APPENDICES

APPENDIX A

PROJECT PLANS

MAYFAIR HIGH SCHOOL

Athletics Fields Upgrades

A# 03-124281

Mayfair High School

Bellflower Unified School District

DSA APPROVAL SET

FEBRAURY 4TH, 2025

STATE:

IDENTIFICATION STAMP
DIV. OF THE STATE ARCHITECT
APP: 03-124281 INC:
REVIEWED FOR
SS ☑ FLS ☑ ACS ☑
DATE: 02/04/2025

ARCHITECT:

architecture
westbergwhite
7700 IRVINE CENTER DR. STE. 100
IRVINE, CA 92618
(714) 508-1780 (714) 508-1780 FAX

LICENSED ARCHITECT
JEFFREY DEBRITZ WESTBERG
C-11045
EXP.9-2025
STATE OF CALIFORNIA

CONSULTANT:

PROJECT NAME:

Bellflower Unified School District
Mayfair High School Athletics Fields
6000 North Woodruff Ave
Lakewood, California 90713

CLIENT:

BELLFLOWER UNIFIED
SCHOOL DISTRICT
16703 S. Clark Ave.
BELLFLOWER, CALIFORNIA 90706

Rev.	Date	Description

JOB NO: 15008.01
DATE: 01/13/2025
DRAWN: TG, XY
CHECK: RB, JG
ARCHITECT: PDW
ENGINEER:

SHEET DESCRIPTION:
COVER SHEET

SHEET NO:
G000

℄	CENTERLINE	F.O.M.	FACE OF MASONRY	PLUMB.	PLUMBING
℄	PLATE	F.O.P.	FACE OF "GFRC" PANEL	PLWD.	PLYWOOD
&	AND	F.O.S.	FACE OF STUDS	P.M.	PRESSED METAL
@	AT OR ABOUT	F.R.P.	FIBERGLASS REINFORCED PANEL	PNL.	PANEL
'	FOOT	F.S.	FULL SIZE / FINISH SURFACE	P/P	PUSH-PULL
"	INCH OR REPEAT	FT.	FOOT OR FEET	PR.	PAIR
#	POUND OR NUMBER	FTG.	FOOTING	PREFAB.	PREFABRICATED
		FURR.	FURRING	PT.	POINT
A.B.	ANCHOR BOLT	FUT.	FUTURE		
A.C.	ASPHALTIC CONCRETE	FW.	FLATWALL	Q.T.	QUARRY TILE
A/C	AIR CONDITIONING			R.	RISER / RADIUS
ACC.	ACCESSIBLE	GA.	GUAGE / GAGE	R.A.	RETURN AIR
ADJ.	ADJUSTABLE / ADJACENT	GALV.	GALVANIZED IRON	RAD.	RADIUS
A.F.F.	ABOVE FINISH FLOOR	G.B.	GRAB BAR	R.C.P.	REINFORCED CLAY PIPE
AGGR.	AGGREGATE	GEN	GENERAL		
ALUM.	ALUMINUM	G.I.	GALVANIZED IRON	R.D.	ROOF DRAIN
ANOD.	ANODIZED	GL.	GLASS	REC.	RECESSED / RECIEVING
APPROX.	APPROXIMATE	GLU-LAM	GLUE LAMINATE BEAM	RECPT.	RECEPTACLE
ARCH.	ARCHITECTURAL	GR.	GRADE	REF.	REFERENCE
ASPH.	ASPHALT	GYP.	GYPSUM	REFR.	REFRIGERATOR
ASSY.	ASSEMBLY	GYP. BD.	GYPSUM BOARD	REV.	REVERSE
ACT.	ACOUSTICAL TILE			REG.	REGISTER / REGULAR
		H.B.	HOSE BIBB	REINF.	REINFORCED
BD.	BOARD	H.C.	HOLLOW CORE	REQ.	REQUIRED
BITUM.	BITUMINOUS	HD.	HEAD	RESIL.	RESILIENT
BLDG.	BUILDING	HDR.	HEADER	R.H.	ROUND HEAD
BLK.	BLOCK	HDWD.	HARDWOOD	RM.	ROOM
BLKG.	BLOCKING	HDWR.	HARDWARE	R.O.	ROUGH OPENING
BM.	BEAM	HGT.	HEIGHT	RS	ROLLER SHADE
B.M.	BENCHMARK	H.M.	HOLLOW METAL	RSM	ROLLER SHADE MOTORIZED
BOT.	BOTTOM	HORIZ.	HORIZONTAL	RWD.	REDWOOD
B/S	BOTH SIDES	H.P.	HIGH POINT		
B.W.	BOTH WAYS	HR.	HOUR	S.	SOUTH / SPANDREL
		HVAC.	HEATING, VENT, AIR	S.C.	SOLID CORE
CAB.	CABINET		CONDITIONING	SCHED.	SCHEDULE
C.B.	CATCH BASIN			SECT.	SECTION
CEM.	CEMENT	I.B.C	INTERNATIONAL BUILDING CODE	SERV.	SERVICE / SERVING
CER.	CERAMIC	I.D.	INSIDE DIAMETER / DIMENSION	S.F.	SQUARE FOOT
C.F.M.	CUBIC FEET PER MINUTE	IDF	INTERMEDIATE DISTRUBUTION FRAME	S.G.E.	SEMI-GLOSS ENAMEL
C.I.	CAST IRON	IN.	INCH	SHT.	SHEET
C.J.	CEILING JOIST OR CONTROL JOINT	INCND.	INCANDESCENT	SHTG.	SHEATHING
CLG.	CEILING	INSL.	INSULATION	SIM.	SIMILAR
CLO.	CLOSET	INT.	INTERIOR	SL.	SLIDING
CLR.	CLEAR	INV.	INVERT	SPEC.	SPECIFICATION
C.M.U.	CONCRETE MASONRY UNIT			SQ.	SQUARE
COL.	COLUMN	JAN.	JANITOR	S.S.	STAINLESS STEEL
COMPO.	COMPOSITION	JT.	JOINT	S/S	SERVICE SINK
CONC.	CONCRETE	JST.	JOIST	STA.	STATION
CONN.	CONNECTION			STD.	STANDARD
CONSTR.	CONSTRUCTION	K.D.	KNOCK DOWN	STL.	STEEL
CONT.	CONTINUOUS	KIT.	KITCHEN	STOR.	STORAGE
CONTR.	CONTRACTOR			STRUCT.	STRUCTURAL
CORR.	CORRIDOR	LAB.	LABORATORY	SUSP.	SUSPENDED
C.R.B.	CRUSHER RUN BASE	LAM.	LAMINATE	SYM.	SYMMETRICAL
CSK.	COUNTERSUNK	LAV.	LAVATORY	SKLT.	SKYLIGHT
C.T.	CERAMIC TILE	LB.	POUND		
CYL.	CYLINDER	L.F.	LINEAL FEET	T.	TREAD / TEMPERED
		LLH.	LONG LEG HORIZONTAL	T.B.	TOP OF BEAM
DBL.	DOUBLE	LLV.	LONG LEG VERTICAL	T.C.	TOP OF CURB OR CONCRETE
DEPT.	DEPARTMENT	L.P.	LOW POINT	TEL.	TELEPHONE
DET.	DETAIL	LT.	LIGHT	TEMP.	TEMPERED / TEMPORARY
D.F.	DRINKING FOUNTAIN	LT. WT.	LIGHT WEIGHT	TERR.	TERRAZZO
DF	DOUGLAS FIR			TEXT.	TEXTURED
DG	DECOMPOSTED GRANITE	M.	MEN	T&G	TONGUE AND GROOVE
DGS	DRYWALL GRID SYSTEM	MACH.	MACHINE	THK.	THICK
DIA.	DIAMETER	MAT.	MATERIAL	THRSH.	THRESHOLD
DIAG.	DIAGONAL	MAX.	MAXIMUM	T.L.	TOP OF LEDGER
DIM.	DIMENSION	M.B.	MACHINE BOLT	TOIL.	TOILET
DISP.	DISPENSER / DISPOSAL	MDF	MAIN DISTRIBUTION FRAME	T.O.P.	TOP OF PARAPET
DN.	DOWN	MECH.	MECHANICAL	T.S.	TOP OF STEEL
DO.	DITTO / REPEAT	MED.	MEDIUM	T.V.	TELEVISION
DR.	DOOR	MEMB.	MEMBRANE	T.O.W.	TOP OF WALL
D.S.	DOWN SPOUT	MET.	METAL	TYP.	TYPICAL
D.S.P.	DRY STANDPIPE	MEZZ.	MEZZANINE	TRNSF.	TRANSFORMER
DWG.	DRAWING	MFR.	MANUFACTURER		
DWR.	DRAWER	MH.	MANHOLE	U.L.	UNDERWRITER'S LAB
		MIN.	MINIMUM / MINUTE	UNFIN.	UNFINISHED
(E)	EXISTING	MISC.	MISCELLANEOUS	U.N.O.	UNLESS NOTED OTHERWISE
E.	EAST / ENAMEL	M.L. & P.L.	METAL LATH AND PLASTER	URN.	URINAL
EA.	EACH	M.O.	MASONARY OPENING		
EE	EACH END	MPOE	MAIN POINT OF ENTRY	V.	VINYL
E.G.	EXISTING GRADE	MTD.	MOUNTED	V.C.T.	VINYL COMPOSTION TILE
E.J.	EXPANSION JOINT	MUL.	MULLION	VEN.	VENEER
EL.	ELEVATION			VENT.	VENTILATOR
ELEC.	ELECTRICAL	(N)	NEW	VERT.	VERTICAL
ELEV.	ELEVATOR / ELEVATION	NAT.	NATURAL	VEST.	VESTIBULE
EMER.	EMERGENCY	NT, GR.	NATURAL GRADE	V.G.	VERTICAL GRAIN
ENCL.	ENCLOSURE	N.I.C.	NOT IN CONTRACT	V.O.J.	VERIFY ON JOB
E.O.S.	EDGE OF SLAB	NO.	NUMBER	V.T.R.	VENT THRU ROOF
EQ.	EQUAL	NOM.	NOMINAL	V.W.C.	VINYL WALL COVERING
EQPT.	EQUIPMENT	N.T.S.	NOT TO SCALE		
E.S.	EACH SIDE			W.	WEST / WOMEN
E.W.	EACH WAY	O/	OVER	W/	WITH
E.O.C.	EDGE OF CONCRETE	O.A.	OVERALL / OUTSIDE AIR	WSCT.	WAINSCOT
EXH.	EXHAUST	OBS.	OBSCURE	W.C.	WATER CLOSET
EXIST.	EXISTING	O.C.	ON CENTER	WD.	WOOD
EXP.	EXPANSION	O.D.	OUTSIDE DIAMETER / DIMENSION	W.H.	WATER HEATER
EXPO.	EXPOSE(			W.I.	WROUGHT IRON
		PH	PANIC HARDWARE	W/O	WITHOUT
FLUOR.	FLUORESCENT	P.I.V.	PRESSURE INDICATOR VALVE	WP.	WATERPROOF
FNDN.	FOUNDATION	PTN.	PARTITION	W.R.	WATER RESISTANT
F.O.C.	FACE OF CONCRETE/CURB	PL.	PLATE	W.S.	WOOD SCREW
F.O.F.	FACE OF FINISH	P. LAM.	PLASTIC LAMINATE	WT.	WEIGHT
F.O.A.	FACE OF ALUMINUM	PLAS.	PLASTER	W.W.M.	WOVEN WIRE MESH
F.O.G.	FACE OF GLAZING				

KEYNOTES SPECIFIC TO BUILDING WORK

BE	BUILDING EXISTING
BD	BUILDING DEMOLITION
BN	BUILDING NEW

KEYNOTES SPECIFIC TO SITE WORK

SE	SITE EXISTING
SD	SITE DEMOLITION
SN	SITE NEW

ABBREVIATIONS

CHAPTER 4, PART 1, TITLE 24, C.C.R., ADMINISTRATIVE REQUIREMENTS (PARAGRAPH LISTING ONLY)

1. A COPY OF PARTS 1 AND 5, TITLE 24, C.C.R. SHALL BE KEPT ON THE JOB SITE AT ALL TIMES.
2. ALL CHANGE ORDERS ARE NOT VALID UNTIL APPROVED BY DSA PER SECTION 4-338, PART 1 TITLE 24
3. ALL TESTS TO CONFORM TO THE REQUIREMENTS OF SECTION 4-335, PART 1, TITLE 24, AND APPROVED T AND I SHEET
4. TESTS OF MATERIALS AND TESTING LABORATORY SHALL BE IN ACCORDANCE WITH SECTION 4-335 OF PART 1, TITLE 24 AND THE DISTRICT SHALL EMPLOY AND PAY THE LABORATORY. COSTS OF RE-TEST MAY BE BACK CHARGED TO THE CONTRACTOR.
5. DSA WILL BE NOTIFIED AT THE START OF CONSTRUCTION AND PRIOR TO THE PLACEMENT OF CONCRETE PER SECTION 4-331, PART 1, TITLE 24.
6. PROJECT INSPECTOR CLASS 1 WILL BE APPROVED BY DSA. INSPECTION WILL BE IN ACCORDANCE WITH SECTION 4-333(B). THE DUTY OF THE INSPECTOR WILL BE IN ACCORDANCE WITH SECTION 4-342, PART 1, TITLE 24.
7. SUPERVISION OF THE CONSTRUCTION BY DSA WILL BE IN ACCORDANCE WITH SECTION 4-334, PART 1, TITLE 24.
8. CONTRACTOR, INSPECTOR, ARCHITECT, AND ENGINEERS WILL SUBMIT VERIFIED REPORTS (FORM DSA-6 BY INSPECTORS AND DSA-6AVE BY ARCHITECTS AND ENGINEERS) IN ACCORDANCE WITH SECTION 4-336 AND 4-334, PART 1, TITLE 24.
9. THE ARCHITECT AND THE STRUCTURAL ENGINEER WILL PERFORM THEIR DUTIES IN ACCORDANCE WITH SECTION 4-333(A) AND 4-341, PART 1, TITLE 24.
10. THE CONTRACTOR WILL PERFORM HIS DUTIES IN ACCORDANCE WITH SECTION 4-343, PART 1, TITLE 24.

PARTIAL LIST OF APPLICABLE CODES AS OF JANUARY 1, 2022

- 2022 CALIFORNIA ADMINISTRATIVE CODE (CAC), PART 1, TITLE 24 CCR*
- 2022 CALIFORNIA BUILDING CODE (CBC), PART 2, TITLE 24 CCR
- 2022 CALIFORNIA ELECTRICAL CODE (CEC), PART 3, TITLE 24 CCR
- 2022 CALIFORNIA MECHANICAL CODE (CMC), PART 4, TITLE 24 CCR
- 2022 CALIFORNIA PLUMBING CODE (CPC), PART 5, TITLE 24 CCR
- 2022 CALIFORNIA ENERGY CODE (CEC), PART 6, TITLE 24
- 2022 CALIFORNIA EXISTING BUILDING CODE (CEBC), PART 10, TITLE 24 CCR
- 2022 CALIFORNIA GREEN BUILDING STANDARDS CODE (CALGREEN), PART 11, TITLE 24
- 2022 CALIFORNIA REFERENCED STANDARD CODES, PART 12, TITLE 24 CCR
- TITLE 19 CCR, PUBLIC SAFETY, STATE FIRE MARSHAL REGULATIONS

- NOTE: CAL/OSHA ELEVATOR UNIT ENFORCES CCR TITLE 8 AND USES THE 2004 ASME A17.1 BY ADOPTION

PARTIAL LIST OF APPLICABLE STANDARDS

- NFPA 13 - STANDARD FOR THE INSTALLATION OF SPRINKLER SYSTEMS (CA AMENDED), 2022 EDITION
- NFPA 14 - STANDARD FOR THE INSTALLATION OF STANDPIPE AND HOSE SYSTEMS (CA AMENDED), 2019 EDITION
- NFPA 17 - STANDARD FOR DRY CHEMICAL EXTINGUISHING SYSTEMS, 2021 EDITION
- NFPA 17A - STANDARD FOR WET CHEMICAL EXTINGUISHING SYSTEMS, 2021 EDITION
- NFPA 20 - STANDARD FOR THE INSTALLATION OF STATIONARY PUMPS FOR FIRE PROTECTION, 2019 EDITION
- NFPA 24 - STANDARD FOR THE INSTALLATION OF PRIVATE FIRE SERVICE MAINS AND THEIR APPURTENANCES (CA AMENDED), 2019 EDITION
- NFPA 72 - NATIONAL FIRE ALARM AND SIGNALING CODE (CA AMENDED), 2022 EDITION
- NFPA 80 - STANDARD FOR FIRE DOORS AND OTHER OPENING PROTECTIVES, 2019 EDITION
- NFPA 2001 - STANDARD ON CLEAN AGENT FIRE EXTINGUISHING SYSTEMS (CA AMENDED), 2018 EDITION
- UL 300 - STANDARD FOR FIRE TESTING OF FIRE EXTINGUISHING SYSTEMS FOR PROTECTION OF COMMERCIAL COOKING EQUIPMENT, 2005 (R2010)
- UL 464 - AUDIBLE SIGNALING DEVICES FOR FIRE ALARM AND SIGNALING SYSTEMS, INCLUDING ACCESSORIES, 2003 EDITION
- UL 521 - STANDARD FOR HEAT DETECTORS FOR FIRE PROTECTIVE SIGNALING SYSTEMS, 1999 EDITION
- UL 1971 - STANDARD ON SIGNALING DEVICES FOR THE HEARING IMPAIRED, 2002 (R2024)
- ICC 300 - STANDARD FOR BLEACHERS, FOLDING AND TELESCOPIC SEATING, AND GRANDSTANDS, 2017 EDITION

FOR A COMPLETE LIST OF APPLICABLE NFPA STANDARDS REFER TO 2022 CBC (SFM) CHAPTER 35 AND CALIFORNIA FIRE CODE CHAPTER 80.

SEE CALIFORNIA BUILDING CODE CHAPTER 35 AND CFC CHAPTER 80 FOR STATE OF CALIFORNIA AMENDMENTS TO THE NFPA STANDARDS.

*ALL PARTS OF THE 2022 CALIFORNIA BUILDING CODE BECOME EFFECTIVE JANUARY 1, 2023 EXCEPT THE EFFECTIVE DATE FOR THE USE OF THE 2022 BUILDING ENERGY EFFICIENCY STANDARDS (TITLE 24, PART 1, CHAPTER 10) IS JANUARY 8, 2022 AND THE EFFECTIVE DATE FOR THE USE OF THE CALIFORNIA ADMINISTRATIVE CODE (TITLE 24, PART 1, CHAPTER 4) IS JANUARY 8, 2022.

*FIRE SAFETY DURING CONSTRUCTION AND DEMOLITION WILL BE ENFORCED IN ACCORDANCE WITH CBC & CFC CHAPTER 33.

APPLICABLE CODES

1. WHERE NO SPECIFIC DETAIL IS SHOWN, THE FRAMING, CONSTRUCTION OR FINISHING SHALL BE IDENTICAL OR SIMILAR TO THAT INDICATED FOR LIKE CASES OR IN THE ABSENCE OF SAME SHALL BE TREATED ACCORDING TO STANDARD PROCEDURES AS APPROVED BY THE ARCHITECT OR ACCORDING TO MANUFACTURERS STANDARDS.
2. VERIFY ALL CONDITIONS AND DIMENSIONS AT SITE.
3. MINOR ITEMS USED IN THE CONSTRUCTION OF THIS PROJECT MAY BE INDICATED ON THE DRAWINGS BUT NOT NECESSARILY IN THE SPECIFICATIONS. SUCH MINOR ITEMS ARE GENERALLY REFERENCED TO A MANUFACTURER INCLUDING A MODEL NUMBER, WHERE APPLICABLE. HOWEVER, ALL SUCH MINOR ITEMS SHALL BE GOVERNED BY ALL ASPECTS OF THE SPECIFICATIONS AS IF WRITTEN THEREIN.
4. THE CONTRACTOR SHALL MAKE ALL EFFORTS NOT TO DISTURB THE OPERATION OF THE EXISTING PREMISES INCLUDING ACCESS THERETO; PROVIDE ALL REQUIRED CONSTRUCTION FENCING, BARRICADES, WARNING SIGNS AND LIGHTS; PROTECT AGAINST ANY POTENTIAL FLOOD HAZARDS OR AIR POLLUTION AND SHALL EXERCISE ANY AND ALL REQUIRED SAFETY MEASURES TO PROTECT AND RENDER SAFE THE PREMISES TO ALL OCCUPANTS.
5. CONTRACTOR SHALL ALSO ABIDE BY 2022 CBC CHAPTER 33 SECTION 3303.2: PROTECTION OF PEDESTRIANS DURING CONSTRUCTION OR DEMOLITION.
6. WHERE EXISTING FEATURES HAVE TO BE DISTURBED TO EXECUTE THE WORK SHOWN ON ANY OF THE DRAWINGS OR CALLED FOR IN SPECIFICATIONS INCLUDING BUT NOT NECESSARILY LIMITED TO THE REMOVAL OF CONCRETE SLABS, ELEMENTS OF WALL AND CEILING SECTIONS, FLOOR, WALL AND CEILING FINISHES AND ELEMENTS OF ROOFING, SUCH FEATURES MUST BE REPLACED TO MATCH EXISTING CONDITIONS, SURFACES AND FINISHES. WHILE FINISHES SUCH AS CARPET MAY BE REMOVED AND REPLACED AFTER WORK IS COMPLETE. FINISHES THAT CANNOT BE REPLACED IN THIS MANNER MUST BE REPLACED WITH NEW MATERIALS MATCHING EXISTING AS CLOSE AS POSSIBLE.
7. WHERE EXECUTING THE WORK SHOWN ON ANY OF THESE DRAWINGS OR CALLED FOR IN SPECIFICATIONS REQUIRES PENETRATION OF EXTERIOR WALLS OR ROOFS, SUCH WORK SHALL BE FLASHED, SEALED OR OTHERWISE MADE TIGHT AGAINST THE ENTRANCE OF AIR OR WATER
8. WHILE DRAWINGS INDICATE ITEMS TO BE REMOVED, REPLACED OR REWORKED, THEY MAY NOT NECESSARILY INDICATE ALL ASPECTS OF WORK REQUIRED IN THE REMOVAL, REPLACEMENT OR REWORK OF SUCH ITEMS. IT SHALL BE THE RESPONSIBILITY OF THE CONTRACTOR TO FURNISH AND INSTALL ALL WORK NECESSARY TO COMPLETE AND FINISH ALL AREAS IN AND AROUND SUCH ITEMS.
9. CONTRACTOR SHALL BE RESPONSIBLE FOR ANY DAMAGE DONE BY HIM TO THE DISTRICT'S PREMISES OR OTHERWISE, AND SHALL REPAIR SAME AT HIS OWN EXPENSE. NOTE THAT HEAVY EQUIPMENT DRIVEN OVER ASPHALT CONCRETE PAVEMENT IN THE SCHOOL YARD MAY CAUSE DAMAGE TO SUCH PAVEMENT.
10. TOILET ROOM ACCESSORIES ARE CALLED OUT IN SPECIFICATIONS. WHERE NOT LOCATED ON DRAWINGS THEY SHALL BE MOUNTED PER DIRECTIONS FROM THE ARCHITECT.
11. WHERE INTERIOR OR EXTERIOR TRENCHING REQUIRES REMOVAL OF CONCRETE OR A.C. PAVING, SUCH PAVING MUST BE REMOVED BY SAW CUTTING AND REPLACED AFTER WORK IS COMPLETE - TO MATCH EXISTING.
12. WORK REQUIRED SHALL INCLUDE BUT NOT BE NECESSARILY BE LIMITED TO WORK CALLED FOR BY NOTES ON BUILDING FLOOR PLANS.
13. GENERAL CONTRACTOR MUST CAREFULLY SCRUTINIZE ALL DRAWINGS TO ASCERTAIN ALL REQUIRED WORK ARISING OUT OF WORK DONE BY MECHANICAL, PLUMBING, ELECTRICAL OR OTHER SUB-CONTRACTORS.
14. THE INTENT OF THESE DRAWINGS AND SPECIFICATIONS IS THAT THE WORK OF THE CONTRACT IS TO BE IN ACCORDANCE WITH TITLE 24, CALIFORNIA CODE OF REGULATIONS. SHOULD ANY EXISTING CONDITION SUCH AS DETERIORATION OR NON-COMPLYING CONSTRUCTION BE DISCOVERED WHICH IS NOT COVERED BY THE CONTRACT DOCUMENTS WHERE IN THE FINISHED WORK WILL NOT COMPLY WITH TITLE 24, CALIFORNIA CODE OF REGULATIONS, A CONSTRUCTION CHANGE DOCUMENT (C.C.D.) OR AN ADDITIONAL SET OF PLANS AND SPECIFICATIONS DETAILING AND SPECIFYING THE REQUIRED WORK SHALL BE SUBMITTED TO AND APPROVED BY THE DIVISION OF THE STATE ARCHITECT.
15. ALL PROPOSED BUILDING ENTRIES / EXITS TO BE BARRIER FREE.
16. CHANGES TO THE APPROVED DRAWINGS AND SPECIFICATIONS SHALL BE MADE BY AN ADDENDA OR A CONSTRUCTION CHANGE DOCUMENT (C.C.D.) APPROVED BY THE DIVISION OF THE STATE ARCHITECT, AS REQUIRED BY SECTION 4-338, PART 1, TITLE 24, CCR.
17. CUTTING, BORING, SAWCUTTING OR DRILLING THROUGH STRUCTURAL ELEMENTS IS NOT TO BE STARTED UNTIL THE DETAILS HAVE BEEN REVIEWED AND APPROVED BY THE ARCHITECT, STRUCTURAL ENGINEER AND THE DSA FIELD ENGINEER IF DETAILS DO NOT SHOW OR CONFORM TO THE APPROVED DRAWINGS.
18. SHOULD ANY EXISTING CONDITIONS SUCH AS DETERIORATION OR NON-COMPLYING CONSTRUCTION WHICH HAS BEEN CONCEALED AND IS NOT COVERED BY THE CONSTRUCTION DOCUMENTS, WHEREIN THE FINISH WORK WILL NOT COMPLY WITH TITLE 24, CALIFORNIA CODE REGULATIONS, A CHANGE ORDER OR SEPARATE SET OF PLANS/SPECIFICATIONS DETAILING THE REQUIRED WORK SHALL BE SUBMITTED TO AND APPROVED BY THE DIVISION OF THE STATE ARCHITECT BEFORE PROCEEDING WITH THAT WORK.
19. CONTRACTOR TO NOTE: WHERE EXISTING ROOM SIGNAGE IS BEING REMOVED AND REPLACED, ALL ROOM SIGNAGE VERBAGE MUST MATCH THE EXISTING ROOM SIGN VERBAGE IN-KIND. CONTRACTOR TO DOCUMENT THE EXISTING ROOM SIGNAGE VERBAGE PRIOR TO DISPOSING OF THE EXISTING SIGNAGE.
20. WHERE EXISTING UTILITIES ARE INDICATED IN THE GENERAL VICINITY OF NEW WORK, VERIFY EXACT LOCATION BY POT-HOLING, METAL DETECTION, OR ELECTRICAL CURRENT DETECTION, PRIOR TO STARTING WORK.
21. ALL WORK SHALL CONFORM TO 2022 TITLE 24, CALIFORNIA CODE OF REGULATIONS (CCR).
22. FABRICATION & INSTALLATION OF DEFERRED SUBMITTAL ITEMS SHALL NOT BE STARTED UNTIL CONTRACTOR'S DRAWINGS, SPECIFICATIONS, & ENGINEERING CALCULATIONS FOR THE ACTUAL SYSTEMS TO BE INSTALLED HAVE BEEN ACCEPTED & SIGNED BY THE ARCHITECT OR STRUCTURAL ENGINEER & APPROVED BY THE DSA. LIST OF DEFERRED SUBMITTAL ITEMS FOR THIS PROJECT: **ANY SUBSTITUTION AND TESTING AND INSPECTION OF THE DEEP SOIL MIXING**
23. A "DSA CERTIFIED" PROJECT INSPECTOR EMPLOYED BY THE DISTRICT (OWNER) & APPROVED BY THE DSA SHALL PROVIDE CONTINUOUS INSPECTION OF THE WORK. THE DUTIES OF THE INSPECTOR ARE DEFINED IN SECTION 4-342, PART 1, TITLE 24, CCR.
24. A DSA ACCEPTED TESTING LABORATORY DIRECTLY EMPLOYED BY THE DISTRICT (OWNER) SHALL CONDUCT ALL THE REQUIRED TESTS & INSPECTIONS FOR THE PROJECT.
25. GRADING PLANS, DRAINAGE IMPROVEMENTS, ROAD & ACCESS REQUIREMENTS & ENVIRONMENTAL HEALTH CONSIDERATIONS SHALL COMPLY WITH ALL LOCAL ORDINANCES.
26. LIST OF DEFERRED APPROVALS: **ANY SUBSTITUTION AND TESTING AND INSPECTION OF THE DEEP SOIL MIXING**
27. THE CALIFORNIA ENERGY CODE SECTION 10-103 REQUIRES ACCEPTANCE TESTING ON ALL NEWLY INSTALLED LIGHTING CONTROLS, MECHANICAL SYSTEMS, ENVELOPES, AND PROCESS EQUIPMENT AFTER INSTALLATION AND BEFORE PROJECT COMPLETION. AN ACCEPTANCE TEST IS A FUNCTIONAL PERFORMANCE TEST TO HELP INSURE THAT NEWLY INSTALLED EQUIPMENT IS OPERATING AN DIN COMPLIANCE WITH THE ENERGY CODE.
28. LIGHTING CONTROLS ACCEPTANCE TESTS MUST BE PERFORMED BY A CERTIFIED LIGHTING CONTROLS ACCEPTED TEST TECHNICIAN (ATT).
29. MECHANICAL SYSTEM ACCEPTANCE TESTS MUST BE PERFORMED BY A CERTIFIED MECHANICAL ATT FOR PROJECTS SUBMITTED ON OR AFTER OCTOBER 1ST, 2021.
30. ENVELOPE AND PROCESS EQUIPMENT ACCEPTANCE TESTS SHALL BE PERFORMED BY THE INSTALLING CONTRACTOR, ENGINEER/ARCHITECT OF RECORD OR THE OWNER'S AGENT.
31. A LIST OF CERTIFIED ATT CAN BE FOUND AT: HTTPS://WWW.ENERGY.CA.GOV/PROGRAMS-AND-TOPICS/PROGRAMS/ACCEPTANCE-TEST-TECHNICIAN-CERTIFICATION-PROVIDER-PROGRAM/ACCETANCE.
32. THE ACCEPTANCE TESTING PROCEDURES MUST BE REPEATED, AND DEFICIENCIES MUST BE CORRECTED BY THE BUILDER OR INSTALLING CONTRACTOR UNTIL THE CONSTRUCTION/INSTALLATION OF THE SPECIFIED SYSTEMS CONFORM AND PASS THE REQUIRED ACCEPTANCE CRITERIA.
33. PROJECT INSPECTORS WILL COLLECT THE FORMS TO CONFIRM THAT THE REQUIRED ACCEPTANCE TESTS HAVE BEEN COMPLETED.

GENERAL NOTES

SCOPE OF WORK INCLUDES:

- DEMOLITION:
  - REMOVAL OF (E) SPORTS FIELDS, DUGOUTS, FENCING, BLEACHERS, STORAGE BUILDINGS, & RELATED ITEMS. REGRADE (E) SITE AREA FOR FUTURE WORK
- CONSTRUCTION:
  - CMU CONCESSIONS/RESTROOM BUILDING, (2) CMU TICKET BOOTHS, BASEBALL FIELD & CMU DUGOUTS, SOFTBALL FIELD & CMU DUGOUTS, CMU FIELD STORAGE BUILDING, SYNTHETIC TURF FOOTBALL/SOCCER FIELD, SYNTHETIC RUNNING TRACK, FIELD EVENT AREAS INCLUDING SUB-GRADE DRAINAGE, 1,500-SEAT HOME BLEACHERS & PRESS BOX, 500-SEAT VISITOR BLEACHERS, 5-ROW BLEACHERS AT BASEBALL & SOFTBALL FIELDS SYNTHETIC & NATURAL TURF PRACTICE FIELDS, SCOREBOARDS (A# 03-123415 PC), MUSCO FIELD LIGHTING, (2) PC SHADE STRUCTURES (A# 02-121474 PC) AT BASEBALL & SOFTBALL, EXCAVATION & REGRADE FOR (N) ASPHALT PARKING LOT, CONCRETE PAVING AND ASSOCIATED SITEWORK

SCOPE OF WORK

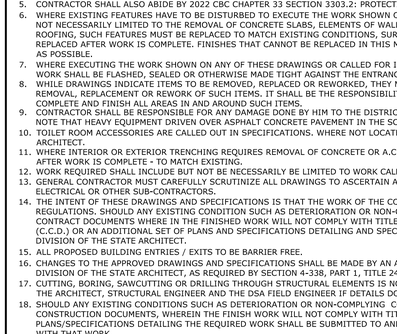

VICINITY MAP

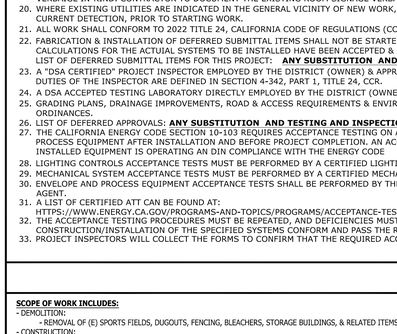

KEYMAP

*MECHANICAL (6 Sheets)

*M001	MECHANICAL ABBREVIATIONS & SYMBOLS LIST
*M002	MECHANICAL SCHEDULES
*M003	MECHANICAL DETAILS
*M101	CONCESSIONS BUILDING MECHANICAL FLOOR & ROOF PLANS
*M201	FIELD STORAGE MECHANICAL FLOOR & ROOF PLANS
*M301	BASEBALL HOME DUGOUT MECHANICAL FLOOR & ROOF PLANS

*PLUMBING (11 Sheets)

*P001	PLUMBING ABBREVIATIONS & SYMBOLS LIST
*P002	PLUMBING SCHEDULE & DETAILS
*P003	PLUMBING SITE PLAN
*P004	DOMESTIC WATER HEATING SYSTEM CERTIFICATE OF COMPLIANCE
*P101	CONCESSIONS BUILDING PLUMBING FLOOR & ROOF PLANS
*P201	TICKET BOOTH PLUMBING FLOOR & ROOF PLANS
*P301	FIELD STORAGE BUILDING PLUMBING FLOOR & ROOF PLANS
*P401	BASEBALL HOME DUGOUT PLUMBING FLOOR & ROOF PLANS
*P402	BASEBALL VISITOR DUGOUT PLUMBING FLOOR & ROOF PLANS
*P501	SOFTBALL HOME DUGOUT PLUMBING FLOOR & ROOF PLANS
*P502	SOFTBALL VISITOR DUGOUT PLUMBING FLOOR & ROOF PLANS

*FOOTBALL BLEACHERS (35 Sheets)

*B1	COVER PAGE
*B2	GENERAL NOTES
*B3	FOOTING LAYOUT
*B4	EXIT FOOTING LAYOUTS
*B5	PIER DETAILS
*B6	PIER DETAILS
*B7	UNDERSTRUCTURE LAYOUT / ELEVATION VIEWS
*B8	EXIT UNDERSTRUCTURE LAYOUTS
*B9	SECTION VIEWS
*B10	SECTION VIEWS
*B11	SEATING LAYOUT
*B12	EXIT LAYOUTS
*B13	LEFT EXIT VIEWS
*B14	RIGHT EXIT VIEWS
*B15	SEAT BRACKET LAYOUT
*B16	PRESS BOX LAYOUT
*B17	PRESS BOX FRAMING PLAN
*B18	~~OMITTED~~
*B19	PRESS BOX DETAILS
*B20	PRESS BOX DETAILS
*B21	PRESS BOX CEILING DETAILS
*B21.1	APPENDIX 'A' MATERIAL SPECS
*B22	FOOTING LAYOUT
*B23	UNDERSTRUCTURE LAYOUT / ELEVATION VIEWS
*B24	EXIT UNDERSTRUCTURE LAYOUTS
*B25	SECTION VIEWS
*B26	SEATING LAYOUT
*B27	EXIT LAYOUTS
*B28	EXITS
*B29	EXITS
*B30	PLANK DETAILS
*B31	EXIT DETAILS
*B32	EXIT DETAILS
*B33	GRANDSTAND DETAILS
*B34	GRANDSTAND DETAILS
*B35	GRANDSTAND DETAILS

*BASEBALL/SOFTBALL BLEACHERS (5 Sheets)

*BB1	COVER PAGE
*BB2	SECTION VIEW
*BB3	PLAN VIEWS
*BB4	ANGLE FAB/GUARDRAIL DETAILS
*BB5	ALUMINUM PLANK DETAILS

*SPORTS LIGHTING (5 Sheets)

*MT1	NOTES, FOUNDATION DETAIL
*MS1	90B POLE DETAILS
*MD1	ATTACHMENT DETAILS
*MD2	ATTACHMENT DETAILS
*MD3	ATTACHMENT DETAILS

*SHADE STRUCTURE PC: A# 02-121474 (4 Sheets)

*S1	FOUNDATION PLAN, GENERAL NOTES, DETAILS
*S2	ROOF FRAMING DETAILS
*S3	SECTION, TYPICAL ELEVATIONS, DETAILS
*S4	SECTION, TYPICAL ELEVATIONS, DETAILS

*SCOREBOARD PC: A# 03-123415 (3 Sheets)

*S-1	GENERAL NOTES
*S-2	GENERAL NOTES, SECTIONS, DETAILS, OUTDOOR SCOREBOARD
*S-3	GENERAL NOTES, SECTIONS, DETAILS, MARQUEE

TOTAL SHEETS: (217) SHEETS

SHEET INDEX

ARCHITECTURAL (5 Sheets)

GENERAL

G000	COVER SHEET
G001	SHEET INDEX, SYMBOLS, ABBREVIATIONS, AND NOTES
G002	BUILDING SIGNAGE PLANS
G003	ACCESSIBILITY & SIGNAGE DETAILS

FIRE

F001	FIRE SITE ACCESS PLAN

*CIVIL (34 Sheets)

*C000	TITLE SHEET
*C001	GENERAL NOTES
*C002	EXISTING CONDITIONS
*C100	SITE DEMOLITION PLAN
*C200	EROSION CONTROL PLAN

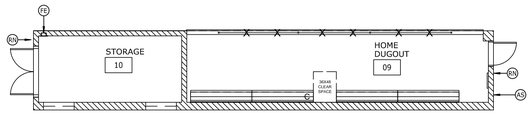

NORTH

SOFTBALL DUGOUT - SIGNAGE PLAN (HOME) SCALE: 1/8" = 1'-0" | 15

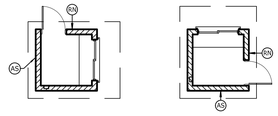

NORTH

TICKET BOOTH - SIGNAGE PLANS SCALE: 1/8" = 1'-0" | 5

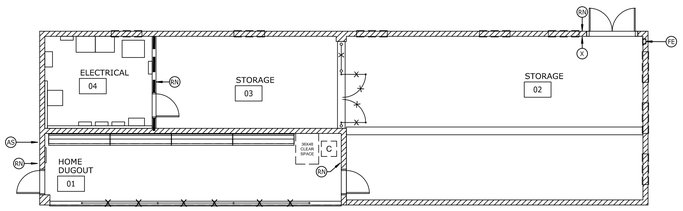

NORTH

BASEBALL DUGOUT - SIGNAGE PLAN (HOME) SCALE: 1/8" = 1'-0" | 13

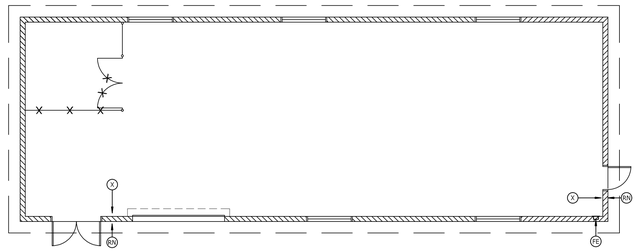

NORTH

STORAGE BUILDING - SIGNAGE PLAN SCALE: 1/8" = 1'-0" | 3

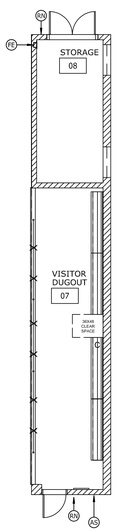

NORTH

SB SIGNAGE PLAN (V) SCALE: 1/8" = 1'-0" | 26

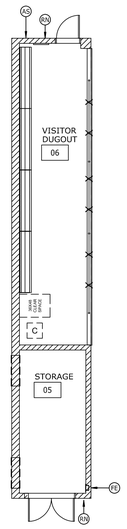

NORTH

BB SIGNAGE PLAN (V) SCALE: 1/8" = 1'-0" | 21

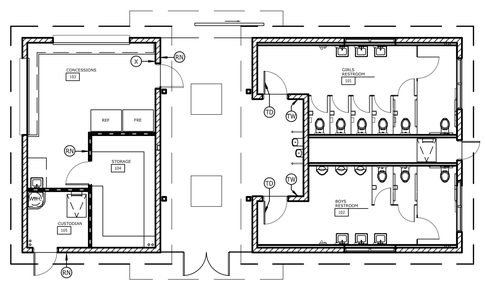

NORTH

CONCESSION SIGNAGE PLAN SCALE: 1/8" = 1'-0" | 6

(X) EXIT
SEE 1F/G003

(RN) ROOM NAME
SEE 1E/G003

(AS) ASSISTIVE LISTENING
SEE 4/G003

(TW) TOILET WALL
SEE 1C/G003& 1D/G003

(TD) TOILET DOOR
SEE 1A/G003 & 1B/G003

NOTE: SEE ELEVATIONS FOR BUILDING ID SIGNAGE

SIGNAGE LEGEND

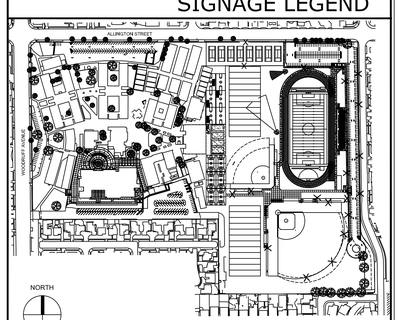

KEYMAP

STATE:

IDENTIFICATION STAMP
DIV. OF THE STATE ARCHITECT
APP: 03-124281 INC:
REVIEWED FOR
SS ☑ FLS ☑ ACS ☑
DATE: 02/04/2025

ARCHITECT:

architecture
westbergwhite
7700 IRVINE CENTER DR. STE. 100
IRVINE, CA 92618
(714) 508-1780 (714) 508-1780 FAX

LICENSED ARCHITECT
PAUL DEBRITS WESTBERG
C-11045
EXP.9-2025
STATE OF CALIFORNIA

CONSULTANT:

PROJECT NAME:

Bellflower Unified School District
Mayfair High School Athletics Fields
6000 North Woodruff Ave
Lakewood, California 90713

CLIENT:

BELLFLOWER UNIFIED SCHOOL DISTRICT
16703 S. Clark Ave.
BELLFLOWER, CALIFORNIA 90706

Rev.	Date	Description

JOB NO: 15008.01
DATE: 11/13/2024
DRAWN: TG, XY
CHECK: RB, JG
ARCHITECT: PDW
ENGINEER:

SHEET DESCRIPTION:
BUILDING SIGNAGE PLANS

SHEET NO:
G002

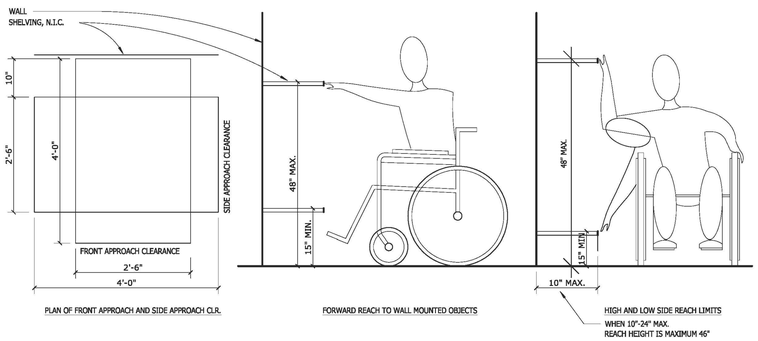

PLAN OF FRONT APPROACH AND SIDE APPROACH CLR. FORWARD REACH TO WALL MOUNTED OBJECTS

ADA APPROACH & REACH RANGE REQUIREMENTS SCALE: 3/4" = 1'-0" | 8

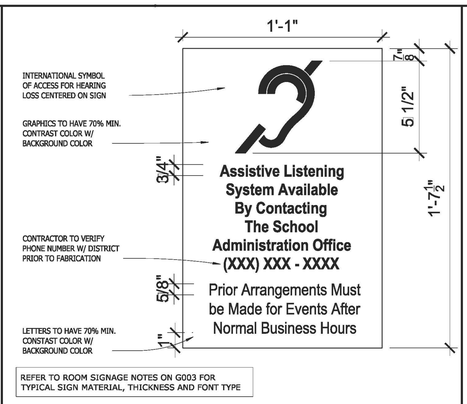

REFER TO ROOM SIGNAGE NOTES ON G003 FOR TYPICAL SIGN MATERIAL, THICKNESS AND FONT TYPE

ASSISTIVE LISTENING SIGN SCALE: 12" = 1'-0" | 4

1. CHARACTER TYPE: CHARACTERS ON SIGNS SHALL BE RAISED 1/32 INCH MINIMUM AND SHALL BE SANS SERIF UPPERCASE CHARACTERS ACCOMPANIED BY GRADE 2 BRAILLE.
2. CHARACTER HEIGHT: RAISED CHARACTERS SHALL BE A MINIMUM OF 5/8 INCH AND A MAXIMUM OF 2 INCHES HIGH.
3. FINISH AND CONTRAST: CONTRAST BETWEEN CHARACTERS, SYMBOLS AND THEIR BACKGROUND MUST BE 70% MINIMUM AND HAVE A NON-GLARE FINISH. (11B-703.5.1)
4. BRAILLE: CONTRACTED CALIFORNIA GRADE 2 BRAILLE SHALL BE USED WHENEVER BRAILLE IS REQUIRED IN OTHER PORTIONS OF THESE STANDARDS. DOTS SHALL BE 1/10 INCH ON CENTERS IN EACH CELL WITH 2/10 INCH SPACE BETWEEN CELLS, MEASURED FROM THE SECOND COLUMN OF DOTS IN THE FIRST CELL TO THE FIRST COLUMN OF DOTS IN THE SECOND CELL. DOTS SHALL BE RAISED ABOVE THE BACKGROUND ACCORDING TO THE DIMENSIONAL RANGE SHOWN BELOW. (11B-703.3).

MEASUREMENT RANGE	MINIMUM IN INCHES MAXIMUM IN INCHES
DOT BASE DIAMETER	0.059 (1.5mm) TO 0.063 (1.6mm)
DISTANCE BETWEEN TWO DOTS IN THE SAME CELL PER NOTE #1	0.100 (2.5mm)
DISTANCE BETWEEN CORRESPONDING DOTS IN ADJACENT CELLS PER NOTE #1	0.300 (7.6mm)
DOT HEIGHT	0.025 (0.6mm) TO 0.037 (0.9mm)
DISTANCE MEASURED BETWEEN CORRESPONDING DOTS FROM ONE CELL BELOW PER NOTE #1	0.395 (10mm) TO 0.400 (10.2mm)

NOTE:
1. MEASURED CENTER TO CENTER

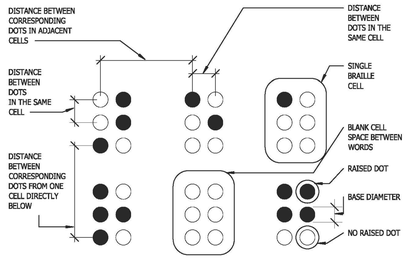

REQUIRED ROUNDED OR DOMED CALIFORNIA BRAILLE DOTS, EACH DISTINCT AND SEPARATE. DOTS WITH STRAIGHT SIDES AND FLAT TOPS ARE NOT READABLE FOR MANY BRAILLE USERS.

TACTILE / BRAILLE NOTES SCALE: 12" = 1'-0" | 3

GENERAL NOTES

1. FOR MOUNTING SIGNAGE AT WINDOW SEE DETAIL B.
2. VERIFY ALL SIGN TEXT WITH ***DISTRICT*** PRIOR TO MANUFACTURING SIGNAGE.
3. PROVIDE AN ADDITIONAL 10 BUILDING SIGNS WITH 40 CHARACTERS PER SIGN TO BE DETERMINED DURING CONSTRUCTION PER THE ***DISTRICT'S*** DIRECTION.

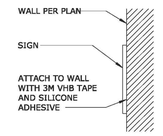

DETAIL A

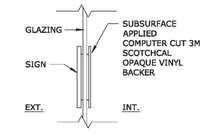

DETAIL B

NOTE: FOR APPLICATION TO GLASS PROVIDE A MATCHING BACK-UP PLATE & MOUNT TO INTERIOR SURFACE OF GLASS WITH ADHESIVE.

SIGNAGE INSTALLATION NOTES

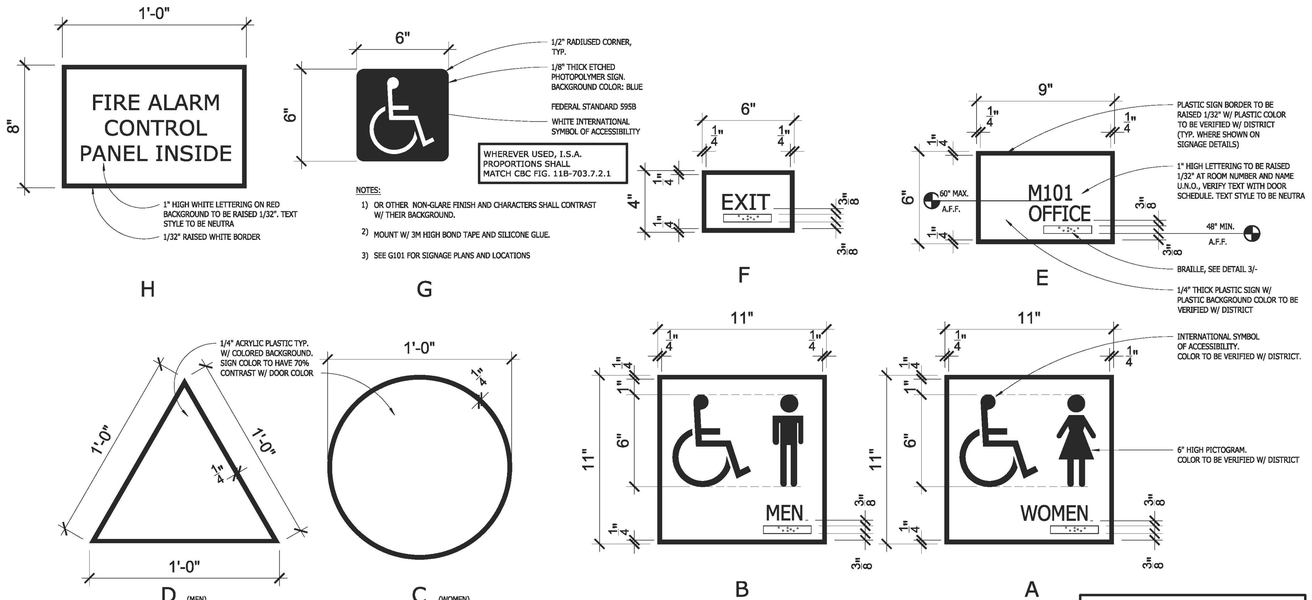

NOTES:
1) REFER TO G003 FOR ALL SIGN DESIGN AND ACCESSIBILITY REQUIREMENTS
2) REFER TO G003 FOR INSTALLATION NOTES

BUILDING AND ROOM SIGNAGE TYPES SCALE: 3" = 1'-0" | 1

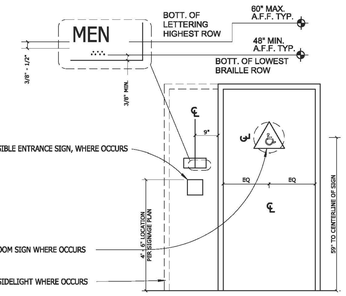

FOR SIGNAGE LOCATIONS SEE G002. NEW SIGNAGE HEIGHT MUST COMPLY WITH CODE REQUIREMENTS AS SHOWN ON THE ELEVATION ABOVE

NOTES:
1. SIGN MATERIAL SHALL BE MIN. 1/4" THICK ACRYLIC PLASTIC WITH SURFACE PAINTED FINISH. SIGN GRAPHICS, NUMBERS AND LETTERS SHALL BE RAISED 1/32" .
2. LETTERS SHALL BE UPPER CASE, OFFICINA SANS BOOK FONT TYPE. AT TACTILE SIGN LOCATIONS SIGN SHALL BE ACCOMPANIED BY CALIF. CONTRACTED GRADE 2 BRAILLE WITH CHARACTER TYPE AND HEIGHT PER DET. 4 THIS SHEET.
3. INSTALL ALL ROOM NAME/NUMBER SIGNAGE ON WALL AT EXTERIOR SIDE OF ROOM U.N.O.
4. INSTALL ALL EXIT AND EXIT ROUTE SIGNAGE ON WALL AT INTERIOR SIDE OF ROOM
5. SIGN BACKGROUND SHALL HAVE A 70% MIN. CONTRAST COLOR W/ TEXT LETTERS AND BORDER W/ NON GLARE FINISH.
6. SIGNS ADHESIVELY APPLIED TO GLASS SHALL HAVE ADDITIONAL PLASTIC BACKING SAME SIZE AS SIGN ADHESIVELY APPLIED TO OTHER SIDE OF GLASS.
7. ALL SIGNAGE TO BE ATTACHED WITH 3M VHB TAPE AND SILICONE ADHESIVE.
8. VERIFY SIGN TEXT AND ROOM NUMBER WITH OWNER.
9. REFER TO DETAIL 5E/- FOR MULTI LINE TEXT SIGNAGE REQUIREMENTS.
10. PROVIDE EASED EDGES ON ALL SIDES OF SIGNAGE.
11. TACTILE CHARACTERS ON SIGNS SHALL BE LOCATED 48 INCHES MINIMUM ABOVE THE FINISH FLOOR OR GROUND SURFACE, MEASURED FROM THE BASELINE OF THE LOWEST BRAILLE CELLS AND 60 INCHES MAXIMUM ABOVE THE FINISH FLOOR OR GROUND SURFACE, MEASURED FROM THE BASELINE OF THE HIGHEST LINE OF RAISED CHARACTERS (SEE DIAGRAM ABOVE).

ROOM SIGNAGE NOTES

STATE:

IDENTIFICATION STAMP
DIV. OF THE STATE ARCHITECT
APP: 03-124281 INC:
REVIEWED FOR
SS ☑ FLS ☑ ACS ☑
DATE: 02/04/2025

ARCHITECT:

architecture
westbergwhite
7700 IRVINE CENTER DR. STE. 100
IRVINE, CA 92618
(714) 508-1780 (714) 508-1780 FAX

REGISTERED ARCHITECT
PAUL D. WESTBERG
C-11045
EXP.9-2025
STATE OF CALIFORNIA

CONSULTANT:

PROJECT NAME:

Bellflower Unified School District
Mayfair High School Athletics Fields
6000 North Woodruff Ave
Lakewood, California 90713

CLIENT:

BELLFLOWER UNIFIED SCHOOL DISTRICT
16703 S. Clark Ave.
BELLFLOWER, CALIFORNIA 90706

Rev.	Date	Description
2		

JOB NO: 15008.01
DATE: 11/13/2024
DRAWN: TG, XY
CHECK: RB, JG
ARCHITECT: PDW
ENGINEER:

SHEET DESCRIPTION:
ACCESSIBILITY & SIGNAGE DETAILS

SHEET NO:
G003

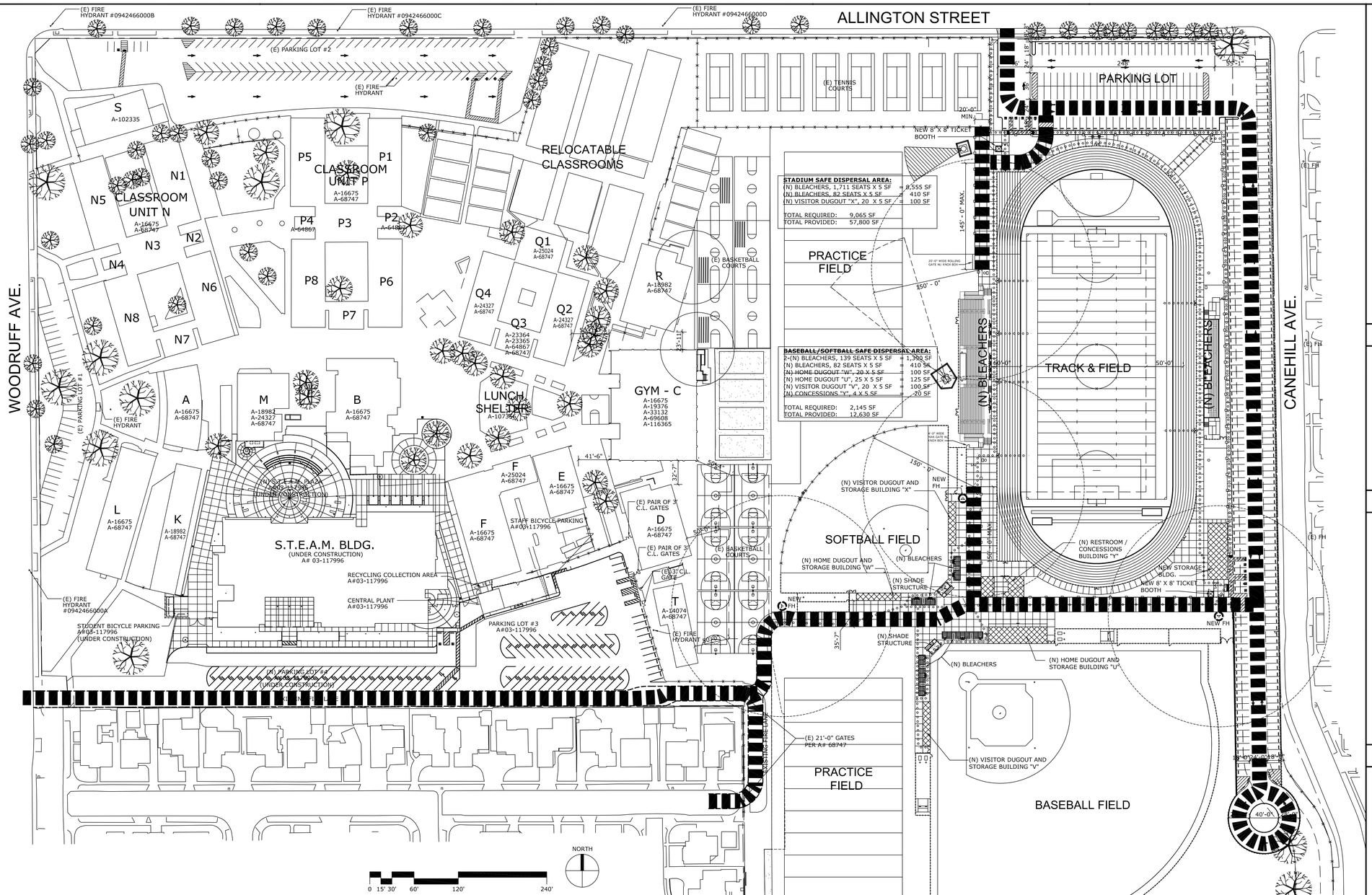

PARKING TABULATION

(N) PARKING LOT

STANDARD STALLS:	303
VAN ACCESSIBLE STALLS:	2
STANDARD ACCESSIBLE STALLS:	6
TOTAL:	311

FIRE FLOW CALCULATION

THE REQUIRED FIRE FLOW IS BASED ON THE FOLLOWING CALCULATION:

- TYPE OF CONSTRUCTION PER THE BUILDING CODE	TYPE VB
- FIRE-FLOW CALCULATION AREA	1,855 SQ. FT.
- FIRE-FLOW BASED ON THE FIRE-FLOW CALCULATION AREA	1,500 GPM
- REDUCTION FOR FIRE SPRINKLERS (MAXIMUM 50%)	0 GPM
- TOTAL FIRE FLOW REQUIRED	1,500 GPM

CODE ANALYSIS

(2) 60'x10'-4" VISITOR DUGOUTS/STORAGES - (N) BLDG "V" & "X"
(1) 60'x10'-4" HOME DUGOUTS/STORAGES - (N) BLDG "W"

CONSTRUCTION TYPE:	V-B / ONE-STORY
OCCUPANCY GROUP:	A-3
BUILDING AREA (ACTUAL):	620 S.F. EACH
BUILDING AREA (ALLOWABLE):	6,000
BUILDING HEIGHT (ACTUAL):	12'-10 1/2"
BUILDING HEIGHT (ALLOWABLE):	40'

60'x10'-4" HOME DUGOUTS/STORAGES - (N) BLDG "U"

CONSTRUCTION TYPE:	V-B / ONE-STORY
OCCUPANCY GROUP:	A-3
BUILDING AREA (ACTUAL):	1798 S.F.
BUILDING AREA (ALLOWABLE):	6,000
BUILDING HEIGHT (ACTUAL):	12'-10 1/2"
BUILDING HEIGHT (ALLOWABLE):	40'

FIELD STORAGE BLDG - (N)

CONSTRUCTION TYPE:	V-B / ONE-STORY
OCCUPANCY GROUP:	S-2
BUILDING AREA (ACTUAL):	2,044 S.F.
BUILDING AREA (ALLOWABLE):	6,000
BUILDING HEIGHT (ACTUAL):	13'-4"
BUILDING HEIGHT (ALLOWABLE):	40'

BLEACHERS - (N)

CONSTRUCTION TYPE:	V-B
OCCUPANCY GROUP:	A-5
BUILDING AREA (ALLOWABLE):	UL=UNLIMITED
BUILDING HEIGHT (ACTUAL):	27'
BUILDING HEIGHT (ALLOWABLE):	40'
TOTAL NET 18" SEATS:	1663 SEATS
TOTAL 33" WHEELCHAIR SPACES:	16 SPACES
TOTAL NET 18" COMPANION SEATS:	16 SEATS
TOTAL NET 18" SEMI-AMBULATORY SEATS:	16 SEATS
TOTAL SEATING CAPACITY:	1711

RESTROOM/CONCESSIONS - (N) BLDG "Y"

CONSTRUCTION TYPE:	V-B / ONE-STORY
OCCUPANCY GROUP:	A-3
BUILDING AREA (ACTUAL):	1,590 S.F.
OVERHANG AREA:	265 S.F.
TOTAL BUILDING AREA:	1,855 S.F.
BUILDING AREA (ALLOWABLE):	6,000
BUILDING HEIGHT (ACTUAL):	19'-6"
BUILDING HEIGHT (ALLOWABLE):	40'

(2) 8'x8' TICKET BOOTHS - (N)

CONSTRUCTION TYPE:	V-B / ONE-STORY
OCCUPANCY GROUP:	B
BUILDING AREA (ACTUAL):	64 S.F. EACH
BUILDING AREA (ALLOWABLE):	6,000
BUILDING HEIGHT (ACTUAL):	11'-2"
BUILDING HEIGHT (ALLOWABLE):	50'

FIRE ACCESS AND CODE ANALYSIS SITE PLAN

SCALE: 1" = 60'-0"

1

FIRE PROTECTION NOTES

1. EMERGENCY ACCESS ROADS SHALL BE DESIGNED AND MAINTAINED TO SUPPORT AN IMPOSED LOAD OF 75,000 POUNDS AND WILL HAVE A SURFACE THAT PROVIDES ALL-WEATHER DRIVING CAPABILITIES.
2. ALL-WEATHER ACCESS ROADS AND HYDRANT LOCATIONS SHALL BE APPROVED BY THE LOCAL FIRE AUTHORITY, AND SHALL BE IN PLACE AND OPERATIONAL BEFORE ANY COMBUSTIBLE MATERIALS ARE PLACED ON SITE.
3. ACCESS ROADS AND HYDRANTS SHALL BE MAINTAINED AND REMAIN CLEAR OF OBSTRUCTIONS AT ALL TIMES.
4. FIRE LANE WIDTHS SHALL BE MEASURED FROM TOP OF FACE OF THE CURB TO TOP FACE OF THE CURB FOR FIRE LANES WITH CURBS AND GUTTERS AND FROM THE FLOWLINE TO FLOWLINE FOR FIRE LANES WITH MODIFIED CURB DESIGNS (E.G., ROLLED, RAMPED, ETC...). CALIFORNIA FIRE CODE 503.2.1, AS AMENDED.
5. ALL VEGETATION AND OTHER OBSTRUCTIONS OVERHANGING A FIRE ACCESS ROADWAY SHALL BE MAINTAINED TO A CLEAR HEIGHT OF 13'-6".
6. ALL POLES, BACKBOARDS AND OTHER OBSTRUCTIONS ON PLAYGROUNDS NEAR A FIRE ACCESS ROADWAY SHALL BE PROVIDED WITH REFLECTIVE TAPE OR PAINT.
7. ACCESS GATES SHALL BE APPROVED PRIOR TO INSTALLATION AND SHALL BE IN COMPLIANCE WITH SECTION 503.5 OF THE 2016 CALIFORNIA FIRE CODE AND LOCAL FIRE AUTHORITY GUIDELINES. ACCESS GATE(S) SHALL BE OPERABLE WITH AN LOCAL FIRE AUTHORITY KNOX KEY.
8. KNOX KEY SWITCHES, KNOX LOCKS, OR FRANGIBLE PADLOCKS/CHAINS SHALL BE PROVIDED FOR ALL GATES AND BARRIERS IN THE PATH OF VEHICLE OR FIRE FIGHTER ACCESS.
9. PRIVATE FIRE HYDRANTS, SPRINKLER CONTROL AND POST INDICATOR VALVES, RISERS AND FIRE DEPARTMENT CONNECTIONS SHALL BE PAINTED OSHA SAFETY RED. ALL FIRE HYDRANTS SHALL HAVE A "BLUE REFLECTIVE PAVEMENT MARKER" INDICATING THE LOCATION. ON PRIVATE PROPERTY MARKERS ARE TO BE MAINTAINED IN GOOD CONDITION BY THE PROPERTY OWNER.
10. APPROVED ACCESS WALKWAYS SHALL BE PROVIDED TO ALL REQUIRED OPENINGS AND ALL RESCUE WINDOWS. VEGETATION SHALL BE SELECTED AND MAINTAINED IN SUCH A MANNER AS TO ALLOW ACCESS TO AND THE LADDERING OF RESCUE WINDOWS AND STRUCTURES. CALIFORNIA FIRE CODE 504.
11. ANY FUTURE MODIFICATION TO THE APPROVED FIRE MASTER PLAN OR APPROVED PLAN, INCLUDING BUT NOT LIMITED TO ROAD WIDTH, GRADE, SPEED HUMPS, TURNING RADII, GATES OR OTHER OBSTRUCTIONS, SHALL REQUIRE REVIEW AND APPROVAL BY THE LOCAL FIRE AUTHORITY.
12. THE CAMPUS BUILDINGS SHALL BE IDENTIFIED WITH 6" HIGH ADDRESS NUMBERS OR LETTERS EASILY VISIBLE FROM THE PUBLIC WAY OR FIRE ACCESS ROADWAY.
13. KNOX BOX ACCESS SHALL BE PROVIDED TO ALL BUILDINGS
14. EXIT DOORS SHALL BE OPENABLE FROM THE INSIDE WITHOUT THE USE OF A KEY OR ANY SPECIAL KNOWLEDGE OR EFFORT AS REQUIRED BY SECTION 1010.1.9 OF THE 2016 CBC.
15. EXIT DOORS SHALL BE CLEARLY IDENTIFIED WITH EXIT SIGNS. SUCH SIGNS MUST HAVE EMERGENCY POWER BACK-UP.
16. THE EXIT PATH FROM OCCUPIED SPACES SHALL BE ILLUMINATED AT ALL TIME IN ACCORDANCE WITH CBC 1008.
17. PANIC HARDWARE SHALL BE PROVIDED FOR ALL EXIT DOORS FROM ROOMS WITH 50 OR MORE OCCUPANTS AND ON ALL CORRIDOR DOORS.
18. WHEN SECURITY GATES ARE PROVIDED, MAINTAIN A MINIMUM ACCESS WIDTH OF 20 FEET. THE SECURITY GATE SHALL BE PROVIDED WITH AN APPROVED MEANS OF EMERGENCY OPERATION, AND SHALL BE MAINTAINED OPERATIONAL AT ALL TIMES AND REPLACED OR REPAIRED WHEN DEFECTIVE. ELECTRIC GATE OPERATORS, WHERE PROVIDED, SHALL BE LISTED IN ACCORDANCE WITH UL 325. GATES INTENDED FOR AUTOMATIC OPERATION SHALL BE DESIGNED, CONSTRUCTED AND INSTALLED TO COMPLY WITH THE REQUIREMENTS OF ASTM F220. GATES SHALL BE OF THE SWINGING OR SLIDING TYPE. CONSTRUCTION OF GATES SHALL BE OF MATERIALS THAT ALLOW MANUAL OPERATION BY ONE PERSON. FIRE CODE 503.6.
19. APPROVED BUILDING ADDRESS NUMBERS, BUILDING NUMBERS OR APPROVED IDENTIFICATION SHALL BE PROVIDED AND MAINTAINED SO AS TO BE PLAINLY VISIBLE AND LEGIBLE FROM THE STREET FRONTING THE PROPERTY. THE NUMBERS SHALL CONTRAST WITH THEIR BACKGROUND, BE ARABIC NUMERALS OR ALPHABET LETTERS, AND BE A MINIMUM OF 4 INCHES HIGH WITH A MINIMUM STROKE WIDTH OF 0.5 INCH. FIRE CODE 505.1
20. AN APPROVED KEY BOX, LISTED IN ACCORDANCE WITH UL 1037 SHALL BE PROVIDED AS REQUIRED BY FIRE CODE 506. THE LOCATION OF EACH KEY BOX SHALL BE DETERMINED BY THE FIRE INSPECTOR.

EXISTING AREA IN SCOPE OF WORK

NEW CONCRETE PAVING

NEW AC PAVING

EXISTING BUILDING TO REMAIN (NOT IN SCOPE OF WORK)

20'-0" WIDE FIRE DEPARTMENT VEHICLE ACCESS ROUTE PER A# 68747

BARRIER-FREE PATH OF TRAVEL (P.O.T.)

PROPERTY LINE

NEW CHAINLINK FENCE

NEW TUBE STEEL FENCE

EXISTING CHAINLINK FENCE TO REMAIN

FLOOD CHANNEL

LEGEND

THE P.O.T. IDENTIFIED IN THESE CONSTRUCTION DOCUMENTS IS COMPLIANT WITH THE CURRENT APPLICALBE CALIFORNIA BUILDING CODE ACCESSIBILITY PROVISIONS FOR PATH OF TRAVEL REQUIREMENTS FOR ALTERATIONS, ADDITIONS AND STRUCTURAL REPAIRS. AS PART OF THE DESGIN OF THIS PROJECT, THE POT WAS EXAMINED AND ANY ELEMENTS, COMPONENTS OR PORTIONS OF THE POT THAT WERE DETERMINED TO BE NONCOMPLIANT 1) HAVE BEEN IDENTIFIED AND 2) THE CORRECTIVE WORK NECESSARY TO BRING THEM INTO COMPLIANCE HAS BEEN INCLUDED WITHIN THE SCOPE OF THE PROJECT'S WORK THROUGH DETAILS, DRAWINGS AND SPECIFICATIONS INCORPORATED INTO THESE CONSTRUCTION DOCUMENTS. ANY NONCOMPLIANT ELEMENT, COMPONENTS OR PORTIONS OF THE POT THAT WILL NOT BE CORRECTED BY THIS PROJECT BASED ON VALUATION THRESHOLD LIMITATIONS OR A FINDING OF UNREASONABLE HARDSHIP ARE SO INDICATED IN THESE CONSTRUCTION DOCUMENTS.

DURING CONSTRUCTION, IF POT ITEMS WITHIN THE SCOPE OF THE PROJECT REPRESENTED AS CODE COMPLIANT ARE FOUND TO BE NONCONFORMING BEYOND REASONABLE CONSTRUCTION TOLERANCES, THEY SHALL BE BROUGHT INTO COMPLIANCE WITH THE CBC AS A PART OF THIS PROJECT BY MEANS OF A CONSTRUCTION CHANGE DOCUMENT.

P.O.T. CHARGE STATEMENT

1. "PATH OF TRAVEL (P.O.T.) AS INDICATED IS A BARRIER FREE ACCESS IS AT LEAST 48" WIDE WITHOUT ANY ABRUPT VERTICAL CHANGES EXCEEDING 1/2" AT 1:2 MAXIMUM SLOPE, EXCEPT THAT LEVEL CHANGES DO NOT EXCEED 1/4" VERTICAL. MAXIMUM CROSS-SLOPE 2% TYPICAL AND MAXIMUM SLOPE IN THE DIRECTION IS 5% , UNLESS OTHERWISE NOTED. THE CONTRACTOR SHALL VERIFY THAT ALL BARRIERS ON THE INDICATED PATH OF TRAVEL HAVE BEEN REMOVED."
2. ABRUPT CHANGES IN LEVEL ALONG ANY ACCESSIBLE ROUTE SHALL NOT EXCEED 1/2". WHERE ABRUPT CHANGES DO OCCUR, THEY SHALL BE BEVELED WITH A SLOPE NO GREATER THAT 1-IN-2, EXCEPT THAT VERTICAL LEVEL CHANGES NOT EXCEEDING 1/4" MAY REMAIN. WHERE CHANGES IN LEVELS GREATER THAN 1/2" ARE NECESSARY, THEY SHALL COMPLY WITH REQUIREMENTS FOR CURB RAMPS. (PER CBC SECTION 11B-403.4)
3. ALL SIDEWALKS ALONG THE ACCESSIBLE ROUTE SHALL BE A MINIMUM OF 4'-0" WIDE AND THERE SHALL BE NO DROP-OFFS OVER 4" AT THE EDGE OF WALKS OR LANDINGS. WHERE A 4" DROP-OFF DOES OCCUR, PROVIDE A WARNING CURB OR A 12" WIDE LEVEL GRADE NEXT TO SIDEWALK. (PER CBC SECTION 11B-303.5)
4. GRATINGS IN THE PATH OF TRAVEL SHALL HAVE GRID OPENINGS LIMITED TO 1/2" MAX. CLEAR IN DIRECTION OF TRAVEL.
5. CONTRACTOR SHALL OBTAIN DISTRICT APPROVAL IN ADVANCE FOR PROPOSED WORK SCHEDULE, LOCATION OF STAGING AREAS, ACCESS, PARKING, MATERIAL DELIVERIES, ETC.

GENERAL NOTES

DSA 810

FIRE & LIFE SAFETY SITE CONDITIONS SUBMITTAL

To facilitate the Division of the State Architect's (DSA) fire and life safety plan review of project site conditions, DSA requires the design professional to provide the following information at time of project submittal for projects consisting of construction of a new campus, construction of new building(s), additions to existing buildings, and for site alternate design means for fire department emergency vehicle access, and fire suppression water supply.

Information associated with compliance items 1–3 below is to be provided for all project types indicated above. Information associated with items 4–7 is to be completed when an alternate means is utilized. Acknowledgement by the school district and signature from the local fire authority (LFA) is only required when an alternate design means is being requested.

Page 1 of the completed form must be imaged onto the fire access site plan. When an alternate design/means is proposed, completed pages 1 and 2 are to be imaged on the fire access site plan.

For additional information refer to the instructions at the end of this form and DSA Policy 09-01.

PROJECT INFORMATION	
School District/Owner:	BELLFLOWER UNIFIED SCHOOL DISTRICT
Project Name/School:	MAYFAIR HIGH SCHOOL SPORTS FIELDS
Project Address:	6000 NORTH WOODRUFF AVE, LAKEWOOD, CA 90713

FIRE & LIFE SAFETY INFORMATION			
1.	Has a fire hydrant flow test been performed within the past 12 months? *(If yes, provide a copy of the test data.)*	Yes ☒	No ☐
2.	Was the fire hydrant water flow test performed as part of this LFA review?	Yes ☒	No ☐
3.	Is the project located within a designated fire hazard severity zone as established by Cal-Fire? *(If yes, indicate fire hazard zone classification below)*	Yes ☐	No ☒
	Refer to the following for fire hazard zone locations: www.fire.ca.gov/fire_prevention/fire_prevention_wildland_zones_maps	Moderate ☐ / High ☐	Very High ☐
	Wildland Interface Area (WIFA) *(If any designations are checked, project design must meet the requirements of CBC Chapter 7A.)*		WIFA ☐

CONDITION MEANS AND METHODS RESOLUTION		ALTERNATE ACCEPTED			
		Yes	No	N/A	N/R
4.	Emergency vehicle access roadways do not meet CFC requirements.			☒	
4a.	**Acceptable Alternate:** Emergency vehicle and personnel access as proposed by the project architect is acceptable for providing fire suppression and protection of life and property.	☐	☐		
5.	**Fire Hydrants:** Number and spacing does not meet CFC requirements.			☒	
5a.	**Acceptable Alternate:** Number of fire hydrants and spacing as proposed by the project architect is acceptable for fire suppression and protection of life and property.	☐	☐		
6.	**Fire Hydrants:** Water flow and pressure are less than CFC minimum.			☒	
6a.	**Acceptable Alternate**: The available flow and pressure is acceptable for providing fire suppression and protection of life and property.	☐	☐		
7.	Location of fire department connection(s) serving fire sprinkler systems or standpipe systems does not meet CFC requirements.			☒	
7a.	**Acceptable Alternate:** The location of fire department connection serving the fire sprinkler system and/or standpipe system is acceptable for providing fire suppression and protection of life and property.	☐	☐		

School District Acceptance of Acceptable Design Alternates

By signing this form, the school district acknowledges and accepts the proposed design as an alternative to California Building Code (CBC) and California Fire Code (CFC) minimum requirements, as indicated by one or more of the conditions indicated at items 4a, 5a, 6a or 7a, for providing fire and life safety protection of life and property.

Accepted by: _____ Title: _____

Signature: _____ Date: _____

LOCAL FIRE AUTHORITY (LFA) INFORMATION	
LFA Agency Name:	LOS ANGELES COUNTY FIRE DEPARTMENT
LFA Review Official:	
Title:	
Work E-mail:	

IDENTIFICATION STAMP
DIV. OF THE STATE ARCHITECT
APP: 03-124281 INC:
REVIEWED FOR
SS ☑ FLS ☑ ACS ☑
DATE: 02/04/2025

ARCHITECT:

architecture westbergwhite
14471 CHAMBERS RD, SUITE 210
TUSTIN, CA 92780
(714) 508-1780 (714) 508-1780 FAX

REGISTERED ARCHITECT JEFF DEBRITS WESTBERG C-11045 EXP.9-2025 STATE OF CALIFORNIA

CONSULTANT:

PROJECT NAME:

Bellflower Unified School District
Mayfair High School Sports Fields
6000 North Woodruff Ave
Lakewood, California 90713

CLIENT:

BELLFLOWER UNIFIED SCHOOL DISTRICT
16703 S. Clark Ave.
BELLFLOWER, CALIFORNIA 90706

Δ	Rev. Date	Description

JOB NO: 15008.01
DATE: 11/13/2024
DRAWN: DC
CHECK: JC
ARCHITECT: PDW
ENGINEER:

SHEET DESCRIPTION:
FIRE SITE ACCESS PLAN

SHEET NO:
F001

ON-SITE IMPROVEMENT PLANS

FOR

MAYFAIR HIGH SCHOOL SPORTS FIELDS

6000 WOODRUFF AVENUE
LAKEWOOD, CA 90713

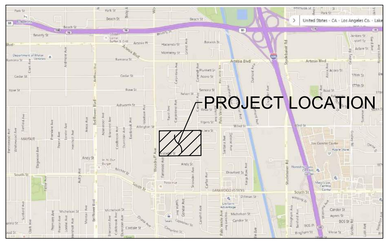

NORTH

VICINITY MAP
N.T.S.

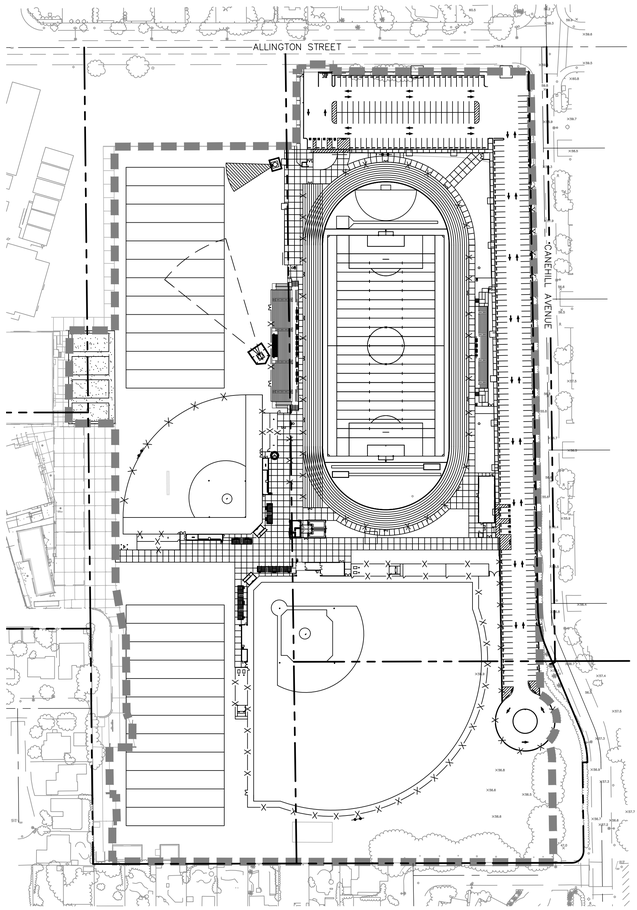

NORTH

GRAPHIC SCALE IN FEET
0 50 100 200
SCALE 1" = 100'
WHEN PRINTED FULL SIZE
30" X 42"



NORTH

CAMPUS MAP
N.T.S.

PROJECT TEAM

OWNER
BELLFLOWER UNIFIED SCHOOL DISTRICT
16703 S CLARK AVENUE
BELLFLOWER, CA 90706
562-866-9011

ARCHITECT
JON COULTER
WESTBERG AND WHITE
14471 CHAMBERS RD, SUITE 210
TUSTIN, CA 92780
714-508-1780

CIVIL ENGINEER
AHMED ZUWAWA, PE
KIMLEY-HORN AND ASSOCIATES, INC.
1100 TOWN & COUNTRY RD, SUITE 700
ORANGE, CA 92868
(714) 939-1030

SURVEYOR
ROBERT SHELLMAN, LS
TERRAMARK SURVEYING, INC
4275 37TH STREET, SUITE 500
SAN DIEGO, CA 92105
619-280-0056

LEGAL DESCRIPTION

BEING PORTIONS OF THE NORTHWEST AND NORTHEAST QUARTERS OF THE SOUTHWEST QUARTER, SECTION 35, TOWNSHIP 3 SOUTH, RANGE 12 WEST OF THE SAN BERNARDINO BASELINE MERIDIAN AS SHOWN LYING WITHIN THE RANCHO LOS COYOTES AS SHOWN ON A MAP MADE BY CAPTAIN CHARLES R. HEALEY FOUND IN BOOK 41819 OR 141 ET. SEQ, A COPY OF WHICH CAN BE FOUND ON FILE AT THE LA COUNTY SURVEYOR'S OFFICE UNDER FILED MAP NO. 16282, DATED SEPTEMBER 24, 1937, SAID PARCELS BRING THE CITY OF LAKEWOOD, COUNTY OF LOS ANGELES, STATE OF CALIFORNIA.

SEE TITLE REPORT FOR FULL PARTICULARS

GEOTECHNICAL REPORT

THE GEOTECHNICAL INVESTIGATION DATED JANUARY 30,2017 PREPARED BY JOHN R. BYERLY INCORPORATED AND ALL ADDENDA SHALL BE CONSIDERED PART OF THESE CONSTRUCTION DOCUMENTS.

BASIS OF BEARING

THE SURVEY AS DEPICTED HEREIN WAS BASED ON FOUND AERIAL TARGETS PROVIDED BY KIMLEY-HORN, SAID SYSTEM PURPORTED TO BE IN TERMS OF NAD83, ZONE 5; HOWEVER, THIS HAS NOT BEEN VERIFIED. THE USE OF SAID AERIAL CONTROL FOR THE BASES OF THIS SURVEY WAS TO KEEP ALL WORK FLOW THE SAME FOR THE DESIGN TEAM PER THEIR REQUEST.

Sheet List Table

Sheet Number	Sheet Title
C000	TITLE SHEET
C001	GENERAL NOTES
C002	EXISTING CONDITIONS
C100	SITE DEMOLITION PLAN
C200	EROSION CONTROL PLAN
C300	OVERALL HORIZONTAL CONTROL PLAN
C301	HORIZONTAL CONTROL PLAN
C302	HORIZONTAL CONTROL PLAN
C303	HORIZONTAL CONTROL PLAN
C304	HORIZONTAL CONTROL PLAN
C305	HORIZONTAL CONTROL PLAN
C306	HORIZONTAL CONTROL PLAN
C307	HORIZONTAL CONTROL PLAN
C308	HORIZONTAL CONTROL PLAN
C309	HORIZONTAL CONTROL PLAN
C400	OVERALL GRADING PLAN
C401	PRECISE GRADING
C402	PRECISE GRADING
C403	PRECISE GRADING
C404	PRECISE GRADING
C405	PRECISE GRADING
C406	PRECISE GRADING
C407	PRECISE GRADING
C408	PRECISE GRADING
C409	PRECISE GRADING
C500	OVERALL STORM DRAIN PLAN
C501	STORM DRAIN PLAN
C502	STORM DRAIN PLAN
C600	OVERALL UTILITY PLAN
C601	UTILITY PLAN
C602	UTILITY PLAN
C700	DETAILS
C701	DETAILS
C702	DETAILS

LEGEND

	PROPERTY LINE
	STREET CENTERLINE
	CIVIL LIMIT OF WORK LINE
GB	GRADE BREAK LINE
R	RIDGE LINE
	FLOW LINE
W	WATER LINE
FW	FIRE WATER LINE
SS	SEWER LINE
SD	STORM DRAIN LINE
49.50 TC 49.00 FS	PROPOSED SPOT GRADE
(49.50 TC) (49.00 FS)	EXISTING SPOT GRADE
2.00%	PROPOSED FLOW (DIRECTION AND SLOPE)

ABBREVIATIONS

AB	– AGGREGATE BASE	INV	– INVERT
AC	– ASPHALT	IRR	– IRRIGATION WATER
AHJ	– AUTHORITY HAVING JURISDICTION	JS	– JUNCTION STRUCTURE
BC	– BACK OF CURB	LP	– LOW POINT
BS	– BOTTOM OF STAIR	MH	– MANHOLE
BLDG	– BUILDING	N	– NORTH
BW	– BACK OF WALK	PCC	– PORTLAND CEMENT CONCRETE
CAB	– COMPACTED AGGREGATE BASE	P/L	– PROPERTY LINE
CB	– CATCH BASIN	PUE	– PUBLIC UTILITY EASEMENT
CF	– CURB FACE	PVC	– POLYVINYL CHLORIDE
C/L	– CENTERLINE	R	– RADIUS OR RIDGE
CONC.	– CONCRETE	RD	– ROOF DRAIN
CONST.	– CONSTRUCT, CONSTRUCTION	RW	– RECLAIMED WATER
CSG	– COMPACTED SUBGRADE	R/W	– RIGHT-OF-WAY
DF	– DEEPENED FOOTING	S	– SEWER OR SOUTH
DI	– DRAIN INLET	SD	– STORM DRAIN
DW	– DOMESTIC WATER	STA	– STATION
E	– EAST	SS	– SANITARY SEWER
EG	– EDGE OF GUTTER	SPPWC	– STANDARD PLANS FOR PUBLIC WORKS CONSTRUCTION
ELEC	– ELECTRIC	SW	– SIDE WALK
EP	– EDGE OF PAVEMENT	T	– TELEPHONE
FF	– FINISHED FLOOR	TC	– TOP OF CURB
FG	– FINISHED GRADE	TP	– TOP OF PAD
FL	– FLOW LINE	TR	– TOP OF RAMP
FS	– FINISHED SURFACE	TS	– TOP OF STAIR
FW	– FIRE WATER	VIF	– VERIFY IN FIELD
G	– GAS	W	– WATER OR WEST
GB	– GRADE BREAK	XXX.XX	– PROPOSED ELEVATION
HP	– HIGH POINT	(XXX.XX)	– EXISTING ELEVATION

ESTIMATED EARHTWORK QUANTITIES

CUT:	10,103	CY
FILL:	20,298	CY
NET:	10,195	CY (FILL)

NOTE: THE ABOVE QUANTITIES ARE APPROXIMATE IN PLACE VOLUMES CALCULATED FROM THE EXISTING GROUND TO THE PROPOSED FINISHED GRADE. EXISTING GROUND IS DEFINED BY THE CONTOURS AND SPOT GRADES ON THE BASE SURVEY.

THE EARTHWORK QUANTITIES ABOVE ARE FOR PERMIT PURPOSES ONLY. THEY HAVE NOT BEEN FACTORED TO ACCOUNT FOR CHANGES IN VOLUME DUE TO BULKING, CLEARING AND GRUBBING, SHRINKAGE, AND CONSTRUCTION METHODS. THE CONTRACTOR SHALL RELY ON THEIR OWN EARTHWORK ESTIMATES FOR BIDDING PURPOSES.

DIGALERT
DIAL BEFORE YOU DIG
TWO WORKING DAYS BEFORE YOU DIG
TOLL FREE 1-800-227-2600
A PUBLIC SERVICE BY UNDERGROUND SERVICE ALERT

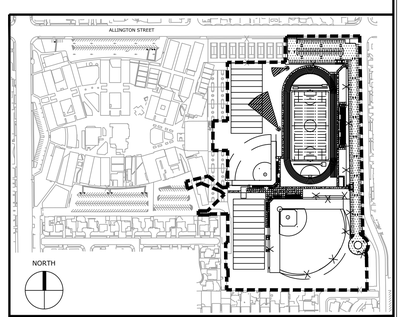

KEYMAP

IDENTIFICATION STAMP
DIV. OF THE STATE ARCHITECT
APP: 03-124281 INC:
REVIEWED FOR
SS ☑ FLS ☑ ACS ☑
DATE: 02/04/2025

ARCHITECT:
architecture
westbergwhite
14471 Chambers Rd, Suite 210
Tustin, CA 92780
714.508.1780
714.508.1780 Fax

1775 Hancock St, Suite 120
San Diego, CA 92110
619.542.1188
619.542.1663 Fax

CONSULTANT:
Kimley»Horn

© 2018 KIMLEY-HORN AND ASSOCIATES, INC.

765 THE CITY DRIVE, SUITE 200, ORANGE, CA 92868
PHONE: 714-939-1030 FAX: 714-938-9488
WWW.KIMLEY-HORN.COM

REGISTERED PROFESSIONAL ENGINEER
AHMED ZUWAWA
No. RCE NO. 92050
CIVIL
STATE OF CALIFORNIA

PROJECT NAME:

Bellflower Unified School District
Mayfair High School Sports Fields
6000 North Woodruff Ave
Lakewood, California 90713

CLIENT:

BELLFLOWER UNIFIED SCHOOL DISTRICT
16703 S. Clark Ave.
BELLFLOWER, CALIFORNIA 90706

Rev.	Date	Description

JOB NO:	15008.01
DATE:	11/13/2024
DRAWN:	CC
CHECK:	IV
ARCHITECT:	PDW
ENGINEER:	AZ

SHEET DESCRIPTION:

TITLE SHEET

SHEET NO:

C000

K:\ORA_IDEV\094842008 – mayfair high school\CAD\plansheets\Field\C000 TITLE SHEET.dwg Jan 13, 2025 – 3:55pm Isabella.Valbuena

CAUTION

1. THE LOCATIONS, SIZES AND/OR DEPTHS OF EXISTING UNDERGROUND UTILITIES AS SHOWN ON THIS PLAN WERE OBTAINED FROM SOURCES OF VARYING RELIABILITY. THE CONTRACTOR IS CAUTIONED THAT ONLY ACTUAL EXCAVATION WILL REVEAL THE TYPES, EXTENT, SIZES, LOCATIONS AND DEPTHS OF SUCH UNDERGROUND UTILITIES. (A REASONABLE EFFORT HAS BEEN MADE TO LOCATE AND DELINEATE ALL KNOWN UNDERGROUND UTILITIES). CONTRACTOR SHALL VERIFY LOCATION AND DEPTH PRIOR TO ANY EXCAVATION OR IMPROVEMENT.
2. CONTRACTOR SHALL CONTACT UNDERGROUND SERVICE ALERT FOR LOCATION OF UNDERGROUND UTILITIES AT LEAST 48 HOURS PRIOR TO COMMENCEMENT OF CONSTRUCTION– PHONE (800) 642–2444. CONTRACTOR SHALL VERIFY ALL EXISTING UTILITIES PRIOR TO BEGINNING ANY WORK ON THIS SITE.
3. THESE DRAWINGS DO NOT ADDRESS CONTRACTOR MEANS, METHODS OR PROCESSES THAT MAY BE ASSOCIATED WITH ANY TOXIC SOILS IF FOUND ON SITE. THE CONTRACTOR IS RESPONSIBLE FOR COMPLYING WITH ALL CITY, COUNTY AND STATE STANDARDS AND APPROPRIATE REGULATIONS IF TOXIC SOILS ARE ENCOUNTERED. CONTRACTOR MUST NOTIFY THE PROJECT MANAGER IMMEDIATELY IF ANY SOILS ARE EVEN SUSPECTED OF BEING CONTAMINATED.

GENERAL NOTES:

1. CONTRACTOR SHALL VISIT THE SITE PRIOR TO BIDDING ON THIS WORK AND CONSIDER THE EXISTING CONDITIONS AND SITE CONSTRAINTS IN THE BID. CONTRACTOR SHALL BE IN THE POSSESSION OF AND FAMILIAR WITH ALL APPLICABLE GOVERNING AGENCIES STANDARD DETAILS AND SPECIFICATIONS PRIOR TO SUBMITTING OF A BID.
2. ALL WORK ON–SITE AND IN THE PUBLIC RIGHT–OF–WAY SHALL CONFORM TO ALL APPLICABLE GOVERNING AGENCIES STANDARD DETAILS & SPECIFICATIONS.
3. PRIOR TO BEGINNING WORK AND AFTER INITIAL HORIZONTAL CONTROL STAKING, CONTRACTOR SHALL FIELD CHECK ALL JOIN ELEVATIONS AND REPORT ANY DISCREPANCIES GREATER THAN 0.05' FOR FINISHED GRADE OR 0.02' FOR FINISHED SURFACE IN ADA AREAS TO CIVIL ENGINEER.
4. DAMAGE TO ANY EXISTING SITE IMPROVEMENTS, UTILITIES AND/OR SERVICES TO REMAIN SHALL BE RESPONSIBILITY OF THE CONTRACTOR. CONTRACTOR SHALL REPAIR AND/OR REPLACE IN KIND AT NO COST TO THE OWNER.
5. CONTRACTOR SHALL REPLACE ALL STRUCTURES AND GRATE LIDS FOR VAULTS, CATCH BASINS, ETC., WITHIN TRAFFIC ACCESSIBLE AREAS WITH STRUCTURES AND LIDS RATED FOR HS20–44 LOADING AND MARKED AS SUCH.
6. THE CONTRACTOR SHALL ADJUST TO FINAL GRADE ALL EXISTING AND/OR NEW MANHOLES, CURB INLETS, CATCH BASINS, VALVES, MONUMENT COVERS, AND OTHER CASTINGS WITHIN THE WORK AREA TO FINAL GRADE IN PAVEMENT AND LANDSCAPE AREAS UNLESS NOTED OTHERWISE.
7. CONTRACTOR AGREES THAT HE SHALL ASSUME SOLE AND COMPLETE RESPONSIBILITY FOR JOB SITE CONDITIONS DURING THE COURSE OF CONSTRUCTION OF THIS PROJECT INCLUDING SAFETY OF ALL PERSONS AND PROPERTY THAT THIS REQUIREMENT SHALL APPLY CONTINUOUSLY AND NOT BE LIMITED TO NORMAL WORKING HOURS AND THAT THE CONTRACTOR SHALL DEFEND INDEMNIFY AND HOLD THE DISTRICT AND THE CONSULTING ENGINEER HARMLESS FROM ANY AND ALL LIABILITY, REAL OR ALLEGED, IN CONNECTION WITH THE PERFORMANCE OF WORK ON THIS PROJECT, EXCEPTING FOR LIABILITY ARISING FROM THE SOLE NEGLIGENCE OF THE DISTRICT OR THE CONSULTING ENGINEER.
8. THE DISTRICT AND CONTRACTOR SHALL BE RESPONSIBLE AND SHALL TAKE NECESSARY PRECAUTIONS TO PREVENT PUBLIC TRESPASS ONTO AREAS WHERE IMPOUNDED WATER CREATES A HAZARDOUS CONDITION.
9. EXISTING PEDESTRIAN WALKWAYS, BIKE PATHS AND ACCESSIBLE PATHWAYS SHALL BE MAINTAINED, WHERE FEASIBLE, DURING CONSTRUCTION.
10. IF A CONFLICT ARISES BETWEEN THE SPECIFICATIONS AND THE PLAN NOTES, THE MORE STRINGENT REQUIREMENT SHALL GOVERN.
11. ALL WORK SHALL BE PERFORMED IN ACCORDANCE WITH THE GEOTECHNICAL REPORT BY JOHN R. BYERLY INC. DATED JANUARY 30, 2017.

TREE/PLAN PROTECTION NOTES:

1. PRIOR TO BEGINNING CONSTRUCTION ON SITE, CONTRACTOR SHALL IDENTIFY AND PROTECT EXISTING TREES AND PLANTS DESIGNATED AS TO REMAIN.
2. PROVIDE 6 FOOT TALL TREE PROTECTION FENCE WITH DISTINCTIVE MARKING VISIBLE TO CONSTRUCTION EQUIPMENT, ENCLOSING DRIP LINES OF TREES DESIGNATED TO REMAIN.
3. WORK REQUIRED WITHIN FENCE LINE SHALL BE HELD TO A MINIMUM, AVOID UNNECESSARY MOVEMENT OF HEAVY EQUIPMENT WITHIN FENCED AREA AND DO NOT PARK VEHICLES WITH IDLE RUNNING ENGINES UNDER DRIP LINE OF TREES.
4. CONSULT WITH THE PROJECT MANAGER PRIOR TO REMOVING ROOTS AND BRANCHES LARGER THAN 2" IN DIAMETER OF TREES OR PLANTS THAT ARE TO REMAIN.
5. ANY GRADE CHANGES GREATER THAN 6" WITHIN THE DRIPLINE OF EXISTING TREES SHALL NOT BE MADE WITHOUT FIRST CONSULTING THE LANDSCAPE ARCHITECT/CIVIL ENGINEER.
6. PROTECT EXISTING TREES TO REMAIN FROM SPILLED CHEMICALS, FUEL OIL, MOTOR OIL, GASOLINE AND ALL OTHER CHEMICALLY INJURIOUS MATERIAL; AS WELL AS FROM PUDDLING OR CONTINUOUSLY RUNNING WATER. SHOULD A SPILL OCCUR, STOP WORK IN THAT AREA AND CONTACT THE CITY'S ENGINEER/INSPECTOR IMMEDIATELY. CONTRACTOR SHALL BE RESPONSIBLE TO MITIGATE DAMAGE FROM SPILLED MATERIAL AS WELL AS MATERIAL CLEAN UP, AT NOT COST TO THE OWNER.
7. PROVIDE TEMPORARY IRRIGATION TO ALL TREES AND PLANTS THAT ARE IN OR ADJACENT TO CONSTRUCTION AREAS WHERE EXISTING IRRIGATION SYSTEMS MAY BE AFFECTED BY THE CONSTRUCTION. ALSO PROVIDE TEMPORARY IRRIGATION TO RELOCATED TREES.
8. CONTRACTOR SHALL BE RESPONSIBLE FOR ONGOING MAINTENANCE OF ALL TREES DESIGNATED TO REMAIN AND FOR MAINTENANCE OF RELOCATED TREES STOCKPILED DURING CONSTRUCTION. CONTRACTOR WILL BE REQUIRED TO REPLACE TREES THAT DIE DUE TO LACK OF MAINTENANCE.

PAVEMENT SECTION:

1. SEE SHEET C700 FOR ALL PAVEMENT SECTIONS.
2. SEE STRUCTURAL DRAWINGS FOR BUILDING SLAB SECTIONS AND PAD PREPARATIONS.
3. SEE SHEETS C300–C308 FOR ALL VEHICULAR PAVEMENT SECTIONS AND FOR LOCATION OF PAVEMENT SECTIONS.
4. SEE SHEET C700 FOR FLATWORK SECTIONS AND BASE REQUIREMENTS.
5. EXISTING PAVEMENT SHALL BE TACK COATED PRIOR TO CONSTRUCTING NEW PAVEMENT.
6. THE FINAL OR SURFACE LAYER OF ASPHALT CONCRETE SHALL NOT BE PLACED UNTIL ALL ON–SITE IMPROVEMENTS HAVE BEEN COMPLETED, INCLUDING ALL GRADING, AND ALL UNACCEPTABLE CONCRETE WORK HAS BEEN REMOVED AND REPLACED, UNLESS OTHERWISE APPROVED BY THE CITY ENGINEER AND/OR DEVELOPER'S CIVIL ENGINEER.
7. EXISTING ASPHALT CONCRETE IN PARKING LOT TO BE REMOVED IN ACCORDANCE WITH THE DEMOLITION PLAN. SCRAPE OFF BASE ROCK AND STOCKPILE FOR RE–USE AS GENERAL FILL IN NEW PAVEMENT SECTION IF APPROVED BY GEOTECHNICAL ENGINEER.
8. ALL PAVING SHALL BE IN CONFORMANCE WITH SECTION 26 "AGGREGATE BASE" AND SECTION 39 "ASPHALT CONCRETE" PER LATEST EDITION OF CALTRANS STANDARD SPECIFICATIONS.

RECORD DRAWINGS:

1. THE CONTRACTOR SHALL KEEP A COMPLETE UP–TO–DATE AND ACCURATE RECORD SET OF PRINTS OF THE CONTRACT DRAWINGS SHOWING EVERY CHANGE FROM THE ORIGINAL DRAWINGS MADE DURING THE COURSE OF CONSTRUCTION INCLUDING EXACT FINAL LOCATION, ELEVATION, SIZES, MATERIALS, AND DESCRIPTION OF ALL WORK. RECORDS SHALL BE "REDLINED" ON A SET OF CONSTRUCTION PLAN DRAWINGS. A COMPLETE SET OF CORRECTED AND COMPLETED RECORD DRAWING PRINTS SHALL BE SUBMITTED TO THE DISTRICT AND DISTRICT'S CIVIL ENGINEER PRIOR TO FINAL ACCEPTANCE FOR REVIEW AND APPROVAL BY THE DISTRICT.

SITE MAINTENANCE (BY CONTRACTOR):

1. GATHER ALL CONSTRUCTION DEBRIS ON A REGULAR BASIS AND PLACE IT IN A DUMPSTER OR OTHER CONTAINER WHICH IS EMPTIED OR REMOVED ON A REGULAR BASIS. WHEN APPROPRIATE, USE TARPS ON THE GROUND TO COLLECT FALLEN DEBRIS OR SPLATTERS THAT COULD CONTRIBUTE TO STORM WATER RUNOFF POLLUTION.
2. REMOVE ALL DIRT, GRAVEL, RUBBISH, REFUSE, AND GREEN WASTE FROM STREET PAVEMENT AND STORM DRAINS ADJOINING THE SITE. LIMIT CONSTRUCTION ACCESS ROUTES ONTO THE SITE AND PLACE GRAVEL PADS AT THESE LOCATIONS. DO NOT DRIVE VEHICLES AND EQUIPMENT OFF THE PAVED OR GRAVELED AREAS DURING WET WEATHER.
3. SWEEP OR VACUUM THE STREET PAVEMENT AND SIDEWALKS ADJOINING THE PROJECT SITE AND THE ON–SITE PAVED AREAS ON A DAILY BASIS. SCRAPE CAKED–ON MUD AND DIRT FROM THESE AREAS BEFORE SWEEPING. CORNERS AND HARD TO REACH AREAS SHALL BE SWEPT MANUALLY.
4. IF THE STREETS, SIDEWALKS AND/OR PARKING LOT ARE PRESSURE WASHED, DEBRIS MUST BE TRAPPED AND COLLECTED TO PREVENT ENTRY INTO THE STORM DRAIN SYSTEM. NO CLEANING AGENT MAY BE DISCHARGED INTO THE STORM DRAIN. IF ANY CLEANING AGENT OR DEGREASER IS USED, WASH WATER MUST BE COLLECTED AND DISCHARGED TO THE SANITARY SEWER, SUBJECT TO THE APPROVAL OF THE PROJECT MANAGER, OR OTHERWISE DISPOSED OF THROUGH APPROVED DISPOSAL METHODS.
5. CREATE A CONTAINED AND COVERED AREA ON THE SITE FOR THE STORAGE OF BAGS, CEMENT, PAINTS, OILS, FERTILIZERS, PESTICIDES, OR OTHER MATERIALS USED ON THE SITE THAT HAVE THE POTENTIAL OF BEING DISCHARGED INTO THE STORM DRAIN SYSTEM THROUGH EITHER BEING WIND–BLOWN OR IN THE EVENT OF A MATERIAL SPILL.
6. NEVER CLEAN MACHINERY, EQUIPMENT OR TOOLS INTO A STREET, GUTTER OR STORM DRAIN.
7. ENSURE THAT CEMENT TRUCKS, PAINTERS, OR STUCCO/PLASTER FINISHING CONTRACTORS DO NOT DISCHARGE WASH WATER FROM EQUIPMENT, TOOLS OR RINSE CONTAINERS INTO GUTTERS OR DRAINS.
8. UPON PROJECT COMPLETION THE DISTRICT SHALL BE SOLELY RESPONSIBLE TO ROUTINELY INSPECT AND MAINTAIN ALL ON–SITE STORM DRAIN FACILITIES. STORM DRAIN SYSTEM SHALL BE CLEANED AND/OR FLUSHED ON A BIANNUAL BASIS OR AS FOUND NECESSARY.
9. PREVENT DUST FROM LEAVING THE SITE AND ACCUMULATING ON ADJACENT AREAS AS REQUIRED IN THE DUST CONTROL NOTES ON THIS SHEET.
10. PREVENT SEDIMENT LADEN STORM RUN–OFF FROM LEAVING THE SITE OR ENTERING STORM DRAIN OR SANITARY SEWER SYSTEMS AS REQUIRED IN THE EROSION AND SEDIMENTATION CONTROL NOTES ON THIS SHEET.
11. MAINTAIN EXISTING TREES AND PLANTS THAT ARE TO REMAIN AS REQUIRED BY THE TREE AND PLANT PROTECTION NOTES ON THIS SHEET.

NPDES REQUIREMENTS (BY CONTRACTOR):

1. ALL CONSTRUCTION OF OFF–SITE OR ON–SITE IMPROVEMENTS SHALL ADHERE TO NPDES (NATIONAL POLLUTION DISCHARGE ELIMINATION SYSTEM) BEST MANAGEMENT PRACTICES TO PREVENT DELETERIOUS MATERIALS OR POLLUTANTS FROM ENTERING THE CITY OR COUNTY STORM DRAIN SYSTEMS.
2. ERODED SEDIMENTS AND OTHER POLLUTANTS MUST BE RETAINED ON SITE AND MAY NOT BE TRANSPORTED FROM THE SITE VIA SHEET FLOW, SWALES, AREA DRAINS, NATURAL DRAINAGE COURSES, OR WIND.
3. STOCKPILES OF EARTH AND OTHER CONSTRUCTION RELATED MATERIALS MUST BE PROTECTED FROM BEING TRANSPORTED FROM THE SITE BY THE FORCES OF WIND OR WATER.
4. FUELS, OILS, SOLVENTS, AND OTHER TOXIC MATERIALS MUST BE STORED IN ACCORDANCE WITH THEIR LISTING AND ARE NOT TO CONTAMINATE THE SOIL AND SURFACE WATERS. ALL APPROVED STORAGE CONTAINERS ARE TO BE PROTECTED FROM THE WEATHER. SPILLS MUST BE CLEANED UP IMMEDIATELY AND DISPOSED OF IN A PROPER MANNER. SPILLS MAY NOT BE WASHED INTO THE DRAINAGE SYSTEM.
5. EXCESS OR WASTE CONCRETE MAY NOT BE WASHED INTO THE PUBLIC RIGHT–OF–WAY OR ANY OTHER DRAINAGE SYSTEM. PROVISIONS SHALL BE MADE TO RETAIN CONCRETE WASTES ON SITE UNTIL THEY CAN BE DISPOSED OF AS SOLID WASTE.
6. TRASH AND CONSTRUCTION RELATED SOLID WASTES MUST BE DEPOSITED INTO A COVERED RECEPTACLE TO PREVENT CONTAMINATION AND DISPERSAL BY WIND.
7. SEDIMENTS AND OTHER MATERIALS MAY NOT BE TRACKED FROM THE SITE BY VEHICLE TRAFFIC. THE CONSTRUCTION ENTRANCE ROADWAYS MUST BE STABILIZED SO AS TO INHIBIT SEDIMENTS FROM BEING DEPOSITED INTO THE PUBLIC RIGHT–OF–WAY. ACCIDENTAL DEPOSITIONS MUST BE SWEPT UP IMMEDIATELY AND MAY NOT BE WASHED DOWN BY RAIN OR OTHER MEANS.
8. ANY SLOPES WITH DISTURBED SOILS OR DENUDED OF VEGETATION MUST BE STABILIZED SO AS TO INHIBIT EROSION BY WIND AND WATER.
9. CLEAN UP ALL SPILLS USING DRY METHODS.
10. SWEEP ALL GUTTERS AT THE END OF EACH WORKING DAY. GUTTERS SHALL BE KEPT CLEAN AFTER LEAVING CONSTRUCTION SITE.
11. CALL 911 IN CASE OF A HAZARDOUS SPILL.
12. BMP'S AS OUTLINED IN, BUT NOT LIMITED TO, CALIFORNIA STORM WATER QUALITY TASK FORCE, SACRAMENTO, CALIFORNIA, JANUARY 2009, OR THE LATEST REVISED EDITION, MAY APPLY DURING THE CONSTRUCTION OF THIS PROJECT (ADDITIONAL MEASURES MAY BE REQUIRED IF DEEMED APPROPRIATE BY THE INSPECTORS).
13. UPON SATISFACTORY COMPLETION OF THE WORK, THE ENTIRE WORK SITE SHALL BE CLEANED BY THE CONTRACTOR AND LEFT WITH A SMOOTH AND NEATLY GRADED SURFACE FREE OF CONSTRUCTION WASTE, RUBBISH, AND DEBRIS OF ANY NATURE.

FIRE PROTECTION NOTES:

1. APPROVED DRAWINGS SHALL BE OBTAINED FROM THE LOCAL FIRE MARSHAL, THE RATING AGENCY AND THE DISTRICT, ALLOWING TIME FOR REVIEW AND ACCEPTANCE, PRIOR TO START OF WORK.
2. THE UNDERGROUND FIRE PROTECTION SYSTEM INSTALLER SHALL OBTAIN ALL APPROVED PLANS AND PERMITS PRIOR TO ORDERING MATERIALS, FABRICATING SYSTEMS OR ANY INSTALLATION.
3. GENERAL CONTRACTOR IS RESPONSIBLE FOR VERIFICATION OF ALL DIMENSIONS AND EQUIPMENT LOCATIONS. RISER LOCATIONS ARE SHOWN ON ARCHITECTURAL AND PLUMBING DRAWINGS AND ARE TO BE COORDINATED WITH ACTUAL FIELD CONDITIONS.
4. INSTALL MONITORED TAMPER SWITCHES AT ALL POST INDICATOR VALVES AND VALVES ON BACKFLOW ASSEMBLIES, INCLUDING CONDUIT AND CONNECTION TO FIRE MAIN CONTROL PANEL.
5. PER CALIFORNIA FIRE CODE CHAPTER 14, FIRE DISTRICT APPROVED ACCESS AND WATER SUPPLY MUST BE INSTALLED AND IN PLACE BEFORE AND COMBUSTIBLE MATERIALS ARE PLACED AT THE CONSTRUCTION SITE.
6. THE CONTRACTOR SHALL PROVIDE SHOP DRAWINGS FOR APPROVAL FOR ANY CHANGES TO THE FIRE PROTECTION LINE AND FOR CONTINUATION OF THE FIRE PROTECTION LINE BEYOND THE CIVIL POINT OF TERMINATION.
7. CONTRACTOR TO USE CATHODIC PROTECTION FOR ALL UNDERGROUND FIRE PROTECTION SYSTEMS IF RECOMMENDED BY THE GEOTECHNICAL REPORT. FINAL LOCATION OF ANODES AND TEST STATIONS SHALL BE COORDINATED WITH ARCHITECT/ENGINEER. CONTRACTOR MAY ASSUME THAT THE TEST STATIONS WILL BE WITHIN 10 FEET OF THE FITTING/ITEM BEING CONNECTED TO.

EROSION CONTROL NOTES:

1. EROSION CONTROL MEASURES ARE INTENDED TO PREVENT SEDIMENT AND DEBRIS FROM ENTERING THE CITY STORM DRAIN SYSTEM, SANITARY SEWER SYSTEM OR FROM LEAVING THE SITE. THE CONTRACTOR SHALL MAKE ADJUSTMENTS IN THE FIELD TO MAKE SURE THAT THIS CONCEPT IS CARRIED OUT.
2. EROSION CONTROL FACILITIES AND MEASURES ARE TO BE INSTALLED AND OPERABLE YEAR–ROUND THROUGHOUT CONSTRUCTION, AND SHALL CONTINUE IN EFFECT UNTIL INSTALLATION OF THE PERMANENT SITE IMPROVEMENTS.
3. CONTRACTOR SHALL ASSUME THE CONCEPTS ON THE EROSION CONTROL PLAN, IF PROVIDED, ARE SCHEMATIC MINIMUM REQUIREMENTS. CONTRACTOR IS RESPONSIBLE FOR THE EXACT DESIGN AND EXTENT OF THE EROSION CONTROL SYSTEM SO THAT IT WORKS WITH THE CONTRACTOR'S INTENDED USE AND MANAGEMENT OF THE CONSTRUCTION SITE.
4. ALL EROSION CONTROL FACILITIES SHALL BE INSPECTED BY THE CONTRACTOR AND REPAIRED, AS REQUIRED, AT THE CONCLUSION OF EACH WORKING DAY. THE CONTRACTOR SHALL INSPECT THE EROSION CONTROL FACILITIES AND MAKE NECESSARY REPAIRS PRIOR TO ANTICIPATED STORMS AND AT REASONABLE INTERVALS DURING STORMS OF EXTENDED DURATION. REPAIRS TO DAMAGED FACILITIES SHALL BE MADE IMMEDIATELY UPON DISCOVERY.
5. AS SOON AS PRACTICAL FOLLOWING EACH STORM, THE CONTRACTOR SHALL REMOVE ANY ACCUMULATION OF SILT OR DEBRIS FROM THE EROSION CONTROL SEDIMENT BASINS AND SHALL CLEAR THE OUTLET PIPES OF ANY BLOCKAGE.
6. STOCKPILED MATERIAL SHALL BE COVERED WITH VISQUEEN OR A TARPAULIN UNTIL THE MATERIAL IS REMOVED FROM THE SITE. ANY REMAINING BARE SOIL THAT EXISTS AFTER THE STOCKPILE HAS BEEN REMOVED SHALL BE COVERED UNTIL A NATURAL GROUND COVER IS ESTABLISHED OR IT MAY BE SEEDED OR PLANTED TO PROVIDE GROUND COVER.
7. PRIOR TO THE COMMENCEMENT OF ANY CLEARING, GRADING, OR EXCAVATION, THE CONTRACTOR SHALL VERIFY THAT THE DISTRICT HAS SUBMITTED TO THE STATE WATER RESOURCES CONTROL BOARD A NOTICE OF INTENT (NOI) FOR COVERAGE UNDER THE STATE CONSTRUCTION STORM WATER GENERAL PERMIT, IF REQUIRED BY THE STATE. THE CONTRACTOR SHALL MAINTAIN A COPY OF THE NOI ON THE CONSTRUCTION SITE.
8. NECESSARY MATERIALS SHALL BE AVAILABLE ON SITE AND STOCKPILED AT CONVENIENT LOCATIONS TO FACILITATE RAPID CONSTRUCTION OF TEMPORARY DEVICES WHEN RAIN IS IMMINENT.
9. EROSION CONTROL DEVICES SHALL NOT BE MOVED OR MODIFIED WITHOUT THE APPROVAL OF THE DISTRICT.
10. ALL REMOVABLE EROSION PROTECTIVE DEVICES SHALL BE IN PLACE AT THE END OF EACH WORKING DAY WHEN THE 5–DAY RAIN PROBABILITY FORECAST EXCEEDS 40%.
11. AFTER A RAINSTORM, ALL SILT AND DEBRIS SHALL BE REMOVED FROM STREETS, CHECK BERMS AND BASINS.
12. GRADED AREAS ON THE PERMITTED AREA PERIMETER MUST DRAIN AWAY FROM THE FACE OF SLOPES AT THE CONCLUSION OF EACH WORKING DAY. DRAINAGE IS TO BE DIRECTED TOWARD DESILTING FACILITIES.
13. THE CONTRACTOR SHALL INSPECT THE EROSION CONTROL WORK AND INSURE THAT THE WORK IS IN ACCORDANCE WITH APPROVED PLANS.
14. PROTECT ADJACENT PROPERTIES AND UNDISTURBED AREAS FROM CONSTRUCTION IMPACTS USING VEGETATIVE BUFFER STRIPS, SEDIMENT BARRIERS OR FILTERS, DIKES, MULCHING OR OTHER MEASURES AS APPROPRIATE.
15. CONTRACTOR SHALL MAINTAIN ADJACENT STREETS IN A NEAT, CLEAN, DUST FREE AND SANITARY CONDITION AT ALL TIMES AND TO THE SATISFACTION OF THE CITY INSPECTOR. THE ADJACENT STREET SHALL BE KEPT CLEAN OF DEBRIS, WITH DUST AND OTHER NUISANCE BEING CONTROLLED AT ALL TIMES. DEVELOPER SHALL BE RESPONSIBLE FOR ANY CLEAN UP ON ADJACENT STREETS AFFECTED BY THEIR CONSTRUCTION, METHOD OF STREET CLEANING SHALL BE BY DRY SWEEPING OF ALL PAVED AREAS. NO STOCKPILING OF BUILDING MATERIALS WITHIN THE CITY'S RIGHT–OF–WAY IS PERMITTED.
16. ALL EROSION CONTROL MATERIALS SHALL BE FURNISHED AND INSTALLED BY CONTRACTOR UNLESS OTHERWISE NOTED.
17. CONTRACTOR SHALL BE RESPONSIBLE FOR IMPLEMENTING AND MAINTAINING EROSION CONTROLS, SEDIMENT CONTROLS AND ALL OTHER BEST MANAGEMENT PRACTICES (BMP'S) THROUGH OUT THE DURATION OF CONSTRUCTION, AS OUTLINED IN THE PROJECT SWPPP AND AS DIRECTED BY THE PROJECT QUALIFIED SWPPP PRACTITIONER (QSP), WHO SHALL BE HIRED SEPARATELY BY THE DISTRICT.

CONSTRUCTION FENCE NOTES:

1. CONTRACTOR SHALL PROVIDE A CONSTRUCTION FENCE AROUND THE ENTIRE AREA OF DEMOLITION AND CONSTRUCTION, INCLUDING ALL STAGING, STORAGE, CONSTRUCTION OFFICE AND LAYDOWN AREAS.
2. FENCE LOCATION MAY BE ADJUSTED FROM TIME TO TIME AS CONSTRUCTION PROCEEDS TO EXCLUDE SOME AREAS WHERE CONSTRUCTION WORK IS NOT BEING DONE AND THE AREA IS NOT OBJECTIONABLE IN VISUAL APPEARANCE.
3. CONSTRUCTION FENCE SHALL BE A MINIMUM OF A 6' HIGH GALVANIZED CHAIN LINK WITH GREEN WINDSCREEN FABRIC ON THE OUTSIDE OF THE FENCE.
4. CONTRACTOR SHALL REPLACE THE GREEN FABRIC AT SUCH A TIME AS IT BECOMES TATTERED AND UNSIGHTLY DUE TO WIND OR CONSTRUCTION ACTIVITY.
5. CONSTRUCTION FENCE ADDRESSED IN THESE NOTES IS ONLY FOR VISUAL CONFORMANCE OF THIS CONSTRUCTION SITE TO THE CITY STANDARDS. CONTRACTOR MAY BE REQUIRED TO PROVIDE ADDITIONAL FENCING, BARRICADES OR OTHER SAFETY DEVICES TO KEEP THE SITE SECURE AND SAFE.

UNDERGROUND PIPING FOR PRIVATE HYDRANTS AND SPRINKLERS NOTES:

1. PRIOR TO INSTALLATION, ALL PLANS AND SPECIFICATION SHALL BE APPROVED BY DSA. REFER TO DSA IR A–25 FOR DESIGN, INSTALLATION AND MAINTENANCE GENERAL REQUIREMENTS.
2. INSPECTIONS ARE REQUIRED: 1) PRIOR TO POURING THRUST BLOCKS, 2) FOR HYDROSTATIC TESTING, AND 3) FOR FLUSH
3. INSTALLATION, INSPECTION, AND TESTING SHALL CONFORM TO 2016 NFPA 13 AND 2016 NFPA 24.
4. PRIVATE FIRE HYDRANTS SHALL BE APPROVED WET BARREL STYLE WITH A MINIMUM OF TWO 2½" AND ONE 4" OUTLET. THE 4" OUTLET SHALL FACE THE FIRE DEPARTMENT ACCESS ROAD. ALL OUTLETS SHALL BE PROVIDED WITH NATIONAL STANDARD THREADS (NST). NFPA 24, 7.1.1.2.
5. FIRE HYDRANT SUPPLY PIPING SHALL BE A MINIMUM OF 6" IN DIAMETER. THE CENTER OF THE HOSE OUTLET SHALL BE NOT LESS THAN 18" ABOVE FINAL GRADE OR, WHERE LOCATED IN A HOSE HOUSE. 12" ABOVE THE FLOOR. NFPA 24, 7.1.1 & 7.3.3.
6. FIRE HYDRANTS SHALL BE A MINIMUM OF 40 FEET FROM ALL STRUCTURES. NFPA 24, 7.2.3.
7. A KEYED GATE VALVE SHALL BE PROVIDED FOR EACH HYDRANT IN AN ACCESSIBLE LOCATION. VALVES SHALL NOT BE LOCATED IN PARKING STALLS. NFPA 24, 7.1.1.1.
8. ALL PIPING SHALL BE LISTED FOR USE IN FIRE PROTECTION SERVICE AND COMPLY WITH AWWA STANDARDS (CLASS 150 MINIMUM) CLASS 200 PIPE SHALL BE USED WHERE THE PRESSURE MAY EXCEED 150 PSI. NFPA 24, 10.1.1.
9. ALL BOLTED JOINTS SHALL BE CLEANED AND THOROUGHLY COATED WITH ASPHALT OR OTHER CORROSION RETARDING MATERIAL AFTER INSTALLATION. NFPA 24, 10.4.1.1.
10. BACKFILL SHALL BE WELL TAMPED LAYERS TO CONSIST OF 6" MINIMUM BED OF CLEAN FILL SAND OR PEA GRAVEL BELOW AND 12" ABOVE THE PIPE (TOTAL 18" MINIMUM). NFPA 24, 10.9.1.
11. FITTINGS SHALL BE OF AN APPROVED TYPE. NFPA 24, 10.2.1.
12. A MINIMUM OF 40" OF COVER FROM FINISH GRADE TO THE TOP OF THE PIPE SHALL BE PROVIDED. WHEN SURFACE LOADS ARE EXPECTED, A MINIMUM OF 36" COVER SHALL BE PROVIDED. NFPA 24, 10.4.2.2.2&3
13. THRUST BLOCKS, OR OTHER APPROVED METHOD OF THRUST RESTRAINT, SHALL BE PROVIDED WHEREVER PIPE CHANGES DIRECTION. BACK–FILL BETWEEN THE JOINTS TO PREVENT MOMENT OF THE PIPE. PROVIDE DETAILS AND CALCULATIONS FOR SIZING THRUST BLOCKS BASE ON ACTUAL SOIL CONDITIONS. NFPA 24, 10.6.
14. A HYDROSTATIC TEST (200 PSI FOR TWO HOURS OR 50 PSI OVER MAXIMUM STATIC PRESSURE, WHICHEVER IS GREATER) SHALL BE PERFORMED. NFPA 24, 10.10.2.2.1.
15. THE SYSTEM SHALL BE THOROUGHLY FLUSHED BEFORE CONNECTION IS MADE TO OVERHEAD PIPING. FLOW SHALL BE THROUGH A MINIMUM OF A 4" HOSE OF PIPE. MFPA 24, 10.10.2.1.
16. ALL CONTROL VALVES SHALL BE LOCKED IN THE OPEN POSITION. VALVES SHALL BE MONITORED IF THEY SERVE 6 OR MORE SPRINKLER HEADS. CBC/CFC 903.4.
17. ALL CONTROL VALVES SHALL BE LISTED INDICATING TYPE UNLESS A NON–INDICATING VALVE, SUCH AS AN UNDERGROUND GATE VALVE WITH APPROVED ROADWAY BOX COMPLETE WITH T–WRENCH, IS ACCEPTABLE TO AUTHORITY HAVING JURISDICTION (AHJ). NFPA 24, 6.1.1.
18. POST INDICATING VALVES (PIV) SHALL BE TESTED TO INSURE THAT THE "TARGETS" (OPEN,CLOSED) ARE CLEARLY IDENTIFIED WHEN VALVE IS OPENED AND CLOSED. NFPA 24, 10.10.1& 14.1.
19. TESTS SHALL BE MADE BY THE INSTALLING CONTRACTOR IN THE PRESSENCE OF THE (AHJ). PROVIDE A COMPLETED CONTRACTOR'S MATERIAL AND TEST CERTIFICATE FOR UNDERGROUND PIPING TO DSA. NFPA 24, 10.10.1& 14.1, CFC 901.5&6

GENERAL UTILITY SYSTEM NOTES:

1. ALL TRENCHES SHALL BE BACK FILLED PER THE SPECIFICATIONS WITH APPROPRIATE TESTS BY THE GEOTECHNICAL ENGINEER TO VERIFY COMPACTION VALUES.
2. CLEAN OUTS, CATCH BASINS AND AREA DRAINS ARE TO BE ACCURATELY LOCATED BY THEIR RELATIONSHIP TO THE BUILDING, FLATWORK, ROOF DRAINS, AND/OR CURB LAYOUT, NOT BY THE LENGTH OF PIPE SPECIFIED IN THE DRAWINGS (WHICH IS APPROXIMATE).
3. CONTRACTOR SHALL STAKE LOCATION OF ABOVE GROUND UTILITY EQUIPMENT (BACKFLOW PREVENTOR, SATELLITE DISH, TRANSFORMER, GAS METER, ETC.) AND MEET WITH DISTRICT TO REVIEW LOCATION PRIOR TO INSTALLATION. PLANNING DEPARTMENT MUST SPECIFICALLY AGREE WITH LOCATION PRIOR TO PROCEEDING WITH THE INSTALLATION.
4. CONTRACTOR SHALL PREPARE AN ACCURATE COMPOSITE UTILITY PLAN THAT TAKES INTO ACCOUNT THE ACTUAL LOCATION OF EXISTING UTILITIES AS DETERMINED DURING THE DEMOLITION WORK, THE UTILITIES SHOWN ON THE CIVIL DRAWINGS, AND THE SITE POWER, CONDUITS AND LIGHTING SHOWN ON THE ELECTRICAL PLANS. THE FIRE SPRINKLER SYSTEM SHALL BE INCLUDED AS DESIGNED BY THE DESIGN/BUILD UNDERGROUND FIRE SPRINKLER CONTRACTOR.
5. CATHODIC PROTECTION MAY BE REQUIRED ON ALL METALLIC FITTINGS AND ASSEMBLIES THAT ARE IN CONTACT WITH THE SOIL, IF RECOMMENDED BY THE GEOTECHNICAL REPORT. CONTRACTOR IS RESPONSIBLE TO FULLY ENGINEER AND INSTALL THIS SYSTEM AND COORDINATE ANODE AND TEST STATION LOCATIONS WITH OWNER'S PROJECT MANAGER.
6. COMPLETE SYSTEMS: ALL UTILITY SYSTEMS ARE DELINEATED ON THESE PLANS. CONTRACTOR IS TO PROVIDE ALL FITTINGS, ACCESSORIES AND WORK NECESSARY TO COMPLETE THE UTILITY SYSTEM SO THAT IT IS FULLY FUNCTIONING FOR THE PURPOSE INTENDED.
7. UNDERGROUND UTILITIES OR STRUCTURES ARE SHOWN IN THEIR APPROXIMATE LOCATIONS AND EXTENT BASED UPON RECORD INFORMATION. LOCATIONS MAY NOT HAVE BEEN VERIFIED IN THE FIELD AND NO GUARANTEE IS MADE TO THE ACCURACY OR COMPLETENESS OF THE INFORMATION SHOWN. THE DISTRICT, BY ACCEPTING THESE PLANS OR PROCEEDING WITH IMPROVEMENTS PURSUANT THERETO, AGREES TO ASSUME LIABILITY AND TO HOLD UNDERSIGNED HARMLESS FOR ANY DAMAGES RESULTING FROM THE EXISTENCE OF UNDERGROUND UTILITIES OR STRUCTURES NOT REPORTED TO THE UNDERSIGNED; NOT INDICATED ON THE PUBLIC RECORDS EXAMINED, LOCATED AT VARIANCE WITH THOSE REPORTED OR SHOWN ON RECORDS EXAMINED.
8. THE CONTRACTOR SHALL BE RESPONSIBLE FOR PROTECTING ALL UTILITIES FRO

ALLINGTON STREET

ALLINGTON ST.

CANEHILL AVENUE

CANEHILL AVE

MAPLELEAF ST.

CHANNEL REMOVAL AND IMPROVEMENTS TO BE COMPLETED PER SEPARATE PERMIT

CHANNEL REMOVAL AND IMPROVEMENTS TO BE COMPLETED PER SEPARATE PERMIT

(APN: 7188-004-901)

(APN: 7188-004-902)

SURVEYOR NOTE

AERIAL SURVEY BACKGROUND COMPILED BY ARROWHEAD MAPPING CORPORATION DATED JUNE 8, 2015.

SUPPLEMENTAL SURVEY PERFORMED BY TERRAMARK SURVEYING ON OCTOBER 3, 2016.

DIGALERT
DIAL BEFORE YOU DIG
TWO WORKING DAYS BEFORE YOU DIG
TOLL FREE 1-800-227-2600
A PUBLIC SERVICE BY UNDERGROUND SERVICE ALERT

NORTH

GRAPHIC SCALE IN FEET
0 25 50 100
SCALE 1" = 50'
WHEN PRINTED FULL SIZE
30" X 42"

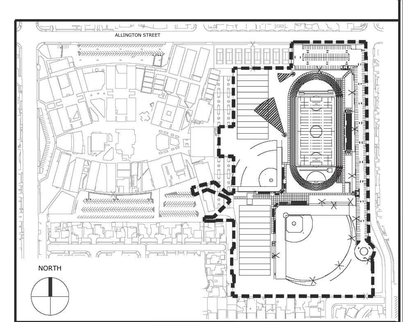

KEYMAP

IDENTIFICATION STAMP
DIV. OF THE STATE ARCHITECT
APP: 03-124281 INC:
REVIEWED FOR
SS ☑ FLS ☑ ACS ☑
DATE: 02/04/2025

ARCHITECT:
architecture
westbergwhite
14471 Chambers Rd, Suite 210
Tustin, CA 92780
714.508.1780
714.508.1780 Fax

1775 Hancock St, Suite 120
San Diego, CA 92110
619.542.1188
619.542.1663 Fax

CONSULTANT:
Kimley»Horn

© 2018 KIMLEY-HORN AND ASSOCIATES, INC.

765 THE CITY DRIVE, SUITE 200, ORANGE, CA 92868
PHONE: 714-939-1030 FAX: 714-938-9488
WWW.KIMLEY-HORN.COM

REGISTERED PROFESSIONAL ENGINEER
AHMED ZUHAIR
No. RCE NO. 93209
CIVIL
STATE OF CALIFORNIA

PROJECT NAME:

Bellflower Unified School District

Mayfair High School Sports Fields

6000 North Woodruff Ave
Lakewood, California 90713

CLIENT:

BELLFLOWER UNIFIED SCHOOL DISTRICT

16703 S. Clark Ave.
BELLFLOWER, CALIFORNIA 90706

Rev.	Date	Description

JOB NO: 15008.01
DATE: 11/13/2024
DRAWN: CC
CHECK: IV
ARCHITECT: PDW
ENGINEER: AZ

SHEET DESCRIPTION:
EXISTING CONDITIONS

SHEET NO:
C002

K:\ORA_LDEV\094842008 – mayfair high school\CAD\plansheets\Field\C002 EXISTING CONDITIONS.dwg Jan 13, 2025 – 3:56pm isabella.Valbuena

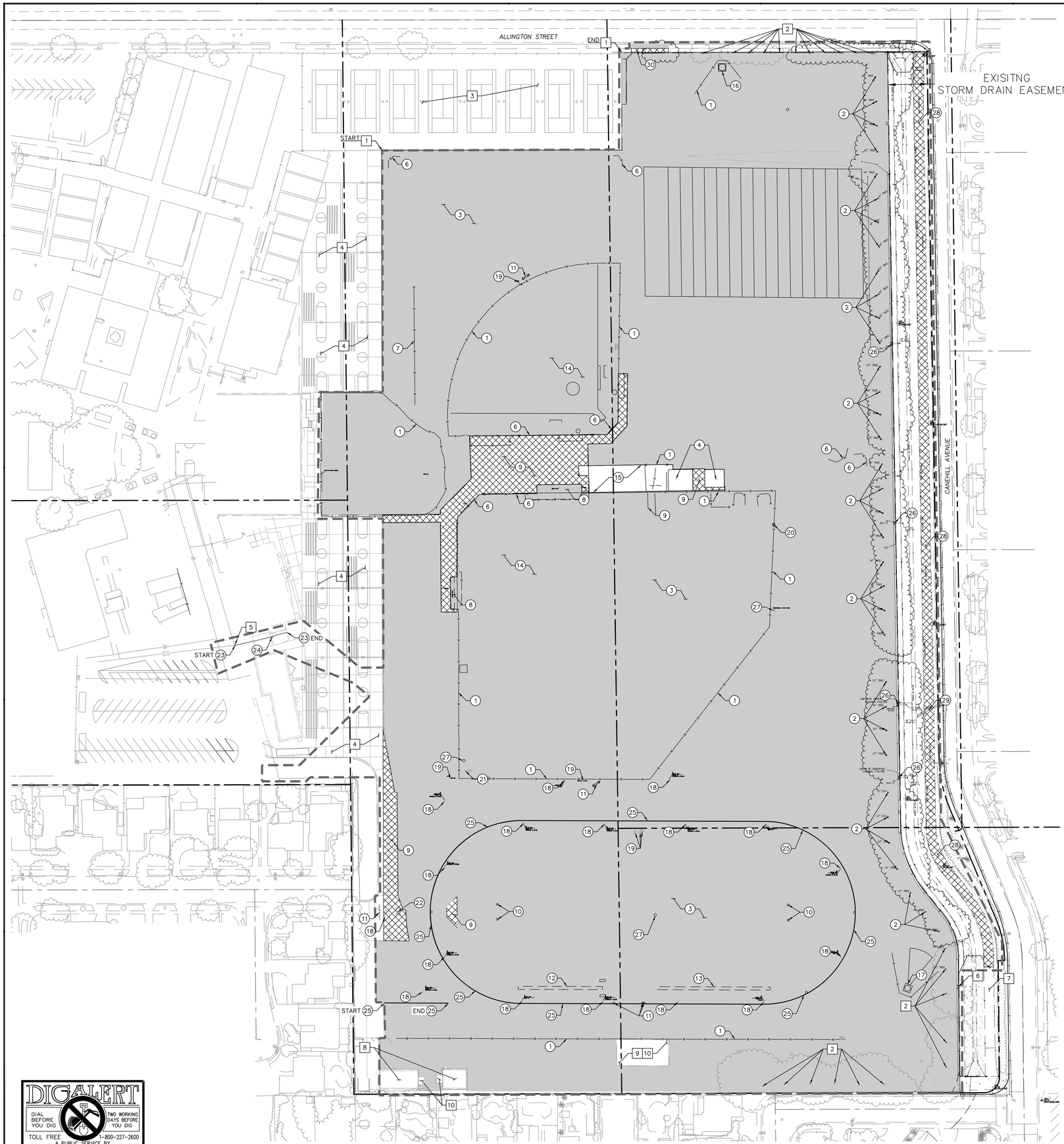

DEMOLITION LEGEND

- PROPERTY LINE
- STREET CENTERLINE
- EASEMENT
- LIMIT OF WORK
- EXISTING LANDSCAPING TO BE REMOVED, INCLUDING SHRUBS, GRASS, TREES, ALL ROOT MASS UNLESS OTHERWISE SPECIFIED. COORDINATE WITH CLIENT AND ARCHITECT PRIOR TO REMOVING ANY TREES. IRRIGATION LINES TO BE REPAIRED TO THE EXTENTS OF NEW PLANTING AND IRRIGATION CONSTRUCTION. SEE LANDSCAPE ARCHITECT PLANS.
- EXISTING HARDSCAPE TO BE REMOVED INCLUDING ALL BASE ROCK AND REBAR

DEMOLITION NOTES

1. REMOVE EXISTING FENCE, INCLUDING POSTS AND FOUNDATIONS
2. DEMOLISH AND REMOVE EXISTING TREE INCLUDING ALL ROOT MASS
3. EXISTING LANDSCAPING TO BE REMOVED, INCLUDING SHRUBS, GRASS, TREES, ALL ROOT MASS UNLESS OTHERWISE SPECIFIED. COORDINATE WITH CLIENT AND ARCHITECT PRIOR TO REMOVING ANY TREES. SEE LANDSCAPE ARCHITECT PLANS FOR IRRIGATION LINE REPAIR/REPLACEMENT SCOPE
4. REMOVE EXISTING STORAGE BUILDING INCLUDING CONCRETE PAD AND REBAR
5. REMOVE EXISTING BLEACHERS, INCLUDING CONCRETE PAD AND REBAR
6. REMOVE EXISTING BACKSTOP FENCING INCLUDING POSTS AND FOUNDATIONS
7. REMOVE EXISTING VOLLEYBALL NETS, POSTS, AND FOUNDATION
8. REMOVE EXISTING BASEBALL DUGOUT INCLUDING FOUNDATION
9. REMOVE EXISTING CONCRETE PAVEMENT INCLUDING BASE COURSE AND REBAR IF ENCOUNTERED
10. REMOVE EXISTING GOAL POST INCLUDING FOUNDATION
11. REMOVE EXISTING SCORE BOARD INCLUDING FOUNDATION
12. REMOVE EXISTING POLE VAULT INCLUDING FOUNDATION
13. REMOVE EXISTING LONG JUMP INCLUDING FOUNDATION
14. REMOVE EXISTING BASEBALL FIELD, PITCHERS MOUND, AND ALL ASSOCIATED MATERIALS INCLUDING FOUNDATIONS
15. REMOVE EXISTING BATTING CAGE INCLUDING FOUNDATION AND FENCING
16. REMOVE EXISTING DISCUS PAD AND FENCING INCLUDING FOUNDATIONS AND POSTS
17. REMOVE EXISTING SHOT PUT PAD AND FENCING INCLUDING FOUNDATIONS AND POSTS
18. REMOVE EXISTING STORM DRAIN GRATE INLET AND ASSOCIATED STORM DRAIN LINES WITHIN LIMITS OF WORK
19. REMOVE EXISTING UTILITY VAULT AND ASSOCIATED CONDUITS WITHIN LIMITS OF WORK
20. REMOVE EXISTING SITE LIGHT INCLUDING FOUNDATION REMOVE CONDUCTORS TO SOURCE ABANDON CONDUIT IN PLACE UNLESS NOTE OTHERWISE
21. REMOVE EXISTING FLAG POLE INCLUDING FOUNDATION
22. REMOVE EXISTING DRINKING FOUNTAIN AND ASSOCIATED WATER LINE WITHIN LIMITS OF WORK INCLUDING SURROUNDING BOLLARDS AND FOUNDATION
23. REMOVE EXISTING SEWER LINE
24. REMOVE EXISTING SEWER CLEAN OUT
25. REMOVE EXISTING CONCRETE CURB AND REBAR
26. REMOVE EXISTING DRAINAGE INLET. CAP AND ABANDON EXISTING LINE IN PLACE
27. REMOVE EXISTING UTILITY STRUCTURE. CONTRACTOR TO FIELD VERIFY STRUCTURES PRIOR TO DEMOLITION
28. REMOVE EXISTING ASPHALT ACCESS ROAD AND BASE COURSE. CONTRACTOR TO COORDINATE REMOVAL OF ROAD WITH LOS ANGELES COUNT FLOOD CONTROL AS REQUIRED
29. EXISTING RCP TO BE CAPPED AND CONNECTED INTO PROPOSED BOX CULVERT PER SEPARATE PERMIT
30. REMOVE EXISTING PARKWAY AND HARDSCAPE TO CONSTRUCT NEW DRIVEWAY PER SEPARATE PERMIT

PROTECT IN PLACE NOTES

1. PROTECT–IN–PLACE EXISTING FENCE
2. PROTECT–IN–PLACE EXISTING TREE
3. PROTECT–IN–PLACE EXISTING TENNIS COURTS
4. PROTECT–IN–PLACE EXISTING BASKETBALL COURTS
5. PROTECT–IN–PLACE EXISTING SEWER MANHOLE
6. PROTECT–IN–PLACE EXISTING DRAINAGE INLET
7. PROTECT–IN–PLACE EXISTING ASPHALT
8. PROTECT–IN–PLACE EXISTING BUILDING
9. PROTECT–IN–PLACE EXISTING BLEACHERS
10. PROTECT–IN–PLACE EXISTING CONCRETE

GENERAL DEMOLITION NOTES

1. THE CONTRACTOR SHALL CLEAR THE PROJECT SITE AREA WITHIN THE CONFINES OF THE DEMOLITION LIMIT LINE. THE CONTRACTOR SHALL CAP IN PLACE ALL EXISTING UTILITIES AT THE DEMOLITION LIMIT LINE, UNLESS NOTED ON THE PLAN. THE CONTRACTOR SHALL DEMOLISH AND REMOVE FROM THE SITE ALL EXISTING UTILITY STRUCTURES, PLANTERS, TREES, AND ALL OTHER SITE FEATURES, UNLESS OTHERWISE NOTED ON THE PLAN.
2. DEMOLITION AND REMOVAL OF PAVEMENT INCLUDES PAVEMENT THICKNESS AS WELL AS BASE COURSE THICKNESS.
3. REMOVAL OF LANDSCAPING SHALL INCLUDE ROOTS AND ORGANIC MATERIAL.
4. THE CONTRACTOR SHALL BE RESPONSIBLE FOR OBTAINING ANY AND ALL PERMITS AND SHALL PAY ALL FEES NECESSARY FOR ENCROACHMENT, GRADING, DEMOLITION, AND DISPOSAL OF SAID MATERIALS AS REQUIRED BY PRIVATE, LOCAL AND STATE JURISDICTIONS.
5. THE CONTRACTOR SHALL BE RESPONSIBLE FOR A SITE INSPECTION TO FULLY ACKNOWLEDGE THE EXTENT OF DEMOLITION WORK.
6. THE CONTRACTOR SHALL VERIFY AND LOCATE ALL EXISTING ABOVE AND UNDERGROUND UTILITIES. LOCATIONS SHOWN ON THE PLANS ARE APPROXIMATE AND ARE SHOWN FOR GENERAL INFORMATION ONLY.
7. DAMAGE TO ANY EXISTING UTILITIES AND SERVICES TO REMAIN SHALL BE THE RESPONSIBILITY OF THE CONTRACTOR. CONTRACTOR SHALL REPAIR AND/OR REPLACE IN KIND.
8. EROSION CONTROL MEASURES SHALL BE IMPLEMENTED TO PREVENT DEBRIS AND UNSUITABLE MATERIALS FROM ENTERING STORM DRAINS, SANITARY SEWERS AND STREETS.
9. DUST CONTROL MEASURES SHALL BE IMPLEMENTED DURING DEMOLITION.
10. DEMOLITION IS LIMITED TO WITHIN THE DEMOLITION LIMIT LINE UNLESS OTHERWISE NOTED.
11. CONTRACTOR SHALL REMOVE DEMOLISHED MATERIALS FROM THE SITE AS WORK PROGRESSES.
12. THE DRAWINGS MAY NOT INDICATE IN DETAIL ALL DEMOLITION WORK TO BE PERFORMED. THE CONTRACTOR SHALL EXAMINE EXISTING CONDITIONS TO DETERMINE THE FULL EXTENT OF DEMOLITION.
13. ALL DEMOLITION SHALL COMPLY WITH CHAPTER 33 OF THE CALIFORNIA BUILDING CODE AND CHAPTER 33 OF THE CALIFORNIA FIRE CODE.
14. CONTRACTOR TO USE CARE IN HANDLING DEBRIS FROM SITE TO ENSURE THE SAFETY OF THE PUBLIC. HAUL ROUTE TO BE CLOSELY MONITORED FOR DEBRIS OR MATERIALS TRACKED ONTO ADJOINING ROADWAYS, SIDEWALKS, ETC. ROADWAYS AND WALKWAYS TO BE CLEARED DAILY OR AS NECESSARY TO MAINTAIN PUBLIC SAFETY.
15. SEE EROSION CONTROL PLAN FOR REMAINING INLET PROTECTION AND EROSION PREVENTION.
16. CONTRACTOR TO INSTALL CHAIN LINK FENCE WITH MESH SCREEN TO PROTECT PUBLIC FROM ENTERING CONSTRUCTION AREA.
17. CONTINUOUS ACCESS SHALL BE MAINTAINED FOR SURROUNDING PROPERTIES AT ALL TIMES DURING DEMOLITION OF EXISTING FACILITIES.
18. THIS PLAN IS NOT INTENDED TO BE A COMPLETE CATALOGUE OF ALL EXISTING STRUCTURES AND UTILITIES. THIS PLAN INTENDS TO DISCLOSE GENERAL INFORMATION KNOWN BY THE ENGINEER AND TO SHOW THE LIMITS OF THE AREA WHERE WORK WILL BE PERFORMED. THIS PLAN SHOWS THE EXISTING FEATURES TAKEN FROM A FIELD SURVEY. FIELD INVESTIGATIONS AND OTHER AVAILABLE INFORMATION. THIS PLAN MAY OR MAY NOT ACCURATELY REFLECT THE TYPE OR EXTENT OF THE ITEMS TO BE ENCOUNTERED AS THEY ACTUALLY EXIST. WHERE EXISTING FEATURES ARE NOT SHOWN, IT IS NOT IMPLIED THAT THEY ARE NOT TO BE DEMOLISHED OR REMOVED. THE CONTRACTOR SHALL PERFORM A THOROUGH FIELD INVESTIGATION AND REVIEW OF THE SITE WITHIN THE LIMIT OF WORK SHOWN IN THIS PLAN SET TO DETERMINE THE TYPE, QUANTITY AND EXTENT OF ANY AND ALL ITEMS. THE CONTRACTOR SHALL BE SOLELY RESPONSIBLE FOR DETERMINING THE EXTENT OF EXISTING STRUCTURES AND UTILITIES AND QUANTITY OF WORK INVOLVED IN REMOVING THESE ITEMS FROM THE SITE.
19. CONTRACTOR TO SAWCUT, DEMOLISH, AND REPLACE CONCRETE SIDEWALK TO NEAREST JOINT.

NORTH

GRAPHIC SCALE IN FEET
0 25 50 100

SCALE 1" = 50'
WHEN PRINTED FULL SIZE
30" X 42"

DIGALERT
DIAL BEFORE YOU DIG — TWO WORKING DAYS BEFORE YOU DIG
TOLL FREE 1-800-227-2600
A PUBLIC SERVICE BY UNDERGROUND SERVICE ALERT

K:\ORA_LDEV\094842008 – mayfair high school\CAD\plansheets\Field\C100 SITE DEMOLITION PLAN.dwg Jan 13, 2025 – 3:56pm Isabella.Valbuena

IDENTIFICATION STAMP
DIV. OF THE STATE ARCHITECT
APP: 03-124281 INC:
REVIEWED FOR
SS ☑ FLS ☑ ACS ☑
DATE: 02/04/2025

ARCHITECT:
architecture
westbergwhite
14471 Chambers Rd, Suite 210
Tustin, CA 92780
714.508.1780
714.508.1780 Fax

1775 Hancock St, Suite 120
San Diego, CA 92110
619.542.1188
619.542.1663 Fax

CONSULTANT:
Kimley»Horn

© 2018 KIMLEY–HORN AND ASSOCIATES, INC.

765 THE CITY DRIVE, SUITE 200, ORANGE, CA 92868
PHONE: 714–939–1030 FAX: 714–938–9488
WWW.KIMLEY–HORN.COM

REGISTERED PROFESSIONAL ENGINEER
AHMED ZUMAWA
RCE NO. 92209
CIVIL
STATE OF CALIFORNIA

PROJECT NAME:

Bellflower Unified School District
Mayfair High School Sports Fields
6000 North Woodruff Ave
Lakewood, California 90713

CLIENT:

BELLFLOWER UNIFIED SCHOOL DISTRICT
16703 S. Clark Ave.
BELLFLOWER, CALIFORNIA 90706

#	Rev. Date	Description

JOB NO:	15008.01
DATE:	11/13/2024
DRAWN:	CC
CHECK:	IV
ARCHITECT:	PDW
ENGINEER:	AZ

SHEET DESCRIPTION:
SITE DEMOLITION PLAN

SHEET NO:
C100

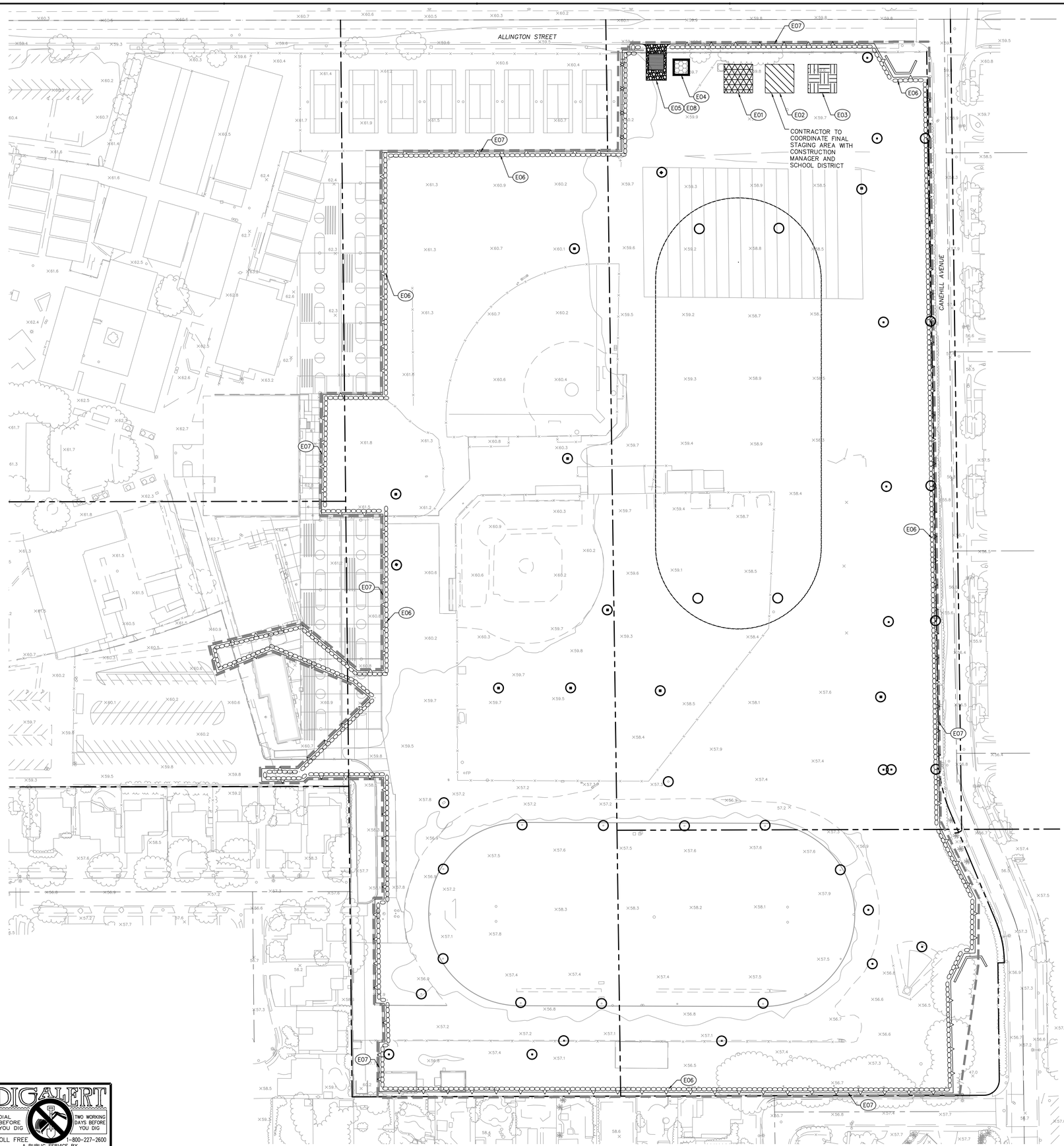

LEGEND

- PROPERTY LINE
- ROAD CENTERLINE
- CIVIL LIMIT OF WORK
- STRAW WADDLE BARRIER
- CONSTRUCTION FENCE
- INLET PROTECTION
- STABILIZED CONSTRUCTION ENTRANCE
- STOCK PILE AREA
- SANITARY AREA, TRASH STORAGE, HAZARDOUS MATERIAL, CONCRETE MANAGEMENT, VEHICLE MAINTENANCE AND EQUIPMENT STORAGE AREA
- MATERIAL STORAGE AND DELIVERY AREA
- EQUIPMENT WASHOUT PIT

EROSION CONTROL CONSTRUCTION NOTES

- (E01) STOCK PILE AREA
- (E02) SANITARY AREA, TRASH STORAGE, HAZARDOUS MATERIAL, CONCRETE MANAGEMENT, VEHICLE MAINTENANCE AND EQUIPMENT STORAGE AREA
- (E03) MATERIAL STORAGE AND DELIVERY AREA
- (E04) EQUIPMENT WASHOUT PIT. SEE DETAIL 3, SHEET C700
- (E05) CONSTRUCTION ENTRANCE. SEE DETAIL 4, SHEET C700
- (E06) STRAW WADDLE. SEE DETAIL 1, SHEET C700
- (E07) CONSTRUCTION FENCE. SEE DETAIL 5, SHEET C700
- (E08) TIRE WASH RACK. SEE DETAIL 2, SHEET C700

CONTRACTOR RESPONSIBLE FOR TRAFFIC CONTROL AND PEDESTRIAN CONTROL WHILE PERFORMING WORK IN THE PUBLIC RIGHT-OF-WAY.

SITE PREPARATION SHOULD BE IN ACCORDANCE WITH GEOTECHNICAL INVESTIGATION

CONTRACTOR TO USE BEST MANAGEMENT PRACTICES TO ENSURE COMPLIANCE WITH NPDES AND WATER MANAGEMENT DISTRICT REGULATIONS FOR STORMWATER DISCHARGE FROM CONSTRUCTION ACTIVITIES AND DEWATERING OPERATIONS.

EROSION CONTROL NOTES

1. ERODED SEDIMENTS AND OTHER POLLUTANTS MUST BE RETAINED ON SITE AND MAY NOT BE TRANSPORTED FROM THE SITE VIA SHEET FLOW, SWALES, AREA DRAINS, NATURAL DRAINAGE COURSES OR WIND.
2. STOCKPILES OF EARTH AND OTHER CONSTRUCTION RELATED MATERIALS MUST BE PROTECTED FROM BEING TRANSPORTED FROM THE SITE BY THE FORCES OF WIND OR WATER.
3. FUELS, OILS, SOLVENTS, AND OTHER TOXIC MATERIALS MUST BE STORED IN ACCORDANCE WITH THEIR LISTING AND MUST NOT CONTAMINATE THE SOIL AND SURFACE WATERS. ALL APPROVED STORAGE CONTAINERS ARE TO BE PROTECTED FROM THE WEATHER. SPILLS MUST BE CLEANED UP IMMEDIATELY AND DISPOSED OF IN A PROPER MANNER. SPILLS MAY NOT BE WASHED INTO THE DRAINAGE SYSTEM.
4. EXCESS OR WASTE CONCRETE MAY NOT BE WASHED INTO THE PUBLIC WAY OR ANY OTHER DRAINAGE SYSTEM. PROVISIONS SHALL BE MADE TO RETAIN CONCRETE WASTES ON SITE UNTIL THEY CAN BE DISPOSED OF AS SOLID WASTE.
5. TRASH AND CONSTRUCTION RELATED SOLID WASTES MUST BE DEPOSITED INTO A COVERED RECEPTACLE TO PREVENT CONTAMINATION OF RAINWATER AND DISPERSAL BY WIND.
6. SEDIMENTS AND OTHER MATERIALS MAY NOT BE TRACKED FROM THE SITE BY VEHICLE TRAFFIC. THE CONSTRUCTION ENTRANCE ROADWAYS MUST BE STABILIZED SO AS TO INHIBIT SEDIMENTS FROM BEING DEPOSITED INTO THE PUBLIC WAY. ACCIDENTAL DEPOSITIONS MUST BE SWEPT UP IMMEDIATELY AND MAY NOT BE WASHED DOWN BY RAIN OR ANY OTHER MEANS.
7. ANY SLOPES WITH DISTURBED SOILS OR DENUDED OF VEGETATION MUST BE STABILIZED SO AS TO INHIBIT EROSION BY WIND AND WATER.
8. STORM WATER POLLUTION CONTROL REQUIREMENTS MUST BE INTEGRATED ONTO THE EROSION CONTROL PLANS FOR ANY CONSTRUCTION BETWEEN OCTOBER 1 AND APRIL 15. THE FOLLOWING NOTES AND BMP'S AS OUTLINED IN, BUT NOT LIMITED TO, THE BEST MANAGEMENT PRACTICE HANDBOOK, CALIFORNIA STORM WATER QUALITY TASK FORCE, SACRAMENTO, CALIFORNIA 1993, OR THE LATEST REVISED EDITION MAY APPLY DURING THE CONSTRUCTION OF PROJECT (ADDITIONAL MEASURES MAY BE REQUIRED IF DEEMED APPROPRIATE BY CITY INSPECTIONS).
9. TEMPORARY EROSION CONTROL DEVICES SHOWN ON THE PLAN WHICH INTERFERE WITH THE WORK SHALL BE RELOCATED OR MODIFIED AS AND WHEN THE CONTRACTOR AND/OR THE INSPECTOR SO DIRECTS AS THE WORK PROGRESSES.
10. ALL STANDARDS REFERENCED FROM 2019 CASQA CONSTRUCTION BMP BOOK.

MAINTENANCE NOTES

ALL MEASURES STATED ON THIS SITE MAP, AND IN THE STORM WATER POLLUTION PREVENTION PLAN, SHALL BE MAINTAINED IN FULLY FUNCTIONAL CONDITION UNTIL NO LONGER REQUIRED FOR A COMPLETED PHASE OF WORK OR FINAL STABILIZATION OF THE SITE. ALL EROSION AND SEDIMENTATION CONTROL MEASURES SHALL BE CHECKED BY A QUALIFIED PERSON IN ACCORDANCE WITH THE CONTRACT DOCUMENTS OR THE APPLICABLE PERMIT, WHICHEVER IS MORE STRINGENT, AND REPAIRED IN ACCORDANCE WITH THE FOLLOWING:

1. INLET PROTECTION DEVICES AND BARRIERS SHALL BE REPAIRED OR REPLACED IF THEY SHOW SIGNS OF UNDERMINING OR DETERIORATION.
2. ALL SEEDED AREAS SHALL BE CHECKED REGULARLY TO SEE THAT A GOOD STAND IS MAINTAINED. AREAS SHOULD BE FERTILIZED, WATERED, AND RESEEDED AS NEEDED.
3. THE CONSTRUCTION EXITS SHALL BE MAINTAINED IN A CONDITION WHICH WILL PREVENT TRACKING OR FLOW OF MUD ONTO PUBLIC RIGHTS-OF-WAY. THIS MAY REQUIRE PERIODIC TOP DRESSING OF THE CONSTRUCTION EXITS AS CONDITIONS DEMAND.
4. THE TEMPORARY PARKING AND STORAGE AREA SHALL BE KEPT IN GOOD CONDITION (SUITABLE FOR PARKING AND STORAGE). THIS MAY REQUIRE PERIODIC TOP DRESSING OF THE TEMPORARY PARKING AREA AS CONDITIONS DEMAND.
6. OUTLET STRUCTURES IN THE SEDIMENTATION BASINS SHALL BE MAINTAINED IN OPERATIONAL CONDITIONS AT ALL TIMES. SEDIMENT SHALL BE REMOVED FROM SEDIMENT BASINS OR TRAPS WHEN THE DESIGN CAPACITY HAS BEEN REDUCED BY 50%.

SEQUENCE OF CONSTRUCTION

UPON IMPLEMENTATION AND INSTALLATION OF THE FOLLOWING AREAS: TRAILER, PARKING, LAYDOWN, PORTA-POTTY, WHEEL WASH, CONCRETE WASHOUT, FUEL AND MATERIAL STORAGE CONTAINERS, SOLID WASTE CONTAINERS, ETC., IMMEDIATELY DENOTE THEM ON THE SITE MAPS AND NOTE ANY CHANGES IN LOCATION AS THEY OCCUR THROUGHOUT THE CONSTRUCTION PROCESS.

PHASE 1:
1. CONSTRUCT STABILIZED CONSTRUCTION ENTRANCE (1) AND CHAIN LINK FENCE WITH GREEN SCREEN AND THEN STRAW WATTLE WHERE SHOWN ON PLAN.
2. INSTALL INLET PROTECTION AT EXISTING INLET(S).
3. INSTALL AND STABILIZE ANY NECESSARY HYDRAULIC CONTROL STRUCTURES
4. PREPARE CLEARING AND GRUBBING OF THE SITE, IF APPLICABLE.

PHASE 2:
5. PERFORM MASS GRADING. ROUGH GRADE TO ESTABLISH PROPOSED DRAINAGE PATTERNS.
6. START CONSTRUCTION OF THE BUILDING PAD AND STRUCTURES.
7. TEMPORARILY SEED WITH PURE LIVE SEED, THROUGHOUT CONSTRUCTION, DISTURBED AREAS THAT WILL BE INACTIVE FOR 7 DAYS OR MORE OR AS REQUIRED BY GENERIC PERMIT.

BMP NOTES

THE FOLLOWING BMPS AS OUTLINED IN, BUT NOT LIMITED TO, THE CALIFORNIA STORMWATER BMP HANDBOOK DATED NOVEMBER 2009, OR THE LATEST REVISED EDITION, MAY APPLY DURING THE CONSTRUCTION OF THE PROJECT. ADDITIONAL MEASURES MAY BE REQUIRED AS NEEDED:

EC-1, SCHEDULING
EC-2, PRESERVATION OF EXISTING VEGETATION
EC-3, HYDRAULIC MULCH
WE-1, WIND EROSION CONTROL
NS-1, WATER CONSERVATION PRACTICES
NS-3, PAVING AND GRINDING OPERATIONS
NS-6, ILLICIT CONNECTION/DISCHARGE
NS-7, POTABLE WATER/IRRIGATION
NS-8, VEHICLE AND EQUIPMENT CLEANING
NS-9, VEHICLE AND EQUIPMENT FUELING
NS-10, VEHICLE AND EQUIPMENT MAINTENANCE
NS-12, CONCRETE CURING
NS-13, CONCRETE FINISHING
WM-2, MATERIAL USE
WM-4, SPILL PREVENTION AND CONTROL
WM-5, SOLID WASTE MANAGEMENT
WM-9, SANITARY/SEPTIC WASTE MANAGEMENT
WM-10, LIQUID WASTE MANAGEMENT
SE-7, STREET SWEEPING AND VACUUMING

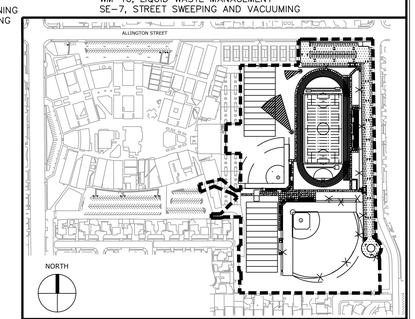

KEYMAP

NORTH

GRAPHIC SCALE IN FEET
0 25 50 100

SCALE 1" = 50'
WHEN PRINTED FULL SIZE
30" X 42"

DIGALERT
DIAL BEFORE YOU DIG
TWO WORKING DAYS BEFORE YOU DIG
TOLL FREE 1-800-227-2600
A PUBLIC SERVICE BY UNDERGROUND SERVICE ALERT

K:\ORA_LDEV\094842008 - mayfair high school\CAD\plansheets\Field\C200 EROSION CONTROL PLAN.dwg Jan 13, 2025 - 3:56pm Isabella.Valbuena

IDENTIFICATION STAMP
DIV. OF THE STATE ARCHITECT
APP: 03-124281 INC:
REVIEWED FOR
SS ☑ FLS ☑ ACS ☑
DATE: 02/04/2025

ARCHITECT:
architecture
westbergwhite
14471 Chambers Rd, Suite 210
Tustin, CA 92780
714.508.1780
714.508.1780 Fax

1775 Hancock St, Suite 120
San Diego, CA 92110
619.542.1188
619.542.1663 Fax

CONSULTANT:
Kimley»Horn

© 2018 KIMLEY-HORN AND ASSOCIATES, INC.

765 THE CITY DRIVE, SUITE 200, ORANGE, CA 92868
PHONE: 714-939-1030 FAX: 714-938-9488
WWW.KIMLEY-HORN.COM

REGISTERED PROFESSIONAL ENGINEER
AHMED ZUMWA
RCE NO. 92200
CIVIL
STATE OF CALIFORNIA

PROJECT NAME:

Bellflower Unified School District

Mayfair High School Sports Fields

6000 North Woodruff Ave
Lakewood, California 90713

CLIENT:

BELLFLOWER UNIFIED SCHOOL DISTRICT

16703 S. Clark Ave.
BELLFLOWER, CALIFORNIA 90706

#	Rev. Date	Description

JOB NO:	15008.01
DATE:	11/13/2024
DRAWN:	CC
CHECK:	IV
ARCHITECT:	PDW
ENGINEER:	AZ

SHEET DESCRIPTION:

EROSION CONTROL PLAN

SHEET NO:

C200

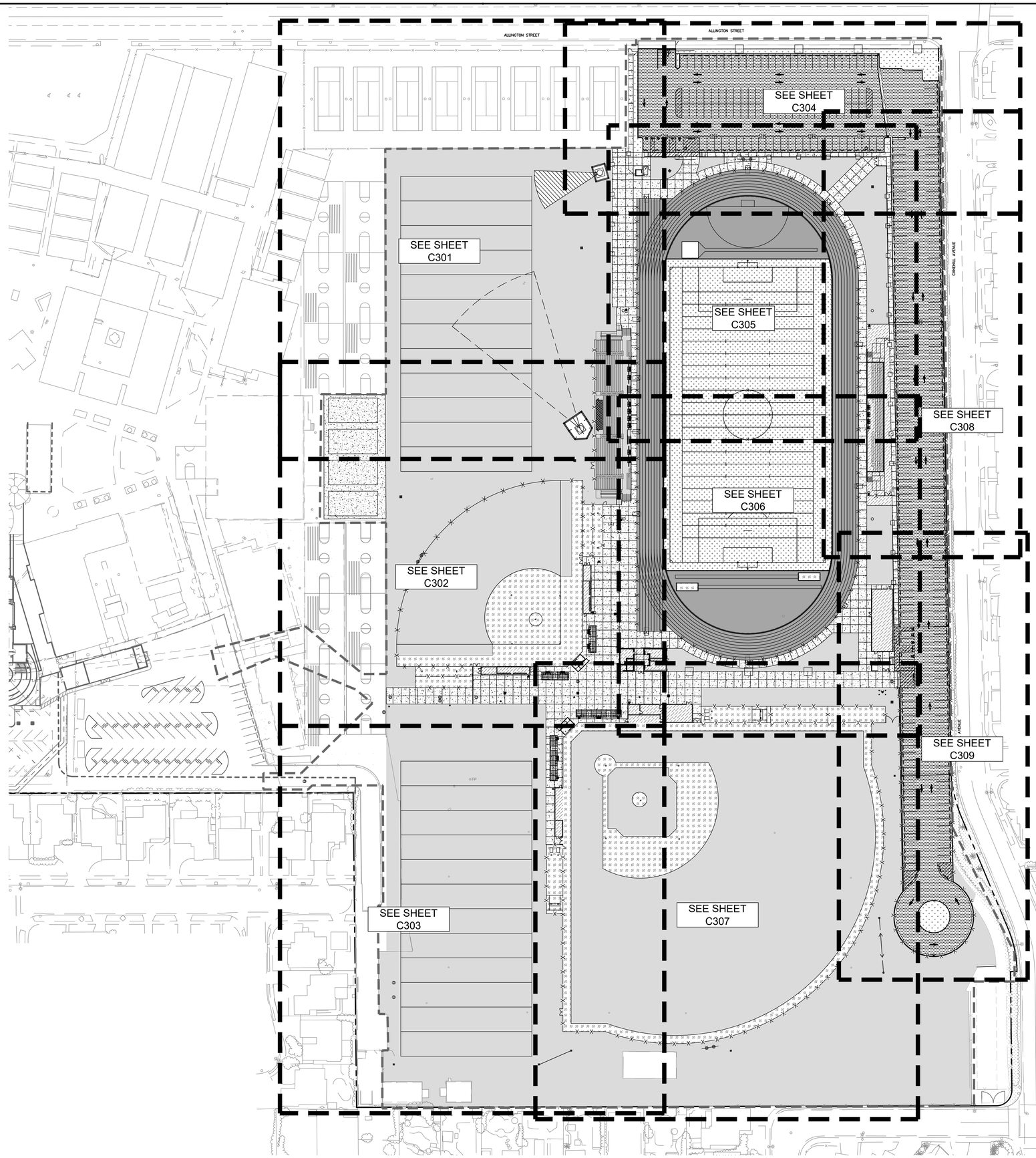

LEGEND

- PROPERTY LINE
- STREET CENTERLINE
- CIVIL LIMIT OF WORK
- PROPOSED FENCE
- RETAINING WALL
- FLOW LINE
- CATCH BASIN

PAVING LEGEND

- HEAVY DUTY ASPHALT CONCRETE PAVEMENT REFER TO DETAIL 13, SHEET C700 COLOR AND FINISH PER LANDSCAPE PLANS
- STANDARD DUTY CONCRETE PAVEMENT REFER TO DETAIL 13, SHEET C700 COLOR AND FINISH PER LANDSCAPE PLANS
- PROPOSED LANDSCAPING
- PROPOSED SYNTHETIC TURF SURFACE REFER TO ARCHITECTURAL PLANS
- PROPOSED NATURAL GRASS REFER TO LANDSCAPE PLANS
- PROPOSED SYNTHETIC TRACK SURFACE REFER TO ARCHITECTURAL PLANS
- INFIELD MIXTURE PER ARCHITECTURAL PLANS
- CAST-IN-PLACE TRUNCATED DOMES
- PROPOSED CONCRETE SLAB ON GRADE REFER TO STRUCTURAL PLANS

NORTH

GRAPHIC SCALE IN FEET
0 25 50 100

SCALE 1" = 50'
WHEN PRINTED FULL SIZE
30" X 42"

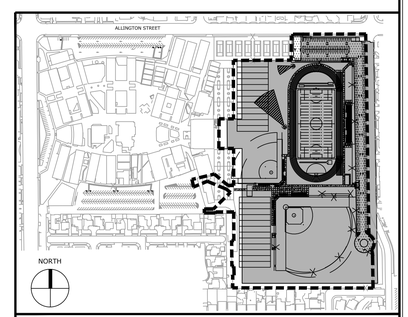

KEYMAP

IDENTIFICATION STAMP
DIV. OF THE STATE ARCHITECT
APP: 03-124281 INC:
REVIEWED FOR
SS ☑ FLS ☑ ACS ☑
DATE: 02/04/2025

ARCHITECT:
architecture
westbergwhite

CONSULTANT:
Kimley»Horn
© 2018 KIMLEY-HORN AND ASSOCIATES, INC.
765 THE CITY DRIVE, SUITE 200, ORANGE, CA 92868
PHONE: 714-939-1030 FAX: 714-938-9488
WWW.KIMLEY-HORN.COM

REGISTERED PROFESSIONAL ENGINEER
AHMED ZUHAIRA
RCE NO. 92200
CIVIL
STATE OF CALIFORNIA

PROJECT NAME:

Bellflower Unified School District
Mayfair High School Sports Fields
6000 North Woodruff Ave
Lakewood, California 90713

CLIENT:

BELLFLOWER UNIFIED SCHOOL DISTRICT
16703 S. Clark Ave.
BELLFLOWER, CALIFORNIA 90706

Rev.	Date	Description

JOB NO: 15008.01
DATE: 11/13/2024
DRAWN: CC
CHECK: IV
ARCHITECT: PDW
ENGINEER: AZ

SHEET DESCRIPTION:
OVERALL HORIZONTAL CONTROL PLAN

SHEET NO:
C300

K:\ORA_LDEV\094842008 – mayfair high school\CAD\plansheets\Field\C300 HORIZONTAL CONTROL PLAN.dwg Jan 28, 2025 – 10:40am Isabella.Valbuena

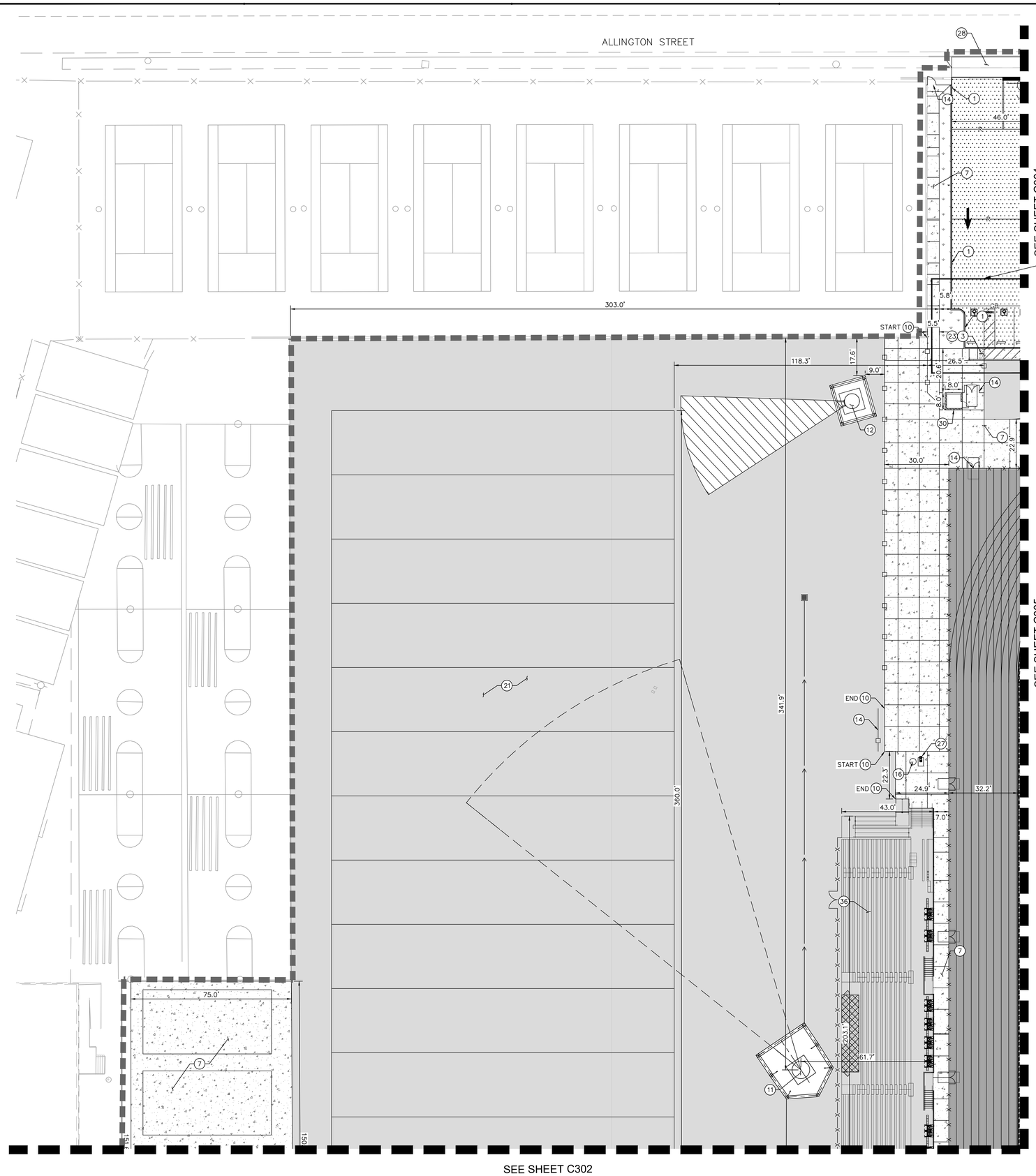

LEGEND

- PROPERTY LINE
- STREET CENTERLINE
- CIVIL LIMIT OF WORK
- PROPOSED FENCE
- RETAINING WALL
- FLOW LINE
- CATCH BASIN

PAVING LEGEND

- HEAVY DUTY ASPHALT CONCRETE PAVEMENT REFER TO DETAIL 13, SHEET C700 COLOR AND FINISH PER LANDSCAPE PLANS
- STANDARD DUTY CONCRETE PAVEMENT REFER TO DETAIL 13, SHEET C700 COLOR AND FINISH PER LANDSCAPE PLANS
- PROPOSED LANDSCAPING
- PROPOSED SYNTHETIC TURF SURFACE REFER TO ARCHITECTURAL PLANS
- PROPOSED NATURAL GRASS REFER TO LANDSCAPE PLANS
- PROPOSED SYNTHETIC TRACK SURFACE REFER TO ARCHITECTURAL PLANS
- INFIELD MIXTURE PER ARCHITECTURAL PLANS
- CAST-IN-PLACE TRUNCATED DOMES
- PROPOSED CONCRETE SLAB ON GRADE REFER TO STRUCTURAL PLANS

CONSTRUCTION NOTES

1. CONSTRUCT CONCRETE CURB PER DETAIL 11, SHEET C700
2. CONSTRUCT CONCRETE CURB AND GUTTER PER DETAIL 10, SHEET C700
3. INSTALL CAST-IN-PLACE TRUNCATED DOMES PER ARCHITECTURAL DETAIL 5, SHEET A004
4. INSTALL STANDARD 90° PARKING STALL
5. INSTALL ACCESSIBLE PARKING STALL PER ARCHITECTURAL DETAILS ON SHEET A007
6. INSTALL 3' WHEEL STOP PER DETAIL 14, PER ARCHITECTURAL DETAIL 8, SHEET A007
7. INSTALL STANDARD DUTY CONCRETE PAVEMENT PER DETAIL 13, SHEET C700
8. INSTALL HEAVY DUTY ASPHALT CONCRETE PAVEMENT PER DETAIL 13, SHEET C700
9. INSTALL SYTHENTIC TURF FIELD PER OF ARCHITECTURAL DETAILS ON SHEET A005
10. INSTALL SITE FENCE PER ARCHITECTURAL DETAILS ON SHEET A008
11. INSTALL DISCUS PAD PER ARCHITECTURAL DETAILS ON, SHEET A005 AND A005.1
12. INSTALL SHOT PUT PAD PER ARCHITECTURAL DETAILS ON, SHEET A005 AND A005.1
13. INSTALL POLE VAULT PER ARCHITECTURAL DETAIL 20, SHEET A005
14. INSTALL GATE PER ARCHITECTURAL DETAILS ON SHEET A008
15. INSTALL SCOREBOARD PER SEPARATE PLANS
16. INSTALL SITE LIGHT PER ELECTRICAL PLAN SHEET E002
17. INSTALL BASEBALL FIELD AND DUGOUTS AND STORAGE PER ARCHITECTURAL DETAILS ON SHEET A006
18. INSTALL SOFTBALL FIELD AND DUGOUTS AND STORAGE PER ARCHITECTURAL DETAILS ON SHEET A006
19. CONSTRUCT RESTROOM BUILDING PER ARCHITECTURAL PLAN SHEET A101
20. INSTALL LONG JUMP PER ARCHITECTURAL DETAIL 13, SHEET A005
21. NATURAL TURF PRACTICE FIELD PER LANDSCAPE PLANS
22. CONSTRUCT CONCRETE WALK-OFF CURB PER DETAIL 6, SHEET C700
23. CONSTRUCT ACCESSIBLE CURB RAMP PER DETAIL 16, SHEET C700
24. CONSTRUCT CONCRETE MOW STRIP PER ARCHITECTURAL DETAIL 10 SHEET A004
25. CONSTRUCT CURB WALL WITH CURB AND GUTTER PER PER DETAIL 8 SHEET C700
26. CONSTRUCT CONCRETE VALLEY GUTTER PER DETAIL 12, SHEET C700
27. REMOTE DRINKING FOUNTAIN PER ARCHITECTURAL DETAIL 16 SHEET A810
28. DRIVEWAY APRON PER SEPARATE CITY APPROVED PLANS
29. ALUMINUM BLEACHERS PER ARCHITECTURAL SHEETS A002 AND A003
30. CONSTRUCT TICKETING BOOTH PER ARCHITECTURAL SHEET A201
31. CONSTRUCT 2-FT CURB CUT
32. BATTING CAGES PER ARCHITECTURAL DETAIL 6, SHEET A006
33. SHADE STRUCTURE AND SCORE TABLE PER ARCHITECTURAL SHEET A005.2
34. INSTALL BOLLARD PER DETAIL 3, SHEET C701
35. ROLLING GATE PER ARCHITECTURAL DETAIL 4, SHEET A008
36. ALUMINUM BLEACHERS PER SEPARATE BLEACHERS PLANS
37. CULVERT PER SEPARATE PERMIT
38. PROPOSED ROLL CURB PER DETAIL 10 SHEET C701
39. PROPOSED 0" CURB PER DETAIL 11 SHEET C701

NORTH

GRAPHIC SCALE IN FEET
0 10 20 40

SCALE 1" = 20'
WHEN PRINTED FULL SIZE
30" X 42"

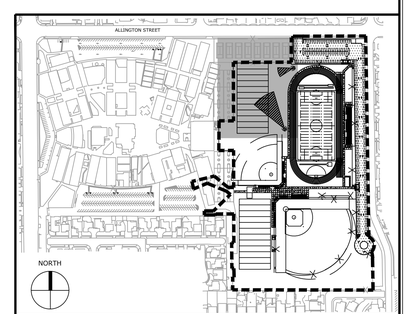

KEYMAP

IDENTIFICATION STAMP
DIV. OF THE STATE ARCHITECT
APP: 03-124281 INC:
REVIEWED FOR
SS ☑ FLS ☑ ACS ☑
DATE: 02/04/2025

ARCHITECT:
architecture
westbergwhite

CONSULTANT:
Kimley»Horn
© 2018 KIMLEY-HORN AND ASSOCIATES, INC.
765 THE CITY DRIVE, SUITE 200, ORANGE, CA 92868
PHONE: 714-939-1030 FAX: 714-938-9488
WWW.KIMLEY-HORN.COM

REGISTERED PROFESSIONAL ENGINEER
AHMED ZUHAIRA
No. RCE NO. 92050
CIVIL
STATE OF CALIFORNIA

PROJECT NAME:

Bellflower Unified School District

Mayfair High School Sports Fields

6000 North Woodruff Ave
Lakewood, California 90713

CLIENT:

BELLFLOWER UNIFIED SCHOOL DISTRICT

16703 S. Clark Ave.
BELLFLOWER, CALIFORNIA 90706

#	Rev. Date	Description

JOB NO: 15008.01
DATE: 11/13/2024
DRAWN: CC
CHECK: IV
ARCHITECT: PDW
ENGINEER: AZ

SHEET DESCRIPTION:
HORIZONTAL CONTROL PLAN

SHEET NO:
C301

K:\ORA_LDEV\094842008 - mayfair high school\CAD\plansheets\Field\C300 HORIZONTAL CONTROL PLAN.dwg Jan 28, 2025 - 10:40am Isabella.Valbuena

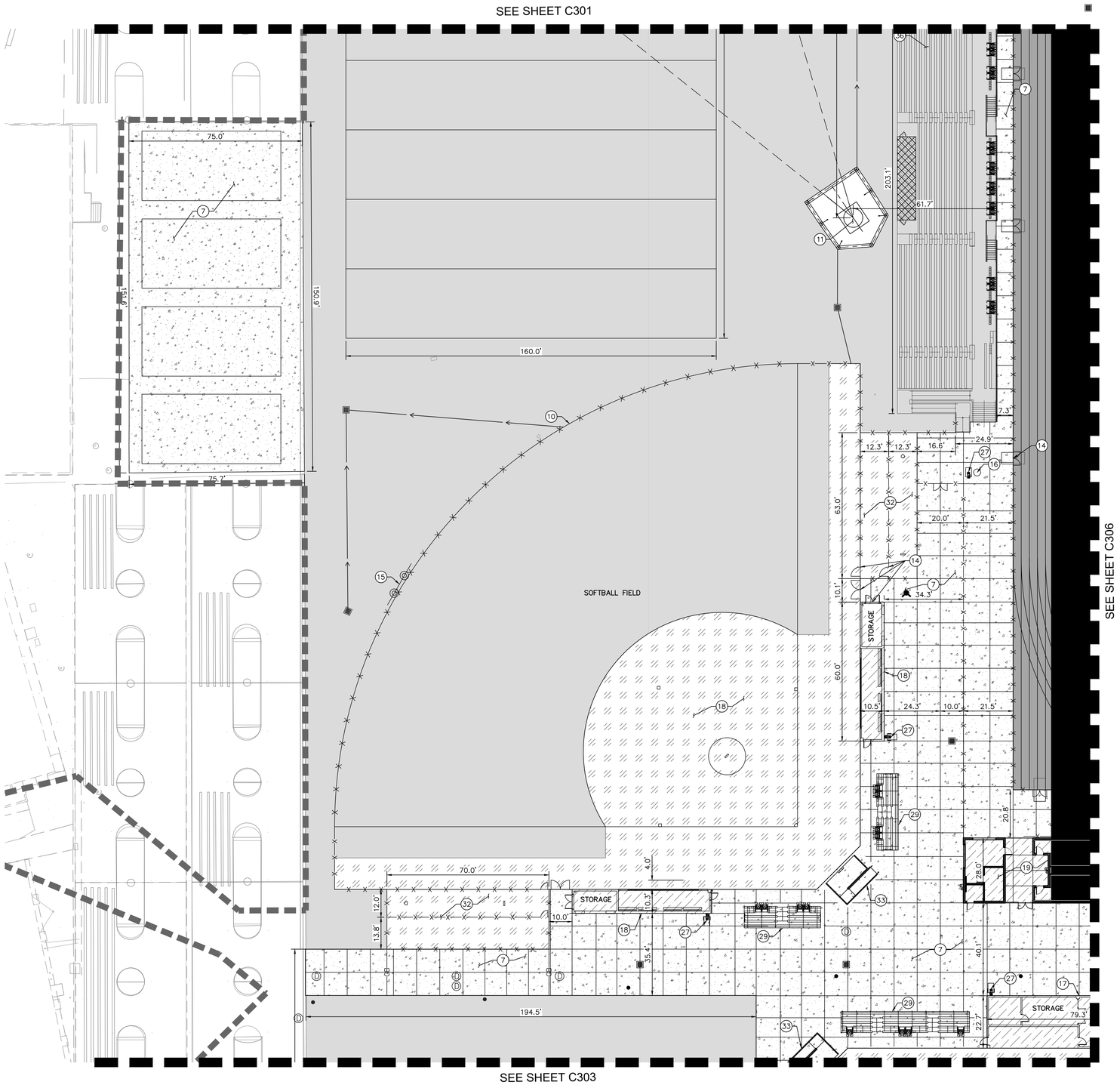

LEGEND

- PROPERTY LINE
- STREET CENTERLINE
- CIVIL LIMIT OF WORK
- PROPOSED FENCE
- RETAINING WALL
- FLOW LINE
- CATCH BASIN

PAVING LEGEND

- HEAVY DUTY ASPHALT CONCRETE PAVEMENT REFER TO DETAIL 13, SHEET C700 COLOR AND FINISH PER LANDSCAPE PLANS
- STANDARD DUTY CONCRETE PAVEMENT REFER TO DETAIL 13, SHEET C700 COLOR AND FINISH PER LANDSCAPE PLANS
- PROPOSED LANDSCAPING
- PROPOSED SYNTHETIC TURF SURFACE REFER TO ARCHITECTURAL PLANS
- PROPOSED NATURAL GRASS REFER TO LANDSCAPE PLANS
- PROPOSED SYNTHETIC TRACK SURFACE REFER TO ARCHITECTURAL PLANS
- INFIELD MIXTURE PER ARCHITECTURAL PLANS
- CAST-IN-PLACE TRUNCATED DOMES
- PROPOSED CONCRETE SLAB ON GRADE REFER TO STRUCTURAL PLANS

CONSTRUCTION NOTES

1. CONSTRUCT CONCRETE CURB PER DETAIL 11, SHEET C700
2. CONSTRUCT CONCRETE CURB AND GUTTER PER DETAIL 10, SHEET C700
3. INSTALL CAST-IN-PLACE TRUNCATED DOMES PER ARCHITECTURAL DETAIL 5, SHEET A004
4. INSTALL STANDARD 90° PARKING STALL
5. INSTALL ACCESSIBLE PARKING STALL PER ARCHITECTURAL DETAILS ON SHEET A007
6. INSTALL 3' WHEEL STOP PER DETAIL 14, PER ARCHITECTURAL DETAIL 8, SHEET A007
7. INSTALL STANDARD DUTY CONCRETE PAVEMENT PER DETAIL 13, SHEET C700
8. INSTALL HEAVY DUTY ASPHALT CONCRETE PAVEMENT PER DETAIL 13, SHEET C700
9. INSTALL SYTHENTIC TURF FIELD PER OF ARCHITECTURAL DETAILS ON SHEET A005
10. INSTALL SITE FENCE PER ARCHITECTURAL DETAILS ON SHEET A008
11. INSTALL DISCUS PAD PER ARCHITECTURAL DETAILS ON, SHEET A005 AND A005.1
12. INSTALL SHOT PUT PAD PER ARCHITECTURAL DETAILS ON, SHEET A005 AND A005.1
13. INSTALL POLE VAULT PER ARCHITECTURAL DETAIL 20, SHEET A005
14. INSTALL GATE PER ARCHITECTURAL DETAILS ON SHEET A008
15. INSTALL SCOREBOARD PER SEPARATE PLANS
16. INSTALL SITE LIGHT PER ELECTRICAL PLAN SHEET E002
17. INSTALL BASEBALL FIELD AND DUGOUTS AND STORAGE PER ARCHITECTURAL DETAILS ON SHEET A006
18. INSTALL SOFTBALL FIELD AND DUGOUTS AND STORAGE PER ARCHITECTURAL DETAILS ON SHEET A006
19. CONSTRUCT RESTROOM BUILDING PER ARCHITECTURAL PLAN SHEET A101
20. INSTALL LONG JUMP PER ARCHITECTURAL DETAIL 13, SHEET A005
21. NATURAL TURF PRACTICE FIELD PER LANDSCAPE PLANS
22. CONSTRUCT CONCRETE WALK-OFF CURB PER DETAIL 6, SHEET C700
23. CONSTRUCT ACCESSIBLE CURB RAMP PER DETAIL 16, SHEET C700
24. CONSTRUCT CONCRETE MOW STRIP PER ARCHITECTURAL DETAIL 10 SHEET A004
25. CONSTRUCT CURB WALL WITH CURB AND GUTTER PER PER DETAIL 8 SHEET C700
26. CONSTRUCT CONCRETE VALLEY GUTTER PER DETAIL 12, SHEET C700
27. REMOTE DRINKING FOUNTAIN PER ARCHITECTURAL DETAIL 16 SHEET A810
28. DRIVEWAY APRON PER SEPARATE CITY APPROVED PLANS
29. ALUMINUM BLEACHERS PER ARCHITECTURAL SHEETS A002 AND A003
30. CONSTRUCT TICKETING BOOTH PER ARCHITECTURAL SHEET A201
31. CONSTRUCT 2-FT CURB CUT
32. BATTING CAGES PER ARCHITECTURAL DETAIL 6, SHEET A006
33. SHADE STRUCTURE AND SCORE TABLE PER ARCHITECTURAL SHEET A005.2
34. INSTALL BOLLARD PER DETAIL 3, SHEET C701
35. ROLLING GATE PER ARCHITECTURAL DETAIL 4, SHEET A008
36. ALUMINUM BLEACHERS PER SEPARATE BLEACHERS PLANS
37. CULVERT PER SEPARATE PERMIT
38. PROPOSED ROLL CURB PER DETAIL 10 SHEET C701
39. PROPOSED 0" CURB PER DETAIL 11 SHEET C701

NORTH

GRAPHIC SCALE IN FEET
0 10 20 40

SCALE 1" = 20'
WHEN PRINTED FULL SIZE
30" X 42"

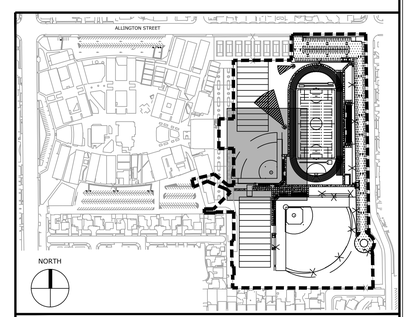

KEYMAP

IDENTIFICATION STAMP
DIV. OF THE STATE ARCHITECT
APP: 03-124281 INC:
REVIEWED FOR
SS ☑ FLS ☑ ACS ☑
DATE: 02/04/2025

ARCHITECT:
architecture
westbergwhite

CONSULTANT:
Kimley»Horn
© 2018 KIMLEY-HORN AND ASSOCIATES, INC.
765 THE CITY DRIVE, SUITE 200, ORANGE, CA 92868
PHONE: 714-939-1030 FAX: 714-938-9488
WWW.KIMLEY-HORN.COM

REGISTERED PROFESSIONAL ENGINEER
AHMED ZUHAIRA
No. RCE NO. 92200
CIVIL
STATE OF CALIFORNIA

PROJECT NAME:

Bellflower Unified School District

Mayfair High School Sports Fields

6000 North Woodruff Ave
Lakewood, California 90713

CLIENT:

BELLFLOWER UNIFIED SCHOOL DISTRICT

16703 S. Clark Ave.
BELLFLOWER, CALIFORNIA 90706

Rev.	Date	Description

JOB NO:	15008.01
DATE:	11/13/2024
DRAWN:	CC
CHECK:	IV
ARCHITECT:	PDW
ENGINEER:	AZ

SHEET DESCRIPTION:

HORIZONTAL CONTROL PLAN

SHEET NO:

C302

K:\ORA_LDEV\099842008 - mayfair high school\CAD\plansheets\Field\C300 HORIZONTAL CONTROL PLAN.dwg Jan 13, 2025 - 4:21pm Isabella.Valbuena

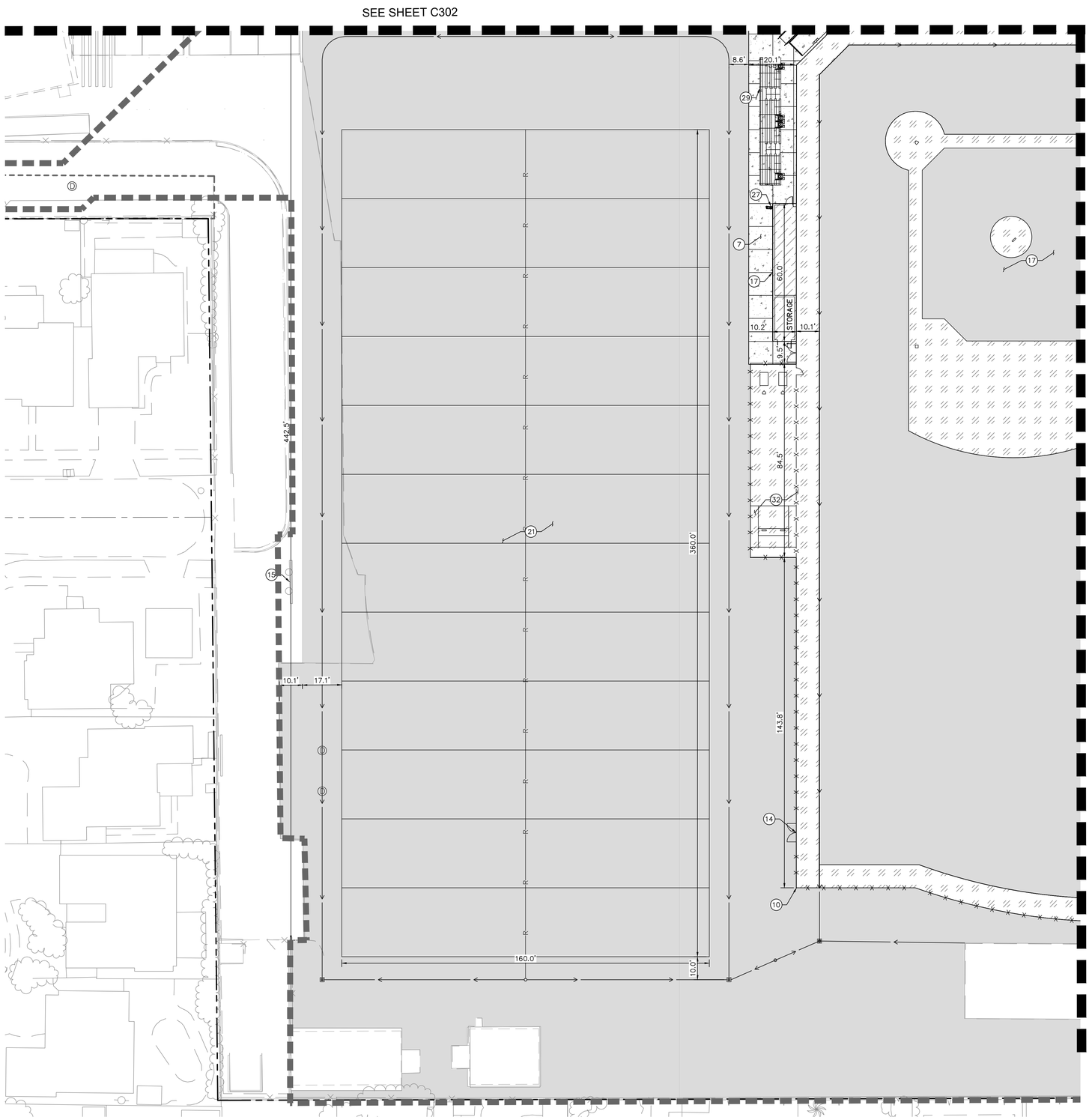

LEGEND

- PROPERTY LINE
- STREET CENTERLINE
- CIVIL LIMIT OF WORK
- PROPOSED FENCE
- RETAINING WALL
- FLOW LINE
- CATCH BASIN

PAVING LEGEND

- HEAVY DUTY ASPHALT CONCRETE PAVEMENT REFER TO DETAIL 13, SHEET C700 COLOR AND FINISH PER LANDSCAPE PLANS
- STANDARD DUTY CONCRETE PAVEMENT REFER TO DETAIL 13, SHEET C700 COLOR AND FINISH PER LANDSCAPE PLANS
- PROPOSED LANDSCAPING
- PROPOSED SYNTHETIC TURF SURFACE REFER TO ARCHITECTURAL PLANS
- PROPOSED NATURAL GRASS REFER TO LANDSCAPE PLANS
- PROPOSED SYNTHETIC TRACK SURFACE REFER TO ARCHITECTURAL PLANS
- INFIELD MIXTURE PER ARCHITECTURAL PLANS
- CAST-IN-PLACE TRUNCATED DOMES
- PROPOSED CONCRETE SLAB ON GRADE REFER TO STRUCTURAL PLANS

CONSTRUCTION NOTES

1. CONSTRUCT CONCRETE CURB PER DETAIL 11, SHEET C700
2. CONSTRUCT CONCRETE CURB AND GUTTER PER DETAIL 10, SHEET C700
3. INSTALL CAST-IN-PLACE TRUNCATED DOMES PER ARCHITECTURAL DETAIL 5, SHEET A004
4. INSTALL STANDARD 90° PARKING STALL
5. INSTALL ACCESSIBLE PARKING STALL PER ARCHITECTURAL DETAILS ON SHEET A007
6. INSTALL 3' WHEEL STOP PER DETAIL 14, PER ARCHITECTURAL DETAIL 8, SHEET A007
7. INSTALL STANDARD DUTY CONCRETE PAVEMENT PER DETAIL 13, SHEET C700
8. INSTALL HEAVY DUTY ASPHALT CONCRETE PAVEMENT PER DETAIL 13, SHEET C700
9. INSTALL SYTHENTIC TURF FIELD PER OF ARCHITECTURAL DETAILS ON SHEET A005
10. INSTALL SITE FENCE PER ARCHITECTURAL DETAILS ON SHEET A008
11. INSTALL DISCUS PAD PER ARCHITECTURAL DETAILS ON, SHEET A005 AND A005.1
12. INSTALL SHOT PUT PAD PER ARCHITECTURAL DETAILS ON, SHEET A005 AND A005.1
13. INSTALL POLE VAULT PER ARCHITECTURAL DETAIL 20, SHEET A005
14. INSTALL GATE PER ARCHITECTURAL DETAILS ON SHEET A008
15. INSTALL SCOREBOARD PER SEPARATE PLANS
16. INSTALL SITE LIGHT PER ELECTRICAL PLAN SHEET E002
17. INSTALL BASEBALL FIELD AND DUGOUTS AND STORAGE PER ARCHITECTURAL DETAILS ON SHEET A006
18. INSTALL SOFTBALL FIELD AND DUGOUTS AND STORAGE PER ARCHITECTURAL DETAILS ON SHEET A006
19. CONSTRUCT RESTROOM BUILDING PER ARCHITECTURAL PLAN SHEET A101
20. INSTALL LONG JUMP PER ARCHITECTURAL DETAIL 13, SHEET A005
21. NATURAL TURF PRACTICE FIELD PER LANDSCAPE PLANS
22. CONSTRUCT CONCRETE WALK-OFF CURB PER DETAIL 6, SHEET C700
23. CONSTRUCT ACCESSIBLE CURB RAMP PER DETAIL 16, SHEET C700
24. CONSTRUCT CONCRETE MOW STRIP PER ARCHITECTURAL DETAIL 10 SHEET A004
25. CONSTRUCT CURB WALL WITH CURB AND GUTTER PER PER DETAIL 8 SHEET C700
26. CONSTRUCT CONCRETE VALLEY GUTTER PER DETAIL 12, SHEET C700
27. REMOTE DRINKING FOUNTAIN PER ARCHITECTURAL DETAIL 16 SHEET A810
28. DRIVEWAY APRON PER SEPARATE CITY APPROVED PLANS
29. ALUMINUM BLEACHERS PER ARCHITECTURAL SHEETS A002 AND A003
30. CONSTRUCT TICKETING BOOTH PER ARCHITECTURAL SHEET A201
31. CONSTRUCT 2-FT CURB CUT
32. BATTING CAGES PER ARCHITECTURAL DETAIL 6, SHEET A006
33. SHADE STRUCTURE AND SCORE TABLE PER ARCHITECTURAL SHEET A005.2
34. INSTALL BOLLARD PER DETAIL 3, SHEET C701
35. ROLLING GATE PER ARCHITECTURAL DETAIL 4, SHEET A008
36. ALUMINUM BLEACHERS PER SEPARATE BLEACHERS PLANS
37. CULVERT PER SEPARATE PERMIT
38. PROPOSED ROLL CURB PER DETAIL 10 SHEET C701
39. PROPOSED 0" CURB PER DETAIL 11 SHEET C701

NORTH

GRAPHIC SCALE IN FEET
0 10 20 40

SCALE 1" = 20'
WHEN PRINTED FULL SIZE
30" X 42"

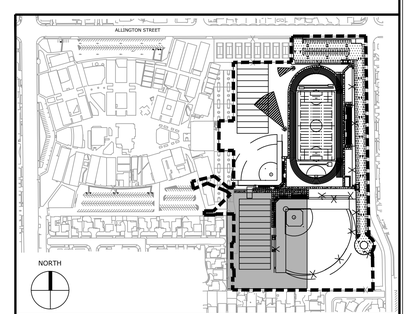

KEYMAP

IDENTIFICATION STAMP
DIV. OF THE STATE ARCHITECT
APP: 03-124281 INC:
REVIEWED FOR
SS ☑ FLS ☑ ACS ☑
DATE: 02/04/2025

ARCHITECT:
architecture
westbergwhite

CONSULTANT:
Kimley»Horn
© 2018 KIMLEY-HORN AND ASSOCIATES, INC.
765 THE CITY DRIVE, SUITE 200, ORANGE, CA 92868
PHONE: 714-939-1030 FAX: 714-938-9488
WWW.KIMLEY-HORN.COM

REGISTERED PROFESSIONAL ENGINEER
AHMED ZUHAIRA
No. RCE NO. 92050
CIVIL
STATE OF CALIFORNIA

PROJECT NAME:

Bellflower Unified School District

Mayfair High School Sports Fields

6000 North Woodruff Ave
Lakewood, California 90713

CLIENT:

BELLFLOWER UNIFIED SCHOOL DISTRICT

16703 S. Clark Ave.
BELLFLOWER, CALIFORNIA 90706

#	Rev. Date	Description

JOB NO:	15008.01
DATE:	11/13/2024
DRAWN:	CC
CHECK:	IV
ARCHITECT:	PDW
ENGINEER:	AZ

SHEET DESCRIPTION:

HORIZONTAL CONTROL PLAN

SHEET NO:

C303

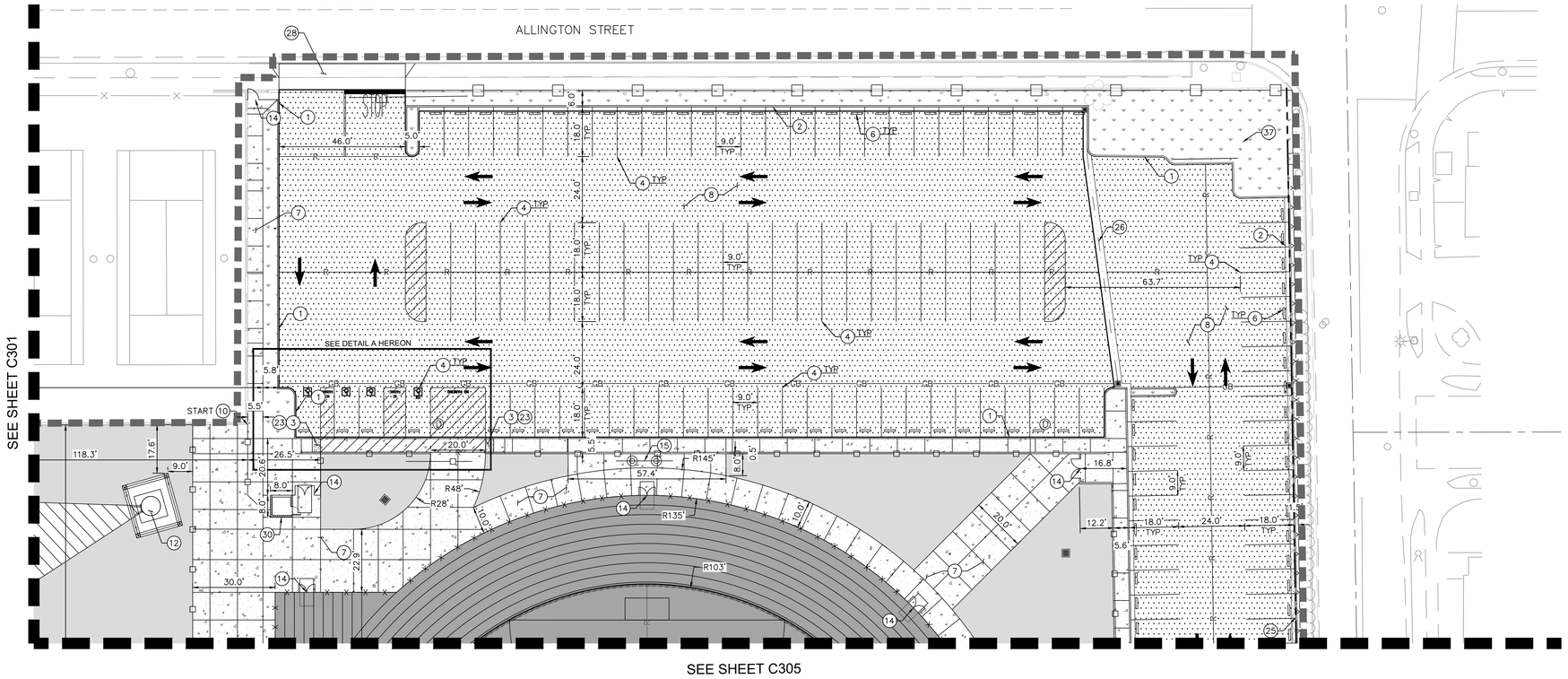

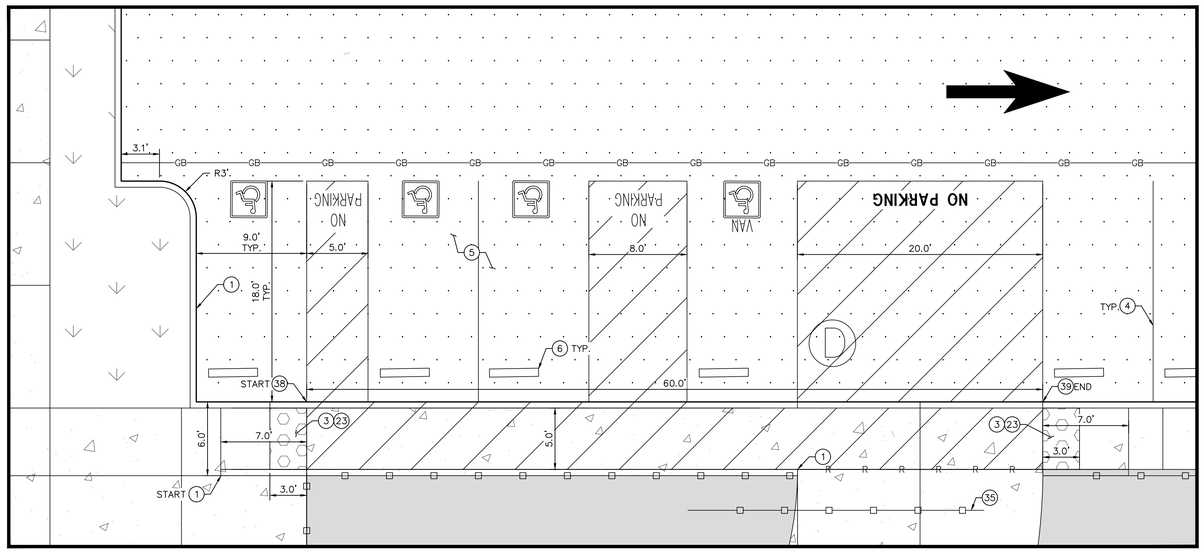

DETAIL A
SCALE: 1" = 5'

LEGEND

- PROPERTY LINE
- STREET CENTERLINE
- CIVIL LIMIT OF WORK
- PROPOSED FENCE
- RETAINING WALL
- FLOW LINE
- CATCH BASIN

PAVING LEGEND

- HEAVY DUTY ASPHALT CONCRETE PAVEMENT REFER TO DETAIL 13, SHEET C700 COLOR AND FINISH PER LANDSCAPE PLANS
- STANDARD DUTY CONCRETE PAVEMENT REFER TO DETAIL 13, SHEET C700 COLOR AND FINISH PER LANDSCAPE PLANS
- PROPOSED LANDSCAPING
- PROPOSED SYNTHETIC TURF SURFACE REFER TO ARCHITECTURAL PLANS
- PROPOSED NATURAL GRASS REFER TO LANDSCAPE PLANS
- PROPOSED SYNTHETIC TRACK SURFACE REFER TO ARCHITECTURAL PLANS
- INFIELD MIXTURE PER ARCHITECTURAL PLANS
- CAST-IN-PLACE TRUNCATED DOMES
- PROPOSED CONCRETE SLAB ON GRADE REFER TO STRUCTURAL PLANS

CONSTRUCTION NOTES

1. CONSTRUCT CONCRETE CURB PER DETAIL 11, SHEET C700
2. CONSTRUCT CONCRETE CURB AND GUTTER PER DETAIL 10, SHEET C700
3. INSTALL CAST-IN-PLACE TRUNCATED DOMES PER ARCHITECTURAL DETAIL 5, SHEET A004
4. INSTALL STANDARD 90° PARKING STALL
5. INSTALL ACCESSIBLE PARKING STALL PER ARCHITECTURAL DETAILS ON SHEET A007
6. INSTALL 3' WHEEL STOP PER DETAIL 14, PER ARCHITECTURAL DETAIL 8, SHEET A007
7. INSTALL STANDARD DUTY CONCRETE PAVEMENT PER DETAIL 13, SHEET C700
8. INSTALL HEAVY DUTY ASPHALT CONCRETE PAVEMENT PER DETAIL 13, SHEET C700
9. INSTALL SYTHENTIC TURF FIELD PER OF ARCHITECTURAL DETAILS ON SHEET A005
10. INSTALL SITE FENCE PER ARCHITECTURAL DETAILS ON SHEET A008
11. INSTALL DISCUS PAD PER ARCHITECTURAL DETAILS ON, SHEET A005 AND A005.1
12. INSTALL SHOT PUT PAD PER ARCHITECTURAL DETAILS ON, SHEET A005 AND A005.1
13. INSTALL POLE VAULT PER ARCHITECTURAL DETAIL 20, SHEET A005
14. INSTALL GATE PER ARCHITECTURAL DETAILS ON SHEET A008
15. INSTALL SCOREBOARD PER SEPARATE PLANS
16. INSTALL SITE LIGHT PER ELECTRICAL PLAN SHEET E002
17. INSTALL BASEBALL FIELD AND DUGOUTS AND STORAGE PER ARCHITECTURAL DETAILS ON SHEET A006
18. INSTALL SOFTBALL FIELD AND DUGOUTS AND STORAGE PER ARCHITECTURAL DETAILS ON SHEET A006
19. CONSTRUCT RESTROOM BUILDING PER ARCHITECTURAL PLAN SHEET A101
20. INSTALL LONG JUMP PER ARCHITECTURAL DETAIL 13, SHEET A005
21. NATURAL TURF PRACTICE FIELD PER LANDSCAPE PLANS
22. CONSTRUCT CONCRETE WALK-OFF CURB PER DETAIL 6, SHEET C700
23. CONSTRUCT ACCESSIBLE CURB RAMP PER DETAIL 16, SHEET C700
24. CONSTRUCT CONCRETE MOW STRIP PER ARCHITECTURAL DETAIL 10 SHEET A004
25. CONSTRUCT CURB WALL WITH CURB AND GUTTER PER PER DETAIL 8 SHEET C700
26. CONSTRUCT CONCRETE VALLEY GUTTER PER DETAIL 12, SHEET C700
27. REMOTE DRINKING FOUNTAIN PER ARCHITECTURAL DETAIL 16 SHEET A810
28. DRIVEWAY APRON PER SEPARATE CITY APPROVED PLANS
29. ALUMINUM BLEACHERS PER ARCHITECTURAL SHEETS A002 AND A003
30. CONSTRUCT TICKETING BOOTH PER ARCHITECTURAL SHEET A201
31. CONSTRUCT 2-FT CURB CUT
32. BATTING CAGES PER ARCHITECTURAL DETAIL 6, SHEET A006
33. SHADE STRUCTURE AND SCORE TABLE PER ARCHITECTURAL SHEET A005.2
34. INSTALL BOLLARD PER DETAIL 3, SHEET C701
35. ROLLING GATE PER ARCHITECTURAL DETAIL 4, SHEET A008
36. ALUMINUM BLEACHERS PER SEPARATE BLEACHERS PLANS
37. CULVERT PER SEPARATE PERMIT
38. PROPOSED ROLL CURB PER DETAIL 10 SHEET C701
39. PROPOSED 0" CURB PER DETAIL 11 SHEET C701

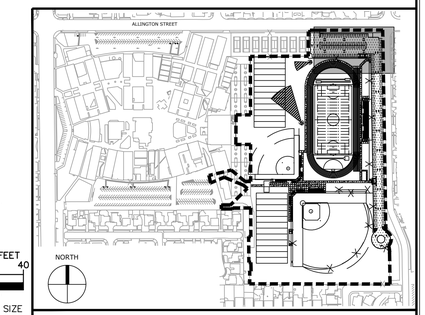

KEYMAP

NORTH

GRAPHIC SCALE IN FEET
0 10 20 40
SCALE 1" = 20'
WHEN PRINTED FULL SIZE
30" X 42"

IDENTIFICATION STAMP
DIV. OF THE STATE ARCHITECT
APP: 03-124281 INC:
REVIEWED FOR
SS ☑ FLS ☑ ACS ☑
DATE: 02/04/2025

ARCHITECT:
architecture
westbergwhite

CONSULTANT:
Kimley»Horn
© 2018 KIMLEY-HORN AND ASSOCIATES, INC.
765 THE CITY DRIVE, SUITE 200, ORANGE, CA 92868
PHONE: 714-939-1030 FAX: 714-938-9488
WWW.KIMLEY-HORN.COM

REGISTERED PROFESSIONAL ENGINEER
AHMED ZUHAIRA
RCE NO. 92050
CIVIL
STATE OF CALIFORNIA

PROJECT NAME:

Bellflower Unified School District
Mayfair High School Sports Fields
6000 North Woodruff Ave
Lakewood, California 90713

CLIENT:
BELLFLOWER UNIFIED SCHOOL DISTRICT
16703 S. Clark Ave.
BELLFLOWER, CALIFORNIA 90706

Rev.	Date	Description
1		

JOB NO: 15008.01
DATE: 11/13/2024
DRAWN: CC
CHECK: IV
ARCHITECT: PDW
ENGINEER: AZ

SHEET DESCRIPTION:
HORIZONTAL CONTROL PLAN

SHEET NO:
C304

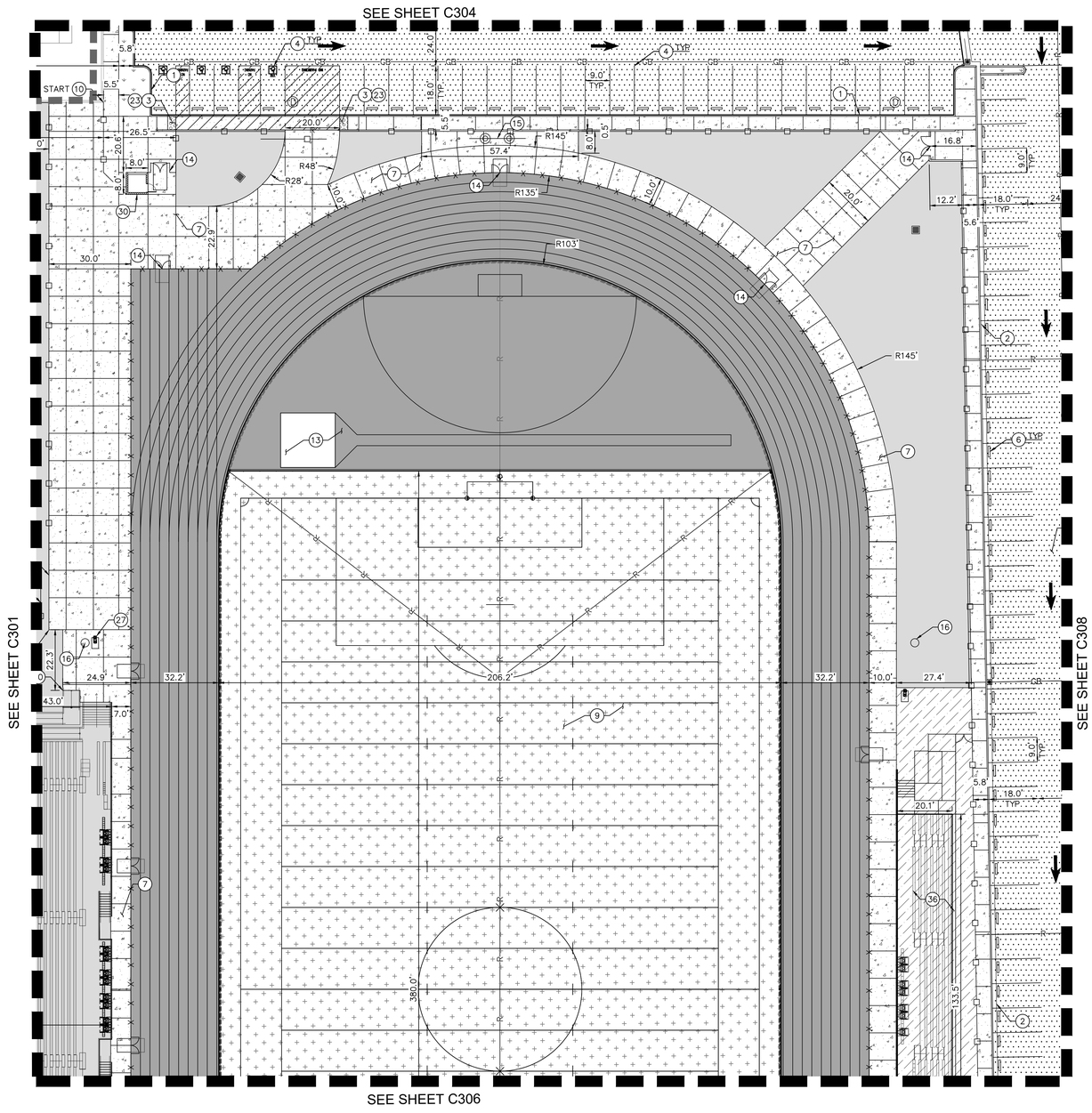

LEGEND

- PROPERTY LINE
- STREET CENTERLINE
- CIVIL LIMIT OF WORK
- PROPOSED FENCE
- RETAINING WALL
- FLOW LINE
- CATCH BASIN

PAVING LEGEND

- HEAVY DUTY ASPHALT CONCRETE PAVEMENT REFER TO DETAIL 13, SHEET C700 COLOR AND FINISH PER LANDSCAPE PLANS
- STANDARD DUTY CONCRETE PAVEMENT REFER TO DETAIL 13, SHEET C700 COLOR AND FINISH PER LANDSCAPE PLANS
- PROPOSED LANDSCAPING
- PROPOSED SYNTHETIC TURF SURFACE REFER TO ARCHITECTURAL PLANS
- PROPOSED NATURAL GRASS REFER TO LANDSCAPE PLANS
- PROPOSED SYNTHETIC TRACK SURFACE REFER TO ARCHITECTURAL PLANS
- INFIELD MIXTURE PER ARCHITECTURAL PLANS
- CAST-IN-PLACE TRUNCATED DOMES
- PROPOSED CONCRETE SLAB ON GRADE REFER TO STRUCTURAL PLANS

CONSTRUCTION NOTES

1. CONSTRUCT CONCRETE CURB PER DETAIL 11, SHEET C700
2. CONSTRUCT CONCRETE CURB AND GUTTER PER DETAIL 10, SHEET C700
3. INSTALL CAST-IN-PLACE TRUNCATED DOMES PER ARCHITECTURAL DETAIL 5, SHEET A004
4. INSTALL STANDARD 90° PARKING STALL
5. INSTALL ACCESSIBLE PARKING STALL PER ARCHITECTURAL DETAILS ON SHEET A007
6. INSTALL 3' WHEEL STOP PER DETAIL 14, PER ARCHITECTURAL DETAIL 8, SHEET A007
7. INSTALL STANDARD DUTY CONCRETE PAVEMENT PER DETAIL 13, SHEET C700
8. INSTALL HEAVY DUTY ASPHALT CONCRETE PAVEMENT PER DETAIL 13, SHEET C700
9. INSTALL SYTHENTIC TURF FIELD PER OF ARCHITECTURAL DETAILS ON SHEET A005
10. INSTALL SITE FENCE PER ARCHITECTURAL DETAILS ON SHEET A008
11. INSTALL DISCUS PAD PER ARCHITECTURAL DETAILS ON, SHEET A005 AND A005.1
12. INSTALL SHOT PUT PAD PER ARCHITECTURAL DETAILS ON, SHEET A005 AND A005.1
13. INSTALL POLE VAULT PER ARCHITECTURAL DETAIL 20, SHEET A005
14. INSTALL GATE PER ARCHITECTURAL DETAILS ON SHEET A008
15. INSTALL SCOREBOARD PER SEPARATE PLANS
16. INSTALL SITE LIGHT PER ELECTRICAL PLAN SHEET E002
17. INSTALL BASEBALL FIELD AND DUGOUTS AND STORAGE PER ARCHITECTURAL DETAILS ON SHEET A006
18. INSTALL SOFTBALL FIELD AND DUGOUTS AND STORAGE PER ARCHITECTURAL DETAILS ON SHEET A006
19. CONSTRUCT RESTROOM BUILDING PER ARCHITECTURAL PLAN SHEET A101
20. INSTALL LONG JUMP PER ARCHITECTURAL DETAIL 13, SHEET A005
21. NATURAL TURF PRACTICE FIELD PER LANDSCAPE PLANS
22. CONSTRUCT CONCRETE WALK-OFF CURB PER DETAIL 6, SHEET C700
23. CONSTRUCT ACCESSIBLE CURB RAMP PER DETAIL 16, SHEET C700
24. CONSTRUCT CONCRETE MOW STRIP PER ARCHITECTURAL DETAIL 10 SHEET A004
25. CONSTRUCT CURB WALL WITH CURB AND GUTTER PER PER DETAIL 8 SHEET C700
26. CONSTRUCT CONCRETE VALLEY GUTTER PER DETAIL 12, SHEET C700
27. REMOTE DRINKING FOUNTAIN PER ARCHITECTURAL DETAIL 16 SHEET A810
28. DRIVEWAY APRON PER SEPARATE CITY APPROVED PLANS
29. ALUMINUM BLEACHERS PER ARCHITECTURAL SHEETS A002 AND A003
30. CONSTRUCT TICKETING BOOTH PER ARCHITECTURAL SHEET A201
31. CONSTRUCT 2-FT CURB CUT
32. BATTING CAGES PER ARCHITECTURAL DETAIL 6, SHEET A006
33. SHADE STRUCTURE AND SCORE TABLE PER ARCHITECTURAL SHEET A005.2
34. INSTALL BOLLARD PER DETAIL 3, SHEET C701
35. ROLLING GATE PER ARCHITECTURAL DETAIL 4, SHEET A008
36. ALUMINUM BLEACHERS PER SEPARATE BLEACHERS PLANS
37. CULVERT PER SEPARATE PERMIT
38. PROPOSED ROLL CURB PER DETAIL 10 SHEET C701
39. PROPOSED 0" CURB PER DETAIL 11 SHEET C701

NORTH

GRAPHIC SCALE IN FEET
0 10 20 40
SCALE 1" = 20'
WHEN PRINTED FULL SIZE
30" X 42"

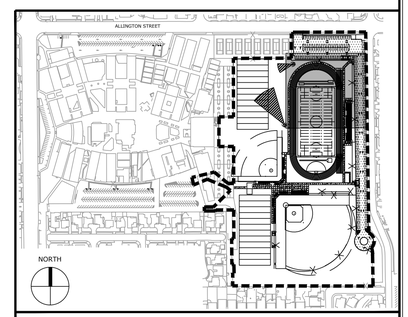

KEYMAP

IDENTIFICATION STAMP
DIV. OF THE STATE ARCHITECT
APP: 03-124281 INC:
REVIEWED FOR
SS ☑ FLS ☑ ACS ☑
DATE: 02/04/2025

ARCHITECT:
architecture
westbergwhite

CONSULTANT:
Kimley»Horn
© 2018 KIMLEY-HORN AND ASSOCIATES, INC.
765 THE CITY DRIVE, SUITE 200, ORANGE, CA 92868
PHONE: 714-939-1030 FAX: 714-938-9488
WWW.KIMLEY-HORN.COM

REGISTERED PROFESSIONAL ENGINEER
AHMED ZUMAWA
No. RCE NO. 92209
CIVIL
STATE OF CALIFORNIA

PROJECT NAME:

Bellflower Unified School District

Mayfair High School Sports Fields

6000 North Woodruff Ave
Lakewood, California 90713

CLIENT:

BELLFLOWER UNIFIED SCHOOL DISTRICT

16703 S. Clark Ave.
BELLFLOWER, CALIFORNIA 90706

#	Rev.	Date	Description

JOB NO: 15008.01
DATE: 11/13/2024
DRAWN: CC
CHECK: IV
ARCHITECT: PDW
ENGINEER: AZ

SHEET DESCRIPTION:
HORIZONTAL CONTROL PLAN

SHEET NO:
C305

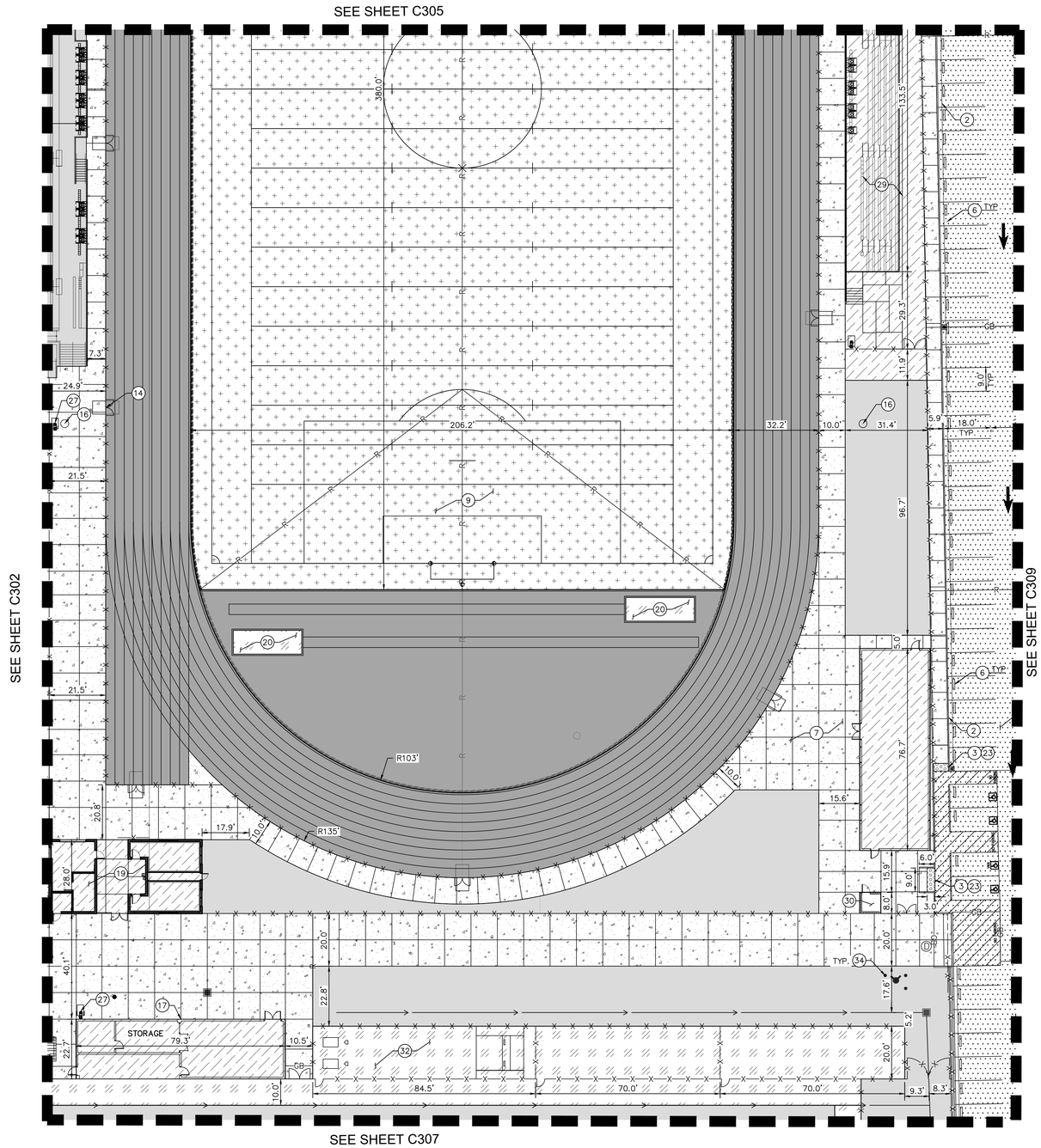

LEGEND

- PROPERTY LINE
- STREET CENTERLINE
- CIVIL LIMIT OF WORK
- PROPOSED FENCE
- RETAINING WALL
- FLOW LINE
- CATCH BASIN

PAVING LEGEND

- HEAVY DUTY ASPHALT CONCRETE PAVEMENT REFER TO DETAIL 13, SHEET C700 COLOR AND FINISH PER LANDSCAPE PLANS
- STANDARD DUTY CONCRETE PAVEMENT REFER TO DETAIL 13, SHEET C700 COLOR AND FINISH PER LANDSCAPE PLANS
- PROPOSED LANDSCAPING
- PROPOSED SYNTHETIC TURF SURFACE REFER TO ARCHITECTURAL PLANS
- PROPOSED NATURAL GRASS REFER TO LANDSCAPE PLANS
- PROPOSED SYNTHETIC TRACK SURFACE REFER TO ARCHITECTURAL PLANS
- INFIELD MIXTURE PER ARCHITECTURAL PLANS
- CAST-IN-PLACE TRUNCATED DOMES
- PROPOSED CONCRETE SLAB ON GRADE REFER TO STRUCTURAL PLANS

CONSTRUCTION NOTES

1. CONSTRUCT CONCRETE CURB PER DETAIL 11, SHEET C700
2. CONSTRUCT CONCRETE CURB AND GUTTER PER DETAIL 10, SHEET C700
3. INSTALL CAST-IN-PLACE TRUNCATED DOMES PER ARCHITECTURAL DETAIL 5, SHEET A004
4. INSTALL STANDARD 90° PARKING STALL
5. INSTALL ACCESSIBLE PARKING STALL PER ARCHITECTURAL DETAILS ON SHEET A007
6. INSTALL 3' WHEEL STOP PER DETAIL 14, PER ARCHITECTURAL DETAIL 8, SHEET A007
7. INSTALL STANDARD DUTY CONCRETE PAVEMENT PER DETAIL 13, SHEET C700
8. INSTALL HEAVY DUTY ASPHALT CONCRETE PAVEMENT PER DETAIL 13, SHEET C700
9. INSTALL SYTHENTIC TURF FIELD PER OF ARCHITECTURAL DETAILS ON SHEET A005
10. INSTALL SITE FENCE PER ARCHITECTURAL DETAILS ON SHEET A008
11. INSTALL DISCUS PAD PER ARCHITECTURAL DETAILS ON, SHEET A005 AND A005.1
12. INSTALL SHOT PUT PAD PER ARCHITECTURAL DETAILS ON, SHEET A005 AND A005.1
13. INSTALL POLE VAULT PER ARCHITECTURAL DETAIL 20, SHEET A005
14. INSTALL GATE PER ARCHITECTURAL DETAILS ON SHEET A008
15. INSTALL SCOREBOARD PER SEPARATE PLANS
16. INSTALL SITE LIGHT PER ELECTRICAL PLAN SHEET E002
17. INSTALL BASEBALL FIELD AND DUGOUTS AND STORAGE PER ARCHITECTURAL DETAILS ON SHEET A006
18. INSTALL SOFTBALL FIELD AND DUGOUTS AND STORAGE PER ARCHITECTURAL DETAILS ON SHEET A006
19. CONSTRUCT RESTROOM BUILDING PER ARCHITECTURAL PLAN SHEET A101
20. INSTALL LONG JUMP PER ARCHITECTURAL DETAIL 13, SHEET A005
21. NATURAL TURF PRACTICE FIELD PER LANDSCAPE PLANS
22. CONSTRUCT CONCRETE WALK-OFF CURB PER DETAIL 6, SHEET C700
23. CONSTRUCT ACCESSIBLE CURB RAMP PER DETAIL 16, SHEET C700
24. CONSTRUCT CONCRETE MOW STRIP PER ARCHITECTURAL DETAIL 10 SHEET A004
25. CONSTRUCT CURB WALL WITH CURB AND GUTTER PER PER DETAIL 8 SHEET C700
26. CONSTRUCT CONCRETE VALLEY GUTTER PER DETAIL 12, SHEET C700
27. REMOTE DRINKING FOUNTAIN PER ARCHITECTURAL DETAIL 16 SHEET A810
28. DRIVEWAY APRON PER SEPARATE CITY APPROVED PLANS
29. ALUMINUM BLEACHERS PER ARCHITECTURAL SHEETS A002 AND A003
30. CONSTRUCT TICKETING BOOTH PER ARCHITECTURAL SHEET A201
31. CONSTRUCT 2-FT CURB CUT
32. BATTING CAGES PER ARCHITECTURAL DETAIL 6, SHEET A006
33. SHADE STRUCTURE AND SCORE TABLE PER ARCHITECTURAL SHEET A005.2
34. INSTALL BOLLARD PER DETAIL 3, SHEET C701
35. ROLLING GATE PER ARCHITECTURAL DETAIL 4, SHEET A008
36. ALUMINUM BLEACHERS PER SEPARATE BLEACHERS PLANS
37. CULVERT PER SEPARATE PERMIT
38. PROPOSED ROLL CURB PER DETAIL 10 SHEET C701
39. PROPOSED 0" CURB PER DETAIL 11 SHEET C701

NORTH

GRAPHIC SCALE IN FEET
0 10 20 40

SCALE 1" = 20'
WHEN PRINTED FULL SIZE
30" X 42"

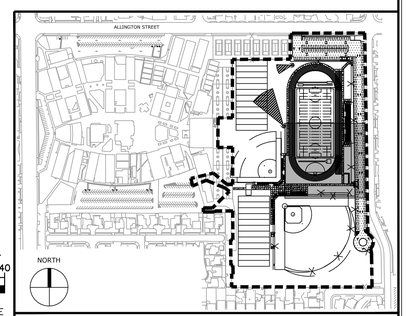

KEYMAP

IDENTIFICATION STAMP
DIV. OF THE STATE ARCHITECT
APP: 03-124281 INC:
REVIEWED FOR
SS ☑ FLS ☑ ACS ☑
DATE: 02/04/2025

ARCHITECT:
architecture
westbergwhite

CONSULTANT:
Kimley»Horn
© 2018 KIMLEY-HORN AND ASSOCIATES, INC.
765 THE CITY DRIVE, SUITE 200, ORANGE, CA 92868
PHONE: 714-939-1030 FAX: 714-938-9488
WWW.KIMLEY-HORN.COM

REGISTERED PROFESSIONAL ENGINEER
AHMED ZUMAWA
No. 92200
CIVIL
STATE OF CALIFORNIA

PROJECT NAME:

Bellflower Unified School District

Mayfair High School Sports Fields

6000 North Woodruff Ave
Lakewood, California 90713

CLIENT:

BELLFLOWER UNIFIED SCHOOL DISTRICT

16703 S. Clark Ave.
BELLFLOWER, CALIFORNIA 90706

#	Rev. Date	Description

JOB NO: 15008.01
DATE: 11/13/2024
DRAWN: CC
CHECK: IV
ARCHITECT: PDW
ENGINEER: AZ

SHEET DESCRIPTION:
HORIZONTAL CONTROL PLAN

SHEET NO:
C306

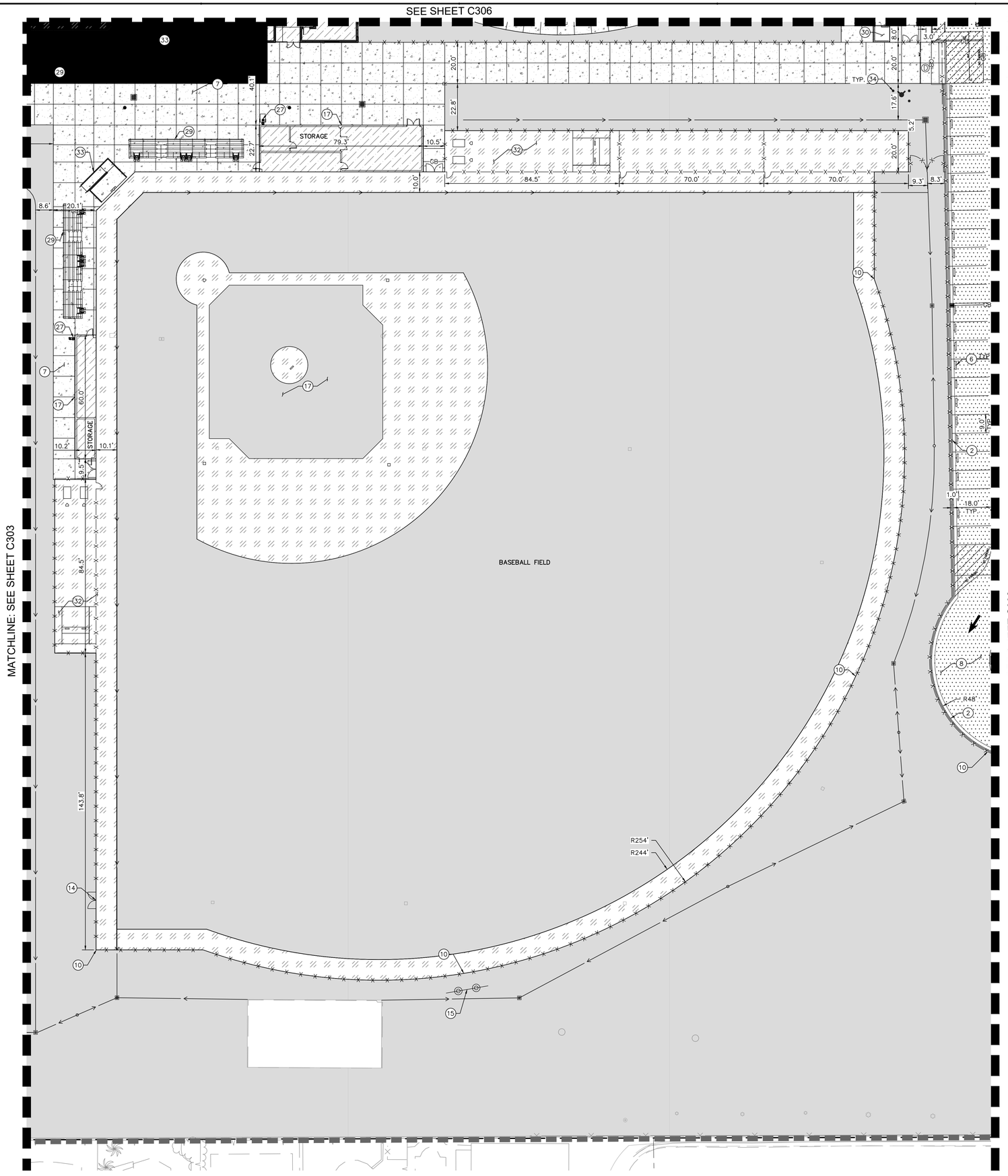
SEE SHEET C306
MATCHLINE: SEE SHEET C303
SEE SHEET C309
BASEBALL FIELD
STORAGE
STORAGE
R254'
R244'
R48'
143.8'
84.5'
70.0'
70.0'
84.5'
79.3'
60.0'
40.1'
20.1'
8.6'
10.2'
10.1'
9.1'
22.7'
10.5'
22.8'
20.0'
17.6'
5.2'
9.3'
8.3'
8.0'
3.0'
18.0'
1.0'
9.0'
TYP.
TYP.
TYP.

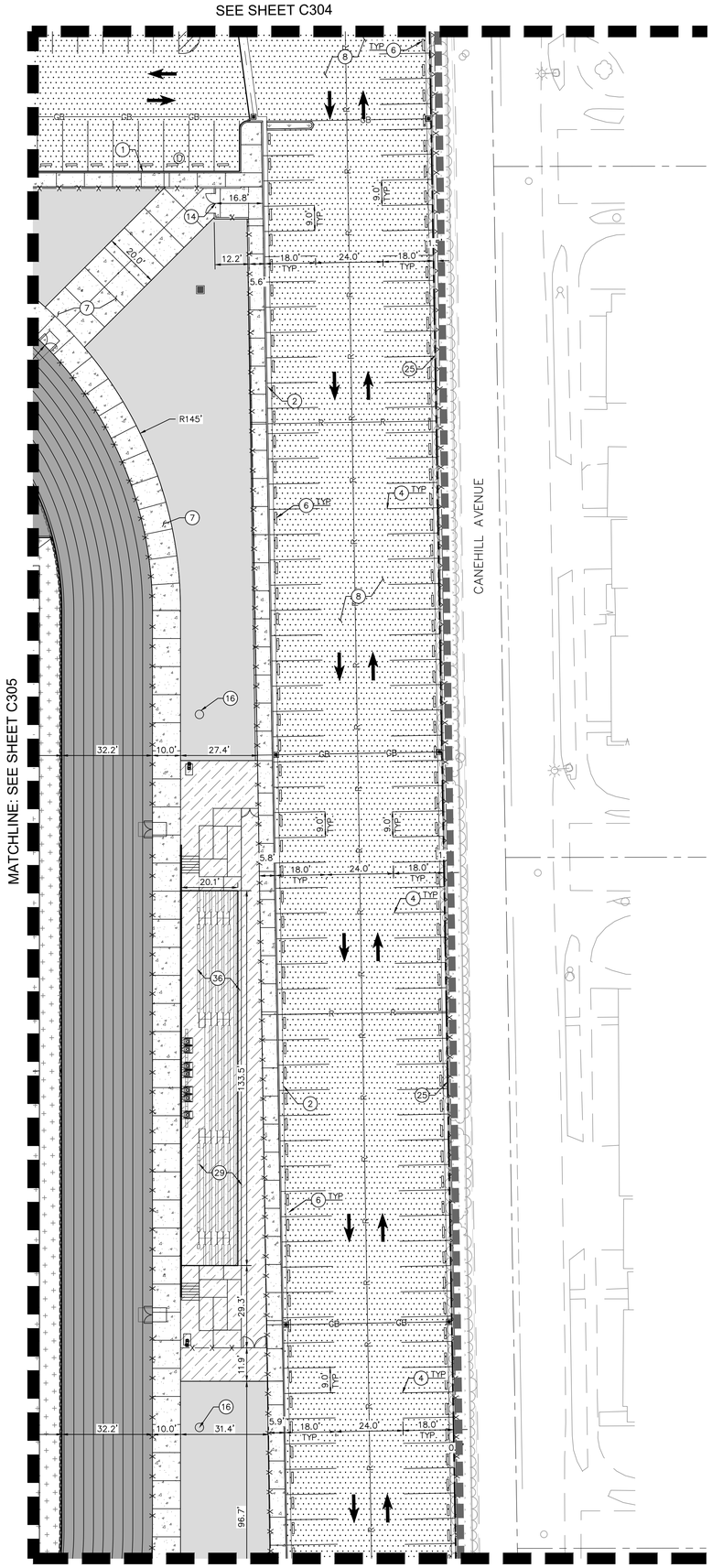

LEGEND

- PROPERTY LINE
- STREET CENTERLINE
- CIVIL LIMIT OF WORK
- PROPOSED FENCE
- RETAINING WALL
- FLOW LINE
- CATCH BASIN

PAVING LEGEND

- HEAVY DUTY ASPHALT CONCRETE PAVEMENT REFER TO DETAIL 13, SHEET C700 COLOR AND FINISH PER LANDSCAPE PLANS
- STANDARD DUTY CONCRETE PAVEMENT REFER TO DETAIL 13, SHEET C700 COLOR AND FINISH PER LANDSCAPE PLANS
- PROPOSED LANDSCAPING
- PROPOSED SYNTHETIC TURF SURFACE REFER TO ARCHITECTURAL PLANS
- PROPOSED NATURAL GRASS REFER TO LANDSCAPE PLANS
- PROPOSED SYNTHETIC TRACK SURFACE REFER TO ARCHITECTURAL PLANS
- INFIELD MIXTURE PER ARCHITECTURAL PLANS
- CAST-IN-PLACE TRUNCATED DOMES
- PROPOSED CONCRETE SLAB ON GRADE REFER TO STRUCTURAL PLANS

CONSTRUCTION NOTES

1. CONSTRUCT CONCRETE CURB PER DETAIL 11, SHEET C700
2. CONSTRUCT CONCRETE CURB AND GUTTER PER DETAIL 10, SHEET C700
3. INSTALL CAST-IN-PLACE TRUNCATED DOMES PER ARCHITECTURAL DETAIL 5, SHEET A004
4. INSTALL STANDARD 90° PARKING STALL
5. INSTALL ACCESSIBLE PARKING STALL PER ARCHITECTURAL DETAILS ON SHEET A007
6. INSTALL 3' WHEEL STOP PER DETAIL 14, PER ARCHITECTURAL DETAIL 8, SHEET A007
7. INSTALL STANDARD DUTY CONCRETE PAVEMENT PER DETAIL 13, SHEET C700
8. INSTALL HEAVY DUTY ASPHALT CONCRETE PAVEMENT PER DETAIL 13, SHEET C700
9. INSTALL SYTHENTIC TURF FIELD PER OF ARCHITECTURAL DETAILS ON SHEET A005
10. INSTALL SITE FENCE PER ARCHITECTURAL DETAILS ON SHEET A008
11. INSTALL DISCUS PAD PER ARCHITECTURAL DETAILS ON, SHEET A005 AND A005.1
12. INSTALL SHOT PUT PAD PER ARCHITECTURAL DETAILS ON, SHEET A005 AND A005.1
13. INSTALL POLE VAULT PER ARCHITECTURAL DETAIL 20, SHEET A005
14. INSTALL GATE PER ARCHITECTURAL DETAILS ON SHEET A008
15. INSTALL SCOREBOARD PER SEPARATE PLANS
16. INSTALL SITE LIGHT PER ELECTRICAL PLAN SHEET E002
17. INSTALL BASEBALL FIELD AND DUGOUTS AND STORAGE PER ARCHITECTURAL DETAILS ON SHEET A006
18. INSTALL SOFTBALL FIELD AND DUGOUTS AND STORAGE PER ARCHITECTURAL DETAILS ON SHEET A006
19. CONSTRUCT RESTROOM BUILDING PER ARCHITECTURAL PLAN SHEET A101
20. INSTALL LONG JUMP PER ARCHITECTURAL DETAIL 13, SHEET A005
21. NATURAL TURF PRACTICE FIELD PER LANDSCAPE PLANS
22. CONSTRUCT CONCRETE WALK-OFF CURB PER DETAIL 6, SHEET C700
23. CONSTRUCT ACCESSIBLE CURB RAMP PER DETAIL 16, SHEET C700
24. CONSTRUCT CONCRETE MOW STRIP PER ARCHITECTURAL DETAIL 10 SHEET A004
25. CONSTRUCT CURB WALL WITH CURB AND GUTTER PER PER DETAIL 8 SHEET C700
26. CONSTRUCT CONCRETE VALLEY GUTTER PER DETAIL 12, SHEET C700
27. REMOTE DRINKING FOUNTAIN PER ARCHITECTURAL DETAIL 16 SHEET A810
28. DRIVEWAY APRON PER SEPARATE CITY APPROVED PLANS
29. ALUMINUM BLEACHERS PER ARCHITECTURAL SHEETS A002 AND A003
30. CONSTRUCT TICKETING BOOTH PER ARCHITECTURAL SHEET A201
31. CONSTRUCT 2-FT CURB CUT
32. BATTING CAGES PER ARCHITECTURAL DETAIL 6, SHEET A006
33. SHADE STRUCTURE AND SCORE TABLE PER ARCHITECTURAL SHEET A005.2
34. INSTALL BOLLARD PER DETAIL 3, SHEET C701
35. ROLLING GATE PER ARCHITECTURAL DETAIL 4, SHEET A008
36. ALUMINUM BLEACHERS PER SEPARATE BLEACHERS PLANS
37. CULVERT PER SEPARATE PERMIT
38. PROPOSED ROLL CURB PER DETAIL 10 SHEET C701
39. PROPOSED 0" CURB PER DETAIL 11 SHEET C701

NORTH

GRAPHIC SCALE IN FEET
0 10 20 40

SCALE 1" = 20'
WHEN PRINTED FULL SIZE
30" X 42"

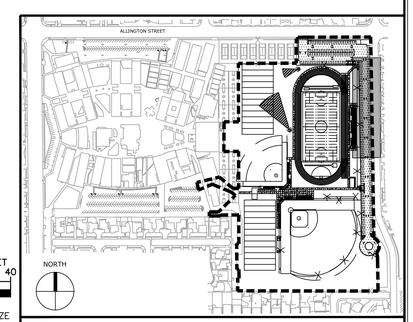

KEYMAP

IDENTIFICATION STAMP
DIV. OF THE STATE ARCHITECT
APP: 03-124281 INC:
REVIEWED FOR
SS ☑ FLS ☑ ACS ☑
DATE: 02/04/2025

ARCHITECT:
architecture
westbergwhite

CONSULTANT:
Kimley»Horn
© 2018 KIMLEY-HORN AND ASSOCIATES, INC.
765 THE CITY DRIVE, SUITE 200, ORANGE, CA 92868
PHONE: 714-939-1030 FAX: 714-938-9488
WWW.KIMLEY-HORN.COM

REGISTERED PROFESSIONAL ENGINEER
AHMED ZUMAWA
No. RCE NO. 92050
CIVIL
STATE OF CALIFORNIA

PROJECT NAME:

Bellflower Unified School District

Mayfair High School Sports Fields

6000 North Woodruff Ave
Lakewood, California 90713

CLIENT:

BELLFLOWER UNIFIED SCHOOL DISTRICT

16703 S. Clark Ave.
BELLFLOWER, CALIFORNIA 90706

#	Rev. Date	Description

JOB NO: 15008.01
DATE: 11/13/2024
DRAWN: CC
CHECK: IV
ARCHITECT: PDW
ENGINEER: AZ

SHEET DESCRIPTION:

HORIZONTAL CONTROL PLAN

SHEET NO:

C308

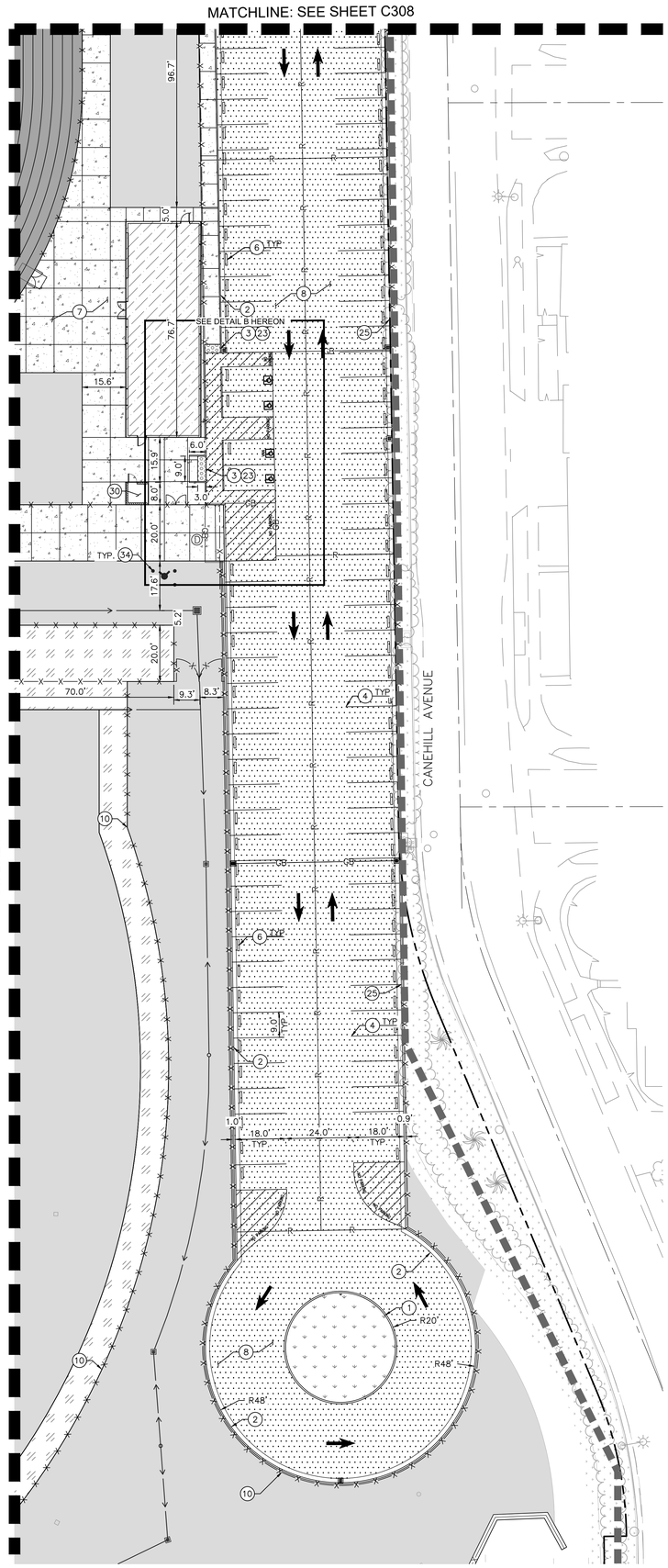

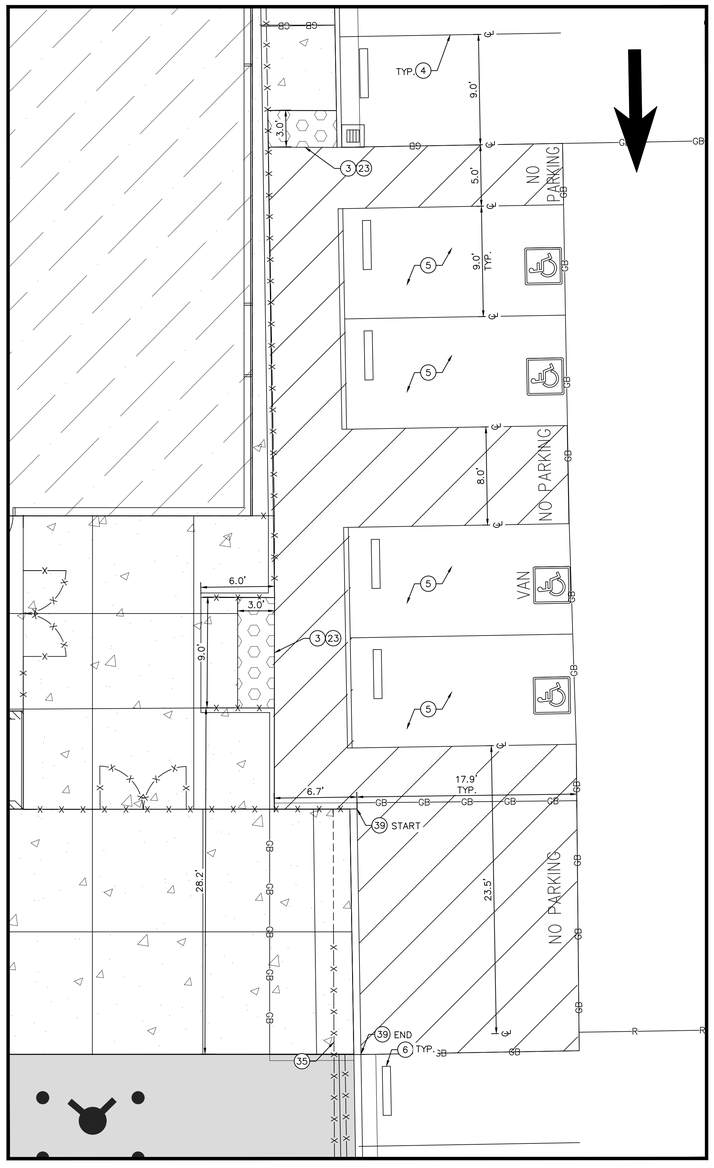

DETAIL B
SCALE: 1" = 5'

LEGEND

- PROPERTY LINE
- STREET CENTERLINE
- CIVIL LIMIT OF WORK
- PROPOSED FENCE
- RETAINING WALL
- FLOW LINE
- CATCH BASIN

PAVING LEGEND

- HEAVY DUTY ASPHALT CONCRETE PAVEMENT REFER TO DETAIL 13, SHEET C700 COLOR AND FINISH PER LANDSCAPE PLANS
- STANDARD DUTY CONCRETE PAVEMENT REFER TO DETAIL 13, SHEET C700 COLOR AND FINISH PER LANDSCAPE PLANS
- PROPOSED LANDSCAPING
- PROPOSED SYNTHETIC TURF SURFACE REFER TO ARCHITECTURAL PLANS
- PROPOSED NATURAL GRASS REFER TO LANDSCAPE PLANS
- PROPOSED SYNTHETIC TRACK SURFACE REFER TO ARCHITECTURAL PLANS
- INFIELD MIXTURE PER ARCHITECTURAL PLANS
- CAST-IN-PLACE TRUNCATED DOMES
- PROPOSED CONCRETE SLAB ON GRADE REFER TO STRUCTURAL PLANS

CONSTRUCTION NOTES

1. CONSTRUCT CONCRETE CURB PER DETAIL 11, SHEET C700
2. CONSTRUCT CONCRETE CURB AND GUTTER PER DETAIL 10, SHEET C700
3. INSTALL CAST-IN-PLACE TRUNCATED DOMES PER ARCHITECTURAL DETAIL 5, SHEET A004
4. INSTALL STANDARD 90° PARKING STALL
5. INSTALL ACCESSIBLE PARKING STALL PER ARCHITECTURAL DETAILS ON SHEET A007
6. INSTALL 3' WHEEL STOP PER DETAIL 14, PER ARCHITECTURAL DETAIL 8, SHEET A007
7. INSTALL STANDARD DUTY CONCRETE PAVEMENT PER DETAIL 13, SHEET C700
8. INSTALL HEAVY DUTY ASPHALT CONCRETE PAVEMENT PER DETAIL 13, SHEET C700
9. INSTALL SYTHENTIC TURF FIELD PER OF ARCHITECTURAL DETAILS ON SHEET A005
10. INSTALL SITE FENCE PER ARCHITECTURAL DETAILS ON SHEET A008
11. INSTALL DISCUS PAD PER ARCHITECTURAL DETAILS ON, SHEET A005 AND A005.1
12. INSTALL SHOT PUT PAD PER ARCHITECTURAL DETAILS ON, SHEET A005 AND A005.1
13. INSTALL POLE VAULT PER ARCHITECTURAL DETAIL 20, SHEET A005
14. INSTALL GATE PER ARCHITECTURAL DETAILS ON SHEET A008
15. INSTALL SCOREBOARD PER SEPARATE PLANS
16. INSTALL SITE LIGHT PER ELECTRICAL PLAN SHEET E002
17. INSTALL BASEBALL FIELD AND DUGOUTS AND STORAGE PER ARCHITECTURAL DETAILS ON SHEET A006
18. INSTALL SOFTBALL FIELD AND DUGOUTS AND STORAGE PER ARCHITECTURAL DETAILS ON SHEET A006
19. CONSTRUCT RESTROOM BUILDING PER ARCHITECTURAL PLAN SHEET A101
20. INSTALL LONG JUMP PER ARCHITECTURAL DETAIL 13, SHEET A005
21. NATURAL TURF PRACTICE FIELD PER LANDSCAPE PLANS
22. CONSTRUCT CONCRETE WALK-OFF CURB PER DETAIL 6, SHEET C700
23. CONSTRUCT ACCESSIBLE CURB RAMP PER DETAIL 16, SHEET C700
24. CONSTRUCT CONCRETE MOW STRIP PER ARCHITECTURAL DETAIL 10 SHEET A004
25. CONSTRUCT CURB WALL WITH CURB AND GUTTER PER PER DETAIL 8 SHEET C700
26. CONSTRUCT CONCRETE VALLEY GUTTER PER DETAIL 12, SHEET C700
27. REMOTE DRINKING FOUNTAIN PER ARCHITECTURAL DETAIL 16 SHEET A810
28. DRIVEWAY APRON PER SEPARATE CITY APPROVED PLANS
29. ALUMINUM BLEACHERS PER ARCHITECTURAL SHEETS A002 AND A003
30. CONSTRUCT TICKETING BOOTH PER ARCHITECTURAL SHEET A201
31. CONSTRUCT 2-FT CURB CUT
32. BATTING CAGES PER ARCHITECTURAL DETAIL 6, SHEET A006
33. SHADE STRUCTURE AND SCORE TABLE PER ARCHITECTURAL SHEET A005.2
34. INSTALL BOLLARD PER DETAIL 3, SHEET C701
35. ROLLING GATE PER ARCHITECTURAL DETAIL 4, SHEET A008
36. ALUMINUM BLEACHERS PER SEPARATE BLEACHERS PLANS
37. CULVERT PER SEPARATE PERMIT
38. PROPOSED ROLL CURB PER DETAIL 10 SHEET C701
39. PROPOSED 0" CURB PER DETAIL 11 SHEET C701

NORTH

GRAPHIC SCALE IN FEET
0 10 20 40

SCALE 1" = 20'
WHEN PRINTED FULL SIZE
30" X 42"

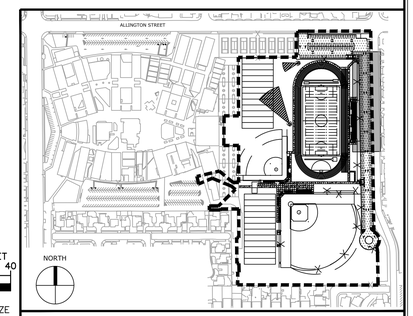

KEYMAP

IDENTIFICATION STAMP
DIV. OF THE STATE ARCHITECT
APP: 03-124281 INC:
REVIEWED FOR
SS ☑ FLS ☑ ACS ☑
DATE: 02/04/2025

ARCHITECT:
architecture
westbergwhite

CONSULTANT:
Kimley»Horn
© 2018 KIMLEY-HORN AND ASSOCIATES, INC.
765 THE CITY DRIVE, SUITE 200, ORANGE, CA 92868
PHONE: 714-939-1030 FAX: 714-938-9488
WWW.KIMLEY-HORN.COM

REGISTERED PROFESSIONAL ENGINEER
AHMED ZUHAIRA
RCE NO. 92050
CIVIL
STATE OF CALIFORNIA

PROJECT NAME:

Bellflower Unified School District

Mayfair High School Sports Fields

6000 North Woodruff Ave
Lakewood, California 90713

CLIENT:

BELLFLOWER UNIFIED SCHOOL DISTRICT

16703 S. Clark Ave.
BELLFLOWER, CALIFORNIA 90706

Rev.	Date	Description

JOB NO: 15008.01
DATE: 11/13/2024
DRAWN: CC
CHECK: IV
ARCHITECT: PDW
ENGINEER: AZ

SHEET DESCRIPTION:
HORIZONTAL CONTROL PLAN

SHEET NO:
C309

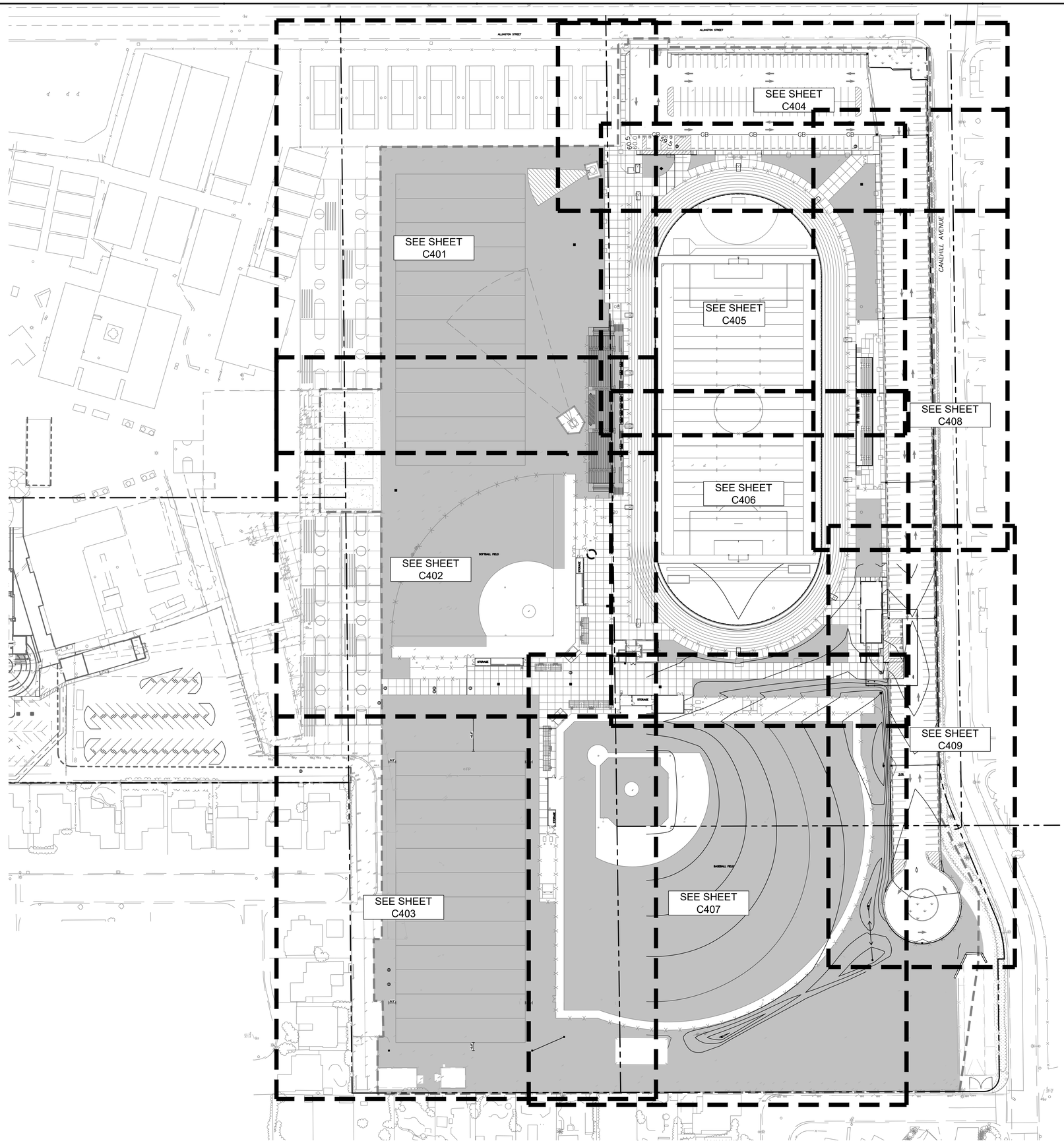

LEGEND

- PROPERTY LINE
- STREET CENTERLINE
- CIVIL LIMIT OF WORK
- PROPOSED FENCE
- RETAINING WALL

OVEREXCAVATION NOTE

CONCESSION AND RESTROOM BUILDING, TICKET BOOTHS, BLEACHER AREAS AND MUSCO FIELD LIGHTING POLE AREAS:
THE NATURAL SOIL SHOULD BE OVEREXCAVATED TO A DEPTH OF AT LEAST 10FT. THE OVEREXCAVATION SHOULD EXTEND BEYOND THE BUILDING, TICKET BOOTHS, BLEACHER AREAS AND POLE LOCATIONS A HORIZONTAL DISTANCE AT LEAST EQUAL TO THE DEPTH OF THE OVEREXCAVATION BELOW THE FINAL GROUND SURFACE. SEE S001 FOR ADDITIONAL INFORMATION. CONTRACTOR TO FOLLOW ALL GEOTECHNICAL RECOMMENDATIONS AND NOTIFY CIVIL ENGINEER OF ANY DISCREPANCIES, IF FOUND.

HARDSCAPE AREAS:
SHOULD NATURAL SOIL BE ENCOUNTERED AT A DEPTH OF LESS THAN 3 FEET BELOW PORTLAND CEMENT CONCRETE PAVEMENT AREAS, THE SOILS EXPOSED IN THE SUBEXCAVATED SURFACE SHOULD BE SCARIFIED TO A MINIMUM DEPTH OF 12 INCHES. SEE S001 FOR ADDITIONAL INFORMATION.

EXISTING GRADE NOTE

CONTRACTOR TO FIELD VERIFY ALL EXISTING GRADES AT JOIN TO EXISTING

NORTH

GRAPHIC SCALE IN FEET
0 25 50 100

SCALE 1" = 50'
WHEN PRINTED FULL SIZE
30" X 42"

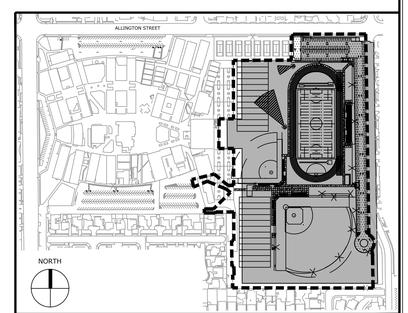

KEYMAP

IDENTIFICATION STAMP
DIV. OF THE STATE ARCHITECT
APP: 03-124281 INC:
REVIEWED FOR
SS ☑ FLS ☑ ACS ☑
DATE: 02/04/2025

ARCHITECT:
architecture westbergwhite

CONSULTANT:
Kimley»Horn
© 2018 KIMLEY-HORN AND ASSOCIATES, INC.
765 THE CITY DRIVE, SUITE 200, ORANGE, CA 92868
PHONE: 714-939-1030 FAX: 714-938-9488
WWW.KIMLEY-HORN.COM

REGISTERED PROFESSIONAL ENGINEER
AHMED ZUMAWA
No. RCE NO. 92050
CIVIL
STATE OF CALIFORNIA

PROJECT NAME:

Bellflower Unified School District
Mayfair High School Sports Fields
6000 North Woodruff Ave
Lakewood, California 90713

CLIENT:
BELLFLOWER UNIFIED SCHOOL DISTRICT
16703 S. Clark Ave.
BELLFLOWER, CALIFORNIA 90706

Rev.	Date	Description

JOB NO: 15008.01
DATE: 11/13/2024
DRAWN: CC
CHECK: IV
ARCHITECT: PDW
ENGINEER: AZ

SHEET DESCRIPTION:
OVERALL GRADING PLAN

SHEET NO:
C400

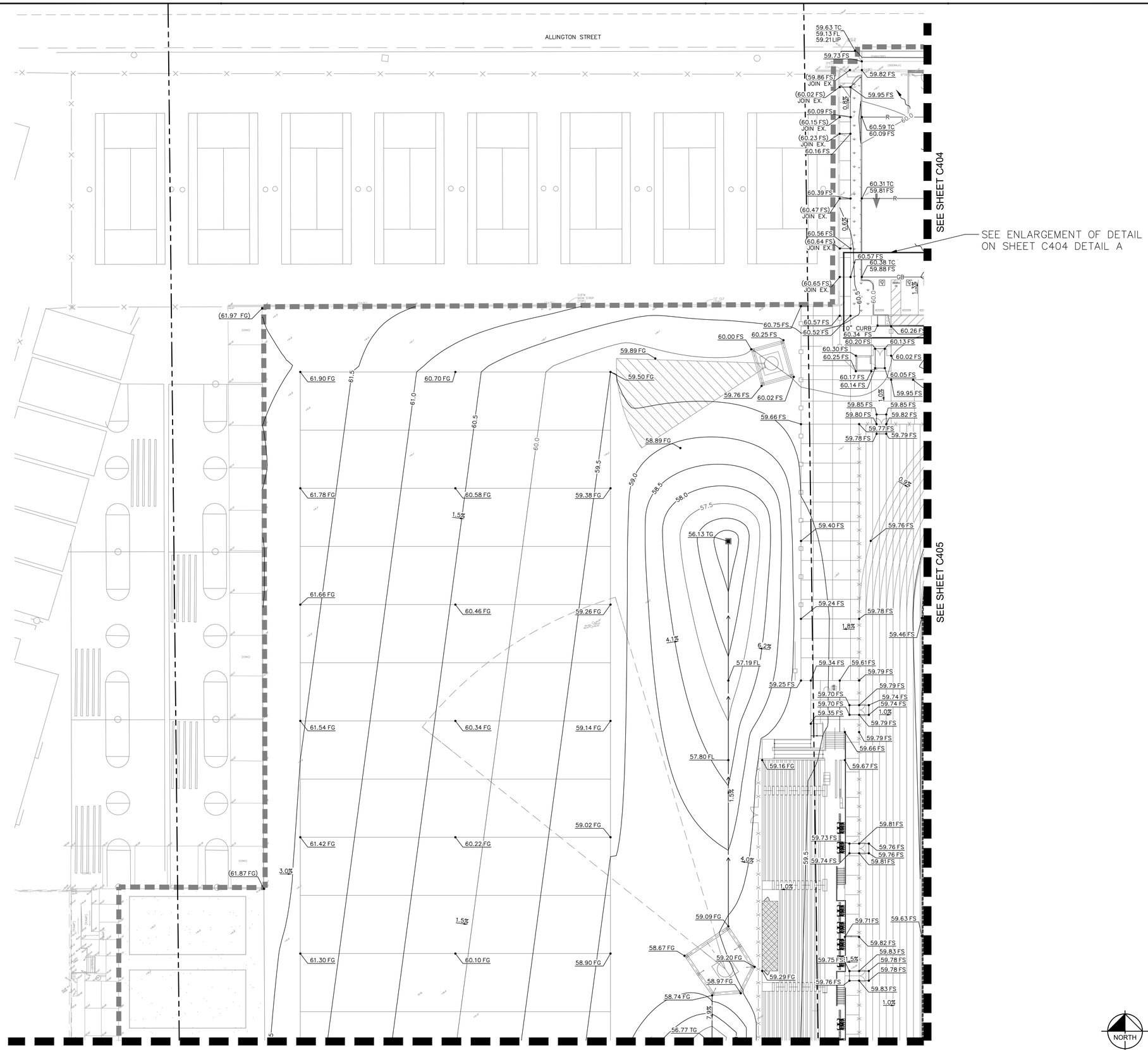

LEGEND

- PROPERTY LINE
- STREET CENTERLINE
- CIVIL LIMIT OF WORK
- PROPOSED FENCE
- RETAINING WALL
- 59.5 PROPOSED CONTOUR
- 214 EXISTING CONTOUR
- 59.03 FS PROPOSED SPOT ELEVATION
- (59.12 FS) EXISTING SPOT ELEVATION
- 2.00% PROPOSED SLOPE
- (2.00%) EXISTING SLOPE
- DIRECTION OF SURFACE FLOW

EXISTING GRADE NOTE

CONTRACTOR TO FIELD VERIFY ALL EXISTING GRADES AT JOIN TO EXISTING

NORTH

GRAPHIC SCALE IN FEET
0 10 20 40

SCALE 1" = 20'
WHEN PRINTED FULL SIZE
30" X 42"

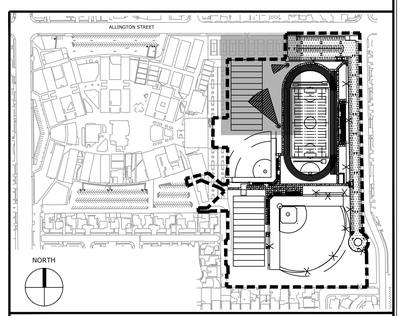

KEYMAP

IDENTIFICATION STAMP
DIV. OF THE STATE ARCHITECT
APP: 03-124281 INC:
REVIEWED FOR
SS ☑ FLS ☑ ACS ☑
DATE: 02/04/2025

ARCHITECT:
architecture
westbergwhite

CONSULTANT:
Kimley»Horn
© 2018 KIMLEY-HORN AND ASSOCIATES, INC.
765 THE CITY DRIVE, SUITE 200, ORANGE, CA 92868
PHONE: 714-939-1030 FAX: 714-938-9488
WWW.KIMLEY-HORN.COM

REGISTERED PROFESSIONAL ENGINEER
AHMED ZUHAIRA
RCE NO. 92050
CIVIL
STATE OF CALIFORNIA

PROJECT NAME:

Bellflower Unified School District

Mayfair High School Sports Fields

6000 North Woodruff Ave
Lakewood, California 90713

CLIENT:

BELLFLOWER UNIFIED SCHOOL DISTRICT

16703 S. Clark Ave.
BELLFLOWER, CALIFORNIA 90706

#	Rev. Date	Description

JOB NO:	15008.01
DATE:	11/13/2024
DRAWN:	CC
CHECK:	IV
ARCHITECT:	PDW
ENGINEER:	AZ

SHEET DESCRIPTION:

PRECISE GRADING

SHEET NO:

C401

K:\ORA_LDEV\094842008 – mayfair high school\CAD\plansheets\Field\C400 GRADING PLAN.dwg Jan 28, 2025 – 10:42am Isabella.Valbuena

SEE SHEET C401

SEE SHEET C406

SEE SHEET C403

SOFTBALL FIELD

STORAGE FF=59.00

STORAGE FF=59.26

STORAGE FF=59.95

ENLARGEMENT A

ENLARGEMENT B

LEGEND

- PROPERTY LINE
- STREET CENTERLINE
- CIVIL LIMIT OF WORK
- PROPOSED FENCE
- RETAINING WALL
- 59.5 PROPOSED CONTOUR
- 214 EXISTING CONTOUR
- 59.03 FS PROPOSED SPOT ELEVATION
- (59.12 FS) EXISTING SPOT ELEVATION
- 2.00% PROPOSED SLOPE
- (2.00%) EXISTING SLOPE
- DIRECTION OF SURFACE FLOW

ENLARGEMENT A

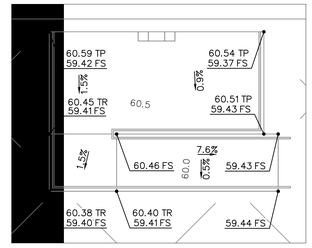

GRAPHIC SCALE IN FEET
0 2.5 5 10

ENLARGEMENT B

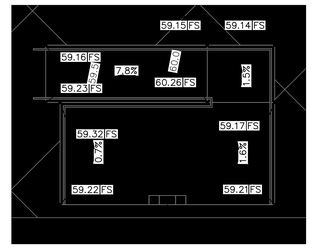

GRAPHIC SCALE IN FEET
0 2.5 5 10

EXISTING GRADE NOTE

CONTRACTOR TO FIELD VERIFY ALL EXISTING GRADES AT JOIN TO EXISTING

NORTH

GRAPHIC SCALE IN FEET
0 10 20 40

SCALE 1" = 20'
WHEN PRINTED FULL SIZE
30" X 42"

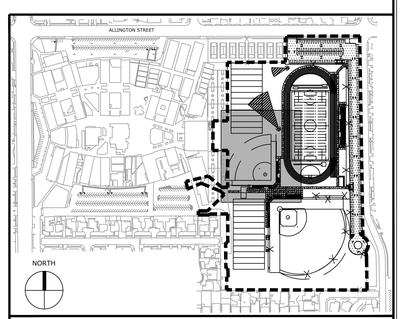

KEYMAP

IDENTIFICATION STAMP
DIV. OF THE STATE ARCHITECT
APP: 03-124281 INC:
REVIEWED FOR
SS ☑ FLS ☑ ACS ☑
DATE: 02/04/2025

ARCHITECT:
architecture
westbergwhite

CONSULTANT:
Kimley»Horn
© 2018 KIMLEY-HORN AND ASSOCIATES, INC.
765 THE CITY DRIVE, SUITE 200, ORANGE, CA 92868
PHONE: 714-939-1030 FAX: 714-938-9488
WWW.KIMLEY-HORN.COM

REGISTERED PROFESSIONAL ENGINEER
AHMED ZUMAWA
No. RCE NO. 92200
CIVIL
STATE OF CALIFORNIA

PROJECT NAME:

Bellflower Unified School District
Mayfair High School Sports Fields
6000 North Woodruff Ave
Lakewood, California 90713

CLIENT:
BELLFLOWER UNIFIED SCHOOL DISTRICT
16703 S. Clark Ave.
BELLFLOWER, CALIFORNIA 90706

#	Rev. Date	Description

JOB NO: 15008.01
DATE: 11/13/2024
DRAWN: CC
CHECK: IV
ARCHITECT: PDW
ENGINEER: AZ

SHEET DESCRIPTION:
PRECISE GRADING

SHEET NO:
C402

K:\ORA_LDEV\094842008 – mayfair high school\CAD\plansheets\Field\C400 GRADING PLAN.dwg Jan 13, 2025 – 4:00pm Isabella.Valbuena

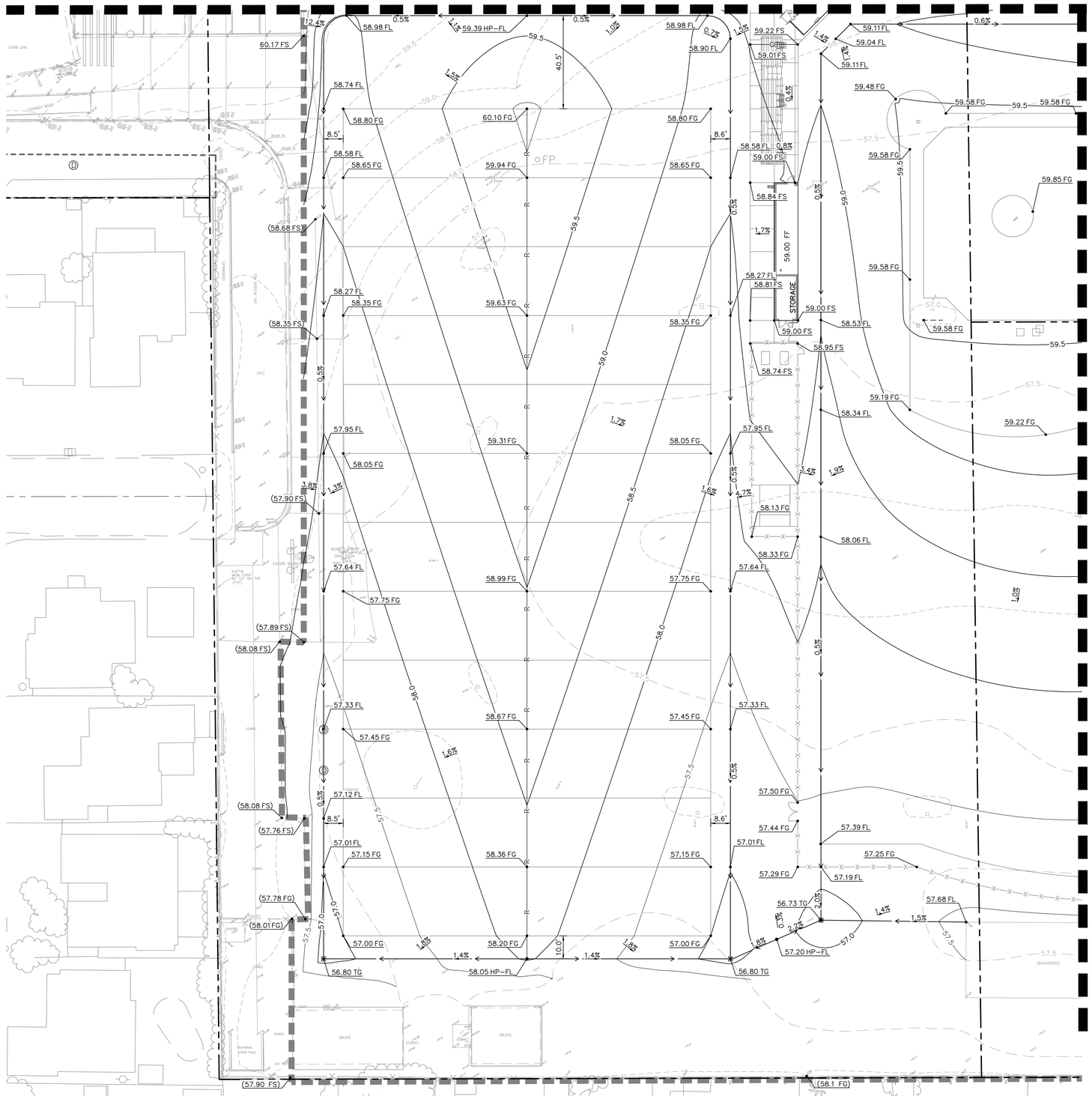

LEGEND

- PROPERTY LINE
- STREET CENTERLINE
- CIVIL LIMIT OF WORK
- PROPOSED FENCE
- RETAINING WALL
- 59.5 PROPOSED CONTOUR
- 214 EXISTING CONTOUR
- 59.03 FS PROPOSED SPOT ELEVATION
- (59.12 FS) EXISTING SPOT ELEVATION
- 2.00% PROPOSED SLOPE
- (2.00%) EXISTING SLOPE
- DIRECTION OF SURFACE FLOW

EXISTING GRADE NOTE

CONTRACTOR TO FIELD VERIFY ALL EXISTING GRADES AT JOIN TO EXISTING

NORTH

GRAPHIC SCALE IN FEET
0 10 20 40

SCALE 1" = 20'
WHEN PRINTED FULL SIZE
30" X 42"

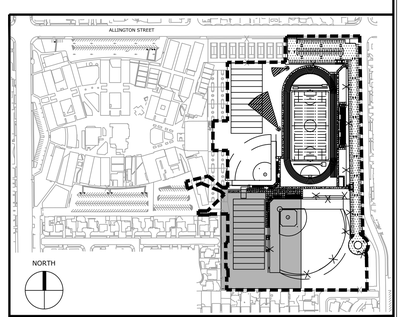

KEYMAP

IDENTIFICATION STAMP
DIV. OF THE STATE ARCHITECT
APP: 03-124281 INC:
REVIEWED FOR
SS ☑ FLS ☑ ACS ☑
DATE: 02/04/2025

ARCHITECT:
architecture
westbergwhite

CONSULTANT:
Kimley»Horn
© 2018 KIMLEY-HORN AND ASSOCIATES, INC.
765 THE CITY DRIVE, SUITE 200, ORANGE, CA 92868
PHONE: 714-939-1030 FAX: 714-938-9488
WWW.KIMLEY-HORN.COM

REGISTERED PROFESSIONAL ENGINEER
AHMED ZUHAIRA
No. RCE NO. 92200
CIVIL
STATE OF CALIFORNIA

PROJECT NAME:

Bellflower Unified School District
Mayfair High School Sports Fields
6000 North Woodruff Ave
Lakewood, California 90713

CLIENT:

BELLFLOWER UNIFIED SCHOOL DISTRICT
16703 S. Clark Ave.
BELLFLOWER, CALIFORNIA 90706

#	Rev. Date	Description

JOB NO:	15008.01
DATE:	11/13/2024
DRAWN:	CC
CHECK:	IV
ARCHITECT:	PDW
ENGINEER:	AZ

SHEET DESCRIPTION:
PRECISE GRADING

SHEET NO:
C403

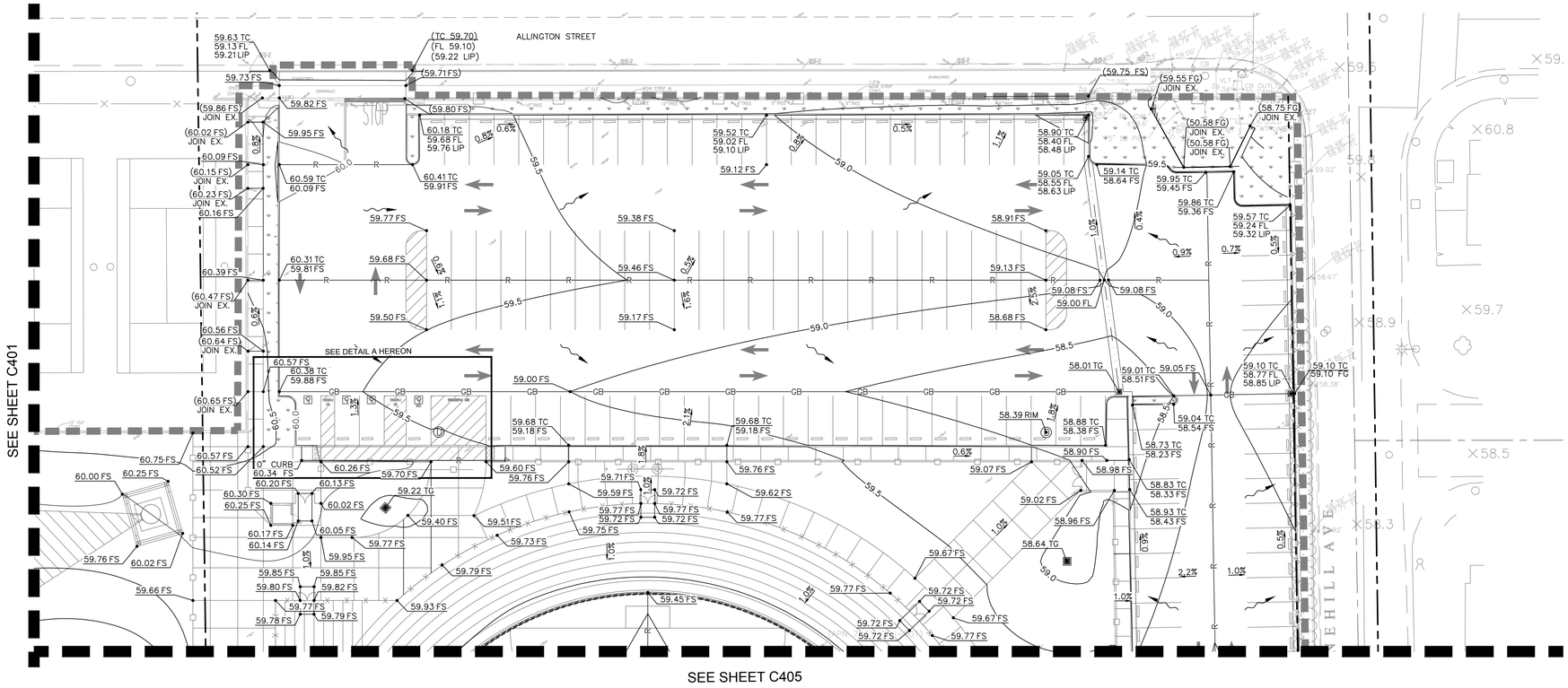

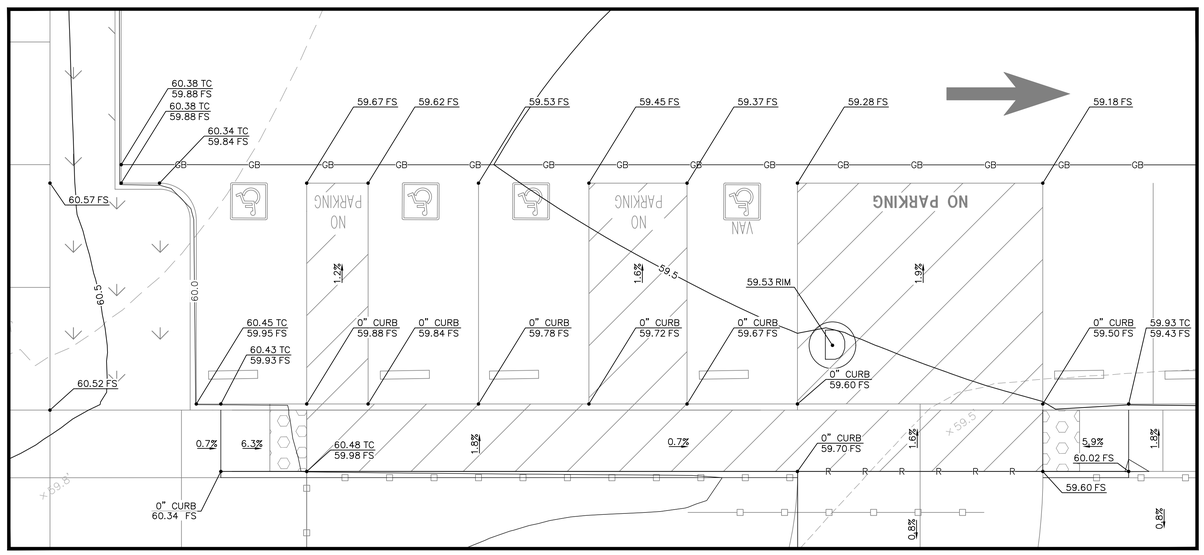

DETAIL A
SCALE: 1" = 5'

EXISTING GRADE NOTE

CONTRACTOR TO FIELD VERIFY ALL EXISTING GRADES AT JOIN TO EXISTING

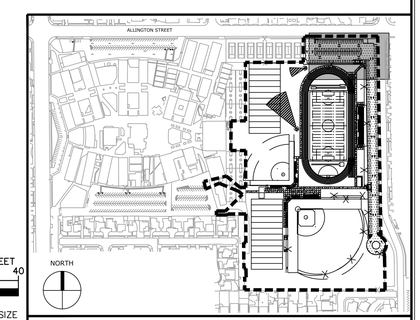

KEYMAP

NORTH

GRAPHIC SCALE IN FEET
0 10 20 40

SCALE 1" = 20'
WHEN PRINTED FULL SIZE
30" X 42"

LEGEND

- PROPERTY LINE
- STREET CENTERLINE
- CIVIL LIMIT OF WORK
- PROPOSED FENCE
- RETAINING WALL
- 59.5 PROPOSED CONTOUR
- 214 EXISTING CONTOUR
- 59.03 FS PROPOSED SPOT ELEVATION
- (59.12 FS) EXISTING SPOT ELEVATION
- 2.00% PROPOSED SLOPE
- (2.00%) EXISTING SLOPE
- DIRECTION OF SURFACE FLOW

IDENTIFICATION STAMP
DIV. OF THE STATE ARCHITECT
APP: 03-124281 INC:
REVIEWED FOR
SS ☑ FLS ☑ ACS ☑
DATE: 02/04/2025

ARCHITECT:
architecture
westbergwhite

CONSULTANT:
Kimley»Horn
© 2018 KIMLEY-HORN AND ASSOCIATES, INC.
765 THE CITY DRIVE, SUITE 200, ORANGE, CA 92868
PHONE: 714-939-1030 FAX: 714-938-9488
WWW.KIMLEY-HORN.COM

REGISTERED PROFESSIONAL ENGINEER
AHMED ZUMAWA
No. RCE NO. 92050
CIVIL
STATE OF CALIFORNIA

PROJECT NAME:

Bellflower Unified School District
Mayfair High School Sports Fields
6000 North Woodruff Ave
Lakewood, California 90713

CLIENT:
BELLFLOWER UNIFIED SCHOOL DISTRICT
16703 S. Clark Ave.
BELLFLOWER, CALIFORNIA 90706

#	Rev. Date	Description

JOB NO: 15008.01
DATE: 11/13/2024
DRAWN: CC
CHECK: IV
ARCHITECT: PDW
ENGINEER: AZ

SHEET DESCRIPTION:
PRECISE GRADING

SHEET NO:
C404

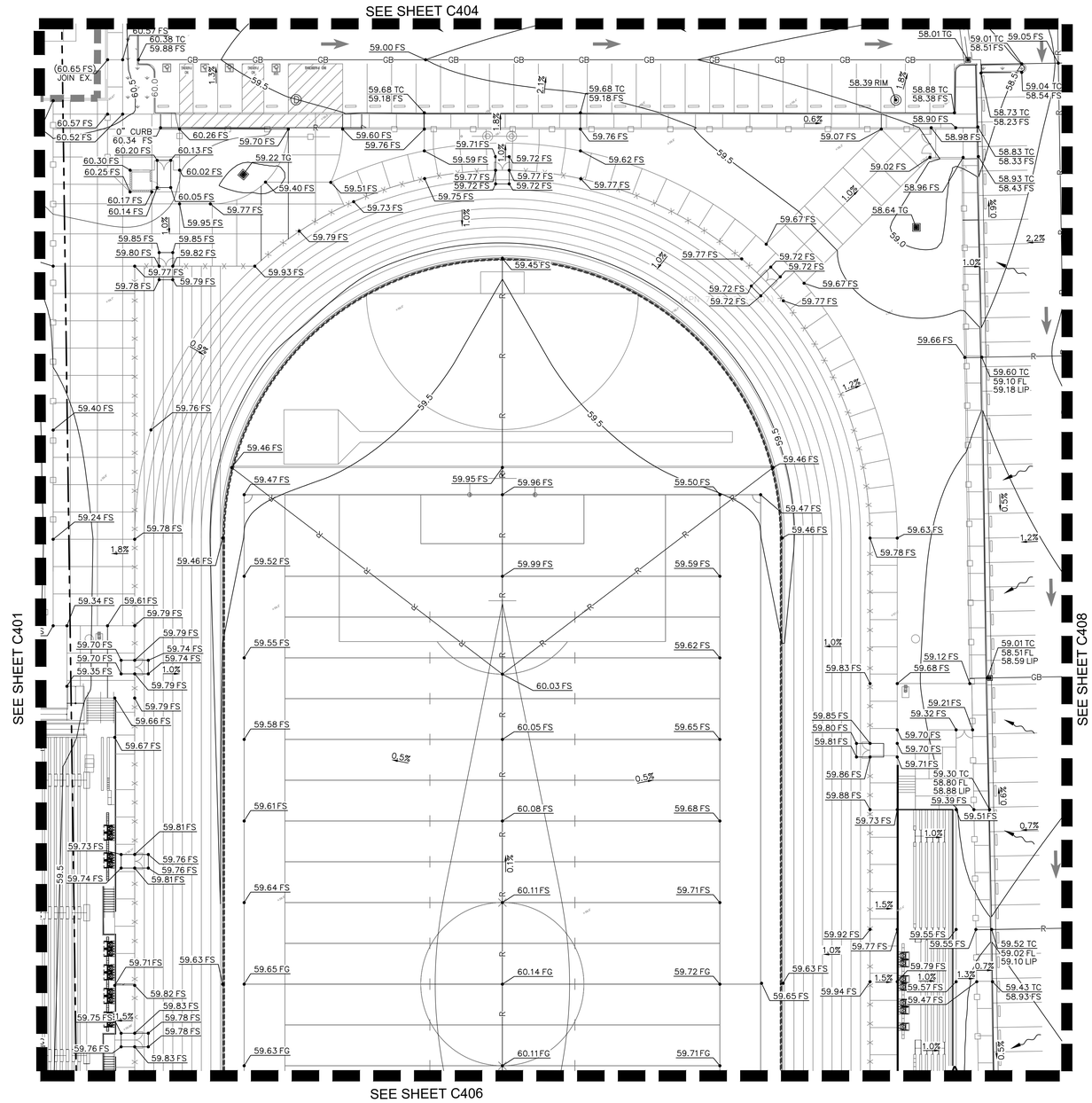

LEGEND

- PROPERTY LINE
- STREET CENTERLINE
- CIVIL LIMIT OF WORK
- PROPOSED FENCE
- RETAINING WALL
- 59.5 — PROPOSED CONTOUR
- 214 — EXISTING CONTOUR
- 59.03 FS — PROPOSED SPOT ELEVATION
- (59.12 FS) — EXISTING SPOT ELEVATION
- 2.00% — PROPOSED SLOPE
- (2.00%) — EXISTING SLOPE
- DIRECTION OF SURFACE FLOW

EXISTING GRADE NOTE

CONTRACTOR TO FIELD VERIFY ALL EXISTING GRADES AT JOIN TO EXISTING

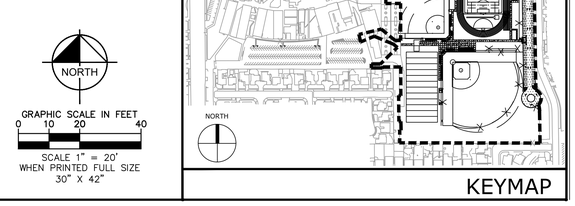

KEYMAP

NORTH

GRAPHIC SCALE IN FEET
0 10 20 40

SCALE 1" = 20'
WHEN PRINTED FULL SIZE
30" X 42"

IDENTIFICATION STAMP
DIV. OF THE STATE ARCHITECT
APP: 03-124281 INC:
REVIEWED FOR
SS ☑ FLS ☑ ACS ☑
DATE: 02/04/2025

ARCHITECT:
architecture
westbergwhite

CONSULTANT:
Kimley»Horn
© 2018 KIMLEY-HORN AND ASSOCIATES, INC.
765 THE CITY DRIVE, SUITE 200, ORANGE, CA 92868
PHONE: 714-939-1030 FAX: 714-938-9488
WWW.KIMLEY-HORN.COM

REGISTERED PROFESSIONAL ENGINEER
AHMED ZUHAIRA
No. RCE NO. 92050
CIVIL
STATE OF CALIFORNIA

PROJECT NAME:

Bellflower Unified School District

Mayfair High School Sports Fields

6000 North Woodruff Ave
Lakewood, California 90713

CLIENT:

BELLFLOWER UNIFIED SCHOOL DISTRICT

16703 S. Clark Ave.
BELLFLOWER, CALIFORNIA 90706

#	Rev. Date	Description

JOB NO: 15008.01
DATE: 11/13/2024
DRAWN: CC
CHECK: IV
ARCHITECT: PDW
ENGINEER: AZ

SHEET DESCRIPTION:

PRECISE GRADING

SHEET NO:

C405

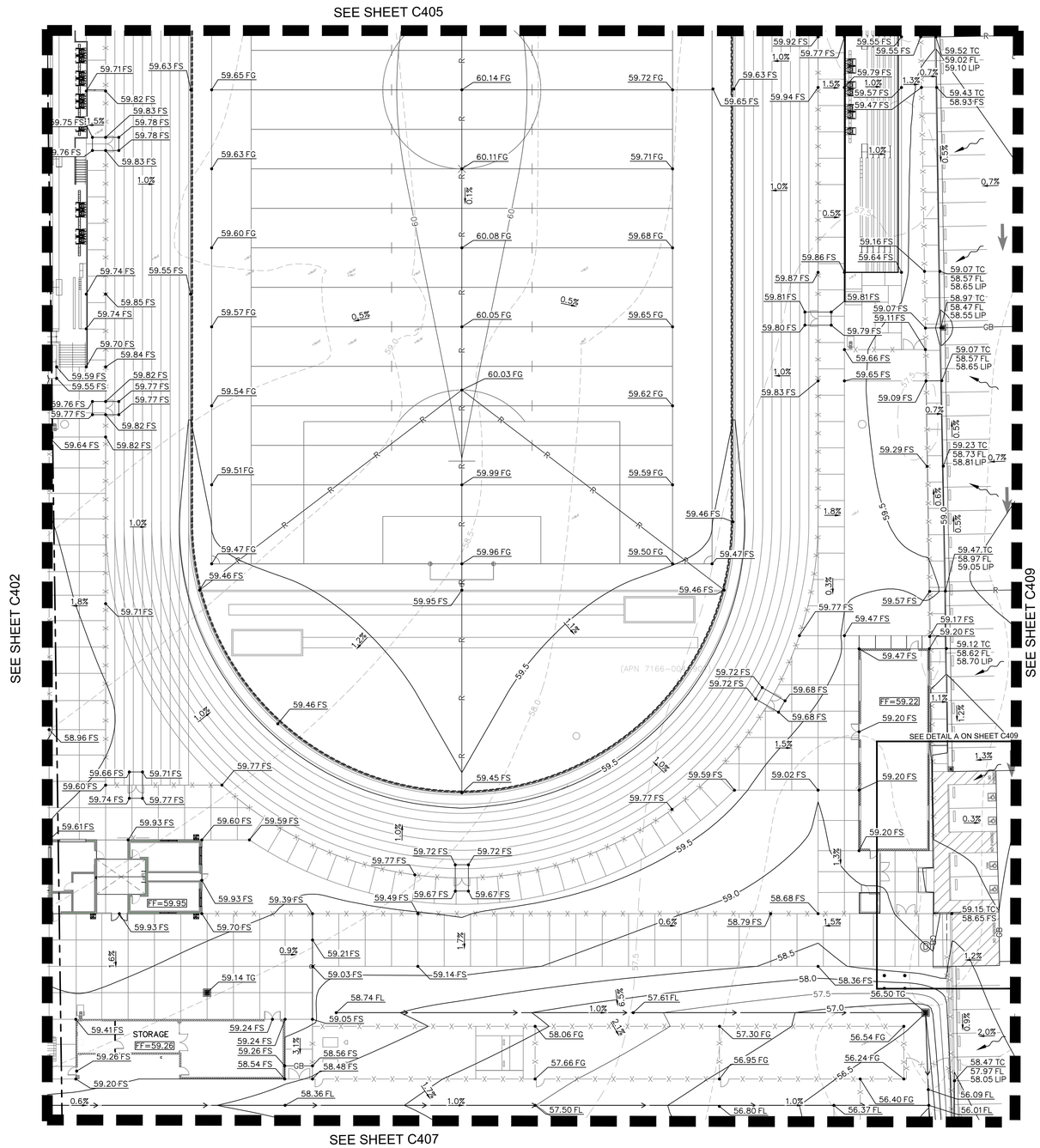

LEGEND

- PROPERTY LINE
- STREET CENTERLINE
- CIVIL LIMIT OF WORK
- PROPOSED FENCE
- RETAINING WALL
- 59.5 PROPOSED CONTOUR
- 214 EXISTING CONTOUR
- 59.03 FS PROPOSED SPOT ELEVATION
- (59.12 FS) EXISTING SPOT ELEVATION
- 2.00% PROPOSED SLOPE
- (2.00%) EXISTING SLOPE
- DIRECTION OF SURFACE FLOW

EXISTING GRADE NOTE

CONTRACTOR TO FIELD VERIFY ALL EXISTING GRADES AT JOIN TO EXISTING

NORTH

GRAPHIC SCALE IN FEET
0 10 20 40

SCALE 1" = 20'
WHEN PRINTED FULL SIZE
30" X 42"

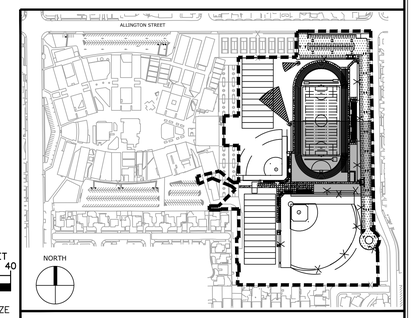

KEYMAP

IDENTIFICATION STAMP
DIV. OF THE STATE ARCHITECT
APP: 03-124281 INC:
REVIEWED FOR
SS ☑ FLS ☑ ACS ☑
DATE: 02/04/2025

ARCHITECT:
architecture
westbergwhite

CONSULTANT:
Kimley»Horn
© 2018 KIMLEY-HORN AND ASSOCIATES, INC.
765 THE CITY DRIVE, SUITE 200, ORANGE, CA 92868
PHONE: 714-939-1030 FAX: 714-938-9488
WWW.KIMLEY-HORN.COM

REGISTERED PROFESSIONAL ENGINEER
AHMED ZUHAIRA
RCE NO. 92050
CIVIL
STATE OF CALIFORNIA

PROJECT NAME:

Bellflower Unified School District
Mayfair High School Sports Fields
6000 North Woodruff Ave
Lakewood, California 90713

CLIENT:
BELLFLOWER UNIFIED SCHOOL DISTRICT
16703 S. Clark Ave.
BELLFLOWER, CALIFORNIA 90706

Rev.	Date	Description

JOB NO: 15008.01
DATE: 11/13/2024
DRAWN: CC
CHECK: IV
ARCHITECT: PDW
ENGINEER: AZ

SHEET DESCRIPTION:
PRECISE GRADING

SHEET NO:
C406

K:\ORA_LDEV\094842008 – mayfair high school\CAD\plansheets\Field\C400 GRADING PLAN.dwg Jan 13, 2025 – 4:01pm Isabella.Valbuena

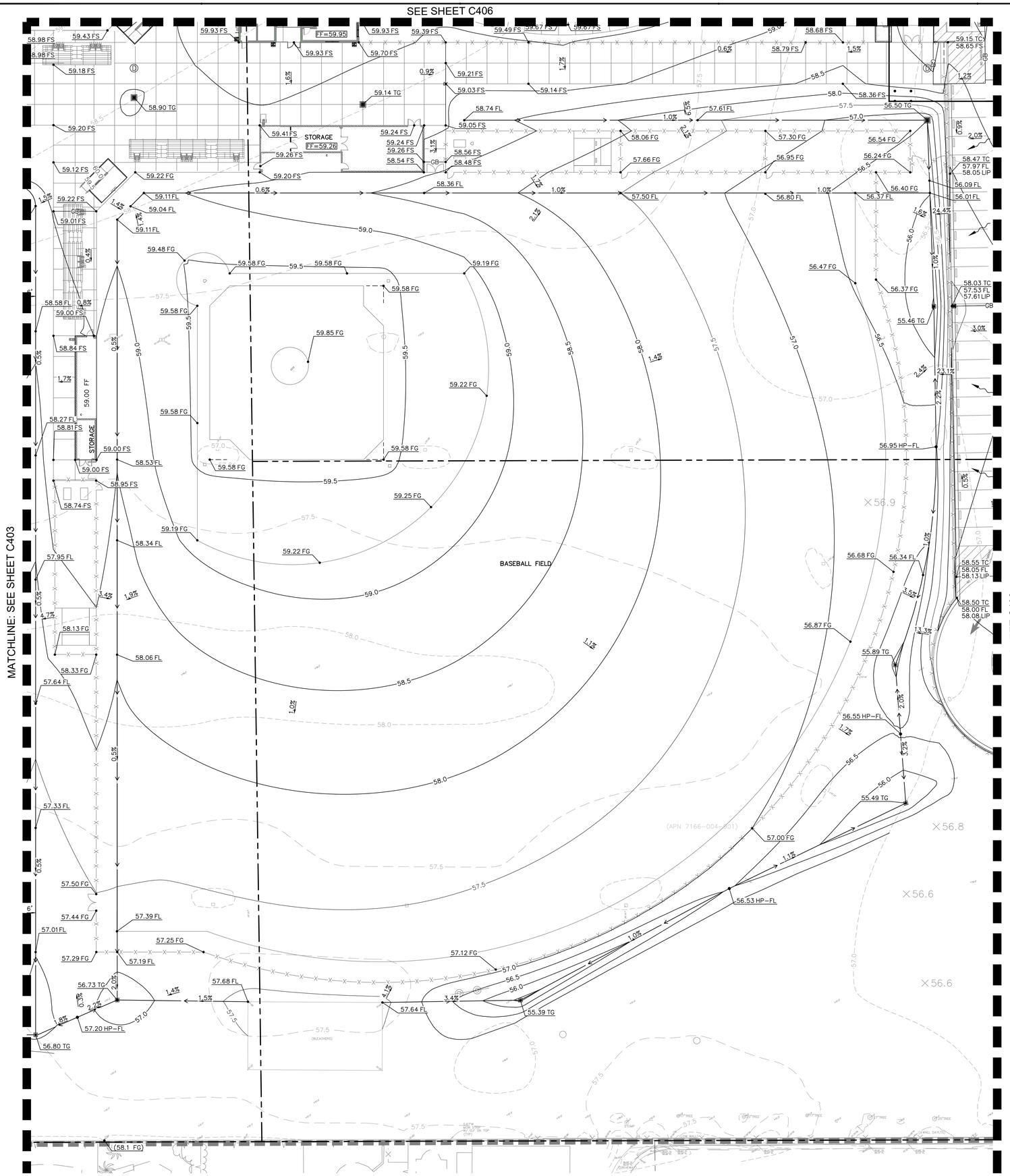

LEGEND

- PROPERTY LINE
- STREET CENTERLINE
- CIVIL LIMIT OF WORK
- PROPOSED FENCE
- RETAINING WALL
- 59.5 — PROPOSED CONTOUR
- 214 — EXISTING CONTOUR
- 59.03 FS — PROPOSED SPOT ELEVATION
- (59.12 FS) — EXISTING SPOT ELEVATION
- 2.00% — PROPOSED SLOPE
- (2.00%) — EXISTING SLOPE
- DIRECTION OF SURFACE FLOW

EXISTING GRADE NOTE

CONTRACTOR TO FIELD VERIFY ALL EXISTING GRADES AT JOIN TO EXISTING

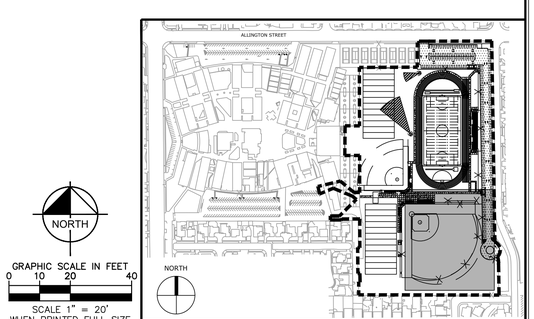

KEYMAP

NORTH

GRAPHIC SCALE IN FEET
0 10 20 40

SCALE 1" = 20'
WHEN PRINTED FULL SIZE
30" X 42"

IDENTIFICATION STAMP
DIV. OF THE STATE ARCHITECT
APP: 03-124281 INC:
REVIEWED FOR
SS ☑ FLS ☑ ACS ☑
DATE: 02/04/2025

ARCHITECT:
architecture
westbergwhite

CONSULTANT:
Kimley»Horn
© 2018 KIMLEY-HORN AND ASSOCIATES, INC.
765 THE CITY DRIVE, SUITE 200, ORANGE, CA 92868
PHONE: 714-939-1030 FAX: 714-938-9488
WWW.KIMLEY-HORN.COM

REGISTERED PROFESSIONAL ENGINEER
AHMED ZUHAIRA
No. RCE NO. 92050
STATE OF CALIFORNIA CIVIL

PROJECT NAME:

Bellflower Unified School District
Mayfair High School Sports Fields
6000 North Woodruff Ave
Lakewood, California 90713

CLIENT:

BELLFLOWER UNIFIED SCHOOL DISTRICT
16703 S. Clark Ave.
BELLFLOWER, CALIFORNIA 90706

#	Rev. Date	Description

JOB NO:	15008.01
DATE:	11/13/2024
DRAWN:	CC
CHECK:	IV
ARCHITECT:	PDW
ENGINEER:	AZ

SHEET DESCRIPTION:
PRECISE GRADING

SHEET NO:
C407

K:\ORA_LDEV\094842008 - mayfair high school\CAD\plansheets\Field\C400 GRADING PLAN.dwg Jan 13, 2025 - 4:01pm Isabella.Valbuena

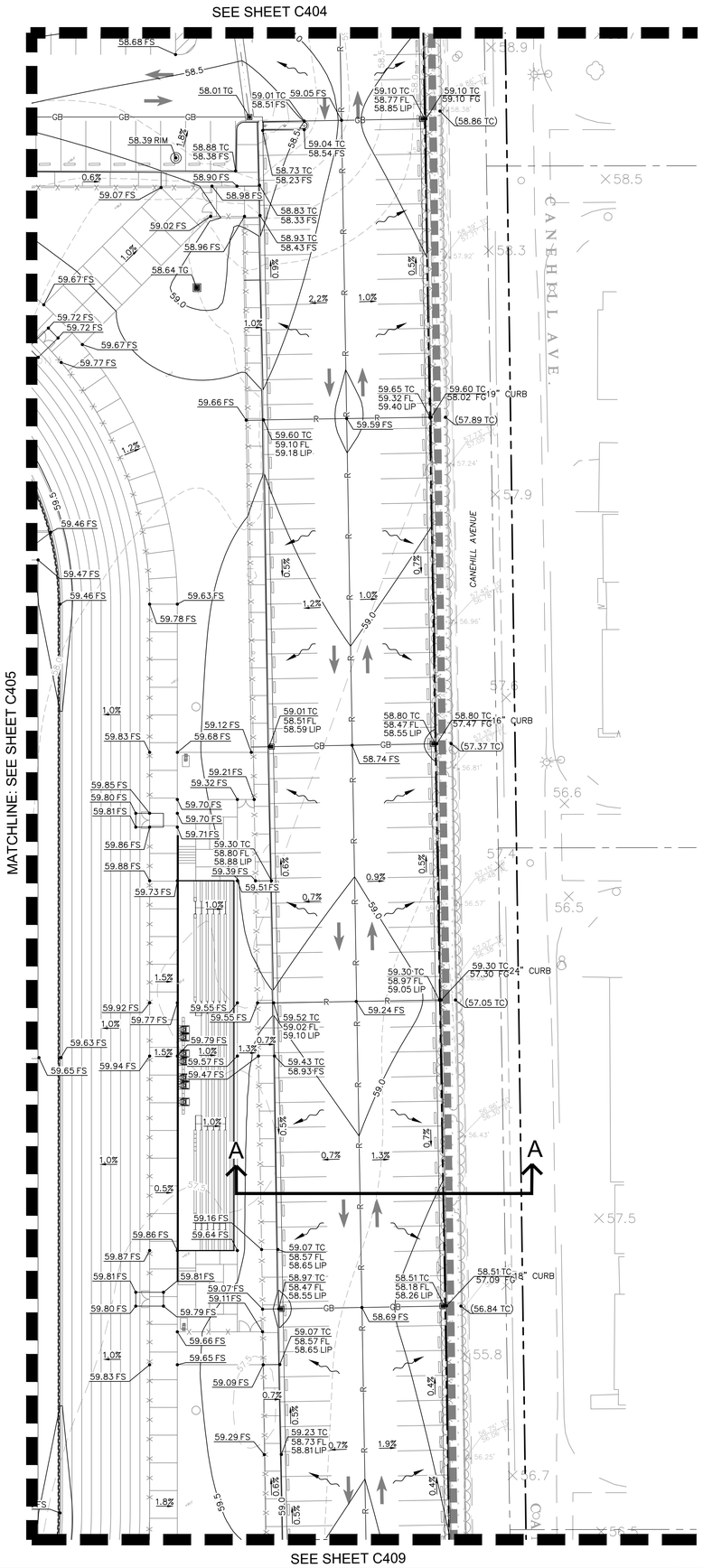

LEGEND

- PROPERTY LINE
- STREET CENTERLINE
- CIVIL LIMIT OF WORK
- PROPOSED FENCE
- RETAINING WALL
- 59.5 PROPOSED CONTOUR
- 214 EXISTING CONTOUR
- 59.03 FS PROPOSED SPOT ELEVATION
- (59.12 FS) EXISTING SPOT ELEVATION
- 2.00% PROPOSED SLOPE
- (2.00%) EXISTING SLOPE
- DIRECTION OF SURFACE FLOW

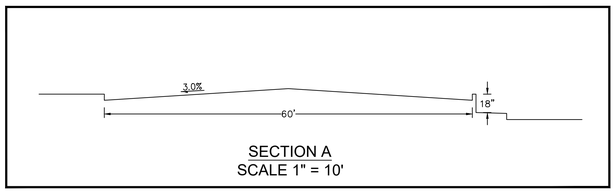

SECTION A
SCALE 1" = 10'

NORTH

GRAPHIC SCALE IN FEET
0 10 20 40

SCALE 1" = 20'
WHEN PRINTED FULL SIZE
30" X 42"

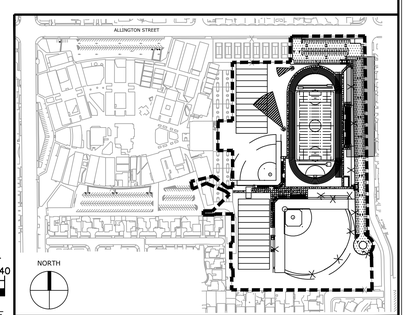

KEYMAP

IDENTIFICATION STAMP
DIV. OF THE STATE ARCHITECT
APP: 03-124281 INC:
REVIEWED FOR
SS ☑ FLS ☑ ACS ☑
DATE: 02/04/2025

ARCHITECT:
architecture
westbergwhite

CONSULTANT:
Kimley»Horn
© 2018 KIMLEY-HORN AND ASSOCIATES, INC.
765 THE CITY DRIVE, SUITE 200, ORANGE, CA 92868
PHONE: 714-939-1030 FAX: 714-938-9488
WWW.KIMLEY-HORN.COM

REGISTERED PROFESSIONAL ENGINEER
AHMED ZUHAIRA
RCE NO. 92050
CIVIL
STATE OF CALIFORNIA

PROJECT NAME:

Bellflower Unified School District

Mayfair High School Sports Fields

6000 North Woodruff Ave
Lakewood, California 90713

CLIENT:

BELLFLOWER UNIFIED SCHOOL DISTRICT

16703 S. Clark Ave.
BELLFLOWER, CALIFORNIA 90706

#	Rev. Date	Description

JOB NO: 15008.01
DATE: 11/13/2024
DRAWN: CC
CHECK: IV
ARCHITECT: PDW
ENGINEER: AZ

SHEET DESCRIPTION:
PRECISE GRADING

SHEET NO:
C408

K:\ORA_LDEV\094842008 – mayfair high school\CAD\plansheets\Field\C400 GRADING PLAN.dwg Jan 13, 2025 – 4:01pm Isabella.Valbuena

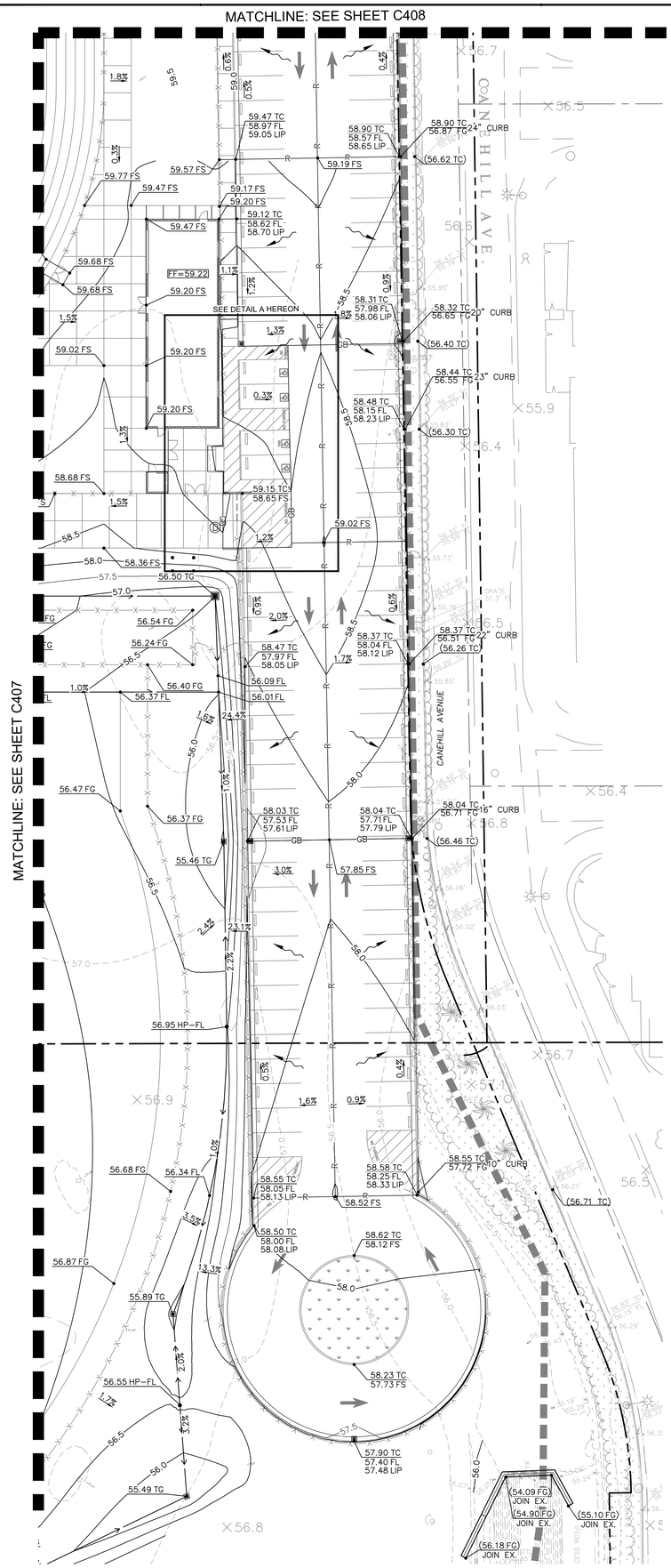

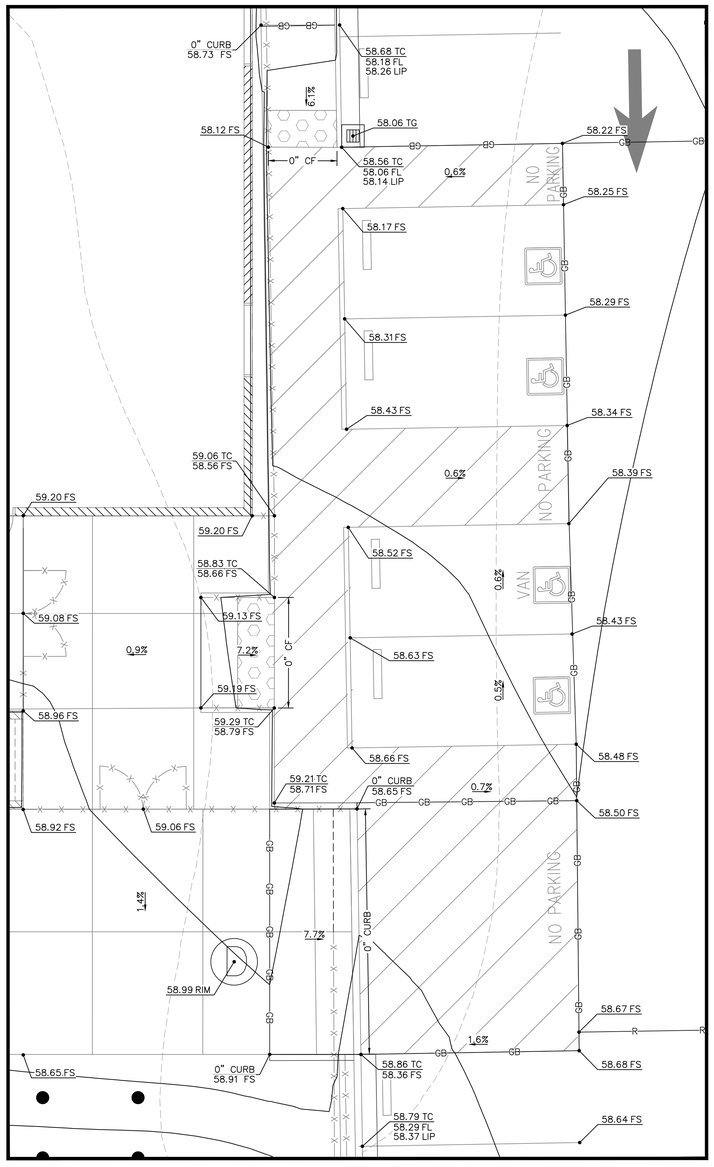

DETAIL A
SCALE: 1" = 5'

LEGEND

- PROPERTY LINE
- STREET CENTERLINE
- CIVIL LIMIT OF WORK
- PROPOSED FENCE
- RETAINING WALL
- 59.5 PROPOSED CONTOUR
- 214 EXISTING CONTOUR
- 59.03 FS PROPOSED SPOT ELEVATION
- (59.12 FS) EXISTING SPOT ELEVATION
- 2.00% PROPOSED SLOPE
- (2.00%) EXISTING SLOPE
- DIRECTION OF SURFACE FLOW

EXISTING GRADE NOTE

CONTRACTOR TO FIELD VERIFY ALL EXISTING GRADES AT JOIN TO EXISTING

NORTH

GRAPHIC SCALE IN FEET
0 10 20 40
SCALE 1" = 20'
WHEN PRINTED FULL SIZE
30" X 42"

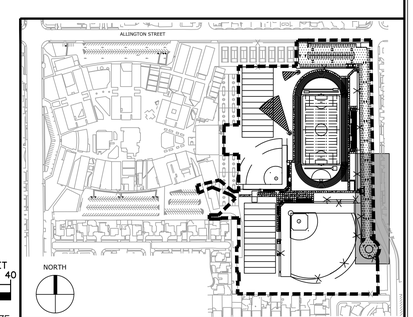

KEYMAP

IDENTIFICATION STAMP
DIV. OF THE STATE ARCHITECT
APP: 03-124281 INC:
REVIEWED FOR
SS ☑ FLS ☑ ACS ☑
DATE: 02/04/2025

ARCHITECT:
architecture
westbergwhite

CONSULTANT:
Kimley»Horn
© 2018 KIMLEY-HORN AND ASSOCIATES, INC.
765 THE CITY DRIVE, SUITE 200, ORANGE, CA 92868
PHONE: 714-939-1030 FAX: 714-938-9488
WWW.KIMLEY-HORN.COM

REGISTERED PROFESSIONAL ENGINEER
AHMED ZUHAIRA
No. RCE NO. 92050
CIVIL
STATE OF CALIFORNIA

PROJECT NAME:

Bellflower Unified School District
Mayfair High School Sports Fields
6000 North Woodruff Ave
Lakewood, California 90713

CLIENT:
BELLFLOWER UNIFIED SCHOOL DISTRICT
16703 S. Clark Ave.
BELLFLOWER, CALIFORNIA 90706

Rev.	Date	Description

JOB NO: 15008.01
DATE: 11/13/2024
DRAWN: CC
CHECK: IV
ARCHITECT: PDW
ENGINEER: AZ

SHEET DESCRIPTION:
PRECISE GRADING

SHEET NO:
C409

K:\ORA_LDEV\099842008 – mayfair high school\CAD\plansheets\Field\C400 GRADING PLAN.dwg Jan 13, 2025 – 4:01pm Isabella.Valbuena

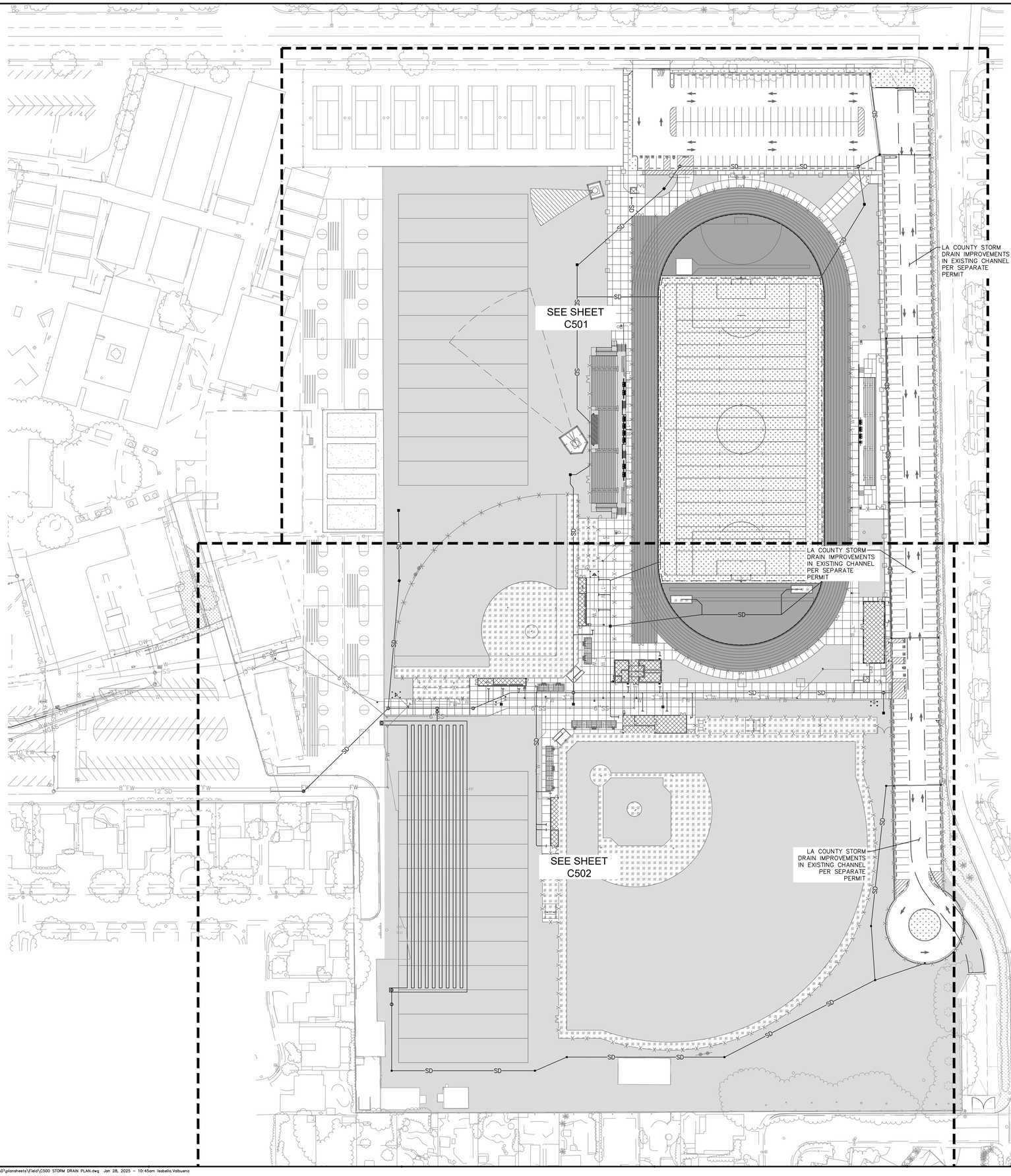

LEGEND

- 8"SS — SANITARY SEWER LINE
- 3"W — 3" DOMESTIC WATER LINE
- 1"W — 1" DOMESTIC WATER LINE
- SD — STORM DRAIN LINE
- PERFORATED UNDERDRAIN
- SLOT DRAIN

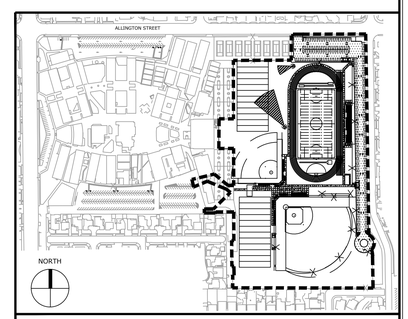

KEYMAP

IDENTIFICATION STAMP
DIV. OF THE STATE ARCHITECT
APP: 03-124281 INC:
REVIEWED FOR
SS ☑ FLS ☑ ACS ☑
DATE: 02/04/2025

ARCHITECT:
architecture
westbergwhite
14471 Chambers Rd, Suite 210
Tustin, CA 92780
714.508.1780
714.508.1780 Fax

1775 Hancock St, Suite 120
San Diego, CA 92110
619.542.1188
619.542.1663 Fax

CONSULTANT:
Kimley»Horn
© 2018 KIMLEY-HORN AND ASSOCIATES, INC.
765 THE CITY DRIVE, SUITE 200, ORANGE, CA 92868
PHONE: 714-939-1030 FAX: 714-938-9488
WWW.KIMLEY-HORN.COM

REGISTERED PROFESSIONAL ENGINEER
AHMED ZUMAWA
No. RCE NO. 92050
CIVIL
STATE OF CALIFORNIA

PROJECT NAME:

Bellflower Unified School District
Mayfair High School Sports Fields
6000 North Woodruff Ave
Lakewood, California 90713

CLIENT:

BELLFLOWER UNIFIED SCHOOL DISTRICT
16703 S. Clark Ave.
BELLFLOWER, CALIFORNIA 90706

#	Rev. Date	Description

JOB NO:	15008.01
DATE:	11/13/2024
DRAWN:	CC
CHECK:	IV
ARCHITECT:	PDW
ENGINEER:	AZ

SHEET DESCRIPTION:
OVERALL STORM DRAIN PLAN

SHEET NO:
C500

K:\ORA_LDEV\094842008 – mayfair high school\CAD\plansheets\Field\C500 STORM DRAIN PLAN.dwg Jan 28, 2025 – 10:45am Isabella.Valbuena

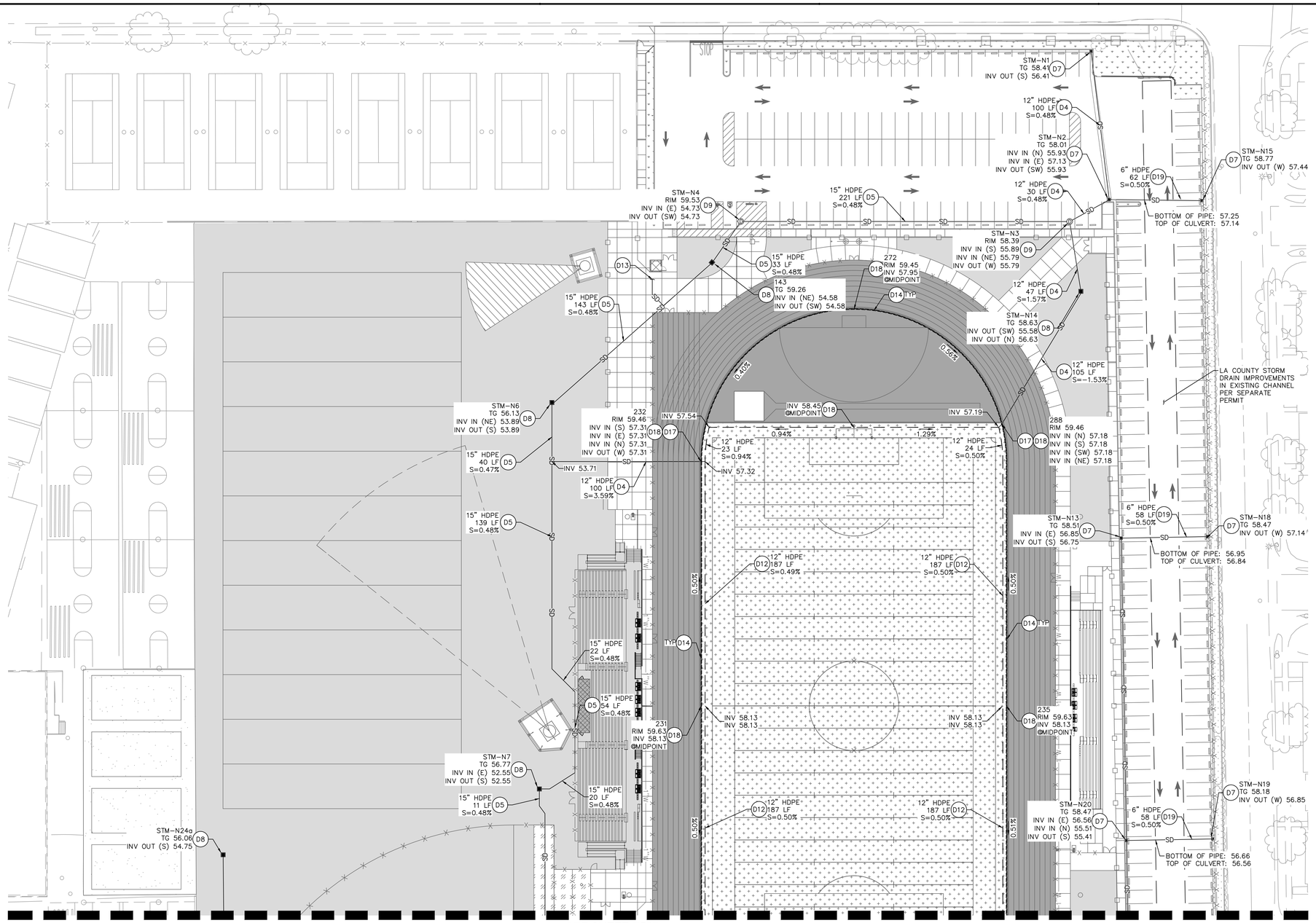

SEE SHEET C502

LEGEND

8"SS	SANITARY SEWER LINE
3"W	3" DOMESTIC WATER LINE
1"W	1" DOMESTIC WATER LINE
SD	STORM DRAIN LINE
	PERFORATED UNDERDRAIN
	SLOT DRAIN

STORM DRAIN NOTES

D1	CONNECTION PROPOSED STORM DRAIN LINE TO EXISTING STORM DRAIN LINE
D2	4" HDPE STORM DRAIN LINE. TRENCHING PER DETAIL 8, SHEET C701.
D3	8" HDPE STORM DRAIN LINE. TRENCHING PER DETAIL 8, SHEET C701.
D4	12" HDPE STORM DRAIN LINE. TRENCHING PER DETAIL 8, SHEET C701.
D5	15" HDPE STORM DRAIN LINE. TRENCHING PER DETAIL 8, SHEET C701.
D6	18" HDPE STORM DRAIN LINE. TRENCHING PER DETAIL 8, SHEET C701.
D7	CATCH BASIN IN VALLEY GUTTER PER DETAIL 9, SHEET C701.
D8	24" X 24" CATCH BASIN PER DETAIL 2, SHEET C701.
D9	STORM DRAIN MANHOLE PER DETAIL 1, SHEET C701.
D10	INSTALL CONTECH CDS UNIT
D11	INSTALL 6" ROUND AREA DRAIN, ZURN MODEL NUMBER 2400-582-28-VP
D12	INSTALL 12" PERFORATED UNDERDRAINS PER ARCHITECTURAL PLANS FOR DETAILS.
D13	BUILDING POINT OF CONNECTION 5' FROM BUILDING FACE. REFER TO MEP PLANS FOR CONTINUATION.
D14	PROPOSED TRACK PRECAST ACO SYSTEM 3000 DRAIN SLOT, SEE DETAIL 15 ON SHEET C700
D15	INSTALL (7) 60" DIAMETER DUAL WALL ADS N-12 UNDERGROUND DETENTION SYSTEM PER DETAIL SHEET C702. (75'x335')
D16	CONNECT PROPOSED STORM DRAIN LINE TO UNDERGROUND DETENTION SYSTEM
D17	PROPOSED CONNECTION OF SLOT DRAIN TO STORM DRAIN LINE
D18	PROPOSED SLOT DRAIN CLEANOUT
D19	6" HDPE STORM DRAIN LINE. TRENCHING PER DETAIL 8, SHEET C701.

EXISTING UTILITY NOTE

THE EXISTING UTILITIES SHOWN ON THE PLAN ARE BASED ON AVAILABLE RECORDS. THE CONTRACTOR MUST POTHOLE AND FIELD VERIFY THE LOCATION AND DEPTH OF ALL EXISTING UTILITIES PRIOR TO ANY CONSTRUCTION. REPORT DISCREPANCIES AND POTENTIAL CONFLICTS WITH PROPOSED UTILITIES TO CIVIL ENGINEER PRIOR TO INSTALLATION OF ANY PIPING.

UTILITY NOTE

CONTRACTOR SHALL CONSTRUCT GRAVITY UTILITIES (STORM DRAIN AND SEWER) BEFORE OTHER UTILITIES. CONSTRUCTION OF THESE GRAVITY UTILITIES TO START FROM THE DOWNSTREAM ENDS AND NOTIFY ENGINEER OF ANY DISCREPANCIES.

NORTH

GRAPHIC SCALE IN FEET
0 15 30 60

SCALE 1" = 30'
WHEN PRINTED FULL SIZE
30" X 42"

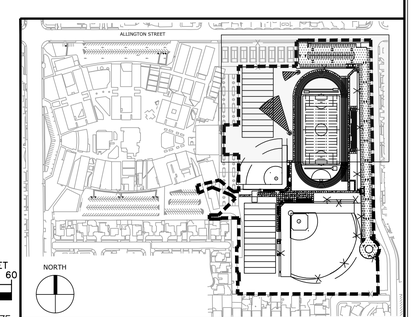

KEYMAP

IDENTIFICATION STAMP
DIV. OF THE STATE ARCHITECT
APP: 03-124281 INC:
REVIEWED FOR
SS ☑ FLS ☑ ACS ☑
DATE: 02/04/2025

ARCHITECT:
architecture
westbergwhite
14471 Chambers Rd, Suite 210
Tustin, CA 92780
714.508.1780
714.508.1780 Fax

1775 Hancock St, Suite 120
San Diego, CA 92110
619.542.1188
619.542.1663 Fax

CONSULTANT:
Kimley»Horn
© 2018 KIMLEY-HORN AND ASSOCIATES, INC.
765 THE CITY DRIVE, SUITE 200, ORANGE, CA 92868
PHONE: 714-939-1030 FAX: 714-938-9488
WWW.KIMLEY-HORN.COM

REGISTERED PROFESSIONAL ENGINEER
AHMED ZUMAWA
No. 92050
CIVIL
STATE OF CALIFORNIA

PROJECT NAME:

Bellflower Unified School District
Mayfair High School Sports Fields
6000 North Woodruff Ave
Lakewood, California 90713

CLIENT:

BELLFLOWER UNIFIED SCHOOL DISTRICT

16703 S. Clark Ave.
BELLFLOWER, CALIFORNIA 90706

Rev.	Date	Description

JOB NO: 15008.01
DATE: 11/13/2024
DRAWN: CC
CHECK: IV
ARCHITECT: PDW
ENGINEER: AZ

SHEET DESCRIPTION:
STORM DRAIN PLAN

SHEET NO:
C501

K:\ORA_LDEV\094842008 - mayfair high school\CAD\plansheets\Field\C500 STORM DRAIN PLAN.dwg Jan 28, 2025 - 7:21pm Isabella.Valbuena

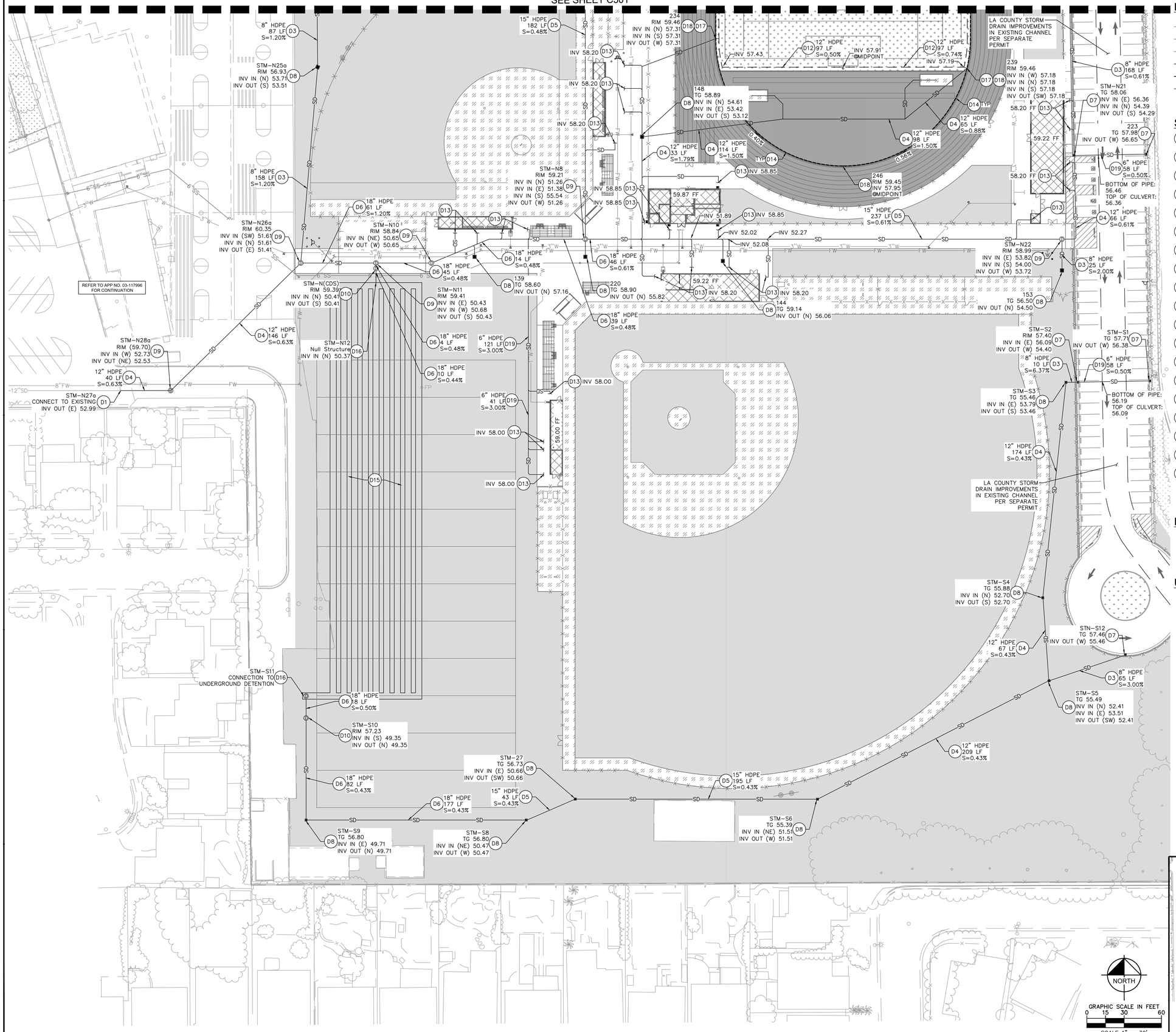

LEGEND

- SANITARY SEWER LINE
- 3" DOMESTIC WATER LINE
- 1" DOMESTIC WATER LINE
- STORM DRAIN LINE
- PERFORATED UNDERDRAIN
- SLOT DRAIN

STORM DRAIN NOTES

D1 CONNECTION PROPOSED STORM DRAIN LINE TO EXISTING STORM DRAIN LINE

D2 4" HDPE STORM DRAIN LINE. TRENCHING PER DETAIL 8, SHEET C701.

D3 8" HDPE STORM DRAIN LINE. TRENCHING PER DETAIL 8, SHEET C701.

D4 12" HDPE STORM DRAIN LINE. TRENCHING PER DETAIL 8, SHEET C701.

D5 15" HDPE STORM DRAIN LINE. TRENCHING PER DETAIL 8, SHEET C701.

D6 18" HDPE STORM DRAIN LINE. TRENCHING PER DETAIL 8, SHEET C701.

D7 CATCH BASIN IN VALLEY GUTTER PER DETAIL 9, SHEET C701.

D8 24" X 24" CATCH BASIN PER DETAIL 2, SHEET C701.

D9 STORM DRAIN MANHOLE PER DETAIL 1, SHEET C701.

D10 INSTALL CONTECH CDS UNIT

D11 INSTALL 6" ROUND AREA DRAIN, ZURN MODEL NUMBER 2400-582-28-VP

D12 INSTALL 12" PERFORATED UNDERDRAINS PER ARCHITECTURAL PLANS FOR DETAILS.

D13 BUILDING POINT OF CONNECTION 5' FROM BUILDING FACE. REFER TO MEP PLANS FOR CONTINUATION.

D14 PROPOSED TRACK PRECAST ACO SYSTEM 3000 DRAIN SLOT, SEE DETAIL 15 ON SHEET C700

D15 INSTALL (7) 60" DIAMETER DUAL WALL ADS N-12 UNDERGROUND DETENTION SYSTEM PER DETAIL SHEET C702. (75'x335')

D16 CONNECT PROPOSED STORM DRAIN LINE TO UNDERGROUND DETENTION SYSTEM

D17 PROPOSED CONNECTION OF SLOT DRAIN TO STORM DRAIN LINE

D18 PROPOSED SLOT DRAIN CLEANOUT

D19 6" HDPE STORM DRAIN LINE. TRENCHING PER DETAIL 8, SHEET C701.

EXISTING UTILITY NOTE

THE EXISTING UTILITIES SHOWN ON THE PLAN ARE BASED ON AVAILABLE RECORDS. THE CONTRACTOR MUST POTHOLE AND FIELD VERIFY THE LOCATION AND DEPTH OF ALL EXISTING UTILITIES PRIOR TO ANY CONSTRUCTION. REPORT DISCREPANCIES AND POTENTIAL CONFLICTS WITH PROPOSED UTILITIES TO CIVIL ENGINEER PRIOR TO INSTALLATION OF ANY PIPING.

UTILITY NOTE

CONTRACTOR SHALL CONSTRUCT GRAVITY UTILITIES (STORM DRAIN AND SEWER) BEFORE OTHER UTILITIES. CONSTRUCTION OF THESE GRAVITY UTILITIES TO START FROM THE DOWNSTREAM ENDS AND NOTIFY ENGINEER OF ANY DISCREPANCIES.

IDENTIFICATION STAMP
DIV. OF THE STATE ARCHITECT
APP: 03-124281 INC:
REVIEWED FOR
SS ☑ FLS ☑ ACS ☑
DATE: 02/04/2025

ARCHITECT:
architecture
westbergwhite
14471 Chambers Rd, Suite 210
Tustin, CA 92780
714.508.1780
714.508.1780 Fax

1775 Hancock St, Suite 120
San Diego, CA 92110
619.542.1188
619.542.1663 Fax

CONSULTANT:
Kimley»Horn
© 2018 KIMLEY-HORN AND ASSOCIATES, INC.
765 THE CITY DRIVE, SUITE 200, ORANGE, CA 92868
PHONE: 714-939-1030 FAX: 714-938-9488
WWW.KIMLEY-HORN.COM

REGISTERED PROFESSIONAL ENGINEER
AHMED ZUMAWA
No. 92205
CIVIL
STATE OF CALIFORNIA

PROJECT NAME:

Bellflower Unified School District
Mayfair High School Sports Fields
6000 North Woodruff Ave
Lakewood, California 90713

CLIENT:
BELLFLOWER UNIFIED SCHOOL DISTRICT
16703 S. Clark Ave.
BELLFLOWER, CALIFORNIA 90706

Δ	Rev. Date	Description

JOB NO: 15008.01
DATE: 11/13/2024
DRAWN: CC
CHECK: IV
ARCHITECT: PDW
ENGINEER: AZ

SHEET DESCRIPTION:
STORM DRAIN PLAN

SHEET NO:
C502

K:\DRA_LDEV\094842008 - mayfair high school\CAD\plansheets\Field\C500 STORM DRAIN PLAN.dwg Jan 13, 2025 - 4:03pm Isabella.Valbuena

ALLINGTON STREET

CANEHILL AVENUE

SEE SHEET C601

SEE SHEET C602

LEGEND

8"SS	SANITARY SEWER LINE
3"W	3" DOMESTIC WATER LINE
1"W	1" DOMESTIC WATER LINE
SD	STORM DRAIN LINE

GRAPHIC SCALE IN FEET
0 25 50 100
SCALE 1" = 50'
WHEN PRINTED FULL SIZE
30" X 42"

NORTH

KEYMAP

IDENTIFICATION STAMP
DIV. OF THE STATE ARCHITECT
APP: 03-124281 INC:
REVIEWED FOR
SS ☑ FLS ☑ ACS ☑
DATE: 02/04/2025

ARCHITECT:

architecture
westbergwhite
14471 Chambers Rd, Suite 210
Tustin, CA 92780
714.508.1780
714.508.1780 Fax

1775 Hancock St, Suite 120
San Diego, CA 92110
619.542.1188
619.542.1663 Fax

CONSULTANT:

Kimley»Horn

© 2018 KIMLEY-HORN AND ASSOCIATES, INC.

765 THE CITY DRIVE, SUITE 200, ORANGE, CA 92868
PHONE: 714-939-1030 FAX: 714-938-9488
WWW.KIMLEY-HORN.COM

REGISTERED PROFESSIONAL ENGINEER
AHMED ZUMAWA
No. RCE NO. 92050
CIVIL
STATE OF CALIFORNIA

PROJECT NAME:

Bellflower Unified School District

Mayfair High School Sports Fields

6000 North Woodruff Ave
Lakewood, California 90713

CLIENT:

BELLFLOWER UNIFIED SCHOOL DISTRICT

16703 S. Clark Ave.
BELLFLOWER, CALIFORNIA 90706

Rev.	Date	Description

JOB NO:	15008.01
DATE:	11/13/2024
DRAWN:	CC
CHECK:	IV
ARCHITECT:	PDW
ENGINEER:	AZ

SHEET DESCRIPTION:

OVERALL UTILITY PLAN

SHEET NO:

C600

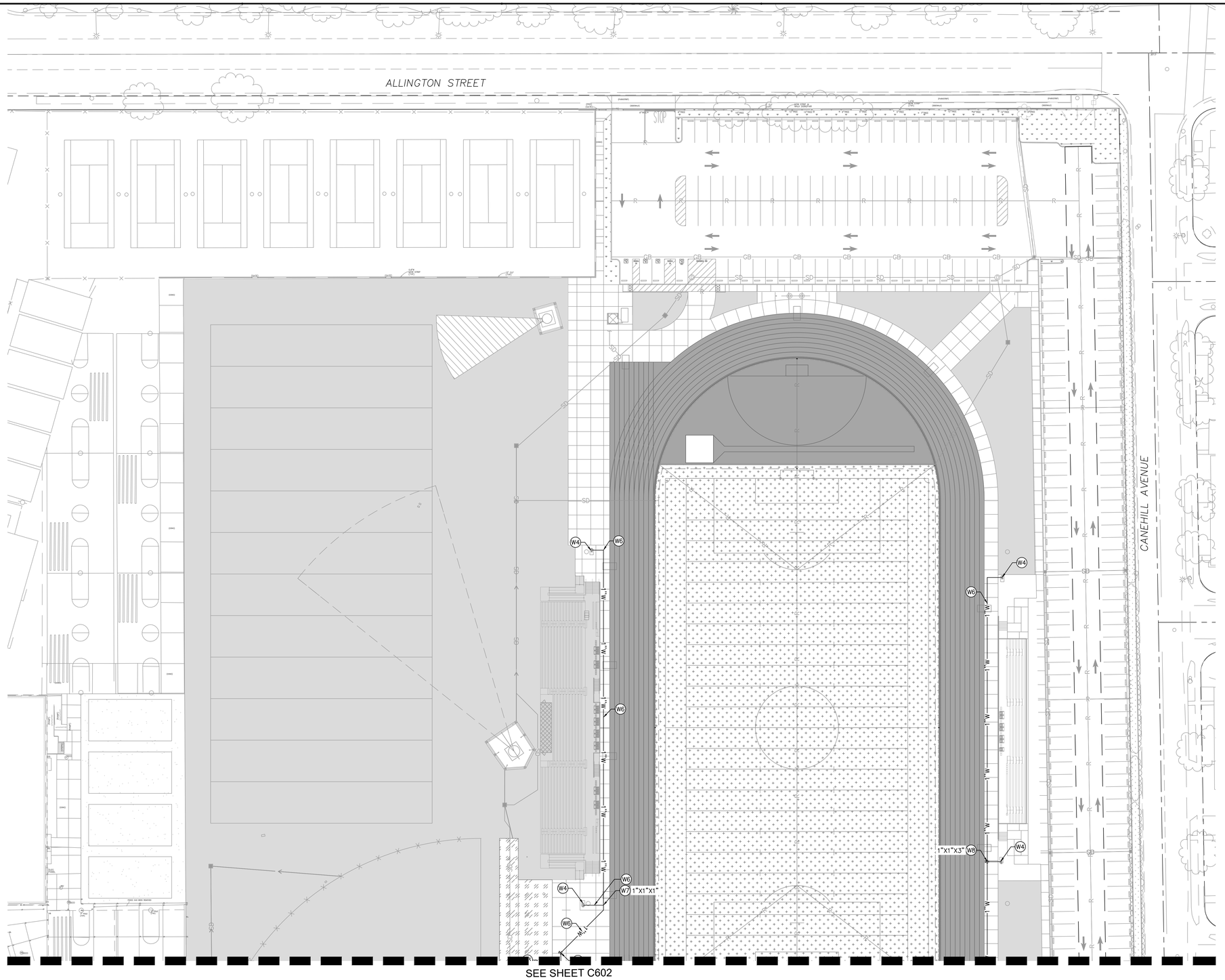

LEGEND

8"SS	SANITARY SEWER LINE
3"W	3" DOMESTIC WATER LINE
1"W	1" DOMESTIC WATER LINE
SD	STORM DRAIN LINE

SANITARY SEWER NOTES

(S1) INSTALL SDR-35 SANITARY SEWER LINE. TRENCHING PER DETAIL 8, SHEET C701

(S2) INSTALL SANITARY SEWER CLEANOUT PER DETAIL 5, SHEET C701

(S3) INSTALL SANITARY SEWER MANHOLE PER DETAIL 1, SHEET C701

(S4) CONNECTION PROPOSED SANITARY SEWER LINE TO EXISTING SANITARY SEWER MANHOLE

(S5) INSTALL SANITARY SEWER BEND PER DETAIL 7, SHEET C701

(S6) BUILDING POINT OF CONNECTION. REFER TO MEP PLANS FOR CONTINUATION.

DOMESTIC WATER NOTES

(W1) INSTALL 3" PVC SCHEDULE 80 DOMESTIC WATER LINE. TRENCHING PER DETAIL 8, SHEET C701

(W2) BUILDING POINT OF CONNECTION. REFER TO MEP PLANS FOR CONTINUATION.

(W3) CONNECT PROPOSED DOMESTIC WATER LINE TO EXISTING WATER MAIN. CONTRACTOR TO POTHOLE AND VERIFY IN FIELD LOCATION OF EXISTING LINE.

(W4) PROPOSED REMOTE DRINKING FOUNTAIN PER PLUMBING PLANS

(W5) THRUST BLOCK PER DETAIL 6, SHEET C701

(W6) INSTALL 1" PVC SCHEDULE 80 DOMESTIC WATER LINE. TRENCHING PER DETAIL 8, SHEET C701

(W7) INSTALL TEE CONNECTION, SIZES PER PLAN

(W8) INSTALL REDUCER CONNECTION, SIZES PER PLAN

(W9) 2" PVC CONNECTION FOR SPORTS FIELD. REFER TO LANDSCAPE PLANS FOR MORE INFORMATION

(W10) HOSE BIB CONNECTION. REFER TO MEP PLANS FOR CONTINUATION

(W11) CAP 3" WATER LINE BELOW FOR FUTURE CONNECTION.

FIRE WATER NOTES

(F1) INSTALL 8" PVC C900 FIRE WATER LINE. TRENCHING PER DETAIL 8, SHEET C701

(F2) INSTALL THRUST BLOCK PER DETAIL 7, SHEET C701

(F3) INSTALL FIRE HYDRANT PER DETAIL 6, SHEET C701

(F4) CONNECT TO EXISTING FIRE WATER LINE PER DSA APPROVED PLANS A#03-117996

EXISTING UTILITY NOTE

THE EXISTING UTILITIES SHOWN ON THE PLAN ARE BASED ON AVAILABLE RECORDS. THE CONTRACTOR MUST FIELD DETERMINE THE LOCATION AND DEPTH OF ALL UTILITIES PRIOR TO ANY CONSTRUCTION. REPORT DISCREPANCIES AND POTENTIAL CONFLICTS WITH PROPOSED UTILITIES TO ENGINEER PRIOR TO INSTALLATION OF ANY PIPING.

UTILITY NOTE

CONTRACTOR SHALL CONSTRUCT GRAVITY UTILITIES (STORM DRAIN AND SEWER) BEFORE OTHER UTILITIES. CONSTRUCTION OF THESE GRAVITY UTILITIES TO START FROM THE DOWNSTREAM ENDS AND NOTIFY ENGINEER OF ANY DISCREPANCIES.

NORTH

GRAPHIC SCALE IN FEET
0 15 30 60

SCALE 1" = 20'
WHEN PRINTED FULL SIZE
30" X 42"

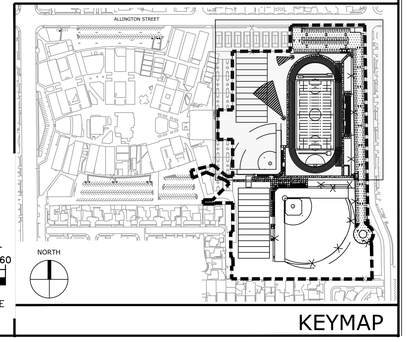

KEYMAP

IDENTIFICATION STAMP
DIV. OF THE STATE ARCHITECT
APP: 03-124281 INC:
REVIEWED FOR
SS ☑ FLS ☑ ACS ☑
DATE: 02/04/2025

ARCHITECT:
architecture
westbergwhite
14471 Chambers Rd, Suite 210
Tustin, CA 92780
714.508.1780
714.508.1780 Fax

1775 Hancock St, Suite 120
San Diego, CA 92110
619.542.1188
619.542.1663 Fax

CONSULTANT:
Kimley»Horn
© 2018 KIMLEY-HORN AND ASSOCIATES, INC.
765 THE CITY DRIVE, SUITE 200, ORANGE, CA 92868
PHONE: 714-939-1030 FAX: 714-938-9488
WWW.KIMLEY-HORN.COM

REGISTERED PROFESSIONAL ENGINEER
AHMED ZUMAWA
No. RCE NO. 92200
CIVIL
STATE OF CALIFORNIA

PROJECT NAME:

Bellflower Unified School District
Mayfair High School Sports Fields
6000 North Woodruff Ave
Lakewood, California 90713

CLIENT:

BELLFLOWER UNIFIED SCHOOL DISTRICT
16703 S. Clark Ave.
BELLFLOWER, CALIFORNIA 90706

Rev.	Date	Description

JOB NO: 15008.01
DATE: 11/13/2024
DRAWN: CC
CHECK: IV
ARCHITECT: PDW
ENGINEER: AZ

SHEET DESCRIPTION:
UTILITY PLAN

SHEET NO:
C601

SEE SHEET C601

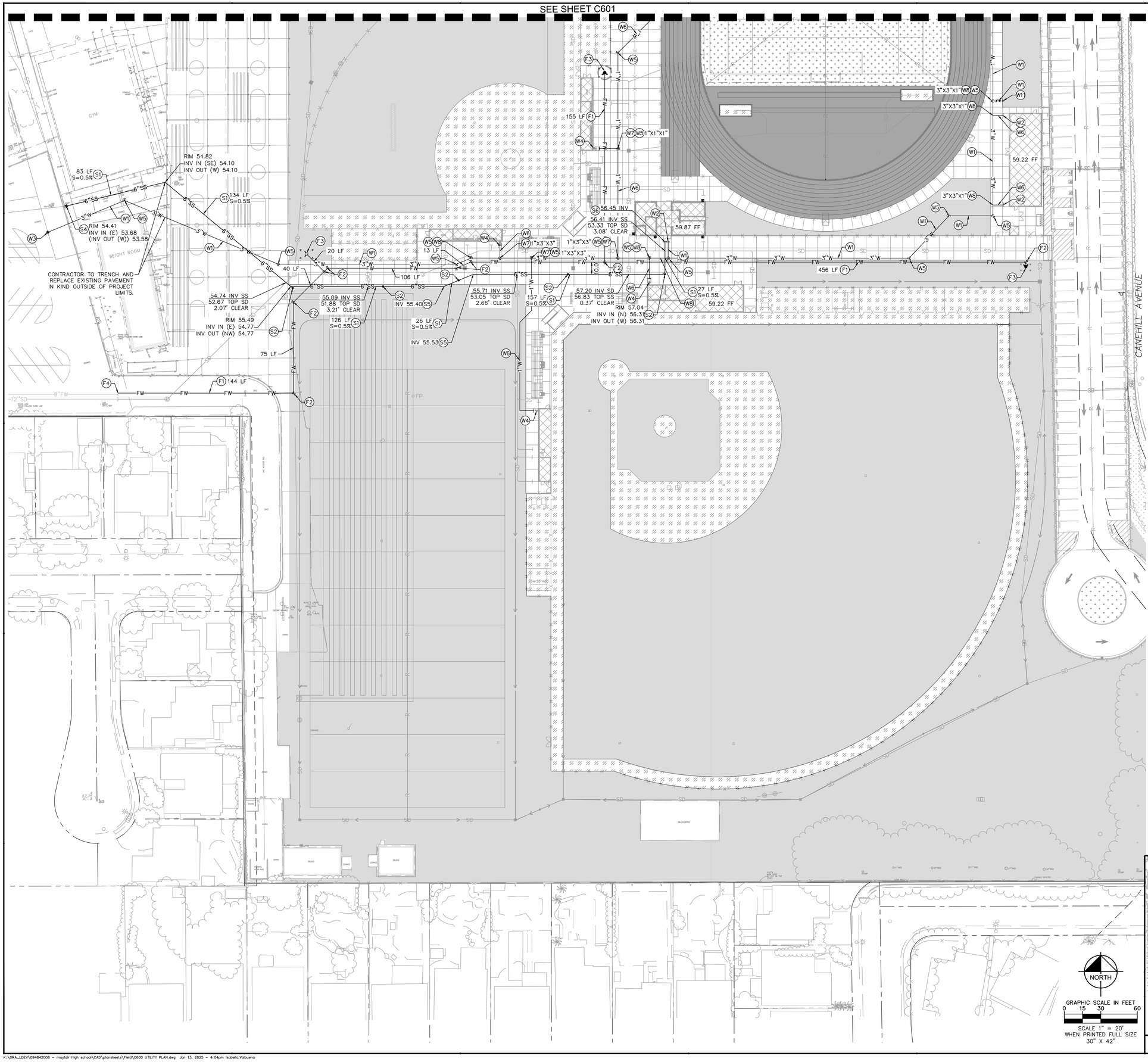

LEGEND

8"SS	SANITARY SEWER LINE
3"W	3" DOMESTIC WATER LINE
1"W	1" DOMESTIC WATER LINE
SD	STORM DRAIN LINE

SANITARY SEWER NOTES

- (S1) INSTALL SDR-35 SANITARY SEWER LINE. TRENCHING PER DETAIL 8, SHEET C701
- (S2) INSTALL SANITARY SEWER CLEANOUT PER DETAIL 5, SHEET C701
- (S3) INSTALL SANITARY SEWER MANHOLE PER DETAIL 1, SHEET C701
- (S4) CONNECTION PROPOSED SANITARY SEWER LINE TO EXISTING SANITARY SEWER MANHOLE
- (S5) INSTALL SANITARY SEWER BEND PER DETAIL 7, SHEET C701
- (S6) BUILDING POINT OF CONNECTION. REFER TO MEP PLANS FOR CONTINUATION.

DOMESTIC WATER NOTES

- (W1) INSTALL 3" PVC SCHEDULE 80 DOMESTIC WATER LINE. TRENCHING PER DETAIL 8, SHEET C701
- (W2) BUILDING POINT OF CONNECTION. REFER TO MEP PLANS FOR CONTINUATION.
- (W3) CONNECT PROPOSED DOMESTIC WATER LINE TO EXISTING WATER MAIN. CONTRACTOR TO POTHOLE AND VERIFY IN FIELD LOCATION OF EXISTING LINE.
- (W4) PROPOSED REMOTE DRINKING FOUNTAIN PER PLUMBING PLANS
- (W5) THRUST BLOCK PER DETAIL 6, SHEET C701
- (W6) INSTALL 1" PVC SCHEDULE 80 DOMESTIC WATER LINE. TRENCHING PER DETAIL 8, SHEET C701
- (W7) INSTALL TEE CONNECTION, SIZES PER PLAN
- (W8) INSTALL REDUCER CONNECTION, SIZES PER PLAN
- (W9) 2" PVC CONNECTION FOR SPORTS FIELD. REFER TO LANDSCAPE PLANS FOR MORE INFORMATION
- (W10) HOSE BIB CONNECTION. REFER TO MEP PLANS FOR CONTINUATION
- (W11) CAP 3" WATER LINE BELOW FOR FUTURE CONNECTION.

FIRE WATER NOTES

- (F1) INSTALL 8" PVC C900 FIRE WATER LINE. TRENCHING PER DETAIL 8, SHEET C701
- (F2) INSTALL THRUST BLOCK PER DETAIL 7, SHEET C701
- (F3) INSTALL FIRE HYDRANT PER DETAIL 6, SHEET C701
- (F4) CONNECT TO EXISTING FIRE WATER LINE PER DSA APPROVED PLANS A#03-117996

EXISTING UTILITY NOTE

THE EXISTING UTILITIES SHOWN ON THE PLAN ARE BASED ON AVAILABLE RECORDS. THE CONTRACTOR MUST FIELD DETERMINE THE LOCATION AND DEPTH OF ALL UTILITIES PRIOR TO ANY CONSTRUCTION. REPORT DISCREPANCIES AND POTENTIAL CONFLICTS WITH PROPOSED UTILITIES TO ENGINEER PRIOR TO INSTALLATION OF ANY PIPING.

UTILITY NOTE

CONTRACTOR SHALL CONSTRUCT GRAVITY UTILITIES (STORM DRAIN AND SEWER) BEFORE OTHER UTILITIES. CONSTRUCTION OF THESE GRAVITY UTILITIES TO START FROM THE DOWNSTREAM ENDS AND NOTIFY ENGINEER OF ANY DISCREPANCIES.

IDENTIFICATION STAMP
DIV. OF THE STATE ARCHITECT
APP: 03-124281 INC:
REVIEWED FOR
SS ☑ FLS ☑ ACS ☑
DATE: 02/04/2025

ARCHITECT:
architecture
westbergwhite
14471 Chambers Rd, Suite 210
Tustin, CA 92780
714.508.1780
714.508.1780 Fax

1775 Hancock St, Suite 120
San Diego, CA 92110
619.542.1188
619.542.1663 Fax

CONSULTANT:
Kimley»Horn
© 2018 KIMLEY-HORN AND ASSOCIATES, INC.
765 THE CITY DRIVE, SUITE 200, ORANGE, CA 92868
PHONE: 714-939-1030 FAX: 714-938-9488
WWW.KIMLEY-HORN.COM

REGISTERED PROFESSIONAL ENGINEER
AHMED ZUMAWA
No. RCE NO. 92200
CIVIL
STATE OF CALIFORNIA

PROJECT NAME:

Bellflower Unified School District
Mayfair High School Sports Fields
6000 North Woodruff Ave
Lakewood, California 90713

CLIENT:
BELLFLOWER UNIFIED SCHOOL DISTRICT
16703 S. Clark Ave.
BELLFLOWER, CALIFORNIA 90706

#	Rev. Date	Description

JOB NO:	15008.01
DATE:	11/13/2024
DRAWN:	CC
CHECK:	IV
ARCHITECT:	PDW
ENGINEER:	AZ

SHEET DESCRIPTION:
UTILITY PLAN

SHEET NO:
C602

K:\ORA_LDEV\094842008 – mayfair high school\CAD\plansheets\Field\C600 UTILITY PLAN.dwg Jan 13, 2025 – 4:04pm Isabella.Valbuena

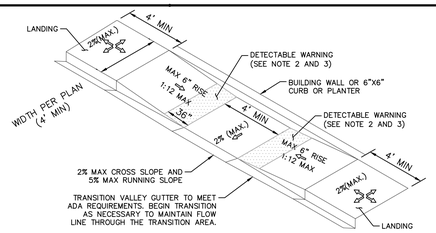

DOUBLE RAMP CURB RAMP

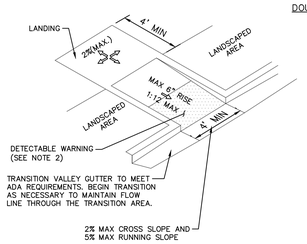

IN-LINE CURB RAMP

NOTES:

1. ALL ACCESSIBLE COMPONENTS CONSTRUCTED AS PART OF THESE PLANS SHALL COMPLY WITH THE LOCAL, STATE, AND FEDERAL REGULATIONS WHICHEVER ARE MORE STRINGENT.
2. CURB RAMPS SHALL HAVE A DETECTABLE WARNING EXTENDING THE FULL WIDTH OF THE CURB RAMP AND 3' DEEP. GROOVED SURFACES ON OUTDOOR CURB RAMPS ARE NOT PERMITTED. VERIFY LOCAL REQUIREMENTS WITH THE BUILDING DEPARTMENT. REFER TO TRUNCATED DOMES DETAIL AND REQUIREMENTS IN THE CALIFORNIA BUILDING CODE.
3. PARALLEL CURB RAMPS SHALL HAVE A DETECTABLE WARNING EXTENDING 36" DEEP ALONG THE FLUSH TRANSITION BETWEEN STREET AND SIDEWALK. REFER TO TRUNCATED DOMES DETAIL.
4. PUBLIC SIDEWALK CURB RAMPS CONSTRUCTED WITHIN A PUBLIC RIGHT- OF -WAY, IN ABSENCE OF LOCAL ROADWAY GUIDELINES, SHALL MEET OR EXCEED LOCAL REGULATIONS.
5. CURB RAMP SURFACES (FLARES AND RAMP) SHALL HAVE A DIFFERENT TEXTURE FROM THE SURROUNDING PAVEMENT.
6. CURB RAMPS SHALL BE CONCRETE WITH STRENGTH OF 2500 PSI.
7. INSTALL 1/4" EXPANSION JOINT FILLER MATERIAL BETWEEN A NEW CURB RAMP AND THE EXISTING SIDEWALKS.
8. WATER PONDING WITHIN THE CURB RAMP LIMITS IS NOT ALLOWED.
9. NO GRADE BREAK IS ALLOWED ALONG THE RAMP SURFACE.
10. CROSS SLOPE OF THE CURB RAMP SURFACE SHALL BE LESS THAN 2%
11. TRANSITION CHANGE IN ELEVATION IS NOT TO EXCEED 1/2" WITHIN AN ACCESSIBLE ROUTE.
12. DIAGONAL CURB RAMP SIDE SLOPE VARIES UNIFORMLY FROM A MAXIMUM OF UP TO 10% AT CURB TO CONFORM WITH LONGITUDINAL SIDEWALK SLOPE ADJACENT TO TOP OF THE RAMP.

ACCESSIBLE RAMP DETAIL (16)
N.T.S.

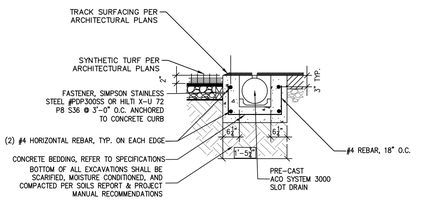

NOTES:

1. CONCRETE BEDDING SHALL HAVE SAW CUT JOINTS AT BOTH ENDS OF THE DRAIN SEGMENTS EACH SIDE.
2. PROVIDE SAW CUT JOINT 8' ON CENTER MAX.
3. JOINTS TO BE ON BOTH SIDE OF GRATE.
4. CONCRETE FINISH FOR TRENCH DRAINS SHALL BE MEDIUM BROOM FINISH LENGTHWISE.

TRACK SLOT DRAIN (15)
N.T.S.

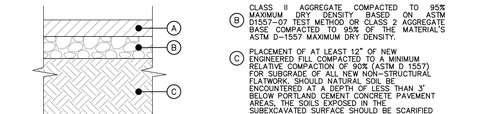

WHEEL STOP (14)
N.T.S.

	REGULAR DUTY ASPHALT CONCRETE	HEAVY DUTY ASPHALT CONCRETE	STANDARD DUTY CONCRETE	HEAVY DUTY CONCRETE
(A)	2.5"	3.0"	4.5"	6.5"
(B)	4.0"	5.0"	4.0"	4.0"
(C)	12"	12"	12"	12"

(A) C2-PG64-10 ASPHALTIC PAVEMENT, 3,250 PSI PORTLAND CEMENT CONCRETE WITH #3 BARS AT 24" O.C.

(B) CLASS II AGGREGATE COMPACTED TO 95% MAXIMUM DRY DENSITY BASED ON ASTM D1557-07 TEST METHOD OR CLASS 2 AGGREGATE BASE COMPACTED TO 95% OF THE MATERIAL'S ASTM D-1557 MAXIMUM DRY DENSITY.

(C) PLACEMENT OF AT LEAST 12" OF NEW ENGINEERED FILL COMPACTED TO A MINIMUM RELATIVE COMPACTION OF 90% (ASTM D 1557) FOR SUBGRADE OF ALL NEW NON-STRUCTURAL FLATWORK. SHOULD NATURAL SOIL BE ENCOUNTERED AT A DEPTH OF LESS THAN 3' BELOW PORTLAND CEMENT CONCRETE PAVEMENT AREAS, THE SOILS EXPOSED IN THE SUBEXCAVATED SURFACE SHOULD BE SCARIFIED TO A MINIMUM DEPTH OF 12".

NOTES:

1. CONTRACTOR SHALL CONFIRM THESE PAVEMENT SECTIONS WITH THE GEOTECHNICAL REPORT BY JOHN R. BYERLY, INC. DATED JUNE 30, 2017.
2. MATCH EXISTING PAVEMENT SECTION IF MORE STRINGENT THAN SECTION PER THIS DETAIL.
3. CONTRACTOR TO PROVIDE R-VALUE OF COMPACTED SUBGRADE TO ENGINEER PRIOR TO PAVEMENT OPERATIONS, IN ORDER TO MAKE ANY NECESSARY ADJUSTMENTS TO THE PAVEMENT SECTION.
4. ALL TREAD SURFACES SHALL BE SLIP-RESISTANT.
5. REFER TO ARCHITECTURAL PLANS FOR COLOR, TEXTURE, PATTERN AND FINISH.
6. CONTROL JOINTS FOR STANDARD DUTY CONCRETE SHOULD BE SPACED NO MORE THAN 13.5 FEET ON-CENTER EACH WAY. CONTROL JOINTS FOR HEAVY DUTY CONCRETE SHOULD BE SPACED NO MORE THAN 19.5 FEET ON-CENTER EACH WAY. REFER TO SHEET A004 FOR CONTROL JOINT DETAILS.

PAVEMENT SECTIONS (13)
N.T.S.

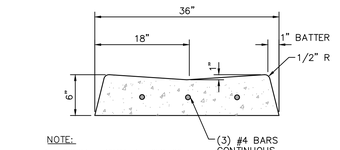

NOTE:

1. CONCRETE SHALL BE 3250 PSI
2. PROVIDE CONTROL JOINTS AT 8'-0" O.C. PER SHEET A004

CONCRETE VALLEY GUTTER (12)
N.T.S.

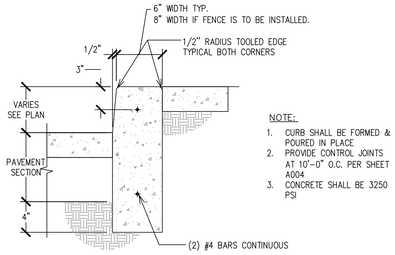

NOTE:

1. CURB SHALL BE FORMED & POURED IN PLACE
2. PROVIDE CONTROL JOINTS AT 10'-0" O.C. PER SHEET A004
3. CONCRETE SHALL BE 3250 PSI

CURB (11)
N.T.S.

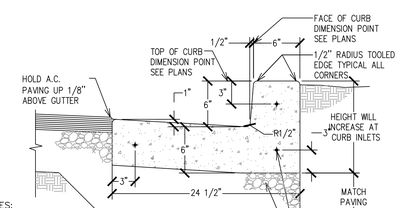

NOTES:

1. CONCRETE BEDDING SHALL HAVE SAW CUT JOINTS AT BOTH ENDS OF THE DRAIN SEGMENTS EACH SIDE.
2. PROVIDE SAW CUT JOINT 8' ON CENTER MAX.
3. JOINTS TO BE ON BOTH SIDE OF GRATE.
4. CONCRETE FINISH FOR TRENCH DRAINS SHALL BE MEDIUM BROOM FINISH LENGTHWISE.

TRACK SLOT DRAIN (15)
N.T.S.

NOTES:

1. DETAIL VARIES AT CATCH BASINS
2. BASEROCK TO BE COMPACTED TO A MIN. OF 95% & FIELD TESTED BY THE GEOTECHNICAL ENGINEER
3. CONTRACTION JOINTS CONSISTING OF 1" DEEP SCORES SHALL BE PLACED AT 5' INTERVALS O.C. PER SHEET A004. WHERE ADJACENT TO SIDEWALK, CONTRACTOR TO ALIGN JOINT SPACING.

CURB AND GUTTER DETAIL (10)
N.T.S.

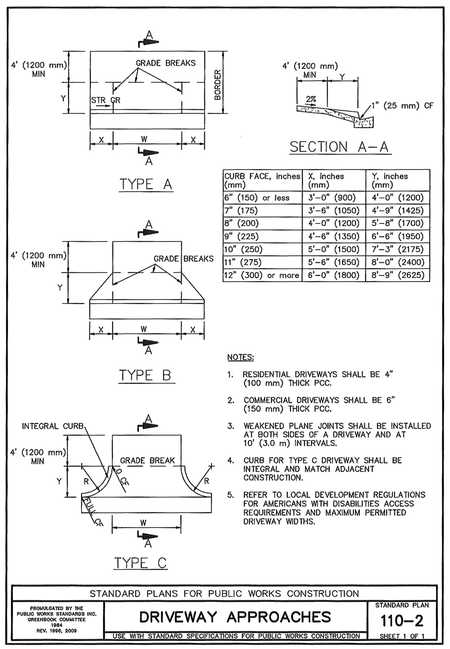

CURB FACE, inches (mm)	X, inches (mm)	Y, inches (mm)
6" (150) or less	3'-0" (900)	4'-0" (1200)
7" (175)	3'-6" (1050)	4'-9" (1425)
8" (200)	4'-0" (1200)	5'-8" (1700)
9" (225)	4'-6" (1350)	6'-6" (1950)
10" (250)	5'-0" (1500)	7'-3" (2175)
11" (275)	5'-6" (1650)	8'-0" (2400)
12" (300) or more	6'-0" (1800)	8'-9" (2625)

NOTES:

1. RESIDENTIAL DRIVEWAYS SHALL BE 4" (100 mm) THICK PCC.
2. COMMERCIAL DRIVEWAYS SHALL BE 6" (150 mm) THICK PCC.
3. WEAKENED PLANE JOINTS SHALL BE INSTALLED AT BOTH SIDES OF A DRIVEWAY AND AT 10' (3.0 m) INTERVALS.
4. CURB FOR TYPE C DRIVEWAY SHALL BE INTEGRAL AND MATCH ADJACENT CONSTRUCTION.
5. REFER TO LOCAL DEVELOPMENT REGULATIONS FOR AMERICANS WITH DISABILITIES ACCESS REQUIREMENTS AND MAXIMUM PERMITTED DRIVEWAY WIDTHS.

STANDARD PLANS FOR PUBLIC WORKS CONSTRUCTION		
ENDORSED BY THE PUBLIC WORKS STANDARDS INC. GREENBOOK COMMITTEE 1994 REV. 1998, 2009	DRIVEWAY APPROACHES	STANDARD PLAN 110-2
	USE WITH STANDARD SPECIFICATIONS FOR PUBLIC WORKS CONSTRUCTION	SHEET 1 OF 1

DRIVEWAY (9)
N.T.S.

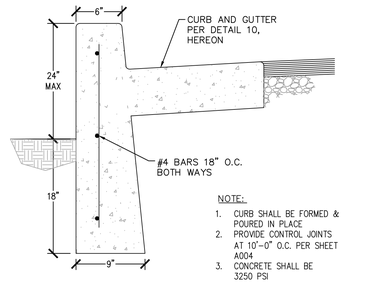

NOTE:

1. CURB SHALL BE FORMED & POURED IN PLACE
2. PROVIDE CONTROL JOINTS AT 10'-0" O.C. PER SHEET A004
3. CONCRETE SHALL BE 3250 PSI

CONCRETE CURB AND GUTTER WALL (8)
N.T.S.

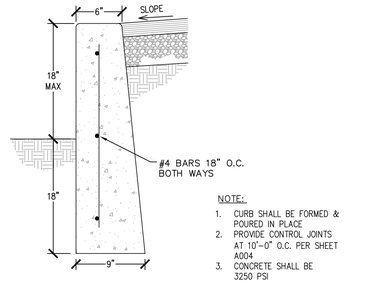

NOTE:

1. CURB SHALL BE FORMED & POURED IN PLACE
2. PROVIDE CONTROL JOINTS AT 10'-0" O.C. PER SHEET A004
3. CONCRETE SHALL BE 3250 PSI

CONCRETE CURB WALL (7)
N.T.S.

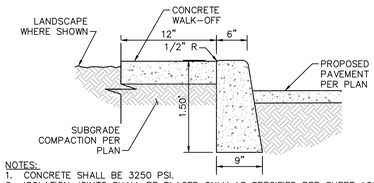

NOTES:

1. CONCRETE SHALL BE 3250 PSI.
2. ISOLATION JOINTS SHALL BE PLACED ONLY AS SPECIFIED PER SHEET A004
3. CONTRACTION JOINTS CONSISTING OF 1" DEEP SCORES SHALL BE PLACED AT 5' INTERVALS O.C. PER SHEET A004
4. WHERE A WALK IS ADJACENT TO THE CURB THE JOINTS SHALL ALIGN WITH JOINTS IN THE WALK.

CONCRETE WALK OFF CURB (6)
N.T.S.

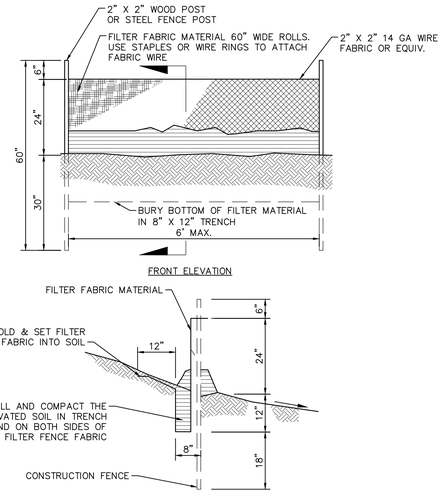

NOTES:

1. CONSTRUCT SILT FENCE ALONG A LEVEL CONTOUR.
2. WHEN STANDARD STRENGTH FILTER FABRIC IS USED A WIRE MESH SUPPORT FENCE SHALL BE FASTENED TO THE UPSLOPE SIDE OF THE POSTS USING HEAVY- DUTY WIRE STAPLES AR LEAST 1" LONG TIE WIRES OR HOG RINGS. THE WIRE SHALL EXTEND INTO THE TRENCH A MINIMUM OF 4".
3. STANDARD STRENGTH FILTER FABRIC SHALL BE STAPLED OR WIRED TO THE FENCE AND 40" OF THE FABRIC SHALL EXTEND INTO THE TRENCH. WHEN EXTRA-STRENGTH FILTER FABRIC AND CLOSER POST SPACING ARE USED THE WIRE MESH SUPPORT FENCE MAY BE ELIMINATED AND THE FILTER FABRIC STAPLED OR WIRED DIRECTLY TO THE POSTS.
4. FILTER FABRIC SHALL BE PURCHASED IN A CONTINUOUS ROLL THEN CUT TO THE LENGTH OF THE BARRIER. WHEN JOINTS ARE NECESSARY FILTER CLOTH SHALL BE SPICED TOGETHER ONLY TO A SUPPORT POST WITH A MINIMUM 6" OVERLAP AND BOTH AND SECURELY FASTENED TO THE POST.
5. THE TRENCH SHALL BE BACKFILLED WITH IMPACTED NATIVE MATERIAL.
6. IF 85% OR MORE OF A SOIL BY WEIGHT PASSES THROUGH THE OPENINGS IN A NO. 200 SIEVE (U.S. STANDARD) FILTER FABRIC SHALL NOT BE USED.
7. FILTER FABRIC MATERIAL SHALL CONTAIN ULTRAVIOLET RAY INHIBITORS AND STABILIZERS TO PROVIDE A MINIMUM OF 6 MONTHS OF EXPECTED USABLE CONSTRUCTION LIFE AT A TEMPERATURE RANGE OF 0 DEGREES FAHRENHEIT TO 120 DEGREES FAHRENHEIT.
8. SILT FENCES SHALL REMAIN IN PLACE UNTIL THE SLOPED AREA IS PERMANENTLY STABILIZED.
9. LEAVE AN UNDISTURBED OR STABILIZED AREA IMMEDIATELY DOWNSLOPE FROM THE FENCE.

CONSTRUCTION SILT FENCE (5)
N.T.S.

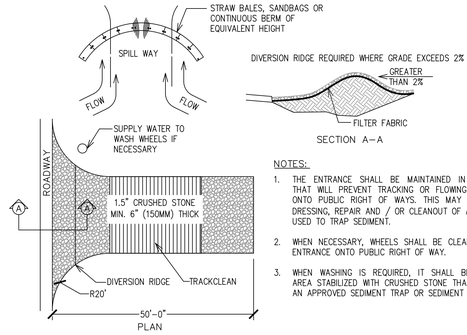

NOTES:

1. THE ENTRANCE SHALL BE MAINTAINED IN A CONDITION THAT WILL PREVENT TRACKING OR FLOWING OF SEDIMENT ONTO PUBLIC RIGHT OF WAYS. THIS MAY REQUIRED TOP DRESSING, REPAIR AND / OR CLEANOUT OF ANY MEASURES USED TO TRAP SEDIMENT.
2. WHEN NECESSARY, WHEELS SHALL BE CLEANED PRIOR TO ENTRANCE ONTO PUBLIC RIGHT OF WAY.
3. WHEN WASHING IS REQUIRED, IT SHALL BE DONE ONTO AREA STABILIZED WITH CRUSHED STONE THAT DRAINS INTO AN APPROVED SEDIMENT TRAP OR SEDIMENT BASIN.

STABILIZED CONSTRUCTION ENTRANCE (TC-1) (4)
N.T.S.

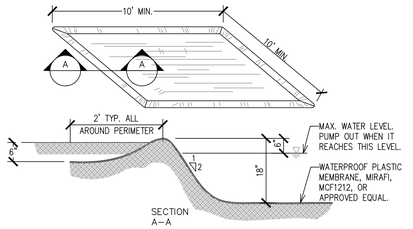

VEHICLE/EQUIPMENT WASHOUT PIT (WM-8) (3)
N.T.S.

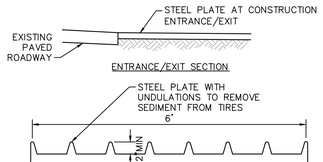

TIRE WASH RACK (2)
N.T.S.

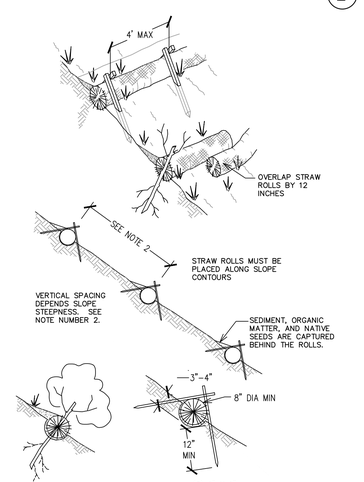

NOTES:

1. STRAW ROLL INSTALLATION REQUIRES THE PLACEMENT AND SECURE STAKING OF THE ROLL IN A TRENCH, 3" TO 4" DEEP, DUG ON CONTOUR. RUNOFF MUST NOT BE ALLOWED TO RUN UNDER OR AROUND ROLL.
2. VERTICAL SPACING FOR SLOPE INSTALLATIONS:
   SLOPE OF 2:1 OR GREATER = 10 FEET APART
   SLOPE BETWEEN 4:1 AND 2:1 = 15 FEET APART
   SLOPE OF 4:1 OR FLATTER = 20 FEET APART
3. INSPECT AND REPAIR STRAW ROLLS AFTER EACH STORM EVENT AND REMOVE SEDIMENT WHEN NECESSARY.
4. REMOVED SEDIMENT SHALL BE DEPOSITED TO AN AREA THAT WILL NOT CONTRIBUTE SEDIMENT OFF-SITE AND CAN BE PERMANENTLY STABILIZED.

STRAW WADDLE DETAIL (1)
N.T.S.

IDENTIFICATION STAMP
DIV. OF THE STATE ARCHITECT
APP: 03-124281 INC:
REVIEWED FOR
SS ☑ FLS ☑ ACS ☑
DATE: 02/04/2025

ARCHITECT:
architecture
westbergwhite
14471 Chambers Rd, Suite 210
Tustin, CA 92780
714.508.1780
714.508.1780 Fax

1775 Hancock St, Suite 120
San Diego, CA 92110
619.542.1188
619.542.1663 Fax

CONSULTANT:
Kimley»Horn

© 2018 KIMLEY-HORN AND ASSOCIATES, INC.
765 THE CITY DRIVE, SUITE 200, ORANGE, CA 92868
PHONE: 714-939-1030 FAX: 714-938-9488
WWW.KIMLEY-HORN.COM

REGISTERED PROFESSIONAL ENGINEER
AHMED ZUMWALA
RCE NO. 92050
CIVIL
STATE OF CALIFORNIA

PROJECT NAME:

Bellflower Unified School District
Mayfair High School Sports Fields
6000 North Woodruff Ave
Lakewood, California 90713

CLIENT:

BELLFLOWER UNIFIED SCHOOL DISTRICT
16703 S. Clark Ave.
BELLFLOWER, CALIFORNIA 90706

Δ	Rev. Date	Description

JOB NO: 15008.01
DATE: 11/13/2024
DRAWN: CC
CHECK: IV
ARCHITECT: PDW
ENGINEER: AZ

SHEET DESCRIPTION:
DETAILS

SHEET NO:
C700

K:\ORA_LDEV\094842008 - mayfair high school\CAD\plansheets\Field\C700 DETAILS.dwg Jan 13, 2025 - 4:04pm Isabella.Valbuena

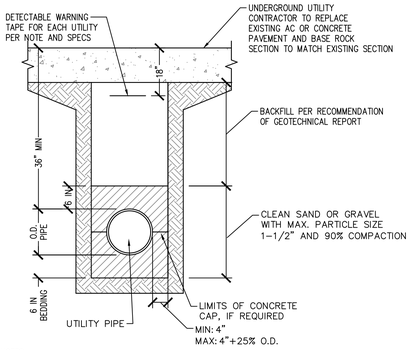

NOTES

BEDDING:	CLEAN COARSE SAND
FILL MATERIAL:	NATIVE MATERIAL – MAXIMUM SIZE NOT TO EXCEED 1 1/2"
COVER A:	30" MINIMUM, OR MINIMUM OF AGENCY HAVING JURISDICTION
NOTE 1:	FOR AREAS WITH LESS THAN 30" OF COVER, 2 SACK SLURRY BACKFILL TO BE USED

PIPE BEDDING AND TRENCHING (8)
N.T.S.

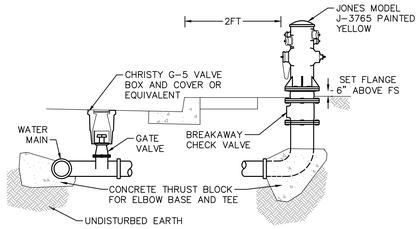

FIRE HYDRANT ASSEMBLY (6)
N.T.S.

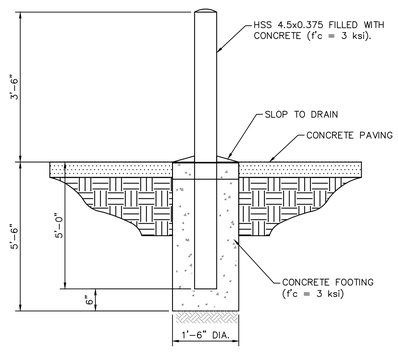

BOLLARD - CONCRETE PAVEMENT (3)
N.T.S.

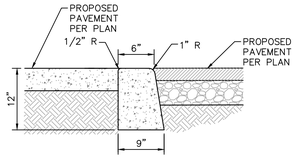

NOTES:

1. CONCRETE SHALL BE 2500 PSI.
2. ISOLATION JOINTS SHALL BE PLACED ONLY AS SPECIFIED
3. CONTRACTION JOINTS CONSISTING OF 1" DEEP SCORES SHALL BE PLACED AT 15' INTERVALS O.C.
4. WHERE A WALK IS ADJACENT TO THE CURB THE JOINTS SHALL ALIGN WITH JOINTS IN THE WALK.

0" CONCRETE CURB (11)
N.T.S.

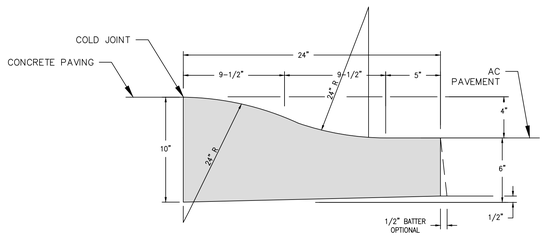

ROLLED CURB (10)
N.T.S.

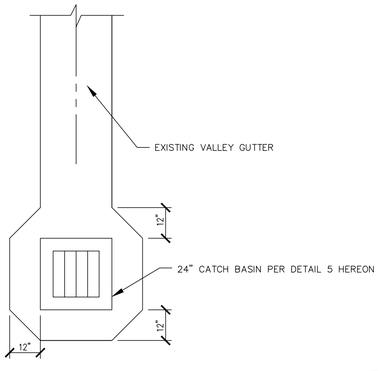

CATCH BASIN AT VALLEY GUTTER TERMINATION (9)
N.T.S.

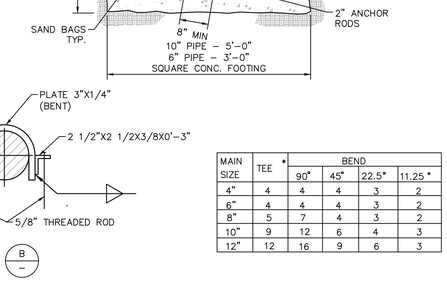

MAIN SIZE	TEE *	BEND			
		90°	45°	22.5°	11.25 °
4"	4	4	4	3	2
6"	4	4	4	3	2
8"	5	7	4	3	2
10"	9	12	6	4	3
12"	12	16	9	6	3

THRUST AND ANCHOR BLOCK DETAILS (7)
N.T.S.

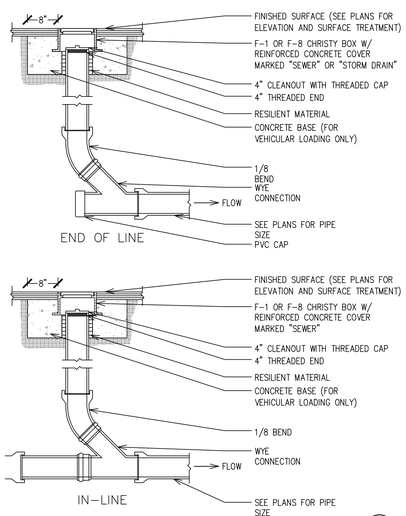

CLEANOUT (5)
N.T.S.

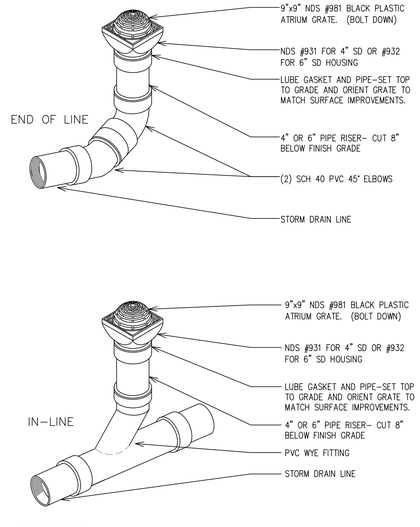

AREA DRAIN (4)
N.T.S.

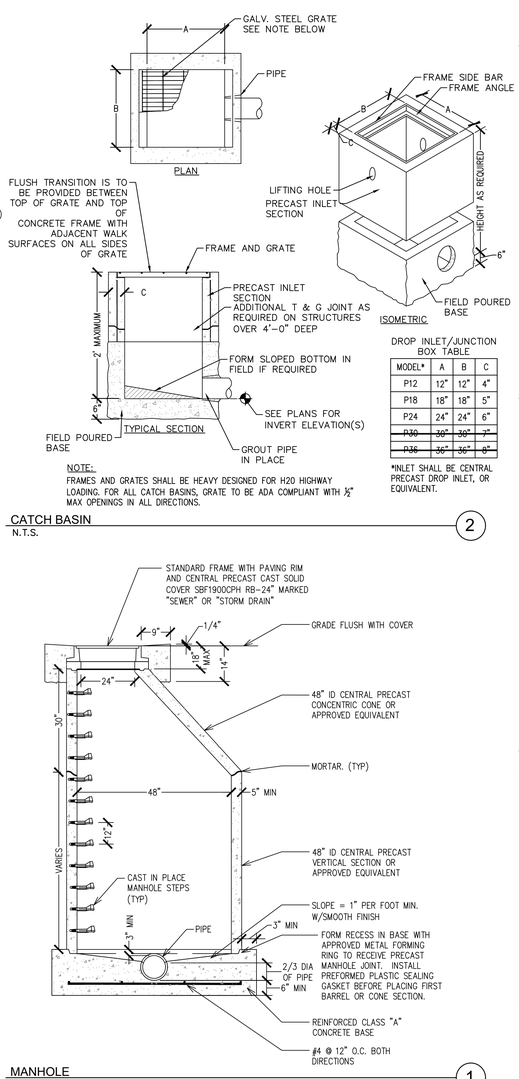

DROP INLET/JUNCTION BOX TABLE

MODEL*	A	B	C
P12	12"	12"	4"
P18	18"	18"	5"
P24	24"	24"	6"
P30	30"	30"	7"
P36	36"	36"	8"

*INLET SHALL BE CENTRAL PRECAST DROP INLET, OR EQUIVALENT.

NOTE:
FRAMES AND GRATES SHALL BE HEAVY DESIGNED FOR H20 HIGHWAY LOADING. FOR ALL CATCH BASINS, GRATE TO BE ADA COMPLIANT WITH ½" MAX OPENINGS IN ALL DIRECTIONS.

CATCH BASIN (2)
N.T.S.

MANHOLE (1)
N.T.S.

IDENTIFICATION STAMP
DIV. OF THE STATE ARCHITECT
APP: 03-124281 INC:
REVIEWED FOR
SS ☑ FLS ☑ ACS ☑
DATE: 02/04/2025

ARCHITECT:
architecture
westbergwhite
14471 Chambers Rd, Suite 210
Tustin, CA 92780
714.508.1780
714.508.1780 Fax

1775 Hancock St, Suite 120
San Diego, CA 92110
619.542.1188
619.542.1663 Fax

CONSULTANT:
Kimley»Horn
© 2018 KIMLEY-HORN AND ASSOCIATES, INC.
765 THE CITY DRIVE, SUITE 200, ORANGE, CA 92868
PHONE: 714-939-1030 FAX: 714-938-9488
WWW.KIMLEY-HORN.COM

REGISTERED PROFESSIONAL ENGINEER
AHMED ZUMAWA
No. RCE NO. 92050
CIVIL
STATE OF CALIFORNIA

PROJECT NAME:

Bellflower Unified School District
Mayfair High School Sports Fields
6000 North Woodruff Ave
Lakewood, California 90713

CLIENT:

BELLFLOWER UNIFIED SCHOOL DISTRICT
16703 S. Clark Ave.
BELLFLOWER, CALIFORNIA 90706

Δ	Rev. Date	Description

JOB NO:	15008.01
DATE:	11/13/2024
DRAWN:	CC
CHECK:	IV
ARCHITECT:	PDW
ENGINEER:	AZ

SHEET DESCRIPTION:
DETAILS

SHEET NO:
C701

ITEM	DESCRIPTION	MATERIAL	NOTE
1	60" DOUBLE MANIFOLD TEE	HDPE	SEE DETAIL
2	60" DOUBLE MANIFOLD TEE	HDPE	SEE DETAIL
3	60" X 90° MANIFOLD BEND	HDPE	SEE DETAIL
4	60" X 48" REDUCING TEE	HDPE	SEE DETAIL
5	60" X 18" REDUCING TEE	HDPE	SEE DETAIL
6	60" END CAP	HDPE	SEE DETAIL
7	60" PIPE STICK : PERF	HDPE	STIB
8	60" PIPE STICK : PERF	HDPE	FIELD CUT
9	60" PIPE STICK : PERF	HDPE	FIELD CUT
10	60" PIPE STICK : PERF	HDPE	FIELD CUT
11	60" PIPE STICK : PERF	HDPE	FIELD CUT
	60" SPLIT BAND COUPLER	HDPE	NOT SHOWN
	ADS GEOTEXTILE FABRIC	AS SPECIFIED	AS REQUIRED

NOTES
- THE CIVIL ENGINEER MUST REVIEW ELEVATIONS AND IF NECESSARY ADJUST GRADING TO ENSURE THE PIPE COVER REQUIREMENTS ARE MET.
- STUB SIZES AND INVERTS TO BE VERIFIED BY THE SITE DESIGN ENGINEER PRIOR TO FABRICATION.
- **SYSTEM VOLUME** - 100,900 ft³

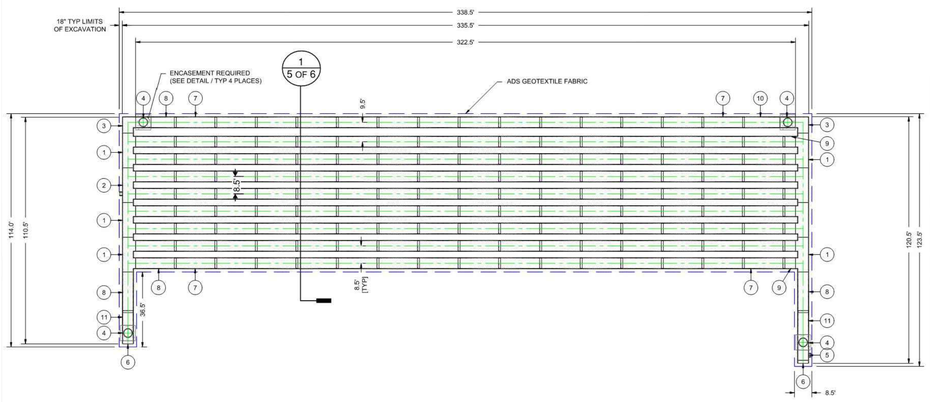

MAYFAIR HIGH SCHOOL SPORTS FIELDS
LAKEWOOD, CA
DATE: 10-01-20 | DRAWN: KR | CHECKED: AJD
PROJECT # 52035535
DESCRIPTION
60" STIB - PERF DETENTION
HDPE N-12
4640 TRUEMAN BLVD HILLIARD, OH 43026
SHEET 2 OF 6

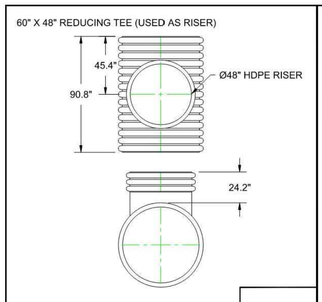

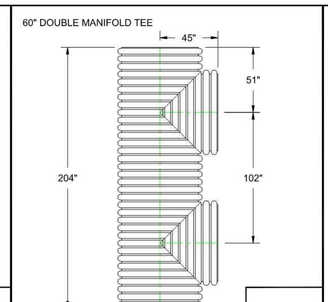

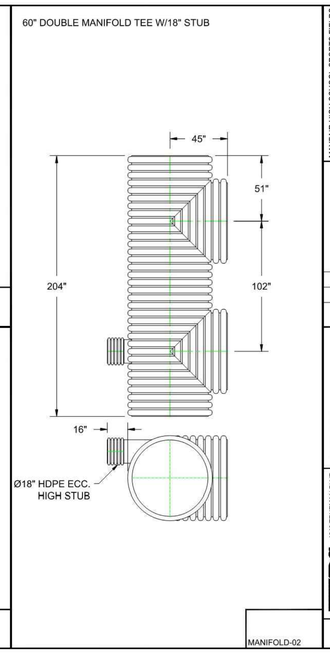

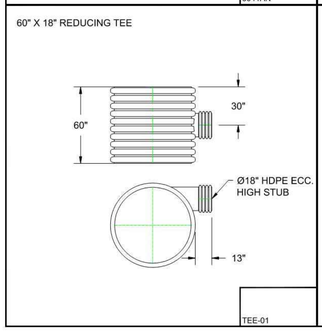

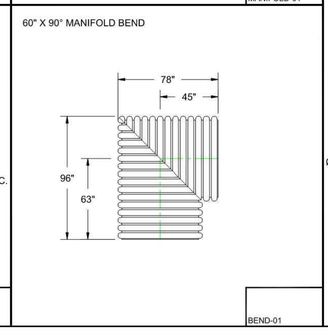

MAYFAIR HIGH SCHOOL SPORTS FIELDS
LAKEWOOD, CA
DATE: 10-01-20 | DRAWN: KR | CHECKED: AJD
PROJECT # 52035535
DESCRIPTION
60" STIB - PERF DETENTION
HDPE N-12
4640 TRUEMAN BLVD HILLIARD, OH 43026
SHEET 3 OF 6

NOTES
1. THE CIVIL ENGINEER SHALL PROVIDE INSPECTION DURING CONSTRUCTION.
2. DESIGN PROFESSIONAL IN RESPONSIBLE CHARGE SHOULD PROVIDE FINAL VERIFIED REPORT INCLUDING INSTALLATION OF THE STROMWATER RETENTION SYSTEM.

Nominal Diameter: 60
Product Type: 12 per ASTM F2648
Design Life Interval: 100 years
Analysis Location: Springline

Material Type: HDPE
Tensile Strength — *Short Term:* 3000 psi — *Long Term:* 700 psi
Modulus — *Short Term:* 110000 psi — *Long Term:* 20000 psi

Profile Properties:		
ID =	59.74	(in.)
OD =	66.59	(in.)
Hp =	3.43	(in.)
Ag =	0.535	(in²/inch)
c =	1.339	(in.)
Cx =	2.056	(in.)
Do =	62.42	(in.)
R =	31.21	(in.)
I =	0.788	(in⁴/inch)
rx =	6.1	(in.)
Pipe Stiffness (min value), PSI =	14.0	(psi)
Stub Compression Psi =	1242	(lb/in)
k =	4	
Cs =	0.55	
v =	0.45	

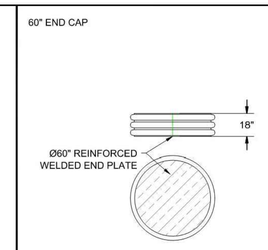

MAYFAIR HIGH SCHOOL SPORTS FIELDS
LAKEWOOD, CA
DATE: 10-01-20 | DRAWN: KR | CHECKED: AJD
PROJECT # 52035535
DESCRIPTION
60" STIB - PERF DETENTION
HDPE N-12
4640 TRUEMAN BLVD HILLIARD, OH 43026
SHEET 4 OF 6

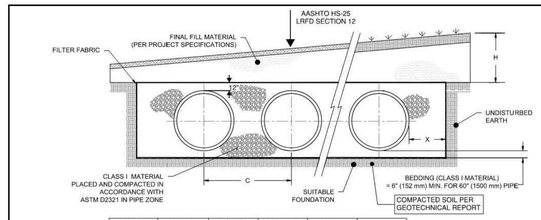

NOMINAL DIAMETER	NOMINAL O.D.	CUSTOM SPACING "C"	TYPICAL SIDE WALL "X"	MIN. 'H' (TRAFFIC)	MAX. H*
60" (1500 mm)	67" (1702 mm)	PER PLAN	18" (457 mm)	24" (610 mm)	8' (2.4 m)

* MAXIMUM FILL HEIGHTS OVER MANIFOLD FITTINGS. CONTACT MANUFACTURER'S REPRESENTATIVE FOR INSTALLATION CONSIDERATIONS WHEN COVER EXCEEDS 8 FT (2.4 m).
**60" (1500 mm) SYSTEMS REQUIRE CLASS I BACKFILL AROUND ALL LATERALS AND FITTINGS.

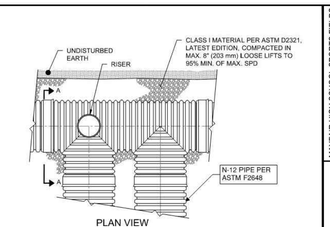

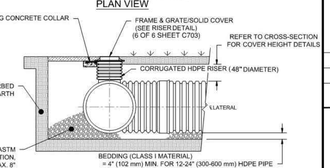

* LOAD BEARING CONCRETE COLLAR SHALL BE CONSTRUCTED IN TRAFFIC AREAS SUCH THAT THE LIVE LOAD IS TRANSMITTED TO THE SURROUNDING SOIL AND NOT DIRECTLY TO THE RISER.

NOTES:

1. ALL REFERENCES TO CLASS I MATERIAL ARE PER ASTM D2321 "STANDARD PRACTICE FOR UNDERGROUND INSTALLATION OF THERMOPLASTIC PIPE FOR SEWERS AND OTHER GRAVITY FLOW APPLICATIONS", LATEST EDITION.
2. ALL RETENTION AND DETENTION SYSTEMS SHALL BE INSTALLED IN ACCORDANCE WITH ASTM D2321, LATEST EDITION AND THE MANUFACTURER'S PUBLISHED INSTALLATION GUIDELINES.
3. MEASURES SHOULD BE TAKEN TO PREVENT THE MIGRATION OF NATIVE FINES INTO THE BACKFILL MATERIAL, WHEN REQUIRED. SEE ASTM D2321.
4. FILTER FABRIC: A GEOTEXTILE FABRIC MAY BE USED AS SPECIFIED BY THE CIVIL ENGINEER TO PREVENT THE MIGRATION OF FINES FROM THE NATIVE SOIL INTO THE SELECT BACKFILL MATERIAL.
5. FOUNDATION: WHERE THE TRENCH BOTTOM IS UNSTABLE. THE CONTRACTOR SHALL EXCAVATE TO A DEPTH REQUIRED BY THE GEOTECHNICAL ENGINEER AND REPLACE WITH SUITABLE MATERIAL AS SPECIFIED BY THE GEOTECHNICAL ENGINEER. AS AN ALTERNATIVE AND AT THE DISCRETION OF THE DESIGN, GEOTECHNICAL ENGINEERS AND APPROVED BY DSA REPRESENTATIVES, THE TRENCH BOTTOM MAY BE STABILIZED USING A GEOTEXTILE MATERIAL.
6. BEDDING: SUITABLE MATERIAL SHALL BE CLASS I. THE CONTRACTOR SHALL PROVIDE DOCUMENTATION FOR MATERIAL SPECIFICATION TO GEOTECHNICAL ENGINEER. UNLESS OTHERWISE NOTED BY THE GEOTECHNICAL ENGINEER, MINIMUM BEDDING THICKNESS SHALL BE 6" (152 mm) FOR 30-60" (750-900 mm).
7. INITIAL BACKFILL: SUITABLE MATERIAL SHALL BE CLASS I IN THE PIPE ZONE EXTENDING NOT LESS THAN 6" (152 mm) ABOVE CROWN OF PIPE. THE CONTRACTOR SHALL PROVIDE DOCUMENTATION FOR MATERIAL SPECIFICATION TO GEOTECHNICAL ENGINEER. MATERIAL SHALL BE INSTALLED AS REQUIRED IN ASTM D2321, LATEST EDITION.
8. COVER: ADDITIONAL COVER MAY BE REQUIRED TO PREVENT FLOATATION. FOR TRAFFIC APPLICATIONS, 24" (610 mm) OF COVER FOR 42-60" (1050-1500 mm) DIAMETER PIPE, MEASURED FROM TOP OF PIPE TO BOTTOM OF FLEXIBLE PAVEMENT OR TO TOP OF RIGID PAVEMENT. MAXIMUM FILL HEIGHT LIMITED TO 8 FT (2.4 m) OVER FITTINGS FOR STANDARD INSTALLATIONS.

Table 1
Profile Section Properties for N-12, N-12 STIB, and N-12 WTIB Pipe per ASTM F2648

Nominal ID	Inside Diameter, ID	Outside Diameter, OD	Pitch	Pipe Stiffness	Section Area, As	Distance from ID to Neutral Axis, c	Distance from Extreme Fiber to Neutral Axis, cx	Moment of Inertia, I
in (mm)	in (mm)	in (mm)	in (mm)	psi (kpa)	in^2/in (mm^2/mm)	in (mm)	in (mm)	in^4/in (mm^4/mm)
60 (1500)	59.7 (1516)	66.6 (1692)	6.1 (153.9)	14 (96)	0.535 (13.59)	1.339 (34.0)	2.056 (52.2)	0.7876 (12906)

**Section properties provided are common for ADS pipe production but may not be representative of specific profiles manufactured in a given locality. While profile data provided results in conservative burial depths, contact ADS Application Engineering for specific design values and/or tolerances for a given application.*

MAYFAIR HIGH SCHOOL SPORTS FIELDS
LAKEWOOD, CA
DATE: 10-01-20 | DRAWN: KR | CHECKED: AJD
PROJECT # 52035535
DESCRIPTION
60" STIB - PERF DETENTION
HDPE N-12
4640 TRUEMAN BLVD HILLIARD, OH 43026
SHEET 5 OF 6

IDENTIFICATION STAMP
DIV. OF THE STATE ARCHITECT
APP: 03-124281 INC:
REVIEWED FOR
SS ☑ FLS ☑ ACS ☑
DATE: 02/04/2025

ARCHITECT:
architecture westbergwhite
14471 Chambers Rd, Suite 210
Tustin, CA 92780
714.508.1780
714.508.1780 Fax

1775 Hancock St, Suite 120
San Diego, CA 92110
619.542.1188
619.542.1663 Fax

CONSULTANT:
Kimley»Horn

© 2018 KIMLEY-HORN AND ASSOCIATES, INC.
765 THE CITY DRIVE, SUITE 200, ORANGE, CA 92868
PHONE: 714-939-1030 FAX: 714-938-9488
WWW.KIMLEY-HORN.COM

REGISTERED PROFESSIONAL ENGINEER
AHMED ZUMAWA
No. RCE NO. 82050
CIVIL
STATE OF CALIFORNIA

PROJECT NAME:

Bellflower Unified School District
Mayfair High School Sports Fields
6000 North Woodruff Ave
Lakewood, California 90713

CLIENT:

BELLFLOWER UNIFIED SCHOOL DISTRICT
16703 S. Clark Ave.
BELLFLOWER, CALIFORNIA 90706

#	Rev. Date	Description

JOB NO: 15008.01
DATE: 11/13/2024
DRAWN: CC
CHECK: IV
ARCHITECT: PDW
ENGINEER: AZ

SHEET DESCRIPTION:
UNDERGROUND DETENTION SYSTEM DETAILS

SHEET NO:
C702

K:\ORA_LDEV\094842008 – mayfair high school\CAD\plansheets\Field\C700 DETAILS.dwg Jan 13, 2025 – 4:04pm Isabella.Valbuena

IDENTIFICATION STAMP
DIV. OF THE STATE ARCHITECT
APP: 03-124281 INC:
REVIEWED FOR
SS ☑ FLS ☑ ACS ☑
DATE: 02/04/2025

C:\Users\thomas.lisik\Keller\OPO036780 - Mayfair High School Sports Field - Documents\E Engineering\KNA Shop Drawing\16121215 Mayfair High School Sports Field Rev0.dwg
1/31/2025 9:05:36 AM Created By: First Initial Last Name

MAYFAIR HIGH SCHOOL SPORTS FIELD
DEEP SOIL MIXING (DSM)

Underground Service Alert of Southern California
Call: TOLL FREE 800-422-4133
TWO WORKING DAYS BEFORE YOU DIG
RE-NOTIFY EVERY TWO WEEKS
TICKET # _____
DATE CALLED: _____

GROUND IMPROVEMENT GENERAL NOTES:

1. The Ground improvement Design Engineer is the registered Professional Engineer whose stamp resides on these drawings.
2. OTHERS are to provide a dry, stable, and relative level working platform. It is Keller North America's (KNA) understanding that the working grade will be approximately elevation +52 feet. The working surface shall be constructed and managed by others such that KNA's equipment can safely track and efficiently work under its own weight without the need for steel plates or crane mats.
3. The GENERAL CONTRACTOR shall confirm that the proposed operation does not conflict with future improvement such as structural, mechanical, plumbing, and electrical prior to DSM installation.
4. An underground service alert must be obtained 3 days before starting work.
5. All permits shall be procured and paid for by the OWNER, other than transportation permits required for KNA's mobilization and demobilization.
6. All encroachment permits within the public right of way and letters of permission from private owners must be obtained by the OWNER.
7. KNA will provide a qualified full-time quality control (QC) representative. This representative is either KNA's Superintendent/Foreman/or Field Engineer. Third party testing and/or inspection shall be provided by OTHERS.
8. Locating, protecting and rerouting/removal of all utilities are the responsibility of OTHERS. KNA is not responsible for damage to existing utilities.
9. KNA's scope of work consists of construction of ground improvement by Deep Soil Mixing (DSM).
10. DSM column locations shown on the drawings are for ground improvement layout only. The drawings shall not be used for foundation layout or construction.
11. Alternative structural shapes, materials and details shall not be used unless approved by the ground improvement engineer of record.
12. A surveyor shall stake and identify the site control points for proper DSM Column installation before installation begins. KNA retains the sole authority to modify DSM Column locations due to contractibility or site constraints provided the performance criteria is met.
13. DSM Column shall be installed to design depth or auger refusal.
14. After the completion of Ground Improvement work, OTHERS are responsible for the protection of DSM columns. Proper site drainage to prevent ponding of water at the area of the soil-mixed columns and control coordination of earthwork activities shall be managed such that existing soil-mixed columns are not damaged.
15. All post-improvement testing including frequency and criteria for soil-mixed columns are noted on the plans and design submittal.
16. Foundations shall not be poured until approved by the project Geotechnical Engineer of Record.

GROUND IMPROVEMENT DESIGN CRITERIA:

1. Ground Improvement design is based on the following documents:

- "Geotechnical Investigation" dated June 30, 2024, prepared by John R. Byerly
- "Update of Geotechnical Investigation Reports and Geologic Hazard Reports" dated August 26, 2024, prepared by John R. Byerly
- "Response to Engineering Geology and Seismology Review" dated November 14, 2024, prepared by John R. Byerly
- "Second Engineering Geology and Seismology Review for Mayfair High School - Sports Field Modernization" dated November 25. 2024, prepared by California Geological Survey
- Foundation plans, sheets S101, S104, S201, S204, S206, dated May 24, 2024, prepared by RTM Engineering Consultants
- Foundation plans, sheets B3, B22 dated May 10, 2024, prepared by Southern Bleacher Company

2. The engineering analysis design of the DSM is presented in a report by Keller.

DSM VERIFICATION NOTES:

1. The acceptance of the work shall be based on demonstrating that the in-place mixing of grout with the treatment soils has achieved the average design strength requirements. Soilcrete strengths shall be determined statistically by wet (grab) sample and core samples. Confirmation sample collection will be conducted by KNA. Samples shall be collected by KNA using wet sampling and continuous core sampling techniques described below. Test shall be performed at the frequencies described below.
2. Wet soil mix samples will be retrieved at various depths and cast into molds for one column per rig/shift. Samples will be retrieved using an in-situ wet sampler immediately after column construction and shall consist of no fewer than 8 specimens. Soil clods greater than 10% of the mold diameter will be screened off. Appropriate curing techniques shall be implemented until testing based on ASTM D1632.
3. Unconfined compression testing shall be performed on wet grab and core samples by an approved laboratory in pairs of specimens at 7 days, 14 days and 28 days. Additional testing may me performed at Keller's discretion at 3 days, 56 days or other time intervals. The unconfined compressive strength (UCS) shall be determined by ASTM D1633 "Standard Test Methods for Compressive Strength of Molded Soil-Cement Cylinders". Sulfur or gypsum end caps shall be required in the UCS tests to minimize the end effects on the test specimen.
4. Wet grab samples will be kept on-site (approximately 3 days) for an intial set before being shipped to the lab.
5. KNA will core 2% of the total DSM elements.
6. All core locations shall be randomly selected and the selection of locations for confirmation coring and selection of core samples for UCS testing are subject to review and approval of the Geotechnical Engineer of Record and/or QC Inspector.
7. At minimum five (5) samples from each core will be extracted. KNA anticipates 5 specimens trimmed from each core hole and tested for UCS by ASTM D1633.
8. The average 28-day UCS value shall be 150 psi or greater. KNA will calculate the average 28-day UCS value based on the core samples and wet grab samples. UCS strengths exceeding 400% of the target 28-day UCS (in this case, 4 x 150 psi = 600 psi) will be excluded when calculating the average test UCS results.
9. No more than 10 percent of all specimens tested shall exhibit an unconfined compressive strength of less than 75 psi at 28 day of age.
10. If the acceptance criteria is not achieved in a designated area, KNA may be given the opportunity to conduct additional UCS test on soilcrete specimens, site exploration, coring, sampling and downhole imaging to better define the average design strength at KNA's preference and expense.
11. The KNA Ground Improvement Design Engineer may conduct an engineering evalutaion to determine if the as-built condition satisfies the project design criteria. If the design criteria are not met in the as-built condition, the design engineer of record shall prepare a mitigation plan for approval by the geotechnical engineer of record that cloud include remixing columns, constructing additional columns, or other measures.
12. Uniformity of mixing shall be evaluated by the Ground Improvement Design Engineer and QC Inspector based on the continuous core samples recovered. The continuous core holes shall extend the entire depth of the DSM column. For each 5ft core run, at least 85 percent shall comprise of soilcrete (e.g., the volumetric sum of unmixed clumps and zones of no recovery shall not be more than 15 percent). For the entire length of a core hole location at least 85 percent shall be comprised of soilcrete. If the core recovery below the anticipated value due to the gravel particles in the soilcrete matrix, KNA shall be allowed to utilize a downhole camera or other approved methods to verify the core hole. This may include additional cores in the same column.
13. At the end of the project, to not unnecessary delay subsequent activities by waiting for 28 days test result, a correction of early strength gain will be used to approve the soil-mixed column work. However, this correlation will not relieve the contractor of the responsibility to achieve average 28 days strength. Based on FHWA (2013) guidelines, the following UCS aging factor correlations will be applied to this job:
    a. 28: 3 day, 1.72
    b. 28: 7 day, 1.35
    c. 28: 14 day, 1.15
13. A site-specific correlation between 3 days, 7 days and 28 days strength may be used to supersede this correlation if in the opinion of the Engineer, the site-specific correlation is more appropriate.

DSM CONSTRUCTION:

1. OTHERS will provide to KNA, at least five (5) control points. KNA will provide an AutoCAD Shop Drawing for all DSM columns overlaid on the site Civil drawing and stake all DSM locations.
2. DSM columns will be installed within 6 inches of the design locations as shown in the KNA shop drawing. Construction tolerances:
    a. Plan location ±6 inches
    b. Verticality ±1.5% of plumb
3. Once a stable working platform has been established. DSM columns will be constructed sequentially based on a pattern dictated in the Field. KNA requires access to all DSM locations at all times to maximize efficiency.
4. In general, soil mixing operation parameters, such as mixing shaft speed, penetration rate, batching grout specific gravity, and pumping rate will be determined based on prior experience. These parameters may be fine-tuned during production. The design cement content in place (cement weight/ [soil volume + grout volume]) will start from the predetermined cement content and grout slurry specific gravity (SG). Keller engineers may adjust the cement content and grout SG based on the field sample strength development.
5. Vertical alignment of the mix tool stroke will be controlled by the drill rig operator. Two measurements of verticality will be monitored. These are the fore-aft and left-right vertical mast positions. Verticality will be measured by a level as measured on the mixing tool prior to penetration. Intermittent measurements will be made as may be necessary during mixing operations.
6. The mixing shaft speed which is anticipated to be ranging between 20-100 RPM and shall be adjusted to accommodate a constant rate of mixing shaft penetration based on the degree of drilling difficulty. The mixing shaft speed can be adjusted according to drilling difficulty. The mixing shaft speed can be adjusted to aid mixing of the soil column when needed or to assist penetration in hard drilling. Mixing shaft speed will be recorded.
7. In order to ensure adequate mixing, the penetration rate of the mixing shaft shall be maintained at about 1.0 to 6.0 feet/minute during penetration but will vary based on actual site conditions. The penetration rate and maximum depth of each stroke shall be recorded by KNA's data acquisition system (DAQ).
8. The grout slurry flow per vertical foot of the column will be adjusted to the requirements of the design mix. Progressive cavity pumps will be used to transfer the grout from the mixing plant to the mixing rig. Flow monitoring devices will be installed in the grout line to detect any line blockage and monitor flow, total injected grout per column and grout pressure. These parameters will be recorded.
9. Inevitably some variations of the grout take will occasionally occur due to field conditions. It is anticipated that a grout flow rate between 20 to 160 GPM will be used during penetration. KNA's Data Acquisition System (DAQ) can automatically adjust the grout flow rate as a function of the penetration rate and maintain the pre-set cement dosage prescribed by the design engineer.
10. The mixing shaft will be withdrawn at a rate of 6 to 12 feet per minute during the removal of the mixing shaft from the ground thus mixed.
11. KNA will use a data acquisition system to monitor the mixing shaft penetration and the shaft rotation resistance in terms of the hydraulic pressure. The DAQ system will calculate and plot the Drilling Index as a function of depth, a mixing parameter to detect penetration resistance and refusal depth. KNA will set up the penetration criteria based on the site measurement. In case of underground obstruction, such as abandoned footings, piles, utilities, etc., the general contractor will be responsible to remove obstructions and backfilled with sandy soil prior KNA mixing operation.
12. Cement will be furnished by KNA and conform to ASTM C150 "Standard Specification for Portland Cement," Type II/V or equivalent. The cement will be adequately protected from moisture and contamination while in transit to and in storage at the job site. Reclaimed cement or cement containing lumps or deleterious matter will not be used.
13. Water for the slurry will be fresh, free of deleterious substances that adversely affect the strength and mixing properties of the slurry, furnished by the OTHERS.
14. The batch plant shall consist of in-line eductor (jet valve) mixers. Dry materials shall be stored in tankers and/or silos and fed to the mixers for shearing and circulation. The resulting grout slurry will be transferred to a surge tank for continuous agitation and to supply the in-situ soil mixing rig. Grout slurry quality will be assured by frequent testing prior to injection into the soil.
15. Single or multi shaft mixing equipment that mechanically mixes the soil and cement slurry for the full dimensions of the column will be used for the work. We anticipate using hydraulic drill rigs for the soil mixing operations. This rig is capable of up to > 150,000 ft-lbs. of torque at > 20 rpm. The working shaft rate of rotation ranges between 20 and 100 rpm. The mixing shaft will have mixing augers and/or blades (paddles) configured in such a manner so that they are capable of thoroughly blending the in-situ soils and cement slurry. The power source for driving the mixing shafts will be sufficient to maintain the required mix tool (shaft) rotation speed in revolutions per minute and penetration/ withdrawal rates from the ground surface to the maximum depth required. The design target Blade Rotation Number (BRN, defined as the number of blades cut in each 1.0-meter soil) will be at least 450, averaged over a 3-foot interval.
16. The DSM equipment will be equipped with devices to assure vertical alignment in two planes (90 degrees in plan from each other): fore-aft and left-right. The DSM equipment will be equipped with a real-time display of depth, rotation speed, grout flow rate; grout specific gravity, cumulative grout injected, and grout pressure for each soil mix column.
17. Grout slurry will be supplied to the drill using large size Moyno pumps. These pumps will be sized and powered so that design volumes and pressures can be maintained up to 1,000 ft away from the batching facility.
18. The batching and pumping facility will be set up at a central location to all soil mixing areas. This will eliminate the need to move the plant once it is established.

DSM POST CONSTRUCTION:

1. After completion of the recommended and accepted final ground improvement program, Keller will prepare an as-built plan, coring and testing results, and DAQ reports. The report will include a statement indicating the work was performed in accordance with the design drawings and will be stamped and signed by the Ground Improvement Design Engineer.
2. After completion of the recommended and accepted final ground improvement program, Keller will prepare a comprehensive final report for CGS review. The report should document their observations, testing, and analysis, including the data collected to satisfy the specified acceptance criteria. The report should include (at minimum):
    a. All DSM installation logs/records, field testing records, as-built plan and record of installed DSM elements, and daily field reports from both Keller and consultants' field representative(s).
    b. All equipment calibration reports, QA/QC data and records of DSM installation data.
    c. All DSM coring logs, any downhole televiewer logs, and labratory test results, including summary and calculations of the UCS values of the DSM materials.
    d. Any other pertinent data gathered and/or observations made during the performance of the ground improvement program that are considered in assessing the satisfaction of the design objectives.
    e. Discussion and conclusion(s) regarding satisfaction of the DSM design and performance requirements for the project.

Table 1: Design inputs and performance criteria

Property	Criteria	Reference
Assumed Working Grade	EL. +52 feet	Google Earth
Max Allowable Bearing Pressure (Unfactored DL + LL)	2000 psf[a]	RTM Engineering Consultants Taylor & Syfan, Inc.
Total Allowable Static Settlement	≤ 1 inches	John R. Byerly, Inc.
Allowable Differential Static Settlement	≤ 0.5 inch over 20 feet	
Total Allowable Liquefaction-Induced Settlement	≤ 1 inches	
Allowable Differential Liquefaction-Induced Settlement	≤ 0.5 inch over 20 feet	

Notes:
(a) The allowable bearing pressure shown in the table is for dead + live loads; this value may be increased by 1/3 for transient loads such as wind and/or seismic loading.

TYPICAL DEEP SOIL MIX COLUMN DETAILS

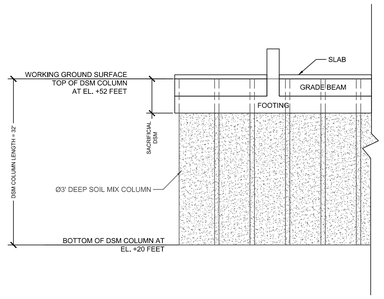

TYPICAL DEEP SOIL MIX COLUMN DETAIL
(NOT TO SCALE)

TYPICAL UTILITY TRENCH THROUGH DSM COLUMN
(NOT TO SCALE)

DRAWING SHEET INDEX

SHEET NAME	SHEET NUMBER
TITLE SHEET - GENERAL NOTES & DETAILS	KNA-1
SITE & EXPLORATION PLAN	KNA-2
OVERALL DEEP SOIL MIXING LAYOUT PLAN	KNA-3
DEEP SOIL MIXING LAYOUT PLAN AREA 1 & 2	KNA-4
DEEP SOIL MIXING LAYOUT PLAN AREA 3	KNA-5
DEEP SOIL MIXING LAYOUT PLAN AREA 4	KNA-6
DEEP SOIL MIXING LAYOUT PLAN AREA 5, 6 & 7	KNA-7

IMAGE COURTESY OF GOOGLE MAPS:

KELLER
17461 DERIAN AVENUE
SUITE 106
IRVINE, CA 92614
909-393-9300
www.Keller-na.com

Engineer of Record:
Sunil Arora

REGISTERED PROFESSIONAL ENGINEER SUNIL ARORA C72352 EXP. 09/30/26 CIVIL CALIFORNIA

California

THIS ITEM HAS BEEN ELECTRONICALLY SIGNED AND SEALED USING A DIGITAL SIGNATURE.

PRINTED COPIES OF THIS DOCUMENT ARE NOT CONSIDERED SIGNED AND SEALED AND THE SIGNATURE MUST BE VERIFIED ON ANY ELECTRONIC COPIES.

Use of Proposals and Designs

Designs, sketches, specifications, and/or proposals ("Designs") prepared by Keller North America ("KNA") and/or it's employees have been prepared for exclusive use by KNA and based upon, and in anticipation of, KNA being employed to perform the work. KNA makes no warranties or guarantees as to the suitability of the Design for use by others. The Designs are subject to protection under the Copyright Act of 1976 and Architectural Works Copyright Protection Act of 1990. Use, control, reproduction, publication, or dissemination of such Designs without the prior written consent of an authorized representative of KNA is strictly prohibited. KNA is, and shall continue to be, the sole owner of the Designs.

TITLE SHEET - GENERAL NOTES & DETAILS
MAYFAIR HIGH SCHOOL SPORTS FIELD
6000 N WOODRUFF AVE LAKEWOOD, CA 90713

No.	Description	Date
0	FOR SUBMITTAL	01/10/2025

Design by: TL	Approved by: SA
Drawn by: SPB	Checked by: SA

Project Number: 16121215
Date: 01/10/2025

Sheet No.
KNA-1

1" 0" 2" 1"

IDENTIFICATION STAMP
DIV. OF THE STATE ARCHITECT
APP: 03-124281 INC:
REVIEWED FOR
SS ☑ FLS ☑ ACS ☑
DATE: 02/04/2025

C:\Users\SPBarker\OneDrive - Keller\16121215 - Mayfair High School Sports Field\E Engineering\KNA Shop Drawing\16121215 Mayfair High School Sports Field Rev 0.dwg
1/10/2025 2:10:29 PM Created By:First Initial Last Name

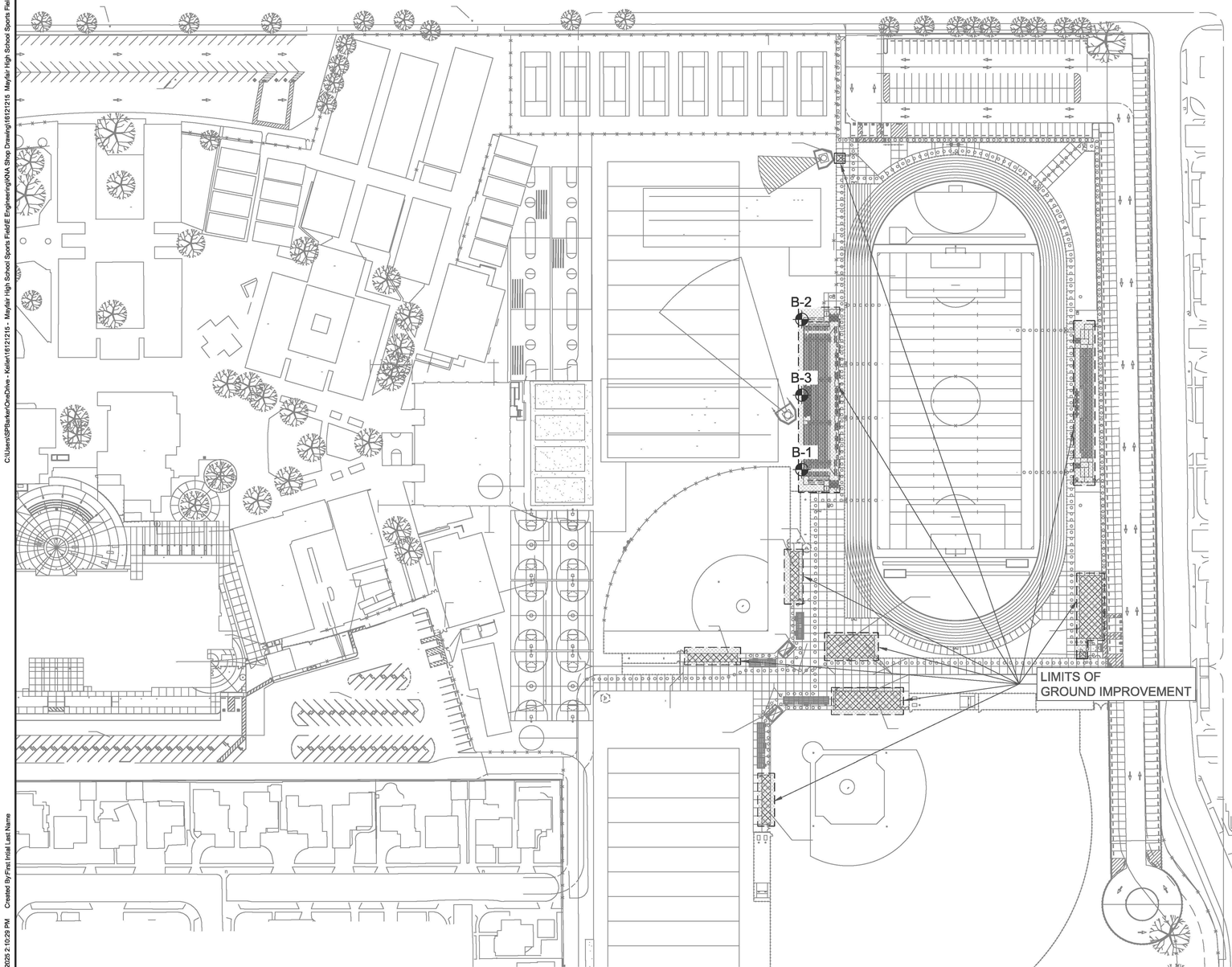

Data from:
John R. Byerly - Geotechnical Investigation
Mayfair High School
"Enclosure 1" - Report No. 8363 File No. S-13836
Dated June 30th, 2024.

Note:
Utilities within the ground improvement area are to be removed prior to Deep Soil Mixing installation.

LEGEND:

B-# Boring
-Performed by Byrely (May 2024)

0" 60'-0" 120'-0"
SCALE IN FEET

1" 1/2" 0"

KELLER
17461 DERIAN AVENUE
SUITE 106
IRVINE, CA 92614
909-393-9300
www.Keller-na.com

Engineer of Record:
Sunil Arora

REGISTERED PROFESSIONAL ENGINEER
SUNIL ARORA
C72352
EXP. 09/30/26
CIVIL
STATE OF CALIFORNIA

California

THIS ITEM HAS BEEN ELECTRONICALLY SIGNED AND SEALED USING A DIGITAL SIGNATURE.

PRINTED COPIES OF THIS DOCUMENT ARE NOT CONSIDERED SIGNED AND SEALED AND THE SIGNATURE MUST BE VERIFIED ON ANY ELECTRONIC COPIES.

Use of Proposals and Designs

Designs, sketches, specifications, and/or proposals ("Designs") prepared by Keller North America ("KNA") and/or it's employees have been prepared for exclusive use by KNA and based upon, and in anticipation of, KNA performing the work called for in such Designs. KNA makes no warranties or guarantees as to the suitability of the Designs for any purpose. Designs are subject to protection under the Copyright Act of 1976 and Architectural Works Copyright Protection Act of 1990. Use, control, reproduction, publication, or dissemination of such Designs without the prior written consent of an authorized representative of KNA is strictly prohibited. KNA is, and shall continue to be, the sole owner of the Designs.

SITE & EXPLORATION PLAN
MAYFAIR HIGH SCHOOL SPORTS FIELD
6000 N WOODRUFF AVE LAKEWOOD, CA 90713

No.	Description	Date
0	FOR SUBMITTAL	01/10/2025

Design by: TL	Approved by: SA
Drawn by: SPB	Checked by: SA

Project Number: 16121215
Date: 01/10/2025

Sheet No.
KNA-2

IDENTIFICATION STAMP
DIV. OF THE STATE ARCHITECT
APP: 03-124281 INC:
REVIEWED FOR
SS ☑ FLS ☑ ACS ☑
DATE: 02/04/2025

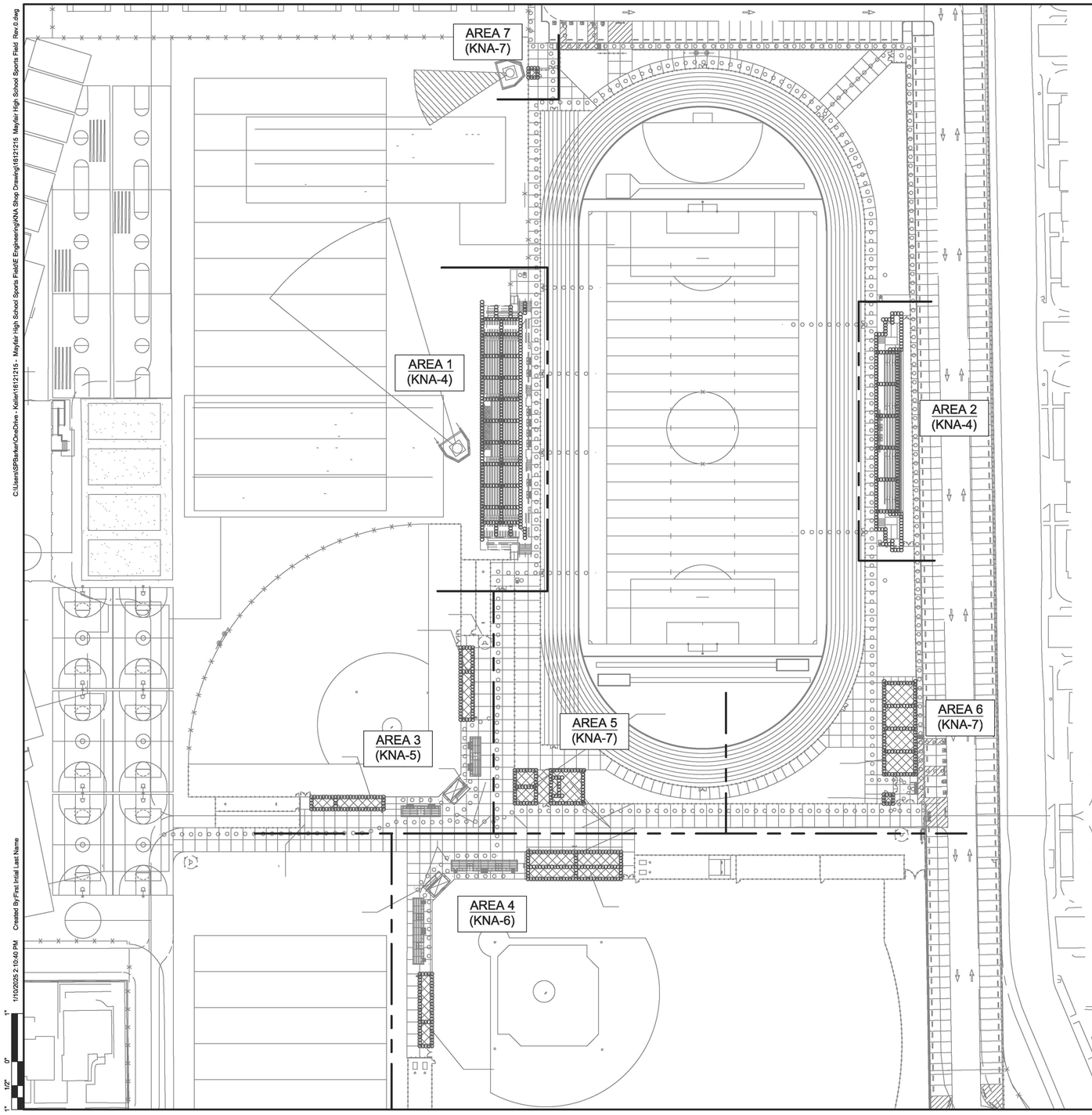

LEGEND:

◯ Ø3' DEEP SOIL MIX COLUMN, TO DEPTH OF 32' FROM WORKING GRADE ELEVATION OF +52-FEET.

0" 40'-0" 80'-0"
SCALE IN FEET

KELLER
17461 DERIAN AVENUE
SUITE 106
IRVINE, CA 92614
909-393-9300
www.Keller-na.com

Engineer of Record:
Sunil Arora

REGISTERED PROFESSIONAL ENGINEER
SUNIL ARORA
C72352
EXP. 09/30/26
CIVIL
STATE OF CALIFORNIA

California

THIS ITEM HAS BEEN ELECTRONICALLY SIGNED AND SEALED USING A DIGITAL SIGNATURE.

PRINTED COPIES OF THIS DOCUMENT ARE NOT CONSIDERED SIGNED AND SEALED AND THE SIGNATURE MUST BE VERIFIED ON ANY ELECTRONIC COPIES.

Use of Proposals and Designs

Designs, sketches, specifications, and/or proposals ("Designs") prepared by Keller North America ("KNA") and/or it's employees have been prepared for exclusive use by KNA and based upon, and in anticipation of, KNA performing the work called for in such Designs. KNA makes no warranties or guarantees as to the suitability of the Designs for any purpose. Designs are subject to protection under the Copyright Act of 1976 and Architectural Works Copyright Protection Act of 1990. Use, control, reproduction, publication, or dissemination of such Designs without the prior written consent of an authorized representative of KNA is strictly prohibited. KNA is, and shall continue to be, the sole owner of the Designs.

OVERALL DEEP SOIL MIXING LAYOUT PLAN
MAYFAIR HIGH SCHOOL SPORTS FIELD
6000 N WOODRUFF AVE LAKEWOOD, CA 90713

No.	Description	Date
0	FOR SUBMITTAL	01/10/2025

Design by: TL	Approved by: SA
Drawn by: SPB	Checked by: SA
Project Number: 16121215	Date: 01/10/2025

Sheet No.
KNA-3

C:\Users\SPBarker\OneDrive - Keller\16121215 - Mayfair High School Sports Field\E Engineering\KNA Shop Drawing\16121215 Mayfair High School Sports Field Rev 0.dwg
1/10/2025 2:10:40 PM Created By:First Initial Last Name

IDENTIFICATION STAMP
DIV. OF THE STATE ARCHITECT
APP: 03-124281 INC:
REVIEWED FOR
SS ☑ FLS ☑ ACS ☑
DATE: 02/04/2025

C:\Users\thomas.lisik\Keller\OPO036780 - Mayfair High School Sports Field - Documents\E Engineering\KNA Shop Drawing\16121215 Mayfair High School Sports Field Rev.0.dwg
1/31/2025 9:05:39 AM Created By:First Initial Last Name

AREA 1

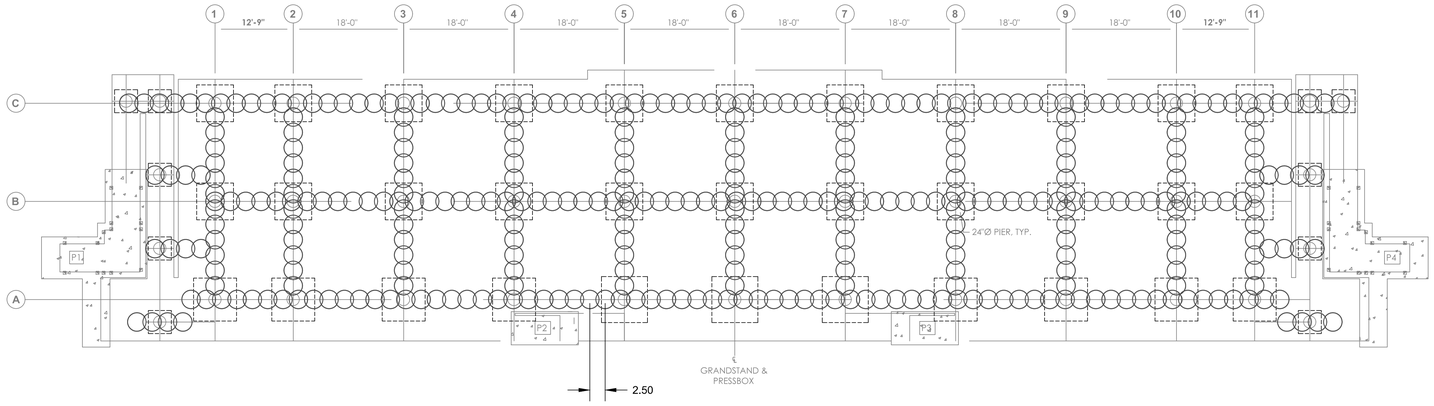

AREA 2

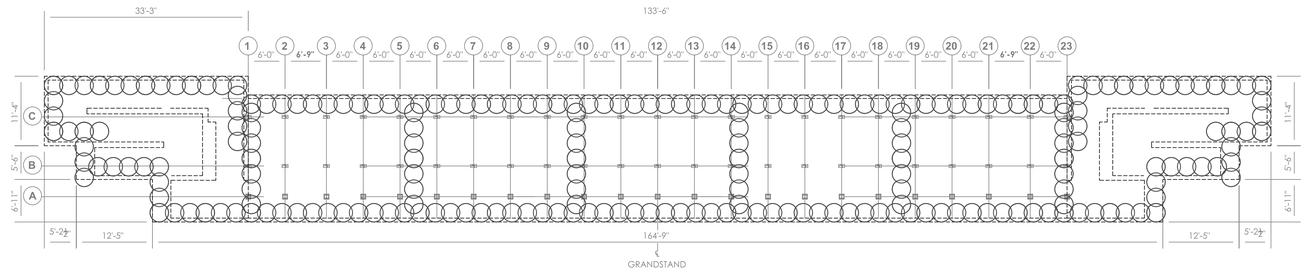

LEGEND:

○ Ø3' DEEP SOIL MIX COLUMN, TO DEPTH OF 32'
FROM WORKING GRADE ELEVATION OF +52-FEET.

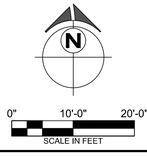

KELLER
17461 DERIAN AVENUE
SUITE 106
IRVINE, CA 92614
909-393-9300
www.Keller-na.com

Engineer of Record:
Sunil Arora

REGISTERED PROFESSIONAL ENGINEER
SUNIL ARORA
C72352
EXP. 04/30/26
CIVIL
STATE OF CALIFORNIA

California

THIS ITEM HAS BEEN ELECTRONICALLY SIGNED AND SEALED USING A DIGITAL SIGNATURE.

PRINTED COPIES OF THIS DOCUMENT ARE NOT CONSIDERED SIGNED AND SEALED AND THE SIGNATURE MUST BE VERIFIED ON ANY ELECTRONIC COPIES.

Use of Proposals and Designs

Designs, sketches, specifications, and/or proposals ("Designs") prepared by Keller North America ("KNA") and/or it's employees have been prepared for exclusive use by KNA and based upon, and in anticipation of, KNA being awarded the contract for the Designs. KNA makes no warranties or guarantees as to the suitability of the Design for use by others. The Designs are subject to protection under the Copyright Act of 1976 and Architectural Works Copyright Protection Act of 1990. Use, control, reproduction, publication, or dissemination of such Designs without the prior written consent of an authorized representative of KNA is strictly prohibited. KNA is, and shall continue to be, the sole owner of the Designs.

DEEP SOIL MIXING LAYOUT PLAN
AREA 1 & 2
MAYFAIR HIGH SCHOOL SPORTS FIELD
6000 N WOODRUFF AVE LAKEWOOD, CA 90713

No.	Description	Date
0	FOR SUBMITTAL	01/10/2025

Design by: TL	Approved by: SA
Drawn by: SPB	Checked by: SA

Project Number: 16121215
Date: 01/10/2025

Sheet No.
KNA-4

IDENTIFICATION STAMP
DIV. OF THE STATE ARCHITECT
APP: 03-124281 INC:
REVIEWED FOR
SS ☑ FLS ☑ ACS ☑
DATE: 02/04/2025

C:\Users\SPBarker\OneDrive - Keller\16121215 - Mayfair High School Sports Field\E Engineering\KNA Shop Drawings\16121215 Mayfair High School Sports Field Rev.0.dwg
1/10/2025 2:10:34 PM Created By:First Initial Last Name

AREA 3

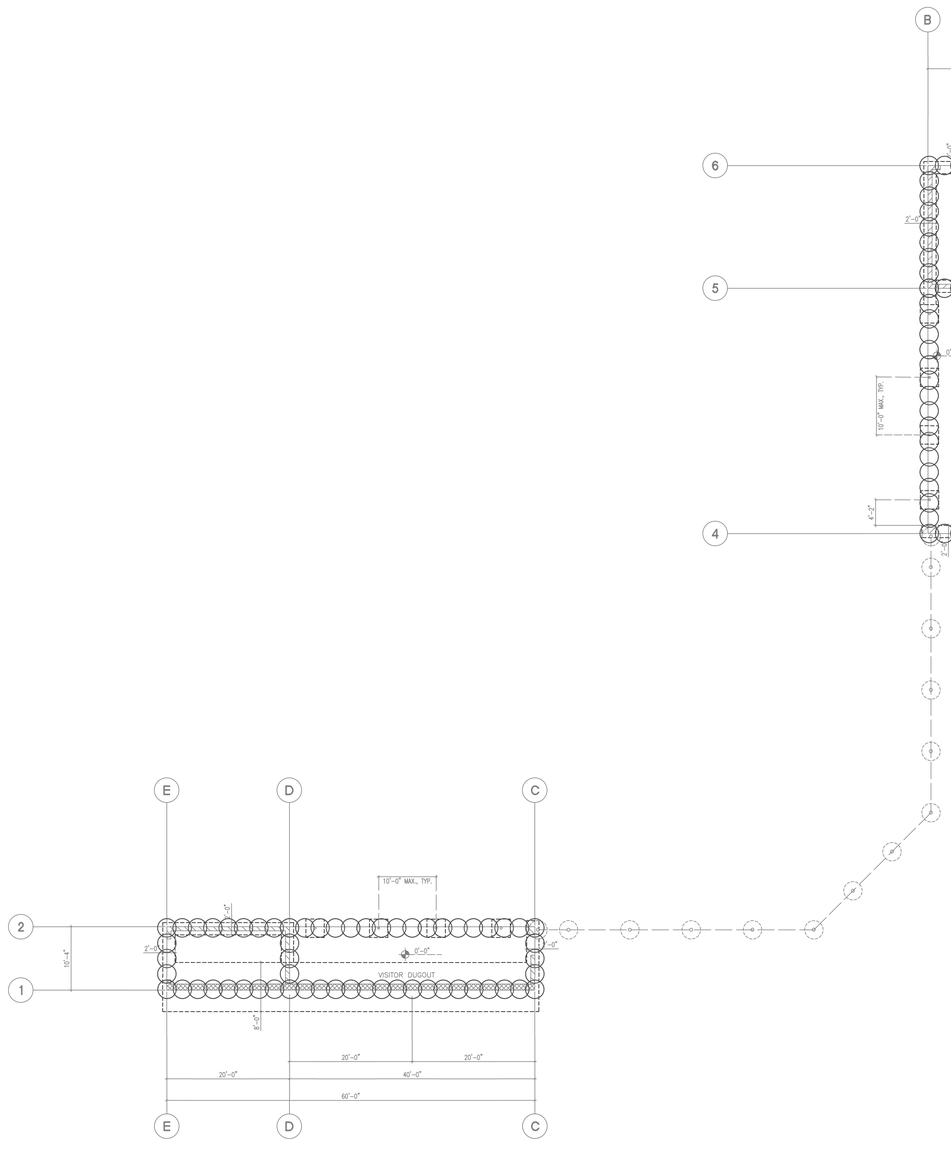

LEGEND:

Ø3' DEEP SOIL MIX COLUMN, TO DEPTH OF 32' FROM WORKING GRADE ELEVATION OF +52-FEET.

N

0" 10'-0" 20'-0"
SCALE IN FEET

KELLER
17461 DERIAN AVENUE
SUITE 106
IRVINE, CA 92614
909-393-9300
www.Keller-na.com

Engineer of Record:
Sunil Arora

REGISTERED PROFESSIONAL ENGINEER
SUNIL ARORA
C72352
EXP. 09/30/26
CIVIL
STRUCTURAL
CALIFORNIA

California

THIS ITEM HAS BEEN ELECTRONICALLY SIGNED AND SEALED USING A DIGITAL SIGNATURE.

PRINTED COPIES OF THIS DOCUMENT ARE NOT CONSIDERED SIGNED AND SEALED AND THE SIGNATURE MUST BE VERIFIED ON ANY ELECTRONIC COPIES.

Use of Proposals and Designs

Designs, sketches, specifications, and/or proposals ("Designs") prepared by Keller North America ("KNA") and/or it's employees have been prepared for exclusive use by KNA and based upon, and in anticipation of, KNA retaining the exclusive right to perform the work. KNA prefers to give no warranties as to the suitability of the Design for use by others. The Designs are subject to protection under the Copyright Act of 1976 and Architectural Works Copyright Protection Act of 1990. Use, control, reproduction, publication, or dissemination of such Designs without the prior written consent of an authorized representative of KNA is strictly prohibited. KNA is, and shall continue to be, the sole owner of the Designs.

DEEP SOIL MIXING LAYOUT PLAN
AREA 3
MAYFAIR HIGH SCHOOL SPORTS FIELD
6000 N WOODRUFF AVE LAKEWOOD, CA 90713

No.	Description	Date
0	FOR SUBMITTAL	01/10/2025

Design by: TL	Approved by: SA
Drawn by: SPB	Checked by: SA
Project Number: 16121215	Date: 01/10/2025

Sheet No.
KNA-5

IDENTIFICATION STAMP
DIV. OF THE STATE ARCHITECT
APP: 03-124281 INC:
REVIEWED FOR
SS ☑ FLS ☑ ACS ☑
DATE: 02/04/2025

C:\Users\SPBarker\OneDrive - Keller\16121215 - Mayfair High School Sports Field\E Engineering\KNA Shop Drawing\16121215 Mayfair High School Sports Field Rev.0.dwg
1/10/2025 2:10:40 PM Created By:First Initial Last Name

AREA 4

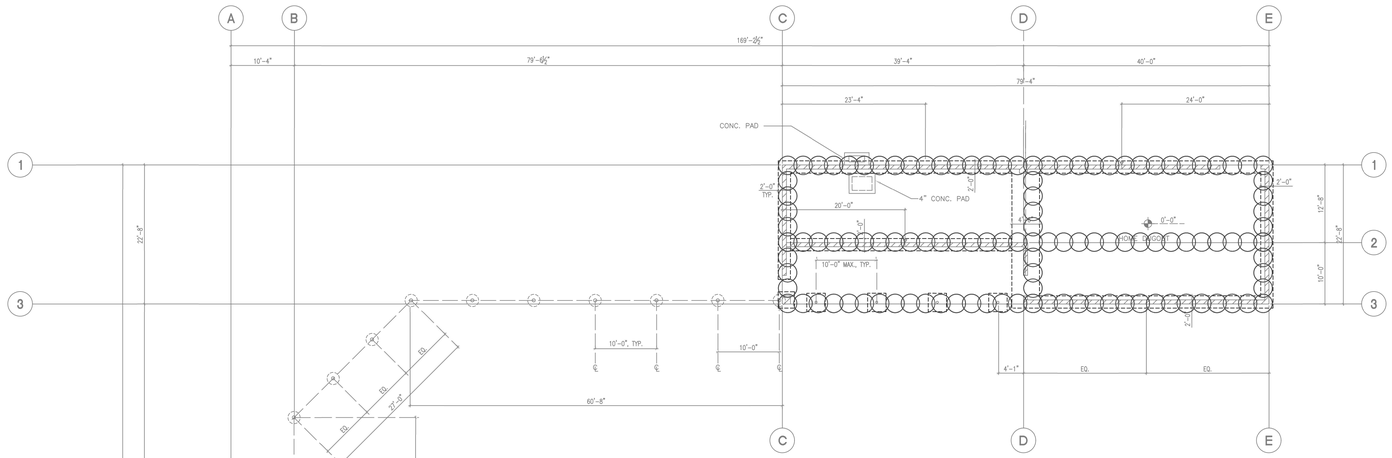

LEGEND:

○ Ø3' DEEP SOIL MIX COLUMN, TO DEPTH OF 32' FROM WORKING GRADE ELEVATION OF +52-FEET.

1" 1/2" 0"

0" 10'-0" 20'-0"
SCALE IN FEET

KELLER
17461 DERIAN AVENUE
SUITE 106
IRVINE, CA 92614
909-393-9300
www.Keller-na.com

Engineer of Record:
Sunil Arora

REGISTERED PROFESSIONAL ENGINEER
SUNIL ARORA
C72352
EXP. 04/30/26
CIVIL
STATE OF CALIFORNIA

California

THIS ITEM HAS BEEN ELECTRONICALLY SIGNED AND SEALED USING A DIGITAL SIGNATURE.

PRINTED COPIES OF THIS DOCUMENT ARE NOT CONSIDERED SIGNED AND SEALED AND THE SIGNATURE MUST BE VERIFIED ON ANY ELECTRONIC COPIES.

Use of Proposals and Designs

Designs, sketches, specifications, and/or proposals ("Designs") prepared by Keller North America ("KNA") and/or it's employees have been prepared for exclusive use by KNA and based upon, and in anticipation of, KNA being awarded the contract for the Designs. KNA makes no warranties or guarantees as to the suitability of the Design for use by others. The Designs are subject to protection under the Copyright Act of 1976 and Architectural Works Copyright Protection Act of 1990. Use, control, reproduction, publication, or dissemination of such Designs without the prior written consent of an authorized representative of KNA is strictly prohibited. KNA is, and shall continue to be, the sole owner of the Designs.

DEEP SOIL MIXING LAYOUT PLAN
AREA 4
MAYFAIR HIGH SCHOOL SPORTS FIELD
6000 N WOODRUFF AVE LAKEWOOD, CA 90713

No.	Description	Date
0	FOR SUBMITTAL	01/10/2025

Design by: TL	Approved by: SA
Drawn by: SPB	Checked by: SA
Project Number: 16121215	Date: 01/10/2025

Sheet No.
KNA-6

IDENTIFICATION STAMP
DIV. OF THE STATE ARCHITECT
APP: 03-124281 INC:
REVIEWED FOR
SS ☑ FLS ☑ ACS ☑
DATE: 02/04/2025

C:\Users\SPBarker\OneDrive - Keller\16121215 - Mayfair High School Sports Field\E Engineering\KNA Shop Drawing\16121215 Mayfair High School Sports Field Rev.0.dwg
11/0/2025 2:10:45 PM Created By:First Initial Last Name
1" 1/2" 0"

AREA 5

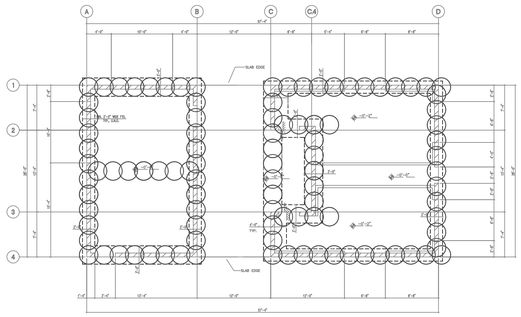

AREA 6

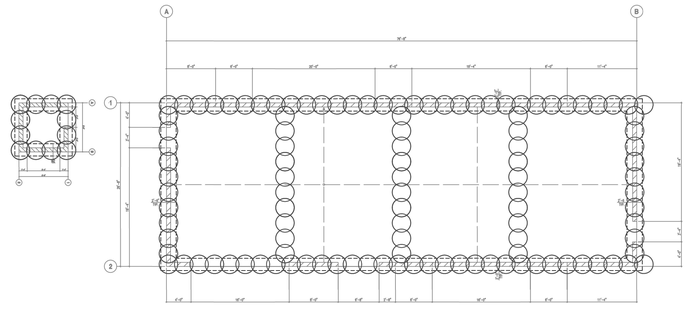

AREA 7

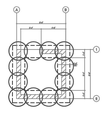

LEGEND:

○ Ø3' DEEP SOIL MIX COLUMN, TO DEPTH OF 32'
FROM WORKING GRADE ELEVATION OF +52-FEET.

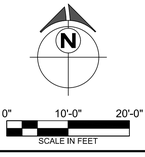

KELLER
17461 DERIAN AVENUE
SUITE 106
IRVINE, CA 92614
909-393-9300
www.Keller-na.com

Engineer of Record:
Sunil Arora

REGISTERED PROFESSIONAL ENGINEER
SUNIL ARORA
C72352
EXP. 04/30/26
CIVIL
STRUCTURAL
CALIFORNIA

California

THIS ITEM HAS BEEN ELECTRONICALLY SIGNED AND SEALED USING A DIGITAL SIGNATURE.

PRINTED COPIES OF THIS DOCUMENT ARE NOT CONSIDERED SIGNED AND SEALED AND THE SIGNATURE MUST BE VERIFIED ON ANY ELECTRONIC COPIES.

Use of Proposals and Designs

Designs, sketches, specifications, and/or proposals ("Designs") prepared by Keller North America ("KNA") and/or it's employees have been prepared for exclusive use by KNA and based upon, and in anticipation of, KNA being employed to perform the work. KNA shall have no liability for any entities or parties/persons as to the suitability of the Design for use by others. The Designs are subject to protection under the Copyright Act of 1976 and Architectural Works Copyright Protection Act of 1990. Use, control, reproduction, publication, or dissemination of such Designs without the prior written consent of an authorized representative of KNA is strictly prohibited. KNA is, and shall continue to be, the sole owner of the Designs.

DEEP SOIL MIXING LAYOUT PLAN
AREA 5, 6 & 7
MAYFAIR HIGH SCHOOL SPORTS FIELD
6000 N WOODRUFF AVE LAKEWOOD, CA 90713

No.	Description	Date
0	FOR SUBMITTAL	01/10/2025

Design by: TL	Approved by: SA
Drawn by: SPB	Checked by: SA
Project Number: 16121215	Date: 01/10/2025

Sheet No.
KNA-7

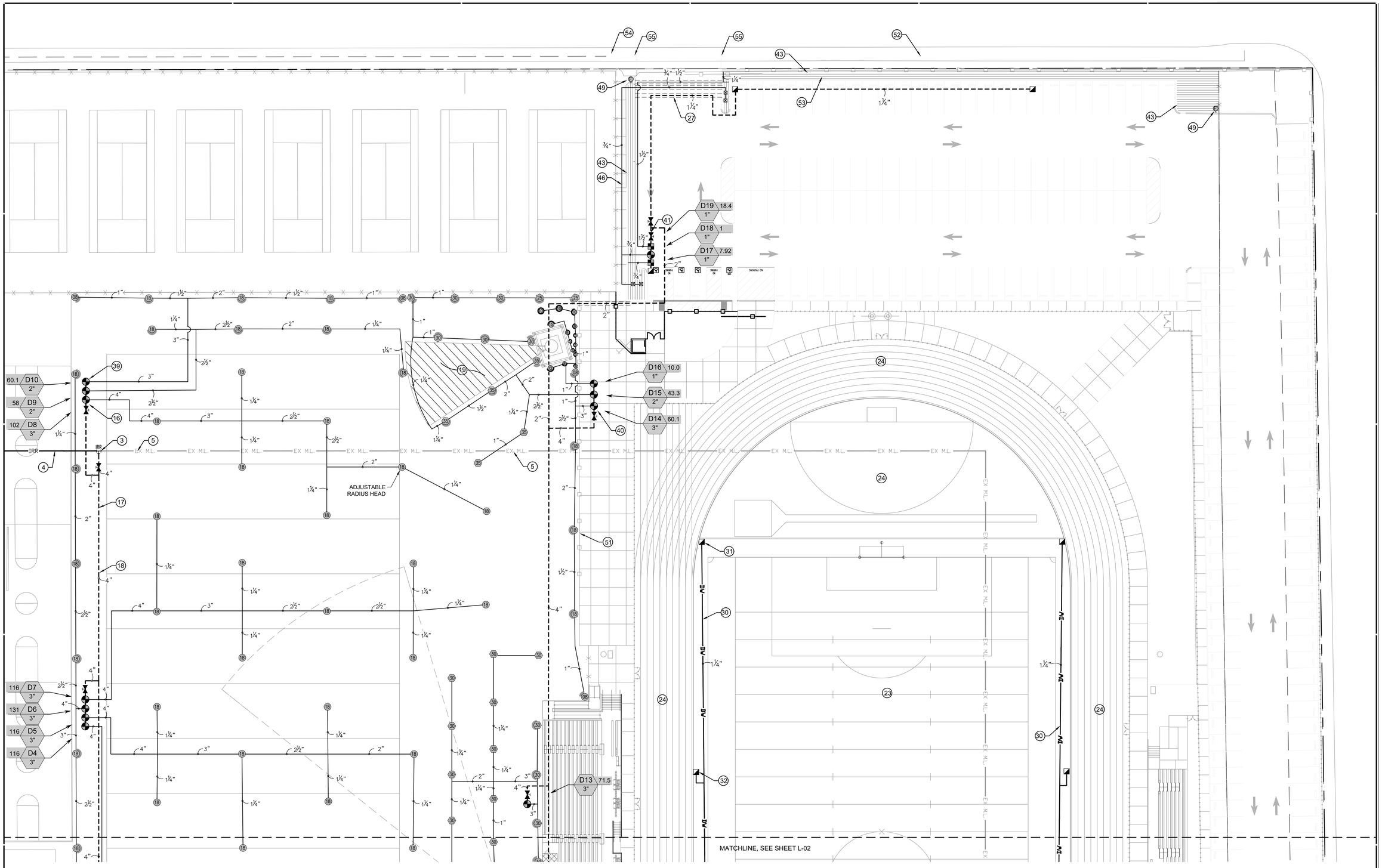

HYDRAULIC CALCULATION

HYDRAULIC CALCULATIONS:
RECYCLED WATER IRRIGATION FOR PLAYFIELD:

FOR CONTROLLER 'A'. MULTI VALVE OPERATION
STATIC PSI AT POINT OF CONNECTION: 90.0-110 psi
VALVE A-14, 116.0 GPM.

LOSSES:

MAINLINE, 1,530' OF 4" AT 116 GPM	7.0
ISOLATION VALVES	3.0
3" RCV	1.6
LATERAL LINE	2.5
SUB TOTAL	14.1
10% FITTINGS	1.4
SUB-TOTAL	15.5
OPERATING PRESSURE AT HEAD	50.0
ELEVATION 2'	1.0
DESIGN PRESSURE	66.5
RESIDUAL PRESSURE	26.9

HYDRAULIC CALCULATIONS:
RECYCLED WATER IRRIGATION FOR PLAYFIELD:

FOR CONTROLLER 'C' MULTI VALVE OPERATION
STATIC PSI AT POINT OF CONNECTION: 90.0-110 psi
VALVE C-14, 131.0 GPM.

LOSSES:

MAINLINE, 675' OF 4" AT 131 GPM	3.1
ISOLATION VALVES	3.5
3" RCV	2.8
LATERAL LINE	2.5
SUB TOTAL	11.9
10% FITTINGS	1.2
SUB-TOTAL	13.1
OPERATING PRESSURE AT HEAD	50.0
ELEVATION 2'	1.0
DESIGN PRESSURE	63.1
RESIDUAL PRESSURE	26.9

PRESSURE INFORMATION OBTAINED FROM ROBERT RENTERIA, BUSD ON 12/07/17.
THIS IRRIGATION SYSTEM HAS BEEN DESIGNED FOR A MINIMUM OPERATING PRESSURE OF 50 PSI AND A MAXIMUM DEMAND OF 145.0 GPM AT THE POINT OF CONNECTION. CONTRACTOR SHALL VERIFY THAT EXISTING PRESSURE AT POINT OF CONNECTION IS ADEQUATE TO OPERATE SYSTEM AS DESIGNED. THIS VERIFICATION SHALL BE DONE PRIOR TO WORK. IF PRESSURE IS NOT ADEQUATE, CONTRACTOR SHALL REPORT DEFICIENCY TO DISTRICT AND LANDSCAPE ARCHITECT IN WRITING FOR DIRECTION. FAILURE TO DO SO WILL RESULT IN CONTRACTOR BEING RESPONSIBLE FOR ANY CHANGES AS A RESULT.

Valve Callout
Valve Number
Valve Flow
Valve Size

REFER TO L-01 FOR:
HYDRAULIC CALCULATION
REFER TO L-02 FOR:
IRRIGATION PLAN KEY NOTE LEGEND.
REFER TO SHEET L-05 FOR:
PLANTING PLAN KEY NOTE LEGEND.
REFER TO SHEET L-07 FOR:
IRRIGATION AND PLANTING LEGENDS, SEED/ SOD NOTES, FIELD NOTES, PIPE SIZE TABLE, INSPECTION NOTES, IRRIGATION DETAILS, SOD REMOVAL NOTES.
REFER TO SHEET L-08 FOR:
JOINT RESTRAINT DETAILS, GENERAL NOTES.
REFER TO SHEET L-09 FOR:
IRRIGATION NOTES, RECYCLED WATER USE NOTES, EXISTING TREE PROTECTION NOTES, IRRIGATION DETAILS.
REFER TO SHEETS L-10 & L-11 FOR:
IRRIGATION DETAILS.
REFER TO SHEET L-12 FOR:
PLANTING DETAILS, PLANTING NOTES

DIGALERT
DIAL BEFORE YOU DIG
TWO WORKING DAYS BEFORE YOU DIG
TOLL FREE 1-800-227-2600
A PUBLIC SERVICE BY UNDERGROUND SERVICE ALERT

0' 20' 40' 60'

N:\Projects\24pr\j\24117 Mayfair HS Sports Field\AutoCAD\RHA\24117 IRR.dwg Jan 27, 2025 - 1:42pm DaveB

IDENTIFICATION STAMP
DIV. OF THE STATE ARCHITECT
APP: 03-124281 INC:
REVIEWED FOR
SS ☑ FLS ☑ ACS ☑
DATE: 02/04/2025

ARCHITECT:

architecture
westbergwhite
14471 CHAMBERS RD, SUITE 210
TUSTIN, CA 92780
(714) 508-1780 (714) 508-1780 FAX

CONSULTANT:

RHA LANDSCAPE ARCHITECTS PLANNERS, INC.
6840 Indiana Ave, Suite 100
Riverside, CA 92506
(951) 781.1930 ph
Lic 2799
www.rhala.com
RHA PRJ# 24117

LICENSED LANDSCAPE ARCHITECT
DOUGLAS GROVE PETERS
Signature
11/26/24
Renewal Date
10/31/2026
STATE OF CALIFORNIA

PROJECT NAME:

Bellflower Unified School District
Mayfair High School Sports Fields
6000 North Woodruff Ave
Lakewood, California 90713

CLIENT:
BELLFLOWER UNIFIED SCHOOL DISTRICT
16703 S. Clark Ave.
BELLFLOWER, CALIFORNIA 90706

Rev.	Date	Description

JOB NO: 15008
DATE: 05/28/2024
DRAWN: DC
CHECK: JC
ARCHITECT: PDW
ENGINEER:

SHEET DESCRIPTION:
IRRIGATION PLAN

SHEET NO:
L-01

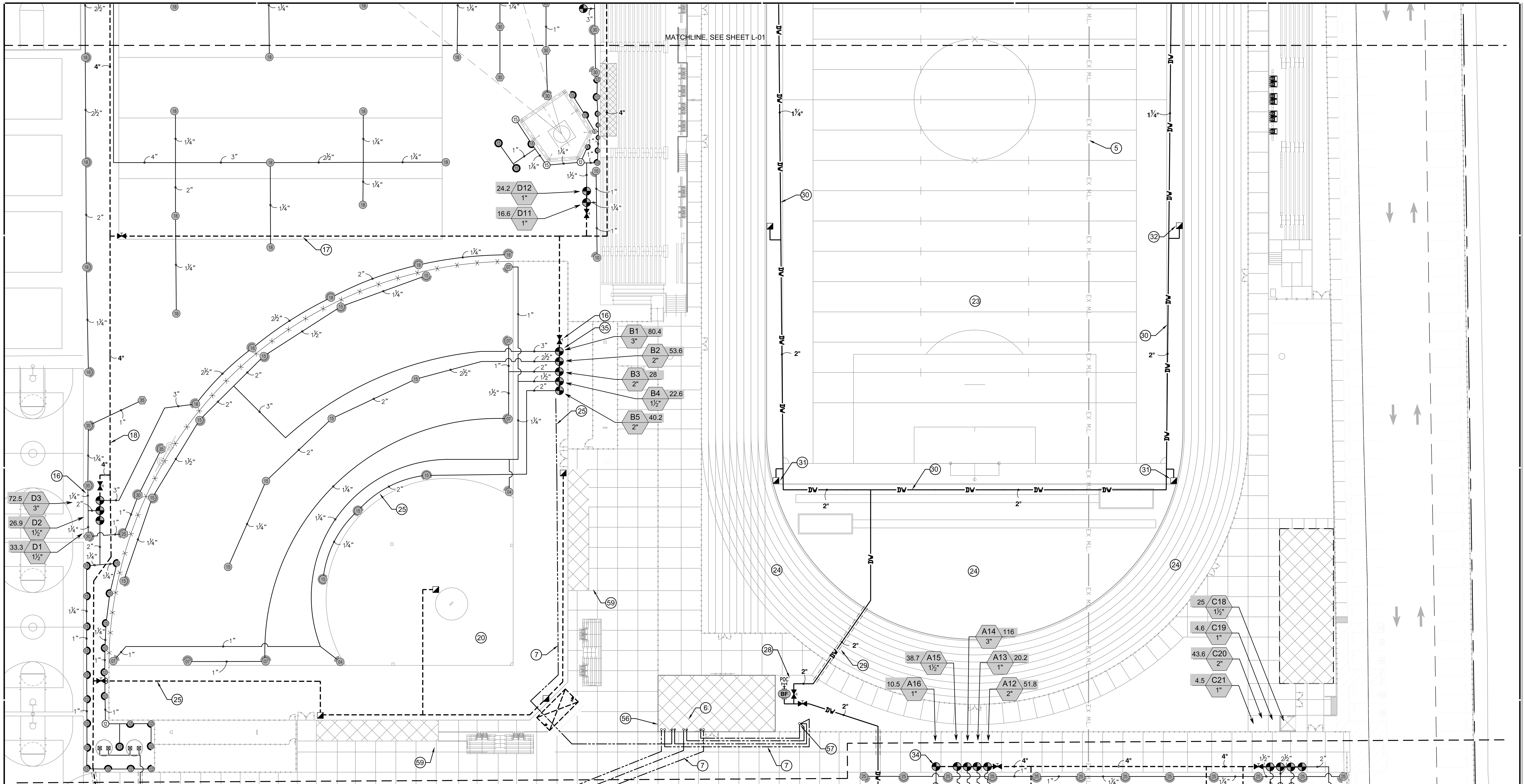

KEY NOTE LEGEND FOR SHEETS L-01, L-02, L-03:

1. HOLD MAINLINE 48" CLEAR OF BACK OF OUTFIELD FENCE. CONTRACTOR SHALL BE RESPONSIBLE FOR REVIEWING ENGINEERING PLANS FOR ROUTING OF ALL POTABLE WATER, STORM DRAIN, SEWER, ETC. LINES. ALL IRRIGATION MAINLINES SHALL BE KEPT CLEAR OF OTHER LINES AS REQUIRED, (HORIZONTAL AND VERTICAL). WHERE LINES MUST CROSS, CONTRACTOR SHALL REFER TO RECYCLED WATER NOTES ON SHEET L-7.
2. INSTALL VALVE MANIFOLD FOR BASEBALL FIELD AT BASE OF BASEBALL FIELD FENCE OUTSIDE PLAYING FIELD. ALL RCV'S FOR BASEBALL FIELD SHALL BE OUTSIDE BASEBALL FIELD AREA.
3. POINT OF CONNECTION. CONTRACTOR SHALL TIE INTO EXISTING MAINLINE SERVICING EXISTING FIELDS. LOCATION SHOWN IS APPROXIMATE. CONTRACTOR CONTACT DISTRICT MAINTENANCE AND OPERATIONS IF ASSISTANCE IS REQUIRED TO LOCATE LINES ENTERING SCOPE OF WORK AREA. CONTRACTOR SHALL BE RESPONSIBLE FOR DOCUMENTING EXACT LOCATION OF EXISTING MAINLINE ON AS-BUILT PLANS. INSTALL CLASS 200 4" MAINLINE TO EXISTING LINE AND ROUTE TO NEW LINE SIZE ISOLATION VALVE. REFER TO LEGEND AND DETAILS. ALL 4" LINE SHALL BE GASKETED AND UTILIZE DUCTILE IRON FITTINGS AND LEEMCO JOINT RESTRAINTS. REFER TO IRRIGATION LEGEND AND DETAILS. NEW MAINLINE TO BE CONNECTED AT 2 POINTS AS SHOWN TO MAINTAIN LOOPED MAINLINE SYSTEM.
4. EXISTING MAINLINE TO BE PROTECTED IN PLACE.
5. EXISTING MAINLINE AND ASSOCIATED RCV WIRES TO BE ABANDONED. LOCATION SHOWN IS APPROXIMATE. IF ANY TRANSITE LINE IS FOUND PROPER MEASURES PER CODE SHALL BE TAKEN IN ADDRESSING CUTTING, CAPPING, REMOVING, ETC. REFER TO SPECIFICATIONS, LOCAL, AND STATE CODES.
6. SUPERIOR STERLING CONTROLLERS. CONTROLLERS TO BE MOUNTED ON WALL INSIDE UTILITY ROOM. ACTIVE WIRES FOR EACH CONTROLLER SHALL BE UNIQUE. COMMON SHALL BE WHITE WITH SAME COLOR STRIPE AS CORRESPONDING ACTIVE WIRES. REFER TO SPECIFICATIONS.
   6.1. CONTROLLER A: 18 STATION CONTROLLER SERVICES BASEBALL FIELD.
   6.2. CONTROLLER B: 8 STATION CONTROLLER SERVICES SOFTBALL FIELD.
   6.3. CONTROLLER C: 30 STATION SERVICES SOUTHERLY FIELDS.
   6.4. CONTROLLER D: 36 STATION SERVICES NORTHERLY FIELDS.
7. PROVIDE CONDUITS FOR RCV WIRES AND GROUND RODS FROM CONTROLLERS INSIDE BUILDING TO LANDSCAPE. COORDINATE INSTALLATION OF CONDUITS WITH PAVING INSTALLATION. ALL CONTROLLERS MAY HAVE COMMON GROUND ROD. INSTALL GROUND ROD IN ADJACENT LANDSCAPE PER DETAIL.
8. CUT AND CAP 4" MAINLINE THAT WILL PROVIDE FUTURE DEDICATED SERVICE TO ADJACENT ELEMENTARY SCHOOL. RECYCLED WATER METER FOR ADJACENT ELEMENTARY SCHOOL WILL BE LOCATED ON WOODRUFF AVENUE. FUTURE WORK SHALL CONNECT THIS STUB TO NEW RECYCLED WATER METER. INSTALL CAPPED LINE INSIDE VALVE BOX. DOCUMENT LOCATION ON AS-BUILT PLANS.
9. TIE MAINLINE SERVICING ADJACENT ELEMENTARY SCHOOL TO NEW MAINLINE SERVICING NEW FIELDS AS SHOWN. WHEN FUTURE WORK TO ISOLATE ADJACENT ELEMENTARY SCHOOL IRRIGATION, THIS SECTION OF PIPE SHALL BE REMOVED/ CAPPED TO PERMANENTLY SEPARATE THE TWO SYSTEMS.
10. 4" CLASS 200 MAINLINE FOR FUTURE DEDICATED SERVICE TO ELEMENTARY SCHOOL. HOLD MAINLINE 48" OFF EXISTING AC PAVING.
11. 4" CLASS 200 MAINLINE FOR FUTURE DEDICATED SERVICE TO ELEMENTARY SCHOOL. HOLD MAINLINE 20' OFF EXISTING FENCE LINE.
12. CONTRACTOR SHALL TAKE CARE IN TRENCHING UNDER EXISTING TREES. REFER TO TREE PROTECTION NOTES.
13. CONTRACTOR SHALL TIE IN NEW MAINLINE SERVICING ADJACENT ELEMENTARY SCHOOL TO EXISTING LINE PASSING UNDER STREET.
14. PROTECT EXISTING MAINLINE PASSING UNDER STREET IN PLACE.
15. HOLD ROTOR HEADS 16" OFF SOUTHERLY FENCE LINE, TYPICAL FOR THIS EDGE.
16. RCV MANIFOLD. PROVIDE ISOLATION VALVE AT UPSTREAM SIDE OF MANIFOLD WHERE 2 OR MORE VALVES ARE SPECIFIED. REFER TO DETAIL FOR INSTALLATION.
17. MAINLNE INSTALLATION SHALL BE KEPT 4' CLEAR OF MARKED FIELD. ALL MAINLINE WITHIN PROJECT SHALL BE KEPT OUT FROM UNDER MARKED PLAYING FIELDS, TYPICAL.
18. 4" CLASS 200 PVC MAINLINE LOOP. INSTALL PIPE 48" FROM EDGE OF AC PLAY SURFACE. CONTRACTOR SHALL COORDINATE WITH DISTRICT AND GENERAL CONTRACTOR TO INSTALL MAINLINE TO ENSURE THAT OVERALL LOOPED SYSTEM REMAINS IN WORKING ORDER DURING DEMO AND SITE CONSTRUCTION. THIS SECTION OF MAINLINE MAY HAVE TO BE INSTALLED PRIOR TO SITE DEMO. COORDINATE DEMO AND CONSTRUCTION SCHEDULE WITH DISTRICT AND GENERAL CONTRACTOR TO ENSURE THAT BALANCE OF CAMPUS IRRIGATION IS SERVICED DURING WORK PERIOD.
19. SHOT PUT EVENT SURFACE PER ARCHITECT'S/ ENGINEER'S PLANS.
20. SOFTBALL INFIELD LAYOUT AND EQUIPMENT PER ARCHITECT'S/ ENGINEER'S PLANS.
21. BASEBALL INFIELD LAYOUT AND EQUIPMENT PER ARCHITECT'S/ ENGINEER'S PLANS.
22. BASEBALL WARNING TRACK LAYOUT PER ARCHITECT'S/ ENGINEER'S PLANS.
23. SYNTHETIC TURF FOOTBALL AND PRACTICE FIELD PER ARCHITECT'S/ ENGINEER'S PLANS.
24. SYNTHETIC TRACK AND 'D' SECTION OF TRACK PER ARCHITECT'S/ ENGINEER'S PLANS.
25. WHERE EVER POSSIBLE, CONTRACTOR SHALL TRENCH LINES FOR LATERAL AND MAINLINE OUTSIDE PLANNED AREAS FOR BASEBALL/ SOFTBALL FIELD CLAY. THIS SHALL BE DONE TO MINIMIZE DAMAGE TO CLAY SURFACE FOR ANY MAINTENANCE THAT MIGHT HAVE TO BE PERFORMED.
26. VALVE BOXES HOUSING QUICK COUPLERS SET IN CLAY WARNING TRACK SURFACE SHALL BE SET TIGHT UP AGAINST ADJACENT FENCE. TOP OF BOX SHALL BE FLUSH WITH CLAY SURFACE. ENSURE THAT SUFFICIENT GRAVEL IS SET UNDER BOX AND THOROUGHLY COMPACTED TO PREVENT SETTLING.
27. ALL LATERAL LINE PASSING UNDER ROADWAY/ PARKING LOT SHALL BE SLEEVED. REFER TO DETAIL FOR REQUIRED LINE DEPTHS. LATERAL LINE PASSING UNDER PAVING DOES NOT REQUIRE SLEEVING. WHERE LATERAL PASSES UNDER PAVING, AVOID PLACING ANY JOINT UNDER PAVING.
28. APPROXIMATE POINT OF CONNECTION FOR POTABLE WATER SYSTEM FOR SYNTHETIC TURF QUICK COUPLERS. 2" LINE PROVIDED PER ENGINEER'S PLANS. THIS WATER SOURCE WILL HAVE BACKFLOW PREVENTER INSTALLED PER DETAIL ON L-11. CONNECT TO POTABLE WATER SOURCE AT THIS APPROXIMATE POINT, INSTALL LINE SIZE ISOLATION VALVE AND ROUTE LINE AS SHOWN.
29. POTABLE WATER LINE PASSING UNDER SYNTHETIC TRACK SHALL BE SLEEVED. LOCATE EXACT POSITION OF SLEEVED CROSSING ON AS-BUILT PLANS. CONTRACTOR SHALL SCRIBE MARK ON CONCRETE CURBS OVER LOCATION OF PIPE CROSSING. SCRIBE MARK TO BE NOTED ON AS-BUILT PLANS.
30. MAINLINE SERVICING QUICK COUPLERS IN SYNTHETIC TURF TO BE HELD APPROXIMATELY 24" FROM EDGE OF TURF. COORDINATE EXACT LOCATION OF POTABLE WATER MAINLINE WITH CIVIL ENGINEER'S FIELD DRAINAGE SYSTEM. ALTER LOCATION OF MAINLINE AS REQUIRED. DISTANCE OF MAINLINE FROM EDGE OF SYNTHETIC TURF SHALL BE CONSISTENT.
31. QUICK COUPLER AT CORNER OF SYNTHETIC FIELD. REFER TO DETAIL. LID OF QUICK COUPLER BOX SHALL BE COVERED WITH SAME SYNTHETIC RUNNING TRACK SURFACING MATERIAL. REFER TO SPECIFICATION SECTION 32 1839 - 2.10 FOR PRODUCT.
32. QUICK COUPLER AT STRAIGHT LINE SECTION OF CONCRETE BORDERING SYNTHETIC TURF. REFER TO DETAILS FOR INSTALLATION. LID OF BOX HOUSING QUICK COUPLER SHALL BE SURFACED WITH ADJACENT RUNNING TRACK SURFACE MATERIAL. REFER TO NOTE 31 ABOVE.
33. INSTALL 2 EXTRA RCV WIRES PLUS LOOPED COMMON IN VALVE BOX A-4. PROVIDE MINIMUM 36" OF COILED EXTRA WIRE. INSTALL 24" COILED COMMON LOOP. WIRES SHALL BE A UNIQUE COLOR. PROVIDE 24" COIL OF EXTRA WIRE IN CONTROLLER 'A' CABINET. TAG BOTH ENDS AS "EXTRA". TAG ON THESE 2 WIRES IN CONTROLLER SHALL NOTE CORRESPONDING END IN VALVE BOX A-4. ALL "EXTRA" WIRES FOR CONTROLLER 'A' SHALL BE THE SAME COLOR.
34. INSTALL 2 EXTRA RCV WIRES PLUS LOOPED COMMON IN VALVE BOX A-12. PROVIDE MINIMUM 36" OF COILED EXTRA WIRE. INSTALL 24" COILED COMMON LOOP. WIRES SHALL BE A UNIQUE COLOR. PROVIDE 24" COIL OF EXTRA WIRE IN CONTROLLER 'A' CABINET. TAG BOTH ENDS AS "EXTRA". TAG ON THESE 2 WIRES IN CONTROLLER SHALL NOTE CORRESPONDING END IN VALVE BOX A-16. ALL "EXTRA" WIRES FOR CONTROLLER 'A' SHALL BE THE SAME COLOR.
35. INSTALL 4 EXTRA RCV WIRES PLUS LOOPED COMMON IN VALVE BOX B-1. PROVIDE MINIMUM 36" OF COILED EXTRA WIRE. INSTALL 24" COILED COMMON LOOP. WIRES SHALL BE A UNIQUE COLOR. PROVIDE 24" COIL OF EXTRA WIRE IN CONTROLLER 'B' CABINET. TAG BOTH ENDS AS "EXTRA". TAG ON THESE 4 WIRES IN CONTROLLER SHALL NOTE CORRESPONDING END IN VALVE BOX B-1. ALL EXTRA WIRES FOR CONTROLLER 'B' SHALL BE THE SAME COLOR.
36. INSTALL 3 EXTRA RCV WIRES PLUS LOOPED COMMON IN VALVE BOX C-21. PROVIDE MINIMUM 36" OF COILED EXTRA WIRE. INSTALL 24" COILED COMMON LOOP. WIRES SHALL BE A UNIQUE COLOR. PROVIDE 24" COIL OF EXTRA WIRE IN CONTROLLER 'C' CABINET. TAG BOTH ENDS AS "EXTRA". TAG ON THESE 3 WIRES IN CONTROLLER SHALL NOTE CORRESPONDING END IN VALVE BOX C-21. ALL EXTRA WIRES FOR CONTROLLER 'C' SHALL BE THE SAME COLOR.
37. INSTALL 3 EXTRA RCV WIRES PLUS LOOPED COMMON IN VALVE BOX C-5. PROVIDE MINIMUM 36" OF COILED EXTRA WIRE. INSTALL 24" COILED COMMON LOOP. WIRES SHALL BE A UNIQUE COLOR. PROVIDE 24" COIL OF EXTRA WIRE IN CONTROLLER 'C' CABINET. TAG BOTH ENDS AS "EXTRA". TAG ON THESE 3 WIRES IN CONTROLLER SHALL NOTE CORRESPONDING END IN VALVE BOX C-5. ALL "EXTRA" WIRES FOR CONTROLLER 'D' SHALL BE THE SAME COLOR.
38. INSTALL 2 EXTRA RCV WIRES PLUS LOOPED COMMON IN VALVE BOX C-10. PROVIDE MINIMUM 36" OF COILED EXTRA WIRE. INSTALL 24" COILED COMMON LOOP. WIRES SHALL BE A UNIQUE COLOR. PROVIDE 24" COIL OF EXTRA WIRE IN CONTROLLER 'C' CABINET. TAG BOTH ENDS AS "EXTRA". TAG ON THESE 2 WIRES IN CONTROLLER SHALL NOTE CORRESPONDING END IN VALVE BOX C-10. ALL "EXTRA' WIRES FOR CONTROLLER 'C' SHALL BE THE SAME COLOR.
39. INSTALL 2 EXTRA RCV WIRES PLUS LOOPED COMMON IN VALVE BOX D-10 PROVIDE MINIMUM 36" OF COILED EXTRA WIRE. INSTALL 24" COILED COMMON LOOP. WIRES SHALL BE A UNIQUE COLOR. PROVIDE 24" COIL OF EXTRA WIRE IN CONTROLLER 'D' CABINET. TAG BOTH ENDS AS "EXTRA". TAG ON THESE 2 WIRES IN CONTROLLER SHALL NOTE CORRESPONDING END IN VALVE BOX D-10. ALL "EXTRA" WIRES FOR CONTROLLER 'D' SHALL BE THE SAME COLOR.
40. INSTALL 2 EXTRA RCV WIRES PLUS LOOPED COMMON IN VALVE BOX D-14. PROVIDE MINIMUM 36" OF COILED EXTRA WIRE. INSTALL 24" COILED COMMON LOOP. WIRES SHALL BE A UNIQUE COLOR. PROVIDE 24" COIL OF EXTRA WIRE IN CONTROLLER 'D' CABINET. TAG BOTH ENDS AS "EXTRA". TAG ON THESE 2 WIRES IN CONTROLLER SHALL NOTE CORRESPONDING END IN VALVE BOX D-14. ALL "EXTRA" WIRES FOR CONTROLLER 'D' SHALL BE THE SAME COLOR.
41. INSTALL 1 EXTRA RCV WIRE PLUS LOOPED COMMON IN VALVE BOX D-19. PROVIDE MINIMUM 36" OF COILED EXTRA WIRE. INSTALL 24" COILED COMMON LOOP. WIRE SHALL BE A UNIQUE COLOR. PROVIDE 24" COIL OF EXTRA WIRE IN CONTROLLER 'D' CABINET. TAG BOTH ENDS AS "EXTRA". TAG ON THIS 1 WIRE IN CONTROLLER SHALL NOTE CORRESPONDING END IN VALVE BOX D-19. ALL "EXTRA" WIRES FOR CONTROLLER 'D' SHALL BE THE SAME COLOR.
42. ISOLATION VALVE SERVICING BASEBALL FIELD QUICK COUPLER VALVES TO BE INSTALLED IN TURF OUTSIDE CHAIN LINK ENCLOSURE.
43. OFFSET DRIPLINE FOR SHRUBS 6" FROM BACK OF CURB.
44. HOLD POP UP SPRAY HEADS FOR SHRUBS 10" CLEAR OF EDGE OF SIDEWALK.
45. SUB-GRADE BUBBLER ASSEMBLY FOR TREES. REFER TO DETAIL FOR INSTALLATION. COORDINATE INSTALLATION OF BUBBLERS WITH TREE INSTALLATION.
46. LATERAL LINES SHOWN IN SIDEWALK FOR GRAPHIC CLARITY. INSTALL LATERAL LINES IN PLANTER AREAS.
47. MAINLINE PIPE SHOWN IN SIDEWALK FOR GRAPHIC CLARITY. INSTALL PIPE AND CONTROL WIRES IN TURF AREA OFFSET 5' FROM EDGE OF SIDEWALK.
48. HOLD ROTOR HEADS 12" OFF BACK OF BASEBALL PERIMETER FENCE, TYPICAL.
49. DRIPLINE FLUSH VALVES LOCATED AT THE FARTHEST POINT IN THE ZONE INSTALLED ON THE EXHAUST HEADER, TYPICAL.
50. HOLD POP UP SPRAY HEADS 6" CLEAR OF BACK OF WALK, TYPICAL.
51. HOLD POP UP ROTOR HEADS 8" CLEAR OF BACK OF WALK, TYPICAL.
52. TURF PARKWAY IRRIGATION NOT A PART. PARKWAY IRRIGATION IS SERVICED BY MAINLINE THAT IS NOT WITHIN THE SCOPE OF WORK AREA. PROTECT IN PLACE.
53. EXISTING METROSIDEROS TREES ADJACENT TO EXISTING CHAIN LINK FENCING TO BE PROTECTED IN PLACE. REFER TO TREE PROTECTION NOTES.
54. APPROXIMATE LOCATION OF RCV SERVICING PARKWAY TURF. THIS VALVE IS SUPPLIED WITH WATER FROM MAINLINE THAT IS OUTSIDE THE SCOPE OF WORK AREA. CONTRACTOR SHALL VERIFY LOCATION OF THIS RCV, (CONTACT BUSD MAINTENANCE AND OPERATIONS FOR ASSISTANCE) TO VERIFY THAT IT IS ON THE WEST SIDE OF THE PROPOSED WIDENED DRIVEWAY ENTRY.
55. CONTRACTOR SHALL BE RESPONSIBLE FOR ENSURING THAT LATERAL LINE(S) PASSING UNDER PROPOSED NEW DRIVEWAY APRON ARE PROTECTED IN PLACE, ENSURING THAT EASTERLY PARKWAY IRRIGATION SYSTEM IS NOT AFFECTED BY DEMO/ CONSTRUCTION. A PORTION OF THE PARKWAY WILL BE REMOVED TO ACCOMMODATE NEW WIDENED DRIVE ENTRY. CONTRACTOR SHALL BE RESPONSIBLE FOR REVISING EXISTING PARKWAY IRRIGATION TO ACCOMMODATE NEW CONSTRUCTION. THIS SHALL INCLUDE REMOVING/ ADDING REVISING LOCATION OF HEADS, LATERALS, ETC. TO ENSURE THAT PROPER IRRIGATION COVERAGE IS MAINTAINED.
56. INSTALL RAIN SHUT OFF DEVICE ON THE EXTERIOR OF THE BUILDING IN A LOCATION THAT IS CLEAR TO THE SKY ABOVE AND OUT OF SIGHT TO AVOID VANDALISM. FINAL LOCATION SHALL BE APPROVED BY DISTRICT REPRESENTATIVE. COORDINATE ANY REQUIRED CONDUITS THROUGH WALLS FOR COMMUNICATION WIRES FROM CONTROLLER TO RAIN SHUT OFF DEVICE. INSTALL ONE RAIN SHUT OFF DEVICE PER CONTROLLER.
57. APPROXIMATE LOCATION OF GROUND ROD FOR CONTROLLERS. REFER TO DETAIL FOR INSTALLATION.
58. APPROXIMATE LOCATION OF END OF CONDUIT. ALL RCV WIRE INSTALLED THAT IS NOT TAPED TO THE BOTTOM OF MAINLINE SHALL BE INSTALLED IN PVC CONDUIT. TRANSITION RCV WIRES FROM CONDUIT TO BOTTOM OF MAINLINE AT THIS APPROXIMATE LOCATION. CONTRACTOR SHALL DOCUMENT EXACT LOCATION ON AS-BUILT PLANS.
59. DRINKING FOUNTAIN. NO OVER-SPRAY ALLOWED ONTO DRINKING FOUNTAIN.
60. QUICK COUPLER AT PRACTICE SYNTHETIC TURF FIELD SHALL BE INSTALLED IN THE NATURAL GRASS AREA. REFER TO DETAILS FOR INSTALLATION. POTABLE MAINLINE TO THE QUICK COUPLERS SHALL BE INSTALLED ADJACENT TO THE SYNTHETIC TURF, OFFSET 24" FROM EDGE OF FIELD.

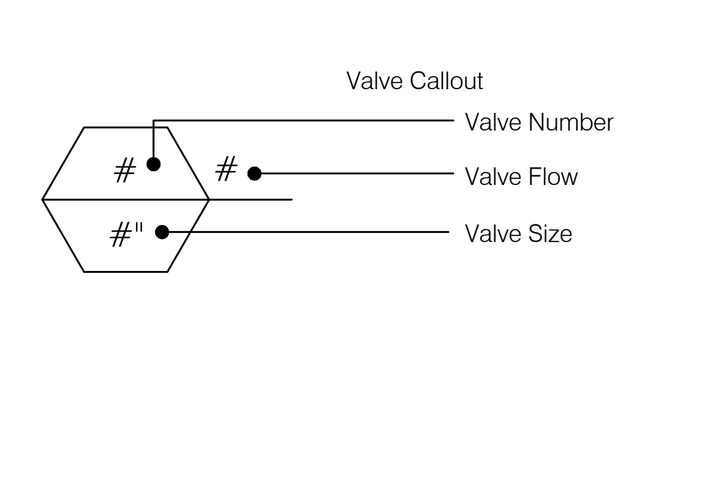

REFER TO L-01 FOR:
HYDRAULIC CALCULATION
REFER TO L-02 FOR:
IRRIGATION PLAN KEY NOTE LEGEND.
REFER TO SHEET L-05 FOR:
PLANTING PLAN KEY NOTE LEGEND.
REFER TO SHEET L-07 FOR:
IRRIGATION AND PLANTING LEGENDS, SEED/ SOD NOTES, FIELD NOTES, PIPE SIZE TABLE, INSPECTION NOTES, IRRIGATION DETAILS, SOD REMOVAL NOTES.
REFER TO SHEET L-08 FOR:
JOINT RESTRAINT DETAILS, GENERAL NOTES.
REFER TO SHEET L-09 FOR:
IRRIGATION NOTES, RECYCLED WATER USE NOTES, EXISTING TREE PROTECTION NOTES, IRRIGATION DETAILS.
REFER TO SHEETS L-10 & L-11 FOR:
IRRIGATION DETAILS.
REFER TO SHEET L-12 FOR:
PLANTING DETAILS, PLANTING NOTES

DIGALERT
DIAL BEFORE YOU DIG
TWO WORKING DAYS BEFORE YOU DIG
TOLL FREE 1-800-227-2600
A PUBLIC SERVICE BY UNDERGROUND SERVICE ALERT

0' 20' 40' 60'

IDENTIFICATION STAMP
DIV. OF THE STATE ARCHITECT
APP: 03-124281 INC:
REVIEWED FOR
SS ☑ FLS ☑ ACS ☑
DATE: 02/04/2025

ARCHITECT:
westbergwhite architecture
14471 CHAMBERS RD, SUITE 210
TUSTIN, CA 92780
(714) 508-1780 (714) 508-1780 FAX

CONSULTANT:
RHA LANDSCAPE ARCHITECTS PLANNERS, INC.
6840 Indiana Ave, Suite 100
Riverside, CA 92506
(951) 781.1930 ph
Lic 2799
www.rhala.com
RHA PRJ# 24117

LICENSED LANDSCAPE ARCHITECT
DOUGLAS GROVE NO. 2799
Signature
11/30/25
Renewal Date
12/16/24
Date
STATE OF CALIFORNIA

PROJECT NAME:

Bellflower Unified School District
Mayfair High School Sports Fields
6000 North Woodruff Ave
Lakewood, California 90713

CLIENT:
BELLFLOWER UNIFIED SCHOOL DISTRICT
16703 S. Clark Ave.
BELLFLOWER, CALIFORNIA 90706

#	Rev. Date	Description

JOB NO:	15008
DATE:	05/28/2024
DRAWN:	DC
CHECK:	JC
ARCHITECT:	PDW
ENGINEER:	

SHEET DESCRIPTION:
IRRIGATION PLAN

SHEET NO:
L-02

C:\Users\DaveB\appdata\local\temp\AcPublish_33436\24117 IRR.dwg Dec 13, 2024 – 9:57am DaveB

MATCH LINE, SEE SHEET L-02

53.3 A1 2"
34.4 A2 1½"
72.5 A3 3"
102 A4 3"
51.8 A5 2"
20.2 A6 1"
70 A7 2"
53.4 C6 2"
50.9 C7 2"
53.1 C8 2"
58 C9 2"
7.5 C10 1"
5 C1 1"
30.1 C2 1½"
21.5 C3 1½"
38.7 C4 2"
53.3 C5 2"
131 C14 3"
87 C12 3"
60.6 C13 2"
116 C11 3"
131 A9 3"
87 A8 2"
72.5 A11 3"
102 A10 3"
35.7 C17 ½"
C15 89.1 3"
C16 12.2 1"

DIG ALERT
DIAL BEFORE YOU DIG
TOLL FREE 1-800-227-2600
TWO WORKING DAYS BEFORE YOU DIG
A PUBLIC SERVICE BY UNDERGROUND SERVICE ALERT

0' 20' 40' 60'

C:\Users\DaveB\appdata\local\temp\AcPublish_33436\24117 IRR.dwg Dec 13, 2024 - 9:57am DaveB

IDENTIFICATION STAMP
DIV. OF THE STATE ARCHITECT
APP: 03-124281 INC:
REVIEWED FOR
SS ☑ FLS ☑ ACS ☑
DATE: 02/04/2025

ARCHITECT:
architecture
westbergwhite
14471 CHAMBERS RD, SUITE 210
TUSTIN, CA 92780
(714) 508-1780 (714) 508-1780 FAX

CONSULTANT:
RHA LANDSCAPE ARCHITECTS PLANNERS, INC.
6840 Indiana Ave, Suite 100
Riverside, CA 92506
(951) 781.1930 ph
Lic 2799
www.rhala.com
RHA PRJ# 24117

LICENSED LANDSCAPE ARCHITECT
STATE OF CALIFORNIA
Signature
11/26/24
Renewal 2026
12/04/24
Date

PROJECT NAME:

Bellflower Unified School District
Mayfair High School Sports Fields
6000 North Woodruff Ave
Lakewood, California 90713

CLIENT:
BELLFLOWER UNIFIED SCHOOL DISTRICT
16703 S. Clark Ave.
BELLFLOWER, CALIFORNIA 90706

Rev.	Date	Description

JOB NO:	15008
DATE:	05/28/2024
DRAWN:	DC
CHECK:	JC
ARCHITECT:	PDW
ENGINEER:	

SHEET DESCRIPTION:
IRRIGATION PLAN

SHEET NO:
L-03

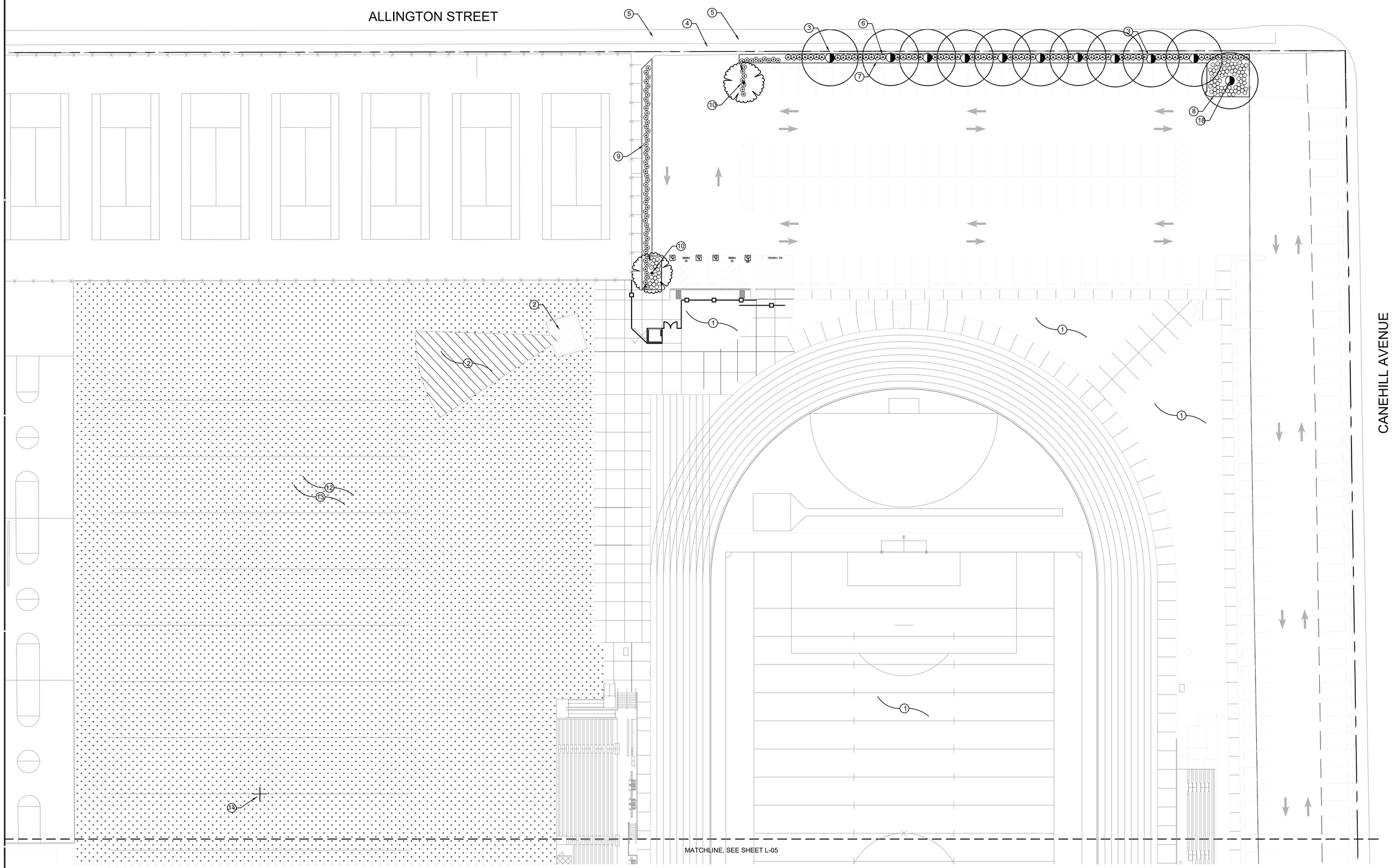

REFER TO L-01 FOR:
HYDRAULIC CALCULATION
REFER TO L-02 FOR:
IRRIGATION PLAN KEY NOTE LEGEND.
REFER TO SHEET L-05 FOR:
PLANTING PLAN KEY NOTE LEGEND.
REFER TO SHEET L-07 FOR:
IRRIGATION AND PLANTING LEGENDS, SEED/ SOD NOTES, FIELD NOTES, PIPE SIZE TABLE, INSPECTION NOTES, IRRIGATION DETAILS, SOD REMOVAL NOTES.
REFER TO SHEET L-08 FOR:
JOINT RESTRAINT DETAILS, GENERAL NOTES.
REFER TO SHEET L-09 FOR:
IRRIGATION NOTES, RECYCLED WATER USE NOTES, EXISTING TREE PROTECTION NOTES, IRRIGATION DETAILS.
REFER TO SHEETS L-10 & L-11 FOR:
IRRIGATION DETAILS.
REFER TO SHEET L-12 FOR:
PLANTING DETAILS, PLANTING NOTES

DIGALERT
DIAL BEFORE YOU DIG
TWO WORKING DAYS BEFORE YOU DIG
TOLL FREE 1-800-227-2600
A PUBLIC SERVICE BY UNDERGROUND SERVICE ALERT

0' 20' 40' 60'

N:\Projects\24pr\j\24117 Mayfair HS Sports Field\AutoCAD\RHA\24117 PLT.dwg Jan 27, 2025 - 1:45pm DaveB

IDENTIFICATION STAMP
DIV. OF THE STATE ARCHITECT
APP: 03-124281 INC:
REVIEWED FOR
SS ☑ FLS ☑ ACS ☑
DATE: 02/04/2025

ARCHITECT:
architecture
westbergwhite
14471 CHAMBERS RD, SUITE 210
TUSTIN, CA 92780
(714) 508-1780 (714) 508-1780 FAX

CONSULTANT:
RHA LANDSCAPE ARCHITECTS PLANNERS, INC.
6840 Indiana Ave, Suite 100
Riverside, CA 92506
(951) 781.1930 ph
Lic 2799
www.rhala.com
RHA PRJ# 24117

LICENSED LANDSCAPE ARCHITECT
DOUGLAS GROVE No. 6799
Signature
11/26/19
Renewal: 8/31
12/31/24
Date
STATE OF CALIFORNIA

PROJECT NAME:

Bellflower Unified School District
Mayfair High School Sports Fields
6000 North Woodruff Ave
Lakewood, California 90713

CLIENT:

BELLFLOWER UNIFIED SCHOOL DISTRICT
16703 S. Clark Ave.
BELLFLOWER, CALIFORNIA 90706

Rev.	Date	Description

JOB NO:	15008
DATE:	05/28/2024
DRAWN:	DC
CHECK:	JC
ARCHITECT:	PDW
ENGINEER:	

SHEET DESCRIPTION:
PLANTING PLAN

SHEET NO:
L-04

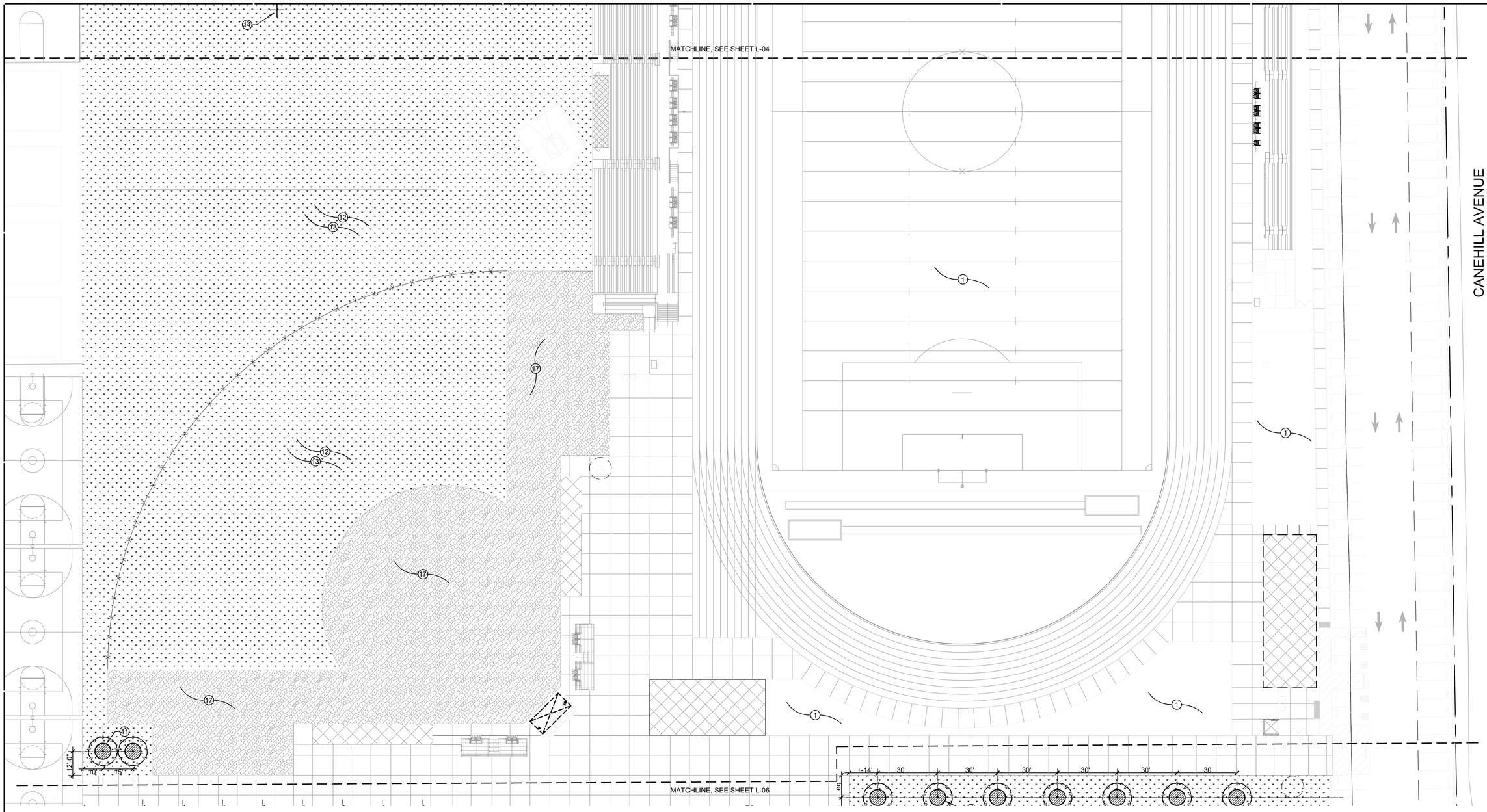

PLANTING KEY NOTE LEGEND, SHEETS L-04, L-05, L-06:

1. NEW SYNTHETIC TURF FIELD PER ARCHITECT'S/ ENGINEER'S PLANS. REFER TO ARCHITECT'S PLANS.
2. SHOT PUT EVENT SURFACING. REFER TO ARCHITECT'S PLANS.
3. EXISTING METROSIDEROS TREES ALONG EXISTING CHAIN LINK FENCING. PROTECT IN PLACE.
4. EXISTING METROSIDEROS TREE TO BE REMOVED PER CIVIL ENGINEER'S DEMO PLANS.
5. A PORTION OF THE PARKWAY TURF SHALL BE REMOVED PER CIVIL ENGINEER'S DEMO PLANS TO ACCOMMODATE NEW, WIDENED DRIVEWAY ENTRY. CONTRACTOR SHALL BE RESPONSIBLE FOR SOIL PREP AND INSTALLATION OF SODDED TURF TO REPLACE TURF DAMAGED, DESTROYED DUE TO NEW DRIVEWAY CONSTRUCTION. THIS TURF SHALL BE INCLUDED WITHIN PRESCRIBED MAINTENANCE RESPONSIBILITY.
6. PLANT PHOTINIA 30" FROM CHAIN LINK FENCE. HOLD APPROXIMATELY 3.5' CLEAR OF EXISTING METROSIDEROS TREES. TAKE CARE IN EXCAVATING HOLES FOR PHOTINIAS. REFER TO EXISTING TREE PROTECTION NOTES.
7. CONTRACTOR SHALL FINE GRADE PLANTER TO ALLOW FOR MINIMUM 3" LAYER OF SHREDDED BARK MULCH. MULCH LAYER TO BE SET 1/2" BELOW TOP OF ADJACENT CURB. HOLD MULCH CLEAR OF BASE OF TREE TRUNKS AND STEMS OF SHRUBS. INSTALL SHREDDED BARK STABILIZER. REFER TO SPECIFICATIONS.
8. HOLD FESTUCA MINIMUM 18" CLEAR OF BACK OF CURB. PROTECT IN PLACE EXISTING ASH TREE. REFER TO EXISTING TREE PROTECTION NOTES.
9. CENTER INFORMAL CALLISTEMON HEDGE IN PLANTER. GRADE TO ALLOW FOR FULL DEPTH OF 3" OF SHREDDED BARK MULCH IN PLANTER. HOLD MULCH 1/2" BELOW TOP OF ADJACENT FINISH SURFACE AND TOP OF CURB. HOLD MULCH CLEAR OF STEMS OF SHRUBS.
10. COORDINATE INSTALLATION OF TREES WITH SUB-GRADE IRRIGATION BUBBLERS.
11. 1"X6" RECYCLED 'BENDABOARD' PLASTIC HEADER. SET HEADER 1.5" ABOVE ADJACENT FINISH GRADE ON OUTSIDE OF HEADER, (TURF SIDE). GRADE INSIDE OF PLASTIC HEADER TO ALLOW FOR 3" THICK LAYER OF SHREDDED BARK MULCH. BARK MULCH TO BE 1/5" BELOW TOP OF HEADER. CENTER TREE IN CIRCULAR HEADER. FINE GRADE TO DRAIN AWAY FROM TREE TRUNK. HOLD MULCH CLEAR OF TREE TRUNK. REFER TO DETAIL FOR INSTALLATION OF HEADER. REFER TO SPECIFICATIONS.
12. CONTRACTOR SHALL REMOVE REMAINING EXISTING SOD AFTER EXISTING DEMO AND STADIUM CONSTRUCTION IS COMPLETE. REFER TO SOD REMOVAL NOTES ON PLANS AND SPECIFICATIONS.
13. CONTRACTOR SHALL TILL SOIL ADD SOIL AMENDMENTS AND FINE GRADE. FINE GRADING SHALL INCLUDE FILLING DIPS AND CUTTING HUMPS IN GRADE. GRADE TO SHEET FLOW OR SWALE TO EXISTING DRAINAGE STRUCTURES OR NEW PER CIVIL ENGINEER'S PLANS. REFER TO SPECIFICATIONS FOR BID AMENDMENTS. SOIL LABORATORY RESULTS SHALL OUTLINE EXACT AMENDMENTS AND FERTILIZERS REQUIRED. SUBSEQUENT TO GRADING AND AMENDMENT INSTALLATION, COMPACTION FIELD SHALL BE INSPECTED FOR PROPER IRRIGATION COVERAGE. CONTRACTOR SHALL CONTACT LANDSCAPE ARCHITECT/ DISTRICT TO OBSERVE IRRIGATION SYSTEM AND ENSURE THAT HEAD TO HEAD COVERAGE IS ACHIEVED. AFTER APPROVAL OF SYSTEM, CONTRACTOR SHALL HYDROSEED ENTIRE FIELD WITH THE EXCEPTION OF THE BASEBALL INFIELD WHICH WILL BE SODDED. REFER TO SPECIFICATIONS FOR HYDROSEEDING REQUIREMENTS.
14. LOCATION OF SOIL SAMPLE #1. CONTRACTOR SHALL TAKE SOIL SAMPLE FROM THIS LOCATION AND LABEL IT #1.
15. LOCATION OF SOIL SAMPLE #2. CONTRACTOR SHALL TAKE SOIL SAMPLE FROM THIS LOCATION AND LABEL IT #2.
16. LOCATION OF SOIL SAMPLE #3. CONTRACTOR SHALL TAKE SOIL SAMPLE FROM THIS LOCATION AND LABEL IT #3. ALL SOIL SAMPLES SHALL BE FORWARDED TO WALLACE LABORATORIES FOR STANDARD AGRICULTURAL SOIL SUITABILITY ANALYSIS. CONTRACTOR SHALL PROVIDE COPIES OF SOIL ANALYSIS SUBMITTAL FORM AS WELL AS RESULTS TO LANDSCAPE ARCHITECT AND DISTRICT REPRESENTATIVE. ACTUAL SOIL SAMPLE SHALL BE TAKEN BY CONTRACTOR WITH DISTRICT REPRESENTATIVE.
17. BASEBALL AND SOFTBALL INFIELD, BASEBALL WARNING TRACK AND BRICK PERIMETER PER ARCHITECTURAL/ ENGINEER'S PLANS. COORDINATE SOIL PREP AND GRADING WITH CUTTING OF INFIELD EDGES PER ARCHITECT'S/ ENGINEER'S PLANS.
18. EXISTING ASH TREE TO BE PROTECTED IN PLACE. REFER TO EXISTING TREE PROTECTION NOTES.
19. ESTABLISH A 12' DIAMETER CIRCLE AROUND THE EXISTING ASH TREE CENTERED AROUND THE TRUNK THAT IS CLEAR OF GRASS OR HYDROSEED. INSTALL A 3" LAYER OF SHREDDED BARK MULCH IN THE 12' DIAMETER CIRCLE. TAKE CARE IN GRADING AROUND ROOTS. DO NOT EXPOSE ROOTS. HOLD MULCH CLEAR OF BASE OF TRUNK OF TREE. REFER TO EXISTING TREE PROTECTION NOTES AND SPECIFICATIONS.
20. BASEBALL INFIELD TURF SHALL BE 'BANDERA' HYBRID BERMUDA TURF SOD. SOD AVAILABLE FROM WEST COAST SOD. REFER TO PLANTING LEGEND AND SPECIFICATIONS.
21. HOLD FESTUCA 24" MINIMUM CLEAR OF BACK OF CURB.
22. CIRCLE PLANTER SHALL BE MOUNDED. CENTER SHALL BE 24" ABOVE TOP OF CURB. CONTRACTOR SHALL COORDINATE UTILIZING ANY SPOILS FROM FIELD GRADING. ANY SPOILS OR IMPORTED SOILS USED MUST BE TESTED FOR SUITABILITY. REFER TO SPECIFICATIONS.

REFER TO L-01 FOR:
HYDRAULIC CALCULATION
REFER TO L-02 FOR:
IRRIGATION PLAN KEY NOTE LEGEND.
REFER TO SHEET L-05 FOR:
PLANTING PLAN KEY NOTE LEGEND.
REFER TO SHEET L-07 FOR:
IRRIGATION AND PLANTING LEGENDS, SEED/ SOD NOTES, FIELD NOTES, PIPE SIZE TABLE, INSPECTION NOTES, IRRIGATION DETAILS, SOD REMOVAL NOTES.
REFER TO SHEET L-08 FOR:
JOINT RESTRAINT DETAILS, GENERAL NOTES.
REFER TO SHEET L-09 FOR:
IRRIGATION NOTES, RECYCLED WATER USE NOTES, EXISTING TREE PROTECTION NOTES, IRRIGATION DETAILS.
REFER TO SHEETS L-10 & L-11 FOR:
IRRIGATION DETAILS.
REFER TO SHEET L-12 FOR:
PLANTING DETAILS, PLANTING NOTES

DIGALERT
DIAL BEFORE YOU DIG
TWO WORKING DAYS BEFORE YOU DIG
TOLL FREE 1-800-227-2600
A PUBLIC SERVICE BY UNDERGROUND SERVICE ALERT

0' 20' 40' 60'

IDENTIFICATION STAMP
DIV. OF THE STATE ARCHITECT
APP: 03-124281 INC:
REVIEWED FOR
SS ☑ FLS ☑ ACS ☑
DATE: 02/04/2025

ARCHITECT:
architecture
westbergwhite
14471 CHAMBERS RD, SUITE 210
TUSTIN, CA 92780
(714) 508-1780 (714) 508-1780 FAX

CONSULTANT:
RHA LANDSCAPE ARCHITECTS PLANNERS, INC.
6840 Indiana Ave, Suite 100
Riverside, CA 92506
(951) 781.1930 ph
Lic 2799
www.rhala.com
RHA PRJ# 24117

LICENSED LANDSCAPE ARCHITECT
DOUGLAS GROVE No. 6299
Signature
11/26/24
Renewal 10/31
10/31/26
DATE
STATE OF CALIFORNIA

PROJECT NAME:

Bellflower Unified School District
Mayfair High School Sports Fields
6000 North Woodruff Ave
Lakewood, California 90713

CLIENT:

BELLFLOWER UNIFIED SCHOOL DISTRICT
16703 S. Clark Ave.
BELLFLOWER, CALIFORNIA 90706

Δ	Rev. Date	Description

JOB NO:	15008
DATE:	05/28/2024
DRAWN:	DC
CHECK:	JC
ARCHITECT:	PDW
ENGINEER:	

SHEET DESCRIPTION:

PLANTING PLAN

SHEET NO:

L-05

MATCHLINE, SEE SHEET L-05

CANEHILL AVENUE

REFER TO L-01 FOR:
HYDRAULIC CALCULATION
REFER TO L-02 FOR:
IRRIGATION PLAN KEY NOTE LEGEND.
REFER TO SHEET L-05 FOR:
PLANTING PLAN KEY NOTE LEGEND.
REFER TO SHEET L-07 FOR:
IRRIGATION AND PLANTING LEGENDS, SEED/ SOD NOTES, FIELD NOTES, PIPE SIZE TABLE, INSPECTION NOTES, IRRIGATION DETAILS, SOD REMOVAL NOTES.
REFER TO SHEET L-08 FOR:
JOINT RESTRAINT DETAILS, GENERAL NOTES.
REFER TO SHEET L-09 FOR:
IRRIGATION NOTES, RECYCLED WATER USE NOTES, EXISTING TREE PROTECTION NOTES, IRRIGATION DETAILS.
REFER TO SHEETS L-10 & L-11 FOR:
IRRIGATION DETAILS.
REFER TO SHEET L-12 FOR:
PLANTING DETAILS, PLANTING NOTES

DIGALERT
DIAL BEFORE YOU DIG
TWO WORKING DAYS BEFORE YOU DIG
TOLL FREE 1-800-227-2600
A PUBLIC SERVICE BY UNDERGROUND SERVICE ALERT

0' 20' 40' 60'

IDENTIFICATION STAMP
DIV. OF THE STATE ARCHITECT
APP: 03-124281 INC:
REVIEWED FOR
SS ☑ FLS ☑ ACS ☑
DATE: 02/04/2025

ARCHITECT:
architecture
westbergwhite
14471 CHAMBERS RD, SUITE 210
TUSTIN, CA 92780
(714) 508-1780 (714) 508-1780 FAX

CONSULTANT:
RHA LANDSCAPE ARCHITECTS PLANNERS, INC.
6840 Indiana Ave, Suite 100
Riverside, CA 92506
(951) 781.1930 ph
Lic 2799
www.rhala.com
RHA PRJ# 24117

LICENSED LANDSCAPE ARCHITECT
DOUGLAS GROVE No. 6799
Signature
11/26/24
Renewal 10/31
10/31/24
Date
STATE OF CALIFORNIA

PROJECT NAME:

Bellflower Unified School District

Mayfair High School Sports Fields

6000 North Woodruff Ave
Lakewood, California 90713

CLIENT:

BELLFLOWER UNIFIED SCHOOL DISTRICT

16703 S. Clark Ave.
BELLFLOWER, CALIFORNIA 90706

Rev.	Date	Description

JOB NO:	15008
DATE:	05/28/2024
DRAWN:	DC
CHECK:	JC
ARCHITECT:	PDW
ENGINEER:	

SHEET DESCRIPTION:

PLANTING PLAN

SHEET NO:

L-06

WATER EFFICIENT LANDSCAPE WORKSHEET FOR SCHOOLS
Sports Field @ Mayfair High School

Reference Evapotranspiration (ETo) : 48.20 **ETAF:** 0.65

Hydrozone # /Planting Description[a]	Plant Factor (PF)[f]	Irrigation Method[b]	Irrigation Efficiency (IE)[c]	ETAF (PF/IE)	Landscape Area (sq ft)	ETAF x Area	Estimated Total Water Use (ETWU)[e]
Regular Landscape Areas							
Low water use plants	0.3	drip	0.81	0.37	3,692	1,367	**40,864**
				Totals	**3,692**	**1,367**	
					(A)	(B)	
Special Landscape Areas							
Recreational Turf	[redacted]			1	373,931	373,931	**11,174,554**
				1		0	**0**
				1		0	**0**
				Totals	**373,931**	**373,931**	
					(C)	(D)	
						ETWU Total	**11,215,418**
DO NOT TYPE IN GRAY CELLS						**MAWA Total**	**11,246,270**

ETWU Estimated Total Water Use
MAWA Maximum Applied Water Allowance
ETAF Evapotranspiration Adjustment Factor
ETAF for schools is 0.65

ETAF Calculations

Regular Landscape Areas

Total ETAF x Area	1,367	(B)
Total Area	3,692	(A)
Average ETAF	**0.37**	**B / A**

All Landscape Areas

Total ETAF x Area	375,298	(B+D)
Total Area (LA)	377,623	(A+C)
Sitewide ETAF	**0.99**	**(B+D) / (A+C)**

[a] ***Hydrozone #/Planting Description***
E.g.
1) Turf
2) low water use plants
3) medium water use plants

[b] ***Irrigation Method***
overhead spray
or drip

[c] ***Irrigation Efficiency***
0.75 for spray head
0.81 for drip

[d] ***ETWU (Annual Gallons Required) =***
Eto x 0.62 x ETAF x Area
where 0.62 is a conversion factor that converts acre-inches per acre per year to gallons per square foot per year.

[e] ***MAWA (Annual Gallons Allowed) = (****Eto) (0.62) [(ETAF x LA+((1-ETAF) x SLA)]*
where 0.62 is a conversion factor that converts acre-inches per acre per year to gallons per square foot per year, LA is the total landscape area in square feet, SLA is the total special landscape area in square feet, and ETAF is .55 for residential areas and 0.45 for non-residential areas.

Plant Factor (PF)[f]

0 - 0.1	very low water use plants
0.1 - 0.3	low water use plants
0.4 - 0.6	moderate water use plants
0.7 - 1.0	high water use plants

SEEDING AND SODDING NOTES

1. TURFGRASS PLANTING SHALL NOT COMMENCE UNTIL THE IRRIGATION SYSTEM IS INSTALLED AND OPERATING IN A SATISFACTORY MANNER OR UNTIL THE OWNER'S AUTHORIZED REPRESENTATIVE HAS REVIEWED THE FINISHED WORK OR SEED BED PREPARATION OPERATIONS FOR THAT PORTION TO BE PLANTED.
2. AREAS TO BE SODDED SHALL BE WATERED HEAVILY TO PROVIDE AMPLE SOIL MOISTURE AND SHALL BE DONE SO AS NOT TO CAUSE EROSION. SOD LAYING SHALL BEGIN AT THE AREA FARTHEST FROM THE SUPPLY AND SHALL PROCEED WITH STAGGERED JOINTS AND STRIPS BUTTED TIGHTLY. SOD SHALL BE LAYED PARALLEL TO THE SLOPE AND PEGGED TO PREVENT MOVEMENT.
3. NEWLY INSTALLED SOD SHALL BE WATERED IMMEDIATELY AFTER LAYING UNTIL COMPLETELY SOAKED AND THEN ROLLED TO MAKE COMPLETE CONTACT BETWEEN THE SOD AND THE SOIL.
4. AREAS TO BE PLANTED WITH WARM SEASON TURF SPECIES SHALL BE PLANTED BETWEEN THE DATES OF APRIL 1ST AND AUGUST 30TH. SEEDING AFTER THIS DATE SHALL BE DONE AT THE CONTRACTOR'S OWN RISK AT NO ADDITIONAL EXPENSE TO THE OWNER SHOULD A REPLANTING BE NECESSARY. A DORMANT SPRING SEEDING OF COMMON BERMUDAGRASS MAY BE PERFORMED PROVIDING A COVER CROP OF ITALIAN OR WINTER RYE IS PLANTED. RYGRASS SHALL BE SEEDED AT THE RATE OF 200 POUNDS PER ACRE.
5. IT IS THE CONTRACTOR'S RESPONSIBILITY TO MAINTAIN, IN AN ACCEPTABLE MANNER, ALL PLANTED AREAS FOR AT LEAST (120) ONE HUNDRED TWENTY DAYS AFTER COMPLETION OF THE WORK AND UNTIL ACCEPTED BY THE OWNER'S AUTHORIZED REPRESENTATIVE. IT WILL BE THE RESPONSIBILITY OF THE CONTRACTOR TO RE-SPRIG OR RE-SEED ANY AREA THAT BECOMES WASHED OR SHOWS EVIDENCE THAT THE INITIAL PLANTING IS NOT GOING TO PROVIDE ADEQUATE COVERAGE.

HYDROSEED NOTES

THE SEED SHALL BE DELIVERED TO THE JOB SITE IN UNOPENED BAGS, BEARING THE SEED SUPPLIER'S TAG SHOWING THE PROPORTIONS AND MIX COMPONENETS OF THE SEED CONTAINED IN EACH BAG INCLUDING THE AREA TO BE COVERED BY THE SEED CONTAINED IN EACH BAG.

THE CONTRATOR IS TO BRING TO THE JOB SITE, THE PACKING LIST FROM THE SEED SUPPLIER LISTING ALL THE SEED DELIVERED TO THE JOB SITE. SEED TAGS AND PACKING LIST TO CORRESPOND TO RATES OF APPLICATION AND SEED SPECIES LISTED IN THE SPCIFICATIONS AND OR ON THE PLANS.

SOD REMOVAL NOTES

1. CONTRACTOR SHALL MOW TURF TO LOWEST HEIGHT POSSIBLE. ALL CLIPPINGS ARE TO BE CAUGHT AND DISPOSED OF. DO NOT MULCH CLIPPINGS BACK INTO TURF.
2. IRRIGATE TURF PRIOR TO REMOVAL TO FACILITATE REMOVAL AND MINIMIZE DUST.
3. REMOVE ALL IRRIGATION HEADS, VALVES, VALVE BOXES, ETC. IF ANY EQUIPMENT ON THE FIELD IS REMOVABLE, AS BACKSTOPS, TABLES, ETC. THEY SHALL BE REMOVED AND STORED IN A LOCATION APPROVED BY THE OWNER. REFER TO GENERAL NOTES FOR CONTRACTOR REQUIREMENTS REGARDING SALVAGE MATERIAL.
4. CONTRACTOR SHALL REMOVE SOD WITH SOD CUTTING DEVICE OR SIMILAR EQUIPMENT THAT CLEANLY CUTS SOD FROM SOIL.
5. TILL SOIL TO A DEPTH OF 6" AND REMOVE ANY LOOSE ORGANIC MATTER AND STONES. REFER TO SPECIFICATIONS.
6. CONTRACTOR SHALL BE RESPONSIBLE FOR MINIMIZING DUST DRIFT TO EXISTING BUILDINGS ON-SITE AND ANY DUST OFF-SITE DURING THIS OPERATION.
7. REFER TO SPECIFICATIONS FOR SOIL AMENDMENT REQUIREMENTS, (FOR BIDDING PURPOSES ONLY). SOIL LABORATORY RECOMMENDATIONS FOR AMENDMENT/ REMEDIATION SHALL SUPERSEDE SPECIFICATION RECOMMENDATIONS. CONTRACTOR SHALL ASSIGN THIRD PARTY TO COLLECT SAMPLES. SAMPLE COLLECTION FEES, SOIL LABORATORY FEES SHALL BE PAID FOR BY CONTRACTOR. TILL IN AMENDMENTS TO THOROUGHLY MIX WITH EXISTING SOIL.
8. FINE GRADE TO FOLLOW CIVIL ENGINEER'S GRADING PATTERN, EITHER SHEET FLOWING OR SWALING TO EXISTING DRAINAGE STRUCTURES. REFER TO SPECIFICATIONS.
7. CONTRACTOR SHALL PERFORM WEED KILL PER SPECIFICATIONS.
8. INSTALL NEW TURF PER PLAN.
9. CONTRACTOR SHALL BE RESPONSIBLE FOR CORDONING OFF AREA DURING TURF ESTABLISHMENT. CORDONING METHOD SHALL BE APPROVED BY GENERAL CONTRACTOR AND DISTRICT.
10. ALL MATERIAL SHALL BE REMOVED FROM SITE IN A LEGAL MANNER AND DUMPED AT AN APPROPRIATE FACILITY. ALL WORK SHALL BE DONE PER LOCAL CODES AND ORDINANCES. ALL PERMITS, FEES, ETC. REQUIRED TO PERFORM ALL WORK SHALL BE THE RESPONSIBILITY OF THE CONTRACTOR.

BIG ROLL SOD NOTES

1. BIG ROLL SOD SHALL BE INSTALLED WITH LARGE WHEELED VEHICLES, NO TRACKED VEHICLES ALLOWED. ONLY VEHICLES WITH SIDE SHIFT ATTACHEMENT FOR LAYING SOD IS ALLOWED.
2. PULL NETTING OFF SOD AS IT IS BEING UNROLLED.
3. CONTRACTOR SHALL ROLL SOD 2 WEEKS AFTER INSTALLATION WITH 8' WIDE DRUM ROLLER. BERMUDA GRASS MUST EXHIBIT 1/3"-1/2" OF ROOTING PRIOR TO ROLLING. DO NOT ROLL SOD DIRECTLY AFTER INSTALLATION AS ROLLER MAY PULL ON SOD AND PULL APART JOINTS.
4. CONTACT JOHN MARMAN, (WEST COAST TURF) FOR ANY QUESTIONS REGARDING INSTALLATION METHODS FOR BIG ROLL SOD.

NOTES

ALL TREES IN FIELD SHALL INSTALLED WITHIN 6' OF ANY HARDSCAPE SHALL HAVE DEEPROOT UB-18 DEEP ROOT BARRIERS INSTALLED. BARRIER SHALL BE INSTALLED, EXTENDING ALONG EDGE OF HARDSCAPE 6' IN EITHER DIRECTION AWAY FROM CENTER OF TRUNK.
CONTRACTOR SHALL VERIFY LOCATION OF ALL UNDERGROUND UTILITIES ON SITE PRIOR TO TRENCHING. COORDINATE WITH CIVIL, ELECTRICAL AND MECHANICAL PLANS WHEN ROUTING MAINLINES.
REFER TO RECYCLED WATER NOTES FOR ALL REQUIREMENTS PERTAINING TO THE USE OF RECYCLED WATER FOR IRRIGATION.

PLANT SCHEDULE

SYMBOL	QTY	BOTANICAL / COMMON NAME	CONTAINER	WUCOLS	SPACING
TREES					
	18	EXISTING TREE PROTECT IN PLACE	EXISTING		
	19	LAGERSTROEMIA INDICA X FAURIEI 'TUSCARORA' / CRAPE MYRTLE	36"BOX	MODERATE	
	17	METROSIDEROS EXCELSA / NEW ZEALAND CHRISTMAS TREE	36"BOX	MODERATE	
	3	QUERCUS ILEX / CORK OAK	36"BOX	LOW	
SHRUBS					
	66	CALLISTEMON CITRINUS `LITTLE JOHN` / DWARF BOTTLE BRUSH	5 GAL	LOW	30" o.c.
	282	FESTUCA CALIFORNICA / CALFORNIA FESCUE	1 GAL	LOW	24" o.c.
	63	PHOTINIA X FRASERI / FRASER PHOTINIA	5 GAL	LOW	36" o.c.

SYMBOL	QTY	BOTANICAL / COMMON NAME	CONT	WUCOLS	SPACING
GROUND COVERS					
	367,500 SF	HYDRO SEED FIELD TURF / 'GRAND SLAM' BY STOVER SEED	HYDROSEED	HIGH	
	6,431 SF	SODDED TURF / 'BANDERA' BY WEST COAST TURF	SOD	HIGH	

CONTRACTOR SHALL HYDRO-SEED BLEND AT A RATE OF 10-12 LBS PER 1,000 SQUARE FEET WHERE SEEDING IN AREAS WITH NO GRASS. SEED AT A RATE OF 6-8 LBS PER 1,000 SQUARE FEET IF OVER-SEEDING EXISTING TURF. SEED AVAILABLE FROM STOVER SEED COMPANY (800) 621-0315. REFER TO MANUFACTURE'S SPECIFICATIONS FOR RATES AND INSTALLATION NOTES. REFER TO SPECIFICATIONS.

BID ALTERNATE:
SODDED TURF - SODDED TURF AREAS ARE NOTED
CONTRACTOR SHALL SOD BASEBALL INFIELD WITH 'BANDERA' HYBRID BERMUDA. AVAILABLE FROM WEST COAST TURF COMPANY (888) 893-8873. WWW.WESTCOASTTURF.COM. REFER TO SPECIFICATIONS FOR INSTALLATION NOTES. INSTALL BIG ROLL SOD. REFER TO BIG ROLL SOD NOTES.

INSTALL MINIMUM 3" THICK LAYER OF SHREDDED BARK MULCH BENEATH PROPOSED AND EXISTING TREES AS SHOWN. GRADE SOIL TO ALLOW FOR FULL DEPTH OF MULCH. HOLD MULCH CLEAR OF TRUNKS OF TREES. INSTALL MINIMUM 3" THICK LAYER OF SHREDDED BARK MULCH IN ALL SHRUB PLANTER AREAS. SYMBOL IS NOT SHOWN IN THESE PLANTERS FOR CLARITY. HOLD BARK CLEAR OF SHRUB STEMS.
HOLD TOP OF BARK LAYER 1/2" BELOW TOP OF ADJACENT HEADER, CURB OR CONCRETE WALK. APPLY BARK STABILIZER TO ALL SHREDDED BARK MULCH. REFER TO SPECIFICATIONS.

FURNISH & INSTALL 'PRO GOLD INFIELD MIX' AVAILABLE FROM GAIL MATERIALS (951) 667-6106 GAILMATERIALS.NET ON THE BASEBALL AND SOFTBALL FIELDS. REFER TO SPECIFICATIONS.
PLACE AT THE FOLLOWING THICKNESS:
-4" THICK IN INFIELDS AND BULLPEN CAGES
-6" THICK IN A 10' DIAMETER AROUND THE BASES
-3" THICK IN THE OUTFIELD WARNING TRACK

FIELD NOTES

- CONTRACTOR SHALL VERIFY FIELD DIMENSIONS AND CONFIGURATION PRIOR TO LAYING OUT HEADS. LANDSCAPE ARCHITECT AND SCHOOL DISTRICT SHALL BE INFORMED IN WRITING OF ANY FIELD DISCREPANCIES. FAILURE TO DO SO WILL RESULT IN CONTRACTOR BEING RESPONSIBLE FOR ANY CHANGES AS A RESULT. ANY DIFFERENCE FOUND TO HARDSCAPE EDGES SHALL BE REFLECTED ON AS-BUILT PLANS.
- A MINIMUM OF 6" CLEARANCE SHALL BE PROVIDED FOR ALL LATERAL LINE IN TRENCHES. CONTRACTOR SHALL CUT SINGLE WIDE TRENCH WHERE EVER POSSIBLE TO ACCOMMODATE REQUIRED LATERAL LINES. DRAWINGS ARE DIAGRAMMATIC AND CANNOT SHOW EXACT LOCATION AND DIMENSION OF ALL TRENCHES REQUIRED. CONTRACTOR SHALL BE RESPONSIBLE FOR LOCATING TRENCHES SO AS TO ARRANGE LATERAL LINE PIPING TO HEADS AS SHOWN.
- MAINLINE SHALL BE SET WITHIN TURF FIELD AND A CONSISTENT DIMENSION FROM BACK OF CURB OR FINISH SURFACE. REFER TO PLAN FOR REQUIRED DIMENSIONS. DOCUMENT ON AS-BUILT DRAWINGS.

•• CONTRACTOR SHALL BE RESPONSIBLE FOR REMOVING ANY EXISTING TURF ON FIELD.
•• CONTRACTOR SHALL PROTECT IN PLACE ALL EXISTING TREES AS NOTED INCLUDING ROOTS WITHIN THIS TURF AREA. REFER TO TREE PROTECTION NOTES.
•• REPAIR ALL HUMPS AND DIPS/ GRADES DUE TO TRENCHING BY IRRIGATION CONTRACTOR AND OTHER UTILITY CONTRACTORS. FINE GRADING OF ENTIRE FIELD SHALL BE PERFORMED TO CREATE A EVENLY SLOPED FIELD TO EXISTING/ PROPOSED DRAINAGE STRUCTURES. CONTRACTOR SHALL REVIEW CIVIL ENGINEER'S PLANS AND ENSURE THAT GRADING CONCEPT PER CIVIL ENGINEER'S PLANS IS MAINTAINED.

WHERE SOD IS TO BE REMOVED DUE TO REQUIRED GRADING:

REMOVE SOD AND RAKE UP DEAD ORGANIC MATERIAL/ THATCH AND DISPOSE OF ALL MATERIAL OFF SITE IN A LEGAL MANNER. CONTRACTOR SHALL FINE GRADE THE FIELD TO CREATE A SURFACE FOR TURF INSTALLATION. REFER TO SPECIFICATIONS FOR REQUIREMENTS FOR TILLING AND SOIL PREP. REMOVE ALL STONES. REFER TO SPECIFICATIONS. FINE GRADE TO MATCH EXISTING GRADES, SLOPE PROPERLY TO EXISTING DRAINAGE STRUCTURES AND COMPACT PER SPECIFICATIONS. HYDRO-SEED. REFER TO SPECIFICATIONS.

INSPECTION NOTES

REQUIRED INSPECTIONS / APPROVALS FROM DISTRICT INSPECTOR AND OR LANDSCAPE ARCHITECT: FAILURE TO OBTAIN APPROVALS OR HAVING UP TO DATE AS-BUILTS UPON CONSTRUCTION INSPECTION BY DISTRICT INSPECTOR OR LANDSCAPE ARCHITECT MAY RESULT IN DISTRICT SUSPENDING WORK:

1. PRE-CONSTRUCTION MEETING.
2. STATIC PRESSURE VERIFICATION AT POINT OF CONNECTION.
3. DELIVERY OF SALVAGED EXISTING VALVES TO DISTRICT MAINTENANCE DEPARTMENT.
4. VERIFICATION OF PLANTER DIMENSIONS.
5. MAIN LINE LAYOUT/ TRENCHING.
6. MAIN LINE PRESSURE TEST
7. IRRIGATION COVERAGE TEST.
8. INSPECTION OF RELEASE TO MAINTENANCE PERIOD.
9. FINAL INSPECTION FOR RELEASE TO MAINTENANCE PERIOD.

PIPE SIZING CHART

REFER TO THIS CHART WHEN SIZING LATERAL LINE. FOLLOW SIZE RECOMMENDATIONS IF OR WHEN REVISIONS TO LATERAL LINE LAYOUTS MUST BE MADE DUE TO DIFFERENCES IN AS-BUILT CONDITIONS. IF DIFFERENCES IN PLANTER CONFIGURATIONS VARY GREATLY FROM WHAT IS EXHIBITED ON PLANS, CONTRACTOR SHALL CONTACT LANDSCAPE ARCHITECT IN WRITING PRIOR TO ANY WORK FOR DIRECTION. PVC LATERAL AND MAINLINE 1.5" AND SMALLER SHALL BE SCHEDULE 40 PVC, LATERAL AND MAINLINE 2"-3" SHALL BE CLASS 315, 4" SHALL BE CLASS 200 GASKETED PVC.

GPM	PIPE SIZE	GPM	PIPE SIZE
0 - 4	1/2"	29 - 44	2"
5 - 8	3/4"	45 - 65	2.5"
9 - 12	1"	66 - 95	3"
13 - 21	1.25"	96 - 170	4"
22 - 28	1.5"		

Valve Callout: Valve Number, Valve Flow, Valve Size

NOTE:
FOR CLARITY, LATERAL LINE SYSTEMS ARE SHOWN DIAGRAMMATICALLY. IF CONTRACTOR WISHES TO RE-ROUTE PIPING IN A DIFFERENT FASHION TO ACCOMMODATE HEADS, PIPE SIZING CHART SHALL BE USED TO SIZE LATERAL LINE PIPING.

COORDINATE INSTALLATION OF SCHEDULE 40 PVC CONDUIT UNDER CONCRETE PAVING WITH SITE SUPERINTENDENT. STUB CONDUIT 12" FROM EDGE OF FINISH SURFACE.

CONTROLLERS:
EXISTING CONTROLLERS SHALL BE USED. NO NEW CONTROLLER SPECIFIED THIS PROJECT.

(A) CONTROLLER 'A': ET WATER SMARTBOX MODEL 105W-16, 16 STATION WALL MOUNT CONTROLLER. 16 ACTIVE STATIONS

(B) CONTROLLER 'B': ET WATER SMARTBOX MODEL 105W-8. 8 STATION WALL MOUNT CONTROLLER. 5 ACTIVE STATIONS

(C) CONTROLLER 'C': ET WATER SMARTBOX MODEL 105W-24. 24 STATION WALL MOUNT CONTROLLER. 21 ACTIVE STATIONS

(D) CONTROLLER 'D': ET WATER SMARTBOX MODEL 205W-40 40 STATION WALL MOUNT CONTROLLER. 19 ACTIVE STATIONS

- ALL CONTROLLERS SHALL BE INSTALLED INSIDE UTILITY ROOM IN CONCESSION/ RESTROOM BUILDING. POWER FOR CONTROLLERS PROVIDED PER ELECTRICAL ENGINEER'S PLANS. CONTRACTOR TO MAKE FINAL HOOKUPS TO POWER.
- COORDINATE CONDUITS FOR RCV WIRES, GROUND ROD AND RAIN SHUT OFF DEVICE WITH BUILDING CONSTRUCTION. ALL CONDUITS ABOVE GRADE SHALL BE RIGID GALVANIZED STEEL. PAINT ALL EXTERIOR ABOVE GRADE CONDUIT TO MATCH BUILDING COLOR. ALL CONDUITS ATTACHED TO WALLS SHALL BE DONE IN A NEAT AND ORDERLY MANNER AND SECURED WITH APPROPRIATE CONDUIT STRAPS, ANCHORS AND SCREWS.
- SMARTBOX CONTROLLER INSTALLATION AND START UP SHALL BE CERTIFIED BY ET WATER FIELD REPRESENTATIVE.
- CONTRACTOR SHALL PROVIDE AND INSTALL RAIN SENSOR FOR EACH CONTROLLER.

INSTALL GROUND RODS FOR THE RE-LOCATED CONTROLLERS AND EXISTING CONTROLLERS. REFER TO DETAIL FOR INSTALLATION.

COORDINATE INSTALLATION OF CONTROLLER ASSEMBLY WITH SCHOOL DISTRICT. PROVIDE SEPARATE SWEEP ELLS FOR RCV WIRES, GROUND ROD AND POWER. IRRIGATION CONTRACTOR SHALL BE RESPONSIBLE FOR MAKING FINAL POWER HOOKUPS TO 120VAC POWER SUPPLIED PER ELECTRICAL ENGINEER'S PLANS.

IRRIGATION SCHEDULE

SYMBOL	MANUFACTURER/MODEL/DESCRIPTION	PSI
8 Q T H F	HUNTER PROS-06-PRS30-CV-R 8 SERIES TURF SPRAY, 30 PSI REGULATED 6IN. POP-UP CHECK VALVE AND PURPLE CAP.	30
10 Q T H F	HUNTER PROS-06-PRS30-CV-R 10 SERIES TURF SPRAY, 30 PSI REGULATED 6IN. POP-UP CHECK VALVE AND PURPLE CAP.	30
12 Q T H F	HUNTER PROS-06-PRS30-CV-R 12 SERIES TURF SPRAY, 30 PSI REGULATED 6IN. POP-UP CHECK VALVE AND PURPLE CAP.	30
17 Q H	HUNTER PROS-06-PRS30-CV-R 17 SERIES TURF SPRAY, 30 PSI REGULATED 6IN. POP-UP CHECK VALVE AND PURPLE CAP.	30
4 6 8 10 12 15 17	HUNTER PROS-06-PRS30-CV-R ADJ SERIES TURF SPRAY, 30 PSI REGULATED 6IN. POP-UP CHECK VALVE AND PURPLE CAP.	30
0.25 0.50	HUNTER RZWS-36-CV-R 36IN. LONG RZWS WITH .25 GPM BUBBLERS, PURPLE GRATE	30

SYMBOL	MANUFACTURER/MODEL/DESCRIPTION	PSI	GPM	RADIUS
25	HUNTER I-20-04-SS-PRB-R-MPR 25 TURF ROTOR, 4IN. POP-UP. ADJUSTABLE AND FULL CIRCLE. MPR NOZZLE. WITH PURPLE COVER.	45		21'
30	HUNTER I-20-04-SS-PRB-R-MPR 30 TURF ROTOR, 4IN. POP-UP. ADJUSTABLE AND FULL CIRCLE. MPR NOZZLE. WITH PURPLE COVER.	45		26'
35	HUNTER I-20-04-SS-PRB-R-MPR 35 TURF ROTOR, 4IN. POP-UP. ADJUSTABLE AND FULL CIRCLE. MPR NOZZLE. WITH PURPLE COVER.	45		30'
04	HUNTER I-25-04-SS-R 04 TURF ROTOR, 4IN. POP-UP. ADJUSTABLE AND FULL CIRCLE. PURPLE COVER	50	4.3	35'
07	HUNTER I-25-04-SS-R 07 TURF ROTOR, 4IN. POP-UP. ADJUSTABLE AND FULL CIRCLE. PURPLE COVER	50	7	40'
08	HUNTER I-25-04-SS-R 08 TURF ROTOR, 4IN. POP-UP. ADJUSTABLE AND FULL CIRCLE. PURPLE COVER	50	8.3	42'
10	HUNTER I-25-04-SS-R 10 TURF ROTOR, 4IN. POP-UP. ADJUSTABLE AND FULL CIRCLE. PURPLE COVER	50	10.1	43'
15	HUNTER I-25-04-SS-R 15 TURF ROTOR, 4IN. POP-UP. ADJUSTABLE AND FULL CIRCLE. PURPLE COVER	50	13.4	48'
18	HUNTER I-25-04-SS-R 18 TURF ROTOR, 4IN. POP-UP. ADJUSTABLE AND FULL CIRCLE. PURPLE COVER	50	14.5	49'

SYMBOL	MANUFACTURER/MODEL/DESCRIPTION
	MEDIUM FLOW DRIP CONTROL VALVE 1" WEATHERMATIC 8200CR-XS24NP VALVE WITH 1" NETAFIM 120 MESH DISC FILTER. PRESSURE REGULATION: 40PSI.
F	DRIPLINE FLUSH VALVE INSTALL 3/4" PVC BALL VALVE AT END OF DRIPLINE RUN.
	AREA TO RECEIVE DRIPLINE NETAFIM TLRW-09-12 (18) TECHLINE RW DRIPLINE WITH PURPLE STRIPE. 0.9GPH EMITTERS AT 12" O.C. DRIPLINE LATERALS SPACED AT 18" APART, WITH EMITTERS OFFSET FOR TRIANGULAR PATTERN. BURY DRIPLINE 2" BELOW GRADE.

CONTRACTOR SHALL ADJUST ALL RADII ON ADJUSTABLE NOZZLES TO MINIMIZE OVER-SPRAY ONTO WALLS, TRACK SURFACE AND WALKS. NO OVER-SPRAY ALLOWED ONTO BUILDINGS, DRINKING FOUNTAINS OR PICNIC TABLES.

VALVES:

WEATHERMATIC BRONZE BULLET REMOTE CONTROL VALVE WITH XPR PRESSURE REGULATOR AND NP- NON POTABLE HANDLE. REFER TO DETAIL FOR INSTALLATION. SIZE OF VALVE NOTED ON PLANS. ADJUST PRESSURE REGULATOR AS REQUIRED TO PROVIDE MAXIMUM PERFORMANCE TO DOWNSTREAM SYSTEM.

NO SYM — FOR ISOLATION VALVES IN REMOTE CONTROL ASSEMBLY USE:
2" AND SMALLER - NIBCO FULL PORT T-585-70-66 SERIES BRONZE BALL VALVE. 2.5" AND 3" - NIBCO T-580-70-UL CONVENTIONAL PORT BRONZE BALL VALVE.

ISOLATION VALVES IN MAINLINE 3" AND SMALLER - NIBCO BALL VALVE MODEL T-585-70-66 WITH THREADED TWO PIECE BODY. FULL PORT FOR 1/4"-1', CONVENTIONAL PORT FOR 1.25"-3". ISOLATION VALVES 4" AND LARGER TO BE NIBCO F-510-S6-R-66-FS FLANGED BALL VALVE. REFER TO DETAIL SHEET FOR INSTALLATION AND SELECTION OF ASSOCIATED FITTINGS / PARTS.

QUICK COUPLER PROVIDE AND INSTALL RAIN BIRD 44-NP WITH LOCKING PURPLE COVER FOR QUICK COUPLERS SERVICED BY RECYCLED WATER. INSTALL RAIN BIRD 44LRC FOR QUICK COUPLERS SERVICED BY POTABLE WATER. QUICK COUPLERS SERVICED BY POTABLE WATER ARE LOCATED IN SYNTHETIC TURF ONLY. REFER TO SPECIFICATIONS FOR QUANTITY OF KEYS THAT WILL BE REQUIRED FOR THE CONTRACTOR TO PROVIDE. REFER TO DETAILS FOR INSTALLATION.

IRR — 4" RECLAIMED WATER IRRIGATION POINT OF CONNECTION.

POC — 2" POTABLE WATER CONNECTION PROVIDED PER CIVIL ENGINEERS PLAN.

BF — REDUCED PRESSURE PRINCIPAL BACKFLOW DEVICE:
2" FEBCO 825Y BACKFLOW SUPPLIED BY POTABLE WATER STUB-OUT PROVIDED PER CIVIL ENGINEERS PLAN. INSTALL STRONGBOX SBBC-45CR BACKFLOW ENCLOSURE.

IRRIGATION PIPE:

RECLAIMED IRRIGATION MAINLINE:
PACIFIC PLASTIC RECLAIMED WATER PURPLE SOLVENT WELD PIPE OR APPROVED EQUIVALENT PVC IRRIGATION MAINLINE. SIZES 1.5" AND SMALLER SHALL BE SCHEDULE 40 PVC. SIZES 2"-3" SHALL BE PVC CLASS 315. 4"-6" PIPE SHALL BE CLASS 200 PVC. ALL 4" AND LARGER PVC PIPE SHALL BE GASKETED. REFER TO DETAIL FOR INSTALLATION. REFER NOTES, DETAILS AND SPECIFICATIONS. MAINLINE 2"-3" SHALL BE THRUST BLOCKED.

DW — POTABLE WATER LINE:
PACIFIC PLASTIC OR APPROVED WHITE MAINLINE OR APPROVED EQUIVALENT PVC IRRIGATION MAINLINE. SIZES 1.5' AND SMALLER SHALL BE SCHEDULE 40 PVC. SIZES 2"-3" SHALL BE PVC CLASS 315. 4"-6" PIPE SHALL BE CLASS 200 PVC. REFER TO DETAIL FOR INSTALLATION. REFER NOTES, DETAILS AND SPECIFICATIONS. MAINLINE 2"-3" SHALL BE THRUST BLOCKED.

IRRIGATION LATERAL LINE:
PACIFIC PLASTIC RECLAIMED WATER PURPLE SOLVENT WELD PIPE OR APPROVED EQUIVALENT PVC IRRIGATION LATERAL LINE. SIZES 1.5" AND SMALLER SHALL BE SCHEDULE 40 PVC. SIZES 2"-3" SHALL BE PVC CLASS 315. 4"-6" PIPE SHALL BE CLASS 200 PVC. 4" AND LARGER PIPE SHALL BE GASKETED. REFER TO DETAIL FOR INSTALLATION. REFER NOTES, DETAILS AND SPECIFICATIONS. LATERAL LINE 2"-3" SHALL BE THRUST BLOCKED.

APPROVED PVC SCHEDULE 40 ELECTRICAL CONDUIT. BURY MINIMUM 18"/24" BELOW FINISH GRADE/SUB-GRADE. EXTEND MINIMUM 12" BEYOND EDGE OF PAVING. SIZE AS REQUIRED. PIPING, CONTROL WIRING AND FLOW METER WIRE UNDER ASPHALT SHALL BE SLEEVED SEPARATELY THROUGH SCHEDULE 40 PVC CONDUIT. CONDUIT SHALL BE INSTALLED A MINIMUM OF 24" BELOW STREET OR PARKING OF PAVED SURFACES. CONDUIT SHALL BE INSTALLED A MINIMUM OF 18" UNDER WALLS. REFER TO DETAIL FOR INSTALLATION.

APPROVED SCHEDULE 40 PVC SLEEVING. SLEEVING SIZE SHALL BE 3x THE SIZE OF THE PIPE TO BE SLEEVED. SLEEVING SHALL EXTEND MINIMUM 12" BEYOND EDGE OF FINISH SURFACE. BURY MINIMUM 18"/24" BELOW FINISH GRADE OR SUB-GRADE.

ALL PIPING SHALL BE INSTALLED, INSPECTED AND BACKFILLED PER SPECIFICATIONS AND DETAILS. ALL PIPING 4" AND LARGER SHALL BE GASKETED. ALL PIPING 4" AND LARGER SHALL HAVE JOINT RESTRAINTS INSTALLED PER DETAILS. ALL DUCTILE IRON JOINT RESTRAINTS SHALL HAVE 'LEEM-GUARD' FUSION BONDED EPOXY COATING ON ALL DUCTILE IRON FITTINGS AND RESTRAINTS. ALL PIPING CARRYING RECYCLED WATER SHALL BE INSTALLED AND INSPECTED PER WATER DISTRICT NOTES, DETAILS AND SPECIFICATIONS.

IDENTIFICATION STAMP
DIV. OF THE STATE ARCHITECT
APP: 03-124281 INC:
REVIEWED FOR
SS ☑ FLS ☑ ACS ☑
DATE: 02/04/2025

ARCHITECT:
westbergwhite architecture
14471 CHAMBERS RD, SUITE 210
TUSTIN, CA 92780
(714) 508-1780 (714) 508-1780 FAX

CONSULTANT:
RHA LANDSCAPE ARCHITECTS PLANNERS, INC.
6840 Indiana Ave, Suite 100
Riverside, CA 92506
(951) 781.1930 ph
Lic 2799
www.rhala.com
RHA PRJ# 24117

LICENSED LANDSCAPE ARCHITECT DOUGLAS GROVE NO. 2799 Signature 11/30/25 Renewal Date 12/16/24 Date STATE OF CALIFORNIA

PROJECT NAME:
Bellflower Unified School District
Mayfair High School Sports Fields
6000 North Woodruff Ave
Lakewood, California 90713

CLIENT:
BELLFLOWER UNIFIED SCHOOL DISTRICT
16703 S. Clark Ave.
BELLFLOWER, CALIFORNIA 90706

#	Rev. Date	Description

JOB NO:	15008
DATE:	05/28/2024
DRAWN:	DC
CHECK:	JC
ARCHITECT:	PDW
ENGINEER:	

SHEET DESCRIPTION:
LANDSCAPE LEGENDS AND NOTES

SHEET NO:
L-07

TAKE-OFF & INSTALLATION OF LEEMCO JOINT RESTRAINTS

For estimating purposes, it is best to first make a schedule (Table) of all ductile iron fittings on the project. Then next to each fitting jot down the number and type of joint restraints required using the following simplified guide. Think of joint restraints the same way as with thrust blocks. Thrust forces are created by changes in direction (bends) and pipe diameter changes. Direction of flow plays no significant role…static pressure plays a key role. Long runs of pipe that encounter no significant bend (say less than 15 degrees) and encounter no reducers do not require joint restraints.

Bend: 90

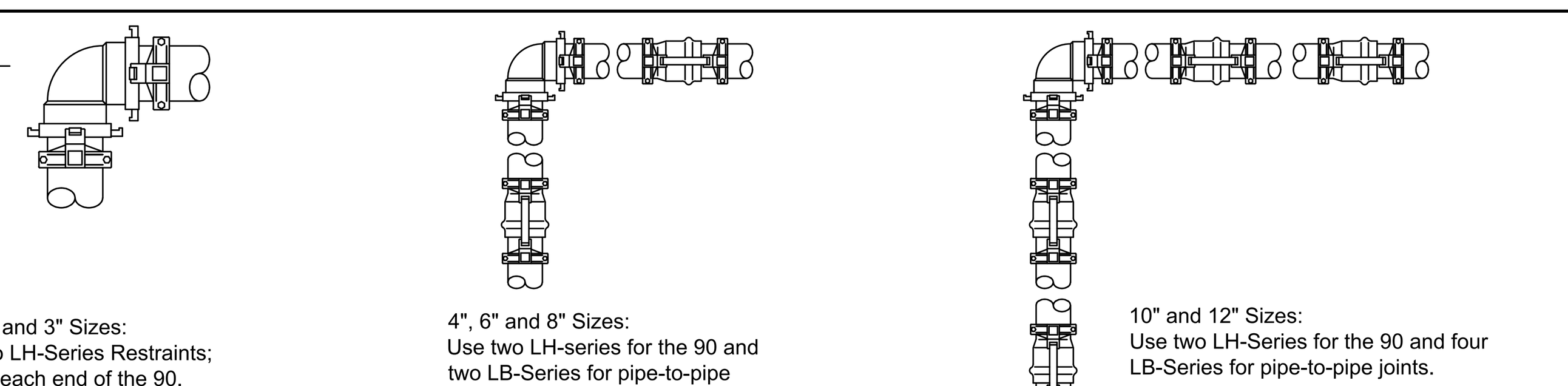

2", 2.5" and 3" Sizes:
Use two LH-Series Restraints; one for each end of the 90.

4", 6" and 8" Sizes:
Use two LH-series for the 90 and two LB-Series for pipe-to-pipe joints.

10" and 12" Sizes:
Use two LH-Series for the 90 and four LB-Series for pipe-to-pipe joints.

45 - degree

22 - degree

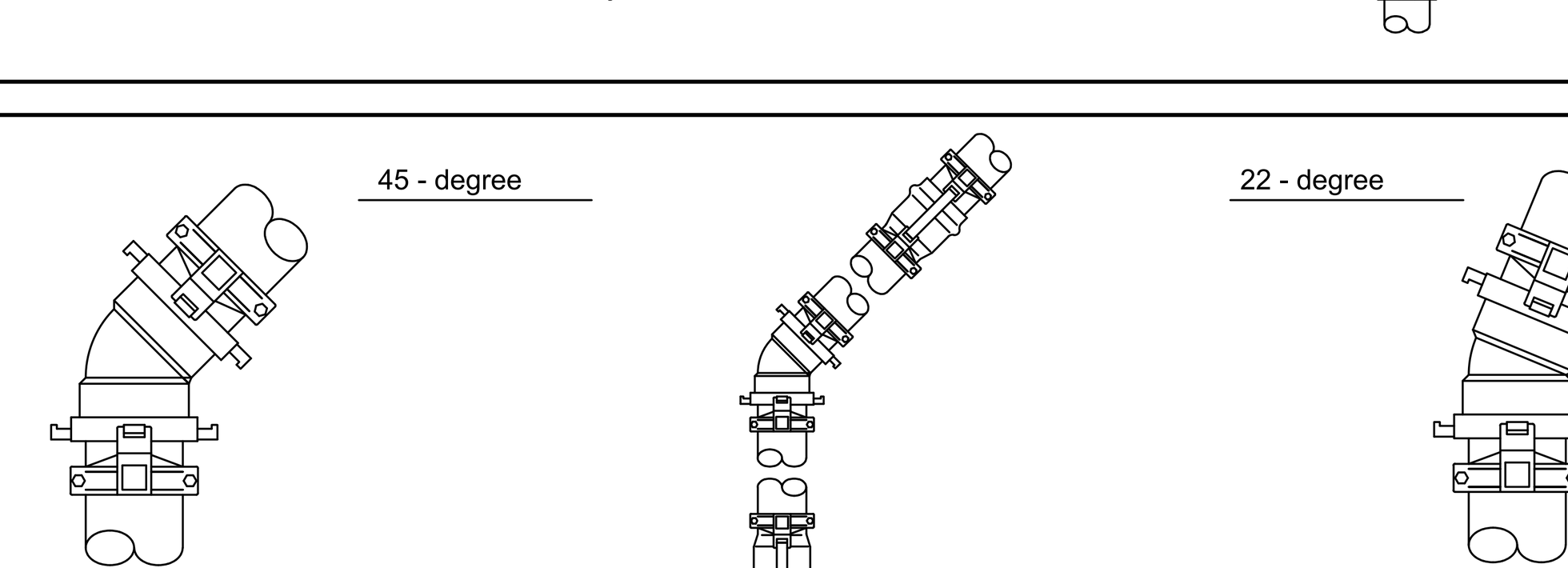

2", 2.5", 3", 4", 6" Sizes:
Use two LH-Series Restraints

8", 10" and 12" Sizes:
Use two LH-Series and two LB-Series.

All Sizes:
22-degree Bends require two LH-Series.
No restraints required for the next joints.

2. Reducers

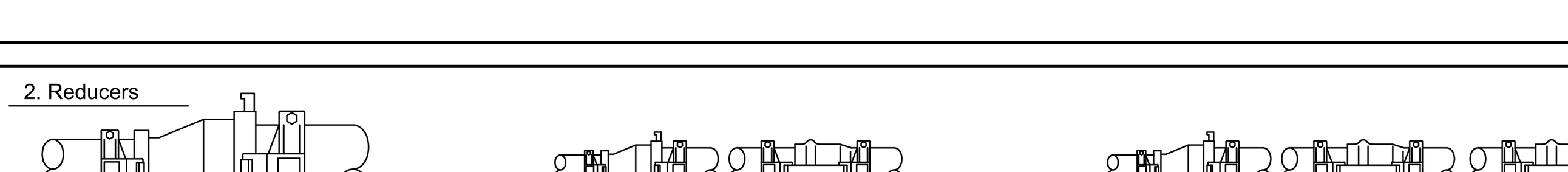

For reasons of economy, it is best to avoid reducers…instead reduce at a tee or a bend. Both ends of reducers must be restrained using LH-Series.

In addition to the reducer, the next joint on the larger diameter needs one LB-Series for the following reductions:
4 x 2, 4 x 2.5, 6 X 3, 6 X 4, 8 X 6, 10 x 8

In addition to the reducer, the next two joints on the larger diameter side need LB-Series for the following reductions:
6 x 2, 6 x 2.5, 8 x 4, 8 x 3, 10 x 6, 12 x 10, 12 x 8.
More severe reductions (10 x 4, 10 x 3, 12 x 6) require three, LB-Series.

3. Tee

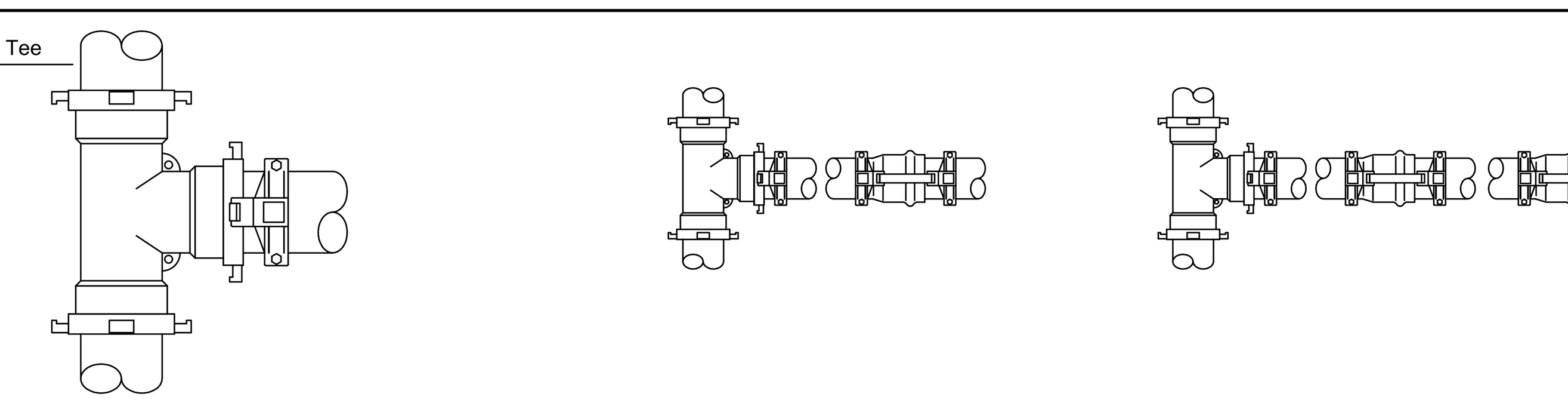

When pipe along the run does not change in size, only the branch end needs a LH–Series restraint.
2", 2.5", 3" Branch Size:
One LH–Series on the branch end.

4", 6", 8" Branch Size:
One LH-Series on the branch end and one LB-Series on the next joint.

10", 12" Branch Sizes:
One LH-Series on the branch end and two LB-Series on the next two joints.

Reducing Tee's

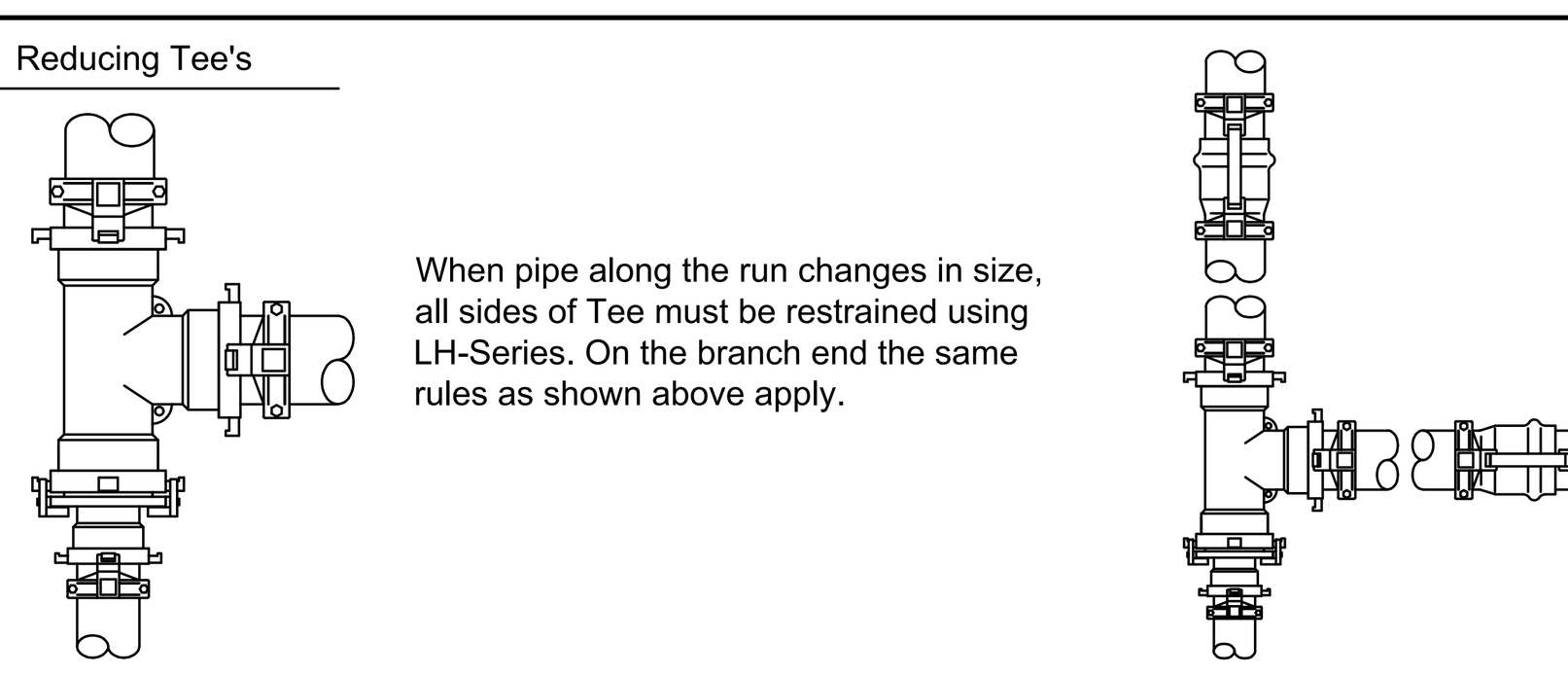

When pipe along the run changes in size, all sides of Tee must be restrained using LH-Series. On the branch end the same rules as shown above apply.

Along the run, additional joint restraints may be needed on the larger diameter end, using the same rules as for 90-dgree bends.

The next joint after a restrained fitting could be another ductile iron fitting…such as a Service Tee…
When the next joint is another fitting, simply restrain the ductile iron fitting using LH–Series restraints instead of LB–Series that are made for pipe–to–pipe connections as illustrated below.

4. Service Tee's ... normally do not require restraints.

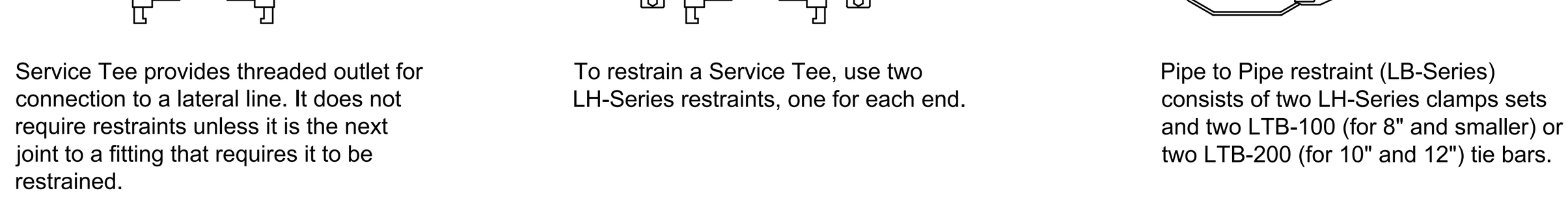

Service Tee provides threaded outlet for connection to a lateral line. It does not require restraints unless it is the next joint to a fitting that requires it to be restrained.

To restrain a Service Tee, use two LH-Series restraints, one for each end.

Pipe to Pipe restraint (LB-Series) consists of two LH-Series clamps sets and two LTB-100 (for 8" and smaller) or two LTB-200 (for 10" and 12") tie bars.

5. Vertical Offsets.....slopes

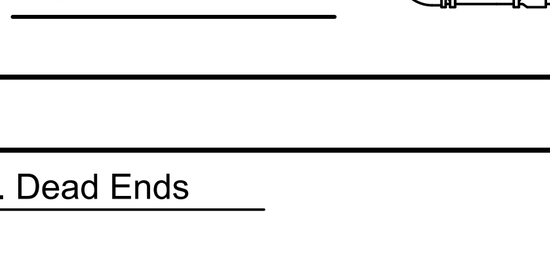

Elevation View

Pipe to Pipe restraint (LB-Series) consists of two LH-Series clamps sets and two LTB-100 (for 8" and smaller) or two LTB-200 (for 10" and 12") tie bars.

6. Long Runs of Pipe

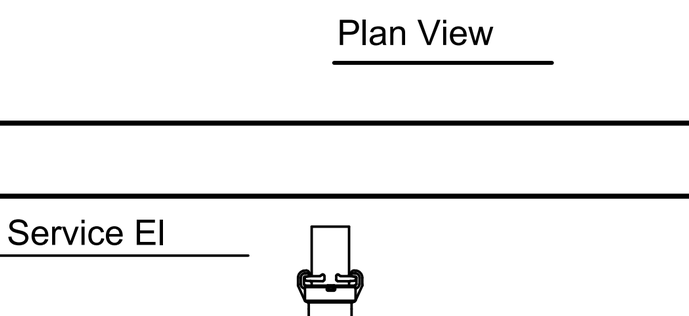

Plan View

Pipe joints on relatively straight runs of pipe that do not encounter a major change in direction (larger than 15 degrees) or a reducer do not require joint restraints.

7. Dead Ends

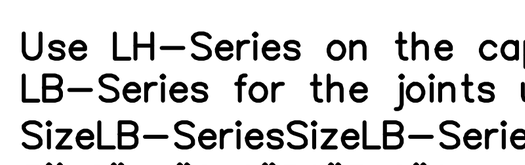

Use LH–Series on the cap and the following LB–Series for the joints upstream of the Cap SizeLB–SeriesSizeLB–Series2", 2.5", 3"18"44"210"56"312"6

Size	LB-Series	Size	LB-Series
2", 2.5", 3"	1	8"	4
4"	2	10"	5
6"	3	12"	6

Service El

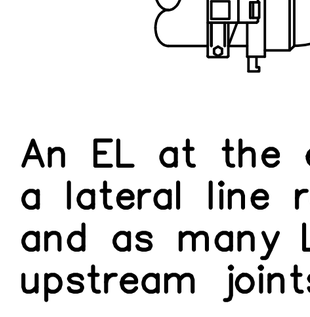

An EL at the end of a mainline that connects to a lateral line require one LH–Series for the EL and as many LB–Series restraints on the upstream joints as recommended below.

Size	LB-Series	Size	LB-Series
2", 2.5", 3"	0	8"	3
4"	1	10"	5
6"	2	12"	6

8. Push-On, In-Line Gate Valves

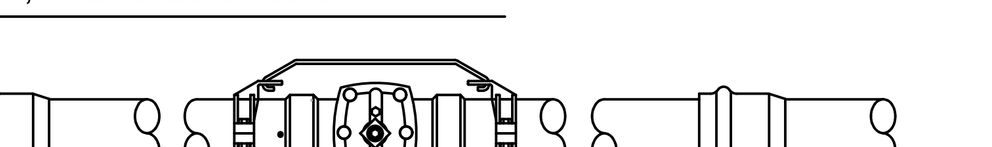

LG-Series consists of two LH-Series and two Tie-Bars and is used to restrain a push on gate valve installed on a main. Adjacent joints need restraints when the gate valve is installed close to a bend or a reducer.

9. MJ & Flanged Gate Valve

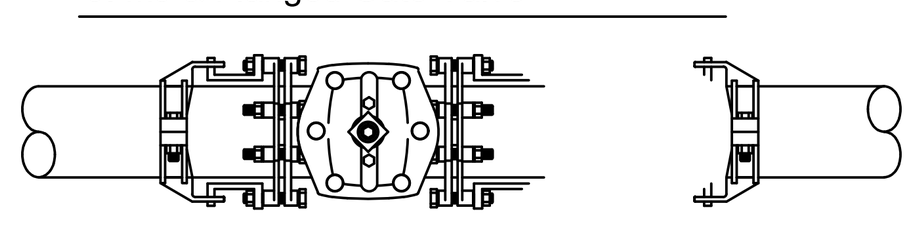

LMJ-Series consists of one LH-Series and two MJ-LK links to secure one end of an MJ or Flanged gate or automatic valve.
In the illustration above, two LMJ-Series restraints are used.

Dealing With Shorter Than 20-foot Distances...

When the distance between a restrained fitting to the next joint is less than 20 feet, the above recommendations are no longer valid. One must refer to the following Table that lists the length (in feet) for each size/type fitting within which all joints must be restrained.
As an example, whereas a 6", 90 require only one LB–Series restraint when using 20–foot pipe, it would require two LB–Series if the pipe is spliced into two 10–foot length segments.

Pipe Size	Bends				Reducers			Dead end	
	11	22	45	90	1 Step	2 Step	3 Step	Blind	Serv EL
2"	1	1	2	6	-	-	-	19	6
2.5"	1	2	4	9	4	-	-	23	10
3"	2	3	5	11	8	10	-	30	15
4"	2	4	9	20	14	20	31	45	25
6"	3	6	13	29	30	40	53	63	40
8"	4	8	15	38	33	55	63	83	70
10"	5	9	19	45	31	56	75	100	90
12"	5	10	21	53	54	58	79	118	110

About the table...

For Tee Branch: Use data for 90 Bend
1 Step Reducer: Reduction is one size down (i.e. 12x10, 10x8, 8x6).
2 Step Reducer: Reduction skips one size (i.e. 12x8, 10x6, 6x3)
3 Step Reducer: Skips two sizes (i.e 12x6)
Blind: A line that is capped off…the severest for of reduction
Serv EL: A service EL that connects to a lateral line (typically) vertically mounted.

Installing Joint Restraints.

Because Leemco fittings have four lugs, the eye of the LH-Series clamp slips over the vertically located lugs allowing easy access to tighten the bolts. Competitive fittings with two horizontally located lugs block access to the bolt/nut that situates beneath the pipe. In a narrow trench installing the clamp becomes very difficult.

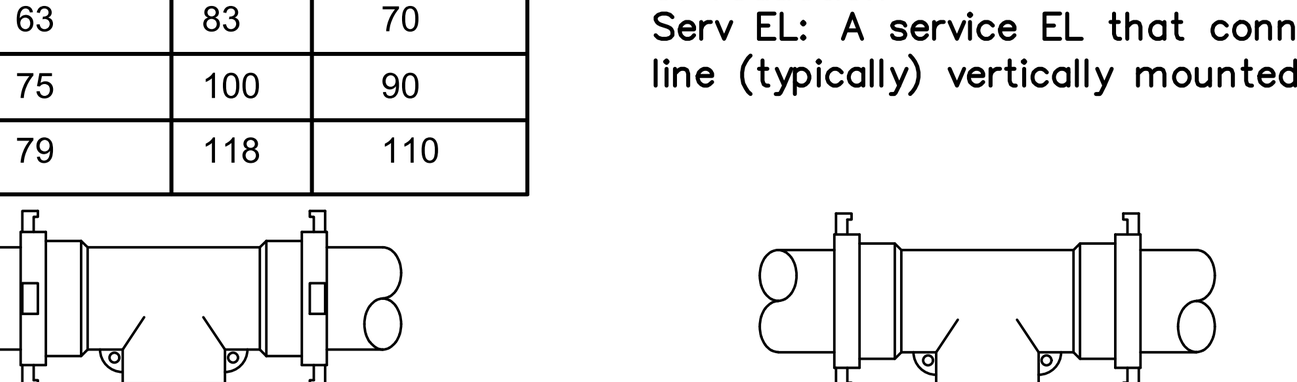

With Leemco fittings clamp bolts are readily accessible.

With other fittings the bottom bolt is difficult to access.

LEEMCO FITTINGS AND JOINT RESTRAINTS

A. CONTACT TOM GENTILE REGARDING ALL QUESTIONS REGARDING LEEMCO JOINT RESTRAINTS USED IN DESIGN TO ASSIST CONTRACTOR IN BIDDING. PHONE OFFICE (909) 461-0942, CELL (949) 246-8467. TOM GENTILE SHALL BE CONTACTED MINIMUM (4) WORKING DAYS FOR ANY SITE QUESTIONS REGARDING VISUAL INSPECTION. TOM GENTILE SHALL BE CONTACTED BY CONTRACTOR TO ATTEND PRE-CONSTRUCTION MEETING.

B. FITTINGS FOR BELL AND GASKET PIPELINES SHALL BE DUCTILE IRON, SLANT-BELL DESIGN, AND DEEP BELL TYPE. FITTINGS SHALL BE MANUFACTURED OF DUCTILE IRON, GRADE 65-45-12 IN ACCORDANCE WITH ASTM A-536. FITTING GASKETS SHALL BE IN ACCORDANCE WITH ASTM F-477. ALL DUCTILE IRON FITTINGS SHALL BE EQUIPPED WITH (4) FOUR 90-DEGREE APART, OUTWARDLY EXTENDING RADIAL LUGS TO ACCOMMODATE FOR APPROPRIATE METHOD OF MECHANICAL RESTRAINTS.

C. FITTINGS MADE FROM MORE THAN ONE PIECE SHALL UTILIZE SECURELY FASTENED BOLT-ON STYLE SPIGOT-BELL LINKS. SLIP-ON RINGS OR LOOSE RINGS AS THE METHOD OF ATTACHMENT ARE NOT PERMISSIBLE.

D. ALL TEE FITTINGS USED TO CONNECT REMOTE CONTROL VALVE AND QUICK COUPLING ASSEMBLIES TO THE MAINLINE SHALL BE DUCTILE IRON, DEEP BELL SERVICE TEES.

E. ALL DUCTILE IRON BENDS; REDUCERS, TEES AND GATE VALVES SHALL BE MECHANICALLY RESTRAINED. ALL BELL AND GASKET JOINTS ADJACENT TO RESTRAINED JOINTS SHALL BE RESTRAINED IN ACCORDANCE TO THE MANUFACTURER'S RECOMMENDED DESIGN CRITERIA AND GUIDE.

F. THE MECHANICAL JOINT RESTRAINT SHALL BE CAPABLE OF SECURING THE PVC PIPE DIRECTLY TO THE DUCTILE IRON FITTING WITHOUT THE USE OF BOLTS, LINKS AND ADAPTERS. THE JOINT RESTRAINT SHALL BE CAPABLE OF SECURING PVC GASKET PIPE JOINTS AND GATE VALVES WITHOUT THE USE OF THREADED RODS. JOINT RESTRAINTS MADE FOR IRON OR STEEL PIPE ARE NOT PERMISSIBLE.

G. THE JOINT RESTRAINT SHALL BE MANUFACTURED FROM DUCTILE IRON, GRADE 65-45-12 IN ACCORDANCE WITH ASTM A-536. BOLTS AND NUTS USED ON JOINT RESTRAINTS SHALL BE PROVIDED AS PART OF THE RESTRAINT ASSEMBLY. JOINT RESTRAINTS SHALL BE AS MANUFACTURED BY LEEMCO, INC.

H. ALL RESTRAINTS SHALL BE INSTALLED USING METHODS RECOMMENDED BY THE MANUFACTURER. ALL BOLTS AND NUTS SHALL BE TIGHTENED AS PER MANUFACTURER'S RECOMMENDED TORQUE RATINGS.

I. THE FOLLOWING LEEMCO MODELS SHALL BE UTILIZED WHERE APPLICABLE:

1. LH-SERIES RESTRAINTS SHALL BE USED FOR ALL CONNECTIONS BETWEEN PVC PIPE AND PUSH-ON DEEP BELL, DUCTILE IRON FITTINGS.
2. LB-SERIES RESTRAINTS SHALL BE USED FOR PVC BELL-SPIGOT CONNECTIONS THAT REQUIRE RESTRAINTS.
3. LPP-SERIES RESTRAINTS SHALL BE USED FOR PVC BELL-SPIGOT CONNECTIONS.
4. LG-SERIES RESTRAINTS SHALL BE USED FOR ALL PUSH-ON GATE VALVES.
5. LGK-SERIES RESTRAINTS SHALL BE USED FOR ALL PUSH-ON GATE VALVES INSTALLED ADJACENT TO A DUCTILE IRON FITTING.
6. LMJ-SERIES RESTRAINTS SHALL BE USED FOR ALL MJ GATE VALVES AND FLANGED VALVES.

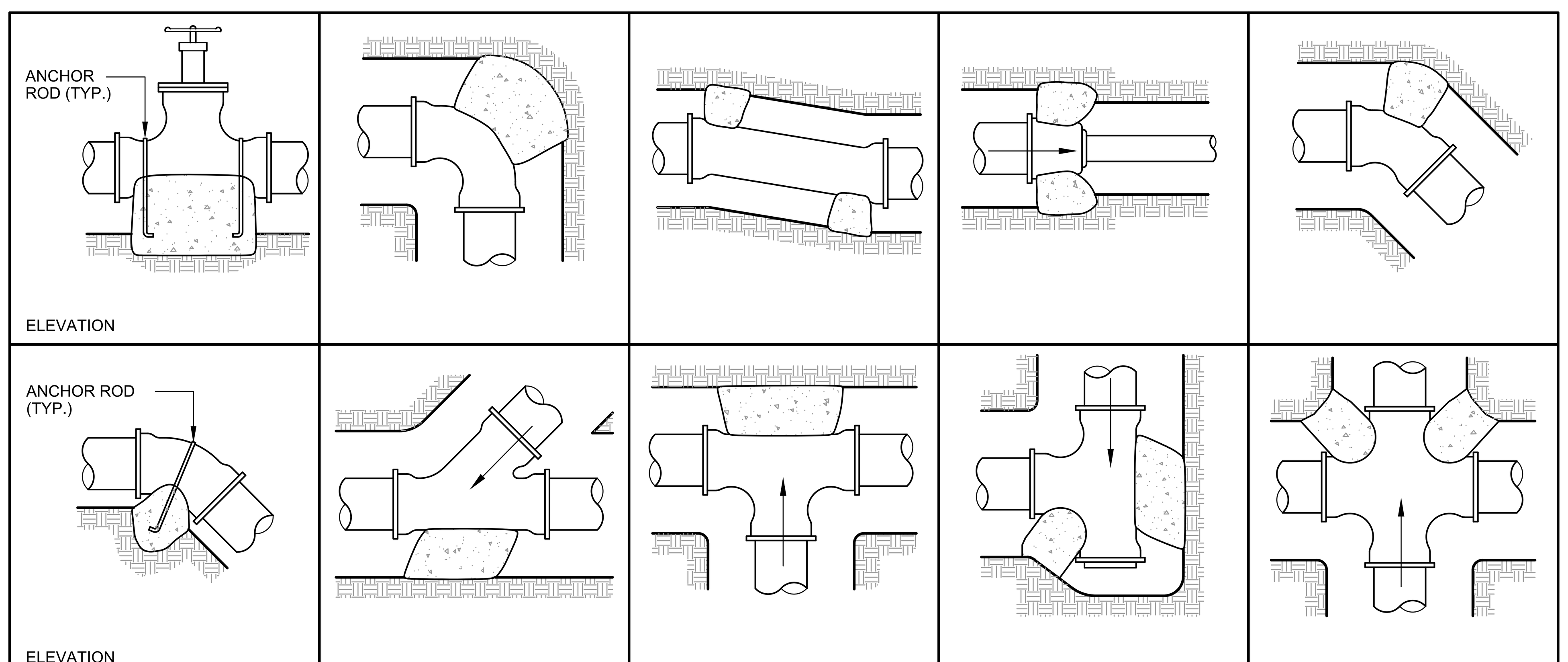

NOTES:

A. ALL SOLVENT WELDED PVC PLASTIC PIPE MAINLINE 2" THROUGH 3" TO BE INSTALLED ACCORDING TO THESE DETAILS UNLESS OTHERWISE NOTED OR DETAILED. REFER TO NOTES AND SPECIFICATIONS.
B. THE PORTLAND CEMENT CONCRETE USED FOR THRUST BLOCKS SHALL BE 420-C-2000 CONCRETE.
C. ALL ANCHOR RODS SHALL BE GALVANIZED STEEL. MINIMUM 1/2" DIAMETER, WRAPPED AROUND PIPE.
D. SIZE OF THRUST BLOCKS SHALL BE SUFFICIENT TO PREVENT MOVEMENT. SIZE OF THRUST BLOCK SHALL TAKE INTO ACCOUNT SIZE OF PIPE, DIRECTIONAL CHANGE AND BEARING CAPACITY OF SOIL.
E. THRUST BLOCKS SHALL BE USED FOR PVC PIPE 2" THROUGH 3" WHERE SOLVENT WELD JOINTS ARE USED. 4" AND LARGER PIPE THAT UTILIZE GASKETED JOINTS SHALL UTILIZE DUCTILE IRON FITTINGS AND JOINT RESTRAINTS.
F. FLOW DIRECTION INDICATED BY
G. ALL VIEWS ARE PLAN VIEW UNLESS OTHERWISE NOTED.

THRUST BLOCK DETAIL

GENERAL NOTES

1. CONTRACTOR SHALL WALK SITE WITH DISTRICT PERSONNEL, CONTACT BELLFLOWER UNIFIED SCHOOL DISTRICT MAINTENANCE AND OPERATIONS DEPARTMENT, DAN BUFFINGTON - MAINTENANCE MANAGER (562) 244-9026, TO FAMILIARIZE THEMSELVES WITH EXISTING CONDITIONS AND TO VERIFY CONDITION OF EXISTING IRRIGATION SYSTEM. THE CONDITION OF THE EXISTING IRRIGATION SYSTEM SHALL BE RECORDED IN WRITING AND WITH DIGITAL PHOTOGRAPHS TO DOCUMENT EXISTING CONDITIONS BY CONTRACTOR AND APPROVED BY THE DISTRICT PRIOR TO ANY DEMO/ CONSTRUCTION WORK.
2. THE CONTRACTOR IS RESPONSIBLE FOR MAINTAINING CONTINUITY OF THE EXISTING IRRIGATION SYSTEM DURING THE DEMO/ CONSTRUCTION PHASE OF THE PROJECT. HAND WATERING SHALL BE PERFORMED IN THE EVENT THE AUTOMATIC SYSTEM IS INOPERABLE OR MUST BE SHUT DOWN FOR WORK RELATING TO THIS PROJECT. THE CONTRACTOR SHALL BE RESPONSIBLE FOR REPLACING ANY PLANT MATERIAL LOSS DUE TO LACK OF WATER.
3. NO PROPOSED OR EXISTING MAINLINE SHALL PASS UNDER PROPOSED BUILDINGS. IF IT IS FOUND THAT EXISTING MAINLINE/ WIRES EXIST UNDER PROPOSED BUILDING CONSTRUCTION, CONTRACTOR SHALL RE-ROUTE PIPING AND WIRES TO 5' CLEAR OF STRUCTURE.
4. IRRIGATION SYSTEM UTILIZES RECYCLED WATER. ALL MEASURES SHALL BE TAKEN TO PREVENT WATER LOSS, RUN OFF AND PONDING.
5. EXISTING IRRIGATION SYSTEM AT EDGE OF LIMIT OF WORK, (NEW CONSTRUCTION) SHALL BE REVISED AS REQUIRED TO ACCOMMODATE NEW CONSTRUCTION WHILE ENSURING THAT EXISTING PLANT MATERIAL RECEIVE ADEQUATE COVERAGE AND MINIMIZE OVER-SPRAY ONTO BUILDINGS, WALLS AND WALKS.
6. PROPOSED IRRIGATION SYSTEM IS BEING TIED INTO AN EXISTING RECYCLED WATER SYSTEM THAT IS CURRENTLY PROTECTED WITH A REDUCED PRESSURE BACKFLOW DEVICE. BACKFLOW PREVENTION IS NOT REQUIRED WITHIN THIS SCOPE OF WORK.
7. REFER TO IRRIGATION LEGEND, DETAILS AND NOTES AND SPECIFICATIONS.
8. ALL WORK SHALL BE PERFORMED IN ACCORDANCE WITH LOCAL CODES AND ORDINANCES.
9. CONTRACTOR SHALL FLUSH ENTIRE CONTINUOUS IRRIGATION SYSTEM (PIPES AND SPRINKLER HEADS) THAT SERVICES THE ENTIRE CAMPUS UNTIL FREE OF DEBRIS PRIOR TO TURNING OVER THE SYSTEM TO THE DISTRICT. CONTACT THE DISTRICT MAINTENANCE AND OPERATIONS DEPARTMENT FOR OBSERVATION OF THE WORK.
10. REMOVE ABANDONED AND OR OBSOLETE WATER VALVES AND VALVE BOXES, ATMOSPHERIC VACUUM BREAKERS, BACKFLOW PREVENTERS, ETC. AND CLEAN AND FORWARD TO THE DISTRICT. THESE ITEMS SHALL BE THOROUGHLY CLEANED, DRIED, SHRUNK WRAPPED IF REQUIRED, (PREPPED FOR STORAGE) AND PALLETIZED.
11. SALVAGED ITEMS: THE DISTRICT RESERVES THE RIGHT TO CLAIM REMOVED VALVES, FLUSH VALVES, FITTINGS OR ANY OTHER IRRIGATION RELATED EQUIPMENT. THE CONTRACTOR AT NO ADDITIONAL COST TO THE DISTRICT SHALL ARRANGE FOR DELIVERY OF CLAIMED ITEMS TO A LOCATION DETERMINED BY THE DISTRICT.
12. IRRIGATION SYSTEM AND PLANT MATERIAL, INCLUDING TURF, (OUTSIDE SCOPE OF WORK AREA) DAMAGED DURING THE PERFORMANCE OF THE WORK SHALL BE RESTORED TO ORIGINAL CONDITION. A WALK-THROUGH WITH THE DISTRICT'S GROUND STAFF SHALL BE CONDUCTED PRIOR TO THE START OF WORK TO RECORD AND ASSESS CURRENT CONDITIONS OF THE IRRIGATION SYSTEM AND LANDSCAPE. COORDINATE WALK-THROUGH WITH GENERAL CONTRACTOR AND AUTHORIZED DISTRICT REPRESENTATIVE.
13. LAYOUT OF THE WORK: PRIOR TO TRENCHING OR LAYING OF ANY PIPE, THE CONTRACTOR SHALL DETERMINE BY ACTUAL EXCAVATION AND MEASUREMENT, THE EXACT LOCATION AND DEPTH OF LINES TO WHICH THEY ARE TO CONNECT. IN THE EVENT DEPTH OF LINES IS NOT SUFFICIENT TO PERMIT CONNECTION IN THE MANNER INDICATED, THE CONTRACTOR SHALL OBTAIN DIRECTION FROM THE ARCHITECT BEFORE PROCEEDING WITH THE WORK. FINAL TRENCH LAYOUT SHALL BE APPROVED BY THE DISTRICT AND THE ARCHITECT BEFORE PROCEEDING WITH THE WORK.
14. THE IRRIGATION SYSTEM AND LANDSCAPE, (ALL PLANT MATERIAL OUTSIDE SCOPE OF WORK AREA) INCLUDING TURF, DAMAGED DURING THE PERFORMANCE OF THE WORK BY ALL TRADES SHALL BE RESTORED TO ORIGINAL CONDITIONS BY LANDSCAPE CONTRACTOR. A WALK THROUGH WITH THE DISTRICT'S MAINTENANCE AND OPERATIONS REPRESENTATIVE SHALL BE CONDUCTED PRIOR TO THE START OF WORK TO RECORD AND ASSESS CURRENT CONDITIONS OF THE IRRIGATION SYSTEM AND LANDSCAPE. COORDINATE WALK-THROUGH WITH GENERAL CONTRACTOR. COORDINATE DEMOLITION AND CONSTRUCTION WITH ALL OTHER TRADES TO ENSURE MINIMAL AMOUNT OF DAMAGE / DESTRUCTION TO EXISTING LANDSCAPE. ALL TURF DAMAGED OR DESTROYED SHALL BE REPLACED WITH DISTRICT APPROVED SOD VARIETY. REFER TO PLANTING LEGEND. REFER TO SPECIFICATIONS FOR SOD INSTALLATION REQUIREMENTS. CONTRACTOR SHALL BE RESPONSIBLE FOR THE MAINTENANCE AND PROTECTION OF ESTABLISHING TURF SOD.
15. CONTRACTOR SHALL VERIFY ALL DIMENSIONS OF PLANTERS TO BE IRRIGATED. IF DIMENSIONS VARY FROM THOSE SCALED OFF PLANS, CONTRACTOR SHALL CONTACT LANDSCAPE ARCHITECT IN WRITING PRIOR TO ANY WORK FOR DIRECTION.
16. CONTRACTOR SHALL DOCUMENT ALL EXISTING EQUIPMENT FOUND IN SURVEYS ALONG WITH ALL EQUIPMENT INSTALLED PER THIS SCOPE OF WORK. CONTRACTOR SHALL SKETCH SCHEMATIC OF CROSS SECTION OF TRENCH FOR ALL TYPICAL CONDITIONS WHERE COMMON UTILITIES ARE PLACED. DIMENSION LOCATION OF CONDUIT AND MAINLINE RELATIVE TO OTHER EQUIPMENT IN COMMON TRENCH.
17. REFER TO SPECIFICATIONS FOR STANDARDS OF MATERIALS AND EXECUTION FOR ALL PROPOSED IRRIGATION WORK AND ALL LANDSCAPE WORK REQUIRED TO REPAIR AREAS DUE TO CONSTRUCTION.
18. CONTRACTOR SHALL AVOID ROUTING HIS TRENCH THROUGH CONCRETE. WHERE EVER POSSIBLE AND WHERE APPROVED, ROUTE MAINLINE, CONDUIT IN COMMON TRENCHES WITH RELATED UTILITIES OR OTHER IRRIGATION PIPING.
19 AVOID TRENCHING ADJACENT TO AND UNDER CANOPY OF EXISTING TREES.. WHERE TRENCHING IS THIS AREA IS NECESSARY, HAND TRENCH TO PROTECT EXISTING ROOTS. TREE ROOTS LARGER THAN 2" IN DIAMETER SHALL NOT BE CUT BY CONTRACTOR. CONTRACTOR SHALL CONSULT ARBORIST, (APPROVED BY SCHOOL DISTRICT) IN METHODS OF PROTECTION AND SEVERING OF ALL ROOTS OVER 2" IN DIAMETER. REFER TO TREE PROTECTION NOTES.
20. ANY TRENCHING DONE SOLELY FOR IRRIGATION PURPOSES, (WHERE SHARING OF TRENCHES IS NOT POSSIBLE) SHALL HAVE ITS LOCATION AND PATH MARKED PRIOR TO EXCAVATION FOR APPROVAL BY AUTHORIZED DISTRICT REPRESENTATIVE.
21. ANY VALVE /SPLICE BOXES INSTALLED IN CONCRETE OR AC PAVING SHALL BE CONCRETE WITH CAST IRON LIDS. LIDS SHALL BE HINGED AND LOCKABLE. ALL BOXES INSTALLED IN LANDSCAPE AREAS SHALL HAVE POLYMER BOXES WITH METAL LIDS.
22. CONTRACTOR SHALL INSTALL PULL BOXES AS REQUIRED AT ALL CHANGES OF DIRECTION AND AT 100 FOOT MINIMUM ON CENTER ON STRAIGHT RUNS. PULL BOX SIZE SHALL BE ADEQUATE TO HOUSE ALL ANTICIPATED REMOTE CONTROL VALVE WIRES, COMMUNICATION CABLES, ETC. SIZING OF CONDUIT AND PULL BOXES SHALL BE APPROVED BY THE DISTRICT.

IDENTIFICATION STAMP
DIV. OF THE STATE ARCHITECT
APP: 03-124281 INC:
REVIEWED FOR
SS ☑ FLS ☑ ACS ☑
DATE: 02/04/2025

ARCHITECT:
architecture westbergwhite
14471 CHAMBERS RD, SUITE 210
TUSTIN, CA 92780
(714) 508-1780 (714) 508-1780 FAX

CONSULTANT:
RHA LANDSCAPE ARCHITECTS PLANNERS, INC.
6840 Indiana Ave, Suite 100
Riverside, CA 92506
(951) 781.1930 ph
Lic 2799
www.rhala.com
RHA PRJ# 24117

LICENSED LANDSCAPE ARCHITECT DOUGLAS GROVE NO. 2799 Signature 11/30/25 Renewal Date 12/16/24 Date STATE OF CALIFORNIA

PROJECT NAME:

Bellflower Unified School District
Mayfair High School Sports Fields
6000 North Woodruff Ave
Lakewood, California 90713

CLIENT:

BELLFLOWER UNIFIED SCHOOL DISTRICT
16703 S. Clark Ave.
BELLFLOWER, CALIFORNIA 90706

#	Rev. Date	Description

JOB NO: 15008
DATE: 05/28/2024
DRAWN: DC
CHECK: JC
ARCHITECT: PDW
ENGINEER:

SHEET DESCRIPTION:
IRRIGATION DETAILS, NOTES

SHEET NO:
L-08

C:\Users\DaveB\appdata\local\temp\AcPublish_33436\24117 DETAILS.dwg Dec 13, 2024 – 9:55am DaveB

IRRIGATION NOTES

1. ALL MAIN LINE PIPING AND CONTROL WIRES UNDER PAVING SHALL BE INSTALLED IN SEPARATE SLEEVES. MAIN LINE SLEEVE SIZE SHALL BE A MINIMUM OF TWICE (2X) THE DIAMETER OF THE PIPE TO BE SLEEVED. CONTROL WIRE SLEEVES SHALL BE OF SUFFICIENT SIZE FOR THE REQUIRED NUMBER OF WIRES UNDER PAVING.
2. ALL LATERAL LINE PIPING UNDER PAVING SHALL BE PVC SCHEDULE 40 PIPE AND SHALL BE INSTALLED PRIOR TO PAVING.
3. PIPE SIZES SHALL CONFORM TO THOSE SHOWN ON THE DRAWINGS. NO SUBSTITUTIONS OF SMALLER PIPE SIZES SHALL BE PERMITTED, BUT SUBSTITUTIONS OF LARGER SIZES MAY BE APPROVED. ALL DAMAGED AND REJECTED PIPE SHALL BE REMOVED FROM THE SITE AT THE TIME OF SAID REJECTION.
4. ALL SPRINKLER HEADS SHALL BE SET PERPENDICULAR TO FINISH GRADE UNLESS OTHERWISE SPECIFIED.
5. THE IRRIGATION CONTRACTOR SHALL FLUSH AND ADJUST ALL SPRINKLER HEADS AND VALVES FOR OPTIMUM COVERAGE WITH MINIMAL OVER-SPRAY ONTO WALKS, STREETS, WALL, ETC.
6. THE DESIGN IS DIAGRAMMATIC. ALL PIPING, VALVES, ETC., SHOWN WITHIN PAVED AREAS ARE FOR DESIGN CLARIFICATION ONLY AND SHALL BE INSTALLED IN PLANTING AREAS WHEREVER POSSIBLE. THE CONTRACTOR SHALL LOCATE ALL VALVES IN SHRUB AREAS.
7. IT IS THE RESPONSIBILITY OF THE IRRIGATION CONTRACTOR TO FAMILIARIZE THEMSELVES WITH ALL GRADE DIFFERENCES, LOCATION OF WALLS, RETAINING WALLS, STRUCTURES AND UTILITIES. THE IRRIGATION CONTRACTOR SHALL REPAIR OR REPLACE ALL ITEMS DAMAGED BY IRRIGATION CONTRACTORS' WORK. IRRIGATION CONTRACTOR SHALL COORDINATE THEIR WORK WITH OTHER CONTRACTORS FOR THE LOCATION AND INSTALLATION OF PIPE SLEEVES AND LATERALS THROUGH WALLS, UNDER ROADWAYS AND PAVING, ETC.
8. DO NOT WILLFULLY INSTALL THE SPRINKLER SYSTEM AS SHOWN ON THE DRAWINGS WHEN IT IS OBVIOUS IN THE FIELD THAT UNKNOWN OBSTRUCTIONS, GRADE DIFFERENCES OR DIFFERENCES IN THE AREA DIMENSIONS EXIST THAT MIGHT NOT HAVE BEEN CONSIDERED IN THE ENGINEERING. SUCH OBSTRUCTIONS OR DIFFERENCES SHALL BE BROUGHT TO THE ATTENTION OF THE OWNER'S AUTHORIZED REPRESENTATIVE. IN THE EVENT THIS NOTIFICATION IS NOT PERFORMED, THE IRRIGATION CONTRACTOR SHALL ASSUME FULL RESPONSIBILITY FOR ANY REVISIONS NECESSARY.
9. ALL SPRINKLER EQUIPMENT NOT OTHERWISE DETAILED OR SPECIFIED SHALL BE INSTALLED AS PER MANUFACTURER'S RECOMMENDATIONS AND SPECIFICATIONS.
10. ADV (ANTI DRAIN VALVES) UNITS AS SHOWN IN THE DETAILS ARE FOR TYPICAL INSTALLATION ONLY, AND MAY NOT BE REQUIRED ON ALL HEADS. PRIOR TO INSTALLATION THE CONTRACTOR SHALL VERIFY WITH THE ON-SITE GRADES. IF THERE IS AN ELEVATION DIFFERENCE OF 24" OR MORE BETWEEN THE HIGHEST HEAD AND LOWEST HEAD ON A SYSTEM, THE ADV'S SHALL BE INSTALLED PER THE DETAIL.
11. REFER TO SPECIFICATIONS FOR STANDARDS OF MATERIALS AND WORKMANSHIP. REFER TO WATER DISTRICT NOTES AND SPECIFICATIONS FOR REQUIREMENTS WHERE RECYCLED WATER IS USED WHERE APPLICABLE. WHERE DIFFERENCES OCCUR BETWEEN THE SPECIFICATIONS WITHIN THESE PLANS AND WATER DISTRICT SPECIFICATIONS, WATER DISTRICT SPECIFICATIONS SHALL SUPERCEDE.
12. REFER TO PLANS FOR ANY CERTIFICATES OF COMPLIANCE REQUIRED FOR THE INSTALLATION OF ANY OF THE SPECIFIED IRRIGATION EQUIPMENT.

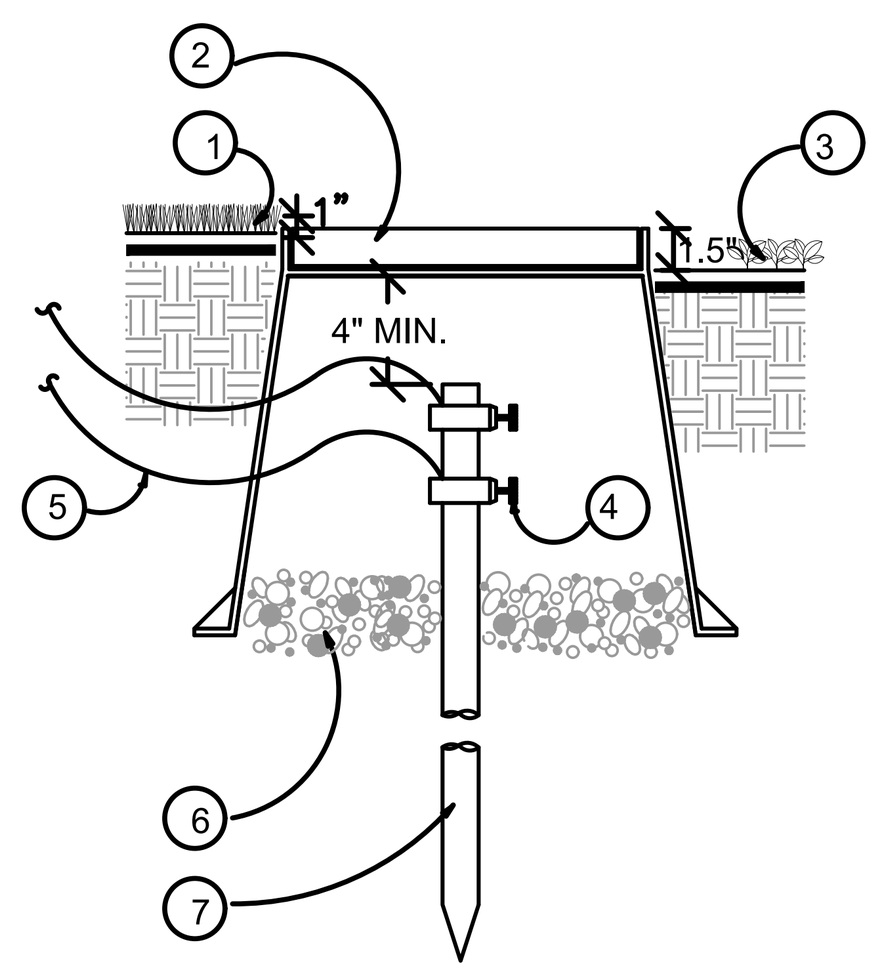

DETAIL LEGEND

1. FINISHED GRADE IN TURF AREAS/ TOP OF MULCH OR GRAVEL.
2. PLASTIC VALVE BOX WITH BOLT DOWN COVER. USE STAINLESS BOLT NUT AND WASHER. HEAT BRAND COVER 'GR'
3. FINISHED GRADE IN SHRUB AREAS
4. 'CADWELD' OR APPROVED EQUAL CONNECTION TO GROUND ROD.
5. #10 MINIMUM BARE COPPER WIRE TO CONTROLLER.
6. 3/4" ROCK, 1 CUBIC FT.
7. 5/8" X 8' COPPER ROD. SET ROD AS CLOSE TO CONTROLLER AS POSSIBLE.

NOTE:
CONTRACTOR SHALL USE A SEPARATE 'CADWELD' CONNECTION FOR EACH WIRE ON GROUND ROD WHEN MORE THAN ONE WIRE IS BEING USED.
INSTALL ONE WIRE PER CONTROLLER.
INSTALL GROUND WIRE IN DEDICATED PVC CONDUIT EXITING CONTROLLER HOUSING.
WHERE ENTIRE LENGTH OF 8' GROUND ROD CANNOT BE DRIVEN INTO SOIL, 2'-3' MAY BE CUT OFF AND DRIVEN INTO THE GROUND SEPARATELY. DRIVE THIS SECTION INTO THE GROUND 2' FROM FIRST SECTION AND CADWELD A #6 COPPER WIRE CONNECTING THE TWO SECTIONS.

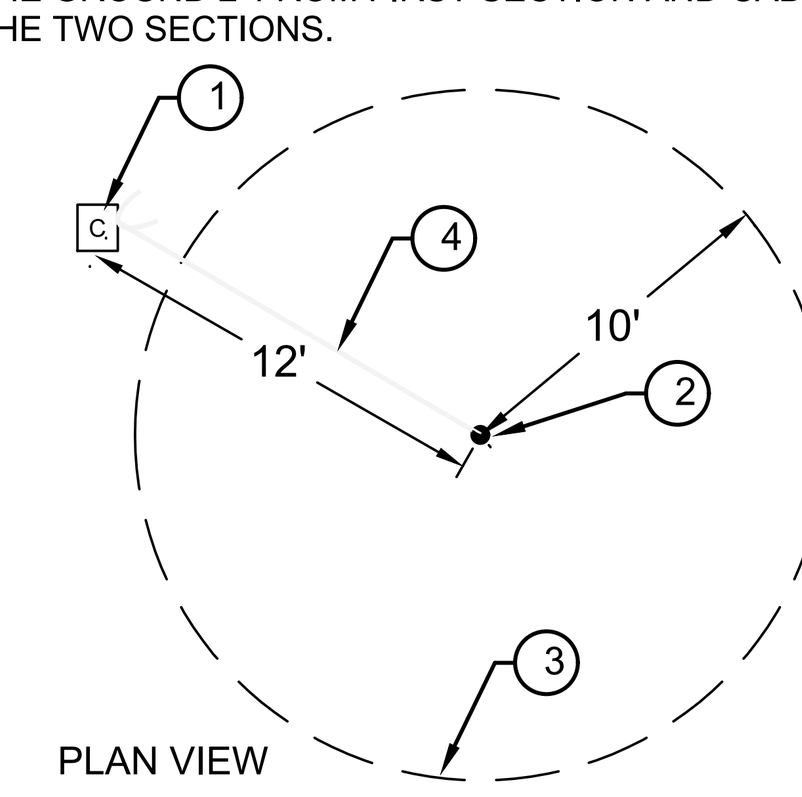

PLAN VIEW

1. CONTROLLER ASSEMBLY
2. GROUND ROD. INSTALL ITS GROUND ROD ASSEMBLY.
3. ELECTRODE SPHERE OF INFLUENCE BOUNDARY. INSTALL NO WIRES OR CABLE WITHIN THIS AREA.
4. #6 AWG SOLID BARE COPPER WIRE.
5. IRRIGATION EQUIPMENT ENCLOSURE.
6. CONCRETE FLOOR WITH FORMED OPENING FOR SWEEPS.
7. PVC SWEEP, MINIMUM 1".
8. CADWELD CONNECTION. REFER TO GROUND ROD DETAIL.
9. VALVE BOX REFER TO DETAIL LEFT.

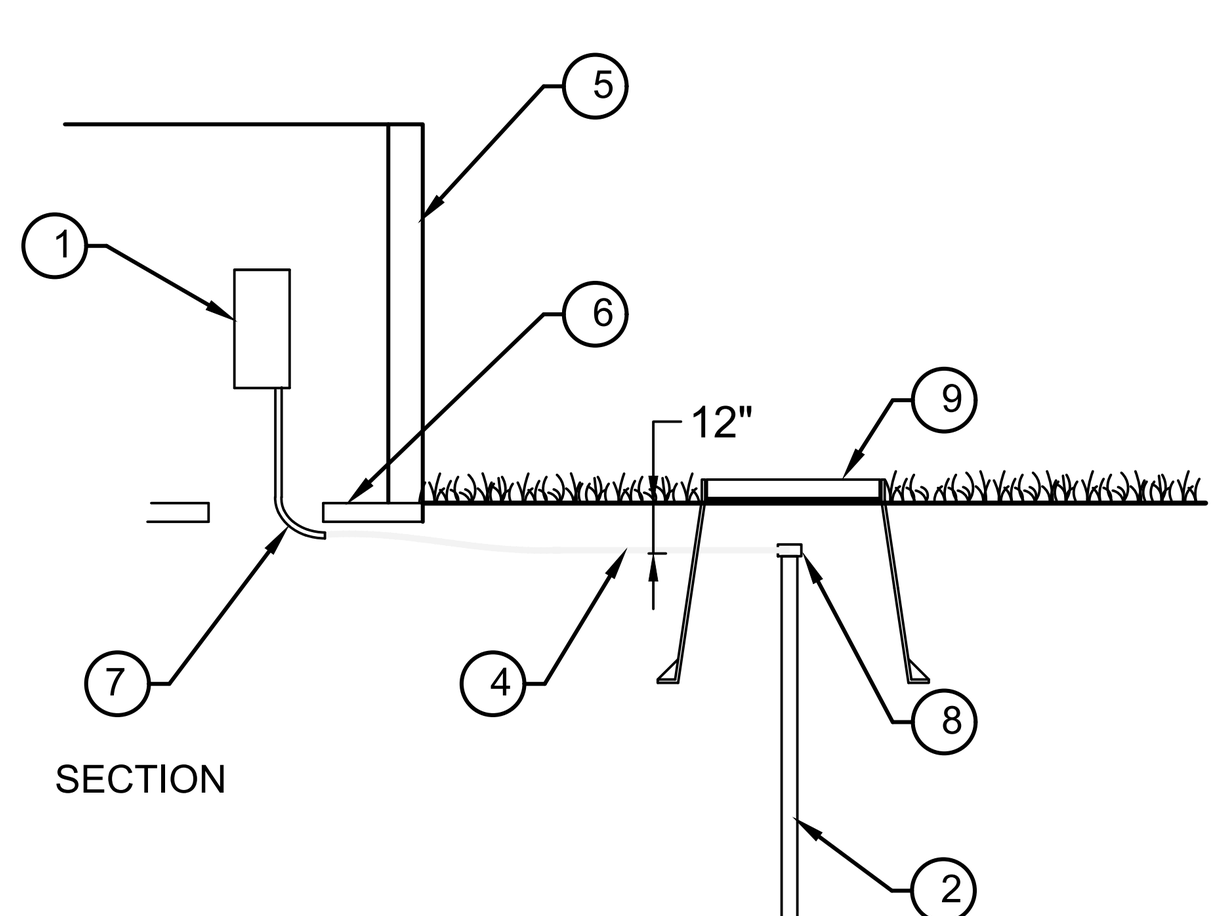

SECTION

GROUND ROD NTS

GUIDELINES FOR PIPELINE CONSTRUCTION AND INSTALLATION FOR THE SAFE USE OF RECYCLED / RECLAIMED WASTEWATER

RECYCLED/ RECLAIMED WASTEWATER SYSTEMS SHALL BE CONSTRUCTED IN COMPLIANCE WITH APPLICABLE POTABLE WATER SYSTEM CONSTRUCTION STANDARDS AS WELL AS THOSE SPECIFIED IN "THE PURPLE BOOK", CALIFORNIA HEALTH LAWS RELATED TO RECYCLED WATER, (CALIFORNIA HEALTH AND SAFETY CODE, WATER CODE, TITLES 22 AND 17 OF THE CALIFORNIA CODE OF REGULATIONS) AND THE LOS ANGELES COUNTY CODE (LACC), TITLE 28 PLUMBING, APPENDIX J.

SEPARATION REQUIREMENTS

THE MAXIMUM ATTAINABLE SEPARATION OF RECYCLED/ RECLAIMED WASTEWATER LINES AND POTABLE WATER LINES SHALL BE ENFORCED IN ORDER TO MINIMIZE POTENTIAL RISKS ASSOCIATED WITH PIPELINE BREAKS RESULTING IN INFILTRATION OF WASTEWATER FROM LEAKING WASTEWATER LINES INTO DOMESTIC WATER LINES, OR ACCIDENTAL CROSS-CONNECTIONS BETWEEN RECYCLED WASTEWATER AND POTABLE WATER SYSTEMS.

- PARALLEL CONSTRUCTION: A HORIZONTAL SEPARATION OF AT LEAST TEN FEET (10') SHALL BE REQUIRED BETWEEN PRESSURIZED. BURIED, RECYCLED / RECLAIMED AND POTABLE WATER PIPING (ALL DISTANCE TO BE MEASURE FROM PIPELINE OUTSIDE DIAMETER).
- CROSS-OVER CONNECTION: BURIED POTABLE WATER PIPES CROSSING OVER PRESSURIZED RECYCLED / RECLAIMED WATER PIPES SHALL BE LAID NOT LESS THAN TWELVE INCHES (12") ABOVE THE RECLAIMED WATER PIPES. RECLAIMED WATER PIPES LAID IN THE SAME TRENCH OR CROSSING-OVER BUILDING SEWER OR DRAINAGE PIPING SHALL BE INSTALLED IN COMPLIANCE WITH THE LACC - TITLE 28, PLUMBING, SECTIONS 609.0 AND 720.0.
- UNUSED OR ABANDONED POTABLE WTAER LINES: THESE LINES ARE TO BE SEVERED AS CLOSE TO WATER MAINS AS PRACTICAL, CAPPED , AND A TEN FOOT (10") SECTION OF ABANDONED LINE REMOVED AND CEMENTED UNDER DIRECT SUPERVISION BY THE DEPARTMENT.
- EXISTING ON-SITE PIPING: MAXIMUM SEPARATION OF RECYCLED / RECLAIMED WASTEWATER LINES AND POTABLE WATER LINES SHALL BE MAINTAINED UPON SYSTEM ADDITIONS OR MODIFICATION.

PIPELINE MATERIALS AND IDENTIFICATION

ALL RECYCLED / RECLAIMED WATER PIPE MATERIALS, VALVES AND FITTINGS SHALL CONFORM TO THE REQUIREMENTS OF THE LACC - TITLE 28, PLUMBING, SECTIONS 604.0, 605.0 AND 606.0.

ALL RECYCLED / RECLAIMED WASTEWATER LINE (PRESSURE / NON-PRESSURE), VALVE BOXES, HYDRANTS AND APPURTENANCES SHALL BE IDENTIFIED TO CLEARLY DISTINGUISH BETWEEN RECYCLED / RECLAIMED WASTEWATER, NON-POTABLE AND POTABLE WATER SYSTEMS (AS SPECIFIED IN LACC - TITLE 28, PLUMBING, APPENDIX J).

- RECYCLED / RECLAIMED WASTEWATER: ALL BURIED, RECYCLED, WASTEWATER SYSTEMS (PRESSURE / NON-PRESURE) SHALL UTILIZE PURPLE PIPE WITH BLACK UPPERCASE LETTERING "CAUTION: RECYCLED WATER - DO NOT DRINK" PRINTED ON OPPOSITE SIDES OF THE PIPE. FOR LIMITED APPLICATION, THE USE OF CONTINUOUS LETTERING ON THREE INCH (3") MINIMUM WIDTH PURPLE TAPE WITH ONE INCH BLACK OR WHITE CONTRASTING UPPERCASE LETTING "CAUTION RECYCLED WATER - DON NOT DRINK" PERMANENTLY AFFIXED AT INTERVALS NOT TO EXCEED 5 FEET, ATOP ALL HORIZONTAL PIPING, LATERAL AND MAINS. IDENTIFICATION TAPE SHALL EXTEND TO ALL VALVE BOXES AND / OR VAULTS, EXPOSED PIPING, HYDRANTS AND QUICK COUPLERS, ALL VALVES, EXCEPT FIXTURE SUPPLY CONTROL VALVE SHALL BE EQUIPPED WITH A LOCKING FEATURE, ALL MECHANICAL EQUIPMENT THAT IS APPURTENANT TO THE RECYCLED / RECLAIMED WATER SYSTEM SHALL BE PAINTED PURPLE.
- POTABLE WATER: ALL POTABLE WATER LINES SHALL BE INSTALLED IN ACCORDANCE WITH THE UNIFORM PLUMBING CODE AND ALL OTHER APPLICABLE POTABLE WATER SYSTEM CONSTRUCTION STANDARDS. ALL BURIED POTABLE WATER LINES SHALL BE CLEARLY IDENTIFIED BY CONTINUOUS LETTERING ON THREE INCH (3") MINIMUM WIDTH BLUE TAPE WITH ONE INCH (1") WHITE LETTERING BEARING THE REPEATED WORDING "POTABLE WATER" PERMANENTLY AFFIXED AT TEN FOOT INTERVALS ATOP ALL HORIZONTAL PIPING, LATERALS AND MAINS. IDENTIFICATION TAPE SHALL EXTEND TO ALL VALVE BOXES AND / OR VAULTS, EXPOSED PIPING AND HYDRANTS, IDENTIFICATION TAPE IS NOT NECESSARY FOR EXTRUDED COLORED PVC WITH CONTINUOUS WORDING "POTABLE WATER" PRINTED IN CONTRASTING LETTERING ON OPPOSITE SIDES OF THE PIPE.
- NON-POTABLE WATER: ALL NON-POTABLE IRRIGATION / INDUSTRIAL WATER LINES (PRESSURE / NON-PRESSURE) SHALL BE IDENTIFIED BY CONTINUOUS LETTERING ON THREE INCH (3") MINIMUM WIDTH TAPE WITH ONE INCH (1") CONTRASTING LETTERING BEARING THE CONTINUOUS UPPERCASE LETTERING "NON-POTABLE WATER - DO NOT DRINK" PERMANENTLY AFFIXED AT TEN FOOT (10') INTERVALS ATOP ALL HORIZONTAL PIPING, LATERALS AND MAINS. IDENTIFICATION TAPE SHALL EXTEND TO ALL VALVE BOXES AND / OR VAULTS, CONTROL VALVES, QUICK COUPLING VALVES. OUTLETS AND RELATED APPURTENANCES SHALL BE COLOR CODED AND LABELED / TAGGED TO DIFFERENTIATE BETWEEN RECYCLED / RECLAIMED WASTEWATER, POTABLE WATER AND NON-POTABLE WATER SYSTEMS. TAGS IDENTIFYING RECYCLED / RECLAIMED WATER SHALL HAVE THE APPROPRIATE IDENTIFICATION ON BOTH SIDES (WORKING ON ONE SIDE AND SYMBOL ON THE OPPOSITE SIDE).

THE SAFE USE OF RECYCLED / RECLAIMED WATER PROTECTS POTABLE WATER

- DETERIORATED OR INADEQUATELY PROTECTED WELL WATER CASINGS SHALL BE REQUIRED OR REPLACED TO PROTECT AQUIFERS AGAINST CONTAMINATION FROM RECYCLED / RECLAIMED WASTEWATER SYSTEMS.
- AN ON-SITE WATER SUPERVISOR SHALL BE APPOINTED, HAVING THE RESPONSIBILITY OF OVERSIGHT FOR THE PROTECTION OF THE POTABLE WATER SYSTEM (PROVIDED FOR UNDER TITLE 17, SECTION 7586, AND CALIFORNIA CODE OF REGULATIONS). THE NAME AND POSITION OF THE ON-SITE WATER SUPERVISOR SHALL BE REPORTED TO THE WATER PURVEYOR AND TO THE DEPARTMENT. THIS POSITION WILL BE RESPONSIBLE FOR THE INSTALLATION, OPERATION AND MAINTENANCE OF THE RECYCLED / RECLAIMED WASTEWATER AND POTABLE WATER SYSTEMS, AUTHORIZATION OF ANY PIPING CHANGES OR ADDITIONS TO EITHER THE POTABLE OR RECYCLED SYSTEMS, PREVENTION OF POTENTIAL HAZARDS, IMPLEMENTATION OF THE REGULATIONS, AND COORDINATION WITH THE CROSS-CONNECTION PROGRAM OF THE WATER PURVEYOR AND THIS DEPARTMENT.
- HOSE BIBBS SHALL NOT BE PERMITTED IN ANY AREAS OF PUBLIC ACCESS TO RECYCLED / RECLAIMED WASTEWATER SYSTEM, TO PREVENT UNAUTHORIZED USE OF RECYCLED WASTEWATER. QUICK COUPLERS ARE PERMITTED IN LIEU OF HOSE-BIBB OUTLETS BUT SHALL ONLY BE CONNECTED TO RECYCLED / RECLAIMED WASTEWATER LINES. HOSE BIBBS MAY BE PERMITTED IN AREAS THAT ARE NOT ACCESSIBLE TO THE PUBLIC, PROVIDED THEY ARE PROPERLY IDENTIFIED WITH PERMANENTLY AFFIXED TAGS, LABELS, OR PLATES WITH UPPERCASE LETTERING "RECYCLED WATER - DO NOT DRINK" IN ENGLISH.
- THE USE OF RECYCLED / RECLAIMED WASTEWATER FOR IRRIGATION PURPOSES SHALL MINIMIZE EXPOSURE OF THE WASTEWATER SPRAY TO DRINKING FOUNTAINS AND PICNIC TABLES THROUGH SELECTIVE LOCATION OF EQUIPMENT AND BY APPROPRIATE IRRIGATION SYSTEM DESIGN. ADDITIONALLY,, THE FOLLOWING MEASURE SHOULD BE TAKEN: RECYCLED WASTEWATER SPRAYING SHALL BE DONE DURING HOURS OF LEAST PUBLIC EXPOSURE, ANY AREA WHERE RECYCLED WASTEWATER IS RELEASED, USED OR IMPOUNDED SHOULD BE POSTED, INFORMING THE PUBLIC THAT RECYCLED WATER IS BEING USED, AND IRRIGATION PRACTICES UTILIZING RECYCLED WATER SHALL BE CONTROLLED TO PREVENT SURFACE RUNOFF.

BACKFLOW PROTECTION

- THERE SHALL BE NO INTERCONNECTION BETWEEN A POTABLE WATER SYSTEM AND A RECYCLED / RECLAIMED WATER SYSTEM WITHIN THE USER'S PREMISES.
- A DYE OR PRESSURE TEST SHALL BE UTILIZED TO CONFIRM THE PHYSICAL SEPARATION OF A RECYCLED WASTEWATER SYSTEM AND A POTABLE WATER SYSTEM. TESTING SHALL BE PERFORMED IN CONJUNCTION WITH THE WATER PURVEYORS AND THIS DEPARTMENT AND CONDUCTED BEFORE THE INTRODUCTION OF RECYCLED WASTEWATER.
- AN APPROVED BACKFLOW PREVENTION DEVICE SHALL BE INSTALLED A THE POTABLE WATER SERVICE CONNECTION.
- IN A RECYCLED / RECLAIMED WASTEWATER DISTRIBUTION SYSTEM, A BACKFLOW PREVENTION DEVICE MAY BE REQUIRED AT THE RECYCLED WASTEWATER METER OR AT SPECIFIC ON-SITE LOCATIONS WHERE SAID USE COULD DEGRADE THE QUALITY OF THE RECYCLED WASTEWATER SUPPLY.









IRRIGATION FIELD NOTES

1. ALL VALVE BOXES SHALL BE LOCATED OUTSIDE MARKED FIELD LINES. VERIFY LOCATION OF FIELD LINES PRIOR TO SETTING VALVE BOXES.
2. ALL IRRIGATION WIRES SHALL BE TAGGED WITH RESPECTIVE CONTROLLER / REMOTE CONTROL VALVE SEQUENCE DESIGNATION.
3. ALL IRRIGATION HEADS SHALL HAVE DOUBLE SWING JOINTS, USING ALTERNATING MARLEX AND SCHEDULE 40 PVC STREET ELLS.
4. HOLD STREAM ROTORS 8" CLEAR OF FINISH SURFACES UNLESS OTHERWISE NOTED ON PLANS.
5. LATERAL LINE AND MAINLINES SHALL BE IN SEPARATE TRENCHES.
6. PRIOR TO LAYING OUT HEADS, CONTRACTOR SHALL VERIFY FIELD DIMENSIONS, LOCATION OF PLAYING FIELD LINES, BACKSTOPS, ETC. IF ACTUAL DIMENSIONS VARY FROM SCALED DIMENSIONS ON THESE PLANS, CONTRACTOR SHALL CONTACT LANDSCAPE ARCHITECT, IN WRITING, PRIOR TO WORK TO REPORT DISCREPANCY AND RECEIVE DIRECTION. NO HEADS SHALL BE LAID OUT UNTIL LANDSCAPE ARCHITECT HAS BEEN CONTACTED. FAILURE TO DO SO MAY RESULT IN THE CONTRACTOR BEING RESPONSIBLE FOR ANY CHANGES THAT MAY RESULT.
7. CONTACT DIG ALERT (48) HOURS PRIOR TO TRENCHING IN RIGHT OF WAYS. PHONE 1-800-227-2600.
8. REMOTE CONTROL COMMON WIRE SHALL BE MINIMUM #10 TO FACILITATE MULTIPLE VALVE OPERATION.

MAINLINE PIPING 4 INCH, (GASKETED PIPE) SHALL HAVE DUCTILE IRON FITTINGS AND LEEMCO JOINT RESTRAINTS INSTALLED. FITTINGS AND JOINT RESTRAINTS SHALL BE INSTALLED PER MANUFACTURE'S DETAILS AND SPECIFICATIONS. CONTACT AT DAVID AVILA 951-473-3163 GENTILE & ASSOCIATES FOR ANY QUESTIONS REGARDING INSTALLATION, ORDERING, ETC. OFFICE 951-473-3163.

EXISTING TREE PROTECTION NOTES

CONTRACTOR SHALL NOT ALTER GRADES AT THE BASE OF TRUNKS OF EXISTING TREES TO BE PROTECTED IN PLACE. FINISH GRADE SHALL BE ADJUSTED TO COVER EXISTING EXPOSED ROOTS AS MUCH AS POSSIBLE WITHOUT ALTERING SURFACE DRAINAGE,

NO CONSTRUCTION EQUIPMENT SHALL BE STORED UNDER CANOPIES OF EXISTING TREES. EXCESSIVE COMPACTION SHALL BE AVOIDED IN THESE AREAS. FINISH GRADE AREA UNDER CANOPY OF TREE SHALL BE TAPED OFF TO PREVENT EQUIPMENT FROM RUNNING UNDER TREES. AREA UNDER CANOPY SHALL NOT BE USED FOR STORAGE OF ANY MATERIAL AT ANY TIME.

ROOTS 2" IN DIAMETER AND SMALLER THAT ARE ENCOUNTERED WHILE TRENCHING SHALL BE CLEANLY CUT WITH LOPPERS OR A FINE BLADED SAW TO AVOID BREAKING OR TEARING THE ROOT BACK CLOSER TO THE TRUNK. WHEN CUTTING, DO NOT TEAR THE OUTER BARK COVERING THE ROOT.

AREAS AROUND LARGE ROOTS, (LARGER THAN 2" IN DIAMETER) ENCOUNTERED DURING TRENCHING SHALL BE HAND WORKED. LARGE ROOTS EXPOSED DURING TRENCHING SHALL BE PROTECTED BY COVERING THEM WITH MOISTENED BURLAP. THEY SHALL BE COVERED WITH MOIST BURLAP THE DURATION THE TRENCH IS EXCAVATED. CONTRACTOR IS RESPONSIBLE FOR MAINTAINING MOISTURE IN BURLAP THE ENTIRE TIME THE ROOT IS EXPOSED. THE CONTRACTOR SHALL TAKE DIGITAL PHOTOS OF ROOTS THAT ARE PRUNED/ SEVERED FOR DISTRICT RECORDS AND TO SUBSTANTIATE PROPER METHODS OF WORK. THESE PHOTOS SHALL BE COPIED ONTO A CD AND FORWARDED TO THE DISTRICT SUBSEQUENT TO COMPLETION OF WORK.

WHERE LARGE ROOTS ARE ENCOUNTERED AND MUST BE SEVERED, THE CONTRACTOR SHALL BE RESPONSIBLE FOR OBTAINING THE SERVICES OF A DISTRICT APPROVED ARBORIST. (PAID FOR BY THE CONTRACTOR). THE CONTRACTOR SHALL LIST 3 LICENSED, INSURED AND BONDED ARBORISTS THAT THE DISTRICT MAY CHOOSE FROM TO OVERSEE POSSIBLE ROOT PRUNING OF LARGER STRUCTURAL ROOTS. THE ARBORIST SHALL INSTRUCT THE CONTRACTOR IN METHODS OF PROTECTION AND IF REQUIRED, CUTTING OF TREE ROOTS. IF NECESSARY COORDINATE RE-ROUTING OF TRENCHING TO AVOID MAJOR TREE ROOTS. ARBORIST SHALL SUGGEST ALTERNATE ROUTING OF TRENCHING TO ENSURE TREES SURVIVAL AND STRUCTURAL INTEGRITY. IF THE ARBORIST DEEMS THAT THE TREE CANNOT BE SAVED OR DISTRICT WILL NOT APPROVE TRENCH RE-ROUTING, CONTRACTOR SHALL BE RESPONSIBLE FOR REMOVING THE TREE IN ITS ENTIRETY. THE CONTRACTOR SHALL BE RESPONSIBLE FOR IMPORTING OF SOIL TO FILL VOIDS LEFT BY REMOVAL OF LARGE TREE ROOTS AND STUMP. ALL REMNANTS OF REMOVED TREE SHALL BE REMOVED FROM SITE, NONE SHALL BE USED AS MULCH. THE ARBORIST SHALL OVERSEE EXCAVATION, AND FILLING OF TRENCH/ PIT. THIS LIST OF QUALIFIED ARBORISTS SHALL BE SUBMITTED PRIOR TO ANY CONSTRUCTION PERFORMED.

ALL TURF/ PLANTING AREAS THAT ARE DISTURBED BY TRENCHING AND EXCAVATING SHALL BE BROUGHT BACK TO FINISH GRADE READY FOR PLANTING. GRADE SHALL BE COMPACTED AND DEVOID OF ANY ROCKS 1" DIAMETER AND LARGER WITHIN 6" OF SURFACE OR ANY DELETERIOUS MATERIAL. CONTRACTOR SHALL ENSURE THAT PROPER FLOW LINES ARE MAINTAINED/ CREATED TO ENSURE THAT WATER DOES NOT POND AT TREE BASE.

BELLFLOWER USD

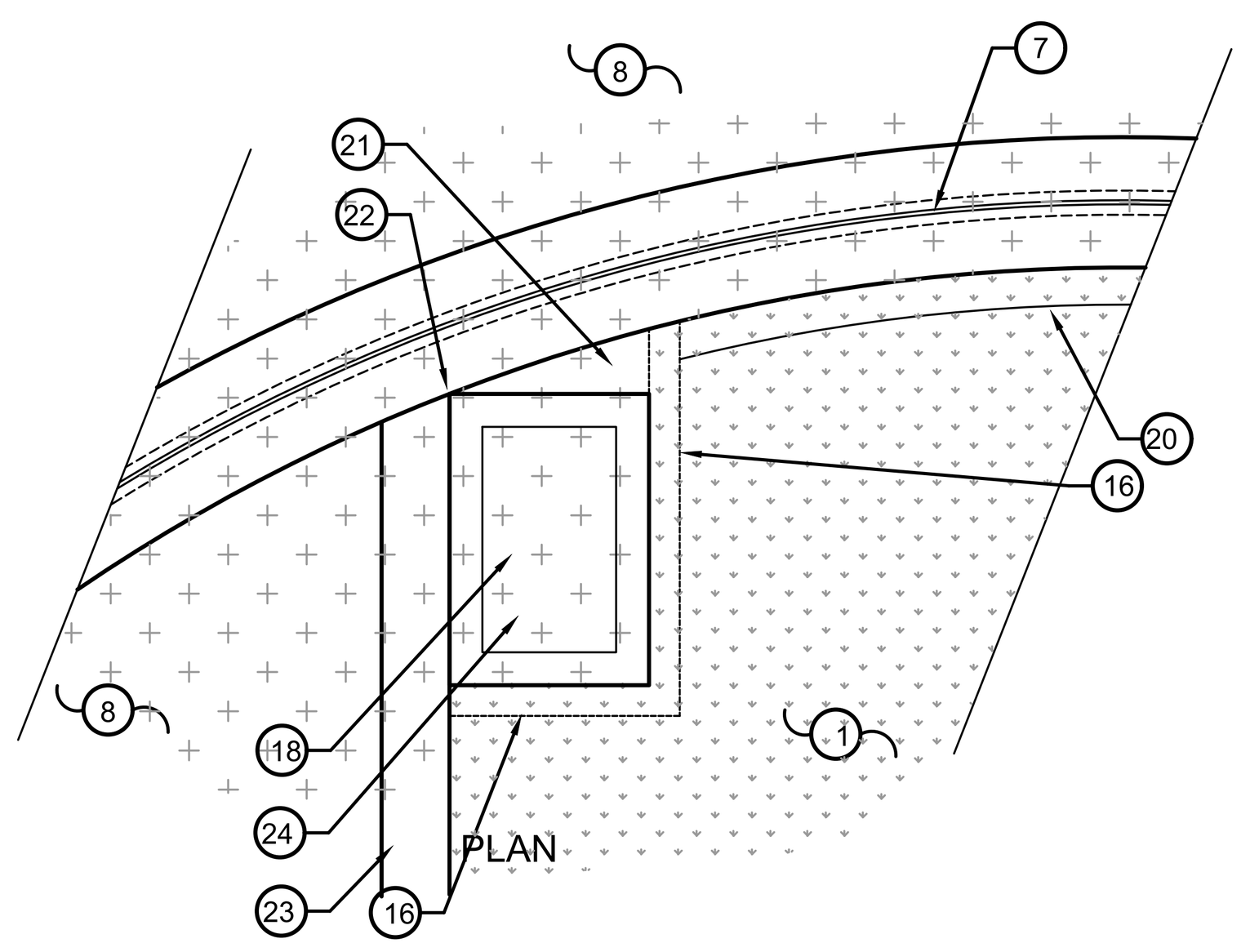

VALVE BOXES IN CORNER OF SYNTHETIC FIELD

21. INSTALL AGGREGATE BASE AND ASPHALT UNDER SYNTHETIC TRACK SURFACING IN THIS TRIANGULAR AREA BETWEEN BOX AND DRAINAGE STRUCTURE. INSTALL PER ARCHITECT'S DETAIL 6 SHEET A004.
22. INSTALL QUICK COUPLER BOX CORNER AT INTERSECTION OF ENGINEER'S CONCRETE DRAINAGE STRUCTURE AND ARCHITECT'S CONCRETE CURB.
23. CONCRETE CURB PER ARCHITECT'S PLAN. REFER TO ARCHITECT'S PLAN.
24. CHRISTY N09 CONCRETE BOX WITH REINFORCED CONCRETE LID OR APPROVED EQUAL.

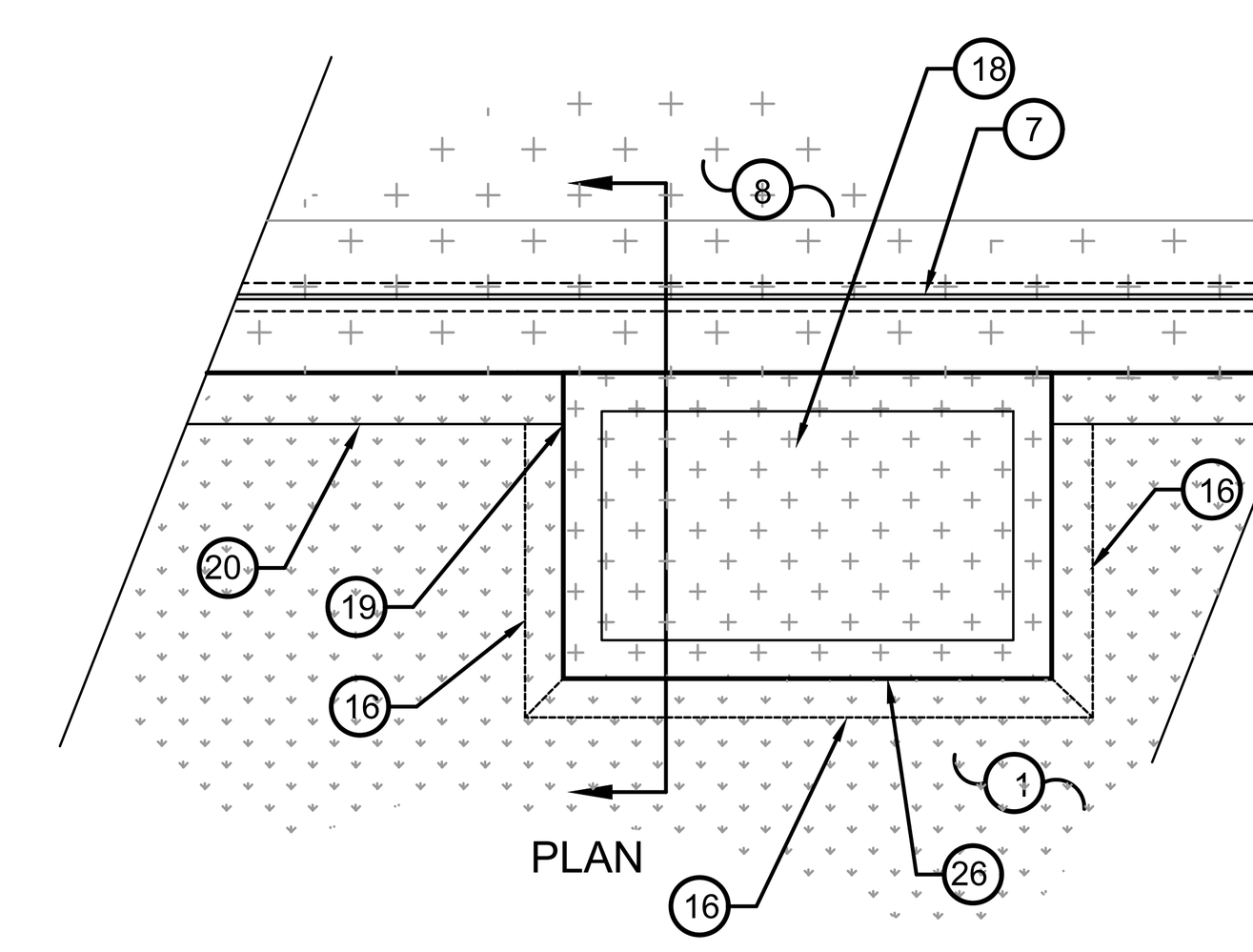

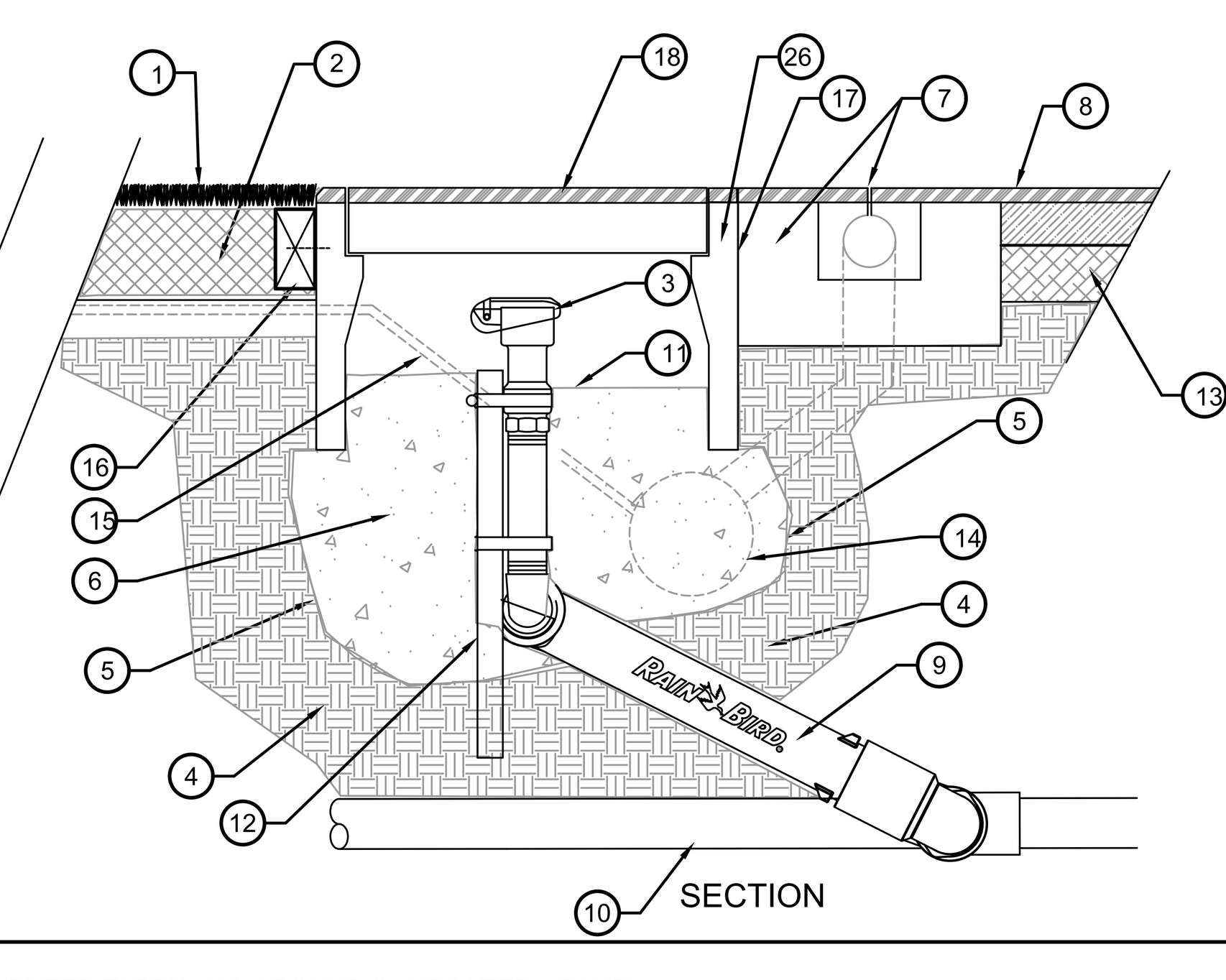

NOTES

COORDINATE INSTALLATION OF FIELD AND TILE DRAINAGE STRUCTURES, SYNTHETIC TURF AND TRACK WITH INSTALLATION OF QUICK COUPLER AND REQUIRED IRRIGATION PIPING.

CONTRACTOR SHALL AFFIX SYNTHETIC TRACK SURFACING TO TOP OF CONCRETE BOX. SET CONCRETE BOX SO TRACK SURFACING ON BOX MATCHES FLUSH WITH SURFACING ON TRACK AND DRAIN.

COMPACT GRAVEL TO ENSURE THAT QUICK COUPLER IS STABLE.

DETAIL LEGEND

1. SYNTHETIC TURF INSTALLED PER ARCHITECT'S/ ENGINEER'S PLANS.
2. COMPACTED SUB-BASE FOR SYNTHETIC TURF PER ENGINEER'S PLANS.
3. QUICK COUPLER. REFER TO LEGEND FOR MODEL.
4. COMPACTED SUB-GRADE.
5. INSTALL FILTER FABRIC ALL AROUND COMPACTED GRAVEL.
6. ANGULAR GRAVEL .75" COMPACTED THOROUGHLY. ENSURE QUICK COUPLER IS PLUMB.
7. CHANNEL SLOT DRAIN/ STRUCTURE PER CIVIL ENGINEER'S PLANS.
8. SYNTHETIC TRACK SURFACE PER ARCH. PLANS.
9. RAINBIRD SWING JOINT ASSEMBLY TSJ-12.
10. PVC MAINLINE. REFER TO IRRIGATION LEGEND.
11. BRING GRAVEL TO WITHIN 3" OF TOP OF QUICK COUPLER VALVE.
12. 30" LONG #4 REBAR STAKE FASTENED TO QUICK COUPLER WITH 2 SS ¾" WIDE WORM CLAMPS.
13. CONSTRUCTION OF SYNTHETIC TRACK BASE IS PER ARCHITECT'S/ ENGINEER'S PLANS.
14. PVC DRAIN LINE PER ENGINEER'S PLANS. COORDINATE INSTALLATION OF QUICK COUPLER AND GRAVEL SUPPORT BED WITH DRAIN LINE.
15. GEOCOMPOSITE PIPE PER ENGINEER'S PLANS. COORDINATE INSTALLATION OF QUICK COUPLER AND GRAVEL SUPPORT BED WITH PIPE INSTALLATION.
16. 2"x4" NAILER. REFER TO ARCHITECT'S DETAIL 15/ A004 SIM FOR INSTALLATION. CONTRACTOR SHALL MATCH NAILER INSTALLATION WITH ARCHITECTURAL DETAILS.
17. SET BOX FLUSH WITH CONCRETE TRENCH DRAIN BOX. PIN BOX TO DRAINAGE STRUCTURE TO PREVENT MOVEMENT.

    APPLY TRACK SURFACING TO CONCRETE BOX LID.
18. COORDINATE INSTALLATION OF CONC BOX WITH 2x4 NAILER INSTALLED PER ARCHITECTS PLAN DETAIL 15/ A004 SIM ON DRAINAGE STRUCTURE.
19. 2x4 NAILER INSTALLED PER ARCHITECTS DETAIL 15/A004 SIM.
20.

QUICK COUPLER IN BOX FOR SYNTHETIC TURF/ TRACK SURFACING

NTS

IDENTIFICATION STAMP
DIV. OF THE STATE ARCHITECT
APP: 03-124281 INC:
REVIEWED FOR
SS ☑ FLS ☑ ACS ☑
DATE: 02/04/2025

ARCHITECT:
architecture westbergwhite
14471 CHAMBERS RD, SUITE 210
TUSTIN, CA 92780
(714) 508-1780 (714) 508-1780 FAX

CONSULTANT:
RHA LANDSCAPE ARCHITECTS PLANNERS, INC.
6840 Indiana Ave, Suite 100
Riverside, CA 92506
(951) 781.1930 ph
Lic 2799
www.rhala.com
RHA PRJ# 24117

LICENSED LANDSCAPE ARCHITECT
DOUGLAS GROVE NO. 2799
Signature
11/30/25
Renewal Date
12/16/24
Date
STATE OF CALIFORNIA

PROJECT NAME:

Bellflower Unified School District
Mayfair High School Sports Fields
6000 North Woodruff Ave
Lakewood, California 90713

CLIENT:

BELLFLOWER UNIFIED SCHOOL DISTRICT
16703 S. Clark Ave.
BELLFLOWER, CALIFORNIA 90706

#	Rev. Date	Description

JOB NO: 15008
DATE: 05/28/2024
DRAWN: DC
CHECK: JC
ARCHITECT: PDW
ENGINEER:

SHEET DESCRIPTION:
IRRIGATION DETAILS, NOTES

SHEET NO:
L-09

C:\Users\DaveB\appdata\local\temp\AcPublish_33436\24117 DETAILS.dwg Dec 13, 2024 – 9:55am DaveB

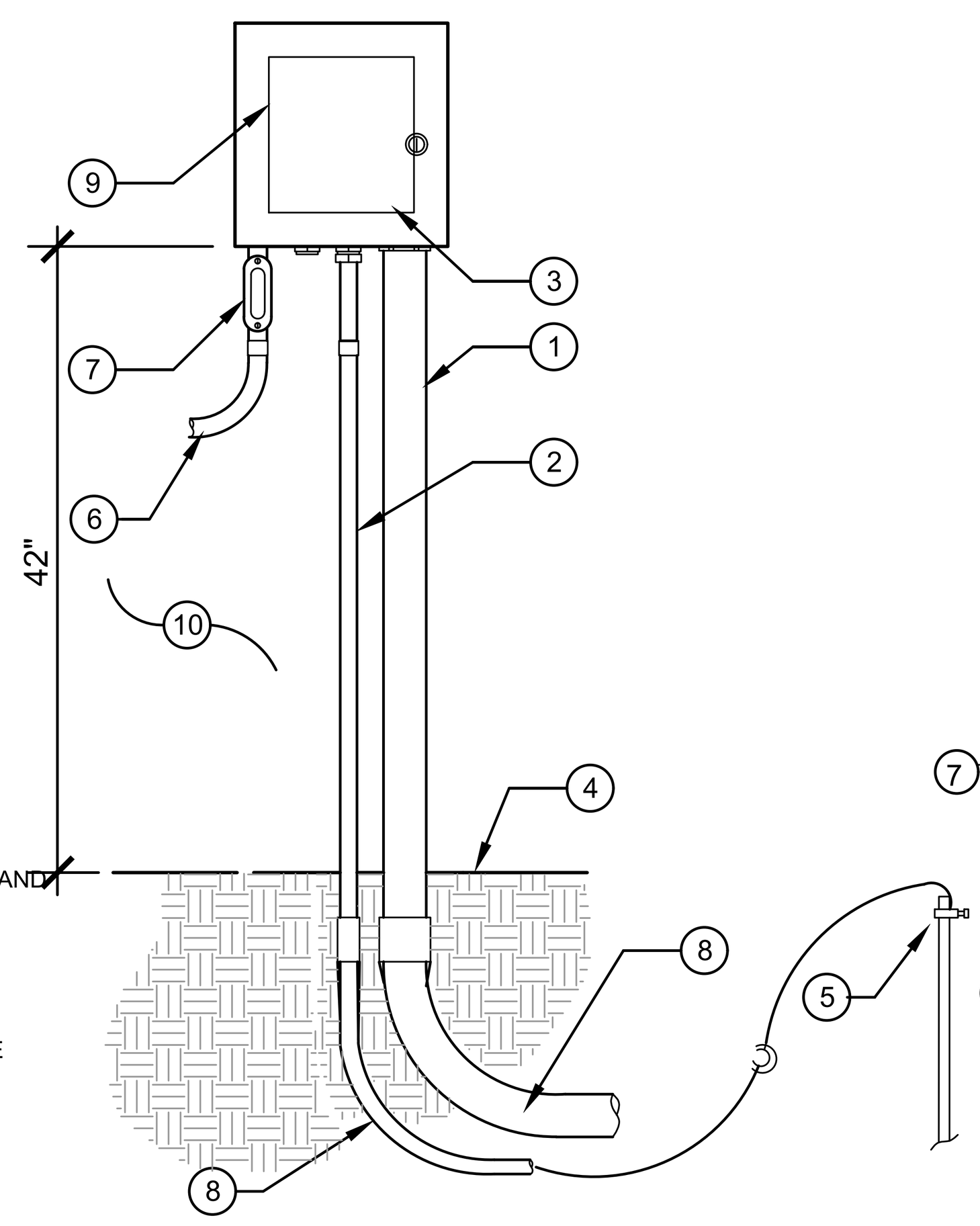

LEGEND KEY

1. GALV. RIGID CONDUIT FOR CONTROL WIRES SIZE AS REQUIRED.
2. GALV. RIGID CONDUIT FOR GROUND WIRE.
3. STAINLESS STEEL ENCLOSURE. REFER TO IRRIGATION LEGEND FOR MFG AND MODEL OF ENCLOSURE. MOUNT ENCLOSURE PER MFG RECOMMENDATIONS.
4. FINISH GRADE.
5. GROUND ROD. REFER TO DETAIL FOR INSTALLATION. INSTALL WITHIN NEW CONCRETE PAD.
6. CONDUIT WITH LINE VOLTAGE POWER FROM ELECTRICAL ENGINEER'S STUB. ALL CONDUITS SHALL BE PAINTED TO MATCH BACK OF SIGN WALL.
7. 120VAC JUNCTION BOX.
8. PVC SWEEP ELL.
9. IRRITROL CONTROLLER. REFER TO IRRIGATION LEGEND.
10. BACK OF COLLEGE SIGN.

NOTES

REFER TO LEGEND FOR CONTROLLER MODEL. MAINTAIN 12" CLEARANCE BETWEEN EDGE OF WALL AND ENCLOSURE.

CONTRACTOR SHALL RROVIDE SEPARATE PVC SWEEP ELLS FOR RCV WIRES AND GROUND ROD CABLE.

FINAL LOCATION OF CONTROLLER(S) SHALL BE APPROVED BY AUTHORIZED DISTRICT REPRESENTATIVE.

SECURELY ATTACH ALL CONDUIT TO MASONRY WALL. ALL CONDUIT SHALL BE NEATLY ARRANGED AND CONNECTED.

120VAC POWER TO BE SUPPLIED PER ELECTRICAL ENGINEER'S PLANS. IRRIGATION CONTRACTOR TO MAKE FINAL CONNECTIONS TO CONTROLLER.

WALL MOUNT CONTROLLER

NTS

REFER TO NOTES AND SPECIFICATIONS

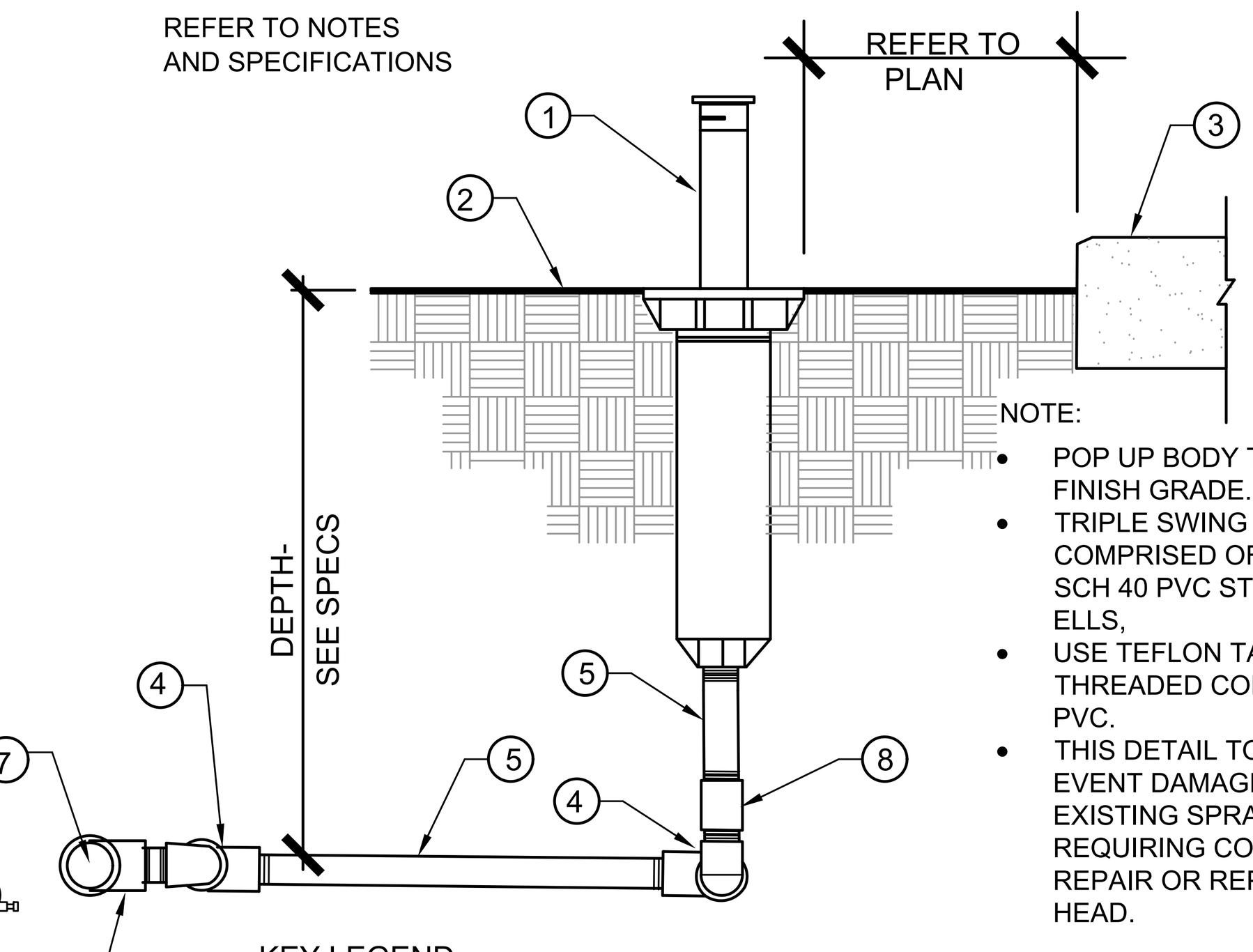

NOTE:

- POP UP BODY TO BE .5" ABOVE FINISH GRADE.
- TRIPLE SWING JOINTS SHALL BE COMPRISED OF ALTERNATING SCH 40 PVC ST ELLS AND MARLEX ELLS,
- USE TEFLON TAPE ON ALL THREADED CONNECTIONS PVC TO PVC.
- THIS DETAIL TO BE USED IN THE EVENT DAMAGE OCCURS TO EXISTING SPRAY HEADS REQUIRING CONTRACTOR TO REPAIR OR REPLACE EXISTING HEAD.

KEY LEGEND

1. POP-UP SPRAY HEAD,
2. FINISH GRADE.
3. PROPOSED/ EXISTING EDGE OF FINISH SURFACE OR BLDG/ WALL FACE.
4. TRIPLE SWING JOINT
5. 1/2" PVC SCH. 80 NIPPLE, LENGTH AS REQUIRED
6. PVC SCH. 40 TEE SxSxT.
7. PVC LATERAL LINE.
8. PVC SCH 40 TXT COUPLING OR ADV AS REQUIRED.

POP-UP SPRAY HEAD

NTS

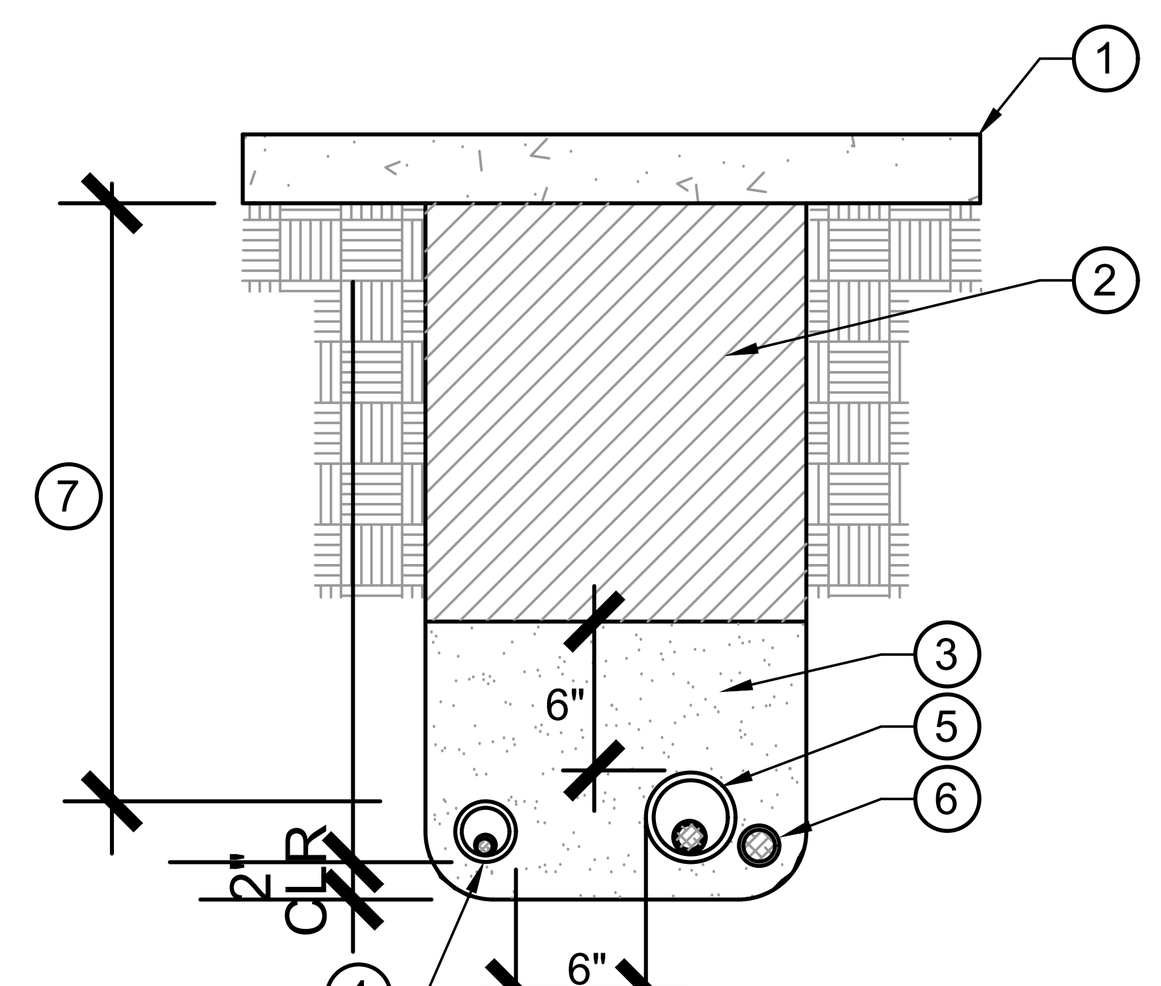

KEY LEGEND

1. HARDSCAPE SURFACE.
2. CLEAN BACKFILL AS REQUIRED, TO BE SET IN 6" LIFTS. REFER TO SPECIFICATIONS FOR SPECIFIC MATERIAL AND COMPACTION REQUIREMENTS.
3. CLEAN SAND.
4. LATERAL LINE W/ SLEEVE.
5. PRESSURE MAIN LINE W/ SLEEVE.
6. CONTROL WIRES & COMPUTER HARD WIRE SLEEVE.
7. MIN. DEPTH:
   24" UNDER WALKS.
   30" UNDER DRIVEWAY.
   36" UNDER STREETS.

REFER TO NOTES AND SPECIFICATIONS

ALL SLEEVES TO BE PVC. SCH. 80 AND TWICE THE DIA. OF THE WORKING PIPE.

ALL SLEEVES TO RUN A MIN. OF 12" BEYOND HARDSCAPE EDGES.

CLEAN BACKFILL MAY BE SUBSTITUTED FOR SAND UNDER WALKS AND DRIVES.

REFER TO RECYCLED WATER NOTES FOR REQUIREMENTS FOR INSTALLATION OF RECYCLED WATER SYSTEMS.

SLEEVING

NTS

- REFER TO RECYCLED WATER NOTES FOR REQUIREMENTS FOR INSTALLATION OF RECYCLED WATER SYSTEMS.
- PROVIDE PURPLE IDENTIFIER CAPS ON ALL ROTORS SERVICED BY RECYCLED WATER.

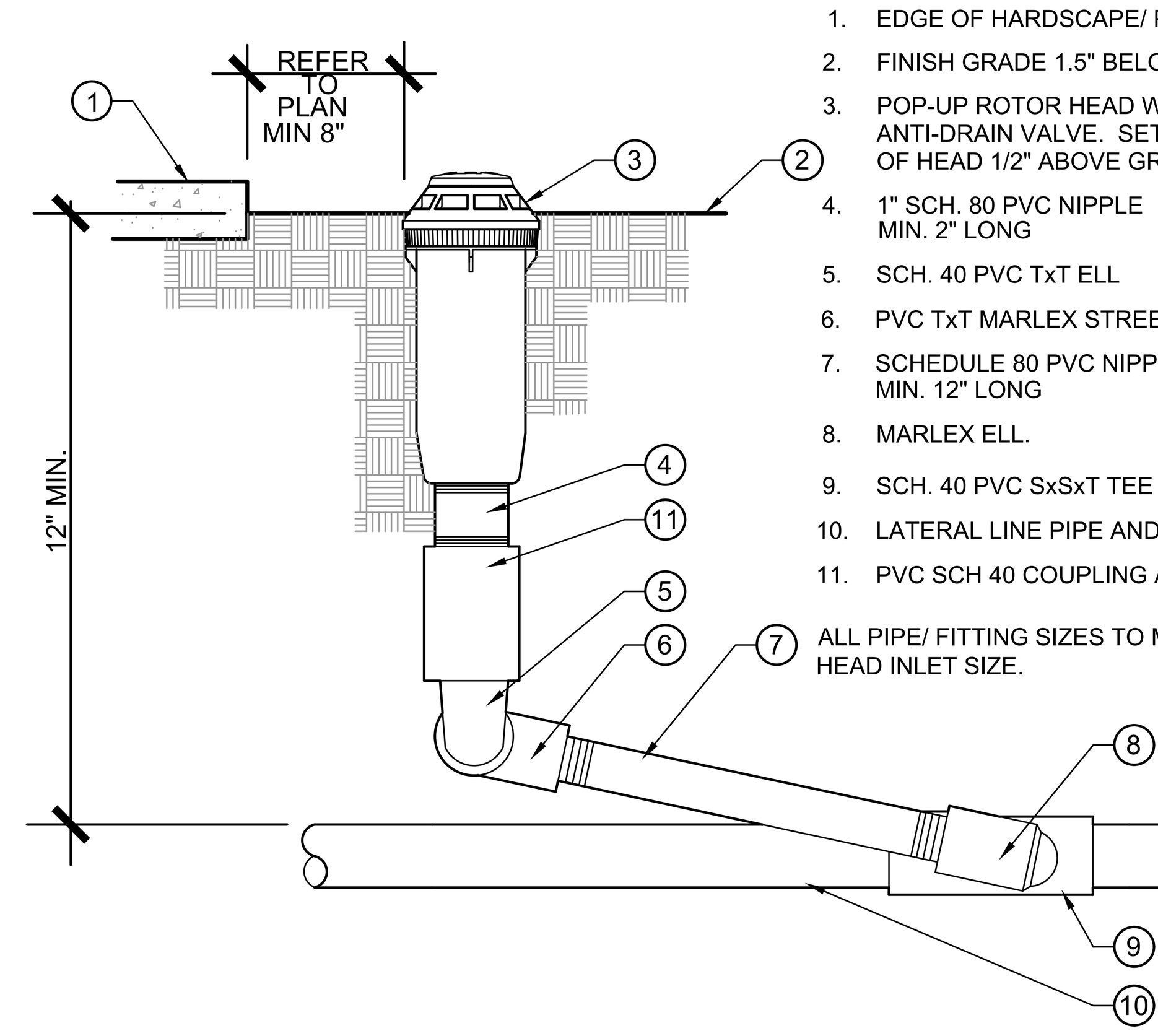

KEY LEGEND

1. EDGE OF HARDSCAPE/ PAVING
2. FINISH GRADE 1.5" BELOW TOP OF CURB.
3. POP-UP ROTOR HEAD WITH ANTI-DRAIN VALVE. SET TOP OF HEAD 1/2" ABOVE GRADE.
4. 1" SCH. 80 PVC NIPPLE MIN. 2" LONG
5. SCH. 40 PVC TxT ELL
6. PVC TxT MARLEX STREET ELL
7. SCHEDULE 80 PVC NIPPLE - MIN. 12" LONG
8. MARLEX ELL.
9. SCH. 40 PVC SxSxT TEE WITH 1" OUTLET.
10. LATERAL LINE PIPE AND FITTING
11. PVC SCH 40 COUPLING AS REQUIRED.

ALL PIPE/ FITTING SIZES TO MATCH ROTOR HEAD INLET SIZE.

TURF ROTOR

NTS

REFER TO NOTES AND SPECIFICATIONS

REFER TO RECYCLED WATER NOTES FOR REQUIREMENTS FOR INSTALLATION OF RECYCLED WATER SYSTEMS.

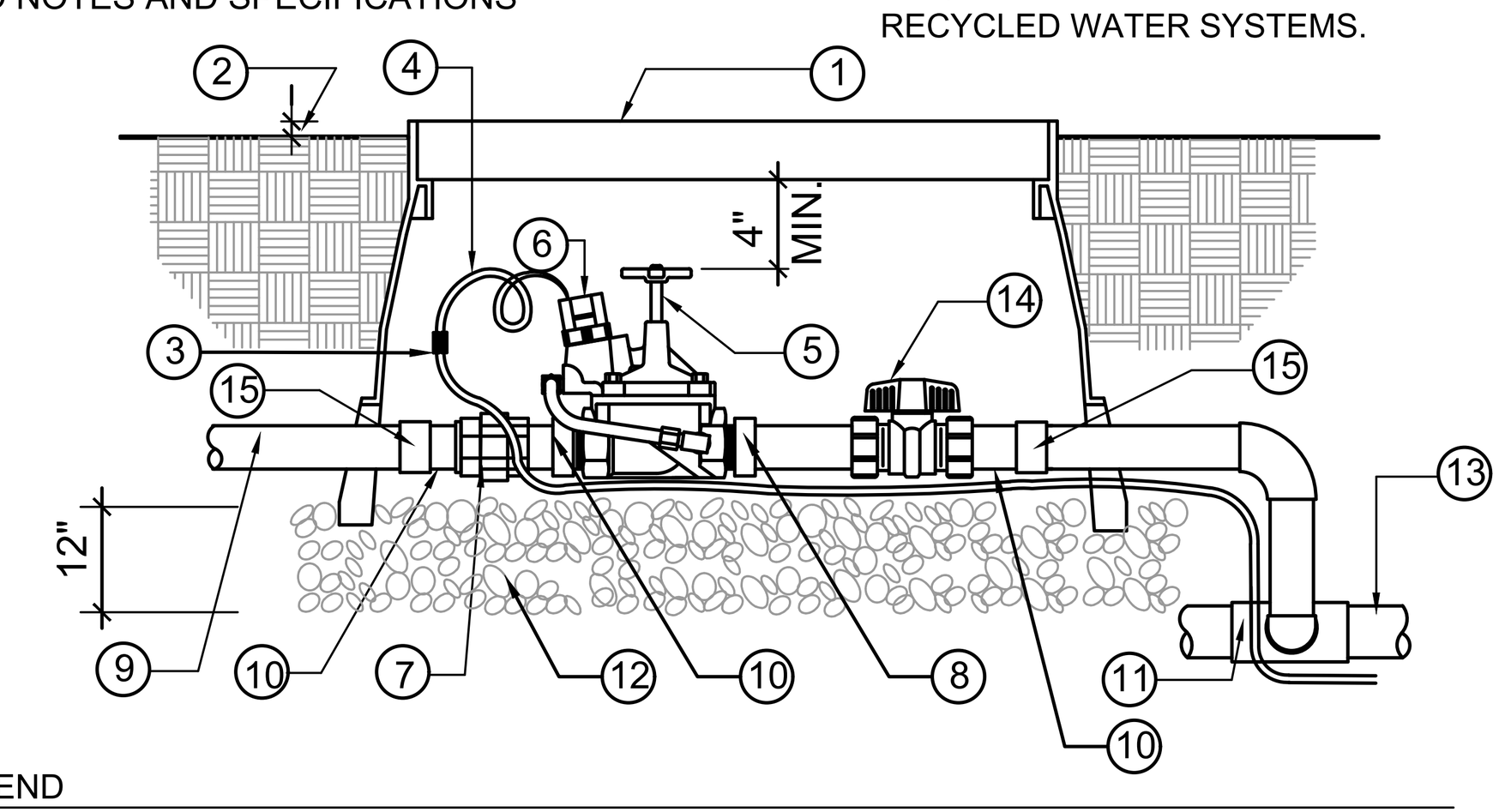

KEY LEGEND

1. PURPLE PLASTIC VALVE BOX WITH LOCKING COVER MARKED "RCV" BOX SIZE SHALL BE LARGE ENOUGH TO ACCOMMODATE ALL EQUIPMENT AND FITTINGS SHOWN WITH 3" CLEARANCE TO PVC ADAPTERS.
2. 1" IN TURF AREAS, 1.5" IN SHRUB AREAS.
3. APPROVED WIRE CONNECTORS.
4. CONTROL WIRES, BUNDLE AND TAPE (W/24"MIN. EXTRA WIRE).
5. REMOTE CONTROL VALVE.
6. SOLENOID.
7. PVC SCH 80 UNION, (2) REQ.
8. PVC SCH 40 MALE ADAPTERS, (2) REQ.
9. PVC NON-PRESSURE PIPE.
10. PVC SCH 80 NIPPLE. LENGTH AS REQUIRED. SIZE TO MATCH VALVE INLET.
11. PVC SCH 40 TEE (SxSxS) OR ELL (SxS) ON MAINLINE. REFER TO JOINT RESTRAINT DETAIL FOR LARGER SIZE PIPING.
12. 4" MIN. DEEP OF 3/4" GRAVEL.
13. PVC PRESSURE PIPE.
14. ISOLATION BALL VALVE PER LEGEND. MATCH RCV SIZE. INSTALL BALL VALVE WITH PVC MALE ADAPTERS (2) REQUIRED. REFER TO SPECIFICATIONS.
15. PVC SCHEDULE 40 REDUCER BUSHING AS REQUIRED TO MATCH RCV INLET/ NIPPLE SIZE.

NOTE:
USE CLASS 315 PVC PIPE AND SCH 80 PVC FITTINGS FOR SIZE 2"-3"
USE SCH 40 PVC PIPE AND FITTINGS FOR SIZE
1\" OR LESS. REFER TO JOINT RESTRAINT DETAILS FOR GASKETED CONNECTIONS

PROVIDE ONE CONTROLLER/VALVE ID TAG PER VALVE. ID TAGS SHALL BE POLYURETHANE 2|" X 2[" MIN. WITH 1_" BLACK LETTER ON CONTRASTING BACKGROUND

BELOW GRADE REMOTE CONTROL VALVE

single valve

NOTE:
INSTALL VALVE BOX SO THAT TOP OF COVER IS 2".
ABOVE FG IN GROUND COVER AREAS AND 1/2" IN TURF AREAS.
REFER TO SPECIFICATIONS AND NOTES FOR PIPE DEPTH.
BALL VALVES 2.5" AND LARGER SHALL BE FLANGED.

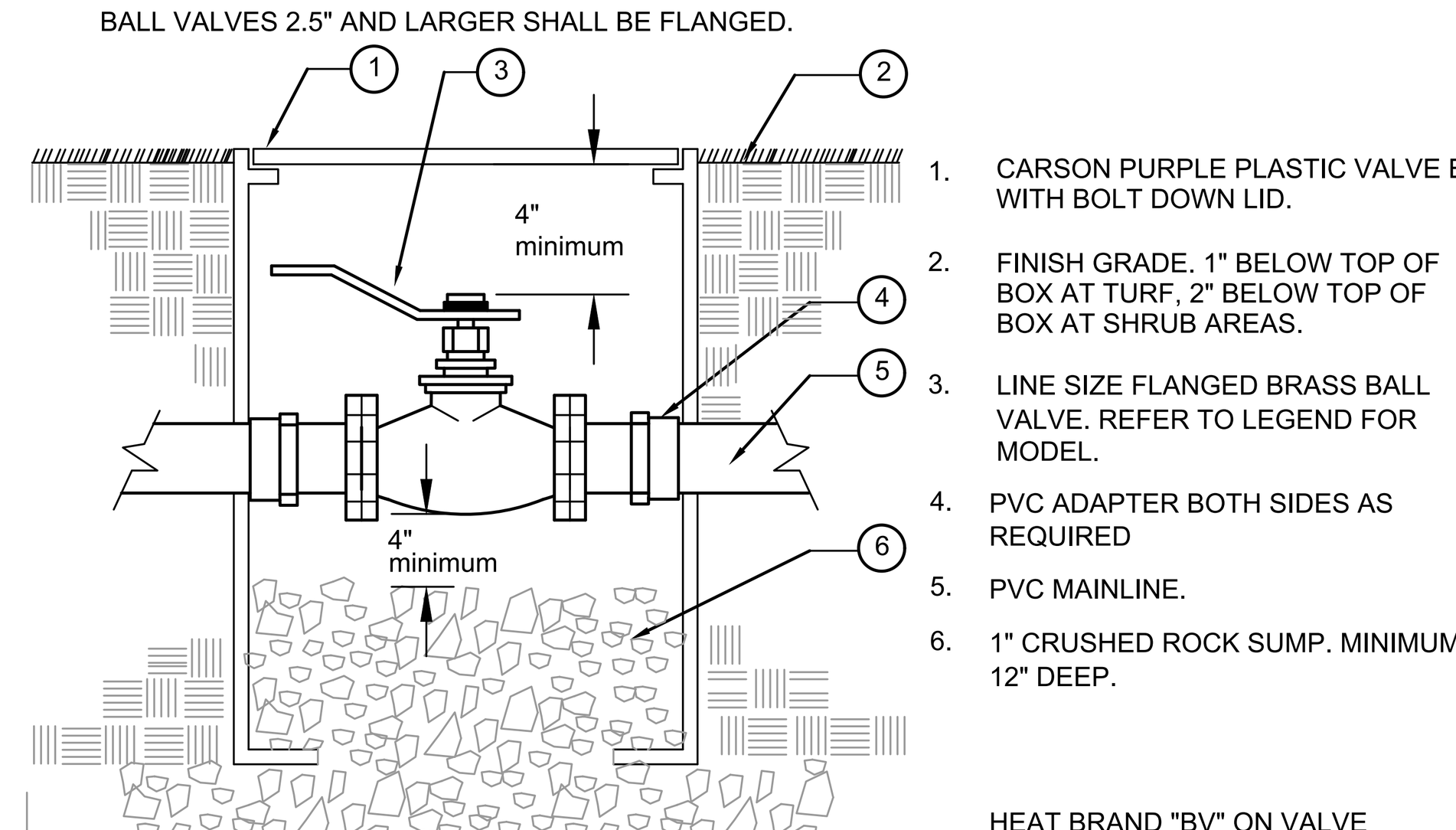

1. CARSON PURPLE PLASTIC VALVE BOX WITH BOLT DOWN LID.
2. FINISH GRADE. 1" BELOW TOP OF BOX AT TURF, 2" BELOW TOP OF BOX AT SHRUB AREAS.
3. LINE SIZE FLANGED BRASS BALL VALVE. REFER TO LEGEND FOR MODEL.
4. PVC ADAPTER BOTH SIDES AS REQUIRED
5. PVC MAINLINE.
6. 1" CRUSHED ROCK SUMP. MINIMUM 12" DEEP.

HEAT BRAND "BV" ON VALVE BOX LID.

SIZE OF BOX SHALL ALLOW FULL OPERATION OF HANDLE.

CONTRACTOR SHALL PROVIDE 'NON-SEIZE' COMPOUND TO APPLY ON BOLTS TO ELIMINATE SEIZING. BOLTS, WASHERS, ETC SHALL BE STAINLESS STEEL AND MATCH THREADED INSERT IN VALVE BOX. BOLTS WASHERS AND ANY OTHER MATERIALS OR COMPOUNDS USED TO PREVENT SEIZING OF HOLD DOWN BOLTS SHALL BE APPROVED BY THE DISTRICT.

FLANGED BALL VALVE 4" & LARGER

NTS

NOTE:
INSTALL VALVE BOX SO THAT TOP OF COVER IS 2" (5cms)
ABOVE FG IN GROUND COVER AREAS AND 1/2" (1.5cms) IN TURF AREAS.
BALL VALVES 2" AND SMALLER SHALL BE THREADED.
REFER TO SPECIFICATIONS AND NOTES FOR PIPE DEPTHS.

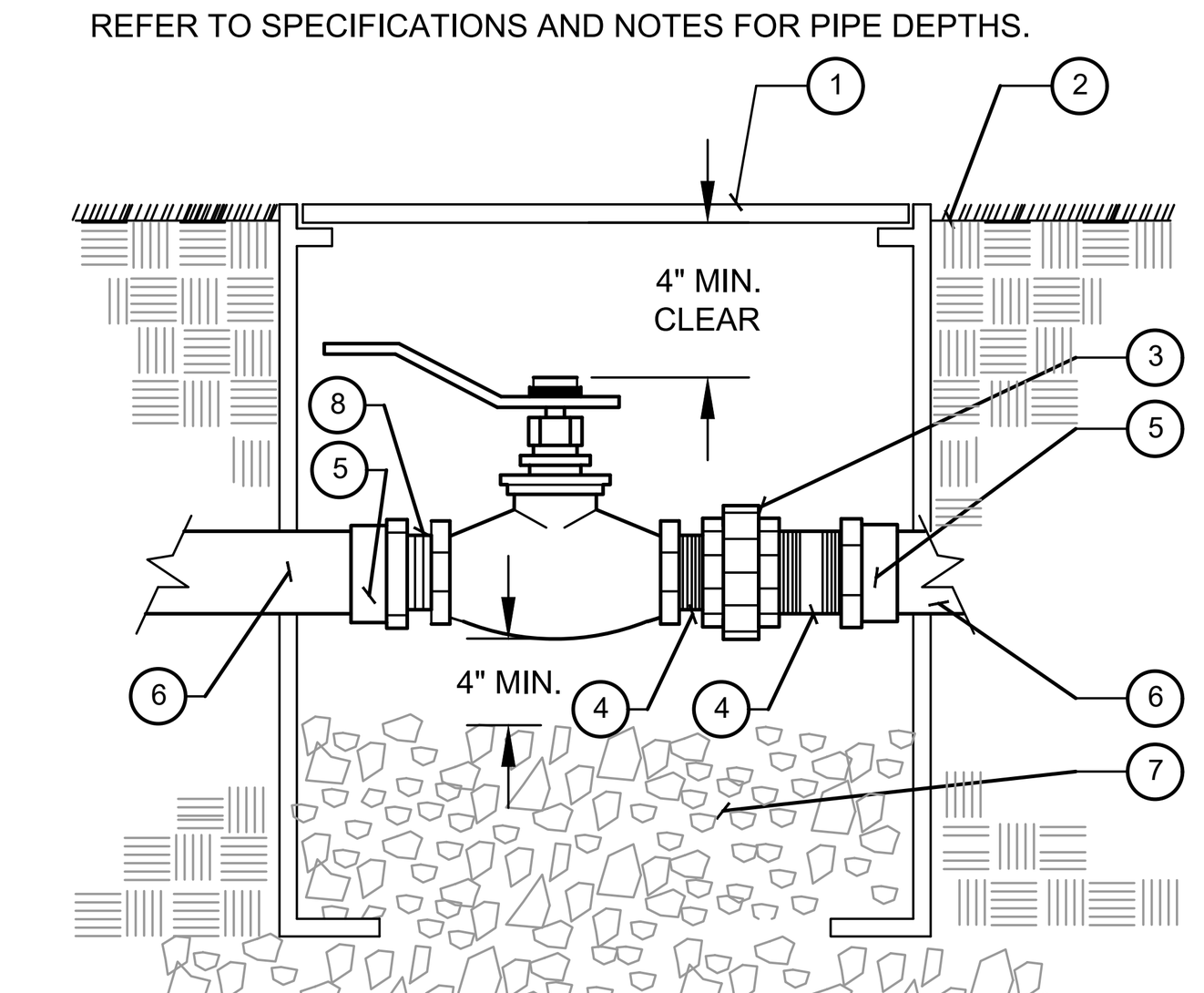

1. PURPLE PLASTIC VALVE BOX WITH BOLT DOWN LID. HEAT BRAND "BV" ON LID.
2. FINISH GRADE. 1" BELOW TOP OF BOX AT TURF, 2" BELOW TOP OF BOX AT SHRUB AREAS.
3. BRASS UNION.
4. BRASS NIPPLE, TYP.
5. PVC ADAPTER.
6. PVC MAINLINE.
7. 1" CRUSHED ROCK SUMP. MINIMUM 12" DEEP.
8. PVC SCHEDULE 80 NIPPLE.

CONTRACTOR SHALL PROVIDE 'NON-SEIZE' COMPOUND TO APPLY ON BOLTS TO ELIMINATE SEIZING. BOLTS, WASHERS, ETC SHALL BE STAINLESS STEEL AND MATCH THREADED INSERT IN VALVE BOX. BOLTS WASHERS AND ANY OTHER MATERIALS OR COMPOUNDS USED TO PREVENT SEIZING OF HOLD DOWN BOLTS SHALL BE APPROVED BY THE DISTRICT.
VALVE BOX SIZE SHALL BE LARGE ENOUGH TO ALLOW FULL OPERATION OF BALL VALVE HANDLE.

BALL VALVE 3" AND SMALLER

NTS

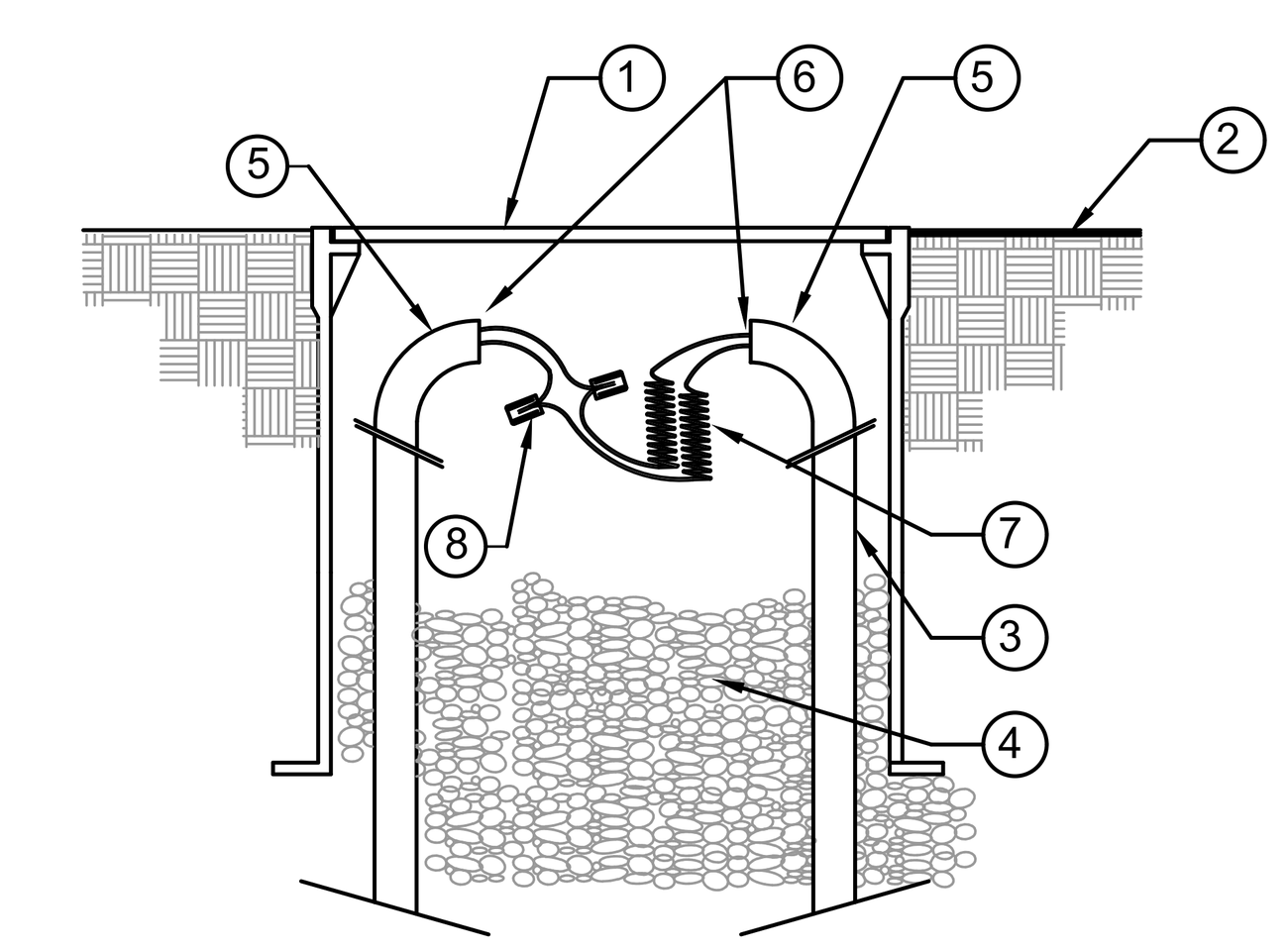

KEY LEGEND

1. CARSON PURPLE PLASTIC VALVE BOX. INSTALL SIZE AS REQUIRED. HEAT BRAND LID WITH 'PB'.
2. FINISH GRADE. SET 1" BELOW TO OF BOX LID IN SHRUB AREAS. ALL BOXES SHALL BE LOCATED IN SHRUB AREAS. BOXES SHALL NOT BE INSTALLED WITHIN TURF AREAS.
3. PVC CONDUIT RISER. SIZE AS REQUIRED.
4. MINIMUM 1.5 CUBIC FEET OF 3/4" GRAVEL. BOX SHALL SIT ON MINIMUM 3" THICK LAYER OF GRAVEL.
5. PVC SWEEP ELL. SIZE AS REQUIRED.
6. SEAL ENDS OF SWEEP ELL TO PREVENT WATER, DIRT AND INSECCT INTRUSION. USE DUCT SEAL COMPOUND #1003 MANUFACTURED BY SEALERS, INC. OR APPROVED EQUAL.
7. 24" COIL OF RCV WIRES WHERE WATERPROOF CONNECTION IS MADE TO ANOTHER WIRE OR WHERE BOX IS PROVIDED AT CONDUIT CHANGE OF DIRECTION OR ALONG STRAIGHT RUN AT 100' OC.
8. WATERPROOF WIRE SPLICE. REFER TO WIRE SPLICE DETAIL. INSTALL IF REQUIRED.

PULL/ SPLICE BOX IN LANDSCAPE

NTS

REFER TO NOTES AND SPECIFICATIONS

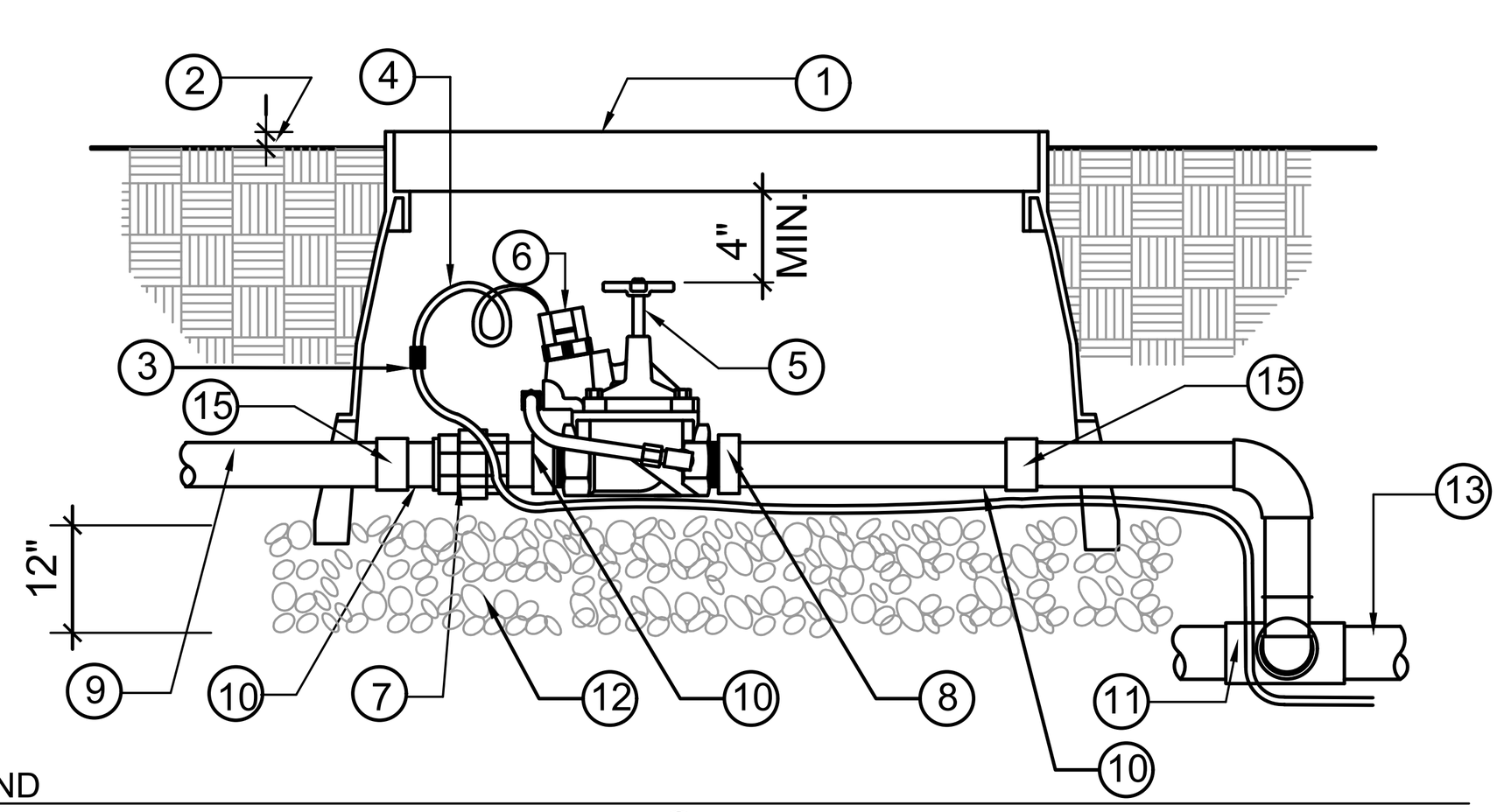

KEY LEGEND

1. PURPLE PLASTIC VALVE BOX WITH LOCKING COVER MARKED "RCV" BOX SIZE SHALL BE LARGE ENOUGH TO ACCOMMODATE ALL EQUIPMENT AND FITTINGS SHOWN WITH 3" CLEARANCE TO PVC ADAPTERS.
2. 1" IN TURF AREAS, 1.5" IN SHRUB AREAS.
3. APPROVED WIRE CONNECTORS.
4. CONTROL WIRES, BUNDLE AND TAPE (W/24"MIN. EXTRA WIRE).
5. REMOTE CONTROL VALVE.
6. SOLENOID.
7. PVC SCH 80 UNION, (2) REQ.
8. PVC SCH 40 MALE ADAPTERS, (2) REQ.
9. PVC NON-PRESSURE PIPE.
10. PVC SCH 80 NIPPLE. LENGTH AS REQUIRED. SIZE TO MATCH VALVE INLET.
11. PVC SCH 40 TEE (SxSxS) OR ELL (SxS) ON MAINLINE. REFER TO JOINT RESTRAINT DETAIL FOR LARGER SIZE PIPING.
12. 4" MIN. DEEP OF 3/4" GRAVEL.
13. PVC PRESSURE PIPE.
14. ISOLATION BALL VALVE PER LEGEND. MATCH RCV SIZE. INSTALL BALL VALVE WITH PVC MALE ADAPTERS (2) REQUIRED. REFER TO SPECIFICATIONS.
15. PVC SCHEDULE 40 REDUCER BUSHING AS REQUIRED TO MATCH RCV INLET/ NIPPLE SIZE.

NOTE:
USE CLASS 315 PVC PIPE AND SCH 80 PVC FITTINGS FOR SIZE 2"-3"
USE SCH 40 PVC PIPE AND FITTINGS FOR SIZE
1\" OR LESS. REFER TO JOINT RESTRAINT DETAILS FOR GASKETED CONNECTIONS

PROVIDE ONE CONTROLLER/VALVE ID TAG PER VALVE. ID TAGS SHALL BE POLYURETHANE 2|" X 2[" MIN. WITH 1_" BLACK LETTER ON CONTRASTING BACKGROUND

BELOW GRADE REMOTE CONTROL VALVE

NTS

multiple valve manifold

REFER TO RECYCLED WATER NOTES FOR REQUIREMENTS FOR INSTALLATION OF RECYCLED WATER SYSTEMS.

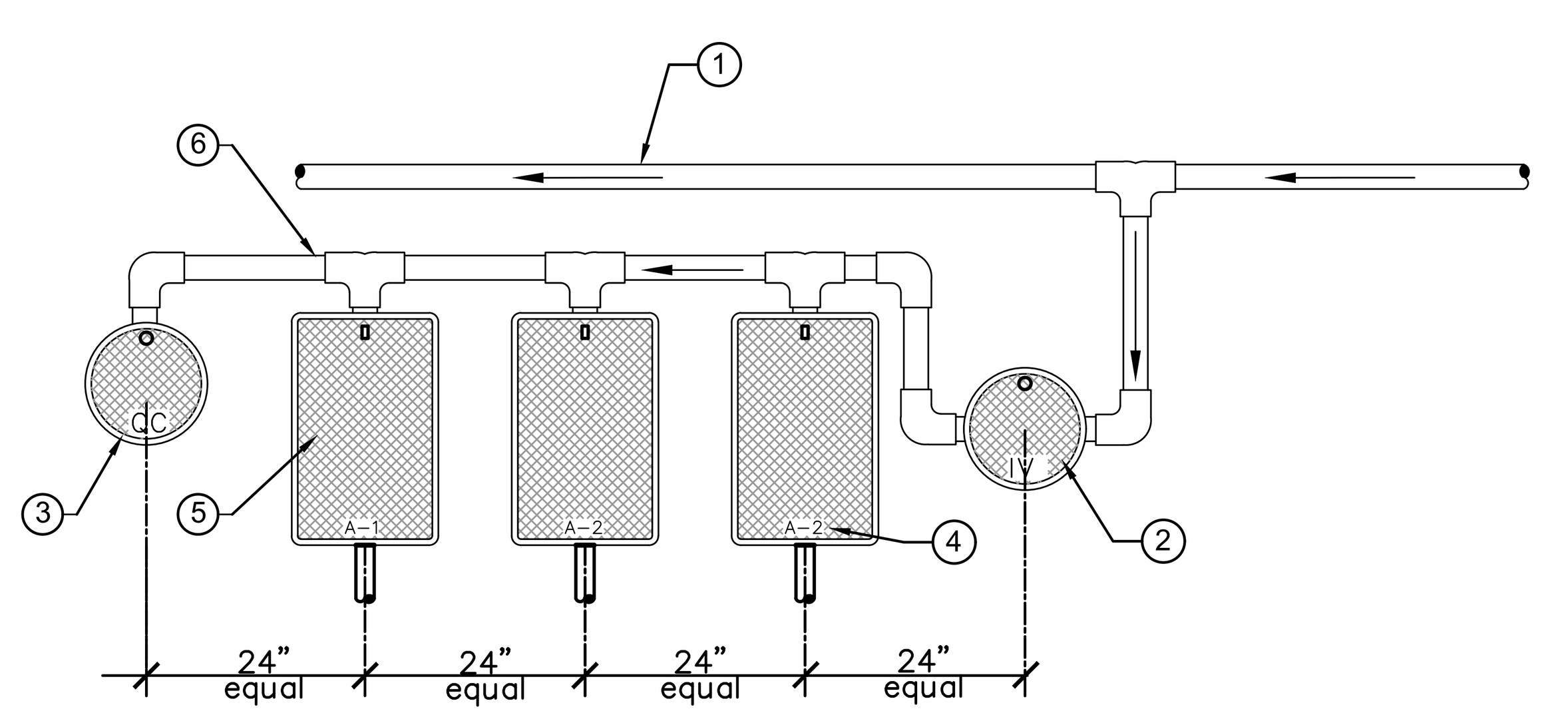

KEY LEGEND

1. PRESSURE SUPPLY LINE. SEE PLANS FOR SIZE..
2. ISOLATION VALVES. SEE SPECIFICATIONS AND DETAIL FOR INSTALLATION. REFER TO LEGEND FOR TYPE.
3. QUICK COUPLER IF SPECIFIED. SEE LEGEND AND DETAIL FOR INSTALLATION.
4. HEAT BRAND ALL VALVE BOXES.
5. ELECTRIC REMOTE CONTROL VALVE. REFER TO DETAIL FOR INSTALLATION.
6. PVC MANIFOLD PIPE - SAME SIZE AS PRESSURE SUPPLY LINE LOCATED UNDERNEATH VALVE BOXES.

NOTE
EACH MANIFOLD SHALL HAVE A MAXIMUM OF 15' SEPARATION, ALL MANIFOLDS ARE TO BE INSTALLED IN PLANTER AREAS WHENEVER POSSIBLE.

RCV MANIFOLD FOR MULTIPLE VALVES

NTS

multiple valve

KEY LEGEND

1. SATURATE AND COMPACT BACKFILL TO 90%
2. FINISH SURFACE.
3. NON-PRESSURE LATERAL LINE.
4. PRESSURE MAIN LINE.
5. DIRECT BURIAL, LOW VOLTAGE CONTROL WIRES, BUNDLE AT 10' O.C.

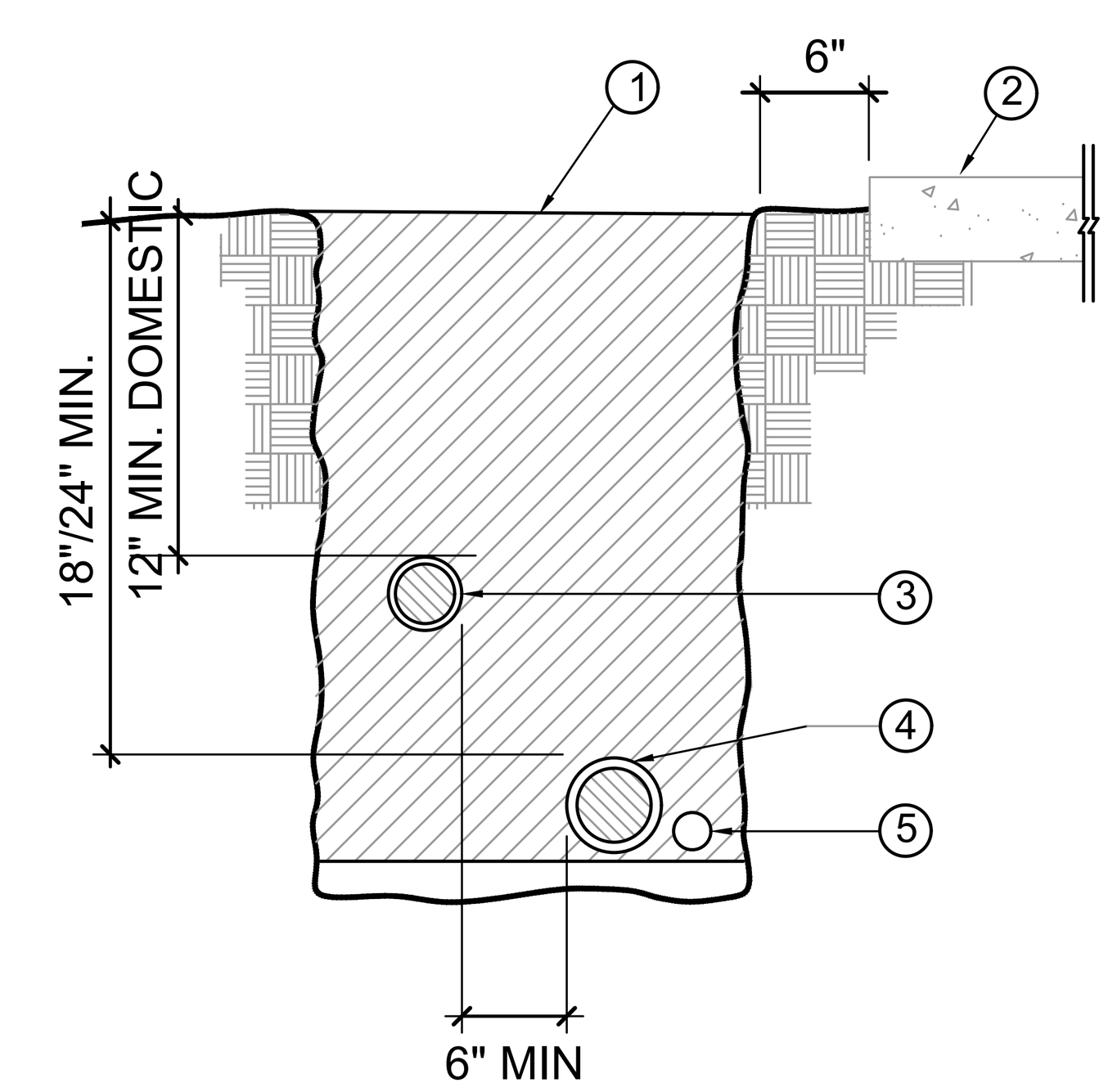

MINIMUM BACKFILL RELATIVE COMPACTION SHALL BE 90%

NOTE: SEE SLEEVING DETAIL FOR TRENCHING IN PAVED AREAS

TRENCHING

NTS

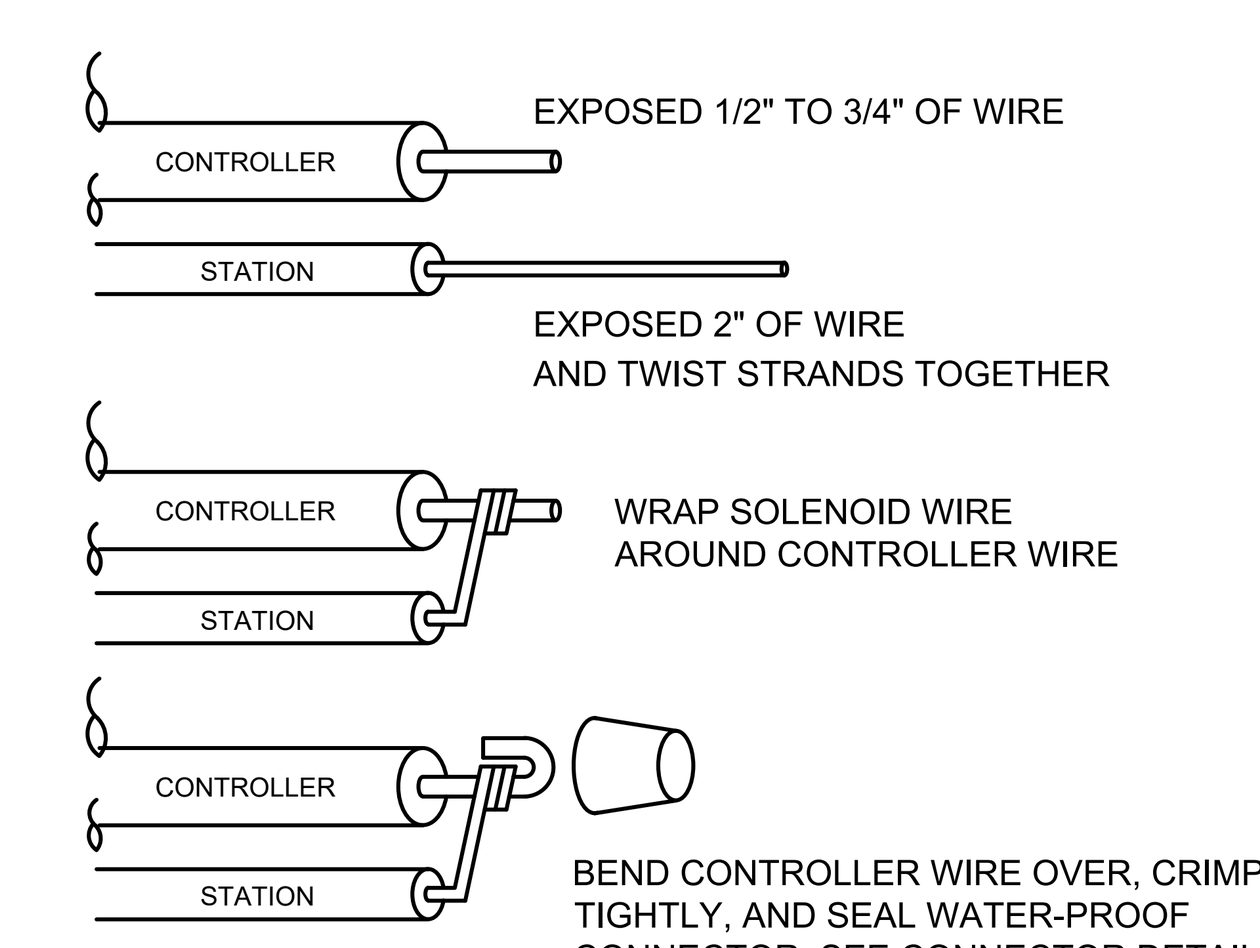

DETAIL LEGEND

1. LOW VOLTAGE WIRE, 3 MAXIMUM. STRIP WIRES .75"
2. WITH WIRE ENDS EVEN, INSERT WIRES INTO THE CONNECTOR AND TIGHTEN UNTIL SECURE.
3. INSERT THE CONNECTOR ALL THE WAY INTO THE TUBE UNTIL THE CONNECTOR RESTS ON THE BOTTOM.
4. CLOSE AND SNAP THE COVER

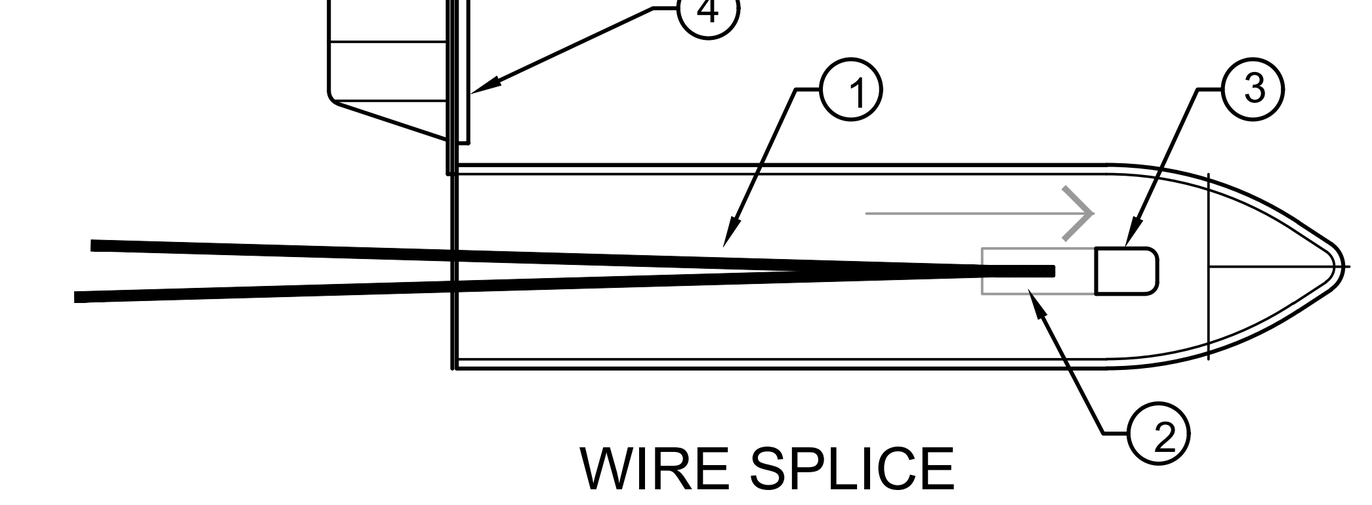

WIRE SPLICE

NOTE:
DRAWINGS INDICATE THE WIRE CONNECTION TO BE ENCLOSED IN THE WATER-PROOF WIRE CONNECTOR
REFER TO NOTES AND SPECIFICATIONS.

RCV WIRE CONNECTION

NTS

C:\Users\DaveB\appdata\local\temp\AcPublish_33436\24117 DETAILS.dwg Dec 13, 2024 – 9:55am DaveB

IDENTIFICATION STAMP
DIV. OF THE STATE ARCHITECT
APP: 03-124281 INC:
REVIEWED FOR
SS ☑ FLS ☑ ACS ☑
DATE: 02/04/2025

ARCHITECT:

architecture westbergwhite
14471 CHAMBERS RD, SUITE 210
TUSTIN, CA 92780
(714) 508-1780 (714) 508-1780 FAX

CONSULTANT:

RHA LANDSCAPE ARCHITECTS PLANNERS, INC.
6840 Indiana Ave, Suite 100
Riverside, CA 92506
(951) 781.1930 ph
Lic 2799
www.rhala.com
RHA PRJ# 24117

LICENSED LANDSCAPE ARCHITECT
DOUGLAS GROVE NO. 2799
Signature
11/30/25 Renewal Date
12/16/24 Date
STATE OF CALIFORNIA

PROJECT NAME:

Bellflower Unified School District
Mayfair High School Sports Fields
6000 North Woodruff Ave
Lakewood, California 90713

CLIENT:

BELLFLOWER UNIFIED SCHOOL DISTRICT
16703 S. Clark Ave.
BELLFLOWER, CALIFORNIA 90706

#	Rev. Date	Description

JOB NO:	15008
DATE:	05/28/2024
DRAWN:	DC
CHECK:	JC
ARCHITECT:	PDW
ENGINEER:	

SHEET DESCRIPTION:
IRRIGATION DETAILS

SHEET NO:
L-10

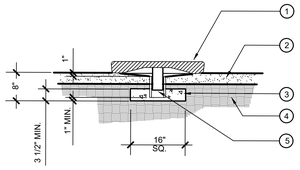

SECTION VIEW

1. BASE & TOP PLATE PER PLAN
2. 6" INFIELD MIX AROUND BASE PER PLAN
3. CONCRETE FOOTING-PRE POURED
4. 95% COMPACTED SUBGRADE
5. ANCHOR STAKE PER PLAN

2 BASE SCALE: N.T.S.

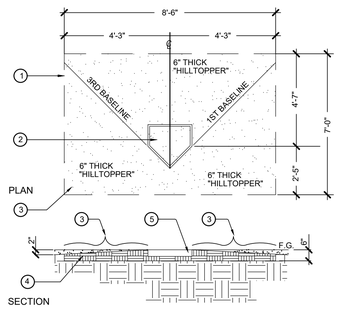

1. LIMIT OF "HILLTOPPER"
2. HOME PLATE PER PLAN
3. TAPER INFIELD MIX FROM 3" TO 1/4" @ PLATE
4. 6" MIN. LAYER OF "HILLTOPPER" SOIL COMPOUND. AVAILABLE FROM 'GAIL MATERIALS' (951) 667-6106. INSTALL PER MFG. SPECIFICATIONS
5. NOTE: 2 LAYERS OF 2 X 6 REDWOOD NAILED IN ALTERNATE DIRECTIONS TO WOOD FILLERS OF HOME PLATE FOR ADDITIONAL DEPTH/STABILITY -TOP OF PLATE TO BE LEVEL W/ PLAYING SURFACE

1 HOME PLATE SCALE: N.T.S.

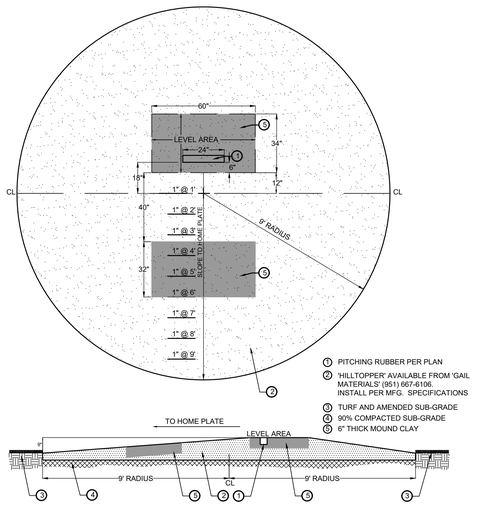

1. PITCHING RUBBER PER PLAN
2. 'HILLTOPPER' AVAILABLE FROM 'GAIL MATERIALS' (951) 667-6106. INSTALL PER MFG. SPECIFICATIONS
3. TURF AND AMENDED SUB-GRADE
4. 90% COMPACTED SUB-GRADE
5. 6" THICK MOUND CLAY

4 PITCHING MOUND

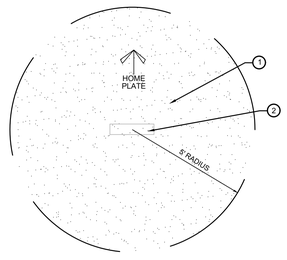

1. 4" OF 'HILLTOPPER' AVAILABLE FROM 'GAIL MATERIALS' (951) 667-6106. INSTALL PER MFG. SPECIFICATIONS
2. PITCHING RUBBER PER PLAN

3 SOFTBALL PITCHING RUBBER SCALE: N.T.S.

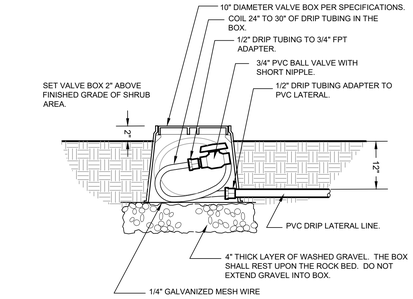

C DRIP FLUSH VALVE

1 1/2" = 1'-0" 328413.53-01

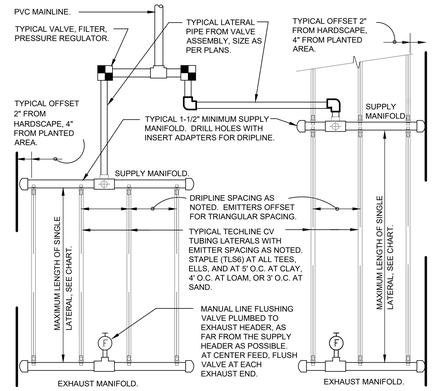

END FEED EXAMPLE CENTER FEED EXAMPLE

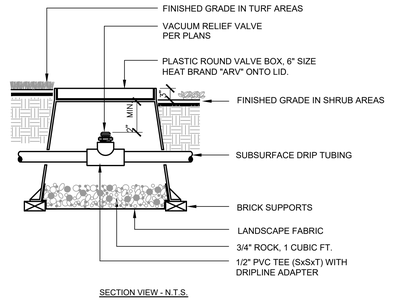

SECTION VIEW - N.T.S.

D DRIP AIR RELIEF VALVE

328413.53-02

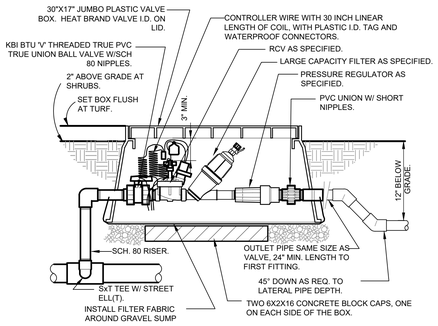

E DRIP VALVE ASSEMBLY

NTS 328413.76-15

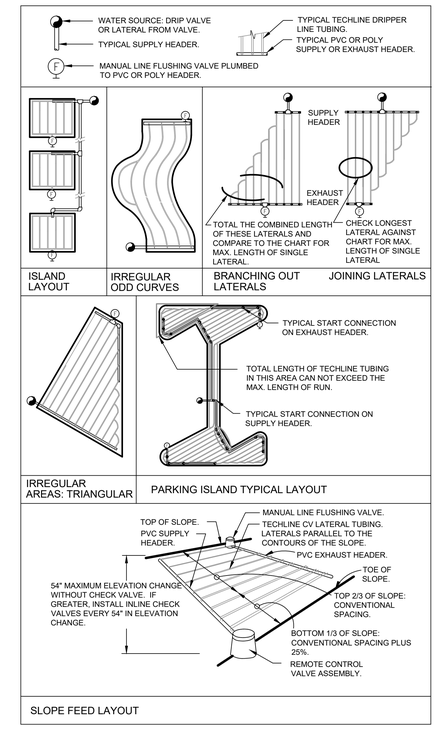

A NETAFIM TECHLINE CV W/ XPANDO MANIFOLD

N.T.S. 328413.56-41

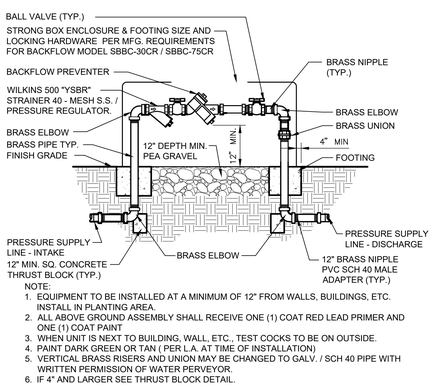

NOTE:
1. EQUIPMENT TO BE INSTALLED AT A MINIMUM OF 12" FROM WALLS, BUILDINGS, ETC. INSTALL IN PLANTING AREA.
2. ALL ABOVE GROUND ASSEMBLY SHALL RECEIVE ONE (1) COAT RED LEAD PRIMER AND ONE (1) COAT PAINT
3. WHEN UNIT IS NEXT TO BUILDING, WALL, ETC., TEST COCKS TO BE ON OUTSIDE.
4. PAINT DARK GREEN OR TAN (PER L.A. AT TIME OF INSTALLATION)
5. VERTICAL BRASS RISERS AND UNION MAY BE CHANGED TO GALV. / SCH 40 PIPE WITH WRITTEN PERMISSION OF WATER PERVEYOR.
6. IF 4" AND LARGER SEE THRUST BLOCK DETAIL.

H R.P. BACKFLOW DEVICE ENCLOSED

1" = 1'-0" 32 8409.46-01

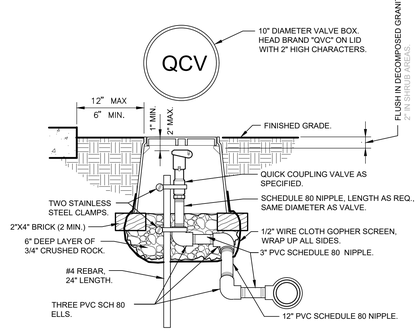

G QUICK COUPLER VALVE IN D.G. AREAS

1" = 1" 328403.53-07

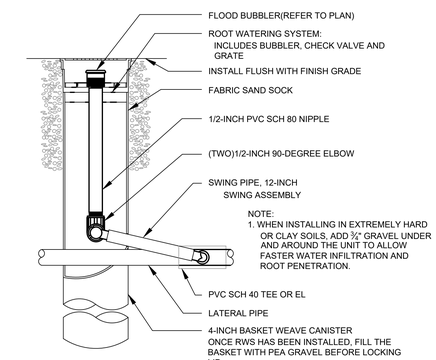

F TREE BUBBLER-ROOT WATERING SYSTEM

328403.53-07

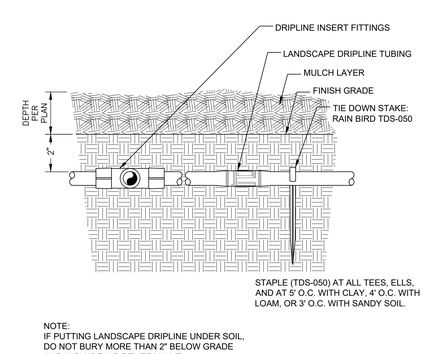

NOTE:
IF PUTTING LANDSCAPE DRIPLINE UNDER SOIL, DO NOT BURY MORE THAN 2" BELOW GRADE AND INCLUDE AIR RELIEF VALVE.

B LANDSCAPE DRIPLINE BELOW GRADE

NTS 328413.56-10

IDENTIFICATION STAMP
DIV. OF THE STATE ARCHITECT
APP: 03-124281 INC:
REVIEWED FOR
SS ☑ FLS ☑ ACS ☑
DATE: 02/04/2025

ARCHITECT:

architecture westbergwhite
14471 CHAMBERS RD, SUITE 210
TUSTIN, CA 92780
(714) 508-1780 (714) 508-1780 FAX

CONSULTANT:

RHA LANDSCAPE ARCHITECTS PLANNERS, INC.
6840 Indiana Ave, Suite 100
Riverside, CA 92506
(951) 781.1930 ph
Lic 2799
www.rhala.com
RHA PRJ# 24117

LICENSED LANDSCAPE ARCHITECT — 5690 — Registration 11/26/26 Renewal Date 12/31/24 — STATE OF CALIFORNIA

PROJECT NAME:

Bellflower Unified School District
Mayfair High School Sports Fields
6000 North Woodruff Ave
Lakewood, California 90713

CLIENT:

BELLFLOWER UNIFIED SCHOOL DISTRICT
16703 S. Clark Ave.
BELLFLOWER, CALIFORNIA 90706

Rev.	Date	Description

JOB NO:	15008
DATE:	05/28/2024
DRAWN:	DC
CHECK:	JC
ARCHITECT:	PDW
ENGINEER:	

SHEET DESCRIPTION:
IRRIGATION DETAILS

SHEET NO:
L-11

C:\Users\DaveB\appdata\local\temp\AcPublish_33436\24117 DETAILS.dwg Dec 13, 2024 - 9:55am DaveB

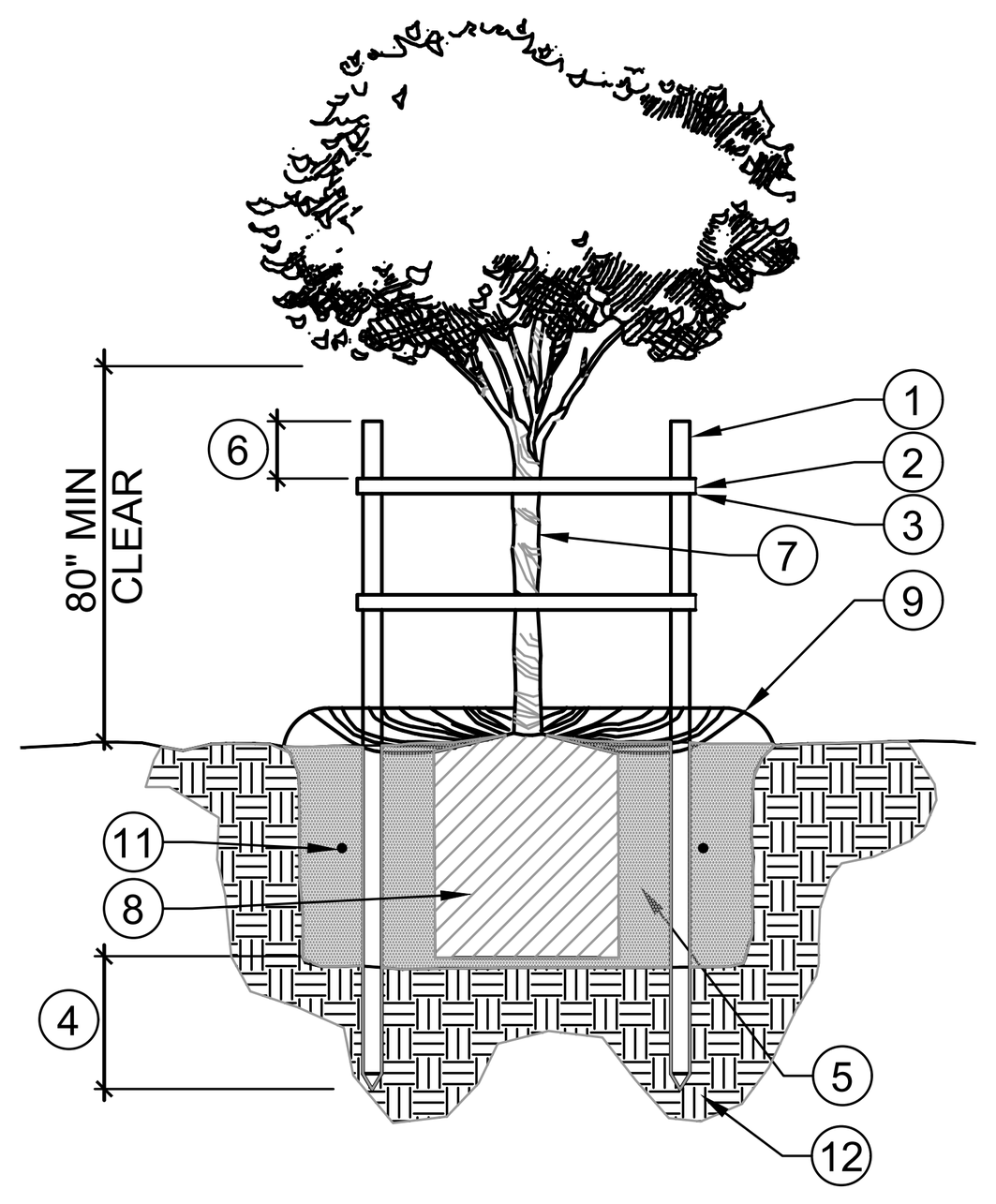

KEY LEGEND

1. 2" DIAMETER X 10'/ 12' LONG LODGEPOLE PINE STAKE, (2) REQUIRED.
2. 1"X2" REDWOOD BRACE. LENGTH AS REQUIRED. (2) REQUIRED.
3. DEEP ROOT ARBOR TIE 3/4" POLYPROPYLENE BAND. REFER TO INSET DETAIL.
4. MINIMUM 24"
5. REFER TO SPEC/ LAB RECOMMENDATIONS FOR BACKFILL.
6. 12" MINIMUM
7. TREE TRUNK.
8. ROOTBALL.
9. 4" HIGH WATERING BASIN. BASIN TO BE 3' OUT FROM EDGE OF WATERING BASIN, EXTENDING JUST BEYOND AMENDED BACKFILL HOLE.
10. HOLD ENDS OF ARBOR TIE BACK. SECURE TO STAKE WITH 1' GALVANIZED ROOFING NAIL OR SECURE WITH KNOT. REFER TO DEEP ROOT ARBOR TIE MANUFACTURERS SPECS FOR KNOT.
11. FERTILIZER TABLET. REFER TO SPECS.
12. COMPACTED SUB-GRADE.

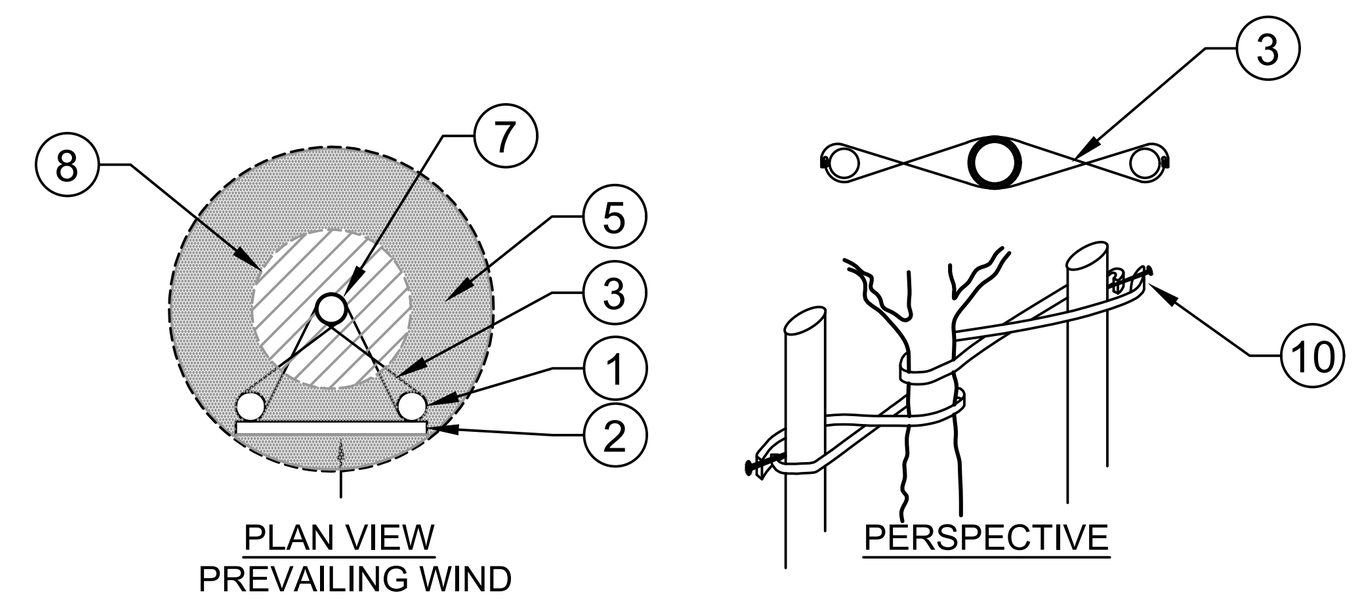

NOTES:

- APPLY MINIMUM 2" THICK LAYER OF SHREDDED BARK MULCH INSIDE WATERING BASIN. HOLD MULCH CLEAR OF TREE TRUNK.
- UNTANGLE MATTED ROOTS BY LOOSENING ALL ROOTS AT EDGE OF ROOT BALL WITH WATER FROM HOSE.
- REFER TO SPECIFICATIONS FOR FERTILIZER REQUIREMENTS.
- ARBOR TIE SHALL BE FASTENED TO STAKES IN A MANNER WHICH PERMITS TREE MOVEMENT AND SUPPORTS THE TREE.
- PLANT PIT SIZE TO BE 2 TIMES DIAMETER X 1.5 TIMES DEPTH OF CONTAINER, 24"-48" BOX SIZE, 2 TIMES THE DIAMETER AND SAME DEPTH AS BOX CONTAINER.
- WHERE TREES ARE LOCATED WITHIN TURF, PROVIDE ARBORGUARD TREE GUARDS MANUFACTURED BY DIMEX LLC OR APPROVED EQUIVALENT. INSTALL GUARDS SUBSEQUENT TO REMOVAL OF TEMPORARY WATERING BASIN.
- STAKE SHALL BE MINIMUM 6" CLEAR OF ROOTBALL. IN NO CASES SHALL PROPOSED STAKE PENETRATE ROOT BALL.
- TOP OF STAKE SHALL NOT COME IN CONTACT WITH BRANCHES.

TREE PLANTING - DOUBLE STAKE 48" BOX AND SMALLER

NTS

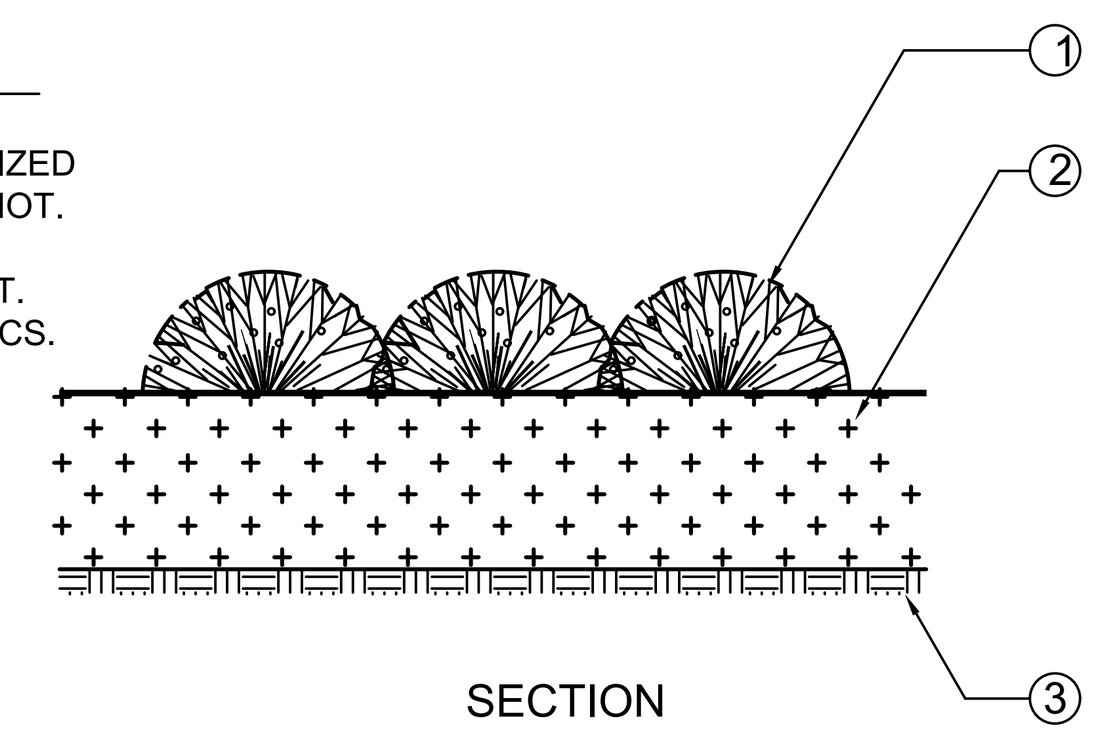

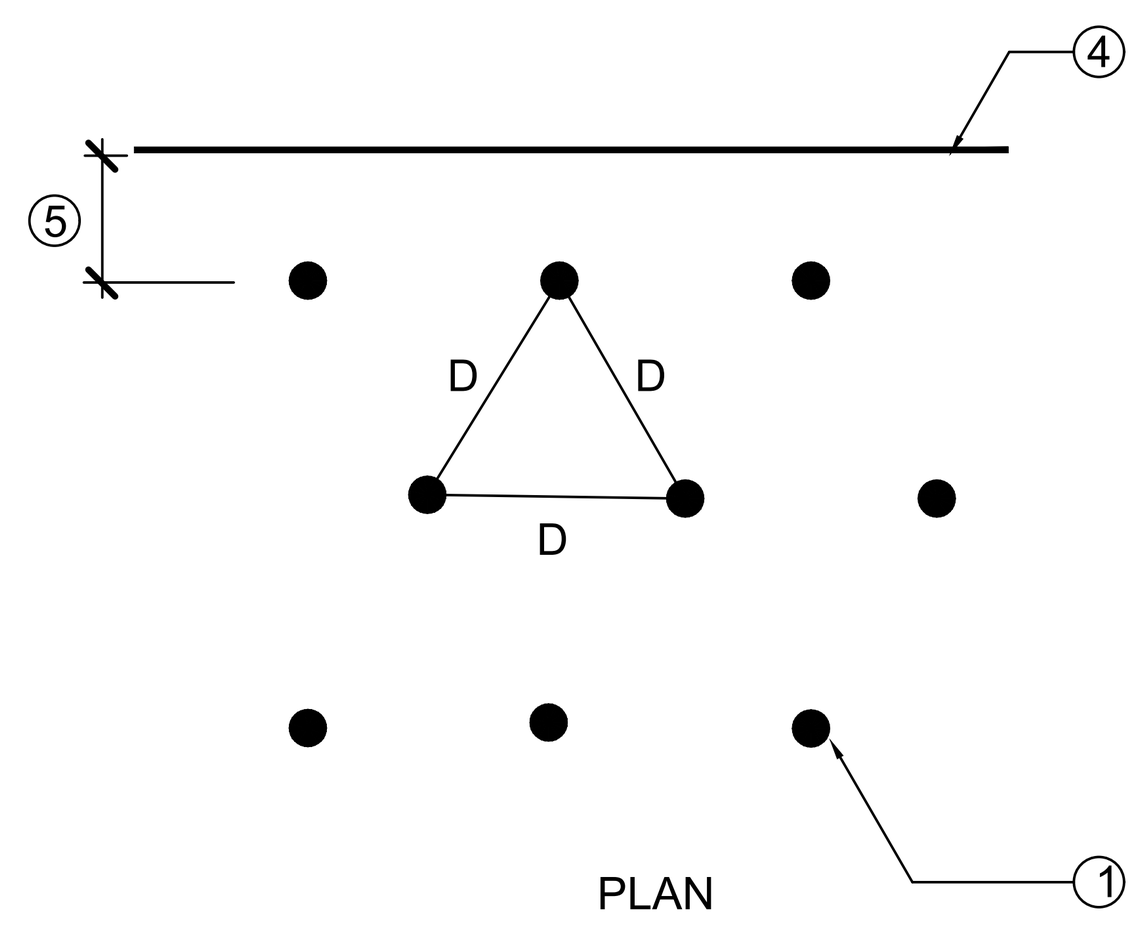

KEY LEGEND

1. GROUND COVER/SHRUB LOCATION TYPICAL
2. PREPARED BACKFILL (SEE SPECIFICATIONS FOR TYPE AND DEPTH.)
3. COMPACTED SUBGRADE
4. EDGE OF PAVING, WALK, WALL OR CURB
5. 1/2 D, OR AS NOTED ON PLANS AND LEGEND.

NOTES:

- LOCATE PLANTS SPACED EQUAL DISTANCE (D) FROM EACH OTHER AS SHOWN. D - AS NOTED ON PLAN.
- APPLY MIN. 1" LAYER OF SHREDDED (NITROLIZED) BARK MULCH IN WATERING BASIN.
- UNTANGLE MATTED ROOTS BY LOOSENING ALL ROOTS AT EDGE OF ROOTBALL WITH WATER FROM HOSE.
- REFER TO SPECIFICATIONS FOR FERTILIZER REQUIREMENTS AND TYPICAL SHRUB PLANTING DETAIL.
- REFER TO PLANS FOR PLANTER EDGE TREATMENTS - I.E. CONCRETE MOW BANDS.

GROUND COVER LAYOUT

NTS

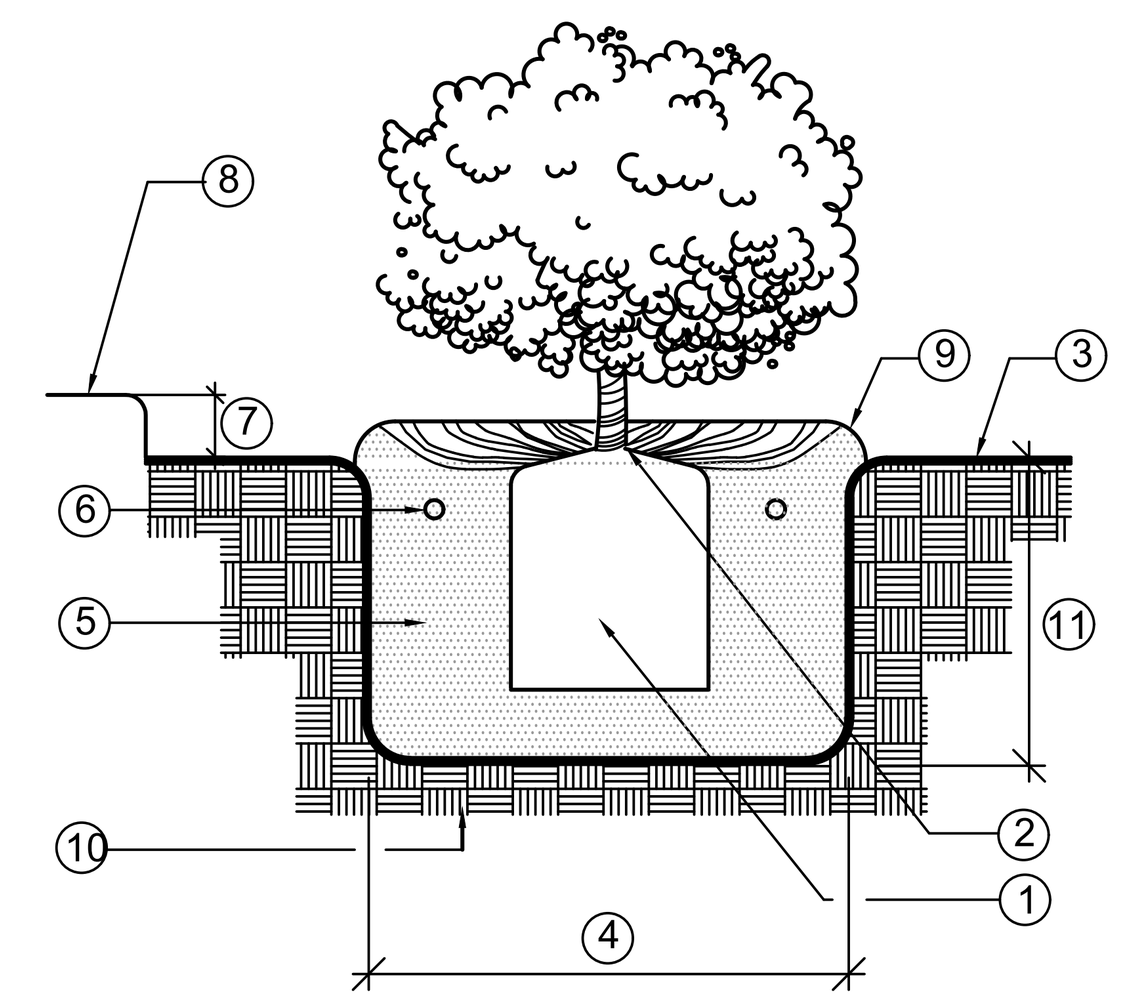

KEY LEGEND

1. ROOTBALL.
2. CROWN-1" ABOVE FINISH GRADE.
3. FINISH GRADE.
4. 2 X ROOTBALL DIA.
5. BACKFILL MIX (SEE SPECS.).
6. PLANT TABLETS (SEE SPECS.).
7. 2" .
8. TOP OF PAVING.
9. 3" HIGH WATERING BASIN.
10. UNDISTURBED NATIVE SOIL.
11. 1-1/2 X DEPTH OF ROOTBALL.

NOTES:

- APPLY MIN. 1" LAYER OF SHREDDED (NITROLIZED) BARK MULCH IN WATERING BASIN.
- UNTANGLE MATTED ROOTS BY LOOSENING ALL ROOTS AT EDGE OF ROOTBALL WITH WATER FROM HOSE.
- REFER TO SPECIFICATIONS FOR FERTILIZER REQUIREMENTS.
- KEEP WEEDS AND GROUNDCOVER OUT OF WATERING BASIN.

SHRUB PLANTING

NTS

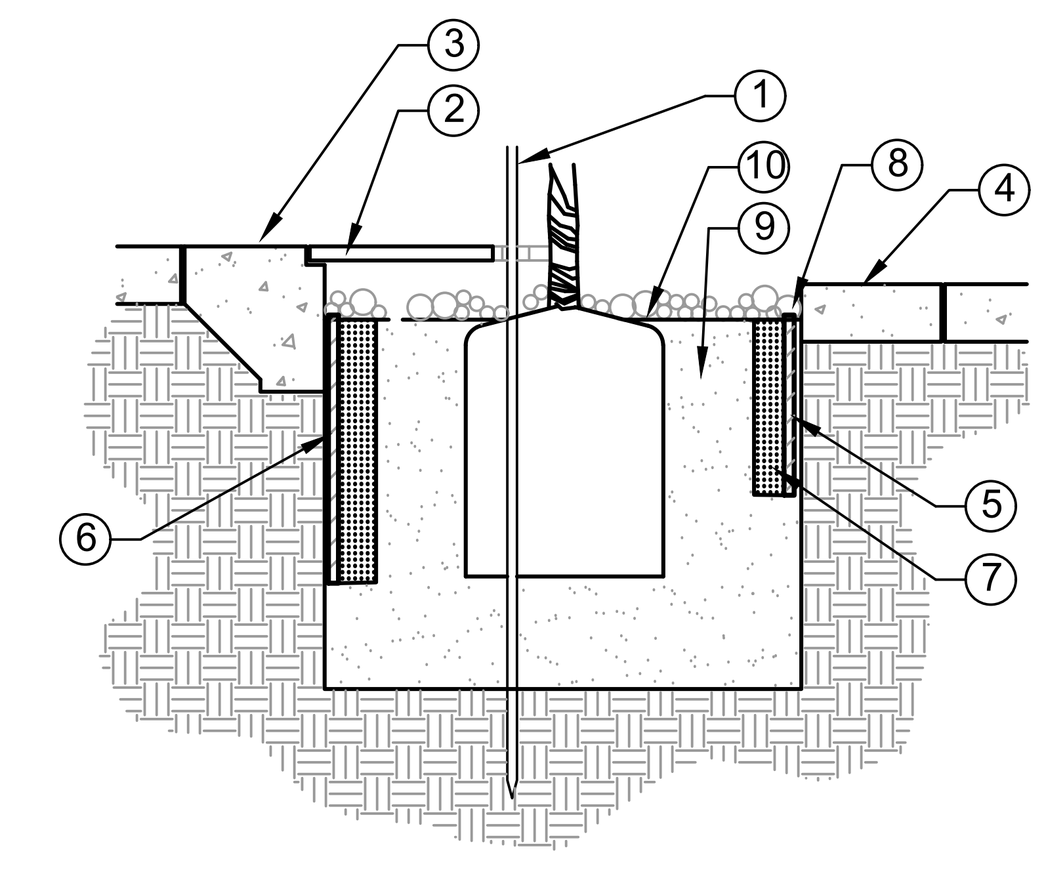

NOTES:

- COORDINATE INSTALLATION OF IRRIGATION PIPING WITH ROOT BARRIER PANEL INSTALLATION.
- INSTALL ROOT BARRIER ALONG HARDSCAPE MINIMUM 4' ON EITHER SIDE OF TREE TRUNK.
- POSITION ROOT BARRIER ADJACENT TO HARDSCAPE EDGE.
- RAISED ROOT DEFLECTORS MUST BE FACING TREE.
- ROOT BARRIER SHALL EXTEND 18" BELOW FG ADJACENT TO CONCRETE WALK AND 24" BELOW GRADE WHERE ADJACENT TO CONCRETE CURBING, WALL OR BUILDING.

KEY LEGEND

1. STAKING. REFER TO TREE PLANTING DETAIL.
2. TREE GRATE WHERE APPLICABLE. REFER TO APPROPRIATE DETAIL.
3. CONCRETE CURB OR THICKEND EDGE.
4. CONCRETE SIDEWALK.
5. DEEP-ROOT UB18, 18" DEEP ROOT BARRIER AT CONCRETE SIDEWALK CONDITION.
6. DEEP-ROOT UB24, 24 DEEP ROOT BARRIER AT CONCRETE CURBING OR THICKEND EDGE CONDITION.
7. 6" WIDE LAYER OF 3/4" GRAVEL OR CRUSHED ROCK ALONG FACE OF ROOT BARRIER.
8. SET TOP OF ROOT BARRIER .5" ABOVE FINISH GRADE. COVER WITH LAYER OF MULCH PER PLANTING NOTES.
9. BACKFILL PER TREE PLANTING DETAIL.
10. MULCH LAYER PER TREE PLANTING DETAIL.

ROOT BARRIER - LINEAR METHOD

NTS

LINEAR APPLICATION OF DEEPROOT ROOT BARRIERS AT TIME OF INSTALLATION OF AC PAVING.

TYPICAL SECTION OF ASPHALTIC CONCRETE WITH DEEPROOT TREE ROOT BARRIER BACKED AGAINST REDWOOD HEADER. BARRIER INSTALLED IN A TRENCH IN SUB-GRADE WHICH IS THEN COMPACTED. BARRIER IS SET SO THAT TOP EDGE WILL BE 2" BELOW TOP OF HEADER, AND SET FLUSH WITH BACK SIDE OF THE HEADER. BARRIER RIBS FACE TOWARDS TREE ROOTS.

INSTALLATION SEQUENCE:

1. PREPARE BASE AND SUB-GRADE
2. TRENCH TO APPROX. DEPTH FOR INSTALLATION OF BARRIER SO THAT TOP OF BARRIER IS 2" BELOW TOP OF HEADER.
3. PLACE BARRIER IN TRENCH, RIBS MUST FACE TOWARD ROOTS.
4. BACKFILL AND COMPACT TO REQUIREMENTS.
5. PLACE REDWOOD HEADER AGAINST BARRIER. IT MAY BE NAILED FROM THE OUTSIDE OF THE HEADER.

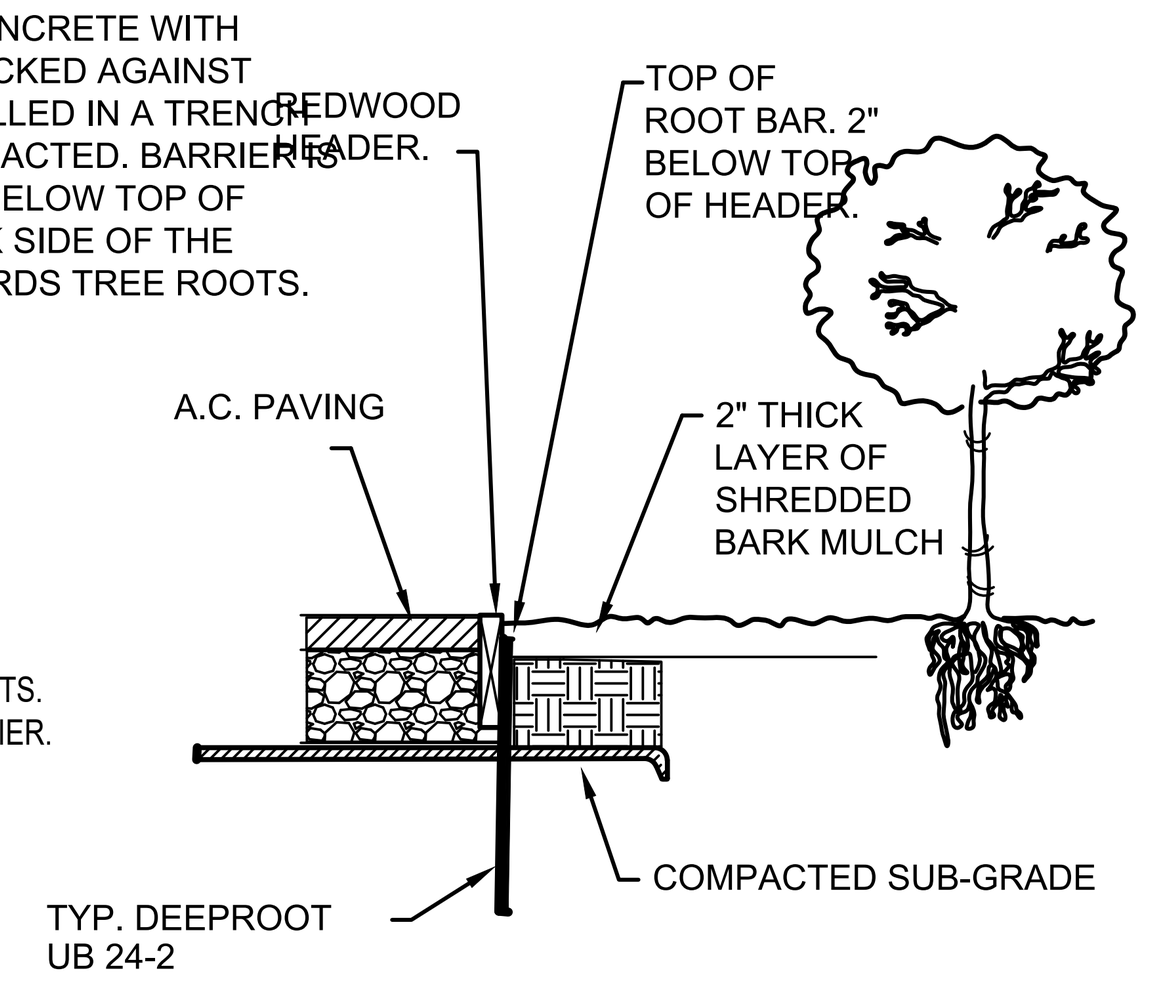

TYPICAL SECTION OF RECYCLED PLASTIC HEADER AT ROOT BARRIER.

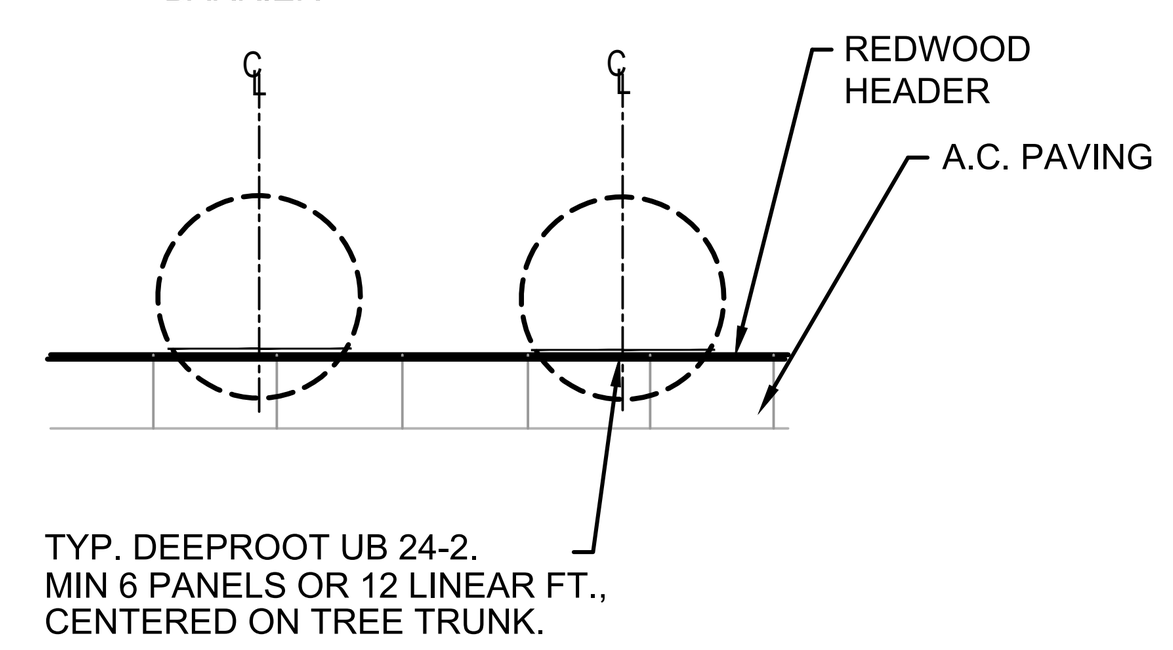

LINEAR APPLICATION OF DEEPROOT ROOT BARRIERS AT TIME OF INSTALLATION CONC. WALKS/ CURBS

TYPICAL SECTION OF CURB AND GUTTER WITH DEEPROOT TREE ROOT BARRIER INSET INTO CONCRETE. BARRIER INSTALLED IN A TRENCH IN SUB-GRADE WHICH IS THEN COMPACTED. BARRIER IS SET SO THAT TOP EDGE WILL BE 2" BELOW TOP OF CURB, AND SET FLUSH WITH BACK SIDE OF CURB. BARRIER RIBS FACE TOWARDS TREE ROOTS.

INSTALLATION SEQUENCE:

1. PREPARE BASE AND SUB-GRADE
2. TRENCH TO APPROX. DEPTH FOR INSTALLATION OF BARRIER SO THAT TOP OF BARRIER IS 2" BELOW TOP OF CURB.
3. PLACE BARRIER IN TRENCH, RIBS MUST FACE TOWARD ROOTS.
4. BACKFILL AND COMPACT TO REQUIREMENTS.
5. PLACE FORM MATERIAL AGAINST BARRIER. IT MAY BE NAILED FROM THE OUTSIDE OF THE FORM.

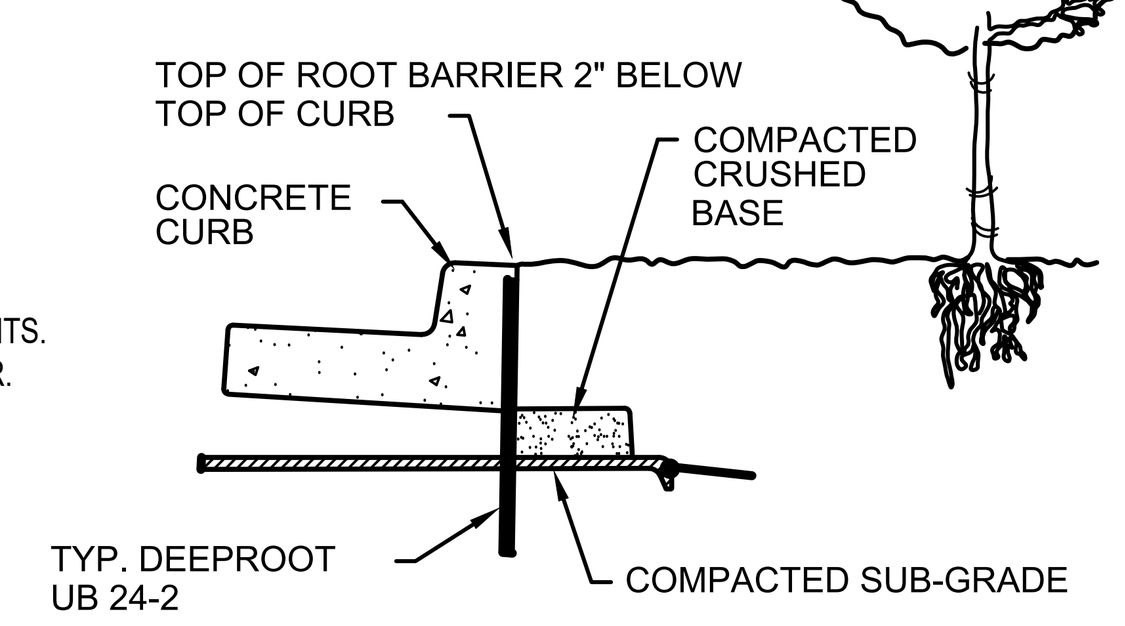

TYPICAL SECTION OF CURB, GUTTER, WALK W/ DEEPROOT BARRIER INSET INTO CONCRETE

BARRIER INSTALLED IN A TRENCH IN SUBGRADE WHICH IS THEN COMPACTED. SET BARRIER SO THAT TOP EDGE WILL BE 2" ABOVE COMPACTED BASE, (OR HALFWAY BETWEEN BASE AND FG OF WALK). BARRIER RIBS FACE TOWARD ROOTS.

INSTALLATION SEQUENCE:

1. PREPARE BASE AND SUB-GRADE
2. TRENCH TO APPROX. DEPTH FOR INSTALLATION OF BARRIER SO THAT TOP OF BARRIER IS 2" BELOW FS, (OR HALFWAY BETWEEN TOP OF COMP. BASE AND FS OF WALK.)
3. PLACE BARRIER IN TRENCH, RIBS MUST FACE TOWARD ROOTS.
4. BACKFILL AND COMP. TO REQMTS.
5. PLACE FORM MATERIAL AGAINST BARRIER. IT MAY BE NAILED FROM THE OUTSIDE OF THE FORM.

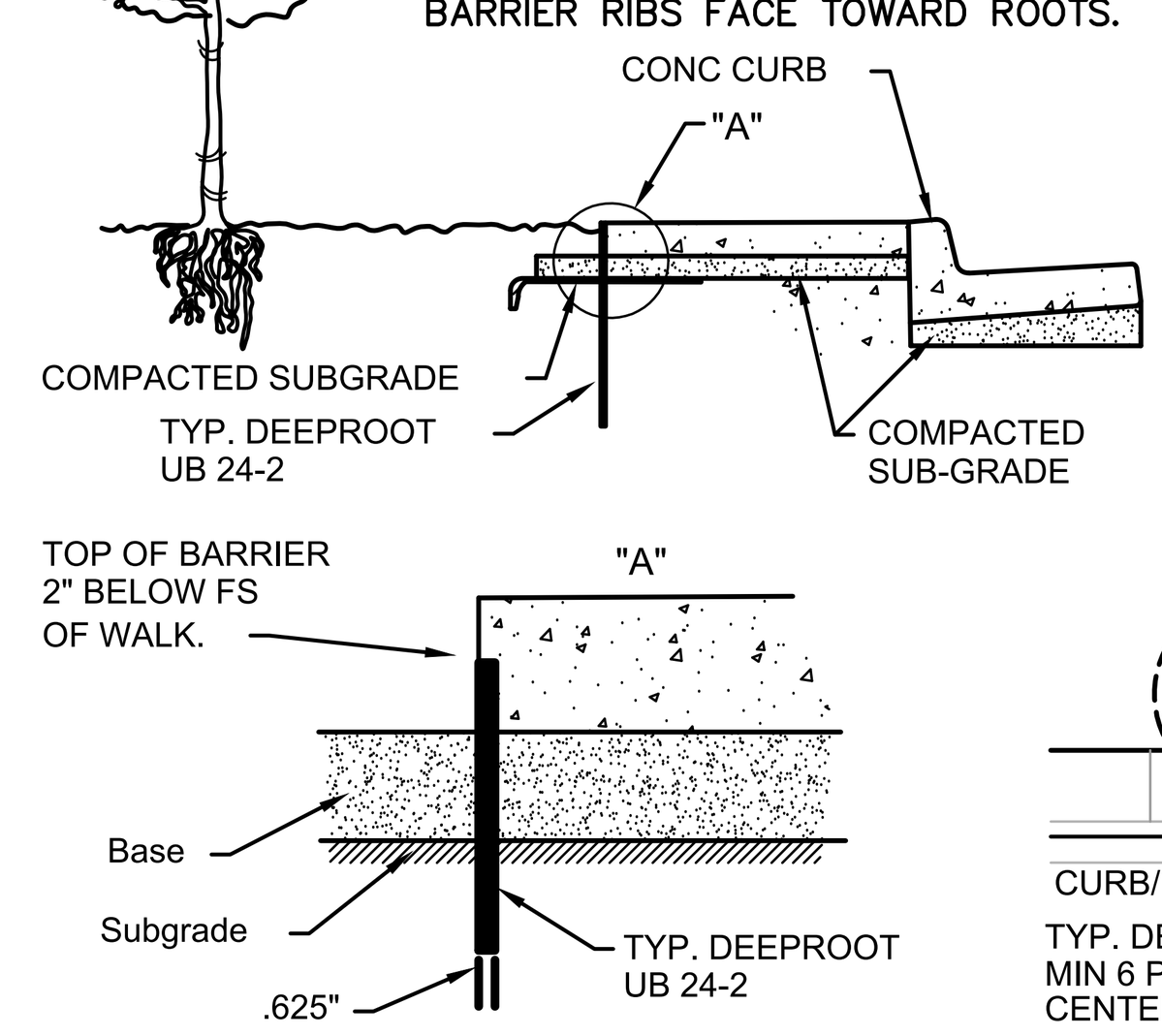

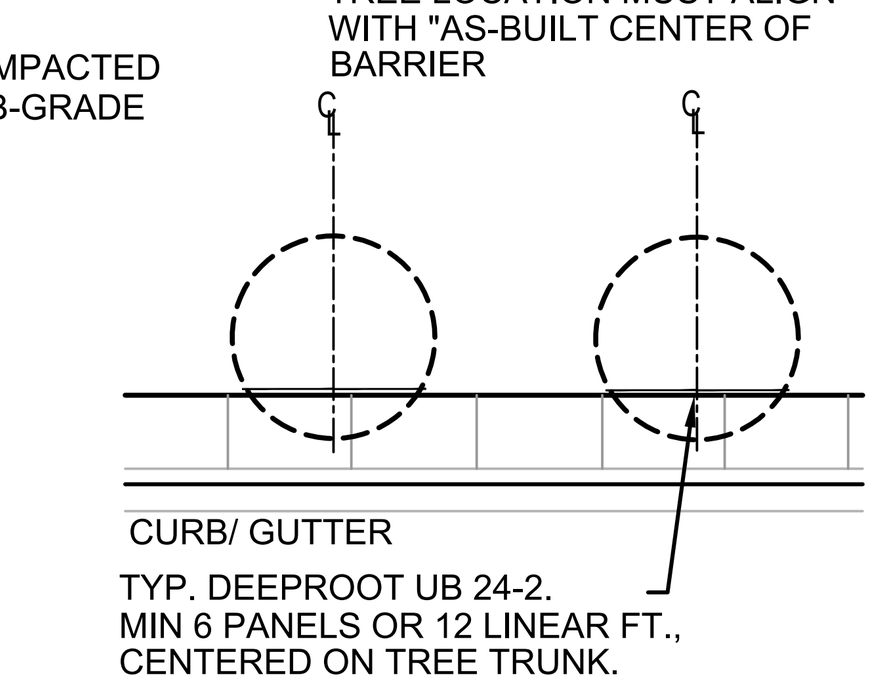

DEEP ROOT BARRIER - LINEAR METHOD

NTS

1. SEE CHART FOR THERMAL EXPANSION GAP.
2. PLASTIC STAKE AT 3' ON CENTER MAX. USE PLATED DECK SCREWS FOR ATTACHMENT. MINIMUM (2) SCREWS.
3. BENDA BOARD PLASTC HEADER BOARD. REFE REFER TO CHART THIS DETAIL AND PLANTING PLAN FOR SIZE AND COLOR SPECIFIED.
4. 7 GAUGE GALVANIZED STEEL HAIRPIN. SEE CHART THIS DETAIL FOR WIDTH.
5. FACTORY CUT THERMAL EXPANSION SLIP JOINT.
6. FINISH GRADE AT SHRUB/ GROUND COVER PLANTING AREAS. SET GRADE 2" BELOW TOP OF HEADER.
7. FINISH GRADE AT TURF AREAS. SET FINISH GRADE 1.5" BELOW TOP OF HEADER.
8. REFER TO CHART, THIS DETAIL FOR MINIMUM RADIUS ALLOWED.

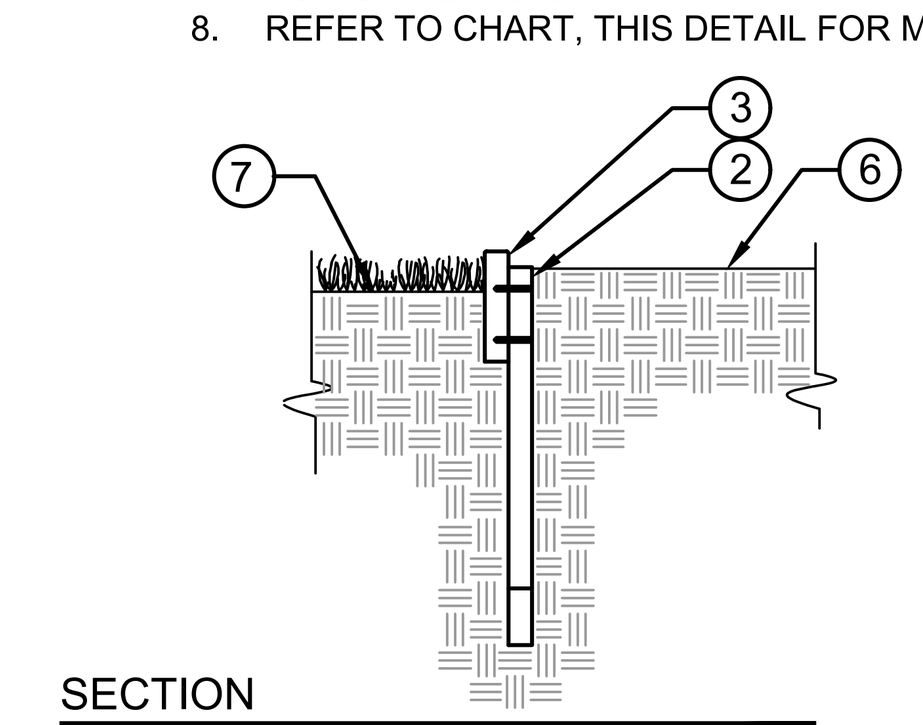

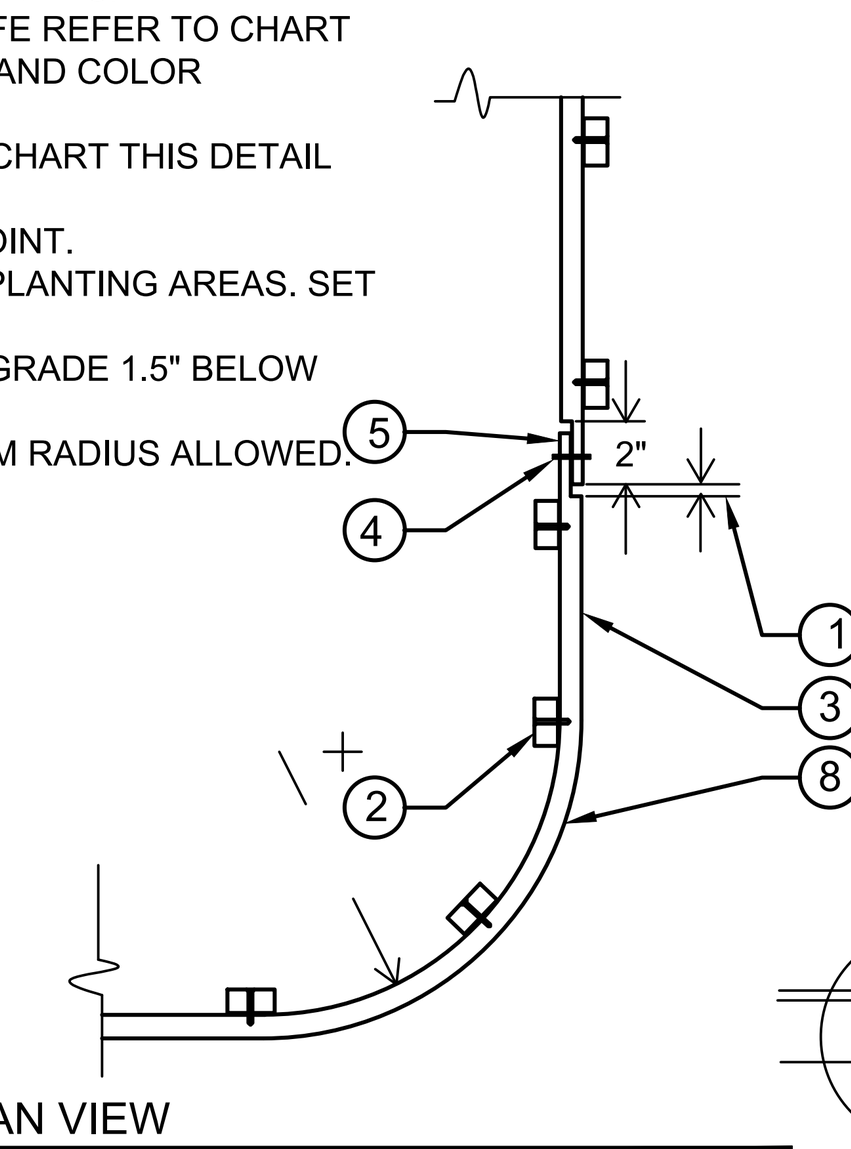

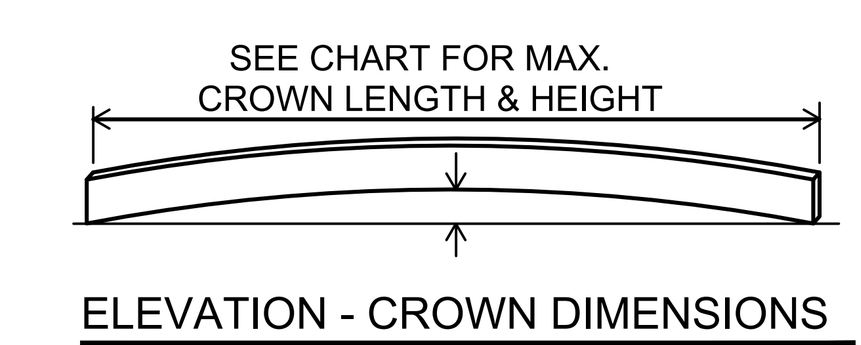

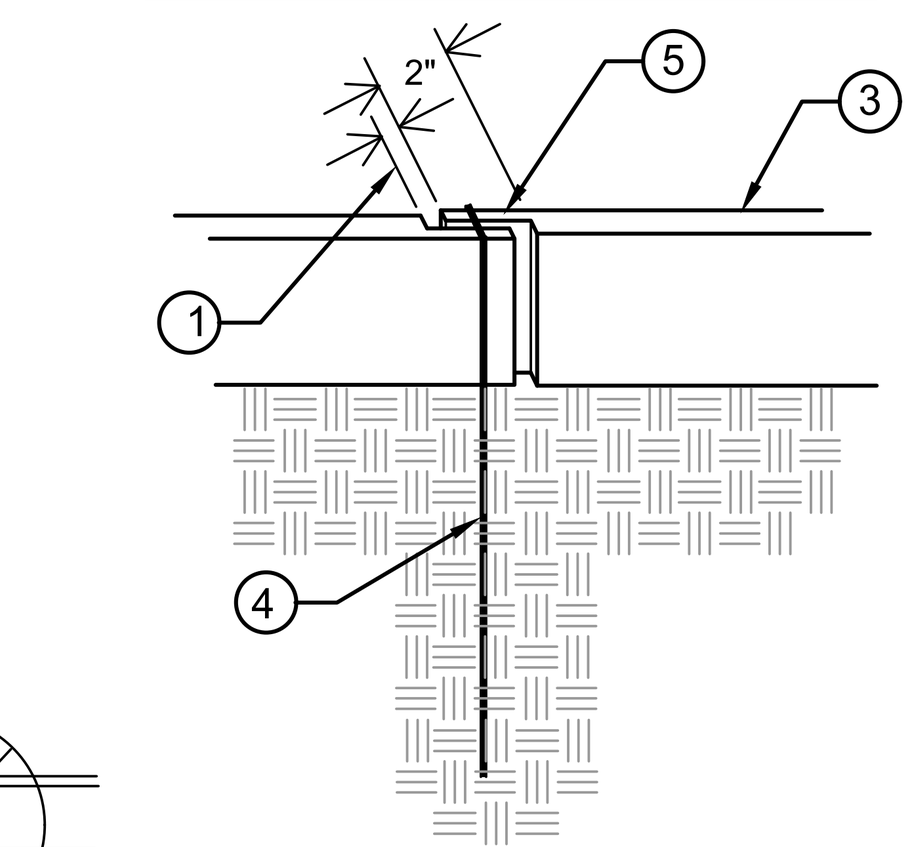

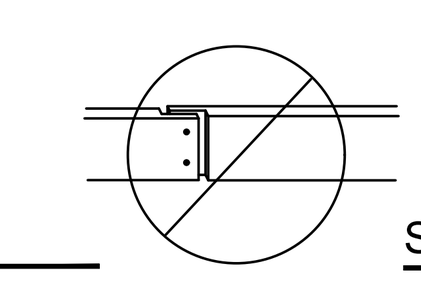

SLIP JOINT DETAIL

HDR. SIZE	ACTUAL DIMENSIONS	MINIMUM RADIUS POSSIBLE	MAXIMUM CROWN POSSIBLE	THERMAL EXP. GAP AT SLIP JOINT	SLIP JOINT HAIRPIN DIMENSIONS
1"x4"	3-3/8"x1-1/16"x20'	24"	19" / 20'	1/4" - 1/2"	3/4" ID x 13"
2"x4"	3-3/8"x1-3/8"x20'	36"	16" / 20'	1/2" - 3/4"	1-1/2" ID x 13"
1"x6"	5-3/8"x1-1/16"x20'	24"	9" / 20'	1/2" - 3/4"	3/4" ID x 13"
2"x6"	5-3/8"x1-1/2"x16'	36"	6" / 16'	1/2" - 3/4"	1-1/2" ID x 13"

BENDA BOARD CHART

COLOR MENDOCINO REDWOOD
MANUFACTURED BY: EPIC PLASTICS, 104 EAST TURNER RD., LODI CA 95240
URL ADDRESS: www.epicplastics.com

1. DO NOT SCREW THROUGH SLIP JOINT.
2. USE COARSE WOOD WORKING TOOLS FOR CUTTING & DRILLING.
3. USE PLATED SCREWS OR RING SHANK NAILS TO JOIN BOARD TO STAKE.
4. ALLOW FOR THERMAL EXPANSION & CONTRACTION BY LEAVING GAPS IN THE SLIP JOINTS OR AT THE END OF THE RUN (SEE CHART).
5. WARM WEATHER INSTALL MIN GAP.
6. COLD WEATHER INSTALL MAX GAP.
7. 5. STAKE APPROX 3' 0" OC (MORE FOR STRAIGHT RUNS LESS FOR CURVES).

BENDA BOARD PLASTIC HEADER BOARD DETAIL #110

NTS

BENDA BOARD IS INTENDED FOR NON-STRUCTURAL USE ONLY

1. CONTRACTOR IS TO REVIEW PLANS, VERIFY SITE CONDITIONS AND PLANT QUANTITIES PRIOR TO INSTALLATION. CONFLICTS BETWEEN THE SITE AND THESE PLANS OR WITHIN THESE PLANS SHALL BE BROUGHT TO THE ATTENTION OF THE OWNER'S AUTHORIZED REPRESENTATIVE PRIOR TO LANDSCAPE INSTALLATION. ANY DEVIATION(S) FROM THE PLANS OR SPECIFICATIONS IS TO HAVE WRITTEN APPROVAL.
2. ALL TREES SHALL BE EQUAL TO OR SURPASS "VALLEY CREST" STANDARDS FOR QUALITY AND SHALL HAVE A MINIMUM 1-1/2" CALIPER AT A POINT 6 INCHES ABOVE ROOT BALL. ALL OTHER MEASUREMENTS SUCH AS NUMBER OF CANES, BALL SIZES, QUALITY DESIGNATIONS, ETC., SHALL BE IN ACCORDANCE WITH THE LATEST EDITION OF "HORTICULTURE STANDARDS OF THE AMERICAN ASSOCIATION OF NURSERYMEN, INC."
3. ALL SHRUBS AND GROUND COVER SHALL EQUAL OR SURPASS "HINES NURSERY" STANDARDS FOR QUALITY.
4. LANDSCAPE ARCHITECT SHALL APPROVE PLANT MATERIAL PLACEMENT BY CONTRACTOR PRIOR TO INSTALLATION.
5. SEE PLANTING DETAILS FOR PLANTING AND STAKING.
6. EDGES BETWEEN LAWN AND SHRUB BEDS TO BE CONCRETE MOW CURB. INSTALL CONCRETE CURB PER DETAIL INCLUDED IN THESE PLANS OR PER ARCHITECTURAL/ CIVIL ENGINEER'S PLANS. REFER TO CONSTRUCTION DOCUMENTS FOR MOW CURB INSTALLATION RESPONSIBILITY.
7. FERTILIZER FOR ALL GROUND COVER AREAS SHALL BE AS SPECIFIED WITHIN THE SPECIFICATIONS OR AS CALLED OUT ON THE DETAIL.
8. THE LANDSCAPE CONTRACTOR SHALL MAINTAIN ALL PLANTED AREAS BY MEANS OF CONTINUOUS WATERING, PRUNING, RAISING ROOT BALLS WHICH SETTLE BELOW GRADE, FERTILIZING, APPLICATION OF SPRAYS WHICH ARE NECESSARY TO KEEP THE PLANTINGS FREE OF INSECTS AND DISEASES, WEEDING, ROLLING, MOWING, RE-SEEDING, EDGING AND OR OTHER OPERATIONS NECESSARY FOR PROPER CARE AND UPKEEP. THE LANDSCAPE CONTRACTOR SHALL MAINTAIN ALL PLANTINGS AS SPECIFIED ABOVE FOR A PERIOD OF ONE HUNDRED TWENTY (120) DAYS.
9. REFER TO SPECIFICATIONS FOR STANDARDS OF MATERIALS AND WORKMANSHIP.
10. INSTALL MINIMUM 3" THICK LAYER OF SHREDDED/ RECYCLED BARK IN ALL SHRUB/ GROUND COVER PLANTING AREAS. CONTRACTOR SHALL SUBMIT MULCH SAMPLE TO LANDSCAPE ARCHITECT FOR APPROVAL. REFER TO SPECIFICATIONS.
11. ALL TREES WITHIN 5' OF HARDSCAPE SHALL HAVE ROOT BARRIERS FROM 'DEEP ROOT' MODEL UB-24 OR UB-18, (OR APPROVED EQUIVALENT) INSTALLED. REFER TO DETAIL FOR INSTALLATION.
12. CONTRACTOR SHALL HAVE FINE GRADING FOR ALL PLANTER AREAS INCLUDING PLAYFIELD INSPECTED BY DISTRICT AUTHORIZED REPRESENTATIVE PRIOR TO PLANTING OF SHRUBS, INSTALLATION OF SOD, OR HYDROSEED. CONTRACTOR SHALL FORWARD WRITTEN APPROVAL FROM DISTRICT AUTHORIZED REPRESENTATIVE AND LANDSCAPE ARCHITECT.
13. CONTRACTOR SHALL INSTALL PLANTER MIX AT THE RATE SPECIFIED PER PLANS AND SPECIFICATIONS. CONTRACTOR SHALL VERIFY EXACT AREA AND INSTALL AMOUNT OF PLANTER MIX PER RATE SPECIFIED. CONTRACTOR SHALL DOCUMENT AREA AND PLANTER MIX ORDERED AND DELIVERED. COPY OF PLANTER IMX DELIVERY RECEIPT FOR TURF AREAS SHALL BE FORWARD TO AUTHORIZED DISTRICT REPRESENTATIVE AND LANDSCAPE ARCHITECT. CONTRACTOR SHALL NOT BE LET TO MAINTENANCE PERIOD IF THE ABOVE PAPERWORK REQUIRED IS NOT COMPLETED AND FORWARDED TO THE APPROPRIATE PARTIES.

X

X

PLANTING NOTES

IDENTIFICATION STAMP
DIV. OF THE STATE ARCHITECT
APP: 03-124281 INC:
REVIEWED FOR
SS ☑ FLS ☑ ACS ☑
DATE: 02/04/2025

ARCHITECT:
westbergwhite architecture
14471 CHAMBERS RD, SUITE 210
TUSTIN, CA 92780
(714) 508-1780 (714) 508-1780 FAX

CONSULTANT:
RHA LANDSCAPE ARCHITECTS PLANNERS, INC.
6840 Indiana Ave, Suite 100
Riverside, CA 92506
(951) 781.1930 ph
Lic 2799
www.rhala.com
RHA PRJ# 24117

LICENSED LANDSCAPE ARCHITECT
DOUGLAS GROVE NO. 2799
Signature
11/30/25
Renewal Date
12/16/24
Date
STATE OF CALIFORNIA

PROJECT NAME:

Bellflower Unified School District
Mayfair High School Sports Fields
6000 North Woodruff Ave
Lakewood, California 90713

CLIENT:

BELLFLOWER UNIFIED SCHOOL DISTRICT
16703 S. Clark Ave.
BELLFLOWER, CALIFORNIA 90706

#	Rev. Date	Description

JOB NO: 15008
DATE: 05/28/2024
DRAWN: DC
CHECK: JC
ARCHITECT: PDW
ENGINEER:

SHEET DESCRIPTION:
PLANTING DETAILS, NOTES

SHEET NO:
L-12

C:\Users\DaveB\appdata\local\temp\AcPublish_33436\24117 DETAILS.dwg Dec 13, 2024 - 9:55am DaveB

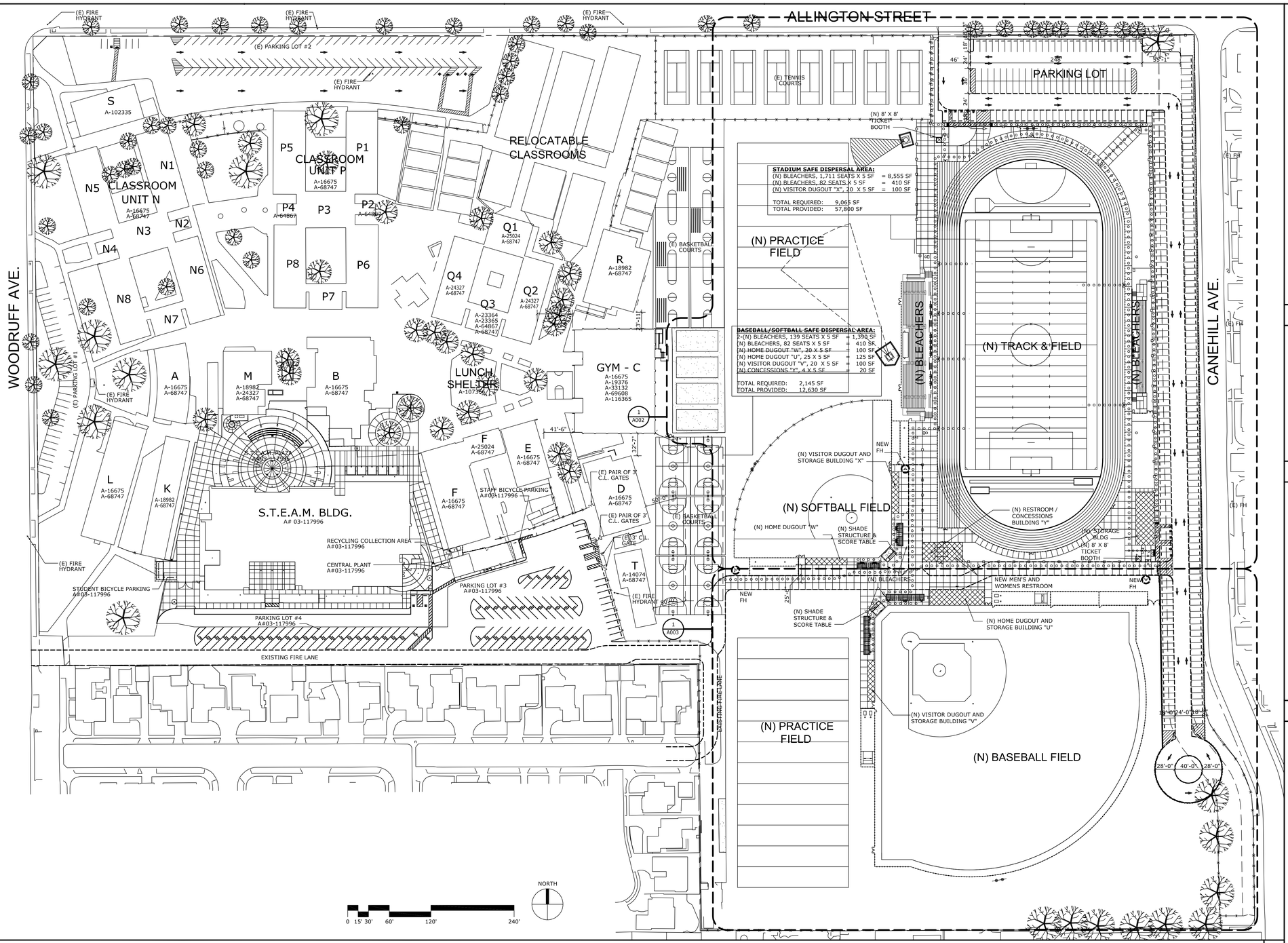

OVERALL SITE PLAN

SCALE: 1" = 60'-0"

1

EXISTING AREA IN SCOPE OF WORK

NEW CONCRETE PAVING, SEE 8/A004

NEW AC PAVING, SEE 2/A004

EXISTING BUILDING TO REMAIN (NOT IN SCOPE OF WORK)

20'-0" WIDE FIRE DEPARTMENT VEHICLE ACCESS ROUTE, SEE F001 FOR ADDT'L. INFO.

BARRIER-FREE PATH OF TRAVEL (P.O.T.)

PROPERTY LINE

NEW CHAINLINK FENCE "PER DETAILS ON SHEET A008"

NEW TUBE STEEL FENCE "PER DETAILS ON SHEET A008"

EXISTING CHAINLINK FENCE TO REMAIN

LEGEND

THE P.O.T. IDENTIFIED IN THESE CONSTRUCTION DOCUMENTS IS COMPLIANT WITH THE CURRENT APPLICALBE CALIFORNIA BUILDING CODE ACCESSIBILITY PROVISIONS FOR PATH OF TRAVEL REQUIREMENTS FOR ALTERATIONS, ADDITIONS AND STRUCTURAL REPAIRS. AS PART OF THE DESGIN OF THIS PROJECT. THE POT WAS EXAMINED AND ANY ELEMENTS, COMPONENTS OR PORTIONS OF THE POT THAT WERE DETERMINED TO BE NONCOMPLIANT 1) HAVE BEEN IDENTIFIED AND 2) THE CORRECTIVE WORK NECESSARY TO BRING THEM INTO COMPLIANCE HAS BEEN INCLUDED WITHIN THE SCOPE OF THE PROJECT'S WORK THROUGH DETAILS, DRAWINGS AND SPECIFICATIONS INCORPORATED INTO THESE CONSTRUCTION DOCUMENTS. ANY NONCOMPLIANT ELEMENT, COMPONENTS OR PORTIONS OF THE POT THAT WILL NOT BE CORRECTED BY THIS PROJECT BASED ON VALUATION THRESHOLD LIMITATIONS OR A FINDING OF UNREASONABLE HARDSHIP ARE SO INDICATED IN THESE CONSTRUCTION DOCUMENTS.

DURING CONSTRUCTION, IF POT ITEMS WITHIN THE SCOPE OF THE PROJECT REPRESENTED AS CODE COMPLIANT ARE FOUND TO BE NONCONFORMING BEYOND REASONABLE CONSTRUCTION TOLERANCES, THEY SHALL BE BROUGHT INTO COMPLIANCE WITH THE CBC AS A PART OF THIS PROJECT BY MEANS OF A CONSTRUCTION CHANGE DOCUMENT.

P.O.T. CHARGE STATEMENT

1. "PATH OF TRAVEL (P.O.T.) AS INDICATED IS A BARRIER FREE ACCESS IS AT LEAST 48" WIDE WITHOUT ANY ABRUPT VERTICAL CHANGES EXCEEDING 1/2" AT 1:2 MAXIMUM SLOPE, EXCEPT THAT LEVEL CHANGES DO NOT EXCEED 1/4" VERTICAL. MAXIMUM CROSS-SLOPE 2% TYPICAL AND MAXIMUM SLOPE IN THE DIRECTION IS 5% , UNLESS OTHERWISE NOTED. THE CONTRACTOR SHALL VERIFY THAT ALL BARRIERS ON THE INDICATED PATH OF TRAVEL HAVE BEEN REMOVED."
2. ABRUPT CHANGES IN LEVEL ALONG ANY ACCESSIBLE ROUTE SHALL NOT EXCEED 1/2". WHERE ABRUPT CHANGES DO OCCUR, THEY SHALL BE BEVELED WITH A SLOPE NO GREATER THAT 1-IN-2, EXCEPT THAT VERTICAL LEVEL CHANGES NOT EXCEEDING 1/4" MAY REMAIN. WHERE CHANGES IN LEVELS GREATER THAN 1/2" ARE NECESSARY, THEY SHALL COMPLY WITH REQUIREMENTS FOR CURB RAMPS. (PER CBC SECTION 11B-403.4)
3. ALL SIDEWALKS ALONG THE ACCESSIBLE ROUTE SHALL BE A MINIMUM OF 4'-0" WIDE AND THERE SHALL BE NO DROP-OFFS OVER 4" AT THE EDGE OF WALKS OR LANDINGS. WHERE A 4" DROP-OFF DOES OCCUR, PROVIDE A WARNING CURB OR A 12" WIDE LEVEL GRADE NEXT TO SIDEWALK. (PER CBC SECTION 11B-303.5)
4. GRATINGS IN THE PATH OF TRAVEL SHALL HAVE GRID OPENINGS LIMITED TO 1/2" MAX. CLEAR IN DIRECTION OF TRAVEL.
5. CONTRACTOR SHALL OBTAIN DISTRICT APPROVAL IN ADVANCE FOR PROPOSED WORK SCHEDULE, LOCATION OF STAGING AREAS, ACCESS, PARKING, MATERIAL DELIVERIES, ETC.

GENERAL NOTES

CODE ANALYSIS

(2) 60'x10'-4" VISITOR DUGOUTS/STORAGES - (N) BLDG "V" & "X"
(1) 60'x10'-4" HOME DUGOUTS/STORAGES - (N) BLDG "W"

CONSTRUCTION TYPE:	V-B / ONE-STORY
OCCUPANCY GROUP:	A-3
BUILDING AREA (ACTUAL):	620 S.F. EACH
BUILDING AREA (ALLOWABLE):	6,000
BUILDING HEIGHT (ACTUAL):	12'-10 1/2"
BUILDING HEIGHT (ALLOWABLE):	40'

60'x10'-4" HOME DUGOUTS/STORAGES - (N) BLDG "U"

CONSTRUCTION TYPE:	V-B / ONE-STORY
OCCUPANCY GROUP:	A-3
BUILDING AREA (ACTUAL):	1798 S.F.
BUILDING AREA (ALLOWABLE):	6,000
BUILDING HEIGHT (ACTUAL):	12'-10 1/2"
BUILDING HEIGHT (ALLOWABLE):	40'

FIELD STORAGE BLDG - (N)

CONSTRUCTION TYPE:	V-B / ONE-STORY
OCCUPANCY GROUP:	S-2
BUILDING AREA (ACTUAL):	2,044 S.F.
BUILDING AREA (ALLOWABLE):	6,000
BUILDING HEIGHT (ACTUAL):	13'-4"
BUILDING HEIGHT (ALLOWABLE):	40'

BLEACHERS - (N)

CONSTRUCTION TYPE:	V-B
OCCUPANCY GROUP:	A-5
BUILDING AREA (ALLOWABLE):	UL=UNLIMITED
BUILDING HEIGHT (ACTUAL):	27'
BUILDING HEIGHT (ALLOWABLE):	40'
TOTAL NET 18" SEATS:	1663 SEATS
TOTAL 33" WHEELCHAIR SPACES:	16 SPACES
TOTAL NET 18" COMPANION SEATS:	16 SEATS
TOTAL NET 18" SEMI-AMBULATORY SEATS:	16 SEATS
TOTAL SEATING CAPACITY:	1711

RESTROOM/CONCESSIONS - (N) BLDG "Y"

CONSTRUCTION TYPE:	V-B / ONE-STORY
OCCUPANCY GROUP:	A-3
BUILDING AREA (ACTUAL):	1,590 S.F.
OVERHANG AREA:	265 S.F.
TOTAL BUILDING AREA:	1,855 S.F.
BUILDING AREA (ALLOWABLE):	6,000
BUILDING HEIGHT (ACTUAL):	19'-6"
BUILDING HEIGHT (ALLOWABLE):	40'

(2) 8'x8' TICKET BOOTHS - (N)

CONSTRUCTION TYPE:	V-B / ONE-STORY
OCCUPANCY GROUP:	B
BUILDING AREA (ACTUAL):	64 S.F. EACH
BUILDING AREA (ALLOWABLE):	6,000
BUILDING HEIGHT (ACTUAL):	11'-2"
BUILDING HEIGHT (ALLOWABLE):	50'

PARKING TABULATION

(N) PARKING LOT

STANDARD STALLS:	303
VAN ACCESSIBLE STALLS:	2
STANDARD ACCESSIBLE STALLS:	6
TOTAL:	311

STATE:

IDENTIFICATION STAMP
DIV. OF THE STATE ARCHITECT
APP: 03-124281 INC:
REVIEWED FOR
SS ☑ FLS ☑ ACS ☑
DATE: 02/04/2025

ARCHITECT:

architecture westbergwhite
7700 IRVINE CENTER DR. STE. 100
IRVINE, CA 92618
(714) 508-1780 (714) 508-1780 FAX

LICENSED ARCHITECT PAUL DEBRITS WESTBERG C-11045 EXP.9-2025 STATE OF CALIFORNIA

CONSULTANT:

PROJECT NAME:

Bellflower Unified School District
Mayfair High School Athletics Fields
6000 North Woodruff Ave
Lakewood, California 90713

CLIENT:

BELLFLOWER UNIFIED SCHOOL DISTRICT
16703 S. Clark Ave.
BELLFLOWER, CALIFORNIA 90706

Δ	Rev. Date	Description

JOB NO: 15008.01
DATE: 01/13/2025
DRAWN: TG, XY
CHECK: RB, JG
ARCHITECT: PDW
ENGINEER:

SHEET DESCRIPTION:
OVERALL SITE PLAN

SHEET NO:
A001

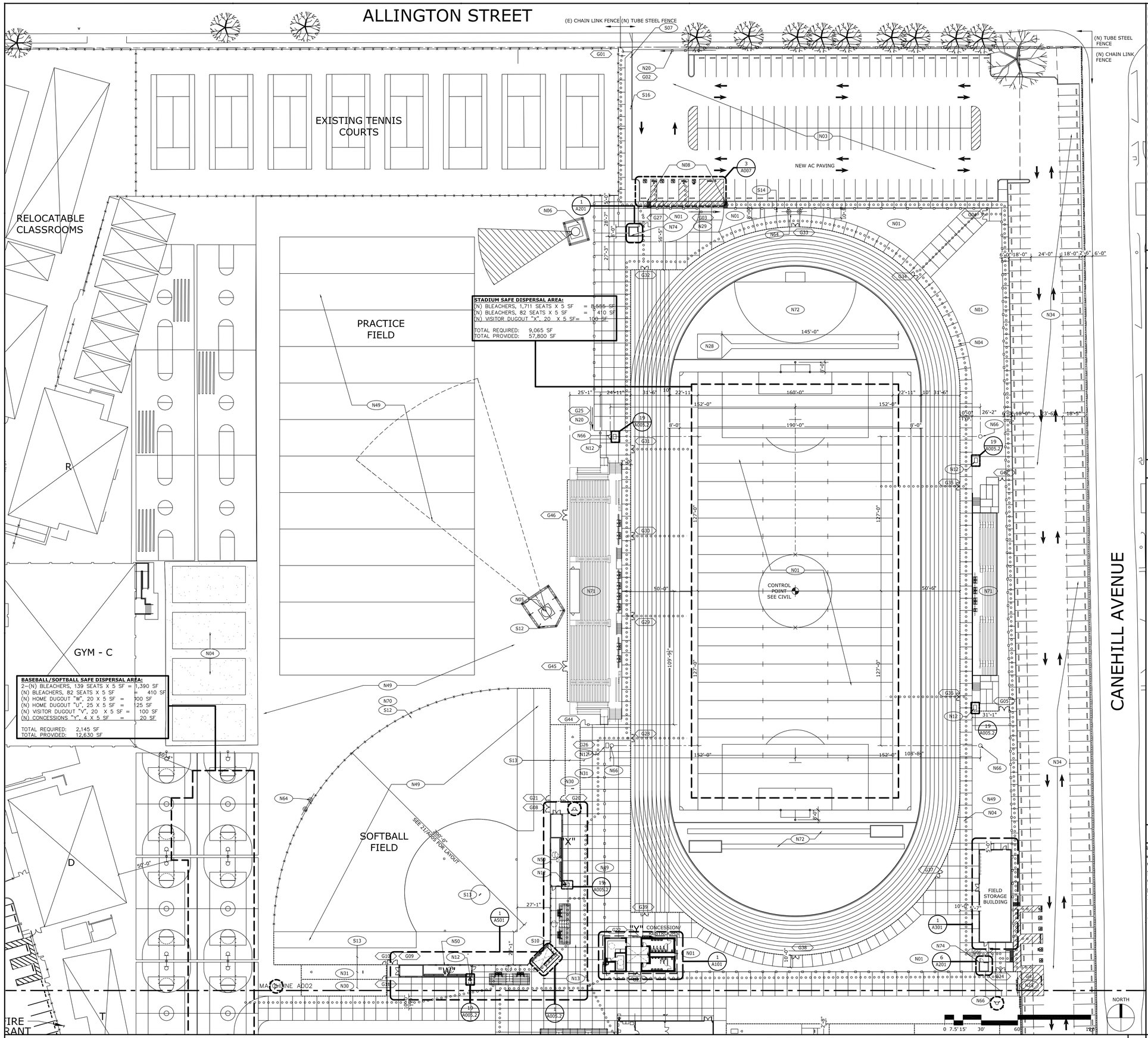

ENLARGED PARTIAL SITE PLAN – NORTH 1" = 30'-0" | 1

N01	(N) SYNTH TURF FIELD: 17 & 18/A004. SYNTH TRACK: 1 & 2/A005.
N03	(N) AC PAVING PARKING LOT
N04	(N) CONCRETE PAVING, SEE A004
N05	(N) DISCUS PAD & CAGE, SEE DETAIL 5/A005
N06	(N) SHOT PUT PAD, CAGE & THROW AREA. SEE 5/A005
N08	(N) CONCRETE CURB RAMP, SEE DETAIL 14/A004
N12	(N) DRINKING FOUNTAIN W/ HOSE BIBB. SEE 19/A005.2 & 1/A004 AND PLUMB DWGS
N13	(N) ALUM. 5 ROW BLEACHERS, SEE A401 (BASEBALL) OR A501 (SOFTBALL). NOTE: BLEACHERS 5 ROWS OF SEATS OR LESS, ABOVE GRADE, NOT PART OF DSA REVIEW & APPROVAL PER 2022 CAL. ADMIN. CODE SEC. 4-314.
N20	(N) ROLLING CHAINLINK VEHICLE GATE, SEE 23/A006
N28	(N) POLE VAULT, SEE 20/A005
N29	(N) ROLLING TUBE STEEL VEHICLE GATE, SEE 4/A008
N30	(N) BATTING CAGES, SEE 6, 7, & 16/A006
N31	(N) BULLPEN, SEE 16/A006 FOR DETAILS
N34	(N) PARKING LOT OVER NEW BOX CULVERT
N49	(N) NATURAL GRASS FIELD
N50	(N) SOFTBALL DUGOUT BUILDINGS, SEE A501.
N63	(N) TUBE STEEL MAN GATE, PER DETAIL 10/A008
N64	(N) SCOREBOARD (PC 03-123415), SEE S-1 & S-2 DWGS.
N66	(N) SPORT FIELD LIGHTING, MFR DRAWINGS PER SHEET INDEX
N70	(N) 8'H CHAINLINK FENCE, SEE 2/A008
N71	(N) ALUMINUM BLEACHERS, SEE B-SHEETS PER SHEET INDEX
N72	(N) LONG JUMP & TRIPLE JUMP, SEE 13/A005.
N74	(N) CMU TICKET BOOTH, SEE A201
S07	(N) 'TOW AWAY' SIGN, SEE DETAIL 19/A007
S10	(N) 4' HIGH WD PLANK BACKSTOP, BEHIND HOME PLATE. SEE 19/A006
S12	(N) 12" WIDE MOW CURB, SEE 10/A004
S13	(N) BRICK DUST AREA, SEE LANDSCAPE DWGS
S14	(N) FLAG POLE, SEE 20/A006.
S16	(N) FIRE LANE SIGN, SEE 18/A007

KEYNOTES

- EXISTING BUILDING TO REMAIN, NOT IN SCOPE OF WORK
- NEW SYNTHETIC TURF FIELD, SEE DETAILS ON SHEET A003
- NEW NATURAL GRASS FIELD
- NEW CONCRETE WALKS/PAVING
- NEW AC PAVING, SEE CIVIL DWGS
- NEW CHAIN LINK FENCING PER DETAILS ON A008
- NEW TUBE STEEL FENCING PER DETAILS ON A008
- EXISTING CHAIN LINK FENCING TO REMAIN
- PROPERTY LINE
- BARRIER-FREE PATH OF TRAVEL (P.O.T.)
- (E) FLOOD CHANNEL
- EXISTING TREES - PROTECT IN PLACE

SITE PLAN LEGEND

1. FOR TYPICAL SYMBOLS SEE SHEET G001.
2. ALL ITEMS SHOWN OR NOTED ARE EXISTING, UNLESS INDICATED AS NEW.
3. PROTECT AND SAFEGUARD FROM DAMAGE ALL EXISTING FINISHES AND IMPROVEMENTS TO REMAIN, INCLUDING LANDSCAPING AND IRRIGATION SYSTEMS.
4. WHERE REMOVAL OF CONCRETE WALKS, MOWSTRIPS, CURBS AND GUTTERS IS REQUIRED TO INSTALL UNDERGROUND UTILITIES, REMOVE THE CONCRETE WORK TO THE NEAREST EXISTING EXPANSION OR CONTROL JOINT (SAWCUT IF REQUIRED). MOWSTRIPS, CURBS AND GUTTERS MAY BE REMOVED IN MINIMUM LENGTHS OF 6' IF THE DISTANCE BETWEEN EXISTING JOINTS IS 12' OR MORE. REPLACE REMOVED WORK WITH REINFORCED CONCRETE TO MATCH ADJACENT EXISTING WORK IN PROFILE, JOINT LAYOUT AND FINISH. SEE SHEET A003 FOR SIMILAR DETAILS AND REINFORCING REQUIREMENTS. DOWEL NEW CONCRETE WORK INTO EXISTING PER DETAIL 1A/A003.
5. COORDINATE THE REMOVAL, RELOCATION OR MODIFICATION OF EXISTING IRRIGATION LINES WITH THE DISTRICT PRIOR TO ANY TRENCHING, CLEARING AND GRUBBING, OR OTHER SITE EXCAVATIONS REQUIRED FOR NEW CONSTRUCTION.
6. RUN-OFF FROM PETROLEUM PRODUCTS, LIME AND MORTAR, SOIL STERILANTS, AND THE WASHING OF EQUIPMENT USED TO APPLY THESE MATERIALS, IS PROHIBITED WITHIN PLANTED AREAS.
7. CONTRACTOR SHALL MAINTAIN EXISTING PLANTING WITHIN THE JOB SITE FENCE ENCLOSURE DURING DEMOLITION AND CONSTRUCTION PHASES. EXISTING IRRIGATION SYSTEMS SHALL EITHER REMAIN OPERATIONAL FOR CONTRACTOR'S USE OR CONTRACTOR SHALL HAND-WATER EXISTING PLANT MATERIALS AT LEAST ONCE A WEEK. TURF SHALL BE MOWED AT LEAST ONCE EVERY TWO WEEKS.
8. REPAIR EXISTING IRRIGATION SYSTEMS DAMAGED DURING THE EXECUTION OF THIS CONTRACT. REPLACE PLANT MATERIALS DAMAGED, DECLINING IN HEALTH, SUFFERING DIEBACK, THAT HAVE LOST FORM AND SIZE, OR THAT DIE DURING THE CONSTRUCTION PERIOD, WITH THE SAME SPECIES OF EQUAL OR GREATER SIZE.
9. REPAIR ASPHALT PARKING LOTS, SPEED BUMPS AND PAINTED CROSSWALKS DAMAGED BY THE EXECUTION OF THIS CONTRACT TO ORIGINAL OR BETTER CONDITION. REPAINT CROSSWALKS AND SPEED BUMP STRIPING THEIR FULL LENGTHS ACROSS ROADWAYS.
10. FOR ADDITIONAL SITE WORK ADJACENT TO BUILDINGS NOT SHOWN ON THIS SHEET, SEE BUILDING FLOOR PLANS.
11. FOR SITE REPAIR WORK NOT SHOWN ON ARCHITECTURAL PLANS, SEE ENGINEERS SITE PLAN SHEETS AS NOTED IN THE SHEET INDEX ON SHEET G001.
12. ALL WORK SHALL COMPLY WITH CBC CHAP. 34, CFC ARTICLE 87; PROVISIONS FOR SAFETY DURING CONSTRUCTION.
13. WHERE NEW WALKS AND OTHER PAVING OVERLAYS EXISTING CLEANOUTS OR UTILITY BOXES, RAISE EXISTING CLEANOUT OR BOX TO FLUSH WITH NEW SURFACE. IF IN PATH OF TRAVEL, REPLACE AS NECESSARY WITH ACCESSIBLE TYPE. IF IN VEHICULAR DRIVE OR PARKING AREA, REPLACE AS NECESSARY WITH TRAFFIC BEARING BOX AND LID.
14. PROVIDE TEMPORARY 6' HIGH CHAIN LINK FENCE ENCLOSURES WITH LOCKABLE GATES AS REQUIRED FOR CONSTRUCTION ACCESS AT CONTRACTOR'S STAGING AREA AND AROUND ALL CONSTRUCTION SITES AS DICTATED BY THE SCHEDULE AND DISTRICT OPERATIONS.

GENERAL NOTES

KEYMAP

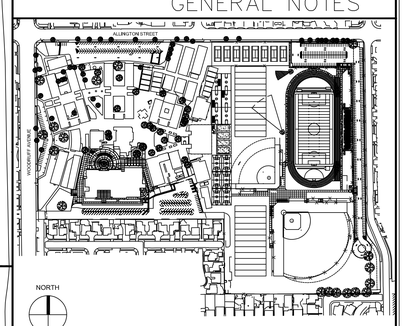

NORTH

STATE:

IDENTIFICATION STAMP
DIV. OF THE STATE ARCHITECT
APP: 03-124281 INC:
REVIEWED FOR
SS ☑ FLS ☑ ACS ☑
DATE: 02/04/2025

ARCHITECT:

architecture
westbergwhite
7700 IRVINE CENTER DR. STE. 100
IRVINE, CA 92618
(714) 508-1780 (714) 508-1780 FAX

LICENSED ARCHITECT
JEFFREY DEBRITZ WESTBERG
C-11045
EXP.9-2025
STATE OF CALIFORNIA

CONSULTANT:

PROJECT NAME:

Bellflower Unified School District
Mayfair High School Athletics Fields
6000 North Woodruff Ave
Lakewood, California 90713

CLIENT:

BELLFLOWER UNIFIED SCHOOL DISTRICT
16703 S. Clark Ave.
BELLFLOWER, CALIFORNIA 90706

Δ	Rev. Date	Description

JOB NO:	15008.01
DATE:	01/13/2025
DRAWN:	TG, XY
CHECK:	RB, JG
ARCHITECT:	PDW
ENGINEER:	

SHEET DESCRIPTION:
ENLARGED SITE PLAN - NORTH

SHEET NO:
A002

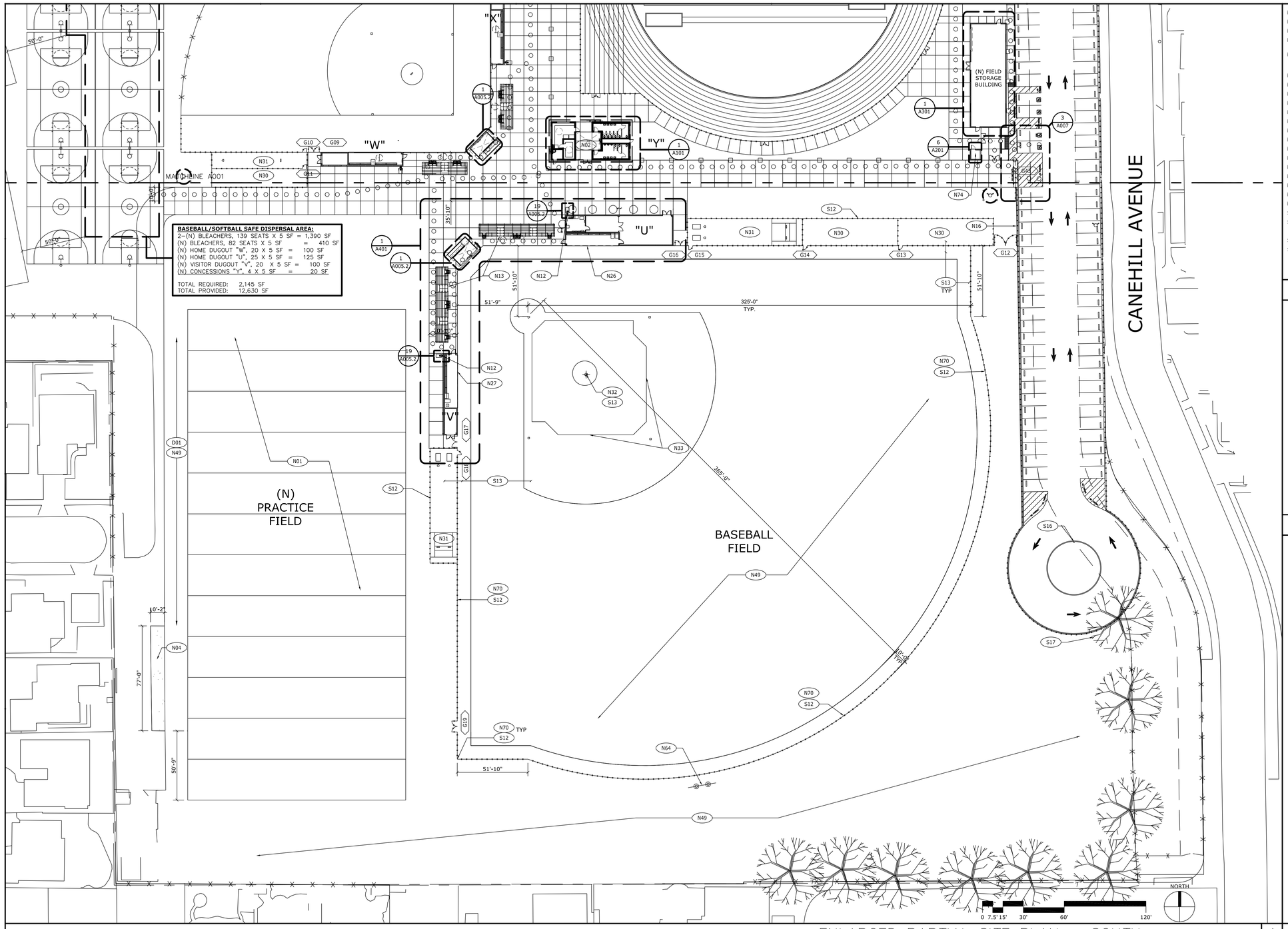

ENLARGED PARTIAL SITE PLAN – SOUTH 1" = 30'-0" 1

N01	(N) SYNTH TURF FIELD: 17 & 18/A004. SYNTH TRACK: 1 & 2/A005.
N02	(N) CONCESSION AND RESTROOM BUILDING, SEE 1/A101 FOR FLOOR PLAN
N04	(N) CONCRETE PAVING, SEE A004
N12	(N) DRINKING FOUNTAIN W/ HOSE BIBB. SEE 19/A005.2 & 1/A004 AND PLUMB DWGS
N13	(N) ALUM. 5 ROW BLEACHERS, SEE A401 (BASEBALL) OR A501 (SOFTBALL). NOTE: BLEACHERS 5 ROWS OF SEATS OR LESS, ABOVE GRADE, NOT PART OF DSA REVIEW & APPROVAL PER 2022 CAL. ADMIN. CODE SEC. 4-314.
N16	(N) CHAINLINK FENCING, SEE DETAIL 2/A008
N26	(N) HOME DUGOUT & STORAGE BLDG, SEE SHT A401 & A301 FOR FLOOR PLAN
N27	(N) VISITORS DUGOUT & STORAGE BLDG, SEE SHT A401 & A301 FOR FLOOR PLAN
N28	(N) POLE VAULT, SEE 20/A005
N30	(N) BATTING CAGES, SEE 6, 7, & 16/A006
N31	(N) BULLPEN, SEE 16/A006 FOR DETAILS
N32	(N) PITCHER'S MOUND, SEE 5/A006
N33	(N) BASEBALL DIAMOND, SEE 9/A006
N34	(N) PARKING LOT OVER NEW BOX CULVERT
N49	(N) NATURAL GRASS FIELD
N50	(N) SOFTBALL DUGOUT BUILDINGS, SEE A501
N64	(N) SCOREBOARD (PC 03-123415), SEE S-1 & S-2 DWGS.
N70	(N) 8'H CHAINLINK FENCE, SEE 2/A008
N74	(N) CMU TICKET BOOTH, SEE A201.
N82	(N) 8" DP BIOSWALE W/ 12"-18" HIGH SHRUBS/GRASSES
S12	(N) 12" WIDE MOW CURB, SEE 10/A004
S13	(N) BRICK DUST AREA, SEE LANDSCAPE DWGS
S16	(N) FIRE LANE SIGN, SEE 18/A007
S17	TRIM (E) TREE TO PROVIDE 13'-6" MIN. VERTICAL CLEARANCE FOR FIRE LANE

KEYNOTES

- EXISTING BUILDING TO REMAIN, NOT IN SCOPE OF WORK
- NEW SYNTHETIC TURF FIELD, SEE DETAILS ON SHEET A003
- NEW NATURAL GRASS FIELD
- NEW CONCRETE WALKS/PAVING
- NEW AC PAVING, SEE CIVIL DWGS
- NEW CHAIN LINK FENCING PER DETAILS ON A008
- NEW TUBE STEEL FENCING PER DETAILS ON A008
- EXISTING CHAIN LINK FENCING TO REMAIN
- PROPERTY LINE
- BARRIER-FREE PATH OF TRAVEL (P.O.T.)
- (E) FLOOD CHANNEL
- EXISTING TREES - PROTECT IN PLACE

SITE PLAN LEGEND

1. FOR TYPICAL SYMBOLS SEE SHEET G001.
2. ALL ITEMS SHOWN OR NOTED ARE EXISTING, UNLESS INDICATED AS NEW.
3. PROTECT AND SAFEGUARD FROM DAMAGE ALL EXISTING FINISHES AND IMPROVEMENTS TO REMAIN, INCLUDING LANDSCAPING AND IRRIGATION SYSTEMS.
4. WHERE REMOVAL OF CONCRETE WALKS, MOWSTRIPS, CURBS AND GUTTERS IS REQUIRED TO INSTALL UNDERGROUND UTILITIES, REMOVE THE CONCRETE WORK TO THE NEAREST EXISTING EXPANSION OR CONTROL JOINT (SAWCUT IF REQUIRED). MOWSTRIPS, CURBS AND GUTTERS MAY BE REMOVED IN MINIMUM LENGTHS OF 6' IF THE DISTANCE BETWEEN EXISTING JOINTS IS 12' OR MORE. REPLACE REMOVED WORK WITH REINFORCED CONCRETE TO MATCH ADJACENT EXISTING WORK IN PROFILE, JOINT LAYOUT AND FINISH. SEE SHEET A003 FOR SIMILAR DETAILS AND REINFORCING REQUIREMENTS. DOWEL NEW CONCRETE WORK INTO EXISTING PER DETAIL 1A/A003.
5. COORDINATE THE REMOVAL, RELOCATION OR MODIFICATION OF EXISTING IRRIGATION LINES WITH THE DISTRICT PRIOR TO ANY TRENCHING, CLEARING AND GRUBBING, OR OTHER SITE EXCAVATIONS REQUIRED FOR NEW CONSTRUCTION.
6. RUN-OFF FROM PETROLEUM PRODUCTS, LIME AND MORTAR, SOIL STERILANTS, AND THE WASHING OF EQUIPMENT USED TO APPLY THESE MATERIALS, IS PROHIBITED WITHIN PLANTED AREAS.
7. CONTRACTOR SHALL MAINTAIN EXISTING PLANTING WITHIN THE JOB SITE FENCE ENCLOSURE DURING DEMOLITION AND CONSTRUCTION PHASES. EXISTING IRRIGATION SYSTEMS SHALL EITHER REMAIN OPERATIONAL FOR CONTRACTOR'S USE OR CONTRACTOR SHALL HAND-WATER EXISTING PLANT MATERIALS AT LEAST ONCE A WEEK. TURF SHALL BE MOWED AT LEAST ONCE EVERY TWO WEEKS.
8. REPAIR EXISTING IRRIGATION SYSTEMS DAMAGED DURING THE EXECUTION OF THIS CONTRACT. REPLACE PLANT MATERIALS DAMAGED, DECLINING IN HEALTH, SUFFERING DIEBACK, THAT HAVE LOST FORM AND SIZE, OR THAT DIE DURING THE CONSTRUCTION PERIOD, WITH THE SAME SPECIES OF EQUAL OR GREATER SIZE.
9. REPAIR ASPHALT PARKING LOTS, SPEED BUMPS AND PAINTED CROSSWALKS DAMAGED BY THE EXECUTION OF THIS CONTRACT TO ORIGINAL OR BETTER CONDITION. REPAINT CROSSWALKS AND SPEED BUMP STRIPING THEIR FULL LENGTHS ACROSS ROADWAYS.
10. FOR ADDITIONAL SITE WORK ADJACENT TO BUILDINGS NOT SHOWN ON THIS SHEET, SEE BUILDING FLOOR PLANS.
11. FOR SITE REPAIR WORK NOT SHOWN ON ARCHITECTURAL PLANS, SEE ENGINEERS SITE PLAN SHEETS AS NOTED IN THE SHEET INDEX ON SHEET G001.
12. ALL WORK SHALL COMPLY WITH CBC CHAP. 34, CFC ARTICLE 87; PROVISIONS FOR SAFETY DURING CONSTRUCTION.
13. WHERE NEW WALKS AND OTHER PAVING OVERLAYS EXISTING CLEANOUTS OR UTILITY BOXES, RAISE EXISTING CLEANOUT OR BOX TO FLUSH WITH NEW SURFACE. IF IN PATH OF TRAVEL, REPLACE AS NECESSARY WITH ACCESSIBLE TYPE. IF IN VEHICULAR DRIVE OR PARKING AREA, REPLACE AS NECESSARY WITH TRAFFIC BEARING BOX AND LID.
14. PROVIDE TEMPORARY 6' HIGH CHAIN LINK FENCE ENCLOSURES WITH LOCKABLE GATES AS REQUIRED FOR CONSTRUCTION ACCESS AT CONTRACTOR'S STAGING AREA AND AROUND ALL CONSTRUCTION SITES AS DICTATED BY THE SCHEDULE AND DISTRICT OPERATIONS.

GENERAL NOTES

FOOTBALL FIELD NOTES

1. CONTRACTOR SHALL VERIFY ALL DIMENSIONS WITH N.F.H.S.A. (NATIONAL FEDERATION OF STATE HIGH SCHOOL ASSOCIATIONS) & C.I.F. (CALIFORNIA INTERSCHOLASTIC FEDERATION) FIELD STANDARDS.
2. ALL LINE WORK SHALL BE LAID OUT WITH A TOLERANCE OF (1/4") QUARTER INCH.
3. ALL YARDLINES SHALL BE A (4") FOUR INCH WHITE, TUFTED TURF, REFER TO FOOTBALL FIELD LAYOUT PLAN.
4. A (4") FOUR INCH WHITE TUFTED OR INLAID TURF LINE SHALL SURROUND THE ENTIRE PLAYING FIELD. REFER TO FOOTBALL FIELD LAYOUT PLAN.
5. (24") TWENTY-FOUR INCH LONG BY (4") FOUR INCH WIDE YARD LINE EXTENSIONS, LOCATE (4") FOUR INCHES AWAY FROM THE SIDELINES. REFER TO DETAIL 10/A005.1.
6. THE COACHING BOX AND TEAM AREA SHALL BE PER NFSHSA RULES AND SHALL BE OUTLINED IN (4") FOUR INCH WIDE WHITE INLAID TURF, REFER TO FOOTBAL FIELD LAYOUT PLAN.
7. THE INBOUND LINES ARE (53'-4") FIFTY-THREE FEET FOUR INCHES FROM EACH SIDELINE. INBOUNDS LINES AND YARDLINE EXTENSIONS SHALL BE (24") TWENTY-FOUR INCHES LONG BY (4") FOUR INCHES WIDE PAINTED WHITE LINES. REFER TO FOOTBALL LAYOUT PLAN.
8. THE EXTRA POINT LINES ARE (6'-0") SIX FEET LONG BY (4") FOUR INCHES WIDE, WHITE INLAID TURF AT THE CENTER LINE OF THE FIELD AT THE (3) THREE YARD LINE. LOCATE ONE AT EACH END OF THE FIELD.
9. WHITE YARDLINE NUMBERS MEASURE (6'-0") SIX FEET HIGH BY (4'-0" FOUR FEET WIDE. TOP OF NUMBERS ARE LOCATED (27'-0) TWENTY-SEVEN FEET FROM THE SIDELINE AND ARE COMPOSED OF WHITE INLAID TURF. REFER TO DETAIL 18/A101.
10. DIRECTIONAL ARROWS POINT TOWARD RESPECTIVE END ZONES AND ARE WHITE INLAID TURF. THERE ARE NO ARROWS ON THE (50) FIFTY YARD LINE. REFER TO DETAIL 10/A005.1.
11. AN 'X' WILL MARK THE KICK-OFF LOCATION AT THE (40) FORTY YARD LINE EACH END OF THE FIELD. THE MARK IS COMPOSED OF WHITE INLAID TURF. REFER TO DETAIL 8/A005.1.
12. (12) TWELVE PYLONS SHALL BE LOCATED AT THE INTERSECTIONS OF GOAL LINES AND ENDLINES AT THE SIDELINES OF BOTH SIDES OF THE FIELD. THE PYLONS SHALL BE SUPPLIED BY THE CONTRACTOR.
13. NUMBERED SIDELINE YARD MARKERS, CHAIN SET AND DOWN BOX SET, GOAL POSTS AND PYLONS SHALL BE PROVIDED BY CONTRACTOR PER SPECIFICATIONS.
14. GOAL POSTS SHALL BE BY SPORTS FIELD SPECIALTIES, GROUND SLEEVE MODEL. REFER TO SPECS FOR MORE INFO.

SOCCER FIELD NOTES

1. CONTRACTOR SHALL VERIFY ALL DIMENSIONS WITH N.F.H.S.A. (NATIONAL FEDERATION OF STATE HIGH SCHOOL ASSOCIATIONS) & C.I.F. (CALIFORNIA INTERSCHOLASTIC FEDERATION) FIELD STANDARDS.
2. ALL LINE WORK SHALL BE LAID OUT WITH A TOLERANCE OF (1/4") QUARTER INCH.
3. ALL SOCCER LINES SHALL BE A (4") FOUR INCH YELLOW, TUFTED OR INLAID TURF. REFER TO SOCCER FIELD LAYOUT PLAN.
4. THE SOCCER GOAL AREA SHALL BE (4") FOUR INCHES WIDE, YELLOW TUFTED OR INLAID LINES MEASURING (18'-0") EIGHTEEN FEET BY (60'-0") SIXTY FEET.
5. THE SOCCER PENALTY AREA SHALL BE (4") FOUR INCHES WIDE, YELLOW TUFTED OR INLAID LINES MEASURING (54'-0") FIFTY-FOUR FEET BY (132'-0") ONE-HUNDRED THIRTY-TWO FEET.
6. THE PENALTY MARK SHALL BE A (4") FOUR INCHE WIDE INLAID YELLOW LINE, (2'-0") TWO FEET LONG. LOCATED (36'-0") THIRTY-SIX FEET FROM THE GOAL LINE AND CENTERED ON THE GOAL AREA. THE RESTRAINING LINE FOR PENALTY KICKS SHALL BE A (4") FOUR INCH WIDE YELLOW ARC, ON THE OUTSIDE OF THE PENALTY AREA. LOCATE (30'-0") THIRTY FEET FROM THE CENTER OF THE PENALTY MARK. REFER TO SOCCER FIELD LAYOUT PLAN.
7. THE HALFWAY LINE FOR THE SOCCER FIELD SHALL BE A (4") FOUR INCH TUFTED YELLOW LINE WITH A (4") FOUR INCH WIDE YELLOW INLAID CIRCLE (30'-0") THIRTY FOOT RADIUS, CENTERED ON THE HALFWAY LINE. REFER TO DETAIL 26/A003.
8. THE DESIGNATED CORNER KICK AREA AT THE CORNERS OF THE SOCCER FIELD SHALL RECEIVE A (4") FOUR INCH WIDE YELLOW ARC, (3'-0") THREE FOOT RADIUS. REFER TO SOCCER FIELD LAYOUT PLAN.
9. CONTRACTOR SHALL PROVIDE SLEEVES FOR SOCCER GOALS.

FIELD EQUIPMENT NOTES

HIGH JUMP
1. THE INCLINATION IN THE HIGH JUMP APPROACH SHALL NOT EXCEED 1:100 (1%).
2. THE APPROACH SHALL CONSIST OF A SEMI-CIRCLE OF LEVEL AND UNVARYING SURFACE. THE CENTER OF THE SEMI-CIRCLE SHALLBE THE MIDPOINT BETWEEN THE STANDARDS. THE DEPTH OF THE APPRACH SHOULD BE A MINIMUM OF 50 FEET.
3. THE LANDING PAD AREA SHALL NOT BE LESS THAN 26.3 FEET WIDE BY 13.8 FEET DEEP.

POLE VAULT
1. THE INCLINATION IN THE POLE VAULT APPROACH SHALL BE LIMITED TO 2:100 (2%) LATERALLY AND 1:100 (1%) IN THE RUNNING DIRECTION.
2. THE RECOMMENDED LENGTH OF THE RUNWAY IS A MINIMUM OF 130 FEET. WHERE CONDITIONS PERMIT, IT SHOULD BE 147 FEET AND 6 INCHES. THE RUNWAY SHOULD BE 42 INCHES WIDE.
3. THE OVERALL SIZE OF THE POLE VAULT LANDING SYSTEM SHALL BE A MINIMUM OF 19 FEET, 8 INCHES WIDE BY 20 FEET AND 2 INCHES DEEP. THE LANDING SURFACE SHALL BE MEASURE FROM BEYOND THE BACK OF THE STANDARD BASES, SHALL BE A MINIMUM OF 19 FEET, 8 INCHES WIDE. THE DIMENSION OF TEH LANDING SURFACE IN THE BACK OF THE VAULTING BOX TO THE BACK OF THE LANDING SYSTEM SHALL BE 16 FEET, 5 INCHES DEEP.
4. THE COLOR OF THE VAULT BOX SHALL OF CONTRASTING COLOR FROM THAT OF THE COLOR OF THE RUNWAY.

LONG JUMP AND TRIPLE JUMP
1. THE INCLINATION IN THE LONG JUMP AND TRIPLE JUMP APPROACH SHALL BE LIMITED TO 2:100 (2%) LATERALLY AND 1:100 (1%) IN THE JUMPING DIRECTION.
2. THE RUNWAY SHALL HAVE A MINIMUM LENGTH OF 130 FEET. WHEN CONDITIONS PERMIT THE RUNWAY SHOULD BE 147 FEET 6 INCHES MEASURED FROM THE LONG JUMP SCRATCH LINE. THE RUNWAY SHOULD BE 42 INCHES WIDE.
3. THE TAKEOFF AREA SHALL BE MARKED BY A RECTANGULAR SHAPED TAKEOFF BOARD, MANUFACTURED FROM WOOD OR SYNTHETIC MATERIAL WHICH PROVIDES A FIRM BASE. THE WIDTH OF THE TAKEOFF BOARD SHALL BE BETWEEN 8 INCHES (MINIMUM) AND 24 INCHES (MAXIMUM) WIDE AND AT LEAST 4 FEET LONG.
4. IF THE TAKEOFF BOARD IS 8 INCHES WIDE AN ADDITIONAL 8 INCHES OF FIRM RESILIENT MATERIAL MAY BE PLACED SO THAT IT ABUTS AGAINST THE EDGE OF THE TAKEOFF BOARD FARTHEST FROM THE SCRATCH LINE SIDE.
5. THE LANDING PIT SHALL BE FILLED WITH SAND TO ENSURE A SAFE LANDING.
6. THE SURFACE SHALL BE AT THE SAME ELEVATION AS THE TAKEOFF BOARD.
7. THE SCRATCH LINE IS THE HAIRLINE WHICH IS USED TO MARK THE LIMIT OF A COMPETITOR'S RUN DURING A TRIAL. THE SCRATCH LINE SHALL BE LOCATED BY MEASURING FROM THE NEARER EDGE OF THE LANDING PIT A DISTANCE OF APPROXIMATELY:

	BOYS	GIRLS
LONG JUMP:	12 FEET	8 FEET
TRIPLE JUMP	32 FEET	24 FEET

SHOT PUT
1. THE SHOTPUT PAD SHALL BE 10 FT BY 10 FT OF CONCRETE CONSTRUCTION WITH A LIGHT BROOM FINISH. LANDING SECTOR SHALL SLOPE NO MORE THAN 1% FOR PAD SECTOR LENGTH ALLOW FOR 60 FEET.

DISCUS
1. THE DISCUS PAD SHALL BE 10 FT BY 10 FT OF CONCRETE CONSTRUCTION WITH A LIGHT BROOM FINISH. THE THROWING RING SHALL BE DEFINED BY INSTALLATION OF METAL RING. AN APPROVED CAGE WITH NETTING SHALL BE INSTALLED AROUND THE DISCUS PAD, REFER TO 23/A004. THE DISCUS LANDING SECTOR SHALL BE 34.92 DEGREES.

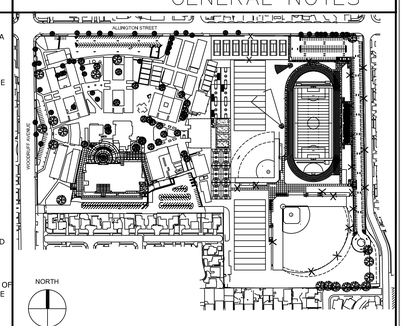

KEYMAP

STATE:

IDENTIFICATION STAMP
DIV. OF THE STATE ARCHITECT
APP: 03-124281 INC:
REVIEWED FOR
SS ☑ FLS ☑ ACS ☑
DATE: 02/04/2025

ARCHITECT:
architecture
westbergwhite
7700 IRVINE CENTER DR. STE. 100
IRVINE, CA 92618
(714) 508-1780 (714) 508-1780 FAX
LICENSED ARCHITECT
C-11045
EXP.9-2025
STATE OF CALIFORNIA

CONSULTANT:

PROJECT NAME:

Bellflower Unified School District
Mayfair High School Athletics Fields
6000 North Woodruff Ave
Lakewood, California 90713

CLIENT:

BELLFLOWER UNIFIED SCHOOL DISTRICT
16703 S. Clark Ave.
BELLFLOWER, CALIFORNIA 90706

Rev.	Date	Description

JOB NO: 15008.01
DATE: 01/13/2025
DRAWN: TG, XY
CHECK: RB, JG
ARCHITECT: PDW
ENGINEER:

SHEET DESCRIPTION:
ENLARGED SITE PLAN – SOUTH

SHEET NO:
A003

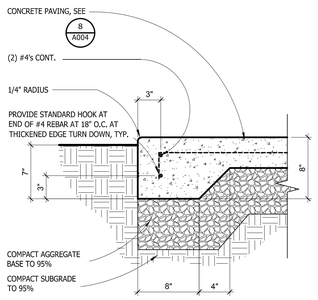

THICKENED EDGE 1-1/2" = 1'-0" 20

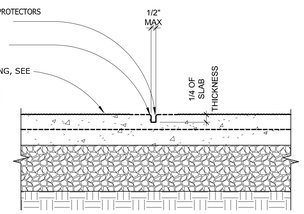

NOTES:

1. SAWCUT CONTROL JOINTS ARE GENERALLY SPACE AT 8'-0" O.C. EA. WAY. JOINT SHALL NOT BE LESS THAN 5'-0".
2. SAWCUT JOINTS SHALL BE MADE IMMEDIATELY AFTER FINISHING OPERATION AND PRIOR TO DRYING SHRINKAGE. SAWCUT JOINTS SHALL BE MADE WITH "EARLY ENTRY" SAW EQUIPMENT

CONC. CONTROL JOINT 1-1/2" = 1'-0" 16

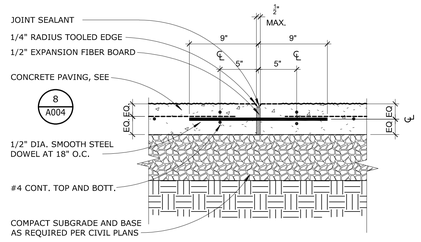

NOTES:

1. DOWELED CONSTRUCTION JOINT NOT TO EXCEED 24' O.C.
2. DOWELS SHALL BE GREASED TO PREVENT CONCRETE BOND
3. DOWELS SHALL BE HELD LEVEL AND PARALLEL TO ONE ANOTHER BY POSITIVE MECHANICAL MEANS
4. DOWEL SHALL BE SMOOTH CUT, NOT SHEARED

CONC. EXPANSION JOINT 1-1/2" = 1'-0" 12

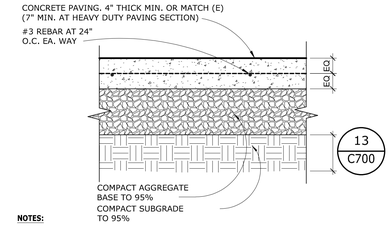

NOTES:

1. SEE PLANS FOR ADDITIONAL INFORMATION
2. FINISHING OF CONCRETE SHALL BE DONE AFTER SURFACE BLEED WATER HAS EVAPORATED.
3. CONCRETE SHALL HAVE AIR ENTERTAINMENT OF 2% TO 3% BY VOLUME
4. MOISTEN SUB-GRADE PRIOR TO PLACING CONCRETE
5. FILLS SHALLS BE COMPACTED THROUGHOUT TO A MINIMUM RELATIVE COMPACTION OF 95%.

CONC PAVING SECT. 1-1/2" = 1'-0" 8

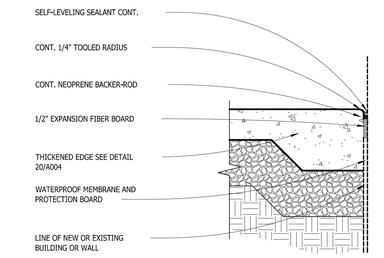

EXP. JOINT @ BLDG 1-1/2" = 1'-0" 4

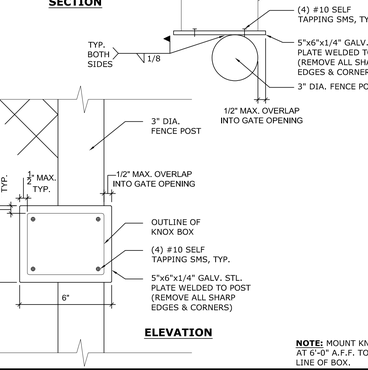

NOTE:
1)SAWCUT AND REMOVE EXISTING CONCRETE AT NEAREST JOINT

2) SURFACE 2% MAX. IN ALL DIRECTIONS

(N) TO (E) CONC. 1-1/2" = 1'-0" 19

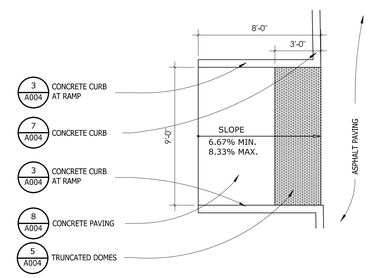

ZERO CURB 1-1/2" = 1'-0" 15

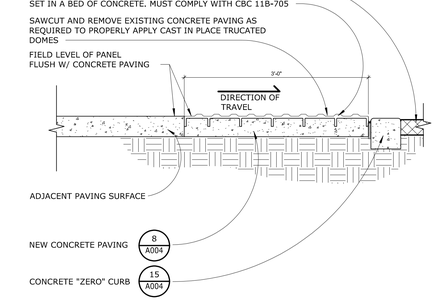

CONC PAVING @ CURB 1-1/2" = 1'-0" 11

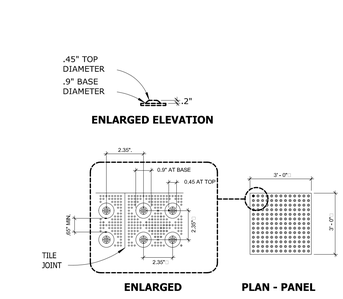

NOTES

1. INSTALL 1/2" FIBER EXPANSION JOINTS AT 24'-0" MAX., INCLUDING ALL CURVES, TANGENTS, AND CORNERS.
2. SACK FINISH ALL EXPOSED SURFACES SMOOTH.

CONC CURB (STRAIGHT) 1-1/2" = 1'-0" 7

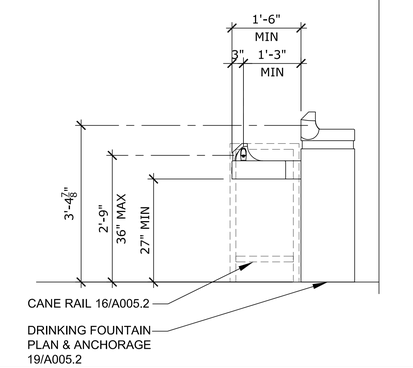

CONC. CURB @ WALK 1" = 1'-0" 3

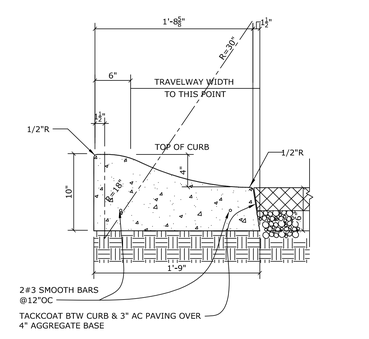

ROLLED CURB N.T.S. 18

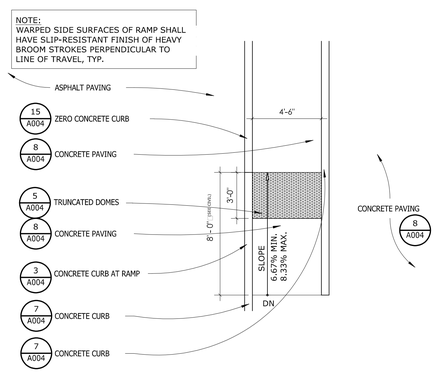

CURB RAMP - NORTH LOT 1/4" = 1'-0" 14

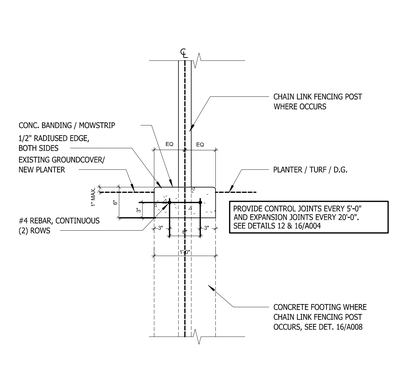

CONC MOW STRIP 1" = 1'-0" 10

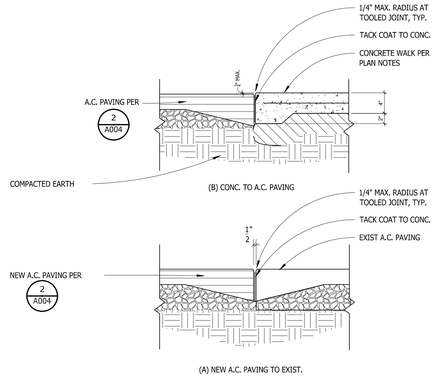

A.C. TO A.C. / CONC PAVING 1" = 1'-0" 6

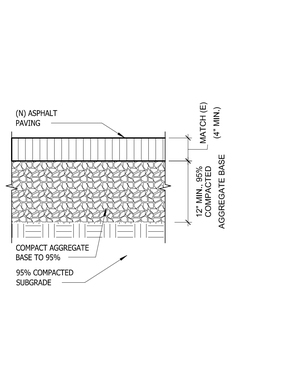

ASPHALT PAVING SECTION 1-1/2" = 1'-0" 2

NOTE: MOUNT KNOX BOX AT 6'-0" A.F.F. TO CENTER LINE OF BOX.

KNOX BOX @ C.L. POST 3" = 1'-0" 17

CURP RAMP - SOUTH LOT 1/4" = 1'-0" 13

NOTES:
1. WHEN USING TRUNCATED DOME TILE PRODUCTS; DEMONSTRATE THAT DOME SPACING WILL BE CONSISTENT AS SPECIFIED ACROSS TILE JOINTS WHEN THE PRODUCT IS INSTALLED. THE ACCEPTED RANGE FOR IN-LINE TRUNCATED DOMES IS 2.35" ON CENTER.

2. PROVIDE YELLOW COLOR #33538 PER FED STD 595B

DETECTABLE WARNING SURFACES 1" = 1'-0" 5

TRUNCATED DOME SURFACE REQUIREMENTS

PEDESTAL D.F. 3/4" = 1'-0" 1

STATE:

IDENTIFICATION STAMP
DIV. OF THE STATE ARCHITECT
APP: 03-124281 INC:
REVIEWED FOR
SS ☑ FLS ☑ ACS ☑
DATE: 02/04/2025

ARCHITECT:

architecture
westbergwhite
7700 IRVINE CENTER DR. STE. 100
IRVINE, CA 92618
(714) 508-1780 (714) 508-1780 FAX

LICENSED ARCHITECT
JEFF DEBRITZ WESTBERG
C-11045
EXP.9-2025
STATE OF CALIFORNIA

CONSULTANT:

PROJECT NAME:

Bellflower Unified School District
Mayfair High School Athletics Fields
6000 North Woodruff Ave
Lakewood, California 90713

CLIENT:

BELLFLOWER UNIFIED SCHOOL DISTRICT

16703 S. Clark Ave.
BELLFLOWER, CALIFORNIA 90706

Rev.	Date	Description

JOB NO:	15008.01
DATE:	01/13/2025
DRAWN:	TG, XY
CHECK:	RB, JG
ARCHITECT:	PDW
ENGINEER:	

SHEET DESCRIPTION:

SITE DETAILS

SHEET NO:

A004

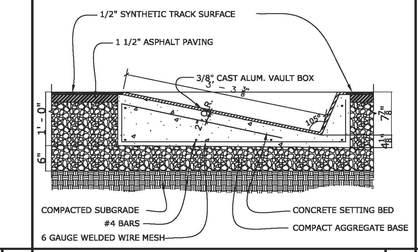

VAULT BOX SECTION 1"=1'-0" | 25

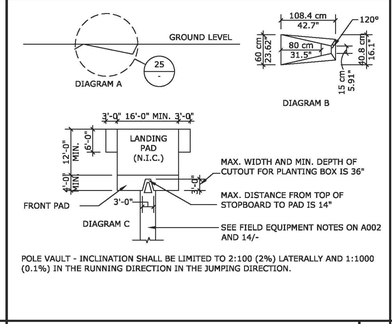

POLE VAULT - INCLINATION SHALL BE LIMITED TO 2:100 (2%) LATERALLY AND 1:1000 (0.1%) IN THE RUNNING DIRECTION IN THE JUMPING DIRECTION.

POLE VAULT 1/16" = 1'-0" | 20

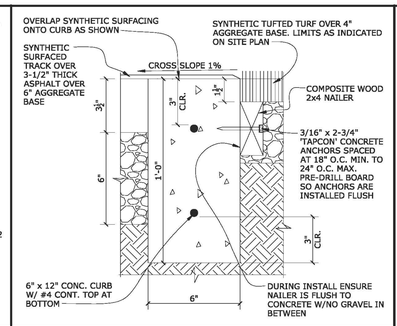

CONC CURB AT TRANSITION 3"=1'-0" | 15

5

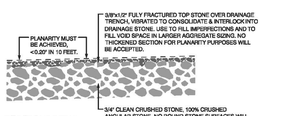

TOP STONE DETAIL
NTS

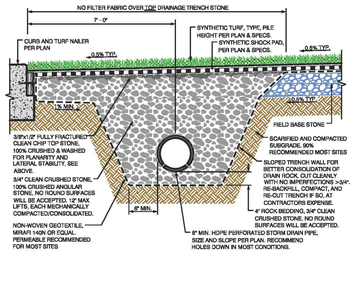

TURF EDGE @ PERIMETER DRAIN N.T.S. | 28

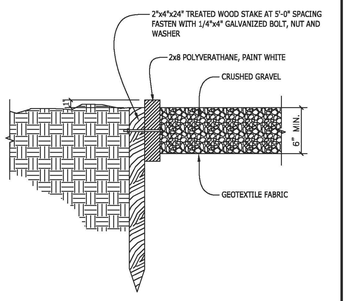

SHOT PUT LANDING AREA 1 1/2" = 1'-0" | 24

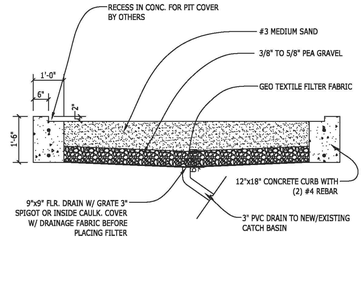

JUMP PIT SECTION 1/2"=1'-0" | 19

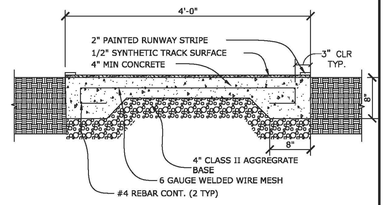

NOTE:
TYPICAL FOR LONG JUMP, TRIPLE JUMP, AND POLE VAULT RUNWAYS

TYPICAL RUNWAY SECTION 1"=1'-0" | 14

HURDLE SETTINGS

BOYS COMPETITION

EVENT	NO. OF HURDLES	(INCHES) HURDLE HEIGHT	START TO FIRST HURDLE	BETWEEN HURDLES	LAST HURDLE TO FINISH
55 M	5	39	13.716 M (45 FT.)	9.144 M (30 FT.)	4.708 M (15.45 FT.)
110 M	10	39	13.716 M (45 FT.)	9.144 M (30 FT.)	13.988 M (45.88 FT.)
165 M	8	30	18.288 M (60 FT.)	18.288 M (60 FT.)	18.696 M (61.35 FT.)
300 M	8	36	45 M (147.62 FT.)	30 M (114.83 FT.)	10 M (32.81 FT.)

GIRLS COMPETITION

EVENT	NO. OF HURDLES	(INCHES) HURDLE HEIGHT	START TO FIRST HURDLE	BETWEEN HURDLES	LAST HURDLE TO FINISH
55 M	5	30	13 M (42.67 FT.)	8.5 M (27.90 FT.)	8 M (26.25 FT.)
75 M	7	30 / 33	13 M (42.67 FT.)	8.5 M (27.90 FT.)	11 M (36.08 FT.)
100 M	10	30	13 M (42.67 FT.)	8.5 M (27.90 FT.)	10.5 M (34.46 FT.)
200 M	10	30	16 M (52.50 FT.)	19 M (62.33 FT.)	13 M (42.67 FT.)
300 M	8	30	45 M (147.62 FT.)	35 M (114.83 FT.)	10 M (32.81 FT.)

STAGGERED STARTS

	ADVANTAGE	
	FEET	METERS
1	10.996	3.35
2	21.98	6.70
3	32.97	10.06
4	43.98	13.40

RULE: 5-3-6

START 3000 M CURVED START (RULE: 5-3-7)

400 METER EVENT MARKINGS LAYOUT

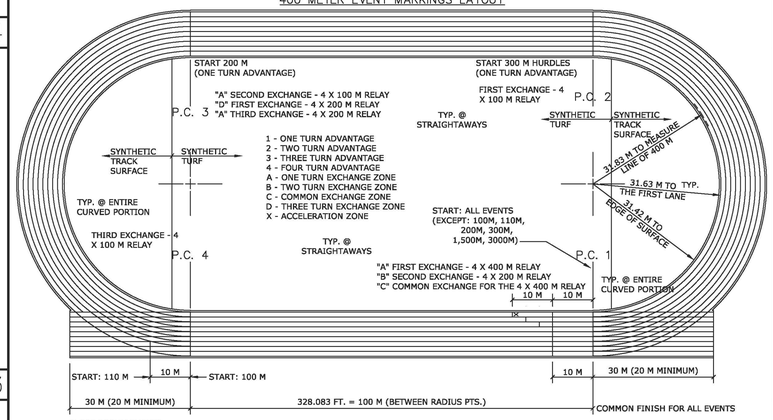

SLOPE REQUIREMENTS:
LATERAL - 2:100 (RECOMMENDED TO THE INSIDE)
RUNNING DIRECTION - 1:1000

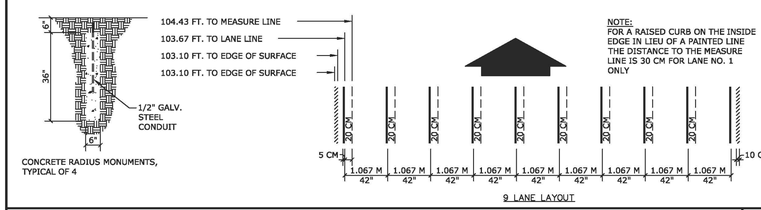

TRACK AND FIELD LAYOUT 1" = 50'-0" | 2

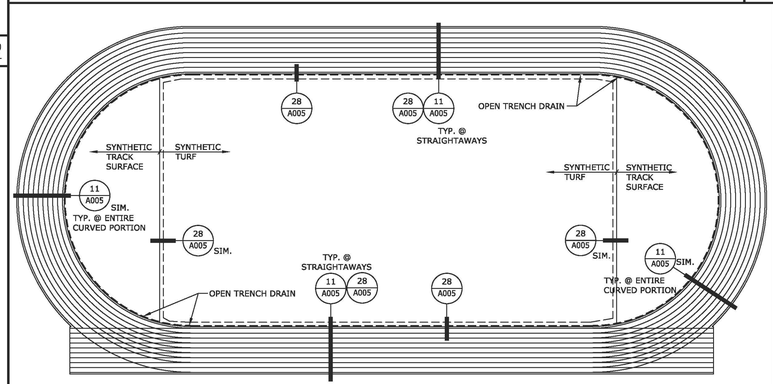

TRACK AND FIELD DRAINAGE LAYOUT 1" = 50'-0" | 1

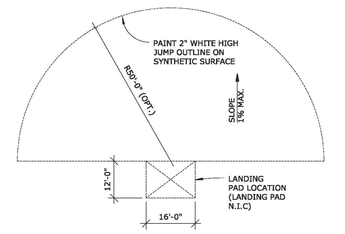

HIGH JUMP - THE INCLINATION IN THE HIGH JUMP APPROACH SHALL NOT EXCEED 1:100 (1%). THE APPROACH SHALL CONSIST OF A SEMICIRCLE OF LEVEL AND UNVARING SURFACE. THE CENTER OF THE SEMICIRCLE IS TO BE THE MIDPOINT BETWEEN THE STANDARDS. THE RADIUS IS AS SHOWN ABOVE.

THE RUNNING HIGH JUMP LANDING PAD SHALL 16'-0" x 12'-0" AS SHOWN ABOVE, AND SHALL BE FILLED WITH A SOFT MATERIAL OTHER THAN SAND OR SAWDUST. THE RULES COMMITTEE STRONGLY RECOMMENDS THE USE OF 24" OF FOAM RUBBER OR SHOCK ABSORBING SYNTHETIC SOFT MATERIAL OR AN ENCASED, COMMERCIALLY COMPRESSED FOAM RUBBER MATTRESS AT LEAST 18" THICK.

WHEN THE LANDING PAD IS MADE UP OF TWO OR MORE SECTIONS, THEY SHALL BE ATTACHED OR INCLUDE A COMMON COVER OR PAD EXTENDING OVER ALL SECTIONS.

THE UPRIGHT STANDARDS WHICH SUPPORT THE CROSSBAR SHALL BE AT LEAST 12 FEET APART. THE PLATFORMS WHICH SUPPORT THE CROSSBAR SHALL BE RECTANGULAR PLANES 1-1/2 INCHES BY 2-3/8 INCHES. THE LONG DIMENSIONS SHALL POINT TOWARD THE OPPOSITE UPRIGHT SO THAT IT WILL BE PARALLEL TO THE CROSSBAR. THERE MAY BE AN EXTENSION OF THE STANDARD ABOVE THE CROSSBAR.

EFFECTIVE JANUARY 01, 2013, THE CROSSBAR SHALL BE CIRCULAR. SQUARE WITH BEVELED EDGES OR TRIANGULAR CROSSBARS SHALL NO LONGER BE LEGAL FOR COMPETITION.

HIGH JUMP LAYOUT 1" = 20'-0" | 26

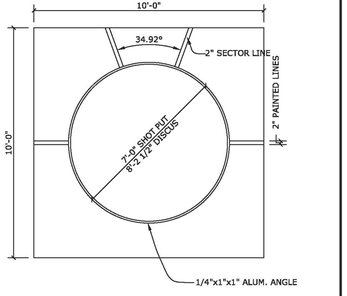

DISCUS PAD PLAN 3/8"=1'-0" | 23

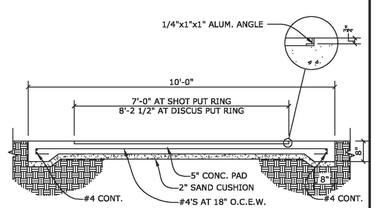

SHOT PUT/DISCUS PAD SECTION 1/2"=1'-0" | 22

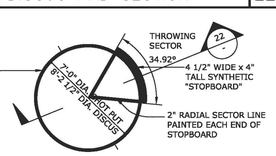

SHOT PUT - THE PUTTING CIRCLES SHALL HAVE AN INSIDE DIAMETER OF 7 FEET (2.134 M); THE CIRCLE HAS A SURFACE OF CONCRETE WITH A 2 INCHES (5 CM) WIDE PAINTED BAND AROUND THE PERIMETER. A CONCRETE SURFACE WITH A 1/64 INCH (1 MM) ROUGHNESS IS RECOMMENDED.

A STOPBOARD, CONSTRUCTED OF SYNTHETIC MATERIAL IN THE SHAPE OF AN ARC, SO THAT THE INNER EDGE COINCIDES WITH THE INNER EDGE OF THE CIRCLE, SHALL BE FIRMLY FIXED IN THIS POSITION. IT SHALL BE 4 FEET (1.22 M) IN LENGTH ALONG THE INSIDE SURFACE, 4 INCHES (10 CM) IN HEIGHT AND 4-1/2 INCHES (11.4 CM) IN WIDTH. THE INSIDE EDGE OF THE LINE OR BAND IS THE LIMIT OF THE PUTTING CIRCLE.

RADIAL LINES 2 INCHES (5 CM) WIDE SHALL EXTEND FROM THE CENTER OF THE CIRCLE THROUGH THE EXTREMITIES OF THE STOP BOARD AND CONTINUE OUT TO FORM AN AREA INTO WHICH LEGAL PUTS MUST BE MADE.

SHOT PUT 1/4" = 1'-0" | 21

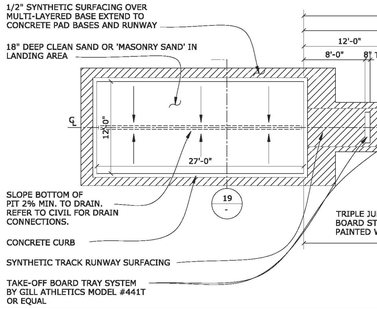

LONG JUMP/TRIPLE JUMP RUNWAY AND PIT 1/8"=1'-0" | 13

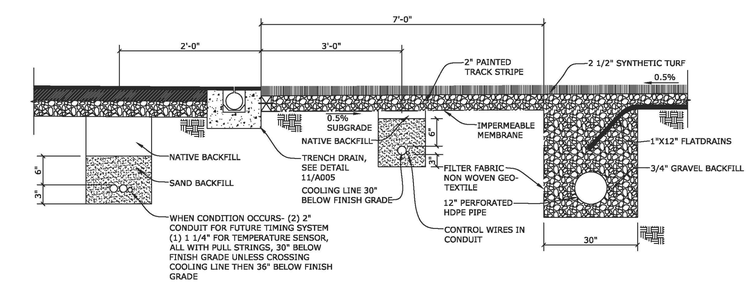

UTILITY SECTION 3/4" = 1'-0" | 12

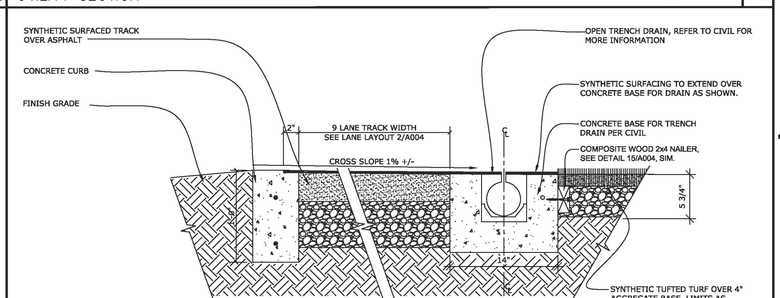

TRACK SECTION AT CURB AND DRAIN 1 1/2" = 1'-0" | 11

STATE:

IDENTIFICATION STAMP
DIV. OF THE STATE ARCHITECT
APP: 03-124281 INC:
REVIEWED FOR
SS ☑ FLS ☑ ACS ☑
DATE: 02/04/2025

ARCHITECT:

architecture
westbergwhite
7700 IRVINE CENTER DR. STE. 100
IRVINE, CA 92618
(714) 508-1780 (714) 508-1780 FAX

REGISTERED ARCHITECT
JEFFREY DEBRITS WESTBERG
C-11045
EXP 9-2025
STATE OF CALIFORNIA

CONSULTANT:

PROJECT NAME:

Bellflower Unified School District
Mayfair High School Athletic Fields
6000 North Woodruff Ave
Lakewood, California 90713

CLIENT:

BELLFLOWER UNIFIED SCHOOL DISTRICT

16703 S. Clark Ave.
BELLFLOWER, CALIFORNIA 90706

Rev.	Date	Description
2		

JOB NO:	15008.01
DATE:	01/13/2025
DRAWN:	TG, XY
CHECK:	RB, JG
ARCHITECT:	PDW
ENGINEER:	

SHEET DESCRIPTION:

TRACK & FIELD DETAILS

SHEET NO:

A005

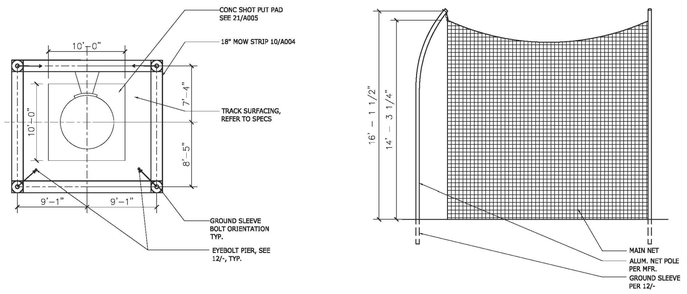

SHOT PUT CAGE LAYOUT — 1/8" = 1'-0" — 16

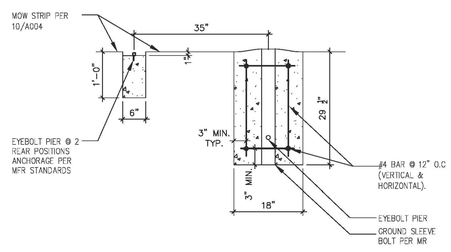

SHOT PUT/DISCUSS FOOTING — 3/4" = 1'-0" — 12

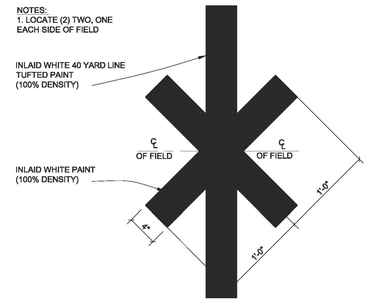

KICK-OFF MARKER — 1 1/2" = 1'-0" — 8

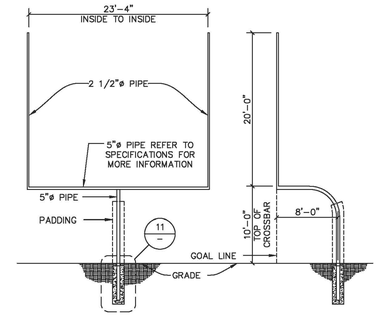

FIELD GOAL POST — 1/8" = 1'-0" — 4

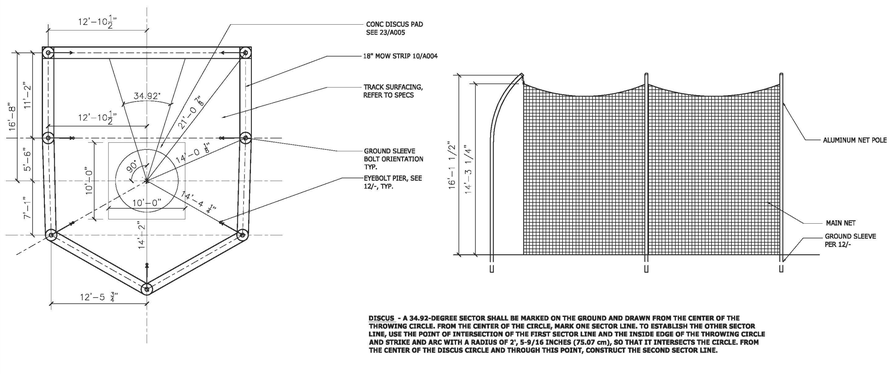

DISCUS - A 34.92-DEGREE SECTOR SHALL BE MARKED ON THE GROUND AND DRAWN FROM THE CENTER OF THE THROWING CIRCLE. FROM THE CENTER OF THE CIRCLE, MARK ONE SECTOR LINE. TO ESTABLISH THE OTHER SECTOR LINE, USE THE POINT OF INTERSECTION OF THE FIRST SECTOR LINE AND THE INSIDE EDGE OF THE THROWING CIRCLE AND STRIKE AND ARC WITH A RADIUS OF 2', 5-9/16 INCHES (75.07 cm), SO THAT IT INTERSECTS THE CIRCLE. FROM THE CENTER OF THE DISCUS CIRCLE AND THROUGH THIS POINT, CONSTRUCT THE SECOND SECTOR LINE.

DISCUSS CAGE LAYOUT — 1/8" = 1'-0" — 15

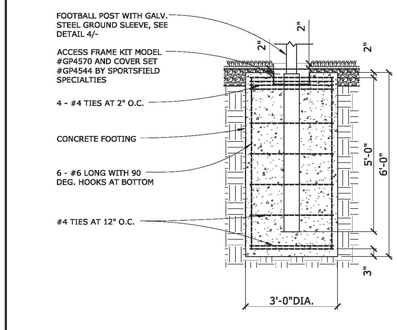

GOAL POST FOOTING — 1/2" = 1'-0" — 11

1. BOTH TEAM BOXES MAY BE ON ONE SIDE BETWEEN THE TWO 45 - AND 20 - YARD LINES. END LINES AND SIDELINES SHOULD BE AT LEAST 4 INCHES WIDE. OTHER FIELD DIMENSIONS SHOULD BE 4 INCHES WIDE.
2. INBOUNDS LINES SHOULD BE 24" LONG AND 4" WIDE.
3. A 4-INCH WIDE BROKEN RESTRAINING LINE SHALL BE PUT AROUND THE ENTIRE FIELD, 2 OR MORE YARDS FROM BOUNDARIES.
4. FOOTBALL GOAL POST WITH GROUND SLEEVE BY SPORTSFIELD SPECIALTIES MODEL #GP4183, #GP4570 AND #GP4544. INSTALL PER MANUFACTURER INSTRUCTIONS AND SPECS.
5. FOR YARDLINE LETTERING SEE DETAIL 18/- AND 17/- FOR 50 YARDLINE MARKER.

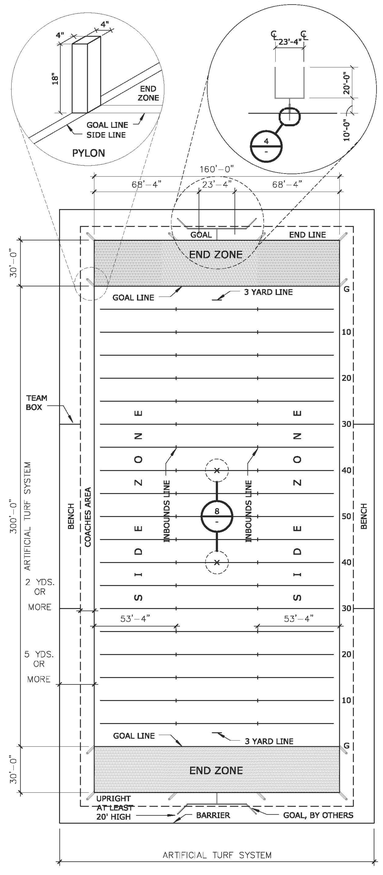

FOOTBALL FIELD — 1" = 40'-0" — 5

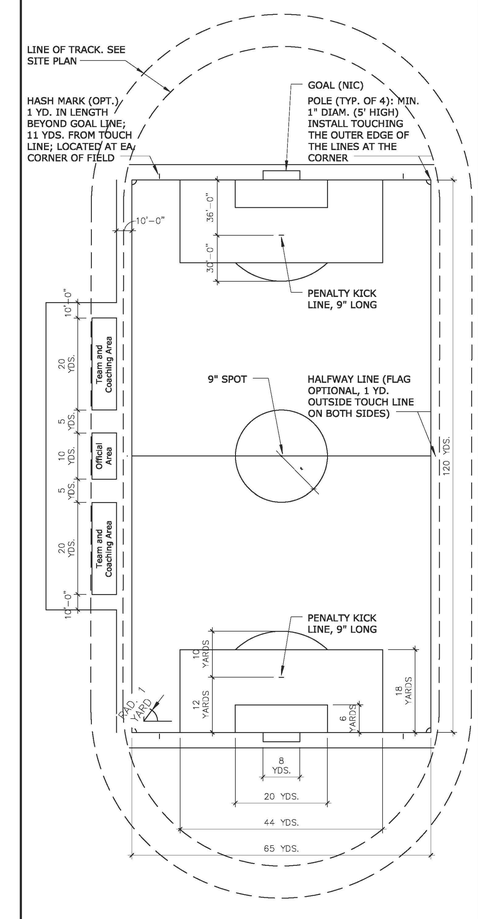

SOCCER FIELD — 1" = 40'-0" — 1

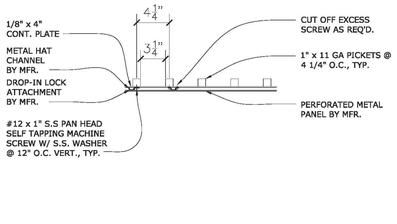

PANEL ATTACHMENT @ GATE — 1 1/2" = 1'-0" — 10

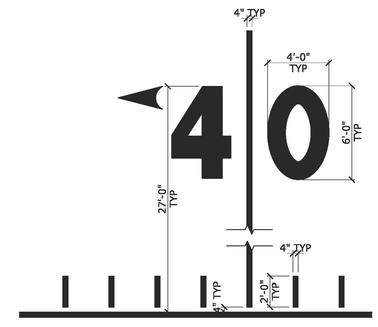

YARDLINE LETTERING — 1/4" = 1'-0" — 10

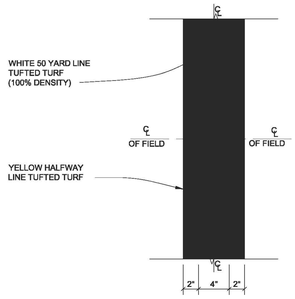

50 YARD/HALFWAY LINE — 1 1/2" = 1'-0" — 9

STATE:

IDENTIFICATION STAMP
DIV. OF THE STATE ARCHITECT
APP: 03-124281 INC:
REVIEWED FOR
SS ☑ FLS ☑ ACS ☑
DATE: 02/04/2025

ARCHITECT:

architecture
westbergwhite
7700 IRVINE CENTER DR. STE. 100
IRVINE, CA 92618
(714) 508-1780 (714) 508-1780 FAX

LICENSED ARCHITECT
REGISTERED PROFESSIONAL ENGINEER
C-11045
EXP.9-2025
STATE OF CALIFORNIA

CONSULTANT:

PROJECT NAME:

Bellflower Unified School District
Mayfair High School Athletics Fields
6000 North Woodruff Ave
Lakewood, California 90713

CLIENT:

BELLFLOWER UNIFIED
SCHOOL DISTRICT
16703 S. Clark Ave.
BELLFLOWER, CALIFORNIA 90706

Δ	Rev. Date	Description

JOB NO:	15008.01
DATE:	01/13/2025
DRAWN:	TG, XY
CHECK:	RB, JG
ARCHITECT:	PDW
ENGINEER:	

SHEET DESCRIPTION:

FIELD STRIPING AND DETAILS

SHEET NO:

A005.1

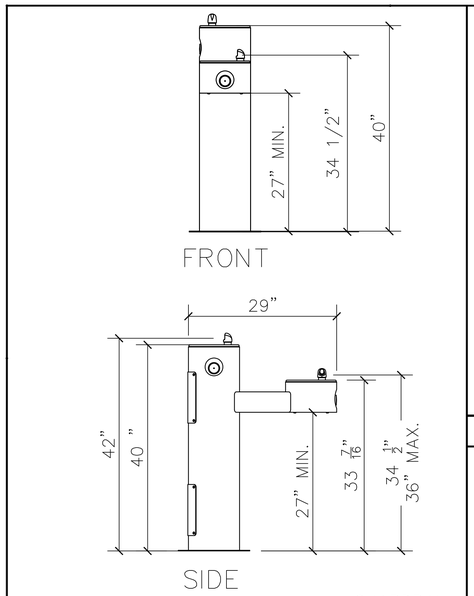

DRINKING FOUNTAIN — N.T.S. — 19

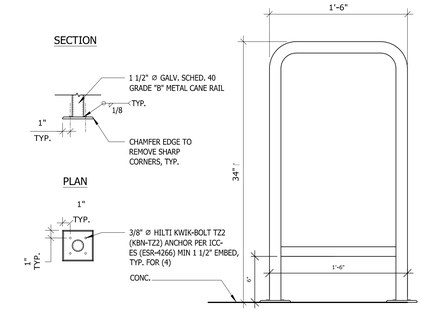

GUARDRAIL @ D.F. — 1 1/2" = 1'-0" — 16

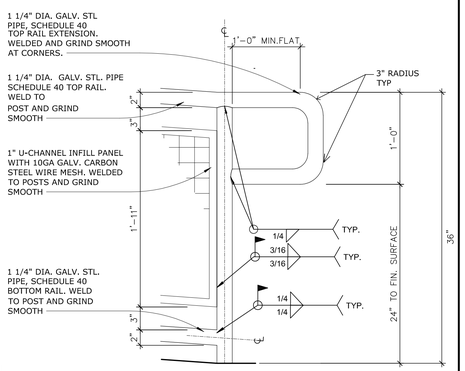

HANDRAIL EXTENSION — 1 1/2" = 1'-0" — 15

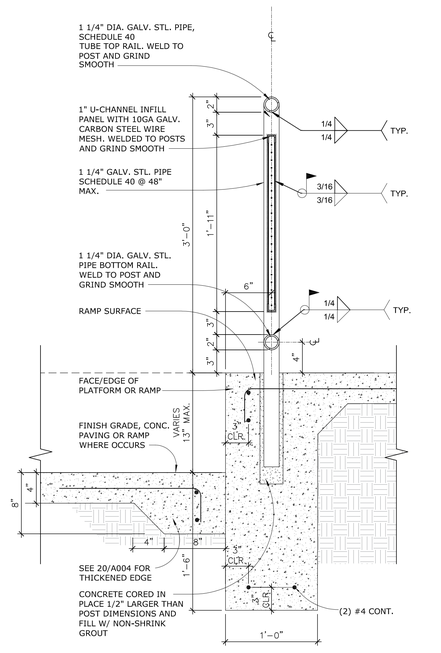

HANDRAIL AT RAMP/STAIR — 1 1/2" = 1'-0" — 11

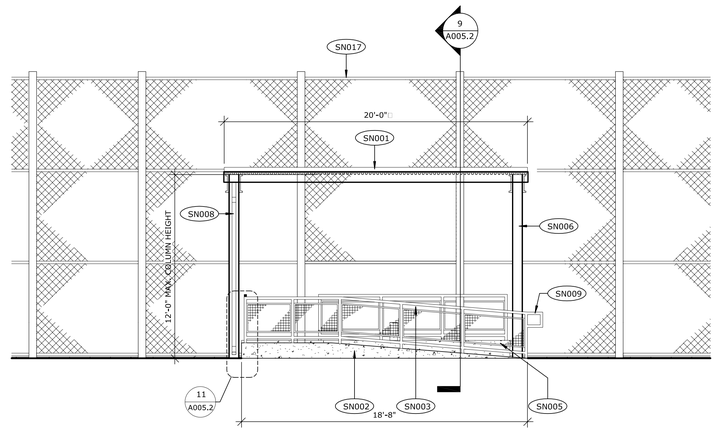

SN001 NEW 9' X 20' SHADE CANOPY, PER PC 02-121474-REV1
SN002 NEW RAMP WITH RAILING, SEE 11/-
SN003 NEW 1 1/2" HSS TUBE RAILING WITH 10GA WIRE MESH INFILL PANEL, SEE 10/A003 FOR DETAIL
SN005 NEW CONCRETE PLATFORM, SEE PLAN FOR FINISH SURFACE SPOT ELEVATIONS
SN006 NEW 8" X 8" HSS POST PER PC 02-121474-REV1
SN008 NEW GUTTER AND DOWNSPOUT PER PC
SN009 NEW 1 1/2" HSS TUBE RAILING EXTENSION PER DETAIL 12/A003
SN017 SOFTBALL AND BASEBALL CHAIN LINK BACKSTOP PER 17/- AND 29/A006

CONC. PLATFORM AND CANOPY WEST ELEVATION — 1/4" = 1'-0" — 3

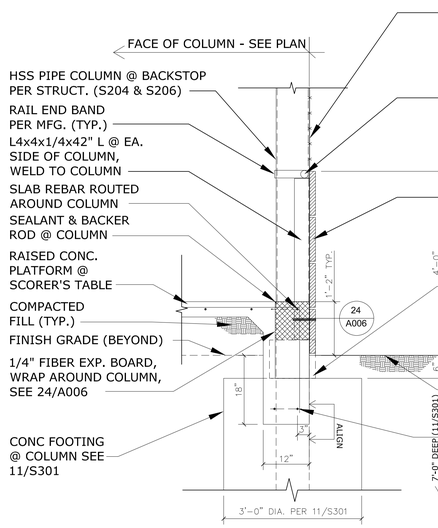

PLATFORM @ COLUMN & BATTER BOARD — 3/4" = 1'-0" — 17

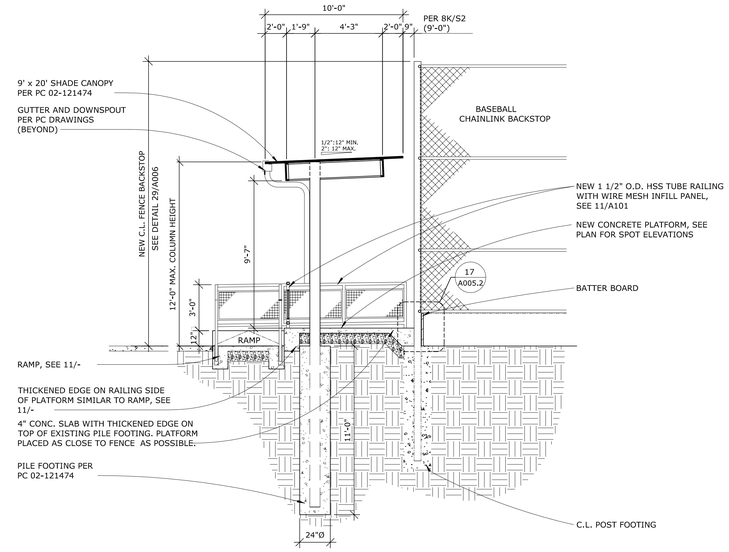

SECTION/ELEVATION — 1/4" = 1'-0" — 9

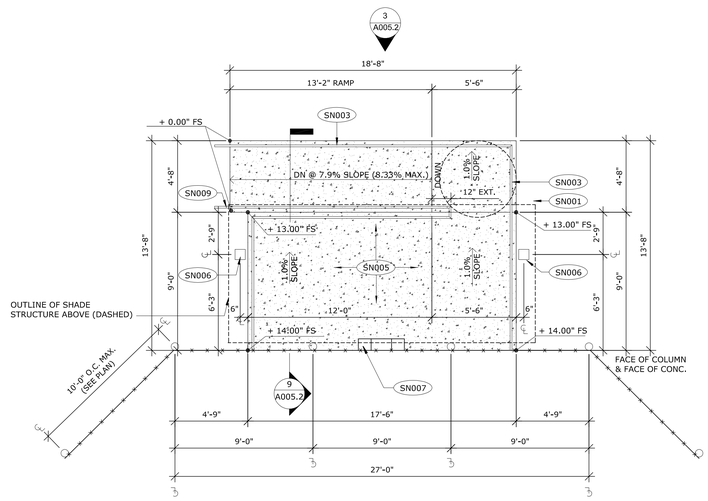

SN001 NEW 9' X 20' SHADE CANOPY, PER PC 02-121474-REV1
SN003 NEW 1 1/2" HSS TUBE RAILING WITH 10GA WIRE MESH INFILL PANEL, SEE 11/- FOR DETAIL
SN005 NEW CONCRETE PLATFORM, SEE PLAN FOR FINISH SURFACE SPOT ELEVATIONS
SN006 NEW 8" X 8" HSS POST PER PC 02-121474-REV1
SN007 NEW CONC. PEDESTAL FOR ELECTRIC JUNCTION BOXES
SN009 NEW 1 1/2" HSS TUBE RAILING EXTENSION PER DETAIL 15/-

CONCRETE PLATFORM AND RAMP FLOOR PLAN — 1/4" = 1'-0" — 1

STATE:

IDENTIFICATION STAMP
DIV. OF THE STATE ARCHITECT
APP: 03-124281 INC:
REVIEWED FOR
SS ☑ FLS ☑ ACS ☑
DATE: 02/04/2025

ARCHITECT:

architecture
westbergwhite
7700 IRVINE CENTER DR. STE. 100
IRVINE, CA 92618
(714) 508-1780 (714) 508-1780 FAX

LICENSED ARCHITECT — JEFFREY DEBRITZ WESTBERG — C-11045 EXP.9-2025 — STATE OF CALIFORNIA

CONSULTANT:

PROJECT NAME:

Bellflower Unified School District
Mayfair High School Athletics Fields
6000 North Woodruff Ave
Lakewood, California 90713

CLIENT:

BELLFLOWER UNIFIED SCHOOL DISTRICT
16703 S. Clark Ave.
BELLFLOWER, CALIFORNIA 90706

Δ	Rev. Date	Description

JOB NO: 15008.01
DATE: 01/13/2025
DRAWN: TG, XY
CHECK: RB, JG
ARCHITECT: PDW
ENGINEER:

SHEET DESCRIPTION:
SCORER'S TABLE ENLARGED PLAN, SECTION, & DETAILS

SHEET NO:
A005.2

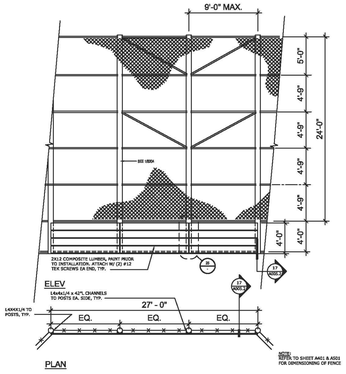

BACKSTOP PARTIAL PLAN & ELEV. 1/8"=1'-0" | 29

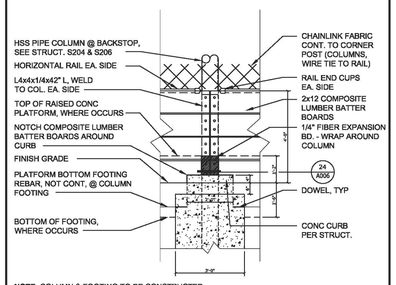

NOTE: COLUMN & FOOTING TO BE CONSTRUCTED BEFORE RAISED PLATFORM PERIMETER BEAM

BATTER BOARDS AT CURB 3/8" = 1'-0" | 25

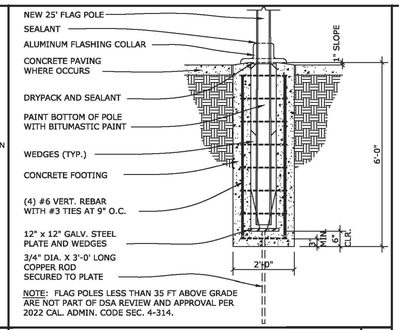

NOTE: FLAG POLES LESS THAN 35 FT ABOVE GRADE ARE NOT PART OF DSA REVIEW AND APPROVAL PER 2022 CAL. ADMIN. CODE SEC. 4-314.

FLAGPOLE 1/2"=1'-0" | 20

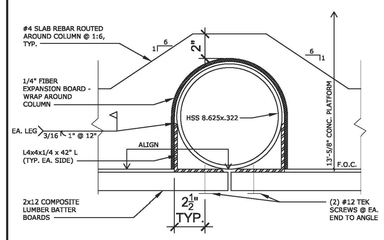

BACKSTOP POST @ PLATFORM N.T.S. | 24

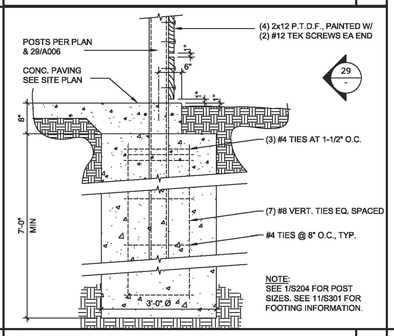

NOTE: SEE 1/S204 FOR POST SIZES. SEE 11/S301 FOR FOOTING INFORMATION.

BACKSTOP BANG BOARD 3/4"=1'-0" | 19

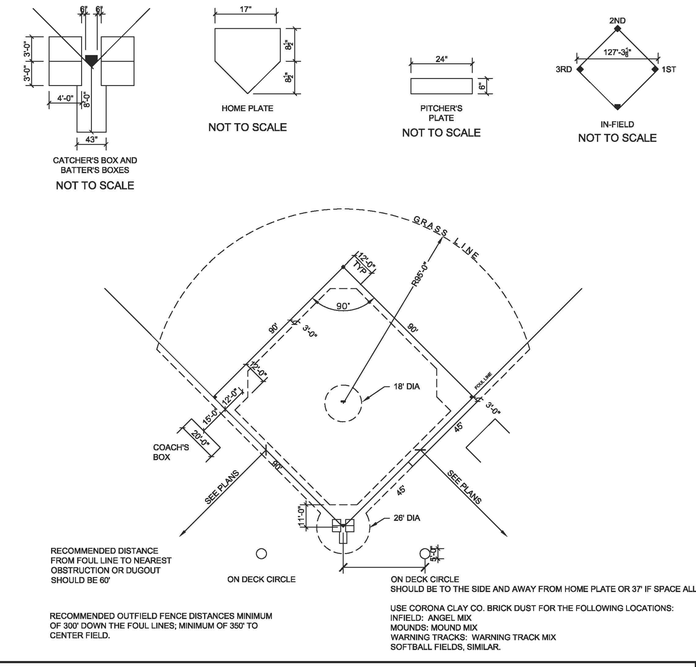

RECOMMENDED OUTFIELD FENCE DISTANCES MINIMUM OF 300' DOWN THE FOUL LINES; MINIMUM OF 350' TO CENTER FIELD.

USE CORONA CLAY CO. BRICK DUST FOR THE FOLLOWING LOCATIONS:
INFIELD: ANGEL MIX
MOUNDS: MOUND MIX
WARNING TRACKS: WARNING TRACK MIX
SOFTBALL FIELDS, SIMILAR.

BASEBALL FIELD 1" = 30'-0" | 9

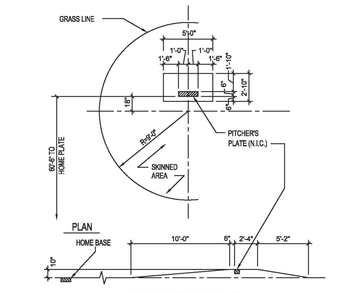

CROSS - SECTION AT MOUND

PITCHER'S MOUND N.T.S. | 5

NOTE:
INSTALL PADDING AT 8'-0" HIGH PERIMETER FENCING AT BASEBALL, SOFTBALL FIELDS AND AT 4'-0" HIGH FENCING AT TRACK & AT BASEBALL & SOFTBALL DUGOUTS. COLOR SHALL BE SELECTED BY ARCHITECT. FADE RESISTANCE WARRANTY SHALL BE FIVE YEARS OR GREATER. BASIS OF DESIGN: SPORTSFIELD SPECIALTIES

TOP RAIL PADDING: 18 OZ. EXTRUDED VINYL, HIGH UV RESISTANCE, 3" THICK HIGH IMPACT POLYURATHANE FOAM. ATTACH TO TOP RAIL USING 14" LONG NYLON ZIP TIES W/ 50 LB BREAK STRENGTH PER MFR

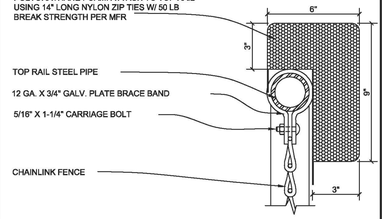

CHAINLINK TOP RAIL PROTECTION 3" = 1'-0" | 4

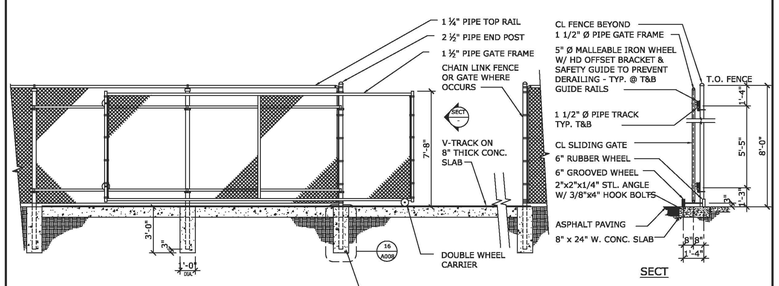

CHAIN LINK ROLLING GATE SCALE: 1/4"=1'-0" | 23

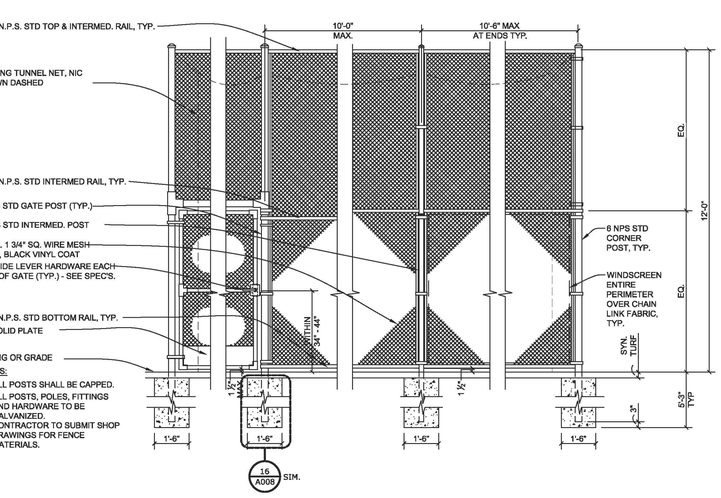

NOTES:
A. ALL POSTS SHALL BE CAPPED.
B. ALL POSTS, POLES, FITTINGS AND HARDWARE TO BE GALVANIZED.
C. CONTRACTOR TO SUBMIT SHOP DRAWINGS FOR FENCE MATERIALS.

CHAIN LINK FENCE AND GATE – BATTING CAGES 3/8" = 1'-0" | 7

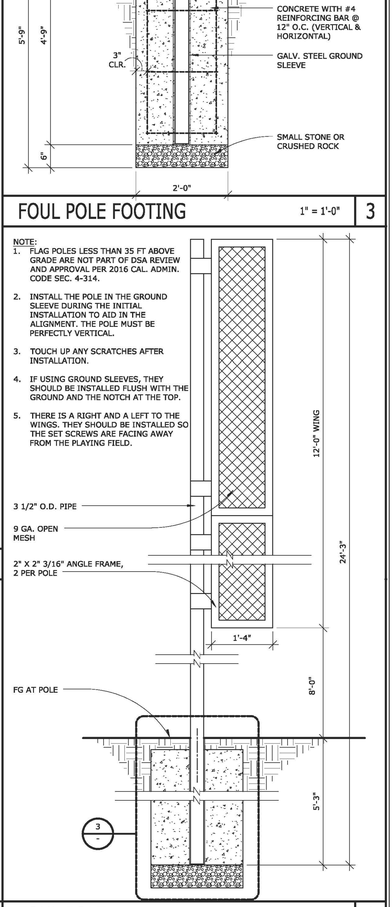

FOUL POLE FOOTING 1" = 1'-0" | 3

FOUL POLE 1" = 1'-0" | 1

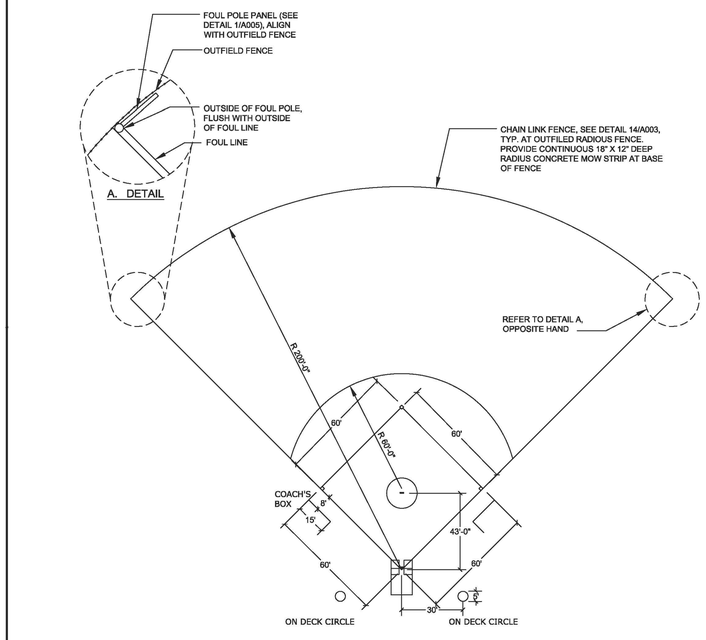

SOFTBALL FIELD FOUL POLE LOCATION 1/32" = 1'-0" | 21

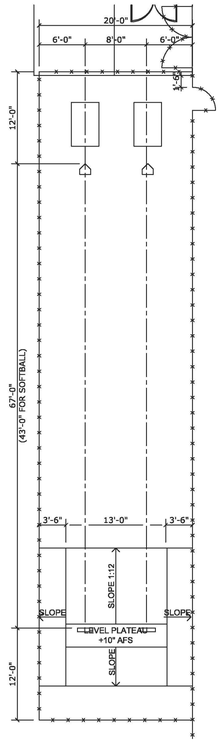

NOTE:
REFER TO DETAIL 5 CROSS SECTION DIMENSIONS FOR SIMILAR PITCHING MOUND DIMENSIONS NOT SHOWN. BRICK DUST SURFACE U.N.O. SEE LANDSCAPE DRAWINGS. AT SOFTBALL: OMIT PITCHING MOUND AND SECOND THROWING LANE.

BULLPEN LAYOUT SCALE: 1/8" = 1'-0" | 16

NOTE:
REFER TO BATTING CAGE FENCE DETAIL ON 7/- FOR ADDITIONAL INFORMATION

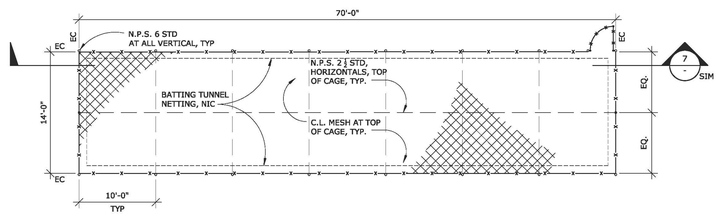

BATTING CAGE LAYOUT 1/8" = 1'-0" | 6

STATE:

IDENTIFICATION STAMP
DIV. OF THE STATE ARCHITECT
APP: 03-124281 INC:
REVIEWED FOR
SS ☑ FLS ☑ ACS ☑
DATE: 02/04/2025

ARCHITECT:

architecture
westbergwhite
7700 IRVINE CENTER DR. STE. 100
IRVINE, CA 92618
(714) 508-1780 (714) 508-1780 FAX

LICENSED ARCHITECT
PAUL DEBRITS WESTBERG
C-11045
EXP 9-2025
STATE OF CALIFORNIA

CONSULTANT:

PROJECT NAME:

Bellflower Unified School District
Mayfair High School Athletics Fields
6000 North Woodruff Ave
Lakewood, California 90713

CLIENT:

BELLFLOWER UNIFIED SCHOOL DISTRICT
16703 S. Clark Ave.
BELLFLOWER, CALIFORNIA 90706

Rev.	Date	Description
2		

JOB NO:	15008.01
DATE:	01/13/2025
DRAWN:	TG, XY
CHECK:	RB, JG
ARCHITECT:	PDW
ENGINEER:	

SHEET DESCRIPTION:

BASEBALL & SOFTBALL FIELD DETAILS

SHEET NO:

A006

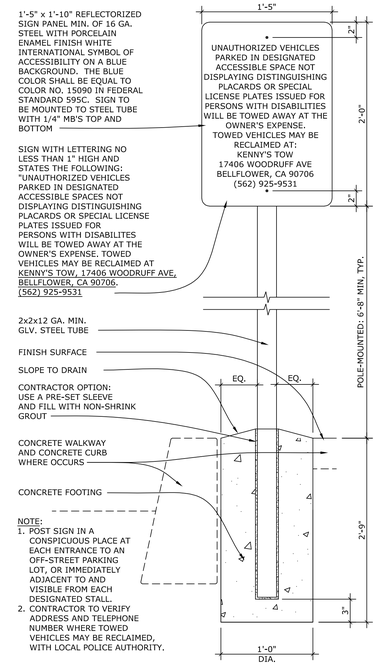

'TOW AWAY' SIGN 1-1/2" = 1'-0" 19

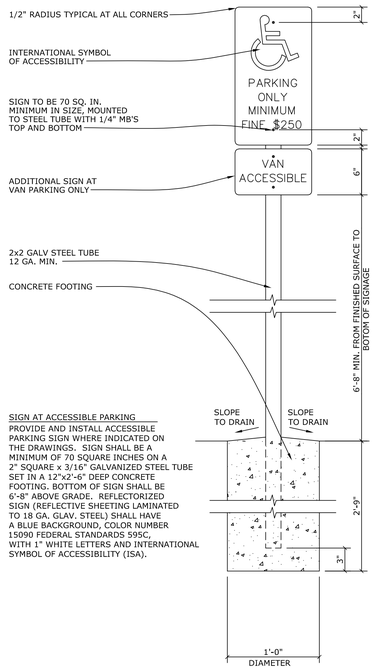

ACCESSIBLE PARKING SIGN 1-1/2" = 1'-0" 15

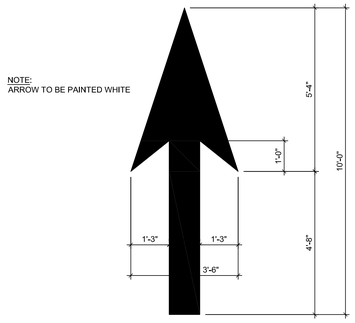

TRAFFIC ARROW 1-1/2" = 1'-0" 12

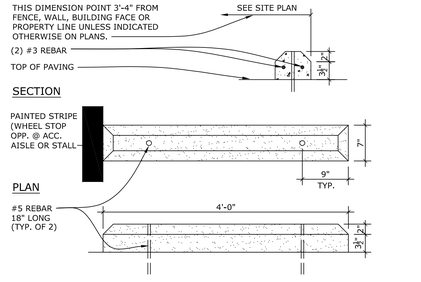

WHEEL STOP 1-1/2" = 1'-0" 8

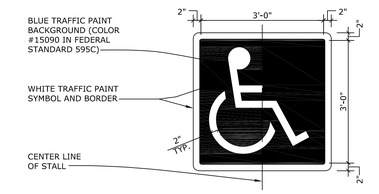

ISA PARKING SYMBOL 1-1/2" = 1'-0" 4

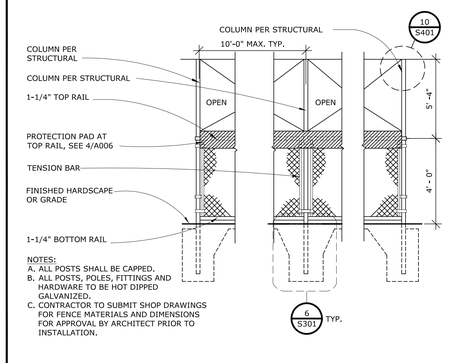

D.O. PROTECTIVE CL FENCE 3/8" = 1'-0" 11

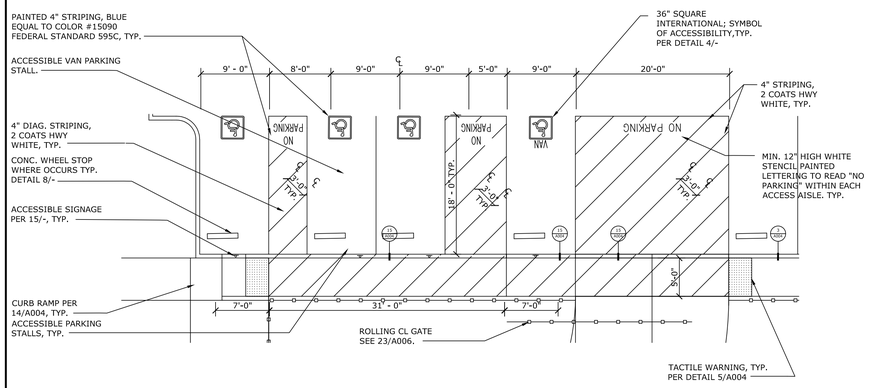

ENLARGED ACCESSIBLE PARKING PLAN - NORTH 1/8" = 1'-0" 3

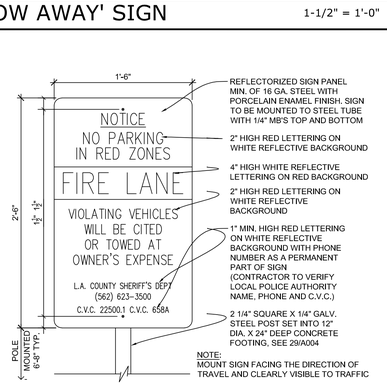

FIRE LANE SIGN 1-1/2" = 1'-0" 18

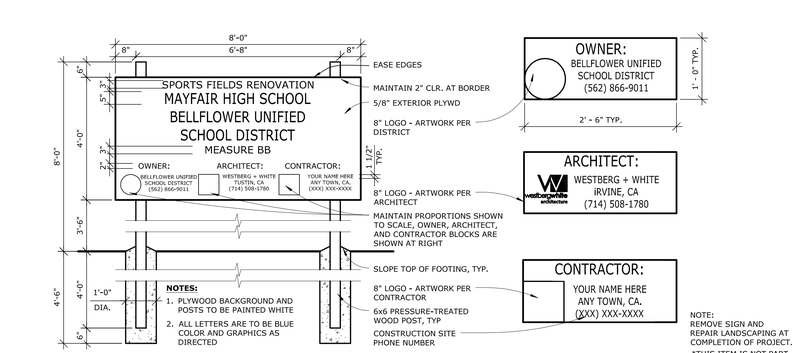

CONSTRUCTION SIGN 1/2" = 1'-0" 10

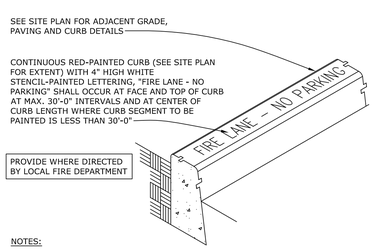

FIRE LANE CURB N.T.S. 17

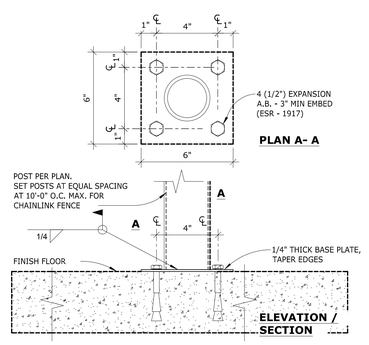

BASE PLATE POST FOOTING 3" = 1'-0" 13

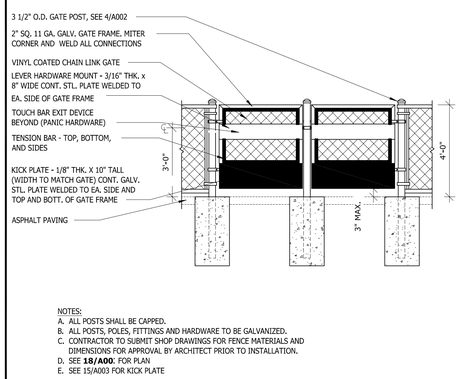

ACCESSIBLE C.L. DOUBLE GATE 3/8" = 1'-0" 9

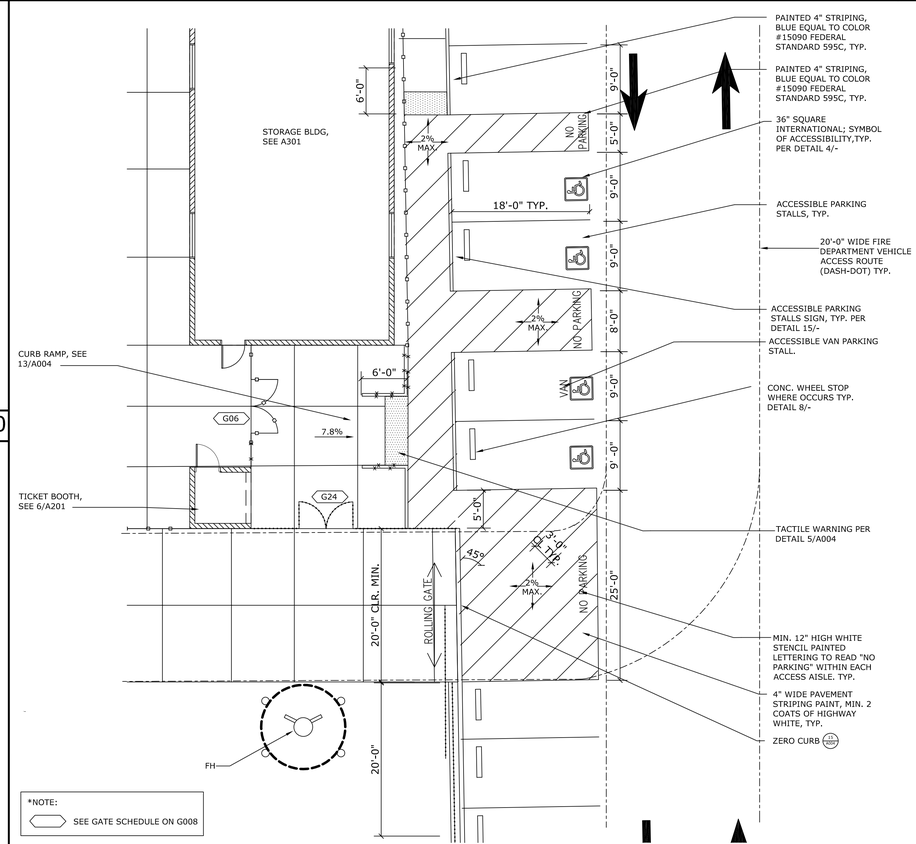

ENLARHED ACCESSIBLE PARKING PLAN - SOUTH 1/8" = 1'-0" 1

STATE:

IDENTIFICATION STAMP
DIV. OF THE STATE ARCHITECT
APP: 03-124281 INC:
REVIEWED FOR
SS ☑ FLS ☑ ACS ☑
DATE: 02/04/2025

ARCHITECT:

architecture
westbergwhite
7700 IRVINE CENTER DR. STE. 100
IRVINE, CA 92618
(714) 508-1780 (714) 508-1780 FAX

LICENSED ARCHITECT — STEPHEN DEBRITS WESTBERG — C-11045 EXP.9-2025 — STATE OF CALIFORNIA

CONSULTANT:

PROJECT NAME:

Bellflower Unified School District
Mayfair High School Athletics Fields
6000 North Woodruff Ave
Lakewood, California 90713

CLIENT:

BELLFLOWER UNIFIED SCHOOL DISTRICT

16703 S. Clark Ave.
BELLFLOWER, CALIFORNIA 90706

Rev.	Date	Description

JOB NO:	15008.01
DATE:	01/13/2025
DRAWN:	TG, XY
CHECK:	RB, JG
ARCHITECT:	PDW
ENGINEER:	

SHEET DESCRIPTION:
ENLARGED ACCESSIBLE PARKING PLANS & SITE SIGNAGE DETAILS

SHEET NO:
A007

GATE SCHEDULE

GATE NO	SIZE/MAT'L	DETAIL	HEIGHT	PANIC HD.
G01	4'-0"/TUBE STEEL	10/-	8'-0"	PH
G02	RG344"/TUBE STEEL	4/-	8'-0"	-
G03	RG 22'-0"/ TUBE STEEL	4/-	8'-0"	-
G04	PR 3'-6"/TUBE STEEL	12/- SIM	8'-0"	PH
G05	PR 4'-0"/C.L.	9/- SIM	8'-0"	-
G06	PR 3'-6"/TUBE STEEL	12/- SIM	8'-0"	PH
G07	3'-0"/C.L.	9/-	8'-0"	-
G08	PR 4'-0"/C.L.	9/- SIM	8'-0"	-
G09	PR 4'-0"/C.L.	9/- SIM	8'-0"	-
G10	3'-0"/C.L.	1/-	8'-0"	-
G11	3'-0"/C.L.	1/-	8'-0"	-
G12	PR 8'-0"/C.L.	9/- SIM	8'-0"	-
G13	3'-0"/C.L.	1/-	8'-0"	-
G14	3'-0"/C.L.	1/-	8'-0"	-
G15	3'-0"/C.L.	1/-	8'-0"	-
G16	PR 4'-0"/C.L.	9/- SIM	8'-0"	-
G17	PR 4'-0"/C.L.	9/- SIM	8'-0"	-
G18	3'-0"/C.L.	1/-	8'-0"	-
G19	PR 4'-0"/C.L.	9/- SIM	8'-0"	-
G20	3'-0"/C.L.	1/-	8'-0"	-
G21	3'-0"/C.L.	1/-	8'-0"	-
G22	RG 12'-0"/TUBE STEEL	4/-	8'-0"	-
G23	PR 3'-0"/TUBE STEEL	12/- SIM	8'-0"	PH
G24	PR 3'-6"/TUBE STEEL	12/- SIM	8'-0"	PH
G25	RG 20'-0"/T.S. W/ KNOX BOX	23/A006	8'-0"	-
G26	PR3'-0"/TUBE STEEL	9/-SIM	8'-0"	PH
G27	PR 3'-6"/TUBE STEEL	12/- SIM	8'-0"	PH
G28	PR 3'-0"/C.L.	9/A007	4'-0"	PH
G29	PR 3'-0"/C.L.	9/- SIM	4'-0"	PH
G30	PR 3'-0"/C.L.	9/- SIM	4'-0"	PH
G31	PR 3'-0"/C.L.	9/- SIM	4'-0"	PH
G32	PR 3'-0"/C.L.	9/- SIM	4'-0"	-
G33	PR 3'-0"/C.L.	9/- SIM	4'-0"	-
G34	PR 3'-0"/C.L.	9/- SIM	4'-0"	-
G35	PR 3'-0"/C.L.	9/A007	4'-0"	PH
G36	PR 3'-0"/C.L.	9/- SIM	4'-0"	PH
G37	PR 3'-0"/C.L.	9/- SIM	4'-0"	-
G38	PR 3'-0"/C.L.	9/- SIM	4'-0"	-
G39	PR 3'-0"/C.L.	9/- SIM	4'-0"	-
G40	PR 3'-0"/C.L.	9/- SIM	8'-0"	-
G41	PR 3'-0"/C.L.	9/- SIM	8'-0"	-
G42	PR 3'-0"/C.L.	9/- SIM	8'-0"	-
G43	RG20'-0"/TUBE STEEL	4/- SIM	8'-0"	-
G44	4'-0"/T.S. W/ KNOX BOX	1/- SIM	8'-0"	-
G45	PR 3'-0"/C.L.	9/- SIM	8'-0"	-
G46	PR 3'-0"/C.L.	9/- SIM	8'-0"	-

NOTE:

REFER TO SECTIONS 32 3113 AND 32 3119 FOR GATE HARDWARE.

GATE SCHEDULE -

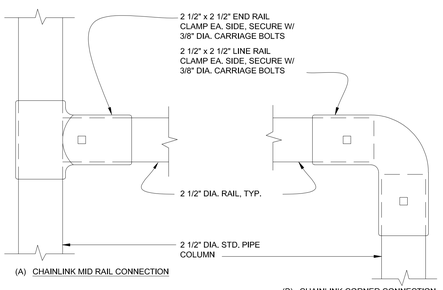

CHAINLINK CONNECTION 3" = 1'-0" | 18

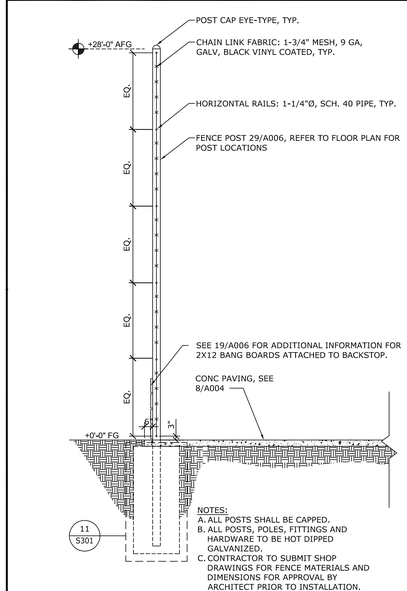

BACKSTOP SECTION 1/4" = 1'-0" | 17

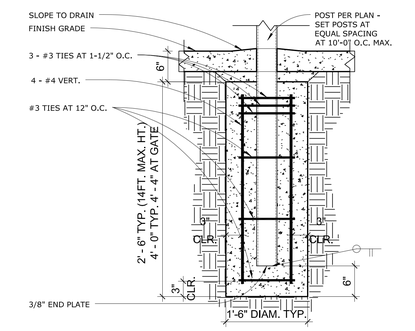

CHAINLINK FENCE POST FTG. 1" = 1'-0" | 16

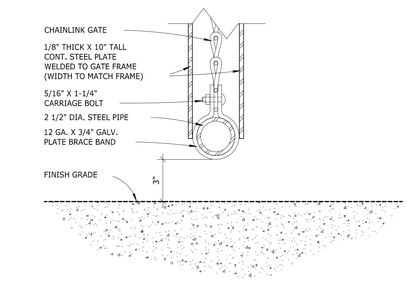

CHAINLINK GATE THRESHOLD 3" = 1'-0" | 15

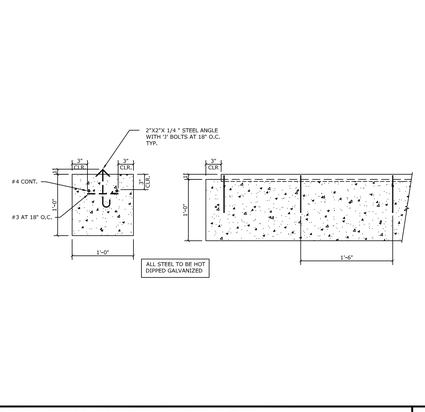

ROLLING GATE V-TRACK 1" = 1'-0" | 14

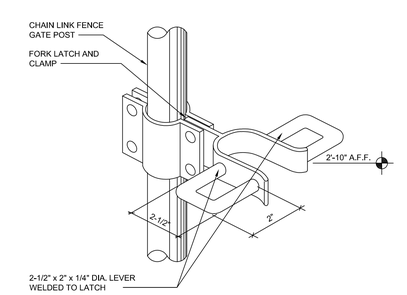

FORK LATCH @ GATE 12" = 1'-0" | 13

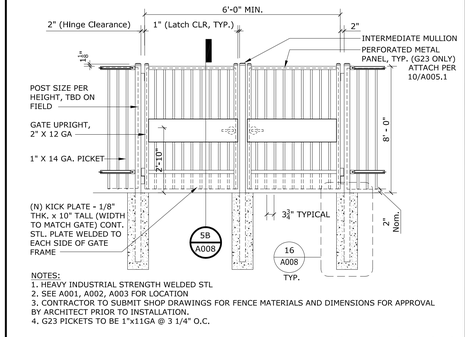

(NOT PART OF DSA APPROVAL)

TUBE STEEL DBL. MAN GATE 3/8" = 1'-0" | 12

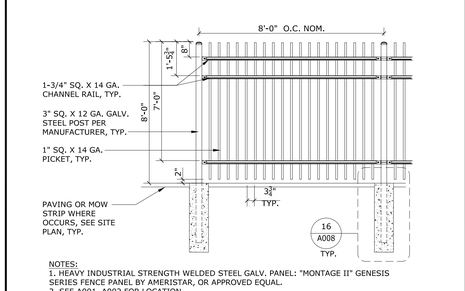

(NOT PART OF DSA APPROVAL)

TUBE STEEL FENCE PANEL 3/8" = 1'-0" | 11

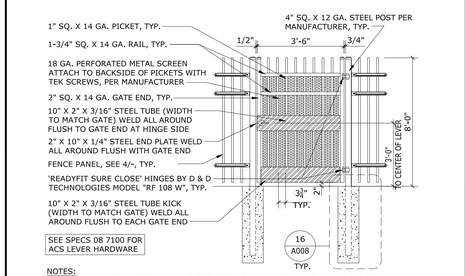

(NOT PART OF DSA APPROVAL)

TUBE STL. PEDESTRIAN GATE 3/8" = 1'-0" | 10

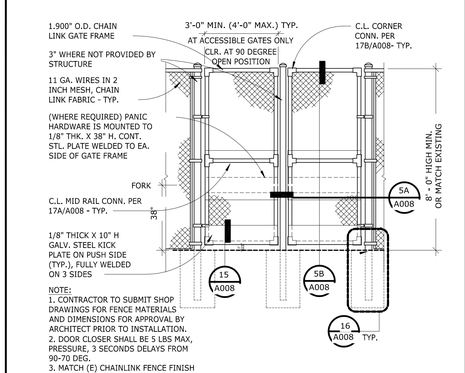

CHAIN LINK DOUBLE GATES 1/2" = 1'-0" | 9

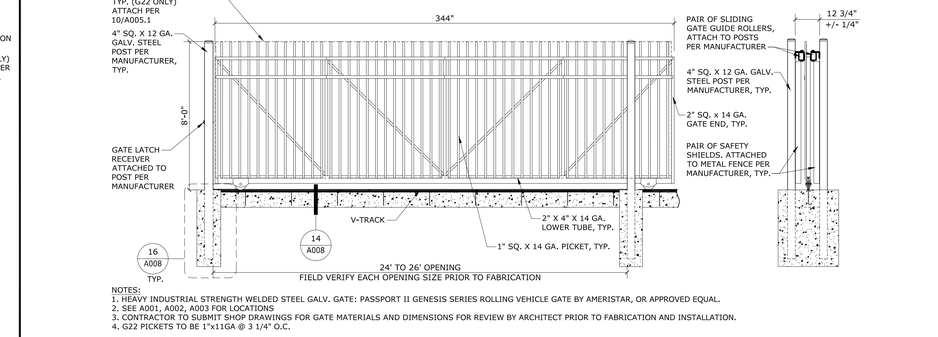

(NOT PART OF DSA APPROVAL)

ROLLING TUBE STEEL PEDESTRIAN/VEHICLE GATE 3/8" = 1'-0" | 4

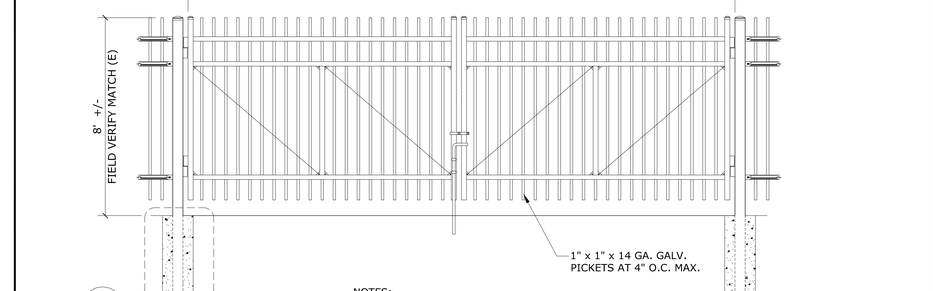

(NOT PART OF DSA APPROVAL)

DOUBLE LEAF TUBE STEEL SWINGING GATE 1/2" = 1'-0" | 3

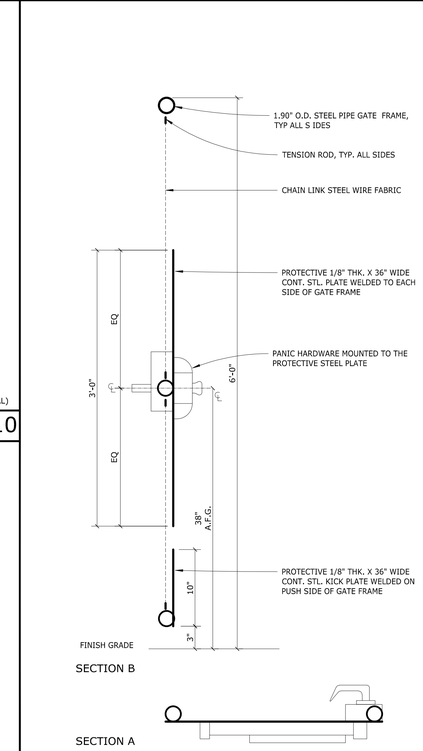

GATE PANIC HDWR. RELEASE 1 1/2" = 1'-0" | 5

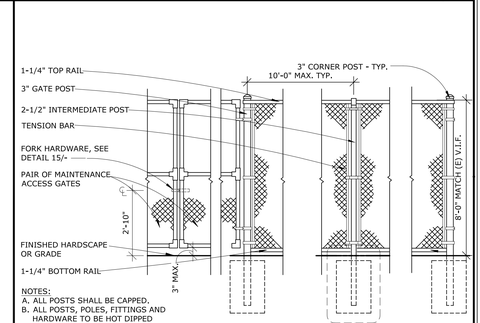

(NOT PART OF DSA APPROVAL)

CHAINLINK FENCE 3/8" = 1'-0" | 2

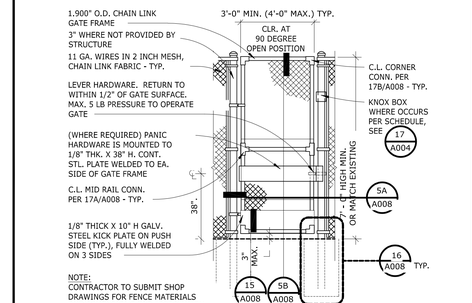

CHAIN LINK SINGLE GATE 1" = 1'-0" | 1

STATE:

IDENTIFICATION STAMP
DIV. OF THE STATE ARCHITECT
APP: 03-124281 INC:
REVIEWED FOR
SS ☑ FLS ☑ ACS ☑
DATE: 02/04/2025

ARCHITECT:

architecture
westbergwhite
7700 IRVINE CENTER DR. STE. 100
IRVINE, CA 92618
(714) 508-1780 (714) 508-1780 FAX

REGISTERED ARCHITECT
JEFFREY DEBRITS WESTBERG
C-11045
EXP.9-2025
STATE OF CALIFORNIA

CONSULTANT:

PROJECT NAME:

Bellflower Unified School District
Mayfair High School Athletics Fields
6000 North Woodruff Ave
Lakewood, California 90713

CLIENT:

BELLFLOWER UNIFIED SCHOOL DISTRICT

16703 S. Clark Ave.
BELLFLOWER, CALIFORNIA 90706

Δ	Rev. Date	Description

JOB NO:	15008.01
DATE:	01/13/2025
DRAWN:	TG, XY
CHECK:	RB, JG
ARCHITECT:	PDW
ENGINEER:	

SHEET DESCRIPTION:

FENCING & GATE DETAILS

SHEET NO:

A008

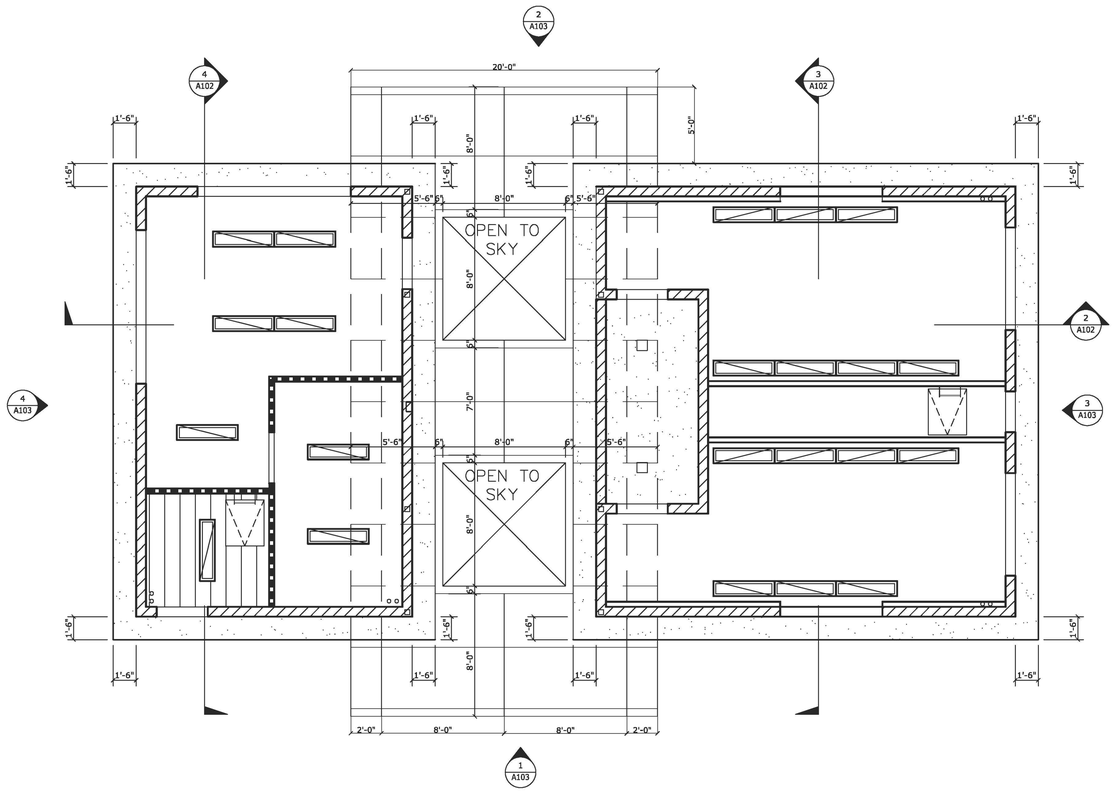

REFLECTED CEILING PLAN

SCALE: 1/4" = 1'-0" | 2

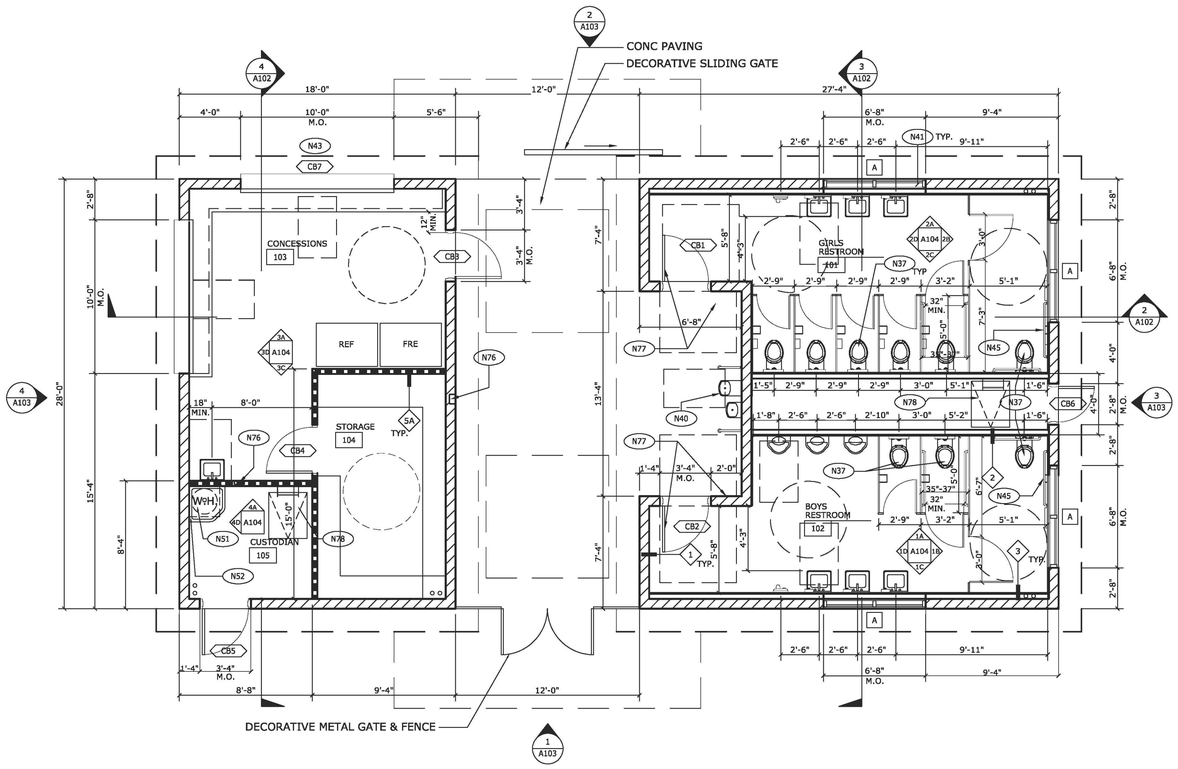

FLOOR PLAN

SCALE: 1/4" = 1'-0" | 1

NORTH

N25	(N) ROOM SIGNAGE, TYP. SEE DOOR SCHEDULE A701
N35	(N) ST. STL. COUNTERTOP, SEE 16, 17/A830
N36	(N) STANDARD WATER CLOSET, SEE PLUMBING DWGS
N37	(N) ACCESSIBLE WATER CLOSET, SEE PLUMBING DWGS
N38	(N) SURFACE MOUNTED SOAP DISPENSER
N39	(N) ACCESSIBLE WALL MOUNTED SINK, SEE PLUMBING DWGS
N40	(N) WALL MTD ACCESSIBLE HI-LO DRINKING FOUNTAIN AND RAILING, 16/A810.
N41	(N) WINDOW, SEE SCHEDULE FOR TYPE
N42	(N) DOOR, SEE SCHEDULE FOR TYPE
N43	(N) ROLL-UP DOOR, SEE DETAIL 20 AND 25/A701. 380 LB HEAD UNIT SUPPORTED BY STL JAMB ON EA SIDE. SEE ALSO MFR INSTRUCTIONS.
N45	(N) GRAB BAR. SEE 25, 29 & 30/A810.
N47	(N) SURFACE MOUNTED HAND DRYER
N51	(N) WATER HEATER ON SHELF, SEE PLUMBING DWGS 5/P002.
N52	(N) JANITOR'S MOP SINK & STAINLESS STL MOP RACK, SEE PLUMBING DWGS.
N53	(N) GYP. BD. CEILING
N54	(N) PLASTER CEILING.
N56	(N) METAL DECKING
N58	(N) C.M.U. WALL, SEE STRUCTURAL PLANS
N59	(N) CONCRETE FLOOR SLAB OVER COMPACTED FILL - SEE STRUCTURAL DWGS
N60	(N) FURRED WALL W/3"X 4" 20 GA. CLIP AT 48"O.C. SEE STRUCT. DETAIL 11/S005. SEE WALL TYPES 1/A830 FOR MORE INFORMATION.
N67	(N) CERAMIC TILE, SEE FINISH SCHEDULE
N68	(N) 6" COVED TILE BASE
N69	(N) 6" RESILIENT BASE
N73	(N) PAINTED GYP. BOARD
N75	(N) PAINTED CMU
N76	(N) FIRE EXTINGUISHER CABINET, SEE 7/A830 FOR CMU & 6/A830 FOR MTL STUD
N77	BUILDING,DOOR, & WALL SIGNAGE PER G003 & DOOR SCHEDULE ON A701
N78	SEE 20/A820 FOR ROOF SCUTTLE AND 9/A830 FOR LADDER

KEYNOTES

- UNDERSIDE OF METAL DECKING
- GYP. BOARD CEILING, SEE 2 & 3/A820
- PLASTER CEILING, SEE 19/A820
- SURFACE MOUNTED LED LIGHT FIXTURE - SEE ELECTRICAL DRAWINGS
- PENDANT MOUNTED LED LIGHT FIXTURE - SEE ELECTRICAL DRAWINGS
- ROOF ACCESS HATCH
- L1 — LOUVER SYMBOL - SEE LOUVER TYPES ON A701

CEILING LEGEND

- CONCRETE MASONRY WALL, SEE STRUCTURAL DWGS
- CHAINLINK FENCING, SEE A008 FOR DETAILS
- INTERIOR FULL HEIGHT, ONE HOUR FIRE-RATED PARTITION
- FULL HEIGHT PLUMBING WALL, 4" U.N.O.
- FE — WALL MOUNTED FIRE EXTINGUISHER. SEE 4/A830
- A/# — WALL TYPE, SEE A830 FOR DETAILS
- ACCESSIBLE CLEAR SPACE: 5' DIAMETER TURNING SPACE
  ACCESSIBLE WORKSTATION / CLEAR SPACE: 30" x 48" (U.N.O.)
- A — WINDOW TYPE, SEE A702 FOR DETAILS
- 101 — DOOR TYPE, SEE A701 FOR DETAILS

WALL LEGEND

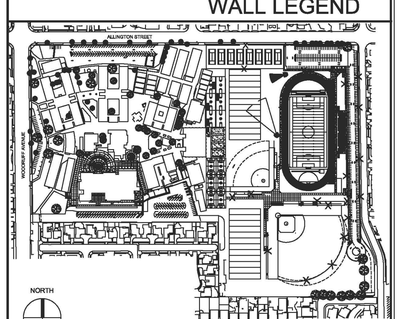

KEYMAP

NORTH

STATE:

IDENTIFICATION STAMP
DIV. OF THE STATE ARCHITECT
APP: 03-124281 INC:
REVIEWED FOR
SS ☑ FLS ☑ ACS ☑
DATE: 02/04/2025

ARCHITECT:

architecture westbergwhite
7700 IRVINE CENTER DR. STE. 100
IRVINE, CA 92618
(714) 508-1780 (714) 508-1780 FAX

LICENSED ARCHITECT — REGISTERED PROFESSIONAL ENGINEER — C-11045 EXP 8-2025 — STATE OF CALIFORNIA

CONSULTANT:

PROJECT NAME:

Bellflower Unified School District
Mayfair High School Athletics Fields
6000 North Woodruff Ave
Lakewood, California 90713

CLIENT:

BELLFLOWER UNIFIED SCHOOL DISTRICT
16703 S. Clark Ave.
BELLFLOWER, CALIFORNIA 90706

Δ	Rev. Date	Description

JOB NO:	15008.01
DATE:	01/13/2025
DRAWN:	TG, XY
CHECK:	RB, JG
ARCHITECT:	PDW
ENGINEER:	

SHEET DESCRIPTION:
CONCESSIONS - FLOOR PLAN & RCP

SHEET NO:
A101

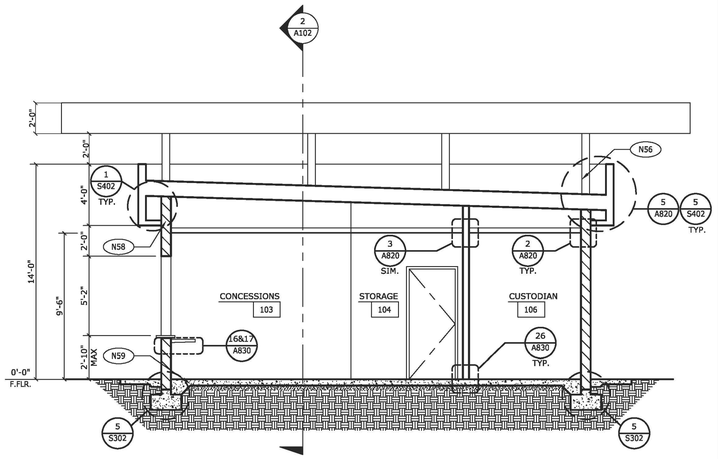

SECTION SCALE: 1/4" = 1'-0" 4

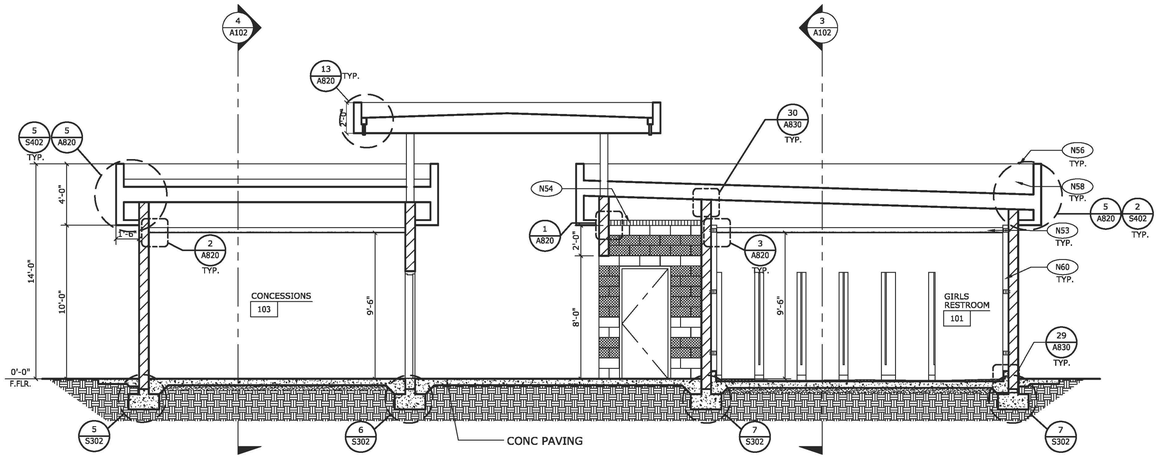

SECTION SCALE: 1/4" = 1'-0" 2

N25	(N) ROOM SIGNAGE, TYP. SEE DOOR SCHEDULE A701
N35	(N) ST. STL. COUNTERTOP, SEE 16, 17/A830
N36	(N) STANDARD WATER CLOSET, SEE PLUMBING DWGS
N37	(N) ACCESSIBLE WATER CLOSET, SEE PLUMBING DWGS
N38	(N) SURFACE MOUNTED SOAP DISPENSER
N39	(N) ACCESSIBLE WALL MOUNTED SINK, SEE PLUMBING DWGS
N40	(N) WALL MTD ACCESSIBLE HI-LO DRINKING FOUNTAIN AND RAILING, 16/A810.
N41	(N) WINDOW, SEE SCHEDULE FOR TYPE
N42	(N) DOOR, SEE SCHEDULE FOR TYPE
N43	(N) ROLL-UP DOOR, SEE DETAIL 15, 20, AND 25/A701. 380 LB HEAD UNIT SUPPORTED BY STL JAMB ON EA SIDE. SEE ALSO MFR INSTRUCTIONS.
N45	(N) GRAB BAR. SEE 25, 29 & 30/A810.
N47	(N) SURFACE MOUNTED HAND DRYER
N51	(N) WATER HEATER ON SHELF, SEE PLUMBING DWGS 5/P002.
N52	(N) JANITOR'S MOP SINK & STAINLESS STL MOP RACK, SEE PLUMBING DWGS.
N53	(N) GYP. BD. CEILING
N54	(N) PLASTER CEILING.
N56	(N) METAL DECKING
N58	(N) C.M.U. WALL, SEE STRUCTURAL PLANS
N59	(N) CONCRETE FLOOR SLAB OVER COMPACTED FILL - SEE STRUCTURAL DWGS
N60	(N) FURRED WALL W/3"X 4" 20 GA. CLIP AT 48"O.C. SEE STRUCT. DETAIL 11/S005. SEE WALL TYPES 1/A830 FOR MORE INFORMATION.
N67	(N) CERAMIC TILE, SEE FINISH SCHEDULE
N68	(N) 6" COVED TILE BASE
N69	(N) 6" RESILIENT BASE
N73	(N) PAINTED GYP. BOARD
N75	(N) PAINTED CMU
N76	(N) FIRE EXTINGUISHER CABINET, SEE 7/A830.

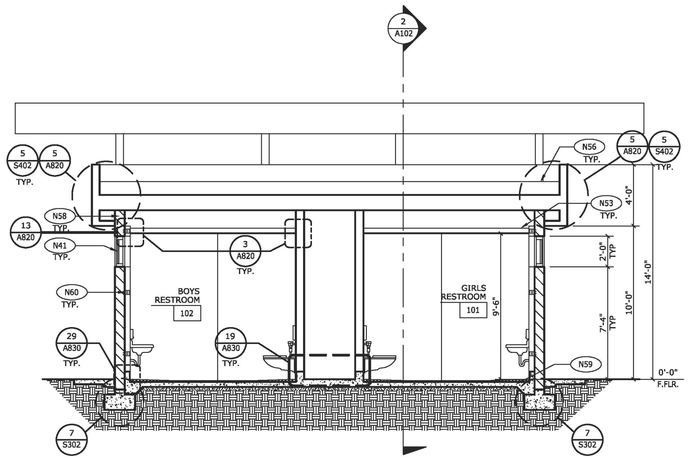

SECTION SCALE: 1/4" = 1'-0" 3

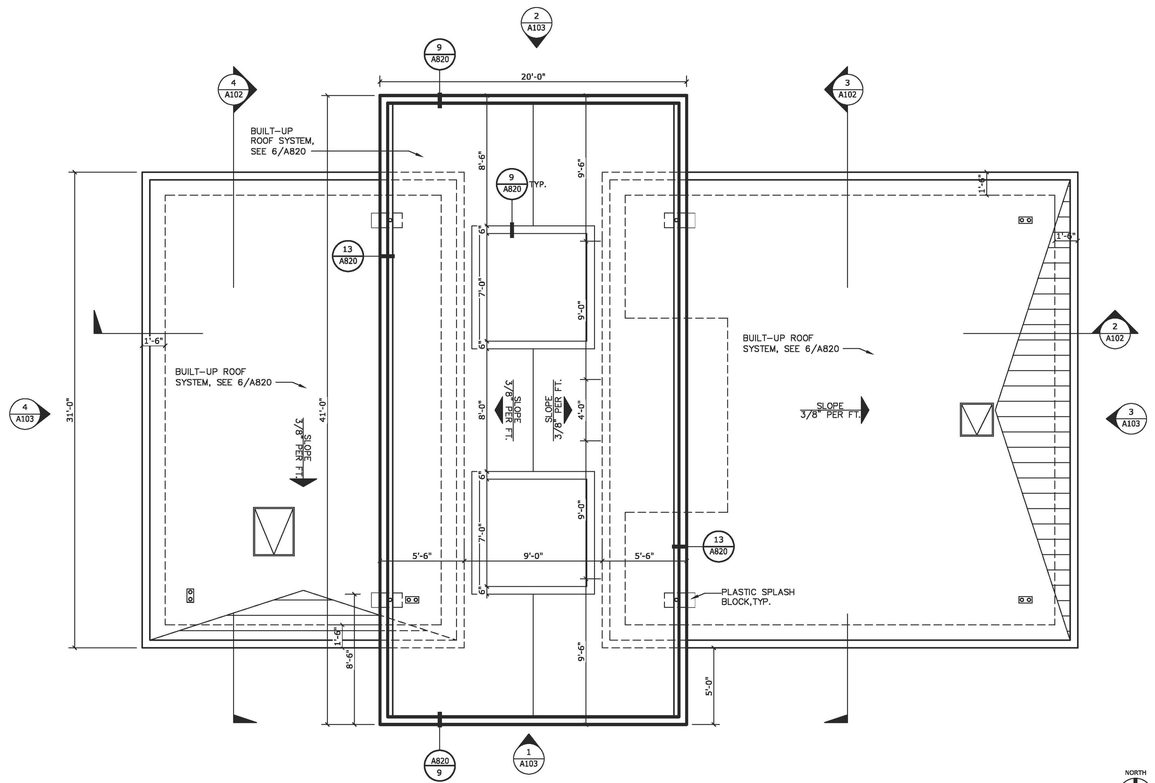

ROOF PLAN SCALE: 1/4" = 1'-0" 1

KEYNOTES

ROOF SLOPE DIRECTION

CRICKET

ROOF AND OVERFLOW DRAIN, SEE 1/A821

ROOF ACCESS HATCH

ROOF LEGEND

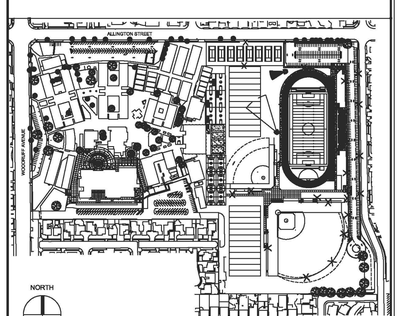

KEYMAP

STATE:

IDENTIFICATION STAMP
DIV. OF THE STATE ARCHITECT
APP: 03-124281 INC:
REVIEWED FOR
SS ☑ FLS ☑ ACS ☑
DATE: 02/04/2025

ARCHITECT:

architecture
westbergwhite
7700 IRVINE CENTER DR. STE. 100
IRVINE, CA 92618
(714) 508-1780 (714) 508-1780 FAX

REGISTERED ARCHITECT — JEFFREY DEBRITS WESTBERG — C-11045 EXP.9-2025 — STATE OF CALIFORNIA

CONSULTANT:

PROJECT NAME:

Bellflower Unified School District
Mayfair High School Athletics Fields
6000 North Woodruff Ave
Lakewood, California 90713

CLIENT:

BELLFLOWER UNIFIED SCHOOL DISTRICT
16703 S. Clark Ave.
BELLFLOWER, CALIFORNIA 90706

Rev.	Date	Description

JOB NO:	15008.01
DATE:	01/13/2025
DRAWN:	TG, XY
CHECK:	RB, JG
ARCHITECT:	PDW
ENGINEER:	

SHEET DESCRIPTION:
CONCESSIONS - ROOF PLAN & SECTIONS

SHEET NO:
A102

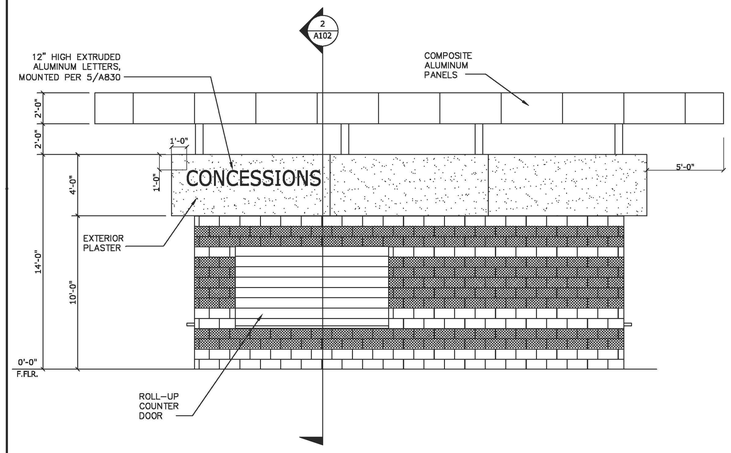

WEST ELEVATION

SCALE: 1/4" = 1'-0" | 4

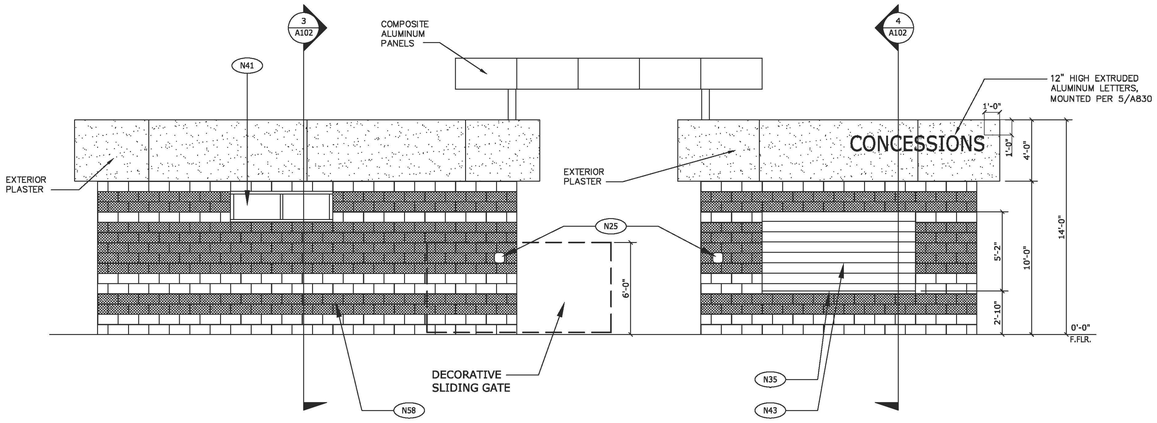

NORTH ELEVATION

SCALE: 1/4" = 1'-0" | 2

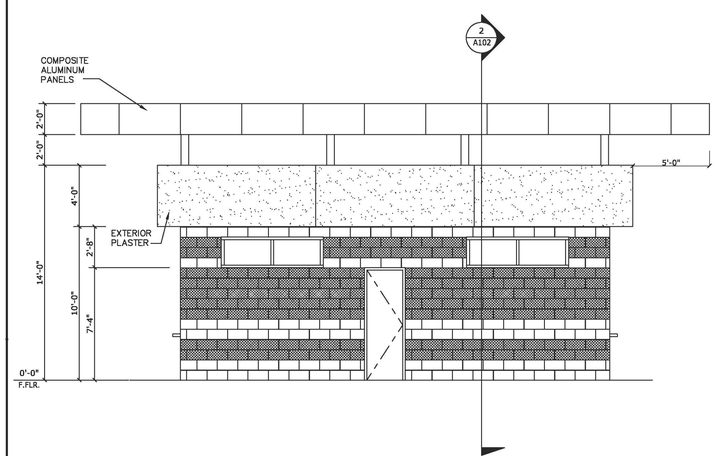

EAST ELEVATION

SCALE: 1/4" = 1'-0" | 3

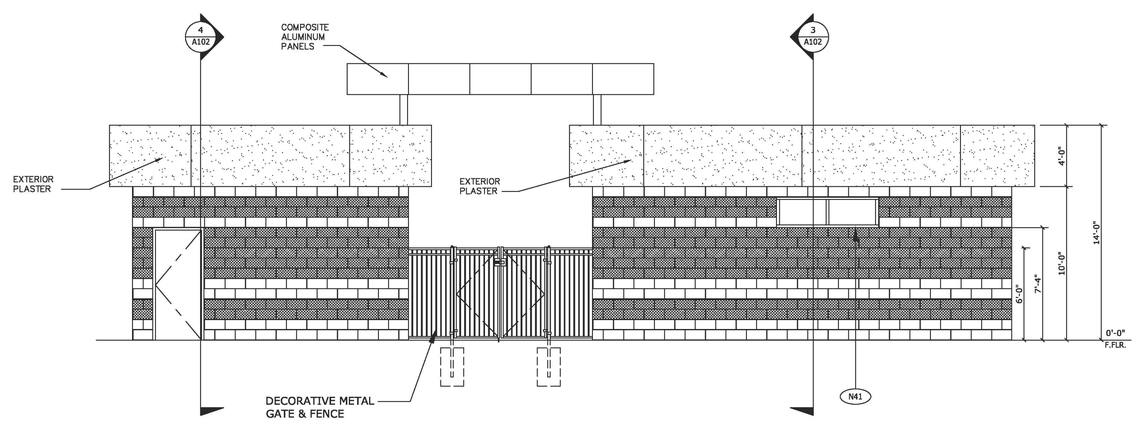

SOUTH ELEVATION

SCALE: 1/4" = 1'-0" | 1

N25	(N) ROOM SIGNAGE, TYP. SEE DOOR SCHEDULE A701
N35	(N) ST. STL. COUNTERTOP, SEE 16, 17/A830
N36	(N) STANDARD WATER CLOSET, SEE PLUMBING DWGS
N37	(N) ACCESSIBLE WATER CLOSET, SEE PLUMBING DWGS
N38	(N) SURFACE MOUNTED SOAP DISPENSER
N39	(N) ACCESSIBLE WALL MOUNTED SINK, SEE PLUMBING DWGS
N40	(N) WALL MTD ACCESSIBLE HI-LO DRINKING FOUNTAIN AND RAILING, 16/A810.
N41	(N) WINDOW, SEE SCHEDULE FOR TYPE
N42	(N) DOOR, SEE SCHEDULE FOR TYPE
N43	(N) ROLL-UP DOOR, SEE DETAIL 20 & 25/A701. 380 LB HEAD UNIT SUPPORTED BY STL JAMB ON EA SIDE. SEE ALSO MFR INSTRUCTIONS.
N45	(N) GRAB BAR. SEE 25, 29, & 30/A810.
N47	(N) SURFACE MOUNTED HAND DRYER
N51	(N) WATER HEATER ON SHELF, SEE PLUMBING DWGS 5/P002.
N52	(N) JANITOR'S MOP SINK & STAINLESS STL MOP RACK, SEE PLUMBING DWGS.
N53	(N) GYP. BD. CEILING
N54	(N) PLASTER CEILING.
N56	(N) METAL DECKING
N58	(N) C.M.U. WALL, SEE STRUCTURAL PLANS
N59	(N) CONCRETE FLOOR SLAB OVER COMPACTED FILL - SEE STRUCTURAL DWGS
N60	(N) FURRED WALL W/3"X 4" 20 GA. CLIP AT 48"O.C. SEE STRUCT. DETAIL 11/S005. SEE WALL TYPES 1/A830 FOR MORE INFORMATION.
N67	(N) CERAMIC TILE, SEE FINISH SCHEDULE
N68	(N) 6" COVED TILE BASE
N69	(N) 6" RESILIENT BASE
N73	(N) PAINTED GYP. BOARD
N75	(N) PAINTED CMU
N76	(N) FIRE EXTINGUISHER CABINET, SEE 7/A830.

KEYNOTES

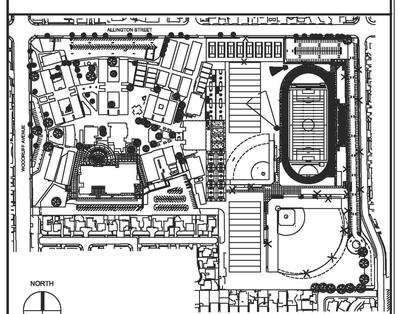

KEYMAP

STATE:

IDENTIFICATION STAMP
DIV. OF THE STATE ARCHITECT
APP: 03-124281 INC:
REVIEWED FOR
SS ☑ FLS ☑ ACS ☑
DATE: 02/04/2025

ARCHITECT:

architecture
westbergwhite
7700 IRVINE CENTER DR. STE. 100
IRVINE, CA 92618
(714) 508-1780 (714) 508-1780 FAX

REGISTERED ARCHITECT
ANY ERASURES OR OMISSIONS VOID THIS DOCUMENT
C-11045
EXP 9-2025
STATE OF CALIFORNIA

CONSULTANT:

PROJECT NAME:

Bellflower Unified School District
Mayfair High School Athletics Fields
6000 North Woodruff Ave
Lakewood, California 90713

CLIENT:

BELLFLOWER UNIFIED SCHOOL DISTRICT
16703 S. Clark Ave.
BELLFLOWER, CALIFORNIA 90706

Δ	Rev. Date	Description

JOB NO: 15008.01
DATE: 01/13/2025
DRAWN: TG, XY
CHECK: RB, JG
ARCHITECT: PDW
ENGINEER:

SHEET DESCRIPTION:
CONCESSIONS – EXT. ELEVATIONS

SHEET NO:
A103

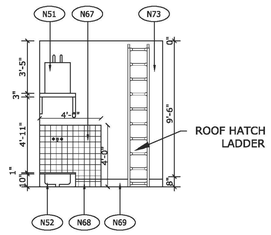

A

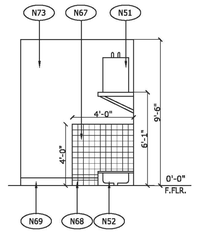

D

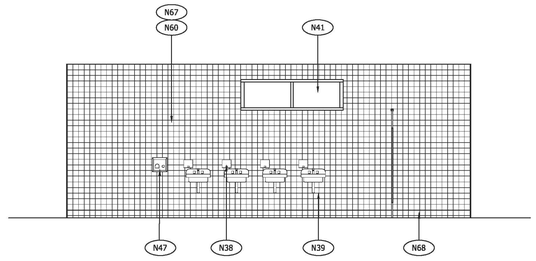

A

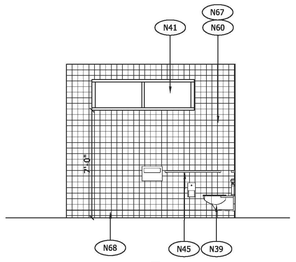

B

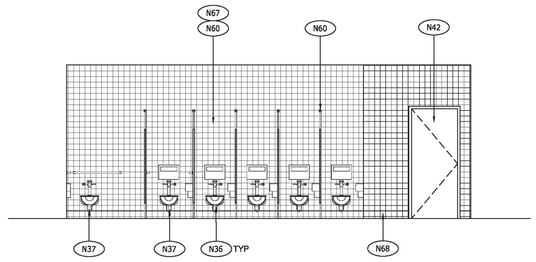

C

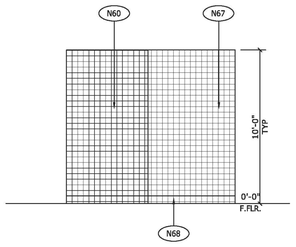

D

CUSTODIAN INT. ELEV. SCALE: 1/4" = 1'-0" | 4

WOMENS RESTROOM INTERIOR ELEVATIONS SCALE: 1/4" = 1'-0" | 2

N25	(N) ROOM SIGNAGE, TYP. SEE DOOR SCHEDULE A701
N35	(N) ST. STL. COUNTERTOP, SEE 16, 17/A830
N36	(N) STANDARD WATER CLOSET, SEE PLUMBING DWGS
N37	(N) ACCESSIBLE WATER CLOSET, SEE PLUMBING DWGS
N38	(N) SURFACE MOUNTED SOAP DISPENSER
N39	(N) ACCESSIBLE WALL MOUNTED SINK, SEE PLUMBING DWGS
N40	(N) WALL MTD ACCESSIBLE HI-LO DRINKING FOUNTAIN AND RAILING, 16/A810.
N41	(N) WINDOW, SEE SCHEDULE FOR TYPE
N42	(N) DOOR, SEE SCHEDULE FOR TYPE
N43	(N) ROLL-UP DOOR, SEE DETAIL 15, 20, AND 25/A701. 380 LB HEAD UNIT SUPPORTED BY STL JAMB ON EA SIDE. SEE ALSO MFR INSTRUCTIONS.
N45	(N) GRAB BAR. SEE 25, 29 & 30/A810.
N47	(N) SURFACE MOUNTED HAND DRYER
N51	(N) WATER HEATER ON SHELF, SEE PLUMBING DWGS S/P002.
N52	(N) JANITOR'S MOP SINK & STAINLESS STL MOP RACK, SEE PLUMBING DWGS.
N53	(N) GYP. BD. CEILING
N54	(N) PLASTER CEILING.
N56	(N) METAL DECKING
N58	(N) C.M.U. WALL, SEE STRUCTURAL PLANS
N59	(N) CONCRETE FLOOR SLAB OVER COMPACTED FILL - SEE STRUCTURAL DWGS
N60	(N) FURRED WALL W/3"X 4" 20 GA. CLIP AT 48"O.C. SEE STRUCT. DETAIL 11/S005. SEE WALL TYPES 1/A830 FOR MORE INFORMATION.
N67	(N) CERAMIC TILE, SEE FINISH SCHEDULE
N68	(N) 6" COVED TILE BASE
N69	(N) 6" RESILIENT BASE
N73	(N) PAINTED GYP. BOARD
N75	(N) PAINTED CMU
N76	(N) FIRE EXTINGUISHER CABINET, SEE 7/A830.

KEYNOTES

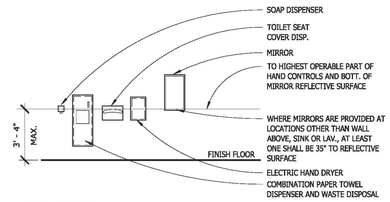

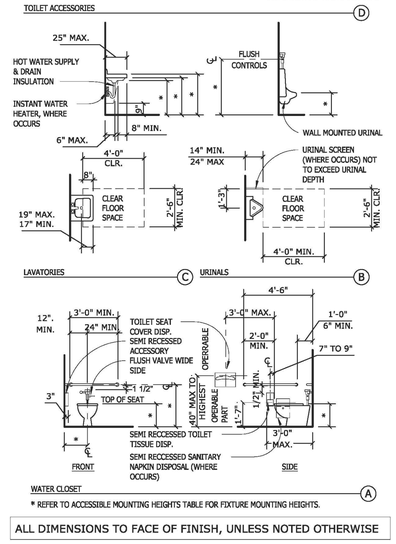

ALL DIMENSIONS TO FACE OF FINISH, UNLESS NOTED OTHERWISE

INTERIOR ACCESS REQUIREMENTS

ITEM	MOUNTING DIMENSION
TOILET CENTERING FROM FINISH FACE OF WALL	17" TO 18"
TOILET SEAT HEIGHT/DIMENSION TO TOP OF SEAT	17" TO 19"
GRAB BAR HEIGHT (SIDE) - TO TOP	33" TO 36"
TOILET PAPER IN FRONT OF TOILET TO CENTERLINE OF DISP.	7" TO 9"
NAPKIN DISPOSAL IN FRONT OF TOILET	7" TO 9"
DISPENSER OR MIRROR HEIGHT	40" MAX.
LAVATORY/SINK TOP HEIGHT	34" MAX.
LAVATORY APRON CLEARANCE	29" MIN.
LAVATORY/SINK APRON KNEE CLEARANCE	27" MIN.
URINAL LIP HEIGHT	17" MAX.
URINAL FLUSH HANDLE HEIGHT	44" MAX.
DRINKING FOUNTAIN BUBBLER HEIGHT	36" MAX.
DRINKING FOUNTAIN KNEE CLEARANCE	27" MIN.
RAMP/STAIR HANDRAIL HEIGHT	34" - 38"

ACCESSORY MOUNTING HEIGHTS CHART

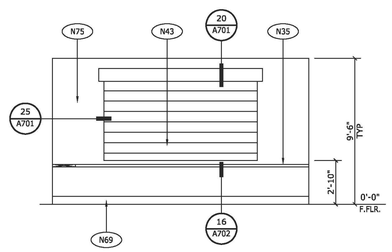

A

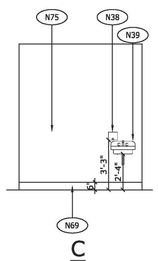

C

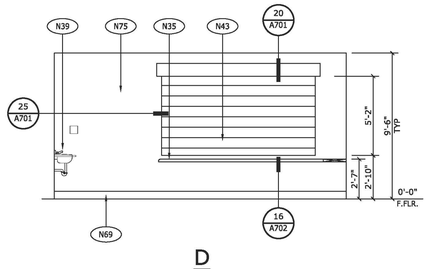

D

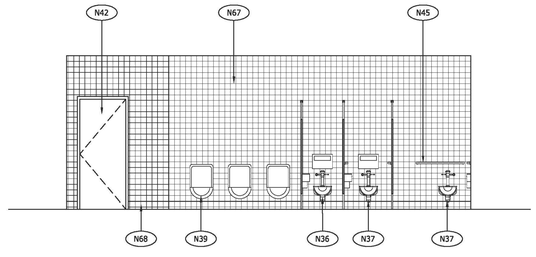

A

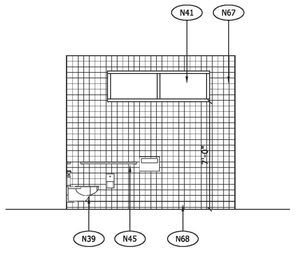

B

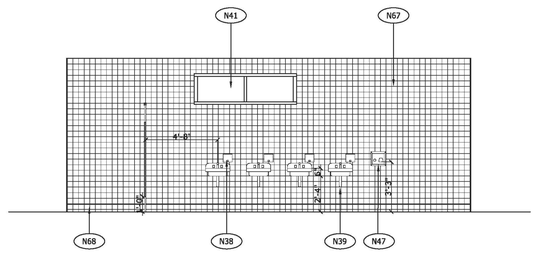

C

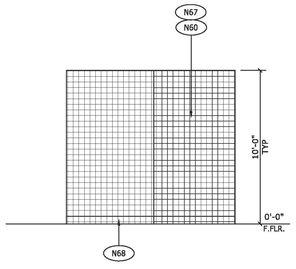

D

NOTE:
REFER TO 1/A810 FOR ACCESSIBILITY REQUIREMENTS

CONCESSION INTERIOR ELEVATIONS SCALE: 1/4" = 1'-0" | 3

MENS RESTROOM INTERIOR ELEVATIONS SCALE: 1/4" = 1'-0" | 1

STATE:

IDENTIFICATION STAMP
DIV. OF THE STATE ARCHITECT
APP: 03-124281 INC:
REVIEWED FOR
SS ☑ FLS ☑ ACS ☑
DATE: 02/04/2025

ARCHITECT:

architecture
westbergwhite
7700 IRVINE CENTER DR. STE. 100
IRVINE, CA 92618
(714) 508-1780 (714) 508-1780 FAX

REGISTERED ARCHITECT
JEFFREY DEBRITZ WESTBERG
C-11045
EXP.9-2025
STATE OF CALIFORNIA

CONSULTANT:

PROJECT NAME:

Bellflower Unified School District
Mayfair High School Athletics Fields
6000 North Woodruff Ave
Lakewood, California 90713

CLIENT:

BELLFLOWER UNIFIED SCHOOL DISTRICT
16703 S. Clark Ave.
BELLFLOWER, CALIFORNIA 90706

Δ	Rev. Date	Description

JOB NO:	15008.01
DATE:	01/13/2025
DRAWN:	TG, XY
CHECK:	RB, JG
ARCHITECT:	PDW
ENGINEER:	

SHEET DESCRIPTION:
CONCESSIONS & RESTROOMS INTERIOR ELEVATIONS

SHEET NO:

A104

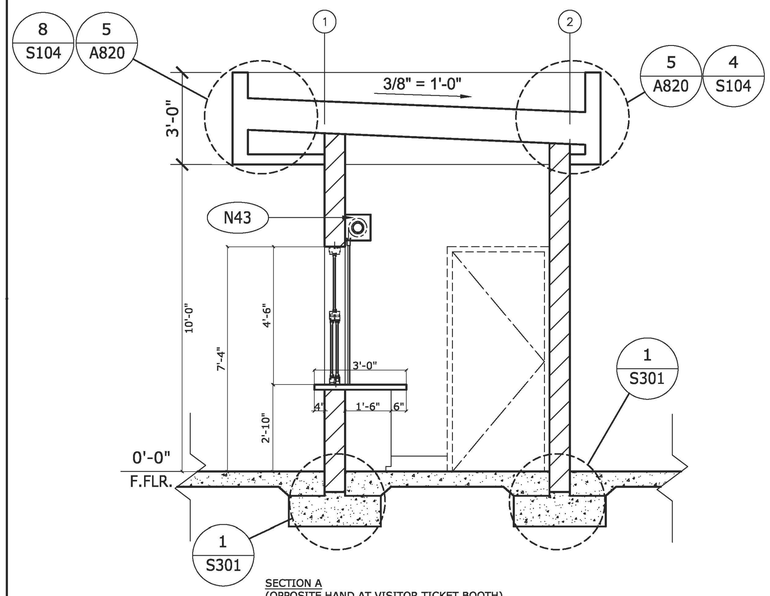

SECTION A
(OPPOSITE HAND AT VISITOR TICKET BOOTH)

TICKET BOOTH SECTION (HOME) SCALE: 1/2" = 1'-0" | 14

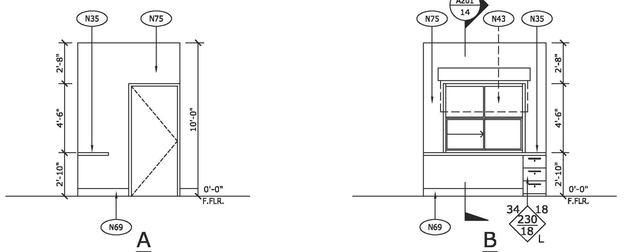

INTERIOR ELEVATIONS
(OPPOSITE HAND AT VISITOR TICKET BOOTH)

TICKET BOOTH INTERIOR ELEVATIONS (HOME) SCALE: 1/4" = 1'-0" | 13

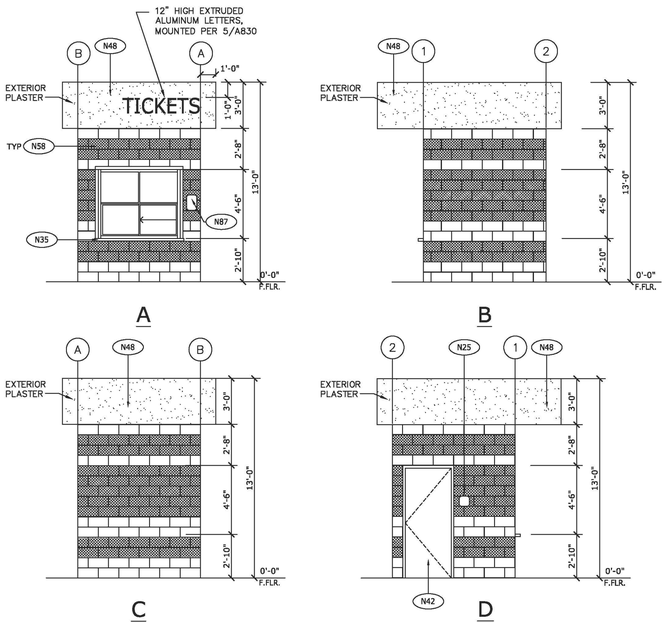

EXTIOR ELEVATIONS
(OPPOSITE HAND AT VISITOR TICKET BOOTH)

TICKET BOOTH ELEVATIONS (HOME) SCALE: 1/4" = 1'-0" | 11

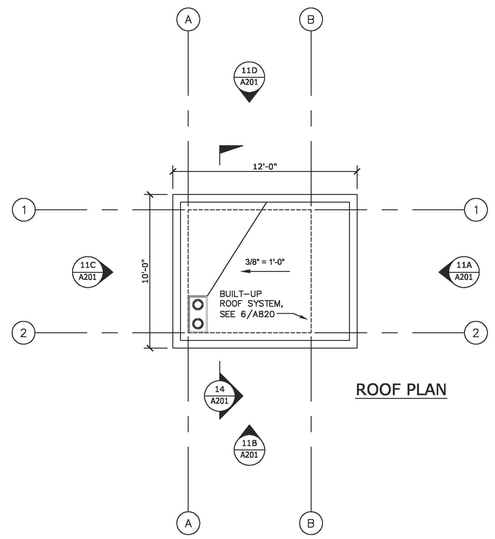

ROOF PLAN

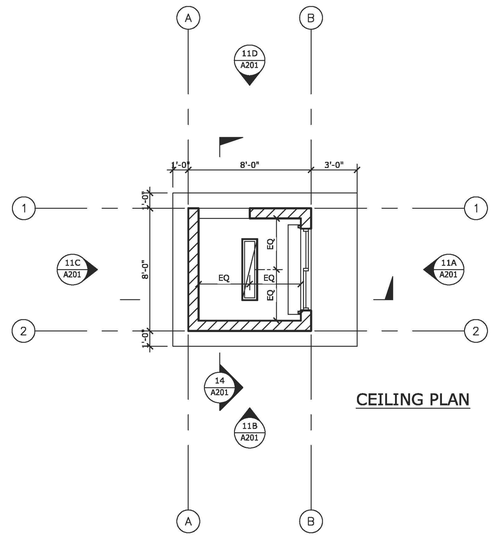

CEILING PLAN

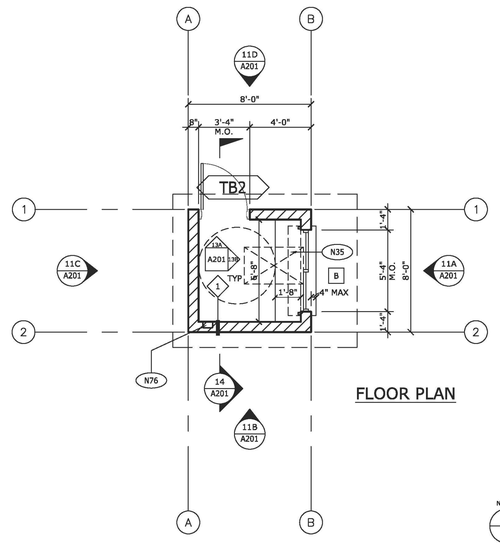

FLOOR PLAN

NORTH

TICKET BOOTH (VISITOR) SCALE: 1/4" = 1'-0" | 6

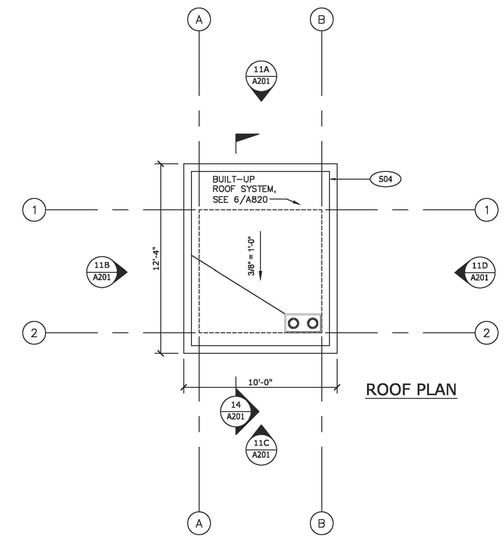

ROOF PLAN

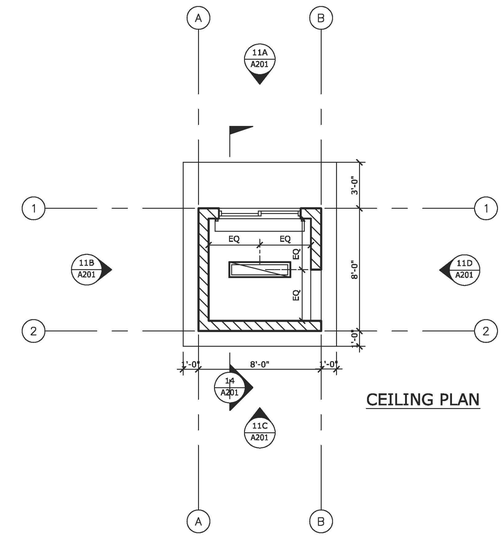

CEILING PLAN

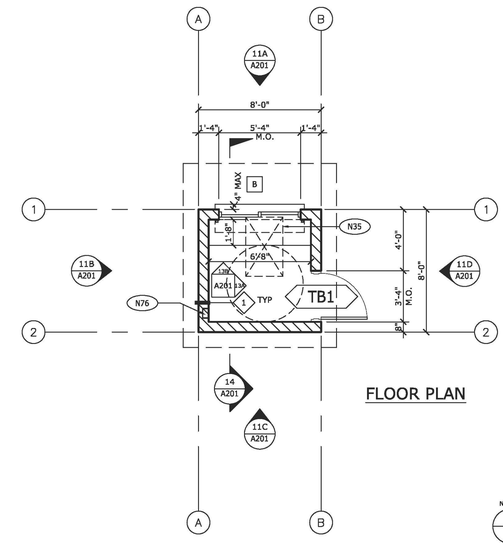

FLOOR PLAN

NORTH

TICKET BOOTH (HOME) SCALE: 1/4" = 1'-0" | 1

N25	(N) ROOM SIGNAGE, TYP. SEE DOOR SCHEDULE A701
N35	(N) ST. STL. COUNTERTOP, SEE 16, 17/A830
N42	(N) DOOR, SEE SCHEDULE FOR TYPE
N43	(N) ROLL-UP DOOR, SEE DETAIL 20, AND 25/A701. 380 LB HEAD UNIT SUPPORTED BY STL JAMB ON EA SIDE. SEE ALSO MFR INSTRUCTIONS.
N48	(N) PLASTER SOFFIT.
N58	(N) C.M.U. WALL, SEE STRUCTURAL PLANS
N69	(N) 6" RESILIENT BASE
N75	(N) PAINTED CMU
N76	(N) FIRE EXTINGUISHER CABINET, SEE 7/A830.
N87	(N) ALS SIGNAGE, SEE DETAIL 4/G003
S04	(N) BUILT UP ROOF SYSTEM

KEYNOTES

- ROOF SLOPE DIRECTION
- CRICKET
- ROOF AND OVERFLOW DRAIN, SEE 1/A821
- ROOF ACCESS HATCH

ROOF LEGEND

- UNDERSIDE OF METAL DECKING
- GYP. BOARD CEILING, SEE 2 & 3/A820
- PLASTER CEILING, SEE 19/A820
- SURFACE MOUNTED LED LIGHT FIXTURE - SEE ELECTRICAL DRAWINGS
- PENDANT MOUNTED LED LIGHT FIXTURE - SEE ELECTRICAL DRAWINGS
- ROOF ACCESS HATCH
- L1 — LOUVER SYMBOL - SEE LOUVER TYPES ON A701

CEILING LEGEND

- CONCRETE MASONRY WALL, SEE STRUCTURAL DWGS
- CHAINLINK FENCING, SEE A008 FOR DETAILS
- INTERIOR FULL HEIGHT, ONE HOUR FIRE-RATED PARTITION
- FULL HEIGHT PLUMBING WALL, 4" U.N.O.
- FE — WALL MOUNTED FIRE EXTINGUISHER. SEE 4/A830
- A / # — WALL TYPE, SEE A830 FOR DETAILS
- ACCESSIBLE CLEAR SPACE: 9' DIAMETER TURNING SPACE
- ACCESSIBLE WORKSTATION / CLEAR SPACE: 30" x 48" (U.N.O.)
- A — WINDOW TYPE, SEE A702 FOR DETAILS
- 101 — DOOR TYPE, SEE A701 FOR DETAILS

WALL LEGEND

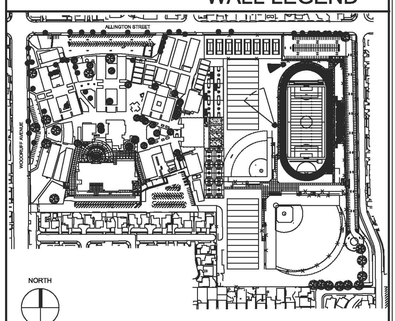

STATE:

IDENTIFICATION STAMP
DIV. OF THE STATE ARCHITECT
APP: 03-124281 INC:
REVIEWED FOR
SS ☑ FLS ☑ ACS ☑
DATE: 02/04/2025

ARCHITECT:

architecture
westbergwhite
7700 IRVINE CENTER DR. STE. 100
IRVINE, CA 92618
(714) 508-1780 (714) 508-1780 FAX

LICENSED ARCHITECT
C-11045
EXP 9-2025
STATE OF CALIFORNIA

CONSULTANT:

PROJECT NAME:

Bellflower Unified School District
Mayfair High School Athletics Fields
6000 North Woodruff Ave
Lakewood, California 90713

CLIENT:

BELLFLOWER UNIFIED SCHOOL DISTRICT
16703 S. Clark Ave.
BELLFLOWER, CALIFORNIA 90706

Δ	Rev. Date	Description

JOB NO:	15008.01
DATE:	01/13/2025
DRAWN:	TG, XY
CHECK:	RB, JG
ARCHITECT:	PDW
ENGINEER:	

SHEET DESCRIPTION:
TICKET BOOTHS - FLOOR PLANS, RCPS, ROOF PLANS, SECTIONS, EXTERIOR & INTERIOR ELEVATIONS

SHEET NO:

A201

KEYMAP

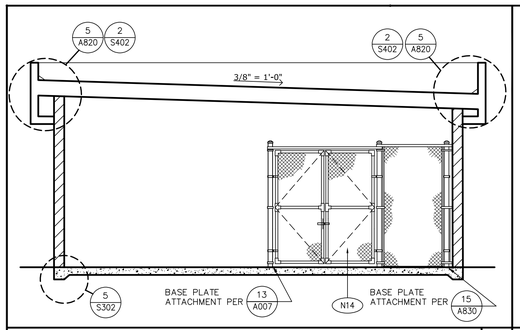

STORAGE BLDG.–SECT. SCALE: 1/4"=1'-0" | 8

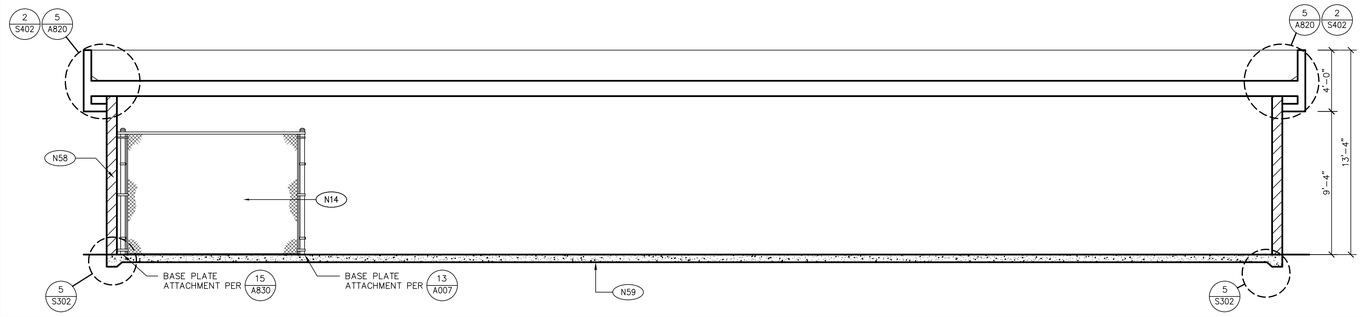

STORAGE BUILDING – SECTION SCALE: 1/4"=1'-0" | 4

N14	(N) INSTALL CHAIN LINK GATE, SEE GATE SCHEDULE ON SHEET A008 FOR MORE DETAILS
N41	(N) WINDOW, SEE SCHEDULE FOR TYPE
N42	(N) DOOR, SEE SCHEDULE FOR TYPE
N43	(N) ROLL-UP DOOR, SEE DETAIL 20, AND 25/A701. 380 LB HEAD UNIT SUPPORTED BY STL JAMB ON EA SIDE. SEE ALSO MFR INSTRUCTIONS.
N48	(N) PLASTER SOFFIT.
N58	(N) C.M.U. WALL, SEE STRUCTURAL PLANS
N59	(N) CONCRETE FLOOR SLAB OVER COMPACTED FILL – SEE STRUCTURAL DWGS
N76	(N) FIRE EXTINGUISHER CABINET, SEE 9/A830

KEYNOTES

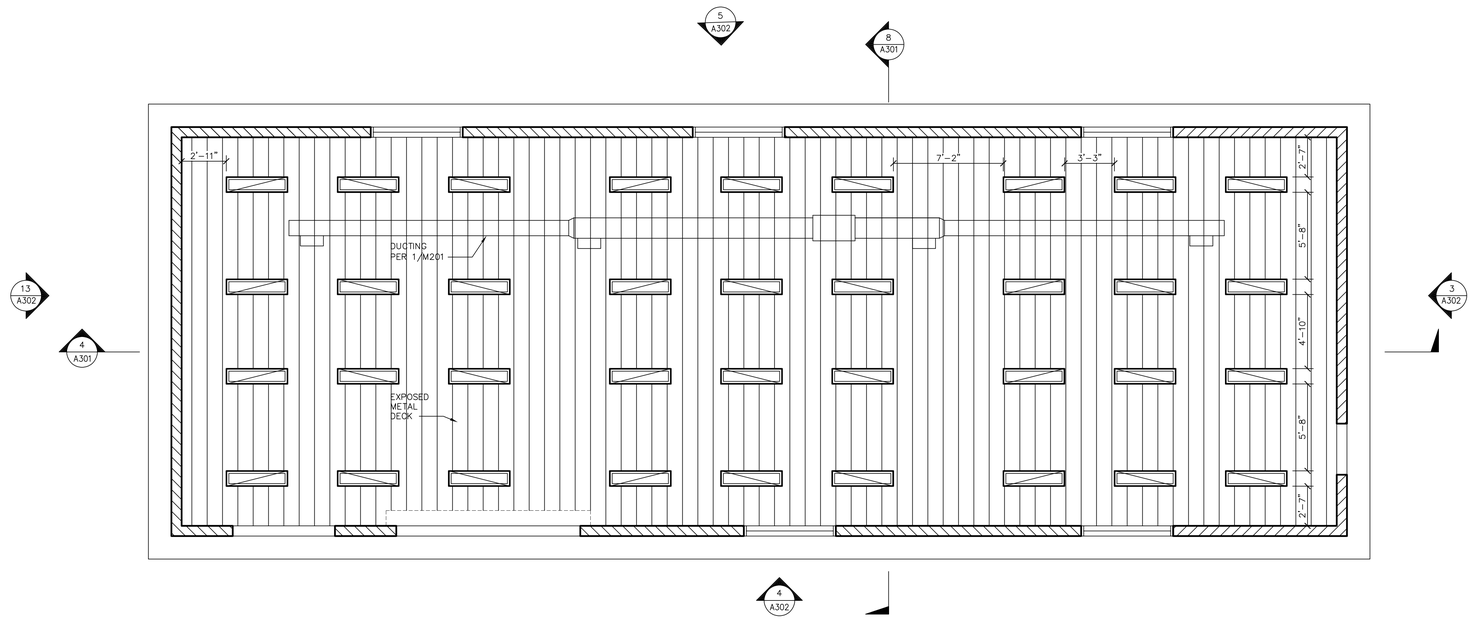

STORAGE BUILDING – REFLECTED CEILING PLAN SCALE: 1/4"=1'-0" | 3

	UNDERSIDE OF METAL DECKING
	GYP. BOARD CEILING
	PLASTER CEILING
	SURFACE MOUNTED LED LIGHT FIXTURE - SEE ELECTRICAL DRAWINGS

CEILING LEGEND

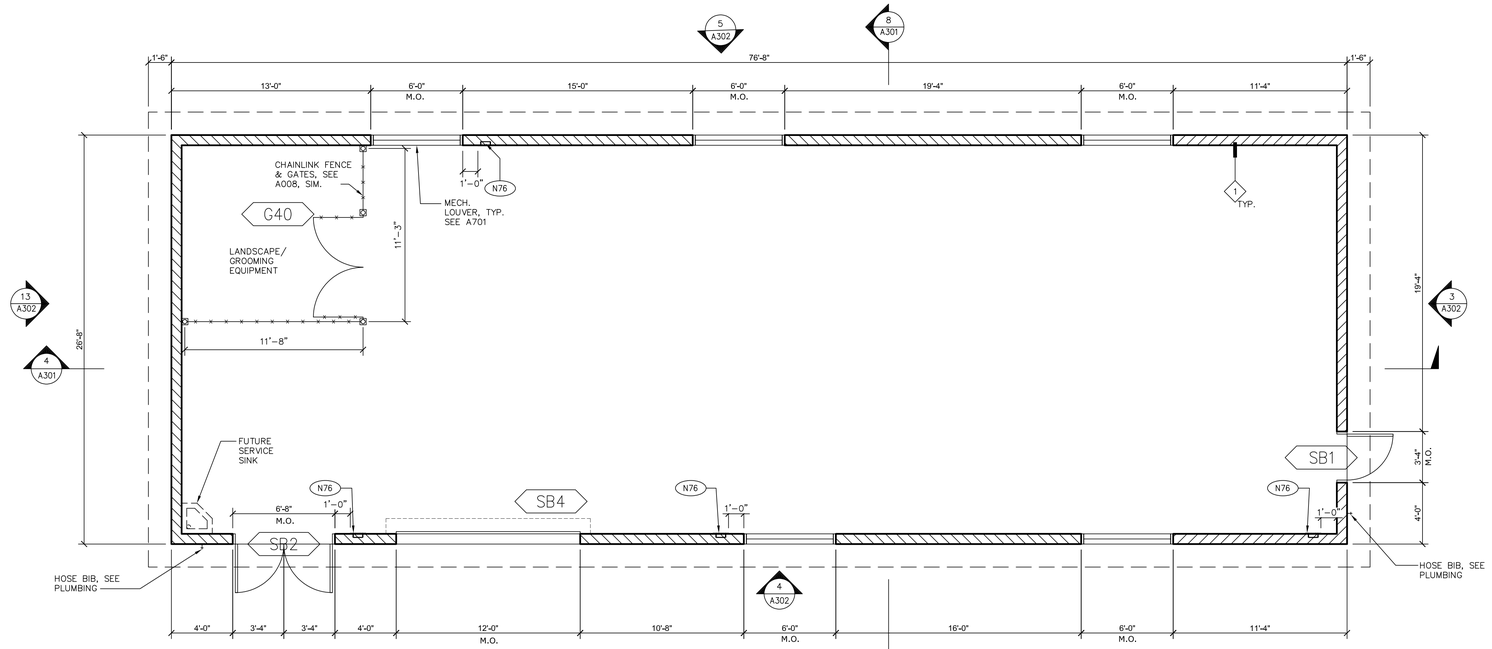

STORAGE BUILDING – FLOOR PLAN SCALE: 1/4"=1'-0" | 1

	CONCRETE MASONRY WALL, SEE STRUCTURAL DWGS
	CHAINLINK FENCING, SEE A008 FOR DETAILS
	INTERIOR FULL HEIGHT, ONE HOUR FIRE-RATED PARTITION
	FULL HEIGHT PLUMBING WALL, 4" U.N.O.
FE	WALL MOUNTED FIRE EXTINGUISHER. SEE 4/A830
A #	WALL TYPE, SEE A830 FOR DETAILS
	ACCESSIBLE CLEAR SPACE: 5' DIAMETER TURNING SPACE ACCESSIBLE WORKSTATION / CLEAR SPACE: 30" x 48" (U.N.O.)
A	WINDOW TYPE, SEE A702 FOR DETAILS
101	DOOR TYPE, SEE A701 FOR DETAILS

WALL LEGEND

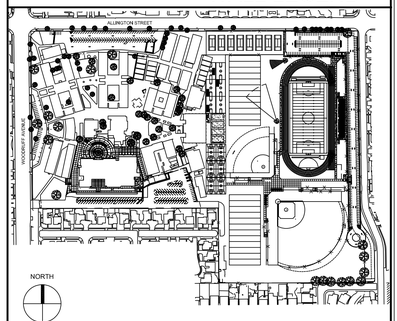

KEYMAP

STATE:

IDENTIFICATION STAMP
DIV. OF THE STATE ARCHITECT
APP: 03-124281 INC:
REVIEWED FOR
SS ☑ FLS ☑ ACS ☑
DATE: 02/04/2025

ARCHITECT:

architecture
westbergwhite
7700 IRVINE CENTER DR. STE. 100
IRVINE, CA 92618
(714) 508-1780 (714) 508-1780 FAX

LICENSED ARCHITECT — JEFFREY DEBRITZ WESTBERG — C-11045 EXP.9-2025 — STATE OF CALIFORNIA

CONSULTANT:

PROJECT NAME:

Bellflower Unified School District
Mayfair High School Athletics Fields
6000 North Woodruff Ave
Lakewood, California 90713

CLIENT:

BELLFLOWER UNIFIED SCHOOL DISTRICT
16703 S. Clark Ave.
BELLFLOWER, CALIFORNIA 90706

Rev.	Date	Description

JOB NO:	15008.01
DATE:	01/13/2025
DRAWN:	TG, XY
CHECK:	RB, JG
ARCHITECT:	PDW
ENGINEER:	

SHEET DESCRIPTION:
STORAGE BUILDING - FLOOR PLAN, RCP, & SECTIONS

SHEET NO:

A301

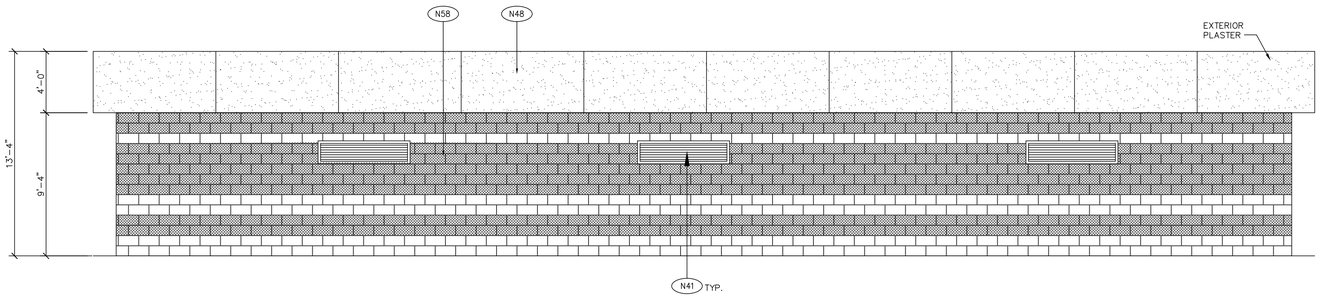

STORAGE BUILDING – EAST ELEVATION SCALE: 1/4"=1'-0" 5

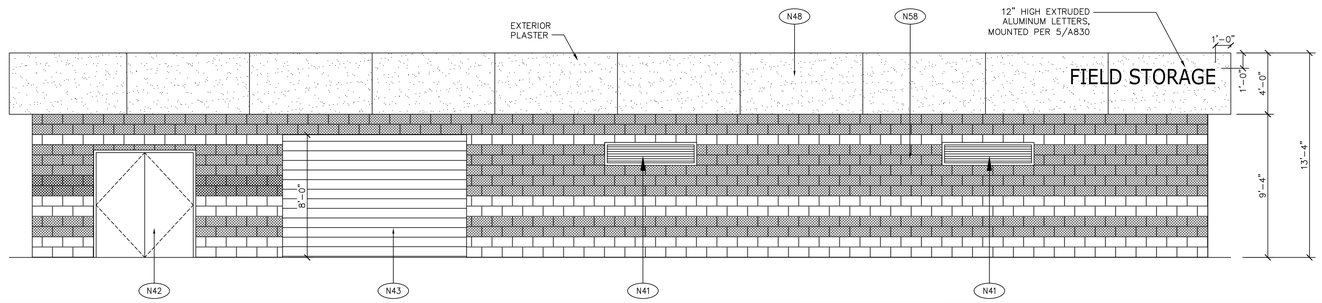

STORAGE BUILDING – WEST ELEVATION SCALE: 1/4"=1'-0" 4

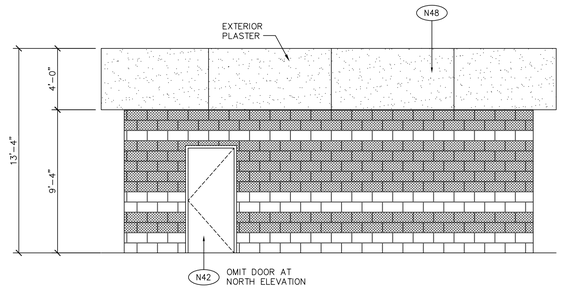

STORAGE–NORTH & SOUTH ELEVS. SCALE: 1/4"=1'-0" 3

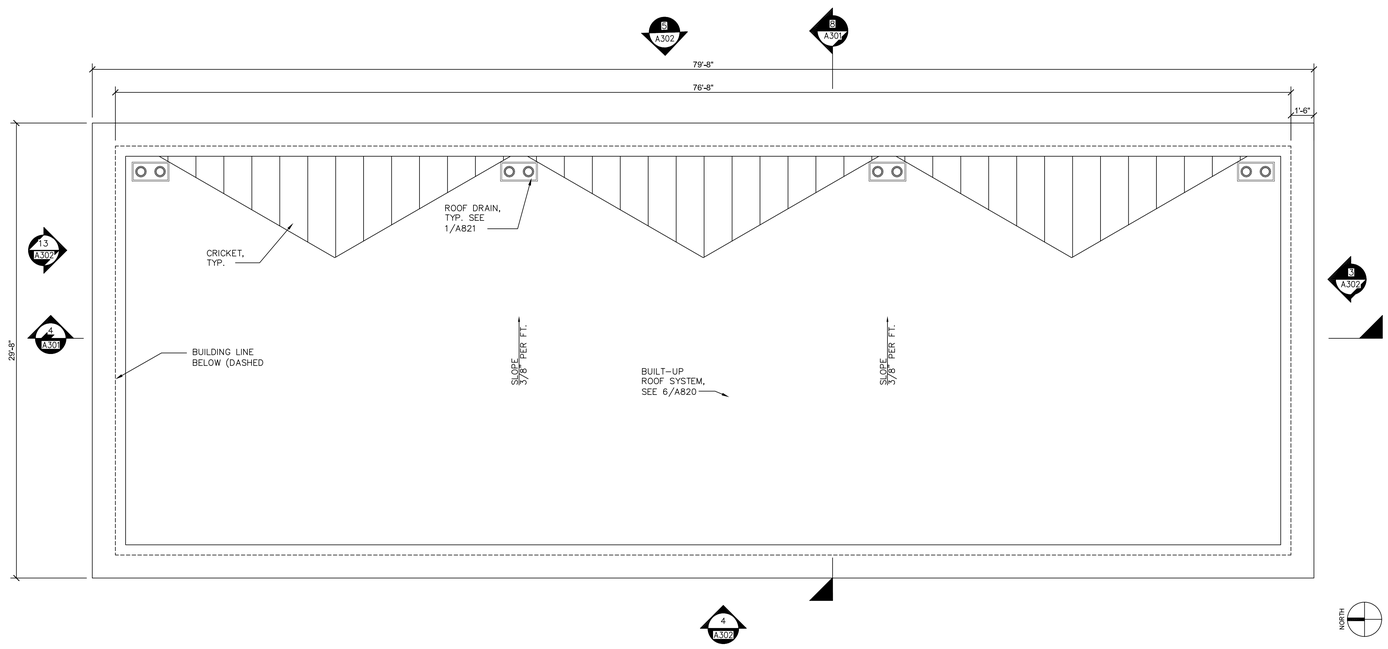

STORAGE BUILDING – ROOF PLAN SCALE: 1/4"=1'-0" 1

KEYNOTES

N41 (N) WNDOW, SEE SCHEDULE FOR TYPE

N42 (N) DOOR, SEE SCHEDULE FOR TYPE

N43 (N) ROLL-UP DOOR, SEE DETAIL 20, AND 25/A701. 380 LB HEAD UNIT SUPPORTED BY STL JAMB ON EA SIDE. SEE ALSO MFR INSTRUCTIONS.

N48 (N) PLASTER SOFFIT.

N58 (N) C.M.U. WALL, SEE STRUCTURAL PLANS

N59 (N) CONCRETE FLOOR SLAB OVER COMPACTED FILL – SEE STRUCTURAL DWGS

GENERAL NOTES

1. FOR TYPICAL SYMBOLS SEE SHEET G001.
2. ALL ITEMS SHOWN OR NOTED ARE EXISTING, UNLESS INDICATED OTHERWISE AS NEW.
3. PROTECT AND SAFEGUARD FROM DAMAGE ALL EXISTING FINISHES AND WORK TO REMAIN.
4. INSTALL TEMPORARY 6' HIGH CHAIN LINK FENCE ENCLOSURES WITH LOCKABLE GATES AS REQUIRED FOR CONSTRUCTION ACCESS AT CONTRACTOR'S STAGING AREA AND AROUND ALL CONSTRUCTION SITES AS DICTATED BY THE PHASING SCHEDULE.
5. WHERE REMOVAL OF CONCRETE WALKS, MOWSTRIPS, CURBS AND GUTTERS IS REQUIRED TO INSTALL UNDERGROUND UTILITIES, REMOVE THE CONCRETE WORK TO THE NEAREST EXISTING EXPANSION OR CONTROL JOINT (SAWCUT IF REQUIRED). MOWSTRIPS, CURBS AND GUTTERS MAY BE REMOVED IN MINIMUM LENGTHS OF 6' IF THE DISTANCE BETWEEN EXISTING JOINTS IS 12' OR MORE. REPLACE REMOVED WORK WITH REINFORCED CONCRETE TO MATCH ADJACENT EXISTING WORK IN PROFILE, JOINT LAYOUT AND FINISH. SEE SHEET A810 FOR SIMILAR DETAILS AND REINFORCING REQUIREMENTS. DOWEL NEW CONCRETE WORK INTO EXISTING PER DETAIL 16/A810.
6. COORDINATE THE REMOVAL, RELOCATION OR MODIFICATION OF EXISTING IRRIGATION LINES WITH THE DISTRICT PRIOR TO ANY TRENCHING, CLEARING AND GRUBBING, OR OTHER SITE EXCAVATIONS REQUIRED FOR NEW CONSTRUCTION.
7. RUN-OFF FROM PETROLEUM PRODUCTS, LIME AND MORTAR, SOIL STERILANTS, AND THE WASHING OF EQUIPMENT USED TO APPLY THESE MATERIALS, IS PROHIBITED WITHIN PLANTED AREAS.
8. CONTRACTOR SHALL MAINTAIN EXISTING PLANTING WITHIN THE JOB SITE FENCE ENCLOSURE DURING DEMOLITION AND CONSTRUCTION PHASES. EXISTING IRRIGATION SYSTEMS SHALL EITHER REMAIN OPERATIONAL FOR CONTRACTOR'S USE OR CONTRACTOR SHALL HAND-WATER EXISTING PLANT MATERIALS AT LEAST ONCE A WEEK. TURF SHALL BE MOWED AT LEAST ONCE EVERY TWO WEEKS.
9. REPAIR EXISTING IRRIGATION SYSTEMS DAMAGED DURING THE EXECUTION OF THIS CONTRACT. REPLACE PLANT MATERIALS DAMAGED, DECLINING IN HEALTH, SUFFERING DIEBACK, THAT HAVE LOST FORM AND SIZE, OR THAT DIE DURING THE CONSTRUCTION PERIOD, WITH THE SAME SPECIE OF EQUAL OR GREATER SIZE.
10. REPAIR ASPHALT PARKING LOTS, SPEED BUMPS AND PAINTED CROSSWALKS DAMAGED BY THE EXECUTION OF THIS CONTRACT TO ORIGINAL OR BETTER CONDITION. REPAINT CROSSWALKS AND SPEED BUMP STRIPING THEIR FULL LENGTHS ACROSS ROADWAYS.
11. FOR ADDITIONAL SITE WORK ADJACENT TO BUILDINGS NOT SHOWN ON THIS SHEET, SEE BUILDING FLOOR PLANS.
12. FOR SITE REPAIR WORK NOT SHOWN ON ARCHITECTURAL PLANS, SEE ELECTRICAL SITE PLAN SHEET E001.

ROOF SLOPE DIRECTION

CRICKET

ROOF AND OVERFLOW DRAIN, SEE 1/A821

ROOF LEGEND

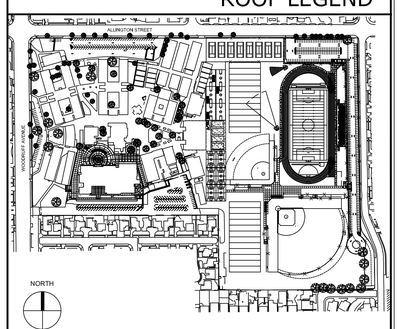

KEYMAP

STATE:

IDENTIFICATION STAMP
DIV. OF THE STATE ARCHITECT
APP: 03-124281 INC:
REVIEWED FOR
SS ☑ FLS ☑ ACS ☑
DATE: 02/04/2025

ARCHITECT:

architecture
westbergwhite
7700 IRVINE CENTER DR. STE. 100
IRVINE, CA 92618
(714) 508-1780 (714) 508-1780 FAX

LICENSED ARCHITECT
JEFFREY DEBRITZ WESTBERG
C-11045
EXP.9-2025
STATE OF CALIFORNIA

CONSULTANT:

PROJECT NAME:

Bellflower Unified School District
Mayfair High School Athletics Fields
6000 North Woodruff Ave
Lakewood, California 90713

CLIENT:

BELLFLOWER UNIFIED SCHOOL DISTRICT
16703 S. Clark Ave.
BELLFLOWER, CALIFORNIA 90706

Δ	Rev. Date	Description

JOB NO: 15008.01
DATE: 01/13/2025
DRAWN: TG, XY
CHECK: RB, JG
ARCHITECT: PDW
ENGINEER:

SHEET DESCRIPTION:
STORAGE BUILDING - ROOF PLAN, & EXTERIOR ELEVATIONS

SHEET NO:

A302

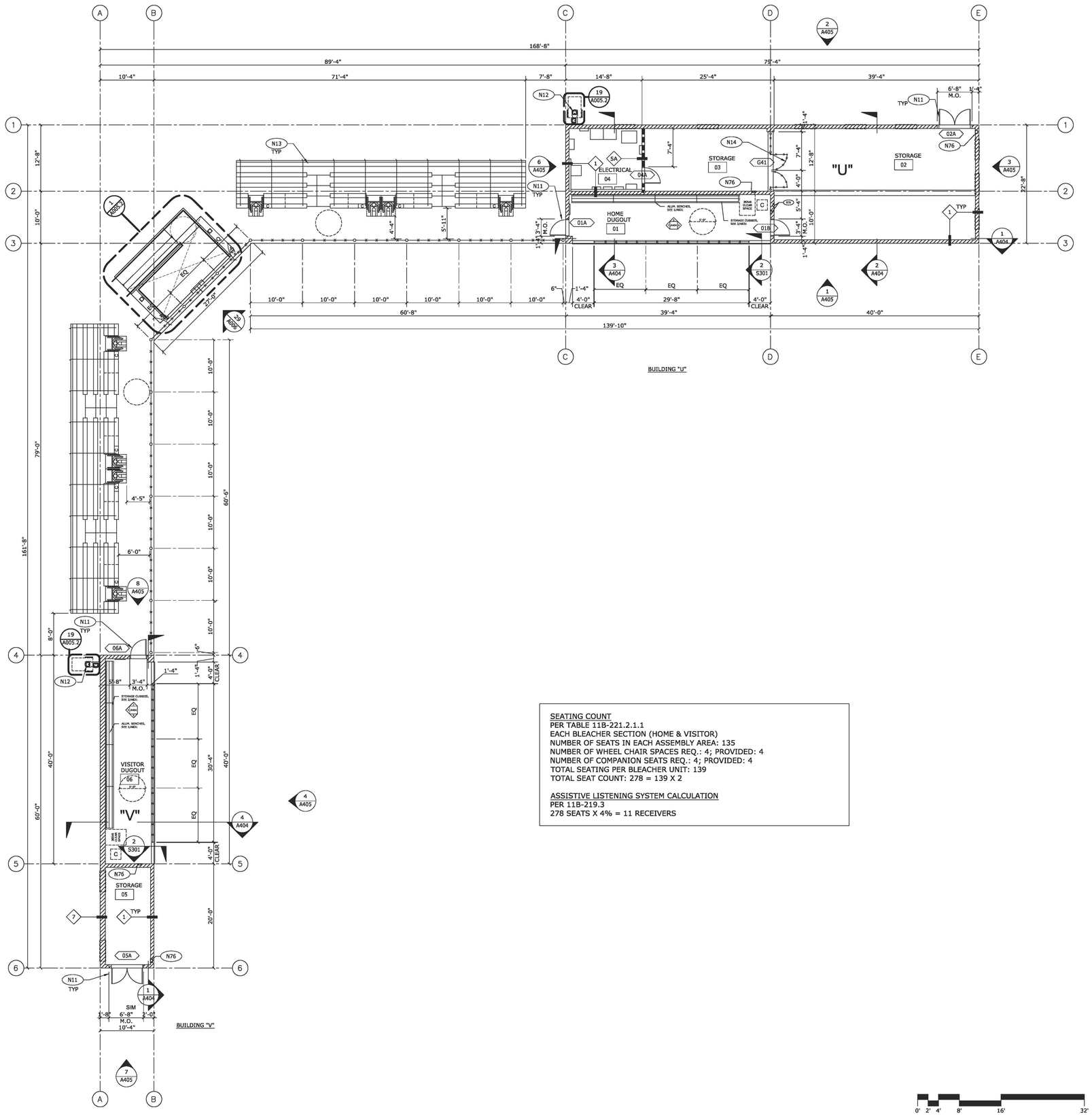

SEATING COUNT
PER TABLE 11B-221.2.1.1
EACH BLEACHER SECTION (HOME & VISITOR)
NUMBER OF SEATS IN EACH ASSEMBLY AREA: 135
NUMBER OF WHEEL CHAIR SPACES REQ.: 4; PROVIDED: 4
NUMBER OF COMPANION SEATS REQ.: 4; PROVIDED: 4
TOTAL SEATING PER BLEACHER UNIT: 139
TOTAL SEAT COUNT: 278 = 139 X 2

ASSISTIVE LISTENING SYSTEM CALCULATION
PER 11B-219.3
278 SEATS X 4% = 11 RECEIVERS

0' 2' 4' 8' 16' 32'

NORTH

BASEBALL DUGOUTS - FLOOR PLANS SCALE: 1/8"=1'-0" | 1

N11 INSTALL NEW DOOR, FRAME & HARDWARE. SEE DOOR SCHEDULE ON SHEET A701.

N12 (N) DRINKING FOUNTAIN W/ HOSE BIBB. SEE 19/A005.2 & 1/A004 AND PLUMB DWGS

N13 (N) ALUM. 5 ROW BLEACHERS, SEE BB1 - BB5. NOTE: BLEACHERS 5 ROWS OF SEATS OR LESS, ABOVE GRADE, NOT PART OF DSA REVIEW & APPROVAL PER 2022 CAL. ADMIN. CODE SEC. 4-314.

N14 INSTALL CHAIN LINK DOOR, SEE GATE SCHEDULE ON SHEET A008 FOR MORE DETAILS.

N76 (N) FIRE EXTINGUISHER CABINET, SEE 9/A830

KEYNOTES

1. FOR TYPICAL SYMBOLS SEE SHEET G001.
2. ALL ITEMS SHOWN OR NOTED ARE EXISTING, UNLESS INDICATED OTHERWISE AS NEW.
3. PROTECT AND SAFEGUARD FROM DAMAGE ALL EXISTING FINISHES AND WORK TO REMAIN.
4. INSTALL TEMPORARY 6' HIGH CHAIN LINK FENCE ENCLOSURES WITH LOCKABLE GATES AS REQUIRED FOR CONSTRUCTION ACCESS AT CONTRACTOR'S STAGING AREA AND AROUND ALL CONSTRUCTION SITES AS DICTATED BY THE PHASING SCHEDULE.
5. WHERE REMOVAL OF CONCRETE WALKS, MOWSTRIPS, CURBS AND GUTTERS IS REQUIRED TO INSTALL UNDERGROUND UTILITIES, REMOVE THE CONCRETE WORK TO THE NEAREST EXISTING EXPANSION OR CONTROL JOINT (SAWCUT IF REQUIRED). MOWSTRIPS, CURBS AND GUTTERS MAY BE REMOVED IN MINIMUM LENGTHS OF 6' IF THE DISTANCE BETWEEN EXISTING JOINTS IS 12' OR MORE. REPLACE REMOVED WORK WITH REINFORCED CONCRETE TO MATCH ADJACENT EXISTING WORK IN PROFILE, JOINT LAYOUT AND FINISH. SEE SHEET A810 FOR SIMILAR DETAILS AND REINFORCING REQUIREMENTS. DOWEL NEW CONCRETE WORK INTO EXISTING PER DETAIL 16/A810.
6. COORDINATE THE REMOVAL, RELOCATION OR MODIFICATION OF EXISTING IRRIGATION LINES WITH THE DISTRICT PRIOR TO ANY TRENCHING, CLEARING AND GRUBBING, OR OTHER SITE EXCAVATIONS REQUIRED FOR NEW CONSTRUCTION.
7. RUN-OFF FROM PETROLEUM PRODUCTS, LIME AND MORTAR, SOIL STERILANTS, AND THE WASHING OF EQUIPMENT USED TO APPLY THESE MATERIALS, IS PROHIBITED WITHIN PLANTED AREAS.
8. CONTRACTOR SHALL MAINTAIN EXISTING PLANTING WITHIN THE JOB SITE FENCE ENCLOSURE DURING DEMOLITION AND CONSTRUCTION PHASES. EXISTING IRRIGATION SYSTEMS SHALL EITHER REMAIN OPERATIONAL FOR CONTRACTOR'S USE OR CONTRACTOR SHALL HAND-WATER EXISTING PLANT MATERIALS AT LEAST ONCE A WEEK. TURF SHALL BE MOWED AT LEAST ONCE EVERY TWO WEEKS.
9. REPAIR EXISTING IRRIGATION SYSTEMS DAMAGED DURING THE EXECUTION OF THIS CONTRACT. REPLACE PLANT MATERIALS DAMAGED, DECLINING IN HEALTH, SUFFERING DIEBACK, THAT HAVE LOST FORM AND SIZE, OR THAT DIE DURING THE CONSTRUCTION PERIOD, WITH THE SAME SPECIE OF EQUAL OR GREATER SIZE.
10. REPAIR ASPHALT PARKING LOTS, SPEED BUMPS AND PAINTED CROSSWALKS DAMAGED BY THE EXECUTION OF THIS CONTRACT TO ORIGINAL OR BETTER CONDITION. REPAINT CROSSWALKS AND SPEED BUMP STRIPING THEIR FULL LENGTHS ACROSS ROADWAYS.
11. FOR ADDITIONAL SITE WORK ADJACENT TO BUILDINGS NOT SHOWN ON THIS SHEET, SEE BUILDING FLOOR PLANS.
12. FOR SITE REPAIR WORK NOT SHOWN ON ARCHITECTURAL PLANS, SEE ELECTRICAL SITE PLAN SHEET E001.

GENERAL NOTES

- CONCRETE MASONRY WALL, SEE STRUCTURAL DWGS
- CHAINLINK FENCING, SEE A008 FOR DETAILS
- INTERIOR FULL HEIGHT, ONE HOUR FIRE-RATED PARTITION
- FULL HEIGHT PLUMBING WALL, 4" U.N.O.
- FE — WALL MOUNTED FIRE EXTINGUISHER. SEE 4/A830
- A / # — WALL TYPE, SEE A830 FOR DETAILS
- ACCESSIBLE CLEAR SPACE: 5' DIAMETER TURNING SPACE
- ACCESSIBLE WORKSTATION / CLEAR SPACE: 30" x 48" (U.N.O.)
- A — WINDOW TYPE, SEE A702 FOR DETAILS
- 101 — DOOR TYPE, SEE A701 FOR DETAILS

WALL LEGEND

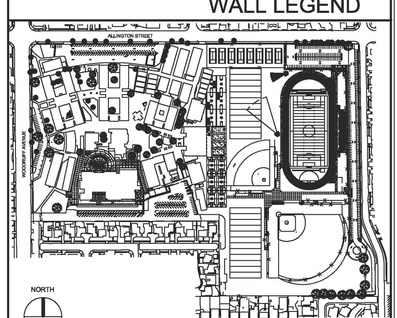

KEYMAP

STATE:

IDENTIFICATION STAMP
DIV. OF THE STATE ARCHITECT
APP: 03-124281 INC:
REVIEWED FOR
SS ☑ FLS ☑ ACS ☑
DATE: 02/04/2025

ARCHITECT:

architecture
westbergwhite
7700 IRVINE CENTER DR. STE. 100
IRVINE, CA 92618
(714) 508-1780 (714) 508-1780 FAX

REGISTERED ARCHITECT — JEFFREY DEBRITZ WESTBERG — C-11045 EXP 9-2025 — STATE OF CALIFORNIA

CONSULTANT:

PROJECT NAME:

Bellflower Unified School District
Mayfair High School Athletics Fields
6000 North Woodruff Ave
Lakewood, California 90713

CLIENT:

BELLFLOWER UNIFIED SCHOOL DISTRICT
16703 S. Clark Ave.
BELLFLOWER, CALIFORNIA 90706

Rev.	Date	Description

JOB NO: 15008.01
DATE: 01/13/2025
DRAWN: TG, XY
CHECK: RB, JG
ARCHITECT: PDW
ENGINEER:

SHEET DESCRIPTION:
BASEBALL DUGOUTS - FLOOR PLANS (HOME & VISITOR)

SHEET NO:
A401

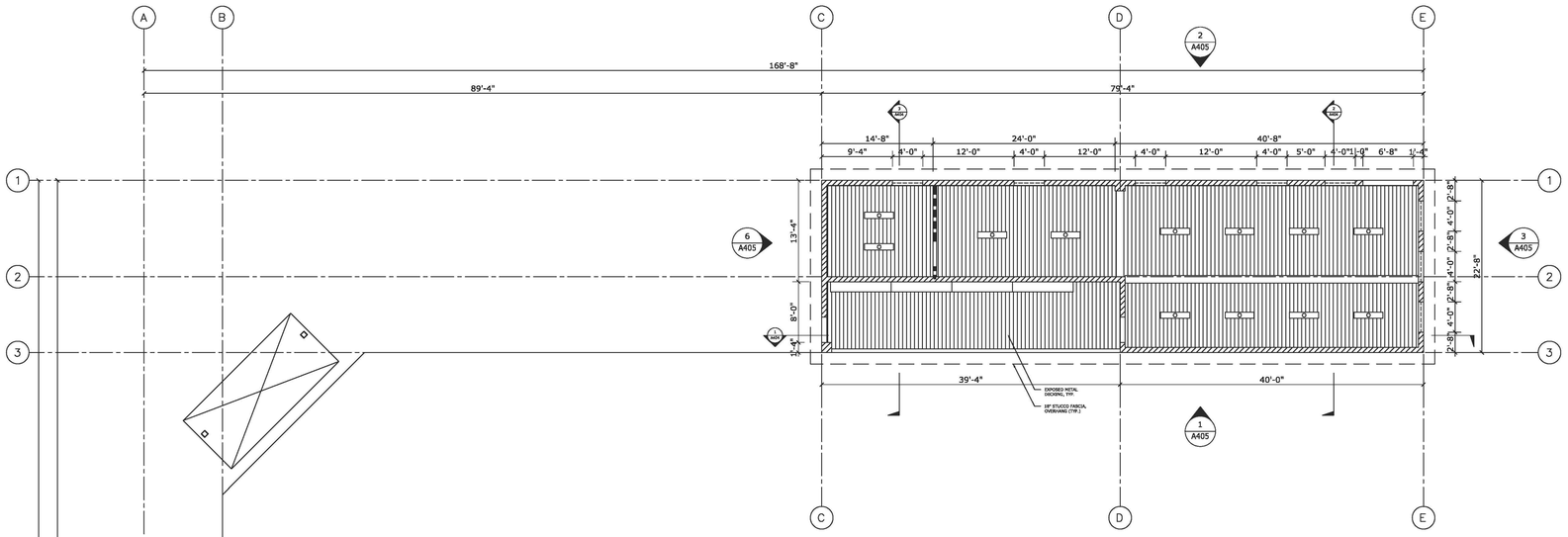

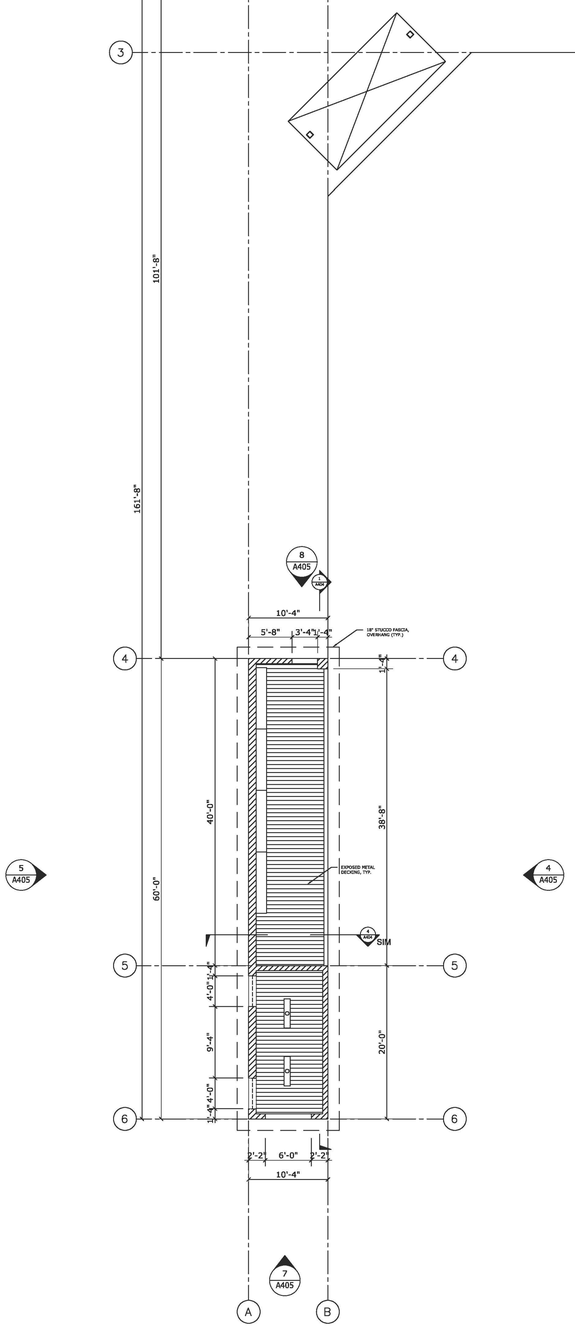

KEYNOTES

UNDERSIDE OF METAL DECKING

GYP. BOARD CEILING

PLASTER CEILING

SURFACE MOUNTED LED LIGHT FIXTURE - SEE ELECTRICAL DRAWINGS

CEILING LEGEND

CONCRETE MASONRY WALL, SEE STRUCTURAL DWGS

CHAINLINK FENCING, SEE A008 FOR DETAILS

INTERIOR FULL HEIGHT, ONE HOUR FIRE-RATED PARTITION

FULL HEIGHT PLUMBING WALL, 4" U.N.O.

FE — WALL MOUNTED FIRE EXTINGUISHER. SEE 4/A830

A / # — WALL TYPE, SEE A830 FOR DETAILS

ACCESSIBLE CLEAR SPACE:
5' DIAMETER TURNING SPACE

ACCESSIBLE WORKSTATION / CLEAR SPACE:
30" x 48" (U.N.O.)

A — WINDOW TYPE, SEE A702 FOR DETAILS

101 — DOOR TYPE, SEE A701 FOR DETAILS

WALL LEGEND

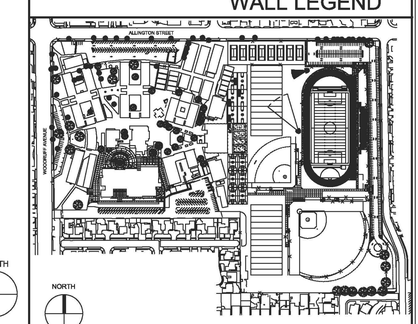

KEYMAP

0' 2' 4' 8' 16' 32'

NORTH

BASEBALL DUGOUTS REFLECTED CEILING PLAN SCALE: 1/8"=1'-0" 1

STATE:

IDENTIFICATION STAMP
DIV. OF THE STATE ARCHITECT
APP: 03-124281 INC:
REVIEWED FOR
SS ☑ FLS ☑ ACS ☑
DATE: 02/04/2025

ARCHITECT:

architecture westbergwhite
7700 IRVINE CENTER DR. STE. 100
IRVINE, CA 92618
(714) 508-1780 (714) 508-1780 FAX

LICENSED ARCHITECT — JEFFREY DEBRITZ WESTBERG — C-11045 EXP.9-2025 — STATE OF CALIFORNIA

CONSULTANT:

PROJECT NAME:

Bellflower Unified School District
Mayfair High School Athletics Fields
6000 North Woodruff Ave
Lakewood, California 90713

CLIENT:

BELLFLOWER UNIFIED SCHOOL DISTRICT
16703 S. Clark Ave.
BELLFLOWER, CALIFORNIA 90706

Rev.	Date	Description

JOB NO: 15008.01
DATE: 01/13/2025
DRAWN: TG, XY
CHECK: RB, JG
ARCHITECT: PDW
ENGINEER:

SHEET DESCRIPTION:
BASEBALL DUGOUTS - REFLECTED CEILING PLANS (HOME & VISITOR)

SHEET NO:
A402

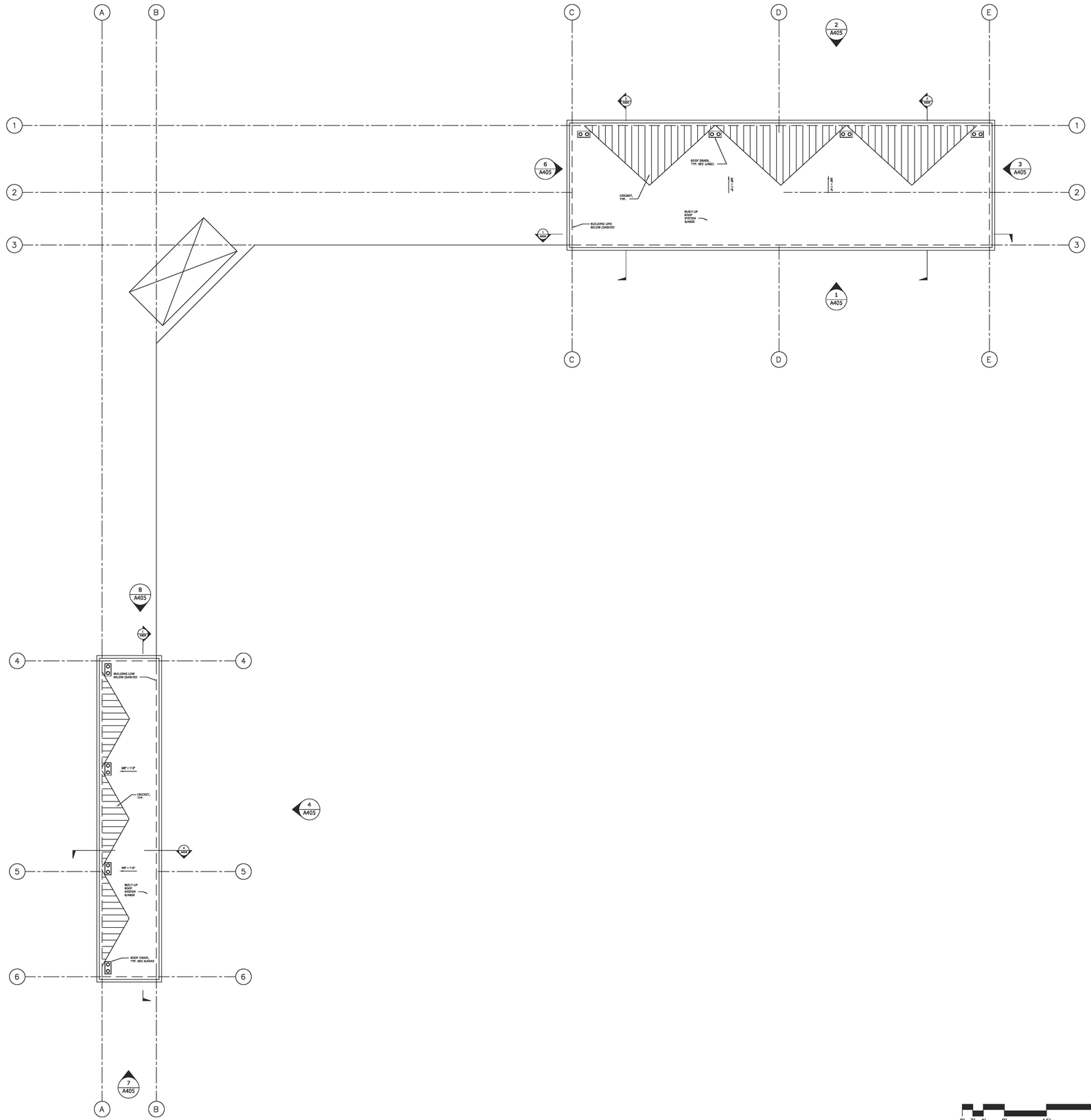

BASEBALL DUGOUTS ROOF PLAN SCALE: 1/8"=1'-0"

0' 2' 4' 8' 16' 32'

NORTH

KEYNOTES

ROOF SLOPE DIRECTION

CRICKET

ROOF AND OVERFLOW DRAIN, SEE 1/A821

ROOF ACCESS HATCH

ROOF LEGEND

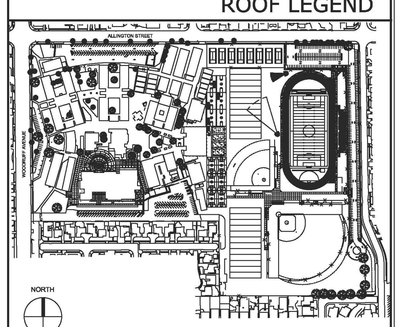

KEYMAP

STATE:

IDENTIFICATION STAMP
DIV. OF THE STATE ARCHITECT
APP: 03-124281 INC:
REVIEWED FOR
SS ☑ FLS ☑ ACS ☑
DATE: 02/04/2025

ARCHITECT:

architecture
westbergwhite
7700 IRVINE CENTER DR. STE. 100
IRVINE, CA 92618
(714) 508-1780 (714) 508-1780 FAX

LICENSED ARCHITECT
PAUL DEBRITS WESTBERG
C-11045
EXP 9-2025
STATE OF CALIFORNIA

CONSULTANT:

PROJECT NAME:

Bellflower Unified School District
Mayfair High School Athletics Fields
6000 North Woodruff Ave
Lakewood, California 90713

CLIENT:

BELLFLOWER UNIFIED SCHOOL DISTRICT

16703 S. Clark Ave.
BELLFLOWER, CALIFORNIA 90706

Rev.	Date	Description

JOB NO:	15008.01
DATE:	01/13/2025
DRAWN:	TG, XY
CHECK:	RB, JG
ARCHITECT:	PDW
ENGINEER:	

SHEET DESCRIPTION:
BASEBALL DUGOUTS - ROOF PLANS (HOME & VISITOR)

SHEET NO:

A403

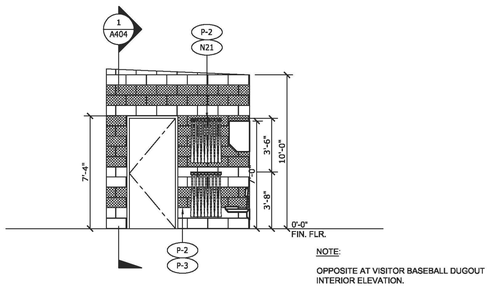

NOTE:

OPPOSITE AT VISITOR BASEBALL DUGOUT INTERIOR ELEVATION.

HOME BASEBALL DUGOUT - INTERIOR ELEVATION SCALE: 1/4"=1'-0" | 7

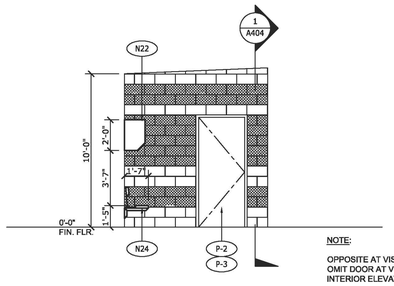

NOTE:

OPPOSITE AT VISITOR BASEBALL DUGOUT. OMIT DOOR AT VISITOR BASEBALL DUGOUT INTERIOR ELEVATION.

HOME BASEBALL DUGOUT - INTERIOR ELEVATION SCALE: 1/4"=1'-0" | 6

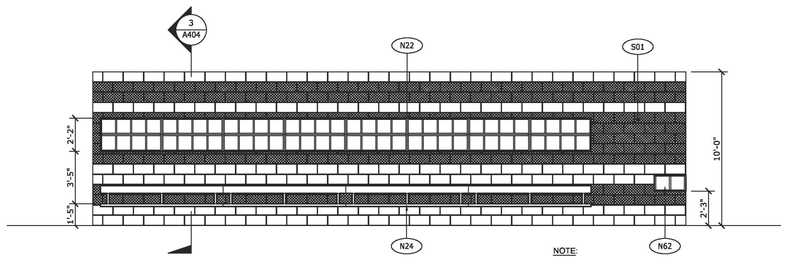

NOTE:

OPPOSITE AT VISITOR BASEBALL DUGOUT INTERIOR ELEVATION.

HOME BASEBALL DUGOUT - INTERIOR ELEVATION SCALE: 1/4"=1'-0" | 5

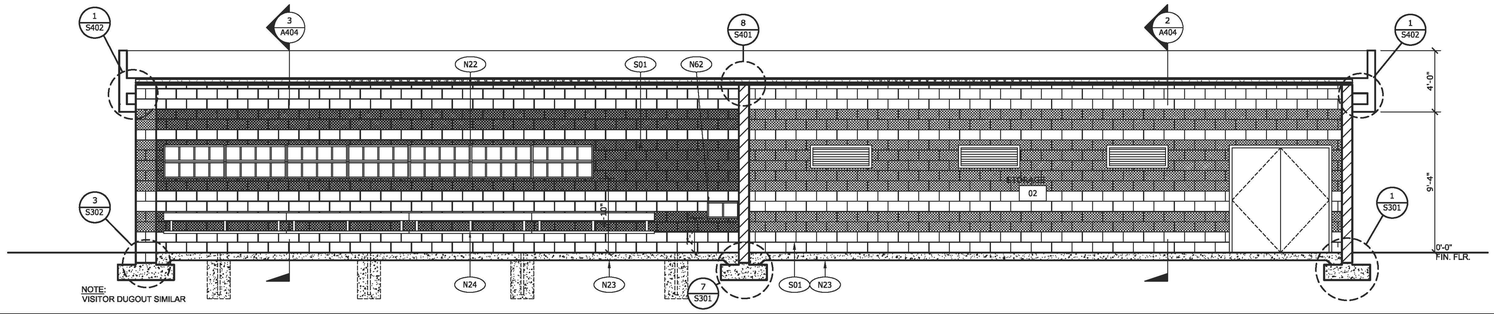

NOTE:
VISITOR DUGOUT SIMILAR

BASEBALL DUGOUT - SECTION SCALE: 1/4"=1'-0" | 1

NOTE:

OPPOSITE AT VISITOR BASEBALL DUGOUT INTERIOR ELEVATION.

HOME BASEBALL DUGOUT - INTERIOR ELEVATION SCALE: 1/4"=1'-0" | 7

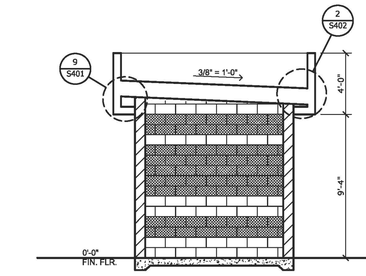

AWAY BASEBALL DUGOUT - SECTION SCALE: 1/4"=1'-0" | 4

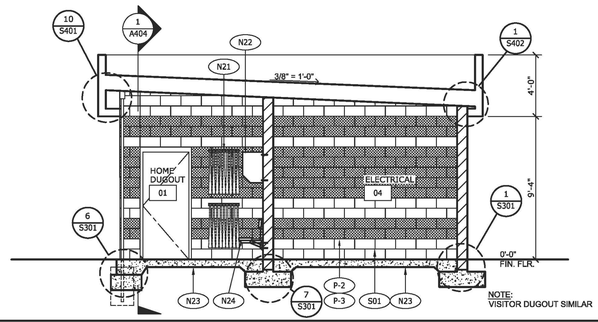

HOME BASEBALL DUGOUTS - SECTION SCALE: 1/4"=1'-0" | 3

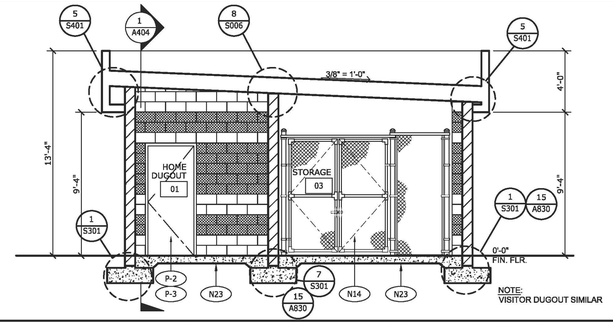

HOME BASEBALL DUGOUT - SECTION SCALE: 1/4"=1'-0" | 2

GENERAL NOTES

N14	(N) INSTALL CHAIN LINK DOOR, SEE GATE SCHEDULE ON SHEET A008 FOR MORE DETAILS.
N16	(N) CHAINLINK BARRIER FENCING, SEE DETAIL 2/A008
N21	(N) METAL BASEBALL BAT RACK, DETAIL 13/A830
N22	(N) METAL OVERHEAD HELMET STORAGE CUBBY AND COAT RACK, DETAIL 14/A005.1
N23	(N) CONC SLAB PER STRUCT. DWGS.
N24	(N) ALUMINUM TEAM BENCH, WALL MOUNTED. SEE 13/A005.1
N62	(N) METAL STORAGE BASE UNIT, 46W X 37H X 32D, SEE SPECS.
S01	(N) CMU WALL, TOOLED CONCAVE JOINTS, TYP.
P-2	PAINT - NEW LIGHT BRONZE, MATCH 548 CONSTRUCTION SPECIALTIES
P-3	PAINT - ONYX GRAY, MATCH 560 CONSTRUCTION SPECIALTIES (ALTERNATIVE)

KEYNOTES

1. FOR TYPICAL SYMBOLS SEE SHEET G001.
2. ALL ITEMS SHOWN OR NOTED ARE EXISTING, UNLESS INDICATED OTHERWISE AS NEW.
3. PROTECT AND SAFEGUARD FROM DAMAGE ALL EXISTING FINISHES AND WORK TO REMAIN.
4. INSTALL TEMPORARY 6' HIGH CHAIN LINK FENCE ENCLOSURES WITH LOCKABLE GATES AS REQUIRED FOR CONSTRUCTION ACCESS AT CONTRACTOR'S STAGING AREA AND AROUND ALL CONSTRUCTION SITES AS DICTATED BY THE PHASING SCHEDULE.
5. WHERE REMOVAL OF CONCRETE WALKS, MOWSTRIPS, CURBS AND GUTTERS IS REQUIRED TO INSTALL UNDERGROUND UTILITIES, REMOVE THE CONCRETE WORK TO THE NEAREST EXISTING EXPANSION OR CONTROL JOINT (SAWCUT IF REQUIRED). MOWSTRIPS, CURBS AND GUTTERS MAY BE REMOVED IN MINIMUM LENGTHS OF 6' IF THE DISTANCE BETWEEN EXISTING JOINTS IS 12' OR MORE. REPLACE REMOVED WORK WITH REINFORCED CONCRETE TO MATCH ADJACENT EXISTING WORK IN PROFILE, JOINT LAYOUT AND FINISH. SEE SHEET A810 FOR SIMILAR DETAILS AND REINFORCING REQUIREMENTS. DOWEL NEW CONCRETE WORK INTO EXISTING PER DETAIL 16/A810.
6. COORDINATE THE REMOVAL, RELOCATION OR MODIFICATION OF EXISTING IRRIGATION LINES WITH THE DISTRICT PRIOR TO ANY TRENCHING, CLEARING AND GRUBBING, OR OTHER SITE EXCAVATIONS REQUIRED FOR NEW CONSTRUCTION.
7. RUN-OFF FROM PETROLEUM PRODUCTS, LIME AND MORTAR, SOIL STERILANTS, AND THE WASHING OF EQUIPMENT USED TO APPLY THESE MATERIALS, IS PROHIBITED WITHIN PLANTED AREAS.
8. CONTRACTOR SHALL MAINTAIN EXISTING PLANTING WITHIN THE JOB SITE FENCE ENCLOSURE DURING DEMOLITION AND CONSTRUCTION PHASES. EXISTING IRRIGATION SYSTEMS SHALL EITHER REMAIN OPERATIONAL FOR CONTRACTOR'S USE OR CONTRACTOR SHALL HAND-WATER EXISTING PLANT MATERIALS AT LEAST ONCE A WEEK. TURF SHALL BE MOWED AT LEAST ONCE EVERY TWO WEEKS.
9. REPAIR EXISTING IRRIGATION SYSTEMS DAMAGED DURING THE EXECUTION OF THIS CONTRACT. REPLACE PLANT MATERIALS DAMAGED, DECLINING IN HEALTH, SUFFERING DIEBACK, THAT HAVE LOST FORM AND SIZE, OR THAT DIE DURING THE CONSTRUCTION PERIOD, WITH THE SAME SPECIE OF EQUAL OR GREATER SIZE.
10. REPAIR ASPHALT PARKING LOTS, SPEED BUMPS AND PAINTED CROSSWALKS DAMAGED BY THE EXECUTION OF THIS CONTRACT TO ORIGINAL OR BETTER CONDITION. REPAINT CROSSWALKS AND SPEED BUMP STRIPING THEIR FULL LENGTHS ACROSS ROADWAYS.
11. FOR ADDITIONAL SITE WORK ADJACENT TO BUILDINGS NOT SHOWN ON THIS SHEET, SEE BUILDING FLOOR PLANS.
12. FOR SITE REPAIR WORK NOT SHOWN ON ARCHITECTURAL PLANS, SEE ELECTRICAL SITE PLAN SHEET E001.

WALL LEGEND

- CONCRETE MASONRY WALL, SEE STRUCTURAL DWGS
- CHAINLINK FENCING, SEE A008 FOR DETAILS
- INTERIOR FULL HEIGHT, ONE HOUR FIRE-RATED PARTITION
- FULL HEIGHT PLUMBING WALL, 4" U.N.O.
- FE — WALL MOUNTED FIRE EXTINGUISHER. SEE 4/A830
- A / # — WALL TYPE, SEE A830 FOR DETAILS
- ACCESSIBLE CLEAR SPACE: 5' DIAMETER TURNING SPACE
- ACCESSIBLE WORKSTATION / CLEAR SPACE: 30" x 48" (U.N.O.)
- A — WINDOW TYPE, SEE A702 FOR DETAILS
- 101 — DOOR TYPE, SEE A701 FOR DETAILS

KEYMAP

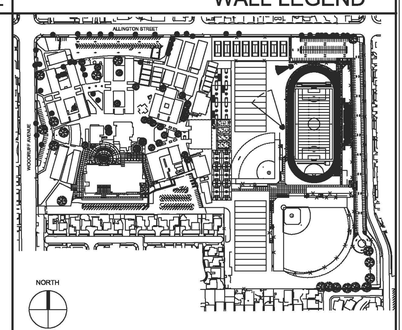

STATE:

IDENTIFICATION STAMP
DIV. OF THE STATE ARCHITECT
APP: 03-124281 INC:
REVIEWED FOR
SS ☑ FLS ☑ ACS ☑
DATE: 02/04/2025

ARCHITECT:

architecture
westbergwhite
7700 IRVINE CENTER DR. STE. 100
IRVINE, CA 92618
(714) 508-1780 (714) 508-1780 FAX

REGISTERED ARCHITECT — STEPHEN WESTBERG — C-11045 EXP 8-2025 — STATE OF CALIFORNIA

CONSULTANT:

PROJECT NAME:

Bellflower Unified School District
Mayfair High School Athletics Fields
6000 North Woodruff Ave
Lakewood, California 90713

CLIENT:

BELLFLOWER UNIFIED SCHOOL DISTRICT
16703 S. Clark Ave.
BELLFLOWER, CALIFORNIA 90706

Rev.	Date	Description
2		

JOB NO:	15008.01
DATE:	01/13/2025
DRAWN:	TG, XY
CHECK:	RB, JG
ARCHITECT:	PDW
ENGINEER:	

SHEET DESCRIPTION:
BASEBALL DUGOUTS - SECTIONS & INTERIOR ELEV. (HOME & VISITOR)

SHEET NO:

A404

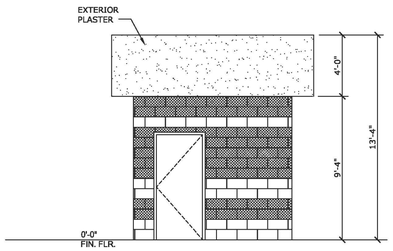

VISITOR BASEBALL DUGOUT - NORTH ELEV. SCALE: 1/4"=1'-0" | 8

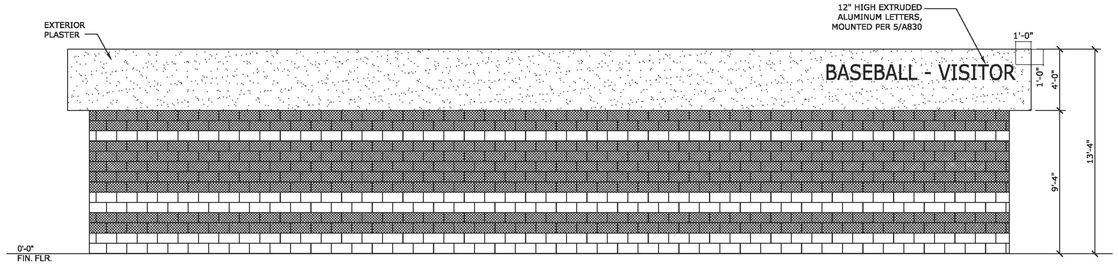

VISITOR BASEBALL DUGOUT - WEST ELEVATION SCALE: 1/4"=1'-0" | 5

N14 (N) INSTALL CHAIN LINK DOOR, SEE DOOR SCHEDULE ON SHEET A701 FOR MORE DETAILS.
N16 (N) CHAINLINK BARRIER FENCING, SEE DETAIL 14/A003
N21 (N) METAL BASEBALL BAT RACK, DETAIL 13/A830
N22 (N) METAL OVERHEAD HELMET STORAGE CUBBY AND COAT RACK, DETAIL 13/A830
N23 (N) CONC SLAB PER STRUCT. DWGS.
N24 (N) ALUMINUM TEAM BENCH, WALL MOUNTED. SEE 19/A601
N25 (N) ROOM SIGNAGE, TYP. SEE DOOR SCHEDULE A701
N62 (N) METAL STORAGE BASE UNIT, 46W X 37H X 32D, SEE SPECS.
S01 (N) CMU WALL, TOOLED CONCAVE JOINTS, TYP.
P-2 PAINT - NEW LIGHT BRONZE, MATCH 548 CONSTRUCTION SPECIALTIES
P-3 PAINT - ONYX GRAY, MATCH 560 CONSTRUCTION SPECIALTIES (ALTERNATIVE)

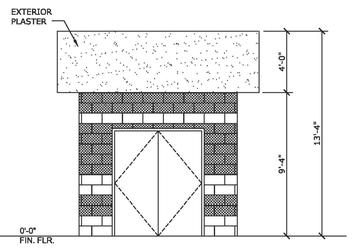

VISITOR BASEBALL DUGOUT - SOUTH ELEV. SCALE: 1/4"=1'-0" | 7

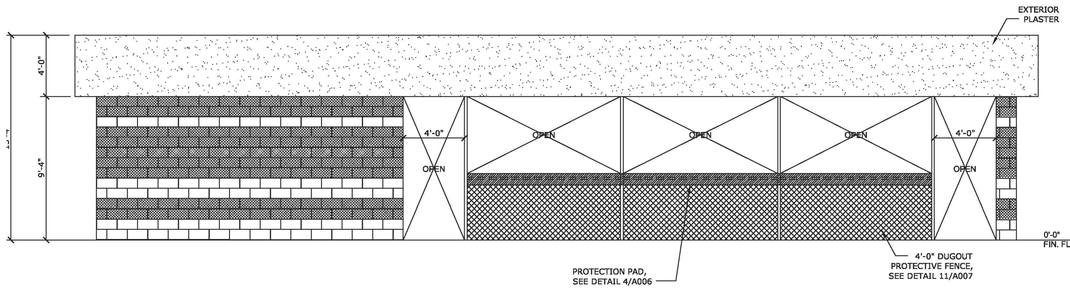

VISITOR BASEBALL DUGOUT - EAST ELEVATION SCALE: 1/4"=1'-0" | 4

KEYNOTES

1. FOR TYPICAL SYMBOLS SEE SHEET G001.
2. ALL ITEMS SHOWN OR NOTED ARE EXISTING, UNLESS INDICATED OTHERWISE AS NEW.
3. PROTECT AND SAFEGUARD FROM DAMAGE ALL EXISTING FINISHES AND WORK TO REMAIN.
4. INSTALL TEMPORARY 6' HIGH CHAIN LINK FENCE ENCLOSURES WITH LOCKABLE GATES AS REQUIRED FOR CONSTRUCTION ACCESS AT CONTRACTOR'S STAGING AREA AND AROUND ALL CONSTRUCTION SITES AS DICTATED BY THE PHASING SCHEDULE.
5. WHERE REMOVAL OF CONCRETE WALKS, MOWSTRIPS, CURBS AND GUTTERS IS REQUIRED TO INSTALL UNDERGROUND UTILITIES, REMOVE THE CONCRETE WORK TO THE NEAREST EXISTING EXPANSION OR CONTROL JOINT (SAWCUT IF REQUIRED). MOWSTRIPS, CURBS AND GUTTERS MAY BE REMOVED IN MINIMUM LENGTHS OF 6' IF THE DISTANCE BETWEEN EXISTING JOINTS IS 12' OR MORE. REPLACE REMOVED WORK WITH REINFORCED CONCRETE TO MATCH ADJACENT EXISTING WORK IN PROFILE, JOINT LAYOUT AND FINISH. SEE SHEET A810 FOR SIMILAR DETAILS AND REINFORCING REQUIREMENTS. DOWEL NEW CONCRETE WORK INTO EXISTING PER DETAIL 16/A810.
6. COORDINATE THE REMOVAL, RELOCATION OR MODIFICATION OF EXISTING IRRIGATION LINES WITH THE DISTRICT PRIOR TO ANY TRENCHING, CLEARING AND GRUBBING, OR OTHER SITE EXCAVATIONS REQUIRED FOR NEW CONSTRUCTION.
7. RUN-OFF FROM PETROLEUM PRODUCTS, LIME AND MORTAR, SOIL STERILANTS, AND THE WASHING OF EQUIPMENT USED TO APPLY THESE MATERIALS, IS PROHIBITED WITHIN PLANTED AREAS.
8. CONTRACTOR SHALL MAINTAIN EXISTING PLANTING WITHIN THE JOB SITE FENCE ENCLOSURE DURING DEMOLITION AND CONSTRUCTION PHASES. EXISTING IRRIGATION SYSTEMS SHALL EITHER REMAIN OPERATIONAL FOR CONTRACTOR'S USE OR CONTRACTOR SHALL HAND-WATER EXISTING PLANT MATERIALS AT LEAST ONCE A WEEK. TURF SHALL BE MOWED AT LEAST ONCE EVERY TWO WEEKS.
9. REPAIR EXISTING IRRIGATION SYSTEMS DAMAGED DURING THE EXECUTION OF THIS CONTRACT. REPLACE PLANT MATERIALS DAMAGED, DECLINING IN HEALTH, SUFFERING DIEBACK, THAT HAVE LOST FORM AND SIZE, OR THAT DIE DURING THE CONSTRUCTION PERIOD, WITH THE SAME SPECIE OF EQUAL OR GREATER SIZE.
10. REPAIR ASPHALT PARKING LOTS, SPEED BUMPS AND PAINTED CROSSWALKS DAMAGED BY THE EXECUTION OF THIS CONTRACT TO ORIGINAL OR BETTER CONDITION. REPAINT CROSSWALKS AND SPEED BUMP STRIPING THEIR FULL LENGTHS ACROSS ROADWAYS.
11. FOR ADDITIONAL SITE WORK ADJACENT TO BUILDINGS NOT SHOWN ON THIS SHEET, SEE BUILDING FLOOR PLANS.
12. FOR SITE REPAIR WORK NOT SHOWN ON ARCHITECTURAL PLANS, SEE ELECTRICAL SITE PLAN SHEET E001.

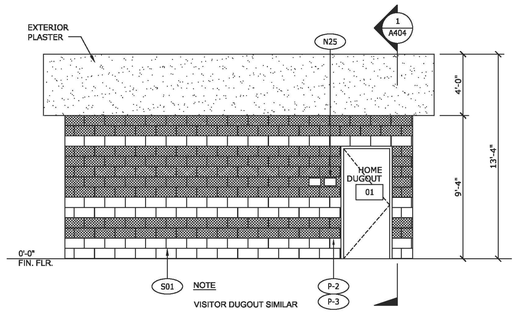

HOME BASEBALL DUGOUT - WEST ELEVATION SCALE: 1/4"=1'-0" | 6

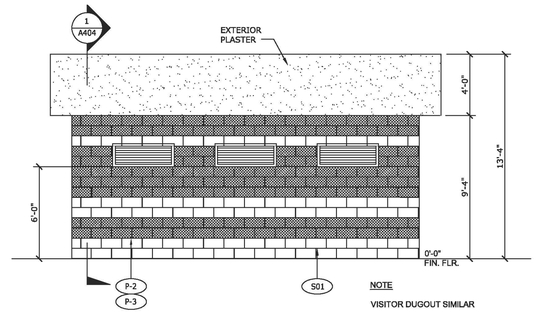

HOME BASEBALL DUGOUT - EAST ELEVATION SCALE: 1/4"=1'-0" | 3

GENERAL NOTES

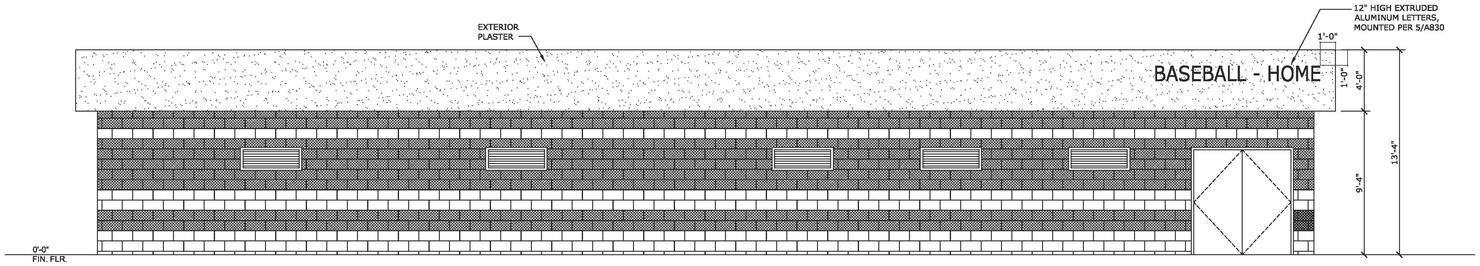

HOME BASEBALL DUGOUT - NORTH ELEVATION SCALE: 1/4"=1'-0" | 2

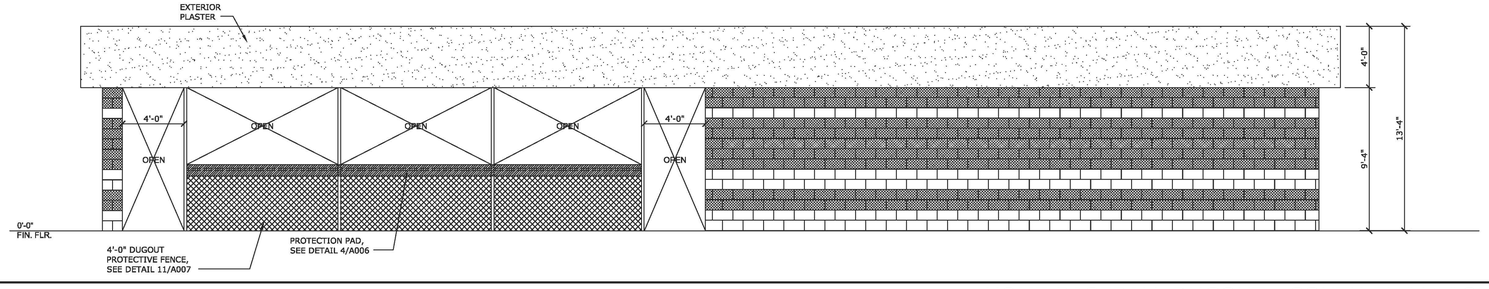

HOME BASEBALL DUGOUT - SOUTH ELEVATION SCALE: 1/4"=1'-0" | 1

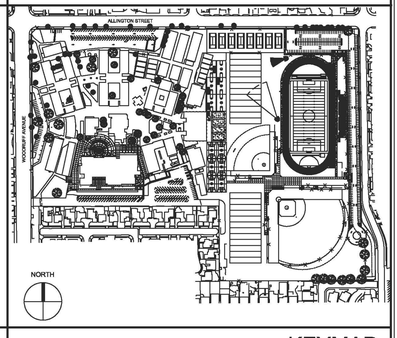

KEYMAP

STATE:

IDENTIFICATION STAMP
DIV. OF THE STATE ARCHITECT
APP: 03-124281 INC:
REVIEWED FOR
SS ☑ FLS ☑ ACS ☑
DATE: 02/04/2025

ARCHITECT:

architecture
westbergwhite
7700 IRVINE CENTER DR. STE. 100
IRVINE, CA 92618
(714) 508-1780 (714) 508-1780 FAX

LICENSED ARCHITECT
PAUL DEBRITS WESTBERG
C-11045
EXP.9-2025
STATE OF CALIFORNIA

CONSULTANT:

PROJECT NAME:

Bellflower Unified School District
Mayfair High School Athletics Fields
6000 North Woodruff Ave
Lakewood, California 90713

CLIENT:

BELLFLOWER UNIFIED SCHOOL DISTRICT
16703 S. Clark Ave.
BELLFLOWER, CALIFORNIA 90706

Rev.	Date	Description

JOB NO: 15008.01
DATE: 01/13/2025
DRAWN: TG, XY
CHECK: RB, JG
ARCHITECT: PDW
ENGINEER:

SHEET DESCRIPTION:
BASEBALL DUGOUTS - EXTERIOR ELEVATIONS (HOME & VISITOR)

SHEET NO:
A405

SEATING COUNT
PER TABLE 11B-221.2.1.1
EACH BLEACHER SECTION (HOME & VISITOR)
NUMBER OF SEATS IN EACH ASSEMBLY AREA: 74
NUMBER OF WHEEL CHAIR SPACES REQ.: 4; PROVIDED: 4
NUMBER OF COMPANION SEATS REQ.: 4; PROVIDED: 4
TOTAL SEATING PER BLEACHER UNIT: 82
TOTAL SEAT COUNT: 164

ASSISTIVE LISTENING SYSTEM CALCULATION
PER 11B-219.3
152 SEATS X 4% = 7 RECEIVERS

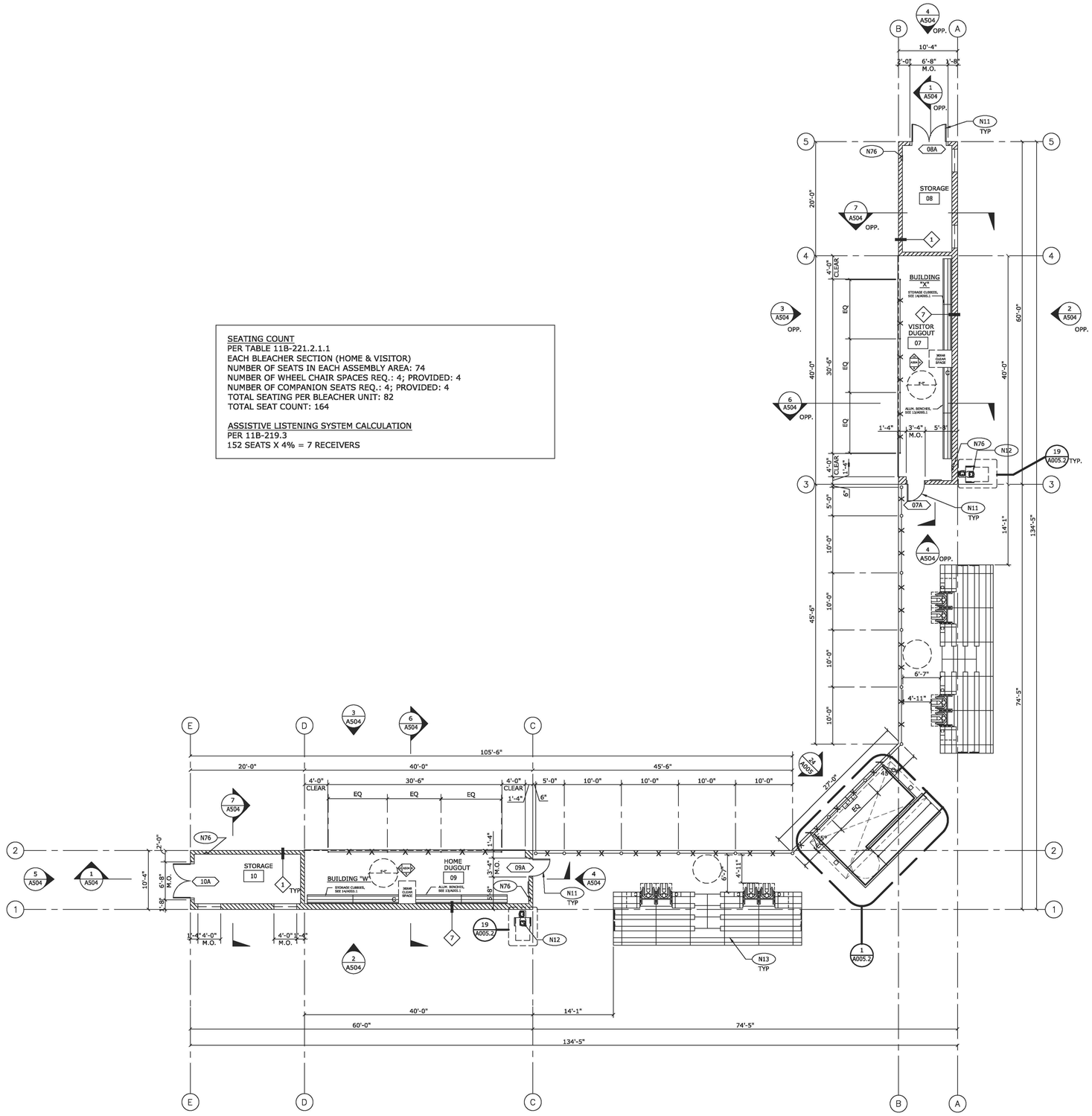

SOFTBALL DUGOUTS - FLOOR PLANS SCALE: 1/8"=1'-0" | 1

0' 2' 4' 8' 16' 32'

NORTH

N11	INSTALL NEW DOOR, FRAME & HARDWARE. SEE DOOR SCHEDULE ON SHEET A701.
N12	(N) DRINKING FOUNTAIN W/ HOSE BIBB. SEE 19/A005.2 & 1/A004 AND PLUMB DWGS
N13	(N) ALUM. 5 ROW BLEACHERS, SEE BB1 - BB5. NOTE: BLEACHERS 5 ROWS OF SEATS OR LESS, ABOVE GRADE, NOT PART OF DSA REVIEW & APPROVAL PER 2022 CAL. ADMIN. CODE SEC. 4-314.
N76	(N) FIRE EXTINGUISHER CABINET, SEE 9/A830

KEYNOTES

1. FOR TYPICAL SYMBOLS SEE SHEET G001.
2. ALL ITEMS SHOWN OR NOTED ARE EXISTING, UNLESS INDICATED OTHERWISE AS NEW.
3. PROTECT AND SAFEGUARD FROM DAMAGE ALL EXISTING FINISHES AND WORK TO REMAIN.
4. INSTALL TEMPORARY 6' HIGH CHAIN LINK FENCE ENCLOSURES WITH LOCKABLE GATES AS REQUIRED FOR CONSTRUCTION ACCESS AT CONTRACTOR'S STAGING AREA AND AROUND ALL CONSTRUCTION SITES AS DICTATED BY THE PHASING SCHEDULE.
5. WHERE REMOVAL OF CONCRETE WALKS, MOWSTRIPS, CURBS AND GUTTERS IS REQUIRED TO INSTALL UNDERGROUND UTILITIES, REMOVE THE CONCRETE WORK TO THE NEAREST EXISTING EXPANSION OR CONTROL JOINT (SAWCUT IF REQUIRED). MOWSTRIPS, CURBS AND GUTTERS MAY BE REMOVED IN MINIMUM LENGTHS OF 6' IF THE DISTANCE BETWEEN EXISTING JOINTS IS 12' OR MORE. REPLACE REMOVED WORK WITH REINFORCED CONCRETE TO MATCH ADJACENT EXISTING WORK IN PROFILE, JOINT LAYOUT AND FINISH. SEE SHEET A810 FOR SIMILAR DETAILS AND REINFORCING REQUIREMENTS. DOWEL NEW CONCRETE WORK INTO EXISTING PER DETAIL 16/A810.
6. COORDINATE THE REMOVAL, RELOCATION OR MODIFICATION OF EXISTING IRRIGATION LINES WITH THE DISTRICT PRIOR TO ANY TRENCHING, CLEARING AND GRUBBING, OR OTHER SITE EXCAVATIONS REQUIRED FOR NEW CONSTRUCTION.
7. RUN-OFF FROM PETROLEUM PRODUCTS, LIME AND MORTAR, SOIL STERILANTS, AND THE WASHING OF EQUIPMENT USED TO APPLY THESE MATERIALS, IS PROHIBITED WITHIN PLANTED AREAS.
8. CONTRACTOR SHALL MAINTAIN EXISTING PLANTING WITHIN THE JOB SITE FENCE ENCLOSURE DURING DEMOLITION AND CONSTRUCTION PHASES. EXISTING IRRIGATION SYSTEMS SHALL EITHER REMAIN OPERATIONAL FOR CONTRACTOR'S USE OR CONTRACTOR SHALL HAND-WATER EXISTING PLANT MATERIALS AT LEAST ONCE A WEEK. TURF SHALL BE MOWED AT LEAST ONCE EVERY TWO WEEKS.
9. REPAIR EXISTING IRRIGATION SYSTEMS DAMAGED DURING THE EXECUTION OF THIS CONTRACT. REPLACE PLANT MATERIALS DAMAGED, DECLINING IN HEALTH, SUFFERING DIEBACK, THAT HAVE LOST FORM AND SIZE, OR THAT DIE DURING THE CONSTRUCTION PERIOD, WITH THE SAME SPECIE OF EQUAL OR GREATER SIZE.
10. REPAIR ASPHALT PARKING LOTS, SPEED BUMPS AND PAINTED CROSSWALKS DAMAGED BY THE EXECUTION OF THIS CONTRACT TO ORIGINAL OR BETTER CONDITION. REPAINT CROSSWALKS AND SPEED BUMP STRIPING THEIR FULL LENGTHS ACROSS ROADWAYS.
11. FOR ADDITIONAL SITE WORK ADJACENT TO BUILDINGS NOT SHOWN ON THIS SHEET, SEE BUILDING FLOOR PLANS.
12. FOR SITE REPAIR WORK NOT SHOWN ON ARCHITECTURAL PLANS, SEE ELECTRICAL SITE PLAN SHEET E001.

GENERAL NOTES

- CONCRETE MASONRY WALL, SEE STRUCTURAL DWGS
- CHAINLINK FENCING, SEE A008 FOR DETAILS
- INTERIOR FULL HEIGHT, ONE HOUR FIRE-RATED PARTITION
- FULL HEIGHT PLUMBING WALL, 4" U.N.O.
- FE — WALL MOUNTED FIRE EXTINGUISHER. SEE 4/A830
- A / # — WALL TYPE, SEE A830 FOR DETAILS
- ACCESSIBLE CLEAR SPACE: 5' DIAMETER TURNING SPACE
- ACCESSIBLE WORKSTATION / CLEAR SPACE: 30" x 48" (U.N.O.)
- A — WINDOW TYPE, SEE A702 FOR DETAILS
- 101 — DOOR TYPE, SEE A701 FOR DETAILS

WALL LEGEND

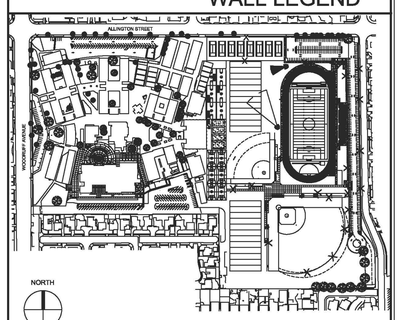

KEYMAP

STATE:

IDENTIFICATION STAMP
DIV. OF THE STATE ARCHITECT
APP: 03-124281 INC:
REVIEWED FOR
SS ☑ FLS ☑ ACS ☑
DATE: 02/04/2025

ARCHITECT:

architecture
westbergwhite
7700 IRVINE CENTER DR. STE. 100
IRVINE, CA 92618
(714) 508-1780 (714) 508-1780 FAX

LICENSED ARCHITECT — I HEREBY CERTIFY UNDER PENALTY OF PERJURY UNDER THE LAWS OF THE STATE OF CALIFORNIA — C-11045 EXP 8-2025

CONSULTANT:

PROJECT NAME:

Bellflower Unified School District
Mayfair High School Athletics Fields
6000 North Woodruff Ave
Lakewood, California 90713

CLIENT:

BELLFLOWER UNIFIED SCHOOL DISTRICT
16703 S. Clark Ave.
BELLFLOWER, CALIFORNIA 90706

Δ	Rev. Date	Description

JOB NO:	15008.01
DATE:	01/13/2025
DRAWN:	TG, XY
CHECK:	RB, JG
ARCHITECT:	PDW
ENGINEER:	

SHEET DESCRIPTION:
SOFTBALL DUGOUTS - FLOOR PLANS (HOME & VISITOR)

SHEET NO:

A501

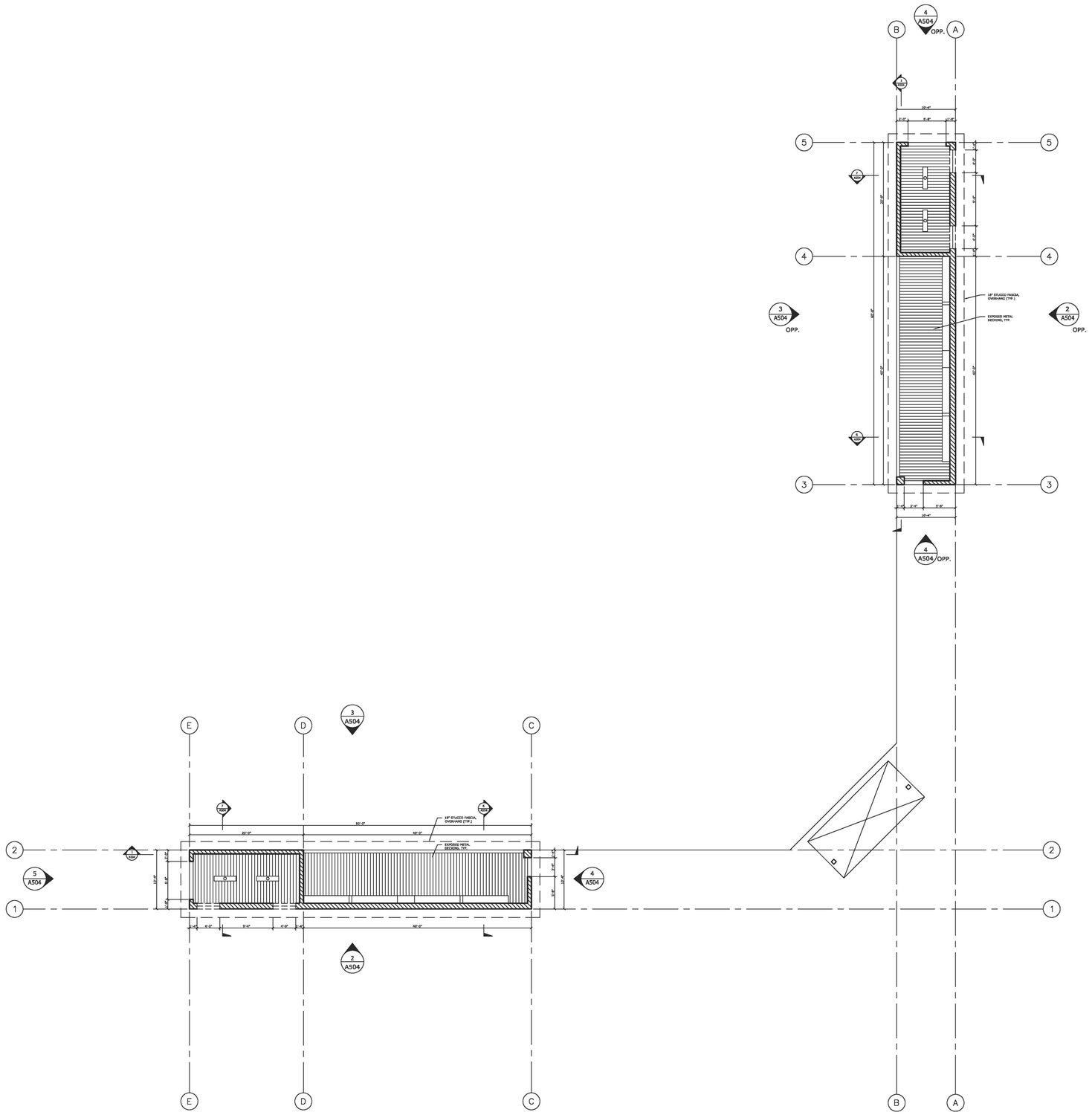

SOFTBALL DUGOUTS - REFLECTED CEILING PLANS SCALE: 1/8"=1'-0" 1

UNDERSIDE OF METAL DECKING

GYP. BOARD CEILING

PLASTER CEILING

SURFACE MOUNTED LED LIGHT FIXTURE - SEE ELECTRICAL DRAWINGS

CEILING LEGEND

1. FOR TYPICAL SYMBOLS SEE SHEET G001.
2. ALL ITEMS SHOWN OR NOTED ARE EXISTING, UNLESS INDICATED OTHERWISE AS NEW.
3. PROTECT AND SAFEGUARD FROM DAMAGE ALL EXISTING FINISHES AND WORK TO REMAIN.
4. INSTALL TEMPORARY 6' HIGH CHAIN LINK FENCE ENCLOSURES WITH LOCKABLE GATES AS REQUIRED FOR CONSTRUCTION ACCESS AT CONTRACTOR'S STAGING AREA AND AROUND ALL CONSTRUCTION SITES AS DICTATED BY THE PHASING SCHEDULE.
5. WHERE REMOVAL OF CONCRETE WALKS, MOWSTRIPS, CURBS AND GUTTERS IS REQUIRED TO INSTALL UNDERGROUND UTILITIES, REMOVE THE CONCRETE WORK TO THE NEAREST EXISTING EXPANSION OR CONTROL JOINT (SAWCUT IF REQUIRED). MOWSTRIPS, CURBS AND GUTTERS MAY BE REMOVED IN MINIMUM LENGTHS OF 6' IF THE DISTANCE BETWEEN EXISTING JOINTS IS 12' OR MORE. REPLACE REMOVED WORK WITH REINFORCED CONCRETE TO MATCH ADJACENT EXISTING WORK IN PROFILE, JOINT LAYOUT AND FINISH. SEE SHEET A810 FOR SIMILAR DETAILS AND REINFORCING REQUIREMENTS. DOWEL NEW CONCRETE WORK INTO EXISTING PER DETAIL 16/A810.
6. COORDINATE THE REMOVAL, RELOCATION OR MODIFICATION OF EXISTING IRRIGATION LINES WITH THE DISTRICT PRIOR TO ANY TRENCHING, CLEARING AND GRUBBING, OR OTHER SITE EXCAVATIONS REQUIRED FOR NEW CONSTRUCTION.
7. RUN-OFF FROM PETROLEUM PRODUCTS, LIME AND MORTAR, SOIL STERILANTS, AND THE WASHING OF EQUIPMENT USED TO APPLY THESE MATERIALS, IS PROHIBITED WITHIN PLANTED AREAS.
8. CONTRACTOR SHALL MAINTAIN EXISTING PLANTING WITHIN THE JOB SITE FENCE ENCLOSURE DURING DEMOLITION AND CONSTRUCTION PHASES. EXISTING IRRIGATION SYSTEMS SHALL EITHER REMAIN OPERATIONAL FOR CONTRACTOR'S USE OR CONTRACTOR SHALL HAND-WATER EXISTING PLANT MATERIALS AT LEAST ONCE A WEEK. TURF SHALL BE MOWED AT LEAST ONCE EVERY TWO WEEKS.
9. REPAIR EXISTING IRRIGATION SYSTEMS DAMAGED DURING THE EXECUTION OF THIS CONTRACT. REPLACE PLANT MATERIALS DAMAGED, DECLINING IN HEALTH, SUFFERING DIEBACK, THAT HAVE LOST FORM AND SIZE, OR THAT DIE DURING THE CONSTRUCTION PERIOD, WITH THE SAME SPECIE OF EQUAL OR GREATER SIZE.
10. REPAIR ASPHALT PARKING LOTS, SPEED BUMPS AND PAINTED CROSSWALKS DAMAGED BY THE EXECUTION OF THIS CONTRACT TO ORIGINAL OR BETTER CONDITION. REPAINT CROSSWALKS AND SPEED BUMP STRIPING THEIR FULL LENGTHS ACROSS ROADWAYS.
11. FOR ADDITIONAL SITE WORK ADJACENT TO BUILDINGS NOT SHOWN ON THIS SHEET, SEE BUILDING FLOOR PLANS.
12. FOR SITE REPAIR WORK NOT SHOWN ON ARCHITECTURAL PLANS, SEE ELECTRICAL SITE PLAN SHEET E001.

GENERAL NOTES

CONCRETE MASONRY WALL, SEE STRUCTURAL DWGS

CHAINLINK FENCING, SEE A008 FOR DETAILS

INTERIOR FULL HEIGHT, ONE HOUR FIRE-RATED PARTITION

FULL HEIGHT PLUMBING WALL, 4" U.N.O.

FE — WALL MOUNTED FIRE EXTINGUISHER. SEE 4/A830

A / # — WALL TYPE, SEE A830 FOR DETAILS

ACCESSIBLE CLEAR SPACE:
5' DIAMETER TURNING SPACE
ACCESSIBLE WORKSTATION / CLEAR SPACE:
30" x 48" (U.N.O.)

A — WINDOW TYPE, SEE A702 FOR DETAILS

101 — DOOR TYPE, SEE A701 FOR DETAILS

WALL LEGEND

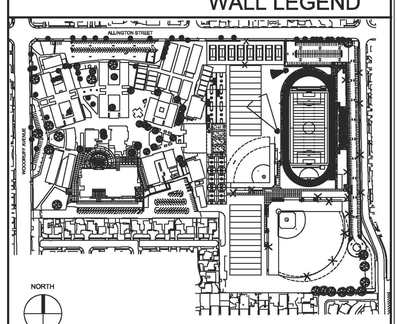

KEYMAP

STATE:

IDENTIFICATION STAMP
DIV. OF THE STATE ARCHITECT
APP: 03-124281 INC:
REVIEWED FOR
SS ☑ FLS ☑ ACS ☑
DATE: 02/04/2025

ARCHITECT:

architecture
westbergwhite
7700 IRVINE CENTER DR. STE. 100
IRVINE, CA 92618
(714) 508-1780 (714) 508-1780 FAX

LICENSED ARCHITECT — REGISTRATION EXPIRES — C-11045 09-9-2025 — STATE OF CALIFORNIA

CONSULTANT:

PROJECT NAME:

Bellflower Unified School District
Mayfair High School Athletics Fields
6000 North Woodruff Ave
Lakewood, California 90713

CLIENT:

BELLFLOWER UNIFIED SCHOOL DISTRICT
16703 S. Clark Ave.
BELLFLOWER, CALIFORNIA 90706

Rev.	Date	Description

JOB NO: 15008.01
DATE: 01/13/2025
DRAWN: TG, XY
CHECK: RB, JG
ARCHITECT: PDW
ENGINEER:

SHEET DESCRIPTION:
SOFTBALL DUGOUTS - REFLECTED CEILING PLANS (HOME & VISITOR)

SHEET NO:
A502

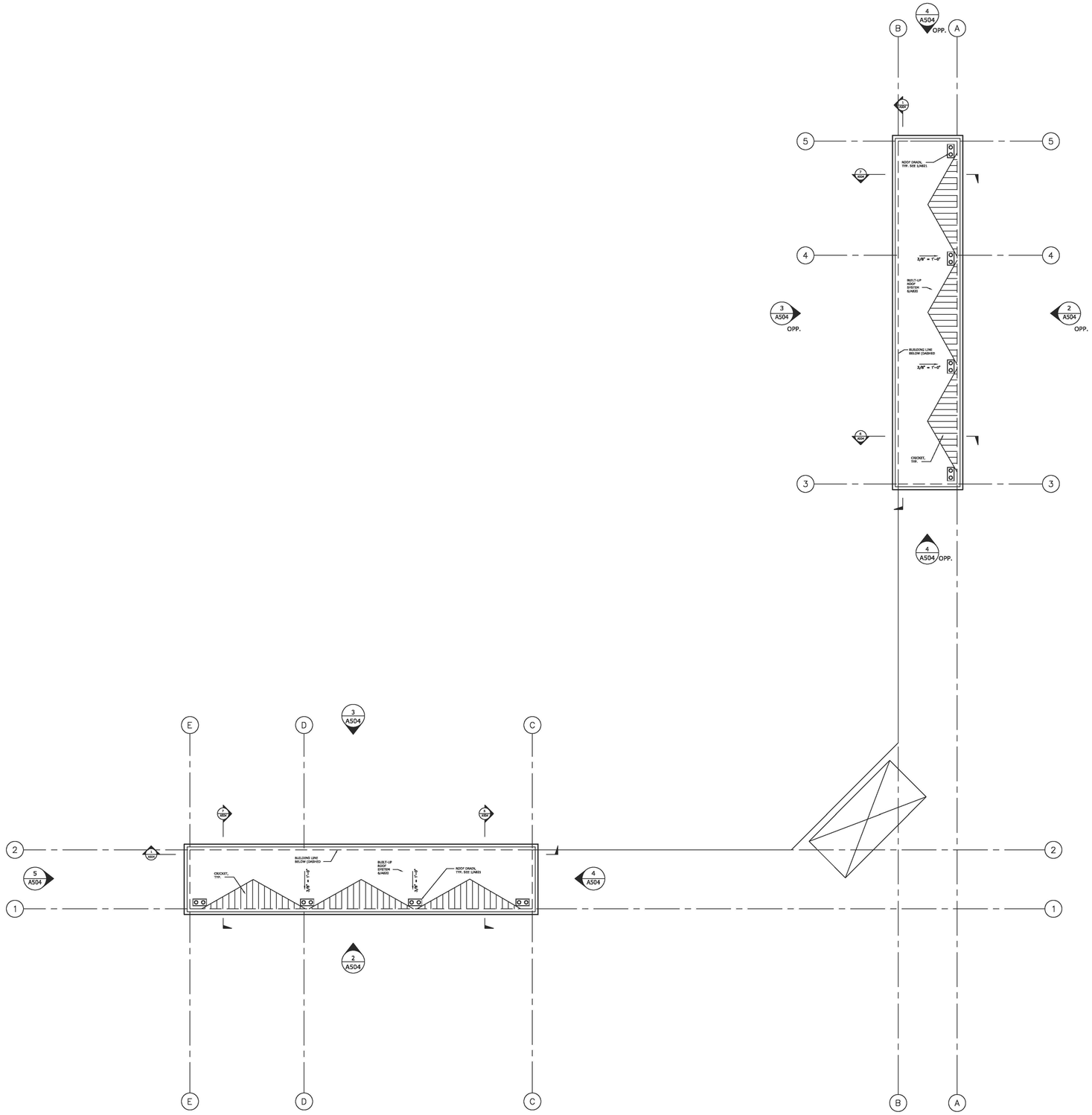

KEYNOTES

1. FOR TYPICAL SYMBOLS SEE SHEET G001.
2. ALL ITEMS SHOWN OR NOTED ARE EXISTING, UNLESS INDICATED OTHERWISE AS NEW.
3. PROTECT AND SAFEGUARD FROM DAMAGE ALL EXISTING FINISHES AND WORK TO REMAIN.
4. INSTALL TEMPORARY 6' HIGH CHAIN LINK FENCE ENCLOSURES WITH LOCKABLE GATES AS REQUIRED FOR CONSTRUCTION ACCESS AT CONTRACTOR'S STAGING AREA AND AROUND ALL CONSTRUCTION SITES AS DICTATED BY THE PHASING SCHEDULE.
5. WHERE REMOVAL OF CONCRETE WALKS, MOWSTRIPS, CURBS AND GUTTERS IS REQUIRED TO INSTALL UNDERGROUND UTILITIES, REMOVE THE CONCRETE WORK TO THE NEAREST EXISTING EXPANSION OR CONTROL JOINT (SAWCUT IF REQUIRED). MOWSTRIPS, CURBS AND GUTTERS MAY BE REMOVED IN MINIMUM LENGTHS OF 6' IF THE DISTANCE BETWEEN EXISTING JOINTS IS 12' OR MORE. REPLACE REMOVED WORK WITH REINFORCED CONCRETE TO MATCH ADJACENT EXISTING WORK IN PROFILE, JOINT LAYOUT AND FINISH. SEE SHEET A810 FOR SIMILAR DETAILS AND REINFORCING REQUIREMENTS. DOWEL NEW CONCRETE WORK INTO EXISTING PER DETAIL 16/A810.
6. COORDINATE THE REMOVAL, RELOCATION OR MODIFICATION OF EXISTING IRRIGATION LINES WITH THE DISTRICT PRIOR TO ANY TRENCHING, CLEARING AND GRUBBING, OR OTHER SITE EXCAVATIONS REQUIRED FOR NEW CONSTRUCTION.
7. RUN-OFF FROM PETROLEUM PRODUCTS, LIME AND MORTAR, SOIL STERILANTS, AND THE WASHING OF EQUIPMENT USED TO APPLY THESE MATERIALS, IS PROHIBITED WITHIN PLANTED AREAS.
8. CONTRACTOR SHALL MAINTAIN EXISTING PLANTING WITHIN THE JOB SITE FENCE ENCLOSURE DURING DEMOLITION AND CONSTRUCTION PHASES. EXISTING IRRIGATION SYSTEMS SHALL EITHER REMAIN OPERATIONAL FOR CONTRACTOR'S USE OR CONTRACTOR SHALL HAND-WATER EXISTING PLANT MATERIALS AT LEAST ONCE A WEEK. TURF SHALL BE MOWED AT LEAST ONCE EVERY TWO WEEKS.
9. REPAIR EXISTING IRRIGATION SYSTEMS DAMAGED DURING THE EXECUTION OF THIS CONTRACT. REPLACE PLANT MATERIALS DAMAGED, DECLINING IN HEALTH, SUFFERING DIEBACK, THAT HAVE LOST FORM AND SIZE, OR THAT DIE DURING THE CONSTRUCTION PERIOD, WITH THE SAME SPECIE OF EQUAL OR GREATER SIZE.
10. REPAIR ASPHALT PARKING LOTS, SPEED BUMPS AND PAINTED CROSSWALKS DAMAGED BY THE EXECUTION OF THIS CONTRACT TO ORIGINAL OR BETTER CONDITION. REPAINT CROSSWALKS AND SPEED BUMP STRIPING THEIR FULL LENGTHS ACROSS ROADWAYS.
11. FOR ADDITIONAL SITE WORK ADJACENT TO BUILDINGS NOT SHOWN ON THIS SHEET, SEE BUILDING FLOOR PLANS.
12. FOR SITE REPAIR WORK NOT SHOWN ON ARCHITECTURAL PLANS, SEE ELECTRICAL SITE PLAN SHEET E001.

GENERAL NOTES

ROOF SLOPE DIRECTION

CRICKET

ROOF AND OVERFLOW DRAIN, SEE 1/A821

ROOF ACCESS HATCH

ROOF LEGEND

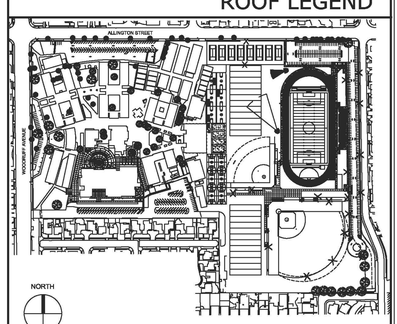

SOFTBALL DUGOUTS - ROOF PLANS SCALE: 1/8"=1'-0" | 1

KEYMAP

STATE:

IDENTIFICATION STAMP
DIV. OF THE STATE ARCHITECT
APP: 03-124281 INC:
REVIEWED FOR
SS ☑ FLS ☑ ACS ☑
DATE: 02/04/2025

ARCHITECT:

architecture
westbergwhite
7700 IRVINE CENTER DR. STE. 100
IRVINE, CA 92618
(714) 508-1780 (714) 508-1780 FAX

LICENSED ARCHITECT
STEPHEN DEBRITZ WESTBERG
C-11045
09-9-2025
STATE OF CALIFORNIA

CONSULTANT:

PROJECT NAME:

Bellflower Unified School District
Mayfair High School Athletics Fields
6000 North Woodruff Ave
Lakewood, California 90713

CLIENT:

BELLFLOWER UNIFIED SCHOOL DISTRICT
16703 S. Clark Ave.
BELLFLOWER, CALIFORNIA 90706

Rev.	Date	Description

JOB NO:	15008.01
DATE:	01/13/2025
DRAWN:	TG, XY
CHECK:	RB, JG
ARCHITECT:	PDW
ENGINEER:	

SHEET DESCRIPTION:
SOFTBALL DUGOUTS - ROOF PLANS (HOME & VISITOR)

SHEET NO:
A503

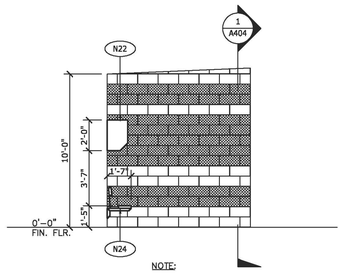

NOTE:
OPPOSITE AT VISITOR BASEBALL DUGOUT.

SOFTBALL DUGOUTS - INTERIOR ELEVATION (HOME) SCALE: 1/4"=1'-0" | 10

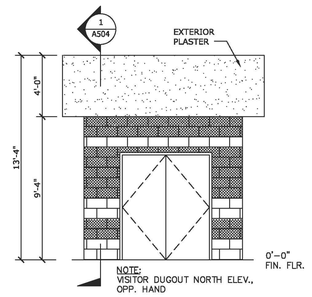

NOTE:
VISITOR DUGOUT NORTH ELEV.,
OPP. HAND

SOFTBALL DUGOUTS. - WEST ELEVATION (HOME) SCALE: 1/4"=1'-0" | 5

N16	(N) CHAINLINK BARRIER FENCING, SEE DETAIL 2/A008
N21	(N) METAL BASEBALL BAT RACK, DETAIL 13/A830
N22	(N) METAL OVERHEAD HELMET STORAGE CUBBY AND COAT RACK, DETAIL 13/A830
N23	(N) CONC SLAB PER STRUCT. DWGS.
N24	(N) ALUMINUM TEAM BENCH, WALL MOUNTED. SEE 19/A601
N62	(N) METAL STORAGE BASE UNIT, 46W X 37H X 32D, SEE SPECS.
S01	(N) CMU WALL, TOOLED CONCAVE JOINTS, TYP.
P-2	PAINT - NEW LIGHT BRONZE, MATCH 548 CONSTRUCTION SPECIALTIES
P-3	PAINT - ONYX GRAY, MATCH 560 CONSTRUCTION SPECIALTIES (ALTERNATIVE)

KEYNOTES

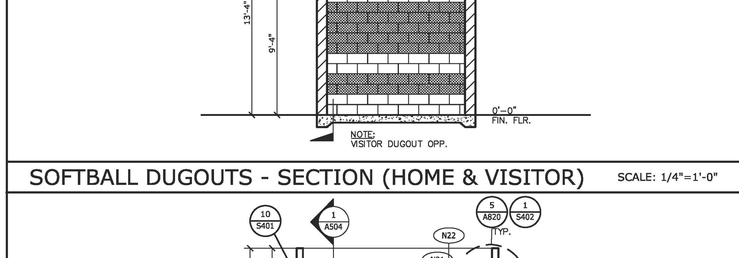

NOTE:
OPPOSITE AT VISITOR BASEBALL DUGOUT.

SOFTBALL DUGOUTS - INTERIOR ELEVATION (HOME) SCALE: 1/4"=1'-0" | 9

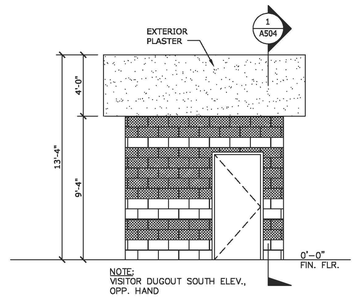

NOTE:
VISITOR DUGOUT SOUTH ELEV.,
OPP. HAND

SOFTBALL DUGOUTS. - EAST ELEVATION (HOME) SCALE: 1/4"=1'-0" | 4

1. FOR TYPICAL SYMBOLS SEE SHEET G001.
2. ALL ITEMS SHOWN OR NOTED ARE EXISTING, UNLESS INDICATED OTHERWISE AS NEW.
3. PROTECT AND SAFEGUARD FROM DAMAGE ALL EXISTING FINISHES AND WORK TO REMAIN.
4. INSTALL TEMPORARY 6' HIGH CHAIN LINK FENCE ENCLOSURES WITH LOCKABLE GATES AS REQUIRED FOR CONSTRUCTION ACCESS AT CONTRACTOR'S STAGING AREA AND AROUND ALL CONSTRUCTION SITES AS DICTATED BY THE PHASING SCHEDULE.
5. WHERE REMOVAL OF CONCRETE WALKS, MOWSTRIPS, CURBS AND GUTTERS IS REQUIRED TO INSTALL UNDERGROUND UTILITIES, REMOVE THE CONCRETE WORK TO THE NEAREST EXISTING EXPANSION OR CONTROL JOINT (SAWCUT IF REQUIRED). MOWSTRIPS, CURBS AND GUTTERS MAY BE REMOVED IN MINIMUM LENGTHS OF 6' IF THE DISTANCE BETWEEN EXISTING JOINTS IS 12' OR MORE. REPLACE REMOVED WORK WITH REINFORCED CONCRETE TO MATCH ADJACENT EXISTING WORK IN PROFILE, JOINT LAYOUT AND FINISH. SEE SHEET A810 FOR SIMILAR DETAILS AND REINFORCING REQUIREMENTS. DOWEL NEW CONCRETE WORK INTO EXISTING PER DETAIL 16/A810.
6. COORDINATE THE REMOVAL, RELOCATION OR MODIFICATION OF EXISTING IRRIGATION LINES WITH THE DISTRICT PRIOR TO ANY TRENCHING, CLEARING AND GRUBBING, OR OTHER SITE EXCAVATIONS REQUIRED FOR NEW CONSTRUCTION.
7. RUN-OFF FROM PETROLEUM PRODUCTS, LIME AND MORTAR, SOIL STERILANTS, AND THE WASHING OF EQUIPMENT USED TO APPLY THESE MATERIALS, IS PROHIBITED WITHIN PLANTED AREAS.
8. CONTRACTOR SHALL MAINTAIN EXISTING PLANTING WITHIN THE JOB SITE FENCE ENCLOSURE DURING DEMOLITION AND CONSTRUCTION PHASES. EXISTING IRRIGATION SYSTEMS SHALL EITHER REMAIN OPERATIONAL FOR CONTRACTOR'S USE OR CONTRACTOR SHALL HAND-WATER EXISTING PLANT MATERIALS AT LEAST ONCE A WEEK. TURF SHALL BE MOWED AT LEAST ONCE EVERY TWO WEEKS.
9. REPAIR EXISTING IRRIGATION SYSTEMS DAMAGED DURING THE EXECUTION OF THIS CONTRACT. REPLACE PLANT MATERIALS DAMAGED, DECLINING IN HEALTH, SUFFERING DIEBACK, THAT HAVE LOST FORM AND SIZE, OR THAT DIE DURING THE CONSTRUCTION PERIOD, WITH THE SAME SPECIE OF EQUAL OR GREATER SIZE.
10. REPAIR ASPHALT PARKING LOTS, SPEED BUMPS AND PAINTED CROSSWALKS DAMAGED BY THE EXECUTION OF THIS CONTRACT TO ORIGINAL OR BETTER CONDITION. REPAINT CROSSWALKS AND SPEED BUMP STRIPING THEIR FULL LENGTHS ACROSS ROADWAYS.
11. FOR ADDITIONAL SITE WORK ADJACENT TO BUILDINGS NOT SHOWN ON THIS SHEET, SEE BUILDING FLOOR PLANS.
12. FOR SITE REPAIR WORK NOT SHOWN ON ARCHITECTURAL PLANS, SEE ELECTRICAL SITE PLAN SHEET E001.

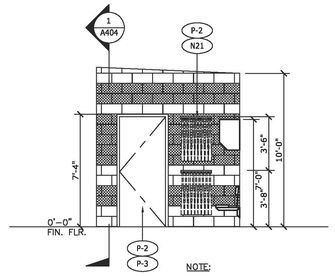

NOTE:
OPPOSITE AT VISITOR BASEBALL DUGOUT.

SOFTBALL DUGOUTS - INTERIOR ELEVATION (HOME) SCALE: 1/4"=1'-0" | 8

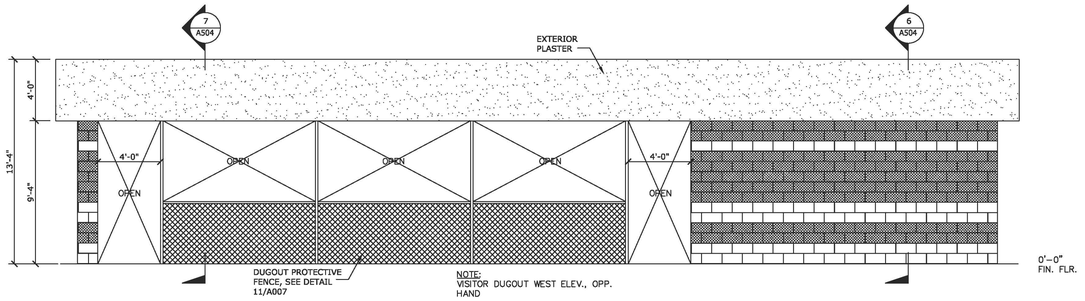

NOTE:
VISITOR DUGOUT WEST ELEV., OPP.
HAND

SOFTBALL DUGOUTS - NORTH ELEVATION (HOME) SCALE: 1/4"=1'-0" | 3

GENERAL NOTES

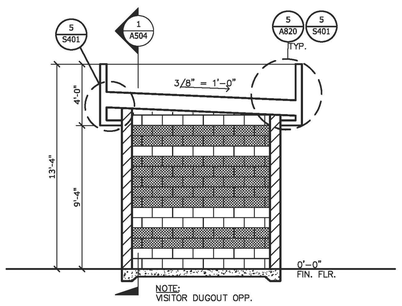

NOTE:
VISITOR DUGOUT OPP.

SOFTBALL DUGOUTS - SECTION (HOME & VISITOR) SCALE: 1/4"=1'-0" | 7

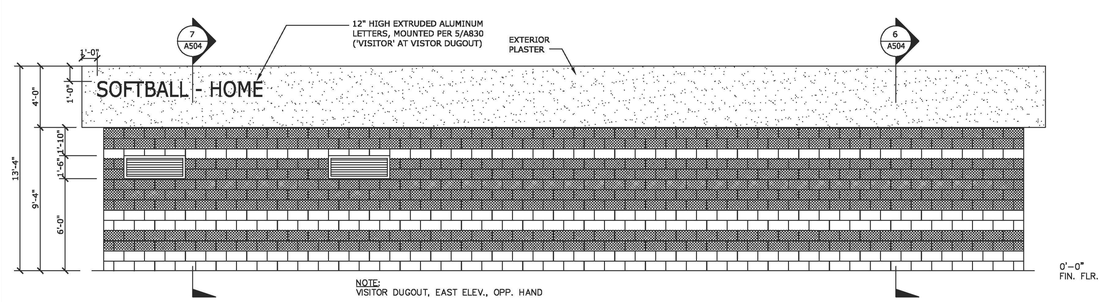

NOTE:
VISITOR DUGOUT, EAST ELEV., OPP. HAND

SOFTBALL DUGOUTS - SOUTH ELEVATION (HOME) SCALE: 1/4"=1'-0" | 2

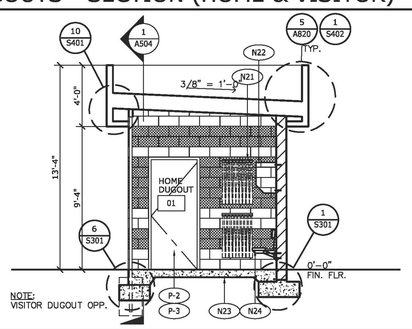

NOTE:
VISITOR DUGOUT OPP.

SOFTBALL DUGOUTS - SECTION (HOME & VISITOR) SCALE: 1/4"=1'-0" | 6

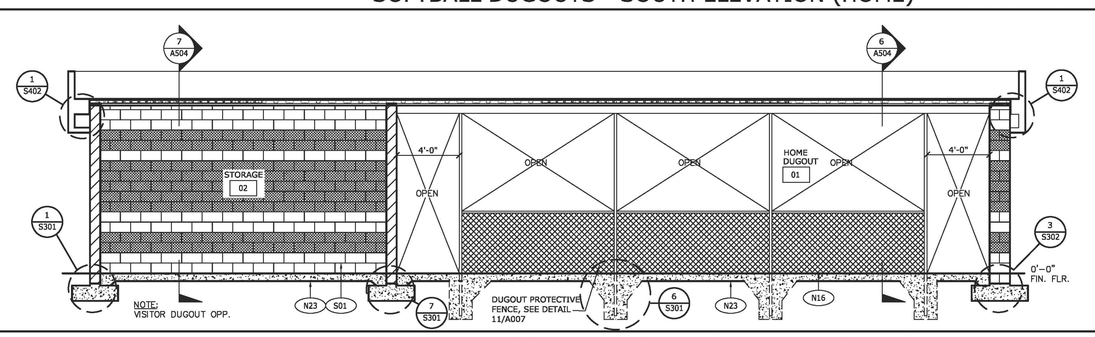

NOTE:
VISITOR DUGOUT OPP.

DUGOUT PROTECTIVE
FENCE, SEE DETAIL
11/A007

SOFTBALL DUGOUTS - SECTION (HOME & VISITOR) SCALE: 1/4"=1'-0" | 1

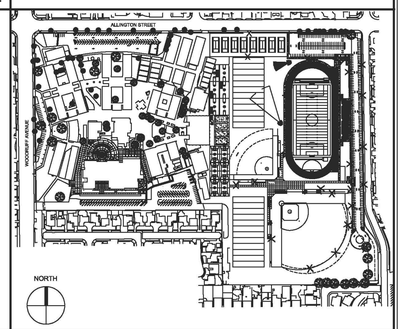

KEYMAP

STATE:

IDENTIFICATION STAMP
DIV. OF THE STATE ARCHITECT
APP: 03-124281 INC:
REVIEWED FOR
SS ☑ FLS ☑ ACS ☑
DATE: 02/04/2025

ARCHITECT:

architecture
westbergwhite
7700 IRVINE CENTER DR. STE. 100
IRVINE, CA 92618
(714) 508-1780 (714) 508-1780 FAX

LICENSED ARCHITECT
JEFFREY DEBRITS WESTBERG
C-11045
EXP.9-2025
STATE OF CALIFORNIA

CONSULTANT:

PROJECT NAME:

Bellflower Unified School District
Mayfair High School Athletics Fields
6000 North Woodruff Ave
Lakewood, California 90713

CLIENT:

BELLFLOWER UNIFIED
SCHOOL DISTRICT
16703 S. Clark Ave.
BELLFLOWER, CALIFORNIA 90706

△	Rev. Date	Description

JOB NO:	15008.01
DATE:	01/13/2025
DRAWN:	TG, XY
CHECK:	RB, JG
ARCHITECT:	PDW
ENGINEER:	

SHEET DESCRIPTION:
SOFTBALL DUGOUTS -
SECTIONS, EXTERIOR, &
INTERIOR ELEVATIONS
(HOME & VISITOR)

SHEET NO:

A504

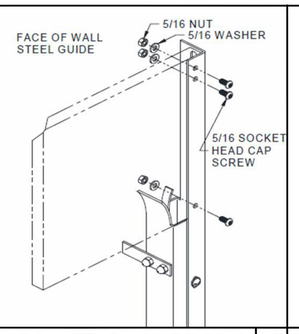

COILING DR HEAD SUPPORT 30

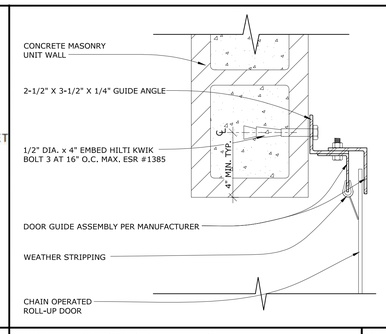

COILING DOOR JAMB 3" = 1'-0" 25

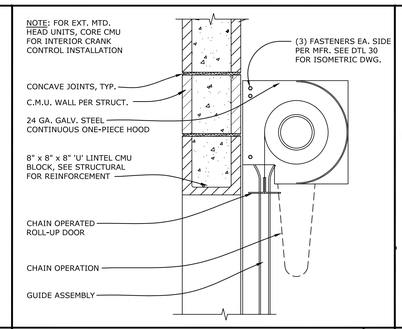

COILING DOOR HEAD 1-1/2" = 1'-0" 20

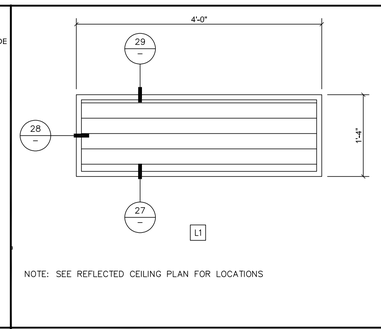

NOTE: SEE REFLECTED CEILING PLAN FOR LOCATIONS

LOUVER TYPES

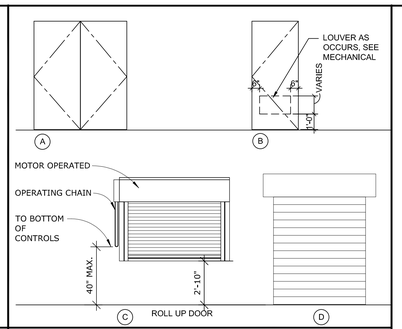

DOOR TYPES

1. DOOR SHALL BE 1-3/4" THICK, UNLESS OTHERWISE NOTED.
2. SEE DOOR SCHEDULES FOR ALL ASSEMBLIES TO BE FIRE RESISTIVE CONSTRUCTION. ALL GLASS IN FIRE DOORS SHALL CONFORM TO C.B.C. SECTION 716.5.8 - GLAZING MATERIAL.
3. PROVIDE ROOM SIGNAGE FOR ALL DOORS PER G002 AND G003.
4. ALL DOOR LOUVERS TO BE HEAVY DUTY, NON-VISION TYPE. SEE MECHANICAL DRAWINGS FOR LOUVER SIZE.
5. SCHEDULE DIMENSIONS REFER TO TOTAL FRAME OPENING. BOTH DOOR LEAVES ARE THE SAME SIZE UNLESS NOTED OTHERWISE.
6. GLAZING IN NON-RATED EXTERIOR DOORS SHALL BE 1/4" THICK TINTED GLASS, TEMPERED. GLAZING IN NON-RATED INTERIOR DOORS SHALL BE 1/4" THICK CLEAR GLASS, TEMPERED. GLAZING IN FIRE DOORS SHALL BE FIRE-PROTECTION-RATED, AND COMPLY WITH THE SIZE LIMITATIONS OF NFPA 80, C.B.C. SECTION 716.5.8
7. ALL FRAMES ARE HOLLOW METAL WITH FACTORY PRIME AND FIELD PAINT.
8. AT FIRE-RATED DOOR ASSEMBLIES, EXTEND FINISH 1/2" MINIMUM INTO HOLLOW METAL FRAMES.
9. SEE MECHANICAL PLANS FOR DOOR LOUVERS, SIZES, AND LOCATIONS AND DOOR UNDERCUTS.
10. PROVIDE KICK PLATES AT ALL SOLID CORE WOOD DOORS PER SPECIFICATIONS.
11. ALL GLAZING IN DOORS AND WITHIN 5'-0" OF DOORS TO BE TEMPERED U.N.O.
12. SMOKE AND DRAFT CONTROL DOOR ASSEMBLY SHALL MEET THE REQUIREMENTS AND TESTED IN ACCORDANCE WITH UL 1784, AND C.B.C. SECTION 710.5.2.2.
13. MAX EFFORT TO OPERATE DOORS WITH CLOSERS SHALL NOT EXCEED 5 POUNDS FOR EXTERNAL AND INTERNAL DOORS. FIRE DOORS SHALL NOT EXCEED 15 POUNDS.
14. SEE FLOOR PLANS FOR ADDITIONAL SIGNAGE.
15. ALL FIRE RESISTIVE ASSEMBLIES TO COMPLY WITH CBC 703.
16. ALL FIRE DOOR ASSEMBLIES IN CORRIDORS AND SMOKE BARRIERS SHALL COMPLY WITH C.B.C. SECTION 716.5.3.
17. FLOOR-MOUNTED DOORSTOPS AND SIMILAR OBSTRUCTIONS TO BE INSTALLED 4" MAXIMUM FROM THE FACE OF THE WALL OR PARTITION.
18. HAND ACTIVATED DOOR OPENING HARDWARE SHALL BE CENTERED BETWEEN 30" AND 44" ABOVE FINISH FLOOR. (36" IS PREFERRED)
19. EXTERIOR DOORS SHALL BE OPERABLE FROM THE INSIDE WITHOUT THE USE OF A KEY, ANY SPECIAL KNOWLEDGE OT EFFORT.
20. DEAD BOLTS ARE NOT PERMITTED UNLESS OPERABLE WITH A SINGLE EFFORT LEVER TYPE HARDWARE.

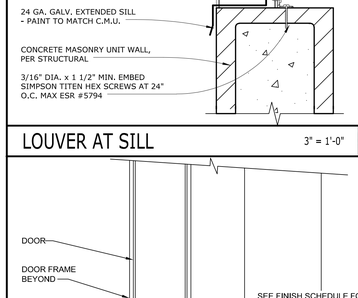

LOUVER AT HEAD 3" = 1'-0" 29

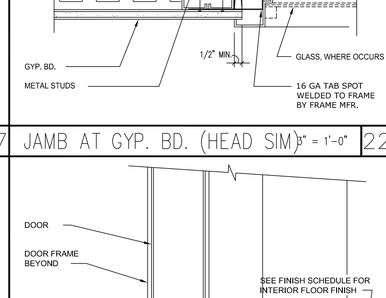

EXT. HM DOOR HEAD @ CMU 3" = 1'-0" 24

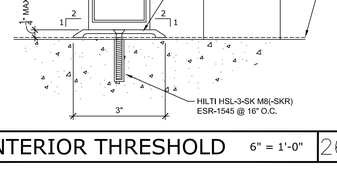

LOUVER AT JAMB 3" = 1'-0" 28

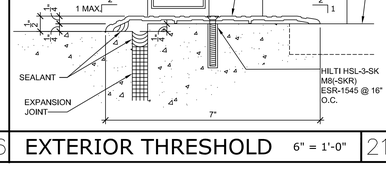

EXT. HM DOOR JAMB @ CMU 3" = 1'-0" 23

LOUVER AT SILL 3" = 1'-0" 27

JAMB AT GYP. BD. (HEAD SIM) 3" = 1'-0" 22

INTERIOR THRESHOLD 6" = 1'-0" 26

EXTERIOR THRESHOLD 6" = 1'-0" 21

DOOR SCHEDULE

NO.	SPACE NAME	FLOOR MATERIAL	FLOOR FINISH	FLOOR COLOR	BASE MATERIAL	BASE HEIGHT	BASE FINISH	BASE COLOR	WALL MATERIAL	WALL FINISH	WALL COLOR	CEILING MATERIAL	CEILING FINISH	CEILING COLOR	REMARKS
BASEBALL DUGOUT/HOME AND VISITOR															
01	HOME DUGOUT	CONC	SEALER						CMU		VARIES	UOS	F	F	
02	STORAGE	CONC	SEALER						CMU		VARIES	UOS	F	F	
03	STORAGE	CONC	SEALER						CMU		VARIES	UOS	F	F	
04	ELECTRICAL	CONC	SEALER		RESIL	4"	F		CMU/GYP BD	F	VARIES	UOS	F	F	RESIL BASE AT GYPBD WALL ONLY
05	STORAGE	CONC	SEALER						CMU		VARIES	UOS	F	F	
06	VISITOR DUGOUT	CONC	SEALER						CMU		VARIES	UOS	F	F	
SOFTBALL DUGOUT/HOME AND VISITOR															
07	VISITOR DUGOUT	CONC	SEALER						CMU		VARIES	UOS	F	F	
08	STORAGE	CONC	SEALER						CMU		VARIES	UOS	F	F	
09	HOME DUGOUT	CONC	SEALER						CMU		VARIES	UOS	F	F	
10	STORAGE	CONC	SEALER						CMU		VARIES	UOS	F	F	
CONCESSIONS BUILDING															
101	GIRL'S RESTROOM	CT	F		CT	6"	F		CMU/CT	F	VARIES	GYP BD	P		4.25"W X 6"H; MATCH WALL TILE SPEC.
102	BOY'S RESTROOM	CT	F		CT	6"	F		CMU/CT	F	VARIES	GYP BD	P		4.25"W X 6"H; MATCH WALL TILE SPEC.
103	CONCESSIONS	CONC	SEALER		RESIL	4"	F		CMU		VARIES	GYP BD	P		RESIL BASE AT GYPBD WALL ONLY
104	STORAGE	CONC	SEALER		RESIL	4"	F		CMU		VARIES	GYP BD	P		RESIL BASE AT GYPBD WALL ONLY
105	JANITOR	CONC	SEALER		RESIL	4"	F		CMU		VARIES	GYP BD	P		RESIL BASE AT GYPBD WALL ONLY
STORAGE BUILDING															
101	STORAGE	CONC	SEALER		-	-	-			-	-	-	-		-

DOOR DESCRIPTION NO.	SIZE (W X H)	TYPE	MATERIAL	FINISH	COLOR	FRAME AND HARDWARE MATERIAL	FINISH	CLOSER	PANIC HDW.	HDW. GROUP	COLOR	ASSEMBLY RATING	DETAILS HEAD	JAMB STRIKE	JAMB HINGE	THRESHOLD	SIGNAGE DOOR	SIGNAGE WALL	COMMENTS
BASEBALL DUGOUT/HOME AND VISITOR																			
01A	3'-0" x 7'-2"	B	HM	P	-	HM	P	YES	-	01	-	-	24/-	23/-	23/-	21/-	-	1E/G003	HOME DUGOUT
01B	3'-0" x 7'-2"	B	HM	P	P-2	HM	P	YES	-	03	P-3	45	24/-	23/-	23/-	21/-	-	1E/G003	HOME DUGOUT/STORAGE
02A	PR 3'-0" x 7'-2"	A	HM	P	P-2	HM	P	YES	-	04	P-2	-	24/-	23/-	23/-	21/-	1H/G003	1E/G003	STORAGE
04A	3'-0" x 7'-2"	B	HM	P	-	HM	P	YES	YES	02	-	45	24/-	23/-	23/-	26/-	1H/G003	1E/G003	ELECTRICAL
05A	PR 3'-0" x 7'-2"	A	HM	P	P-2	HM	P	YES	-	05	P-2	-	24/-	23/-	23/-	21/-	-	1E/G003	STORAGE
06A	3'-0" x 7'-2"	B	HM	P	-	HM	P	YES	-	01	-	-	24/-	23/-	23/-	21/-	-	1E/G003	VISITOR DUGOUT
SOFTBALL DUGOUT/HOME AND VISITOR																			
07A	3'-0" x 7'-2"	B	HM	P	-	HM	P	YES	-	01	-	-	24/-	23/-	23/-	21/-	-	1E/G003	VISITOR DUGOUT
08A	PR 3'-0" x 7'-2"	A	HM	P	P-2	HM	P	YES	-	05	P-3		24/-	23/-	23/-	21/-	-	1E/G003	STORAGE
09A	3'-0" x 7'-2"	B	HM	P	P-2	HM	P	YES	-	01	P-2	-	24/-	23/-	23/-	21/-	-	1E/G003	HOME DUGOUT
10A	PR 3'-0" x 7'-2"	A	HM	P	P-2	HM	P	YES	-	05	P-2	-	24/-	23/-	23/-	21/-	-	1E/G003	STORAGE
CONCESSIONS BUILDING																			
CB1	3'-0" x 7'-2"	B	HM	P	-	HM	P	YES	-	06	-	-	24/-	23/-	23/-	21/-	1C/G003	1A/G003	GIRLS RESTROOM
CB2	3'-0" x 7'-2"	B	HM	P	P-2	HM	P	YES	-	06	P-3	-	24/-	23/-	23/-	21/-	1D/G003	1B/G003	BOYS RESTROOM
CB3	3'-0" x 7'-2"	B	HM	P	P-2	HM	P	YES	-	07	P-2	-	24/-	23/-	23/-	21/-	-	1E/G003	CONCESSIONS
CB4	3'-0" x 7'-2"	B	HM	P	P-2	HM	P	-		08	P-2		22/-	22/-	22/-	26/-	-	1E/G003	STORAGE
CB5	3'-0" x 7'-2"	B	HM	P	P-2	HM	P	YES	-	07	P-2	-	24/-	23/-	23/-	21/-	-	1E/G003	CUSTODIAN
CB6	2'-6" x 7'-2"	B	HM	P	P-2	HM	P	-	-	09	P-2	-	24/-	23/-	23/-	21/-	-	1E/G003	
CB7	10'-0" x 5'-2"	C	STL	F	P-2	STL	F	-	-	-	P-2	-	20/-	25/-	25/-	-	-	1E/G003	CONCESSIONS
STORAGE BUILDING																			
SB1	3'-0" x 6'-10"	B	HM	P	P-2	HM	P	YES	-	07A	P-2	-	24/-	23/-	23/-	21/-	-	1E/G003	
SB2	PR 3'-0" x 6'-10"	B	HM	P	P-2	HM	P	YES	-	07A	P-3	-	24/-	23/-	23/-	21/-	-	1E/G003	
SB4	12'-0" x 8'-0"	D	STL	F	P-2	STL	F	-	-	-	P-2	-	20/-	25/-	23/-	-	-	1E/G003	
TICKET BOOTHS																			
TB1	3'-0" x 7'-0"	B	HM	P	P-2	HM	P	YES	-	07A	P-2	-	24/-	23/-	23/-	21/-	-	1E/G003	TICKET BOOTH
TB2	3'-0" x 7'-0"	B	HM	P	P-2	HM	P	YES	-	07A	P-3	-	24/-	23/-	23/-	21/-	-	1E/G003	TICKET BOOTH

DOOR SCHEDULE NOTES

FLOOR/BASE:

CONC	CONCRETE
CPT	CARPET
CT	CERAMIC TILE
CTCB	CERAMIC TILE COVED BASE
LT	LINOLEUM TILE
S	SEALED
T	TERRAZZO
TSVB	TOP SET VINYL BASE
Q	QUARRY TILE

WALL/CEILING:

ACT	2x4 ACOUSTICAL CEILING TILE SYSTEM
CONC	CONCRETE
CT	CERAMIC TILE
EXP	EXPOSED TO EXTERIOR
F	FACTORY FINISH
FRP	FIBRE-REINFORCED PLASTIC PANELS
GB	GYPSUM WALLBOARD
MGB	MOLD RESISTANT GYPSUM BOARD
PG	PAINT GLOSS
PLAS	EXTERIOR PLASTER SYSTEM
PSG	PAINT SEMI-GLOSS
UOS	UNDERSIDE OF STRUCTURE

DOORS/WINDOWS:

AL	ALUMINUM
CHN LNK	CHAIN LINK
F	FACTORY FINISH
HM	HOLLOW METAL
P	PAINTED
PR	PAIR OF DOORS
ST	STEEL
T	TEMPERED GLASS
TINT	TINTED GLASS

FINISH/DR/WDW ABBREV

NOTE:
FOR ADDITIONAL INSTALLATION
INFORMATION SEE SCTION 08110

TYP. MULLION AND HEAD WELD C

WELD-IN YOKE & STRAP ANCHOR STEEL STUD PARTITIONS E

STEEL STUD ANCHORD STEEL STUD PARTITIONS D

ADJUSTABLE FLOOR ANCHOR STEEL STUD PARTITIONS E

DOOR FRAME NOTES:

1. REFER TO PROFILE DETAILS
2. ALL HOLLOW METAL FRAME / JAMBS SHALL BE CUT FOR STANDARD UNIT LOCK STRIKES 3/4" HIGH
3. FRAME DIMENSIONS ARE FROM FINISH FRAMING. FRAME DIMENSIONS MAY VARY DUE TO FINISH MATERIAL. SEE DOOR / WINDOW SCHEDULE AND DETAIL CALL OUTS
4. DOORS AND FRAMES PENETRATING 1-HOUR ENCLOSURES SHALL HAVE 45 MIN. LABEL ASSEMBLY. A 90 MINUTE LABEL ASSEMBLY IS REQUIRED AT 2 HOUR WALL
5. FIELD VERIFY FRAME DIMENSIONS
6. VERIFY ALL DOOR AND FRAME DIMENSIONS PRIOR TO FABRICATION
7. DOOR DETAILS SHOWN ON THIS SHEET DESCRIBE DOOR INSTALLED ON ONE OF TWO POSSIBLE SIDES OF DOOR FRAME. SEE FLOOR PLAN FOR SPECIFIC LOCATION

HOLLOW METAL FRAME DETAILS AND NOTE 12" = 1'-0" 1

STATE:

IDENTIFICATION STAMP
DIV. OF THE STATE ARCHITECT
APP: 03-124281 INC:
REVIEWED FOR
SS ☑ FLS ☑ ACS ☑
DATE: 02/04/2025

ARCHITECT:

architecture
westbergwhite
7700 IRVINE CENTER DR. STE. 100
IRVINE, CA 92618
(714) 508-1780 (714) 508-1780 FAX

REGISTERED ARCHITECT
JEFFREY DEBRITS WESTBERG
C-31045
EXP.9-2025
STATE OF CALIFORNIA

CONSULTANT:

PROJECT NAME:

Bellflower Unified School District
Mayfair High School Athletic Fields
6000 North Woodruff Ave
Lakewood, California 90713

CLIENT:

BELLFLOWER UNIFIED
SCHOOL DISTRICT

16703 S. Clark Ave.
BELLFLOWER, CALIFORNIA 90706

Rev.	Date	Description
2		

JOB NO: 15008.01
DATE: 01/13/2025
DRAWN: TG, XY
CHECK: RB, JG
ARCHITECT: PDW
ENGINEER:

SHEET DESCRIPTION:
DOOR, FINISH
SCHEDULES AND DETAILS

SHEET NO:
A701

SPEC SECTION	MATERIAL	DESIGNATION	MANUFACTURER	COLOR NO.	COLOR NAME	REMARKS
04 20 00 CONCRETE UNIT MASONRY	PRECISION CONCRETE BLOCK	CMU-1	ORCO BLOCK CO.	–	WHITE	
	SPLIT FACE CONCRETE BLOCK	CMU-2	ORCO BLOCK CO.	–	WHITE	
	PRECISION CONCRETE BLOCK	CMU-3	ORCO BLOCK CO.	–	WHEAT	
	SPLIT FACE CONCRETE BLOCK	CMU-4	ORCO BLOCK CO.	–	WHEAT	
	PRECISION CONCRETE CAP	CMU-5	ORCO BLOCK CO.	–	WHEAT	
09 65 13 RUBBER BASE	RUBBER BASE	RB-1	JOHNSONITE			
09 90 00 PAINTS AND COATINGS	PAINT	P-1	DUNN-EDWARDS PAINTS	DEA105 LRV 13	CHERRY BOMB RED	HOME DUGOUT: INTERIOR WALL ELEV #3
	PAINT	P-2	DUNN-EDWARDS PAINTS	MATCH	NEW LT BRONZE	DOORS, LOUVERS, FRAMES
	PAINT	P-3	DUNN-EDWARDS PAINTS	MATCH	ONYX GRAY	DOORS, LOUVERS, FRAMES

COLOR SCHEDULE

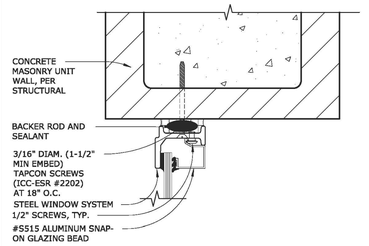

EXT. STL. HEAD @ CMU 6" = 1'-0" 10

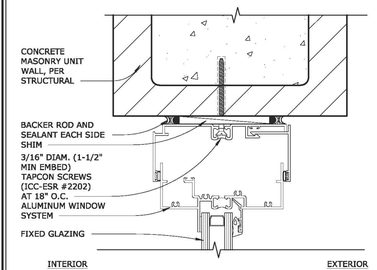

WINDOW HEAD AND JAMB 6" = 1'-0" 5

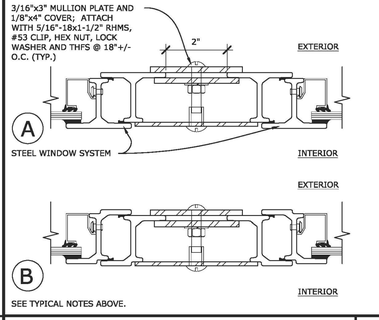

EXT. STL. VERT. PLATE MULLION 3" = 1'-0" 9

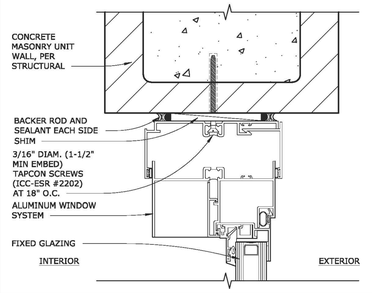

OPERABLE WINDOW JAMB 6" = 1'-0" 4

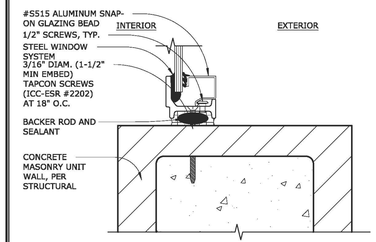

EXT. STL. JAMB @ CMU 3" = 1'-0" 18

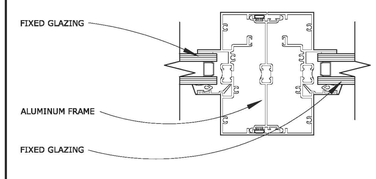

OP.WINDOW VERT. MULLION 6" = 1'-0" 13

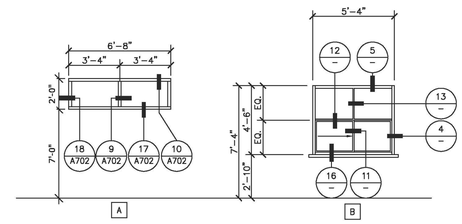

OCCURS AT EA. TICKET BOOTH

WINDOW SCHEDULE

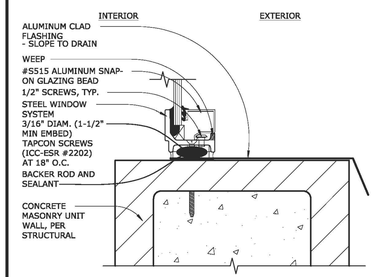

EXT. STL. SILL @ CMU 3" = 1'-0" 17

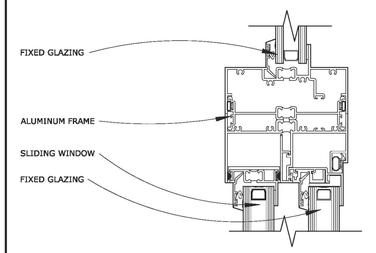

OP. WINDOW - HORIZ. MULLION 6" = 1'-0" 12

1 VERIFY ALL WINDOW DIMENSIONS AT THE JOB SITE.

2 HORIZONTAL DIMENSION FOR PAIR OF DOORS INDICATE TYPICAL DOOR WIDTH.

3 ALL GLAZING BELOW 1'-6" A.F.F AND WITHIN 5'-0" OF A DOOR SHALL BE TEMPERED AND DESIGNATED BY "T" . U.N.O.

4 EACH LIGHT SHALL BEAR THE MFR LABEL DESIGNATING TYPE AND THICKNESS OF GLASS PER 2402a.

5 A PERMANENT LABEL SHALL SPECIFY THE LABELER, STATE THAT SAFETY GLAZING HAS BEEN UTILIZED, SHALL BE ETCHED OR CERAMIC FIRED, AND READABLE FROM THE INSIDE OF THE BUILDING.

6 FOR CURTAINWALL PANELS GREATER THAN 10'-0" IN HEIGHT PROVIDE STEEL REINFORCING IN MULLION AND DOOR JAMB. MANUFACTURER TO PROVIDE CALCULATIONS TO DETERMINE APPROPRIATE SIZE.

7 ALL EXTERIOR GLAZING SHALL BE TINTED. ALL INTERIOR GLAZING SHALL BE CLEAR.

8 ALL FIRE RESISTIVE OPENINGS SHALL COMPLY WITH THE CBC SECTION 713.

9 ALL TEMPERED AND WIRE GLASS SHALL BE CONSIDERED SAFETY GLAZING AND SHALL COMPLY WITH CBC 715.5 AND 715.

WINDOW NOTES

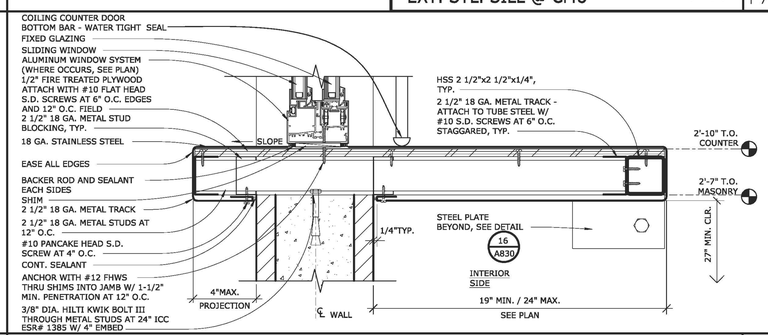

PASS THRU COUNTER 3" = 1'-0" 16

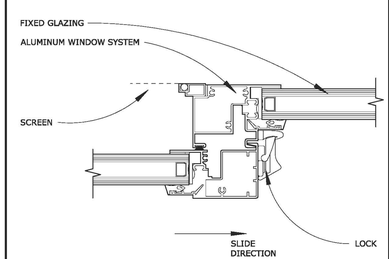

OP.WINDOW VERT. MULLION 6" = 1'-0" 11

STATE:

IDENTIFICATION STAMP
DIV. OF THE STATE ARCHITECT
APP: 03-124281 INC:
REVIEWED FOR
SS ☑ FLS ☑ ACS ☑
DATE: 02/04/2025

ARCHITECT:

architecture
westbergwhite
7700 IRVINE CENTER DR. STE. 100
IRVINE, CA 92618
(714) 508-1780 (714) 508-1780 FAX

LICENSED ARCHITECT — I AFFIX MY SIGNATURE HEREBY — C-11045 EXP.9-2025 — STATE OF CALIFORNIA

CONSULTANT:

PROJECT NAME:

Bellflower Unified School District
Mayfair High School Athletics Fields
6000 North Woodruff Ave
Lakewood, California 90713

CLIENT:

BELLFLOWER UNIFIED SCHOOL DISTRICT
16703 S. Clark Ave.
BELLFLOWER, CALIFORNIA 90706

Δ	Rev. Date	Description

JOB NO:	15008.01
DATE:	01/13/2025
DRAWN:	TG, XY
CHECK:	RB, JG
ARCHITECT:	PDW
ENGINEER:	

SHEET DESCRIPTION:

COLOR & WINDOW SCHEDULE AND DETAILS

SHEET NO:

A702

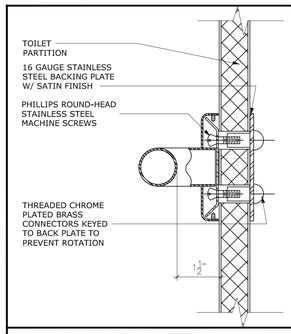

GRAB BAR AT PARTITION 6" = 1'-0" | 30

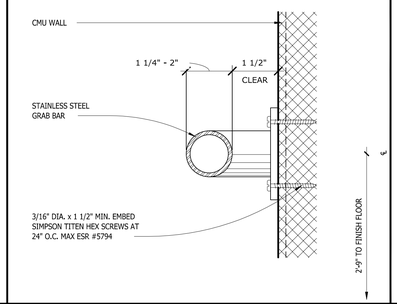

GRAB BAR AT CMU 6" = 1'-0" | 25

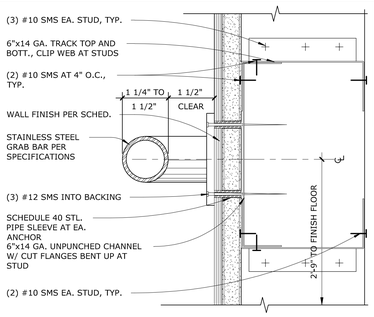

GRAB BAR AT METAL STUD 6" = 1'-0" | 29

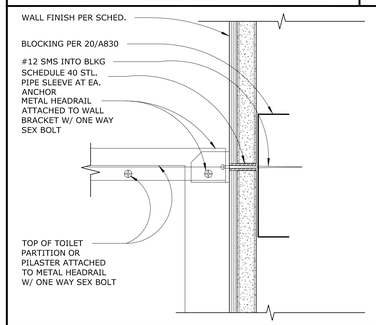

TOILET PARTITION HEAD RAIL 6" = 1'-0" | 28

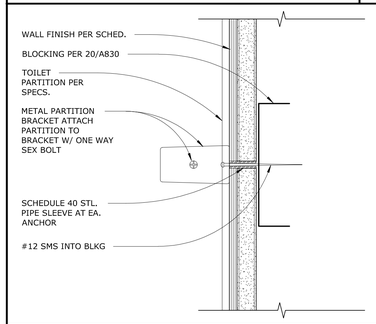

TOILET PARTITION MOUNTING 6" = 1'-0" | 27

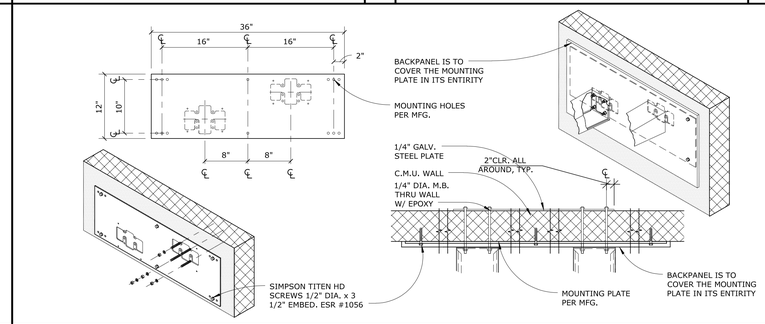

DRINKING FOUNTAIN ANCHORAGE 3/4" = 1'-0" | 17

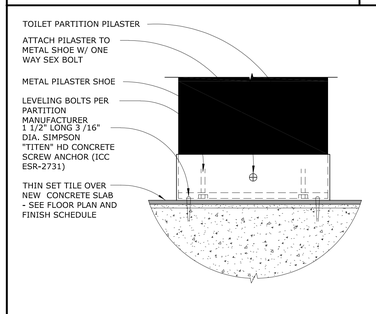

PILASTER SHOE 3" = 1'-0" | 26

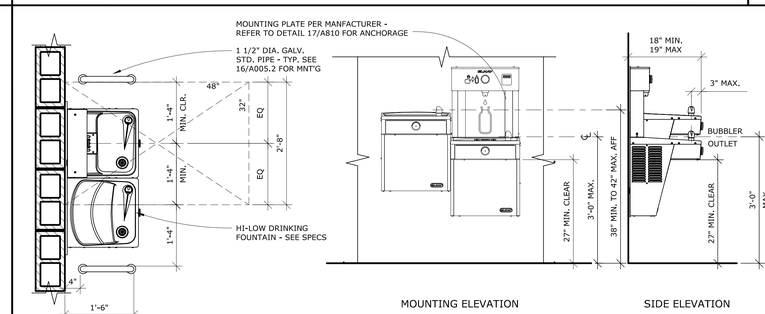

DRINKING FOUNTAIN REQUIREMENTS (ALCOVE) 3/4" = 1'-0" | 16

ITEM	MOUNTING DIMENSION
TOILET CENTERING FROM FINISH FACE OF WALL	18"
TOILET SEAT HEIGHT/DIMENSION TO TOP OF SEAT	17" TO 19"
GRAB BAR HEIGHT (SIDE) - TO CENTERLINE	33"
CENTER LINE OF TOILET PAPER DISPENSER IN FRONT OF TOILET	7" TO 9"
NAPKIN DISPOSAL IN FRONT OF TOILET	12" MAX.
DISPENSER OR MIRROR HEIGHT	40" MAX.
LAVATORY/SINK TOP HEIGHT	34" MAX.
LAVATORY APRON CLEARANCE	29" MIN.
LAVATORY/SINK APRON KNEE CLEARANCE	27" MIN.
URINAL LIP HEIGHT	17" MAX.
URINAL FLUSH HANDLE HEIGHT	44" MAX.
DRINKING FOUNTAIN BUBBLER HEIGHT	36" MAX.
DRINKING FOUNTAIN KNEE CLEARANCE	27" MIN.
RAMP/STAIR HANDRAIL HEIGHT	34" - 38"

MOUNTING HEIGHTS TABLE 3/4" = 1'-0" | 11

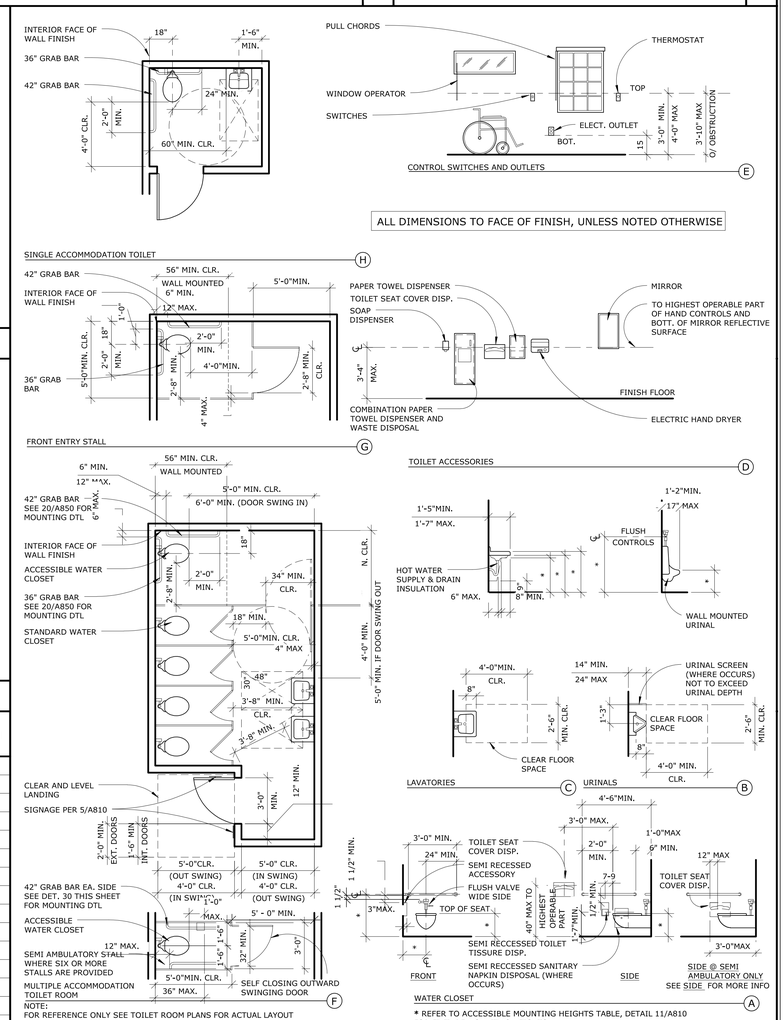

ACCESSIBLITY REQUIREMENTS 1/4" = 1'-0" | 1

STATE:

IDENTIFICATION STAMP
DIV. OF THE STATE ARCHITECT
APP: 03-124281 INC:
REVIEWED FOR
SS ☑ FLS ☑ ACS ☑
DATE: 02/04/2025

ARCHITECT:

architecture
westbergwhite
7700 IRVINE CENTER DR. STE. 100
IRVINE, CA 92618
(714) 508-1780 (714) 508-1780 FAX

LICENSED ARCHITECT GEOFFREY DEBRITZ WESTBERG C-11045 EXP.9-2025 STATE OF CALIFORNIA

CONSULTANT:

PROJECT NAME:

Bellflower Unified School District
Mayfair High School Athletics Fields
6000 North Woodruff Ave
Lakewood, California 90713

CLIENT:

BELLFLOWER UNIFIED SCHOOL DISTRICT
16703 S. Clark Ave.
BELLFLOWER, CALIFORNIA 90706

	Rev. Date	Description
2		

JOB NO: 15008.01
DATE: 01/13/2025
DRAWN: TG, XY
CHECK: RB, JG
ARCHITECT: PDW
ENGINEER:

SHEET DESCRIPTION:
TOILET ROOM & DRINKING FOUNTAIN DETAILS

SHEET NO:
A810

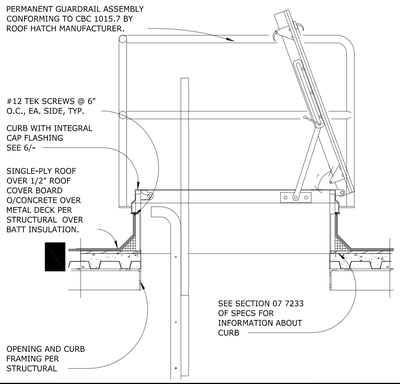

ROOF HATCH 1" = 1'-0" 20

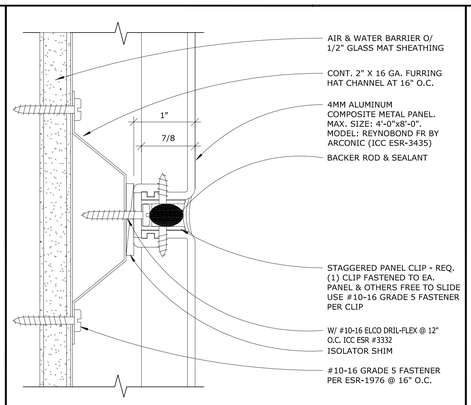

FASTENING PANEL JOINT - HORIZ.. SCALE: 1'-0" = 1'-0" 16

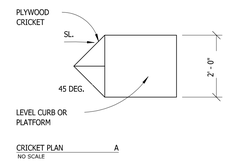

CRICKET PLAN A
NO SCALE

NOTES:
1. ANY SECUREMENT OF UNITS OR SUPPORTS INTO THE HORIZONTAL PLATFORM SURFACE SHALL BE THROUGH SOLID 1/4" NEOPRENE GASKET. APPLY ELASTOMERIC SEALANT ON UNDERSIDE AND TOP OF GASKET IMMEDIATELY PRIOR TO INSTALLING BOLTS.
2. INSTALL PLYWOOD CRICKET ON HIGH SIDE OF PLATFORMS 24" OR WIDER. MITER PLYWOOD CRICKET TO MEET FLUSH WITH DECK AND PLATFORM. PLATFORM SHALL BE RAISED AS NECESSARY TO EXTEND A MINIMUM 7 1/2" ABOVE THE CRICKET (WHERE REQUIRED).
3. PROVIDE SOLID BLOCKING AT ISOLATORS.

MEHCANICAL UNIT CURB SCALE: 3" = 1'-0" 8

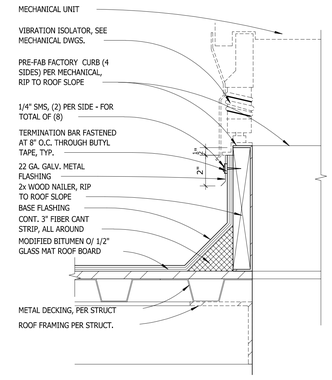

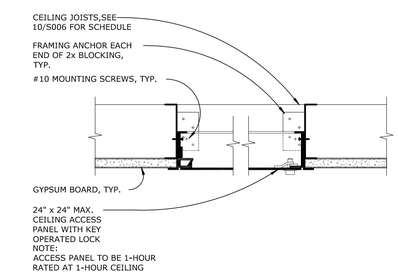

ACCESS PANEL SCALE: 3" = 1'-0" 4

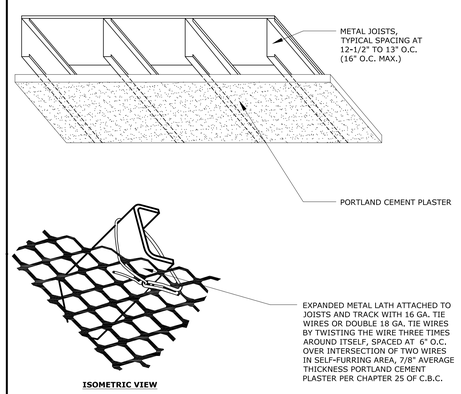

PLASTER SOFFIT - MTL. JOISTS N.T.S. 19

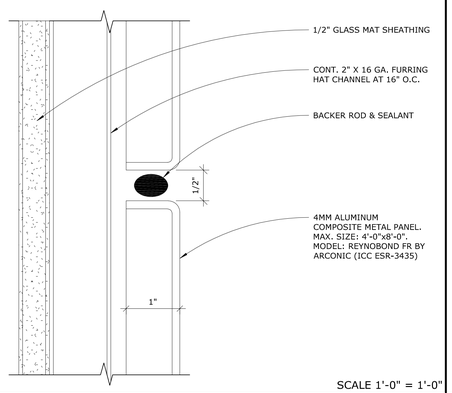

NON-FASTENING PANEL JOINT - VERT. SCALE 1'-0" = 1'-0" 15

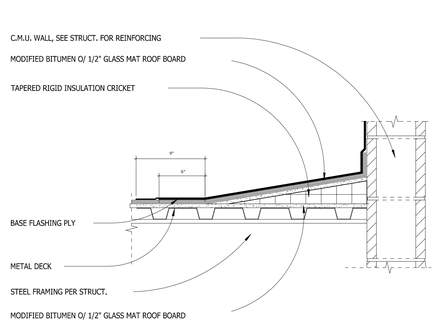

ROOF CRICKET SCALE: 1 1/2" = 1'-0" 11

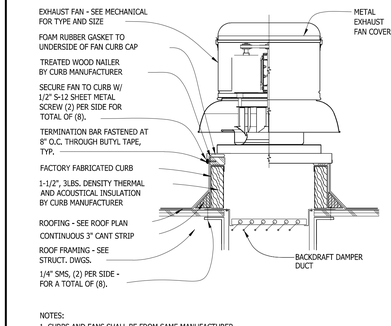

NOTES:
1. CURBS AND FANS SHALL BE FROM SAME MANUFACTURER
2. WHERE DUCTS PENETRATE A FIRE RATED CEILING ROOF ASSEMBLY ENCASE ENTIRE RUN OF DUCT FROM CEILING TO TOP OF ROOF SHEETING WITH 5/8" TYPE "X" GYPSUM BOARD (TYP.)

EXHAUST FAN SCALE: 3" = 1'-0" 7

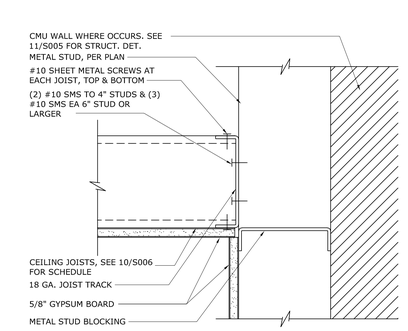

GYP. BD. CEILING @ STUDS SCALE: 3" = 1'-0" 3

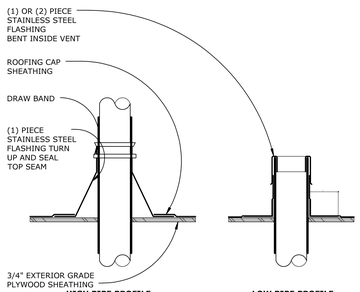

TYP. ROOF PENETRATIONS SCALE: 1 1/2" = 1'-0" 18

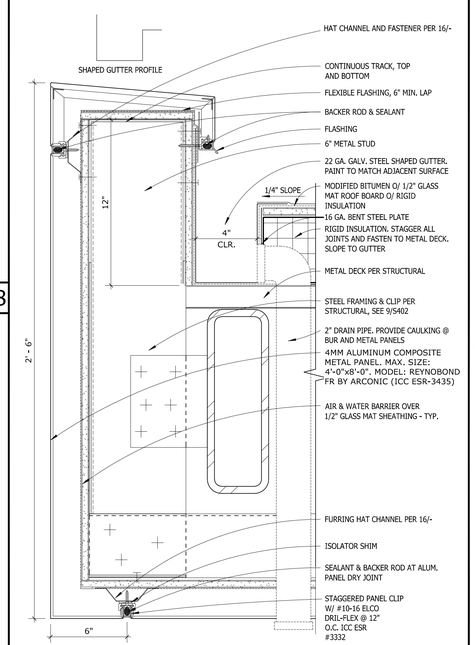

ROOF EDGE W/ GUTTER SCALE: 3" = 1'-0" 13

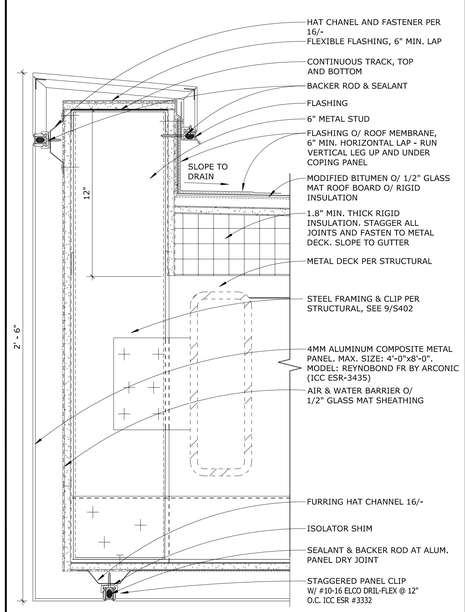

ROOF EDGE SCALE: 3" = 1'-0" 9

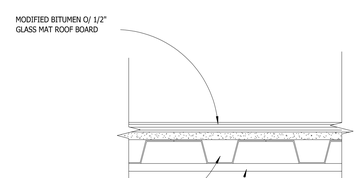

ROOFING O/ MTL. DECK SCALE: 3" = 1'-0" 6

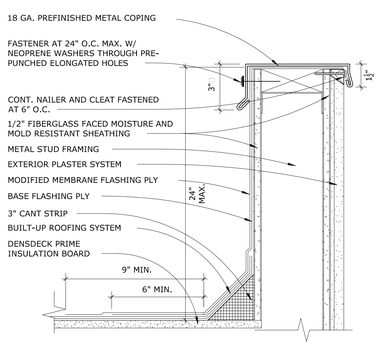

COPING @ MTL. STUD SCALE: 3" = 1'-0" 5

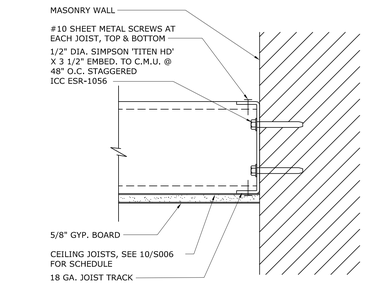

GYP. BD. CEILING @ CMU SCALE: 3" = 1'-0" 2

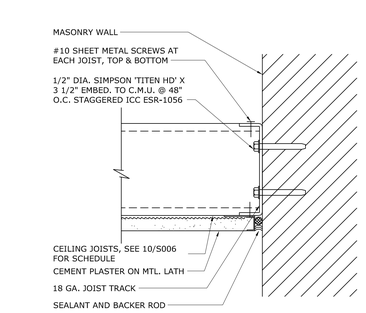

PLASTER CEILING @ CMU SCALE: 3" = 1'-0" 1

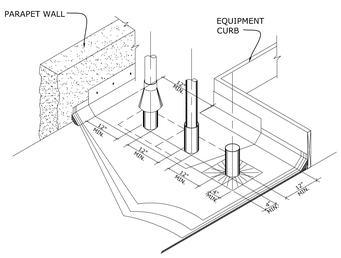

CLEARANCES FOR MULTIPLE PIPES - BETWEEN PIPES, FROM WALLS AND EQUIPMENT CURBS/ PADS.

PENETRATION CLEARANCES N.T.S. 17

STATE:

IDENTIFICATION STAMP
DIV. OF THE STATE ARCHITECT
APP: 03-124281 INC:
REVIEWED FOR
SS ☑ FLS ☑ ACS ☑
DATE: 02/04/2025

ARCHITECT:

architecture
westbergwhite
7700 IRVINE CENTER DR. STE. 100
IRVINE, CA 92618
(714) 508-1780 (714) 508-1780 FAX

LICENSED ARCHITECT JEFF DEBRITZ WESTBERG C-11045 EXP.9-2025 STATE OF CALIFORNIA

CONSULTANT:

PROJECT NAME:

Bellflower Unified School District
Mayfair High School Athletics Fields
6000 North Woodruff Ave
Lakewood, California 90713

CLIENT:

BELLFLOWER UNIFIED SCHOOL DISTRICT

16703 S. Clark Ave.
BELLFLOWER, CALIFORNIA 90706

Rev.	Date	Description

JOB NO:	15008.01
DATE:	01/13/2025
DRAWN:	TG, XY
CHECK:	RB, JG
ARCHITECT:	PDW
ENGINEER:	

SHEET DESCRIPTION:

ROOF AND CEILING DETAILS

SHEET NO:

A820

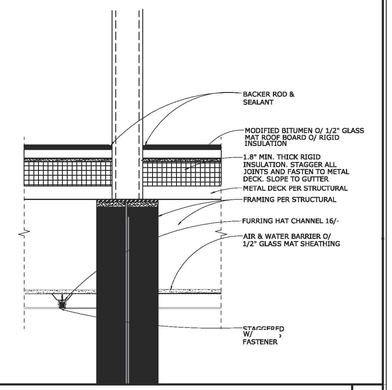

COLUMN @ HIGH ROOF SCALE: 1 1/2" = 1'-0" 3

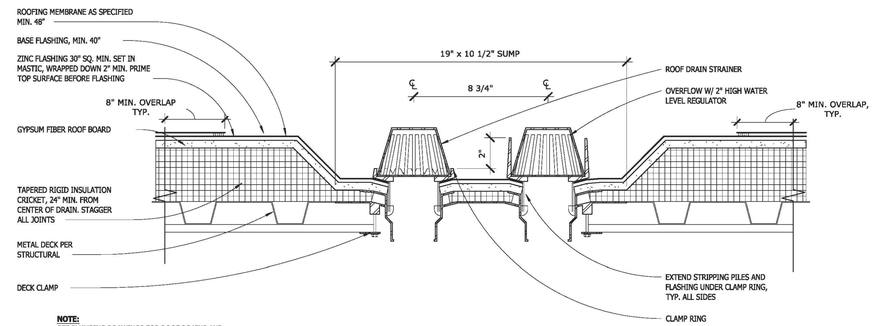

NOTE:
SEE PLUMBING DRAWINGS FOR ROOF DRAINS AND OVERFLOW DRAINS

ROOF DRAIN & OVERFLOW DRAIN SCALE: 3" = 1'-0" 2

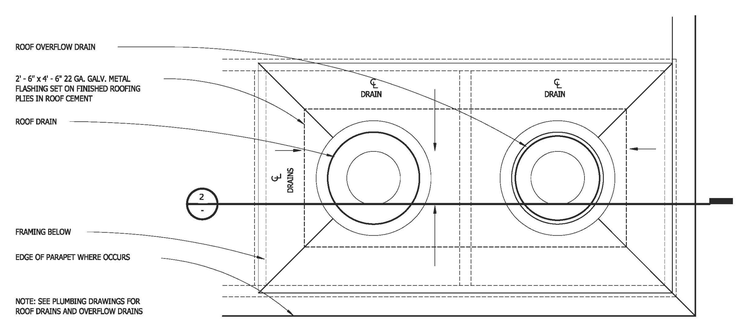

ROOF DRAIN & OVERFLOW DRAIN SCALE: 1 1/2" = 1'-0" 1

STATE:

IDENTIFICATION STAMP
DIV. OF THE STATE ARCHITECT
APP: 03-124281 INC:
REVIEWED FOR
SS ☑ FLS ☑ ACS ☑
DATE: 02/04/2025

ARCHITECT:

architecture
westbergwhite
7700 IRVINE CENTER DR. STE. 100
IRVINE, CA 92618
(714) 508-1780 (714) 508-1780 FAX

LICENSED ARCHITECT — JEFFREY DEBRITS WESTBERG — C-31045 EXP 8-2025 — STATE OF CALIFORNIA

CONSULTANT:

PROJECT NAME:

Bellflower Unified School District
Mayfair High School Athletics Fields
6000 North Woodruff Ave
Lakewood, California 90713

CLIENT:

BELLFLOWER UNIFIED SCHOOL DISTRICT
16703 S. Clark Ave.
BELLFLOWER, CALIFORNIA 90706

Rev.	Date	Description

JOB NO: 15008.01
DATE: 01/13/2025
DRAWN: TG, XY
CHECK: RB, JG
ARCHITECT: PDW
ENGINEER:

SHEET DESCRIPTION:
ROOF DETAILS

SHEET NO:
A821

CMU WALL AT METAL DECK — 1 1/2" = 1'-0" — 30

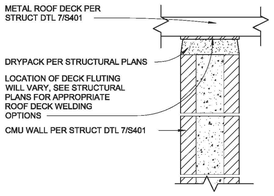

INTERIOR BLOCKING — N.T.S. — 20

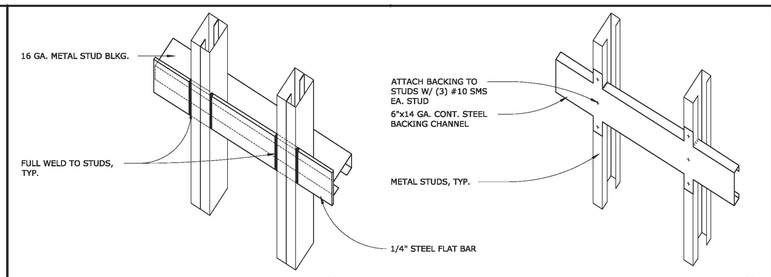

HEAVY WEIGHT MOUNTING - 300 LBS/FT. (A)
WALL HUNG CABINETS (OVER 2 SHELVES), HEAVY EQUIPMENT (TOOL ROOM)

MAXIMUM WEIGHT - 100 LBS/FT. (B)
TYP. FOR UPPER CABINETS (WALL HUNG), BENCH, HANDRAILS, GUARDRAILS, AND MISC. EQUIPMENT

FOOTING @ FENCE POLE — 1-1/2"=1'-0" — 15

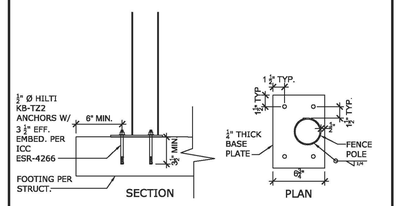

BUILDING SIGNAGE MOUNTING — N.T.S. — 5

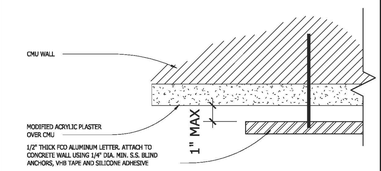

ATTACH BRACKET TO CMU WALL WITH ⅜" DIA HILTI KB TZ2 (ICC ES ESR 4561), TYPICAL (2) TOP AND BOTTOM

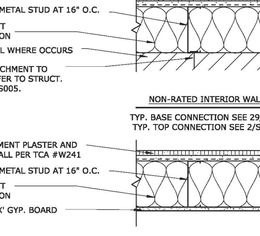

BASE FURRED WALL — 3" = 1'-0" — 29

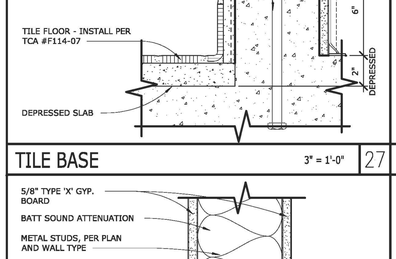

WALL BASE DOUBLE WALL W/TILE — 3" = 1'-0" — 19

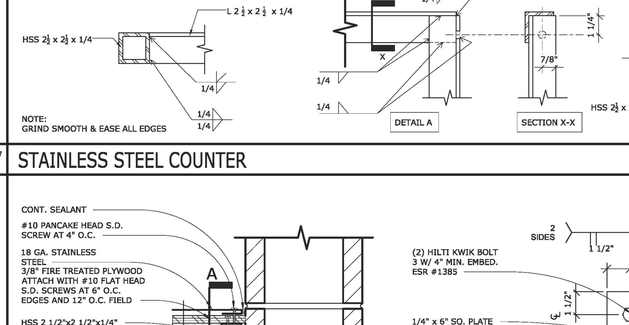

WALL MOUNTED ELECT. PANEL — 3" = 1'-0" — 14

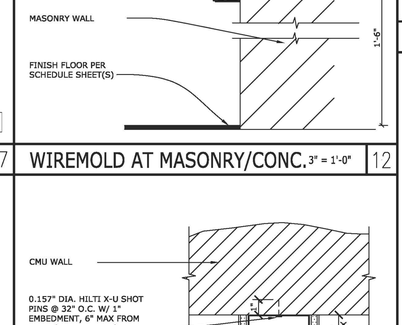

LADDER — 3/8"=1' - 0" — 9

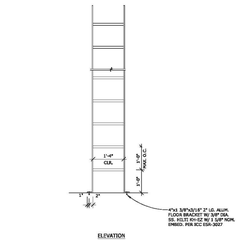

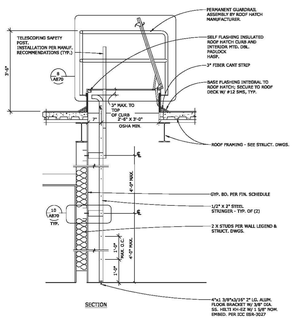

FIRE EXTINGUISHER BRACKET — 1 1/2" = 1'-0" — 4

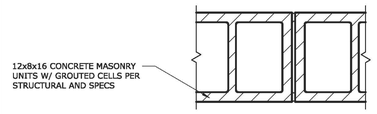

METAL WALL AT METAL DECK — 3" = 1'-0" — 28

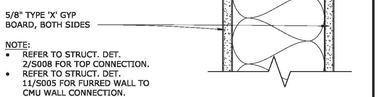

NOTE:
- REFER TO STRUCT. DET. 2/S008 FOR TOP CONNECTION.
- REFER TO STRUCT. DET. 11/S005 FOR FURRED WALL TO CMU WALL CONNECTION.

ACCESSORY AT CMU — 3" = 1'-0" — 13

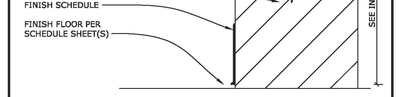

FIRE EXTINGUISHER CABINET — 3/8"=1' - 0" — 8



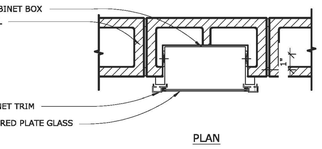

SEE 8/G003 FOR FRONT & SIDE APPROACH CLEARANCE

FIRE EXT. CAB. AT C.M.U. — 1 1/2" = 1'-0" — 7

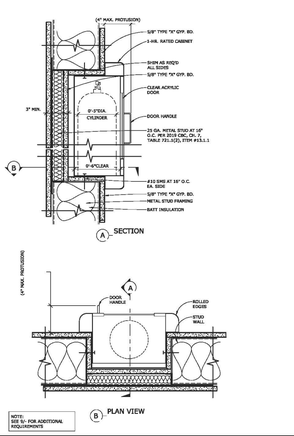

TILE BASE — 3" = 1'-0" — 27

STAINLESS STEEL COUNTER — 3" = 1'-0" — 17

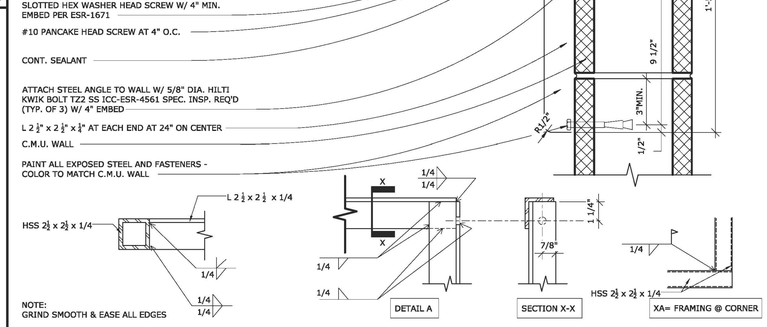

WIREMOLD AT MASONRY/CONC. — 3" = 1'-0" — 12

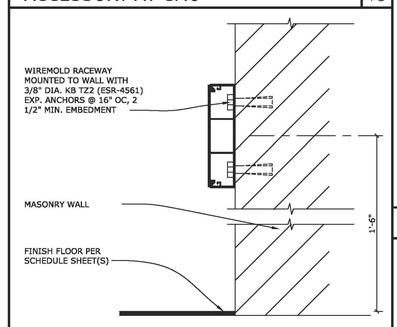

INTERIOR WALL BASE — 3" = 1'-0" — 26

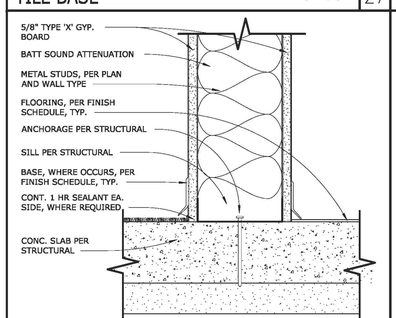

PASS THRU COUNTER AT SIDE WALL — 3" = 1'-0" — 16

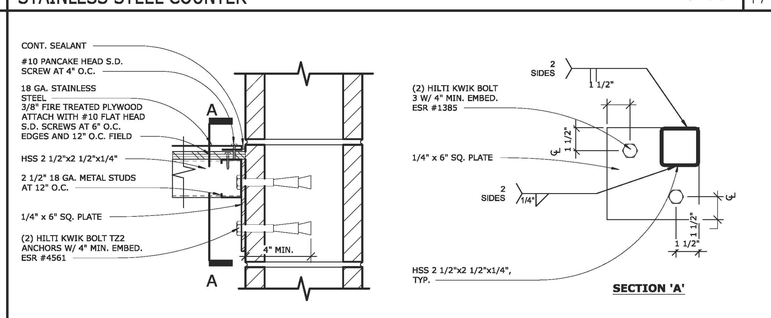

WALL CONNECTION AT CMU — 3"=1'-0" — 11

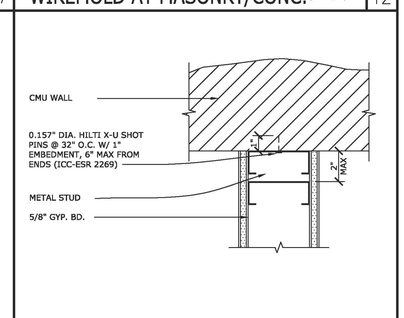

FIRE EXT. @ MTL STUD — SCALE: 1 1/2" = 1'-0" — 6

WALL TYPES — 1 1/2" = 1'-0" — 1

STATE:

IDENTIFICATION STAMP
DIV. OF THE STATE ARCHITECT
APP: 03-124281 INC:
REVIEWED FOR
SS ☑ FLS ☑ ACS ☑
DATE: 02/04/2025

ARCHITECT:

architecture westbergwhite
7700 IRVINE CENTER DR. STE. 100
IRVINE, CA 92618
(714) 508-1780 (714) 508-1780 FAX

REGISTERED ARCHITECT — JEFFREY DEBRITS WESTBERG — C-11045 EXP.9-2025 — STATE OF CALIFORNIA

CONSULTANT:

PROJECT NAME:

Bellflower Unified School District
Mayfair High School Athletics Fields
6000 North Woodruff Ave
Lakewood, California 90713

CLIENT:

BELLFLOWER UNIFIED SCHOOL DISTRICT
16703 S. Clark Ave.
BELLFLOWER, CALIFORNIA 90706

Δ	Rev. Date	Description

JOB NO:	15008.01
DATE:	01/13/2025
DRAWN:	TG, XY
CHECK:	RB, JG
ARCHITECT:	PDW
ENGINEER:	

SHEET DESCRIPTION:
WALL AND MISC. DETAILS

SHEET NO:
A830

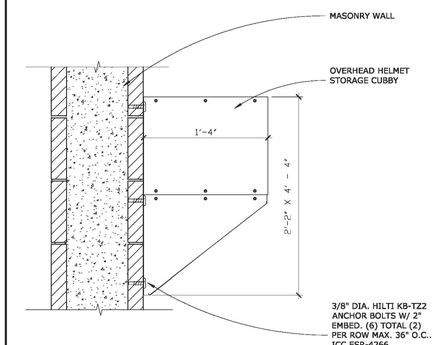

DUGOUT STORAGE CUBBIES 1 1/2"=1'-0" 2

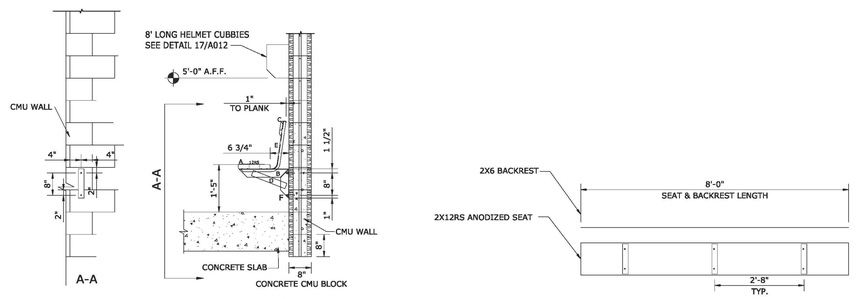

DUGOUT "L" BRACKET DETAIL
NOT TO SCALE

DUGOUT BENCH SEATS
NOT TO SCALE

ALUMINUM DUGOUT BENCHES N.T.S. 1

STATE:

IDENTIFICATION STAMP
DIV. OF THE STATE ARCHITECT
APP: 03-124281 INC:
REVIEWED FOR
SS ☑ FLS ☑ ACS ☑
DATE: 02/04/2025

ARCHITECT:

architecture
westbergwhite
7700 IRVINE CENTER DR. STE. 100
IRVINE, CA 92618
(714) 508-1780 (714) 508-1780 FAX

LICENSED ARCHITECT
JEFFREY DEBRITS WESTBERG
C-11045
EXP 9-2025
STATE OF CALIFORNIA

CONSULTANT:

PROJECT NAME:

Bellflower Unified School District
Mayfair High School Athletics Fields
6000 North Woodruff Ave
Lakewood, California 90713

CLIENT:

BELLFLOWER UNIFIED SCHOOL DISTRICT
16703 S. Clark Ave.
BELLFLOWER, CALIFORNIA 90706

Rev.	Date	Description
2		

JOB NO: 15008.01
DATE: 01/13/2025
DRAWN: TG, XY
CHECK: RB, JG
ARCHITECT: PDW
ENGINEER:

SHEET DESCRIPTION:
WALL AND MISC. DETAILS

SHEET NO:
A831

LIST OF ABBREVIATIONS

ADD'L.	ADDITIONAL
ALT.	ALTERNATE
ACI	AMERICAN CONCRETE INSTITUTE
APA	AMERICAN PLYWOOD ASSOCIATION
ASTM	AMERICAN SOCIETY FOR TESTING AND MATERIALS
AWS	AMERICAN WELDING SOCIETY
A.B.	ANCHOR BOLT(S)
APPROX.	APPROXIMATELY
ARCH.	ARCHITECT / ARCHITECTURAL
@	AT
B. PL.	BASE PLATE
BM.	BEAM
BRG.	BEARING
BTWN.	BETWEEN
BLK.	BLOCK
BLKG.	BLOCKING
B.E.	BOTH ENDS
BOT. OR BOTT.	BOTTOM
B.N.	BOUNDARY NAILS
BLDG.	BUILDING
C	CAMBER
CBC	CALIFORNIA BUILDING CODE
CIP	CAST IN PLACE
CLG.	CEILING
CJ	CEILING JOIST OR CONSTRUCTION JOINT OR CONTROL JOINT
CJP	COMPLETE JOINT PENETRATION WELD
℄	CENTER LINE
CLR.	CLEAR
COL.	COLUMN
CONC.	CONCRETE
CMU	CONCRETE MASONRY UNIT
COND.	CONDITION
CONN.	CONNECTION
CONSTR.	CONSTRUCTION
CONT'D	CONTINUED
CONT.	CONTINUOUS
CONTR.	CONTRACTOR
CSK.	COUNTERSINK
DL	DEAD LOAD
DP.	DEEP
DEMO.	DEMOLISH
DTL. OR DET.	DETAIL
DIAG.	DIAGONAL
DIA. OR ø	DIAMETER
DIM.	DIMENSION
DO	DITTO
DBL.	DOUBLE
D.F.	DOUGLAS FIR
DWL.	DOWEL
DN.	DOWN
DWG.	DRAWING
EA.	EACH
E.F.	EACH FACE
E.S.	EACH SIDE
E.W.	EACH WAY
E.N.	EDGE NAIL(S)
ELEC.	ELECTRICAL
ELEV.	ELEVATION
EMBED.	EMBEDMENT
ENG.	ENGINEER
EQ.	EQUAL
EQUIP.	EQUIPMENT
EXCAV.	EXCAVATION
(E)	EXISTING
EXP.	EXPANSION
EJ	EXPANSION JOINT
EXT.	EXTERIOR
F.O.C.	FACE OF CONCRETE
F.O.M.	FACE OF MASONRY
F.O.S.	FACE OF STUD OR FACE OF SLAB
F.S.	FAR SIDE
FIN.	FINISH
F.F.	FINISHED FLOOR
FHWS	FLAT HEAD WOOD SCREW
FLR.	FLOOR
FD	FLOOR DRAIN
FTG.	FOOTING
FNDN.	FOUNDATION
FRMG.	FRAMING
GALV.	GALVANIZE
GA.	GAUGE
GLU-LAM	GLUED LAMINATED
GLB	GLUED LAMINATED BEAM
GR.	GRADE
HGR.	HANGER
HR	HARDROCK
HDR.	HEADER
HT.	HEIGHT
HD	HOLD DOWN
HSS	HOLLOW STRUCTURAL SECTION
HORIZ.	HORIZONTAL
INFO.	INFORMATION
I.D.	INSIDE DIAMETER
INT.	INTERIOR
IBC	INTERNATIONAL BUILDING CODE
ICC	INTERNATIONAL CODE COUNCIL
INV.	INVERT
JST.	JOIST
KP	KING POST
KSI	KIPS PER SQUARE INCH
LAM.	LAMINATED
LDGR.	LEDGER
LT. WT. OR LW	LIGHT WEIGHT
LL	LIVE LOAD
LG.	LONG OR LENGTH
LLH	LONG LEG HORIZONTAL
LLV	LONG LEG VERTICAL
LO-HY	LOW HYDROGEN
M.B.	MACHINE BOLT(S)
MFR.	MANUFACTURER
MAS.	MASONRY
M.O.	MASONRY OPENING
MATL.	MATERIAL
MAX.	MAXIMUM
MECH.	MECHANICAL
MTL.	METAL
MIN.	MINIMUM
MISC.	MISCELLANEOUS
MU	MECHANICAL UNIT
N.F.	NEAR FACE
N.S.	NEAR SIDE
NSA	NELSON STUD ANCHOR
(N)	NEW
NIC.	NOT IN CONTRACT
NTS.	NOT TO SCALE
NO. OR #	NUMBER
O.C.	ON CENTER
OPNG.	OPENING
OPP.	OPPOSITE
O.H.	OPPOSITE HAND
O.D.	OUTSIDE DIAMETER
PHWS	PAN HEAD WOOD SCREW
P.J.	PANEL JOINT
d	PENNY
PIL.	PILASTER
PL. OR ⅊	PLATE (STEEL OR WOOD)
PLY.	PLYWOOD
PWJ	PLYWOOD WEB JOIST
PCF	POUNDS PER CUBIC FOOT
PSF	POUNDS PER SQUARE FOOT
PSI	POUNDS PER SQUARE INCH
PT	PRESSURE TREATED
PTDF	PRESSURE TREATED DOUGLAS FIR
PL	PROPERTY LINE
RAD.	RADIUS
RFTR.	RAFTER
REF.	REFERENCE
REINF.	REINFORCING
REQ'D	REQUIRED
REQMT.	REQUIREMENT
RF.	ROOF
R.D.	ROOF DRAIN
RO.	ROUGH
R.O.	ROUGH OPENING

LIST OF ABBREVIATIONS (CONT'D)

SCHED.	SCHEDULE
SEC.	SECTION
SEL.	SELECT
SEP.	SEPARATION
SHTG.	SHEATHING
SHT.	SHEET
S.L.R.S.	SEISMIC LATERAL RESISTING SYSTEM
S.M.	SHEET METAL
SMS	SHEET METAL SCREWS
SIM.	SIMILAR
SIMP.	SIMPSON
SPCG.	SPACING
SPECS.	SPECIFICATION
SQ.	SQUARE
STGR.	STAGGER
S.S.	STAINLESS STEEL
SPC	STANDARD PIPE COLUMN
STD.	STANDARD
STL.	STEEL
STIFF.	STIFFENER
STIRR.	STIRRUP
STRUCT.	STRUCTURAL
SYM.	SYMMETRICAL
TSG	TAPERED STEEL GIRDER
THK.	THICK
K OR KIP	1,000 POUNDS
THRU	THROUGH
TN	TOE NAIL
T&G	TONGUE AND GROOVE
T&B	TOP AND BOTTOM
T.O.F.	TOP OF FOOTING
T.O.L.	TOP OF LEDGER
T.O.S.	TOP OF STEEL OR TOP OF SHEATHING
T.O.W.	TOP OF WALL
TL	TOTAL LOAD
TS	TUBE STEEL
TYP.	TYPICAL
U.N.O.	UNLESS NOTED OTHERWISE
VIF	VERIFY IN FIELD
VERT.	VERTICAL
WT.	WEIGHT
WWF	WELDED WIRE FABRIC
W/	WITH
W/O	WITHOUT
WD.	WOOD
WIJ	WOOD-I-JOIST
WP	WORK POINT
W.S.	WOOD SCREW

GENERAL

1. THESE STRUCTURAL DRAWINGS AND SPECIFICATIONS, INCLUDING ANY ADDENDA (COLLECTIVELY "THE PLANS") INCORPORATE ALL LEGAL AND INDUSTRY REQUIREMENTS AND STANDARDS INCLUDING WITHOUT LIMITATION THE FOLLOWING:
   - THE CALIFORNIA CODE OF REGULATIONS, TITLE 24, PART 1 (CALIFORNIA BUILDING STANDARDS ADMINISTRATIVE CODE), 2022 EDITION.
   - THE CALIFORNIA CODE OF REGULATIONS, TITLE 24, PART 2 (CALIFORNIA BUILDING CODE), 2022 EDITION.
   - OTHER REGULATING AGENCIES WHICH MAY HAVE AUTHORITY OVER ANY PORTION OF THE WORK, INCLUDING THE STATE OF CALIFORNIA DIVISION OF INDUSTRIAL SAFETY, AND THOSE CODES AND STANDARDS LISTED IN THESE NOTES AND SPECIFICATIONS.
   - THE FUNCTIONALITY STANDARDS SET FORTH IN TITLE 7 OF THE CALIFORNIA CIVIL CODE (THE "RIGHT TO REPAIR ACT").
   - THE MANUFACTURER'S REQUIREMENTS OR RECOMMENDATIONS FOR ANY INCORPORATED PRODUCTS.
   - THE MOST CURRENT APPROVED ISSUES OF ANY NOTED SPECIFICATIONS, CODES AND STANDARDS, INCLUDING SUPPLEMENTS, UNLESS NOTED OTHERWISE.
2. THE PLANS REPRESENT ONLY THE FINISHED STRUCTURE, AND THEY ARE NOT INTENDED TO INDICATE OR REQUIRE ANY CONSTRUCTION MEANS, METHODS, TECHNIQUES, SEQUENCES OR PROCEDURES. IN PARTICULAR AND WITHOUT LIMITATION, THE CONTRACTOR SHALL BE FULLY AND SOLELY RESPONSIBLE FOR ANY AND ALL EXCAVATION, DEMOLITION, SHORING AND ERECTION PROCEDURES AND FOR ANY AND ALL SAFETY PROGRAMS AND PRECAUTIONS.
3. IN USING THE PLANS FOR BIDDING OR CONSTRUCTION PURPOSES, THE CONTRACTOR IS REQUIRED TO REVIEW ALL OF THE PROJECT'S CONSTRUCTION DOCUMENTS AS A WHOLE IN ORDER TO IDENTIFY ALL REQUIREMENTS THAT DIRECTLY OR INDIRECTLY AFFECT ITS PORTION OF THE STRUCTURAL WORK, EVEN REQUIREMENTS LOCATED IN SECTIONS DESIGNATED AS APPLICABLE TO OTHER TRADES. IN CASE OF CONFLICTS, THE CONTRACTOR SHALL EITHER OBTAIN DIRECTION FROM AN APPROPRIATE OWNER REPRESENTATIVE OR OTHERWISE APPLY THE MORE STRINGENT REQUIREMENT.
4. IN INTERPRETING THE PLANS, THE FOLLOWING GENERAL RULES APPLY:
   - WRITTEN DIMENSIONS SHALL TAKE PRECEDENCE OVER SCALED DRAWINGS.
   - SPECIFIC NOTES AND DETAILS SHALL TAKE PRECEDENCE OVER GENERAL NOTES AND TYPICAL DETAILS.
   - WORK NOT PARTICULARLY SHOWN OR SPECIFIED SHALL BE THE SAME AS SIMILAR PARTS THAT ARE SHOWN OR SPECIFIED.
   - SCALED DIMENSIONS AND GRAPHICALLY SHOWN LOCATIONS ARE TO BE CONSIDERED ONLY APPROXIMATE.
5. IN IMPLEMENTING THE PLANS, THE FOLLOWING GENERAL RULES APPLY:
   - BECAUSE THE PLANS ARE INTENDED TO SET FORTH THE REQUIREMENTS FOR CONSTRUCTION IN ONLY AN INDUSTRY-STANDARD LEVEL OF QUALITY AND DETAIL, AND THEREFORE ARE INTENDED TO BE SUPPLEMENTED BY APPROPRIATE REQUESTS FOR CLARIFICATION AND INFORMATION, ERRORS AND OMISSIONS ARE TO BE EXPECTED AND ANTICIPATED; AND THE CONTRACTOR IS REQUIRED TO CAREFULLY REVIEW THE PLANS FOR ERRORS AND OMISSIONS AND TO BRING THESE ERRORS AND OMISSIONS TO THE ATTENTION OF AN APPROPRIATE OWNER REPRESENTATIVE IN A TIMELY MANNER AND ASSUMES THE RISK OF THE CONSEQUENCES OF FAILING TO DO SO BEFORE BIDDING OR OTHERWISE PROCEEDING.
   - THE CONTRACTOR SHALL REVIEW AND VERIFY ALL DIMENSIONS PRIOR TO STARTING CONSTRUCTION, AND NOTIFY THE ARCHITECT IMMEDIATELY OF ANY DISCREPANCIES OR INCONSISTENCIES.
6. SUBMITTALS WILL BE REVIEWED BY THE STRUCTURAL ENGINEER, IF AT ALL, ONLY PURSUANT TO THE INDUSTRY-STANDARD PROTOCOL SET FORTH IN AIA DOCUMENT A201, AND IN NO EVENT WILL THE SUBMITTAL REVIEW PROCESS RELIEVE OR LESSEN THE SUBMITTING CONTRACTOR'S RESPONSIBILITY FOR AN INAPPROPRIATE SUBMITTAL.
7. IN NO EVENT WILL ANY SITE VISITS BY THE STRUCTURAL ENGINEER CONCERN CONSTRUCTION MEANS AND METHODS OR CONSTRUCTION SAFETY, AND ALL SUCH MATTERS SHALL REMAIN THE SOLE RESPONSIBILITY OF THE CONTRACTOR.
8. COPIES OF THE PLANS PROVIDED IN ANY ELECTRONIC FORM ARE SUBJECT TO THE SAME PROVISIONS AS THE OTHER INSTRUMENTS OF SERVICE PREPARED BY OR ON BEHALF OF STRUCTURAL ENGINEER FOR THE PROJECT, INCLUDING WITHOUT LIMITATION THE ENGINEER'S COMMON LAW, STATUTORY OR OTHER RESERVED RIGHTS, INCLUDING COPYRIGHTS. A RECIPIENT IS GRANTED AT MOST A TRANSFERABLE NONEXCLUSIVE LICENSE TO REUSE THE PLANS SOLELY FOR PROJECT PURPOSES; AND NO RECIPIENT IS AUTHORIZED TO USE OR TO ALLOW THE USE OF ALL OR ANY PORTION OF THESE PLANS FOR ANY OTHER PURPOSE, AND ANY USE FOR ANY OTHER PURPOSE WOULD CONSTITUTE ACTIONABLE PLAGIARISM. STRUCTURAL ENGINEER PROVIDES DOCUMENTS IN AN ELECTRONIC FORM ONLY IN ITS STANDARD FORMATS AND CONVENTIONS AND WITH NO GUARANTEE OF COMPATIBILITY WITH ANY RECIPIENT'S SOFTWARE OR HARDWARE, AND ANY USE WITH OR CONVERSION TO OTHER FORMATS OR CONVENTIONS, OR THE USE WITH ANY PARTICULAR SOFTWARE OR HARDWARE, IS AT THE RECIPIENT'S SOLE RISK.

PROJECT DESIGN CRITERIA

1. BASIC DESIGN LIVE LOADS:

   ROOF: 20 PSF (REDUCIBLE)

2. WIND LOADS

   RISK CATEGORY: III
   EXPOSURE CATEGORY: C
   BASIC DESIGN WIND SPEED (3-SECOND GUST), V = 101 MPH
   ALLOWABLE STRESS DESIGN WIND SPEED, V_{ASD} = 78 MPH
   VELOCITY PRESSURE EXPOSURE COEFFICIENT, K_Z = 0.85
   TOPOGRAPHIC FACTOR, K_{Zt} = 1.0
   WIND DIRECTIONALITY FACTOR, K_d = 0.85
   GROUND ELEVATION FACTOR, Ke = 1.00
   GUST EFFECT FACTOR, G = 0.85

   A. MWFRS – DIRECTIONAL PROCEDURE (ASCE 7-16, CH. 27 PART 1)

   $q_Z = 0.00256\ K_Z\ K_{Zt}\ K_d\ Ke\ V^2 =$ 18.86 PSF

   $P = qGC_P - q_i(GC_{Pi})$

   EXTERNAL PRESSURE COEFFICIENT, C_P = [FIG. 27.4-1 THRU 27.4-3]
   INTERNAL PRESSURE COEFFICIENT, (GC_{Pi}) = ±0.18

   B. COMPONENTS & CLADDING (ASCE 7-16, CH. 30)

   $q_h = 0.00256\ K_Z\ K_{Zt}\ K_d\ V_{ULT}^2 = 20.38$ PSF

   $P = q_h\ [(GC_P) - (GC_{Pi})]$

   EXTERNAL PRESSURE COEFFICIENT, (G_{CP}) = [FIG. 30.3-1 THRU 30.3-7]
   INTERNAL PRESSURE COEFFICIENT, (GC_{Pi}) = TABLE 26.13-1

3. EARTHQUAKE LOADS

   SEISMIC DESIGN CRITERIA

   $S_S = 1.553$
   $S_1 = 0.555$
   SITE CLASS: D
   $F_A = 1.0$
   $F_V = 1.745$
   $S_{DS} = 1.090$
   $S_{D1} = 1.350$
   RISK CATEGORY: III
   SEISMIC DESIGN CATEGORY: D

   SEISMIC DESIGN REQUIREMENTS

   DESIGN BASE SHEAR $V = C_S W$
   WHERE $C_S = S_{DS}/(R/I_e)$
   BUT SHALL NOT BE LESS THAN $C_S = 0.044 S_{DS} I_e > 0.01$
   BUT NEED NOT EXCEED $C_S = S_{D1}/[T(R/I_e)]$

   $R = 5.0$
   $\Omega_0 = 2.5$
   $I_e = 1.25$
   $C_S = 0.273$

   PRIMARY LATERAL FORCE RESISTING SYSTEM: SPECIAL REINFORCED MASONRY SHEAR WALLS (ASCE 7-10, TABLE 12.2-1, ITEM A.7)
   ANALYSIS PROCEDURE: EQUIVALENT LATERAL FORCE PROCEDURE
   LOCATION OF BASE: TOP OF FOOTINGS
   STRUCTURAL IRREGULARITIES: NONE

DIMENSIONS

1. DIMENSIONS SHALL BE DEFINED TO INCLUDE BOTH HORIZONTAL DIMENSIONS AND VERTICAL DIMENSIONS (ELEVATIONS).
2. WRITTEN DIMENSIONS SHALL TAKE PRECEDENCE OVER SCALED DRAWINGS.
3. SEE ARCHITECTURAL DRAWINGS FOR DIMENSIONS NOT NOTED ON STRUCTURAL DRAWINGS.
4. SEE ARCHITECTURAL AND/OR CIVIL DRAWINGS FOR FINISH FLOOR ELEVATIONS.
5. SEE ARCHITECTURAL DRAWINGS FOR ALL TOP OF SHEATHING AND/OR ROOF ELEVATIONS.
6. THE CONTRACTOR SHALL REVIEW AND VERIFY ALL DIMENSIONS PRIOR TO STARTING CONSTRUCTION. THE ARCHITECT SHALL BE NOTIFIED IMMEDIATELY OF ANY DISCREPANCIES OR INCONSISTENCIES.

SUBMITTALS

1. SUBMITTALS, INCLUDING SHOP DRAWINGS AND CONCRETE MIX DESIGNS, REQUIRED BY THE SPECIFICATIONS SHALL BE SUBMITTED TO THE ARCHITECT AND STRUCTURAL ENGINEER FOR REVIEW PRIOR TO FABRICATION OF THE ITEMS.
2. SHOP DRAWINGS SHALL INDICATE THE DATE OR REVISION OF DRAWING(S) FROM WHICH THE DRAWINGS WERE PREPARED. SUBMITTALS THAT DO NOT IDENTIFY THE LATEST DATE OR REVISION OF DRAWING(S) WILL BE RETURNED WITHOUT REVIEW. ONLY SHOP DRAWINGS THAT ARE COMPLETE WILL BE ACCEPTED FOR REVIEW.
3. IF, AFTER REVIEW, THE SHOP DRAWINGS MUST BE REVISED AND RESUBMITTED, THE SHOP DRAWINGS SHALL IDENTIFY EACH REVISION AND/OR ADDITION BY CLOUDING OR OTHER MEANS TO ASSURE PROPER REVIEW.
4. SUBMITTALS WILL NOT BE ACCEPTED DIRECTLY FROM SUBCONTRACTORS. SUBMITTALS WILL BE ACCEPTED FROM THE GENERAL CONTRACTOR ONLY AFTER BEING REVIEWED AND SIGNED BY THE GENERAL CONTRACTOR, INDICATING COMPLIANCE WITH THE REQUIREMENTS OF THE CONSTRUCTION DOCUMENTS. SUBMITTALS NOT COMPLYING WITH THE REQUIREMENTS NOTED ABOVE OR IN THE SPECIFICATIONS WILL BE RETURNED WITHOUT REVIEW.

EXISTING CONDITIONS

1. ALL INFORMATION SHOWN ON THE PLANS RELATIVE TO EXISTING CONDITIONS IS GIVEN AS THE BEST PRESENT KNOWLEDGE FROM PLANS SUPPLIED BY THE OWNER, BUT WITHOUT GUARANTEE OF ACCURACY.
2. WHERE ACTUAL CONDITIONS ARE NOT IN ACCORDANCE WITH THE INFORMATION PRESENTED, THE ARCHITECT SHALL BE NOTIFIED IMMEDIATELY. NO MODIFICATIONS OF THE PLANS FOR NEW CONSTRUCTION SHALL BE MADE WITHOUT THE WRITTEN APPROVAL OF THE ARCHITECT.

EXISTING UNDERGROUND UTILITIES

1. THE ARCHITECT AND ENGINEERS ARE NOT RESPONSIBLE FOR THE LOCATIONS OF EXISTING UNDERGROUND UTILITIES WHETHER OR NOT SHOWN ON THE DRAWINGS. THE LOCATION OF ANY EXISTING UNDERGROUND UTILITIES SHOWN ON THE DRAWINGS, IF ANY, IS APPROXIMATE. THE CONTRACTOR SHALL EXERCISE EXTREME CAUTION IN EXCAVATING AND TRENCHING ON THE SITE. THE CONTRACTOR SHALL IMMEDIATELY NOTIFY THE ARCHITECT SHOULD ANY SUCH UNIDENTIFIED CONDITIONS BE DISCOVERED.
2. THE CONTRACTOR SHALL BE RESPONSIBLE FOR ANY DAMAGES WHICH MAY RESULT FROM HIS FAILURE TO EXACTLY LOCATE AND PRESERVE ALL EXISTING UNDERGROUND UTILITIES.

FOUNDATION

1. ALL PORTIONS OF WORK PERTAINING TO EXCAVATIONS, FOUNDATIONS AND RETAINING WALLS SHALL CONFORM TO TITLE 24, PART 2, CHAPTER 18A.
2. THE FOUNDATION DESIGN IS BASED ON A GEOTECHNICAL REPORT BY:

   JOHN R. BYERLY, INC.
   BLOOMINGTON, CALIFORNIA
   RPT. NO.: 8322
   DATED: MAY 20, 2024
   JRBI RPT NO.: FILE NO.: 8363 (SUPPLEMENTAL REPORT)
   DATED: JULY 30, 2024
   JRBI FILE NO.: S-13836
   PASSIVE EARTH PRESSURE = 300 PCF
   COEFFICIENT OF FRICTION = 0.35

3. AN ALLOWABLE SOIL BEARING PRESSURE OF 2000 PSF WAS USED FOR DESIGN. BOTTOM OF FOOTINGS SHALL BE 18" MINIMUM BELOW LOWEST ADJACENT FINAL GRADE AND BEAR ON APPROVED NATURAL GRADE OR COMPACTED FILL.

   CLASS OF MATERIALS: SILTY SAND

4. A PASSIVE PRESURE OF PSF AND COEFFICIENT OF FRICTION OF WAS USED FOR DESIGN.
5. SEE SPECIFICATIONS FOR EARTHWORK OPERATIONS.
6. THE CONTRACTOR SHALL PROVIDE FOR DE-WATERING OF EXCAVATIONS FROM EITHER SURFACE WATER, GROUND WATER OR SEEPAGE.
7. THE CONTRACTOR SHALL PROVIDE FOR THE DESIGN, APPROVALS, PERMITS, INSTALLATION AND MONITORING OF ALL CRIBBING, SHEATHING AND SHORING REQUIRED TO SAFELY RETAIN TEMPORARY EXCAVATIONS.
8. EXCAVATIONS FOR FOOTINGS SHALL BE APPROVED BY THE GEOTECHNICAL ENGINEER PRIOR TO PLACING CONCRETE AND REINFORCING. THE CONTRACTOR SHALL NOTIFY THE GEOTECHNICAL ENGINEER WHEN EXCAVATIONS ARE READY FOR INSPECTION. THE GEOTECHNICAL ENGINEER SHALL SUBMIT A LETTER OF COMPLIANCE TO THE OWNER.
9. ALL EXCAVATIONS SHALL BE PROPERLY BACKFILLED. DO NOT PLACE BACKFILL BEHIND RETAINING WALLS BEFORE CONCRETE HAS ATTAINED FULL DESIGN STRENGTH. THE CONTRACTOR SHALL BRACE OR PROTECT ALL BUILDING AND PIT WALLS BELOW GRADE FROM LATERAL LOADS UNTIL ATTACHING FLOORS ARE COMPLETELY IN PLACE AND HAVE ATTAINED FULL DESIGN STRENGTH. THE CONTRACTOR SHALL PROVIDE FOR DESIGN, PERMITS AND INSTALLATION AND REMOVAL OF SUCH BRACING.
10. FOOTING BACKFILL AND UTILITY TRENCH BACKFILL WITHIN BUILDING AREA SHALL BE MECHANICALLY COMPACTED IN LAYERS, TO THE APPROVAL OF THE GEOTECHNICAL ENGINEER. FLOODING WILL NOT BE PERMITTED.
11. ALL ABANDONED FOOTINGS, UTILITIES, ETC., THAT INTERFERE WITH NEW CONSTRUCTION, SHALL BE REMOVED.
12. THE CONTRACTOR SHALL IMMEDIATELY NOTIFY THE ARCHITECT SHOULD ANY BURIED STRUCTURES, SUCH AS CESSPOOLS, CISTERNS, FOUNDATIONS, ETC., BE FOUND.
13. SEE FOUNDATION PREPARATION DETAIL ON LOWER RIGHT SIDE.

CAISSONS

1. SEE FOUNDATION NOTES FOR ADDITIONAL INFORMATION.
2. CAISSON EXCAVATIONS SHALL BE APPROVED BY THE GEOTECHNICAL ENGINEER PRIOR TO PLACING CONCRETE AND REINFORCING. LENGTHS OF CAISSONS AS SHOWN ON DRAWINGS ARE ESTIMATED FROM AVAILABLE SOIL DATA. ACTUAL LENGTHS WILL BE DETERMINED BY THE GEOTECHNICAL ENGINEER. THE GEOTECHNICAL ENGINEER SHALL SUBMIT A LETTER OF COMPLIANCE TO THE OWNER.
3. DO NOT ALLOW SHAFTS TO REMAIN OPEN OVERNIGHT. FILL SHAFTS WITH CONCRETE IMMEDIATELY AFTER INSPECTION AND APPROVAL BY THE GEOTECHNICAL ENGINEER.
4. WHERE REQUIRED, PROVIDE FULL-LENGTH WATERTIGHT STEEL CASING OF SUFFICIENT THICKNESS TO WITHSTAND COMPRESSIVE DISPLACEMENT AND WITHDRAWAL STRESSES AND TO MAINTAIN SHAFT WALLS. TEMPORARY CASING SHALL BE WITHDRAWN AS CONCRETE IS PLACED. MAINTAIN A HEAD OF CONCRETE APPROXIMATELY 5 FEET ABOVE CASING BOTTOM.
5. KEEP EXCAVATIONS FREE OF WATER BEFORE PLACING CONCRETE.
6. REINFORCING CAGES IN SHAFTS ARE TO BE ONE CONTINUOUS UNIT. PLACE REINFORCEMENT ACCURATELY IN HOLE AND BRACE SECURELY IN POSITION DURING CONCRETE PLACEMENT.
7. USE PLYWOOD PROTECTION SHEETS WITH CUT OUTS TO RECEIVE CONCRETE AT EXCAVATION OPENINGS. EXTEND PLYWOOD AT LEAST 12" BEYOND EDGE.
8. USE ELEPHANT TRUNK, TREMIE, ETC., TO PLACE CONCRETE SO THAT FREE FALL DOES NOT EXCEED 5 FEET. PROVIDE MECHANICAL VIBRATION FOR FULL HEIGHT OF SHAFT TO CONSOLIDATE CONCRETE. PLACE CONCRETE IN EACH SHAFT IN ONE CONTINUOUS OPERATION. INTERRUPTED PLACING OPERATIONS OF OVER ONE-HOUR DURATION WILL REQUIRE A COLD JOINT INSTALLATION AND MUST BE APPROVED BY THE STRUCTURAL ENGINEER.

CONCRETE

1. ALL PORTIONS OF WORK PERTAINING TO CONCRETE CONSTRUCTION SHALL CONFORM TO TITLE 24, PART 2, CHAPTER 19A.
2. CONCRETE MIXES SHALL BE DESIGNED BY A QUALIFIED TESTING LABORATORY. MIX DESIGNS SHALL CONFORM TO ACI 318, SEC. 26.4, CBC SEC.1903A AND 1904A. MIX DESIGNS SHALL INCORPORATE THE FOLLOWING CRITERIA:
   - MINIMUM OF 5 SACKS OF CEMENT PER CUBIC YARD OF CONCRETE. MAXIMUM OF 7 SACKS OF CEMENT PER YARD OF CONCRETE.
   - MAXIMUM WATER/CEMENT RATIO (BY WEIGHT) OF CONCRETE IN CONTACT WITH SOIL SHALL BE 0.45.
   - MAXIMUM SLUMP SHALL NOT EXCEED 3" ± 1" FOR FOOTINGS, SLABS ON GRADE, AND MASS CONCRETE; AND 4" ± 1" FOR OTHER CONCRETE. SLUMP LIMITATIONS NOTED SHALL APPLY TO CONCRETE MIX PRIOR TO THE ADDITION OF ANY WATER-REDUCING ADMIXTURES OR SUPER-PLASTICIZERS.
   - CALCIUM CHLORIDE OR ADMIXTURES CONTAINING CHLORIDE(S) SHALL NOT BE USED.
3. SCHEDULE OF STRUCTURAL CONCRETE 28 DAY MINIMUM STRENGTHS AND TYPES:
   - FOOTINGS, CAISSONS, GRADE BEAMS — 145 PCF, f'c = 4500 PSI
   - CAST-IN-PLACE WALLS, COLUMNS, STRUCTURAL SLABS BEAMS AND GIRDERS — 145 PCF, f'c = 4500 PSI
   - SLABS ON GRADE (NOTE: 2,500 PSI USED FOR DESIGN) — 145 PCF, f'c = 4500 PSI
   - ELSEWHERE UNLESS NOTED — 145 PCF, f'c = 4500 PSI
4. PORTLAND CEMENT SHALL CONFORM TO ASTM C-150, TYPE II. CEMENT USED FOR CONCRETE IN CONTACT WITH SOIL SHALL CONFORM TO ASTM C-150, TYPE V.
5. AGGREGATE FOR NORMALWEIGHT CONCRETE SHALL CONFORM TO ASTM C-33. COMBINED AGGREGATE GRADATION OF ⅜" MAXIMUM (PEA GRAVEL) SHALL NOT BE USED.
6. READY MIXED CONCRETE SHALL CONFORM TO ASTM C-94.
7. PLACEMENT OF CONCRETE SHALL CONFORM TO ACI 304. CLEAN AND ROUGHEN TO ¼" AMPLITUDE ALL CONCRETE SURFACES AGAINST WHICH CONCRETE IS TO BE PLACED.
8. ALL REINFORCING BARS, ANCHOR BOLTS AND OTHER CONCRETE INSERTS SHALL BE SECURED IN POSITION PRIOR TO PLACING CONCRETE.
9. PROVIDE SLEEVES FOR PLUMBING AND ELECTRICAL OPENINGS IN CONCRETE BEFORE PLACING. DO NOT CUT ANY REINFORCING WHICH MAY CONFLICT. CORING IN CONCRETE IS NOT PERMITTED EXCEPT AS SHOWN. NOTIFY THE STRUCTURAL ENGINEER, IN ADVANCE, OF CONDITIONS NOT SHOWN ON THE STRUCTURAL DRAWINGS.
10. THE FOLLOWING MINIMUM CONCRETE COVER SHALL BE PROVIDED FOR REINFORCEMENT:

    CONCRETE CAST AGAINST AND PERMANENTLY EXPOSED TO EARTH .... 3"

    CONCRETE EXPOSED TO EARTH OR WEATHER:
    #6 THROUGH #18 BARS .... 2"
    #5 BARS, W31 OR D31 WIRE, AND SMALLER .... 1½"

    CONCRETE NOT EXPOSED TO WEATHER OR IN CONTACT WITH GROUND:
    SLABS, WALLS, JOISTS:
    #14 AND #18 BARS .... 1½"
    #11 BAR AND SMALLER .... ¾"
    BEAMS, COLUMNS:
    PRIMARY REINFORCEMENT STIRRUPS, TIES, SPIRALS .... 1½"

11. CONDUITS OR PIPES SHALL NOT BE EMBEDDED WITHIN A SLAB, WALL, BEAM, OR COLUMN, UNLESS SPECIFICALLY DETAILED.
12. SEE ARCHITECTURAL AND STRUCTURAL DRAWINGS FOR ALL MOLDS, GROOVES, REVEALS, ORNAMENTS AND GROUNDS TO BE CAST IN CONCRETE.
13. DRYPACK WHERE NOTED ON DRAWINGS SHALL CONSIST OF 1 PART PORTLAND CEMENT AND 2½ PARTS OF FINE AGGREGATE CONFORMING TO ASTM C-33 WITH ENOUGH WATER TO FORM A BALL WHEN SQUEEZED IN THE HAND. THE SPACE BETWEEN TWO SURFACES REQUIRING DRYPACK SHALL BE PACKED WITH THE DRYPACK MATERIAL BY TAMPING OR RAMMING WITH A BAR OR ROD UNTIL THE VOIDS ARE COMPLETELY FILLED.
14. NON-SHRINK GROUT WHERE NOTED ON DRAWINGS SHALL BE A PRE-MIXED COMPOUND CONSISTING OF NON-METALLIC AGGREGATE, CEMENT, WATER REDUCING AND PLASTICIZING ADDITIVES, CAPABLE OF DEVELOPING A MINIMUM COMPRESSIVE STRENGTH OF 8,000 PSI AT 28 DAYS. WHERE APPLICATION THICKNESS EXCEEDS MANUFACTURER'S LIMITATIONS, EXTEND WITH ⅜" (GRAVEL) AGGREGATE IN ACCORDANCE WITH MANUFACTURER'S RECOMMENDATIONS.
15. CONCRETE FOR SLAB ON GRADE DOES NOT REQUIRE BATCH PLANT INSPECTION. A MINIMUM OF ONE SET OF CYLINDERS SHALL BE TAKEN AND TESTED FOR EACH 50 CUBIC YARDS OF CONCRETE OR FRACTION THEREOF.

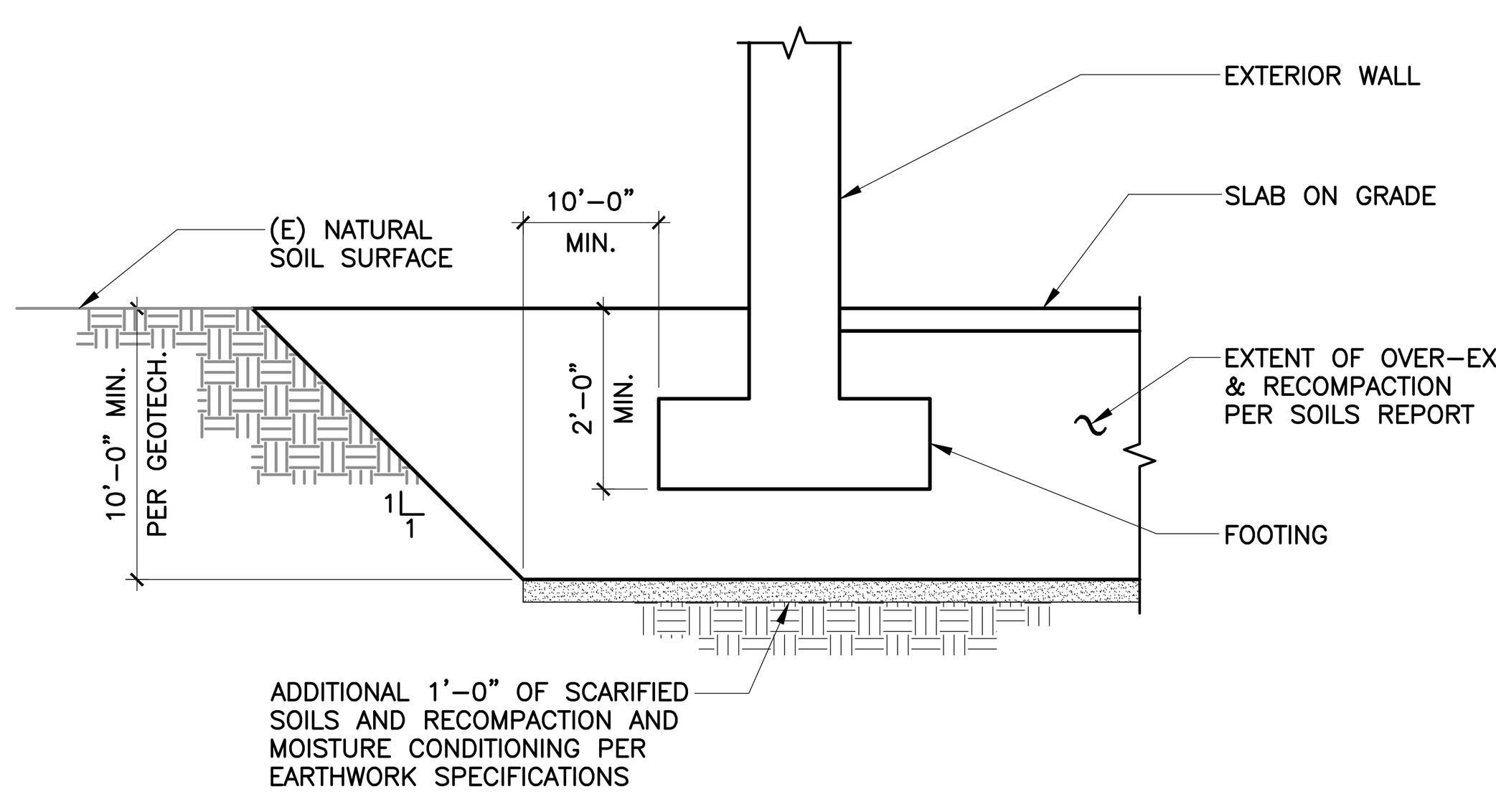

FOUNDATION PREPARATION FOR NATURAL SOILS
SCALE: NO SCALE

STATE:

IDENTIFICATION STAMP
DIV. OF THE STATE ARCHITECT
APP: 03-124281 INC:
REVIEWED FOR
SS ☑ FLS ☑ ACS ☑
DATE: 02/04/2025

ARCHITECT:

architecture westbergwhite
14471 Chambers Rd, Suite 210
Tustin, CA 92780
714.508.1780 714.508.1780 Fax

CONSULTANT:

rtm engineering consultants
1ADA,Suite 100, Irvine, CA 92618
Tel (949) 462-3200 • Fax (949) 462-3201
WWW.RTMEC.COM
RTM JOB NO: 24.002173.2585 (259.123)

PROJECT NAME:

Bellflower Unified School District
Mayfair High School Sports Fields
6000 North Woodruff Ave
Lakewood, California 90713

CLIENT:

BELLFLOWER UNIFIED SCHOOL DISTRICT
16703 S. Clark Ave.
BELLFLOWER, CALIFORNIA 90706

#	Rev. Date	Description

JOB NO:	15008
DATE:	05/24/2024
DRAWN:	NP
CHECK:	BP
ARCHITECT:	PDW
ENGINEER:	

SHEET DESCRIPTION:
GENERAL NOTES

SHEET NO:
S001

CONCRETE BLOCK MASONRY (f'm = 2,000 PSI)

1. ALL PORTIONS OF WORK PERTAINING TO CONCRETE BLOCK MASONRY CONSTRUCTION SHALL CONFORM TO TITLE 24, PART 2, CHAPTER 21A.
2. THE STRENGTH OF CONCRETE BLOCK MASONRY CONSTRUCTION SHALL BE DETERMINED BY THE UNIT STRENGTH METHOD IN ACCORDANCE WITH SEC. 2105A.3,
3. CONCRETE BLOCKS SHALL BE HOLLOW LOAD-BEARING CONCRETE MASONRY UNITS CONFORMING TO ASTM C-90, MEDIUM WEIGHT UNITS. USE OPEN END UNITS AT VERTICAL REINFORCING.
4. CEMENT SHALL BE AS SPECIFIED FOR CONCRETE.
5. MORTAR SHALL CONFORM TO ASTM C-270, FOR TYPE S MORTAR. MORTAR SHALL ATTAIN A MINIMUM COMPRESSIVE STRENGTH OF 1800 PSI AT 28 DAYS.
6. GROUT SHALL CONFORM TO ARTICLE 2.2 OF TMS 602/ACI 530.1/ASCE 6, GROUT PROPORTIONS SHALL CONFORM TO ASTM C-476, TABLE 1, FOR COARSE GROUT. USE SUFFICIENT WATER FOR GROUT TO FLOW INTO ALL CELLS WITHOUT SEGREGATION. ADMIXTURE SHALL BE SIKA GROUT AID, OR APPROVED EQUAL. GROUT SHALL ATTAIN A MINIMUM COMPRESSIVE STRENGTH OF 2000 PSI AT 28 DAYS.
7. PROVIDE A MINIMUM ONE BAR DIAMETER OF GROUT BETWEEN MAIN REINFORCING AND MASONRY UNITS. PROVIDE A MINIMUM OF 1" OF GROUT AROUND ALL BOLTS EMBEDDED IN MASONRY.
8. CELLS SHALL BE IN VERTICAL ALIGNMENT. DOWELS IN FOOTINGS SHALL BE SET TO ALIGN WITH CORES CONTAINING VERTICAL REINFORCING.
9. ALL CELLS IN CONCRETE BLOCKS SHALL BE SOLIDLY FILLED WITH GROUT.
10. LOW-LIFT GROUTED CONSTRUCTION SHALL CONFORM TO SEC. CBC SEC. 2104.A. 1.3.1. & 1.3.5 MAXIMUM GROUT POUR HEIGHT FOR LOW-LIFT CONSTRUCTION SHALL BE 4 FEET.
11. MULTI LIFT GROUNTED (HIGH-LIFT GROUTED) CONSTRUCTION SHALL CONFORM TO SEC. CBC SEC. 2104.A. 1.3.1 & 1.3.5, AND DSA IR 21-2. MAXIMUM GROUT POUR HEIGHT SHALL NOT EXCEED 12'-8" PROVIDE CLEANOUT OPENINGS AND ADEQUATE PROVISIONS TO PREVENT FACE SHELL DAMAGE (BLOW-OUT) AT THE BOTTOM OF EACH POUR OF GROUT.
12. GROUT POURS SHALL BE CONSOLIDATED BY MECHANICAL VIBRATION AND RECONSOLIDATED AFTER EXCESS MOISTURE HAS BEEN ABSORBED, BUT BEFORE WORKABILITY IS LOST.
13. HORIZONTAL REINFORCING SHALL BE PLACED IN BOND BEAM UNITS.
14. REFER TO ARCHITECTURAL DRAWINGS FOR SURFACE TEXTURE, HEIGHT OF MASONRY UNITS, LAYING PATTERN AND JOINT TYPE. USE RUNNING BOND PATTERN, UNLESS NOTED OTHERWISE.
15. NO PIPES OR DUCTS SHALL BE PLACED IN MASONRY CONSTRUCTION UNLESS SPECIFICALLY NOTED OR DETAILED.
16. ELECTRICAL CONDUIT MAY BE ROUTED IN MASONRY WALLS AS FOLLOWS:
    A. MAXIMUM SIZE AND QUANTITY OF CONDUIT PER CELL (EXCEPT AT JUNCTION BOXES) SHALL BE AS FOLLOWS: FOR 8" BLOCK, ONE-1" DIAMETER OR TWO - 3/4" DIAMETER; FOR 12" BLOCK, TWO - 1" DIAMETER OR FOUR - 3/4" DIAMETER. MULTIPLE CONDUITS SHALL BE BUNDLED TOGETHER.
    B. CONDUIT SHALL NOT BE PLACED IN A MASONRY CELL CONTAINING REINFORCING.
    C. CONDUIT SHALL NOT BE PLACED IN A PILASTER.
    D. CONDUIT SHALL BE PLACED AT THE CENTERLINE OF THE WALL.
17. ALL STRUCTURAL MASONRY WORK SHALL BE CONTINUOUSLY INSPECTED DURING LAYING AND GROUTING BY A SPECIAL INSPECTOR SPECIFICALLY APPROVED BY THE ENFORCEMENT AGENCY FOR THAT PURPOSE.

REINFORCING STEEL

1. ALL PORTIONS OF WORK PERTAINING TO FABRICATION AND PLACEMENT OF REINFORCING STEEL SHALL CONFORM TO TITLE 24, PART 2, CHAPTER 19A.
2. REINFORCING BARS SHALL CONFORM TO ASTM A-615 GRADE 60, EXCEPT #3 BARS MAY BE GRADE 40. REINFORCING BARS THAT ARE TO BE WELDED SHALL CONFORM TO ASTM A-706, GRADE 60.
3. WELDING OF REINFORCEMENT SHALL BE WITH LOW HYDROGEN ELECTRODES AND SHALL CONFORM TO STRUCTURAL WELDING CODE - REINFORCING STEEL, AWS D1.4, BY THE AMERICAN WELDING SOCIETY AND SEC. 1903A.8. WELDING RODS USED FOR THE WELDING OF REINFORCING SHALL BE E80XX. ALL WELDING SHALL BE PERFORMED BY CERTIFIED WELDERS.
4. ALL REINFORCING BAR BENDS SHALL BE MADE COLD. ALL #5 OR LARGER REINFORCING BARS SHALL NOT BE RE-BENT.
5. FUSION WELDED REINFORCING STEEL ASSEMBLIES SHALL CONFORM TO SEC. 1903A.8. TIES/STIRRUP BARS IN FUSION WELDED ASSEMBLIES SHALL CONFORM TO ASTM A-706, AND LONGITUDINAL HOLDING WIRES SHALL CONFORM TO ASTM-1064.
6. WELDED WIRE FABRIC SHALL CONFORM TO ASTM A-185, AND SHALL BE LAPPED 1½ SPACES AND 12" MINIMUM.
7. DOWELS BETWEEN FOOTINGS AND WALLS OR COLUMNS SHALL BE THE SAME GRADE, SIZE, SPACING AND NUMBER AS THE VERTICAL REINFORCEMENT, RESPECTIVELY.
8. REINFORCING SPLICES SHALL BE MADE AS INDICATED ON THE DRAWINGS.
9. ALL VERTICAL REINFORCING SHALL BE CONTINUOUS BETWEEN TWO DIAPHRAGM LEVELS, UNLESS NOTED OTHERWISE.

STRUCTURAL STEEL AND MISCELLANEOUS METAL

1. ALL PORTIONS OF WORK PERTAINING TO STRUCTURAL STEEL CONSTRUCTION SHALL CONFORM TO TITLE 24, PART 2, CHAPTER 22A.
2. ALL STRUCTURAL STEEL SHALL CONFORM TO ASTM A-992, UNLESS NOTED OTHERWISE.
3. ROUND HOLLOW STRUCTURAL SECTION (HSS) SHALL CONFORM TO ASTM A-500, GRADE B.
4. PIPE SECTIONS SHALL CONFORM TO ASTM-A53 GRADE B.
5. SQUARE AND RECTANGULAR HOLLOW STRUCTURAL SECTIONS (HSS) SHALL CONFORM TO ASTM A-500, GRADE B.
6. CHANNELS, ANGLES AND PLATES SHALL CONFORM TO ASTM A-36, UNLESS NOTED OTHERWISE.
7. ALL BOLTS SHALL CONFORM TO THE FOLLOWING, UNLESS NOTED OTHERWISE:
    - ANCHOR BOLTS: ASTM F1554, GRADE 36
    - TYPICAL STEEL CONNECTIONS: ASTM A-325N (NON-SLIP-CRITICAL)
    - MOMENT AND DRAG CONNECTIONS: ASTM A-325SC (SLIP-CRITICAL)
    - MISCELLANEOUS CONNECTIONS NOT NOTED OTHERWISE: ASTM A-307
8. ANCHOR BOLTS SHALL BE HEX HEADED. BENT BAR ANCHORS SHALL NOT BE USED.
9. STRUCTURAL STEEL SHOP DRAWINGS SHALL BE SUBMITTED TO THE ARCHITECT FOR REVIEW AND APPROVAL PRIOR TO FABRICATION.
10. ALL WELDING SHALL CONFORM TO THE STRUCTURAL WELDING CODE - STEEL, AWS D1.1 AND SUPPLEMENT AWS D1.8, BY THE AMERICAN WELDING SOCIETY. WELDING RODS SHALL BE E70XX.
11. THE FILLER METAL FOR ALL WELDING SHALL HAVE A NOTCH TOUGHNESS OF NOT LESS THAN 20 FT-LBS AT 0 DEGREES F, AS MEASURED BY A STANDARD CHARPY V-NOTCH TEST, ASTM E23, IN ACCORDANCE WITH THE APPLICABLE FILLER METAL SPECIFICATION REFERENCED IN AWS D1.1 AND SEISMIC SUPPLEMENT AWS D1.8.
12. ALL WELDING SHALL BE PERFORMED BY CERTIFIED WELDERS.
13. ALL WELDS NOT SPECIFIED SHALL BE CONTINUOUS FILLET WELDS. SIZE OF WELDS SHALL BE BASED ON AWS D1.1 FOR THICKER PART JOINED.
14. BOLT HOLES SHALL BE 1/16" LARGER IN DIAMETER THAN NOMINAL SIZE OF BOLT USED, UNLESS NOTED OTHERWISE. BOLT HOLES AT COLUMN BASEPLATES MAY BE 3/16" MAXIMUM LARGER IN DIAMETER THAN NOMINAL SIZE OF ANCHOR BOLT USED, UNLESS NOTED OTHERWISE.
15. DO NOT PAINT STRUCTURAL STEEL SURFACES THAT ARE TO RECEIVE SPRAY-APPLIED FIREPROOFING OR TO BE ENCASED IN CONCRETE OR MASONRY.
16. ALL STRUCTURAL STEEL AND MISCELLANEOUS METAL ITEMS, INCLUDING CONNECTORS, EXPOSED TO THE WEATHER SHALL BE HOT-DIPPED GALVANIZED, AFTER FABRICATION.
17. STRUCTURAL STEEL SHALL BE DELIVERED TO THE JOB SITE FREE OF EXCESSIVE RUST, MILL SCALE, GREASE, ETC.
18. OPENINGS SHALL NOT BE PLACED IN STEEL MEMBERS UNLESS SPECIFICALLY DETAILED.
19. ALL WELDING SHALL BE SPECIALLY INSPECTED BY AN AWS-CW1 QUALIFIED INSPECTOR APPROVED BY DSA.

STEEL DECKING

1. SEE STRUCTURAL STEEL AND MISCELLANEOUS METAL NOTES FOR ADDITIONAL INFORMATION.
2. STEEL DECKING SHALL BE OF THE TYPE AND GAUGE AS NOTED ON THE DRAWINGS. DECKING AND ALL ACCESSORIES SHALL BE GALVANIZED AND SHALL CONFORM TO ASTM A-653 SS, GRADE 40 MINIMUM. GALVANIZING SHALL CONFORM TO COATING DESIGNATION G90, UNLESS NOTED OTHERWISE.
3. DECK UNITS SHALL BE CONTINUOUS OVER TWO OR MORE SPANS. PROVIDE SHORING AS REQUIRED BY MANUFACTURER'S CURRENT ICC REPORT FOR NUMBER AND LENGTHS OF SPANS, AND AS REQUIRED BY MANUFACTURER TO SUIT JOB CONDITIONS.
4. MINIMUM BEARING OF DECKING ON SUPPORTS SHALL BE 2 INCHES. SHEETS SHALL BE ATTACHED TO ALL SUPPORTING STEEL MEMBERS BY WELDING AS INDICATED ON DRAWINGS AND IN ACCORDANCE WITH MANUFACTURER'S RECOMMENDATIONS. UPON COMPLETION OF ERECTION, ALL WELDS SHALL BE TOUCHED UP, DE-SLAGED, CLEANED AND PRIMED WITH A ZINC RICH PRIMER.
5. SEE ARCHITECTURAL, MECHANICAL, ELECTRICAL DRAWINGS, ETC., FOR SIZE AND LOCATION OF REQUIRED OPENINGS.
6. PROVIDE CLOSURE PLATES AT ALL DECK EDGES, INCLUDING CLOSURES AT COLUMNS, AND SHAFT OPENINGS OR DUCT PENETRATIONS. STEEL DECKING SUBCONTRACTOR SHALL SUPPLY ALL CLOSURES AND ALL SUPPORT FRAMING WHERE NECESSARY FOR SUCH OPENINGS.
7. STEEL DECKING SHOP DRAWINGS SHALL BE SUBMITTED TO THE ARCHITECT FOR REVIEW AND APPROVAL PRIOR TO FABRICATION. SHOP DRAWINGS SHALL INDICATE LOCATION, GAUGE AND SIZE OF EACH PIECE OF DECKING. SHOP DRAWINGS SHALL ALSO SHOW ALL CLOSURE CONDITIONS, WELDS TO SUPPORTS AND SIDE LAP DETAILS.
8. WELDING OF STEEL DECKING SHALL BE IN ACCORDANCE WITH THE STRUCTURAL WELDING CODE - SHEET STEEL, AWS D1.3 BY THE AMERICAN WELDING SOCIETY.
9. BASIS OF DESIGN, DIMENSIONS, PROPERTIES AND TYPES NOTED ARE BASED ON METAL DECKS BY VERCO STEEL DECK, IAPMO ER-0217, UNLESS NOTED OTHERWISE.

HIGH-STRENGTH BOLTS

1. SEE STRUCTURAL STEEL AND MISCELLANEOUS METAL NOTES FOR ADDITIONAL INFORMATION.
2. JOINT ASSEMBLIES USING HIGH-STRENGTH BOLTS SHALL BE IN ACCORDANCE WITH SPECIFICATION FOR STRUCTURAL JOINTS USING ASTM A-325 OR A-490 BOLTS, BY THE AMERICAN INSTITUTE OF STEEL CONSTRUCTION.
3. ALL HIGH STRENGTH BOLTS SHALL CONFORM TO ASTM A-325, NUTS SHALL CONFORM TO ASTM A-563, AND WASHERS SHALL CONFORM TO ASTM F-436.
4. PAINT SHALL NOT BE PERMITTED ON CONTACT SURFACES UNLESS NOTED OTHERWISE. CONTACT SURFACES OF BOLTED PARTS SHALL BE DESCALED AND FREE OF DIRT, OIL, BURRS, PITS, AND OTHER DEFECTS WHICH PREVENT SOLID SEATING OF PARTS.
5. ALL HIGH STRENGTH BOLTS SHALL BE TIGHTENED TO THE SNUG TIGHT CONDITION, UNLESS IDENTIFIED ON THE PLANS AS SLIP-CRITICAL.
6. SLIP-CRITICAL JOINT ASSEMBLIES SHALL BE FULLY PRE-TENSIONED BY TURN-OF-NUT TIGHTENING, CALIBRATED WRENCH TIGHTENING, INSTALLATION OF ALTERNATE DESIGN BOLTS OR BY DIRECT TENSION INDICATOR TIGHTENING.

COLD-FORMED STEEL FRAMING

1. ALL PORTIONS OF WORK PERTAINING TO COLD-FORMED STEEL CONSTRUCTION SHALL CONFORM TO TITLE 24, PART 2, CHAPTER 22A.
2. ALL LIGHT GAUGE METAL FRAMING SHALL BE GALVANIZED AND SHALL CONFORM TO ASTM A-653 SS, GRADE 50, CLASS 1, WITH A MINIMUM YIELD STRENGTH OF 50 KSI FOR 16 GAUGE AND HEAVIER FRAMING, AND ASTM A-653 SS, GRADE 33, WITH A MINIMUM YIELD STRENGTH OF 33 KSI FOR 18 GAUGE AND LIGHTER FRAMING.
3. DIMENSIONS, PROPERTIES AND TYPES NOTED ARE BASED ON METAL STUDS AND TRACKS BY STEEL STUD MANUFACTURERS ASSOCIATION, ICC NO. ESR-3064P, UNLESS NOTED OTHERWISE.
4. ALL STUDS AT JAMBS OF DOOR AND WINDOW OPENINGS SHALL BE 16 GAUGE, UNLESS NOTED OTHERWISE.
5. WELDING SHALL BE IN ACCORDANCE WITH THE STRUCTURAL WELDING CODE - SHEET STEEL, AWS D1.3, BY THE AMERICAN WELDING SOCIETY.
6. ALL SHEET METAL SCREWS SHALL PROTRUDE 3 EXPOSED THREADS MINIMUM THROUGH BASE METAL FRAMING.
7. ALL METAL STUDS SHALL HAVE STIFFENED FLANGES.
8. SEE ARCHITECTURAL AND STRUCTURAL DRAWINGS FOR SIZE AND GAUGE OF STUDS.

AUTOMATIC END WELDED STUDS

1. AUTOMATIC END WELDED STUDS SHALL BE NELSON GRANULAR FLUX-FILLED SHEAR CONNECTORS OR ANCHOR STUDS OR AN APPROVED EQUAL.
2. STUDS SHALL BE MANUFACTURED OF COLD ROLLED STEEL, WHICH CONFORMS TO ASTM SPECIFICATION A-108, GRADES C-1010 THRU C-1020.
3. STUDS SHALL BE AUTOMATICALLY END WELDED IN ACCORDANCE WITH THE MANUFACTURER'S RECOMMENDATIONS IN SUCH A MANNER AS TO PROVIDE COMPLETE FUSION BETWEEN THE END OF THE STUD AND THE PLATE. THERE SHOULD BE NO POROSITY OR EVIDENCE OF LACK OF FUSION BETWEEN THE WELDED END OF THE STUD AND THE PLATE. THE STUD SHALL DECREASE IN LENGTH DURING WELDING APPROXIMATELY 1/8" FOR 5/8" DIAMETER STUDS AND SMALLER, AND 3/16" FOR STUDS LARGER THAN 5/8" DIAMETER. WELDING SHALL BE DONE ONLY BY QUALIFIED WELDERS APPROVED BY AN AWS-CWI INSPECTOR APPROVED BY DSA.
4. IN ACCORDANCE WITH TITLE 24, SECTION 2213A.2, INSPECTION OF ALL THE SHOP AND FIELD WELDING OPERATIONS FOR THE AUTOMATIC END WELDED STUDS SHALL BE MADE BY AN AWS-CWI INSPECTOR APPROVED BY THE DIVISION OF THE STATE ARCHITECT. THE TYPE AND CAPACITY OF THE WELDED EQUIPMENT SHALL BE IN ACCORDANCE WITH THE MANUFACTURER'S RECOMENDATIONS AND SHALL BE CHECKED AND APPROVED BY A WELDING INSPECTOR.
5. AT THE BEGINNING OF EACH DAY'S WORK, A MINIMUM OF TWO TEST STUD WELDS SHALL BE MADE WITH THE EQUIPMENT TO BE USED TO METAL WHICH IS THE SAME THE ACTUTAL WORK PIECE. THE TEST STUDS SHALL BE SUBJECTED TO A 30% BEND TEST BY STRIKING THEM WITH A HEAVY HAMMER. AFTER THE ABOVE TEST, THE WELD SECTION SHALL NOT EXHIBIT ANY TEARING OUT OR CRACKING.
6. TESTING OF END-WELDED STUDS SHALL BE IN ACCORDANCE WITH SECTION 2213A.2, PART 2, TITLE 24.

POST-INSTALLED ANCHORS

1. ACCEPTABLE EQUIVALENT MANUFACTURERS OF POST-INSTALLED EXPANSION ANCHORS AND SCREW ANCHORS SHALL BE HILTI INC., SIMPSON STRONG-TIE COMPANY INC., OR DEWALT, UNO.
2. TESTS FOR POST-INSTALLED ANCHORS IN HARDENED CONCRETE SHALL CONFORM TO TITLE 24, PART 2, CHAPTER 19A, SECTION 1910A.5.
3. POST-INSTALLED ANCHOR INSTALLATION SHALL BE INSPECTED BY A SPECIAL INSPECTOR SPECIFICALLY APPROVED BY THE ENFORCEMENT AGENCY FOR THAT PURPOSE.
4. POST-INSTALLED ANCHOR TESTING SHALL BE DONE IN THE PRESENCE OF THE PROJECT INSPECTOR.
5. TEST QUANTITY OF POST-INSTALLED ANCHORS AS NOTED BELOW:

APPLICATION	QUANTITY
SILL PLATES	10% OF BOLTS
STRUCTURAL	100% OF BOLTS
NON-STRUCTURAL (EQUIP. ANCHORAGE, ETC.)	50% OF BOLTS

6. IF ANY ANCHOR FAILS TESTING, TEST ALL ANCHORS OF THE SAME CATEGORY NOT PREVIOUSLY TESTED UNTIL TWENTY (20) CONSECUTIVE ANCHORS PASS, THEN RESUME INITIAL TESTING FREQUENCY.
7. TORQUE TESTING SHALL BE APPLIED BY CALIBRATED WRENCH. TENSION TESTING (WHERE INDICATED) SHALL BE APPLIED BY HYDRAULIC JACK OR CALIBRATED SPRING LOADING DEVICE.
8. THE FOLLOWING CRITERIA SHALL APPLY FOR THE ACCEPTANCE OF INSTALLED POST-INSTALLED ANCHORS:
    A. TORQUE WRENCH METHOD: THE APPLICABLE TEST TORQUE MUST BE ATTAINED WITHIN ONE-HALF (1/2) TURN OF THE NUT. SLEEVE ANCHORS 3/8 INCH DIAMETER OR LESS MUST ATTAIN THE SPECIFIED TEST TORQUE WITHIN ONE-QUARTER (1/4) TURN OF THE NUT, AND THREADED ANCHORS MUST ATTAIN THE SPECIFIED TEST TORQUE WITHIN ONE-QUARTER (1/4) TURN OF THE SCREW AFTER INITIAL SEATING OF THE SCREW HEAD.
    B. HYDRAULIC RAM METHOD: (FOR TENSION TESTING WHERE INDICATED) ANCHORS SHALL MAINTAIN THE TENSION TEST LOAD FOR A MINIMUM OF 15 SECONDS AND SHALL EXHIBIT NO DISCERNABLE MOVEMENT DURING THE TENSION TEST. (AN EXAMPLE OF DISCERNABLE MOVEMENT WOULD BE LOOSENING OF THE WASHER UNDER THE NUT).
9. TEST LOADS (1)(2)(3)

TORQUE TEST VALUES - EXPANSION ANCHORS
NORMAL WEIGHT CONCRETE

ANCHOR DIAMETER (INCH)	ANCHOR DEPTH (INCHES)	REQ'D. ANCHOR DEPTH (INCHES NOMINAL)	TORQUE (FT-LBF)
3/8	2	2½	30
1/2	2	2½	50
	3¼	3¾	50
5/8	3¼	3¾	40
	4	4½	40
3/4	3¾	4½	110
	4¾	5½	110

(1) TEST VALUES ARE BASED ON KWIK BOLT TZ2 (KB-TZ2) EXPANSION ANCHORS BY HILTI, INC. (ICC EVALUATION REPORT NUMBER ESR-4266).

(2) TEST VALUES ARE BASED ON CARBON STEEL ANCHORS.

(3) VERIFY TORQUE VALUES WITH MANUFACTURER FOR SIMPSON STRONG-BOLT 2 (ICC ESR-3037) OR DEWALT POWER-STUD+SD2 (ICC ESR-2502)

TORQUE TEST VALUES - EXPANSION ANCHORS
GROUT FILLED CMU

ANCHOR DIAMETER (INCH)	ANCHOR DEPTH (INCHES)	REQ'D. ANCHOR DEPTH (INCHES NOMINAL)	TORQUE (FT-LBF)
3/8	2½	3	15
1/2	2	2½	25
	3¼	3¾	25
5/8	2¾	3¼	35
	4	4½	35
3/4	3¼	4	50
	4¾	5½	50

(1) TEST VALUES ARE BASED ON KWIK BOLT TZ2 (KB-TZ2) EXPANSION ANCHORS BY HILTI, INC. (ICC EVALUATION REPORT NUMBER ESR-4561).

(2) TEST VALUES ARE BASED ON CARBON STEEL ANCHORS.

(3) ACCETABLE EQUIVALENT ANCHORS SHALL HAVE ICC OR IAPMO APPROVAL FOR 2022 CBC IN CRACKED GROUT FILLED CMU.

TORQUE TEST VALUES - EXPANSION ANCHORS
STRUCTURAL LIGHT WEIGHT CONCRETE OVER METAL DECK

ANCHOR DIAMETER (INCH)	ANCHOR DEPTH (INCHES)	REQ'D. ANCHOR DEPTH (INCHES NOMINAL)	TORQUE (FT-LBF)
3/8	2	2½	30
1/2	2	2½	50
	3¼	3¾	50
5/8	3¼	3¾	40
	4	4½	40

(1) TEST VALUES ARE BASED ON KWIK BOLT TZ2 (KB-TZ2) EXPANSION ANCHORS BY HILTI, INC. (ICC EVALUATION REPORT NUMBER ESR-4266).

(2) TEST VALUES ARE BASED ON CARBON STEEL ANCHORS.

(3) VERIFY TORQUE VALUES WITH MANUFACTURER FOR SIMPSON STRONG-BOLT 2 (ICC ESR-3037) OR DEWALT POWER-STUD+SD2 (ICC ESR-2502)

TORQUE TEST VALUES - SCREW ANCHORS
NORMAL WEIGHT CONCRETE

ANCHOR DIAMETER (INCH)	ANCHOR DEPTH (INCHES NOMINAL)	TORQUE (FT-LBF)
1/4	1 5/8"	24
	2 1/2"	24
3/8	2¾	50
	3½	50
1/2	3¾	65
	4½	65
5/8	4½	100
	6	100
3/4	6	150
	6¾	150

(1) TEST VALUES ARE BASED ON TITEN HD SCREW ANCHORS BY SIMPSON STRONG-TIE, (ICC EVALUATION REPORT NUMBER ESR-2713).

(2) VERIFY TORQUE VALUES WITH MANUFACTURER FOR HILTI KWIK HUS-EZ SCREW ANCHORS (ICC ESR-3027) OR DEWALT SCREW-BOLT+SCREW ANCHOR (ICC ESR-3889)

ANCHORS AND/OR DOWELS INSTALLED WITH ADHESIVE

1. ANCHORS AND/OR DOWELS SHALL BE INSTALLED WITH ADHESIVE ONLY WHERE INDICATED ON DRAWINGS.
2. ANCHORS AND/OR DOWELS SHALL BE INSTALLED IN CONCRETE USING ONE OF THE FOLLOWING PRODUCTS IN ACCORDANCE WITH THE APPLICABLE ICC/IAPMO REPORT:
    - HILTI HIT-HY 200 ADHESIVE — ICC NO. ESR-3187
    - SIMPSON SET-XP ADHESIVE — ICC NO. ESR-2508
    - DEWALT PURE110+ ADHESIVE — ICC NO. ESR-3298
3. ANCHORS AND/OR DOWELS SHALL BE INSTALLED IN GROUTED MASONRY USING ONE OF THE FOLLOWING PRODUCTS IN ACCORDANCE WITH THE APPLICABLE ICC REPORT:
    - HILTI HIT-HY 200 ADHESIVE — ICC NO. ESR-3963
    - SIMPSON SET-XP ADHESIVE — IAPMO NO. ER-265
4. ADHESIVE SYSTEMS OTHER THAN THOSE SPECIFIED SHALL BE SUBMITTED AS A SUBSTITUTION, AND ARE SUBJECT TO THE REVIEW AND APPROVAL OF THE ENFORCEMENT AGENCY, THE ARCHITECT, AND THE STRUCTURAL ENGINEER.
5. HOLES SHALL BE DRILLED WITH NON-REBAR-CUTTING DRILL BITS.
6. HOLES SHALL BE CLEAN OF CONCRETE DUST AND DEBRIS USING A NYLON BRUSH AND OIL-FREE COMPRESSED AIR. HOLES SHALL ALSO BE FREE OF STANDING WATER.
7. PROJECT INSPECTOR SHALL VERIFY INSTALLATION OF ANCHORS OR DOWELS IN ACCORDANCE WITH MANUFACTURER'S RECOMMENDATIONS, INCLUDING CLEANLINESS OF DRILL HOLES AND PROPER EMBEDMENT.
8. ANCHORS SET IN CONCRETE AND GROUTED MASONRY SHALL BE TESTED TO 2 TIMES THE ASD ALLOWABLE TENSION LOAD, 1.25 TIMES THE LRFD STRENGTH CAPACITY, OR 80% OF THE YIELD STRENGTH OF THE BOLT FOR THE SPECIFIC LOCATION OF THE ANCHOR TO BE TESTED, WHICHEVER IS LESS. TORQUE TESTING IS NOT PERMITTED. SEE DETAILS FOR TEST LOADS.
9. ADHESIVE ANCHORS INSTALLED IN HORIZONTAL TO VERTICALLY OVERHEAD ORIENTATION TO SUPPORT SUSTAINED TENSION LOADS SHALL BE DONE BY A CERTIFIED ADHESIVE ANCHOR INSTALLER (AAI) AS CERTIFIED THROUGH ACI/CRSI (ACI 318-13 17.8.2.2). PROOF OF CURENT CERTIFICATION SHALL BE SUBMITTED TO THE ENGINEER FOR APPROVAL PRIOR TO COMMENCEMENT OF INSTALLATION.
10. ADHESIVE ANCHORS MUST BE INSTALLED IN CONCRETE AGED A MINIMUM OF 21 DAYS.

STATE:

IDENTIFICATION STAMP
DIV. OF THE STATE ARCHITECT
APP: 03-124281 INC:
REVIEWED FOR
SS ☑ FLS ☑ ACS ☑
DATE: 02/04/2025

ARCHITECT:

architecture westbergwhite
14471 Chambers Rd, Suite 210
Tustin, CA 92780
714.508.1780 714.508.1780 Fax

LICENSED ARCHITECT PAUL DENNIS WESTBERG STATE OF CALIFORNIA

CONSULTANT:

rtm engineering consultants
1ADA,Suite 100, Irvine, CA 92618
Tel (949) 462-3200 • Fax (949) 462-3201
WWW.RTMEC.COM
RTM JOB NO: 24.002173.2585 (259.123)

REGISTERED PROFESSIONAL ENGINEER JOSH RANDALL No. 4506 Exp. 6-30-25 STRUCTURAL STATE OF CALIFORNIA

PROJECT NAME:

Bellflower Unified School District
Mayfair High School Sports Fields
6000 North Woodruff Ave
Lakewood, California 90713

CLIENT:

BELLFLOWER UNIFIED SCHOOL DISTRICT
16703 S. Clark Ave.
BELLFLOWER, CALIFORNIA 90706

#	Rev. Date	Description

JOB NO:	15008
DATE:	05/24/2024
DRAWN:	NP
CHECK:	BP
ARCHITECT:	PDW
ENGINEER:	

SHEET DESCRIPTION:
GENERAL NOTES

SHEET NO:
S002

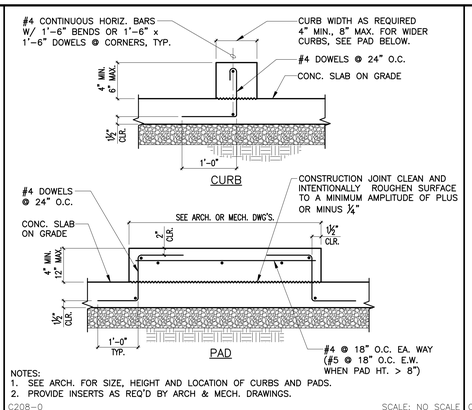

NOTES:
1. SEE ARCH. FOR SIZE, HEIGHT AND LOCATION OF CURBS AND PADS.
2. PROVIDE INSERTS AS REQ'D BY ARCH & MECH. DRAWINGS.

C208–0 SCALE: NO SCALE

17 CONCRETE CURB AND PADS

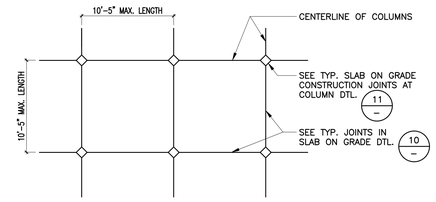

NOTES:
1. PANELS SHALL BE DIVIDED BY CONTROL JOINTS AND CONSTRUCTION JOINTS.
2. PROVIDE CONTROL JOINTS PERPENDICULAR TO CONSTRUCTION JOINTS.
3. IN AREAS WHERE COLUMNS DO NOT OCCUR PROVIDE CONSTRUCTION OR CONTROL JOINTS AT 15'–0" MAX.
4. BETWEEN 1:1 TO 2:1 PANEL SHALL NOT EXCEED 200 SQUARE FEET IN AREA.
5. SEE PLANS FOR LOCATIONS WHERE ADDITIONAL JOINTS MAY BE REQUIRED.
6. THE CONTRACTOR SHALL SUBMIT A PROPOSED LAYOUT OF JOINTS FOR APPROVAL PRIOR TO POURING SLABS.
7. PROVIDE JOINTS @ ALL RE–ENTRANT CORNERS IN SLAB CONSTRUCTION.

C201–0 SCALE: NO SCALE

13 METHOD OF POURING S.O.G.

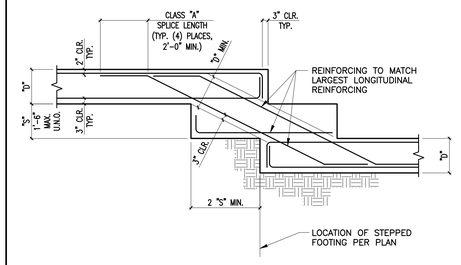

NOTES:
1. FOR FOOTING REINFORCING SEE FOOTING ELEVATIONS AND/OR SECTIONS.
2. VERTICAL WALL DOWELS SHALL EXTEND TO BOTTOM OF FOOTING.

C104–0 SCALE: NO SCALE

9 STEPPED FTG. TWO LAYERS OF REINF.

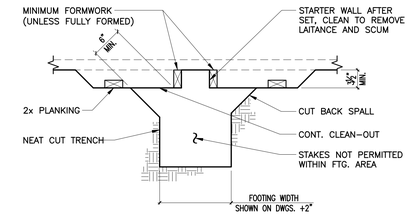

NOTES:
1. FOUNDATION CONCRETE MAY BE PLACED DIRECTLY INTO NEAT EXCAVATIONS PROVIDED THE FOUNDATION TRENCH WALLS ARE STABLE AS DETERMINED BY THE GEOTECHNICAL ENGINEER.
2. FOOTING WIDTHS SHALL NOT BE MORE THAN 4" WIDER THAN SHOWN ON PLAN.
3. FORMWORK NOT PERMITTED BELOW GRADE UNLESS FULLY FORMED.

C101–0 SCALE: NO SCALE

5 FOOTING POURED AGAINST EARTH

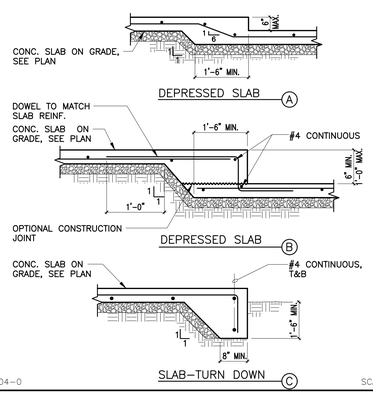

C204–0 SCALE: NO SCALE

18 DEPRESSED S.O.G. AND SLAB EDGE

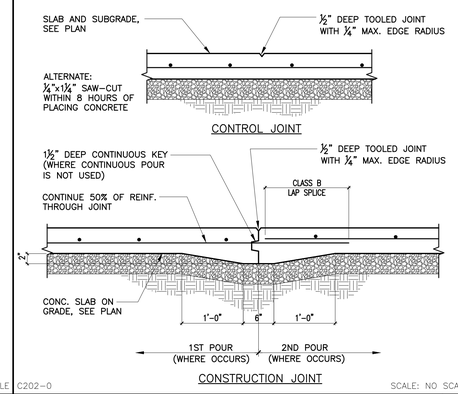

C202–0 SCALE: NO SCALE

14 JOINT IN SLAB ON GRADE

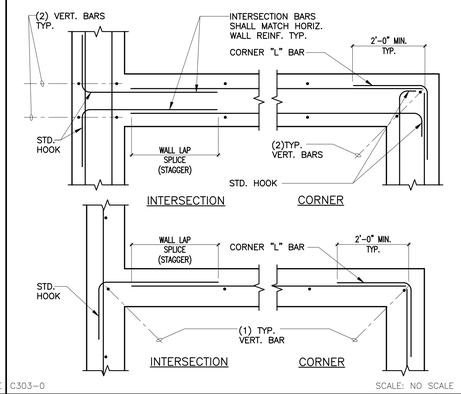

C303–0 SCALE: NO SCALE

10 REINF. AT FNDN. WALL INTERSECTION

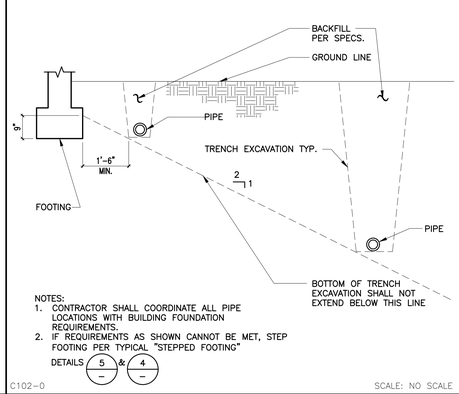

NOTES:
1. CONTRACTOR SHALL COORDINATE ALL PIPE LOCATIONS WITH BUILDING FOUNDATION REQUIREMENTS.
2. IF REQUIREMENTS AS SHOWN CANNOT BE MET, STEP FOOTING PER TYPICAL "STEPPED FOOTING"

DETAILS 5 & 4

C102–0 SCALE: NO SCALE

2 PIPES PARALLEL TO FOOTINGS

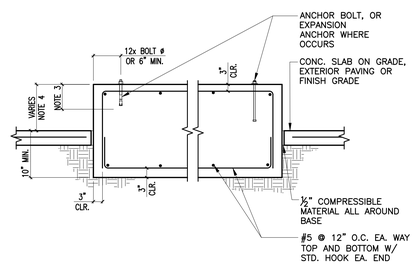

NOTES:
SEE MECHANICAL AND ELECTRICAL DRAWINGS FOR THE FOLLOWING:
1. LOCATION AND DIMENSIONS OF BASES.
2. LOCATION, NUMBER, SIZE AND TYPE OF BOLTS.
3. EMBEDMENT OF EXPANSION ANCHORS WHERE OCCURS.
4. CURB HEIGHT, 4" MIN.

C209–0 SCALE: NO SCALE

19 CONCRETE BASE FOR EQUIPMENT

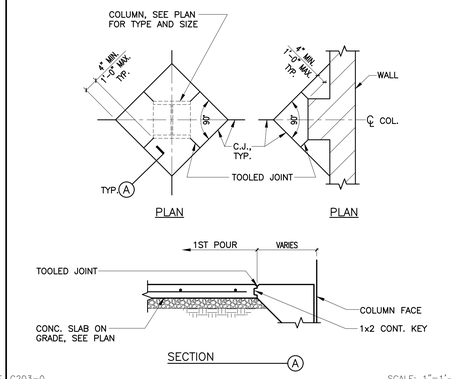

C203–0 SCALE: 1"=1'–0"

15 S.O.G. CONST. JOINTS AT COL.

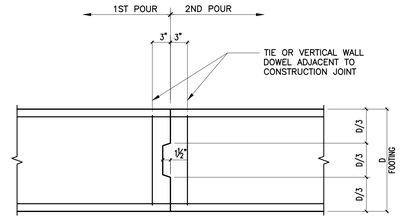

C105–0 SCALE: NO SCALE

11 CONTINUOUS FOOTING CONST. JOINT

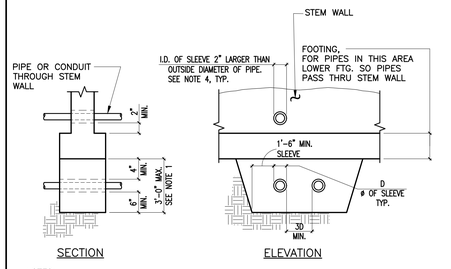

NOTES:
1. FOOTINGS SHALL BE STEPPED SO THAT THIS DIMENSION DOES NOT EXCEED 3'–0".
2. CONTRACTOR SHALL COORDINATE ALL PIPE AND CONDUIT LOCATIONS WITH BUILDING FOUNDATION REQUIREMENTS.
3. TRENCH BELOW FOOTING SHALL BE FILLED WITH CONCRETE OR 3–SACK SLURRY BEFORE POURING FOOTING. CONCRETE FILL SHALL BE SAME WIDTH AS FOOTING AND FULL WIDTH OF PIPE TRENCH.
4. PIPES MAY BE WRAPPED IN 1" THICK LOOSE FOAM IN LIEU OF SLEEVING.
5. CONDUIT MAY BE RUN THRU STEM OR ENCASEMENT UNDER FOOTING WITHOUT SLEEVES OR FOAM WRAP.

C103–0 SCALE: NO SCALE

3 PIPES PERPENDICULAR TO FOOTINGS

PAD FOOTING SCHEDULE				
	A	B	REINF.	REMARKS
PF–3	3'–0"	2'–0"	(5)#5 EA. WAY	
PF–4	4'–0"	2'–0"	(7)#5 EA. WAY	

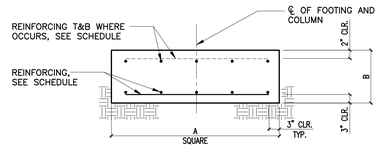

C107–0 SCALE: NO SCALE

16 PAD FOOTING SCHEDULE

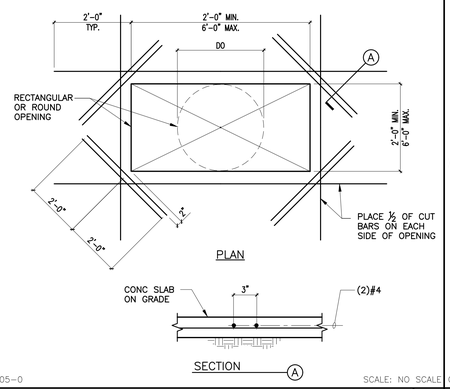

C205–0 SCALE: NO SCALE

12 OPENING IN SLAB ON GRADE

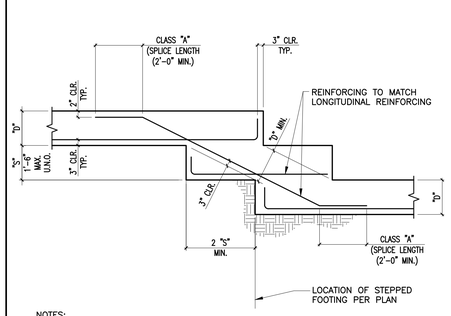

NOTES:
1. FOR FOOTING REINFORCING SEE FOOTING ELEVATIONS AND/OR SECTIONS.
2. VERTICAL WALL DOWELS SHALL EXTEND TO BOTTOM OF FOOTING.

C108–0 SCALE: NO SCALE

4 STEPPED FTG: ONE LAYER OF REINF.

STATE:

IDENTIFICATION STAMP
DIV. OF THE STATE ARCHITECT
APP: 03-124281 INC:
REVIEWED FOR
SS ☑ FLS ☑ ACS ☑
DATE: 02/04/2025

ARCHITECT:

westbergwhite architecture
14471 Chambers Rd, Suite 210
Tustin, CA 92780
714.508.1780 714.508.1780 Fax

LICENSED ARCHITECT
PAUL D. WESTBERG
No. C-26189
EXP. 08-31-2025
STATE OF CALIFORNIA

CONSULTANT:

rtm engineering consultants
1ADA,Suite 100, Irvine, CA 92618
Tel (949) 462-3200 • Fax (949) 462-3201
WWW.RTMEC.COM
RTM JOB NO: 24.002173.2585 (259.123)

REGISTERED PROFESSIONAL ENGINEER
BRIAN P. MCKEE
No. 46008
Exp. 6-30-25
STRUCTURAL
STATE OF CALIFORNIA

PROJECT NAME:

Bellflower Unified School District
Mayfair High School Sports Fields
6000 North Woodruff Ave
Lakewood, California 90713

CLIENT:

BELLFLOWER UNIFIED SCHOOL DISTRICT
16703 S. Clark Ave.
BELLFLOWER, CALIFORNIA 90706

#	Rev. Date	Description

JOB NO: 15008
DATE: 05/24/2024
DRAWN: NP
CHECK: BP
ARCHITECT: PDW
ENGINEER:

SHEET DESCRIPTION:
TYPICAL CONCRETE DETAILS

SHEET NO:
S003

REINFORCING DEVELOPMENT & SPLICE LENGTHS (GRADE 60)

TYPE	BAR LOCATION	CONCRETE TYPE	CONCRETE STRENGTH	BAR SIZE #3 ℓ_d	#3 ℓ_s	#3 ℓ_{dh}	#4 ℓ_d	#4 ℓ_s	#4 ℓ_{dh}	#5 ℓ_d	#5 ℓ_s	#5 ℓ_{dh}	#6 ℓ_d	#6 ℓ_s	#6 ℓ_{dh}	#7 ℓ_d	#7 ℓ_s	#7 ℓ_{dh}	#8 ℓ_d	#8 ℓ_s	#8 ℓ_{dh}	#9 ℓ_d	#9 ℓ_s	#9 ℓ_{dh}	#10 ℓ_d	#10 ℓ_s	#10 ℓ_{dh}	#11 ℓ_d	#11 ℓ_s	#11 ℓ_{dh}
1	VERT. REINF. IN CONC WALL	NWC	f'_c>4ksi	14	18	6	19	25	7	24	31	9	28	37	10	42	54	12	47	62	14	54	70	15	61	79	17	67	87	19
2	HORIZ. REINF. IN CONC. WALL, FTGS., BEAMS, MISC. (SEE NOTE 5)	NWC	f'_c>4ksi	18	24	6	25	32	7	31	40	9	37	48	10	54	70	12	62	80	14	70	91	15	79	102	17	87	113	19
3	SLAB ON GRADE (SEE NOTE 6)	NWC	f'_c>4ksi	14	18	6	19	25	7	24	31	9	28	37	10	42	54	12	47	62	14	54	70	15	61	79	17	67	87	19
4	CONC. ROOF OR FLOOR DIAPHRAGMS	LWC	f'_c≥3ksi	23	30	8	30	39	12	37	48	12	44	57	13	65	84	16	74	96	19	83	108	20	93	121	23	104	135	25

NOTES:

1. ℓ_d = DEVELOPMENT

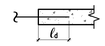

ℓ_s = LAP SPLICE LENGTH

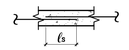

ℓ_{dh} = HOOK DEVELOPMENT LENGTH

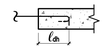

2. THE ABOVE DEVELOPMENT & SPLICE LENGTHS ARE CLASS B & APPLY TO ALL REINF. U.N.O. ON DWGS.
3. FOR NONCONTACT LAP SPLICES AND ALL SPLICES IN SHOTCRETE WALLS, ADD 6" TO THE LENGTHS IN THE TABLE ABOVE.
4. WHEN SPLICING BARS OF DIFFERENT SIZE, USE THE LAP SPLICE LENGTH OF LARGER BAR.
5. TYPE 2 VALUES NOTED HAVE ALREADY BEEN INCREASED BY 1.3, ASSUMING A "TOP BAR" CONDITION.
6. FOR SLABS OR CURBS THICKER THAN 12", THE REBAR LAPS SHALL BE INCREASED TO COMPLY WITH TYPE 2 VALUES.

C415-0 SCALE: NO SCALE

17 | 13 | 9 | DETAIL | 1

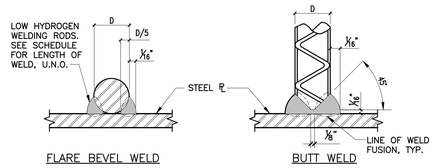

MINIMUM WELD REQUIREMENTS FOR LAP WELDING	
BAR SIZE	WELD LENGTH (EA. SIDE)
#3	2"
#4	2½"
#5	3"
#6	3½"
#7	4"

NOTES:
1. USE (E80XX) LOW HYDROGEN RODS FOR ALL REBAR WELDING.
2. ALL WELDING SHALL BE SUBJECT TO CONTINUOUS INSPECTION.

C413-0 SCALE: NO SCALE

18 | 14 | 10 | REBAR WELDING | 6

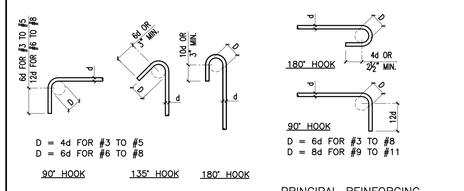

NOTES:
1. ALL BAR BENDS SHALL BE MADE COLD.
2. ALL REINFORCING BARS #5 & LARGER SHALL NOT BE RE-BENT.

C409-0 SCALE: NO SCALE

BAR BENDS | 2

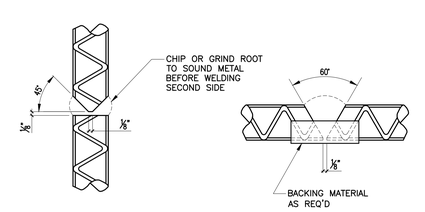

NOTES:
1. A PRE-QUALIFICATION TEST SHALL BE MADE BY AN APPROVED TESTING LABORATORY ON SAMPLES OF EACH SIZE BAR BEING WELDED.
2. WELDING SHALL BE WITH E80XX LOW HYDROGEN ELECTRODES AND SHALL CONFORM TO A.W.S. - D1.4.

C412-0 SCALE: NO SCALE

19 | 15 | 11 | BUTT WELDED REINFORCING BARS | 7

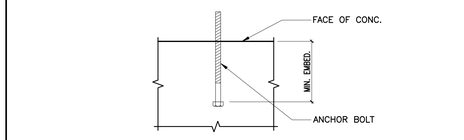

BOLT SIZE	EMBEDMENT FOR CONCRETE U.N.O.	EMBEDMENT FOR CONC. @ SHEAR WALLS
½"	4"	6"
⅝"	5"	7½"
¾"	6"	9"
⅞"	7"	10½"
1"	8"	12"
1⅛"	9"	13½"
1¼"	10"	15"

NOTES:
1. MINIMUM BOLT SPACING SHALL BE 12 BOLT DIAMETERS WITH A MINIMUM EDGE DISTANCE OF 12 DIAMETERS, UNLESS NOTED OTHERWISE.
2. PROVIDE AN ADDITIONAL 2" OF EMBEDMENT FOR ANCHOR BOLTS LOCATED IN THE TOP OF COLUMNS.
3. ANCHOR BOLTS SHALL BE HEX HEADED WITH THE DIMENSIONS OF THE HEX CONFORMING TO ANSI/ASME B18.2.1 BENT BAR ANCHORS SHALL NOT BE USED.

C501-0 SCALE: NO SCALE

20 | 16 | 12 | 8 | TRANSFORMER MOUNTING DETAIL | 4

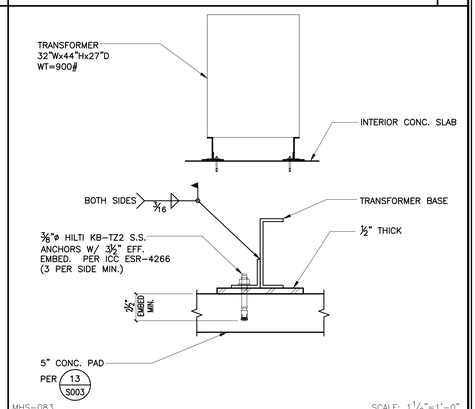

MHS-083 SCALE: 1½"=1'-0"

STATE:

IDENTIFICATION STAMP
DIV. OF THE STATE ARCHITECT
APP: 03-124281 INC:
REVIEWED FOR
SS ☑ FLS ☑ ACS ☑
DATE: 02/04/2025

ARCHITECT:

architecture
westbergwhite
14471 Chambers Rd, Suite 210
Tustin, CA 92780
714.508.1780 714.508.1780 Fax

LICENSED ARCHITECT — PATRICK D. WESTBERG — No. C-30778 — STATE OF CALIFORNIA

CONSULTANT:

rtm
engineering consultants
1ADA, Suite 100, Irvine, CA 92618
Tel (949) 462-3200 • Fax (949) 462-3201
WWW.RTMEC.COM
RTM JOB NO: 24.002173.2585 (259.123)

REGISTERED PROFESSIONAL ENGINEER — BRIAN PHAM — No. C-56006 Exp. 6-30-25 — STRUCTURAL — STATE OF CALIFORNIA

PROJECT NAME:

Bellflower Unified School District
Mayfair High School Sports Fields
6000 North Woodruff Ave
Lakewood, California 90713

CLIENT:

BELLFLOWER UNIFIED SCHOOL DISTRICT
16703 S. Clark Ave.
BELLFLOWER, CALIFORNIA 90706

#	Rev. Date	Description

JOB NO: 15008
DATE: 05/24/2024
DRAWN: NP
CHECK: BP
ARCHITECT: PDW
ENGINEER:

SHEET DESCRIPTION:
TYPICAL REINFORCING DETAILS

SHEET NO:
S004

17

FREESTANDING CMU WALL SCHEDULE

H	W	(A)	(B) *	(C)	WALL THICKNESS (NOMINAL)
1'–0" TO 2'–0"	1'–8"	#4 @ 24" O.C.	#4 @ 24" O.C.	#5 @ 14" O.C.	8"
2'–1" TO 3'–0"	2'–2"	#4 @ 24" O.C.	#4 @ 24" O.C.	#5 @ 14" O.C.	8"
3'–1" TO 4'–0"	2'–8"	#4 @ 24" O.C.	#4 @ 24" O.C.	#5 @ 14" O.C.	8"
4'–1" TO 5'–0"	3'–3"	#4 @ 24" O.C.	#5 @ 24" O.C.	#5 @ 14" O.C.	8"
5'–1" TO 6'–0"	4'–0"	#5 @ 24" O.C.	#5 @ 24" O.C.	#5 @ 14" O.C.	8"
6'–1" TO 7'–0"	4'–4"	#5 @ 16" O.C.	#5 @ 24" O.C.	#5 @ 14" O.C.	8"
7'–1" TO 8'–0"	6'–0"	#5 @ 16" O.C.	#5 @ 16" O.C.	#6 @ 16" O.C.	12"
8'–1" TO 9'–0"	7'–0"	#6 @ 16" O.C.	#5 @ 16" O.C.	#6 @ 16" O.C.	12"
9'–1" TO 10'–0"	7'–6"	#7 @ 16" O.C.	#5 @ 16" O.C.	#6 @ 16" O.C.	12"
10'–1" TO 11'–0"	8'–0"	#7 @ 16" O.C.	#6 @ 16" O.C.	#6 @ 16" O.C.	12"

* SPACE VERTICAL REINFORCING @ 16" O.C. WHERE STACK BOND PATTERN OCCURS.

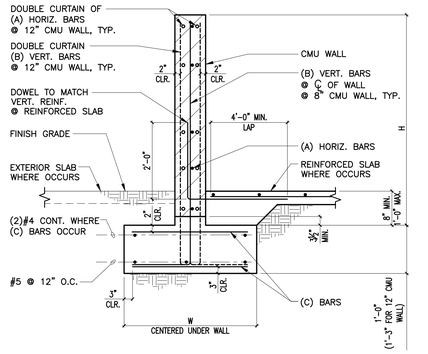

M108–0 SCALE: NO SCALE

16

FURRED WALL TO CMU WALL

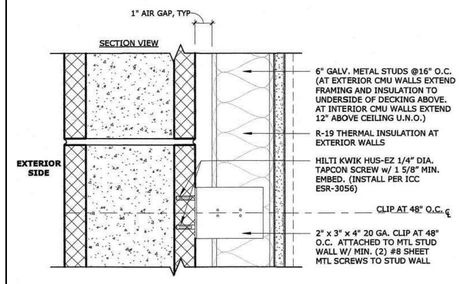

MHS–086 SCALE: NO SCALE

9

MINIMUM REINFORCING AT CONCRETE MASONRY WALL OPENINGS

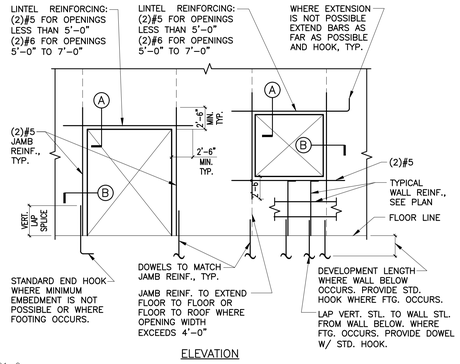

M101–0 SCALE: NO SCALE

10

TYPICAL CONTROL JOINT

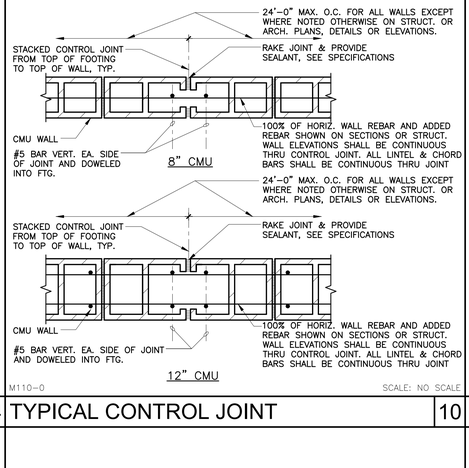

M110–0 SCALE: NO SCALE

11

CONCRETE MASONRY WALL PIERS

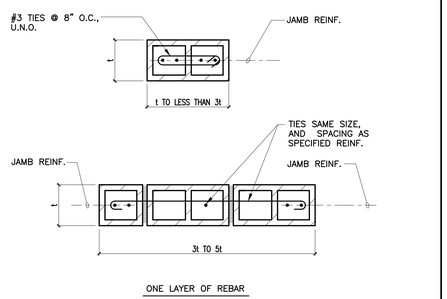

NOTE:
TIES MAY BE TURNED UP AS NECESSARY TO FIT INSIDE WALL. BREAK WEBS AND/OR INTERIOR FACE SHELL AS REQUIRED.

M111–0 SCALE: NO SCALE

6

MASONRY ANCHOR BOLT SCHEDULE

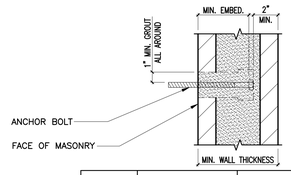

BOLT SIZE	MINIMUM EMBEDMENT	MINIMUM WALL THICKNESS
½"	4"	8"
⅝"	5"	8"
¾"	6"	12"
⅞"	7"	12"
1"	8"	16"
1⅛"	9"	16"
1¼"	10"	16"

NOTES:
1. MINIMUM BOLT SPACING SHALL BE 16 BOLT DIAMETERS WITH A MINIMUM EDGE DISTANCE OF 12 DIAMETERS, UNLESS NOTED OTHERWISE.
2. PROVIDE AN ADDITIONAL 2" OF EMBEDMENT FOR ANCHOR BOLTS LOCATED IN THE TOP OF COLUMNS, WALLS & PILASTERS.
3. ANCHOR BOLTS SHALL BE HEX HEADED WITH THE DIMENSIONS OF THE HEX CONFORMING TO ANSI/ASME B18.2.1 BENT BAR ANCHORS SHALL NOT BE USED.

M114–0 SCALE: NO SCALE

14

TYPICAL CONTROL JOINT

24'–0" MAX. O.C. FOR ALL WALLS EXCEPT WHERE NOTED OTHERWISE ON STRUCT. OR ARCH. PLANS, DETAILS OR ELEVATIONS.
STACKED CONTROL JOINT FROM TOP OF FOOTING TO TOP OF WALL, TYP.
RAKE JOINT & PROVIDE SEALANT, SEE SPECIFICATIONS
CMU WALL
#5 BAR VERT. EA. SIDE OF JOINT AND DOWELED INTO FTG.
100% OF HORIZ. WALL REBAR AND ADDED REBAR SHOWN ON SECTIONS OR STRUCT. WALL ELEVATIONS SHALL BE CONTINUOUS THRU CONTROL JOINT. ALL LINTEL & CHORD BARS SHALL BE CONTINUOUS THRU JOINT
8" CMU
12" CMU

M110–0 SCALE: NO SCALE

2

VERT. REINF. LAP SPLICE-MASONRY

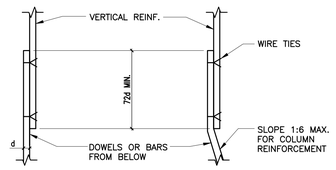

NOTES:
1. ALL VERTICAL REINFORCING FOR COLUMN, PIERS AND WALLS SHALL BE DOWELED AS SHOWN, UNLESS NOTED OTHERWISE.
2. DOWELS SHALL BE THE SAME GRADE, SIZE, QUANTITY AND/OR SPACING AS VERTICAL REINFORCING.
3. WHERE VERT. BARS OF DIFFERENT SIZE ARE BEING LAPPED, LAP LENGTH SHALL BE BASED UPON SMALLER BAR DIAMETER.

M102–0 SCALE: NO SCALE

3

HORIZ. REINF. LAP SPLICE - MASONRY

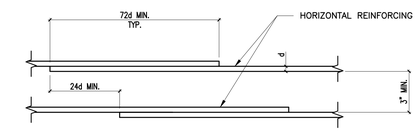

NOTES:
1. CONTRACTOR MAY AT HIS OPTION USE A BUTT WELDED SPLICE IN LIEU OF LAP.
2. WHERE HORIZ. BARS OF DIFFERENT SIZE ARE BEING LAPPED, LAP LENGTH SHALL BE BASED UPON SMALLER BAR DIAMETER.

M103–0 SCALE: NO SCALE

4

CONC. MAS. WALL INTERSECTIONS

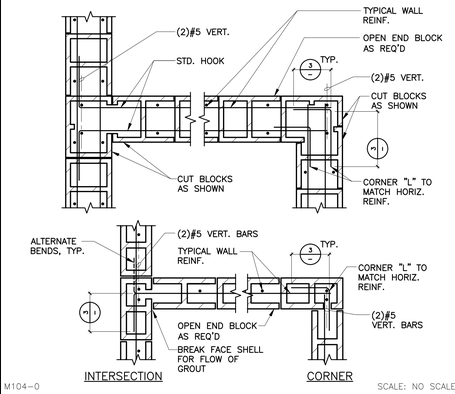

M104–0 SCALE: NO SCALE

STATE:

IDENTIFICATION STAMP
DIV. OF THE STATE ARCHITECT
APP: 03-124281 INC:
REVIEWED FOR
SS ☑ FLS ☑ ACS ☑
DATE: 02/04/2025

ARCHITECT:

architecture
westbergwhite
14471 Chambers Rd, Suite 210
Tustin, CA 92780
714.508.1780 714.508.1780 Fax

LICENSED ARCHITECT — REGISTERED PROFESSIONAL ENGINEER — STATE OF CALIFORNIA

CONSULTANT:

rtm
engineering consultants
1ADA,Suite 100, Irvine, CA 92618
Tel (949) 462-3200 • Fax (949) 462-3201
WWW.RTMEC.COM
RTM JOB NO: 24.002173.2585 (259.123)

REGISTERED PROFESSIONAL ENGINEER — BP KHOSRAVI — No. 4008 Exp. 6-30-25 — STRUCTURAL — STATE OF CALIFORNIA

PROJECT NAME:

Bellflower Unified School District
Mayfair High School Sports Fields
6000 North Woodruff Ave
Lakewood, California 90713

CLIENT:

BELLFLOWER UNIFIED SCHOOL DISTRICT
16703 S. Clark Ave.
BELLFLOWER, CALIFORNIA 90706

#	Rev. Date	Description

JOB NO: 15008
DATE: 05/24/2024
DRAWN: NP
CHECK: BP
ARCHITECT: PDW
ENGINEER:

SHEET DESCRIPTION:
TYPICAL MASONRY DETAILS

SHEET NO:
S005

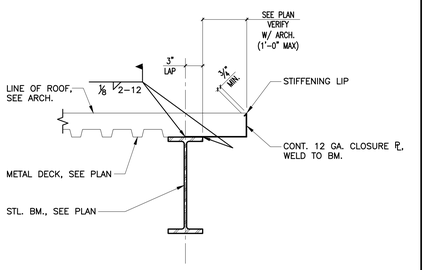

S507-0 SCALE: NO SCALE

TYPICAL ROOF DECK EDGE | 17

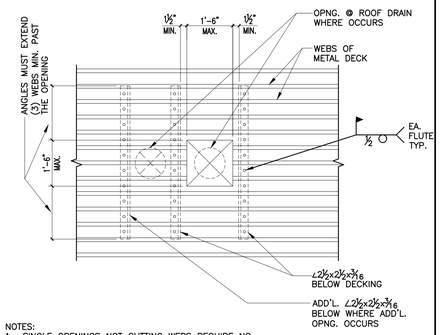

NOTES:
1. SINGLE OPENINGS NOT CUTTING WEBS REQUIRE NO ANGLES.

S503-0 SCALE: NO SCALE

OPENING THRU ROOF DECK | 13

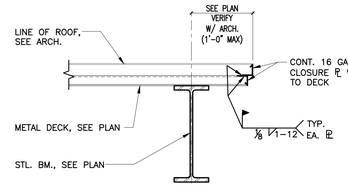

S506-0 SCALE: NO SCALE

TYPICAL ROOF DECK EDGE | 9

FLOOR AND ROOF CONSTRUCTION SCHEDULE		
MARK	DECK CONSTRUCTION	DETAIL
D1	1½"x18 GA. VERCO PLB-36 ROOF DECK	6 / –

S415-0 SCALE: NO SCALE

FLOOR AND ROOF CONST. SCHEDULE | 5

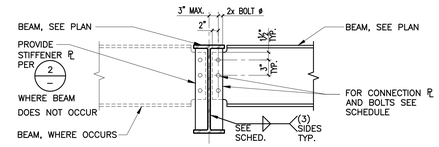

BEAM TO BEAM CONNECTION SCHEDULE				
BEAM DEPTH	CONN. ℄ THICKNESS	NO. AND ø OF A325N HS BOLTS	WELD L SIZE	REMARKS
W8	¼"	(2)¾"	5/16"	
W10	¼"	(2)⅞"	5/16"	
W12 – W14	¼"	(3)⅞"	¼"	
W16	⅜"	(4)⅞"	¼"	

NOTES:
1. FILLET WELD SHALL BE AS SHOWN, UNLESS A GREATER SIZE IS REQUIRED BY THE MANUAL OF STEEL CONSTRUCTION ALLOWABLE STRESS DESIGN, BY THE AMERICAN INSTITUTE OF STEEL CONSTRUCTION, CHAPTER J, SEC. J2, TABLE J2.4.
2. HORIZONTAL SHORT SLOTTED HOLES OPTIONAL.

S101-0 SCALE: NO SCALE

BEAM TO BEAM CONNECTION | 1

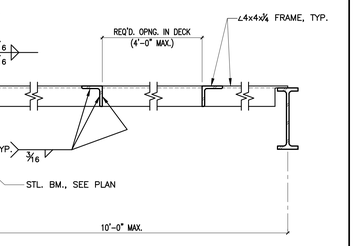

MHS-098 SCALE: 1"=1'-0"

STEEL ANGLE SPLICE DETAIL | 18

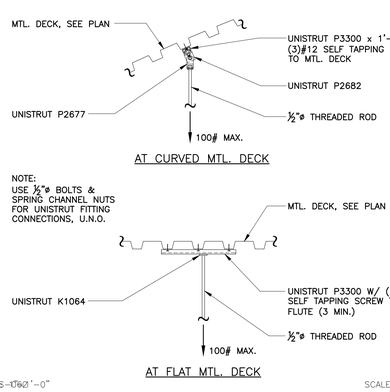

S203-0 SCALE: NO SCALE

HSS BM. TO STL. BM. CONN. | 14

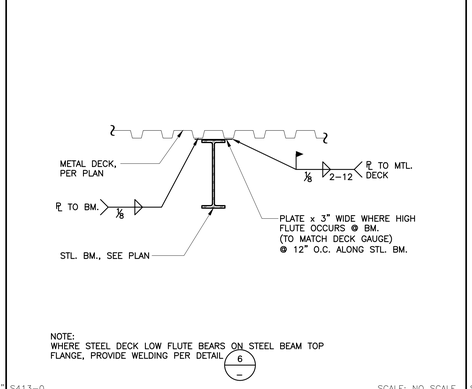

CEILING JOIST SCHEDULE	
JOIST SIZE	MAX. SPAN
4"x20 GA. @ 16" O.C.	7'-6"
6"x20 GA. @ 16" O.C.	9'-0"
6"x18 GA. @ 16" O.C.	16'-0" (NOTE 2)

NOTES:
1. THIS DETAIL IS INTENDED FOR CEILING JOISTS THAT SPAN FROM WALL TO WALL @ CONTRACTORS OPTION.
2. CONT. MIDSPAN BLKG. REQ'D.

S712-0 SCALE: NO SCALE

CEILING JOIST SCHEDULE & DETAILS | 10

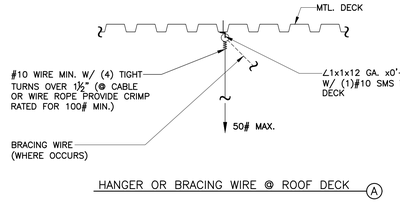

NOTES:
1. ○ INDICATES PUDDLE WELDS.
2. WHERE DECK RIBS ARE PARALLEL TO SUPPORTS USE ½" EFFECTIVE PUDDLE WELD @ 12" O.C.
3. SEAM ATTACHMENT TO BE VSC2 @ 18" O.C.
4. DECK IS TO BE WELDED TO SUPPORTS BY ½" EFFECTIVE PUDDLE WELDS AS SHOWN.
5. SEE ER-0217 FOR MORE INFORMATION.
6. MINIMUM DECK PROPERTIES:

MINIMUM DECK PROPERTIES	
GAUGE	18 GA
I in⁴	0.306
S+ (in³)	0.314
S- (in³)	0.331

S502-0 SCALE: NO SCALE

ROOF DECK WELDING & SECT. PROP. | 6

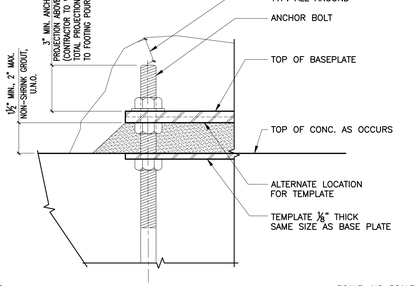

NOTE:
FILLET WELD SIZES SHALL BE AS SHOWN, UNLESS NOTED OTHERWISE.

S105-0 SCALE: NO SCALE

BEAM STIFFENER PLATES | 2

S509-0 SCALE: NO SCALE

TYPICAL ANGLE DROP IN FRAME | 19

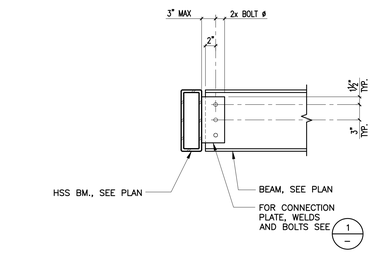

S102-0 SCALE: NO SCALE

WF BM. TO HSS BM. CONN. | 15

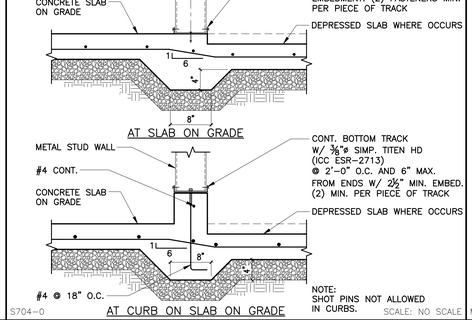

S704-0 SCALE: NO SCALE

NON-BEARING METAL STUD BOTT. | 11

MHS-072 SCALE: 1"=1'-0"

TYPICAL WIRE & STRAP DETAIL | 7

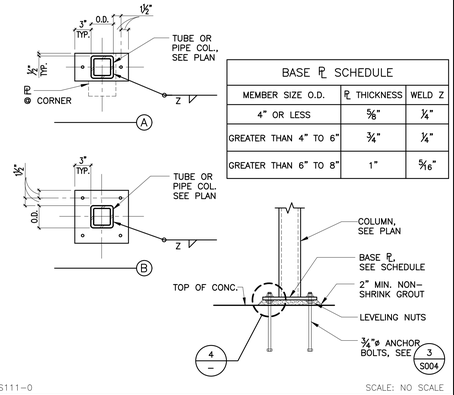

S111-0 SCALE: NO SCALE

COLUMN BASE PLATES | 3

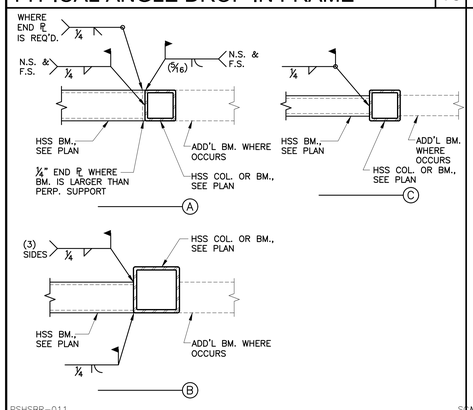

PSHSBR-011 SCALE: 1"=1'-0"

TYP. HSS CONNECTIONS | 20

S508-0 SCALE: 1"=1'-0"

ROD HANGER AT METAL DECK | 16

NOTE:
WHERE STEEL DECK LOW FLUTE BEARS ON STEEL BEAM TOP FLANGE, PROVIDE WELDING PER DETAIL 6/–

S413-0 SCALE: NO SCALE

DECK PARALLEL TO BEAM | 12

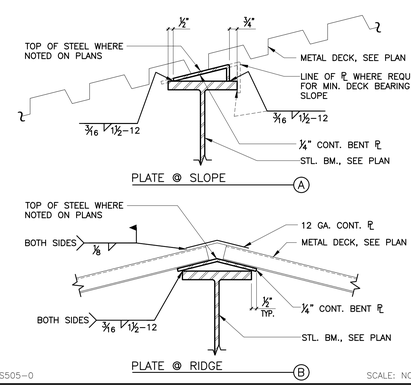

S505-0 SCALE: NO SCALE

BEAM SLOPE TRANSITION PLATES | 8

S114-0 SCALE: NO SCALE

ANCHOR BOLT PROJECTION | 4

STATE:

IDENTIFICATION STAMP
DIV. OF THE STATE ARCHITECT
APP: 03-124281 INC:
REVIEWED FOR
SS ☑ FLS ☑ ACS ☑
DATE: 02/04/2025

ARCHITECT:

architecture
westbergwhite
14471 Chambers Rd, Suite 210
Tustin, CA 92780
714.508.1780 714.508.1780 Fax

LICENSED ARCHITECT
PAUL D. WESTBERG
No. C-30775
STATE OF CALIFORNIA

CONSULTANT:

rtm
engineering consultants
1ADA,Suite 100, Irvine, CA 92618
Tel (949) 462-3200 • Fax (949) 462-3201
WWW.RTMEC.COM
RTM JOB NO: 24.002173.2585 (259.123)

REGISTERED PROFESSIONAL ENGINEER
BRIAN PHAM
No. 42606
Exp. 6-30-25
STRUCTURAL
STATE OF CALIFORNIA

PROJECT NAME:

Bellflower Unified School District
Mayfair High School Sports Fields
6000 North Woodruff Ave
Lakewood, California 90713

CLIENT:

BELLFLOWER UNIFIED
SCHOOL DISTRICT

16703 S. Clark Ave.
BELLFLOWER, CALIFORNIA 90706

Rev.	Date	Description

JOB NO: 15008
DATE: 05/24/2024
DRAWN: NP
CHECK: BP
ARCHITECT: PDW
ENGINEER:

SHEET DESCRIPTION:
TYPICAL
STEEL DETAILS

SHEET NO:
S006

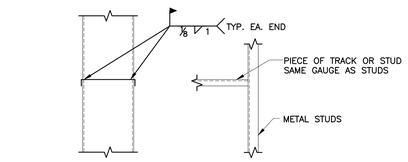

18 GA. & HEAVIER STUDS – (WELD OR SCREW)

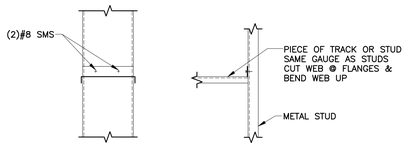

20 GA. & LIGHTER STUDS – (NO WELDING PERMITTED)

S617-0 SCALE: NO SCALE

METAL STUD BLOCKING | 17

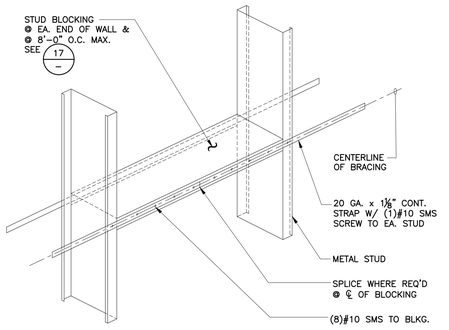

S618-0 SCALE: NO SCALE

METAL STUD BRACING | 18

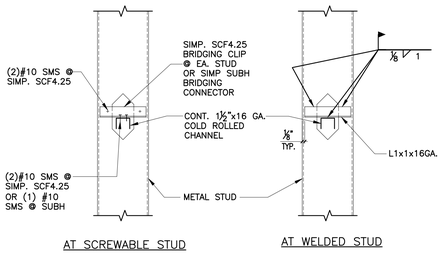

S619-0 SCALE: NO SCALE

METAL STUD BRIDGING | 19

HDS STUD SCHEDULE							
DEPTH	GAUGE	B	A	AREA (IN^2)	I (IN^4)	S (IN^3)	MAX SPACING OF STUD BRACING
3⅝"	16	3	1.0625"	0.715	1.483	0.818	4'-0"
4"	16	3	1.0625"	0.736	1.869	0.934	4'-0"
6"	16	3	2.25"	0.984	4.856	1.619	4'-0"
DIETRICH HDS PER ICC ESR-2374							

STUD SCHEDULE							
DEPTH	GAUGE	B	AREA (IN^2)	I (IN^4)	S (IN^3)	MAX. INTERIOR STUD WALL HT.*	SSMA DESIGNATION
2½"	20	1⅝"	.223	.235	.188	12'-0"	250S162-33
	18	1⅝"	.289	.302	.242	13'-0"	250S162-43
	16	1⅝"	.358	.370	.296	15'-0"	250S162-54
4"	20	1⅝"	.275	.692	.346	18'-11"	400S162-33
	18	1⅝"	.357	.892	.446	20'-7"	400S162-43
	16	1⅝"	.443	1.098	.549	22'-1"	400S162-54
6"	20	1⅝"	.344	1.793	.598	26'-0"	600S162-33
	18	1⅝"	.447	2.316	.772	28'-4"	600S162-43
	16	1⅝"	.556	2.860	.953	30'-4"	600S162-54

* MAX. HEIGHT PER SCHEDULE BASED ON SSMA CATALOG FOR INTERIOR, NON-BEARING WALLS WITH 5 PSF LATERAL LOAD @ L/240 @ 16" O.C.

TRACK SCHEDULE						
DEPTH	GAUGE	B	AREA (IN^2)	I (IN^4)	S (IN^3)	SSMA DESIGNATION
2½"	20	1½"	.190	.221	.167	250T150-33
	18	1½"	.248	.289	.217	250T150-43
	16	1½"	.311	.368	.273	250T150-54
4"	20	1½"	.242	.622	.300	400T150-33
	18	1½"	.315	.811	.390	400T150-43
	16	1½"	.396	1.025	.489	400T150-54
6"	20	1½"	.311	1.590	.517	600T150-33
	18	1½"	.405	2.072	.673	600T150-43
	16	1½"	.509	2.611	.843	600T150-54

NOTES:
1. SEE ARCHITECTURAL AND STRUCTURAL DRAWINGS FOR SIZE AND GAUGE OF STUDS. PROVIDE MIN. 20 GA. STUDS, U.N.O.
2. DIMENSIONS, PROPERTIES AND TYPES NOTED ARE BASED ON METAL STUDS AND TRACKS BY STEEL STUD MANUFACTURERS ASSOCIATION (SSMA), ICC ER-3064P, U.N.O.

S615-0 SCALE: NO SCALE

METAL STUD AND TRACK SCHEDULES | 15

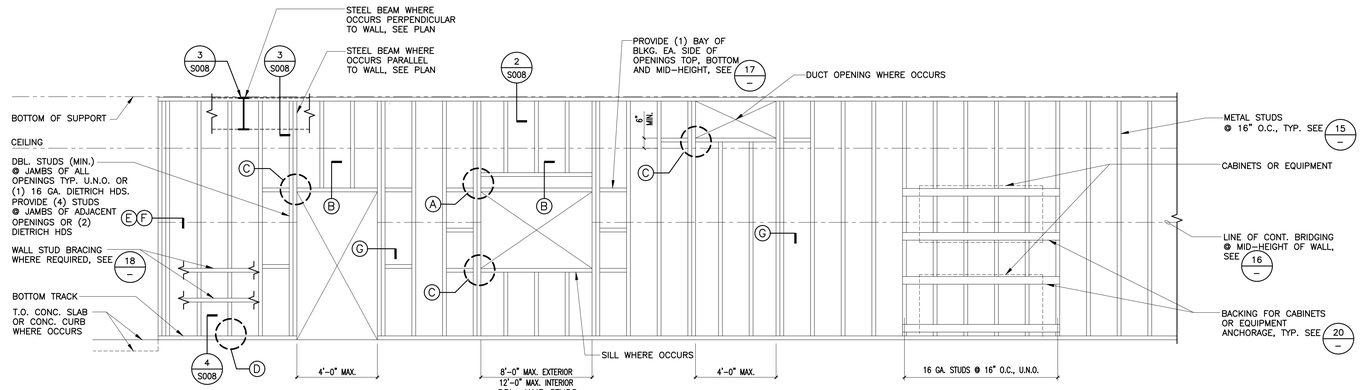

METAL STUD WALL ELEVATION – FULL HEIGHT

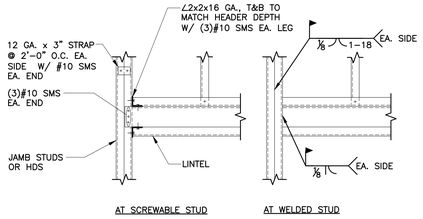

LINTEL TO JAMB (A)

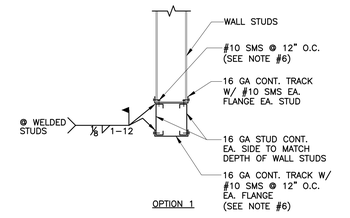

LINTEL SECTION (B)

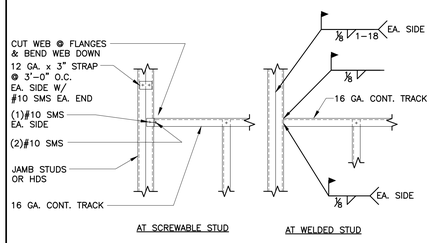

TRACK TO JAMB (C)

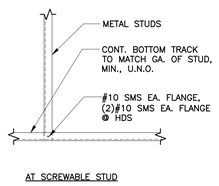

STUD TO TRACK (D)

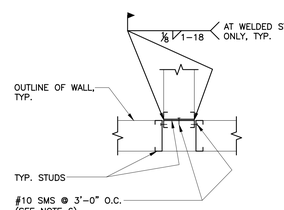

TYP. INTERSECTION (E)

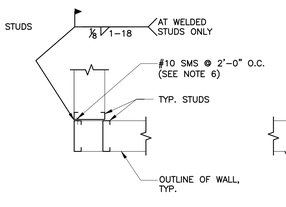

TYPICAL CORNER (F)

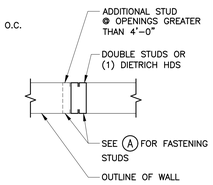

MULTIPLE STUDS (G)

NOTES:
1. SEE "METAL STUD AND TRACK SCHEDULES" ON THIS SHEET FOR ADDITIONAL INFORMATION.
2. SEE ARCHITECTURAL AND STRUCTURAL DRAWINGS FOR SIZE OF STUDS.
3. ALL TOP AND BOTTOM TRACKS SHALL BE SAME GAUGE AS STUDS, U.N.O.
4. ALL STUDS AT JAMBS OF DOOR AND WINDOW OPENINGS SHALL BE 16 GAUGE, U.N.O.
5. WELDING SHALL BE IN ACCORDANCE WITH STRUCTURAL WELDING CODE – SHEET STEEL, AWS D1.3, BY THE AMERICAN WELDING SOCIETY.
6. OMIT SHEET METAL SCREWS @ WELDED STUD CONDITIONS.

S604A-0 SCALE: NO SCALE

METAL STUD WALL FRAMING | 4

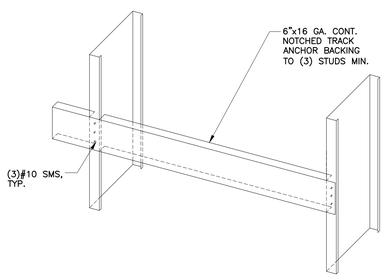

NOTE:
USE #10 SMS WHEN ATTACHING ITEMS TO BACKING, U.N.O.

S620-0 SCALE: NO SCALE

BACKING AT METAL STUDS | 20

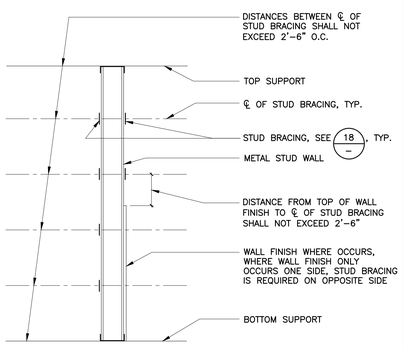

S616-0 SCALE: NO SCALE

WALL STUD BRACING LOCATION | 16

STATE:

IDENTIFICATION STAMP
DIV. OF THE STATE ARCHITECT
APP: 03-124281 INC:
REVIEWED FOR
SS ☑ FLS ☑ ACS ☑
DATE: 02/04/2025

ARCHITECT:

architecture
westbergwhite
14471 Chambers Rd, Suite 210
Tustin, CA 92780
714.508.1780 714.508.1780 Fax

LICENSED ARCHITECT
PAUL D. WESTBERG
No. C-26189
EXP. 08-31-2025
STATE OF CALIFORNIA

CONSULTANT:

rtm
engineering consultants
1ADA,Suite 100, Irvine, CA 92618
Tel (949) 462-3200 • Fax (949) 462-3201
WWW.RTMEC.COM
RTM JOB NO: 24.002173.2585 (259.123)

REGISTERED PROFESSIONAL ENGINEER
BRIAN PATRICK
No. S-6508
Exp. 6-30-25
STRUCTURAL
STATE OF CALIFORNIA

PROJECT NAME:

Bellflower Unified School District
Mayfair High School Sports Fields
6000 North Woodruff Ave
Lakewood, California 90713

CLIENT:

BELLFLOWER UNIFIED SCHOOL DISTRICT
16703 S. Clark Ave.
BELLFLOWER, CALIFORNIA 90706

#	Rev. Date	Description

JOB NO:	15008
DATE:	05/24/2024
DRAWN:	NP
CHECK:	BP
ARCHITECT:	PDW
ENGINEER:	

SHEET DESCRIPTION:

TYPICAL
STEEL DETAILS

SHEET NO:

S007

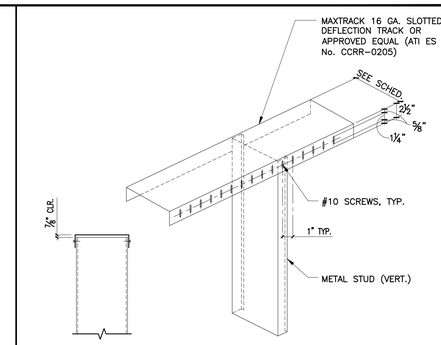

S711-0 (NON-BEARING) SCALE: NO SCALE

17 | 13 | 9 | 5 | METAL STUD TOP TRACK | 1

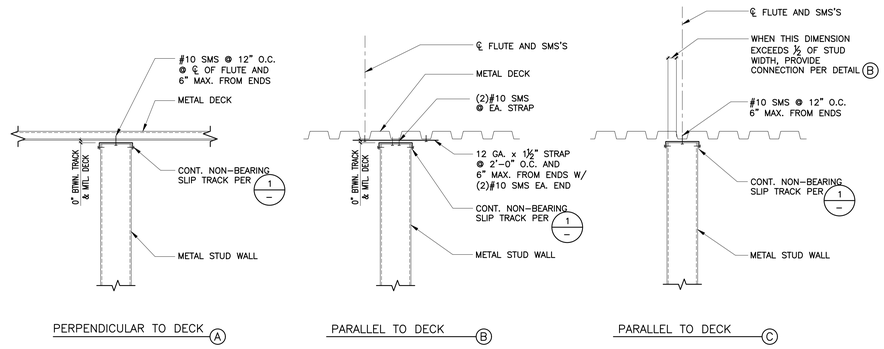

S810-0 SCALE: NO SCALE

18 | 14 | 10 | NON-BEARING METAL STUD PARTITION TOP (FULL HEIGHT WALL) | 2

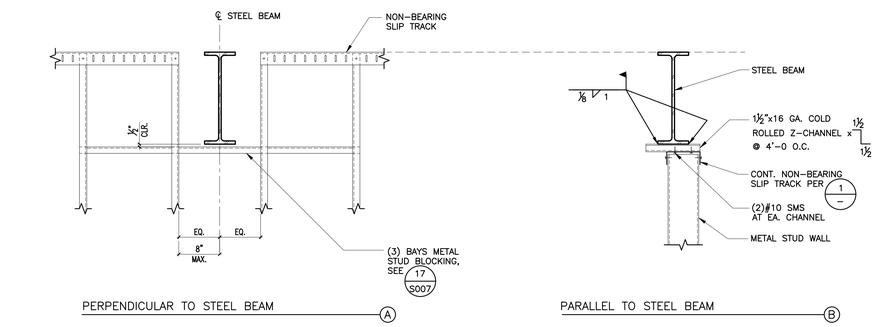

S803-0 SCALE: NO SCALE

19 | 15 | 11 | NON-BEARING METAL STUD TOP AT STEEL BEAM (FULL HEIGHT WALL) | 3

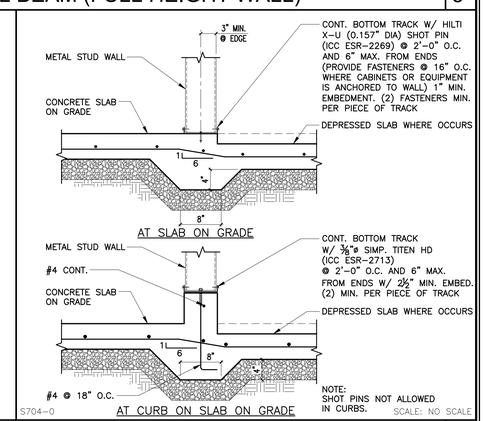

S704-0 SCALE: NO SCALE

20 | 16 | 12 | 8 | NON-BEARING METAL STUD BOTT. | 4

STATE:

IDENTIFICATION STAMP
DIV. OF THE STATE ARCHITECT
APP: 03-124281 INC:
REVIEWED FOR
SS ☑ FLS ☑ ACS ☑
DATE: 02/04/2025

ARCHITECT:

architecture
westbergwhite
14471 Chambers Rd, Suite 210
Tustin, CA 92780
714.508.1780 714.508.1780 Fax

LICENSED ARCHITECT PATRICK D. WESTBERG C-26955 STATE OF CALIFORNIA

CONSULTANT:

rtm
engineering consultants
1ADA,Suite 100, Irvine, CA 92618
Tel (949) 462-3200 • Fax (949) 462-3201
WWW.RTMEC.COM
RTM JOB NO: 24.002173.2585 (259.123)

REGISTERED PROFESSIONAL ENGINEER BRIAN PHAM No. 6006 Exp. 6-30-25 STRUCTURAL STATE OF CALIFORNIA

PROJECT NAME:

Bellflower Unified School District
Mayfair High School Sports Fields
6000 North Woodruff Ave
Lakewood, California 90713

CLIENT:

BELLFLOWER UNIFIED SCHOOL DISTRICT
16703 S. Clark Ave.
BELLFLOWER, CALIFORNIA 90706

#	Rev. Date	Description

JOB NO:	15008
DATE:	05/24/2024
DRAWN:	NP
CHECK:	BP
ARCHITECT:	PDW
ENGINEER:	

SHEET DESCRIPTION:

TYPICAL
STEEL DETAILS

SHEET NO:

S008

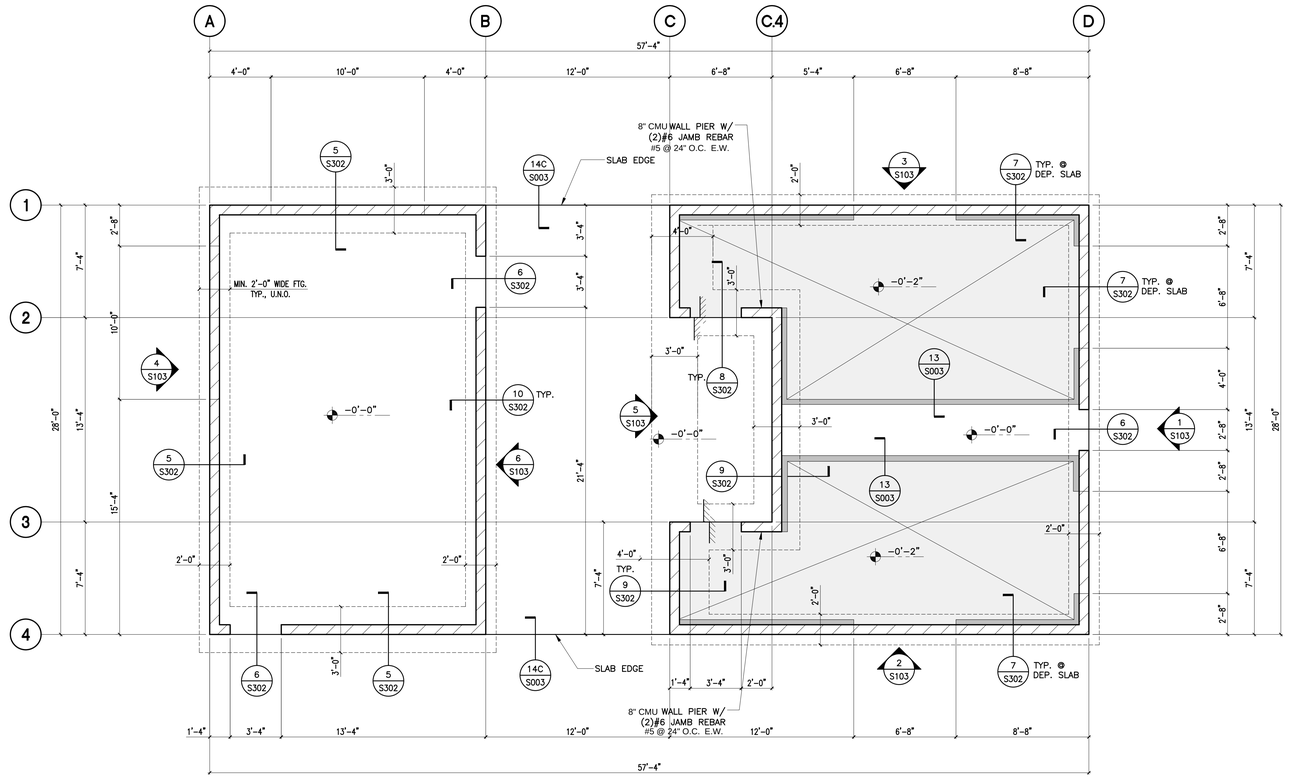

NORTH

CONCESSION & RESTROOM BUILDING - FOUNDATION PLAN

1/4" = 1'-0"

FOUNDATION PLAN NOTES

1. SEE SHEETS S001 THROUGH S008 FOR GENERAL NOTES AND TYPICAL DETAILS.
2. SEE SPECIFICATIONS FOR ALL SITE AND SUBGRADE PREPARATIONS.
3. SEE ARCHITECTURAL AND/OR CIVIL DRAWINGS FOR FINISH FLOOR ELEVATIONS.
4. SEE ARCHITECTURAL AND CIVIL DRAWINGS FOR ALL EXTERIOR CONCRETE PAVING, SLABS, BASES, CURBS, SITE WALLS, ETC.
5. FOR ANY DIMENSIONAL INFORMATION NOT SHOWN, SEE ARCHITECTURAL DRAWINGS.
6. SEE PLANS AND ARCHITECTURAL DRAWINGS FOR DEPRESSIONS AND/OR SLOPES IN CONCRETE SLABS.
7. ALL DIMENSIONS SHOWN ARE FROM FACE OF STUD, FACE OF CONCRETE, FACE OF MASONRY, CENTER LINE OF COLUMN, OR CENTER LINE OF WALL, UNLESS NOTED OTHERWISE. ALL COLUMNS ARE CENTERED IN STUD WALL, UNLESS NOTED OTHERWISE.
8. SEE ARCHITECTURAL DRAWINGS FOR SIZE AND LOCATION OF ALL DOOR AND WINDOW OPENINGS IN BEARING AND NON-BEARING WALLS.
9. SEE ARCHITECTURAL DRAWINGS FOR LOCATION OF INTERIOR NON-BEARING PARTITIONS. INTERIOR NON-BEARING PARTITION WALLS THAT DO NOT REQUIRE CONCRETE CURBS ARE NOT SHOWN ON STRUCTURAL DRAWINGS.
10. SEE ARCHITECTURAL, PLUMBING, MECHANICAL, ELECTRICAL, AND KITCHEN DRAWINGS FOR ADDITIONAL EMBEDDED ITEMS AND SLAB PENETRATIONS.
11. FOR TYPICAL PIPE CHASE IN CONCRETE STEM WALL, SEE DETAIL 3/S003.
12. FOR TYPICAL SLAB JOINTS, SEE DETAIL 9/S003.

LEGEND

: INDICATES MASONRY WALL. SEE PLAN FOR THICKNESS AND REINFORCING.

: INDICATES CONCRETE CURB. SEE PLANS AND DETAIL 13/S003 FOR ADDITIONAL INFORMATION.

: INDICATES DEPRESSED SLAB ON GRADE. SEE ARCHITECTURAL DRAWINGS FOR EXTENT.

: INDICATES TOP OF SLAB ELEVATION.

TYPICAL SLAB ON GRADE

5" CONCRETE W/ #4 @ 16" EACH WAY @ CENTER LINE OF SLAB (MINIMUM SPLICE = 24", STAGGERED), OVER 10 MIL VAPOR BARRIER, OVER 4" CRUSHED ROCK, OVER COMPACTED FILL OR NATURAL GRADE, UNLESS NOTED OTHERWISE.

STATE:

IDENTIFICATION STAMP
DIV. OF THE STATE ARCHITECT
APP: 03-124281 INC:
REVIEWED FOR
SS ☑ FLS ☑ ACS ☑
DATE: 02/04/2025

ARCHITECT:

architecture
westbergwhite
14471 Chambers Rd, Suite 210
Tustin, CA 92780
714.508.1780 714.508.1780 Fax

LICENSED ARCHITECT PAUL D. WESTBERG No. C-26785 STATE OF CALIFORNIA

CONSULTANT:

rtm
engineering consultants
1ADA,Suite 100, Irvine, CA 92618
Tel (949) 462-3200 • Fax (949) 462-3201
WWW.RTMEC.COM
RTM JOB NO: 24.002173.2585 (259.123)

REGISTERED PROFESSIONAL ENGINEER BRIAN PHILLIPS No. S6008 Exp. 6-30-25 STRUCTURAL STATE OF CALIFORNIA

PROJECT NAME:

Bellflower Unified School District
Mayfair High School Sports Fields
6000 North Woodruff Ave
Lakewood, California 90713

CLIENT:

BELLFLOWER UNIFIED SCHOOL DISTRICT
16703 S. Clark Ave.
BELLFLOWER, CALIFORNIA 90706

#	Rev. Date	Description

JOB NO:	15008
DATE:	05/24/2024
DRAWN:	NP
CHECK:	BP
ARCHITECT:	PDW
ENGINEER:	

SHEET DESCRIPTION:
CONCESSION & RESTROOM BLDG.
FOUNDATION PLAN

SHEET NO:
S101

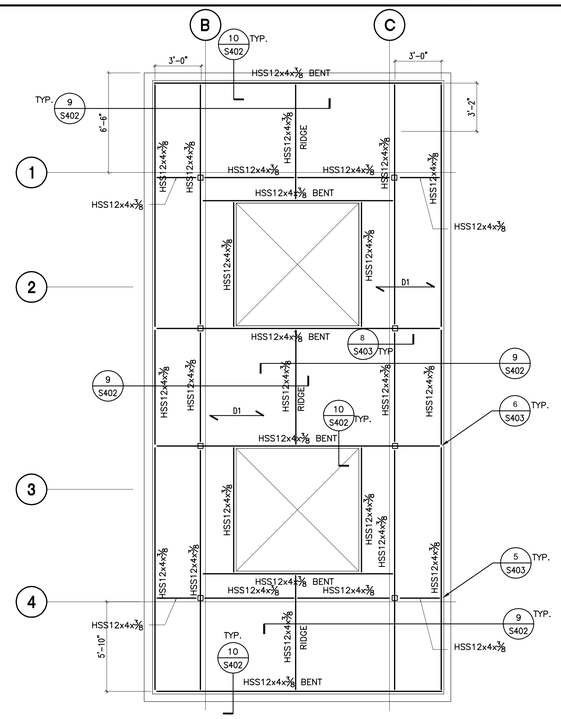

HIGH ROOF FRAMING PLAN

SCALE: 1/4" = 1'-0"

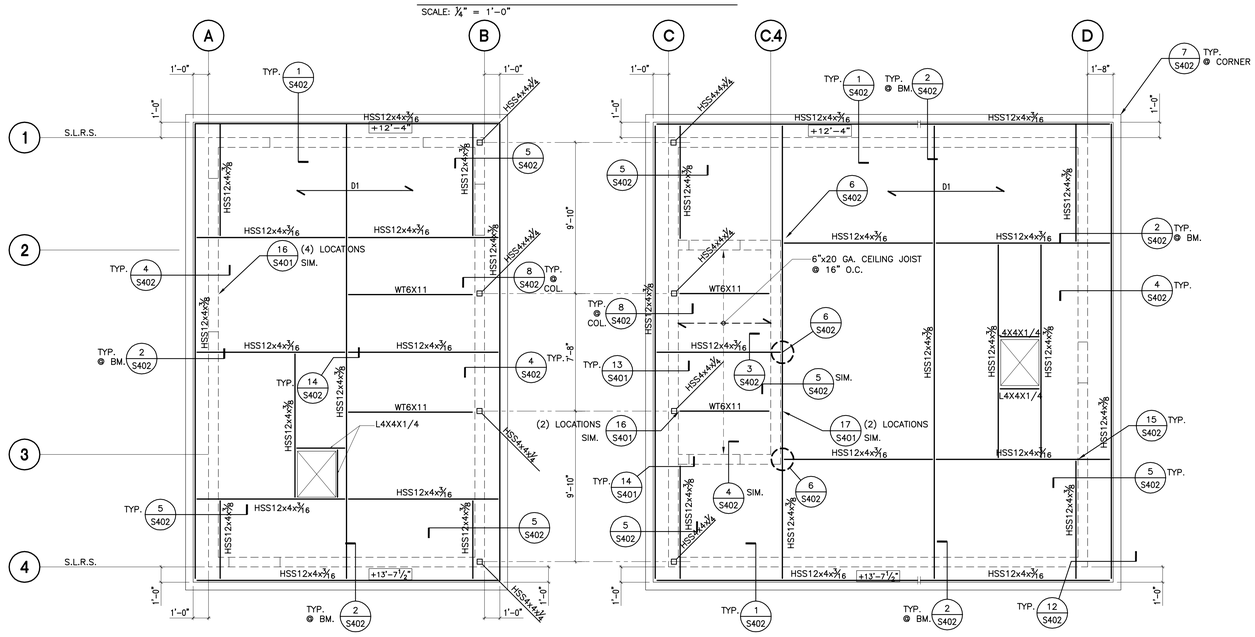

NORTH

CONCESSION & RESTROOM BUILDING - ROOF FRAMING PLAN 1/4" = 1'-0"

ROOF FRAMING PLAN NOTES

1. SEE SHEETS S001 THROUGH S008 FOR GENERAL NOTES AND TYPICAL DETAILS.
2. FOR ANY DIMENSIONAL INFORMATION NOT SHOWN, SEE ARCHITECTURAL DRAWINGS.
3. SEE ARCHITECTURAL, PLUMBING, MECHANICAL, AND ELECTRICAL DRAWINGS FOR SIZE AND LOCATION OF ROOF OPENINGS NOT SHOWN ON ROOF FRAMING PLANS. SEE DETAIL 13/S006 FOR TYPICAL OPENINGS, UNLESS NOTED OTHERWISE.
4. ALL BEAMS SHALL BE EQUALLY SPACED BETWEEN COLUMNS, UNLESS NOTED OTHERWISE.
5. THE CONTRACTOR SHALL COORDINATE LOCATION OF ALL FRAMING BEAMS AT MECHANICAL UNITS WITH MECHANICAL DRAWINGS. THE LOCATION OF FRAMING SHALL MATCH CURB LAYOUT AND ROOF PENETRATIONS FOR THE SUPPLIED UNITS.

LEGEND

- D1 : INDICATES SPAN OF METAL DECK. DECK SPAN INDICATED SHALL BE TYPICAL, UNLESS NOTED OTHERWISE. DECK SHALL SPAN OVER 2 SPANS MINIMUM (3 SUPPORTS) AND 3 SPANS (4 SUPPORTS) WHEREVER POSSIBLE. SEE ROOF CONSTRUCTION SCHEDULE ON SHEET 5/S006 FOR STRUCTURAL DECK REQUIREMENTS.
- : INDICATES TYPICAL CONNECTION WITH ASTM A325SC BOLTS.
- + : INDICATES TOP OF STEEL ELEVATION.
- : INDICATES BEAMS SPLICE PER DETAIL 6/S402.
- C1 : INDICATES HSS3x3x1/4 PARAPET SUPPORT POST.
- : INDICATES ROOF OPENING PER DETAIL 19/S006.

STATE:

IDENTIFICATION STAMP
DIV. OF THE STATE ARCHITECT
APP: 03-124281 INC:
REVIEWED FOR
SS ☑ FLS ☑ ACS ☑
DATE: 02/04/2025

ARCHITECT:

architecture
westbergwhite
14471 Chambers Rd, Suite 210
Tustin, CA 92780
714.508.1780 714.508.1780 Fax

LICENSED ARCHITECT PAUL D. WESTBERG No. C-25775 STATE OF CALIFORNIA

CONSULTANT:

rtm
engineering consultants
1ADA,Suite 100, Irvine, CA 92618
Tel (949) 462-3200 • Fax (949) 462-3201
WWW.RTMEC.COM
RTM JOB NO: 24.002;173.2585 (259.123)

REGISTERED PROFESSIONAL ENGINEER No. M 36006 Exp. 6-30-25 STRUCTURAL STATE OF CALIFORNIA

PROJECT NAME:

Bellflower Unified School District
Mayfair High School Sports Fields
6000 North Woodruff Ave
Lakewood, California 90713

CLIENT:

BELLFLOWER UNIFIED SCHOOL DISTRICT
16703 S. Clark Ave.
BELLFLOWER, CALIFORNIA 90706

Rev.	Date	Description

JOB NO:	15008
DATE:	05/24/2024
DRAWN:	NP
CHECK:	BP
ARCHITECT:	PDW
ENGINEER:	

SHEET DESCRIPTION:
CONCESSION & RESTROOM BLDG.
ROOF FRAMING PLAN

SHEET NO:
S102

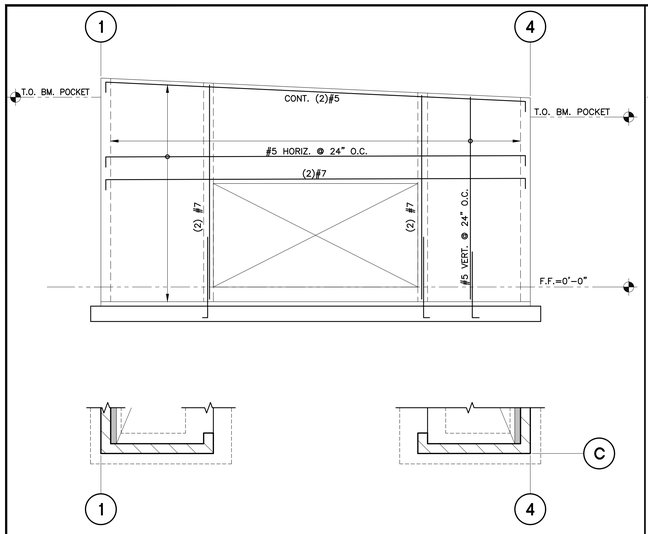

EXTERIOR CMU WALL ELEVATION SCALE: ¼" = 1'-0" 5

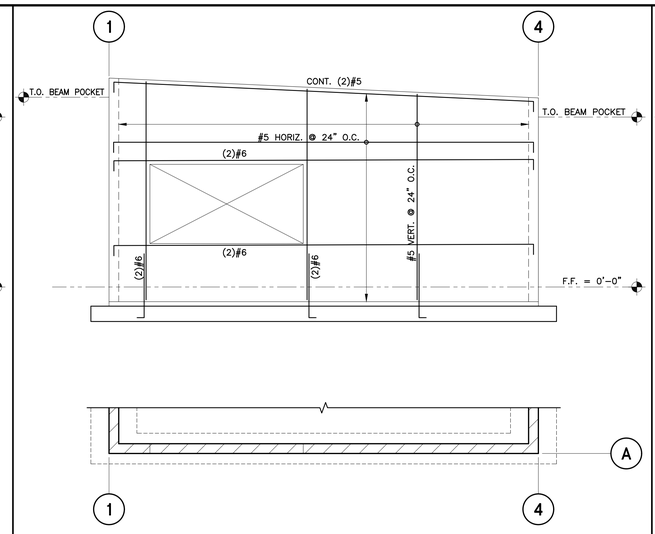

EXTERIOR CMU WALL ELEVATION SCALE: ¼" = 1'-0" 4

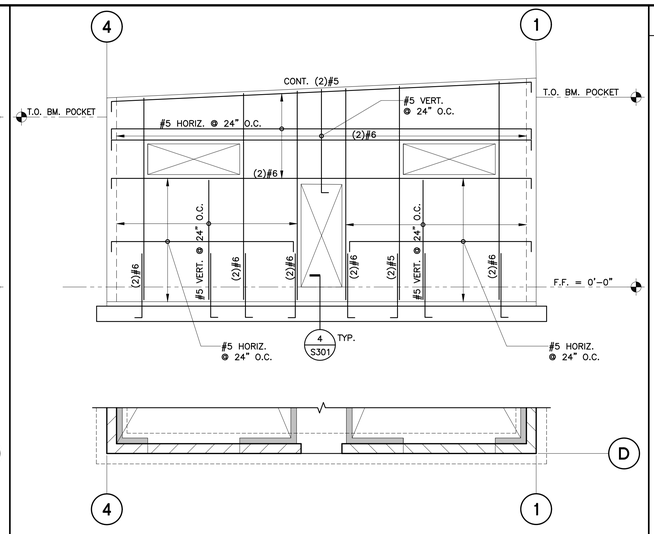

EXTERIOR CMU WALL ELEVATION SCALE: ¼" = 1'-0" 1

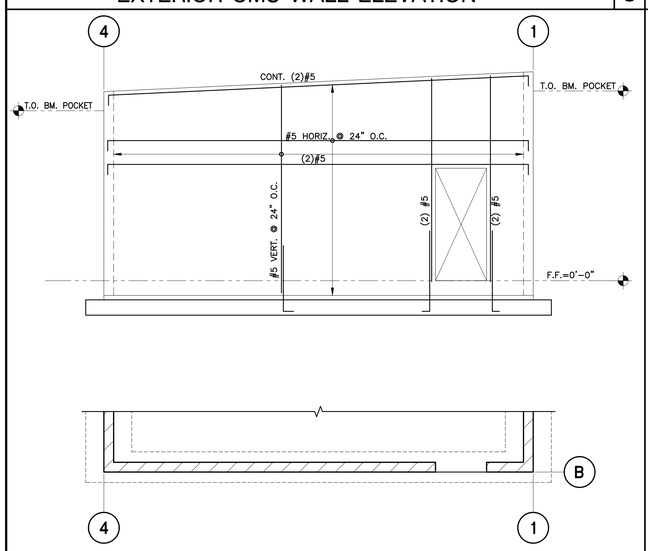

EXTERIOR CMU WALL ELEVATION SCALE: ¼" = 1'-0" 6

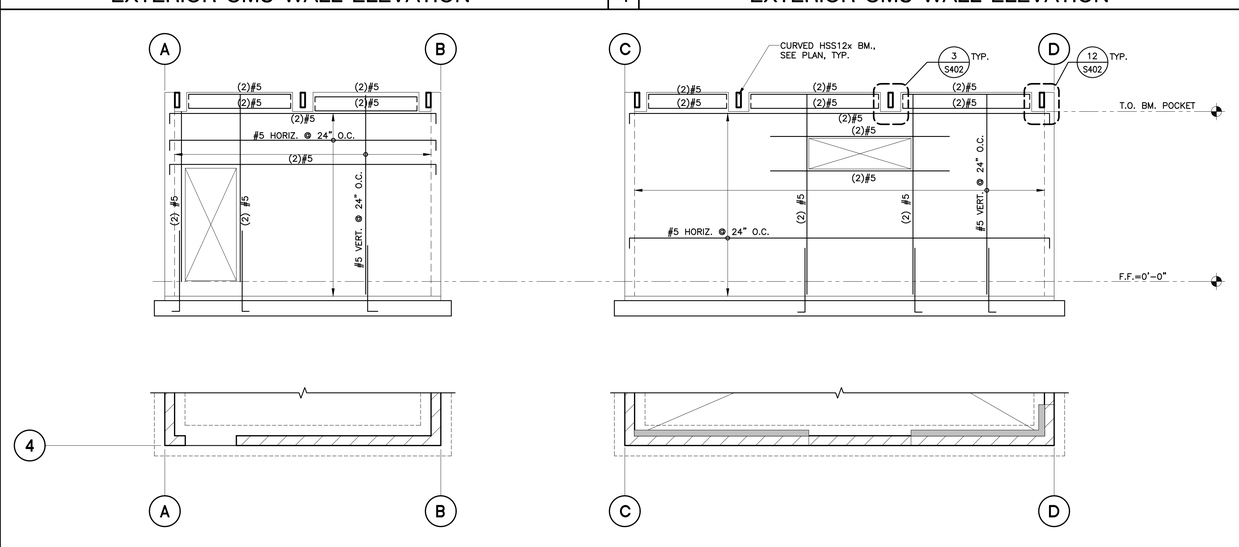

EXTERIOR CMU WALL ELEVATION SCALE: ¼" = 1'-0" 2

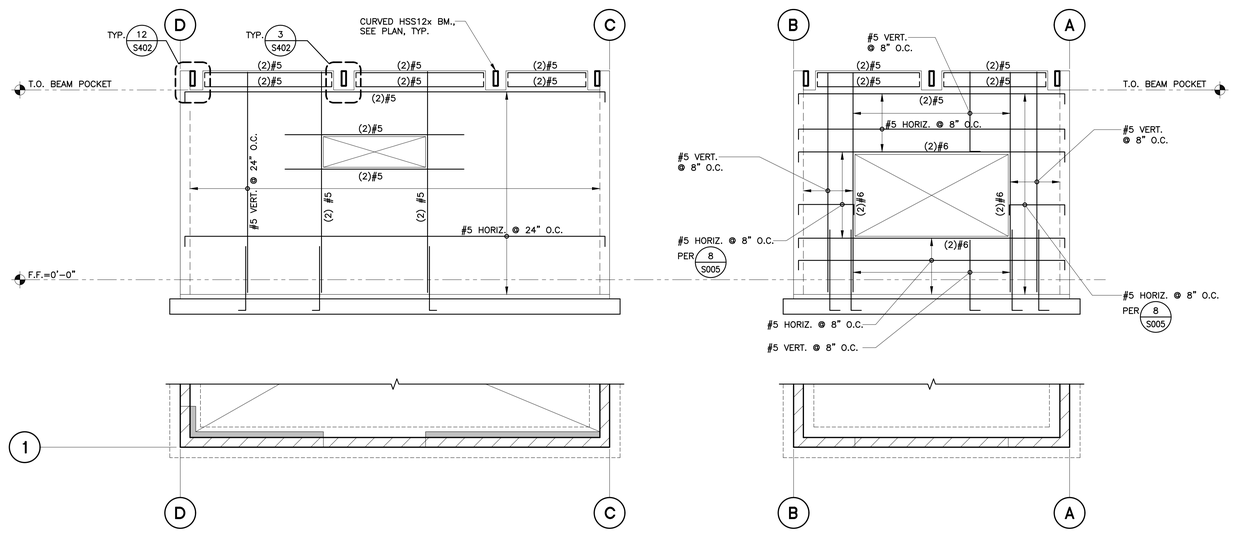

EXTERIOR CMU WALL ELEVATION SCALE: ¼" = 1'-0" 3

7

WALL ELEVATION NOTES

1. SEE FOUNDATION PLANS AND DETAILS FOR WALL THICKNESS.
2. FOR JAMB AND LINTEL REINFORCING AT DOORS AND OPENINGS, SEE DETAIL 1/S005 FOR ADDITIONAL INFORMATION, UNLESS NOTED OTHERWISE.

STATE:

IDENTIFICATION STAMP
DIV. OF THE STATE ARCHITECT
APP: 03-124281 INC:
REVIEWED FOR
SS ☑ FLS ☑ ACS ☑
DATE: 02/04/2025

ARCHITECT:

architecture
westbergwhite
14471 Chambers Rd, Suite 210
Tustin, CA 92780
714.508.1780 714.508.1780 Fax

LICENSED ARCHITECT
PAUL D. WESTBERG
No. C-29009
EXP. 08-31-2025
STATE OF CALIFORNIA

CONSULTANT:

rtm
engineering consultants
1ADA,Suite 100, Irvine, CA 92618
Tel (949) 462-3200 • Fax (949) 462-3201
WWW.RTMEC.COM
RTM JOB NO: 24.002173.2585 (259.123)

REGISTERED PROFESSIONAL ENGINEER
BRIAN PHAM
No. 36006
Exp. 6-30-25
STRUCTURAL
STATE OF CALIFORNIA

PROJECT NAME:

Bellflower Unified School District
Mayfair High School Sports Fields
6000 North Woodruff Ave
Lakewood, California 90713

CLIENT:

BELLFLOWER UNIFIED
SCHOOL DISTRICT
16703 S. Clark Ave.
BELLFLOWER, CALIFORNIA 90706

#	Rev. Date	Description

JOB NO:	15008
DATE:	05/24/2024
DRAWN:	NP
CHECK:	BP
ARCHITECT:	PDW
ENGINEER:	

SHEET DESCRIPTION:

CONSESSIONS & RESTROOM BLDG.
CMU WALL ELEVATIONS

SHEET NO:

S103

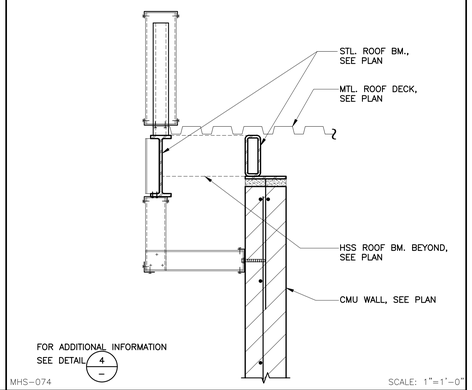

17 DETAIL 13

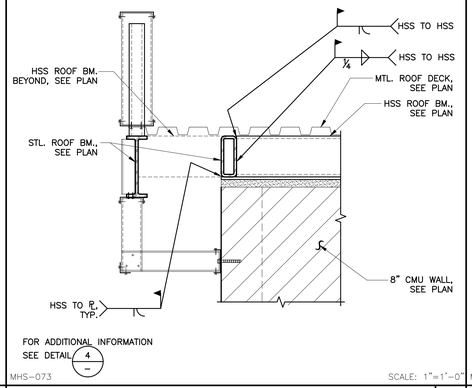

18 DETAIL 14

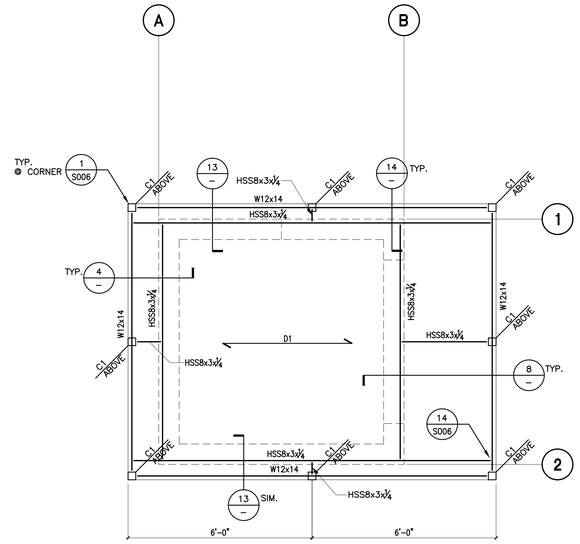

ROOF PLAN

: INDICATES MASONRY WALL. SEE PLAN FOR THICKNESS AND REINFORCING.

D1 : INDICATES SPAN OF METAL DECK. DECK SPAN INDICATED SHALL BE TYPICAL, UNLESS NOTED OTHERWISE. DECK SHALL SPAN OVER 2 SPANS MINIMUM (3 SUPPORTS) AND 3 SPANS (4 SUPPORTS) WHEREVER POSSIBLE. SEE ROOF CONSTRUCTION SCHEDULE ON SHEET 5/S006 FOR STRUCTURAL DECK REQUIREMENTS.

C1 : INDICATES HSS3x3x¼ PARAPET SUPPORT POST. SEE DETAIL 19/S401

MHS-063 SCALE: ½"=1'-0"

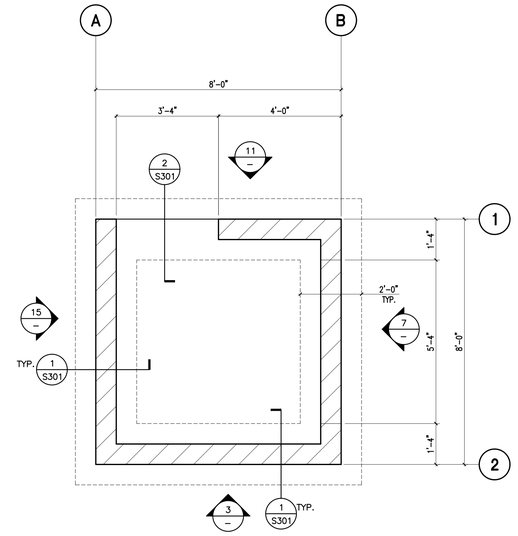

FOUNDATION PLAN

TICKET BOOTHS FOUNDATION & ROOF FRAMING PLANS 2

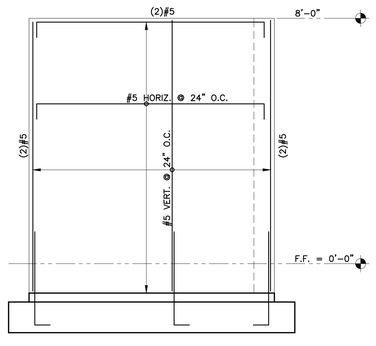

19 DETAIL 15

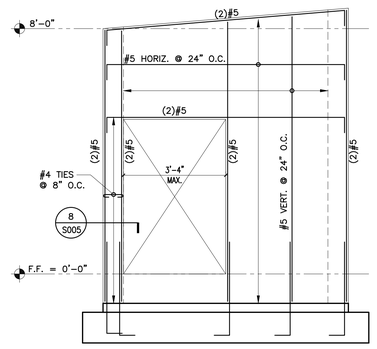

DETAIL 11

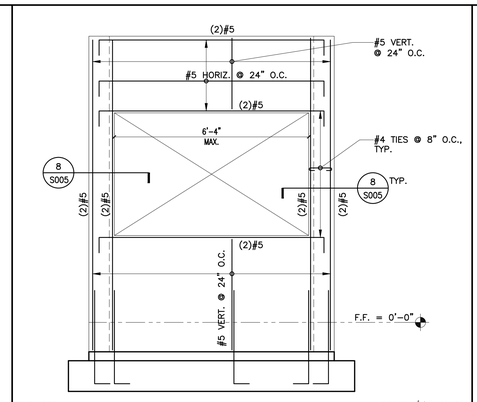

DETAIL 7

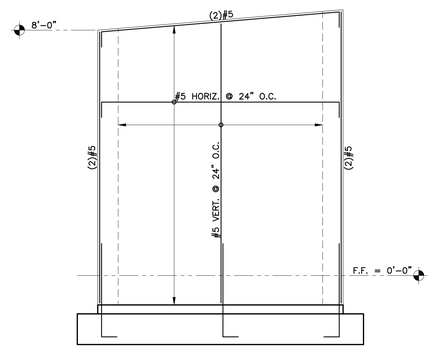

DETAIL 3

20 16 12

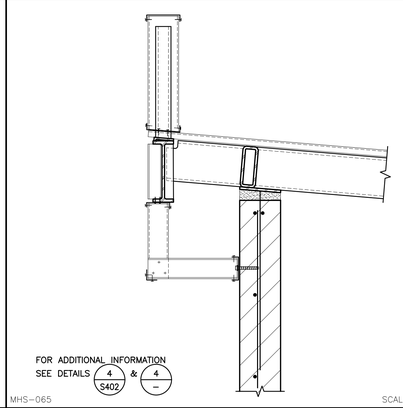

DETAIL 8

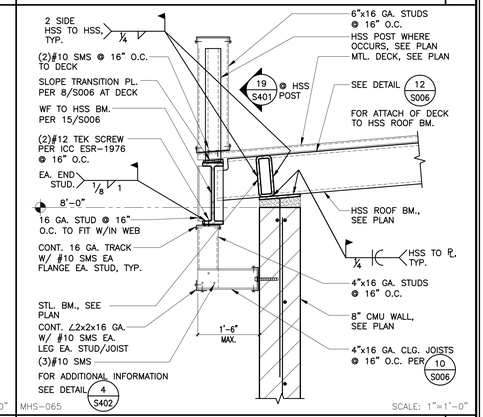

DETAIL 4

STATE:

IDENTIFICATION STAMP
DIV. OF THE STATE ARCHITECT
APP: 03-124281 INC:
REVIEWED FOR
SS ☑ FLS ☑ ACS ☑
DATE: 02/04/2025

ARCHITECT:

architecture
westbergwhite
14471 Chambers Rd, Suite 210
Tustin, CA 92780
714.508.1780 714.508.1780 Fax

LICENSED ARCHITECT PAUL D. WESTBERG No. C-29385 STATE OF CALIFORNIA

CONSULTANT:

rtm
engineering consultants
1ADA, Suite 100, Irvine, CA 92618
Tel (949) 462-3200 • Fax (949) 462-3201
WWW.RTMEC.COM
RTM JOB NO: 24.002173.2585 (250.123)

REGISTERED PROFESSIONAL ENGINEER BRIAN PHILLIPS No. S-6006 Exp. 6-30-25 STRUCTURAL STATE OF CALIFORNIA

PROJECT NAME:

Bellflower Unified School District
Mayfair High School Sports Fields
6000 North Woodruff Ave
Lakewood, California 90713

CLIENT:

BELLFLOWER UNIFIED SCHOOL DISTRICT
16703 S. Clark Ave.
BELLFLOWER, CALIFORNIA 90706

#	Rev. Date	Description

JOB NO:	15008
DATE:	05/24/2024
DRAWN:	NP
CHECK:	BP
ARCHITECT:	PDW
ENGINEER:	

SHEET DESCRIPTION:

TICKET BOOTH PLANS (VISITOR) ELEVATIONS & DETAILS

SHEET NO:

S104

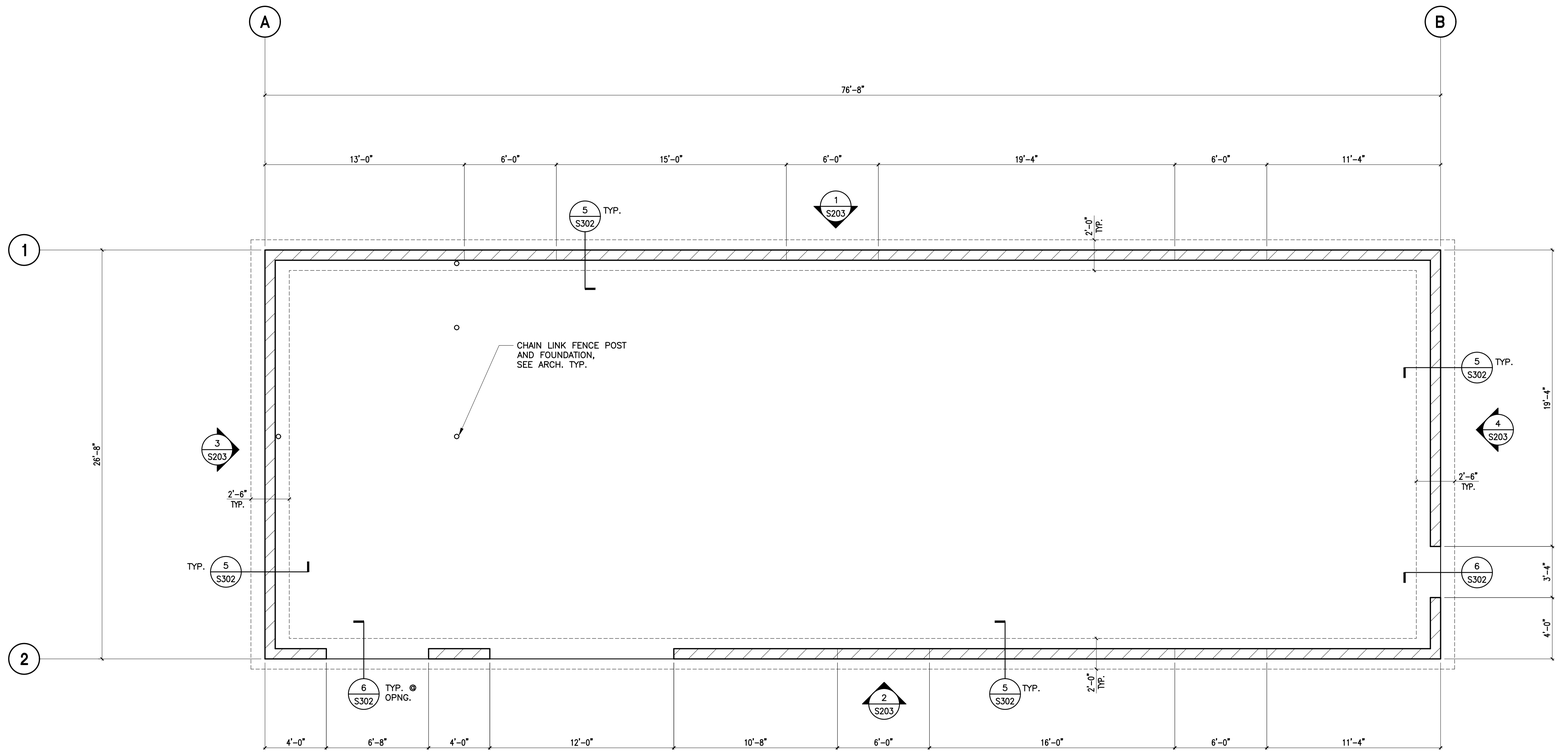

NORTH

STORAGE BUILDING - FOUNDATION PLAN

1/4" = 1'-0"

FOUNDATION PLAN NOTES

1. SEE SHEETS S001 THROUGH S008 FOR GENERAL NOTES AND TYPICAL DETAILS.
2. SEE SPECIFICATIONS FOR ALL SITE AND SUBGRADE PREPARATIONS.
3. SEE ARCHITECTURAL AND/OR CIVIL DRAWINGS FOR FINISH FLOOR ELEVATIONS.
4. SEE ARCHITECTURAL AND CIVIL DRAWINGS FOR ALL EXTERIOR CONCRETE PAVING, SLABS, BASES, CURBS, SITE WALLS, ETC.
5. FOR ANY DIMENSIONAL INFORMATION NOT SHOWN, SEE ARCHITECTURAL DRAWINGS.
6. SEE PLANS AND ARCHITECTURAL DRAWINGS FOR DEPRESSIONS AND/OR SLOPES IN CONCRETE SLABS.
7. ALL DIMENSIONS SHOWN ARE FROM FACE OF STUD, FACE OF CONCRETE, FACE OF MASONRY, CENTER LINE OF COLUMN, OR CENTER LINE OF WALL, UNLESS NOTED OTHERWISE. ALL COLUMNS ARE CENTERED IN STUD WALL, UNLESS NOTED OTHERWISE.
8. SEE ARCHITECTURAL DRAWINGS FOR SIZE AND LOCATION OF ALL DOOR AND WINDOW OPENINGS IN BEARING AND NON-BEARING WALLS.
9. SEE ARCHITECTURAL DRAWINGS FOR LOCATION OF INTERIOR NON-BEARING PARTITIONS. INTERIOR NON-BEARING PARTITION WALLS THAT DO NOT REQUIRE CONCRETE CURBS ARE NOT SHOWN ON STRUCTURAL DRAWINGS.
10. SEE ARCHITECTURAL, PLUMBING, MECHANICAL, ELECTRICAL, AND KITCHEN DRAWINGS FOR ADDITIONAL EMBEDDED ITEMS AND SLAB PENETRATIONS.
11. FOR TYPICAL PIPE CHASE IN CONCRETE STEM WALL, SEE DETAIL 3/S003.
12. FOR TYPICAL SLAB JOINTS, SEE DETAIL 9/S003.

LEGEND

: INDICATES MASONRY WALL. SEE PLAN FOR THICKNESS AND REINFORCING.

: INDICATES CONCRETE CURB. SEE PLANS AND DETAIL 13/S003 FOR ADDITIONAL INFORMATION.

: INDICATES DEPRESSED SLAB ON GRADE. SEE ARCHITECTURAL DRAWINGS FOR EXTENT.

TYPICAL SLAB ON GRADE

5" CONCRETE W/ #4 @ 16" EACH WAY @ CENTER LINE OF SLAB (MINIMUM SPLICE = 24", STAGGERED), OVER 10 MIL VAPOR BARRIER, OVER 4" CRUSHED ROCK, OVER COMPACTED FILL OR NATURAL GRADE, UNLESS NOTED OTHERWISE.

STATE:

IDENTIFICATION STAMP
DIV. OF THE STATE ARCHITECT
APP: 03-124281 INC:
REVIEWED FOR
SS ☑ FLS ☑ ACS ☑
DATE: 02/04/2025

ARCHITECT:

architecture
westbergwhite
14471 Chambers Rd, Suite 210
Tustin, CA 92780
714.508.1780 714.508.1780 Fax

LICENSED ARCHITECT PAUL D. WESTBERG C-26006 Exp. 08-31-25 STATE OF CALIFORNIA

CONSULTANT:

rtm
engineering consultants
1ADA,Suite 100, Irvine, CA 92618
Tel (949) 462-3200 • Fax (949) 462-3201
WWW.RTMEC.COM
RTM JOB NO: 24.002173.2585 (259.123)

REGISTERED PROFESSIONAL ENGINEER NIMA MOSHIRI C-74008 Exp. 6-30-25 STRUCTURAL STATE OF CALIFORNIA

PROJECT NAME:

Bellflower Unified School District
Mayfair High School Sports Fields
6000 North Woodruff Ave
Lakewood, California 90713

CLIENT:

BELLFLOWER UNIFIED SCHOOL DISTRICT
16703 S. Clark Ave.
BELLFLOWER, CALIFORNIA 90706

#	Rev. Date	Description

JOB NO:	15008
DATE:	05/24/2024
DRAWN:	NP
CHECK:	BP
ARCHITECT:	PDW
ENGINEER:	

SHEET DESCRIPTION:

STORAGE BUILDING FOUNDATION PLAN

SHEET NO:

S201

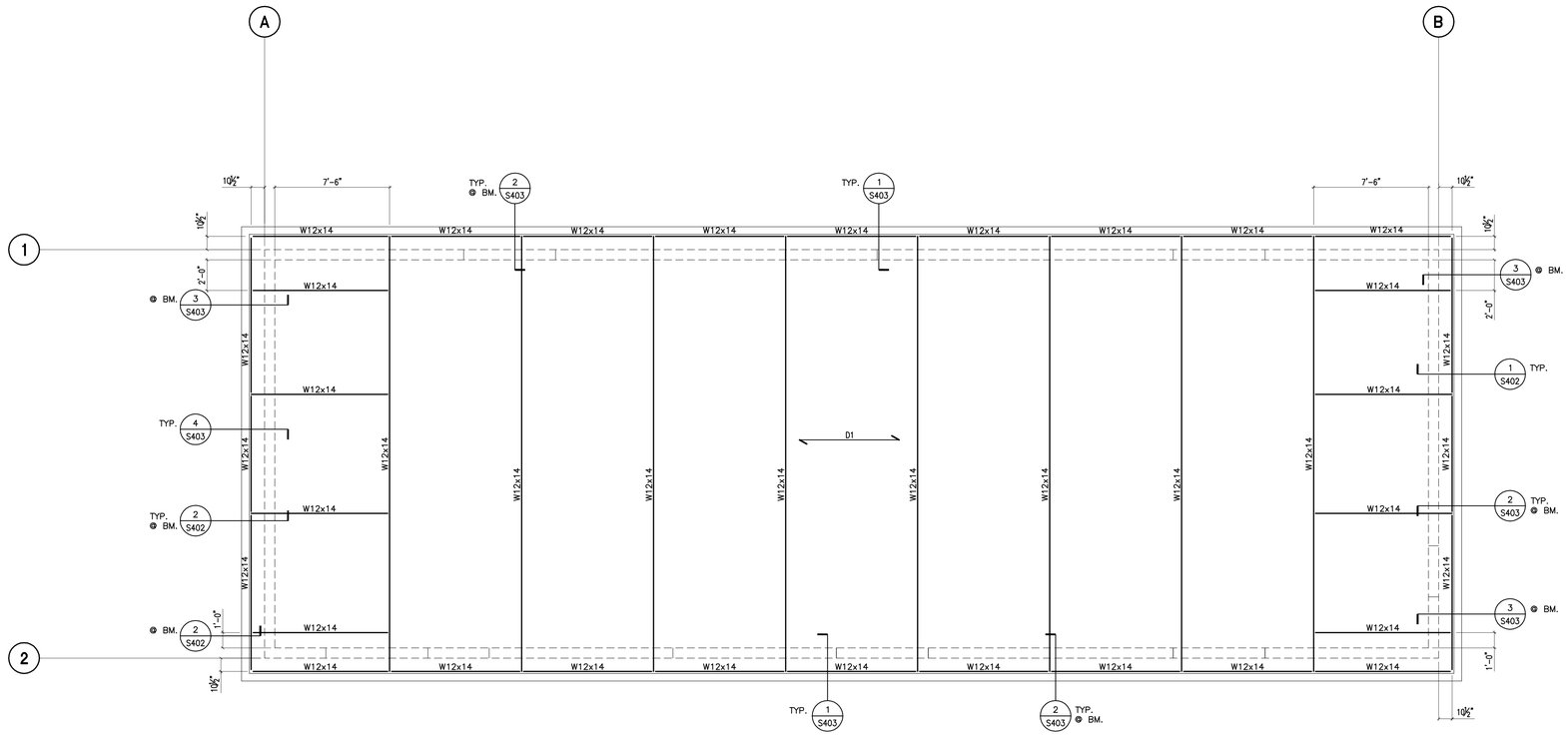

NORTH

STORAGE BUILDING - ROOF FRAMING PLAN

1/4" = 1'-0"

ROOF FRAMING PLAN NOTES

1. SEE SHEETS S001 THROUGH S008 FOR GENERAL NOTES AND TYPICAL DETAILS.
2. FOR ANY DIMENSIONAL INFORMATION NOT SHOWN, SEE ARCHITECTURAL DRAWINGS.
3. SEE ARCHITECTURAL, PLUMBING, MECHANICAL, AND ELECTRICAL DRAWINGS FOR SIZE AND LOCATION OF ROOF OPENINGS NOT SHOWN ON ROOF FRAMING PLANS. SEE DETAIL 13/S006 FOR TYPICAL OPENINGS, UNLESS NOTED OTHERWISE.
4. ALL BEAMS SHALL BE EQUALLY SPACED BETWEEN COLUMNS, UNLESS NOTED OTHERWISE.
5. THE CONTRACTOR SHALL COORDINATE LOCATION OF ALL FRAMING BEAMS AT MECHANICAL UNITS WITH MECHANICAL DRAWINGS. THE LOCATION OF FRAMING SHALL MATCH CURB LAYOUT AND ROOF PENETRATIONS FOR THE SUPPLIED UNITS.

LEGEND

D1 : INDICATES SPAN OF METAL DECK. DECK SPAN INDICATED SHALL BE TYPICAL, UNLESS NOTED OTHERWISE. DECK SHALL SPAN OVER 2 SPANS MINIMUM (3 SUPPORTS) AND 3 SPANS (4 SUPPORTS) WHEREVER POSSIBLE. SEE ROOF CONSTRUCTION SCHEDULE ON SHEET 5/S006 FOR STRUCTURAL DECK REQUIREMENTS.

: INDICATES TYPICAL CONNECTION WITH ASTM A325SC BOLTS.

+ _____ : INDICATES TOP OF STEEL ELEVATION.

: INDICATES BEAMS SPLICE PER DETAIL 6/S402.

C1 : INDICATES HSS3x3x¼ PARAPET SUPPORT POST.

STATE:

IDENTIFICATION STAMP
DIV. OF THE STATE ARCHITECT
APP: 03-124281 INC:
REVIEWED FOR
SS ☑ FLS ☑ ACS ☑
DATE: 02/04/2025

ARCHITECT:

architecture
westbergwhite
14471 Chambers Rd, Suite 210
Tustin, CA 92780
714.508.1780 714.508.1780 Fax

LICENSED ARCHITECT PAUL D. WESTBERG No. 26775 STATE OF CALIFORNIA

CONSULTANT:

rtm
engineering consultants
1ADA,Suite 100, Irvine, CA 92618
Tel (949) 462-3200 • Fax (949) 462-3201
WWW.RTMEC.COM
RTM JOB NO: 24.002173.2585 (259.123)

REGISTERED PROFESSIONAL ENGINEER NIMA MOSLEMI No. 26506 Exp. 6-30-25 STRUCTURAL STATE OF CALIFORNIA

PROJECT NAME:

Bellflower Unified School District

Mayfair High School Sports Fields

6000 North Woodruff Ave
Lakewood, California 90713

CLIENT:

BELLFLOWER UNIFIED SCHOOL DISTRICT
16703 S. Clark Ave.
BELLFLOWER, CALIFORNIA 90706

Rev.	Date	Description

JOB NO: 15008
DATE: 05/24/2024
DRAWN: NP
CHECK: BP
ARCHITECT: PDW
ENGINEER:

SHEET DESCRIPTION:
ROOF FRAMING PLAN

SHEET NO:
S202

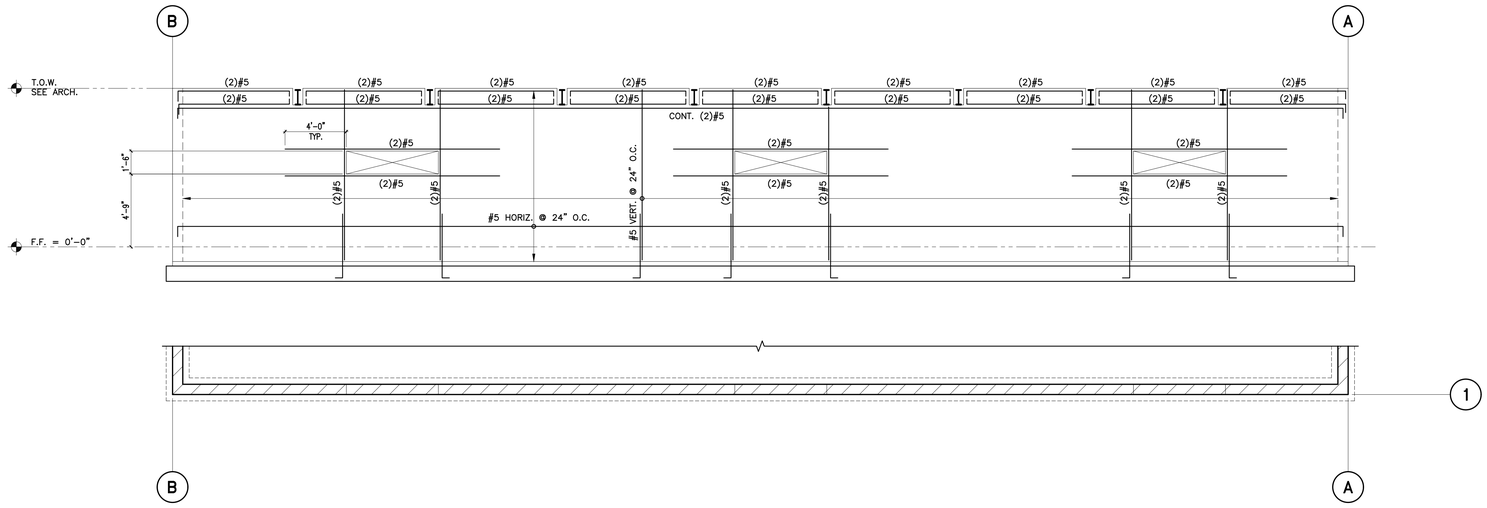

EXTERIOR CMU WALL ELEVATION SCALE: ¼" = 1'-0" | 1

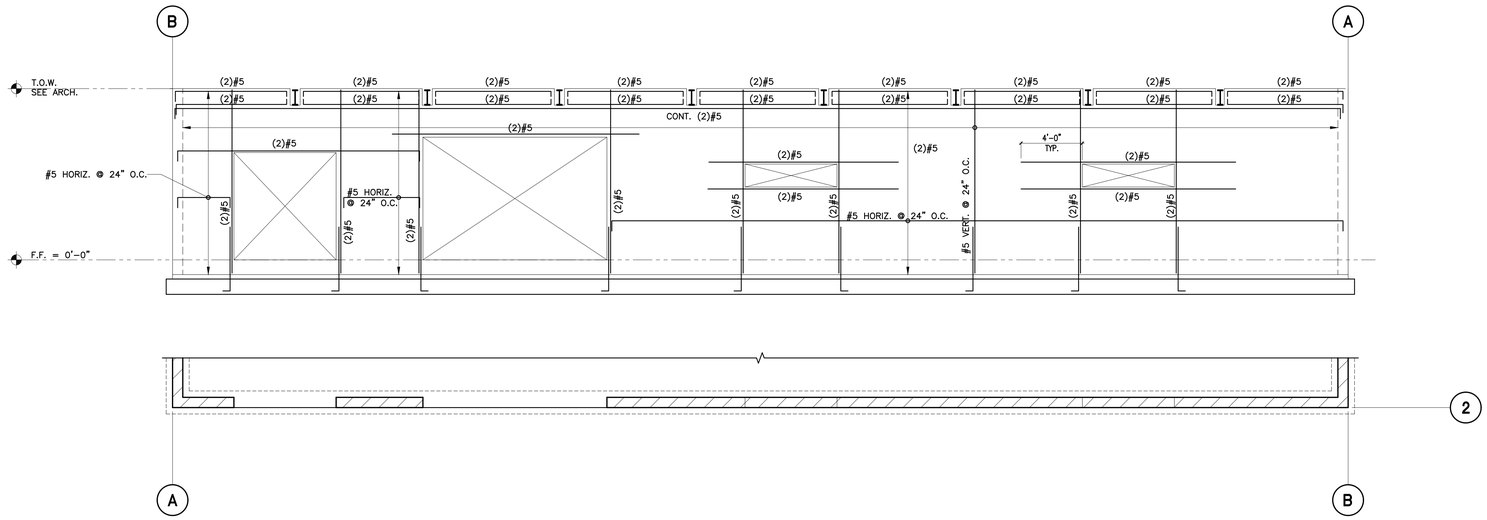

EXTERIOR CMU WALL ELEVATION SCALE: ¼" = 1'-0" | 2

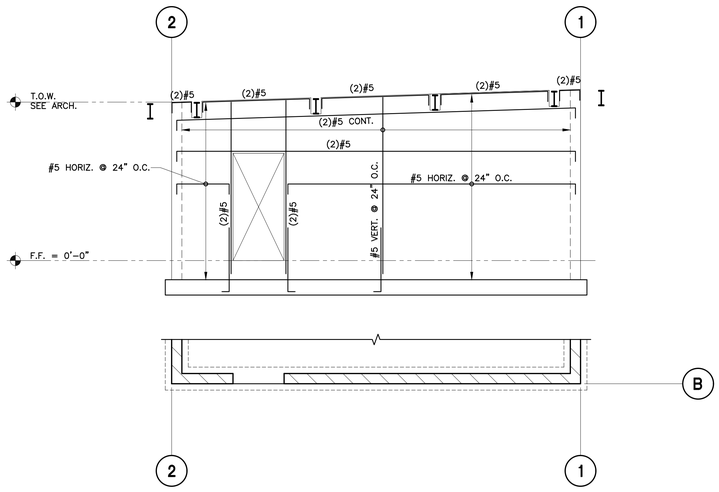

EXTERIOR CMU WALL ELEVATION SCALE: ¼" = 1'-0" | 4

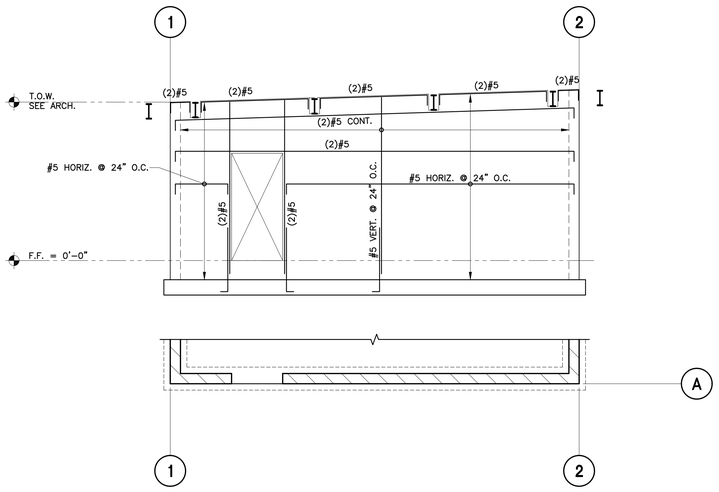

EXTERIOR CMU WALL ELEVATION SCALE: ¼" = 1'-0" | 3

WALL ELEVATION NOTES

1. SEE FOUNDATION PLANS AND DETAILS FOR WALL THICKNESS.
2. FOR JAMB AND LINTEL REINFORCING AT DOORS AND OPENINGS, SEE DETAIL 1/S005 FOR ADDITIONAL INFORMATION, UNLESS NOTED OTHERWISE.

STATE:

IDENTIFICATION STAMP
DIV. OF THE STATE ARCHITECT
APP: 03-124281 INC:
REVIEWED FOR
SS ☑ FLS ☑ ACS ☑
DATE: 02/04/2025

ARCHITECT:
architecture
westbergwhite
14471 Chambers Rd, Suite 210
Tustin, CA 92780
714.508.1780 714.508.1780 Fax

LICENSED ARCHITECT — PAUL D. WESTBERG — No. C-29355 — STATE OF CALIFORNIA

CONSULTANT:
rtm
engineering consultants
1ADA,Suite 100, Irvine, CA 92618
Tel (949) 462-3200 • Fax (949) 462-3201
WWW.RTMEC.COM
RTM JOB NO: 24.002173.2585 (259.123)

REGISTERED PROFESSIONAL ENGINEER — BRIAN PHILLIPS — No. S-6006 Exp. 6-30-25 — STATE OF CALIFORNIA — STRUCTURAL

PROJECT NAME:

Bellflower Unified School District
Mayfair High School Sports Fields
6000 North Woodruff Ave
Lakewood, California 90713

CLIENT:

BELLFLOWER UNIFIED
SCHOOL DISTRICT
16703 S. Clark Ave.
BELLFLOWER, CALIFORNIA 90706

#	Rev. Date	Description

JOB NO:	15008
DATE:	05/24/2024
DRAWN:	NP
CHECK:	BP
ARCHITECT:	PDW
ENGINEER:	

SHEET DESCRIPTION:

STOREAGE BLDG.
CMU WALL ELEVATIONS

SHEET NO:

S203

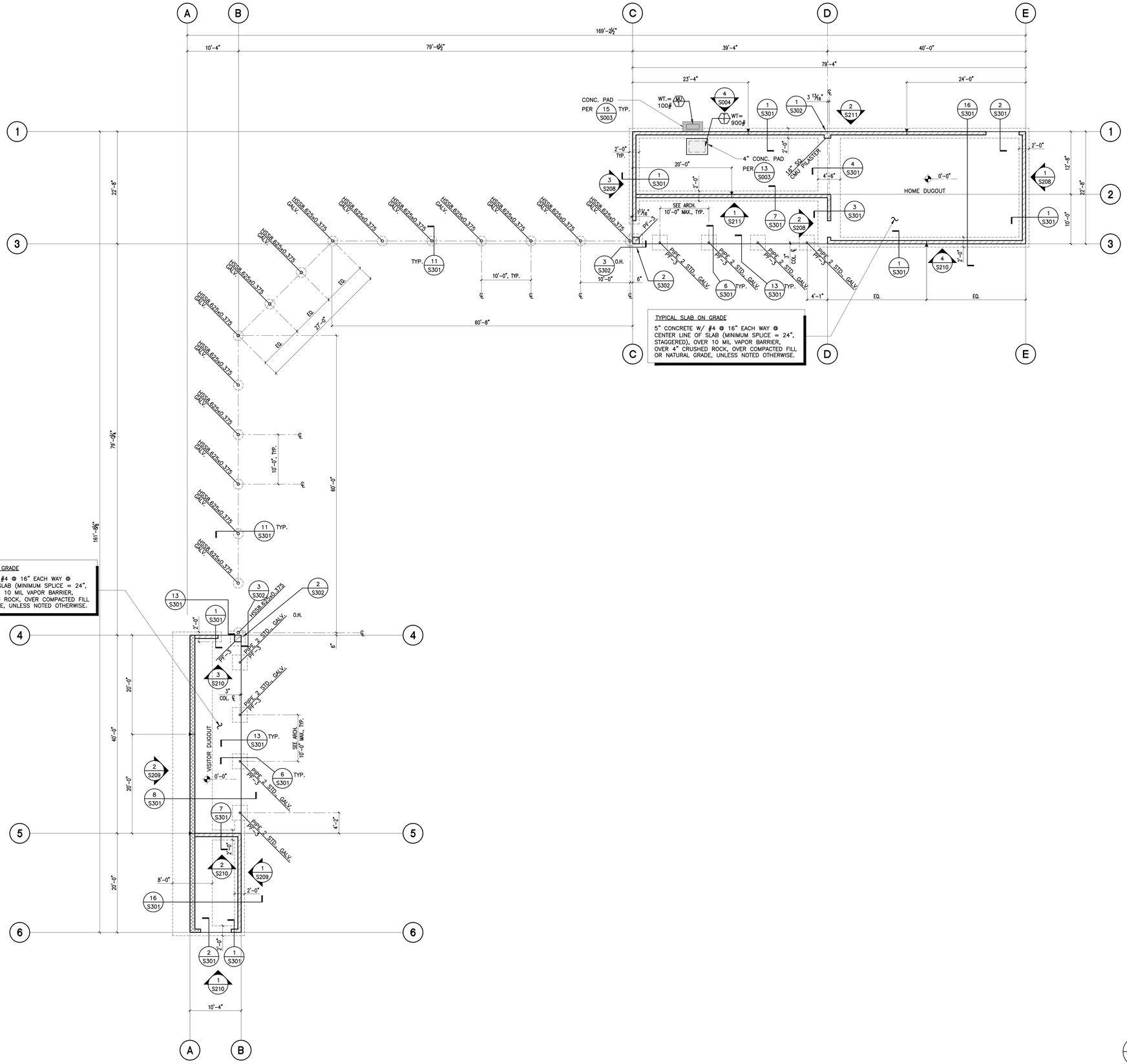

TYPICAL SLAB ON GRADE

5" CONCRETE W/ #4 @ 16" EACH WAY @ CENTER LINE OF SLAB (MINIMUM SPLICE = 24", STAGGERED), OVER 10 MIL VAPOR BARRIER, OVER 4" CRUSHED ROCK, OVER COMPACTED FILL OR NATURAL GRADE, UNLESS NOTED OTHERWISE.

FOUNDATION PLAN NOTES

1. SEE SHEETS S001 THROUGH S008 FOR GENERAL NOTES AND TYPICAL DETAILS.
2. SEE SPECIFICATIONS FOR ALL SITE AND SUBGRADE PREPARATIONS.
3. SEE ARCHITECTURAL AND/OR CIVIL DRAWINGS FOR FINISH FLOOR ELEVATIONS.
4. SEE ARCHITECTURAL AND CIVIL DRAWINGS FOR ALL EXTERIOR CONCRETE PAVING, SLABS, BASES, CURBS, SITE WALLS, ETC.
5. FOR ANY DIMENSIONAL INFORMATION NOT SHOWN, SEE ARCHITECTURAL DRAWINGS.
6. SEE PLANS AND ARCHITECTURAL DRAWINGS FOR DEPRESSIONS AND/OR SLOPES IN CONCRETE SLABS.
7. ALL DIMENSIONS SHOWN ARE FROM FACE OF CONCRETE, FACE OF MASONRY, CENTER LINE OF COLUMN, OR CENTER LINE OF WALL, UNLESS NOTED OTHERWISE.
8. SEE ARCHITECTURAL DRAWINGS FOR SIZE AND LOCATION OF ALL DOOR AND WINDOW OPENINGS IN BEARING AND NON-BEARING WALLS.
9. SEE ARCHITECTURAL, MECHANICAL, AND ELECTRICAL DRAWINGS FOR ADDITIONAL EMBEDDED ITEMS AND SLAB PENETRATIONS.
10. FOR TYPICAL SLAB JOINTS, SEE DETAIL 9/S003.

LEGEND

HSS3x3x3/16 PF-2 : INDICATES STEEL COLUMN SIZE. SEE DETAIL 3/S006 FOR STEEL COLUMN BASE PLATE, U.N.O.

: INDICATES CONCRETE FOOTING. SEE DETAIL 12/S003 FOR ADDITIONAL INFORMATION.

: INDICATES 8" MASONRY WALL. SEE WALL ELEVATION S105, S106, S107, AND S108 FOR REINFORCING.

: INDICATES 12" MASONRY WALL. SEE WALL ELEVATION S105, S106, S107, AND S108 FOR REINFORCING.

: INDICATES CONTROL JOINT IN CMU WALL. SEE DETAIL 10/S005 FOR ADDITIONAL INFORMATION.

: INDICATES TOP OF SLAB ELEVATION (WHERE INDICATED).

NORTH

BASEBALL FIELD FOUNDATION PLAN SCALE: 1/8"=1'-0" 1

STATE:

IDENTIFICATION STAMP
DIV. OF THE STATE ARCHITECT
APP: 03-124281 INC:
REVIEWED FOR
SS ☑ FLS ☑ ACS ☑
DATE: 02/04/2025

ARCHITECT:

architecture
westbergwhite
14471 Chambers Rd, Suite 210
Tustin, CA 92780
714.508.1780 714.508.1780 Fax

LICENSED ARCHITECT
PAUL D. WESTBERG
No. 18975
STATE OF CALIFORNIA

CONSULTANT:

rtm
engineering consultants
1ADA,Suite 100, Irvine, CA 92618
Tel (949) 462-3200 • Fax (949) 462-3201
WWW.RTMEC.COM
RTM JOB NO: 24.002173.2585 (259.123)

REGISTERED PROFESSIONAL ENGINEER
BRIAN PHAM
No. 40506
Exp. 6-30-25
STRUCTURAL
STATE OF CALIFORNIA

PROJECT NAME:

Bellflower Unified School District
Mayfair High School Sports Fields
6000 North Woodruff Ave
Lakewood, California 90713

CLIENT:

BELLFLOWER UNIFIED SCHOOL DISTRICT
16703 S. Clark Ave.
BELLFLOWER, CALIFORNIA 90706

#	Rev. Date	Description

JOB NO:	15008
DATE:	05/24/2024
DRAWN:	NP
CHECK:	BP
ARCHITECT:	PDW
ENGINEER:	

SHEET DESCRIPTION:

BASEBALL FIELD FOUNDATION PLAN

SHEET NO:

S204

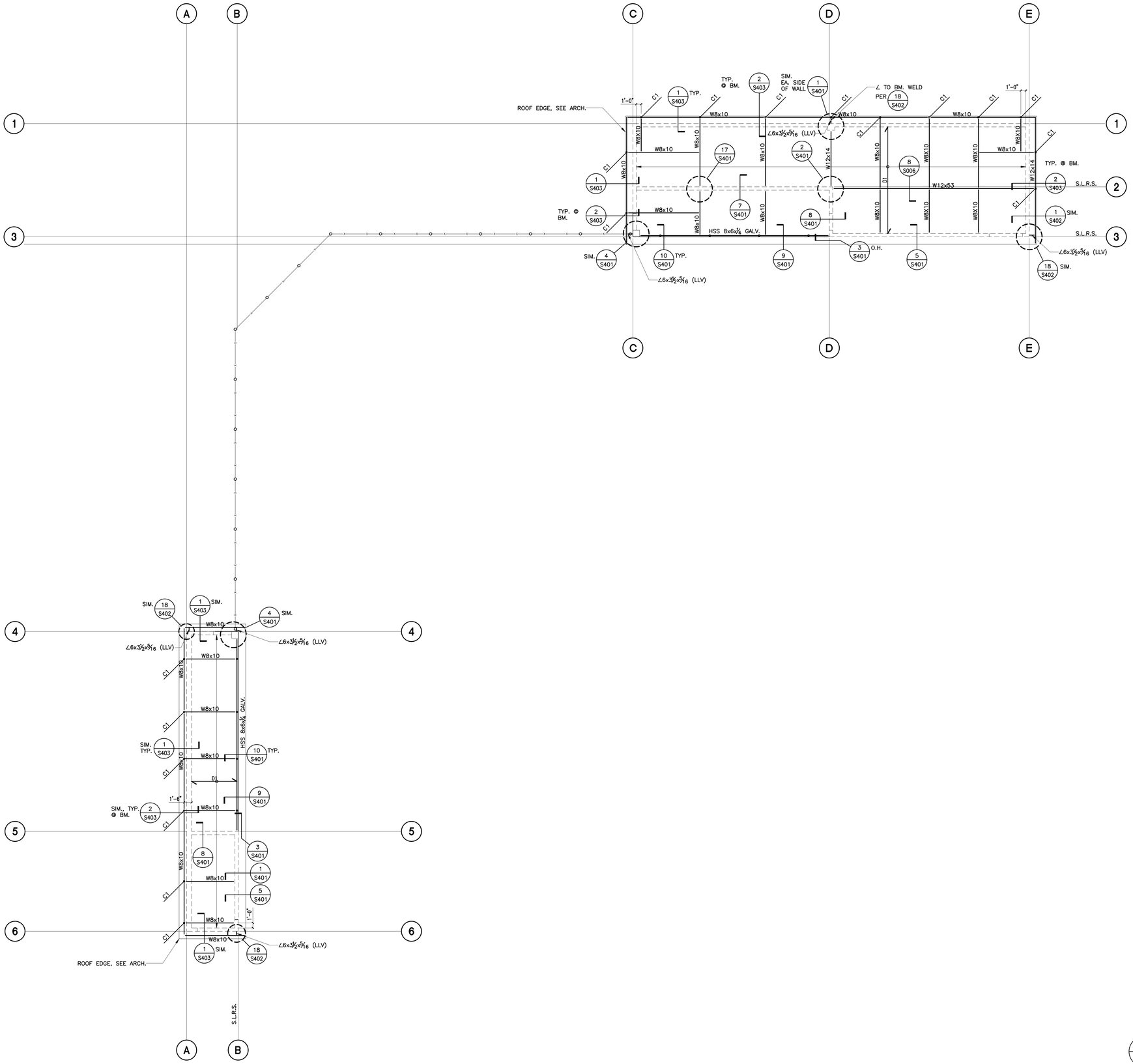

ROOF FRAMING PLAN NOTES

1. SEE SHEETS S001 THROUGH S008 FOR GENERAL NOTES AND TYPICAL DETAILS.
2. FOR ANY DIMENSIONAL INFORMATION NOT SHOWN, SEE ARCHITECTURAL DRAWINGS.
3. SEE ARCHITECTURAL DRAWINGS FOR SIZE AND LOCATION OF ROOF OPENINGS NOT SHOWN ON ROOF FRAMING PLANS. SEE DETAIL 13/S006 FOR TYPICAL OPENINGS, UNLESS NOTED OTHERWISE.
4. ALL BEAMS SHALL BE EQUALLY SPACED BETWEEN COLUMNS, UNLESS NOTED OTHERWISE.

LEGEND

: INDICATES SPAN OF METAL DECK. DECK SPAN INDICATED SHALL BE TYPICAL, UNLESS NOTED OTHERWISE. SEE ROOF CONSTRUCTION SCHEDULE ON SHEET 5/S006 FOR STRUCTURAL DECK REQUIREMENTS.

: INDICATES CHAIN LINK FENCING, PER ARCH.

C1 : INDICATES HSS3x3x¼ PARAPET SUPPORT POST. SEE DETAIL 19/S401

NORTH

BASEBALL FIELD - DUGOUT ROOF FRAMING PLAN SCALE: 1/8"=1'-0" 1

STATE:

IDENTIFICATION STAMP
DIV. OF THE STATE ARCHITECT
APP: 03-124281 INC:
REVIEWED FOR
SS ☑ FLS ☑ ACS ☑
DATE: 02/04/2025

ARCHITECT:

architecture
westbergwhite
14471 Chambers Rd, Suite 210
Tustin, CA 92780
714.508.1780 714.508.1780 Fax

LICENSED ARCHITECT
PAUL D. WESTBERG
No. C-29775
STATE OF CALIFORNIA
EXP. 08-31-25

CONSULTANT:

rtm
engineering consultants
1ADA,Suite 100, Irvine, CA 92618
Tel (949) 462-3200 • Fax (949) 462-3201
WWW.RTMEC.COM
RTM JOB NO: 24.002173.2585 (259.123)

REGISTERED PROFESSIONAL ENGINEER
BRIAN PHILLIPS
No. 36006
Exp. 6-30-25
STRUCTURAL
STATE OF CALIFORNIA

PROJECT NAME:

Bellflower Unified School District
Mayfair High School Sports Fields
6000 North Woodruff Ave
Lakewood, California 90713

CLIENT:

BELLFLOWER UNIFIED SCHOOL DISTRICT
16703 S. Clark Ave.
BELLFLOWER, CALIFORNIA 90706

#	Rev. Date	Description

JOB NO:	15008
DATE:	05/24/2024
DRAWN:	NP
CHECK:	BP
ARCHITECT:	PDW
ENGINEER:	

SHEET DESCRIPTION:

BASEBALL FIELD
ROOF FRAMING PLAN

SHEET NO:

S205

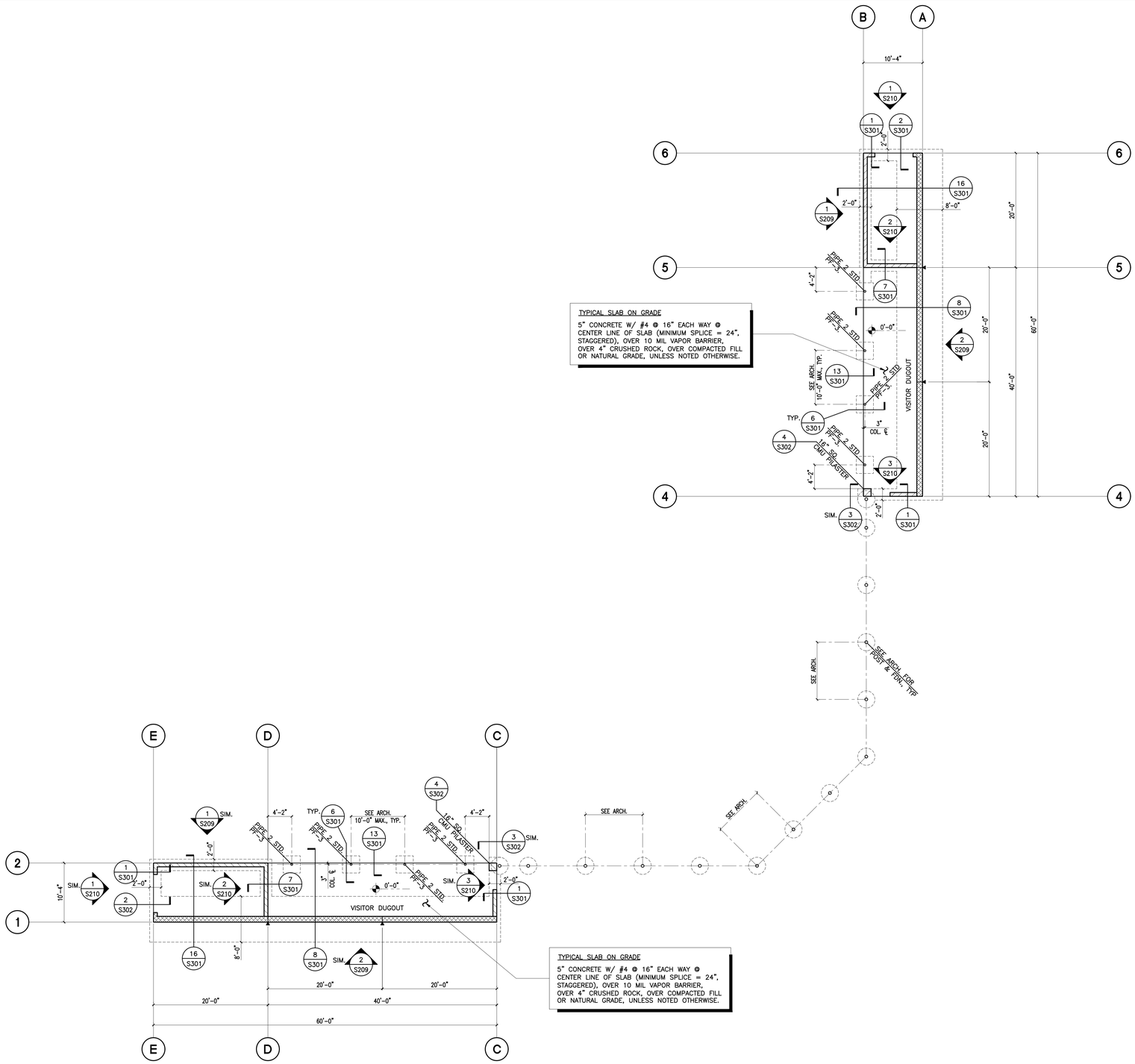

FOUNDATION PLAN NOTES

1. SEE SHEETS S001 THROUGH S008 FOR GENERAL NOTES AND TYPICAL DETAILS.
2. SEE SPECIFICATIONS FOR ALL SITE AND SUBGRADE PREPARATIONS.
3. SEE ARCHITECTURAL AND/OR CIVIL DRAWINGS FOR FINISH FLOOR ELEVATIONS.
4. SEE ARCHITECTURAL AND CIVIL DRAWINGS FOR ALL EXTERIOR CONCRETE PAVING, SLABS, BASES, CURBS, SITE WALLS, ETC.
5. FOR ANY DIMENSIONAL INFORMATION NOT SHOWN, SEE ARCHITECTURAL DRAWINGS.
6. SEE PLANS AND ARCHITECTURAL DRAWINGS FOR DEPRESSIONS AND/OR SLOPES IN CONCRETE SLABS.
7. ALL DIMENSIONS SHOWN ARE FROM FACE OF CONCRETE, FACE OF MASONRY, CENTER LINE OF COLUMN, OR CENTER LINE OF WALL, UNLESS NOTED OTHERWISE.
8. SEE ARCHITECTURAL DRAWINGS FOR SIZE AND LOCATION OF ALL DOOR AND WINDOW OPENINGS IN BEARING AND NON-BEARING WALLS.
9. SEE ARCHITECTURAL DRAWINGS FOR LOCATION OF INTERIOR NON-BEARING PARTITIONS. INTERIOR NON-BEARING PARTITION WALLS THAT DO NOT REQUIRE CONCRETE CURBS ARE NOT SHOWN ON STRUCTURAL DRAWINGS.
10. SEE ARCHITECTURAL, MECHANICAL, AND ELECTRICAL DRAWINGS FOR ADDITIONAL EMBEDDED ITEMS AND SLAB PENETRATIONS.
11. FOR TYPICAL SLAB JOINTS, SEE DETAIL 9/S003.

LEGEND

HSS3x3x$\frac{3}{16}$ PF-2 : INDICATES STEEL COLUMN SIZE. SEE DETAIL 3/S006 FOR STEEL COLUMN BASE PLATE, U.N.O.

: INDICATES CONCRETE FOOTING. SEE DETAIL 12/S003 FOR ADDITIONAL INFORMATION.

: INDICATES 8" MASONRY WALL. SEE WALL ELEVATION S105, S106, S107, AND S108 FOR REINFORCING.

: INDICATES 12" MASONRY WALL. SEE WALL ELEVATION S105, S106, S107, AND S108 FOR REINFORCING.

: INDICATES CONTROL JOINT IN CMU WALL. SEE DETAIL 10/S005 FOR ADDITIONAL INFORMATION.

: INDICATES TOP OF SLAB ELEVATION (WHERE INDICATED).

NORTH

SOFTBALL FIELD FOUNDATION PLAN SCALE: 1/8"=1'-0" 1

STATE:

IDENTIFICATION STAMP
DIV. OF THE STATE ARCHITECT
APP: 03-124281 INC:
REVIEWED FOR
SS ☑ FLS ☑ ACS ☑
DATE: 02/04/2025

ARCHITECT:

architecture
westbergwhite
14471 Chambers Rd, Suite 210
Tustin, CA 92780
714.508.1780 714.508.1780 Fax

LICENSED ARCHITECT — PATRICK D. WESTBERG — C-29015 — EXP. 08-31-2025 — STATE OF CALIFORNIA

CONSULTANT:

rtm
engineering consultants
1ADA,Suite 100, Irvine, CA 92618
Tel (949) 462-3200 • Fax (949) 462-3201
WWW.RTMEC.COM
RTM JOB NO: 24.002173.2585 (259.123)

REGISTERED PROFESSIONAL ENGINEER — BRIAN PHILLIP — No. 42006 — Exp. 6-30-25 — STRUCTURAL — STATE OF CALIFORNIA

PROJECT NAME:

Bellflower Unified School District
Mayfair High School Sports Fields
6000 North Woodruff Ave
Lakewood, California 90713

CLIENT:

BELLFLOWER UNIFIED SCHOOL DISTRICT
16703 S. Clark Ave.
BELLFLOWER, CALIFORNIA 90706

#	Rev. Date	Description

JOB NO: 15008
DATE: 05/24/2024
DRAWN: NP
CHECK: BP
ARCHITECT: PDW
ENGINEER:

SHEET DESCRIPTION:
SOFTBALL FIELD FOUNDATION PLAN

SHEET NO:
S206

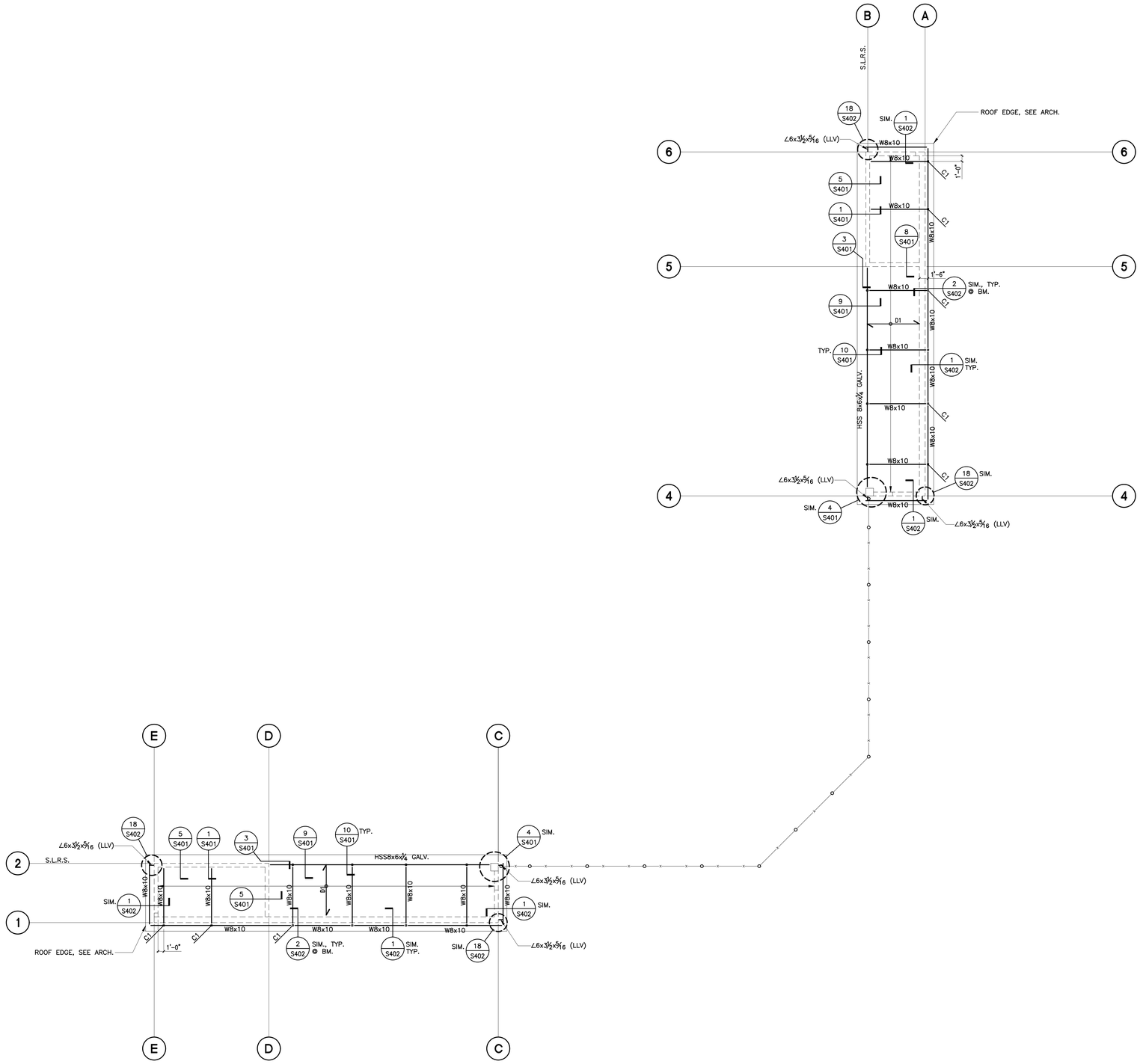

ROOF FRAMING PLAN NOTES

1. SEE SHEETS S001 THROUGH S008 FOR GENERAL NOTES AND TYPICAL DETAILS.
2. FOR ANY DIMENSIONAL INFORMATION NOT SHOWN, SEE ARCHITECTURAL DRAWINGS.
3. SEE ARCHITECTURAL DRAWINGS FOR SIZE AND LOCATION OF ROOF OPENINGS NOT SHOWN ON ROOF FRAMING PLANS. SEE DETAIL 13/S006 FOR TYPICAL OPENINGS, UNLESS NOTED OTHERWISE.
4. ALL BEAMS SHALL BE EQUALLY SPACED BETWEEN COLUMNS, UNLESS NOTED OTHERWISE.

LEGEND

: INDICATES SPAN OF METAL DECK. DECK SPAN INDICATED SHALL BE TYPICAL, UNLESS NOTED OTHERWISE. SEE ROOF CONSTRUCTION SCHEDULE ON SHEET 5/S006 FOR STRUCTURAL DECK REQUIREMENTS.

: INDICATES CHAIN LINK FENCING, PER ARCH.

S1 : INDICATES HSS3x3x¼ PARAPET SUPPORT POST. SEE DETAIL 19/S401

NORTH

SOFTBALL FIELD ROOF FRAMING PLAN SCALE: 1/8"=1'-0" 1

STATE:

IDENTIFICATION STAMP
DIV. OF THE STATE ARCHITECT
APP: 03-124281 INC:
REVIEWED FOR
SS ☑ FLS ☑ ACS ☑
DATE: 02/04/2025

ARCHITECT:

architecture
westbergwhite
14471 Chambers Rd, Suite 210
Tustin, CA 92780
714.508.1780 714.508.1780 Fax

LICENSED ARCHITECT — PAUL D. WESTBERG — No. C-29615 — STATE OF CALIFORNIA

CONSULTANT:

rtm
engineering consultants
1ADA,Suite 100, Irvine, CA 92618
Tel (949) 462-3200 • Fax (949) 462-3201
WWW.RTMEC.COM
RTM JOB NO: 24.002173.2585 (259.123)

REGISTERED PROFESSIONAL ENGINEER — BRIAN PHILLIPS — No. 42606 Exp. 6-30-25 — STRUCTURAL — STATE OF CALIFORNIA

PROJECT NAME:

Bellflower Unified School District
Mayfair High School Sports Fields
6000 North Woodruff Ave
Lakewood, California 90713

CLIENT:

BELLFLOWER UNIFIED SCHOOL DISTRICT
16703 S. Clark Ave.
BELLFLOWER, CALIFORNIA 90706

#	Rev. Date	Description

JOB NO: 15008
DATE: 05/24/2024
DRAWN: NP
CHECK: BP
ARCHITECT: PDW
ENGINEER:

SHEET DESCRIPTION:
SOFTBALL FIELD
ROOF FRAMING PLAN

SHEET NO:
S207

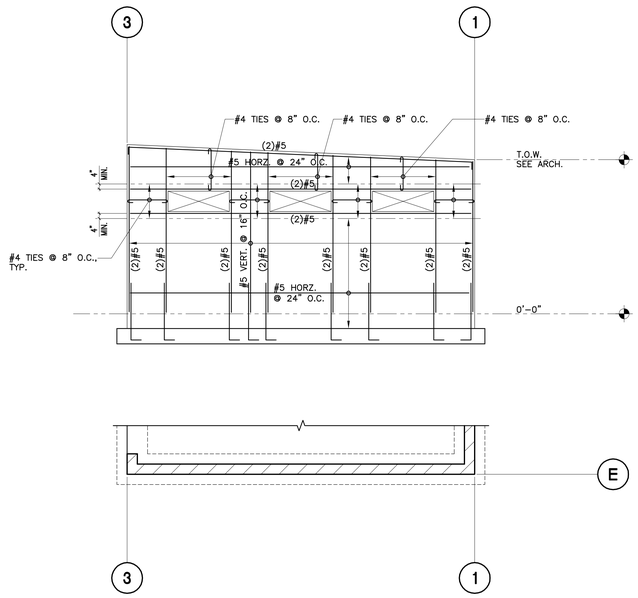

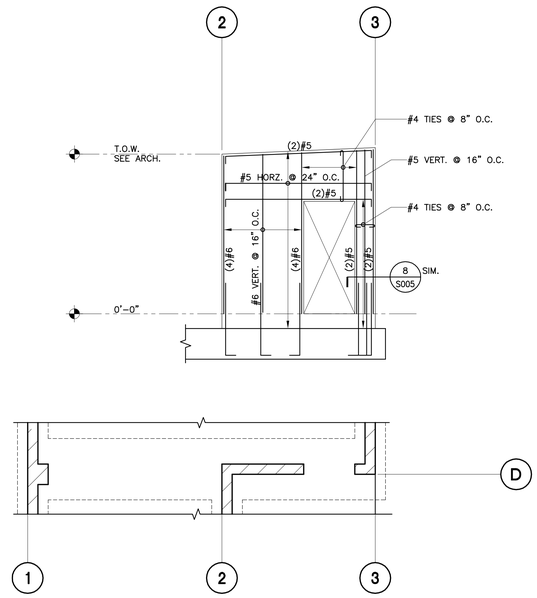

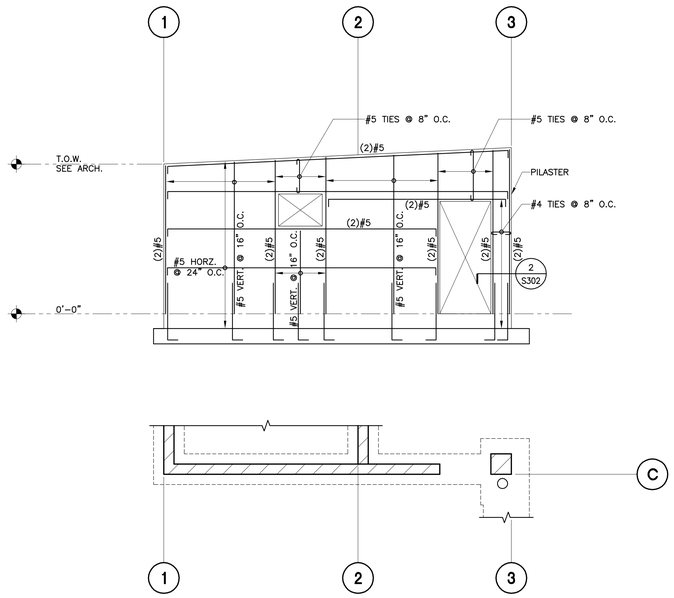

WALL ELEVATION LINE (E) — (1)
SCALE: 1/4" = 1'-0"

WALL ELEVATION LINE (D) — (2)
SCALE: 1/4" = 1'-0"

WALL ELEVATION LINE (C) — (3)
SCALE: 1/4" = 1'-0"

NORTH

WALL ELEVATIONS SCALE: 1/4"=1'-0"

STATE:

IDENTIFICATION STAMP
DIV. OF THE STATE ARCHITECT
APP: 03-124281 INC:
REVIEWED FOR
SS ☑ FLS ☑ ACS ☑
DATE: 02/04/2025

ARCHITECT:

architecture
westbergwhite
14471 Chambers Rd, Suite 210
Tustin, CA 92780
714.508.1780 714.508.1780 Fax

CONSULTANT:

rtm
engineering consultants
1ADA,Suite 100, Irvine, CA 92618
Tel (949) 462-3200 • Fax (949) 462-3201
WWW.RTMEC.COM
RTM JOB NO: 24.002173.2585 (259.123)

PROJECT NAME:

Bellflower Unified School District
Mayfair High School Sports Fields
6000 North Woodruff Ave
Lakewood, California 90713

CLIENT:

BELLFLOWER UNIFIED
SCHOOL DISTRICT
16703 S. Clark Ave.
BELLFLOWER, CALIFORNIA 90706

Rev.	Date	Description

JOB NO: 15008
DATE: 05/24/2024
DRAWN: NP
CHECK: BP
ARCHITECT: PDW
ENGINEER:

SHEET DESCRIPTION:
WALL ELEVATIONS

SHEET NO:
S208

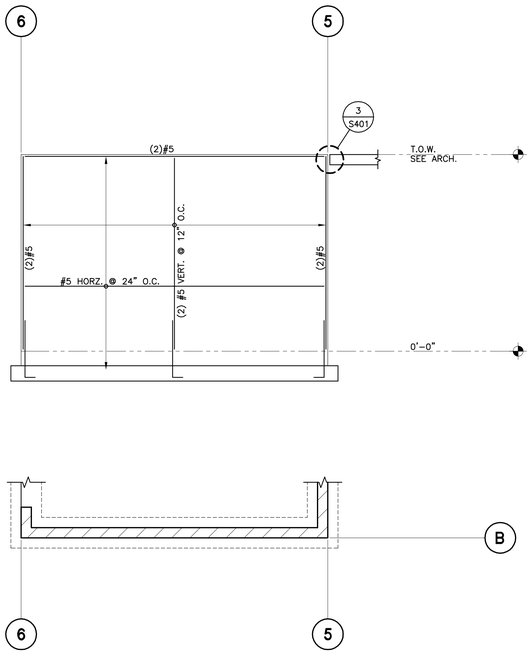

WALL ELEVATION LINE (B) — (1)
SCALE: 1/4" = 1'-0"

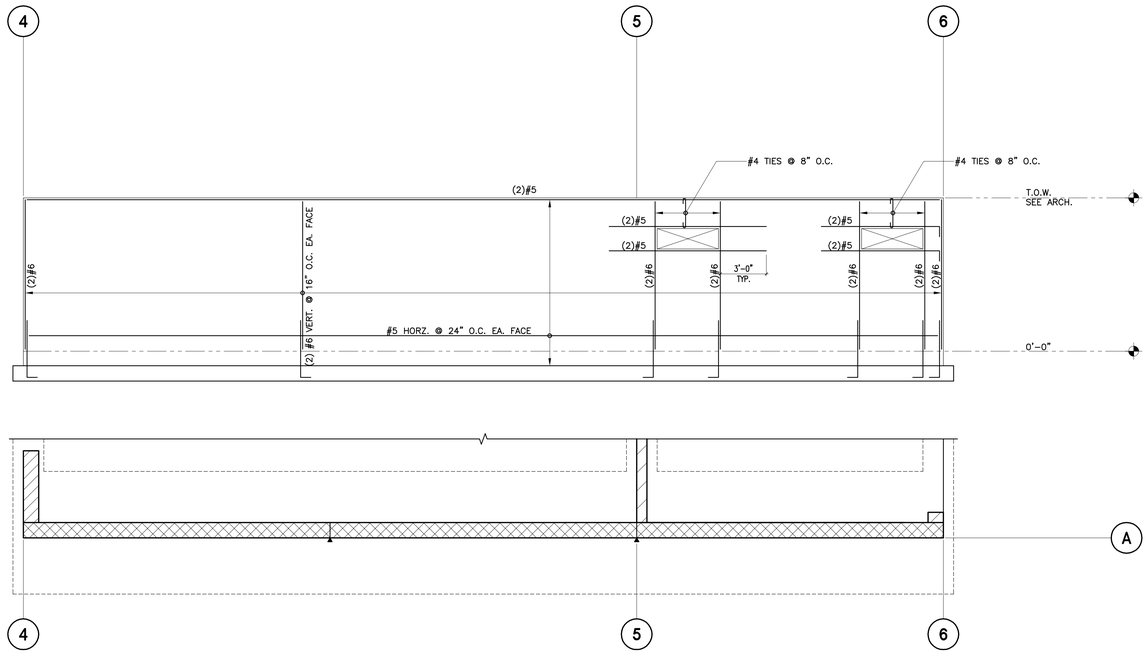

WALL ELEVATION LINE (A) — (2)
SCALE: 1/4" = 1'-0"

NORTH

WALL ELEVATIONS SCALE: 1/4"=1'-0"

STATE:

IDENTIFICATION STAMP
DIV. OF THE STATE ARCHITECT
APP: 03-124281 INC:
REVIEWED FOR
SS ☑ FLS ☑ ACS ☑
DATE: 02/04/2025

ARCHITECT:

architecture
westbergwhite
14471 Chambers Rd, Suite 210
Tustin, CA 92780
714.508.1780 714.508.1780 Fax

LICENSED ARCHITECT — PAUL D. WESTBERG — No. C-26185 — Exp. 08-31-25 — STATE OF CALIFORNIA

CONSULTANT:

rtm
engineering consultants
1ADA,Suite 100, Irvine, CA 92618
Tel (949) 462-3200 • Fax (949) 462-3201
WWW.RTMEC.COM
RTM JOB NO: 24.002173.2585 (259.123)

REGISTERED PROFESSIONAL ENGINEER — No. S6006 Exp. 6-30-25 — STRUCTURAL — STATE OF CALIFORNIA

PROJECT NAME:

Bellflower Unified School District
Mayfair High School Sports Fields
6000 North Woodruff Ave
Lakewood, California 90713

CLIENT:

BELLFLOWER UNIFIED
SCHOOL DISTRICT

16703 S. Clark Ave.
BELLFLOWER, CALIFORNIA 90706

Δ	Rev. Date	Description

JOB NO:	15008
DATE:	05/24/2024
DRAWN:	NP
CHECK:	BP
ARCHITECT:	PDW
ENGINEER:	

SHEET DESCRIPTION:

WALL ELEVATIONS

SHEET NO:

S209

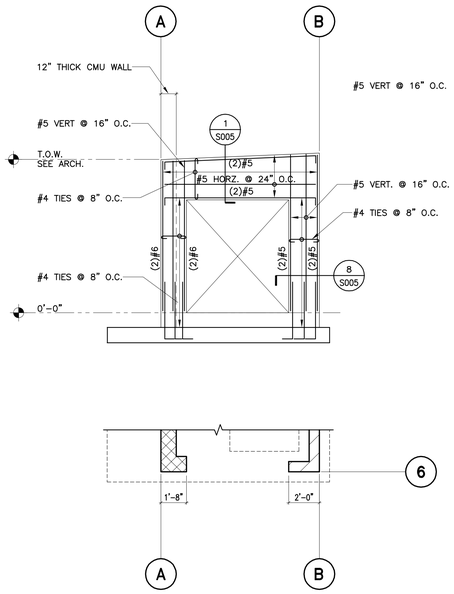

WALL ELEVATION LINE 6
SCALE: 1/4" = 1'-0"
1

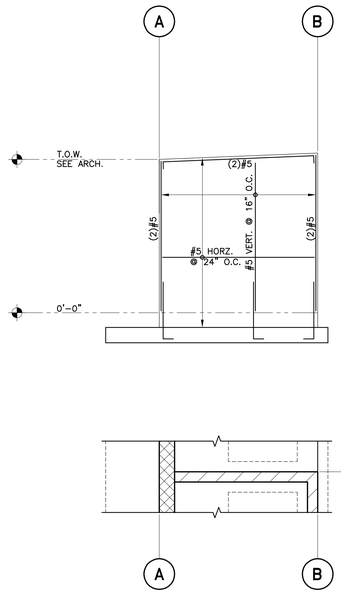

WALL ELEVATION LINE 5
SCALE: 1/4" = 1'-0"
2

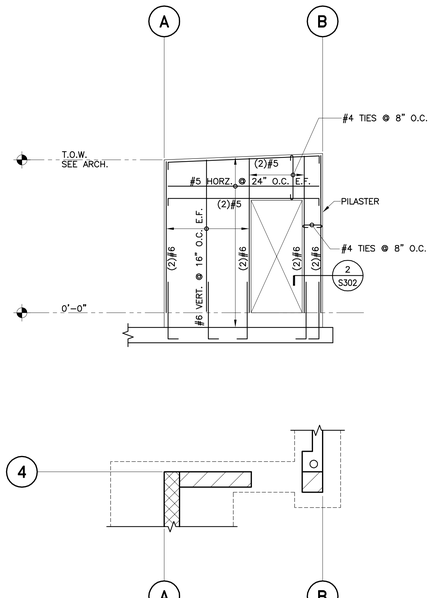

WALL ELEVATION LINE 4
SCALE: 1/4" = 1'-0"
3

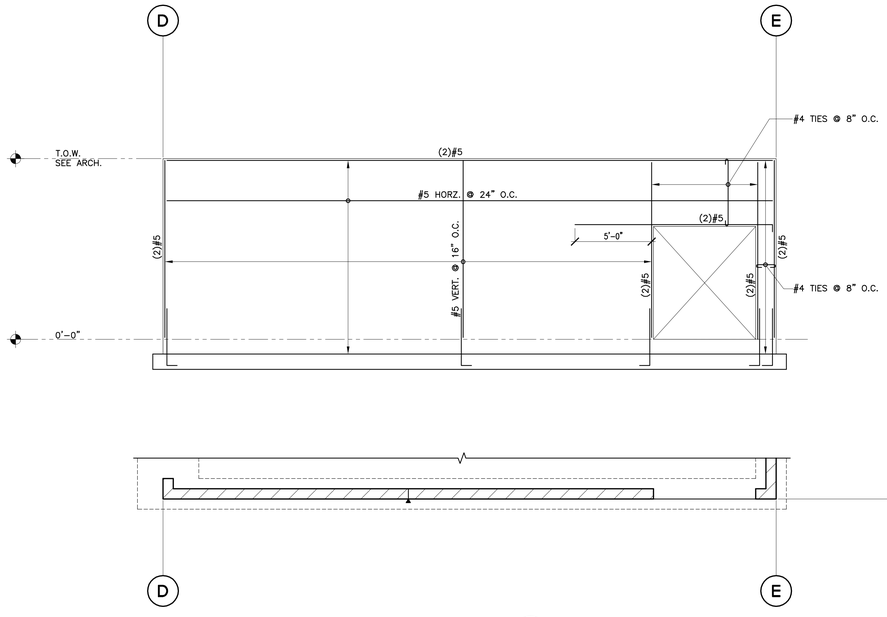

WALL ELEVATION LINE 3
SCALE: 1/4" = 1'-0"
4

NORTH

WALL ELEVATIONS SCALE: 1/4"=1'-0"

STATE:

IDENTIFICATION STAMP
DIV. OF THE STATE ARCHITECT
APP: 03-124281 INC:
REVIEWED FOR
SS ☑ FLS ☑ ACS ☑
DATE: 02/04/2025

ARCHITECT:

architecture
westbergwhite
14471 Chambers Rd, Suite 210
Tustin, CA 92780
714.508.1780 714.508.1780 Fax

LICENSED ARCHITECT PAUL D. WESTBERG No. 18615 STATE OF CALIFORNIA

CONSULTANT:

rtm
engineering consultants
1ADA,Suite 100, Irvine, CA 92618
Tel (949) 462-3200 • Fax (949) 462-3201
WWW.RTMEC.COM
RTM JOB NO: 24.002173.2585 (259.123)

REGISTERED PROFESSIONAL ENGINEER BRIAN PHILLIPS No. S-6506 Exp. 6-30-25 STRUCTURAL STATE OF CALIFORNIA

PROJECT NAME:

Bellflower Unified School District
Mayfair High School Sports Fields
6000 North Woodruff Ave
Lakewood, California 90713

CLIENT:

BELLFLOWER UNIFIED
SCHOOL DISTRICT
16703 S. Clark Ave.
BELLFLOWER, CALIFORNIA 90706

Rev.	Date	Description

JOB NO:	15008
DATE:	05/24/2024
DRAWN:	NP
CHECK:	BP
ARCHITECT:	PDW
ENGINEER:	

SHEET DESCRIPTION:

WALL ELEVATIONS

SHEET NO:

S210

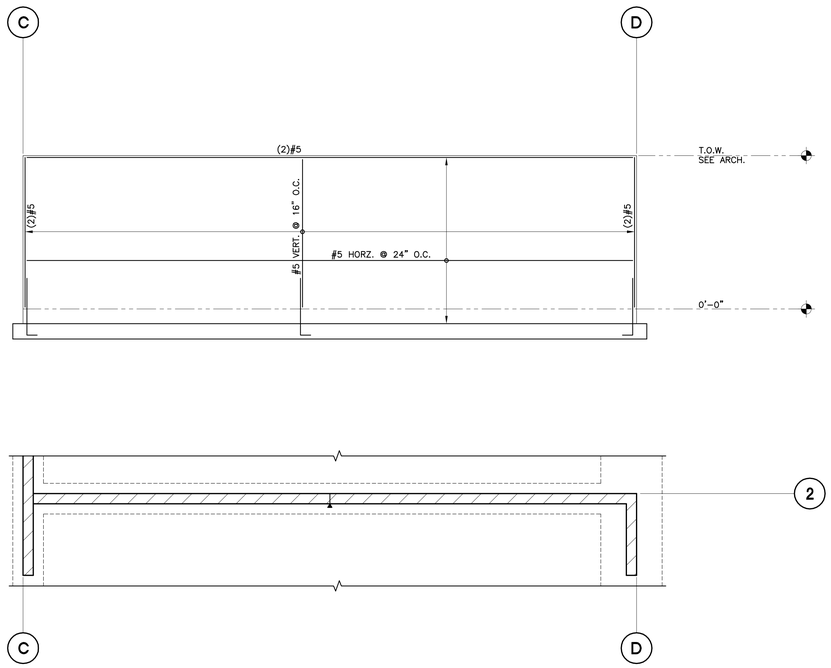

WALL ELEVATION LINE 2
SCALE: 1/4" = 1'-0"

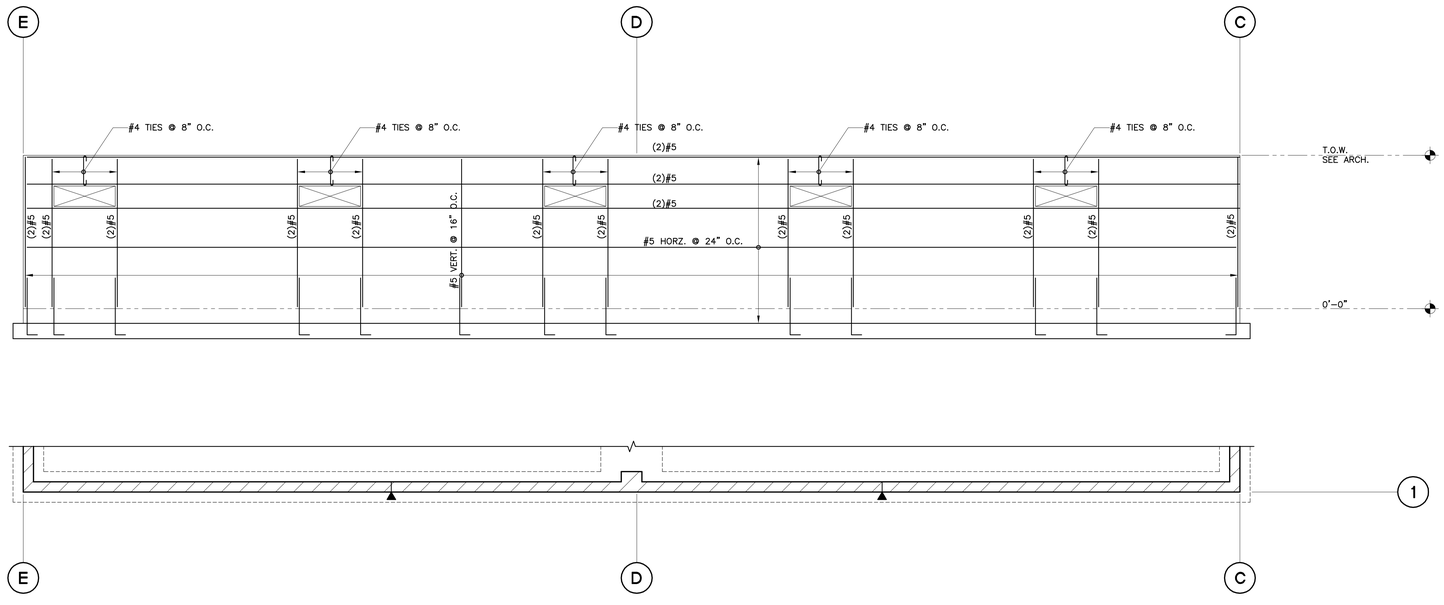

WALL ELEVATION LINE 1
SCALE: 1/4" = 1'-0"

NORTH

WALL ELEVATIONS SCALE: 1/4"=1'-0"

STATE:

IDENTIFICATION STAMP
DIV. OF THE STATE ARCHITECT
APP: 03-124281 INC:
REVIEWED FOR
SS ☑ FLS ☑ ACS ☑
DATE: 02/04/2025

ARCHITECT:

architecture
westbergwhite
14471 Chambers Rd, Suite 210
Tustin, CA 92780
714.508.1780 714.508.1780 Fax

LICENSED ARCHITECT PATRICK D. WESTBERG No. C-26189 STATE OF CALIFORNIA

CONSULTANT:

rtm
engineering consultants
1ADA,Suite 100, Irvine, CA 92618
Tel (949) 462-3200 • Fax (949) 462-3201
WWW.RTMEC.COM
RTM JOB NO: 24.002(13.2585 (259.123)

REGISTERED PROFESSIONAL ENGINEER NIMA MOKHTARZADEH No. M-2606 Exp. 6-30-25 STRUCTURAL STATE OF CALIFORNIA

PROJECT NAME:

Bellflower Unified School District
Mayfair High School Sports Fields
6000 North Woodruff Ave
Lakewood, California 90713

CLIENT:

BELLFLOWER UNIFIED
SCHOOL DISTRICT

16703 S. Clark Ave.
BELLFLOWER, CALIFORNIA 90706

Rev.	Date	Description

JOB NO: 15008
DATE: 05/24/2024
DRAWN: NP
CHECK: BP
ARCHITECT: PDW
ENGINEER:

SHEET DESCRIPTION:

WALL ELEVATIONS

SHEET NO:

S211

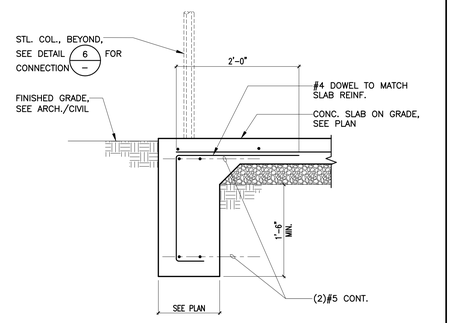

MHS-013 SCALE: 1"=1'-0"

17 DETAIL 13

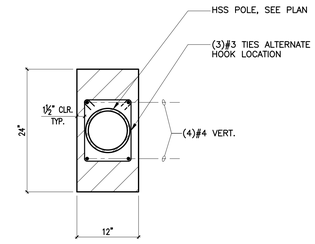

PLAN

MHS-011 SCALE: 1"=1'-0"

9 DETAIL 5

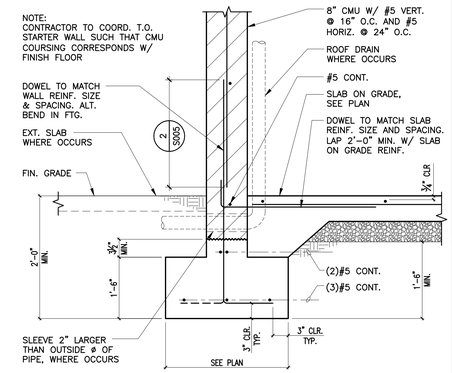

MHS-001 SCALE: 1"=1'-0"

1 DETAIL 1

18

MHS-076 SCALE: 1"=1'-0"

19 DETAIL

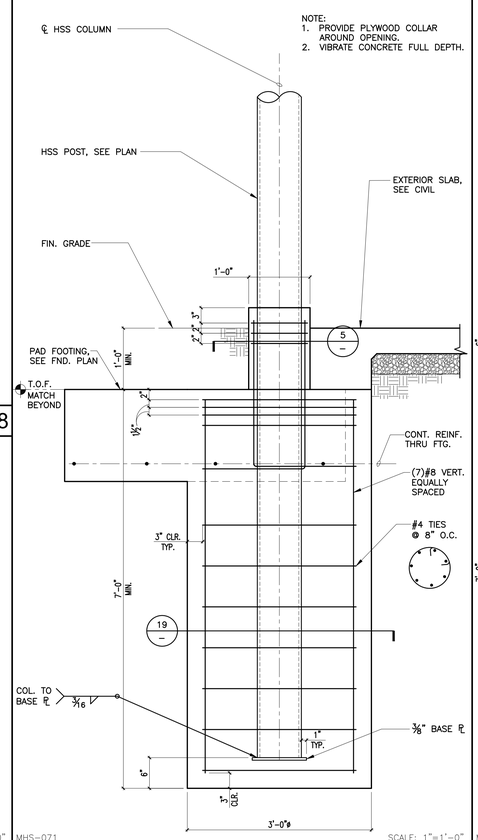

MHS-071 SCALE: 1"=1'-0"

15 DETAIL

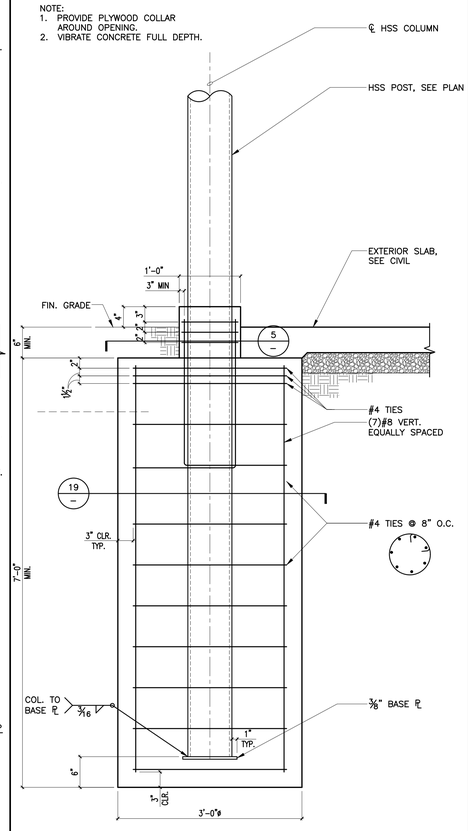

MHS-008 SCALE: 1"=1'-0"

11 DETAIL

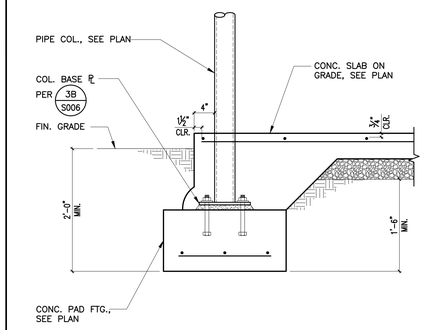

MHS-006 SCALE: 1"=1'-0"

6 DETAIL

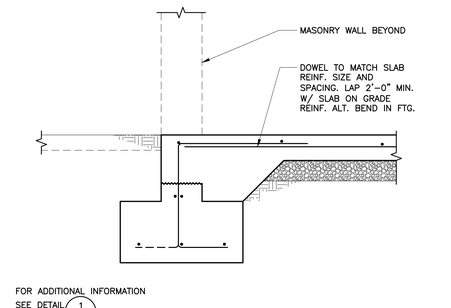

MHS-002 SCALE: 1"=1'-0"

2 DETAIL

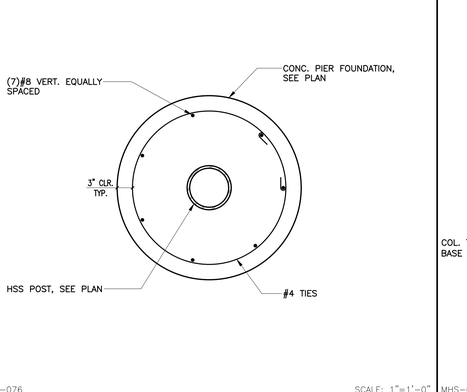

MHS-076 SCALE: 1"=1'-0"

19 DETAIL

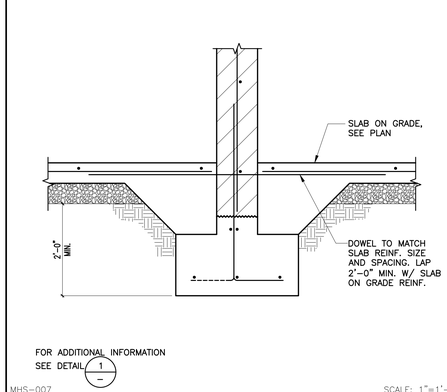

MHS-007 SCALE: 1"=1'-0"

7 DETAIL

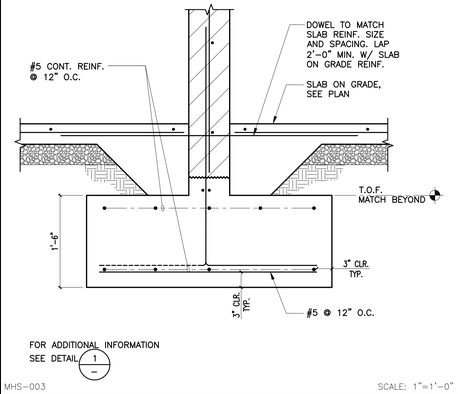

MHS-003 SCALE: 1"=1'-0"

3 DETAIL

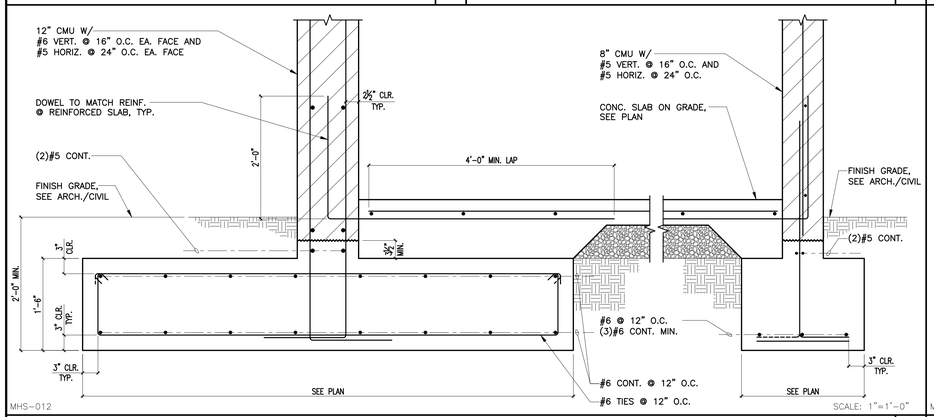

MHS-012 SCALE: 1"=1'-0"

16 DETAIL

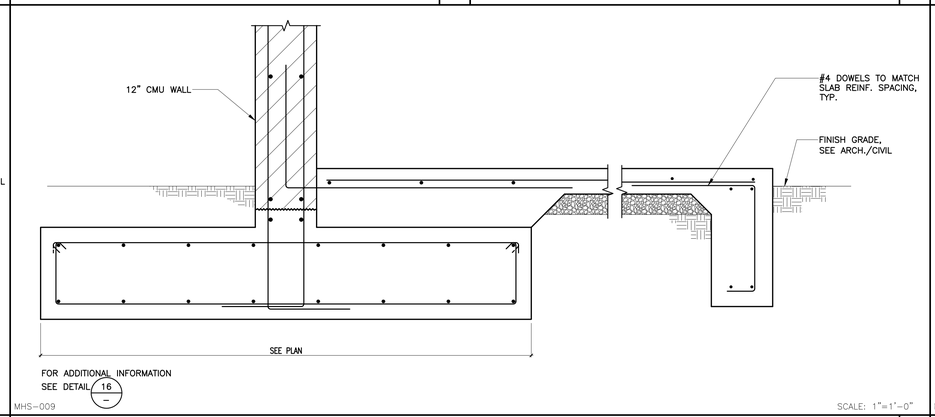

MHS-009 SCALE: 1"=1'-0"

8 DETAIL

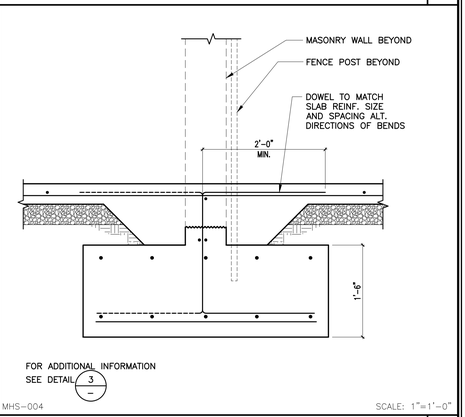

MHS-004 SCALE: 1"=1'-0"

4 DETAIL

STATE:

IDENTIFICATION STAMP
DIV. OF THE STATE ARCHITECT
APP: 03-124281 INC:
REVIEWED FOR
SS ☑ FLS ☑ ACS ☑
DATE: 02/04/2025

ARCHITECT:

architecture
westbergwhite
14471 Chambers Rd, Suite 210
Tustin, CA 92780
714.508.1780 714.508.1780 Fax

LICENSED ARCHITECT PAUL D. WESTBERG No. C-29,585 STATE OF CALIFORNIA
Exp. 08-31-2025

CONSULTANT:

rtm
engineering consultants
1ADA, Suite 100, Irvine, CA 92618
Tel (949) 462-3200 • Fax (949) 462-3201
WWW.RTMEC.COM
RTM JOB NO: 24.002173.2585 (259.123)

REGISTERED PROFESSIONAL ENGINEER
Nicholas Pappas
No. 36006
Exp. 6-30-25
STRUCTURAL
STATE OF CALIFORNIA

PROJECT NAME:

Bellflower Unified School District
Mayfair High School Sports Fields
6000 North Woodruff Ave
Lakewood, California 90713

CLIENT:

BELLFLOWER UNIFIED SCHOOL DISTRICT
16703 S. Clark Ave.
BELLFLOWER, CALIFORNIA 90706

#	Rev. Date	Description

JOB NO:	15008
DATE:	05/24/2024
DRAWN:	NP
CHECK:	BP
ARCHITECT:	PDW
ENGINEER:	

SHEET DESCRIPTION:

FOUNDATION DETAILS

SHEET NO:

S301

17

13 DETAIL

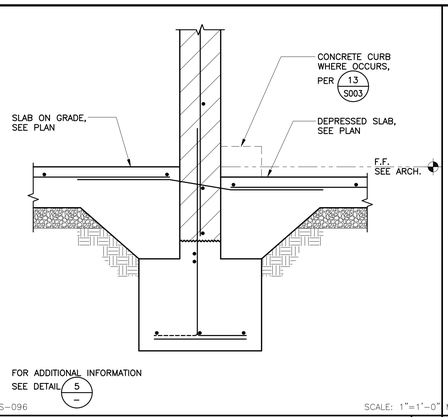

MHS-096 SCALE: 1"=1'-0"

9 DETAIL

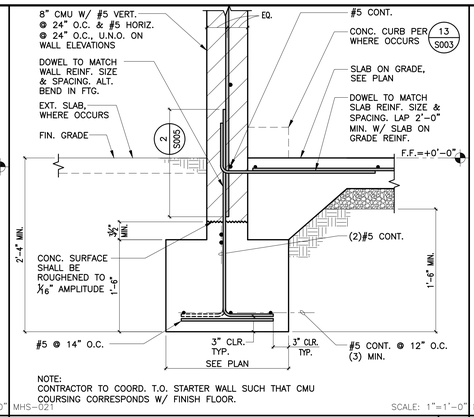

MHS-021 SCALE: 1"=1'-0"

5 DETAIL

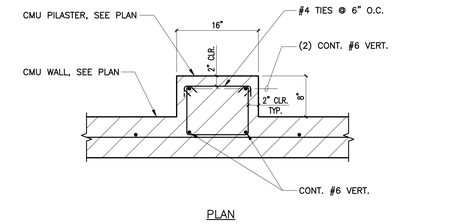

MHS-015 SCALE: 1"=1'-0"

1 DETAIL

18

14 DETAIL

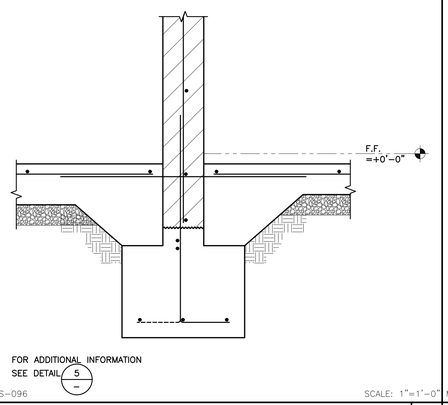

MHS-096 SCALE: 1"=1'-0"

10 DETAIL

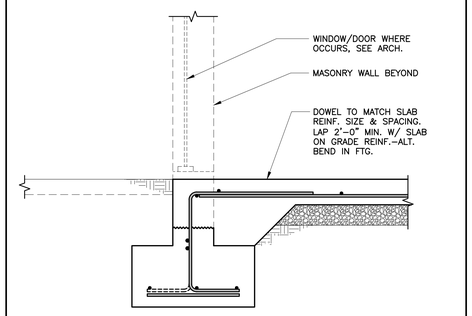

MHS-022 SCALE: 1"=1'-0"

6 DETAIL

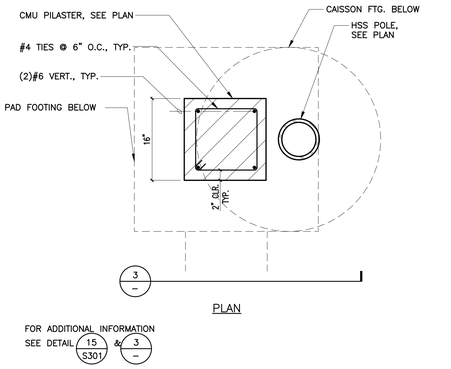

MHS-016 SCALE: 1"=1'-0"

2 DETAIL

19

15

11 DETAIL

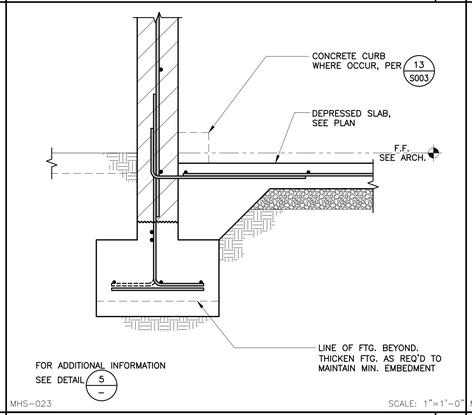

MHS-023 SCALE: 1"=1'-0"

7 DETAIL

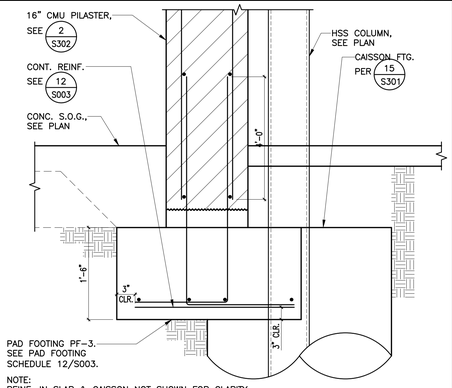

MHS-019 SCALE: 1"=1'-0"

3 DETAIL

20

16

12 DETAIL

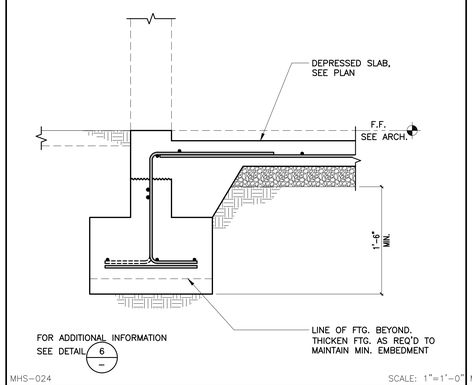

MHS-024 SCALE: 1"=1'-0"

8 DETAIL

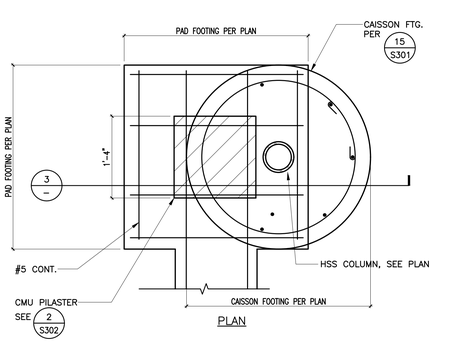

MHS-082 SCALE: 1"=1'-0"

4 DETAIL

STATE:

IDENTIFICATION STAMP
DIV. OF THE STATE ARCHITECT
APP: 03-124281 INC:
REVIEWED FOR
SS ☑ FLS ☑ ACS ☑
DATE: 02/04/2025

ARCHITECT:

architecture
westbergwhite
14471 Chambers Rd, Suite 210
Tustin, CA 92780
714.508.1780 714.508.1780 Fax

LICENSED ARCHITECT — REGISTRATION NO. C-29585 — STATE OF CALIFORNIA

CONSULTANT:

rtm
engineering consultants
1ADA,Suite 100, Irvine, CA 92618
Tel (949) 462-3200 • Fax (949) 462-3201
WWW.RTMEC.COM
RTM JOB NO: 24.002173.2585 (259.123)

REGISTERED PROFESSIONAL ENGINEER — BRIAN PHILLIPS — No. 29006 Exp. 6-30-25 — STRUCTURAL — STATE OF CALIFORNIA

PROJECT NAME:

Bellflower Unified School District
Mayfair High School Sports Fields
6000 North Woodruff Ave
Lakewood, California 90713

CLIENT:

BELLFLOWER UNIFIED SCHOOL DISTRICT

16703 S. Clark Ave.
BELLFLOWER, CALIFORNIA 90706

Rev.	Date	Description

JOB NO: 15008
DATE: 05/24/2024
DRAWN: NP
CHECK: BP
ARCHITECT: PDW
ENGINEER:

SHEET DESCRIPTION:

FOUNDATION DETAILS

SHEET NO:

S302

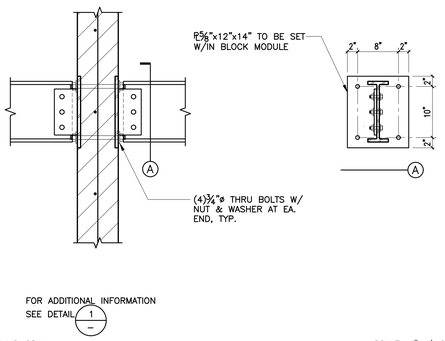

MHS–084 SCALE: 1"=1'–0"

CMU WALL WITH W BEAM ON BOTH SIDES | 17

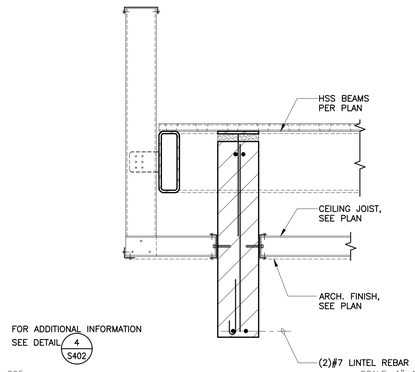

MHS–095 SCALE: 1"=1'–0"

DETAIL | 13

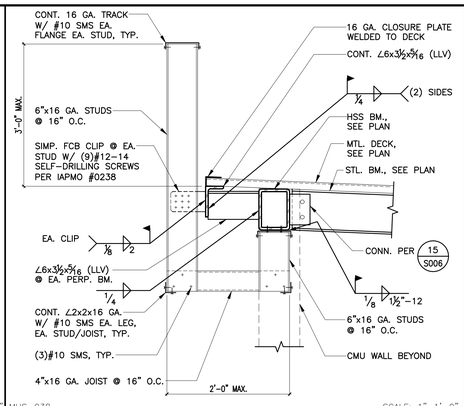

MHS–038 SCALE: 1"=1'–0"

DETAIL | 9

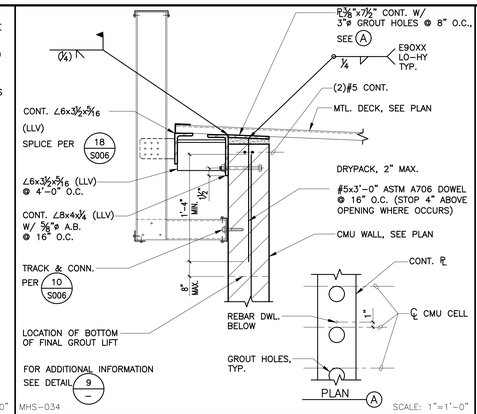

MHS–034 SCALE: 1"=1'–0"

DETAIL | 5

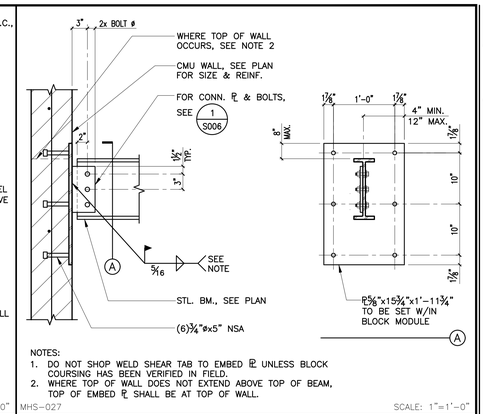

MHS–027 SCALE: 1"=1'–0"

DETAIL | 1

MHS–087 SCALE: 1"=1'–0"

SHEAR PLATE DETAIL | 18

14

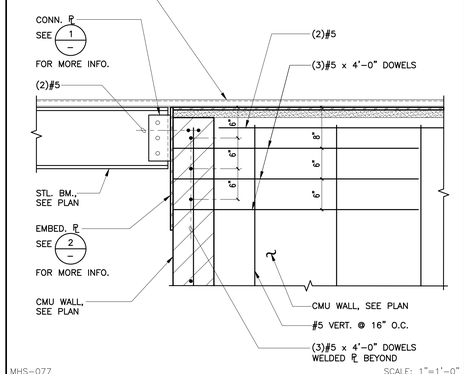

MHS–039 SCALE: 1"=1'–0"

DETAIL | 10

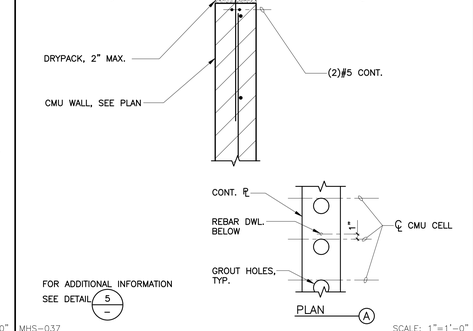

MHS–035 SCALE: 1"=1'–0"

DETAIL | 6

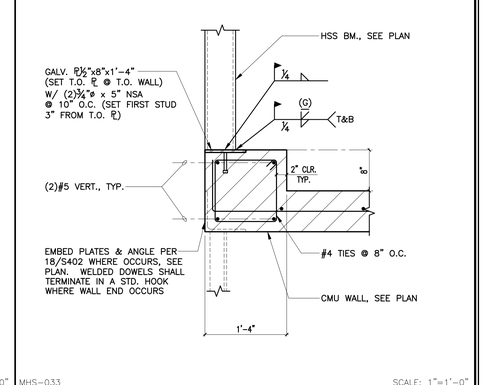

MHS–028 SCALE: 1"=1'–0"

DETAIL | 2

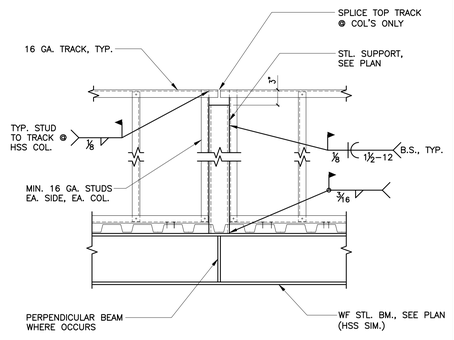

MHS–090 SCALE: 1"=1'–0"

DETAIL | 19

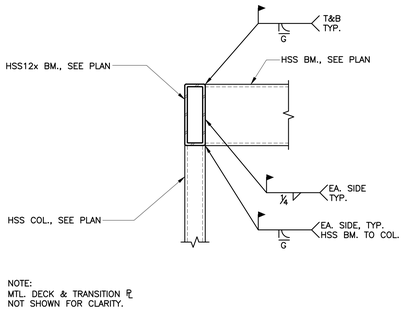

MHS–080 SCALE: 1"=1'–0"

DETAIL | 15

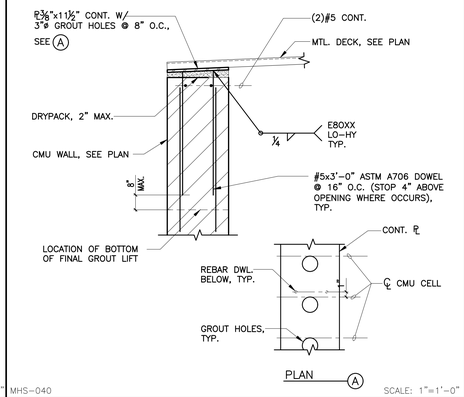

MHS–040 SCALE: 1"=1'–0"

DETAIL | 11

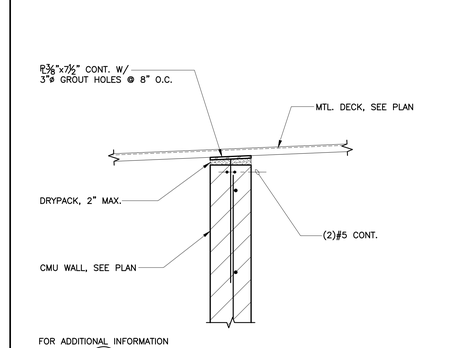

MHS–036 SCALE: 1"=1'–0"

DETAIL | 7

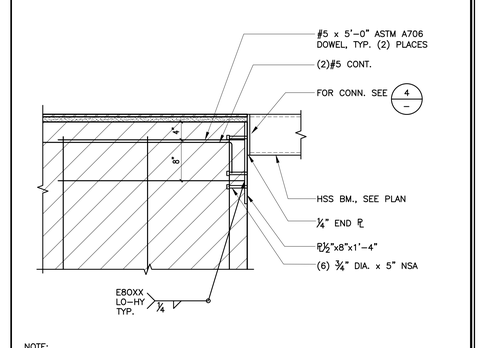

MHS–030 SCALE: 1"=1'–0"

DETAIL | 3

MHS–081 SCALE: 1"=1'–0"

DETAIL | 16

MHS–077 SCALE: 1"=1'–0"

DETAIL | 12

MHS–037 SCALE: 1"=1'–0"

DETAIL | 8

MHS–033 SCALE: 1"=1'–0"

DETAIL | 4

STATE:

IDENTIFICATION STAMP
DIV. OF THE STATE ARCHITECT
APP: 03-124281 INC:
REVIEWED FOR
SS ☑ FLS ☑ ACS ☑
DATE: 02/04/2025

ARCHITECT:

architecture
westbergwhite
14471 Chambers Rd, Suite 210
Tustin, CA 92780
714.508.1780 714.508.1780 Fax

CONSULTANT:

rtm
engineering consultants
1ADA,Suite 100, Irvine, CA 92618
Tel (949) 462-3200 • Fax (949) 462-3201
WWW.RTMEC.COM
RTM JOB NO: 24.002173.2585 (259.123)

PROJECT NAME:

Bellflower Unified School District
Mayfair High School Sports Fields
6000 North Woodruff Ave
Lakewood, California 90713

CLIENT:

BELLFLOWER UNIFIED SCHOOL DISTRICT
16703 S. Clark Ave.
BELLFLOWER, CALIFORNIA 90706

#	Rev. Date	Description

JOB NO:	15008
DATE:	05/24/2024
DRAWN:	NP
CHECK:	BP
ARCHITECT:	PDW
ENGINEER:	

SHEET DESCRIPTION:

ROOF FRAMING DETAILS

SHEET NO:

S401

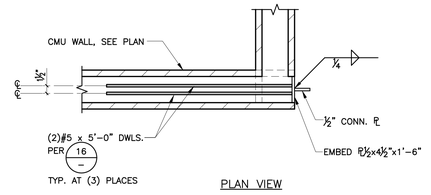

NOTE:
STL. BM. & WALL REINF. NOT SHOWN FOR CLARITY.

MHS-058 SCALE: 1"=1'-0"

DETAIL 17

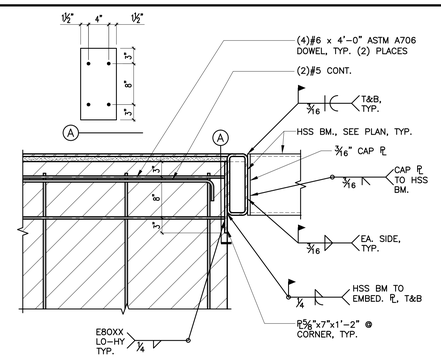

NOTE:
1. METAL DECK NOT SHOWN FOR CLARITY.

MHS-085 SCALE: 1"=1'-0"

DRAG CONNECTION DETAIL 13

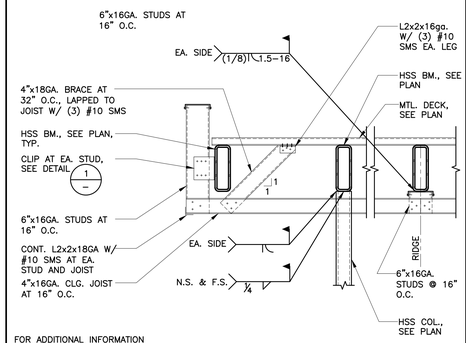

MHS-092 SCALE: ¾"=1'-0"

DETAIL 9

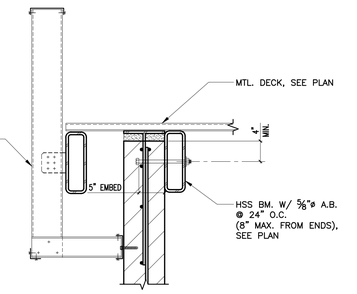

MHS-047 SCALE: 1"=1'-0"

DETAIL 5

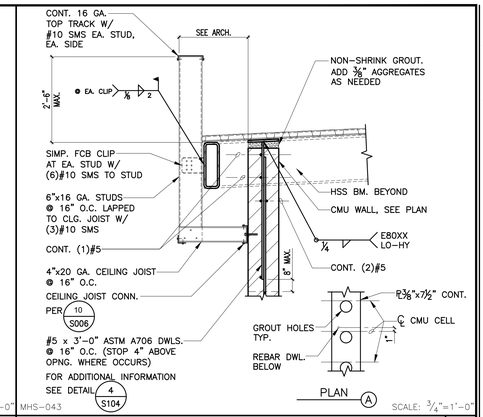

MHS-043 SCALE: ¾"=1'-0"

DETAIL 1

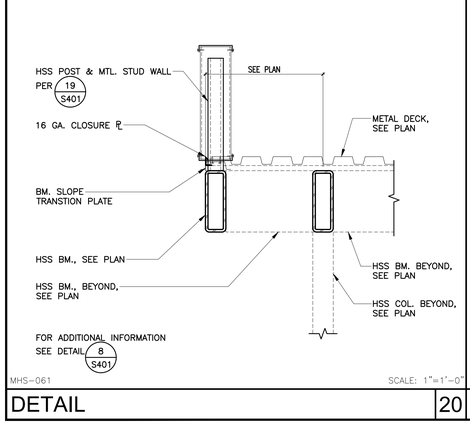

MHS-091 SCALE: 1"=1'-0"

DETAIL 18

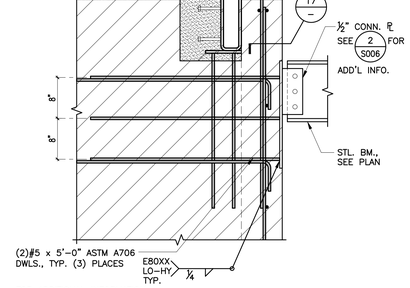

NOTE:
TRANSITION ℄ NOT SHOWN FOR CLARITY.

MHS-055 SCALE: 1"=1'-0"

DETAIL 14

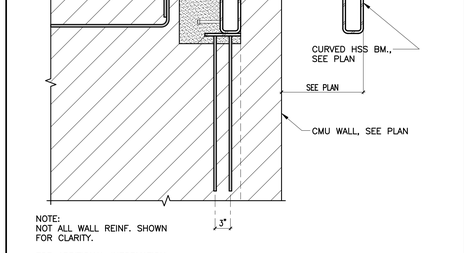

MHS-092 SCALE: ¾"=1'-0"

DETAIL 10

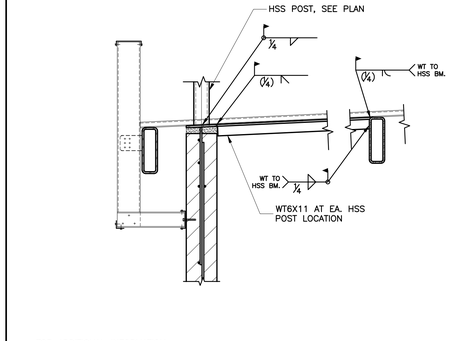

NOTE:
MTL. DECK NOT SHOWN FOR CLARITY.

MHS-048 SCALE: 1"=1'-0"

DETAIL 6

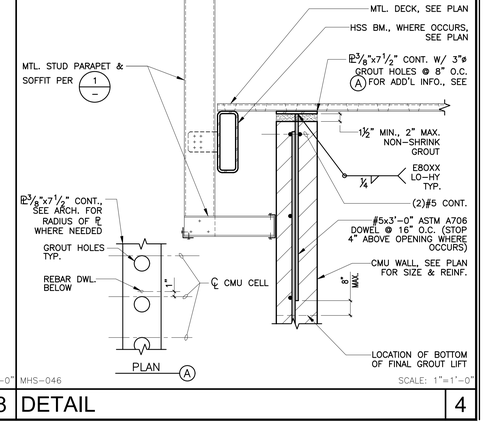

MHS-044 SCALE: 1"=1'-0"

DETAIL 2

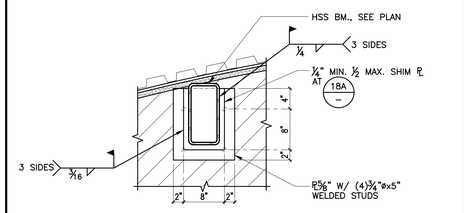

NOTE:
TRANSITION ℄ NOT SHOWN FOR CLARITY.

MHS-060 SCALE: 1"=1'-0"

DETAIL 19

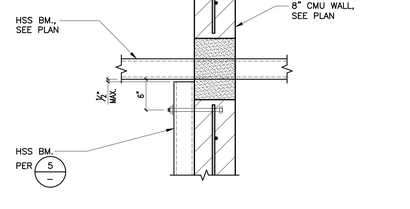

MHS-056 SCALE: 1"=1'-0"

DETAIL 15

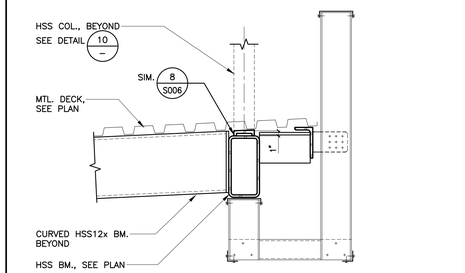

MHS-052 SCALE: 1"=1'-0"

DETAIL 11

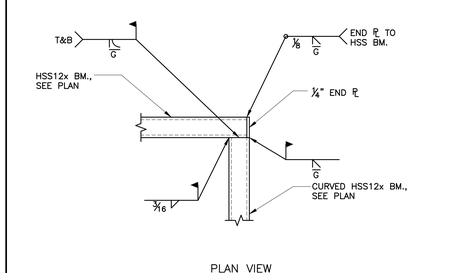

NOTE:
MTL. DECK NOT SHOWN FOR CLARITY.

MHS-049 SCALE: 1"=1'-0"

DETAIL 7

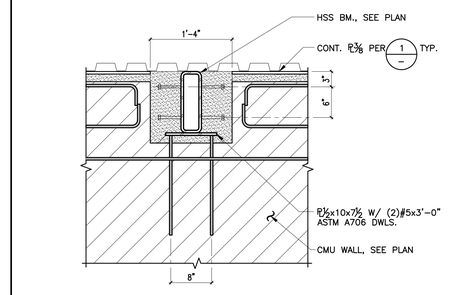

MHS-045 SCALE: 1"=1'-0"

DETAIL 3

MHS-061 SCALE: 1"=1'-0"

DETAIL 20

MHS-057 SCALE: 1"=1'-0"

DETAIL 16

MHS-053 SCALE: 1"=1'-0"

DETAIL 12

MHS-094 SCALE: ¾"=1'-0"

DETAIL 8

MHS-046 SCALE: 1"=1'-0"

DETAIL 4

STATE:

IDENTIFICATION STAMP
DIV. OF THE STATE ARCHITECT
APP: 03-124281 INC:
REVIEWED FOR
SS ☑ FLS ☑ ACS ☑
DATE: 02/04/2025

ARCHITECT:

westbergwhite architecture
14471 Chambers Rd, Suite 210
Tustin, CA 92780
714.508.1780 714.508.1780 Fax

CONSULTANT:

rtm engineering consultants
1ADA,Suite 100, Irvine, CA 92618
Tel (949) 462-3200 • Fax (949) 462-3201
WWW.RTMEC.COM
RTM JOB NO: 24.002173.2585 (259.123)

PROJECT NAME:

Bellflower Unified School District
Mayfair High School Sports Fields
6000 North Woodruff Ave
Lakewood, California 90713

CLIENT:

BELLFLOWER UNIFIED SCHOOL DISTRICT
16703 S. Clark Ave.
BELLFLOWER, CALIFORNIA 90706

#	Rev. Date	Description

JOB NO:	15008
DATE:	05/24/2024
DRAWN:	NP
CHECK:	BP
ARCHITECT:	PDW
ENGINEER:	

SHEET DESCRIPTION:
ROOF FRAMING DETAILS

SHEET NO:
S402

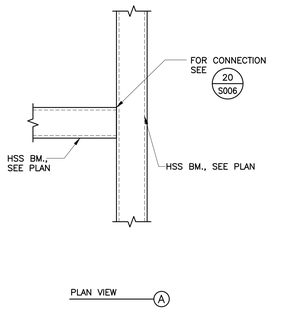

MHS-103 SCALE: 1"=1'-0"

DETAIL 5

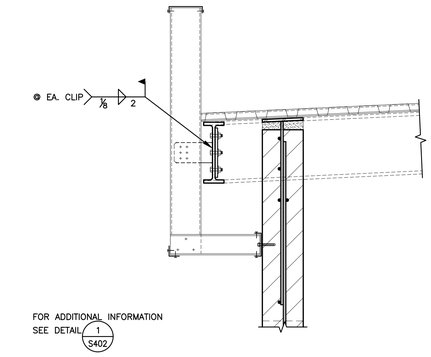

MHS-099 SCALE: 1"=1'-0"

DETAIL 1

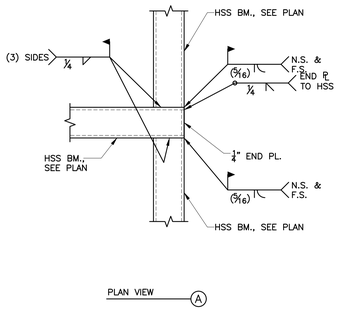

MHS-104 SCALE: 1"=1'-0"

DETAIL 6

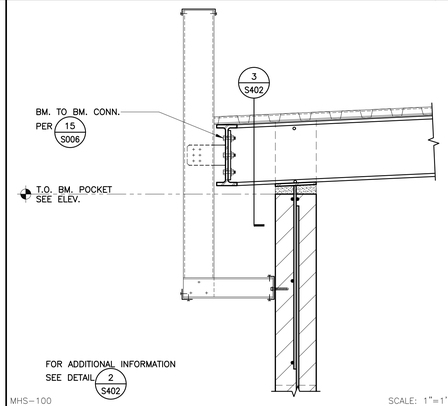

MHS-100 SCALE: 1"=1'-0"

DETAIL 2

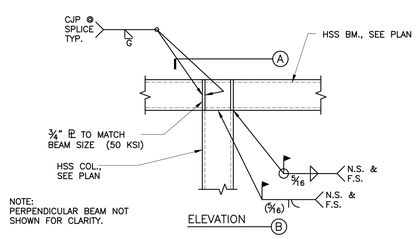

DETAIL 7

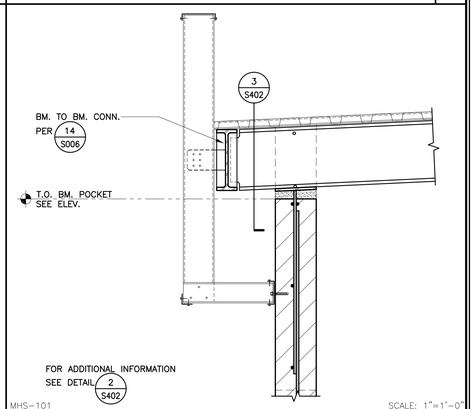

MHS-101 SCALE: 1"=1'-0"

DETAIL 3

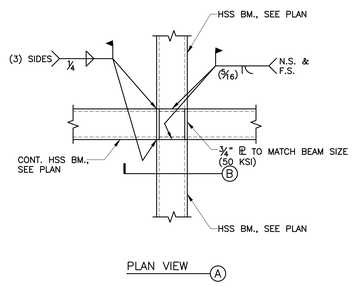

MHS-105 SCALE: 1"=1'-0"

DETAIL 8

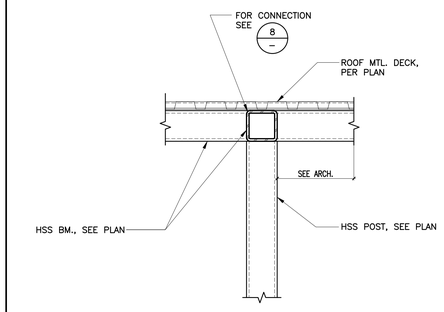

MHS-102 SCALE: 1"=1'-0"

DETAIL 4

17 13 9 5 1

18 14 10 6 2

19 15 11 7 3

20 16 12 8 4

STATE:

IDENTIFICATION STAMP
DIV. OF THE STATE ARCHITECT
APP: 03-124281 INC:
REVIEWED FOR
SS ☑ FLS ☑ ACS ☑
DATE: 02/04/2025

ARCHITECT:

architecture
westbergwhite
14471 Chambers Rd, Suite 210
Tustin, CA 92780
714.508.1780 714.508.1780 Fax

LICENSED ARCHITECT PAUL D. WESTBERG No. C-25785 STATE OF CALIFORNIA

CONSULTANT:

rtm
engineering consultants
1ADA, Suite 100, Irvine, CA 92618
Tel (949) 462-3200 • Fax (949) 462-3201
WWW.RTMEC.COM
RTM JOB NO: 24.002173.2585 (259.123)

REGISTERED PROFESSIONAL ENGINEER BRIAN PHILLIPS No. S-6006 Exp. 6-30-25 STRUCTURAL STATE OF CALIFORNIA

PROJECT NAME:

Bellflower Unified School District
Mayfair High School Sports Fields
6000 North Woodruff Ave
Lakewood, California 90713

CLIENT:

BELLFLOWER UNIFIED SCHOOL DISTRICT
16703 S. Clark Ave.
BELLFLOWER, CALIFORNIA 90706

#	Rev. Date	Description

JOB NO:	15008
DATE:	05/24/2024
DRAWN:	NP
CHECK:	BP
ARCHITECT:	PDW
ENGINEER:	

SHEET DESCRIPTION:

ROOF FRAMING DETAILS

SHEET NO:

S403

ABBREVIATIONS

4S/DP	4" SQUARE BY 2-1/8" DEEP BOX	GFCI	GROUND FAULT CIRCUIT INTERRUPTER	NO	NORMALLY OPENED
ADA	AMERICAN WITH DISABILITIES ACT	GFP	GROUND FAULT PROTECTION	NF	NON-FUSED
A.F.F.	ABOVE FINISH FLOOR	GE or GEC	GROUNDING ELECTRODE CONDUCTOR	NIC	NOT IN CONTRACT
A.F.G.	ABOVE FINISH GRADE	HACR	HEATING AIR CONDITIONING REFRIGERATION	N.T.S.	NOT TO SCALE
AWG	AMERICAN WIRE GAUGE	HOA	HAND-OFF-AUTO	NL	NIGHT LIGHT
AMP, A	AMPERE	HVAC	HEATING, VENTILATING AND AIR CONDITIONING	NO. or #	NUMBER
A.I.C. or AIC	AMPERES INTERRUPTING CAPACITY (SYMMETRICAL)	H.,W.,D.,L.	HEIGHT, WIDTH, DEPTH, LENGTH	OFCI	OWNER FURNISHED, CONTRACTOR INSTALLED
A.F.C. or AFC	AVAILABLE FAULT CURRENT	HID	HIGH INTENSITY DISCHARGE	%Z	PERCENT IMPEDANCE
AF/AT	AMP FRAME, AMP TRIP	HP	HORSEPOWER	PH. or ø	PHASE
AHJ	AUTHORITY HAVING JURISDICTION	HPS	HIGH PRESSURE SODIUM	PC	PHOTOCELL
AS/AF	AMP SWITCH, AMP FUSE	IN. or "	INCHES	P.C.	PLUMBING CONTRACTOR
ATS	AUTOMATIC TRANSFER SWITCH	I/G	ISOLATED GROUND	P	POLE
AVG	AVERAGE	IBC	INTERNATIONAL BUILDING CODE	PVC	POLY VINYL CHLORIDE
BJ	BONDING JUMPER	I.D.C.S.	INTEGRATED DIMMING CONTROL PANEL	PDU	POWER DISTRIBUTION UNIT
BDF	BUILDING DISTRIBUTION FRAME	IDF	INTERMEDIATE DISTRIBUTION FRAME	PRIMARY	OVER 600 VOLTS
BR	BRANCH	JBOX	JUNCTION BOX	PROVIDE	FURNISH, INSTALL AND CONNECT
BLDG	BUILDING	K	DEGREE KELVIN	PT	POTENTIAL TRANSFORMER
CBC	CALIFORNIA BUILDING CODE	KCMIL	THOUSAND CIRCULAR MILS	PA	PUBLIC ADDRESS
CEC	CALIFORNIA ELECTRICAL CODE	KVA	KILOVOLT AMPERES	(R)	DENOTES RELOCATED DEVICE
CIRC., CKT.	CIRCUIT	KW	KILOWATT	LOCATION.	
CB	CIRCUIT BREAKER	KWH	KILOWATT HOUR	REC, RECEPT	RECEPTACLE
CSFD	COMBINATION SMOKE FIRE DAMPER	LCL	LONG CONTINUOUS LOAD	REF	REFRIGERATOR
C	CONDUIT	LF, L.F.	LINEAR FEET	RGS	RIGID GALVANIZED STEEL
C.O.	CONDUIT ONLY, COMPLETE WITH PULLSTRING	LTG, LTS	LIGHTING	RMS	ROOT MEAN SQUARE
CONN	CONNECTED	LPS	LOW PRESSURE SODIUM	SCC	SHORT CIRCUIT CURRENT
CPT	CONTROL POWER TRANSFORMER	MAX.	MAXIMUM	SCCR	SHORT CIRCUIT CURRENT RATING
CLCB	CURRENT LIMITING CIRCUIT BREAKER	MBJ	MAIN BONDING JUMPER	SCS	STRUCTURED CABLING SYSTEM
CLF	CURRENT LIMITING FUSE	MDF	MAIN DISTRIBUTION FRAME	SECONDARY	600 VOLTS AND LESS
CT	CURRENT TRANSFORMER	MOCP	MAXIMUM OVERCURRENT PROTECTION	SMACNA	SHEET METAL AND AIR COND. CONTRACTOR'S NAT'L ASSOC.
(D)	EXISTING DEVICE TO BE DEMOLISHED	MCB	MAIN CIRCUIT BREAKER	SF	SQUARE
DAS	DISTRIBUTED ANTENNA SYSTEM	MLO	MAIN LUGS ONLY	SSBJ	SUPPLY SIDE BONDING JUMPER
DIA	DIAMETER	M.C.	MECHANICAL CONTRACTOR	SBJ	SYSTEM BONDING JUMPER
DISC	DISCONNECT	M	METER	T	TIMECLOCK
DIST	DISTRIBUTION	M/M	METER MAIN	TEL/DATA	TELEPHONE AND DATA
D.P.C.S.	DIMMING PANEL CONTROL STATION	MV	MERCURY VAPOR	TV	TELEVISION
E.C.	ELECTRICAL CONTRACTOR	MH	METAL HALIDE	T.V.S.S.	TRANSIENT VOLTAGE SURGE SUPPRESSION
EMS	ENERGY MANAGEMENT CONTROL SYSTEM	MIN.	MINIMUM	TYP.	TYPICAL
EMT	ELECTRICAL METALLIC TUBING	MCA	MINIMUM CIRCUIT AMPS	U.G.P.S.	UNDERGROUND PULL SECTION
ENT	ELECTRICAL NON-METALLIC TUBING	MCC	MOTOR CONTROL CENTER	U.O.N.	UNLESS OTHERWISE NOTED
EWC	ELECTRIC WATER COOLER	MCM	THOUSAND CIRCULAR MILS	U.P.S. or UPS	UNINTERRUPTIBLE POWER SYSTEM
E.P.O.	EMERGENCY POWER OFF	MCP	MOTOR CIRCUIT PROTECTOR	VAV	VARIABLE AIR VOLUME
E-O-L	END-OF-LINE CIRCUIT TERMINATOR	MFR.	MANUFACTURER	V	VOLTS
EF	EXHAUST FAN	MTD	MOUNTED	VA	VOLT AMPERES
EGC or EG or E/G	EQUIPMENT GROUND (GREEN)	MW	MICROWAVE	VD	VOLTAGE DROP
(E) or E	EXISTING DEVICE TO REMAIN	NATS	NON AUTOMATIC DISCONNECT	WP	WEATHERPROOF
EP	EXPLOSION PROOF	NEC	NATIONAL ELECTRICAL CODE	W	WIRE
(ER)	EXISTING DEVICE TO BE RELOCATED	NEMA	NATIONAL ELECTRICAL MANUFACTURER'S ASSOCIATION	XFMR	TRANSFORMER
FT or '	FEET	NC	NORMALLY CLOSED		
FA or F.A.	FIRE ALARM				
FLA	FULL LOAD AMPS				
GRD	GROUND				

FIRE ALARM SYSTEM SYMBOLS

SEE FIRE ALARM OR CENTRAL MONITORING SYSTEM DRAWINGS FOR FIRE ALARM SYMBOLS.

SIGNAL SYSTEM SYMBOLS

WP(S) — SURFACE WALL MOUNTED PAGING HORN – REFER TO PAGING SYSTEM DETAIL FOR MORE INFORMATION.

—S— CONCEALED SPEAKER CONDUIT RUN 3/4" CONDUIT, OR AS NOTED, WITH CONDUCTORS – REFER TO SPECIFICATIONS.

SECURITY ALARM SYSTEM SYMBOLS

SACP — SECURITY ALARM CONTROL PANEL – SEE SPECIFICATIONS.

SATC — SECURITY SYSTEM TERMINAL CABINET WITH POWER SUPPLY – SEE SPECIFICATIONS.

(VS) — SECURITY ALARM DUAL TECHNOLOGY MOTION SENSOR – SEE SPECIFICATIONS.

(H) — SECURITY ALARM HORN – SEE SPECIFICATIONS.

(KP) — SECURITY ALARM KEY PAD – SEE SPECIFICATIONS.

—SA— SECURITY ALARM SYSTEM BRANCH CIRCUIT PER SECURITY ALARM RISER DIAGRAM AND/OR SPECIFICATIONS.

MEP COMPONENT ANCHORAGE NOTE:

ALL MECHANICAL, ELECTRICAL AND PLUMBING COMPONENTS SHALL BE ANCHORED AND INSTALLED PER THE DETAILS ON THE DSA APPROVED CONSTRUCTION DOCUMENTS. THE FOLLOWING COMPONENTS SHALL BE ANCHORED OR BRACED TO MEET THE FORCE AND DISPLACEMENT REQUIREMENTS PRESCRIBED IN A FUTURE 2022 CBC, SECTIONS 1617A.1.18 THROUGH 1617A.1.26 AND ASCE 7-16, CHAPTERS 13, 26 AND 30.

1. ALL PERMANENT EQUIPMENT AND COMPONENTS.
2. TEMPORARY, MOVABLE OR MOBILE EQUIPMENT THAT IS PERMANENTLY ATTACHED (E.G. HARD WIRED) TO THE BUILDING UTILITY SERVICES SUCH AS ELECTRICITY, GAS OR WATER. "PERMANENTLY ATTACHED" SHALL INCLUDE ALL ELECTRICAL CONNECTIONS EXCEPT PLUGS FOR 110/220 VOLT RECEPTACLES HAVING A FLEXIBLE CABLE.
3. TEMPORARY, MOVABLE OR MOBILE EQUIPMENT WHICH IS HEAVIER THAN 400 POUNDS OR HAS A CENTER OF MASS LOCATED 4 FEET OR MORE ABOVE THE ADJACENT FLOOR OR ROOF LEVEL THAT DIRECTLY SUPPORT THE COMPONENT IS REQUIRED TO BE RESTRAINED IN A MANNER APPROVED BY DSA.

THE FOLLOWING MECHANICAL AND ELECTRICAL COMPONENTS SHALL BE POSITIVELY ATTACHED TO THE STRUCTURE BUT NEED NOT DEMONSTRATE DESIGN COMPLIANCE WITH THE REFERENCES NOTED ABOVE. THESE COMPONENTS SHALL HAVE FLEXIBLE CONNECTIONS PROVIDED BETWEEN THE COMPONENT AND ASSOCIATED DUCTWORK, PIPING, AND CONDUIT. FLEXIBLE CONNECTIONS MUST ALLOW MOVEMENT IN BOTH TRANSVERSE AND LONGITUDINAL DIRECTIONS:

A. COMPONENTS WEIGHING LESS THAN 400 POUNDS AND HAVING A CENTER OF MASS LOCATED 4 FEET OR LESS ABOVE THE ADJACENT FLOOR OR ROOF LEVEL THAT DIRECTLY SUPPORT THE COMPONENT.

B. COMPONENTS WEIGHING LESS THAN 20 POUNDS, OR IN THE CASE OF DISTRIBUTED SYSTEMS, LESS THAN 5 POUNDS PER FOOT, WHICH ARE SUSPENDED FROM A ROOF OR FLOOR OR HUNG FROM A WALL.

THE ANCHORAGE OF ALL MECHANICAL, ELECTRICAL AND PLUMBING COMPONENTS SHALL BE SUBJECT TO THE APPROVAL OF THE DESIGN PROFESSIONAL IN GENERAL RESPONSIBLE CHARGE OR STRUCTURAL ENGINEER DELEGATED RESPONSIBILITY AND ACCEPTANCE BY DSA. THE PROJECT INSPECTOR WILL VERIFY THAT ALL COMPONENTS AND EQUIPMENT HAVE BEEN ANCHORED IN ACCORDANCE WITH THE ABOVE REQUIREMENTS.

PIPING, DUCTWORK, AND ELECTRICAL DISTRIBUTION SYSTEM BRACING NOTE:

PIPING, DUCTWORK AND ELECTRICAL DISTRIBUTION SYSTEMS SHALL BE BRACED TO COMPLY WITH THE FORCES AND DISPLACEMENTS PRESCRIBED IN ASCE 7-16 SECTION 13.3 AS DEFINED IN ASCE 7-16 SECTION 13.6.5, 13.6.6, 13.6.7, 13.6.8; AND 2022 CBC, SECTIONS 1617A.1.24, 1617A.1.25 AND 1616A.1.26.

THE METHOD OF SHOWING BRACING AND ATTACHMENTS TO THE STRUCTURE FOR THE IDENTIFIED DISTRIBUTION SYSTEM ARE AS NOTED BELOW. WHEN BRACING AND ATTACHMENTS ARE BASED ON A PREAPPROVED INSTALLATION GUIDE (E.G. HCAI OPM FOR 2013 CBC OR LATER), COPIES OF THE BRACING SYSTEM INSTALLATION GUIDE OR MANUAL SHALL BE AVAILABLE ON THE JOBSITE PRIOR TO THE START OF AND DURING THE HANGING AND BRACING OF THE DISTRIBUTION SYSTEMS. THE STRUCTURAL ENGINEER OF RECORD SHALL VERIFY THE ADEQUACY OF THE STRUCTURE TO SUPPORT THE HANGER AND BRACE LOADS.

MECHANICAL PIPING (MP), MECHANICAL DUCTS (MD), PLUMBING PIPING (PP), ELECTRICAL DISTRIBUTION SYSTEMS (E):

MP☐ MD☐ PP☐ E☒ OPTION 1: DETAILED ON THE APPROVED DRAWINGS WITH PROJECT SPECIFIC NOTES AND DETAILS.

MP☐ MD☐ PP☐ E☐ OPTION 2: SHALL COMPLY WITH THE APPLICABLE HCAI PRE-APPROVAL (OPM#)

ANNOTATIONS

A — PANEL CALLOUT, "A" INDICATES PANELBOARD OR EQUIPMENT DESIGNATION.

AC / 2 — MECHANICAL EQUIPMENT CALLOUT, "AC" INDICATES UNIT TYPE AND "2" INDICATES UNIT NUMBER. REFER TO MECHANICAL DRAWINGS FOR EXACT LOCATION AND ELECTRICAL REQUIREMENTS.

3 / E-1 — DETAIL CALLOUT, "3" INDICATES DETAIL NUMBER "E-1" INDICATES SHEET NUMBER.

2 — PLAN NOTE REFERENCE, REFER TO NOTES ON SHEET, OR AS DIRECTED.

REVISION REFERENCE.

WYE CONFIGURATION — DELTA CONFIGURATION — GROUND

CCTV SYSTEM SYMBOLS

CCTV FIXED POSITION CAMERA – SEE SPECIFICATIONS.

CCTV PAN/TILT/ZOOM CAMERA – SEE SPECIFICATIONS.

—CC— CCTV SYSTEM BRANCH CONDUIT AND CABLE PER CCTV SYSTEM RISER DIAGRAM AND/OR SPECIFICATIONS.

TELEPHONE/DATA SYMBOLS

TELEPHONE OUTLET BOX, WALL MOUNTED. STUB A 1" C. UP 6" ABOVE THE ACCESSIBLE CEILING AND PROVIDE A BUSHING. 4S/DP MINIMUM WITH SINGLE GANG RING.
"W" = WALL MOUNTED PHONE

DATA OUTLET BOX, WALL MOUNTED. STUB A 1" C. UP 6-INCHES ABOVE THE ACCESSIBLE CEILING AND PROVIDE A BUSHING. 4S/DP MINIMUM WITH SINGLE GANG RING.

COMBINATION TELEPHONE AND DATA OUTLET BOX, WALL MOUNTED. STUB A 1" C. UP 6-INCHES ABOVE THE ACCESSIBLE CEILING AND PROVIDE A BUSHING. 4S/DP MINIMUM WITH SINGLE GANG RING.

TELEPHONE OUTLET BOX, FLUSH MOUNTED IN CEILING – MOUNT FLUSH IN FLOOR WHEN INDICATED IN A FLOOR BOX SYMBOL.

DATA OUTLET BOX FLUSH MOUNTED IN CEILING – MOUNT FLUSH IN FLOOR WHEN INDICATED IN A FLOOR BOX SYMBOL.

COMBINATION TELEPHONE AND DATA OUTLET BOX FLUSH MOUNTED IN CEILING – MOUNT FLUSH IN FLOOR WHEN INDICATED IN A FLOOR BOX SYMBOL.

TELEPHONE OUTLET BOX, WALL MOUNTED 6-INCHES ABOVE COUNTER OR SPLASH. STUB A 1" C. UP 6-INCHES ABOVE THE ACCESSIBLE CEILING AND PROVIDE A BUSHING. 4S/DP MINIMUM WITH SINGLE GANG RING.

DATA OUTLET BOX, WALL MOUNTED 6-INCHES ABOVE COUNTER OR SPLASH. STUB A 1" C. UP 6-INCHES ABOVE THE ACCESSIBLE CEILING AND PROVIDE A BUSHING. 4S/DP MINIMUM WITH SINGLE GANG RING.

COMBINATION TELEPHONE AND DATA OUTLET BOX, WALL MOUNTED 6-INCHES ABOVE COUNTER OR SPLASH. STUB A 1" C. UP 6-INCHES ABOVE THE ACCESSIBLE CEILING AND PROVIDE A BUSHING. 4S/DP MINIMUM WITH SINGLE GANG RING.

COMBINATION TELEPHONE AND DATA OUTLET BOX MOUNTED IN ACCESSIBLE CEILING SPACE OR IN FLOOR BOX PER PLAN FOR FLEXIBLE CONNECTION TO FURNITURE SYSTEM. VERIFY CONNECTION REQUIREMENTS WITH MANUFACTURER PRIOR TO ROUGH-IN – MOUNT FLUSH IN FLOOR WHEN INDICATED IN A FLOOR BOX SYMBOL.

—T1— CONCEALED TELEPHONE/DATA CONDUIT RUN, 1-INCH CONDUIT (MIN). SEE TABLE BELOW FOR CONDUIT SIZE VARIATIONS.
T2 = 1-1/4" C. T3 = 1-1/2" C. T4 = 2" C.

FLUSH MOUNTED, LOCKABLE TERMINAL CABINET WITH TERMINAL STRIPS AS REQUIRED.

SURFACE MOUNTED, LOCKABLE TERMINAL CABINET WITH TERMINAL STRIPS AS REQUIRED.

PAINTED TELEPHONE TERMINAL PLYWOOD BACKBOARD, SIZED AS NOTED.

TELECOM BUS BAR, SEE TELECOM SPECIFICATIONS.

LIGHTING SYMBOLS

SITE LIGHTING FIXTURE SYMBOLS DEPICTED WITH CAPITAL LETTER(S) ADJACENT TO RESPECTIVE SYMBOL(S) INDICATE(S) LIGHT FIXTURE MOUNTING BASE DETAIL(S). SEE LIGHTING FIXTURE SCHEDULE FOR FIXTURE SYMBOL INFORMATION.

1a — LIGHTING FIXTURE CALL OUT, NUMBER(S) AND/OR UPPER CASE LETTER(S) (i.e. "1") INDICATES FIXTURE TYPE (REFER TO LIGHTING FIXTURE SCHEDULE). LOWER CASE LETTER (i.e. "a") ADJACENT TO FIXTURE TYPE INDICATES BALLAST OPTION (SEE GENERAL LIGHTING FIXTURE SCHEDULE NOTES).

J — INDICATES FINAL CONNECTION TO A LIGHTING FIXTURE, NUMBER OF CONDUCTORS AS REQUIRED.

LIGHTING CONTROL SYMBOLS

SEE THE DISTRIBUTED LIGHTING CONTROL SPECIFICATIONS FOR MORE INFORMATION.

—·—·—·— LOW-VOLTAGE WIRING BETWEEN OCCUPANCY SENSORS, VACANCY SENSORS, DAY-LIGHTING CONTROLS, LOW-VOLTAGE SWITCHES, AND SWITCHPACKS. CONDUCTOR TYPE AND QUANTITY PER MANUFACTURER'S RECOMMENDATIONS AND WIRING DIAGRAMS.

$H\Theta$ — WALL MOUNTED DIMMER. SEE SINGE POLE SWITCH SYMBOL FOR RELATED SUBSCRIPTS. QUANTITY OF ADJACENT LOWER CASE LETTERS INDICATES QUANTITY OF DIMMERS REQUIRED. PROVIDE DIMMER TYPE TO MATCH INDICATED BALLAST TYPE AND CONTROL REQUIREMENTS.

$H\Theta_{y}$ $H\Theta_{(y)}$ $H\Theta_{(y,z)}$ — WALL MOUNTED STAND ALONE OCCUPANCY SENSOR. QUANTITY OF ADJACENT LOWER CASE LETTERS INDICATES QUANTITY OF RELAYS CIRCUITS REQUIRED – SEE CONTROL CONFIGURATIONS BELOW FOR MORE INFORMATION. EXACT CONTROL FUNCTION IS DETERMINED BY THE BALLAST/FIXTURE TYPE.

$H\Theta^{H}_{y,(y)}$ $H\Theta^{H}_{y,(y)}$ $H\Theta^{H}_{y,(y)}$ — WALL MOUNTED NON-NETWORKED/INTERCONNECTED/NETWORKED, SYSTEM-BASED OCCUPANCY SENSOR. QUANTITY OF ADJACENT LOWER CASE LETTERS INDICATES QUANTITY OF RELAYS/DIMMING CIRCUITS REQUIRED – SEE CONTROL CONFIGURATIONS BELOW FOR MORE INFORMATION. EXACT CONTROL FUNCTION IS DETERMINED BY THE BALLAST/FIXTURE TYPE. ADJACENT UPPER CASE LETTER ("H") INDICATES CONNECTION TO HVAC SYSTEMS CONTROLS.

$\Theta^{H,DM,AV,P}_{y,(y)}$ $\Theta^{H,DM,AV,P}_{y,(y)}$ $\Theta^{H,DM,AV,P}_{y,(y)}$ $\Theta^{H,DM,AV,P}_{y,(y)}$ — 1-WAY/2-WAY DIRECTIONAL CEILING MOUNTED, NON-NETWORKED/INTERCONNECTED/NETWORKED, SYSTEM-BASED OCCUPANCY SENSOR. QUANTITY OF ADJACENT LOWER CASE LETTERS INDICATES QUANTITY OF RELAYS/DIMMING CIRCUITS REQUIRED – SEE CONTROL CONFIGURATIONS BELOW FOR MORE INFORMATION. EXACT CONTROL FUNCTION IS DETERMINED BY THE BALLAST/FIXTURE TYPE. ADJACENT UPPER CASE SUBSCRIPT "K" INDICATES LOCKING SWITCH FOR THE SUBSEQUENT LOWER CASE LETTER. UPPER CASE SUBSCRIPT "V" INDICATES VANDAL RESISTANT SWITCH. UPPER CASE SUBSCRIPT "DM" INDICATES DUAL MODE CONTROL SWITCH.

$H\Theta_{Ky}$ $H\Theta_{Vy}$ $H\Theta_{y}$ $H\Theta_{DM}$ — LOW VOLTAGE MOMENTARY SWITCHES, WALL MOUNTED, FOR MANUAL "ON/OFF SWITCHING" AND "DIMMING" (STEPPED/CONTINUOUS) CONTROL OF LIGHTING WHICH IS CONTROLLED BY CEILING MOUNTED OCCUPANCY SENSORS. ADJACENT LOWER CASE LETTERS INDICATES QUANTITY OF SWITCHLEGS TO BE CONTROLLED. EXACT CONTROL FUNCTION IS DETERMINED BY THE BALLAST/FIXTURE TYPE. UPPER CASE SUBSCRIPT "K" INDICATES LOCKING SWITCH FOR THE SUBSEQUENT LOWER CASE LETTER. UPPER CASE SUBSCRIPT "V" INDICATES VANDAL RESISTANT SWITCH. UPPER CASE SUBSCRIPT "DM" INDICATES DUAL MODE CONTROL SWITCH.

$\$^{(50)}_{y+}$ — AUTOMATIC SWITCHING/STEP-DIMMING DAYLIGHTING CONTROLLER USED TO SWITCH OFF LIGHTS WHEN SUFFICIENT NATURAL LIGHT IS PRESENT. (1) NUMBER IN PARENTHESIS INDICATES THE AVERAGE WORKPLANE "TARGET ILLUMINATION" SYMBOL VALUE. ADJACENT LOWER CASE LETTER(S) INDICATES SWITCH LEG(S) CONTROLLED. ADJACENT "+" INDICATES PORTION OF SWITCHLEG CONTROLLED BY SENSOR.

$\$^{(50)}_{y+}$ — AUTOMATIC CONTINUOUS DIMMING DAYLIGHTING CONTROLLER USED TO DIM LIGHTS WHEN SUFFICIENT NATURAL LIGHT IS PRESENT. NUMBER IN PARENTHESIS INDICATES THE AVERAGE WORKPLANE "TARGET ILLUMINATION" SYMBOL VALUE. ADJACENT LOWER CASE LETTER(S) INDICATES SWITCH LEG(S) CONTROLLED. ADJACENT "+, ++ AND +" INDICATES PORTION OF SWITCHLEG CONTROLLED BY SENSOR WHERE "+" INDICATES PRIMARY SIDELIT DAYLIT ZONE, "++" INDICATES SECONDARY SIDELIT DAYLIT ZONE, AND "+" INDICATES SKYLIT DAYLIT ZONE

CONTROL CONFIGURATIONS:

y — "y" INDICATES THAT SWITCH LEG "y" TO BE CONFIGURED IN A "AUTO ON 100% / AUTO OFF" AND BE CONTROLLED (CONTINUOUSLY DIMMED) BY THE ASSOCIATED CEILING SENSOR REMOTE SWITCH ON THE WALL.

y,(y) — "y,(y)" INDICATES THAT SWITCH LEG "y" TO BE CONFIGURED IN A "AUTO ON 50% / MANUAL ON 100% / AUTO OFF" AND BE CONTROLLED (CONTINUOUSLY DIMMED) BY THE ASSOCIATED DISTRIBUTED LIGHTING CONTROLS.

(y) — "(y)" INDICATES THAT SWITCH LEG "y" IS TO BE CONFIGURED IN A "MANUAL ON / AUTO OFF" (VACANCY SENSOR) AND BE CONTROLLED BY THE ASSOCIATED DISTRIBUTED LIGHTING CONTROLS.

MISCELLANEOUS SYSTEM SYMBOLS

ICP — INVERTER CONTROL PANEL – SEE INVERTER SPECIFICATIONS.

IAP — INVERTER ANNUNCIATOR PANEL – SEE INVERTER SPECIFICATIONS.

GAP — GENERATOR ANNUNCIATOR PANEL – SEE GENERATOR SYSTEM SPECIFICATIONS FOR MORE INFORMATION.

IDCS — INTEGRATED DIMMING CONTROL STATION (IDCS) PANEL – WALL MOUNTED. SEE IDCS SYSTEM SPECIFICATIONS FOR MORE INFORMATION.

DPCS — DIMMING PANEL CONTROL STATION (DPCS) PANEL – WALL MOUNTED. SEE DPCS SYSTEM SPECIFICATIONS FOR MORE INFORMATION.

HL — LIGHTING CONTROL SYSTEM LOCAL SWITCH – WALL MOUNTED. SEE LIGHTING CONTROL SYSTEM SPECIFICATIONS FOR MORE INFORMATION.

HO — LIGHTING CONTROL SYSTEM OVERRIDE SWITCH – WALL MOUNTED. SEE LIGHTING CONTROL SYSTEM SPECIFICATIONS FOR MORE INFORMATION.

HM — LIGHTING CONTROL SYSTEM MASTER SWITCH – WALL MOUNTED. SEE LIGHTING CONTROL SYSTEM SPECIFICATIONS FOR MORE INFORMATION.

HR — IDCS/DPCS SYSTEM REMOTE STATION SWITCH – WALL MOUNTED. SEE IDCS SYSTEM AND/OR DPCS SYSTEM SPECIFICATIONS FOR MORE INFORMATION.

HP — IDCS/DPCS SYSTEM PARTITION STATION SWITCH – WALL MOUNTED. SEE IDCS SYSTEM AND/OR DPCS SYSTEM SPECIFICATIONS FOR MORE INFORMATION.

BRANCH CIRCUIT SYMBOLS

A-1,3,5 ### — HOME RUN TO PANEL. LETTER DESIGNATES PANEL, NUMBERS INDICATE CIRCUITS. HASH MARKS INDICATE NUMBER OF CONDUCTORS IN CONDUIT RUN, #12 AWG MINIMUM UNLESS OTHERWISE NOTED.

A-1&3&5 ### — HOME RUN TO PANEL. LETTER DESIGNATES PANEL, NUMBERS INDICATE CIRCUITS WITH SEPARATE NEUTRALS. "&" INDICATES SEPARATE NEUTRALS.

A-1+3+5 ### — HOME RUN TO PANEL. LETTER DESIGNATES PANEL, NUMBERS INDICATE CIRCUITS. "+" INDICATES SEPARATE #10 NEUTRAL THROUGHOUT BRANCH CIRCUIT. HASH MARK "⏚" INDICATES AN ISOLATED GROUND CONDUCTOR.

CONCEALED CONDUIT OR BRANCH CIRCUIT UNLESS OTHERWISE NOTED. 1/2" CONDUIT MINIMUM, (2) #12 AWG CONDUCTORS MINIMUM.

CONDUIT OR BRANCH CIRCUIT CONCEALED BELOW GRADE, 3/4" CONDUIT MINIMUM WITH (2) 12 AWG CONDUCTORS MINIMUM AND A CODE SIZED EQUIPMENT GROUND.

SURFACE-MOUNTED CONDUIT OR BRANCH CIRCUIT UNLESS OTHERWISE NOTED. 1/2" CONDUIT MINIMUM, (2) #12 AWG CONDUCTORS MINIMUM.

TANDEM WIRING CONNECTION.

CONDUIT STUB OUT, CAP, MARK AND RECORD ON AS-BUILT DRAWINGS

CONDUIT CONTINUATION.

FLEXIBLE CONNECTION AS REQUIRED. NUMBER OF CONDUCTORS AS REQUIRED. VERIFY CONNECTION REQUIREMENTS WITH MANUFACTURER PRIOR TO ROUGH-IN.

CONDUIT/ BRANCH CIRCUIT/FEEDER CONTINUATION DOWN WALL TO FLOOR BELOW

CONDUIT/ BRANCH CIRCUIT/FEEDER CONTINUATION UP WALL TO FLOOR ABOVE

FLOOR BOX / SPECIALTY WALL BOX / PEDESTAL BOX SYMBOLS

SINGLE SERVICE IN FLOOR BOX. PROVIDE DEVICES PER PLAN. SEE FLOOR BOX DETAILS AND SPECIFICATIONS FOR MORE INFORMATION.

TWO SERVICE IN FLOOR BOX. PROVIDE DEVICES PER PLAN. SEE FLOOR BOX DETAILS AND SPECIFICATIONS FOR MORE INFORMATION.

THREE SERVICE IN FLOOR BOX. PROVIDE DEVICES PER PLAN. SEE FLOOR BOX DETAILS AND SPECIFICATIONS FOR MORE INFORMATION.

FOUR SERVICE IN FLOOR BOX. PROVIDE DEVICES PER PLAN. SEE FLOOR BOX DETAILS AND SPECIFICATIONS FOR MORE INFORMATION.

SIX SERVICE IN FLOOR BOX. PROVIDE DEVICES PER PLAN. SEE FLOOR BOX DETAILS AND SPECIFICATIONS FOR MORE INFORMATION.

7-GANG AV FLOOR BOX. PROVIDE DEVICES PER PLAN. SEE FLOOR BOX DETAILS AND SPECIFICATIONS FOR MORE INFORMATION.

AV — RECESSED, ADJUSTABLE DEPTH, FLAT PANEL TV/DISPLAY WALL BOX WITH FLUSH GROMMETED COVER PANEL (CHIEF #PACS25F) AND MINIMUM OF (1) 1-1/4"C.O. FROM TOP-MOUNTED L.V. CONDUIT ENTRY BOX TO ACCESSIBLE CEILING. SEE PLANS FOR ANY ADDITIONAL CONDUIT REQUIREMENTS. PROVIDE ADDITIONAL L.V. AND LINE VOLTAGE CONDUIT ENTRY BOXES AS REQUIRED TO ACCOMPLISH WALL BOX CONFIGURATION DEPICTED ON PLANS. FLUSH GROMMETED COVER SHALL BE WHITE, BLACK OR CUSTOM COLOR PER ARCHITECT. WHEN FIELD CONDITIONS PROHIBIT INSTALLATION OF THIS DEVICE (SUCH AS WALL STUD/CAVITY DEPTH OF LESS THAN 2.5" ETC), CONFIRM VIA WRITTEN RFI THE INSTALLATION OF A TRADITIONAL POWER AND DATA RECEPTACLE INSTALLATION ALONG SIDE CCTV/AV. JUNCTION BOX CONSISTING OF 2-GANG DEEP JUNCTION BOX/2-GANG RING WITH 1-1/4"C.O. TO ACCESSIBLE CEILING IN ADDITION TO ANY OTHER CONDUIT REQUIREMENTS DEPICTED ON PLANS. REFER TO ARCHITECTURAL PLANS AND ELEVATIONS FOR MOUNTING HEIGHT.

SINGLE OR DUAL SERVICE RECESSED EXTERIOR WALL BOX – TYPE "WP-A". PROVIDE DEVICES PER PLAN. EACH LV OR UNUSED COMPARTMENT SHALL BE EQUIPPED WITH A 1"C.O. TO THE NEAREST ACCESSIBLE CEILING SPACE U.O.N. SEE EXTERIOR DETAILS AND SPECIFICATIONS FOR MORE INFORMATION.

SINGLE OR DUAL SERVICE EXTERIOR PEDESTAL – TYPE "WP-C". PROVIDE DEVICES PER PLAN. SEE EXTERIOR DETAILS AND SPECIFICATIONS FOR MORE INFORMATION. ARROW DENOTES DEVICE DOOR LOCATION.

POWER SYMBOLS

ALL RECEPTACLE OUTLETS SHOWN WITH A DIAGONAL SLASH SHALL BE CONTROLLED BY OCCUPANCY SENSOR OR LIGHTING CONTROL PANEL. SEE DISTRIBUTED LIGHTING CONTROLS FOR ADDITIONAL REQUIREMENTS. WHERE DOUBLE DUPLEX RECEPTACLE OUTLETS ARE INDICATED AS CONTROLLED, ONLY A SINGLE DUPLEX RECEPTACLE OUTLET (NON-IG, NON-GCFI TYPE) SHALL BE CONTROLLED. WITHIN ANY CONTROLLED DUPLEX RECEPTACLE OUTLET, ONLY ONE RECEPTACLE SHALL BE CONTROLLED. NOTE THAT FOR FLOOR BOXES OR POKE-THRU DEVICES, THE ASSOCIATED CONTROL RELAY MAY NEED TO BE LOCATED WITHIN THE ELECTRICAL ROOM WHERE THE CONTROLLED CIRCUIT ORIGINATES.

$\otimes_{a}$ — OCCUPANCY SENSOR/LIGHTING CONTROL SYSTEM CONTROLLED RECEPTACLE RELAY. WHERE LETTER DESIGNATION "a" REPRESENTS OCCUPANCY SENSOR/LIGHTING CONTROL SYSTEM CONTROL ZONE. SEE THE DISTRIBUTED LIGHTING CONTROL SPECIFICATION FOR MORE INFORMATION.

DUPLEX RECEPTACLE, WALL MOUNTED.

DOUBLE DUPLEX RECEPTACLE, WALL MOUNTED.

DUPLEX, GFCI RECEPTACLE, WALL MOUNTED. WP INDICATES WEATHERPROOF, A, B OR C INDICATES THE TYPE OF COVER, REFER TO THE GENERAL PRODUCT SPECIFICATIONS.

DOUBLE DUPLEX, WALL MOUNTED, WITH (1) GFCI RECEPTACLE AND (1) DUPLEX RECEPTACLE CONNECTED ON LOAD SIDE OF GFCI. WP INDICATES WEATHERPROOF, A, B OR C INDICATES THE TYPE OF COVER, REFER TO THE GENERAL PRODUCT SPECIFICATIONS.

DUPLEX RECEPTACLE, ONE HALF SWITCHED, WALL MOUNTED.

DUPLEX, ISOLATED GROUND RECEPTACLE, WALL MOUNTED.

1.3 1.3G — COMBINATION DOUBLE DUPLEX: ONE ISOLATED GROUND DUPLEX RECEPTACLE AND ONE DUPLEX RECEPTACLE, WALL MOUNTED.

COMBINATION DOUBLE DUPLEX: TWO ISOLATED GROUND RECEPTACLES, WALL MOUNTED.

SIMPLEX RECEPTACLE, WALL MOUNTED.

SPECIAL RECEPTACLE, WALL MOUNTED. REFER TO PLAN NOTES.

DUPLEX RECEPTACLE FLUSH IN CEILING – MOUNT FLUSH IN FLOOR WHEN INDICATED IN A FLOOR BOX SYMBOL.

DOUBLE DUPLEX RECEPTACLE FLUSH IN CEILING – MOUNT FLUSH IN FLOOR WHEN INDICATED IN A FLOOR BOX SYMBOL.

DUPLEX RECEPTACLE, ONE HALF SWITCHED, FLUSH IN CEILING – MOUNT FLUSH IN FLOOR WHEN INDICATED IN A FLOOR BOX SYMBOL.

DUPLEX, ISOLATED GROUND RECEPTACLE, FLUSH IN CEILING – MOUNT FLUSH IN FLOOR WHEN INDICATED IN A FLOOR BOX SYMBOL.

1.3 1.3G — COMBINATION DOUBLE DUPLEX: ONE ISOLATED GROUND DUPLEX RECEPTACLE AND ONE DUPLEX RECEPTACLE, MOUNTED FLUSH IN CEILING – MOUNT FLUSH IN FLOOR WHEN INDICATED IN FLOOR BOX SYMBOL.

COMBINATION DOUBLE DUPLEX FLUSH IN CEILING: TWO ISOLATED GROUND RECEPTACLES – MOUNT FLUSH IN FLOOR WHEN INDICATED IN FLOOR BOX SYMBOL.

SIMPLEX RECEPTACLE FLUSH IN CEILING – MOUNT FLUSH IN FLOOR WHEN INDICATED IN A FLOOR BOX SYMBOL.

SPECIAL RECEPTACLE FLUSH IN CEILING –

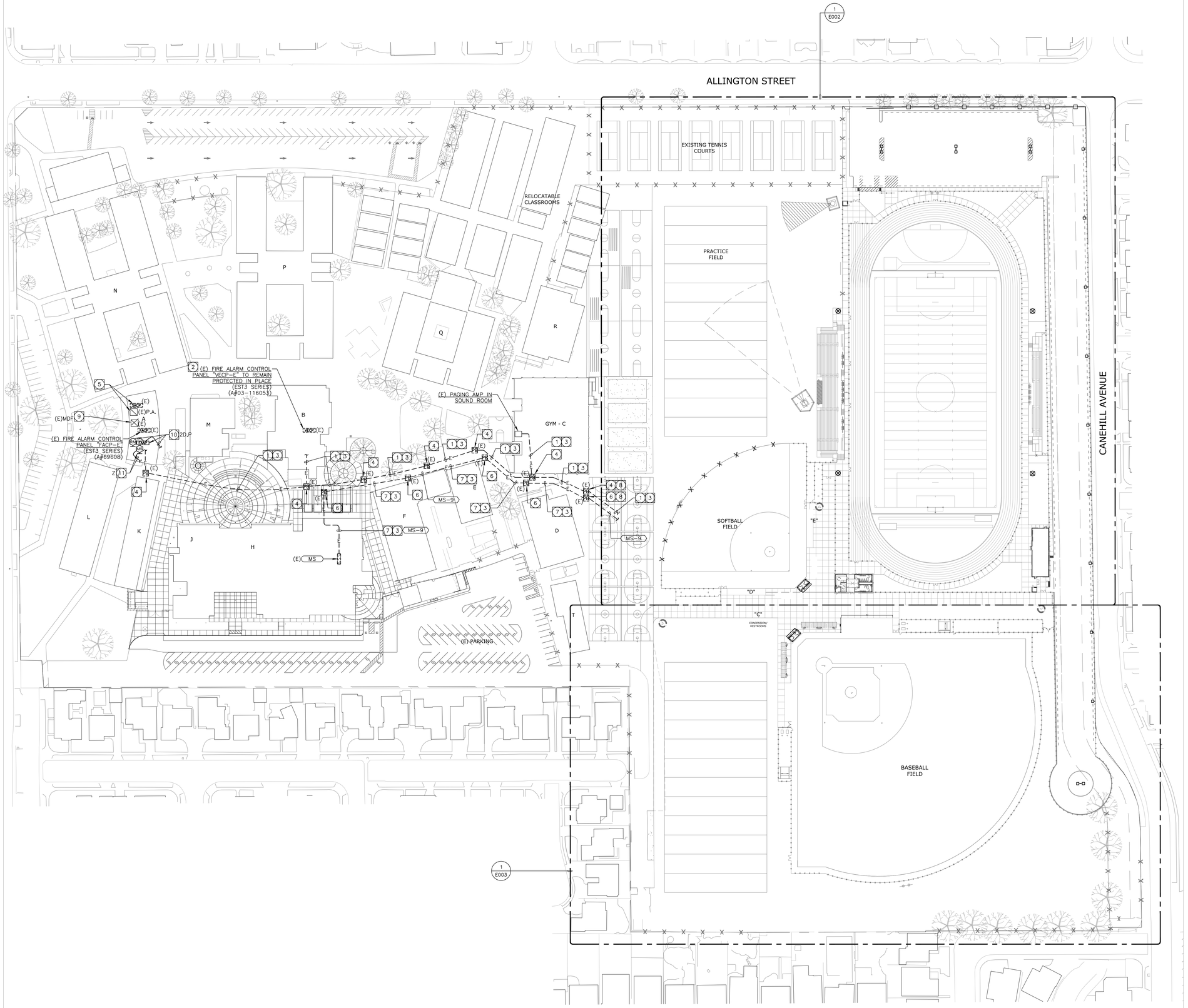

OVERALL SITE ELECTRICAL PLAN

SCALE: 1"=60'-0"

1

PLAN NOTES:

1. EXISTING SIGNAL SYSTEMS AND FIRE ALARM SYSTEM CONDUITS TO REMAIN. PROVIDE ADDITIONAL SIGNAL SYSTEMS, FIRE ALARM CONDUCTORS FOR REMOTE ANNUNICATOR/MICROPHONE AND MANUAL PULLSTATION, ETC. AS REQUIRED TO SERVE THE NEW CONSTRUCTION.
2. MODIFY EXISTING FIRE ALARM PANEL AS REQUIRED TO SERVE THE NEW CONSTRUCTION. PROVIDE ADDITIONAL HARDWARE, PROGRAMMING, CONNECTIONS, ETC. AS NEEDED FOR A COMPLETE AND OPERABLE SYSTEM.
3. WHERE NEW CONDUCTORS/CABLING IS SPECIFIED IN EXISTING CONDUITS, THE CONTRACTOR SHALL REMOVE ENOUGH OF THE EXISTING CABLING AS REQUIRED TO PULL IN NEW PLUS REPLACEMENT OF EXISTING REMOVED.
4. EXISTING IN-GRADE SIGNAL PULLBOX TO REMAIN PROTECTED IN PLACE.
5. MODIFY EXISTING SECURITY SYSTEM CONTROL PANEL AND PUBLIC ADDRESS PAGING AMPS/TERMINALS AS REQUIRED TO SERVE NEW CONSTRUCTION. REFER TO SECURITY SYSTEM AND PUBLIC ADDRESS SYSTEM BLOCK DIAGRAMS FOR ADDITIONAL REQUIREMENTS.
6. EXISTING IN-GRADE POWER PULLBOX TO REMAIN PROTECTED IN PLACE.
7. EXISTING POWER SYSTEM CONDUIT AND CONDUCTORS TO REMAIN.
8. INTERCEPT EXISTING CONDUIT AND WIRING AT EXISTING PULLBOX AND EXTEND AS REQUIRED TO SERVE THE NEW CONSTRUCTION.
9. MODIFY EXISTING LOCAL AREA NETWORK MDF RACK AS REQUIRED TO SERVE NEW CONSTRUCTION. PROVIDE 1RMU RACK MOUNT FIBER HOUSING WITH ADAPTERS, PANELS, CONNECTORS, FAN OUT KITS, ETC AS REQUIRED TO TERMINATE ALL STRANDS OF NEW FIBER INSTALLED ON THIS PROJECT. REFER TO SPECIFICATIONS FOR ADDITIONAL REQUIREMENTS.
10. PROVIDE NEW FIRE ALARM REMOTE ANNUCIATOR PANEL "FAAP" AND REMOTE MICROPHONE "RM" ADJACENT TO EXISTING REMOTE ANNUNCIATOR PANEL OR IN AN APPROVED OCCUPIED LOCATION. VERIFY PRIOR TO ROUGH-IN. ROUTE CONDUCTORS/SINGLE MODE FIBER IN EXISTING CONDUIT BACK TO NEW VOICE EVACUATION CONTROL PANEL LOCATED IN ELECTRICAL ROOM 04.
11. PROVIDE NEW FIRE ALARM MANUAL PULL STATION ADJACENT TO NEW REMOTE ANNUNCIATOR PANEL OR IN AN APPROVED OCCUPIED LOCATION. VERIFY PRIOR TO ROUGH-IN. ROUTE CONDUCTORS IN EXISTING CONDUIT BACK TO NEW VOICE EVACUATION CONTROL PANEL LOCATED IN ELECTRICAL ROOM 04.

SITE UTILITY PLAN CONSTRUCTION NOTES:

THESE NOTES ESTABLISH MINIMUM QUALITY LEVELS AND COORDINATION REQUIREMENTS. RESPECTIVE UTILITY COMPANY PLANS AND REQUIREMENTS TAKE PRECEDENCE OVER THESE NOTES WITH REGARD TO RESPECTIVE UTILITY COMPANY CONDUIT AND UNDERGROUND STRUCTURE SYSTEMS.

1. CALL UNDERGROUND SERVICE ALERT (USA) AT (800) 422-4133 OR APPLICABLE STATE AND LOCAL DIG SAFE OR UNDERGROUND ALERT HOTLINES PRIOR TO CONSTRUCTION START.
2. COORDINATE ALL UNDERGROUND STRUCTURES AND CONDUIT ROUTING WITH LANDSCAPE ARCHITECT PRIOR TO ROUGH-IN TO ENSURE THAT SUCH ITEMS ARE NOT PLACED IN CRITICAL LANDSCAPE PLANTING/HARDSCAPE AREAS.
3. VAULTS, MAINTENANCE HOLES (MH's), FORMERLY KNOWN AS MANHOLES, AND CONDUITS SHALL MAINTAIN A MINIMUM COVER OF 24" BELOW FINAL SURFACE AT ALL CONDITIONS. INCLUDE ALL COSTS IN BASE BID TO MEET UTILITY COMPANY REQUIREMENTS WHICH MAY REQUIRE GREATER MINIMUM CONDUIT DEPTHS.
4. VAULTS, MH's AND PULLBOXES (PB's) SHALL BE EQUIPPED WITH KNOCKOUT PANELS OR PRE-CAST INDIVIDUAL CONDUIT OPENINGS. CONDUITS SHALL ONLY ENTER AND EXIT ON END/SHORT WALLS. CONDUITS MAY NOT ENTER AND EXIT ON SIDE/LONG WALLS, CEILINGS OR FLOORS UNLESS OTHERWISE NOTED.
5. CUT DUCTS FLUSH WITH INTERIOR VAULT/MH/PB WALL.
6. GROUT AROUND DUCT ENTRANCES ON VAULT/MH/PB WALLS.
7. SLURRY BACKFILL AROUND DUCTS WITHIN 5 FEET OF VAULT/MH/PB TO PREVENT SHEARING.
8. CONDUITS PASSING UNDER THE BUILDING PERIMETER SHALL BE ENCASED IN LIGHTWEIGHT CONCRETE OR WATER-IMPERVIOUS CLAY TO PREVENT WATER INFILTRATION. SEE ELECTRICAL SPECIFICATIONS FOR ADDITIONAL INFORMATION.
9. CONDUIT BEND RADIUS FOR BUILDING ENTRANCES AND AT POLES SHALL BE A MINIMUM OF 24" FOR CONDUITS WITH LESS THAN 2" INTERNAL DIAMETER AND A MINIMUM OF 48" FOR CONDUITS WITH MORE THAN 2" INTERNAL DIAMETER.
10. PREFERRED CONDUIT SWEEP RADIUS BETWEEN VAULTS IS 25 FEET. UNDER NO CIRCUMSTANCES SHALL THE CONDUIT SWEEP RADIUS BE LESS THAN 12.5 FEET. MAXIMUM OF 90 DEGREES PER SWEEP AND LIMITED TO NO MORE THAN (2) 90 DEGREE SWEEPS BETWEEN VAULTS.
11. VAULTS/MH's/PB's ARE TO BE EQUIPPED WITH RACKING, GROUNDING LUGS, AND BOLT-DOWN LIDS UNLESS OTHERWISE NOTED.
12. VAULTS AND MH's TO BE EQUIPPED WITH ROUND COVERS, EXTENSION RINGS AS REQUIRED, LADDERS AND (3) SEGMENTS OF 6 FOOT HIGH CABLE RACKING PER EACH LONG WALL.
13. LABEL ALL NON-UTILITY COMMUNICATION VAULT/MH/PB COVERS WITH "COMMUNICATIONS" UNLESS OTHERWISE NOTED ON PLANS.
14. COORDINATE FINAL VAULT/MH/PB OPENING HEIGHT WITH G.C. PRIOR TO ROUGH-IN TO ENSURE FINAL GRADE DOES NOT SLOPE INTO VAULT/MH/PB OPENING.
15. CONTRACTOR TO PROVIDE A MINIMUM OF 8" DEEP COMPACTED 1/2" DIAMETER GRAVEL, UNDER ALL VAULTS, MH's OR PB's TO ENSURE UNIFORM DISTRIBUTION OF SOIL PRESSURE ON THE FLOOR AND BE ABLE TO DISSIPATE WATER OUT OF THE VAULT, MH OR PB.
16. ALL VAULTS/MH's/PB's WITHOUT GROUNDING LUGS SHALL HAVE AN 8' x 3/4" COPPER GROUND ROD DRIVEN THRU THE FLOOR TO ALLOW GROUNDING OF ITEMS WITHIN.
17. ALL VAULTS/MH's/PB's SHALL BE PROVIDED WITH TRAFFIC RATED COVERS WHEN LOCATED IN PAVED AREAS UTILIZED FOR VEHICLE TRAFFIC.
18. IF THE WATER OR MOISTURE BARRIER ON OR NEAR THE FOUNDATION OF A BUILDING IS DISTURBED IN ANY MANNER BY EXCAVATION OR OTHER CONSTRUCTION WORK, THE MOISTURE BARRIER MUST BE REPAIRED FOLLOWING THE RECOMMENDATIONS OF THE MANUFACTURER OF THE ORIGINAL BARRIER PRODUCT.
19. THE CONTRACTOR SHALL INCLUDE IN BASE BID ALL COSTS TO COMPLY WITH ALL REQUIREMENTS FOR CONFINED SPACE ENTRY PER THE OSHA REQUIREMENTS 29 CFR-1910.146, 29 CFR-1910.268, ETC. DURING ANY CONFINED SPACE ENTRY.
20. ANY DUCTS LEAVING A VAULT, MH OR PB ROUTED INTO A FACILITY SHALL BE PLUGGED AT EACH END USING REMOVABLE MECHANICAL PLUGS DESIGNED TO PREVENT WATER AND GAS FROM ENTERING THE FACILITY.
21. SEE ELECTRICAL SPECIFICATIONS AND PLAN DETAILS FOR ADDITIONAL REQUIREMENTS REGARDING UNDERGROUND CONDUITS AND IN-GRADE VAULT/MH/PB/JUNCTION BOXES.

SITE PLAN GENERAL NOTES:

1. CONTRACTOR SHALL EXERCISE EXTREME CAUTION IN EXCAVATING AND TRENCHING ON THIS SITE TO AVOID EXISTING DUCTS, PIPING OR CONDUITS, ETC., AND TO PREVENT HAZARDS TO PERSONNEL AND/OR DAMAGE TO EXISTING UNDERGROUND UTILITIES OR STRUCTURES WHETHER OR NOT SHOWN AND INSTALLED BY ANY OTHER CONTRACTS. THE ENGINEER IS NOT RESPONSIBLE FOR THE LOCATION OF UNDERGROUND UTILITIES OR STRUCTURES WHETHER OR NOT SHOWN OR DETAILED AND INSTALLED BY ANY OTHER CONTRACTS. THE CONTRACTOR SHALL IMMEDIATELY NOTIFY THE ENGINEER SHOULD SUCH UNIDENTIFIED CONDITIONS BE DISCOVERED. THESE DRAWINGS AND SPECIFICATIONS DO NOT INCLUDE THE NECESSARY ELEMENTS FOR CONSTRUCTION SAFETY.
2. CALL UNDERGROUND SERVICE ALERT (USA) AT 1 (800) 422-4133 OR APPLICABLE STATE AND LOCAL DIG SAFE OR UNDERGROUND ALERT HOTLINES PRIOR TO CONSTRUCTION START.
3. MINIMUM CONDUIT SIZE SHALL BE 3/4" - U.O.N.
4. MINIMUM CONDUCTOR SIZE SHALL BE #10 AWG. - U.O.N.
5. ALL SITE BRANCH CIRCUITS SHALL INCLUDE AN EQUIPMENT GROUND CONDUCTOR THAT, AT MINIMUM, MATCHES THE SIZE OF THE ASSOCIATED BRANCH CIRCUIT CONDUCTOR. WHERE MULTIPLE BRANCH CIRCUITS ARE ROUTED/GROUPED TOGETHER, THE EQUIPMENT GROUNDING CONDUCTOR SHALL MATCH THE SIZE OF THE LARGEST BRANCH CIRCUIT CONDUCTOR IN THE GROUP.
6. ALL ELECTRICAL EQUIPMENT MOUNTED OUTDOORS SHALL BE WEATHERPROOF (NEMA #3R).
7. ALL CONDUIT ONLY SHALL BE PROVIDED WITH A NYLON PULL STRING.
8. SEE ARCHITECTURAL/LANDSCAPE ARCHITECTURAL PLANS FOR EXACT LOCATIONS OF FIXTURES, PULLBOXES, MANHOLES, OTHER ELECTRICAL DEVICES, ETC. COORDINATE ALL UNDERGROUND STRUCTURES AND CONDUIT ROUTING WITH LANDSCAPE ARCHITECT PRIOR TO ROUGH-IN TO ENSURE THAT SUCH ITEMS ARE NOT PLACED IN CRITICAL LANDSCAPE PLANTING/HARDSCAPE AREAS.
9. UNLESS SPECIFICALLY SHOWN AS (E), (R), (ER), (D), EXISTING OR NON-BOLD, ALL ELECTRICAL DEVICES SHOWN ARE NEW.

STATE:

IDENTIFICATION STAMP
DIV. OF THE STATE ARCHITECT
APP: 03-124281 INC:
REVIEWED FOR
SS ☑ FLS ☑ ACS ☑
DATE: 02/04/2025

ARCHITECT:

architecture
westbergwhite
7700 IRVINE CENTER DR. STE. 100
IRVINE, CA 92618
(714) 508-1780 (714) 508-1780 FAX

CONSULTANT:

tk1sc COLLABORATIVE
11870 Pierce Street, Suite 160
Riverside, California 92505
951.299.4160 www.tk1sc.com
Project Leader - Bill Voller
Electrical Lead - Bill Voller
tk1sc Job #: US0027568.7397

REGISTERED PROFESSIONAL ENGINEER
RAYMOND W. SWAN
No. E15610
Ex. 12/31/2025
ELECTRICAL
STATE OF CALIFORNIA

PROJECT NAME:

Bellflower Unified School District
Mayfair High School Athletic Fields
6000 North Woodruff Ave
Lakewood, California 90713

CLIENT:

BELLFLOWER UNIFIED SCHOOL DISTRICT
16703 S. Clark Ave.
BELLFLOWER, CALIFORNIA 90706

Rev.	Date	Description
2		

JOB NO:	15008.01
DATE:	05/28/2024
DRAWN:	TG, XY
CHECK:	RB, JG
ARCHITECT:	PDW
ENGINEER:	

SHEET DESCRIPTION:
OVERALL SITE ELECTRICAL PLAN

SHEET NO:
E001

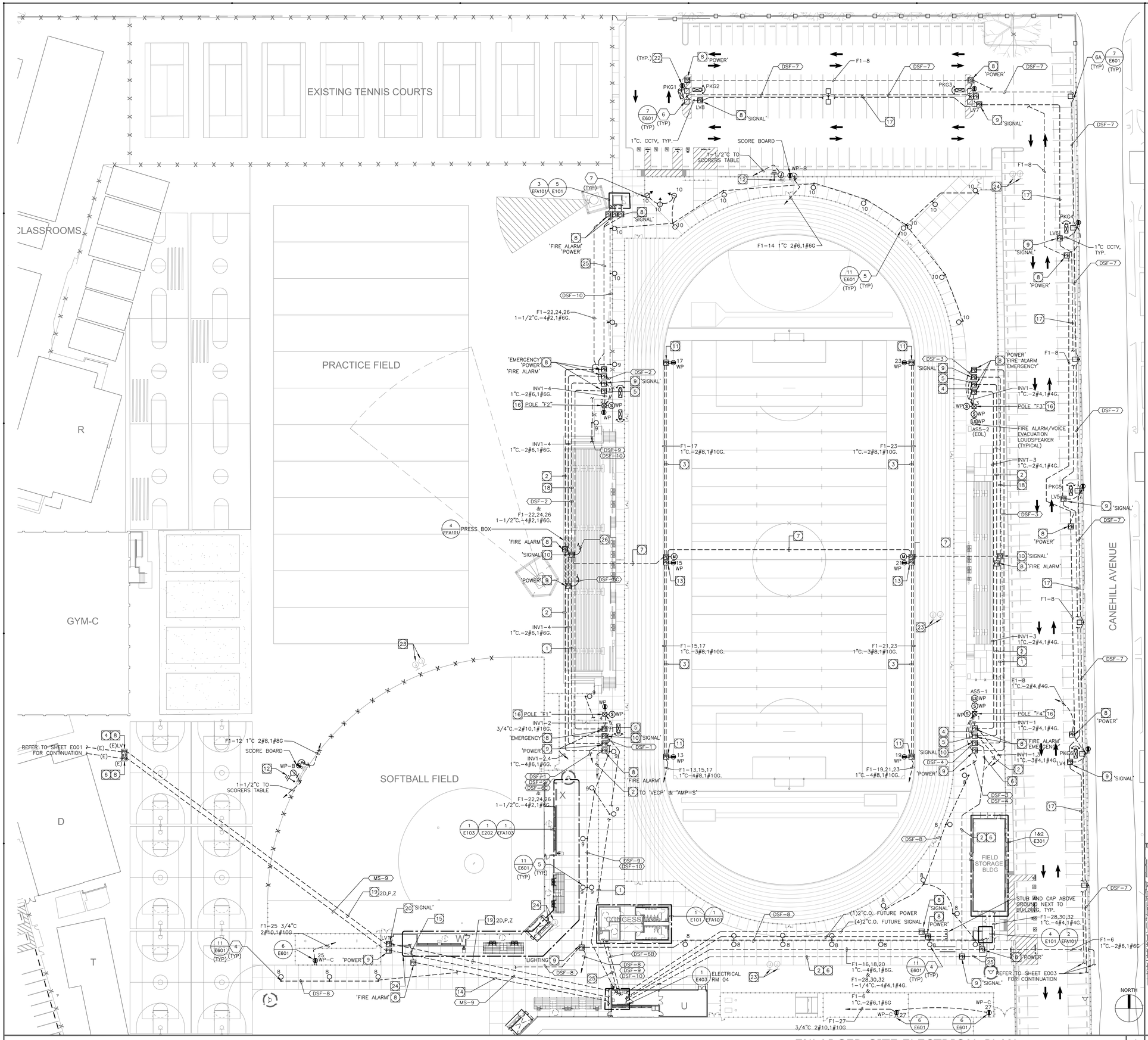

PLAN NOTES:

1. PROVIDE THE FOLLOWING SIGNAL CONDUITS AND WIRING:
   2"C.–TELEPHONE 2"C.–CCTV
   2"C.–SECURITY 2"C.–DATA
   2"C.–SOUND (2) 2"C.O.–SPARE
2. PROVIDE THE FOLLOWING SIGNAL CONDUITS AND WIRING:
   1"C.–FIRE ALARM
3. PROVIDE THE FOLLOWING SIGNAL CONDUITS AND WIRING:
   (2) 2"C.O. SPARE
4. PROVIDE THE FOLLOWING SIGNAL CONDUITS AND WIRING:
   3/4"C.–FIRE ALARM
5. PROVIDE THE FOLLOWING SIGNAL CONDUITS AND WIRING:
   1"C.–SOUND 1"C.–CCTV
   1" C.O.–SPARE
6. PROVIDE THE FOLLOWING SIGNAL CONDUITS AND WIRING:
   2"C.–TELEPHONE 2"C.–CCTV
   2"C.–SECURITY 2"C.–DATA
   (2) 2"C.O.–SPARE
7. PROVIDE THE FOLLOWING SIGNAL CONDUITS AND WIRING:
   2"C.–MICROPHONE 2"C.–SOUND
   (2) 2"C.O.–SPARE
8. PROVIDE 17"x24"xDEPTH AS REQUIRED CONCRETE PULLBOX WITH BOLT–DOWN TRAFFIC COVER ENGRAVED AS INDICATED ON PLANS. REFER TO DETAIL 2, SHEET E602 FOR ADDTIONAL INFORMATION.
9. PROVIDE 2'x3'xDEPTH AS REQUIRED CONCRETE PULLBOX WITH BOLT–DOWN TRAFFIC COVER ENGRAVED AS INDICATED ON PLANS. REFER TO DETAIL 2, SHEET E602 FOR ADDTIONAL INFORMATION.
10. PROVIDE 3'x5'xDEPTH AS REQUIRED CONCRETE PULLBOX WITH BOLT–DOWN TRAFFIC COVER ENGRAVED AS INDICATED ON PLANS. REFER TO DETAIL 2, SHEET E602 FOR ADDTIONAL INFORMATION.
11. PROVIDE PULLBOX PER DETAIL 9 ON SHEET E601 WITH ONE (1) DUPLEX RECEPTACLE.
12. PROVIDE GROUNDING AT SCOREBOARD PER MANUFACTURER'S REQUIREMENTS.
13. PROVIDE PULLBOX PER DETAIL 9 ON SHEET E601 WITH ONE (1) MICROPHONE OUTLET AND ONE (1) DUPLEX RECEPTACLE.
14. PROVIDE THE FOLLOWING CONDUITS WITH CONDUCTORS:
    (1)2"C. –FIRE ALARM
15. PROVIDE THE FOLLOWING CONDUITS WITH CONDUCTORS:
    (1)1"C. –FIRE ALARM
16. SPORTS LIGHTING POLE, REFERENCE SPORTS LIGHTING PLANS AND DETAILS FOR MORE INFORMATION.
17. PROVIDE THE FOLLOWING CONDUITS WITH CONDUCTORS:
    (2)2"C. –CCTV
18. PROVIDE THE FOLLOWING CONDUITS WITH CONDUCTORS:
    (3)2"C. –CCTV
19. PROVIDE THE FOLLOWING CONDUITS WITH CONDUCTORS:
    (1)3"C. (DATA, CCTV)
    (1)2"C. (PUBLIC ADDRESS)
    (1)3"C. (SECURITY)
    (1)2"C. (FIRE ALARM)
    (1)2"C.O. (SPARE)
20. PROVIDE 4'x4'xDEPTH AS REQUIRED CONCRETE PULLBOX WITH BOLT–DOWN TRAFFIC COVER ENGRAVED AS INDICATED ON PLANS. REFER TO DETAIL 2, SHEET E602 FOR ADDTIONAL INFORMATION.
21. NOT USED.
22. PROVIDE RECEPTACLE FOR CCTV CAMERA MOUNTED ON POLE. VERIFY EXACT MOUNTING HEIGHT PRIOR TO ROUGH–IN.
23. EXISTING CONNECTIONS FOR EXISTING SCORE BOARD TO BE DEMOLISHED.
24. EXISTING ELECTRICAL DEVICES TO BE REMOVED.
25. PROVIDE THE FOLLOWING CONDUITS WITH CONDUCTORS:
    (1)1"C. (DATA, CCTV)
    (1)1"C. (PUBLIC ADDRESS)
    (1)1"C. (SECURITY)
    (1)1"C. (FIRE ALARM)
26. PROVIDE CONDUITS WITH CONDUCTORS FROM PULL BOX UP TO PRESS BOX ABOVE.
    (1)1"C. (DATA, CCTV)
    (1)1"C. (PUBLIC ADDRESS)
    (1)1"C. (SECURITY)
    (1)1"C. (FIRE ALARM)
    (1)2"C.–MICROPHONE
    (1)2"C.–SOUND

SITE PLAN GENERAL NOTES:

1. CONTRACTOR SHALL EXERCISE EXTREME CAUTION IN EXCAVATING AND TRENCHING ON THIS SITE TO AVOID EXISTING DUCTS, PIPING OR CONDUITS, ETC., AND TO PREVENT HAZARDS TO PERSONNEL AND/OR DAMAGE TO EXISTING UNDERGROUND UTILITIES OR STRUCTURES WHETHER OR NOT SHOWN AND INSTALLED BY ANY OTHER CONTRACTS. THE ENGINEER IS NOT RESPONSIBLE FOR THE LOCATION OF UNDERGROUND UTILITIES OR STRUCTURES WHETHER OR NOT SHOWN OR DETAILED AND INSTALLED BY ANY OTHER CONTRACTS. THE CONTRACTOR SHALL IMMEDIATELY NOTIFY THE ENGINEER SHOULD SUCH UNIDENTIFIED CONDITIONS BE DISCOVERED. THESE DRAWINGS AND SPECIFICATIONS DO NOT INCLUDE THE NECESSARY ELEMENTS FOR CONSTRUCTION SAFETY.
2. CALL UNDERGROUND SERVICE ALERT (USA) AT 1 (800) 422–4133 OR APPLICABLE STATE AND LOCAL DIG SAFE OR UNDERGROUND ALERT HOTLINES PRIOR TO CONSTRUCTION START.
3. MINIMUM CONDUIT SIZE SHALL BE 3/4" – U.O.N.
4. MINIMUM CONDUCTOR SIZE SHALL BE #10 AWG. – U.O.N.
5. ALL SITE BRANCH CIRCUITS SHALL INCLUDE AN EQUIPMENT GROUND CONDUCTOR THAT, AT MINIMUM, MATCHES THE SIZE OF THE ASSOCIATED BRANCH CIRCUIT CONDUCTOR. WHERE MULTIPLE BRANCH CIRCUITS ARE ROUTED/GROUPED TOGETHER, THE EQUIPMENT GROUNDING CONDUCTOR SHALL MATCH THE SIZE OF THE LARGEST BRANCH CIRCUIT CONDUCTOR IN THE GROUP.
6. ALL ELECTRICAL EQUIPMENT MOUNTED OUTDOORS SHALL BE WEATHERPROOF (NEMA #3R).
7. ALL CONDUIT ONLY SHALL BE PROVIDED WITH A NYLON PULL STRING.
8. SEE ARCHITECTURAL/LANDSCAPE ARCHITECTURAL PLANS FOR EXACT LOCATIONS OF FIXTURES, PULLBOXES, MANHOLES, OTHER ELECTRICAL DEVICES, ETC. COORDINATE ALL UNDERGROUND STRUCTURES AND CONDUIT ROUTING WITH LANDSCAPE ARCHITECT PRIOR TO ROUGH–IN TO ENSURE THAT SUCH ITEMS ARE NOT PLACED IN CRITICAL LANDSCAPE PLANTING/HARDSCAPE AREAS.
9. UNLESS SPECIFICALLY SHOWN AS (E), (R), (ER), (D), EXISTING OR NON–BOLD, ALL ELECTRICAL DEVICES SHOWN ARE NEW.

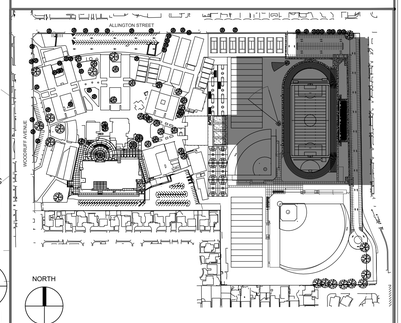

KEYMAP

ENLARGED SITE ELECTRICAL PLAN SCALE: 1"=30'-0" | 1

STATE:

IDENTIFICATION STAMP
DIV. OF THE STATE ARCHITECT
APP: 03-124281 INC:
REVIEWED FOR
SS ☑ FLS ☑ ACS ☑
DATE: 02/04/2025

ARCHITECT:
architecture
westbergwhite
7700 IRVINE CENTER DR. STE. 100
IRVINE, CA 92618
(714) 508-1780 (714) 508-1780 FAX

CONSULTANT:
tk1sc COLLABORATIVE
11870 Pierce Street, Suite 160
Riverside, California 92505
951.299.4160 www.tk1sc.com
Project Leader - Bill Voller
Electrical Lead - Bill Voller
tk1sc Job #: US0027568.7397

REGISTERED PROFESSIONAL ENGINEER
RAYMOND W. SWANN
No. E15610
Ex. 12/31/2025
ELECTRICAL
STATE OF CALIFORNIA

PROJECT NAME:

Bellflower Unified School District
Mayfair High School Athletics Fields
6000 North Woodruff Ave
Lakewood, California 90713

CLIENT:
BELLFLOWER UNIFIED SCHOOL DISTRICT
16703 S. Clark Ave.
BELLFLOWER, CALIFORNIA 90706

#	Rev. Date	Description

JOB NO:	15008.01
DATE:	05/28/2024
DRAWN:	TG, XY
CHECK:	RB, JG
ARCHITECT:	PDW
ENGINEER:	

SHEET DESCRIPTION:
ENLARGED SITE ELECTRICAL PLAN

SHEET NO:
E002

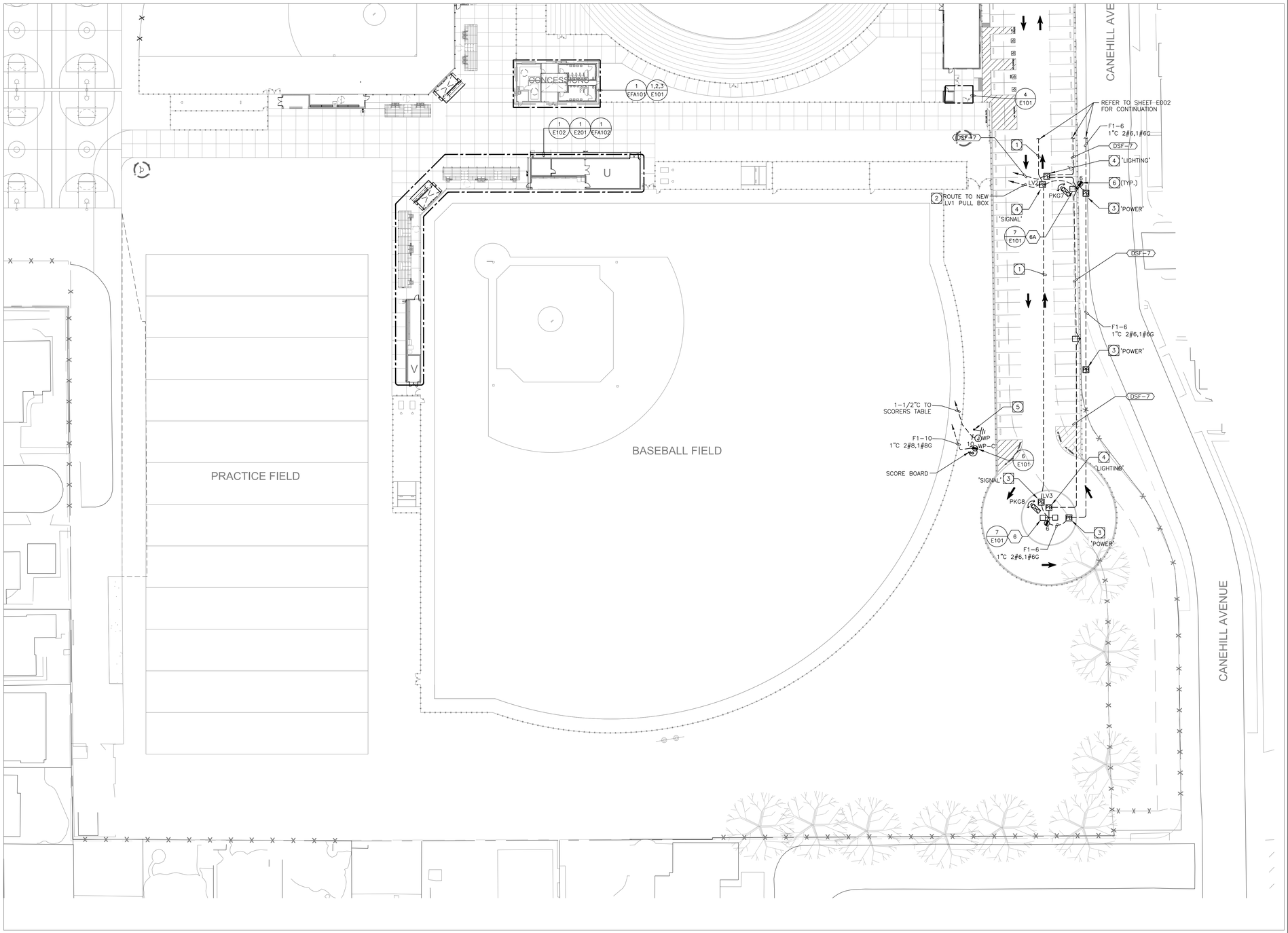

PLAN NOTES:

1. PROVIDE THE FOLLOWING CONDUITS WITH CONDUCTORS:
   (2)2"C. (CCTV)
2. PROVIDE THE FOLLOWING CONDUITS WITH CONDUCTORS:
   (2)3"C. (CCTV)
   (1)3"C.O. SPARE
3. PROVIDE 17"x24"xDEPTH AS REQUIRED CONCRETE PULLBOX WITH BOLT–DOWN TRAFFIC COVER ENGRAVED AS INDICATED ON PLANS. REFER DETAIL 2, SHEET E601 FOR ADDITIONAL INFORMATION.
4. PROVIDE 2'x3'xDEPTH AS REQUIRED CONCRETE PULLBOX WITH BOLT–DOWN TRAFFIC COVER ENGRAVED AS INDICATED ON PLANS. REFER DETAIL 2, SHEET E601 FOR ADDITIONAL INFORMATION.
5. PROVIDE GROUNDING AT SCOREBOARD PER MANUFACTURER'S REQUIREMENTS.
6. PROVIDE RECEPTACLE FOR CCTV CAMERA MOUNTED ON POLE. VERIFY EXACT MOUNTING HEIGHT PRIOR TO ROUGH–IN.

SITE PLAN GENERAL NOTES:

1. CONTRACTOR SHALL EXERCISE EXTREME CAUTION IN EXCAVATING AND TRENCHING ON THIS SITE TO AVOID EXISTING DUCTS, PIPING OR CONDUITS, ETC., AND TO PREVENT HAZARDS TO PERSONNEL AND/OR DAMAGE TO EXISTING UNDERGROUND UTILITIES OR STRUCTURES WHETHER OR NOT SHOWN AND INSTALLED BY ANY OTHER CONTRACTS. THE ENGINEER IS NOT RESPONSIBLE FOR THE LOCATION OF UNDERGROUND UTILITIES OR STRUCTURES WHETHER OR NOT SHOWN OR DETAILED AND INSTALLED BY ANY OTHER CONTRACTS. THE CONTRACTOR SHALL IMMEDIATELY NOTIFY THE ENGINEER SHOULD SUCH UNIDENTIFIED CONDITIONS BE DISCOVERED. THESE DRAWINGS AND SPECIFICATIONS DO NOT INCLUDE THE NECESSARY ELEMENTS FOR CONSTRUCTION SAFETY.
2. CALL UNDERGROUND SERVICE ALERT (USA) AT 1 (800) 422–4133 OR APPLICABLE STATE AND LOCAL DIG SAFE OR UNDERGROUND ALERT HOTLINES PRIOR TO CONSTRUCTION START.
3. MINIMUM CONDUIT SIZE SHALL BE 3/4" – U.O.N.
4. MINIMUM CONDUCTOR SIZE SHALL BE #10 AWG. – U.O.N.
5. ALL SITE BRANCH CIRCUITS SHALL INCLUDE AN EQUIPMENT GROUND CONDUCTOR THAT, AT MINIMUM, MATCHES THE SIZE OF THE ASSOCIATED BRANCH CIRCUIT CONDUCTOR. WHERE MULTIPLE BRANCH CIRCUITS ARE ROUTED/GROUPED TOGETHER, THE EQUIPMENT GROUNDING CONDUCTOR SHALL MATCH THE SIZE OF THE LARGEST BRANCH CIRCUIT CONDUCTOR IN THE GROUP.
6. ALL ELECTRICAL EQUIPMENT MOUNTED OUTDOORS SHALL BE WEATHERPROOF (NEMA #3R).
7. ALL CONDUIT ONLY SHALL BE PROVIDED WITH A NYLON PULL STRING.
8. SEE ARCHITECTURAL/LANDSCAPE ARCHITECTURAL PLANS FOR EXACT LOCATIONS OF FIXTURES, PULLBOXES, MANHOLES, OTHER ELECTRICAL DEVICES, ETC. COORDINATE ALL UNDERGROUND STRUCTURES AND CONDUIT ROUTING WITH LANDSCAPE ARCHITECT PRIOR TO ROUGH–IN TO ENSURE THAT SUCH ITEMS ARE NOT PLACED IN CRITICAL LANDSCAPE PLANTING/HARDSCAPE AREAS.
9. UNLESS SPECIFICALLY SHOWN AS (E), (R), (ER), (D), EXISTING OR NON–BOLD, ALL ELECTRICAL DEVICES SHOWN ARE NEW.

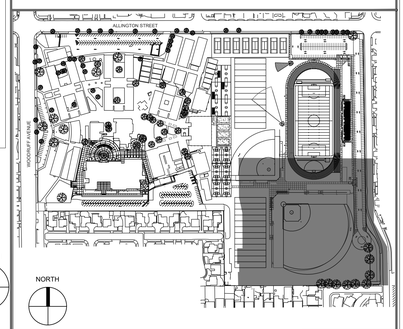

ENLARGED SITE ELECTRICAL PLAN SCALE: 1"=30'-0" 1

KEYMAP

STATE:

IDENTIFICATION STAMP
DIV. OF THE STATE ARCHITECT
APP: 03-124281 INC:
REVIEWED FOR
SS ☑ FLS ☑ ACS ☑
DATE: 02/04/2025

ARCHITECT:

architecture
westbergwhite
7700 IRVINE CENTER DR. STE. 100
IRVINE, CA 92618
(714) 508-1780 (714) 508-1780 FAX

CONSULTANT:

tk1sc
COLLABORATIVE
11870 Pierce Street, Suite 160
Riverside, California 92505
951.299.4160 www.tk1sc.com
Project Leader - Bill Voller
Electrical Lead - Bill Voller
tk1sc Job #: US0027568.7397

REGISTERED PROFESSIONAL ENGINEER
RAYMOND W. SWANSON
No. E15610
Ex. 12/31/2025
ELECTRICAL
STATE OF CALIFORNIA

PROJECT NAME:

Bellflower Unified School District
Mayfair High School Athletics Fields
6000 North Woodruff Ave
Lakewood, California 90713

CLIENT:

BELLFLOWER UNIFIED SCHOOL DISTRICT
16703 S. Clark Ave.
BELLFLOWER, CALIFORNIA 90706

Δ	Rev. Date	Description

JOB NO:	15008.01
DATE:	05/28/2024
DRAWN:	TG, XY
CHECK:	RB, JG
ARCHITECT:	PDW
ENGINEER:	

SHEET DESCRIPTION:

ENLARGED SITE ELECTRICAL PLAN

SHEET NO:

E003

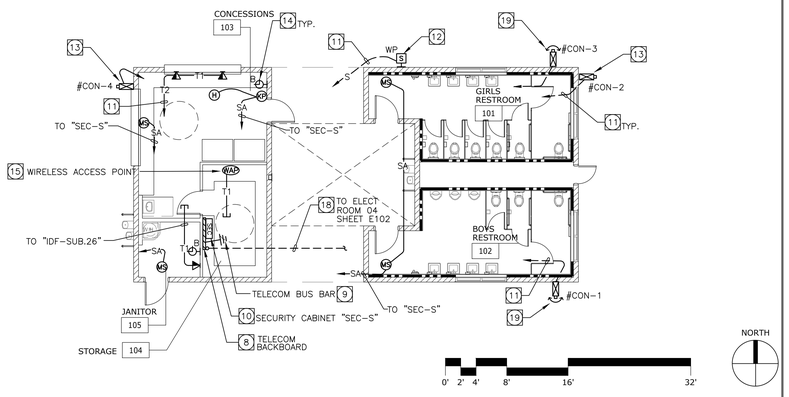

CONCESSIONS BUILDING SIGNAL PLAN

SCALE: 1/8"=1'-0" | 3

MOTORIZED EQUIPMENT SCHEDULE

ITEM	DESCRIPTION	EQUIPMENT RATING VOLTS	PH.	HP.	FLA	MCA	MOCP	DISC. SW. SIZE STARTER SIZE	CIRCUIT DATA CONDUIT – WIRE	SPECIFIC NOTES
EF 1	EXHAUST FAN –	115	1	1/3	–	–	15	^{M}	3/4"C.–2#12, 1#12G.	A
EF 2	EXHAUST FAN –	115	1	112W	–	–	15	^{M}	3/4"C.–2#12, 1#12G.	–
EF 3	EXHAUST FAN –	115	1	116W	–	–	15	^{M}	3/4"C.–2#12, 1#12G.	–
EF 4	EXHAUST FAN –	115	1	112W	–	–	15	^{M}	3/4"C.–2#12, 1#12G.	–

MOTORIZED EQUIPMENT SCHEDULE SPECIFIC NOTES:

A. INTERLOCK WITH ASSOCIATED LIGHTING CONTROLS. REFER TO MECHANICAL PLANS FOR ADDITIONAL INFORMATION.

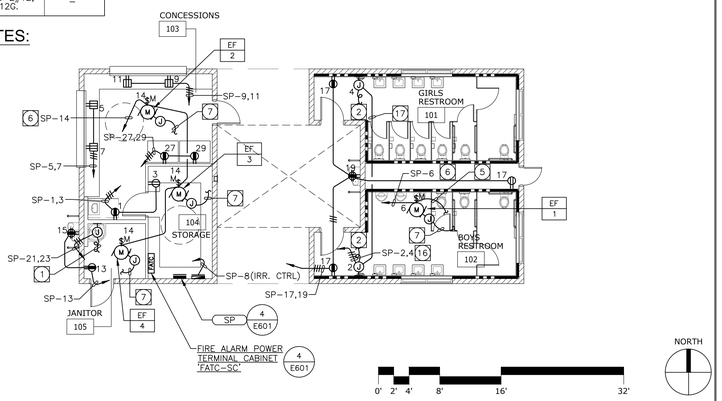

CONCESSIONS BUILDING POWER PLAN

SCALE: 1/8"=1'-0" | 2

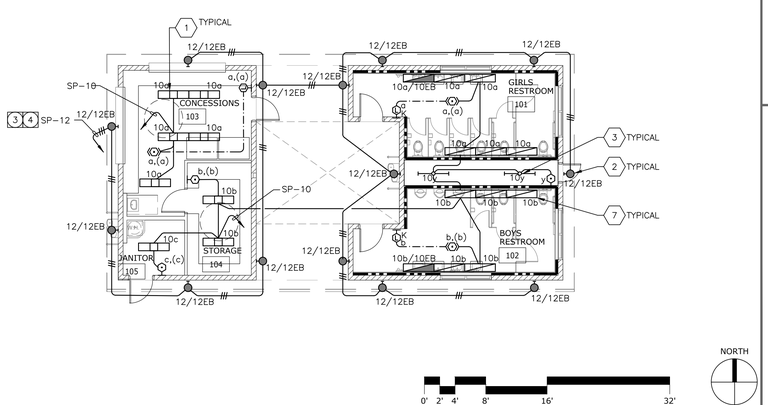

CONCESSIONS BUILDING LIGHTING PLAN

SCALE: 1/8"=1'-0" | 1

LIGHTING PLAN GENERAL NOTES:

1. REFER TO ARCHITECTURAL PLANS FOR EXACT LOCATION AND ELEVATION OF ALL LIGHTING FIXTURES AND ALL DEVICES. ALL WALL-MOUNTED DEVICE HEIGHTS SHALL BE VERIFIED WITH THE ARCHITECT PRIOR TO ROUGH-IN.
2. VERIFY EXACT CEILING CONSTRUCTION WITH ARCHITECTURAL REFLECTED CEILING PLAN AND SPECS. PROVIDE LIGHTING FIXTURES WITH ALL NECESSARY MOUNTING HARDWARE.
3. ALL RECESSED FIXTURES SHALL BE PROVIDED WITH ALL STRUCTURAL SUPPORTS AS REQUIRED BY THE IBC, OR CBC WHERE ADOPTED, IN ADDITION TO ANY LOCAL CODES.
4. ALL PERIMETER AND COVE LIGHTING SHALL EXTEND THE FULL LENGTH OF THE WALLS OR COVE. CONTRACTOR TO FIELD MEASURE COVE LENGTH AND ORDER QUANTITY OF FIXTURES AS REQUIRED.
5. ALL LINE VOLTAGE DIMMING BRANCH CIRCUITS SHALL BE PROVIDED WITH A DEDICATED NEUTRAL CONDUCTOR FOR EACH ZONE/CHANNEL.
6. RECESSED FIXTURES LOCATED IN A FIRE-RATED CEILING OR WALL SHALL BE PROVIDED WITH A 5-SIDED, RATED ENCLOSURE SO CONSTRUCTED AS TO ALLOW CODE AND MANUFACTURER-REQUIRED CLEARANCES BETWEEN THE FIXTURE AND THE ENCLOSURE.
7. REFER TO ARCHITECTURAL REFLECTED CEILING PLANS FOR EXIT SIGN CHEVRONS AND NUMBER OF FACES PER EXIT SIGN. ANY DISCREPANCIES BETWEEN EXIT SIGNS SHOWN ON THE ELECTRICAL AND ARCHITECTURAL PLANS SHALL BE BROUGHT TO THE ATTENTION OF THE ARCHITECT PRIOR TO ORDERING EXIT SIGNS.
8. WHEN EXPOSED CEILINGS OR OPEN GRID CONDITIONS OCCUR, THE CONTRACTOR WILL NEED TO PROVIDE THE FOLLOWING ITEMS:
   a. ALL BRANCH CIRCUITS SHALL BE EMT.
   b. ALL BRANCH CIRCUITS SHALL BE ROUTED ORTHOGONALLY, NEATLY TRAINED, IN PARALLEL TO STRUCTURES OR DUCTWORK. THE TERM "TRAINED" MEANS ALL PARALLEL CONDUITS SHALL MAINTAIN THE SAME SPATIAL RELATIONSHIP WITH EACH OTHER FOR ENTIRE RUN TO INCLUDE RADIUS BENDS AND SWEEPS.
   c. VISUALLY OBJECTIONABLE BRANCH CIRCUITS WILL BE REROUTED AT THE REQUEST OF THE ARCHITECT AT NO ADDITIONAL COST.
9. ALL LED REMOTE INDICATORS FOR DUCT DETECTORS AND FIRE/SMOKE DAMPERS REQUIRED BY THE LOCAL AHJ SHALL BE LOCATED IN CEILINGS IN COORDINATION WITH ARCHITECT PRIOR TO ANY ROUGH-IN.
10. PROVIDE ADDITIONAL J-BOX NEAR PANEL FOR MULTIPLE HOMERUN CIRCUITRY.
11. UNLESS SPECIFICALLY SHOWN AS (E), (R), (ER), (D), EXISTING OR NON-BOLD, ALL ELECTRICAL DEVICES SHOWN ARE NEW.
12. REFER TO GENERAL POWER PLAN NOTES AND COMMUNICATIONS PATHWAYS GENERAL NOTE FOR ADDITIONAL REQUIREMENTS WHEN POWER AND/OR DATA DEVICES ARE SHOWN ON THIS PLAN.
13. ALL PENETRATIONS THROUGH FIRE RATED WALLS SHALL BE PROTECTED FROM THE SPREAD OF FIRE WITH AN APPROVED FIRESTOP SYSTEM EQUAL OR GREATER THAN THE FIRE RATING OF THE WALL.

MOTORIZED EQUIPMENT SCHEDULE GENERAL NOTES:

1. ALL BRANCH CIRCUIT DATA IS BASED UPON METALLIC CONDUITS. IF THE CONTRACTOR ELECTS TO USE NONMETALLIC CONDUITS, AN EQUIPMENT GROUNDING CONDUCTOR SHALL BE INSTALLED PER NEC, OR CEC WHERE ADOPTED, TABLE 250.122 AND THE CONDUIT SIZE SHALL BE INCREASED ACCORDINGLY.
2. ELECTRICAL CONTRACTOR SHALL REFER TO ALL DOCUMENTS RELATED TO THE EQUIPMENT (I.E. SHOP DRAWINGS, CONSTRUCTION DOCUMENTS, ETC.) IN REGARDS TO ELECTRICAL CHARACTERISTICS OF ALL EQUIPMENT LISTED IN THE SCHEDULE. ANY MODIFICATION AND/OR ADDITIONAL WORK NECESSARY SHALL BE INCLUDED IN THE BASE BID.
3. ELECTRICAL CONTRACTOR SHALL CHECK THE ROTATION OF ALL THREE PHASE MOTORS AND CORRECT THE ROTATION IF REVERSED.
4. ELECTRICAL CONTRACTOR SHALL PROVIDE FUSES SIZED PER THE EQUIPMENT NAMEPLATE INFORMATION.
5. DISCONNECT SWITCHES SHALL BE HEAVY DUTY TYPE, EXTERNALLY OPERATED, QUICK MAKE QUICK BREAK AND SHALL BE FUSIBLE OR NON FUSIBLE AS INDICATED. A MAXIMUM VOLTAGE, CURRENT AND HORSEPOWER SHALL BE CLEARLY MARKED ON SWITCH ENCLOSURE. SWITCHES HAVING DUAL RATINGS (HIGHER RATINGS WHEN USED WITH DUAL ELEMENT FUSES) SHALL HAVE RATINGS INDICATED ON METAL PLATES RIVETED OR OTHERWISE PERMANENTLY ATTACHED TO THE ENCLOSURE. WHEN INDICATED, TOGGLE SWITCHES SHALL BE MOTOR RATED FOR THE APPLICATION.
6. STARTERS SHALL BE FULL VOLTAGE, REDUCED VOLTAGE OR COMBINATION DISCONNECT AND STARTER, WITH CONTROL VOLTAGE AS REQUIRED, AS INDICATED ON THE DOCUMENTS RELATED TO THE EQUIPMENT, SUCH AS SHOP DRAWINGS, CONSTRUCTION DOCUMENTS, ETC. STARTERS SHALL INCLUDE MOTOR OVERLOAD PROTECTION, PHASE LOSS AND PHASE UNBALANCE PROTECTION AS REQUIRED.
7. ALL TERMINATIONS AND ENCLOSURES SHALL BE RATED FOR USE WITH 75 DEGREE C CONDUCTORS.
8. COMPLETE INSTALLATION SHALL CONFORM TO THE REQUIREMENTS OF NEC (OR CEC WHERE ADOPTED) ARTICLES 430 AND 440.
9. CONTRACTOR TO COORDINATE WITH ALL OTHER PROJECT TRADES AND WITH OWNER/ TENANT FOR TO OBTAIN RESPECTIVE EQUIPMENT SCCR AND PROVIDE APPROPRIATE PROTECTIVE DEVICES TO LIMIT AVAILABLE FAULT CURRENT TO LESS THAN THE EQUIPMENT NAMEPLATE SCCR PER NEC (OR CEC WHERE ADOPTED) 110.10. SEE POWER SYSTEM STUDY SPECIFICATIONS FOR ADDITIONAL REQUIREMENTS.
10. UNLESS OTHERWISE NOTED, MOCP VALUES FOR VFD-EQUIPPED DEVICE ARE SIZED PER NEC (OR CEC WHERE ADOPTED) 430.130(A).1. CONTRACTOR SHALL COORDINATE WITH ALL OTHER PROJECT TRADES AND WITH OWNER/ TENANT (IF PROVIDING EQUIPMENT ON PROJECT) TO OBTAIN NAMEPLATE VFD-EQUIPPED DEVICE MOCP VALUE FROM MANUFACTURER INSTALLATION INSTRUCTIONS AND PROVIDE APPROPRIATE PROTECTIVE DEVICES TO COMPLY WITH NEC (OR CEC WHERE ADOPTED) 430.130(A).2.

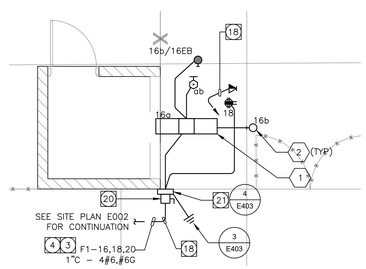

TICKET BOOTH

SCALE: 1/4"=1'-0" | 4

POWER PLAN GENERAL NOTES:

1. ALL RECEPTACLES ON COMMON WALLS SHALL BE SEPARATE BOXES AND OFFSET 24-INCHES MINIMUM.
2. ALL PENETRATIONS THROUGH FIRE RATED WALLS SHALL BE PROTECTED FROM THE SPREAD OF FIRE WITH AN APPROVED FIRESTOP SYSTEM EQUAL OR GREATER THAN THE FIRE RATING OF THE WALL.
3. ALL WALL-MOUNTED DEVICE HEIGHTS SHALL BE VERIFIED WITH THE ARCHITECT PRIOR TO ROUGH-IN.
4. ALL FURNITURE FEED LOCATIONS TO BE VERIFIED WITH ARCHITECT AND FURNITURE VENDOR PRIOR TO ROUGH-IN.
5. ALL FURNITURE WHIPS SHALL BE TRIMMED TO REDUCE EXCESS WHIP LENGTH.
6. WHEN EXPOSED CEILINGS OR OPEN GRID CONDITIONS OCCUR, THE CONTRACTOR WILL NEED TO PROVIDE THE FOLLOWING ITEMS:
   a. ALL BRANCH CIRCUITS SHALL BE EMT.
   b. ALL BRANCH CIRCUITS SHALL BE ROUTED ORTHOGONALLY, NEATLY TRAINED, IN PARALLEL TO STRUCTURES OR DUCTWORK. THE TERM "TRAINED" MEANS ALL PARALLEL CONDUITS SHALL MAINTAIN THE SAME SPATIAL RELATIONSHIP WITH EACH OTHER FOR ENTIRE RUN TO INCLUDE RADIUS BENDS AND SWEEPS.
   c. VISUALLY OBJECTIONABLE BRANCH CIRCUITS WILL BE REROUTED AT THE REQUEST OF THE ARCHITECT AT NO ADDITIONAL COST.
7. EXPOSED CABLE/CONDUCTORS INSTALLED IN A PLENUM SPACE SHALL CONFORM TO NEC, OR CEC WHERE ADOPTED, ARTICLE 300.22(C).
8. PROVIDE G.F.C.I. TYPE RECEPTACLE(S) OR RECEPTACLE(S) PROTECTED BY A GFCI CIRCUIT BREAKER(S) WHEN RECEPTACLES ARE 50A OR LESS, 150V TO GROUND OR LESS AND ARE LOCATED WITHIN 6-FEET OF ANY SINK OR THERAPEUTIC TUB, LAUNDRY AREA, SERVING ANY DRINKING FOUNTAIN OR VENDING MACHINE, WITHIN ANY KITCHEN SPACE, LOCKER ROOM AREA, GARAGE AND BATHROOM SPACE AND/OR LOCATED OUTDOORS. WHERE RECEPTACLES ARE NOT READILY ACCESSIBLE, PROVIDE GFCI CIRCUIT BREAKER(S) TO PROTECT THE RESPECTIVE BRANCH CIRCUIT AND PROVIDE ADDITIONAL NEUTRAL CONDUCTORS IN THE BRANCH CIRCUITING AS REQUIRED TO ENSURE PROPER GFCI FUNCTION.
9. PROVIDE OCCUPANCY SENSOR/LIGHTING CONTROL SYSTEM CONTROLLED RECEPTACLE RELAY(S) AS REQUIRED TO SWITCH CONTROLLED RECEPTACLES. CONNECT BRANCH CIRCUITRY AND CONTROL WIRING AS REQUIRED TO ALLOW OCCUPANCY SENSOR/LIGHTING CONTROL SYSTEM RELAY TO SWITCH STANDALONE AND/OR SYSTEMS FURNITURE CONTROLLED RECEPTACLES AS INDICATED ON PLANS. PROVIDE ADDITIONAL CONDUIT, WIRING AND PATHWAYS NECESSARY TO CONNECT BRANCH CIRCUITRY AND CONTROL WIRING TO REMOTE RELAYS TO INCLUDE RELAY(S) LOCATED ON ALTERNATE FLOORS, IN ELECTRICAL ROOMS, ETC.
10. PROVIDE ADDITIONAL J-BOX NEAR PANEL FOR MULTIPLE HOMERUN CIRCUITRY.
11. UNLESS SPECIFICALLY SHOWN AS (E), (R), (ER), (D), EXISTING OR NON-BOLD, ALL ELECTRICAL DEVICES SHOWN ARE NEW.

COMMUNICATIONS PATHWAYS GENERAL NOTES:

1. CONDUITS SHALL (a) CONTAIN NO CONTINUOUS SECTIONS LONGER THAN 30M (98 FT.), AND (b) CONTAIN NO MORE THAN (2) 90° BENDS OR (1) REVERSE BEND WITHOUT INSTALLING A PULL BOX. SPLIT CONDUITS IN PLACE OF PULL BOXES ARE UNACCEPTABLE.
2. CONDUITS SHALL CONTAIN PLASTIC OR NYLON PULL TAPE RATED AT 200 LBS. WITH A MINIMUM OF 5 FEET OF EXTRA PULL TAPE COILED AT EACH END.
3. CONDUIT BEND RADIUS SHALL BE (a) A MINIMUM OF 6 TIMES THE INTERNAL CONDUIT DIAMETER FOR CONDUITS 2-INCHES IN DIAMETER OR LESS, AND (b) 10 TIMES THE INTERNAL CONDUIT DIAMETER FOR CONDUITS MORE THAN 2-INCHES IN DIAMETER.
4. TERMINATE CONDUIT STUBS AND SLEEVES THAT PROTRUDE THROUGH STRUCTURAL FLOORS 2-INCHES TO 3-INCHES ABOVE THE FLOOR SURFACE.
5. INSTALL BUSHINGS OR BELL ENDS AS REQUIRED ON ALL CONDUITS.
6. FLEX CONDUIT IS UNACCEPTABLE FOR USE AS A COMMUNICATIONS CONDUIT EXCEPT AT SEISMIC JOINTS AND/OR IF APPROVED IN WRITING BY THE ENGINEER.
7. ALL UNDER SLAB OR IN-SLAB CONDUITS SHALL BE INSTALLED IN A MANNER THAT PREVENTS WATER INFILTRATION OF THE CONDUIT. IT IS THE CONTRACTOR'S RESPONSIBILITY TO ENSURE GROUND WATER, RAIN WATER OR CONSTRUCTION WATER IS PREVENTED FROM ENTERING AND/OR REMOVED FROM THE CONDUITS PRIOR TO PLACEMENT OF COMMUNICATIONS CABLES. SEE ELECTRICAL SPECIFICATIONS, DETAILS AND PLANS FOR ADDITIONAL CONDUIT SEALING REQUIREMENTS.
8. ALL PULL BOXES SHALL BE SIZED AND INSTALLED PER ANSI-TIA-569-C. PULL BOXES FOR IN/UNDER SLAB CONDUIT RUNS ARE NOT PERMITTED UNLESS OTHERWISE NOTED. PULL BOXES FOR OVERHEAD CONDUIT RUNS SHALL BE LOCATED ABOVE ACCESSIBLE CEILINGS WITHIN THE ACCESSIBLE CEILING SPACE AND SUPPORTED INDEPENDENTLY FROM THE STRUCTURE AND CONDUIT SUPPORTS. PULL BOXES FOR ROOF MOUNTED OR EXTERIOR ABOVE GRADE APPLICATIONS SHALL BE NEMA 3R RATED. PULL BOXES SHALL BE SIZED ACCORDING TO THE FOLLOWING:

CONDUIT SIZE	WIDTH	LENGTH	DEPTH	WIDTH INCREASE PER ADDITIONAL CONDUIT
1"	4"	16"	3"	2"
2"	8"	36"	4"	5"
3"	12"	48"	5"	6"
4"	15"	60"	8"	8"

FOR OTHER CONDUIT SIZES REFER TO ANSI/TIA-569-C TABLE 12. - LATEST PUBLISHED EDITION.

9. CONDUIT(S) SHALL EXIT A PULL BOX ON THE WALL OPPOSITE THE WALL ENTERED.
10. PROVIDE LABELING OF EACH CONDUIT PER GENERAL ELECTRICAL SPECIFICATIONS.
11. PROVIDE INTERNAL/EXTERNAL GAS AND WATER TIGHT MECHANICAL SEALING/PLUGGING OF EACH BUILDING ENTRY CONDUIT AS SPECIFIED ELSEWHERE IN THE DRAWINGS AND SPECIFICATIONS.

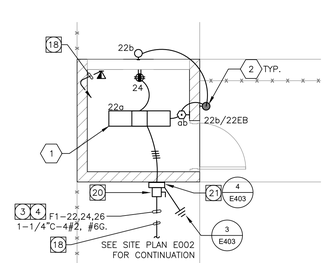

TICKET BOOTH

SCALE: 1/4"=1'-0" | 5

PLAN NOTES:

1. CONNECT COMPLETE TO WATER HEATER AS REQUIRED. PROVIDE DISCONNECT AS REQUIRED.
2. CONNECT COMPLETE TO ELECTRIC HAND DRYER AS REQUIRED.
3. PROVIDE RELAY AS REQUIRED FOR CONTROL OF EXTERIOR LIGHTING BY PHOTOCELL ON/TIMECLOCK OFF. MOUNT RELAY IN SEPARATE BARRIERED COMPARTMENT OF PANELBOARD.
4. PROVIDE AN ADDITIONAL UNSWITCHED HOT WIRE FOR EMERGENCY LIGHTING.
5. INTERLOCK WITH ASSOCIATED LIGHTING CONTROLS IN GIRLS AND BOYS RESTROOMS AS REQUIRED. REFER TO MECHANICAL PLANS FOR ADDITIONAL INFORMATION.
6. REFER TO MOTORIZED EQUIPMENT SCHEDULE FOR MOTOR FEEDER/BRANCH CIRCUIT INFORMATION.
7. PROVIDE 3/4"C.O.(S) TO RESPECTIVE CONTROL DEVICE(S) FOR CONTROL WIRING. REFER TO THE EQUIPMENT CONTROL WIRING DIAGRAMS FOR ADDITIONAL INFORMATION.
8. PAINTED PLYWOOD BACKBOARD BY E.C. PER SPECIFICATIONS. MOUNT 6 INCHES A.F.F., LENGTH AS SHOWN.
9. TELECOM GROUND BUS BAR. REFER TO TELECOM BACKBOARD AND GROUND BUS BAR DETAIL FOR ADDITIONAL REQUIREMENTS.
10. SECURITY TERMINAL CABINET COMPLETE WITH BATTERY, TERMINAL STRIPS, POPITS, POWER SUPPLY AND ALL OTHER COMPONENTS NECESSARY.
11. ROUTE CONDUIT TO TELECOM BACKBOARD.
12. FLUSH 4S DEEP JUNCTION BOX WITH 1"C TO TELECOM BACKBOARD IN CONCESSION BUILDING, BY E.C.. PROVIDE STAINLESS STEEL WEATHERPROOF COVER PLATE AND SURFACE MOUNT HORN. REFER TO PAGING SYSTEM BLOCK DIAGRAM ON SHEET T001 FOR ADDITIONAL REQUIREMENTS. VERIFY MOUNTING HEIGHT IN FIELD PRIOR TO JUNCTION BOX ROUGH-IN.
13. EXTERIOR SURFACE MOUNTED POE-POWERED CCTV I.P. CAMERA WITH FLUSH 2-GANG BACKBOX, LENS, ENCLOSURE, MOUNT, CONDUIT AND CABLES COMPLETE. PROVIDE OSP-RATED CAT-6 4-PAIR UTP CABLE FOR VIDEO SIGNAL. REFERENCE CCTV SYSTEM BLOCK DIAGRAM AND CAMERA SCHEDULE FOR MORE INFORMATION. VERIFY FINAL MOUNTING LOCATIONS WITH OWNER IN FIELD PRIOR TO ROUGH-IN.
14. STAND-ALONE BATTERY OPERATED ANALOG CLOCK, 12" DIAMETER. MATCH EXISTING TYPE ON CAMPUS.
15. WALL MOUNTED OWNER-FURNISHED CONTRACTOR-INSTALLED WIRELESS ACCESS POINT WITH 1"CONDUIT AND CAT-6 CABLE TO IDF-SUB.26.
16. PROVIDE 3/4"C.-3#10, 1#10 GRD.
17. PROVIDE 3/4"C.-2#10, 1#10 GRD.
18. PROVIDE THE FOLLOWING CONDUITS WITH CONDUCTORS:
    (1)1"C. (DATA, CCTV)
    (1)1"C. (PUBLIC ADDRESS)
    (1)1"C. (SECURITY)
    (1)1"C. (FIRE ALARM)
19. EXTERIOR ROOF MOUNTED CCTV PAN-TILT-ZOOM I.P. CAMERA WITH ROOF MOUNT, GOOSE NECK TO EXTEND PAST EXTERIOR WALL, LENS, ENCLOSURE, CONDUIT AND CABLES, COMPLETE. PROVIDE LOW VOLTAGE POWER SUPPLY ON TELECOM BACKBOARD WITH CONDUCTORS TO POWER THE PTZ CAMERA, AND OSP-RATED CAT-6 4-PAIR UTP CABLE FOR VIDEO SIGNAL. REFERENCE CCTV SYSTEM BLOCK DIAGRAM AND CAMERA SCHEDULE FOR MORE INFORMATION. VERIFY FINAL MOUNTING LOCATIONS WITH OWNER IN FIELD PRIOR TO ROUGH-IN.
20. PROVIDE A NEMA 3R ENCLOSED 30A, 3-PHASE, 120V DISCONNECT SWITCH MOUNTED TO SIDE OF BUILDING AT 48" A.F.F. MAX TO HIGHEST POINT OF ACTIVATING LEVER FOR BUILDING SHUT-OFF. VERIFY EXACT LOCATION IN FIELD.
21. PROVIDE THREE (3) 12"X12"X4"D. JUNCTION BOX WITH SCREW COVER TYPE "3R" FOR ELECTRICAL SIGNAL AND FIRE ALARM SYSTEMS MOUNTED TO SIDE OF BUILDING AS INDICATED. JUNCTION BOXES SHALL BE MOUNTED SIDE-BY-SIDE, NOT STACKED.

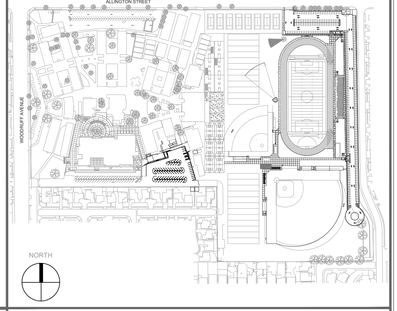

KEYMAP

STATE:

IDENTIFICATION STAMP
DIV. OF THE STATE ARCHITECT
APP: 03-124281 INC:
REVIEWED FOR
SS ☑ FLS ☑ ACS ☑
DATE: 02/04/2025

ARCHITECT:

architecture
westbergwhite
7700 IRVINE CENTER DR. STE. 100
IRVINE, CA 92618
(714) 508-1780 (714) 508-1780 FAX

CONSULTANT:

tk1sc COLLABORATIVE
11870 Pierce Street, Suite 160
Riverside, California 92505
951.299.4160 www.tk1sc.com
Project Leader - Bill Voller
Electrical Lead - Bill Voller
tk1sc Job #: US0027568.7397

REGISTERED PROFESSIONAL ENGINEER
RAYMOND W. SWANSON
No. E15610
Ex. 12/31/2025
ELECTRICAL
STATE OF CALIFORNIA

PROJECT NAME:

Bellflower Unified School District
Mayfair High School Athletics Fields
6000 North Woodruff Ave
Lakewood, California 90713

CLIENT:

BELLFLOWER UNIFIED SCHOOL DISTRICT
16703 S. Clark Ave.
BELLFLOWER, CALIFORNIA 90706

#	Rev. Date	Description

JOB NO:	15008.01
DATE:	05/28/2024
DRAWN:	TG, XY
CHECK:	RB, JG
ARCHITECT:	PDW
ENGINEER:	

SHEET DESCRIPTION:
CONCESSIONS BUILDING LIGHTING, POWER AND SIGNAL PLANS

SHEET NO:
E101

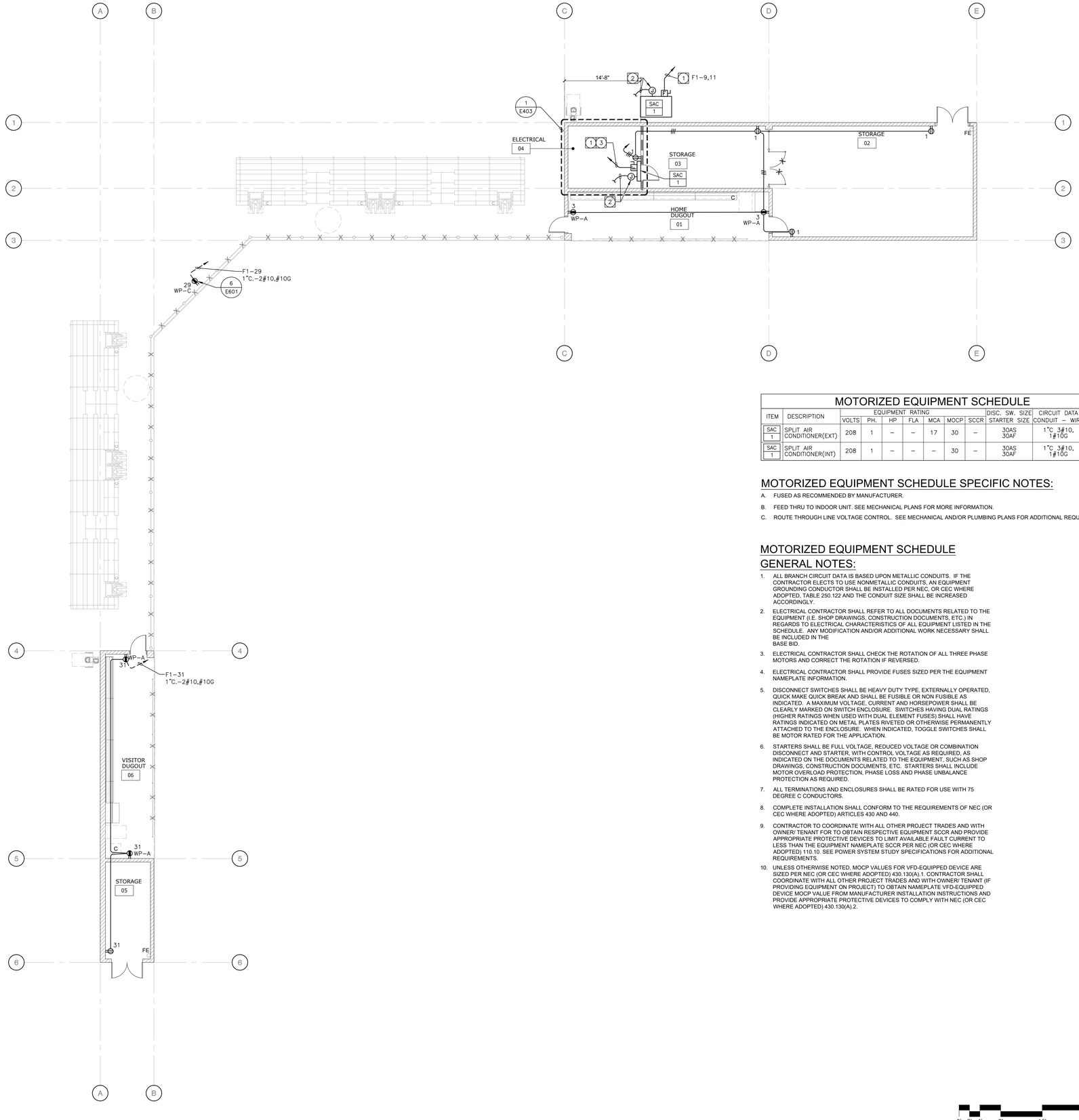

MOTORIZED EQUIPMENT SCHEDULE

ITEM	DESCRIPTION	EQUIPMENT RATING VOLTS	PH.	HP	FLA	MCA	MOCP	SCCR	DISC. SW. SIZE STARTER SIZE	CIRCUIT DATA CONDUIT – WIRE	SPECIFIC NOTES
SAC 1	SPLIT AIR CONDITIONER(EXT)	208	1	–	–	17	30	–	30AS 30AF	1"C. 3#10, 1#10G	A,B,C
SAC 1	SPLIT AIR CONDITIONER(INT)	208	1	–	–	–	30	–	30AS 30AF	1"C. 3#10, 1#10G	C

MOTORIZED EQUIPMENT SCHEDULE SPECIFIC NOTES:

A. FUSED AS RECOMMENDED BY MANUFACTURER.

B. FEED THRU TO INDOOR UNIT. SEE MECHANICAL PLANS FOR MORE INFORMATION.

C. ROUTE THROUGH LINE VOLTAGE CONTROL. SEE MECHANICAL AND/OR PLUMBING PLANS FOR ADDITIONAL REQUIREMENTS.

MOTORIZED EQUIPMENT SCHEDULE GENERAL NOTES:

1. ALL BRANCH CIRCUIT DATA IS BASED UPON METALLIC CONDUITS. IF THE CONTRACTOR ELECTS TO USE NONMETALLIC CONDUITS, AN EQUIPMENT GROUNDING CONDUCTOR SHALL BE INSTALLED PER NEC, OR CEC WHERE ADOPTED, TABLE 250.122 AND THE CONDUIT SIZE SHALL BE INCREASED ACCORDINGLY.
2. ELECTRICAL CONTRACTOR SHALL REFER TO ALL DOCUMENTS RELATED TO THE EQUIPMENT (I.E. SHOP DRAWINGS, CONSTRUCTION DOCUMENTS, ETC.) IN REGARDS TO ELECTRICAL CHARACTERISTICS OF ALL EQUIPMENT LISTED IN THE SCHEDULE. ANY MODIFICATION AND/OR ADDITIONAL WORK NECESSARY SHALL BE INCLUDED IN THE BASE BID.
3. ELECTRICAL CONTRACTOR SHALL CHECK THE ROTATION OF ALL THREE PHASE MOTORS AND CORRECT THE ROTATION IF REVERSED.
4. ELECTRICAL CONTRACTOR SHALL PROVIDE FUSES SIZED PER THE EQUIPMENT NAMEPLATE INFORMATION.
5. DISCONNECT SWITCHES SHALL BE HEAVY DUTY TYPE, EXTERNALLY OPERATED, QUICK MAKE QUICK BREAK AND SHALL BE FUSIBLE OR NON FUSIBLE AS INDICATED. A MAXIMUM VOLTAGE, CURRENT AND HORSEPOWER SHALL BE CLEARLY MARKED ON SWITCH ENCLOSURE. SWITCHES HAVING DUAL RATINGS (HIGHER RATINGS WHEN USED WITH DUAL ELEMENT FUSES) SHALL HAVE RATINGS INDICATED ON METAL PLATES RIVETED OR OTHERWISE PERMANENTLY ATTACHED TO THE ENCLOSURE. WHEN INDICATED, TOGGLE SWITCHES SHALL BE MOTOR RATED FOR THE APPLICATION.
6. STARTERS SHALL BE FULL VOLTAGE, REDUCED VOLTAGE OR COMBINATION DISCONNECT AND STARTER, WITH CONTROL VOLTAGE AS REQUIRED, AS INDICATED ON THE DOCUMENTS RELATED TO THE EQUIPMENT, SUCH AS SHOP DRAWINGS, CONSTRUCTION DOCUMENTS, ETC. STARTERS SHALL INCLUDE MOTOR OVERLOAD PROTECTION, PHASE LOSS AND PHASE UNBALANCE PROTECTION AS REQUIRED.
7. ALL TERMINATIONS AND ENCLOSURES SHALL BE RATED FOR USE WITH 75 DEGREE C CONDUCTORS.
8. COMPLETE INSTALLATION SHALL CONFORM TO THE REQUIREMENTS OF NEC (OR CEC WHERE ADOPTED) ARTICLES 430 AND 440.
9. CONTRACTOR TO COORDINATE WITH ALL OTHER PROJECT TRADES AND WITH OWNER/ TENANT FOR TO OBTAIN RESPECTIVE EQUIPMENT SCCR AND PROVIDE APPROPRIATE PROTECTIVE DEVICES TO LIMIT AVAILABLE FAULT CURRENT TO LESS THAN THE EQUIPMENT NAMEPLATE SCCR PER NEC (OR CEC WHERE ADOPTED) 110.10. SEE POWER SYSTEM STUDY SPECIFICATIONS FOR ADDITIONAL REQUIREMENTS.
10. UNLESS OTHERWISE NOTED, MOCP VALUES FOR VFD-EQUIPPED DEVICE ARE SIZED PER NEC (OR CEC WHERE ADOPTED) 430.130(A).1. CONTRACTOR SHALL COORDINATE WITH ALL OTHER PROJECT TRADES AND WITH OWNER/ TENANT (IF PROVIDING EQUIPMENT ON PROJECT) TO OBTAIN NAMEPLATE VFD-EQUIPPED DEVICE MOCP VALUE FROM MANUFACTURER INSTALLATION INSTRUCTIONS AND PROVIDE APPROPRIATE PROTECTIVE DEVICES TO COMPLY WITH NEC (OR CEC WHERE ADOPTED) 430.130(A).2.

PLAN NOTES:

1. REFER TO MOTORIZED EQUIPMENT SCHEDULE FOR MOTOR FEEDER/BRANCH CIRCUIT INFORMATION.
2. PROVIDE 3/4" C.O.(S) TO RESPECTIVE CONTROL DEVICE(S) FOR CONTROL WIRING. REFER TO THE EQUIPMENT CONTROL WIRING DIAGRAMS FOR ADDITIONAL INFORMATION.
3. INDOOR UNIT POWERED BY OUTDOOR UNIT. REFER TO MECHANICAL DRAWINGS FOR ADDITIONAL INFORMATION.

POWER PLAN GENERAL NOTES:

1. ALL RECEPTACLES ON COMMON WALLS SHALL BE SEPARATE BOXES AND OFFSET 24-INCHES MINIMUM.
2. ALL PENETRATIONS THROUGH FIRE RATED WALLS SHALL BE PROTECTED FROM THE SPREAD OF FIRE WITH AN APPROVED FIRESTOP SYSTEM EQUAL OR GREATER THAN THE FIRE RATING OF THE WALL.
3. ALL WALL-MOUNTED DEVICE HEIGHTS SHALL BE VERIFIED WITH THE ARCHITECT PRIOR TO ROUGH-IN.
4. ALL FURNITURE FEED LOCATIONS TO BE VERIFIED WITH ARCHITECT AND FURNITURE VENDOR PRIOR TO ROUGH-IN.
5. ALL FURNITURE WHIPS SHALL BE TRIMMED TO REDUCE EXCESS WHIP LENGTH.
6. WHEN EXPOSED CEILINGS OR OPEN GRID CONDITIONS OCCUR, THE CONTRACTOR WILL NEED TO PROVIDE THE FOLLOWING ITEMS:
   a. ALL BRANCH CIRCUITS SHALL BE EMT.
   b. ALL BRANCH CIRCUITS SHALL BE ROUTED ORTHOGONALLY, NEATLY TRAINED, IN PARALLEL TO STRUCTURES OR DUCTWORK. THE TERM "TRAINED" MEANS ALL PARALLEL CONDUITS SHALL MAINTAIN THE SAME SPATIAL RELATIONSHIP WITH EACH OTHER FOR ENTIRE RUN TO INCLUDE RADIUS BENDS AND SWEEPS.
   c. VISUALLY OBJECTIONABLE BRANCH CIRCUITS WILL BE REROUTED AT THE REQUEST OF THE ARCHITECT AT NO ADDITIONAL COST.
7. EXPOSED CABLE/CONDUCTORS INSTALLED IN A PLENUM SPACE SHALL CONFORM TO NEC, OR CEC WHERE ADOPTED, ARTICLE 300.22(C).
8. PROVIDE G.F.C.I. TYPE RECEPTACLE(S) OR RECEPTACLE(S) PROTECTED BY A GFCI CIRCUIT BREAKER(S) WHEN RECEPTACLES ARE 50A OR LESS, 150V TO GROUND OR LESS AND ARE LOCATED WITHIN 6-FEET OF ANY SINK OR THERAPEUTIC TUB, LAUNDRY AREA, SERVING ANY DRINKING FOUNTAIN OR VENDING MACHINE, WITHIN ANY KITCHEN SPACE, LOCKER ROOM AREA, GARAGE AND BATHROOM SPACE AND/OR LOCATED OUTDOORS. WHERE RECEPTACLES ARE NOT READILY ACCESSIBLE, PROVIDE GFCI CIRCUIT BREAKER(S) TO PROTECT THE RESPECTIVE BRANCH CIRCUIT AND PROVIDE ADDITIONAL NEUTRAL CONDUCTORS IN THE BRANCH CIRCUITING AS REQUIRED TO ENSURE PROPER GFCI FUNCTION.
9. PROVIDE OCCUPANCY SENSOR/LIGHTING CONTROL SYSTEM CONTROLLED RECEPTACLE RELAY(S) AS REQUIRED TO SWITCH CONTROLLED RECEPTACLES. CONNECT BRANCH CIRCUITRY AND CONTROL WIRING AS REQUIRED TO ALLOW OCCUPANCY SENSOR/LIGHTING CONTROL SYSTEM RELAY TO SWITCH STANDALONE AND/OR SYSTEMS FURNITURE CONTROLLED RECEPTACLES AS INDICATED ON PLANS. PROVIDE ADDITIONAL CONDUIT, WIRING AND PATHWAYS NECESSARY TO CONNECT BRANCH CIRCUITRY AND CONTROL WIRING TO REMOTE RELAYS TO INCLUDE RELAY(S) LOCATED ON ALTERNATE FLOORS, IN ELECTRICAL ROOMS, ETC.
10. PROVIDE ADDITIONAL J-BOX NEAR PANEL FOR MULTIPLE HOMERUN CIRCUITRY.
11. UNLESS SPECIFICALLY SHOWN AS (E), (R), (ER), (D), EXISTING OR NON-BOLD, ALL ELECTRICAL DEVICES SHOWN ARE NEW.

COMMUNICATIONS PATHWAYS GENERAL NOTES:

1. CONDUITS SHALL (a) CONTAIN NO CONTINUOUS SECTIONS LONGER THAN 30M (98 FT.), AND (b) CONTAIN NO MORE THAN (2) 90° BENDS OR (1) REVERSE BEND WITHOUT INSTALLING A PULL BOX. SPLIT CONDUITS IN PLACE OF PULL BOXES ARE UNACCEPTABLE.
2. CONDUITS SHALL CONTAIN PLASTIC OR NYLON PULL TAPE RATED AT 200 LBS. WITH A MINIMUM OF 5 FEET OF EXTRA PULL TAPE COILED AT EACH END.
3. CONDUIT BEND RADIUS SHALL BE (a) A MINIMUM OF 6 TIMES THE INTERNAL CONDUIT DIAMETER FOR CONDUITS 2-INCHES IN DIAMETER OR LESS, AND (b) 10 TIMES THE INTERNAL CONDUIT DIAMETER FOR CONDUITS MORE THAN 2-INCHES IN DIAMETER.
4. TERMINATE CONDUIT STUBS AND SLEEVES THAT PROTRUDE THROUGH STRUCTURAL FLOORS 2-INCHES TO 3-INCHES ABOVE THE FLOOR SURFACE.
5. INSTALL BUSHINGS OR BELL ENDS AS REQUIRED ON ALL CONDUITS.
6. FLEX CONDUIT IS UNACCEPTABLE FOR USE AS A COMMUNICATIONS CONDUIT EXCEPT AT SEISMIC JOINTS AND/OR IF APPROVED IN WRITING BY THE ENGINEER.
7. ALL UNDER SLAB OR IN-SLAB CONDUITS SHALL BE INSTALLED IN A MANNER THAT PREVENTS WATER INFILTRATION OF THE CONDUIT. IT IS THE CONTRACTOR'S RESPONSIBILITY TO ENSURE GROUND WATER, RAIN WATER OR CONSTRUCTION WATER IS PREVENTED FROM ENTERING AND/OR REMOVED FROM THE CONDUITS PRIOR TO PLACEMENT OF COMMUNICATIONS CABLES. SEE ELECTRICAL SPECIFICATIONS, DETAILS AND PLANS FOR ADDITIONAL CONDUIT SEALING REQUIREMENTS.
8. ALL PULL BOXES SHALL BE SIZED AND INSTALLED PER ANSI-TIA-569-C. PULL BOXES FOR IN-UNDER SLAB CONDUIT RUNS ARE NOT PERMITTED UNLESS OTHERWISE NOTED. PULL BOXES FOR OVERHEAD CONDUIT RUNS SHALL BE LOCATED ABOVE ACCESSIBLE CEILINGS WITHIN THE ACCESSIBLE CEILING SPACE AND SUPPORTED INDEPENDENTLY FROM THE STRUCTURE AND CONDUIT SUPPORTS. PULL BOXES FOR ROOF MOUNTED OR EXTERIOR ABOVE GRADE APPLICATIONS SHALL BE NEMA 3R RATED. PULL BOXES SHALL BE SIZED ACCORDING TO THE FOLLOWING:

CONDUIT SIZE	WIDTH	LENGTH	DEPTH	WIDTH INCREASE PER ADDITIONAL CONDUIT
1"	4"	16"	3"	2"
2"	8"	36"	4"	5"
3"	12"	48"	5"	6"
4"	15"	60"	8"	8"

FOR OTHER CONDUIT SIZES REFER TO ANSI/TIA-569-C TABLE 12. - LATEST PUBLISHED EDITION.

9. CONDUIT(S) SHALL EXIT A PULL BOX ON THE WALL OPPOSITE THE WALL ENTERED.
10. PROVIDE LABELING OF EACH CONDUIT PER GENERAL ELECTRICAL SPECIFICATIONS.
11. PROVIDE INTERNAL/EXTERNAL GAS AND WATER TIGHT MECHANICAL SEALING/PLUGGING OF EACH BUILDING ENTRY CONDUIT AS SPECIFIED ELSEWHERE IN THE DRAWINGS AND SPECIFICATIONS.

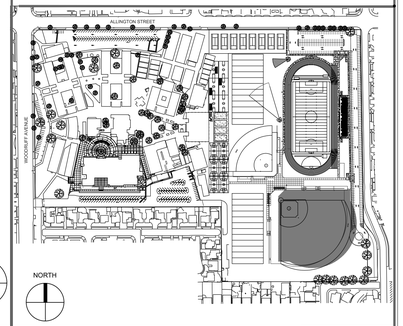

KEYMAP

0' 2' 4' 8' 16' 32'

NORTH

BASEBALL ELECTRICAL PLAN SCALE: 1/8"=1'-0" 1

STATE:

IDENTIFICATION STAMP
DIV. OF THE STATE ARCHITECT
APP: 03-124281 INC:
REVIEWED FOR
SS ☑ FLS ☑ ACS ☑
DATE: 02/04/2025

ARCHITECT:

architecture
westbergwhite
7700 IRVINE CENTER DR. STE. 100
IRVINE, CA 92618
(714) 508-1780 (714) 508-1780 FAX

CONSULTANT:

tk1sc
COLLABORATIVE
11870 Pierce Street, Suite 160
Riverside, California 92505
951.299.4160 www.tk1sc.com
Project Leader - Bill Voller
Electrical Lead - Bill Voller
tk1sc Job #: US0027568.7397

REGISTERED PROFESSIONAL ENGINEER
RAYMOND W. SWANSON
No. E15610
Ex. 12/31/2025
ELECTRICAL
STATE OF CALIFORNIA

PROJECT NAME:

Bellflower Unified School District
Mayfair High School Athletics Fields
6000 North Woodruff Ave
Lakewood, California 90713

CLIENT:

BELLFLOWER UNIFIED SCHOOL DISTRICT
16703 S. Clark Ave.
BELLFLOWER, CALIFORNIA 90706

Δ	Rev. Date	Description

JOB NO: 15008.01
DATE: 05/28/2024
DRAWN: TG, XY
CHECK: RB, JG
ARCHITECT: PDW
ENGINEER:

SHEET DESCRIPTION:
BASEBALL ELECTRICAL PLAN

SHEET NO:
E102

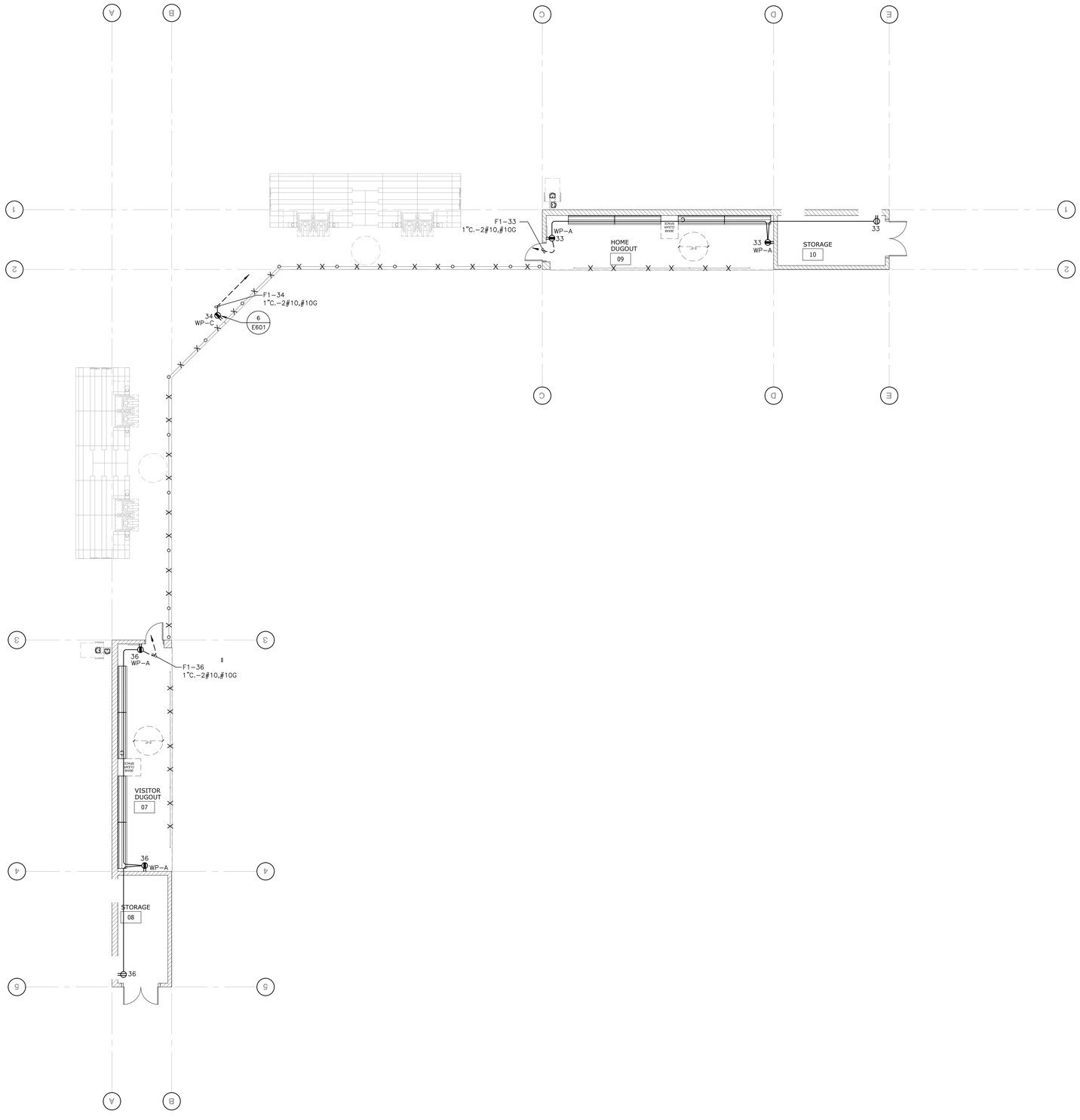

POWER PLAN GENERAL NOTES:

1. ALL RECEPTACLES ON COMMON WALLS SHALL BE SEPARATE BOXES AND OFFSET 24-INCHES MINIMUM.
2. ALL PENETRATIONS THROUGH FIRE RATED WALLS SHALL BE PROTECTED FROM THE SPREAD OF FIRE WITH AN APPROVED FIRESTOP SYSTEM EQUAL OR GREATER THAN THE FIRE RATING OF THE WALL.
3. ALL WALL-MOUNTED DEVICE HEIGHTS SHALL BE VERIFIED WITH THE ARCHITECT PRIOR TO ROUGH-IN.
4. ALL FURNITURE FEED LOCATIONS TO BE VERIFIED WITH ARCHITECT AND FURNITURE VENDOR PRIOR TO ROUGH-IN.
5. ALL FURNITURE WHIPS SHALL BE TRIMMED TO REDUCE EXCESS WHIP LENGTH.
6. WHEN EXPOSED CEILINGS OR OPEN GRID CONDITIONS OCCUR, THE CONTRACTOR WILL NEED TO PROVIDE THE FOLLOWING ITEMS:
   a. ALL BRANCH CIRCUITS SHALL BE EMT.
   b. ALL BRANCH CIRCUITS SHALL BE ROUTED ORTHOGONALLY, NEATLY TRAINED, IN PARALLEL TO STRUCTURES OR DUCTWORK. THE TERM "TRAINED" MEANS ALL PARALLEL CONDUITS SHALL MAINTAIN THE SAME SPATIAL RELATIONSHIP WITH EACH OTHER FOR ENTIRE RUN TO INCLUDE RADIUS BENDS AND SWEEPS.
   c. VISUALLY OBJECTIONABLE BRANCH CIRCUITS WILL BE REROUTED AT THE REQUEST OF THE ARCHITECT AT NO ADDITIONAL COST.
7. EXPOSED CABLE/CONDUCTORS INSTALLED IN A PLENUM SPACE SHALL CONFORM TO NEC, OR CEC WHERE ADOPTED, ARTICLE 300.22(C).
8. PROVIDE G.F.C.I. TYPE RECEPTACLE(S) OR RECEPTACLE(S) PROTECTED BY A GFCI CIRCUIT BREAKER(S) WHEN RECEPTACLES ARE 50A OR LESS, 150V TO GROUND OR LESS AND ARE LOCATED WITHIN 6-FEET OF ANY SINK OR THERAPEUTIC TUB, LAUNDRY AREA, SERVING ANY DRINKING FOUNTAIN OR VENDING MACHINE, WITHIN ANY KITCHEN SPACE, LOCKER ROOM AREA, GARAGE AND BATHROOM SPACE AND/OR LOCATED OUTDOORS. WHERE RECEPTACLES ARE NOT READILY ACCESSIBLE, PROVIDE GFCI CIRCUIT BREAKER(S) TO PROTECT THE RESPECTIVE BRANCH CIRCUIT AND PROVIDE ADDITIONAL NEUTRAL CONDUCTORS IN THE BRANCH CIRCUITING AS REQUIRED TO ENSURE PROPER GFCI FUNCTION.
9. PROVIDE OCCUPANCY SENSOR/LIGHTING CONTROL SYSTEM CONTROLLED RECEPTACLE RELAY(S) AS REQUIRED TO SWITCH CONTROLLED RECEPTACLES. CONNECT BRANCH CIRCUITRY AND CONTROL WIRING AS REQUIRED TO ALLOW OCCUPANCY SENSOR/LIGHTING CONTROL SYSTEM RELAY TO SWITCH STANDALONE AND/OR SYSTEMS FURNITURE CONTROLLED RECEPTACLES AS INDICATED ON PLANS. PROVIDE ADDITIONAL CONDUIT, WIRING AND PATHWAYS NECESSARY TO CONNECT BRANCH CIRCUITRY AND CONTROL WIRING TO REMOTE RELAYS TO INCLUDE RELAY(S) LOCATED ON ALTERNATE FLOORS, IN ELECTRICAL ROOMS, ETC.
10. PROVIDE ADDITIONAL J-BOX NEAR PANEL FOR MULTIPLE HOMERUN CIRCUITRY.
11. UNLESS SPECIFICALLY SHOWN AS (E), (R), (ER), (D), EXISTING OR NON-BOLD, ALL ELECTRICAL DEVICES SHOWN ARE NEW.

COMMUNICATIONS PATHWAYS GENERAL NOTES:

1. CONDUITS SHALL (a) CONTAIN NO CONTINUOUS SECTIONS LONGER THAN 30M (98 FT.), AND (b) CONTAIN NO MORE THAN (2) 90° BENDS OR (1) REVERSE BEND WITHOUT INSTALLING A PULL BOX. SPLIT CONDUITS IN PLACE OF PULL BOXES ARE UNACCEPTABLE.
2. CONDUITS SHALL CONTAIN PLASTIC OR NYLON PULL TAPE RATED AT 200 LBS. WITH A MINIMUM OF 5 FEET OF EXTRA PULL TAPE COILED AT EACH END.
3. CONDUIT BEND RADIUS SHALL BE (a) A MINIMUM OF 6 TIMES THE INTERNAL CONDUIT DIAMETER FOR CONDUITS 2-INCHES IN DIAMETER OR LESS, AND (b) 10 TIMES THE INTERNAL CONDUIT DIAMETER FOR CONDUITS MORE THAN 2-INCHES IN DIAMETER.
4. TERMINATE CONDUIT STUBS AND SLEEVES THAT PROTRUDE THROUGH STRUCTURAL FLOORS 2-INCHES TO 3-INCHES ABOVE THE FLOOR SURFACE.
5. INSTALL BUSHINGS OR BELL ENDS AS REQUIRED ON ALL CONDUITS.
6. FLEX CONDUIT IS UNACCEPTABLE FOR USE AS A COMMUNICATIONS CONDUIT EXCEPT AT SEISMIC JOINTS AND/OR IF APPROVED IN WRITING BY THE ENGINEER.
7. ALL UNDER SLAB OR IN-SLAB CONDUITS SHALL BE INSTALLED IN A MANNER THAT PREVENTS WATER INFILTRATION OF THE CONDUIT. IT IS THE CONTRACTOR'S RESPONSIBILITY TO ENSURE GROUND WATER, RAIN WATER OR CONSTRUCTION WATER IS PREVENTED FROM ENTERING AND/OR REMOVED FROM THE CONDUITS PRIOR TO PLACEMENT OF COMMUNICATIONS CABLES. SEE ELECTRICAL SPECIFICATIONS, DETAILS AND PLANS FOR ADDITIONAL CONDUIT SEALING REQUIREMENTS.
8. ALL PULL BOXES SHALL BE SIZED AND INSTALLED PER ANSI-TIA-569-C. PULL BOXES FOR IN/UNDER SLAB CONDUIT RUNS ARE NOT PERMITTED UNLESS OTHERWISE NOTED. PULL BOXES FOR OVERHEAD CONDUIT RUNS SHALL BE LOCATED ABOVE ACCESSIBLE CEILINGS WITHIN THE ACCESSIBLE CEILING SPACE AND SUPPORTED INDEPENDENTLY FROM THE STRUCTURE AND CONDUIT SUPPORTS. PULL BOXES FOR ROOF MOUNTED OR EXTERIOR ABOVE GRADE APPLICATIONS SHALL BE NEMA 3R RATED. PULL BOXES SHALL BE SIZED ACCORDING TO THE FOLLOWING:

CONDUIT SIZE	WIDTH	LENGTH	DEPTH	WIDTH INCREASE PER ADDITIONAL CONDUIT
1"	4"	16"	3"	2"
2"	8"	36"	4"	5"
3"	12"	48"	5"	6"
4"	15"	60"	8"	8"

   FOR OTHER CONDUIT SIZES REFER TO ANSI/TIA-569-C TABLE 12. - LATEST PUBLISHED EDITION.
9. CONDUIT(S) SHALL EXIT A PULL BOX ON THE WALL OPPOSITE THE WALL ENTERED.
10. PROVIDE LABELING OF EACH CONDUIT PER GENERAL ELECTRICAL SPECIFICATIONS.
11. PROVIDE INTERNAL/EXTERNAL GAS AND WATER TIGHT MECHANICAL SEALING/PLUGGING OF EACH BUILDING ENTRY CONDUIT AS SPECIFIED ELSEWHERE IN THE DRAWINGS AND SPECIFICATIONS.

0' 2' 4' 8' 16' 32'

NORTH

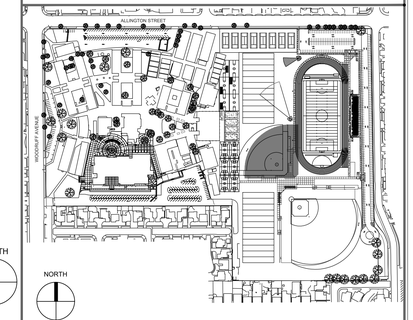

KEYMAP

SOFTBALL ELECTRICAL PLAN SCALE: 1/8"=1'-0" 1

STATE:

IDENTIFICATION STAMP
DIV. OF THE STATE ARCHITECT
APP: 03-124281 INC:
REVIEWED FOR
SS ☑ FLS ☑ ACS ☑
DATE: 02/04/2025

ARCHITECT:

architecture
westbergwhite
7700 IRVINE CENTER DR. STE. 100
IRVINE, CA 92618
(714) 508-1780 (714) 508-1780 FAX

CONSULTANT:

tk1sc
COLLABORATIVE
11870 Pierce Street, Suite 160
Riverside, California 92505
951.299.4160 www.tk1sc.com
Project Leader - Bill Voller
Electrical Lead - Bill Voller
tk1sc Job #: US0027568.7397

REGISTERED PROFESSIONAL ENGINEER
RAYMOND W. SWANSON
No. E15610
Ex. 12/31/2025
ELECTRICAL
STATE OF CALIFORNIA

PROJECT NAME:

Bellflower Unified School District
Mayfair High School Athletics Fields
6000 North Woodruff Ave
Lakewood, California 90713

CLIENT:

BELLFLOWER UNIFIED SCHOOL DISTRICT
16703 S. Clark Ave,
BELLFLOWER, CALIFORNIA 90706

Rev.	Date	Description

JOB NO: 15008.01
DATE: 05/28/2024
DRAWN: TG, XY
CHECK: RB, JG
ARCHITECT: PDW
ENGINEER:

SHEET DESCRIPTION:
SOFTBALL ELECTRICAL PLAN

SHEET NO:
E103

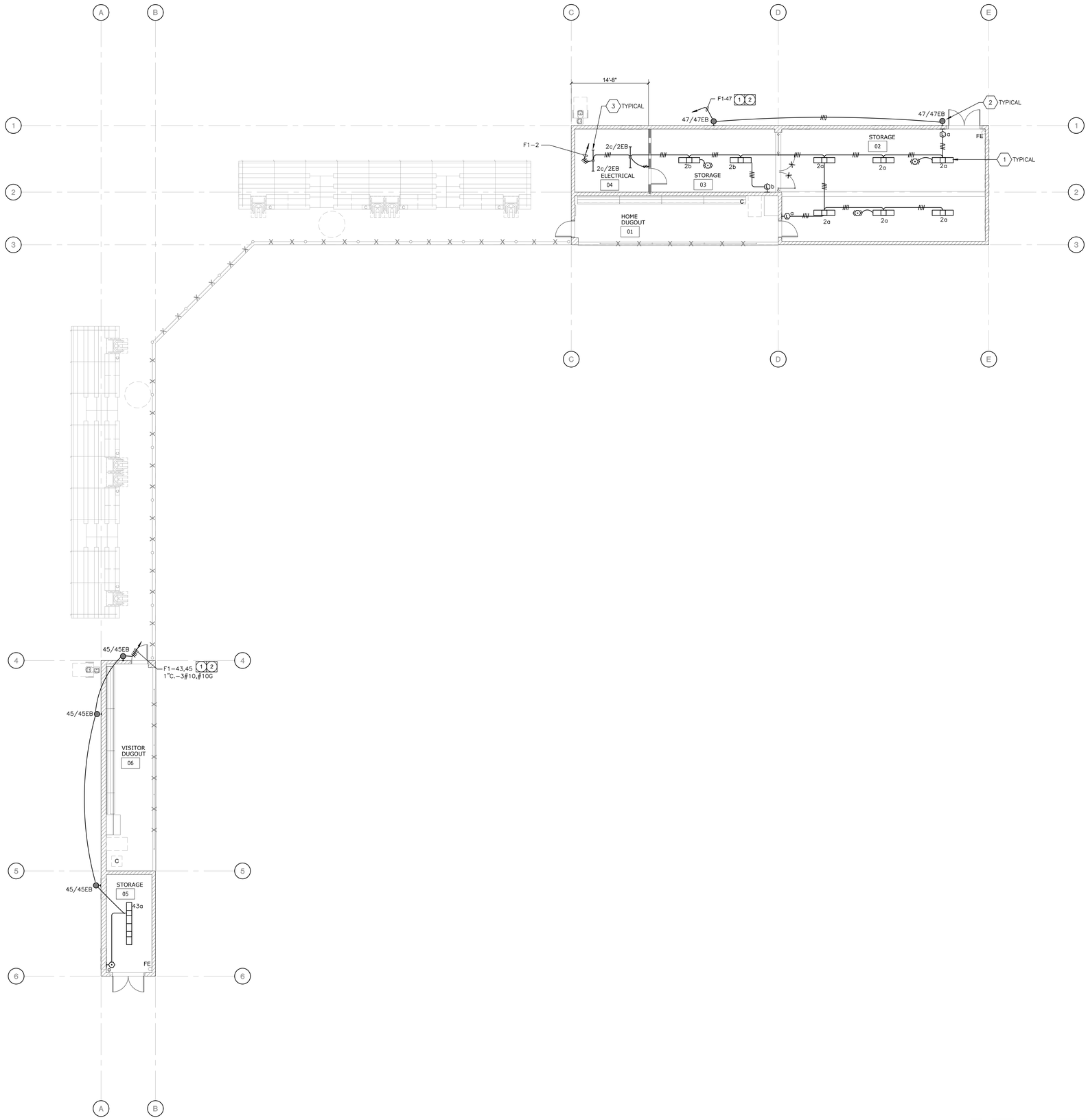

PLAN NOTES:

1. PROVIDE RELAY AS REQUIRED FOR CONTROL OF EXTERIOR LIGHTING BY PHOTOCELL ON/TIMECLOCK OFF. MOUNT RELAY IN SEPARATE BARRIERED COMPARTMENT OF PANELBOARD.
2. PROVIDE AN ADDITIONAL UNSWITCHED HOT WIRE FOR EMERGENCY LIGHTING.

LIGHTING PLAN GENERAL NOTES:

1. REFER TO ARCHITECTURAL PLANS FOR EXACT LOCATION AND ELEVATION OF ALL LIGHTING FIXTURES AND ALL DEVICES. ALL WALL-MOUNTED DEVICE HEIGHTS SHALL BE VERIFIED WITH THE ARCHITECT PRIOR TO ROUGH-IN.
2. VERIFY EXACT CEILING CONSTRUCTION WITH ARCHITECTURAL REFLECTED CEILING PLAN AND SPECS. PROVIDE LIGHTING FIXTURES WITH ALL NECESSARY MOUNTING HARDWARE.
3. ALL RECESSED FIXTURES SHALL BE PROVIDED WITH ALL STRUCTURAL SUPPORTS AS REQUIRED BY THE IBC, OR CBC WHERE ADOPTED, IN ADDITION TO ANY LOCAL CODES.
4. ALL PERIMETER AND COVE LIGHTING SHALL EXTEND THE FULL LENGTH OF THE WALLS OR COVE. CONTRACTOR TO FIELD MEASURE COVE LENGTH AND ORDER QUANTITY OF FIXTURES AS REQUIRED.
5. ALL LINE VOLTAGE DIMMING BRANCH CIRCUITS SHALL BE PROVIDED WITH A DEDICATED NEUTRAL CONDUCTOR FOR EACH ZONE/CHANNEL.
6. RECESSED FIXTURES LOCATED IN A FIRE-RATED CEILING OR WALL SHALL BE PROVIDED WITH A 5-SIDED, RATED ENCLOSURE SO CONSTRUCTED AS TO ALLOW CODE AND MANUFACTURER-REQUIRED CLEARANCES BETWEEN THE FIXTURE AND THE ENCLOSURE.
7. REFER TO ARCHITECTURAL REFLECTED CEILING PLANS FOR EXIT SIGN CHEVRONS AND NUMBER OF FACES PER EXIT SIGN. ANY DISCREPANCIES BETWEEN EXIT SIGNS SHOWN ON THE ELECTRICAL AND ARCHITECTURAL PLANS SHALL BE BROUGHT TO THE ATTENTION OF THE ARCHITECT PRIOR TO ORDERING EXIT SIGNS.
8. WHEN EXPOSED CEILINGS OR OPEN GRID CONDITIONS OCCUR, THE CONTRACTOR WILL NEED TO PROVIDE THE FOLLOWING ITEMS:
   a. ALL BRANCH CIRCUITS SHALL BE EMT.
   b. ALL BRANCH CIRCUITS SHALL BE ROUTED ORTHOGONALLY, NEATLY TRAINED, IN PARALLEL TO STRUCTURES OR DUCTWORK. THE TERM "TRAINED" MEANS ALL PARALLEL CONDUITS SHALL MAINTAIN THE SAME SPATIAL RELATIONSHIP WITH EACH OTHER FOR ENTIRE RUN TO INCLUDE RADIUS BENDS AND SWEEPS.
   c. VISUALLY OBJECTIONABLE BRANCH CIRCUITS WILL BE REROUTED AT THE REQUEST OF THE ARCHITECT AT NO ADDITIONAL COST.
9. ALL LED REMOTE INDICATORS FOR DUCT DETECTORS AND FIRE/SMOKE DAMPERS REQUIRED BY THE LOCAL AHJ SHALL BE LOCATED IN CEILINGS IN COORDINATION WITH ARCHITECT PRIOR TO ANY ROUGH-IN.
10. PROVIDE ADDITIONAL J-BOX NEAR PANEL FOR MULTIPLE HOMERUN CIRCUITRY.
11. UNLESS SPECIFICALLY SHOWN AS (E), (R), (ER), (D), EXISTING OR NON-BOLD, ALL ELECTRICAL DEVICES SHOWN ARE NEW.
12. REFER TO GENERAL POWER PLAN NOTES AND COMMUNICATIONS PATHWAYS GENERAL NOTE FOR ADDITIONAL REQUIREMENTS WHEN POWER AND/OR DATA DEVICES ARE SHOWN ON THIS PLAN.
13. ALL PENETRATIONS THROUGH FIRE RATED WALLS SHALL BE PROTECTED FROM THE SPREAD OF FIRE WITH AN APPROVED FIRESTOP SYSTEM EQUAL OR GREATER THAN THE FIRE RATING OF THE WALL.

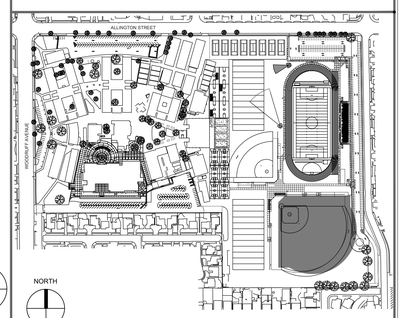

0' 2' 4' 8' 16' 32'

NORTH

BASEBALL LIGHTING PLAN SCALE: 1/8"=1'-0" 1

KEYMAP

STATE:

IDENTIFICATION STAMP
DIV. OF THE STATE ARCHITECT
APP: 03-124281 INC:
REVIEWED FOR
SS ☑ FLS ☑ ACS ☑
DATE: 02/04/2025

ARCHITECT:

architecture westbergwhite
7700 IRVINE CENTER DR. STE. 100
IRVINE, CA 92618
(714) 508-1780 (714) 508-1780 FAX

CONSULTANT:

tk1sc COLLABORATIVE
11870 Pierce Street, Suite 160
Riverside, California 92505
951.299.4160 www.tk1sc.com
Project Leader - Bill Voller
Electrical Lead - Bill Voller
tk1sc Job #: US0027568.7397

REGISTERED PROFESSIONAL ENGINEER
RAYMOND W. SWANSON
No. E15610
Ex. 12/31/2025
ELECTRICAL
STATE OF CALIFORNIA

PROJECT NAME:

Bellflower Unified School District
Mayfair High School Athletics Fields
6000 North Woodruff Ave
Lakewood, California 90713

CLIENT:

BELLFLOWER UNIFIED SCHOOL DISTRICT
16703 S. Clark Ave.
BELLFLOWER, CALIFORNIA 90706

#	Rev. Date	Description

JOB NO:	15008.01
DATE:	05/28/2024
DRAWN:	TG, XY
CHECK:	RB, JG
ARCHITECT:	PDW
ENGINEER:	

SHEET DESCRIPTION:
BASEBALL LIGHTING PLAN

SHEET NO:
E201

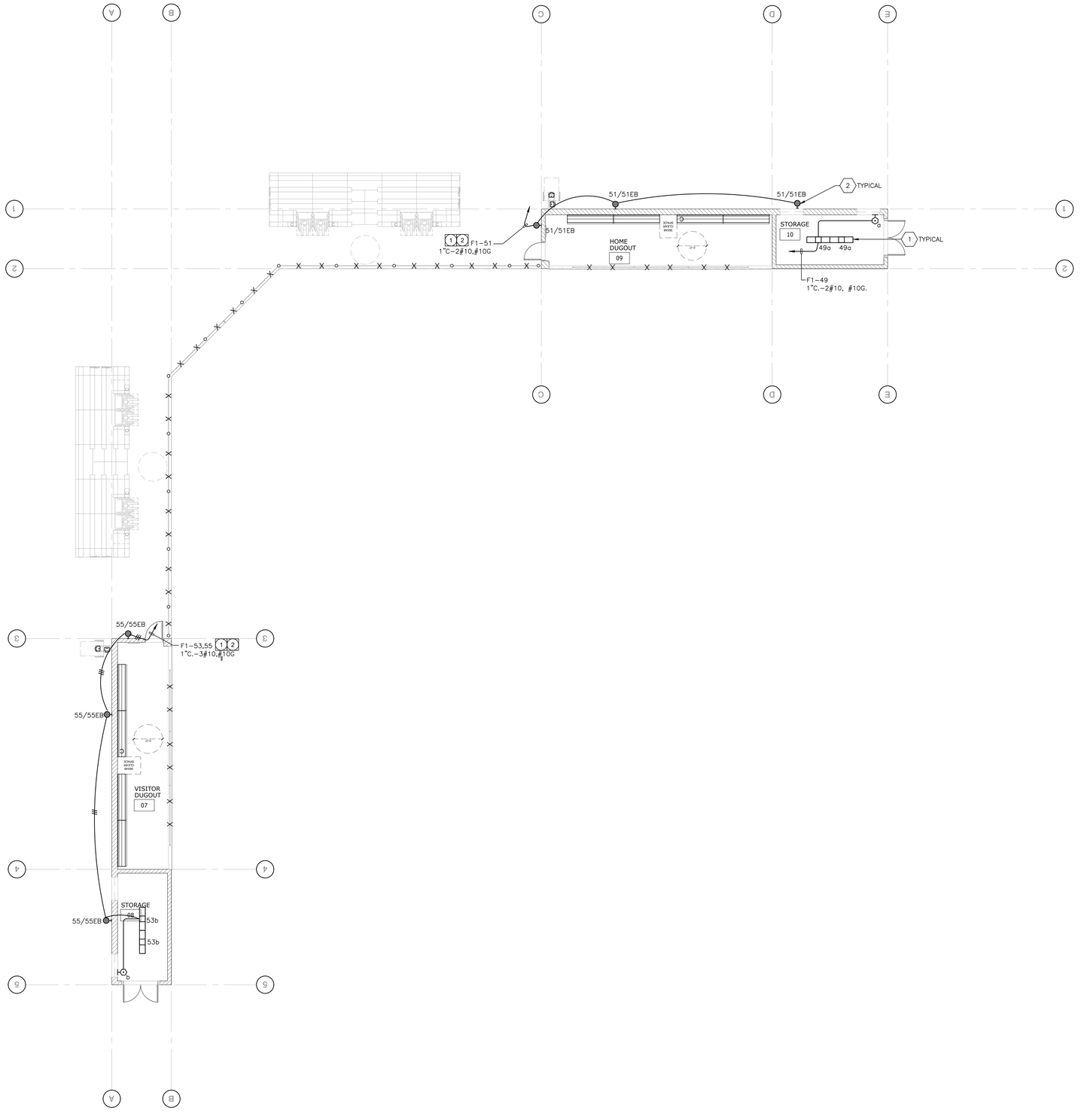

PLAN NOTES:

1. PROVIDE RELAY AS REQUIRED FOR CONTROL OF EXTERIOR LIGHTING BY PHOTOCELL ON/TIMECLOCK OFF. MOUNT RELAY IN SEPARATE BARRIERED COMPARTMENT OF PANELBOARD.
2. PROVIDE AN ADDITIONAL UNSWITCHED HOT WIRE FOR EMERGENCY LIGHTING.

LIGHTING PLAN GENERAL NOTES:

1. REFER TO ARCHITECTURAL PLANS FOR EXACT LOCATION AND ELEVATION OF ALL LIGHTING FIXTURES AND ALL DEVICES. ALL WALL-MOUNTED DEVICE HEIGHTS SHALL BE VERIFIED WITH THE ARCHITECT PRIOR TO ROUGH-IN.
2. VERIFY EXACT CEILING CONSTRUCTION WITH ARCHITECTURAL REFLECTED CEILING PLAN AND SPECS. PROVIDE LIGHTING FIXTURES WITH ALL NECESSARY MOUNTING HARDWARE.
3. ALL RECESSED FIXTURES SHALL BE PROVIDED WITH ALL STRUCTURAL SUPPORTS AS REQUIRED BY THE IBC, OR CBC WHERE ADOPTED, IN ADDITION TO ANY LOCAL CODES.
4. ALL PERIMETER AND COVE LIGHTING SHALL EXTEND THE FULL LENGTH OF THE WALLS OR COVE. CONTRACTOR TO FIELD MEASURE COVE LENGTH AND ORDER QUANTITY OF FIXTURES AS REQUIRED.
5. ALL LINE VOLTAGE DIMMING BRANCH CIRCUITS SHALL BE PROVIDED WITH A DEDICATED NEUTRAL CONDUCTOR FOR EACH ZONE/CHANNEL.
6. RECESSED FIXTURES LOCATED IN A FIRE-RATED CEILING OR WALL SHALL BE PROVIDED WITH A 5-SIDED, RATED ENCLOSURE SO CONSTRUCTED AS TO ALLOW CODE AND MANUFACTURER-REQUIRED CLEARANCES BETWEEN THE FIXTURE AND THE ENCLOSURE.
7. REFER TO ARCHITECTURAL REFLECTED CEILING PLANS FOR EXIT SIGN CHEVRONS AND NUMBER OF FACES PER EXIT SIGN. ANY DISCREPANCIES BETWEEN EXIT SIGNS SHOWN ON THE ELECTRICAL AND ARCHITECTURAL PLANS SHALL BE BROUGHT TO THE ATTENTION OF THE ARCHITECT PRIOR TO ORDERING EXIT SIGNS.
8. WHEN EXPOSED CEILINGS OR OPEN GRID CONDITIONS OCCUR, THE CONTRACTOR WILL NEED TO PROVIDE THE FOLLOWING ITEMS:
   a. ALL BRANCH CIRCUITS SHALL BE EMT.
   b. ALL BRANCH CIRCUITS SHALL BE ROUTED ORTHOGONALLY, NEATLY TRAINED, IN PARALLEL TO STRUCTURES OR DUCTWORK. THE TERM "TRAINED" MEANS ALL PARALLEL CONDUITS SHALL MAINTAIN THE SAME SPATIAL RELATIONSHIP WITH EACH OTHER FOR ENTIRE RUN TO INCLUDE RADIUS BENDS AND SWEEPS.
   c. VISUALLY OBJECTIONABLE BRANCH CIRCUITS WILL BE REROUTED AT THE REQUEST OF THE ARCHITECT AT NO ADDITIONAL COST.
9. ALL LED REMOTE INDICATORS FOR DUCT DETECTORS AND FIRE/SMOKE DAMPERS REQUIRED BY THE LOCAL AHJ SHALL BE LOCATED IN CEILINGS IN COORDINATION WITH ARCHITECT PRIOR TO ANY ROUGH-IN.
10. PROVIDE ADDITIONAL J-BOX NEAR PANEL FOR MULTIPLE HOMERUN CIRCUITRY.
11. UNLESS SPECIFICALLY SHOWN AS (E), (R), (ER), (D), EXISTING OR NON-BOLD, ALL ELECTRICAL DEVICES SHOWN ARE NEW.
12. REFER TO GENERAL POWER PLAN NOTES AND COMMUNICATIONS PATHWAYS GENERAL NOTE FOR ADDITIONAL REQUIREMENTS WHEN POWER AND/OR DATA DEVICES ARE SHOWN ON THIS PLAN.
13. ALL PENETRATIONS THROUGH FIRE RATED WALLS SHALL BE PROTECTED FROM THE SPREAD OF FIRE WITH AN APPROVED FIRESTOP SYSTEM EQUAL OR GREATER THAN THE FIRE RATING OF THE WALL.

0' 2' 4' 8' 16' 32'

NORTH

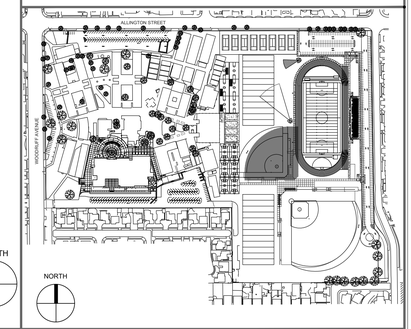

SOFTBALL LIGHTING PLAN SCALE: 1/8"=1'-0" 1 KEYMAP

STATE:

IDENTIFICATION STAMP
DIV. OF THE STATE ARCHITECT
APP: 03-124281 INC:
REVIEWED FOR
SS ☑ FLS ☑ ACS ☑
DATE: 02/04/2025

ARCHITECT:

architecture
westbergwhite
7700 IRVINE CENTER DR. STE. 100
IRVINE, CA 92618
(714) 508-1780 (714) 508-1780 FAX

CONSULTANT:

tk1sc COLLABORATIVE
11870 Pierce Street, Suite 160
Riverside, California 92505
951.299.4160 www.tk1sc.com
Project Leader - Bill Voller
Electrical Lead - Bill Voller
tk1sc Job #: US0027568.7397

REGISTERED PROFESSIONAL ENGINEER
RAYMOND W. SWANSON
No. E15610
Ex. 12/31/2025
ELECTRICAL
STATE OF CALIFORNIA

PROJECT NAME:

Bellflower Unified School District
Mayfair High School Athletics Fields
6000 North Woodruff Ave
Lakewood, California 90713

CLIENT:

BELLFLOWER UNIFIED SCHOOL DISTRICT
16703 S. Clark Ave.
BELLFLOWER, CALIFORNIA 90706

Rev.	Date	Description

JOB NO:	15008.01
DATE:	05/28/2024
DRAWN:	TG, XY
CHECK:	RB, JG
ARCHITECT:	PDW
ENGINEER:	

SHEET DESCRIPTION:
SOFTBALL LIGHTING PLAN

SHEET NO:
E202

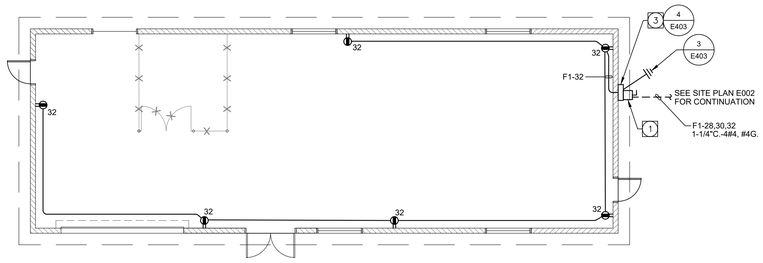

NORTH

STORAGE BUILDING POWER PLAN SCALE: 1/8"=1'-0" 2

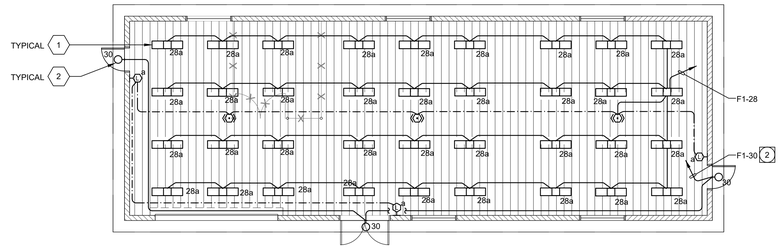

0' 2' 4' 8' 16' 32'

NORTH

STORAGE BUILDING LIGHTING PLAN SCALE: 1/8"=1'-0" 1

PLAN NOTES:

1. PROVIDE A NEMA 3R ENCLOSED 30A, 3-PHASE, 120V DISCONNECT SWITCH MOUNTED TO SIDE OF BUILDING AT 48" A.F.F. MAX TO HIGHEST POINT OF ACTIVATING LEVER FOR BUILDING SHUT-OFF. VERIFY EXACT LOCATION IN FIELD.
2. PROVIDE RELAY AS REQUIRED FOR CONTROL OF EXTERIOR LIGHTING BY PHOTOCELL ON/TIMECLOCK OFF. MOUNT RELAY IN SEPARATE BARRIERED COMPARTMENT OF PANELBOARD.
3. PROVIDE THREE (3) 12"X12"X4"D. JUNCTION BOX WITH SCREW COVER TYPE "3R" FOR ELECTRICAL SIGNAL AND FIRE ALARM SYSTEMS MOUNTED TO SIDE OF BUILDING AS INDICATED. JUNCTION BOXES SHALL BE MOUNTED SIDE-BY-SIDE, NOT STACKED.

POWER PLAN GENERAL NOTES:

1. ALL RECEPTACLES ON COMMON WALLS SHALL BE SEPARATE BOXES AND OFFSET 24-INCHES MINIMUM.
2. ALL PENETRATIONS THROUGH FIRE RATED WALLS SHALL BE PROTECTED FROM THE SPREAD OF FIRE WITH AN APPROVED FIRESTOP SYSTEM EQUAL OR GREATER THAN THE FIRE RATING OF THE WALL.
3. ALL WALL-MOUNTED DEVICE HEIGHTS SHALL BE VERIFIED WITH THE ARCHITECT PRIOR TO ROUGH-IN.
4. ALL FURNITURE FEED LOCATIONS TO BE VERIFIED WITH ARCHITECT AND FURNITURE VENDOR PRIOR TO ROUGH-IN.
5. ALL FURNITURE WHIPS SHALL BE TRIMMED TO REDUCE EXCESS WHIP LENGTH.
6. WHEN EXPOSED CEILINGS OR OPEN GRID CONDITIONS OCCUR, THE CONTRACTOR WILL NEED TO PROVIDE THE FOLLOWING ITEMS:
   a. ALL BRANCH CIRCUITS SHALL BE EMT.
   b. ALL BRANCH CIRCUITS SHALL BE ROUTED ORTHOGONALLY, NEATLY TRAINED, IN PARALLEL TO STRUCTURES OR DUCTWORK. THE TERM "TRAINED" MEANS ALL PARALLEL CONDUITS SHALL MAINTAIN THE SAME SPATIAL RELATIONSHIP WITH EACH OTHER FOR ENTIRE RUN TO INCLUDE RADIUS BENDS AND SWEEPS.
   c. VISUALLY OBJECTIONABLE BRANCH CIRCUITS WILL BE REROUTED AT THE REQUEST OF THE ARCHITECT AT NO ADDITIONAL COST.
7. EXPOSED CABLE/CONDUCTORS INSTALLED IN A PLENUM SPACE SHALL CONFORM TO NEC, OR CEC WHERE ADOPTED, ARTICLE 300.22(C).
8. PROVIDE G.F.C.I. TYPE RECEPTACLE(S) OR RECEPTACLE(S) PROTECTED BY A GFCI CIRCUIT BREAKER(S) WHEN RECEPTACLES ARE 50A OR LESS, 150V TO GROUND OR LESS AND ARE LOCATED WITHIN 6-FEET OF ANY SINK OR THERAPEUTIC TUB, LAUNDRY AREA, SERVING ANY DRINKING FOUNTAIN OR VENDING MACHINE, WITHIN ANY KITCHEN SPACE, LOCKER ROOM AREA, GARAGE AND BATHROOM SPACE AND/OR LOCATED OUTDOORS. WHERE RECEPTACLES ARE NOT READILY ACCESSIBLE, PROVIDE GFCI CIRCUIT BREAKER(S) TO PROTECT THE RESPECTIVE BRANCH CIRCUIT AND PROVIDE ADDITIONAL NEUTRAL CONDUCTORS IN THE BRANCH CIRCUITING AS REQUIRED TO ENSURE PROPER GFCI FUNCTION.
9. PROVIDE OCCUPANCY SENSOR/LIGHTING CONTROL SYSTEM CONTROLLED RECEPTACLE RELAY(S) AS REQUIRED TO SWITCH CONTROLLED RECEPTACLES. CONNECT BRANCH CIRCUITRY AND CONTROL WIRING AS REQUIRED TO ALLOW OCCUPANCY SENSOR/LIGHTING CONTROL SYSTEM RELAY TO SWITCH STANDALONE AND/OR SYSTEMS FURNITURE CONTROLLED RECEPTACLES AS INDICATED ON PLANS. PROVIDE ADDITIONAL CONDUIT, WIRING AND PATHWAYS NECESSARY TO CONNECT BRANCH CIRCUITRY AND CONTROL WIRING TO REMOTE RELAYS TO INCLUDE RELAY(S) LOCATED ON ALTERNATE FLOORS, IN ELECTRICAL ROOMS, ETC.
10. PROVIDE ADDITIONAL J-BOX NEAR PANEL FOR MULTIPLE HOMERUN CIRCUITRY.
11. UNLESS SPECIFICALLY SHOWN AS (E), (R), (ER), (D), EXISTING OR NON-BOLD, ALL ELECTRICAL DEVICES SHOWN ARE NEW.

LIGHTING PLAN GENERAL NOTES:

1. REFER TO ARCHITECTURAL PLANS FOR EXACT LOCATION AND ELEVATION OF ALL LIGHTING FIXTURES AND ALL DEVICES. ALL WALL-MOUNTED DEVICE HEIGHTS SHALL BE VERIFIED WITH THE ARCHITECT PRIOR TO ROUGH-IN.
2. VERIFY EXACT CEILING CONSTRUCTION WITH ARCHITECTURAL REFLECTED CEILING PLAN AND SPECS. PROVIDE LIGHTING FIXTURES WITH ALL NECESSARY MOUNTING HARDWARE.
3. ALL RECESSED FIXTURES SHALL BE PROVIDED WITH ALL STRUCTURAL SUPPORTS AS REQUIRED BY THE IBC, OR CBC WHERE ADOPTED, IN ADDITION TO ANY LOCAL CODES.
4. ALL PERIMETER AND COVE LIGHTING SHALL EXTEND THE FULL LENGTH OF THE WALLS OR COVE. CONTRACTOR TO FIELD MEASURE COVE LENGTH AND ORDER QUANTITY OF FIXTURES AS REQUIRED.
5. ALL LINE VOLTAGE DIMMING BRANCH CIRCUITS SHALL BE PROVIDED WITH A DEDICATED NEUTRAL CONDUCTOR FOR EACH ZONE/CHANNEL.
6. RECESSED FIXTURES LOCATED IN A FIRE-RATED CEILING OR WALL SHALL BE PROVIDED WITH A 5-SIDED, RATED ENCLOSURE SO CONSTRUCTED AS TO ALLOW CODE AND MANUFACTURER-REQUIRED CLEARANCES BETWEEN THE FIXTURE AND THE ENCLOSURE.
7. REFER TO ARCHITECTURAL REFLECTED CEILING PLANS FOR EXIT SIGN CHEVRONS AND NUMBER OF FACES PER EXIT SIGN. ANY DISCREPANCIES BETWEEN EXIT SIGNS SHOWN ON THE ELECTRICAL AND ARCHITECTURAL PLANS SHALL BE BROUGHT TO THE ATTENTION OF THE ARCHITECT PRIOR TO ORDERING EXIT SIGNS.
8. WHEN EXPOSED CEILINGS OR OPEN GRID CONDITIONS OCCUR, THE CONTRACTOR WILL NEED TO PROVIDE THE FOLLOWING ITEMS:
   a. ALL BRANCH CIRCUITS SHALL BE EMT.
   b. ALL BRANCH CIRCUITS SHALL BE ROUTED ORTHOGONALLY, NEATLY TRAINED, IN PARALLEL TO STRUCTURES OR DUCTWORK. THE TERM "TRAINED" MEANS ALL PARALLEL CONDUITS SHALL MAINTAIN THE SAME SPATIAL RELATIONSHIP WITH EACH OTHER FOR ENTIRE RUN TO INCLUDE RADIUS BENDS AND SWEEPS.
   c. VISUALLY OBJECTIONABLE BRANCH CIRCUITS WILL BE REROUTED AT THE REQUEST OF THE ARCHITECT AT NO ADDITIONAL COST.
9. ALL LED REMOTE INDICATORS FOR DUCT DETECTORS AND FIRE/SMOKE DAMPERS REQUIRED BY THE LOCAL AHJ SHALL BE LOCATED IN CEILINGS IN COORDINATION WITH ARCHITECT PRIOR TO ANY ROUGH-IN.
10. PROVIDE ADDITIONAL J-BOX NEAR PANEL FOR MULTIPLE HOMERUN CIRCUITRY.
11. UNLESS SPECIFICALLY SHOWN AS (E), (R), (ER), (D), EXISTING OR NON-BOLD, ALL ELECTRICAL DEVICES SHOWN ARE NEW.
12. REFER TO GENERAL POWER PLAN NOTES AND COMMUNICATIONS PATHWAYS GENERAL NOTE FOR ADDITIONAL REQUIREMENTS WHEN POWER AND/OR DATA DEVICES ARE SHOWN ON THIS PLAN.
13. ALL PENETRATIONS THROUGH FIRE RATED WALLS SHALL BE PROTECTED FROM THE SPREAD OF FIRE WITH AN APPROVED FIRESTOP SYSTEM EQUAL OR GREATER THAN THE FIRE RATING OF THE WALL.

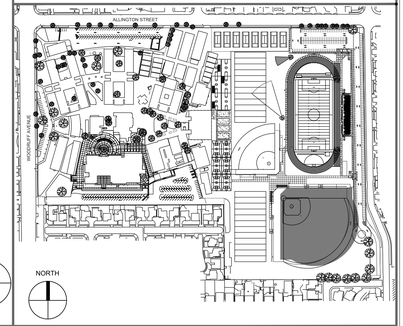

NORTH

KEYMAP

STATE:

IDENTIFICATION STAMP
DIV. OF THE STATE ARCHITECT
APP: 03-124281 INC:
REVIEWED FOR
SS ☑ FLS ☑ ACS ☑
DATE: 02/04/2025

ARCHITECT:

architecture
westbergwhite
7700 IRVINE CENTER DR. STE. 100
IRVINE, CA 92618
(714) 508-1780 (714) 508-1780 FAX

CONSULTANT:

tk1sc
COLLABORATIVE
11870 Pierce Street, Suite 160
Riverside, California 92505
951.299.4160 www.tk1sc.com
Project Leader - Bill Voller
Electrical Lead - Bill Voller
tk1sc Job #: US0027568.7397

REGISTERED PROFESSIONAL ENGINEER
RAYMOND W. SWANSON
No. E15610
Ex. 12/31/2025
ELECTRICAL
STATE OF CALIFORNIA

PROJECT NAME:

Bellflower Unified School District
Mayfair High School Athletics Fields
6000 North Woodruff Ave
Lakewood, California 90713

CLIENT:

BELLFLOWER UNIFIED SCHOOL DISTRICT
16703 S. Clark Ave.
BELLFLOWER, CALIFORNIA 90706

Rev.	Date	Description

JOB NO:	15008.01
DATE:	05/28/2024
DRAWN:	TG, XY
CHECK:	RB, JG
ARCHITECT:	PDW
ENGINEER:	

SHEET DESCRIPTION:

STORAGE BUILDING POWER & LIGHTING PLAN

SHEET NO:

E301

FEEDER SCHEDULE

FEEDER	CONDUIT AND CONDUCTORS	LOAD (A)	DISTANCE (FT)	V.D. (%)	AVAIL.FAULT CURRENT (A)	NOTES
MS-9	(3) 3"C.-4#500KCMIL WITH #2/0G. IN EACH	305A	1200'	1.67	14,416	MAIN FEEDER FOR SWBD "DSF"
DSF-1	1-1/2"C-2#1/0, #4G.	55A	275'	1.43	<10K	MUSCO POLE F1 –
DSF-2	2"C.-2#250KCMIL, #2G.	55A	625'	1.46	<10K	MUSCO POLE F2 –
DSF-3	2"C.-2#250KCMIL, #2G.	55A	825'	1.93	<10K	MUSCO POLE F3 –
DSF-4	2"C.-2#250KCMIL, #2G.	55A	575'	1.35	<10K	MUSCO POLE F4 –
DSF-5	1"C-2#8, #10G	16A	30'	0.68	<10K	INVERTER LIGHTING BACKUP
DSF-6	1-1/2"C-3#1, 1#6G	47A	30'	0.22	<10K	TRANSFORMER T1 –
DSF-6A	2-1/2"C.-4#4/0, #4G.	109A	30'	0.35	<10K	PANEL F1 –
DSF-6B	1-1/2"C.-4#1, #4G.	41A	100'	1.33	<10K	PANEL SP –
DSF-6C	1-1/2"C.-4#1/0, #4G.	10A	400'	2.46	<10K	PANEL LP –
DSF-7	2"C.-2#4/0, #4/0G.	8A	1700'	1.55	<10K	PARKING LIGHTING –
DSF-8	2"C.-3#3/0, #3/0G.	5A	1200'	1.37	<10K	PEDESTRIAN LIGHTING –
DSF-9	2"C.-3#3/0, #3/0G.	2.5A	650'	0.74	<10K	PEDESTRIAN LIGHTING –
DSF-10	2"C.-3#3/0, #3/0G.	3A	1100'	1.25	<10K	PEDESTRIAN LIGHTING –

*NOTE THAT A PORTION OF THIS CONDUIT IS EXISTING. REFERENCE SITE PLAN FOR MORE INFORMATION.

GENERAL FEEDER SCHEDULE NOTES:

1. ALL FEEDERS SHOWN, UNLESS SPECIFICALLY NOTED OTHERWISE, ARE PRESUMED TO BE ROUTED IN METAL RACEWAYS. IF P.V.C. CONDUITS ARE UTILIZED, THE CONTRACTOR SHALL PROVIDE AN EQUIPMENT GROUND PER NEC, OR CEC WHERE ADOPTED, TABLE 250.122 OR, WHERE REQUIRED, PROVIDE A MAIN BONDING JUMPER PER TABLE 250.66 AND INCREASE THE CONDUIT SIZE ACCORDINGLY.
2. LOADS INDICATED WITH " ( ) " REPRESENT WORST CASE LOAD IN AMPS.
3. DISTANCE SHOWN IS FOR DESIGN PURPOSES ONLY. IT IS NOT A MATERIAL TAKEOFF.
4. VOLTAGE DROP VALUE INDICATED IS AT THE END OF THE FEEDER.
5. AVAILABLE FAULT CURRENT VALUE AT THE END OF THE FEEDER INDICATED. CALCULATIONS ARE BASED UPON INITIAL VALUES RECEIVED FROM THE SERVING UTILITY AND THE LENGTH AND IMPEDANCE OF THE FEEDER. THE SHORT CIRCUIT CURRENT RATING, EQUIPMENT BUS BRACING, AND/OR AMP INTERRUPTING CURRENT OF EQUIPMENT CONNECTED ON THE LOAD SIDE OF THE FEEDER SHALL BE GREATER THAN THE AVAILABLE FAULT CURRENT.

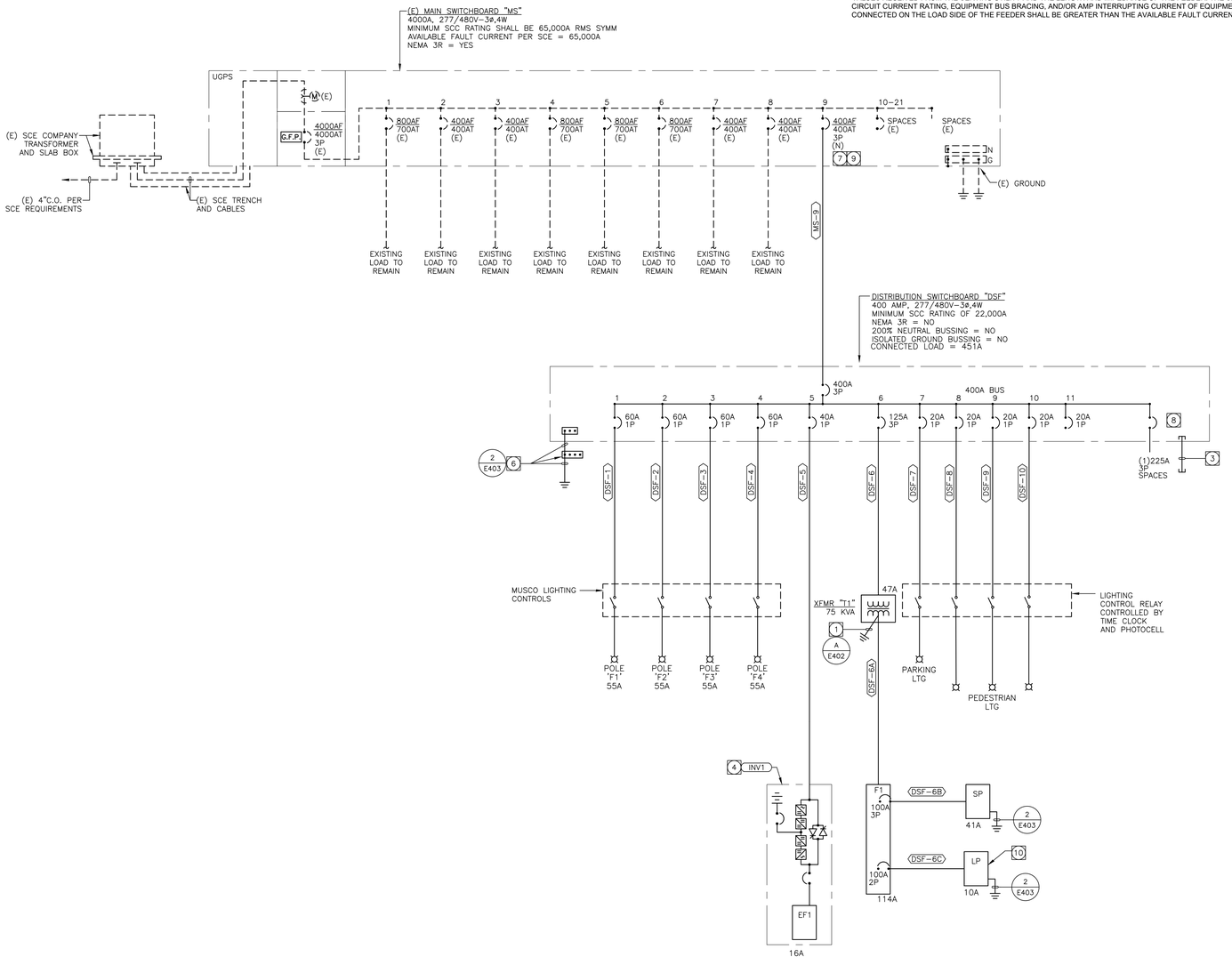

SINGLE LINE DISTRIBUTION DIAGRAM

SCALE: N.T.S.

1

GENERAL SINGLE LINE DIAGRAM NOTES:

1. ALL SWITCHGEAR SHALL BE SQUARE D OR EQUAL BY CUTLER-HAMMER, G.E., SIEMENS, IEM, OR Z-POWER AND DISTRIBUTION.
2. ALL ITEMS DEPICTED ON THE SINGLE LINE DRAWINGS SHALL BE ASSUMED AS NEW U.O.N.
3. ALL OVERCURRENT DEVICES IN AN INDIVIDUAL PIECE OF EQUIPMENT SHALL HAVE AN AIC RATING EQUAL TO THE OVERALL RATING OF THE EQUIPMENT. SERIES-RATING OF DEVICES WITHIN A PIECE OF EQUIPMENT IS NOT ALLOWED. SEE SPECIFICATIONS FOR MORE INFORMATION.
4. ALL SWITCHBOARDS, SWITCHGEAR, AND PANELBOARDS SHALL HAVE A SHORT-CIRCUIT CURRENT RATING NOT LESS THAN THE AVAILABLE FAULT CURRENT. THE AVAILABLE FAULT CURRENT AND THE DATE THE CALCULATION WAS PERFORMED SHALL BE FIELD MARKED ON THE ENCLOSURE AT THE POINT OF SUPPLY.
5. SERIES RATED DEVICES SHALL HAVE BEEN INVESTIGATED BY U.L. IN COMBINATION WITH THE END USE EQUIPMENT AND IN THE EQUIPMENT IN WHICH THESE DEVICES ARE USED AND SHALL BE MARKED WITH A SERIES RATING. ALL EQUIPMENT SHALL BE MARKED IN ACCORDANCE WITH NEC (OR CEC-WHERE ADOPTED) REQUIREMENTS. SEE SPECIFICATIONS FOR MORE INFORMATION. WHERE SERIES RATINGS ARE ALLOWED, THE EQUIPMENT SHALL BE LEGIBLY MARKED IN THE FIELD TO INDICATE A SERIES COMBINATION RATING WHICH SHALL BE READILY VISIBLE AND STATE THE FOLLOWING:

   CAUTION - SERIES COMBINATION SYSTEM RATED AT ??,???
   AMPERES. USE ONLY IDENTIFIED REPLACEMENT COMPONENTS IN
   THIS SYSTEM.

   WHERE ??,??? REPRESENTS AVAILABLE FAULT CURRENT. SEE SPECIFICATIONS FOR PLACARD REQUIREMENTS.
6. ALL TERMINATIONS AND ENCLOSURES SHALL BE RATED FOR USE WITH 75 DEGREE CELSIUS CONDUCTORS.
7. ALL SERVICE ENTRANCE EQUIPMENT RATED AT 400A OR GREATER SHALL BE PROVIDED WITH A BACKFEED-RATED, SOLID STATE MAIN OVERCURRENT DEVICE AND BUSSING RATED AT 100% OPERATION (1000A/sq.in. FOR CU, 750A/sq.in. FOR AL). NO HEAT RISE RATED BUSSING ALLOWED. NON-SERVICE ENTRANCE SWITCHBOARDS AND DISTRIBUTION BOARDS LARGER THAN 600A SHALL BE PROVIDED WITH BUSSING RATED FOR 100% OPERATION - SEE SPECIFICATION FOR CIRCUIT BREAKER REQUIREMENTS. ALL NON-SERVICE ENTRANCE SWITCHBOARDS AND DISTRIBUTION BOARD MAIN OVERCURRENT DEVICES SHALL BE BACKFEED-RATED. BACKFEED RATINGS SHALL COMPLY WITH NEC, OR CEC WHERE ADOPTED, 710.15 (E) AND 705.12(B)(4). SEE SPECIFICATIONS FOR ADDITIONAL REQUIREMENTS REGARDING CIRCUIT BREAKERS.
8. PROVIDE CIRCUIT BREAKER ARC ENERGY REDUCTION MAINTENANCE SWITCHING PER NEC, OR CEC WHERE ADPOPTED, 240.87(B)(3) FOR ANY CIRCUIT BREAKER, 1200A FRAME AND LARGER. SEE SPECIFICATIONS FOR ADDITIONAL REQUIREMENTS.
9. ALL SWITCHBOARDS AND DISTRIBUTION BOARDS SHALL HAVE:
   a. TIN-PLATED ALUMINUM BUSSING WITH RECTANGULAR CROSS SECTION. HORIZONTAL AND VERTICAL BUSSING SHALL BE FULL LENGTH AND SHALL HAVE PROVISIONS FOR FUTURE EXTENSIONS. ALL BUSSING SHALL HAVE MINIMUM WITHSTAND RATING EQUAL TO THE AVAILABLE FAULT CURRENT INDICATED. ALL VERTICAL AND HORIZONTAL BUSSING SHALL BE RATED AT FULL CAPACITY IN ALL SWITCHBOARD AND DISTRIBUTION BOARD SECTIONS. PROVIDE 100% NEUTRAL BUSSING MINIMUM UNLESS OTHERWISE NOTED. PROVIDE FULL LENGTH GROUND BUS AND, WHERE INDICATED ON PLANS, ISOLATED GROUND BUSSING. PROVIDE REAR WIRE WAY IN ALL SWITCHBOARD SECTIONS.
   b. LUGS SUITABLE FOR USE WITH COPPER OR ALUMINUM CONDUCTORS LISTED FOR USE WITH 75 DEGREE CELSIUS AMPACITY CONDUCTORS.
   c. PERMANENT PLACARD(S) MARKED PER THE SPECIFICATIONS AND PER NEC (OR CEC-WHERE ADOPTED) SECTIONS 225.37, 230.2(E), 690.56, 692.56, 700.7, 701.7, 702.7, AND 705.10 AND IFC (OR CFC - WHERE ADOPTED) SECTION 608.2.6.1, DENOTING THE PRESENCE OF ADDITIONAL SERVICES, PHOTOVOLTAIC SYSTEMS, FUEL CELLS, EMERGENCY, STATIONARY BATTERY STORAGE SYSTEMS, OR STAND-BY POWER SOURCES AS APPLICABLE.
10. CONTRACTOR SHALL SUBMIT SWITCHBOARD SHOP DRAWINGS TO THE SERVING UTILITY FOR APPROVAL PRIOR TO FABRICATION. CONTRACTOR SHALL SECURE CONFIRMATION THAT THE PROPOSED SWITCHBOARD COMPLIES WITH ELECTRIC UTILITY COMPANY REGULATIONS.
11. CONTRACTOR SHALL SUBMIT SHOP DRAWINGS PER THE SPECIFICATIONS FOR SWITCHBOARDS, DISTRIBUTION BOARDS, TRANSFORMERS, PANEL BOARDS, AND ALL OTHER DEVICES SHOWN ON THE SINGLE LINE, PRIOR TO FABRICATION.
12. ALLOWABLE DIMENSIONS IN MAIN ELECTRICAL ROOM ARE A CRITICAL COORDINATION ITEM. CONTRACTOR SHALL PROVIDE 1/4"= 1'-0" SCALE DRAWINGS WITH SWITCHGEAR SUBMITTALS SHOWING THAT ALL PROPOSED EQUIPMENT WILL FIT IN THE SPACE PROVIDED. SUBMITTALS WITHOUT THIS DRAWING SHALL BE REJECTED AS INCOMPLETE.
13. UNLESS SPECIFICALLY SHOWN AS (E), (R), (ER), (D), EXISTING OR NON-BOLD, ALL ELECTRICAL DEVICES SHOWN ARE NEW.
14. WHERE REQUIRED BY THE LOCAL AUTHORITY HAVING JURISDICTION OR WHERE A NEW GROUND FAULT PROTECTIVE DEVICE IS BEING INSTALLED, A GROUND FAULT SYSTEM TEST SHALL BE CONDUCTED BY AN INDEPENDENT TESTING AGENCY PER NEC (OR CEC-WHERE ADOPTED) 230.95(C). THE GROUND FAULT SYSTEM TEST SHALL BE PERFORMED IN THE PRESENCE OF THE LOCAL AUTHORITY HAVING JURISDICTION. VERIFICATION OF DEVICE SETTINGS PER THE POWER SYSTEMS STUDY SPECIFICATION SHALL BE PERFORMED BY THE SAME INDEPENDENT TESTING AGENCY. THE GROUND FAULT TEST RESULTS SHALL BE DELIVERED TO THE ENGINEER OF RECORD. DURING THE CONSTRUCTION PHASE OF THE PROJECT, ALL NEW GROUND FAULT RELAYS SHALL BE SET AT THE LOWEST AVAILABLE TIME DELAY AND PICK-UP SETTINGS.
15. SEE POWER SYSTEMS STUDY SPECIFICATION FOR ADDITIONAL REQUIREMENTS. ALL REQUIRED POWER SYSTEMS STUDIES MUST BE COMPLETED AND SUBMITTED WITH ELECTRICAL POWER DISTRIBUTION EQUIPMENT SUBMITTAL. FAILURE TO DO SO WILL PREVENT THE ENGINEER FROM EFFECTIVELY EVALUATING THE SUBMITTAL AND SHALL RESULT IN REJECTION OF THE ELECTRICAL POWER DISTRIBUTION EQUIPMENT SUBMITTAL AS INCOMPLETE.

SPECIFIC SINGLE LINE NOTES:

1. PROVIDE GROUNDING PER NEC, OR CEC WHERE ADOPTED, 250.30. SEE TRANSFORMER SCHEDULE FOR GEC/BJ SIZING INFORMATION. SEE SEPARATELY DERIVED SYSTEM GROUNDING DETAIL FOR MORE INFORMATION.
2. BUSSING SHALL BE PROVIDED FOR FUTURE BUS EXTENSION TO FUTURE DISTRIBUTION SYSTEM.
3. PROVIDE (4) 1" C.O. STUBBED OUTSIDE THE BUILDING TO THE NEAREST PLANTER AREA. CAP AND MARK.
4. INVERTER SIZE BASED ON ILLUMINATOR "E" SERIES 1-PHASE.
5. PROVIDE GROUNDING PER NEC, OR CEC WHERE ADOPTED, 250.30 WHEN UPS IS CONSIDERED A SEPARATELY DERIVED SYSTEM. SEE UPS SCHEDULE FOR GEC/BJ SIZING INFORMATION WHEN APPLICABLE.
6. SEE MAIN SYSTEM GROUNDING DETAIL OR FEEDER TO REMOTE BUILDING / STRUCTURE GROUNDING DETAIL FOR MORE INFORMATION.
7. PROVIDE NEW OVERCURRENT PROTECTIVE DEVICE(S) COMPATIBLE WITH EXISTING ELECTRICAL DISTRIBUTION EQUIPMENT. AIC AND WITHSTAND RATINGS MATCHING EXISTING OCPD RATINGS OR DISTRIBUTION EQUIPMENT WITHSTAND RATINGS - WHICHEVER IS HIGHER.
8. SPACE RESERVED AT END OF BUS FOR FUTURE PV SYSTEM 3-POLE CIRCUIT BREAKER.
9. PROVIDE LIMITED POWER SYSTEM STUDY FOR NEW SINGLE LINE ITEMS TO INCLUDE UPSTREAM SYSTEM COMPONENT/CONTRIBUTIONS. SEE POWER SYSTEM STUDY SPECIFICATIONS FOR ADDITIONAL REQUIREMENTS.
10. PANEL BOARD PROVIDED BY BLEACHER MANUFACTURER. PROVIDE CONNECTIONS TO PANEL BOARD AS REQUIRED FOR OPERATION. SEE SHEET B16 FROM BLEACHER DRAWINGS FOR MORE INFORMATION.

STATE:

IDENTIFICATION STAMP
DIV. OF THE STATE ARCHITECT
APP: 03-124281 INC:
REVIEWED FOR
SS ☑ FLS ☑ ACS ☑
DATE: 02/04/2025

ARCHITECT:

architecture
westbergwhite
7700 IRVINE CENTER DR. STE. 100
IRVINE, CA 92618
(714) 508-1780 (714) 508-1780 FAX

CONSULTANT:

tk1sc COLLABORATIVE
11870 Pierce Street, Suite 160
Riverside, California 92505
951.299.4160 www.tk1sc.com
Project Leader - Bill Voller
Electrical Lead - Bill Voller
tk1sc Job #: US0027568.7397

REGISTERED PROFESSIONAL ENGINEER
RAYMOND W. SWANSON
No. E15610
Ex. 12/31/2025
ELECTRICAL
STATE OF CALIFORNIA

PROJECT NAME:

Bellflower Unified School District
Mayfair High School Athletics Fields
6000 North Woodruff Ave
Lakewood, California 90713

CLIENT:

BELLFLOWER UNIFIED SCHOOL DISTRICT
16703 S. Clark Ave.
BELLFLOWER, CALIFORNIA 90706

Rev.	Date	Description

JOB NO: 15008.01
DATE: 05/28/2024
DRAWN: TG, XY
CHECK: RB, JG
ARCHITECT: PDW
ENGINEER:

SHEET DESCRIPTION:
SINGLE LINE DIAGRAM

SHEET NO:
E401

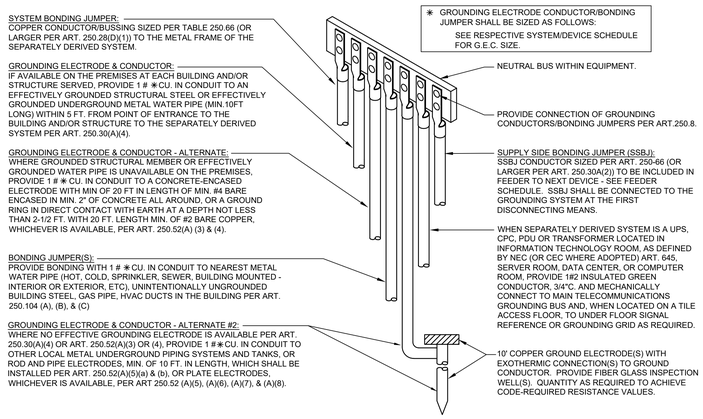

A SEPARATELY DERIVED SYSTEM (SDS) GROUNDING DETAIL
SCALE: NTS (OCPD NOT A PART OF SDS)

POWER SYSTEMS STUDY SPECIFICATIONS:

THE CONTRACTOR SHALL PROVIDE, WITH THE ASSISTANCE OF THE SWITCHGEAR MANUFACTURER, POWER SYSTEMS STUDIES CONSISTING OF A SHORT CIRCUIT STUDY, A COORDINATION STUDY, AND AN ARC FLASH STUDY - ALL PER LATEST PUBLISHED EDITIONS OF THE FOLLOWING STANDARDS: ANSI C37, IEEE 141, IEEE 242, IEEE 399 - BROWN BOOK, NFPA 70E AND IEEE STD 1584/1584a. ADDITIONALLY:

a. CONTRACTOR SHALL PERFORM STUDY USING SKM "SYSTEMS ANALYSIS POWER TOOLS FOR WINDOWS" COMPUTER SOFTWARE PROGRAM - LATEST AVAILABLE VERSION OR EQUAL BY ETAP.

b. CONTRACTOR SHALL FURNISH/OBTAIN ALL DATA REQUIRED FOR POWER SYSTEMS STUDIES. DATA COLLECTION EFFORT SHALL BE PERFORMED IN AN EXPEDITIOUS MANNER AND AS SOON AS POSSIBLE AFTER CONTRACT AWARD TO ENSURE STUDY COMPLETION FOR SUBMISSION AS PART OF THE ELECTRICAL DISTRIBUTION EQUIPMENT SHOP DRAWINGS AND SUBMITTALS. DATA COLLECTION EFFORTS MAY INCLUDE, BUT ARE NOT LIMITED TO, CALCULATED UTILITY COMPANY FAULT VALUES, SERVICE TRANSFORMER PRIMARY PROTECTIVE DEVICE AND APPLIED VOLTAGE, ELECTRICAL CHARACTERISTICS AND FAULT CONTRIBUTION FROM EXISTING MOTORS/GENERATORS, EXISTING CONDUCTOR QUANTITIES, SIZE AND LENGTHS, EXISTING/ NEW OVERCURRENT PROTECTIVE DEVICE SPECIFICATIONS AND PART NUMBERS, TRANSFER SWITCH CHARACTERISTICS AND SHORT CIRCUIT CURRENT RATINGS IN ADDITION TO ANY OTHER DATA REQUIRED TO PERFORM COMPREHENSIVE POWER SYSTEM STUDIES. RANGES OF FAULT CURRENT VALUES OR GENERIC FAULT CURRENT VALUES PROVIDED BY THE UTILITY COMPANY ARE UNACCEPTABLE AS ARE ANY FAULT CURRENT VALUES SHOWN ON THE SINGLE LINE DIAGRAM OR FEEDER SCHEDULE.

DATA GATHERING SHALL BE CONDUCTED IN A SAFE MANNER WITH 1) EQUIPMENT COMPLETELY DE-ENGERIZED IN COORDINATION WITH THE OWNER DURING A SCHEDULED POWER SHUTDOWN OR 2) UTILIZING A LICENSED ELECTRICIAN WEARING APPROPRIATE PERSONNEL PROTECTIVE EQUIPMENT PER NFPA 70E STANDARDS.

CONTRACTOR IS SOLELY RESPONSIBLE FOR OBTAINING UTILITY DATA FROM THE UTILITY COMPANY - INCLUDE ALL COSTS IN BASE BID FOR ANY UTILITY COMPANY FEES FOR PROVIDING NECESSARY DATA. WHERE THE PROJECT IS LOCATED ON A CAMPUS WITH AN OWNER-FURNISHED ELECTRICAL DISTRIBUTION SYSTEM, CONTRACTOR SHALL BE RESPONSIBLE TO OBTAIN SUFFICIENT ELECTRICAL SYSTEM DATA TO DEMONSTRATE COORDINATION OF THE PROJECT'S ELECTRICAL SYSTEM WITH CAMPUS DISTRIBUTION SYSTEM. THIS DATA MAY BE AVAILABLE IN THE FORM OF AN OWNER-PROVIDED CAMPUS POWER SYSTEM STUDY. WHERE SUCH STUDIES ARE NOT AVAILABLE, THE CONTRACTOR SHALL INCLUDE ALL COSTS IN BASE BID TO PERFORM NECESSARY FIELD INVESTIGATION OF CAMPUS DISTRIBUTION SYSTEM INCLUDING CAMPUS SERVICE ENTRANCE AND SERVING UTILITY DATA AS REQUIRED TO DEMONSTRATE COORDINATION OF THE PROJECT'S ELECTRICAL SYSTEM WITH CAMPUS DISTRIBUTION SYSTEM. INCLUDE ALL COSTS FOR RECOMMENDING ADJUSTMENTS TO EXISTING CAMPUS DISTRIBUTION SYSTEM SETTINGS DISCOVERED TO BE INCORRECT. OWNER SHALL BE RESPONSIBLE TO UNDERTAKE ANY PHYSICAL ADJUSTMENTS TO EXISTING MEDIUM OR HIGH VOLTAGE DISTRIBUTION EQUIPMENT WITH THE EXCEPTION OF FUSES, RELAYS OR OTHER CIRCUIT PROTECTIVE DEVICES LOCATED IN EXISTING DISTRIBUTION EQUIPMENT THAT ARE DEDICATED TO SERVE ONLY THIS PROJECT'S ELECTRICAL SYSTEM.

CONTRACTOR IS SOLELY RESPONSIBLE FOR OBTAINING EQUIPMENT SCCR RATING FROM ALL OTHER PROJECT TRADES AND FOR ANY OWNER-FURNISHED OR TENANT-FURNISHED EQUIPMENT CONNECTED TO THE ELECTRICAL SYSTEM IN ORDER TO VALIDATE AVAILABLE FAULT CURRENT AT THE EQUIPMENT CONNECTIONS IS LESS THAN THE RESPECTIVE EQUIPMENT SCCR.

c. THE SHORT CIRCUIT STUDY SHALL INCLUDE CALCULATED SHORT-CIRCUIT MOMENTARY AND INTERRUPTING DUTIES FOR 3-PHASE BOLTED FAULTS AND LINE-TO-GROUND FAULTS THROUGHOUT THE SINGLE LINE TO INCLUDE UTILITY SERVICE SUPPLY, GENERATORS AND TRANSFER SWITCHES, SUBSTATIONS, SWITCHGEAR, PANEL BOARDS ETC. STUDY SHALL EVALUATE ALL ELECTRICAL DISTRIBUTION EQUIPMENT AND PROTECTIVE DEVICES AGAINST SHORT CIRCUIT CURRENT RATINGS. THIS STUDY EFFORT SHALL EXTEND TO SCCR RATINGS OF EQUIPMENT, EQUIPMENT CONTROL PANELS, VARIABLE FREQUENCY DRIVES ETC PROVIDED BY OTHER TRADES THAT ARE CONNECTED TO THE ELECTRICAL SYSTEM. NOTE ANY EXISTING CIRCUIT PROTECTIVE DEVICE(S)/ELECTRICAL DISTRIBUTION THAT IS INADEQUATELY RATED TO WITHSTAND CALCULATED FAULT VALUES OR WHERE EQUIPMENT SCCR IS EXCEEDED. WHERE THE UTILITY COMPANY PROVIDES MULTIPLE FAULT CURRENT VALUES REFLECTING INITIAL TRANSFORMER CAPACITY AND WORST CASE TRANSFORMER CAPACITY, THE CONTRACTOR SHALL PROVIDE SHORT CIRCUIT ANALYSIS PRIMARILY BASED ON WORST CASE TRANSFORMER CAPACITY. ALL SERVICE EQUIPMENT SHALL BE LABELED WITH THE MAXIMUM AVAILABLE FAULT CURRENT AND FAULT CURRENT CALCULATION DATE PER NEC (OR CEC WHERE ADOPTED) 110.24. SEE LABELING SPECIFICATION FOR ADDITIONAL REQUIREMENTS.

d. THE COORDINATION STUDY SHALL INCLUDE TIME-CURRENT CURVES (TCC) FOR OVER CURRENT PROTECTIVE DEVICES (OCPDs) ALONG WITH TRANSFORMER FULL-LOAD CURRENT, INRUSH CURRENT, AND THROUGH-FAULT PROTECTION CURVES, CONDUCTOR DAMAGE CURVES, GROUND FAULT PROTECTIVE DEVICE CURVES, MOTOR STARTING CURVE(S)/DAMAGE POINT(S), GENERATOR SHORT-CIRCUIT CURVE(S) /DAMAGE POINT(S) ETC. - CLEARLY IDENTIFIED AND PLOTTED ON LOG-LOG SCALE GRAPH(S). TCC GRAPH(S) SHALL INCLUDE A ONE-LINE DIAGRAM IDENTIFYING THE SPECIFIC PORTION COVERED BY THE GRAPH. DEMONSTRATE THAT ADEQUATE CLEARING TIME/SELECTIVE OPERATION EXISTS BETWEEN PROTECTIVE DEVICES WHILE PROVIDING PROPER SYSTEM PROTECTION & COORDINATION. STUDY SHALL INCLUDE ALL MAIN AND FEEDER OCPDs INCLUDING SECONDARY SIDE OF EACH TRANSFORMER DOWN TO BREAKERS IN PANEL BOARDS AND INDIVIDUAL BREAKERS IN DISTRIBUTION BOARDS. IN ALL CASES, SOLID STATE AND/OR ADJUSTABLE OCPDs SHALL BE ANALYZED WITH UPSTREAM AND DOWNSTREAM OCPDs AS REQUIRED TO ESTABLISH PROPER COORDINATION SETTINGS. SPECIAL EMPHASIS SHALL BE PLACED ON ANALYZING PORTIONS OF THE ELECTRICAL SYSTEM REQUIRING SELECTIVE COORDINATION WHICH INCLUDE, BUT ARE NOT LIMITED TO, NEC (OR CEC WHERE ADOPTED) ARTICLES 517, 620, 700, 701 & 708; ALONG WITH ANY ARTICLE 702 OPTIONAL STANDBY SYSTEMS SERVING SERVER ROOMS/DATA CENTERS OR OTHER AREAS REQUIRING HIGH AVAILABILITY/PROPER COORDINATION SUCH AS MANUFACTURING, CLEAN ROOM OR LAB FACILITIES. CONTRACTOR SHALL BE RESPONSIBLE TO RECOMMEND SETTINGS OF ALL DEVICES, TO INCLUDE GROUND FAULT SETTINGS, TO ACHIEVE SYSTEM COORDINATION. THE CONTRACTOR SHALL FIELD ADJUST NEW AND EXISTING DEVICES ACCORDINGLY UTILIZING A QUALIFIED MANUFACTURER'S REPRESENTATIVE OR A THIRD-PARTY ELECTRICAL TESTING AGENCY.

e. THE ARC FLASH ANALYSIS SHALL BE BASED ON THE INCIDENT ENERGY ANALYSIS METHOD (NFPA 70E 130.5). THE ARC FLASH ANALYSIS SHALL DETERMINE THE FLASH BOUNDARY, THE WORKING DISTANCE, THE INCIDENT ENERGY AND MINIMUM ARC RATING OF CLOTHING(CAL/CM²) AT LOCATIONS IN THE ELECTRICAL SYSTEM WHERE WORK CAN OR MIGHT BE PERFORMED ON ENERGIZED COMPONENTS WHERE MULTIPLE SYSTEM CONFIGURATION SCENARIOS ARE POSSIBLE, THE CONFIGURATION WITH GREATEST INCIDENT ENERGY MUST BE SHOWN. DECREMENT FAULT CONTRIBUTIONS FROM MOTOR(S) AND GENERATOR(S) BASED ON INDUSTRY STANDARDS. THE CONTRACTOR SHALL MAKE RECOMMENDATIONS WITH REGARD TO SYSTEM ADJUSTMENTS OR OTHER MITIGATION MEASURES TO OPTIMIZE THE RESULTS OF THE STUDY AS IT RELATES TO SAFE AND RELIABLE ELECTRICAL SYSTEM OPERATION (E.G. OVERCURRENT DEVICE SETTINGS, WORKING DISTANCES, CURRENT LIMITING DEVICES). THIS INCLUDES MITIGATION, WHERE POSSIBLE, OF INCIDENT ENERGY LEVELS THAT EXCEED 40 CAL/CM². PERFORM ITERATIVE CALCULATIONS TO DEMONSTRATE EFFECTS OF OPENING PROTECTIVE DEVICES UTILIZING A VARIETY OF DIFFERENT SETTINGS TO BEST MITIGATE ARC FLASH ENERGY WHILE MAINTAINING AN ACCEPTABLE LEVEL OF SYSTEM COORDINATION. WHERE SUCH RECOMMENDATIONS COMPROMISE SELECTIVE COORDINATION SETTINGS, SO STATE IN THE ANALYSIS.

INCLUDE INCIDENT ENERGY/FLASH PROTECTION BOUNDARY CALCULATIONS FOR BOTH LINE/LOAD SIDE OF ALL SEPARATELY ENCLOSED MAIN CIRCUIT BREAKERS. ALL CALCULATIONS SHALL BE BASED ON ACTUAL OVERCURRENT DEVICE CLEARING TIMES.

f. BASED ON THE RESULTS OF THE ARC FLASH ANALYSIS, THE CONTRACTOR SHALL PRODUCE AND INSTALL A WARNING LABEL (ORANGE <40 CAL/CM2) OR DANGER LABEL (RED > 40 CAL/CM2) FOR EACH PIECE OF EQUIPMENT PER NEC (OR CEC WHERE ADOPTED) 110.16 AND IN ACCORDANCE WITH ANSI Z535.4-2007 OR LATEST PUBLISHED EDITION. THE LABEL MUST BE READABLE IN BOTH INDOOR AND OUTDOOR ENVIRONMENTS FOR AT LEAST 3 YEARS AND CONTAIN THE FOLLOWING INFORMATION: NOMINAL SYSTEM VOLTAGE, ARC HAZARD BOUNDARY (INCHES), WORKING DISTANCE (INCHES), AVAILABLE ARC FLASH INCIDENT ENERGY AT THE WORKING DISTANCE (CAL/CM²), MINIMUM ARC RATING OF CLOTHING, EQUIPMENT/BUS NAME, DATE PREPARED, SUPPLIER'S NAME AND ADDRESS. PROVIDE LABEL AS MANUFACTURED BY BRADY OR EQUAL. PRIOR TO PLACING ARC FLASH LABELS, CONTRACTOR SHALL SET ALL PROTECTIVE DEVICE SETTINGS PER THE APPROVED COORDINATION STUDY.

g. DURING THE CONSTRUCTION PHASE OF THE PROJECT, ALL GROUND FAULT RELAYS SHALL BE SET AT THE LOWEST AVAILABLE TIME DELAY AND PICK-UP SETTINGS.

h. POWER SYSTEMS STUDIES SHALL BE SUBMITTED AS PART OF THE OVERALL SWITCHGEAR SUBMITTAL. THE RESULTS OF THE POWER SYSTEMS STUDY SHALL BE PRESENTED IN A COMPREHENSIVE REPORT THAT INCLUDES:

- REPORT SUMMARY WITH ANALYSIS METHODOLOGY, FINDINGS AND RECOMMENDATIONS
- SUMMARY OF INPUT DATA FOR UTILITY SOURCE, EQUIPMENT AND CABLES
- AVAILABLE FAULT CURRENT AT EACH EQUIPMENT LOCATION WITH COMPARISON TO EQUIPMENT RATING
- OVERCURRENT DEVICE SETTINGS (E.G. PICK-UP, TIME DELAY, CURVE), "AS FOUND" AND "AS RECOMMENDED"
- OVERCURRENT DEVICE COORDINATION CURVES INCLUDING RELATED SECTION OF THE SINGLE-LINE DIAGRAM
- COMPLETE SYSTEM SINGLE-LINE DIAGRAM FOR THE SYSTEM ANALYZED
- INCIDENT ENERGY LEVEL (CAL/CM²) FOR EACH EQUIPMENT LOCATION, RECOMMENDED PPE AND SAMPLE ARC FLASH WARNING LABELS
- A DVD OR CD CONTAINING ELECTRONIC PROJECT FILES USED TO DEVELOP THE STUDY TO INCLUDE SKM OR ETAP PROJECT AND REFERENCE LIBRARY FILES. ALL FILES SHALL BE AVAILABLE FOR REVIEW AND/OR FUTURE MODIFICATION WITHOUT LIMITATION. LOCKING OR SECURING FILES BY OTHER MEANS IS NOT ACCEPTABLE. FAILURE TO SUBMIT COMPLETE STUDIES AND FULLY ACCESSIBLE FILES SHALL RESULT IN THE REJECTION OF THE ENTIRE SWITCHGEAR SUBMITTAL.

i. AS A PART OF A CLOSEOUT SUBMITTAL TO BE SUBMITTED TO THE ENGINEER PRIOR TO FINAL PROJECT CONSTRUCTION OBSERVATIONS, CONTRACTOR SHALL PROVIDE PHOTOS OF ALL ADJUSTABLE CIRCUIT BREAKERS DEPICTING THEIR FINAL SETTINGS BASED ON THE POWER SYSTEMS STUDY. SUBMITTAL SHALL BE ORGANIZED WITH OCPD IDENTIFICATION, OCPD PHOTO IMAGE AND RESPECTIVE POWER SYSTEM STUDY OCPD SETTING REQUIREMENTS TO ALLOW EFFICIENT CONFIRMATION OF RECORD SETTINGS. PLEASE NOTE THAT IMAGES MAY NEED TO BE TAKEN PRIOR TO INSTALLATION OF EQUIPMENT COVERS/EQUIPMENT ENERGIZATION SINCE OCPD SETTINGS MAY BE OBSTRUCTED BY EQUIPMENT COVERS.

j. THE STUDY SHALL INCLUDE ALL PORTIONS OF ELECTRICAL SINGLE LINE DIAGRAM TO INCLUDE UPSTREAM OR DOWNSTREAM ELEMENTS THAT MAY NOT BE SHOWN INCLUDING, BUT NOT LIMITED TO, UTILITY SOURCE CONTRIBUTION, RELEVANT PORTIONS OF THE EXISTING ELECTRICAL DISTRIBUTION SYSTEM WITHIN A BUILDING AND/OR CAMPUS ELECTRICAL DISTRIBUTION SYSTEMS AS DESCRIBED ABOVE.

TRANSFORMER SCHEDULE

NAME	KVA	WINDING MATERIAL	INPUT			OUTPUT			MIN %Z	A.I.C. VALUE	K VAL.	GEC/BJ SIZE	REDUCED SOUND LEVEL	NEMA/ MNTG.	DIMENSIONS			WGT.	REMARKS
			V	P	W	V	P	W							H	W	D		
T1	75	ALUMINUM	480	3	3	120/208	3	4	3.6	5,776	N/A	1/2"C, #2	N/A	1/F	43	35	27	710	ANCHORAGE PER 5/E601

TRANSFORMER INSTALLATION REQUIREMENTS:

1. THE CONTRACTOR SHALL BE RESPONSIBLE FOR THE FURNISHING OF ALL MATERIAL, LABOR, EQUIPMENT, AND SERVICES, IN CONNECTION WITH THE INSTALLATION OF A COMPLETE AND FULLY FUNCTIONING AND CODE COMPLIANT INSTALLATION.
2. IT IS THE INTENT OF THE CONTRACT DOCUMENTS, WHICH ARE PRESENTED IN A DIAGRAMMATIC FORMAT, TO PROVIDE CONTRACTOR INFORMATION THAT SUPPLEMENTS AND ENHANCES THE GENERALLY ACCEPTED CONSTRUCTION MEANS, METHODS, TECHNIQUES, SEQUENCES AND PROCEDURES EMPLOYED IN CONNECTION WITH INSTALLATION OF THIS TYPE OF PRODUCT / SYSTEM.
3. THE CONTRACTOR SHALL ALSO INCORPORATE THE REQUIREMENTS OF THE MANUFACTURER'S INSTALLATION INSTRUCTIONS / WARRANTY REQUIREMENTS AS PART OF THE REQUIREMENTS OF THE CONSTRUCTION DOCUMENTS. IN THE EVENT OF A CONFLICT BETWEEN THE CONTRACT DOCUMENT REQUIREMENTS AND THE MANUFACTURERS INSTALLATION REQUIREMENTS, THE MORE STRINGENT REQUIREMENTS SHALL APPLY - UNLESS THE MORE STRINGENT REQUIREMENT VOIDS APPLICABLE WARRANTIES OR VIOLATES THE REQUIREMENTS OF THE LOCAL AUTHORITY HAVING JURISDICTION. ANY SUCH CONFLICT SHALL IMMEDIATELY BE BROUGHT TO THE ATTENTION OF THE ENGINEER IN WRITING THROUGH THE FORMAL RFI PROCESS.
4. REFER TO THE ASSOCIATED SCHEDULES, SCHEMATICS, DRAWINGS, AND SPECIFICATIONS FOR DETAILED INFORMATION / REQUIREMENTS ON THIS PRODUCT / SYSTEM.

TRANSFORMER SYSTEM SPECIFICATIONS:

1. TRANSFORMERS SHALL BE DRY TYPE, INTEGRAL, SELF-COOLED, ENCLOSED DISTRIBUTION, TWO-WINDING TYPE PER UL 506. TRANSFORMERS SHALL BE PROVIDED WITH WINDINGS AS SPECIFIED IN THE TRANSFORMER SCHEDULE. EACH TRANSFORMER MUST UNDERGO RESISTANCE, IMPEDANCE AND RATIO TESTING, THE RESULTS OF WHICH SHALL BE PROVIDED AS PART OF THE TRANSFORMER SUBMITTAL PACKAGE.
2. TRANSFORMERS SHALL BE EQUIPPED WITH TWO (2) 2 1/2% FCAN AND TWO (2) 2 1/2% FCBN TAPS. TAP LEADS SHALL BE TERMINATED ON AN INTERNAL BLOCK WITH LUGS FOR CONNECTION OF INCOMING CONDUCTORS. THE TERMINAL COMPARTMENT SHALL BE LOCATED BELOW THE LEVEL OF THE TRANSFORMER WINDINGS. PROVIDE ACCESS TO TERMINALS FROM THE FRONT FOR WALL AND FLOOR MOUNTED TRANSFORMERS, AND FROM THE FRONT AND BOTTOM FOR SUSPENDED TRANSFORMERS.
3. VENTILATION OPENINGS SHALL BE LOCATED TO PERMIT PLACING THE TRANSFORMER IN A CORNER WITHIN 6" OF THE TWO ADJACENT WALLS. ENCLOSURE SHALL BE CONSTRUCTED OF HEAVY GAUGE STEEL, COATED INSIDE AND OUT WITH ZINC CHROMATE OR IRON OXIDE RUST INHIBITING PRIMER. ENCLOSURE SHALL THEN BE FINISHED IN GRAY ENAMEL. EACH TRANSFORMER SHALL BE FURNISHED WITH A MANUFACTURER'S NAMEPLATE LOCATED ON THE FRONT OF THE UNIT. THE NAMEPLATE SHALL BE ANODIZED ALUMINUM STENCILED WITH VOLTAGE, KVA RATING, K-RATING, PHASE, TAP ADJUSTMENTS AND WIRING DIAGRAMS.
4. SEISMICALLY-RATED VIBRATION ISOLATORS (KORFUND COMPANY, MASON INDUSTRIES, CALDYN OR EQUAL) SHALL BE LOCATED AT EACH CORNER OF THE TRANSFORMER. ELASTOMER PADS MAY BE USED FOR ISOLATION OF TRANSFORMERS 1) WEIGHTING LESS THAN 1000 LBS AND 2) THAT ARE NOT SPECIFIED WITH REDUCED SOUND LEVELS PER THE TRANSFORMER SCHEDULE. ELASTOMER PADS SHALL BE EQUIPPED WITH SHOULDERED BUSHINGS PREVENTING METAL-TO-METAL CONTACT BETWEEN ANCHOR BOLT AND THE TRANSFORMER. NEOPRENE ISOLATORS SHALL BE USED FOR TRANSFORMERS WEIGHING 1000 LBS OR MORE OR ANY TRANSFORMER SPECIFIED WITH REDUCED SOUND LEVEL OUTPUT PER THE TRANSFORMER SCHEDULE. NEOPRENE ISOLATORS SHALL HAVE CAPTIVE STEEL OR DUCTILE IRON HOUSINGS AS REQUIRED BY SEISMIC CONDITIONS AND WEIGHT OF THE TRANSFORMER. NEOPRENE ELEMENTS SHALL BE ARRANGED IN OPPOSITION TO PROVIDE POSITIVE MECHANICAL RESTRAINT IN ALL DIRECTIONS. NEOPRENE ISOLATORS SHALL BE SELECTED TO PROVIDE NOMINAL 0.2" OF NOMINAL STATIC DEFLECTION IN COMPRESSION (0.15" MINIMUM DEFLECTION) AND LESS THAN 70 DUROMETER (BASED ON SHORE SCALE A AND IN COMPLIANCE WITH ASTM D2240 TYPE A) TO LIMIT SOUNDVIBRATION TRANSMISSION TO THE STRUCTURE - SUBMIT ISOLATOR DEFLECTION CALCULATIONS FOR SELECTED ISOLATORS WITH TRANSFORMER SUBMITTAL. TRANSFORMER SHALL BE BOLTED, VIA VIBRATION ISOLATORS, TO THE FLOOR, HOUSEKEEPING PAD, CEILING OR WALL MOUNTING BRACKETS AT ALL FOUR CORNERS. WHEN SHOWN AS WALL-MOUNTED, PROVIDE EITHER MANUFACTURER'S STANDARD TRANSFORMER WALL MOUNTING BRACKETS OR FIELD-FABRICATED MOUNTING SYSTEMS. TRANSFORMER INSTALLATIONS SHALL, AT MINIMUM, MEET THE SEISMIC BRACING AND ANCHORAGE REQUIREMENTS MANDATED BY GOVERNING BUILDING CODES. SEE GENERAL ELECTRICAL SPECIFICATIONS FOR ADDITIONAL REQUIREMENTS.
5. STANDARD TRANSFORMERS SHALL HAVE CLASS 220 INSULATION, HAVING A 150 DEGREE CELSIUS TEMPERATURE RISE ABOVE 30 DEGREE CELSIUS AVERAGE AND 40 DEGREE CELSIUS MAXIMUM, WHEN OPERATING AT FULL LOAD - WITHOUT A LOSS OF LIFE. STANDARD TRANSFORMERS SHALL COMPLY WITH NEMA ENERGY EFFICIENCY STANDARD "TP-1". WHERE TRANSFORMER STOCKS BECOME DEPLETED, INCLUDE ALL COSTS IN BASE BID TO PROVIDE 2016 DEPARTMENT OF ENERGY (DOE) TRANSFORMER EFFICIENCY STANDARD-COMPLIANT TRANSFORMERS.
6. K RATED TRANSFORMERS SHALL HAVE CLASS 220 INSULATION, HAVING A 115 DEGREE CELSIUS TEMPERATURE RISE ABOVE 30 DEGREE CELSIUS AVERAGE AND 40 DEGREE CELSIUS MAXIMUM, WHEN OPERATING AT FULL LOAD - WITHOUT A LOSS OF LIFE. K RATED TRANSFORMERS SHALL COMPLY WITH NEMA ENERGY EFFICIENCY STANDARD "TP-1". WHERE TRANSFORMER STOCKS BECOME DEPLETED, INCLUDE ALL COSTS IN BASE BID TO PROVIDE 2016 DEPARTMENT OF ENERGY (DOE) TRANSFORMER EFFICIENCY STANDARD-COMPLIANT TRANSFORMERS.
7. USE FLEXIBLE CONDUIT FOR PRIMARY AND SECONDARY CONNECTIONS WITH A SEPARATE EQUIPMENT GROUND CONDUCTOR.
8. THE "MIN. %Z" COLUMN INDICATES THE MINIMUM ALLOWED TRANSFORMER IMPEDANCE.
9. THE "A.I.C. VALUE" COLUMN INDICATES THE INTERRUPTING CURRENT AT THE SECONDARY TERMINALS BASED UPON AN INTERRUPTING CURRENT OF INFINITY AT THE PRIMARY TERMINALS.
10. THE "K VALUE" COLUMN INDICATES THE MINIMUM UL APPROVED K RATING. K RATED TRANSFORMERS SHALL BE PROVIDED WITH DOUBLE SIZE NEUTRAL TERMINALS, ADDITIONAL COIL CAPACITY, AN ELECTROSTATIC SHIELD, AND SHALL BE U.L. LISTED FOR NON-LINEAR LOADS.
11. THE "GEC/BJ SIZE" COLUMN INDICATES THE MINIMUM CONDUIT AND COPPER GROUNDING ELECTRODE CONDUCTOR AND BONDING JUMPER SIZES. THE G.E.C. AND CONDUIT SIZE SHALL BE INCREASED PER NEC OR CEC WHERE ADOPTED. TABLE 250.66 BY THE CONTRACTOR BASED ON EQUIVALENT SIZE OF THE TRANSFORMER SECONDARY CONDUCTORS.
12. WHEN THE TRANSFORMER SCHEDULE INDICATES A "REDUCED SOUND LEVEL" TRANSFORMER, PROVIDE A TRANSFORMER THAT PRODUCES 9 DECIBELS LESS SOUND AS COMPARED TO NEMA STANDARD SOUND LEVELS. WHEN REDUCED SOUND LEVEL TRANSFORMER IS NOT INDICATED, PROVIDE A TRANSFORMER THAT MEETS NEMA STANDARD SOUND LEVELS, WHICH ARE:

    10-50 KVA - 45 DECIBELS.
    51-150 KVA - 50 DECIBELS.
    151-300 KVA - 55 DECIBELS.
    301-500 KVA - 60 DECIBELS.

13. THE "NEMA/MNTG" COLUMN INDICATES THE NEMA RATED ENCLOSURE TYPE AS WELL AS THE MOUNTING METHOD:

    "1" - INDICATES AN INDOOR TYPE.
    "3" - INDICATES AN NEMA 3R, OUTDOOR TYPE WITH VENTILATED OPENINGS AND RODENT/TAMPER SCREENS.
    "F" - INDICATES FLOOR MOUNTED.
    "W" - INDICATES WALL MOUNTED.
    "RF" - INDICATES RAISED FLOOR MOUNTING WHICH REQUIRES A CUSTOM MOUNTING FRAME SUCH THAT THE RAISED FLOOR DOES NOT SUPPORT THE TRANSFORMER(S). SUGGESTED SOURCE: MASON WEST INC. (www.masonwest.com)

14. THE "DIMENSIONS" COLUMN INDICATES "H" HEIGHT, "W" WIDTH, AND "D" DEPTH. ALL DIMENSIONS AND WEIGHTS ARE BASED UPON SQUARE D PRODUCTS. CONTRACTOR SHALL BE RESPONSIBLE FOR ALL COST IMPACTS OF LARGER DIMENSIONS FROM AN ALTERNATE MANUFACTURER.
15. TRANSFORMERS SHALL BE GROUNDED TO A CODE APPROVED GROUND SOURCE PER NEC, OR CEC WHERE ADOPTED. ARTICLE 250.30.
16. IF THE SINGLE LINE DIAGRAM INDICATES TWO (2) SECONDARY FEEDERS THE TRANSFORMER SHALL BE PROVIDED WITH A DOUBLE LUG KIT.
17. SHOP DRAWINGS SHALL BE SUBMITTED PER THE ELECTRICAL SUBMITTAL REQUIREMENTS SHOWING CONFORMANCE TO THESE SPECIFICATIONS.
18. TRANSFORMERS SHALL BE MANUFACTURED BY GE, CUTLER-HAMMER, SIEMENS, SQUARE D, MGM, HAMMOND POWER SOLUTIONS, OR OLSEN.

STATE:

IDENTIFICATION STAMP
DIV. OF THE STATE ARCHITECT
APP: 03-124281 INC:
REVIEWED FOR
SS ☑ FLS ☑ ACS ☑
DATE: 02/04/2025

ARCHITECT:
architecture
westbergwhite
7700 IRVINE CENTER DR. STE. 100
IRVINE, CA 92618
(714) 508-1780 (714) 508-1780 FAX

CONSULTANT:
tk1sc COLLABORATIVE
11870 Pierce Street, Suite 160
Riverside, California 92505
951.299.4160 www.tk1sc.com
Project Leader - Bill Voller
Electrical Lead - Bill Voller
tk1sc Job #: US0027568.7397

REGISTERED PROFESSIONAL ENGINEER
RAYMOND W. SWAZEY
No. E15610
Ex. 12/31/2025
ELECTRICAL
STATE OF CALIFORNIA

PROJECT NAME:
Bellflower Unified School District
Mayfair High School Athletics Fields
6000 North Woodruff Ave
Lakewood, California 90713

CLIENT:
BELLFLOWER UNIFIED SCHOOL DISTRICT
16703 S. Clark Ave,
BELLFLOWER, CALIFORNIA 90706

#	Rev. Date	Description

JOB NO: 15008.01
DATE: 05/28/2024
DRAWN: TG, XY
CHECK: RB, JG
ARCHITECT: PDW
ENGINEER:

SHEET DESCRIPTION:
GROUNDING DETAILS, TRANSFORMER SCHEDULE, POWER SYSTEMS STUDY

SHEET NO:
E402

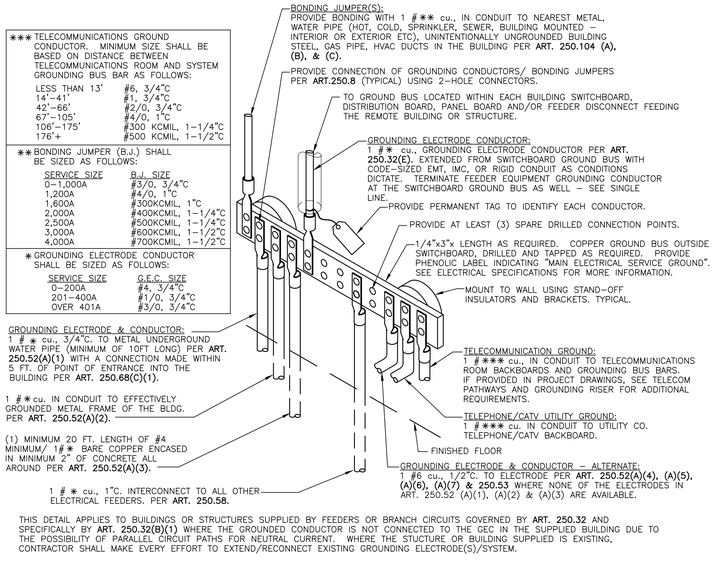

THIS DETAIL APPLIES TO BUILDINGS OR STRUCTURES SUPPLIED BY FEEDERS OR BRANCH CIRCUITS GOVERNED BY ART. 250.32 AND SPECIFICALLY BY ART. 250.32(B)(1) WHERE THE GROUNDED CONDUCTOR IS NOT CONNECTED TO THE GEC IN THE SUPPLIED BUILDING DUE TO THE POSSIBILITY OF PARALLEL CIRCUIT PATHS FOR NEUTRAL CURRENT. WHERE THE STUCTURE OR BUILDING SUPPLIED IS EXISTING, CONTRACTOR SHALL MAKE EVERY EFFORT TO EXTEND/RECONNECT EXISTING GROUNDING ELECTRODE(S)/SYSTEM.

FEEDER TO REMOTE BUILDING / STRUCTURE GROUNDING DETAIL (2)

SCALE: NTS

ELECTRICAL ROOM GENERAL NOTES:

1. ALLOWABLE DIMENSIONS IN MAIN ELECTRICAL ROOM ARE A CRITICAL COORDINATION ITEM. CONTRACTOR SHALL PROVIDE 1/4" = 1'–0" SCALE DRAWINGS WITH SWITCHGEAR SUBMITTALS SHOWING THAT ALL PROPOSED EQUIPMENT WILL FIT IN THE SPACE PROVIDED. SUBMITTALS WITHOUT THIS DRAWING SHALL BE REJECTED AS INCOMPLETE.
2. SEE LIGHTING PLAN GENERAL NOTES, POWER PLAN GENERAL NOTES AND COMMUNICATIONS PATHWAYS GENERAL NOTES FOR ADDITIONAL REQUIREMENTS.
3. FOR ELECTRICAL ROOMS THAT REQUIRE TWO (2) EXITS, OR DOUBLE WORKING SPACE DEPTH, ALL EGRESS DOORS SHOWN SHALL OPEN IN THE DIRECTION OF EGRESS AND SHALL BE PROVIDED WITH PANIC HARDWARE.

ELECTRICAL ROOM SPECIFIC NOTES:

1. TELECOMMUNICATIONS GROUNDING BUS BAR (TGB). MOUNT 18" A.F.F. REFER TO TELECOM BACKBOARD AND GROUNDING DETAIL 1/T003 FOR MORE INFORMATION. E.C. TO PROVIDE #6AWG GREEN BONDING CONDUCTOR TO GROUND BUS BAR IN PANEL F1.
2. PROVIDE 19" x 7'H FLOOR MOUNTED 2–POST UL LISTED IDF RACK COMPLETE WITH FIBER ENCLOSURE, PATCH PANELS, HORIZONTAL CABLE MANAGERS, PATCH CORDS, VERTICAL CABLE MANAGERS, RACK MOUNTED 20A POWER STRIP, ETC. AS REQUIRED FOR A COMPLETE SYSTEM, PER SPECIFICATIONS. PROVIDE #6 AWG GREEN GROUND CONDUCTOR AND BOND RACK TO TELECOM BUS BAR (TGB) WITH 2–HOLE COMPRESSION LUGS. SEE RACK ELEVATION DETAIL 3/T003 AND LAN BLOCK DIAGRAM 1/T001 FOR ADDITIONAL REQUIREMENTS.
3. PROVIDE 18"WIDE BLACK LADDER RUNWAY FROM TOP OF RACK TO BACKBOARD, REFER TO LADDER RUNWAY DETAIL 7/T003 FOR ADDITIONAL INFORMATION.
4. PROVIDE APPROVED LOCK–ON DEVICE, RED INDICATOR AND IDENTIFIED AS "FIRE ALARM CONTROL CIRCUIT" (NFPA 72, SECTION 10.6.5.2) IN BUILDING PANELBOARD. CONNECT AS REQUIRED. PROVIDE ALL REQUIRED MOUNTING HARDWARE. MATCH A.I.C. RATING OF DEVICES USED.

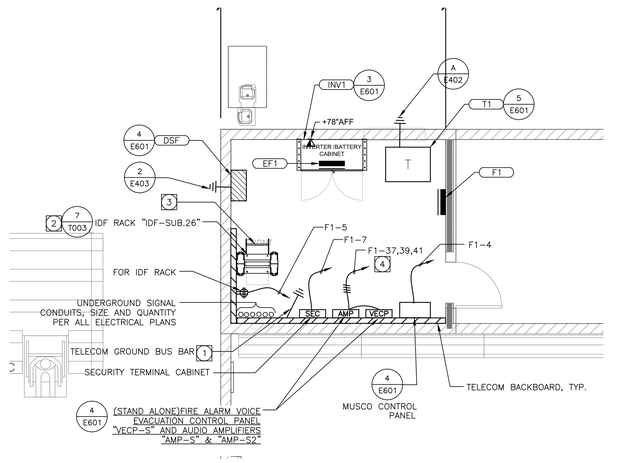

ELECTRICAL ROOM DETAIL (1)

SCALE: 1/4" = 1'–0"

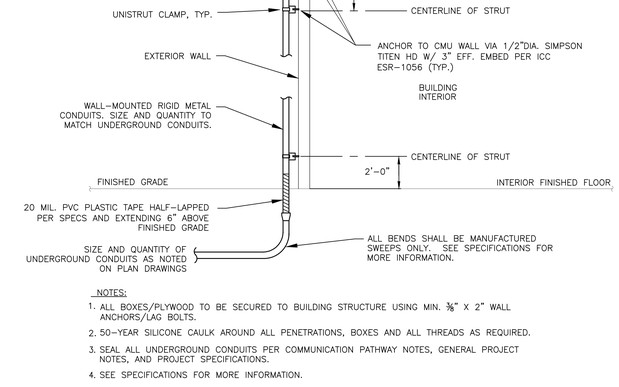

NOTES:

1. ALL BOXES/PLYWOOD TO BE SECURED TO BUILDING STRUCTURE USING MIN. ⅜" X 2" WALL ANCHORS/LAG BOLTS.
2. 50–YEAR SILICONE CAULK AROUND ALL PENETRATIONS, BOXES AND ALL THREADS AS REQUIRED.
3. SEAL ALL UNDERGROUND CONDUITS PER COMMUNICATION PATHWAY NOTES, GENERAL PROJECT NOTES, AND PROJECT SPECIFICATIONS.
4. SEE SPECIFICATIONS FOR MORE INFORMATION.

TYPICAL EXTERIOR JUNCTION BOX DETAIL (4)

SCALE: N.T.S.

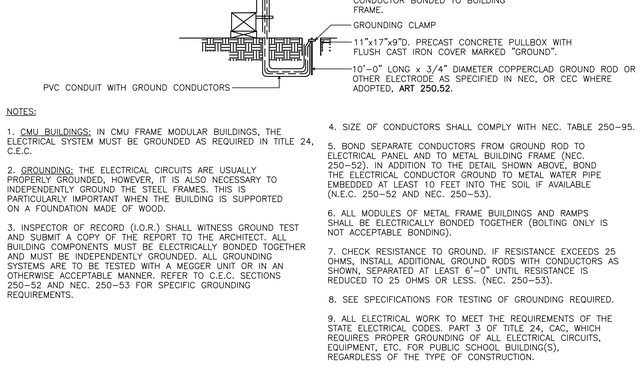

NOTES:

1. CMU BUILDINGS: IN CMU FRAME MODULAR BUILDINGS, THE ELECTRICAL SYSTEM MUST BE GROUNDED AS REQUIRED IN TITLE 24, C.E.C.
2. GROUNDING: THE ELECTRICAL CIRCUITS ARE USUALLY PROPERLY GROUNDED, HOWEVER, IT IS ALSO NECESSARY TO INDEPENDENTLY GROUND THE STEEL FRAMES. THIS IS PARTICULARLY IMPORTANT WHEN THE BUILDING IS SUPPORTED ON A FOUNDATION MADE OF WOOD.
3. INSPECTOR OF RECORD (I.O.R.) SHALL WITNESS GROUND TEST AND SUBMIT A COPY OF THE REPORT TO THE ARCHITECT. ALL BUILDING COMPONENTS MUST BE ELECTRICALLY BONDED TOGETHER AND MUST BE INDEPENDENTLY GROUNDED. ALL GROUNDING SYSTEMS ARE TO BE TESTED WITH A MEGGER UNIT OR IN AN OTHERWISE ACCEPTABLE MANNER. REFER TO C.E.C. SECTIONS 250–52 AND NEC. 250–53 FOR SPECIFIC GROUNDING REQUIREMENTS.
4. SIZE OF CONDUCTORS SHALL COMPLY WITH NEC. TABLE 250–95.
5. BOND SEPARATE CONDUCTORS FROM GROUND ROD TO ELECTRICAL PANEL AND TO METAL BUILDING FRAME (NEC. 250–52). IN ADDITION TO THE DETAIL SHOWN ABOVE, BOND THE ELECTRICAL CONDUCTOR GROUND TO METAL WATER PIPE EMBEDDED AT LEAST 10 FEET INTO THE SOIL IF AVAILABLE (N.E.C. 250–52 AND NEC. 250–53).
6. ALL MODULES OF METAL FRAME BUILDINGS AND RAMPS SHALL BE ELECTRICALLY BONDED TOGETHER (BOLTING ONLY IS NOT ACCEPTABLE BONDING).
7. CHECK RESISTANCE TO GROUND. IF RESISTANCE EXCEEDS 25 OHMS, INSTALL ADDITIONAL GROUND RODS WITH CONDUCTORS AS SHOWN, SEPARATED AT LEAST 6'–0" UNTIL RESISTANCE IS REDUCED TO 25 OHMS OR LESS. (NEC. 250–53).
8. SEE SPECIFICATIONS FOR TESTING OF GROUNDING REQUIRED.
9. ALL ELECTRICAL WORK TO MEET THE REQUIREMENTS OF THE STATE ELECTRICAL CODES. PART 3 OF TITLE 24, CAC, WHICH REQUIRES PROPER GROUNDING OF ALL ELECTRICAL CIRCUITS, EQUIPMENT, ETC. FOR PUBLIC SCHOOL BUILDING(S), REGARDLESS OF THE TYPE OF CONSTRUCTION.

DETACHED BUILDING GROUNDING DETAIL (3)

SCALE: N.T.S.

STATE:

IDENTIFICATION STAMP
DIV. OF THE STATE ARCHITECT
APP: 03-124281 INC:
REVIEWED FOR
SS ☑ FLS ☑ ACS ☑
DATE: 02/04/2025

ARCHITECT:
architecture
westbergwhite
7700 IRVINE CENTER DR. STE. 100
IRVINE, CA 92618
(714) 508-1780 (714) 508-1780 FAX

CONSULTANT:
tk1sc COLLABORATIVE
11870 Pierce Street, Suite 160
Riverside, California 92505
951.299.4160 www.tk1sc.com
Project Leader - Bill Voller
Electrical Lead - Bill Voller
tk1sc Job #: US0027568.7397

REGISTERED PROFESSIONAL ENGINEER
RAYMOND W. SWANSON
No. E15610
Ex. 12/31/2025
ELECTRICAL
STATE OF CALIFORNIA

PROJECT NAME:

Bellflower Unified School District
Mayfair High School Athletics Fields
6000 North Woodruff Ave
Lakewood, California 90713

CLIENT:

BELLFLOWER UNIFIED SCHOOL DISTRICT
16703 S. Clark Ave.
BELLFLOWER, CALIFORNIA 90706

#	Rev. Date	Description

JOB NO:	15008.01
DATE:	05/28/2024
DRAWN:	TG, XY
CHECK:	RB, JG
ARCHITECT:	PDW
ENGINEER:	

SHEET DESCRIPTION:
ELECTRICAL ROOM AND GROUNDING DETAILS

SHEET NO:
E403

INVERTER SYSTEM SCHEMATIC:

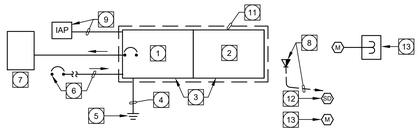

INVERTER SYSTEM PLAN NOTES:

1. INVERTER ELECTRONICS CABINET PER INVERTER SCHEDULE AND SYSTEM SPECIFICATIONS.

2. INVERTER BATTERY STRING CABINET(S) - NUMBER AS REQUIRED TO PROVIDE CODE REQUIRED BACK-UP TIME. INDIVIDUAL BATTERY STRINGS SHALL BE CONNECTED IN PARALLEL FOR ADDED REDUNDANCY.

3. PROVIDE ALL REQUIRED SEISMIC BRACING, AS REQUIRED BY LOCAL CODE. IF LOCATED ON A RAISED FLOOR, PROVIDE CUSTOM MOUNTING FRAME SUCH THAT THE RAISED FLOOR DOES NOT SUPPORT THE INVERTER EQUIPMENT.

4. WHERE THE INVERTER SYSTEM IS CONSIDERED A SEPARATELY DERIVED SYSTEM, PROVIDE GROUNDING ELECTRODE CONDUCTOR(S) PER NEC, OR CEC WHERE ADOPTED, ARTICLE 250.30. SEE THE INVERTER SCHEDULE FOR SIZING.

5. WHERE THE INVERTER SYSTEM IS CONSIDERED A SEPARATELY DERIVED SYSTEM, A CONNECTION SHALL BE MADE TO THE GROUNDING ELECTRODE PER NEC, OR CEC WHERE ADOPTED, ARTICLE 250.30. SEE SEPARATELY DERIVED SYSTEM GROUNDING DETAIL FOR ADDITIONAL REQUIREMENTS.

6. INVERTER INPUT - SEE SINGLE LINE DIAGRAM AND INVERTER SCHEDULE(S). PROVIDE INPUT CIRCUIT BREAKERS OR INPUT CIRCUIT BREAKER TYPE AS RECOMMENDED BY THE MANUFACTURER.

7. TO EITHER 1) EMERGENCY INVERTER OUTPUT BRANCH CIRCUIT PANEL FROM INVERTER OUTPUT CIRCUIT BREAKER OR 2) TO INTEGRAL OUTPUT BRANCH CIRCUIT BREAKERS LOCATED WITHIN INVERTER- SEE SINGLE LINE DIAGRAM AND INVERTER SCHEDULE(S) FOR ADDITIONAL INFORMATION.

8. PROVIDE DATA OUTLET BOX, 4S/DP MINIMUM WITH SINGLE GANG RING, WITH A 3/4" C. UP 6" ABOVE THE ACCESSIBLE CEILING AND PROVIDE A BUSHING. MOUNT 12" ABOVE EACH INVERTER MODULE TO ALLOW ANALOG COMMUNICATIONS. SEE ADDITIONAL CABLING REQUIREMENTS IN INVERTER SYSTEMS SPECIFICATIONS.

9. REMOTE INVERTER ALARM PANEL WITH CONDUIT AND CONDUCTORS, SIZE AND QTY AS REQUIRED, LOCATED NORMALLY OCCUPIED AREA. (MAXIMUM OF 100' FROM INVERTER). SEE INVERTER SCHEDULE AND INVERTER SYSTEM SPECIFICATIONS FOR MORE INFORMATION.

11. INVERTER ROOM SHALL BE PROVIDED WITH U.L.-LISTED SPILL CONTROL ACCESSORIES THAT MEET CURRENT REQUIREMENTS OF INTERNATIONAL FIRE CODE SECTION, OR CFC WHERE ADOPTED, SECTION 1206.2.11.5 AND AMENDMENTS, OSHA (STATE OR LOCAL AS APPLICABLE), NFPA, UL, AND THE LOCAL AUTHORITY HAVING JURISDICTION. AT MINIMUM PROVIDE THE FOLLOWING ACCESSORIES:

   - SPILL CLEANUP AND DISPOSAL KIT CONTAINING 5 D.O.T. GALLON CONTAINER, ELECTROLYTE NEUTRALIZER, PH TEST KIT, GLOVES, EYE PROTECTION, TYVEK COVERALL, AND COMPLETE INSTRUCTIONS. QUANTITY SHALL BE CAPABLE OF NEUTRALIZING SPILLED ELECTROLYTE TO A PH BETWEEN 5.0 AND 9.0. FOR VRLA BATTERIES, THE AMOUNT OF NEUTRALIZER SHALL BE SUFFICIENT TO ACCOMMODATE A SPILL OF 3% OF THE CAPACITY OF THE LARGEST VRLA CELL OR BLOCK. PROVIDE A SPILL CONTAINMENT SIGN ON WALL ABOVE LOCATION OF SPILL CLEANUP AND DISPOSAL KIT.

   - BOTH BATTERY WARNING AND CHEMICAL HAZARD IDENTIFICATION SYSTEM SIGNAGE AT EACH DOOR TO THE ROOM WHERE THE BATTERIES ARE LOCATED AND WHERE BATTERY ELECTROLYTE EXCEEDS 10 GALLONS. CONFORM TO IFC, OR CFC WHERE ADOPTED, SECTION 1206.2.8.6 IN ADDITION TO ANY LOCAL AHJ REQUIREMENTS/MODIFICATIONS TO THIS ARTICLE. (SEE OCFA GUIDELINE G-05 AND G10 WHEN IN OCFA JURISDICTION)

   - ROOMS CONTAINING BATTERY SYSTEMS WITH 70 KWH OR MORE OF ENERGY CAPACITY PER CFC SECTION 1206 OR 50 GALLONS OR MORE OF ELECTROLYTE PER IBC SECTION 1206 SHALL BE PROVIDED WITH AN EYE WASH STATION THAT COMPLIES WITH OSHA 1926.441 (a)(6) AND LATEST EDITION OF ANSI Z358.1. STATION SHALL BE SELF-CONTAINED PORTABLE, WALL-HUNG UNIT WITH A FLOW RATE OF 0.4 GALLONS/MINUTE FOR 15 MINUTES AND SHALL HOLD A MINIMUM OF 6 GALLONS OF NON-TOXIC, BACTERIOSTATICALLY-TREATED WATER. (ENVIROGUARD 1-800-206-9884). IF PERMANENTLY PLUMBED SHOWER IS PROVIDED IN EACH BATTERY ROOM, THAN AN EYEWASH STATION IS NOT REQUIRED. WHEN AN EYE WASH STATION OF ANY KIND IS INSTALLED, "EMERGENCY EYE WASH STATION" SIGNAGE SHALL BE PROVIDED ABOVE THE EYE WASH STATION.

   - PROVIDE START-UP TRAINING FOR SAFETY, MAINTENANCE, AND CARE OF ALL BATTERY-RELATED SAFETY EQUIPMENT FOR UP TO 10 PERSONS ACCESSING THE ROOM CONTAINING THE BATTERIES. TRAINING SHALL BE A MINIMUM OF 4 HOURS AND COVER BATTERY ROOM SAFETY, SPILL RESPONSE AWARENESS, ELECTRICAL SAFETY AND OTHER INDUSTRY BEST PRACTICE TRAINING TOPICS.

12. SMOKE OR HEAT DETECTORS (QTY AS REQUIRED FOR FIRE CODE COMPLIANCE) CONNECTED TO A CENTRAL MONITORING SYSTEM OR FIRE ALARM SYSTEM. INCLUDE ALL COSTS TO CONNECT TO NEW SYSTEM OR EXISTING SYSTEM AS REQUIRED BY PROJECT SCOPE.

13. PER CFC SECTION 1206.2.11.4.1 WHERE BATTERY ENERGY CAPACITY EXCEEDS 70 KWH (OR 50 GALLONS OF ELECTROLYTE WHER IBC OR OTHER LOCAL CODE IS ADOPTED). PROVIDE SUPERVISORY SIGNAL TO FIRE ALARM SYSTEMS VIA CURRENT MONITORING SWITCH. ROUTE 1 PHASE CONDUCTOR OF EACH INVERTER ROOM EXHAUST FAN BRANCH CIRCUIT THROUGH/AROUND A DEDICATED, CURRENT-OPERATED LOAD MONITORING SWITCH THAT DETECTS OVERLOADS AND UNDERLOADS (INCLUDING FAN BELT BREAKAGE) WITHIN +/- 15 PERCENT OF AVERAGE CURRENT DRAW. LOCATE IN BARRIERED PULL BOX - NEMA 3R FOR WET LOCATIONS - AND CONNECT N.O. CONTACT TO FIRE ALARM MONITORING MODULE (SUPERVISORY SIGNAL). ADDITIONALLY CONNECT INVERTER THERMAL RUNAWAY DEVICE OUTPUT CONTACT TO FIRE ALARM MONITOR MODULE AND PROGRAM TO INDICATE THERMAL RUNAWAY/INVERTER SHUTDOWN (SUPERVISORY SIGNAL).LOCATE PULL BOX WITH DEVICES INDOORS WHERE POSSIBLE AND ADJACENT TO THE SERVING ELECTRICAL DISTRIBUTION EQUIPMENT. PROVIDE LABEL "INVERTER 1 BATTERY EX. FAN & THERMAL RUNAWAY/INVERTER SHUTDOWN MONITOR" PER LABELING SPECIFICATIONS. (NK TECHNOLOGIES #ASM-NOU-OU-FT - www.nktechnologies.com).

INVERTER SYSTEM REQUIREMENTS:

1. THE CONTRACTOR SHALL BE RESPONSIBLE FOR THE FURNISHING OF ALL MATERIAL, LABOR, EQUIPMENT, AND SERVICES, IN CONNECTION WITH THE INSTALLATION OF A COMPLETE AND FULLY FUNCTIONING AND CODE COMPLIANT INSTALLATION.

2. IT IS THE INTENT OF THE CONTRACT DOCUMENTS, WHICH ARE PRESENTED IN A DIAGRAMMATIC FORMAT, TO PROVIDE CONTRACTOR INFORMATION THAT SUPPLEMENTS AND ENHANCES THE GENERALLY ACCEPTED CONSTRUCTION MEANS, METHODS, TECHNIQUES, SEQUENCES AND PROCEDURES EMPLOYED IN CONNECTION WITH INSTALLATION OF THIS TYPE OF PRODUCT/SYSTEM.

3. THE CONTRACTOR SHALL ALSO INCORPORATE THE REQUIREMENTS OF THE MANUFACTURER'S INSTALLATION INSTRUCTIONS/WARRANTY REQUIREMENTS AS PART OF THE REQUIREMENTS OF THE CONSTRUCTION DOCUMENTS. IN THE EVENT OF A CONFLICT BETWEEN THE CONTRACT DOCUMENT REQUIREMENTS AND THE MANUFACTURER'S INSTALLATION REQUIREMENTS, THE MORE STRINGENT REQUIREMENTS SHALL APPLY - UNLESS THE MORE STRINGENT REQUIREMENT VOIDS APPLICABLE WARRANTIES OR VIOLATES THE REQUIREMENTS OF THE LOCAL AUTHORITY HAVING JURISDICTION. ANY SUCH CONFLICT SHALL IMMEDIATELY BE BROUGHT TO THE ATTENTION OF THE ENGINEER IN WRITING THROUGH THE FORMAL RFI PROCESS.

4. REFER TO THE ASSOCIATED SCHEDULES, SCHEMATICS, DRAWINGS, AND SPECIFICATIONS FOR DETAILED INFORMATION/REQUIREMENTS ON THIS PRODUCT/SYSTEM.

INVERTER SYSTEM SPECIFICATIONS

1. THE INVERTER SYSTEM SHALL HAVE A TWO YEAR WARRANTY ON CABINET AND ELECTRONICS AFTER INITIAL START-UP. THE INVERTER SHALL HAVE A TEN YEAR BATTERY WARRANTY, ONE-YEAR FULL REPLACEMENT AND PRO-RATA THEREAFTER.

2. THE INVERTER SYSTEM SHALL BE FACTORY ASSEMBLED AND SHALL HAVE THE FOLLOWING LISTINGS AND CERTIFICATIONS:

   - 1998 U.L. 924 (EMERGENCY LIGHTING).
   - 1998 U.L. 924A (AUXILIARY EQUIPMENT FOR USE WITH GENERATORS).
   - REQUIREMENTS OF N.E.C.(OR CEC, WHERE ADOPTED), O.S.H.A., AND THE LIFE SAFETY CODE(NFPA 101).
   - SPECIAL SEISMIC CERTIFICATION - CA OSHPD OSP CERTIFICATION SHALL BE PROVIDED AS EVIDENCE OF COMPLIANCE REGARDLESS OF PROJECT LOCATION.

3. THE INVERTER SYSTEM SHALL HAVE THE FOLLOWING CHARACTERISTICS:

   - MAXIMUM SOUND LEVEL OF 45dBA AS MEASURED 1 METER FROM THE INVERTER SYSTEM WHILE IT IS IN EMERGENCY OPERATION. INVERTER SYSTEM SHALL BE INAUDIBLE AT 1 METER FROM THE INVERTER SYSTEM WHEN IN NON-EMERGENCY MODE.
   - RATED AND BRACED AS APPROPRIATE TO WITHSTAND THE AVAILABLE FAULT CURRENT AT THE INPUT TERMINALS OF THE INVERTER. SEE FEEDER SCHEDULE FOR AIC VALUES.
   - 100% COMPATIBLE WITH ALL LIGHTING LOADS - REGARDLESS OF BALLAST TYPE.
   - CAPABLE OF SUPPORTING SMALL MOTOR LOADS.
   - COMPATIBLE WITH ALL ELECTRONIC SYSTEM LOADS.
   - MICROPROCESSOR-BASED, SOFTWARE-CONTROLLED, BT PWM DESIGN WITH IGBT TECHNOLOGY FOR A TRUE "NO-BREAK" SINE WAVE OUTPUT.
   - MINIMUM 97% EFFICIENCY. SYSTEM SHALL NOT REQUIRE AIR FILTERS.
   - SEALED MAINTENANCE-FREE LEAD CALCIUM BATTERIES WITH FRONT ACCESS TERMINALS AND A 10 YEAR LIFE EXPECTANCY.
   - SELF-TESTING, SELF-DIAGNOSTIC, AND SELF-EXERCISING FUNCTIONS WITH A LOG OF THE LAST 75 ALARM/INVERTER EVENTS.
   - STANDARD RS232 COMMUNICATIONS INTERFACE.
   - AUTOMATIC-OVERLOAD PROTECTION, SHORT CIRCUIT PROTECTION, LIGHTING AND SURGE PROTECTION, AS WELL AS A BACK-FEED RELAY AND/OR SCR FOR PREVENTION OF INADVERTENT LINE ENERGIZATION.
   - 14 STANDARD FUNCTION ALARMS, INCLUDING "OPEN OUTPUT CIRCUIT BREAKER" ALARM AND LOAD REDUCTION ALARM (10% DECREASE IN INVERTER LOAD) AS REQUIRED TO MEET UNIT SELF-TESTING REQUIREMENTS OF THE CURRENTLY-ADOPTED VERSION OF NFPA 101.
   - 10 STANDARD DIGITAL METER DISPLAYS.
   - SELF TESTING AND SELF DIAGNOSTIC FUNCTIONS WITH SEPARATE EVENT ALARM AND TEST LOGS, EVENT MEMORY CAPABLE OF LOGGING 225 DISTINCT EVENTS.
   - 90 MINUTES OF BATTERY CAPACITY AT FULL LOAD OUTPUT.
   - UNITY POWER FACTOR WHERE KVA = KW.
   - AN INTERNAL BREAK-BEFORE-MAKE MAINTENANCE BYPASS SWITCH SHALL BE PROVIDED.

4. THE INVERTER SYSTEM SHALL PROVIDE OUTPUT POWER WITH THE FOLLOWING CHARACTERISTICS:

   - CONTINUOUS LINE CONDITIONED COMPUTER QUALITY POWER.
   - SPIKE AND SURGE PROTECTION.
   - DYNAMIC BROWNOUT PROTECTION.
   - VOLTAGE REGULATION OF 10% NOMINAL.
   - LESS THAN 3% TOTAL HARMONIC DISTORTION AT 100% LINEAR LOAD.

5. THE INVERTER SHALL BE PROVIDED WITH A PROGRAMMABLE EMAIL/PRE-RECORDED VOICE MESSAGE ANALOG MODEM COMMUNICATING WITH INVERTER MFGR-MAINTAINED AUTOMATED CALL CENTER. INVERTER SYSTEM SHALL BE CONFIGURED/PROGRAMMED TO SEND EMAIL ALERT NOTIFICATIONS OR PRE-RECORDED VOICE MESSAGES AS REQUIRED BY OWNER'S REPRESENTATIVE. E.C. SHALL INCLUDE ALL COSTS TO PROVIDE A PLENUM-RATED CATEGORY 6 DATA CABLE AND RJ45 JACK LOCATED IN A RECESSED TELECOMMUNICATIONS OUTLET TO EACH INVERTER LOCATION. CATEGORY 6 CABLE SHALL BE EXTENDED TO NEAREST TELEPHONE BACKBOARD AND TERMINATED. SHELL PROJECT DESTINATION MAY BE THE MAIN TELEPHONE BACKBOARD. TENANT IMPROVEMENT PROJECT DESTINATION MAY BE THE NEAREST TELECOMMUNICATIONS CLOSET OR IDF. IN EITHER CASE, E.C. SHALL OBTAIN OWNER APPROVAL FOR CABLE ROUTING AND TERMINATION LOCATION PRIOR TO ROUGH-IN.

6. WHEN THE INVERTER SCHEDULE INDICATES OUTPUT CONTACTS ARE REQUIRED, PROVIDE AS FOLLOWS:

   "STD" - PROVIDE SUMMARY ALARM RELAY/CONTACT AND "INVERTER ON" RELAY/CONTACT

   "MULTI" - PROVIDE MULTI-OUTPUT CONTACT BOARD THAT PROVIDES STATUS CONTACTS FOR INVERTER ON, INVERTER OFF, AC PRESENT, SUMMARY FAULT, THERMAL ALARM, SYSTEM ON BYPASS, INTERNAL MAINTENANCE BYPASS SWITCH POSITION

   "BMS" - PROVIDE BACNET MS/TP COMMUNICATIONS CARD (BTL-LISTED) PROVIDING, AT MINIMUM, THE SAME POINTS AS THE MULTI-OUTPUT CONTACT BOARD. WHERE THE "BMS" OPTION IS SPECIFIED AND AN ALTERNATE/EQUAL PRODUCT IS USED THAT IS NOT CAPABLE OF BACNET COMMUNICATIONS, INCLUDE ALL COST IS BASE BID TO PROVIDE A MUTIL-OUTPUT CONTACT CARD WITH A SEPARATE, EXTERNAL BACNET MS/TP I/O MODULE WITH POWER SUPPLY LOCATED IN A HINGED NEMA WALL-MOUNTED BOX. PROVIDE 120V CIRCUIT AS REQUIRED.

7. ALL INVERTER BATTERIES SHALL BE VALVE REGULATED, ABSORBENT GLASS MAT, LEAD-ACID TYPE (VRLA) DESIGNED FOR A 10 YEAR LIFE AND SHALL BE EQUIPPED WITH SELF-RESEALING FLAME-ARRESTING SAFETY VENTS PER IFC, OR CFC WHERE ADOPTED, ART 1207.6.4.

8. FOR EACH INVERTER WITH A TOTAL BATTERY ELECTROLYTE CAPACITY 50 GALLONS OR GREATER (PER IFC) OR WITH AN ENERGY CAPACITY OF 70KWH OR GREATER PROVIDE THE FOLLOWING:

   a. A LISTED DEVICE OR OTHER AHJ-APPROVED METHOD TO PRECLUDE, DETECT AND CONTROL THERMAL RUNAWAY PER IFC, OR CFC WHERE ADOPTED, ART 1207.6.5. EACH BATTERY STRING/DC DISCONNECT COMBINATION SHALL BE PROVIDED WITH CPI #BTM BATTERY THERMAL MANAGEMENT DEVICE OR EQUAL - FULLY CONNECTED /CONFIGURED - TO DISCONNECT ITS RESPECTIVE BATTERY DISCONNECT AND ITS RESPECTIVE BATTERY STRING. ADDITIONALLY, THE SYSTEM SHALL PROVIDE AN ALARM OUTPUT AT AN AVAILABLE INVERTER CUSTOMER ALARM INPUT CARD. INVERTER SHALL BE CONFIGURED TO REFLECT A HIGH PRIORITY ALARM "BATTERY THERMAL RUNAWAY" INDICATION VIA BUILDING FIRE ALARM AND, IF PROVIDED ON PROJECT, BUILDING AUTOMATION SYSTEM.

   b. ALL VRLA BATTERIES SHALL BE HOUSED IN LOCKABLE CABINETS. BATTERY CABINETS SHALL LIMIT THE MAXIMUM CONCENTRATION OF HYDROGEN TO 1.0 PERCENT OF THE TOTAL VOLUME OF THE CABINET DURING THE WORST CASE EVENT OF SIMULTANEOUS "BOOST" CHARGING OF ALL THE BATTERIES IN THE CABINET.

   c. BATTERY CABINETS SHALL HAVE EXTERIOR LABELS IDENTIFYING THE MANUFACTURER AND MODEL NUMBER OF THE SYSTEM AND ELECTRICAL RATING (VOLTAGE AND CURRENT) OF THE CONTAINED BATTERY SYSTEM. THERE SHALL ALSO BE SIGNS WITHIN THE CABINET TO INDICATE THE RELEVANT ELECTRICAL, CHEMICAL AND FIRE HAZARDS. IFC, OR CFC WHERE ADOPTED, ART 1207.4.8.

9. WHEN THE INVERTER SCHEDULE INDICATES A "REMOTE ALARM", A REMOTE ALARM PANEL SHALL BE PROVIDED PER THE FLOOR PLAN. WHEN A REMOTE ALARM PANEL IS NOT SHOWN ON FLOOR PLANS, THE E.C. SHALL INCLUDE ALL COSTS TO PROVIDE 1 REMOTE ALARM PANEL PER INVERTER WITH CONDUIT AND CONDUCTORS AS REQUIRED TO LOCATE REMOTE ALARM PANEL(S) A MINIMUM OF 200 FT. FROM THE INVERTER(S).

10. WHEN THE INVERTER SCHEDULE INDICATES A "GEC SIZE", THE INVERTER(S) IS CONSIDERED TO BE A SEPARATELY DERIVED SYSTEM, PROVIDE CONDUIT AND COPPER GROUNDING ELECTRODE CONDUCTOR - SIZES AS INDICATED.

11. AN INTERNAL MAINTENANCE BYPASS SWITCH SHALL BE PROVIDED.

12. THE INVERTER SYSTEM SHALL BE PROVIDED WITH FACTORY STARTUP BY A MANUFACTURER APPROVED TECHNICIAN.

13. ALL INVERTERS SHALL BE SEISMICALLY CERTIFIED ASSUMING A COMPONENT IMPORTANCE FACTOR, I_p = 1.5). SEE STRUCTURAL PLANS FOR SITE SPECIFIC S_{DS} VALUES AND ADDITIONAL SEISMIC DESIGN CRITERIA. WHERE STRUCTURAL PLANS ARE UNAVAILABLE, CONTRACTOR SHALL RETAIN THE SERVICES OF A STRUCTURAL ENGINEER LICENSED IN THE STATE IN WHICH THE PROJECT OCCURS TO PROVIDE/VALIDATE SITE SPECIFIC SEISMIC DESIGN CRITERIA USING USGS US SEISMIC DESIGN MAP TOOLS OR OTHER INDUSTRY RECOGNIZED MAPPING TOOLS AS REQUIRED. WHERE SOIL CONDITIONS ARE UNKNOWN, USE CONDITIONS THAT RESULT IN THE HIGHEST S_{DS} FOR THE PROJECT LOCATION. ADDITIONALLY, INCLUDE ALL COSTS IN BASE BID ASSOCIATED WITH PROVIDING SPECIAL SEISMIC CERTIFICATION AND SPECIAL PERIODIC INSPECTIONS PER IBC, OR CBC WHERE ADOPTED, CHAPTER 17. SEE ELECTRICAL SPECIFICATIONS FOR ADDITIONAL REQUIREMENTS.

    SPECIAL SEISMIC CERTIFICATION SHALL BE PROVIDED BY THE INVERTER MANUFACTURER/VENDOR VIA 3RD PARTY ACCREDITED LISTING AGENCY'S CERTIFICATE OF COMPLIANCE. CERTIFICATION SHALL BE BASED ON TESTING - NOT ANALYSIS. THIS SPECIFICATION FURTHER REQUIRES ALL INVERTER(s) RECEIVE A STATE OF CALIFORNIA OFFICE OF STATEWIDE PLANNING AND DEVELOPMENT (OSHPD) SPECIAL SEISMIC CERTIFICATION PRE-APPROVAL (OSP) REGARDLESS OF INTENDED USE AND/OR LOCATION OF PROJECT.

    THE CONTRACTOR SHALL BE RESPONSIBLE FOR THE DESIGN AND INSTALLATION OF SEISMIC RESTRAINT/ATTACHMENT SYSTEMS VIA LICENSED STRUCTURAL ENGINEER IN THE STATE IN WHICH THE PROJECT OCCURS.

14. SHOP DRAWINGS SHALL BE SUBMITTED PER THE GENERAL SPECIFICATION REQUIREMENTS SHOWING CONFORMANCE TO THESE SPECIFICATIONS.

15. THE INVERTER SYSTEM SHALL BE A SEISMICALLY-CERTIFIED MEYERS-CPI ILLUMINATOR "E" OR "CIII" SERIES - EQUAL BY ISOLITE #E3MAC SERIES, EVENLITE #LITEMINDER MODULAR SERIES OR HUBBELL MYERS-CPI INVERTER SYSTEMS SERVE AS THE DESIGN-BASIS FOR THE INVERTER(S) ON THIS PROJECT. WHILE ISOLITE & EVENLITE SEISMICALLY-CERTIFIED INVERTER(S) AND HUBBELL/DUALITE LSN SEISMICALLY-CERTIFIED INVERTERS ARE CONSIDERED EQUAL TO MEYERS-CPI, USE OF THE ISOLITE, EVENLITE OR HUBBELL/DUALITE INVERTERS MAY REQUIRE ADDITIONAL SPACE, ROOM RECONFIGURATION, COOLING, ELECTRICAL INFRASTRUCTURE ETC. ANY ADDITIONAL CONSTRUCTION COSTS(S), INCLUDING RE-DESIGN/DOCUMENTATION COSTS, FOR USE OF ISOLITE, EVNLITE OR HUBBELL/DUALITE INVERTER(S) SHALL BE INCLUDED IN BASE BID. NO OTHER INVERTER PRODUCTS ARE KNOWN EQUALS TO THE MEYERS-CPI, ISOLITE, EVENELITE, AND HUBBELL PRODUCTS AT THIS TIME.

DESIGNATED SEISMIC SYSTEM:

EVERY INVERTER ON THIS PROJECT IS A PART OF A DESIGNATED SEISMIC SYSTEM (COMPONENT IMPORTANCE FACTOR, I_p = 1.5). SEE INVERTER SPECIFICATIONS FOR ADDITIONAL REQUIREMENTS.

INVERTER INV1

INPUT VOLTAGE	277V	OUTPUT VOLTAGE	277V	KW	6.0	GEC/BJ SIZE	NOT APPLICABLE
INPUT PHASE	1	OUTPUT PHASE	1	OUTPUT CONTACTS	STD		
INPUT WIRE	2	OUTPUT WIRE	2	REMOTE ALARM	YES	AIC	NOT APPLICABLE

NOTES	DESCRIPTION	WATTS	LTG	GEN	KIT	LCL	MIS	BKR	CARC	PHASE	CIRC	BKR	MIS	LCL	KIT	GEN	LTG	WATTS	DESCRIPTION	NOTES
A	MUSCO POLE 'F4' EGRESS	1,080	2	–	–	–	–	20/1	1	A	2	20/1	–	–	–	–	2	1,080	MUSCO POLE 'F1' EGRESS	A
A	MUSCO POLE 'F3' EGRESS	1,080	2	–	–	–	–	20/1	3	A	4	20/1	–	–	–	–	2	1,080	MUSCO POLE 'F2' EGRESS	A
–	SPARE	–	–	–	–	–	–	20/1	5	A	6	20/1	–	–	–	–	–	–	SPARE	–
–	SPARE	–	–	–	–	–	–	20/1	7	A	8	20/1	–	–	–	–	–	–	SPARE	–
–	SPARE	–	–	–	–	–	–	20/1	9	A	10	20/1	–	–	–	–	–	–	SPARE	–

TOTAL WATTS = 4,320 AMPS = 15.6A LCL = 5,400

INVERTER BATTERY SCHEDULE

1. BATTERY TYPE: DRY
2. CHEMICALS IN BATTERIES:

COMMON NAME	CHEMICAL NAME	%	CAS #	MATERIAL FORM	QUANTITY STORED	QUANTITY IN USE	LOCATION	HAZARD CLASSES
GRID	LEAD	34%	7439-921	SOLID	N/A	CLOSED	–	TARGET ORGAN
LEAD OXIDE	LEAD DIOXIDE	31%	1309-60-0	SOLID	N/A	CLOSED	–	CORROSIVE / TOXIC / TARGET ORGAN / CLASS 1 WATER REACTIVE
ANGLESITE	LEAD SULFATE	<1%	7446-14-2	SOLID	N/A	CLOSED	–	CORROSIVE / TOXIC / TARGET ORGAN / CLASS 1 WATER REACTIVE
BATTERY ELECTROLYTE	SULFURIC ACID	34%	7446-93-9	LIQUID	N/A	CLOSED	–	CORROSIVE / TOXIC / TARGET ORGAN / CLASS 1 WATER REACTIVE

3. NUMBER OF BATTERIES: 15 BATTERIES
4. LIQUID GALLON CAPACITY OF EACH BATTERY: 1.42 GALLONS
5. TOTAL SYSTEM GALLON CAPACITY: 21.3 GALLONS
6. BATTERY STORAGE LOCATION / METHOD: IN INVERTER
7. REASON FOR BATTERY USE: MUSCO EMERGENCY LIGHTING

A – CONTROLLED THROUGH MUSCO CONTROL PANEL.

STATE:

IDENTIFICATION STAMP
DIV. OF THE STATE ARCHITECT
APP: 03-124281 INC:
REVIEWED FOR
SS ☑ FLS ☑ ACS ☑
DATE: 02/04/2025

ARCHITECT:

architecture
westbergwhite
7700 IRVINE CENTER DR. STE. 100
IRVINE, CA 92618
(714) 508-1780 (714) 508-1780 FAX

CONSULTANT:

tk1sc
COLLABORATIVE
11870 Pierce Street, Suite 160
Riverside, California 92505
951.299.4160 www.tk1sc.com
Project Leader - Bill Voller
Electrical Lead - Bill Voller
tk1sc Job #: US0027568.7397

REGISTERED PROFESSIONAL ENGINEER
RAYMOND W. SWANSON
No. E15610
Ex. 12/31/2025
ELECTRICAL
STATE OF CALIFORNIA

PROJECT NAME:

Bellflower Unified School District
Mayfair High School Athletics Fields
6000 North Woodruff Ave
Lakewood, California 90713

CLIENT:

BELLFLOWER UNIFIED SCHOOL DISTRICT
16703 S. Clark Ave.
BELLFLOWER, CALIFORNIA 90706

Rev.	Date	Description
2		

JOB NO:	15008.01
DATE:	05/28/2024
DRAWN:	TG, XY
CHECK:	RB, JG
ARCHITECT:	PDW
ENGINEER:	

SHEET DESCRIPTION:

INVERTER SCHEDULE AND SYSTEM SPECIFICATIONS

SHEET NO:

E404

ELECTRICAL ROOM

PANEL F1

MOUNTING	SURFACE	DOUBLE LUG	NO	VOLTS	120/208	MAIN	200A-3P
NEMA 3R	NO	200% NEUTRAL	YES	PHASE	3	BUS	225A
FEED THRU	NO	I/G BUS	YES	WIRE	4	A.I.C.	10,000

NOTES	LOCATION	A	B	C	LTG	CONV	KITC	RECP	MISC	BKR	CIRC		CIRC	BKR	MISC	RECP	KITC	CONV	LTG	A	B	C	LOCATION	NOTES
	SPARE									20/1	1		2	20/1					13	780			BASEBALL HOME DUGOUT LTG	
	SPARE									20/1	3		4	20/1	1							500	MUSCO CTRL PNL	
	IDF RACK			1500				1		20/1	5		6	20/1	2							200	S PARKING CAMERAS	
	SECURITY CNTRL	300							1	20/1	7		8	20/1	5					500			N PARKING CAMERAS	
	SAC-1		1768						1	30/2	9		10	20/1	1						1000		BASEBALL SCOREBOARD	
	-			1768					-	-	11		12	20/1	1							1000	SOFTBALL SCOREBOARD	
	SIDELINE RECEPT	360							1	20/1	13		14	20/1	1					1000			STADIUM SCOREBOARD	
	SIDELINE RECEPT		360						1	20/1	15		16	20/1					1		300		TICKET BOOTH LTG	
	SIDELINE RECEPT			360					1	20/1	17		18	20/1				1				500	TICKET BOOTH REC	
	SIDELINE RECEPT	360							1	20/1	19		20	20/1				1		300			TICKET BOOTH REC	
	SIDELINE RECEPT		360						1	20/1	21		22	20/1					1		500		TICKETBOOTH LTG	
	SIDELINE RECEPT			360					1	20/1	23		24	20/1					1			500	TICKETBOOTH REC	
	SOFTBALL BATTING CAGE	500							1	20/1	25		26	20/1				1		500			TICKETBOOTH REC	
	BASEBALL BATTING CAGE		500						1	20/1	27		28	20/1					39		1296		STORAGE BLDG LTG	
	BASEBALL SCORE TABLE REC			360					1	20/1	29		30	20/1					3			141	STORAGE BLDG EXT LTG	
	BASEBALL VISITOR REC	540							3	20/1	31		32	20/1				6		1080			STORAGE BLDG PWR	
	SOFTBALL HOME REC		540						3	20/1	33		34	20/1				1			360		SOFTBALL SCORE TABLE REC	
	SPARE									20/1	35		36	20/1				3				540	SOFTBALL VISITOR REC	
	AMP-S2	500							1	20/1	37		38	100/3	1					3780			PANEL 'SP'	
	VECP-S		500						1	20/1	39		40	-							5680		-	
	AMP-S			500					1	20/1	41		42	-								5161	-	
	BASEBALL VSITOR LTG	300			2					20/1	43		44	100/2						970			PANEL 'LP'	
	BASEBALL VISITOR EXT LTG		141		3					20/1	45		46	-							970		-	
	BASEBALL HOME EXT LTG			94	2					20/1	47		48	20/1									SPARE	
	SOFTBALL HOME STOR LTG	68			2					20/1	49		50	20/1									SPARE	
	SOFBALL HOME EXT LTG		94		2					20/1	51		52	20/1									SPARE	
	SOFTBALL VSITOR LTG			68	2					20/1	53		54	20/1									SPARE	
	SOFTBALL VISITOR EXT LTG	141			3					20/1	55		56										SPACE	
	SPACE										57		58										SPACE	
	SPACE										59		60										SPACE	

A= 11979 B= 14869 C= 13052

TOTAL VA=	39900	W/LCL=	41005	AMPS=	**114**	TOTAL LCL=	4423	X .25 =	1106
HIGH PHASE VA=	14869	W/LCL=	15452	HIGH PHASE AMPS=	**129**	HIGH PHASE LCL=	2331	X .25 =	583

CONCESSIONS BUILDING

PANEL SP

MOUNTING	SURFACE	DOUBLE LUG	NO	VOLTS	120/208	MAIN	100A-3P
NEMA 3R	NO	200% NEUTRAL	NO	PHASE	3	BUS	100A
FEED THRU	NO	I/G BUS	NO	WIRE	4	A.I.C	10,000A

NOTES	LOCATION	A	B	C	LTG	CONV	KITC	RECP	MISC	BKR	CIRC		CIRC	BKR	MISC	RECP	KITC	CONV	LTG	A	B	C	LOCATION	NOTES
	GEN. RECEPT	360						2		20/1	1		2	20/1	1					1500			HAND DRYER	
	GEN. RECEPT		360					2		20/1	3		4	20/1	1						1500		HAND DRYER	
	RECEPT. CONCESSION			360				2		20/1	5		6	20/1	1							828	EF-1	
	RECEPT. CONCESSION	360						2		20/1	7		8	20/1	1					500			IRRIGATION CNTRL	
	RECEPT. CONCESSION		360					2		20/1	9		10	20/1					20		680		INT. LIGHTING	
	RECEPT. CONCESSION			360				2		20/1	11		12	20/1					14			658	EXT. LIGHTING	
	GEN. RECEPT	360						2		20/1	13		14	20/1	3					340			EF-2,3,4	
	DRINKING FOUNTAIN		360					2		20/1	15		16	20/1									SPARE	
	RESTROOM RECEPT			540				3		20/1	17		18	20/1									SPARE	
	DRINKING FOUNTAIN	360						1		20/1	19		20	20/1									SPARE	
	WATER HEATER		1250						1	20/2	21		22	20/1									SPARE	
				1250							23		24	20/1									SPARE	
	SPARE									20/1	25		26	20/1									SPARE	
	FRIDGE CONCESSIONS		1000					1		20/1	27		28	20/1									SPARE	
	FREEZER CONCESSIONS			1000				1		20/1	29		30	20/1									SPARE	
	SPACE										31		32										SPACE	
	SPACE										33		34										SPACE	
	SPACE										35		36										SPACE	
	SPACE										37		38										SPACE	
	SPACE										39		40										SPACE	
	SPACE										41		42										SPACE	

A=	3780	VA
PHASE A LCL=	0	VA
PHASE A W/LCL=	3780	VA

B=	5510	VA
PHASE B LCL=	170	VA
PHASE B W/LCL=	5680	VA

C=	4996	VA
PHASE C LCL=	165	VA
PHASE C W/LCL=	5161	VA

TOTAL VA=	14286	
TOTAL LCL=	335	
AMPS=	**41**	
TOTAL VA W/LCL=	14621	
HIGH PHASE AMPS=	**47**	

GENERAL PANEL SCHEDULE NOTES:

1. WHERE PANEL IS INDICATED TO INCLUDE FEED THRU LUGS, PROVIDE FEED THROUGH LUGS AT THE OPPOSITE END OF THE PANELBOARD FROM THE PANELBOARD MAIN LUGS.
2. WHERE PANEL IS INDICATED TO INCLUDE DOUBLE LUGS, PROVIDE A DOUBLE LUG KIT AT THE SAME END OF THE PANELBOARD AS THE PANELBOARD MAIN LUGS.
3. WHERE PANEL IS INDICATED TO INCLUDE 200% NEUTRAL, PROVIDE PANELBOARDS UL LISTED AS HAVING NEUTRAL BUSSES RATED TO CARRY 200 PERCENT OF THE CURRENT CARRYING CAPACITY OF THE PHASE BUSSING. OTHERWISE, NEUTRAL BUSSING TO BE FULL SIZE AND RECTANGULAR.
4. WHERE PANEL IS INDICATED TO INCLUDE AN I/G BUS, PROVIDE PANELBOARDS WITH AN ISOLATED GROUND BUS, DRILLED AND TAPPED FOR NUMBER OF ISOLATED GROUND CONDUCTORS SHOWN, AS WELL AS FOR ALL SPARES AND SPACES SHOWN ON THE PANELBOARD.
5. WHERE PANEL CIRCUIT BREAKER RATING IS SHOWN AS SERIES RATED, PROVIDE CIRCUIT BREAKERS IN PANELBOARD WHICH ARE SERIES RATED WITH THE UPSTREAM SYSTEM FOR THE AVAILABLE FAULT CURRENT. THE PANELBOARD SHALL BE MARKED WITH THE SERIES CONNECTED RATINGS, AS WELL AS ALL MARKING AS REQUIRED BY THE NEC, OR CEC WHERE ADOPTED, 240.86(B).
6. WHERE PANEL IS INDICATED AS RECESSED OR FLUSH MOUNTED, PROVIDE SPARE CONDUITS STUBBED UP INTO THE ACCESSIBLE CEILING SPACE. PROVIDE ONE (1) 3/4" CONDUIT ONLY FOR EACH THREE (3) SPARES OR SPACES, MINIMUM OF TWO (2). EACH CONDUIT SHALL BE TAGGED, CAPPED AND MARKED FOR FUTURE USE.
7. ALL BUSSING SHALL BE TIN PLATED ALUMINUM.
8. ALL CIRCUIT BREAKERS USED AS SWITCHES SHALL BE UL LISTED AND LABELED "SWD" FOR SWITCHING DUTY.
9. PROVIDE BREAKER INTERLOCK WITH ADJACENT BREAKER(S) FOR ANY MULTI-WIRE BRANCH CIRCUIT. BREAKER INTERLOCK GROUPING SHALL BE BY BRANCH CIRCUIT GROUP (i.e. MULTIPLE CIRCUITS SHARING A COMMON NEUTRAL (NEC, OR CEC WHERE ADOPTED, 210.4(B).) COMMON YOKE (NEC, OR CEC WHERE ADOPTED, 210.7), OR FURNITURE SYSTEM NEC OR CEC WHERE ADOPTED, 605.5 AND 605.7). WHERE AN EXISTING PANEL IS BEING ALTERED OR MODIFIED IN ANY WAY, CONTRACTOR SHALL INCLUDE ALL COSTS IN BASE BID TO ADD BREAKER INTERLOCKS TO EXISTING MULTI-WIRE BRANCH CIRCUITS BASED ON CONTRACTOR'S INVESTIGATION OF EXISTING CONDITIONS.
10. PROVIDE BREAKER LOCK OFF DEVICE ON ANY CIRCUIT BREAKER FEEDING A TRANSFORMER AS REQUIRED, PER NEC, OR CEC WHERE ADOPTED, 450.14. WHERE AN EXISTING PANEL IS BEING ALTERED OR MODIFIED IN ANY WAY, CONTRACTOR SHALL INCLUDE ALL COSTS IN BASE BID TO ADD BREAKER LOCK-OFF DEVICES TO EXISTING TRANSFORMER CIRCUIT BREAKERS BASED ON CONTRACTOR'S INVESTIGATION OF EXISTING CONDITIONS.
11. ALL CIRCUIT BREAKERS SHALL BE BOLT-ON TYPE AND SHALL BE SUITABLE FOR 75 DEGREE AMPACITY CONDUCTORS.
12. PANELS SHALL BE OF THE DEAD FRONT SAFETY TYPE. PANELS SHALL BE MINIMUM 20" WIDE AND 5-3/4" DEEP UNLESS OTHERWISE NOTED ON PLAN.
13. COORDINATE WITH APPLICABLE TRADE TO INSURE RECESSED MOUNTED PANELBOARDS WILL SEAT FLUSH IN THE WALLS PROVIDED. PANEL TRIMS SHALL HAVE CONCEALED DOORS AND FASTENERS WITH FLUSH TYPE COMBINATION LOCK AND CATCH. TWO MILLED TYPE KEYS SUPPLIED WITH EACH PANEL. ALL LOCKS SHALL BE KEYED ALIKE AND EACH DOOR SHALL HAVE A PLASTIC COVERED DIRECTORY FRAME WITH A TYPED IDENTIFICATION CARD OF ALL CIRCUIT AND PANEL NUMBERS FOR BRANCH CIRCUIT PANELBOARDS.
14. UPON PROJECT COMPLETION, CONTRACTOR SHALL INSTALL TYPED AS-BUILT PANEL DIRECTORIES IN EACH PANEL WITHIN THE MFGR-PROVIDED DIRECTORY HOLDER. THE DIRECTORY SHALL CLEARLY IDENTIFY EACH CIRCUIT TO ITS CLEAR, EVIDENT, AND SPECIFIC PURPOSE OR USE. EACH CIRCUIT IDENTITY SHALL INCLUDE SUFFICIENT DETAIL TO ALLOW EACH CIRCUIT TO BE DISTINGUISHED FROM ALL OTHERS PER NEC, OR CEC WHERE ADOPTED, ART 408.1 AND 408.4. HANDWRITTEN DIRECTORIES ARE UNACCEPTABLE. COPIES OF AS-BUILT PANEL SCHEDULES SHALL BE PLACED IN PANEL DIRECTORIES. E.C. TO INCLUDE ALL COSTS REQUIRED FOR LARGER-THAN-STANDARD CUSTOM PANEL DIRECTORY HOLDERS TO ACCOMMODATE COPIES OF AS-BUILT PANEL SCHEDULES.
15. PANELBOARDS SHALL BE MANUFACTURED BY G.E., CUTLER-HAMMER, SIEMENS, OR SQUARE "D". FUSED PANEL BOARDS SHALL BE BY COOPER BUSSMANN.
16. PROVIDE SHOP DRAWING SUBMITTAL PER THE ELECTRICAL SPECIFICATION SUBMITTAL REQUIREMENTS FOR EACH PANEL DEPICTING CONFORMANCE WITH THE ABOVE NOTES AND SCHEDULES.

SPECIFIC PANEL SCHEDULE NOTES:

"A" PROVIDE LOCK-ON DEVICE.

"B" PROVIDE PERMANENT LOCK-OFF DEVICE THAT SHALL REMAIN IN PLACE WITH OR WITHOUT THE LOCK INSTALLED, PER NEC, OR CEC WHERE ADOPTED, SECTION 110.25.

"C" PROVIDE SHUNT TRIP DEVICE.

"D" PROVIDE GFCI TYPE DEVICE.

"E" PROVIDE A RED CIRCUIT BREAKER.

"F" PROVIDE A NEW BREAKER TO MATCH THE EXISTING IN PANEL.

"G" EXISTING BREAKER WITH NEW LOAD.

"H" PROVIDE AFCI TYPE DEVICE COMPLYING WITH NEC, OR CEC WHERE ADOPTED, 210.12(A),(B),(C).

PANEL SCHEDULE INDEX

-	-	F1
-	-	SP
-	-	

STATE:

IDENTIFICATION STAMP
DIV. OF THE STATE ARCHITECT
APP: 03-124281 INC:
REVIEWED FOR
SS ☑ FLS ☑ ACS ☑
DATE: 02/04/2025

ARCHITECT:

architecture
westbergwhite
7700 IRVINE CENTER DR. STE. 100
IRVINE, CA 92618
(714) 508-1780 (714) 508-1780 FAX

CONSULTANT:

tk1sc
COLLABORATIVE
11870 Pierce Street, Suite 160
Riverside, California 92505
951.299.4160 www.tk1sc.com
Project Leader - Bill Voller
Electrical Lead - Bill Voller
tk1sc Job #: US0027568.7397

REGISTERED PROFESSIONAL ENGINEER
RAYMOND W. SWADER
No. E15610
Ex. 12/31/2025
ELECTRICAL
STATE OF CALIFORNIA

PROJECT NAME:

Bellflower Unified School District
Mayfair High School Athletics Fields
6000 North Woodruff Ave
Lakewood, California 90713

CLIENT:

BELLFLOWER UNIFIED SCHOOL DISTRICT
16703 S. Clark Ave.
BELLFLOWER, CALIFORNIA 90706

Δ	Rev. Date	Description

JOB NO:	15008.01
DATE:	05/28/2024
DRAWN:	TG, XY
CHECK:	RB, JG
ARCHITECT:	PDW
ENGINEER:	

SHEET DESCRIPTION:

PANEL SCHEDULES

SHEET NO:

E405

LIGHTING FIXTURE SCHEDULE NOTES:

A. GENERAL NOTES:

1. THE LIGHTING FIXTURES, LAMPS, BALLASTS, POWER SUPPLIES, DRIVERS AND TRANSFORMERS FOR THIS PROJECT HAVE BEEN SPECIFIED TO ENSURE THAT SPECIFIC AESTHETIC AND PERFORMANCE REQUIREMENTS WILL BE SATISFIED. THESE PRODUCTS HAVE BEEN CAREFULLY RESEARCHED AND EACH SPECIFIED ITEM HAS UNIQUE QUALITIES WHICH WERE DETERMINED TO BE ESSENTIAL IN SATISFYING THE OWNER'S, ARCHITECT'S, ENGINEER'S AND LIGHTING CONSULTANT'S DESIGN CRITERIA.
2. CONTRACTOR SHALL PROVIDE ALL MATERIALS AS DETAILED ON DRAWINGS AND/OR SCHEDULES, AND LABOR AS REQUIRED TO ACHIEVE A COMPLETE AND OPERATING LIGHTING SYSTEM.
3. CONTRACTOR SHALL NOTIFY THE ELECTRICAL ENGINEER AND/OR LIGHTING CONSULTANT OF ANY PROVISIONS OF THE SPECIFICATION THAT IS IN CONFLICT WITH LOCALLY ENFORCED CODES.
4. CONTRACTOR SHALL IMMEDIATELY NOTIFY THE ARCHITECT OF ANY REQUIRED MODIFICATIONS THAT ARE NOT SHOWN ON THE DRAWINGS.
5. ALL ELECTRICAL MATERIAL SHALL BE IN NEW & UNDAMAGED CONDITION WHEN INSTALLED. ALL EQUIPMENT SHALL BE LISTED BY A NATIONALLY RECOGNIZED TESTING LABORATORY.
6. ALL DIMENSIONS & MEASUREMENTS FOUND ON PLANS ARE APPROXIMATE. CONTRACTOR SHALL VALIDATE ALL DIMENSIONS PRIOR TO ORDERING MATERIAL TO INCLUDE MAKING FIELD MEASUREMENTS BASED ON ACTUAL SITE CONDITIONS TO DEVELOP COMPLETE ORDERS AND INSTALL SYSTEMS PER DRAWINGS AND SPECIFICATIONS.
7. REFER TO ARCHITECTURAL PLANS FOR EXACT LOCATION AND ELEVATION OF ALL LIGHTING FIXTURES AND ASSOCIATED DEVICES AND EQUIPMENT.
8. PRIOR TO AIMING/ADJUSTING ACTIVITIES, COMMISSIONING OR PUNCHWALK COMMENCEMENT, CONTRACTOR SHALL PROPERLY TEST AND VERIFY ALL CIRCUITRY AND CONTROL WIRING AND IMPLEMENT ALL CONTROLS PROGRAMMING.

B. INSTALLATION:

1. LOCATIONS OF THE FIXTURES SHALL BE PER THE ARCHITECTURAL REFLECTED CEILING PLAN(S) AND SHALL BE COORDINATED AT TIME OF ROUGH IN. CONFLICTS BETWEEN THE ARCHITECTURAL REFLECTED CEILING PLAN(S) AND THE ELECTRICAL/LIGHTING DESIGN PLAN(S) SHALL BE BROUGHT TO THE ATTENTION OF THE ARCHITECT IN WRITING PRIOR TO ORDERING FIXTURES.
2. LIGHTING DRAWINGS REPRESENT THE DESIGN INTENT OF THE EQUIPMENT, DEVICES, ETC. TO BE CONNECTED AND THE CIRCUITS TO WHICH THEY ARE TO BE CONNECTED. CONTRACTOR SHALL INSTALL ALL CONDUIT, J-BOXES AND ADDITIONAL HARDWARE AND DEVICES AS REQUIRED FOR A COMPLETE AND OPERATING SYSTEM.
3. ALL LIGHTING FIXTURES SHALL BE MOUNTED AND INDIVIDUALLY SUPPORTED IN ACCORDANCE WITH APPLICABLE CODES. FIXTURES SHALL BE FURNISHED AND INSTALLED WITH ALL REQUIRED MOUNTING DEVICES, HARDWARE AND ACCESSORIES.
4. CONTRACTOR TO VERIFY LIGHTING FIXTURE MOUNTING HARDWARE IS COMPATIBLE WITH APPROVED MOUNTING CONDITIONS. MOUNTING CONDITIONS MUST ALLOW FOR AIMING AND ADJUSTING OF LIGHTING FIXTURES ON SITE.
5. CONTRACTOR TO INCLUDE AIMING/ADJUSTING LABOR AFTER DARK AS REQUIRED FOR ANY ADJUSTABLE LIGHTING FIXTURE AND FOR EACH INDIVIDUAL LIGHTING FIXTURE HEAD OR LAMP HOLDER IN A MULTI-FIXTURE/MULTI-LAMP ASSEMBLY. LIGHTING FIXTURES TO BE AIMED/ADJUSTED PER THE DIRECTION OF OWNER, ARCHITECT AND/OR LIGHTING CONSULTANT.
6. CONTRACTOR TO SUPPLY ADEQUATE SUPPORT INCLUDING LADDERS, LIFTS OR OTHER EQUIPMENT REQUIRED TO ACCESS LIGHTING FIXTURES AT THE TIME OF FOCUS, INCLUDING EVENING OR NIGHT WORK AS MAY BE REQUIRED DUE TO SCHEDULE CONFLICT OR DAYLIGHT IMPACT. AIMING/ADJUSTING LABOR SHALL BE PREPARED FOR WORK WITH COMMON HAND TOOLS TO MAKE ADJUSTMENTS AND MINOR REPAIRS DURING AIMING.
7. ALL COVE MOUNTED LIGHTING FIXTURES SHALL EXTEND THE FULL LENGTH OF THE COVE. CONTRACTOR TO FIELD MEASURE COVE LENGTH AND ORDER QUANTITY OF LIGHTING FIXTURES AS REQUIRED. PROVIDE COMPLETE MANUFACTURER SHOP DRAWINGS OF BUILT-IN COVE OR LINEAR LIGHTING SYSTEMS.
8. CONTRACTOR TO REPLACE ALL INOPERATIVE LAMPS, LED ARRAYS OR SYSTEMS AT THE END OF THE CONSTRUCTION PHASE PRIOR TO THE FOCUS AND PROGRAMMING PHASE AND AGAIN PRIOR TO OWNER OCCUPANCY OR PROJECT OPENING.
9. ALL POLE MOUNTED FIXTURES, POST MOUNTED FIXTURES AND BOLLARDS SHALL BE PROVIDED WITH A STRUCTURAL FOOTING AS DETAILED ELSEWHERE IN THE DRAWINGS. FOOTING SIZE TO BE PROVIDED BY STRUCTURAL ENGINEER. REFERENCE FIXTURE SCHEDULE AND DETAILS FOR MORE INFORMATION.
10. ALL EXIT SIGNS SHALL BE INSTALLED IN STRICT ACCORDANCE WITH THE LOCAL FIRE PREVENTION CODE AUTHORITY. THE CONTRACTOR IS RESPONSIBLE FOR PROVIDING ALL NECESSARY HARDWARE SUCH THAT ALL EXIT SIGNS ARE INSTALLED IN AN APPROVED VISIBLE LOCATION. THE CONTRACTOR SHALL VERIFY CHEVRONS AND NUMBER OF FACES PER EXIT SIGN WITH ARCHITECTURAL REFLECTED CEILING PLAN(S). ANY DISCREPANCIES BETWEEN EXIT SIGNS DEPICTED ON ARCHITECTURAL AND ELECTRICAL PLANS SHALL BE BROUGHT TO THE ATTENTION OF THE ARCHITECT PRIOR TO ORDERING EXIT SIGNS.

C. SUBMITTALS AND SUBSTITUTIONS:

1. CONTRACTOR TO SUBMIT FOR APPROVAL ON THE PRODUCTS THEY INTEND TO FURNISH WITHIN TEN (10) DAYS OF AWARD OF CONTRACT. FAILURE TO SUBMIT WITHIN DEADLINE CONSTITUTES A GUARANTEE THAT ONLY THE BASE SPECIFIED PRODUCTS WILL BE SUPPLIED AND THAT NO OTHER PRODUCTS, WHETHER LISTED AS ALTERNATES OR NOT, WILL BE CONSIDERED.
2. CONTRACTOR TO PROVIDE A SUBMITTAL/SHOP DRAWING SUBMITTAL FOR EACH LIGHTING FIXTURE TYPE INCLUDING ACCESSORIES, BALLAST(S), POWER SUPPLIES, DRIVER(S) TRANSFORMER(S), AND INTEGRAL EMERGENCY BATTERIES AND TEST SWITCHES. ANY LIGHTING FIXTURE SUBMITTAL PROVIDED WITHOUT SPECIFIC LIGHTING FIXTURE'S ACCESSORIES, BALLAST, POWER SUPPLY, DRIVER, TRANSFORMER OR BATTERY INFORMATION SHALL BE REJECTED AS INCOMPLETE.
3. SUBSTITUTIONS OF THE SPECIFIED PRODUCTS ARE STRICTLY PROHIBITED - UNLESS APPROVED AS STATED HEREIN. LIGHTING FIXTURE SUBSTITUTIONS SHALL BE FORMALLY PRESENTED TO THE ELECTRICAL ENGINEER AND/OR LIGHTING CONSULTANT, BY APPOINTMENT ONLY, AT LEAST TEN (10) WORKING DAYS PRIOR TO BID TIME. THE SUBMITTAL MATERIAL SHALL INCLUDE THE FOLLOWING ITEMS.
   a. A COMPLETE AND OPERATING SAMPLE, WIRED FOR 120V OPERATION, WITH LAMP, CORD AND PLUG.
   b. A COMPLETE PHOTOMETRIC REPORT, FOR THE PROPOSED SUBSTITUTE PRODUCT, USING THE SPECIFIED LAMP OR LED TYPE AND WATTAGE, INCLUDING TABULATED CANDLEPOWER VALUES, COEFFICIENT OF UTILIZATION, AND AN ISO-FOOT-CANDLE DIAGRAM. PRORATED DATA WILL NOT BE ACCEPTABLE. THE PHOTOMETRIC REPORT MUST BE DONE IN ACCORDANCE WITH PUBLISHED I.E.S. TESTING PROCEDURES AND CERTIFIED BY A REGISTERED ELECTRICAL ENGINEER.
   c. A CURRENT ORIGINAL CATALOG DATA SHEET WITH LIGHTING FIXTURE CATALOG NUMBERS. MODIFIED DATA SHEETS WILL NOT BE ACCEPTABLE.
   d. A SIGNED COPY OF THE "SUBSTITUTION COMPLIANCE FORM", LOCATED IN THE DIVISION 1 SPECIFICATION, STATING THAT IF THE PROPOSED SUBSTITUTION IS ACCEPTED, THE PROJECT SCHEDULE WILL NOT BE NEGATIVELY AFFECTED. IF THE COMPLETION OF THE PROJECT IS DELAYED BECAUSE OF THE APPROVED SUBSTITUTION, THE CONTRACTOR WILL BE RESPONSIBLE FOR PAYMENT OF ANY ESTABLISHED LIQUIDATED DAMAGES.
   e. FOR SPECIFIC INTERIOR FIXTURE SUBSTITUTIONS, WHEN DIRECTED BY THE ELECTRICAL ENGINEER AND/OR LIGHTING CONSULTANT, A POINT-BY-POINT SCALED COMPUTER PRINTOUT SHALL BE PROVIDED VERIFYING THE ILLUMINATION LEVELS FOR THE SPECIFIC INTERIOR AREA. IF THE SUBSTITUTED FIXTURE IS AN EMERGENCY FIXTURE, THE REPORT SHALL BE RUN IN BOTH NORMAL AND EMERGENCY MODES. THIS REPORT SHALL BE CONFIGURED WITH SPECIFIC CONSTRAINTS, AS DIRECTED BY THE ENGINEER OF RECORD. THE REPORT MUST SHOW THAT THE SUBSTITUTED FIXTURE PROVIDES PERFORMANCE EQUAL TO OR BETTER THAN THE LIGHTING LEVELS OF THE SPECIFIED PRODUCT.
   f. FOR ALL EXTERIOR FIXTURE SUBSTITUTIONS, A POINT-BY-POINT SCALED COMPUTER PRINTOUT SHALL BE PROVIDED VERIFYING THE ILLUMINATION LEVELS FOR THE ENTIRE SITE PLAN BASED ON USING THE PROPOSED ALTERNATIVE FIXTURES. THE REPORT MUST SHOW THAT THE SUBSTITUTED FIXTURE PROVIDES PERFORMANCE EQUAL TO, OR BETTER THAN THE LIGHTING LEVELS AND UNIFORMITY RATIOS (MAX:MIN AND AVG:MIN) OF THE SPECIFIED PRODUCT. THIS REPORT SHALL BE CONFIGURED WITH THE FOLLOWING CONSTRAINTS.
      i. THE SPACING INCREMENT OR POINTS ON THE VERIFICATION REPORT SHALL NOT EXCEED TEN (10) FEET IN EITHER DIRECTION.
      ii. THE PHOTOMETRIC CALCULATION SHALL BE BASED ON PROVIDING MAINTAINED FOOT-CANDLE LEVELS USING MEAN LAMP LUMENS AND A LIGHT LOSS FACTOR, AS DIRECTED BY THE ENGINEER OF RECORD.
   iii. THE PHOTOMETRIC CALCULATION SHALL SHOW ANY ADDITIONAL ENERGY AND/OR ENERGY COSTS, FOR A TEN YEAR PERIOD, AS COMPARED TO THE ORIGINALLY SPECIFIED ITEM. THE TOTAL COSTS FOR THESE EXPENSES WILL BE DEDUCTED FROM THE CONTRACT COST.
4. DURING THE BIDDING PROCESS, THE CONTRACTOR SHALL REFER TO THE LIGHTING FIXTURE SCHEDULES ON THE ARCHITECTURAL PLANS (IF PROVIDED ON PROJECT), LIGHTING DESIGN PLANS/SPECIFICATIONS (IF PROVIDED ON PROJECT), AND THE ELECTRICAL PLANS. ANY DISCREPANCIES BETWEEN THEM INCLUDING, BUT NOT LIMITED TO, PART NUMBERS AND FIXTURE DESCRIPTIONS SHALL BE BROUGHT TO THE ATTENTION OF THE ARCHITECT, ELECTRICAL ENGINEER, AND LIGHTING DESIGNER WITH PRE-BID RFI(S). WHERE DISCREPANCIES ARE DISCOVERED WHEN THERE IS INSUFFICIENT TIME TO ISSUE PRE-BID RFI(S), THE BASE BID SHALL INCORPORATE THE MOST COSTLY VERSION OF THE DISCREPANCY AND SHALL BE MEMORIALIZED IN AN RFI OR AS A BID CLARIFICATION. PROVIDING A VOLUNTARY DEDUCTIVE ALTERNATE BID CLARIFYING FIXTURE SCHEDULE DISCREPANCIES IS ALSO AN ACCEPTABLE FORM OF DISCREPANCY DOCUMENTATION.
5. FIXTURE FINISHES:
   a. ALL FIXTURE FINISHES AND COLORS, UNLESS NOTED AS PREMIUM OR CUSTOM, SHALL BE SELECTED FROM THE MANUFACTURERS STANDARD COLOR OPTIONS AS LISTED ON THE FIXTURE SPECIFICATION SHEET. STANDARD FINISH SHALL BE SELECTED BY THE ARCHITECT, INTERIOR DESIGNER OR OWNER. THIS DIRECTION WILL BE PROVIDED IN THE SHOP DRAWING REVIEW PROCESS.
   b. ALL FIXTURES INDICATED WITH A PREMIUM OR CUSTOM COLOR SHALL BE ASSIGNED A CUSTOM COLOR REFERENCE NUMBER (SUCH AS RAL#) OR PROVIDE FIVE (5) PAINT CHIPS FOR MANUFACTURER TO USE TO MATCH COLOR. PREMIUM OR CUSTOM FINISH SHALL BE SELECTED BY THE ARCHITECT, INTERIOR DESIGNER OR OWNER. THIS DIRECTION WILL BE PROVIDED IN THE SHOP DRAWING REVIEW PROCESS.
6. THE LIGHTING FIXTURE MODEL NUMBER MAY INDICATE A FIXTURE OPTION THAT THE CONTRACTOR MUST IDENTIFY PRIOR TO ORDERING/PROVIDING SUBMITTALS, INCLUDING, BUT NOT LIMITED TO: VOLTAGE, MOUNTING CONDITION/HARDWARE, FINISH, DIMMING REQUIREMENTS/BALLAST INFORMATION. GENERALLY, CONTRACTOR-SELECTED OPTIONS ARE DENOTED IN THE PART NUMBER WITH BRACKETS EX: [VOLTS?]
   a. CONTRACTOR SHALL BE RESPONSIBLE FOR VERIFYING AND PROVIDING ALL HANGERS, CLIPS AND NECESSARY HARDWARE TO INSTALL THE FIXTURE IN THE ENVIRONMENT AS SHOWN ON THE ARCHITECTURAL PLANS. ALL FIXTURES SHALL BE PROVIDED WITH ALL REQUIRED STRUCTURAL SUPPORTS AS REQUIRED BY THE CURRENTLY ADOPTED CODES.
   b. VOLTAGES SHALL BE VERIFIED BY THE CONTRACTOR PRIOR TO ORDERING - SEE ELECTRICAL DRAWINGS FOR BRANCH CIRCUIT INFORMATION. IT IS POSSIBLE THAT FIXTURES WILL BE REQUIRED IN VARIOUS VOLTAGES.
7. "NO KNOWN EQUAL" LIGHTING FIXTURE PRICING/BIDDING NOTES:
   a. EACH FIXTURE IDENTIFIED AS "NO KNOWN EQUAL" ON THIS PROJECT SHALL BE BID IN A "LINE ITEM" FORMAT. A PER UNIT MATERIAL COST SHALL BE PROVIDED FOR EACH "NO KNOWN EQUAL" FIXTURE. THIS PRICE SHALL INCLUDE LAMPS AS WELL AS ALL OTHER REQUIRED MATERIALS REQUIRED FOR INSTALLATION. THE FIXTURE PRICE QUOTED WILL BE UTILIZED, PRIOR TO SHOP DRAWING APPROVAL, FOR "ADDING" AND/OR "DELETING" ANY QUANTITY OF THE FIXTURE.
   b. A UNIT COST SHALL BE SUBMITTED FOR EACH "NO KNOWN EQUAL" FIXTURE. SUBMIT THE PRICING AS PART OF THE BID FORM ON A SEPARATE 8 1/2" X 11" SHEET.
   c. FAILURE TO SUBMIT A LINE ITEM FOR EACH "NO KNOWN EQUAL" FIXTURE MAY RESULT IN THE REJECTION, REFUSAL, OR NON-ACCEPTANCE OF THE CONTRACTOR'S BID.
8. FIXTURES IDENTIFIED AS "NO KNOWN EQUAL - OWNER STANDARD" OR "CAMPUS STANDARD" ARE TO BE PROVIDED AS SPECIFIED, WITH SUBSTITUTIONS STRICTLY PROHIBITED. SEE ADDITIONAL NOTES FOR "NO KNOW EQUAL" BIDDING REQUIREMENTS.

D. LIGHTING FIXTURE SPECIFICATIONS:

1. ALL EXTERIOR LIGHTING EQUIPMENT SHALL BE RATED FOR WET LOCATION AND THE IP RATING OF ALL EQUIPMENT, INCLUDING BALLAST, POWER SUPPLY AND TRANSFORMER ENCLOSURES SHALL CONFORM TO THE CONDITIONS IN WHICH THE LIGHTING FIXTURE IS MOUNTED.
2. ALL BALLASTS, POWER SUPPLIES, DRIVERS AND/OR TRANSFORMERS THAT ARE REMOTELY LOCATED SHALL BE INSTALLED AS NEAR TO THE LIGHTING FIXTURE(S) AS POSSIBLE, HIDDEN FROM PUBLIC VIEW IN AN ACCESSIBLE COMPARTMENT THAT IS WELL VENTILATED. CONTRACTOR TO COORDINATE LOCATION(S) WITH ARCHITECT PRIOR TO ROUGH-IN.
3. ALL TRANSFORMERS SHALL BE FUSED ON THE SECONDARY SIDE.
4. COLOR FILTERS SHALL BE GLASS OR DICHROIC UNLESS OTHERWISE INDICATED ON DRAWINGS.
5. CONTRACTOR TO PROVIDE 20% ADDITIONAL COLOR FILTERS FOR EACH COLOR AND SIZE.
6. CONTRACTOR TO VERIFY THAT ALL LIGHTING FIXTURES SPECIFIED WITH A COLOR FILTER ARE SUPPLIED WITH ANY AND ALL ATTACHMENT DEVICES FOR THE FILTER.
7. ALL TRACK LIGHTING FIXTURES SHALL BE PROVIDED WITH THE APPROPRIATE TRACK SYSTEM WHICH SHALL INCLUDE ALL MISCELLANEOUS COMPONENTS REQUIRED, AS WELL A ANY REQUIRED CIRCUIT LIMITERS FOR A COMPLETE INSTALLATION. TRACK LENGTH(S) SHALL BE PER DRAWINGS.

E. DRIVERS / TRANSFORMERS:

1. [OPTION?] IN FIXTURE MODEL NUMBER INDICATE THAT THE FIXTURE DRIVER TYPE AND QUANTITY MUST BE VERIFIED BY THE CONTRACTOR USING FIXTURE CALLOUT INFORMATION AND FIXTURE SWITCHING CONFIGURATION INFORMATION.
2. CONTINUOUS DIMMING AND CONTROLLABLE LED:
   a. PROVIDE CONTROLLABLE LED DIMMING DRIVERS (INTEGRAL OR REMOTE) WITH POWER FACTOR GREATER THAN 0.85 AND MAXIMUM THD OF 20% AT FULL LOAD.
   b. PRIOR TO BID CONTRACTOR TO VERIFY DRIVER COMPATIBILITY WITH DIMMERS, DIMMING CONTROL SYSTEM(S) AND DISTRIBUTED LIGHTING CONTROL SYSTEM(S) WITH RESPECTIVE LIGHTING MANUFACTURER(S) AND LIGHTING/DIMMING CONTROL SYSTEM MANUFACTURERS. IF COMPATIBILITY DOCUMENTATION IS UNAVAILABLE FOR A GIVEN LED FIXTURE/LIGHTING CONTROL SYSTEM COMBINATION, CONTRACTOR SHALL INCLUDE COSTS IN THE BASE BID FOR RESPECTIVE LIGHTING MANUFACTURER AND LIGHTING CONTROLS MANUFACTURER TO TEST/WARRANT COMPATIBILITY OF SAID COMBINATIONS.
   c. CONTINUOUS LED DIMMING DRIVERS SHALL BE AT MINIMUM 4-WIRE 0-10V 10% DIMMING (HOT, NEUTRAL, DIM+, DIM-).

F. EMERGENCY FIXTURES / BATTERY PACKS:

1. LIGHT FIXTURES INDICATED AS EMERGENCY SHALL BE IDENTIFIED / PROVIDED AS FOLLOWS:
   a. INTEGRAL BATTERY PACK (EB):
      3a/3EB - FIXTURE CONNECTED TO CIRCUIT "3", CONTROL SWITCHLEG "a" - WITH THE BATTERY CHARGING LEAD CONNECTED TO A CONSTANT HOT CIRCUIT "3".
      3NL/3EB - FIXTURE CONNECTED TO A CONSTANT HOT CIRCUIT "#3". BATTERY CHARGING LEAD CONNECTED TO A CONSTANT HOT CIRCUIT "3".
   b. REMOTE BACK-UP SOURCE (EM):
      3a/3EM - ROUTED THROUGH A U.L. LISTED TRANSFER RELAY (LC & D #GR-2001E/S) FOR SWITCHED CONTROLS OR A U.L. LISTED TRANSFER SWITCH (BODINE #GTD SERIES DEVICE) FOR DIMMING CONTROLS. CONNECTED TO A CONSTANT HOT EMERGENCY CIRCUIT "3". SEE DISTRIBUTED LIGHTING CONTROL SPECIFICATIONS FOR DEVICE REQUIREMENTS WHEN CONTROLLED BY OCCUPANCY SENSORS.
      3NL/3EM - FIXTURE CONNECTED TO A CONSTANT HOT EMERGENCY CIRCUIT "3".
   c. REMOTE BACK-UP SOURCE (EM) NOTES:
      - ALL REMOTE BACK UP SOURCE (EM) FIXTURES SHALL BE PROVIDED WITH AN IN LINE FUSE. PROVIDE ADDITIONAL LABELING TO INDICATE FIXTURE IS PROTECTED BY A FUSE.
2. EMERGENCY BATTERY PACK NOTES:
   a. PROVIDE INTEGRAL TEST SWITCH / CHARGE LIGHT OPTION FOR ALL EMERGENCY BATTERY PACKS INSTALLED IN LIGHT FIXTURES.
   b. ALL RECESSED DOWNLIGHTS SUPPLIED WITH A BATTERY PACK SHALL BE PROVIDED WITH AN INTEGRAL COMBINATION TEST SWITCH / CHARGING INDICATOR LIGHT- MOUNTED INSIDE THE REFLECTOR. REMOTE TEST SWITCH / CHARGING LIGHTS ARE NOT ALLOWED. THE TEST SWITCH / CHARGING INDICATOR LIGHT SHALL BE SECURELY ATTACHED TO THE REFLECTOR WITH 18" OF SLACK LEADS, FOR EASY REMOVAL OF THE REFLECTOR ASSEMBLY.
   c. ALL BATTERY PACKS AND ALL COMBINATION LED BATTERY PACK/EMERGENCY DRIVERS SHALL BE UL924 LISTED.
   d. PRIOR TO BID, CONTRACTOR SHALL VERIFY WITH FIXTURE MANUFACTURER(S) THAT EMERGENCY BATTERY PACKS ARE MANUFACTURED TO BE INTEGRAL TO FIXTURE HOUSINGS.
   e. SHOULD THE SPECIFIED LED EMERGENCY BATTERY PACK(S) NOT FIT WITHIN A GIVEN FIXTURE(S) OR SHOULD THE FIXTURE NOT BE MANUFACTURED TO ACCOMMODATE A BATTERY PACK, CONTRACTOR SHALL INCLUDE ALL COSTS IN BASE BID TO LOCATE/CONNECT SELF-TESTING MINI INVERTER(S) (IOTA #ILS SERIES OF BODINE#ELI-S-[WATT?]) REMOTELY FROM THE FIXTURE(S) IN THE NEAREST ELECTRICAL ROOM OR TO LOCATE EMERGENCY BATTERY PACK(S) REMOTELY FROM THE FIXTURE ABOVE THE NEAREST ACCESSIBLE CEILING.
   f. LED BATTERY PACKS SHALL PROVIDE A MINIMUM OF 90 MINUTES OF EMERGENCY ILLUMINATION, AND SHALL BE RATED AT A MINIMUM OF 10 WATTS, OR AS SPECIFIED. WHERE A FIXTURE TYPE IS UNAVAILABLE WITH A 10W BATTERY PACK OR WHERE THE WATTAGE IS NOT SPECIFIED ON THE PLANS, INCLUDE ALL COST IN BASE BID TO PROVIDE THE HIGHEST WATTAGE AVAILABLE ON THE FIXTURE CUTSHEET. ANY LISTED EQUAL FIXTURE OR ANY SUBSTITUTION OFFERED BY THE CONTRACTOR MUST ALSO HAVE BATTERY PACKS CAPABLE OF PRODUCING THE SAME OR MORE LUMENS WHEN ON BATTERY AS OUTLINED ABOVE. ACCEPTABLE MANUFACTURES: BODINE OR IOTA.
   g. TO MAINTAIN UL LISTING OF LED FIXTURE, FIXTURE MANUFACTURER(S) SHALL INSTALL LED EMERGENCY BATTERY PACKS AT THE FACTORY AND OBTAIN A UL LISTING FOR THE FIXTURE WITH EMERGENCY BATTERY PACK. FIELD-INSTALLATION OF LED EMERGENCY BATTERY PACK(S) IS PROHIBITED.
   h. PROVIDE DAMP LOCATION VERSION IN ALL DAMP LABEL INSTALLATIONS.

LIGHTING FIXTURE SCHEDULE

SYMBOL	TYPE	MANUFACTURER AND MODEL NUMBER	FIXTURE VA/ LAMP WATTS	LAMP/ LAMP OPTION	GENERAL DESCRIPTION
	1	FAILSAFE #HVLB-4-LD4-1-STD-35-UNV-C-EDD-1-S-EL10W-IP64-VRSD EQUAL BY: --	33	LED/3500'K	SURFACE MOUNTED LINEAR LED 8'x4' VANDAL RESISTANT FIXTURE. WET LOCATION LISTED., ONE-PIECE EXTRUDED UV STABILIZED POLYCARBONATE LENS, EXTRUDED ALUMINUM HOUSING WITH DIE-CAST ENDCAPS AND 90 MINUTE BATTERY BACK UP. SHADED SYMBOL INDICATES EMERGENCY BATTERY BACK-UP. (WEIGHT = 12LBS)
	2	McGRAW-EDISON IST-SA1-D-735-U-T3-[FINISH]-TR-MS/DIM-LXX EQUAL BY: PHILIPS GARDCO	45	LED/3000'K	SMALL TRAPEZOID LED WALL MOUNTED SCONCE WITH TYPE 3 DISTRIBUTION, DIE CAST ALUMINUM HOUSING, WET LOCATION LISTED, IP66 RATED, TAMPER RESISTANT HARDWARE, AND 90 MINUTE BATTERY BACK-UP. INTEGRAL MOTION SENSING AND DIMMING. SHADED SYMBOL INDICATES EMERGENCY BATTERY BACK-UP. MOUNT AT 9'-0" A.F.F. FINISH AS SELECTED BY ARCHITECT. (WEIGHT = 6.8LBS)
	3	METALUX 4SNLED-LD5-46SL-LC-UNV-EL7W-L835-CD-1-[FINISH]-U EQUAL BY: --	35	LED/3500'K	4'-0" STRIP LED FIXTURE, INTEGRAL ELECTRONIC DRIVER. PROVIDE EMERGENCY BATTERY WHERE INDICATED ON PLANS. SURFACE MOUNTED. FINISH AS SELECTED BY ARCHITECT. (WEIGHT = 8.2LBS) --
	4	MCGRAW EDISON #GLEON-SA1-A-740-U-T4W-[FINISH] -- EQUAL BY: KIM LIGHTING OR BK LIGHTING	66	LED/4000'K	LED POLE MOUNTED AREA LIGHT, FULL CUT OFF, DIE CAST ALUMINUM HOUSING, INJECTION MOLDED OPTICS. 9,468 LUMENS. PROVIDE 14'-0" STEEL STRAIGHT POLE. FINISH AS SELECTED BY ARCHITECT. -- --
	5	MCGRAW EDISON #GLEON-SA1-A-740-U-T4W-[FINISH] -- EQUAL BY: KIM LIGHTING OR BK LIGHTING	122	LED/4000'K	SAME AS TYPE 5, EXCEPT TWO HEADS. PROVIDE ADAPTER FOR 90 DEGREE CONFIGURATION WHERE OCCURS ON PLANS. FINISH AS SELECTED BY ARCHITECT. -- --
	6	McGRAW EDISON GLEON LED #GLEON-SA4-A-740-U-T3-[FINISH] EQUAL BY: PHILIPS GARDCO	258	LED/4000'K	POLE MOUNTED DOUBLE HEAD LED FIXTURE, DIE-CAST ALUMINUM HOUSING, 0-10V DIMMING, UL WET LOCATION LISTED, IP66 RATED, WITH 6" SQUARE STRAIGHT STEEL (#SSS) 20 FOOT POLE. FINISH SELECTED BY ARCHITECT. REFERENCE 7/E601 FOR MORE INFORMATION. --
	6A	McGRAW EDISON GLEON LED #GLEON-SA4-A-740-U-T3-[FINISH] EQUAL BY: PHILIPS GARDCO	129	LED/4000'K	SAME AS TYPE 6, EXCEPT SINGLE HEAD. -- -- -- --
	7	LSI #XIG-B-LED-19-WW-UE-FL40-NB--TR-SST EQUAL BY: PHILIPS GARDCO	22	LED/3500'K	4-1/2" RECESSED BRASS INGRADE FLOOD LIGHT. 40 DEGREE FLOOD. LED LIGHTSOURCE. WET LOCATION LISTED 3500K. TAMPER PROOF SCREWS. 22W 2066 LUMENS. AIM TO TOP OF FLAGPOLE. --

SEE GENERAL LIGHTING FIXTURE SCHEDULE NOTES FOR CRITICAL FIXTURE SPECIFICATION AND ORDERING INFORMATION.

STATE:

IDENTIFICATION STAMP
DIV. OF THE STATE ARCHITECT
APP: 03-124281 INC:
REVIEWED FOR
SS ☑ FLS ☑ ACS ☑
DATE: 02/04/2025

ARCHITECT:

architecture
westbergwhite
7700 IRVINE CENTER DR. STE. 100
IRVINE, CA 92618
(714) 508-1780 (714) 508-1780 FAX

CONSULTANT:

tk1sc
COLLABORATIVE
11870 Pierce Street, Suite 160
Riverside, California 92505
951.299.4160 www.tk1sc.com
Project Leader - Bill Voller
Electrical Lead - Bill Voller
tk1sc Job #: US0027568.7397

REGISTERED PROFESSIONAL ENGINEER
RAYMOND W. SWALES
No. E15610
Ex. 12/31/2025
ELECTRICAL
STATE OF CALIFORNIA

PROJECT NAME:

Bellflower Unified School District
Mayfair High School Athletic Fields
6000 North Woodruff Ave
Lakewood, California 90713

CLIENT:

BELLFLOWER UNIFIED SCHOOL DISTRICT
16703 S. Clark Ave.
BELLFLOWER, CALIFORNIA 90706

#	Rev. Date	Description

JOB NO: 15008.01
DATE: 05/28/2024
DRAWN: TG, XY
CHECK: RB, JG
ARCHITECT: PDW
ENGINEER:

SHEET DESCRIPTION:
LIGHTING FIXTURE SCHEDULE

SHEET NO:
E501

DISTRIBUTED LIGHTING CONTROLS ACCEPTABLE MANUFACTURES:

WATTSTOPPER:

WALL BOX SENSORS:	STANDALONE SINGLE RELAY = #DW-100 STANDALONE 0-10V DIMMING WITH SINGLE RELAY = #PW-311 STANDALONE DUAL RELAY = #DW-200 SYSTEM-BASED DIMMING CONTROL = #LMDW-102
CEILING SENSORS:	ONE-WAY DIRECTIONAL = #LMDC-100 WITH MASKING AS REQUIRED. 360 DEGREE COVERAGE = #LMDC-100
DAYLIGHT SENSORS:	OPEN LOOP SENSOR = #LMLS-500 (1-3 ZONE) OR CLOSED LOOP SENSOR = #LMLS-402 (1 ZONE ONLY) REMOTE CONTROL = #LMCT-100 (HAND TO OWNER AT COMPLETION OF PROJECT.)
CONTROL UNITS:	SWITCHED = #LMRC-102 (NUMBER OF RELAYS AS REQUIRED). CONTINUOUS DIMMING (0-10V) = #LMRC-212 (NUMBER OF RELAYS AS REQUIRED). CONTINUOUS DIMMING (UNIVERSAL) = #LMRC-222 (NUMBER OF RELAYS AS REQUIRED). RECEPTACLE CONTROL = #LMPL-101 OR LMPL-201 WHERE MORE THAN 4 RECEPTACLE CONTROL UNITS ARE TIED TOGETHER. HVAC CONTROL = #LMRL-100 AV SYSTEM SERIAL INTERFACE = #LMDI-100 (SCREENS / AV SYSTEM INTEGRATION) MOVEABLE PARTITION INTERFACE & SENSOR = #LMD-102 PARTITION INTERFACE, #LMPS-104 PARTITION SWITCH/STATUS INDICATOR, #BZ-50 POWER PACK (SENSOR POWER) & PARTITION SENSOR #ENTERTAINMENT NETWORKS SENSOR W/BOTTOM COVER (www.entertainmentworks.com). DUAL MODE CORRIDOR/STAIRWAY/AISLEWAY CONTROL INPUT = #LMZC-301, UNLESS OTHERWISE NOTED.
WALL CONTROLS:	DIMMING = #LMSW-101/102/103/104/108 (# OF SWITCHES AS REQUIRED 4/YOKE MAX). KEYED SWITCH = #LMD-101 INPUT INTERFACE W/ LEVITON #1221-2L-? KEYED SWITCH
NETWORK COMPONENTS:	ZONE SEGMENT MANAGER = #LMSM-3E/#LMSM-6E W/#LMSM-ENC1 ENCLOSURE. NETWORK BRIDGE / ROUTER / SWITCH = #LMBC-300/#NB-ROUTER/#NB-SWITCH NETWORK WIRING = #LM-MSTP. NETWORK RELAY PANELS = LMCP8, 24 OR 48
INTERCONNECT COMPONENTS:	NETWORK BRIDGE / ROUTER / SWITCH = #LMBC-300/#NB-ROUTER/#NB-SWITCH PROVIDE TEMPORARY NB ROUTER AND LAPTOP TO DEMONSTRATE DEMAND RESPONSE CAPABILITY DURING ACCEPTANCE TESTING.
EMERGENCY POWER INTERFACE:	SWITCHING / STEP DIMMING = #ELCU-200 BYPASS DEVICE. CONTINUOUS DIMMING = #ELCU-200 BYPASS DEVICE.
LOAD INTERFACE DEVICE:	LUTRON COMPONENTS = LUTRON #BCI-0-10. REVERSE/FORWARD PHASE DIMMING COMPONENTS = LUTRON #PHPM-PA-DV-WH.

nLIGHT:

WALL BOX SENSORS:	STANDALONE SINGLE RELAY = #WSX-PDT STANDALONE DUAL RELAY = #WSX-PDT-2P SYSTEM-BASED DIMMING CONTROL = #nWSX-PDT-LV-DX
CEILING SENSORS:	ONE-WAY DIRECTIONAL = #NRM-PDT-9 W/MASKING AS REQUIRED. 360 DEGREE COVERAGE = #NRM-PDT-9 STANDARD RANGE, #NRM-PDT-10 EXTENDED RANGE/CORRIDOR
DAYLIGHT SENSORS:	CLOSED LOOP SENSOR = #NES-ADCX / #NRM-ADCX (ONLY IF REQUIRED BY CLG. TYPE). REMOTE CONTROL = N/A
CONTROL UNITS:	SWITCH / STEPPED DIMMING = #NPP-16/#NSP-16 (NUMBER OF RELAYS AS REQUIRED). CONTINUOUS DIMMING (0-10V) = #NPP16-D (NUMBER OF RELAYS AS REQUIRED). CONTINUOUS DIMMING (UNIVERSAL) = #NSP5-PCD (NUMBER OF RELAYS AS REQUIRED). AUXILIARY INPUT/ OUTPUT CONTROL = #NAR-40 RECEPTACLE CONTROL = #NPP20 PL HVAC CONTROL = #NAR-40 AV SYSTEM SERIAL INTERFACE = #nIO X (SCREENS / AV SYSTEM INTEGRATION) MOVEABLE PARTITION INTERFACE & SENSOR = #FRESCO TOUCH PANEL #NFCS-7TSN (PER SPACE). #NIO-1S POWER PACK (SENSOR POWER) & PARTITION SENSOR #ENTERTAINMENT NETWORKS SENSOR W/BOTTOM COVER (www.entertainmentworks.com). DUAL MODE CORRIDOR/STAIRWAY/AISLEWAY CONTROL INPUT = LC&D BLUE BOX, UNLESS OTHERWISE NOTED.
WALL CONTROLS:	DIMMING = #NPODM-DX SERIES (# OF DIMMERS AS REQUIRED – 4 / YOKE MAX) KEYED SWITCH = #NIO INPUT INTERFACE W/LEVITON #1221-2L-? KEYED SWITCH

NETWORK COMPONENTS:	GATEWAY = #NECY-120, NGWY2-GFX, 13.9"H x 10"W x 4.5"D ENCLOSURE TO BE PROVIDED BY CONTRACTOR
	BRIDGE = #NBRG-8-KIT
	NETWORK RELAY PANELS = ARP INTENCXX NLT XXFCR MVOLT, QTY AS REQUIRED, TO INCLUDE SPARE RELAYS SHOWN IN SCHEDULES.

INTERCONNECT COMPONENTS:	GATEWAY = #NECY-120, NGWY2-GFX, 13.9"H x 10"W x 4.5"D ENCLOSURE TO BE PROVIDED BY CONTRACTOR
	BRIDGE = #NBRG-8-KIT
	STANDARDS BASED ADR RECEIVER = NADR
	PROVIDE END USER CLIENT WITH (1) WIRELESS PROGRAMMING DEVICE (NIO-BT) FOR MAINTENANCE AND PROGRAMMING

EMERGENCY POWER INTERFACE:	SWITCHING / STEP DIMMING = NPP16-ER CONTINUOUS DIMMING = #NPP16-D-ER
LOAD INTERFACE DEVICE:	LUTRON COMPONENTS = LUTRON #BCI-0-10. REVERSE PHASE DIMMING COMPONENTS = #NSP5-PCD-ELV120/LUTRON #PHPM-PA-DV-WH. FORWARD PHASE DIMMING COMPONENTS = #NSP5-PCD-MLV/LUTRON #PHPM-PA-DV-WH. 2 & 3 WIRE DIMMING COMPONENTS = #NSP5-PCD-2W/3W OR LUTRON #PHPM-PA-DV-WH.

COOPER CONTROLS (GREENGATE):

WALL BOX SENSORS:	STANDALONE SINGLE RELAY = #ONW-D-1001-MV-N SERIES STANDALONE DUAL RELAY = #ONW-D-1001-DMV-N SERIES SYSTEM-BASED DIMMING CONTROL = NOT AVAILABLE
CEILING SENSORS:	ONE-WAY DIRECTIONAL = #OAC-DT-501 (500 S.F. MAXIMUM) 360 DEGREE COVERAGE = #OAC-DT-1000 (1,000 S.F. MAXIMUM) 360 DEGREE COVERAGE = #OAC-DT-2000
DAYLIGHT SENSORS:	OPEN LOOP SENSOR = #DSRC-FMOIR REMOTE CONTROL = #HHPRG-RC
CONTROL UNITS:	SWITCH / STEPPED DIMMING = #RC3D-PL PLENUM RATED SERIES (NUMBER OF RELAYS AS REQUIRED). CONTINUOUS DIMMING (0-10V) = #RC3D-PL PLENUM RATED SERIES (NUMBER OF RELAYS AS REQUIRED). CONTINUOUS DIMMING (UNIVERSAL) = USE WITH LOAD INTERFACE DEVICE AUXILIARY INPUT / OUTPUT CONTROL = #OCC-RJ45 RECEPTACLE CONTROL = #PRC-D-20-120 HVAC CONTROL = #-R OPTION ON OCCUPANCY SENSOR OR CONTACT CLOSURE VIA TERMINAL #5 ON RC CONTROL UNIT. AV SYSTEM SERIAL INTERFACE: REQUIRES NETWORKING TO PROVIDE SERIAL CONNECTION. MOVEABLE PARTITION INTERFACE & SENSOR: REQUIRES NETWORKING TO PROVIDE PARTITIONING. DUAL MODE COORDIDOR/STAIRWAY/AISLEWAY CONTROL INPUT = RC3 SERIES, UNLESS OTHERWISE NOTED.PROVIDE QTY OF CONTROLLERS AND SEPARATE DEMAND RESPONSE/INTERCONNECT CABLING AS REQUIRED.
WALL CONTROLS:	DIMMING = #RC SERIES DIMMERS (# OF DIMMERS AS REQUIRED – 4 / YOKE MAX) KEYED SWITCH = #OCC-RJ45 INPUT INTERFACE W/LEVITON #1221-2L-? KEYED SWITCH
NETWORK COMPONENTS:	NETWORK ADAPTER = RC3D-PL-N OR RC3DE-PL-N
INTERCONNECT COMPONENTS:	DEMAND RESPONSE INCLUDED STANDARD IN CONTROL UNITS. PROVIDE QTY OF CONTROLLERS AND SEPARATE DEMAND RESPONSE/INTERCONNECT CABLING AS REQUIRED.
EMERGENCY POWER INTERFACE:	SWITCHING / STEP DIMMING = PROVIDE THE #RC3E OPTION ON CONTROLLER. CONTINUOUS DIMMING = PROVIDE THE #RC3DE OPTION ON CONTROLLER.
LOAD INTERFACE DEVICE:	LUTRON COMPONENTS = LUTRON #BCI-0-10. REVERSE PHASE DIMMING COMPONENTS = LDCM-PL 2-WIRE DIMMING (FORWARD PHASE-ONLY) = GREENGATE #PD216 SERIES INTERFACE.
NETWORK INTERFACE:	NOT AVAILABLE

DISTRIBUTED LIGHTING CONTROLS SYSTEM SPECIFICATIONS (OCCUPANCY / VACANCY SENSORS AND DAYLIGHTING CONTROLS):

1. SEE LIGHTING PLAN DRAWINGS FOR DISTRIBUTED LIGHTING CONTROL SYSTEM (DLCS) SPECIFICS, SPACE SPECIFIC CONFIGURATIONS/REQUIREMENTS, AS WELL AS FIXTURE BALLAST/DRIVER CONFIGURATIONS.
2. ALL PRODUCTS SHALL BE BACKED BY A FIVE YEAR MANUFACTURER'S WARRANTY.
3. ALL PRODUCTS LISTED IN THIS SPECIFICATION ARE BASED UPON PRODUCTS LISTED ON THIS SHEET. THE FEATURES AND CHARACTERISTICS OF THE PRODUCT LITERATURE AND SPECIFICATION SHEETS AVAILABLE ON THE VARIOUS MANUFACTURER'S WEB-SITES ARE INCLUDED IN THE REQUIREMENT OF THESE SPECIFICATIONS. ALL DLCS NETWORKED/NON-NETWORKED SYSTEM-BASED AND STANDALONE COMPONENTS SHALL BE PROVIDED BY A SINGLE MANUFACTURER.
4. DLCS COMPONENTS SHALL BE COMPLIANT WITH ALL APPLICABLE FEDERAL, STATE AND LOCAL ENERGY CODES.
5. ALL NETWORKED AND NON-NETWORKED SYSTEM-BASED DLCS SYSTEMS SHALL BE COMPLIANT WITH AND CERTIFIED TO THE FOLLOWING SECURITY STANDARDS SET FORTH IN THE LATEST PUBLISHED VERSION OF THE DESIGNLIGHTS CONSORTIUM'S "NETWORKED LIGHTING CONTROL SYSTEM TECHNICAL REQUIREMENTS" DOCUMENT (VERSION 4.0 OR LATEST PUBLISHED VERSION):
   - DLCS COMPONENTS: UL2900-1 UL STANDARD FOR SOFTWARE CYBER SECURITY FOR NETWORK-CONNECTABLE PRODUCTS.
   - DLCS DESIGN PROCESS: UL 2900-1 UL STANDARD FOR SOFTWARE CYBER SECURITY FOR NETWORK- CONNECTABLE PRODUCTS AND/OR ISO/IEC 27001 STANDARD FOR INFORMATION SECURITY MANAGEMENT SYSTEMS.
   - DLCS CLOUD SERVICES: ANY ASSOCIATED DLCS CLOUD SERVICES SHALL MEET THE REQUIREMENTS OF ISO/IEC 27017 (WITH 27001) STANDARD FOR CODE OF PRACTICE FOR INFORMATION SECURITY CONTROLS FOR CLOUD SERVICES.

   WHERE THE MANUFACTURER CANNOT DEMONSTRATE COMPLIANCE WITH THE ABOVE REQUIREMENTS, THE DLCS MANUFACTURER SHALL PROVIDE A COMPREHENSIVE PRODUCT-SPECIFIC IT SECURITY STATEMENT FOR REVIEW BY THE OWNER. THE DLCS SHALL NOT BE CONNECTED TO AN OWNER-FURNISHED NETWORK WITHOUT PRIOR WRITTEN PERMISSION BY THE OWNER.

   ADDITIONALLY, WHERE INSTALLED IN THE STATE OF CALIFORNIA, SYSTEM-BASED DLCS SYSTEMS SHALL BE COMPLIANT WITH CA STATE ASSEMBLY BILL NO. 375 CALIFORNIA PRIVACY ACT OF 2018 AND CA STATE SENATE BILL NO 327 INFORMATION PRIVACY FOR CONNECTED DEVICES.
6. WHERE THE DLCS SCHEDULE INDICATES A SPECIFIC "SYSTEM TOPOLOGY" OPTION, PROVIDE ONE OF THE FOLLOWING:

   "NETWORKED" - PROVIDE A SYSTEM-BASED DLCS THAT COMMUNICATES USING A MANUFACTURER-SPECIFIC DLCS NETWORK ALLOWING BI-DIRECTIONAL FLOW OF INFORMATION BETWEEN DEVICES SUCH AS ROOM CONTROLLERS, SENSORS, RELAY PANELS AND NETWORK CONTROLLERS. PROVIDE A DLCS GUI AND RELATED SOFTWARE TO FACILITATE REMOTE DLCS DEVICE PARAMETERS CHANGES, REMOTE CONTROL ANY DLCS ELEMENT OR DEVICE, REMOTE SCHEDULE CHANGES/IMPLEMENTATIONS, AND REMOTE DLCS COMMISSIONING AND TROUBLESHOOTING. A NETWORKED SYSTEM TOPOLOGY SHALL BE CONFIGURED TO RESPOND TO LOCAL UTILITY DEMAND RESPONSE SIGNALS.

   "NON-NETWORKED" - PROVIDE A SYSTEM-BASED DLCS THAT COULD BE MADE TO COMMUNICATE USING A MANUFACTURER-SPECIFIC DLCS NETWORK, BUT FOR THIS PROJECT IS CONFIGURED WITHOUT ANY NETWORK CONNECTIVITY FOR NETWORK COMPONENTS, EXCEPT FOR ANY NETWORK COMPONENTS REQUIRED FOR DUAL MODE CONTROL FOR CORRIDORS, WAREHOUSE AISLES ETC OR WHERE REQUIRED FOR BAS INTEGRATION REQUIRED IN THE DLCS SCHEDULE OR ELSEWHERE IN THE DRAWINGS AND SPECIFICATIONS. IN A "NON-NETWORKED" DLCS, DEMAND RESPONSE CAPABILITY IS NOT REQUIRED.

   "STAND ALONE" - PROVIDE INDIVIDUAL WALL SENSORS/CONTROLS - OPERATING AT 120V OR 277V. GENERALLY, STANDALONE COMPONENT INSTALLATIONS ARE TO BE AVOIDED AND ARE LIMITED TO USE IN SMALL ROOMS WHERE ADVANCED CONTROLS, DIMMING CAPABILITY, DEMAND RESPONSE, DUAL MODE CONTROL AND/OR NETWORK CONNECTIVITY ARE NOT REQUIRED BY APPLICABLE ENERGY CODE AND WHERE ACCEPTABLE TO AN END-USER.
7. WHERE THE DLCS SCHEDULE INDICATES A SPECIFIC "COMMUNICATIONS TOPOLOGY" OPTION, PROVIDE ONE OF THE FOLLOWING:

   "WIRED" - PROVIDE WIRING, AS REQUIRED, TO INTERCONNECT DLCS DEVICES. WIRING MAY BE A COMBINATION OF LOW AND LINE VOLTAGE CONDUCTORS BASED ON SPECIFIC MANUFACTURER REQUIREMENTS.

   "WIRELESS" - PROVIDE WIRELESS CONNECTIVITY BETWEEN WALL CONTROLS, WALL, CEILING OR FIXTURE-INTEGRATED SENSORS, ROOM CONTROLLERS, WIRELESS ROUTER(S), AND WIRELESS NETWORK BRIDGE. CONTRACTOR SHALL PROVIDE WIRELESS ROUTER QTY AS REQUIRED TO MAINTAIN ROBUST COMMUNICATIONS WITH ALL WIRELESS DEVICES. ROBUST MEANS THAT A CHANGE OF VALUE FROM OR TO ANY DLCS SYSTEM COMPONENT FROM OR TO AN APPLICABLE WIRELESS ROUTER/BRIDGE OCCURS IN LESS THAN 3 SECONDS.

   "HYBRID" - WHERE A SOLELY WIRELESS DLCS TOPOLOGY IS DEEMED INADEQUATE BASED ON OPERATIONAL OR AESTHETIC REASONS, A WIRELESS TOPOLOGY SHALL BE AUGMENTED WITH WIRED SYSTEM TO FORM A HYBRID COMMUNICATIONS TOPOLOGY. AREAS REQUIRING WIRED CONNECTIVITY SHALL BE OUTLINED ON THE LIGHTING PLANS UNLESS OTHERWISE INDICATED, ALL RESTROOMS SHALL BE PROVIDED WITH DUAL TECHNOLOGY OCCUPANCY SENSORS WHICH REQUIRE WIRED CONNECTIVITY AND WIRED POWER SUPPLY. A NETWORKED, SYSTEM-BASED DLCS INSTALLED WITH A HYBRID COMMUNICATIONS TOPOLOGY SHALL APPEAR IN THE USER-GUI/SOFTWARE AS A SINGLE UNIFIED SYSTEM. PROVIDE SEPARATE GUI SOFTWARE INTERFACES FOR THE WIRED AND WIRELESS PORTIONS OF THE DLCS ARE UNACCEPTABLE.
9. WHERE THE DLCS SCHEDULE REQUIRES FIXTURE-INTEGRATED SENSORS, PROVIDE OCCUPANCY AND/OR DAYLIGHT SENSORS INTEGRATED WITHIN SPECIFIED FIXTURE TYPE THAT ALSO INTEGRATE INTO THE DLCS. SEE THE LIGHTING FIXTURE SCHEDULE FOR AFFECTED FIXTURE TYPE(S). WHERE INTEGRATED SENSORS DO NOT MEET OCCUPANCY/DAYLIGHT SENSOR COVERAGE REQUIREMENTS, CONTRACTOR SHALL AUGMENT COVERAGE WITH ADDITIONAL CEILING MOUNTED SENSORS AS REQUIRED AND AS A PART OF THE BASE BID.
10. WHERE THE DLCS SCHEDULE REQUIRES THE DLCS TO INTEGRATE WITH THE PROJECT'S BUILDING AUTOMATION SYSTEM (BAS) - SEE THE DLCS START-UP, BUILDING AUTOMATION SYSTEM (BAS) INTEGRATION, COMMISSIONING, & TRAINING PORTION OF THIS SPECIFICATION FOR ADDITIONAL REQUIREMENTS.
11. WHERE THE DLCS SCHEDULE INDICATES "WIRELESS" OR "HYBRID" COMMUNICATIONS TOPOLOGIES AND ALSO ALLOWS WIRELESS DLCS COMPONENT BATTERY USAGE, PROVIDE BATTERIES WITHIN THE WIRELESS DLCS COMPONENTS INDICATED IN LIEU OF LINE OR LOW VOLTAGE POWER SOURCES.
12. DLCS COMPONENTS SHALL BE BE PROVIDED AS FOLLOWS:
    a. STANDALONE: WALL MOUNTED OCCUPANCY SENSORS SHALL BE UL LISTED AND HAVE A MINIMUM LOAD CAPACITY OF 800 WATTS AT 120 VOLTS AND 1200 WATTS AT 277 VOLTS. WALL SENSORS SHALL ALSO BE DECORA STYLE. WITH A LOW-PROFILE APPEARANCE AND A HARD LENS FOR DURABILITY. SENSOR SHALL UTILIZE PASSIVE INFRARED TECHNOLOGY (PIR) AND ULTRASONIC/MICROPHONIC TECHNOLOGY. UNIT SHALL BE RATED FOR 120/277 VOLT WITH NO MINIMUM LOAD, COMPATIBLE WITH ALL THE SPECIFIED BALLASTS, PROVIDED WITH A NEUTRAL CONNECTION (NO LEAKAGE TO GROUND) AND NO LEAKAGE TO LOAD IN THE "OFF" MODE. SENSOR SHALL BE UTILIZED IN SPACES NOT EXCEEDING 150 SQ FT. SINGLE RELAY SENSORS SHALL BE CONFIGURED WITH THE RELAY IN A "MANUAL ON/ AUTO OFF" SETTING. DUAL RELAY SENSORS SHALL BE CONFIGURED WITH THE FIRST RELAY IN A "AUTOMATIC ON/ AUTOMATIC OFF" SETTING AND THE SECOND RELAY IN A "MANUAL ON/ AUTOMATIC OFF" SETTING. FACTORY STANDARD COLOR TO BE APPROVED BY ARCHITECT.
    b. SYSTEM-BASED (NETWORK OR NON-NETWORK): THE OCCUPANCY SENSOR SYMBOL SHALL REPRESENT A LOW VOLTAGE, WALL MOUNTED OCCUPANCY SENSOR CONNECTED TO A CONTROL UNIT(S) AS REQUIRED. SENSOR SHALL BE DECORA STYLE WITH A LOW-PROFILE APPEARANCE, HAVE ON/OFF/RAISE/LOWER BUTTONS, AND A HARD LENS FOR DURABILITY. FACTORY STANDARD COLOR TO BE APPROVED BY ARCHITECT.

       SYSTEM-BASED (NETWORK OR NON-NETWORK) OR STANDALONE CEILING MOUNTED OCCUPANCY SENSORS SHALL SHALL REPRESENT A LOW VOLTAGE, CEILING-MOUNTED OCCUPANCY SENSOR WITH A LOW-PROFILE APPEARANCE AND SHALL BE CONFIGURED IN ONE OF THE FOLLOWING WAYS AS INDICATED ON THE DRAWINGS:

       - AUTO ON: a/b
       - SWITCHED: AUTO ON a / MANUAL ON b
       - CONTINUOUS DIMMED: AUTO ON 50% a / MANUAL ON 100% a

    c. SENSOR(S) SHALL UTILIZE DUAL TECHNOLOGY (PIR AND ULTRASONIC/MICROPHONIC TECHNOLOGY) WITH 360 DEGREE COVERAGE. IN SPACES WITH DESKTOP ACTIVITIES, THE COVERAGE SHALL BE "HAND MOTION" AND SHALL NOT EXCEED 500 SQ. FT. AT A MAXIMUM CEILING HEIGHT OF 10 FT. IN CORRIDORS, STORAGE ROOMS AND OTHER SPACES WITH NON-DESKTOP ACTIVITIES, COVERAGE SHALL BE "HALF-STEP. WALKING MOTION" AND SHALL NOT EXCEED 1200 SQ. FT. AT A MAXIMUM CEILING HEIGHT OF 10 FT. PIR-ONLY WIRELESS OCCUPANCY SENSORS SHALL NOT BE UTILIZED IN RESTROOMS OR LOCKER ROOMS.
    d. "H" AT THE OCCUPANCY SENSOR INDICATES CONNECTION TO AUXILIARY OUTPUT CONTROL DEVICE FOR CONTROL OF A THIRD PARTY DEVICE VIA LOW-VOLTAGE CONTACT CLOSURES - 1 AMP @ 24V AC/DC. NC/NO RELAYS SHALL BE CONNECTED TO A CONTROLLER TO PERFORM THE AUXILIARY CONTROL REQUIREMENTS INDICATED BY THE DRAWINGS.
    e. OCCUPANCY SENSORS LOCATED WITHIN CORRIDORS, HALLWAYS, STAIRWAYS/WELLS, AISLEWAYS WITHIN WAREHOUSE SPACES, AND IN OTHER AREAS PER PLANS AND/OR SOO SHALL BE CONFIGURED TO CREATE DUAL MODE CONTROL FUNCTIONALITY PER THE SOO/ZONE SCHEDULE. CONTRACTOR SHALL BE RESPONSIBLE FOR PROVIDING ALL DEVICES AND WIRING REQUIRED FOR DUAL MODE OPERATIONS AND ANY PROGRAMMING/CONFIGURATION OF TIME-BASED OPERATING PARAMETERS. COORDINATE WITH OWNER TO DETERMINE BUSINESS HOUR/AFTER BUSINESS HOUR MODES. IF THE PLANS IDENTIFY A NEW OR EXISTING LIGHTING CONTROL PANEL AS THE SOURCE OF DUAL MODE TIMING, E.C. SHALL INCLUDE ALL COSTS TO INSTALL ANY NECESSARY I/O TERMINALS, CARDS, ETC. TO MAKE THE SYSTEM FULLY FUNCTIONAL.
    f. NETWORK SYSTEM-BASED DLCS SYSTEMS SHALL PROVIDE/RESULT IN "LADDERLESS COMMISSIONING" OF DAYLIGHT CONTROLS. AT A MINIMUM, NETWORK ACQUIRED DATA SHALL PROVIDE CT-BASED LIGHTING POWER (WATTS) MEASUREMENTS PER THE COMMISSIONING PORTION OF THESE REQUIREMENTS. PROVIDE NETWORKED CONTROL UNITS/POWER PACKS/INTERFACES AND MISCELLANEOUS EQUIPMENT AS FOLLOWS:
       1) NETWORK SEGMENT MANAGER OR BORDER ROUTER WITH NATIVE BACnet IP - QUANTITY AS REQUIRED BASED UPON A MAXIMUM OF 100 LOCAL ROOM NETWORKS PER SEGMENT AND A MINIMUM OF ONE SEGMENT MANAGER PER FLOOR. THIS EQUIPMENT SHALL BE LOCATED IN THE TYPICAL FLOOR ELECTRICAL ROOM.
       2) NETWORK BRIDGE CONNECTING THE SEGMENT MANAGER TO THE CONTROLLER SUB/LOCAL NETWORK.
       3) ALL CORRIDORS, WAREHOUSE AISLE WAYS, AND STAIRWELLS SHALL BE PROVIDED WITH DUAL MODE CORRIDOR/STAIRWAY CONTROLS TO INCLUDE CEC-LISTED TIME CLOCK(S), ROUTERS, OR SYSTEM GATEWAYS, INTERPOSING RELAYS (WHEN INTERFACING WITH EXISTING CEC-LISTED RELAY PANELS), WIRING, 120V POWER, PROGRAMMING, ETC. NECESSARY FOR A COMPLETE AND FUNCTIONING CONTROL SYSTEM.
       4) INCLUDE ALL COSTS IN BASE BID TO PROVIDE 120V CIRCUIT(S) AND RECEPTACLE(S) NECESSARY TO POWER ALL DEMAND RESPONSE EQUIPMENT.
       5) PROVIDE DATA OUTLET/PATHWAY, DATA CABLING (IF REQUIRED ELSEWHERE BY PROJECT DOCUMENTS), AND CONNECTION TO THE PROJECT'S LOCAL AREA NETWORK.
       6) INCLUDE ALL COSTS IN BASE BID TO PROVIDE 120V CIRCUIT(S) AND RECEPTACLE(S) NECESSARY TO POWER ALL NETWORK SEGMENT MANAGERS, SWITCHES AND ROUTERS.
       7) DEMONSTRATE DLCS RESPONSE TO A SIMULATED DEMAND RESPONSE REQUEST AS PART OF THE LIGHTING COMMISSIONING PROCESS. WHERE MORE THAN ONE WIRING TOPOLOGY AND/OR ZONE IS REQUIRED TO ACCOMPLISH DEMAND RESPONSE - ALL WIRING TOPOLOGIES AND ZONES SHALL BE TESTED ACCORDINGLY. SEE DLCS SOO FOR POWER REDUCTION PERCENTAGES BY ROOM TYPE THAT SHALL BE UTILIZED IN THE SIMULATED DEMAND RESPONSE TESTING.
    g. WHERE INDICATED ON DRAWINGS, PROVIDE DLCS DAYLIGHTING CONTROLS AS FOLLOWS:
       1) AUTOMATIC SWITCHING DAYLIGHTING CONTROLS SHALL BE PROVIDED TO SWITCH SELECTED FIXTURES AND/OR LAMPS OFF AND ON BASED UPON LIGHTING LEVELS PRESENT IN THE CONTROLLED SPACE. THE DAYLIGHTING CONTROLS SHALL BE CONNECTED TO THE CONTROL UNIT. THE SENSOR SHALL UTILIZE AN INTEGRAL PHOTO DIODE TO MEASURE AMBIENT LIGHT LEVELS. CONTROLS SHALL BE FULLY ADJUSTABLE FROM 1 TO 6,500 FOOTCANDLES AND SHALL BE PROVIDED WITH AN ADJUSTABLE TIME DELAY AND ADJUSTABLE DEAD BAND SETTINGS.
       2) AUTOMATIC DIMMING DAYLIGHTING CONTROLS SHALL BE PROVIDED TO CONTINUOUSLY DIM SELECTED FIXTURES/LAMPS UP AND DOWN BASED UPON LIGHTING LEVELS PRESENT IN THE CONTROLLED SPACE. THE SENSOR SHALL UTILIZE AN INTERNAL PHOTO DIODE TO MEASURE AMBIENT LIGHT LEVELS. 0-10 VOLT DIMMING CONTROLS SHALL RANGE FROM 0.2 VOLTS TO 10 VOLTS, WITH AMBIENT LIGHTING SET POINTS FROM 1-6,500 FOOTCANDLES.
       3) AUTOMATIC DAYLIGHTING CONTROLS SHALL BE CONNECTED TO CONTROL UNITS TO PERFORM THE FIXTURE SWITCHING/DIMMING REQUIREMENTS INDICATED BY THE DRAWINGS - CONNECTIONS DIRECTLY TO A BALLAST ARE NOT ALLOWED.
       4) DAYLIGHT SENSOR SHALL PROVIDE CONTROLS FOR UP TO THREE DISTINCT LIGHTING ZONES TO ALLOW SEPARATE CONTROL OF PRIMARY DAYLIT, SECONDARY DAYLIT, AND SKYLIT ZONES.
    h. PROVIDE CONTROL UNITS AND SYSTEM FUNCTIONALITY AS FOLLOWS:
       1) CONTINUOUS DIMMING CONTROLS: SYSTEM-BASED WALL OR CEILING MOUNTED OCCUPANCY SENSORS (CONTINUOUS DIMMED - AUTO ON 50%/MANUAL ON 100%) SHALL BE PROVIDED WITH CONTROL UNITS TO PERFORM THE FIXTURE DIMMING REQUIREMENTS INDICATED BY THE "BLAST AND FLUTTER" TYPE. SWITCH LEG INDICATED OUTSIDE THE PARENTHESIS TO BE CONFIGURED AS "AUTO ON 50%/MANUAL ON 100%" FOR CONTINUOUSLY DIMMED. SWITCH LEGS INSIDE PARENTHESIS INDICATES A MANUAL ACTION REQUIRED TO INCREASE LIGHTING LEVELS ABOVE DLCS SOO LIMITS WHEN INTEGRAL TRANSFERRED LOADS SHALL BE UTILIZED TO PROVIDE POWER TO OCCUPANCY SENSORS AND OTHER CONTROL DEVICES. CONTROL UNITS SHALL BE LOCATED WITHIN JUNCTION BOXES AND NOT EXPOSED IN THE CEILING SPACE. CONTROL UNIT SHALL BE 120/277 VOLT RATED WITH NO MINIMUM LOAD, COMPATIBLE WITH ALL THE SPECIFIED BALLASTS PROVIDED WITH A NEUTRAL CONNECTION (NO LEAKAGE TO GROUND) AND NO LEAKAGE TO LOAD IN THE "OFF" MODE. ADDITIONAL RELAY ZONES MAY BE REQUIRED FOR THE ADDITION OF PRIMARY DAYLIT, SECONDARY DAYLIT, AND PRIMARY SKYLIT UTILIZING THE SAME CONTROL CHANNEL. (I.E. EVEN THOUGH A SINGLE LETTER "a" IS INDICATED AT THE PRIMARY SENSOR), ADDITIONAL RELAYS WOULD BE REQUIRED FOR THE "a+" (PRIMARY SIDELIT DAYLIT ZONE), "a++" (SECONDARY SIDELIT DAYLIT ZONE), AND "a-" (SKYLIT DAYLIT ZONE). WHERE MORE THAN ONE CIRCUIT/THREE SWITCH LEGS/THREE RELAY ZONES ARE REQUIRED, PROVIDE ADDITIONAL FULL FEATURE CONTROL UNITS AS REQUIRED.
       2) WHERE ADDITIONAL 120/ 277 VOLT DEVICES, RECEPTACLES, OR BRANCH CIRCUITS ARE BEING CONTROLLED BY THE ROOM CONTROLLER, AN ADDITIONAL CONTROL UNIT SHALL BE PROVIDED AS REQUIRED.
       3) THE OCCUPANCY SENSOR CONTROLLED RECEPTACLE BRANCH CIRCUIT RELAY, CONNECTED TO THE SPACE'S DISTRIBUTED LIGHTING CONTROL OCCUPANCY SENSOR RELAY, SHALL TURN ON WHEN THE ROOM IS OCCUPIED, REGARDLESS OF THE CONFIGURATION OF THE LIGHTING CONTROL STATE - I.E. AUTO ON/MANUAL ON. SEE THE DISTRIBUTED LIGHTING CONTROL SPECIFICATION FOR MORE INFORMATION. EVEN THOUGH A SINGLE SYMBOL IS INDICATED, MULTIPLE RELAYS MAY BE REQUIRED TO CONTROL THE REQUIRED NUMBER OF SWITCHLEGS/CIRCUITS.
       4) LOW VOLTAGE WALL CONTROLS SHALL BE DECORA STYLE, LOW-VOLTAGE, MOMENTARY SWITCHES WITH COLOR TO MATCH OTHER WALL DEVICES/SWITCHES. LOWER CASE LETTERS INDICATE SWITCHING CONFIGURATION. PROVIDE SWITCHING OR DIMMING CONTROL DEVICES AS REQUIRED BY DRAWINGS.

          DIMMING - NUMBER OF SWITCHES AS REQUIRED - 4 ZONES/YOKE MAX. EACH CONTROL ZONE TO HAVE A DEDICATED RAISE AND LOWER BUTTONS. FACTORY STANDARD COLOR BY ARCHITECT. EACH SYSTEM ZONE DIMMING CONTROL STATION SHALL BE PROVIDED WITH MASTER ON AND MASTER OFF BUTTON IN ADDITION TO THE INDIVIDUAL CONTROL ZONE BUTTONS.

          WHERE INDICATED, PROVIDE VANDAL RESISTANT, HIGH ABUSE SWITCH CONNECTED TO THE DLCS INPUT/OUTPUT INTERFACE DEVICE FOR ON/OFF AND DIMMING CONTROLS. SWITCHES LOCATED IN HIGH ABUSE AREAS (EXTERIOR AREAS OR AREAS SUBJECT TO WASH-DOWN ETC.) OR IDENTIFIED ON PLANS AS HIGH-ABUSE SWITCHES SHALL BE VANDAL RESISTANT, STAINLESS STEEL, TOUCH SENSITIVE AND AVAILABLE WITH UP TO TWO BUTTONS IN A SINGLE GANG. EACH HIGH ABUSE SWITCH SHALL BE ABLE TO BE PROGRAMMED FOR ON, OFF, TOGGLE OR MAINTAIN OPERATION. SWITCHES MUST BE CAPABLE OF HANDLING ELECTROSTATIC DISCHARGES OF AT LEAST 30,000 VOLTS (1CMSPARK) WITHOUT ANY INTERRUPTION OR FAILURE IN OPERATION.

          WHERE INDICATED, PROVIDE A LOCKING SINGLE POLE SWITCH CONNECTED TO THE ROOM CONTROLLER VIA A INPUT/OUTPUT INTERFACE DEVICE FOR ON/OFF CONTROLS. DIRECT CONNECTION OF THE KEYED SWITCH ON THE LOAD SIDE OF THE CONTROLLER IS PROHIBITED. PROVIDE AT LEAST THREE (3) KEYS TO OWNER AT CONCLUSION OF PROJECT. ADJACENT SWITCH SHALL ONLY BRING LIGHTS FULL ON. KEYED SWITCH ALLOWS MANUAL OFF FUNCTIONALITY.

F. INDOOR LIGHTING FIXTURE SCHEDULE

This table includes all planned permanent and portable lighting other than dwelling unit/ hotel/ motel room lighting. Multifamily dwelling unit and hotel/motel room lighting is documented in Table T. If using Table T to document lighting in multifamily common use areas providing shared provisions for living, eating, cooking or sanitation, those luminaires are not included here.

Designed Wattage: Conditioned Spaces

01	02	03	04	05	06	07	08	09	10	
Name or Item Tag	Complete Luminaire Description	Modular (Track) Fixture	Small Aperture & Color Change[1]	Watts per luminaire[2]	How is Wattage determined	Total Number of Luminaires	Excluded per 140.6(a)3 / 170.2(e)2C	Design Watts	Field Inspector	
									Pass	Fail
1	1 - Surface Linear LED	No	NA	34	Mfr. Spec	8	No	272	☐	☐
3	3 - 4ft Strip LED	No	NA	32	Mfr. Spec	1	No	32	☐	☐
7	7 - Rec Linear LED	No	NA	34	Mfr. Spec	10	No	340	☐	☐
						Total Designed Watts: CONDITIONED SPACES		644		

[1]*FOOTNOTE: Design Watts for small aperture and color changing luminaires which qualify per 140.6(a)4B / 170.2(e)2D is adjusted to be 75% /80% of their rated wattage. Table F automatically makes this adjustment, the permit applicant should enter full rated wattage in column 05.*

[2]*Authority Having Jurisdiction may ask for Luminaire cut sheets to confirm wattage used for compliance per 130.0(c) / 160.5(b). Wattage used must be the maximum rated for the luminaire, not the lamp.*

G. MODULAR LIGHTING SYSTEMS

This section does not apply to this project.

H. INDOOR LIGHTING CONTROLS (Not including PAFs)

This table includes lighting controls for conditioned and unconditioned spaces.

Building Level Controls

01	02	03	
Mandatory Demand Response 110.12(c)	Shut-off controls 130.1(c) / 160.5(b)4C	Field Inspector	
		Pass	Fail
Required >= 4,000W subject to multilevel	Whole Building Auto Time Switch	☐	☐

S. DAYLIGHT DESIGN POWER ADJUSTMENT FACTOR (PAF)

This section does not apply to this project.

T. DWELLING UNIT LIGHTING

This section does not apply to this project.

U. DECLARATION OF REQUIRED CERTIFICATES OF INSTALLATION

Selections have been made based on information provided in this document. If any selections have been changed by permit applicant, an explanation should be included in Table E. Additional Remarks. These documents must be provided to the building inspector during construction and can be found online

Form/Title
NRCI-LTI-E - Must be submitted for all buildings

V. DECLARATION OF REQUIRED CERTIFICATES OF ACCEPTANCE

Selections have been made based on information provided in this document. If any selections have been changed by the permit applicant, an explanation should be included in Table E. Additional Remarks. These documents must be provided to the building inspector during construction and any with "-A" in the form name must be completed through an Acceptance Test Technician Certification Provider (ATTCP). For more information visit: http://www.energy.ca.gov/title24/attcp/providers.html

Form/Title	Systems/Spaces To Be Field Verified
NRCA-LTI-02-A - Must be submitted for occupancy sensors and automatic time switch controls.	Whole Building Time Switch;
NRCA-LTI-04-A - Must be submitted for demand responsive lighting controls.	Whole Building Demand Response;

C. COMPLIANCE RESULTS

If any cell on this table says "DOES NOT COMPLY" or "COMPLIES with Exceptional Conditions" refer to Table D. for guidance.

Lighting in conditioned and unconditioned spaces must not be combined for compliance per 140.6(b)1 / 170.2(e)	Allowed Lighting Power per 140.6(b) / 170.2(e) (Watts)						Adjusted Lighting Power per 140.6(a) / 170.2(e) (Watts)				Compliance Results
	01	02	03	04	05		06	07		08	09
	Complete Building 140.6(c)1	Area Category 140.6(c)2 / 170.2(e)4	Area Category Additional 140.6(c)2G / 170.2(e)4Av (+)	Tailored 140.6(c)3 / 170.2(e)4B (+)	**Total Allowed** (Watts)		Total Designed (Watts)	Adjustments PAF Lighting Control Credits 140.6(a)2 / 170.2(e)1B (-)		**Total Adjusted** (Watts) *Includes Adjustments	**05 must be >= 08 140.6 / 170.2(e)**
	(See Table I)	(See Table I)	(See Table J)	(See Table K)			(See Table F)	(See Table P)			
Conditioned		675.7	0		= 676	≥	644	0	=	644	COMPLIES
Unconditioned					=	≥			=		
Controls Compliance (See Table H for Details)											COMPLIES
Rated Power Reduction Compliance (See Table Q for Details)											

D. EXCEPTIONAL CONDITIONS

This table is auto-filled with uneditable comments because of selections made or data entered in tables throughout the form.

E. ADDITIONAL REMARKS

This table includes remarks made by the permit applicant to the Authority Having Jurisdiction.

K. TAILORED METHOD GENERAL LIGHTING POWER ALLOWANCE

This section does not apply to this project.

L. ADDITIONAL LIGHTING ALLOWANCE: TAILORED WALL DISPLAY

This section does not apply to this project.

M. ADDITIONAL LIGHTING ALLOWANCE: TAILORED FLOOR AND TASK LIGHTING

This section does not apply to this project.

N. ADDITIONAL LIGHTING ALLOWANCE: TAILORED DECORATIVE /SPECIAL EFFECTS

This section does not apply to this project.

O. ADDITIONAL LIGHTING ALLOWANCE: TAILORED VERY VALUABLE MERCHANDISE

This section does not apply to this project.

P. POWER ADJUSTMENT: LIGHTING CONTROL CREDIT (POWER ADJUSTMENT FACTOR (PAF))

This section does not apply to this project.

Q. RATED POWER REDUCTION COMPLIANCE FOR ONE-FOR-ONE ALTERATIONS

This section does not apply to this project.

R. 80% LIGHTING POWER FOR ALL ALTERATIONS - CONTROLS EXCEPTIONS

This section does not apply to this project.

TITLE 24 PROCEDURES FOR TESTING AND ADJUSTING

CONTRACTOR SHALL BE RESPONSIBLE FOR ALL WORK ASSOCIATED WITH FINAL INSPECTION AND APPLICABLE ACCEPTANCE REQUIREMENT PROCEDURES. INCLUDE ALL COSTS IN THE BASE BID. THIS SHALL INCLUDE, BUT NOT BE LIMITED TO, CONSTRUCTION INSPECTION, MEASUREMENTS, MONITORING, FUNCTIONAL TESTING, CALIBRATING, ETC. CONTRACTOR SHALL ASSUME THE ROLE OF "FIELD TECHNICIAN" AND "RESPONSIBLE PERSON" AS DEFINED IN STATE OF CALIFORNIA 2022 BUILDING ENERGY EFFICIENCY STANDARDS NONRESIDENTIAL COMPLIANCE MANUAL SECTIONS 13.1.2.2 AND 13.1.2.3.

LIGHTING CONTROL ACCEPTANCE TESTING AND ADJUSTING PROCEDURES - REFER TO NRCA-LTI-02-A DOCUMENTS.

AUTOMATIC DAYLIGHT CONTROL ACCEPTANCE TESTING AND ADJUSTING PROCEDURES - REFER TO NRCA-LTI-03-A DOCUMENTS.

DEMAND RESPONSE LIGHTING CONTROL ACCEPTANCE TESTING AND ADJUSTING PROCEDURES - REFER TO NRCA-LTI-04-A DOCUMENTS.

INSTITUTIONAL TUNING PAF ACCEPTANCE TESTING AND ADJUSTING PROCEDURES - REFER TO NRCA-LTI-05-A DOCUMENTS.

OUTDOOR LIGHTING CONTROL ACCEPTANCE TESTING AND ADJUSTING PROCEDURES - REFER TO NRCA-LTO-02-A DOCUMENTS.

ALL LIGHTING CONTROLS TESTING AND ADJUSTING DOCUMENTS NOTED ABOVE ARE AVAILABLE FROM THE CALIFORNIA ENERGY COMMISSION WEB SITE AT:
https://www.energy.ca.gov/programs-and-topics/programs/building-energy-efficiency-standards/2022-building-energy-efficiency-5

TITLE 24 GENERAL NOTE

CONTRACTOR SHALL BE RESPONSIBLE FOR ALL WORK ASSOCIATED WITH FINAL INSPECTION AND APPLICABLE ACCEPTANCE REQUIREMENT PROCEDURES. INCLUDE ALL COSTS IN THE BASE BID. THIS SHALL INCLUDE, BUT NOT BE LIMITED TO, CONSTRUCTION INSPECTION, MEASUREMENTS, MONITORING, FUNCTIONAL TESTING, CALIBRATING, ETC. CONTRACTOR SHALL ASSUME THE ROLE OF "FIELD TECHNICIAN" AND "RESPONSIBLE PERSON" AS DEFINED IN STATE OF CALIFORNIA 2022 BUILDING ENERGY EFFICIENCY STANDARDS NONRESIDENTIAL COMPLIANCE MANUAL SECTION 14.1.2.

SEE STATE OF CALIFORNIA 2022 BUILDING ENERGY EFFICIENCY STANDARDS SECTIONS 10-103(a)3A AND 10-103(a)3B AND SECTION 130.4 FOR MORE INFORMATION.

SEE STATE OF CALIFORNIA 2022 BUILDING ENERGY EFFICIENCY STANDARDS NONRESIDENTIAL COMPLIANCE MANUAL CHAPTER 14 FOR MORE DETAILED REQUIREMENTS / INFORMATION.

SEE STATE OF CALIFORNIA 2022 BUILDING ENERGY EFFICIENCY STANDARDS RESIDENTIAL COMPLIANCE MANUAL CHAPTER 2 FOR MORE DETAILED REQUIREMENTS / INFORMATION.

PROVIDE COMPLETED INSTALLATION CERTIFICATE(S) AND CERTIFICATE(S) OF ACCEPTANCE AS REQUIRED TO THE SATISFACTION OF THE ENFORCEMENT AGENCY.

This document is used to demonstrate compliance with requirements in 110.9, 110.12(c), 130.0, 130.1, 140.6 and 141.0(b)2 for indoor lighting scopes using the prescriptive path for nonresidential and hotel/motel occupancies. It is also used to document compliance with requirements in 160.5, 170.2(e) and 180.2(b)4 for indoor lighting scopes using the prescriptive path for multifamily occupancies. Multifamily includes dormitory and senior living facilities.

A. GENERAL INFORMATION

01	Project Location (city)	Lakewood	04	Total Conditioned Floor Area (ft²)	1,011
02	Climate Zone	8	05	Total Unconditioned Floor Area (ft²)	0
03	Occupancy Types Within Project (select all that apply):		06	# of Stories (Habitable Above Grade)	1

● Support Areas ● All Other Occupancies

B. PROJECT SCOPE

This table includes any lighting systems that are within the scope of the permit application and are demonstrating compliance using the prescriptive path outlined in 140.6 / 170.2(e) or 141.0(b)2 / 180.2(b)4 for alterations.

Scope of Work	Conditioned Spaces		Unconditioned Spaces	
01	02	03	04	05
My Project Consists of (check all that apply):	Calculation Method	Area (ft²)	Calculation Method	Area (ft²)
☒ New Lighting System	Area Category Method	1011	Area Category Method	0
☐ New Lighting System - Parking Garage				
Total Area of Work (ft²)	1011		0	

H. INDOOR LIGHTING CONTROLS (Not including PAFs)

Area Level Controls

04	05	06	07	08	09	10	11	12	
Area Description	Complete Building or Area Category Primary Function Area	Manual Area Controls 130.1(a) / 160.5(b)4A	Multi-Level Controls 130.1(b) / 160.5(b)4B	Shut-Off Controls 130.1(c) // 160.5(b)4C	Primary/Sky lit Daylighting 130.1(d) / 160.5(b)4D	Secondary Daylighting 130.1(d) / 160.5(b)4D	Interlocked Systems 140.6(a)1/ 170.2(e)2A	Field Inspector	
								Pass	Fail
							13		
							Plan Sheet Showing Daylit Zones:		

I. LIGHTING POWER ALLOWANCE: COMPLETE BUILDING OR AREA CATEGORY METHODS

Each area complying using the Complete Building or Area Category Methods per 140.6(b) are included in this table. Column 06 indicates if additional lighting power allowances per 140.6(c) or adjustments per 140.6(a) are being used .

Conditioned Spaces

01	02	03	04	05	06	
Area Description	Complete Building or Area Category Primary Function Area	Allowed Density (W/ft²)	Area (ft²)	Allowed Wattage (Watts)	Additional Allowance / Adjustment	
					Area Category	PAF
Concessions Building - Restrooms	Restroom	0.65	502	326.3	No	No
Concessions	Kitchen/ Food Preparation	0.95	265	251.8	No	No
Janitor, Storage	All Other Space Types	0.4	244	97.6	No	No
		TOTALS:	1,011	675.7	See Tables J, or P for detail	

J. ADDITIONAL ALLOWANCE: AREA CATEGORY METHOD QUALIFYING LIGHTING SYSTEM

This section does not apply to this project.

DOCUMENTATION AUTHOR'S DECLARATION STATEMENT

I certify that this Certificate of Compliance documentation is accurate and complete.

Documentation Author Name:	Documentation Author Signature:
Company: WSP USA	Signature Date: 2024-04-17
Address: 11870 Pierce Street Ste 160	CEA/ HERS Certification Identification (if applicable):
City/State/Zip: Riverside, CA 92505	Phone: 951-299-4160

RESPONSIBLE PERSON'S DECLARATION STATEMENT

I certify the following under penalty of perjury, under the laws of the State of California:

1. The information provided on this Certificate of Compliance is true and correct.
2. I am eligible under Division 3 of the Business and Professions Code to accept responsibility for the building design or system design identified on this Certificate of Compliance (responsible designer)
3. The energy features and performance specifications, materials, components, and manufactured devices for the building design or system design identified on this Certificate of Compliance conform to the requirements of Title 24, Part 1 and Part 6 of the California Code of Regulations.
4. The building design features or system design features identified on this Certificate of Compliance are consistent with the information provided on other applicable compliance documents, worksheets, calculations, plans and specifications submitted to the enforcement agency for approval with this building permit application.
5. I will ensure that a completed signed copy of this Certificate of Compliance shall be made available with the building permit(s) issued for the building, and made available to the enforcement agency for all applicable inspections. I understand that a completed signed copy of this Certificate of Compliance is required to be included with the documentation the builder provides to the building owner at occupancy.

Responsible Designer Name: Raymond Swartz	Responsible Designer Signature:
Company: tk1sc/WSP	Date Signed: 2024-04-17
Address: 11870 Pierce Street Suite 160	License: E15610
City/State/Zip: Riverside CA 92505	Phone: 951-299-4160

STATE:

IDENTIFICATION STAMP
DIV. OF THE STATE ARCHITECT
APP: 03-124281 INC:
REVIEWED FOR
SS ☑ FLS ☑ ACS ☑
DATE: 02/04/2025

ARCHITECT:
architecture
westbergwhite
7700 IRVINE CENTER DR. STE. 100
IRVINE, CA 92618
(714) 508-1780 (714) 508-1780 FAX

CONSULTANT:
tk1sc COLLABORATIVE
11870 Pierce Street, Suite 160
Riverside, California 92505
951.299.4160 www.tk1sc.com
Project Leader - Bill Voller
Electrical Lead - Bill Voller
tk1sc Job #: US0027568.7397

REGISTERED PROFESSIONAL ENGINEER
RAYMOND W. SWARTZ
No. E15610
Ex. 12/31/2025
ELECTRICAL
STATE OF CALIFORNIA

PROJECT NAME:
Bellflower Unified School District
Mayfair High School Athletics Fields
6000 North Woodruff Ave
Lakewood, California 90713

CLIENT:
BELLFLOWER UNIFIED SCHOOL DISTRICT
16703 S. Clark Ave.
BELLFLOWER, CALIFORNIA 90706

Rev.	Date	Description

JOB NO: 15008.01
DATE: 05/28/2024
DRAWN: TG, XY
CHECK: RB, JG
ARCHITECT: PDW
ENGINEER:

SHEET DESCRIPTION:
TITLE 24

SHEET NO:
E504

STATE OF CALIFORNIA
Outdoor Lighting CALIFORNIA ENERGY COMMISSION

CERTIFICATE OF COMPLIANCE		NRCC-LTO-E
Project Name: Mayfair HS Athletics Fields	**Report Page:**	**(Page 3 of 7)**
	Date Prepared:	4/17/2024

F. OUTDOOR LIGHTING FIXTURE SCHEDULE

For new or altered lighting systems demonstrating compliance with 140.7 / 170.2(e)6 all new luminaires being installed and any existing luminaires remaining or being moved within the spaces covered by the permit application are included in the Table below. For altered lighting systems using the Existing Power method per 141.0(b)2L only new luminaires being installed and replacement luminaires being installed as part of the project scope are included (ie, existing luminaires remaining or existing luminaires being moved are not included). Outdoor lighting attached to multifamily buildings and controlled from the inside of a dwelling unit are included in Table H. and are not included here. All other multifamily outdoor lighting is included here.

Designed Wattage:

01	02		03	04	05	06	07	08	09	10	
Name or Item Tag	Complete Luminaire Description		Watts per luminaire[1, 2]	How is Wattage determined	Total Number Luminaires[2]	Luminaire Status[3]	Excluded per 140.7(a) / 170.2(e)6A	Design Watts	Cutoff Req. > 6,200 initial lumen output 130.2(b) / 160.5(c)1[4]	Field Inspector	
										Pass	Fail
2	2 - Exterior Wall Mtd Sconce	☐ Linear	47	Mfr. Spec	10	New	☐	470	NA: < 6200 lumens	☐	☐
4	4 - LED Pole Mtd Flood (Single Head)	☐ Linear	66	Mfr. Spec	29	New	☐	1,914	NA: < 6200 lumens	☐	☐
5	5 - LED Pole Mtd Flood (Dbl Head)	☐ Linear	122	Mfr. Spec	4	New	☐	488	NA: < 6200 lumens	☐	☐
6	6 - Parking Lot Pole Mtd LED (Dbl Head)	☐ Linear	258	Mfr. Spec	4	New	☐	1,032	NA: < 6200 lumens	☐	☐
6a	6A - Parking Lot Pole Mtd LED (Single Head)	☐ Linear	129	Mfr. Spec	8	New	☐	1,032	NA: < 6200 lumens	☐	☐
								Total Design Watts:	4936		

* NOTES: Selections with a * require a note in the space below explaining how compliance is achieved.
EX: Luminaire is lighting a statue; EXCEPTION 2 to 130.2(b)

[1] FOOTNOTES: Authority Having Jurisdiction may ask for Luminaire cut sheets to confirm wattage used for compliance per 130.0(c) / 160.5(b)
[2] For linear luminaires, wattage should be indicated as W/lf instead of Watts/luminaire. Total linear feet should be indicated in column 05 instead of number of luminaires.
[3] Select "New" for new luminaires in a new outdoor lighting project, or for added luminaires in an alteration. Select "Altered" for replacement luminaires in an alteration. Select "Existing to Remain" for existing luminaires within the project scope that are not being altered and are remaining. Select "Existing Reinstalled" for existing luminaires which are being removed and reinstalled as part of the project scope.
[4] Compliance with mandatory shielding requirements is required for luminaires with initial lumen output >= 6,200 unless exempted by 130.2(b)/ 160.5(c)

L. LIGHTING ALLOWANCE: ORNAMENTAL

This section does not apply to this project.

M. LIGHTING ALLOWANCE: PER SPECIFIC AREA

This section does not apply to this project.

N. EXISTING CONDITIONS POWER ALLOWANCE (alterations only)

This section does not apply to this project.

O. DECLARATION OF REQUIRED CERTIFICATES OF INSTALLATION

Selections have been made based on information provided in this document. If any selection has been changed by permit applicant, an explanation should be included in Table E. Additional Remarks. These documents must be provided to the building inspector during construction and can be found online

Form/Title
NRCI-LTO-E - Must be submitted for all buildings

P. DECLARATION OF REQUIRED CERTIFICATES OF ACCEPTANCE

There are no NRCA forms required for this project.

Generated Date/Time:
CA Building Energy Efficiency Standards - 2022 Nonresidential Compliance
Report Version: 2022.0.000
Schema Version: rev 20220101
Documentation Software: EnergyPro
Compliance ID: EnergyPro-2945-0424-2834
Report Generated: 2024-04-17 13:07:50

STATE OF CALIFORNIA
Outdoor Lighting CALIFORNIA ENERGY COMMISSION

CERTIFICATE OF COMPLIANCE		NRCC-LTO-E
Project Name: Mayfair HS Athletics Fields	**Report Page:**	**(Page 2 of 7)**
	Date Prepared:	4/17/2024

C. COMPLIANCE RESULTS

Results in this table are automatically calculated from data input and calculations in Tables F through N. Note: If any cell on this table says "COMPLIES with Exceptional Conditions" refer to Table D. Exceptional Conditions for guidance or see applicable Table referenced below.

Calculations of Total Allowed Lighting Power (Watts) 140.7 / 170.2(e)6 or 141.0(b)2L / 180.2(b)4Bv												Compliance Results			
01		02		03		04		05		06		07		08	09
General Hardscape Allowance 140.7(d)1 / 170.2(e)6 (See Table I)	+	Per Application 140.7(d)2 / 170.2(e)6 (See Table J)	+	Sales Frontage 140.7(d)2 (See Table K)	+	Ornamental 140.7(d)2 / 170.2(e)6 (See Table L)	+	Per Specific Area 140.7(d)2 / 170.2(e)6 (See Table M)	OR	Existing Power Allowance 141.0(b)2L / 180.2(b)4Bv (See Table N)	=	**Total Allowed** (Watts)	≥	**Total Actual** (Watts)	**07 must be >= 08**
4,964	+	---	+	---	+	---	+	---	OR	---	=	4,964	≥	4,936	COMPLIES
										Shielding Compliance (See Table G for Details)					N/A
										Controls Compliance (See Table H for Details)					Not applicable

D. EXCEPTIONAL CONDITIONS

This table is auto-filled with uneditable comments because of selections made or data entered in tables throughout the form.

E. ADDITIONAL REMARKS

This table includes remarks made by the permit applicant to the Authority Having Jurisdiction.

Generated Date/Time:
CA Building Energy Efficiency Standards - 2022 Nonresidential Compliance
Report Version: 2022.0.000
Schema Version: rev 20220101
Documentation Software: EnergyPro
Compliance ID: EnergyPro-2945-0424-2834
Report Generated: 2024-04-17 13:07:50

STATE OF CALIFORNIA
Outdoor Lighting CALIFORNIA ENERGY COMMISSION

CERTIFICATE OF COMPLIANCE		NRCC-LTO-E
Project Name: Mayfair HS Athletics Fields	**Report Page:**	**(Page 5 of 7)**
	Date Prepared:	4/17/2024

I. LIGHTING POWER ALLOWANCE (per 140.7 / 170.2(e))

This table includes areas using allowance calculations per 140.7 / 170.2(e). General Hardscape Allowance is per Table 140.7-A/Table 170.2-R while "Use it or lose it" Allowances are per Table 140.7-B /Table 170.2-S. Indicate which allowances are being used to expand sections for user input. Luminaires that qualify for one of the "Use it or lose it" allowances shall not qualify for another "Use it or lose it" allowance.
Outdoor lighting attached to multifamily buildings and controlled from the inside of a dwelling unit are included in Table H. and are not included here. All other multifamily outdoor lighting is included here.

	01				
	"Use it or lose it" Allowance (select all that apply) (select all that apply)				
	☒ General Hardscape Allowance Table I (below)	☐ Per Application Table J	☐ Sales Frontage Table K	☐ Ornamental Table L	☐ Per Specific Area Table M

Calculated General Hardscape Lighting Power Allowance per Table 140.7-A for Nonresidential & Hotel/Motel

02	03	04	05	06	07	08	09
Area Description	Area Wattage Allowance (AWA)			Linear Wattage Allowance (LWA)			Total General AWA + LWA (Watts)
	Illuminated Area (ft^2)	Allowed Density (W/ft^2)	Area Allowance (Watts)	Perimeter Length (lf)	Allowed Density (W/lf)	Linear Allowance (Watts)	
Pedestrian Walkway - Concessions	5236	0.019	99.5	721	0.2	108.2	208
Automotive Hardscape	127053	0.019	2414	3304	0.2	495.6	2910
Pedestrian Walkway - Stadium	52631	0.019	1000	4315	0.2	647.2	1647
					Initial Wattage Allowance for Entire Site (Watts):		200
					Instances of Initial Wattage Allowance (LZ 0 only)[1]		
					Total General Hardscape Allowance (Watts):		4964

J. LIGHTING ALLOWANCE: PER APPLICATION

This section does not apply to this project.

K. LIGHTING ALLOWANCE: SALES FRONTAGE

This section does not apply to this project.

Generated Date/Time:
CA Building Energy Efficiency Standards - 2022 Nonresidential Compliance
Report Version: 2022.0.000
Schema Version: rev 20220101
Documentation Software: EnergyPro
Compliance ID: EnergyPro-2945-0424-2834
Report Generated: 2024-04-17 13:07:50

TITLE 24 PROCEDURES FOR TESTING AND ADJUSTING

CONTRACTOR SHALL BE RESPONSIBLE FOR ALL WORK ASSOCIATED WITH FINAL INSPECTION AND APPLICABLE ACCEPTANCE REQUIREMENT PROCEDURES. INCLUDE ALL COSTS IN THE BASE BID. THIS SHALL INCLUDE, BUT NOT BE LIMITED TO, CONSTRUCTION INSPECTION, MEASUREMENTS, MONITORING, FUNCTIONAL TESTING, CALIBRATING, ETC. CONTRACTOR SHALL ASSUME THE ROLE OF "FIELD TECHNICIAN" AND "RESPONSIBLE PERSON" AS DEFINED IN STATE OF CALIFORNIA 2022 BUILDING ENERGY EFFICIENCY STANDARDS NONRESIDENTIAL COMPLIANCE MANUAL SECTIONS 13.1.2.2 AND 13.1.2.3.

LIGHTING CONTROL ACCEPTANCE TESTING AND ADJUSTING PROCEDURES - REFER TO NRCA-LTI-02-A DOCUMENTS.

AUTOMATIC DAYLIGHT CONTROL ACCEPTANCE TESTING AND ADJUSTING PROCEDURES - REFER TO NRCA-LTI-03-A DOCUMENTS.

DEMAND RESPONSE LIGHTING CONTROL ACCEPTANCE TESTING AND ADJUSTING PROCEDURES - REFER TO NRCA-LTI-04-A DOCUMENTS.

INSTITUTIONAL TUNING PAF ACCEPTANCE TESTING AND ADJUSTING PROCEDURES - REFER TO NRCA-LTI-05-A DOCUMENTS.

OUTDOOR LIGHTING CONTROL ACCEPTANCE TESTING AND ADJUSTING PROCEDURES - REFER TO NRCA-LTO-02-A DOCUMENTS.

ALL LIGHTING CONTROLS TESTING AND ADJUSTING DOCUMENTS NOTED ABOVE ARE AVAILABLE FROM THE CALIFORNIA ENERGY COMMISSION WEB SITE AT:
https://www.energy.ca.gov/programs-and-topics/programs/building-energy-efficiency-standards/2022-building-energy-efficiency-5

TITLE 24 GENERAL NOTE

CONTRACTOR SHALL BE RESPONSIBLE FOR ALL WORK ASSOCIATED WITH FINAL INSPECTION AND APPLICABLE ACCEPTANCE REQUIREMENT PROCEDURES. INCLUDE ALL COSTS IN THE BASE BID. THIS SHALL INCLUDE, BUT NOT BE LIMITED TO, CONSTRUCTION INSPECTION, MEASUREMENTS, MONITORING, FUNCTIONAL TESTING, CALIBRATING, ETC. CONTRACTOR SHALL ASSUME THE ROLE OF "FIELD TECHNICIAN" AND "RESPONSIBLE PERSON" AS DEFINED IN STATE OF CALIFORNIA 2022 BUILDING ENERGY EFFICIENCY STANDARDS NONRESIDENTIAL COMPLIANCE MANUAL SECTION 14.1.2.

SEE STATE OF CALIFORNIA 2022 BUILDING ENERGY EFFICIENCY STANDARDS SECTIONS 10-103(a)3A AND 10-103(a)3B AND SECTION 130.4 FOR MORE INFORMATION.

SEE STATE OF CALIFORNIA 2022 BUILDING ENERGY EFFICIENCY STANDARDS NONRESIDENTIAL COMPLIANCE MANUAL CHAPTER 14 FOR MORE DETAILED REQUIREMENTS / INFORMATION.

SEE STATE OF CALIFORNIA 2022 BUILDING ENERGY EFFICIENCY STANDARDS RESIDENTIAL COMPLIANCE MANUAL CHAPTER 2 FOR MORE DETAILED REQUIREMENTS / INFORMATION.

PROVIDE COMPLETED INSTALLATION CERTIFICATE(S) AND CERTIFICATE(S) OF ACCEPTANCE AS REQUIRED TO THE SATISFACTION OF THE ENFORCEMENT AGENCY.

STATE OF CALIFORNIA
Outdoor Lighting CALIFORNIA ENERGY COMMISSION

CERTIFICATE OF COMPLIANCE		NRCC-LTO-E
Project Name: Mayfair HS Athletics Fields	**Report Page:**	**(Page 1 of 7)**
Project Address: 6000 Woodruff Ave	**Date Prepared:**	4/17/2024

This document is used to demonstrate compliance with requirements in 110.9, 130.0, 130.2, 140.7, and 141.0(b)2L for outdoor lighting scopes using the prescriptive path for nonresidential and hotel/motel occupancies. It is also used to document compliance with requirements in 160.5, 170.2(e)6, 180.1(a) and 180.2(b)4Bv for outdoor lighting scopes using the prescriptive path for multifamily and mixed-use occupancies. Multifamily includes dormitory and senior living facilities.

A. GENERAL INFORMATION

01	Project Location (city)	Lakewood	04	Total Illuminated Hardscape Area (ft^2)	184920
02	Climate Zone	8			
03	Outdoor Lighting Zone per Title 24 Part 1 10.114 or as designated by Authority Having Jurisdiction (AHJ):				
☐	LZ-0: Very Low - Undeveloped Parkland	☒ LZ-2: Moderate - Urban Clusters	☐ LZ-4: High - Must be reviewed by CA Energy Commission for Approval		
☐	LZ-1: Low - Rural Areas	☐ LZ-3: Moderately High - Urban Areas			
05	Occupancy Types within Project				
● Support Areas ● All Other Occupancies					

B. PROJECT SCOPE

This table includes outdoor lighting systems that are within the scope of the permit application and are demonstrating compliance using the prescriptive path outlined in 140.7 / 170.2(e)6 or 141.0(b)2L / 180.2(b)4Bv for alterations.

My Project Consists of:

01	02			
☒ New Lighting System	Must Comply with Allowances from 140.7 / 170.2(e)6			
☐ Altered Lighting System	Is your alteration increasing the connected lighting load (Watts)?	○ Yes	○ No	
03	04	05		
% of Existing Luminaires Being Altered[1]	Sum Total of Luminaires Being Added or Altered	Calculation Method		
☐ < 10% ☐ >= 10% and < 50% ☐ >= 50%				

Please proceed to Table F. Outdoor Lighting Fixture Schedule to define the project's luminaires.

[1] FOOTNOTES: % of Existing Luminaires Being Altered = (Sum Total of Luminaires Being Added or Altered / Existing Luminaires within the Scope of the Permit Application) x 100.

Generated Date/Time:
CA Building Energy Efficiency Standards - 2022 Nonresidential Compliance
Report Version: 2022.0.000
Schema Version: rev 20220101
Documentation Software: EnergyPro
Compliance ID: EnergyPro-2945-0424-2834
Report Generated: 2024-04-17 13:07:50

STATE OF CALIFORNIA
Outdoor Lighting CALIFORNIA ENERGY COMMISSION

CERTIFICATE OF COMPLIANCE		NRCC-LTO-E
Project Name: Mayfair HS Athletics Fields	**Report Page:**	**(Page 4 of 7)**
	Date Prepared:	4/17/2024

G. SHIELDING REQUIREMENTS (BUG)

This section does not apply to this project.

H. OUTDOOR LIGHTING CONTROLS

This table demonstrates compliance with controls requirements for all new or altered luminaires installed as part of the permit application. For alteration projects, luminaires which are existing to remain (ie untouched) and luminaires which are removed and reinstalled (wiring only) do not need to be included in this table even if they are within the spaces covered by the permit application.
Outdoor lighting for nonresidential buildings, parking garages and common service areas in multifamily buildings must be documented separately from outdoor lighting attached to multifamily buildings and controlled from the inside of a dwelling unit

Mandatory Controls for Nonresidential Occupancies, Parking Garages & Common Areas in Multifamily Buildings

01	02	03	04	05	
Area Description	Shut-Off 130.2(c)1 / 160.5(c)	Auto-Schedule 130.2(c)2 / 160.5(c)	Motion Sensor 130.2(c)3 / 160.5(c)	Field Inspector	
				Pass	Fail

[1] FOOTNOTE: Text has been abbreviated, please refer to Table 160.5-A to confirm compliance with the specific light source technologies listed.
[2] Authority having jurisdiction may ask for cutsheets or other documentation to confirm compliance of light source.
[3] Recessed luminaires marked for use in fire-rated installations, and recessed luminaires installed in non-insulated ceilings are excepted from ii and iii.

Generated Date/Time:
CA Building Energy Efficiency Standards - 2022 Nonresidential Compliance
Report Version: 2022.0.000
Schema Version: rev 20220101
Documentation Software: EnergyPro
Compliance ID: EnergyPro-2945-0424-2834
Report Generated: 2024-04-17 13:07:50

STATE OF CALIFORNIA
Outdoor Lighting CALIFORNIA ENERGY COMMISSION

CERTIFICATE OF COMPLIANCE		NRCC-LTO-E
Project Name: Mayfair HS Athletics Fields	**Report Page:**	**(Page 7 of 7)**
Project Address: 6000 Woodruff Ave	**Date Prepared:**	4/17/2024

DOCUMENTATION AUTHOR'S DECLARATION STATEMENT

I certify that this Certificate of Compliance documentation is accurate and complete.

Documentation Author Name:	Documentation Author Signature:
Company: WSP USA	Signature Date: 2024-04-17
Address: 11870 Pierce Street Ste 160	CEA/ HERS Certification Identification (if applicable):
City/State/Zip: Riverside, CA 92505	Phone: 951-299-4160

RESPONSIBLE PERSON'S DECLARATION STATEMENT

I certify the following under penalty of perjury, under the laws of the State of California:

1. The information provided on this Certificate of Compliance is true and correct.
2. I am eligible under Division 3 of the Business and Professions Code to accept responsibility for the building design or system design identified on this Certificate of Compliance (responsible designer)
3. The energy features and performance specifications, materials, components, and manufactured devices for the building design or system design identified on this Certificate of Compliance conform to the requirements of Title 24, Part 1 and Part 6 of the California Code of Regulations.
4. The building design features or system design features identified on this Certificate of Compliance are consistent with the information provided on other applicable compliance documents, worksheets, calculations, plans and specifications submitted to the enforcement agency for approval with this building permit application.
5. I will ensure that a completed signed copy of this Certificate of Compliance shall be made available with the building permit(s) issued for the building, and made available to the enforcement agency for all applicable inspections. I understand that a completed signed copy of this Certificate of Compliance is required to be included with the documentation the builder provides to the building owner at occupancy.

Responsible Designer Name: Raymond Swartz	Responsible Designer Signature:
Company: tk1sc/WSP	Date Signed: 2024-04-17
Address: 11870 Pierce Street Suite 160	License: E15610
City/State/Zip: Riverside CA 92505	Phone: 951-299-4160

Generated Date/Time:
CA Building Energy Efficiency Standards - 2022 Nonresidential Compliance
Report Version: 2022.0.000
Schema Version: rev 20220101
Documentation Software: EnergyPro
Compliance ID: EnergyPro-2945-0424-2834
Report Generated: 2024-04-17 13:07:50

STATE:

IDENTIFICATION STAMP
DIV. OF THE STATE ARCHITECT
APP: 03-124281 INC:
REVIEWED FOR
SS ☑ FLS ☑ ACS ☑
DATE: 02/04/2025

ARCHITECT:
architecture
westbergwhite
7700 IRVINE CENTER DR. STE. 100
IRVINE, CA 92618
(714) 508-1780 (714) 508-1780 FAX

CONSULTANT:
tk1sc COLLABORATIVE
11870 Pierce Street, Suite 160
Riverside, California 92505
951.299.4160 www.tk1sc.com
Project Leader - Bill Voller
Electrical Lead - Bill Voller
tk1sc Job #: US0027568.7397

REGISTERED PROFESSIONAL ENGINEER
RAYMOND W. SWARTZ
No. E15610
Ex. 12/31/2025
ELECTRICAL
STATE OF CALIFORNIA

PROJECT NAME:

Bellflower Unified School District
Mayfair High School Athletics Fields
6000 North Woodruff Ave
Lakewood, California 90713

CLIENT:
BELLFLOWER UNIFIED SCHOOL DISTRICT
16703 S. Clark Ave.
BELLFLOWER, CALIFORNIA 90706

#	Rev. Date	Description

JOB NO: 15008.01
DATE: 05/28/2024
DRAWN: TG, XY
CHECK: RB, JG
ARCHITECT: PDW
ENGINEER:

SHEET DESCRIPTION:
TITLE 24 - EXTERIOR

SHEET NO:
E505

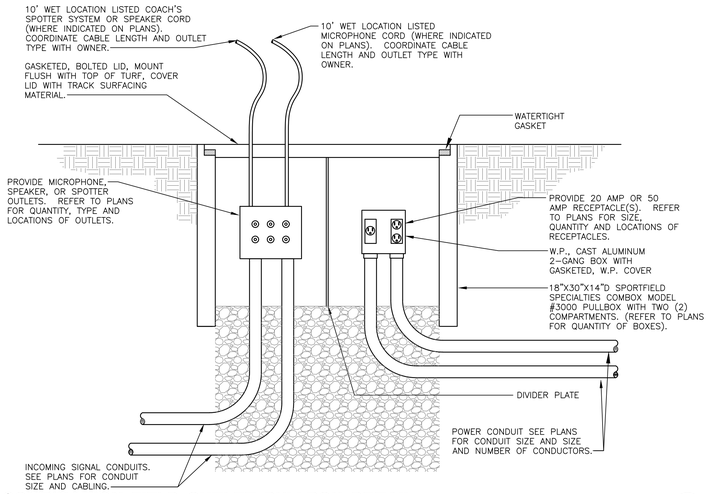

COMBINATION FIELD OUTLET PULLBOX DETAIL 9

SCALE: N.T.S.

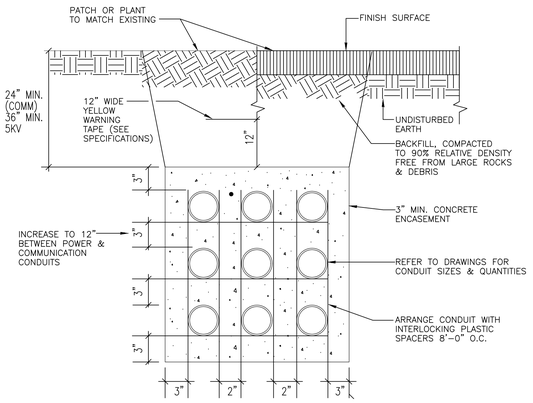

TYPICAL UNDERGROUND CONDUIT TRENCH DETAIL 10

SCALE: N.T.S.

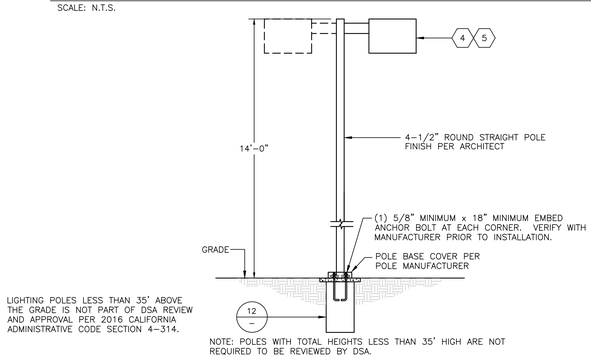

LIGHTING POLES LESS THAN 35' ABOVE THE GRADE IS NOT PART OF DSA REVIEW AND APPROVAL PER 2016 CALIFORNIA ADMINISTRATIVE CODE SECTION 4-314.

NOTE: POLES WITH TOTAL HEIGHTS LESS THAN 35' HIGH ARE NOT REQUIRED TO BE REVIEWED BY DSA.

POST TOP FIXTURE DETAIL 11

SCALE: N.T.S.

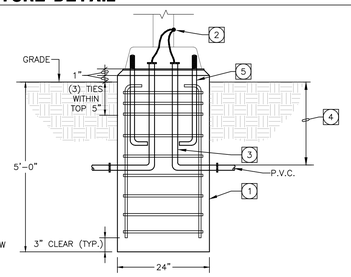

LIGHTING POLES LESS THAN 35' ABOVE THE GRADE IS NOT PART OF DSA REVIEW AND APPROVAL PER 2016 CALIFORNIA ADMINISTRATIVE CODE SECTION 4-314.

NOTE: MAX HEIGHT OF LIGHT POLE = 14'-0". MAX WEIGHT OF LIGHT FIXTURE = 35 LBS.

1. 2"-0" ø x 5'-0" EMBED. CONC. FTG. WITH (10) #6 VERT. AND #3 TIES @ 6" O.C.
2. BOND EQUIPMENT GROUND TO POLE.
3. BRANCH CIRCUIT CONDUIT PER SITE PLAN.
4. PROVIDE MINIMUM COVER OF 24" FROM FINISH GRADE.
5. POLE ANCHOR BOLTS PER MANUFACTURER SPEC'S.

POLE BASE "A" DETAIL 12

SCALE: N.T.S.

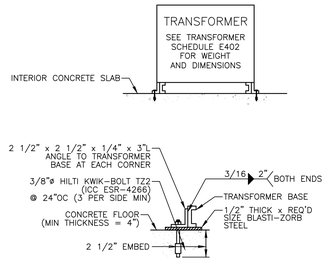

FINISH CONCRETE FLOOR

STANDARD TRANSFORMER MOUNTING DETAIL 5

SCALE: N.T.S.

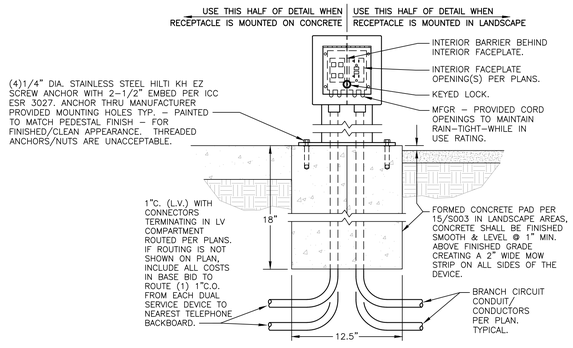

NOTE: COMPLETED BOX ASSEMBLY <20LBS.

DUAL SERVICE "WP-C" SITE RECEPTACLE DETAIL 6

SCALE: N.T.S.

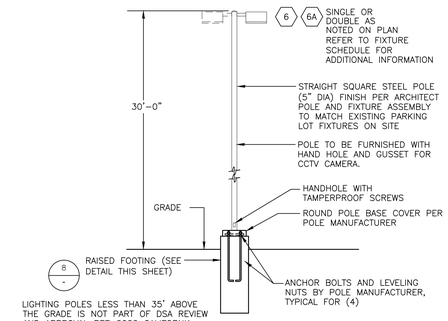

LIGHTING POLES LESS THAN 35' ABOVE THE GRADE IS NOT PART OF DSA REVIEW AND APPROVAL PER 2022 CALIFORNIA ADMINISTRATIVE CODE SECTION 4-314.

POST TOP FIXTURE DETAIL 7

SCALE: N.T.S.

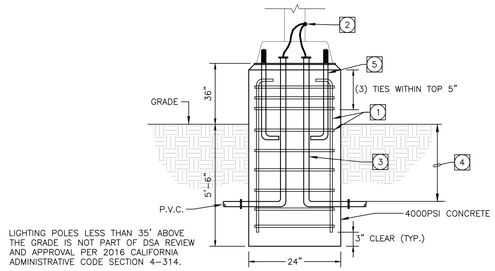

LIGHTING POLES LESS THAN 35' ABOVE THE GRADE IS NOT PART OF DSA REVIEW AND APPROVAL PER 2016 CALIFORNIA ADMINISTRATIVE CODE SECTION 4-314.

NOTE: MAX HEIGHT OF LIGHT POLE = 30'-0". MAX WEIGHT OF LIGHT FIXTURE = 35 LBS.

1. 6-#6 VERT WITH #3 TIES @ 6"O.C.
2. BOND EQUIPMENT GROUND TO POLE.
3. BRANCH CIRCUIT CONDUIT PER SITE PLAN.
4. PROVIDE MINIMUM COVER OF 24" FROM FINISH GRADE.
5. POLE ANCHOR BOLTS PER MANUFACTURER SPEC'S.

POLE BASE "B" DETAIL 8

SCALE: N.T.S.

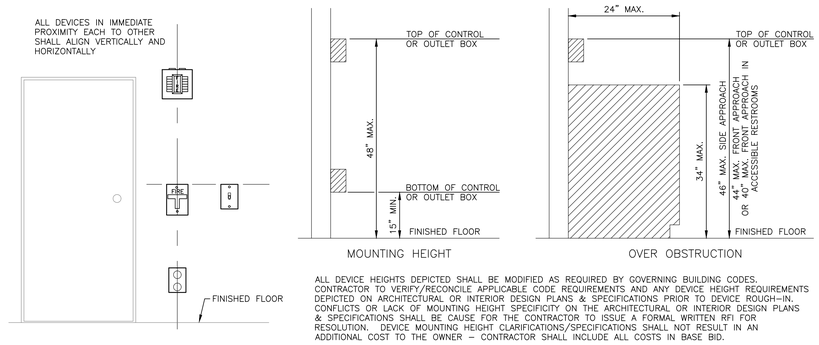

ALL DEVICE HEIGHTS DEPICTED SHALL BE MODIFIED AS REQUIRED BY GOVERNING BUILDING CODES. CONTRACTOR TO VERIFY/RECONCILE APPLICABLE CODE REQUIREMENTS AND ANY DEVICE HEIGHT REQUIREMENTS DEPICTED ON ARCHITECTURAL OR INTERIOR DESIGN PLANS & SPECIFICATIONS PRIOR TO DEVICE ROUGH-IN. CONFLICTS OR LACK OF MOUNTING HEIGHT SPECIFICITY ON THE ARCHITECTURAL OR INTERIOR DESIGN PLANS & SPECIFICATIONS SHALL BE CAUSE FOR THE CONTRACTOR TO ISSUE A FORMAL WRITTEN RFI FOR RESOLUTION. DEVICE MOUNTING HEIGHT CLARIFICATIONS/SPECIFICATIONS SHALL NOT RESULT IN AN ADDITIONAL COST TO THE OWNER - CONTRACTOR SHALL INCLUDE ALL COSTS IN BASE BID.

DEVICE ALIGNMENT & MOUNTING HEIGHT DETAILS 1

SCALE: N.T.S.

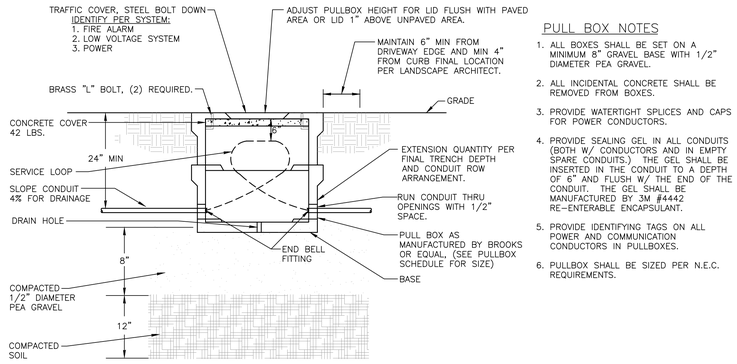

PULL BOX NOTES

1. ALL BOXES SHALL BE SET ON A MINIMUM 8" GRAVEL BASE WITH 1/2" DIAMETER PEA GRAVEL.
2. ALL INCIDENTAL CONCRETE SHALL BE REMOVED FROM BOXES.
3. PROVIDE WATERTIGHT SPLICES AND CAPS FOR POWER CONDUCTORS.
4. PROVIDE SEALING GEL IN ALL CONDUITS (BOTH W/ CONDUCTORS AND IN EMPTY SPARE CONDUITS.) THE GEL SHALL BE INSERTED IN THE CONDUIT TO A DEPTH OF 6" AND FLUSH W/ THE END OF THE CONDUIT. THE GEL SHALL BE MANUFACTURED BY 3M #4442 RE-ENTERABLE ENCAPSULANT.
5. PROVIDE IDENTIFYING TAGS ON ALL POWER AND COMMUNICATION CONDUCTORS IN PULLBOXES.
6. PULLBOX SHALL BE SIZED PER N.E.C. REQUIREMENTS.

PULL BOX DETAIL 2

SCALE: N.T.S.

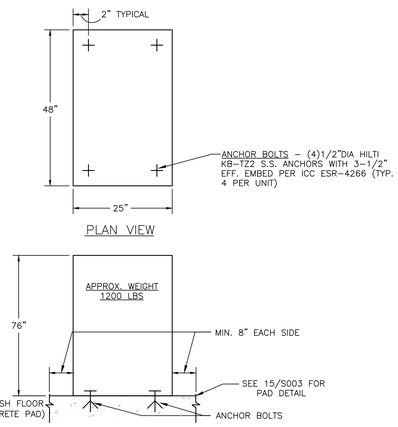

INVERTER ANCHORAGE DETAIL 3

SCALE: N.T.S.

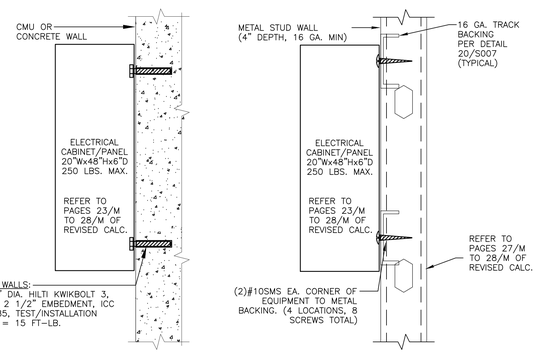

SURFACE PANEL MOUNTING 4

SCALE: N.T.S.

STATE:

IDENTIFICATION STAMP
DIV. OF THE STATE ARCHITECT
APP: 03-124281 INC:
REVIEWED FOR
SS ☑ FLS ☑ ACS ☑
DATE: 02/04/2025

ARCHITECT:

architecture
westbergwhite
7700 IRVINE CENTER DR. STE. 100
IRVINE, CA 92618
(714) 508-1780 (714) 508-1780 FAX

CONSULTANT:

tk1sc
COLLABORATIVE
11870 Pierce Street, Suite 160
Riverside, California 92505
951.299.4160 www.tk1sc.com
Project Leader - Bill Voller
Electrical Lead - Bill Voller
tk1sc Job #: US0027568.7397

REGISTERED PROFESSIONAL ENGINEER
RAYMOND W. SWAN
No. E15610
Ex. 12/31/2025
ELECTRICAL
STATE OF CALIFORNIA

PROJECT NAME:

Bellflower Unified School District
Mayfair High School Athletics Fields
6000 North Woodruff Ave
Lakewood, California 90713

CLIENT:

BELLFLOWER UNIFIED SCHOOL DISTRICT
16703 S. Clark Ave.
BELLFLOWER, CALIFORNIA 90706

#	Rev. Date	Description

JOB NO:	15008.01
DATE:	05/28/2024
DRAWN:	TG, XY
CHECK:	RB, JG
ARCHITECT:	PDW
ENGINEER:	

SHEET DESCRIPTION:

DETAILS

SHEET NO:

E601

FIRE ALARM NOTES

1. WALL MOUNTED, AUDIBLE NOTIFICATION DEVICES SHALL HAVE THEIR TOPS MOUNTED AT 90" MINIMUM AND 100" MAXIMUM ABOVE THE FINISHED FLOOR, AND NO CLOSER THAN 6" TO A HORIZONTAL STRUCTURE. (NFPA 72, SECTION 18.4.8.1). ALL WALL MOUNTED VISUAL APPLIANCES AND COMBINATION AUDIBLE/VISUAL APPLIANCES SHALL HAVE THEIR BOTTOMS MOUNTED AT 80" MINIMUM AND 96" MAXIMUM ABOVE FINISHED FLOOR AS MEASURED TO THE LENS. (NFPA 72, SECTION 18.5.5.1)
2. ALL EQUIPMENT SHALL BE U.L. AND C.S.F.M. LISTED.
3. ALL FIRE ALARM WIRING SHALL BE FLP (FIRE POWER LIMITED) OR FPLP (FIRE POWER LIMITED PLENUM) AS REQUIRED FOR APPLICATION. WIRING IN CONDUIT ABOVE GROUND MAY BE THHN OR THWN.
4. PER THE CEC, ALL WIRING IS TO BE PULLED THROUGH EACH JUNCTION BOX AND CONNECTED DIRECTLY TO EACH FIRE DEVICE. DO NOT SPLICE THE WIRE. THERE MUST BE AT LEAST 6" OF LEAD WIRE FROM THE BOX TO THE DEVICE. ALL BOXES TO BE SIZED PER CEC AND SHALL HAVE THEIR COVERS PAINTED RED WHERE APPLICABLE.
5. DO NOT DEVIATE FROM CONDUIT RUNS AS SHOWN ON FLOOR PLANS WITHOUT PRIOR APPROVAL FROM ELECTRICAL ENGINEER. FACTORS SUCH AS EXCESSIVE VOLTAGE DROP, ADDITIONAL PARTS, ENGINEERING, ETC., THAT ARE A RESULT OF CONDUIT RUN DEVIATIONS SHALL BE THE SOLE RESPONSIBILITY OF THE ELECTRICAL CONTRACTOR.
6. ALL FAN SHUTDOWN FUNCTIONS, DAMPER CLOSURES AND ASSOCIATED MECHANICAL SYSTEM FIRE ALARM INTERFACE SHALL BE BY MECHANICAL CONTRACTOR, AND SHALL BE COORDINATED WITH FIRE ALARM SYSTEM.
7. ALL DUCT SMOKE DETECTORS SHALL BE MOUNTED BY THE MECHANICAL CONTRACTOR. DUCT SMOKE DETECTORS EXPOSED TO THE WEATHER SHALL BE C.S.F.M. LISTED FOR OUTDOOR INSTALLATION, AND WEATHER PROTECTED BY THE MECHANICAL CONTRACTOR. ALL AIR VELOCITY TESTING SHALL BE PERFORMED BY THE MECHANICAL CONTRACTOR.
8. ALL FIRE ALARM DEVICE BACKBOXES, FIRE ALARM TERMINAL CABINETS, GUTTERS, JUNCTION BOXES AND ASSOCIATED CONDUITS SHALL BE FURNISHED AND INSTALLED BY ELECTRICAL CONTRACTOR UNLESS OTHERWISE NOTED. REFER TO FIRE ALARM SYMBOL LIST AND/OR MOUNTING DETAILS FOR ADDITIONAL INFORMATION. SYSTEM SUPPLIER PROVIDED BACKBOXES SHALL BE INSTALLED BY ELECTRICAL CONTRACTOR UNLESS OTHERWISE NOTED.
9. SMOKE DETECTOR TESTING SHALL BE PERFORMED TO ENSURE THAT EACH DETECTOR IS WITHIN ITS LISTED AND MARKED SENSITIVITY RANGE USING THE METHODS RECOMMENDED PER CFC, SECTION 907.8.4 AND NFPA 72, SECTION 14.4.4.3.4.
10. ALL WIRING, INITIATING DEVICES AND ANNUNCIATOR PANEL SHALL BE SUPERVISED TO THE PRINCIPAL POINT OF ANNUNCIATION. THE FIRE ALARM CONTROL PANEL TO SUPERVISE THE ANNUNCIATOR PANEL, ALL INITIATING AND INDICATING DEVICE CIRCUITS.
    A. INITIATING DEVICE CIRCUITS (IDC): CLASS B
    B. SIGNALING LINE CIRCUITS (SLC): CLASS B
    C. NOTIFICATION APPLIANCE CIRCUITS (NAC): CLASS B
11. ALL WIRING SHALL BE CUT FOR IN AND OUT. WIRING SHALL NOT BE LOOPED THROUGH DEVICES.
12. POINT AND COMMON ANNUNCIATION AND T-TAPPING ARE PROHIBITED. (T-TAPPING IS ALLOWABLE ON SLC LOOPS).
13. PROVIDE 3/4" CONDUIT FROM FIRE ALARM CONTROL PANEL TO TELEPHONE BACKBOARD FOR OWNER PROVIDED CENTRAL STATION MONITORING, WHEN APPLICABLE.
14. CONTRACTOR TO FIELD VERIFY AND PROVIDE DECIBEL METER FOR TESTING OF AMBIENT NOISE LEVELS AUDIBLE DEVICES TO BE AT LEAST 15 DBA ABOVE THE AVERAGE AMBIENT SOUND LEVEL BUT NOT LESS THAN 75 DBA AT 10 FEET OR 5 DBA ABOVE THE MAXIMUM SOUND LEVEL BUT NOT MORE THAN 110 DBA AT THE MINIMUM HEARING DISTANCE. SOUND LEVEL SHALL BE MAINTAINED FOR DURATION OF AT LEAST 60 SECONDS. (CFC, SECTION 907.5.2.1.1) THE CONTRACTOR SHALL ADJUST/INSTALL ALL DEVICES TO MAXIMIZE PERFORMANCE AND TO MINIMIZE FALSE ALARMS. PROVIDE UPDATED PLANS AND CALCULATIONS THROUGH THE "CHANGE ORDER" PROCESS WHEN INSTALLING ADDITIONAL DEVICES.
15. VISUAL DEVICES SHOULD NOT EXCEED 2 FLASHES PER SECOND AND SHOULD NOT BE SLOWER THAN 1 FLASH EVERY SECOND. THE DEVICE SHALL HAVE A PULSING LIGHT SOURCE NOT LESS THAN 15-CANDELA. VISUAL DEVICES WITHIN 55" FROM EACH OTHER SHALL BE SYNCHRONIZED.
16. ALL FIRE ALARM CIRCUITS SHALL BE IN CONDUIT, APPROVED SURFACE RACEWAY OR OPEN RUN ABOVE CEILINGS, UNDER FLOORS AND IN WALLS IN A NEAT AND PROTECTED MANNER AS INDICATED ON THE DESIGN DOCUMENTS. EXPOSED CIRCUITS ARE ONLY PERMITTED WHEN NOTED AS EXPOSED ON DESIGN DOCUMENTS. ALL CONDUITS SHALL BE 3/4" MINIMUM. CONTRACTOR TO VERIFY CONDUIT FILL PRIOR TO INSTALLATION.
17. ALL FLOW SWITCHES SHALL BE 2 WIRE WITH NON-ELECTRONIC RETARD TYPE SIMILAR TO THE SYSTEM SENSOR MODEL "WFD SERIES" ONLY.
18. ALL DEVICES IN THE ALARM SYSTEM SHALL BE COMPATIBLE AND INSTALLED PER MANUFACTURER'S SPECIFICATIONS.
19. SYSTEM SHALL BE FURNISHED AND INSTALLED BY AN AUTHORIZED DISTRIBUTOR.
20. FIRE ALARM SYSTEM INSTALLATION COMPANY SHALL BE UL LISTED (UUJS).
21. FIRE ALARM PANEL, REMOTES, AND COMPONENTS SHALL BE SECURED TO MOUNTING SURFACES PER MANUFACTURER'S SPECIFICATIONS. NO SINGLE DEVICE SHALL EXCEED THE WEIGHT OF 20 LBS. WITHOUT SPECIAL MOUNTING DETAILS.
22. SMOKE DETECTOR SHALL NOT BE ANY CLOSER THAN 1 FOOT FROM FIRE SPRINKLERS OR 3 FEET FROM ANY SUPPLY DIFFUSER. IN THE AREA OF CONSTRUCTION OR WHERE POSSIBLE DAMAGE/CONTAMINATION COULD OCCUR ON NEWLY INSTALLED FIRE ALARM DEVICES, DEVICES SHALL BE COVERED UNTIL THAT AREA IS READY TO BE TURNED OVER TO THE OWNER. DETECTORS THAT HAVE BEEN INSTALLED PRIOR TO FINAL CLEAN-UP BY ALL TRADES SHALL BE CLEANED OR REPLACED IN ACCORDANCE WITH CFC, SECTION 907. CLEANING OR REPLACEMENT OF DEVICES THAT WERE MOUNTED AT THE REQUEST OF THE CONTRACTOR WILL NOT BE PERFORMED WITHOUT WRITTEN AUTHORIZATION THAT ASSUMES FINANCIAL RESPONSIBILITY FOR COSTS INCURRED. TESTING OF DETECTORS SHALL BE PERFORMED PER NFPA 72, SECTION 14.4.5.3 AND CFC, SECTION 907.8.4.
23. PER CBC, SECTION 11B-309 ACTIVATION OF INITIATING DEVICE SHALL NOT REQUIRE MORE THAN 5 LBS. (22.2N) OF FORCE OR REQUIRE TIGHT GRASPING PINCHING, OR TWISTING OF WRIST.
24. THE SYSTEM SHALL CONFORM TO CALIFORNIA CODE OF REGULATIONS (CCR) TITLES 19 AND 24 AS APPLICABLE TO THIS PROJECT.
25. THE VOICE/ALARM COMMUNICATION SYSTEM VOICE MESSAGE SHALL COMPLY WITH NFPA 72, SECTIONS 18.4 AND 24.4 FOR GENERAL REQUIREMENTS, INTELLIGIBILITY, AUDIBILITY, MESSAGE PRIORITY, TONES, ETC.
26. A DEDICATED 120V BRANCH CIRCUIT SHALL BE PROVIDED FOR FIRE ALARM EQUIPMENT. THIS CIRCUIT SHALL BE ENERGIZED FROM THE COMMON USE AREA PANEL AND SHALL HAVE NO OTHER OUTLETS. THE BREAKER SHALL HAVE A RED LOCKING DEVICE TO BLOCK THE HANDLE IN THE "ON" POSITION AND BE LABELED AS FOLLOWS:
    A. "FIRE ALARM" FOR FIRE ALARM SYSTEMS
    B. "EMERGENCY COMMUNICATIONS" FOR EMERGENCY COMMUNICATION SYSTEMS, OR
    C. "FIRE ALARM/ECS" FOR COMBINATION FIRE ALARM AND COMMUNICATIONS SYSTEMS.
27. WHERE A DETECTOR IS INSTALLED ABOVE THE CEILING, THE DETECTOR SHALL BE EASILY ACCESSIBLE AND THE LOCATION OF THE DETECTOR SHALL BE CLEARLY MARKED. FOR DUCT SMOKE DETECTORS A REMOTE TEST STATION SHALL BE PROVIDED. ELECTRICAL CONTRACTOR SHALL FURNISH ACCESS PANELS TO AREAS THAT REQUIRE SERVICING, TROUBLE SHOOTING, ETC.
28. THE "END OF LINE RESISTANCE" OF EACH CIRCUIT SHALL BE TESTED IN THE PRESENCE OF THE I.O.R. AND SHALL NOT EXCEED THE LISTED MANUFACTURER'S MINIMUM OPERATING VOLTAGE.
29. UNDERGROUND AND EXTERIOR CONDUITS TO HAVE WATERTIGHT FITTINGS AND WIRE LISTED FOR WET LOCATIONS, IN ACCORDANCE WITH CEC, SECTIONS 110.11, 300.5(B), 300.6, 300.9, 310.10, AND 760.3(D).
30. FIRE ALARM SYSTEM IS A FULLY AUTOMATIC SYSTEM. CONTRACTOR TO UTILIZE AREA COVERAGE SMOKE DETECTORS AND ADDRESSABLE CONTROL RELAYS FOR THE SHUTDOWN AND/OR CLOSURE OF HVAC UNITS AND COMBINATION SMOKE/FIRE DAMPERS. CONTROL RELAYS TO BE LOCATED WITHIN 3FT OF THE CONTROLLED CIRCUIT OR APPLIANCE PER NFPA 72, SECTION 21.2.4.
31. PROVIDE (VIA CHANGE ORDER PROCESS) APPROPRIATE MANUFACTURER PRODUCT DATA SHEETS AND APPLICABLE CSFM LISTINGS FOR ALL SUBSTITUTED MANUFACTURER'S MATERIAL, EQUIPMENT OR APPLIANCES, TO DSA PRIOR TO START OF INSTALLATION.
32. CONTRACTOR SHALL PROVIDE FIRE WATCH FOR ALL OCCUPIED AREAS OF WORK WHERE THE REQUIRED FIRE ALARM SYSTEM IS OUT OF SERVICE FOR THE DURATION OF THE SYSTEM OUTAGE. FIRE WATCH AND SYSTEM/EQUIPMENT SHALL BE PER CFC, SECTION 901.7.
33. EMERGENCY VOICE/ALARM COMMUNICATION SYSTEMS SHALL BE DESIGNED AND INSTALLED IN ACCORDANCE WITH NFPA 72. THE OPERATION OF ANY AUTOMATIC FIRE DETECTOR, SPRINKLER WATERFLOW DEVICE OR MANUAL FIRE ALARM BOX SHALL AUTOMATICALLY SOUND AN ALERT TONE FOLLOWED BY VOICE INSTRUCTIONS GIVING APPROVED INFORMATION AND DIRECTIONS FOR A GENERAL OR STAGED EVACUATION IN ACCORDANCE WITH THE FIRE SAFETY EVACUATION PLANS REQUIRED BY CFC, SECTION 404 PER CBC/CFC, SECTION 907.5.2.2
34. EMERGENCY VOICE/ALARM COMMUNICATION SYSTEMS SHALL HAVE THE CAPABILITY TO BROADCAST LIVE VOICE MESSAGES BY PAGING ZONES ON A SELECTIVE AND ALL-CALL BASIS PER CBC/CFC, SECTION 907.5.2.2.2.
35. EMERGENCY VOICE/ALARM COMMUNICATION SYSTEMS SHALL BE PROVIDED WITH AN APPROVED EMERGENCY POWER SOURCE PER CBC/CFC, SECTION 907.5.2.2.5.
36. UPON DETECTION OF CARBON MONOXIDE THE FIRE ALARM SYSTEM SHALL PRODUCE A FOUR-PULSE TEMPORAL PATTERN SIGNAL WITHIN THE BUILDING AND COMPLY WITH NFPA 720, SECTION 5.8.6.5.
37. ALL MEMBRANE AND THROUGH-PENETRATIONS OF RATED ASSEMBLIES SHALL BE PROTECTED BY AN APPROVED FIRE STOP SYSTEM AS IDENTIFIED IN CBC, CHAPTER 7, UL OR OTHER LAB TESTING CRITERIA. APPROVED TYPES OF MATERIALS SHALL BE IDENTIFIED WITHIN THE FIRE ALARM SECTION OF THE PROJECT SPECIFICATIONS.
38. CONTROL PANELS AND REMOTE ANNUNCIATORS SHALL BE INSTALLED WITH THEIR BOTTOMS MOUNTED AT 48" ABOVE THE FINISHED FLOOR.

FIRE ALARM SYSTEM TESTING NOTES:

1. INSTALLATION OF THE SYSTEMS SHALL NOT BE STARTED UNTIL DETAILED DESIGN DOCUMENTS AND SPECIFICATIONS, INCLUDING STATE FIRE MARSHAL LISTING NUMBERS FOR EACH COMPONENT OF THE SYSTEM HAS BEEN APPROVED BY DSA.
2. A STAMPED SET OF APPROVED FIRE ALARM DESIGN DOCUMENTS SHALL BE ON THE JOB SITE AND USED FOR INSTALLATION.
3. DISTRICT SHALL PROVIDE A CERTIFIED IMPARTIAL FIRE ALARM INSPECTOR. DSA, ARCHITECT/ENGINEER AND OWNER SHALL BE NOTIFIED A MINIMUM OF 48 HOURS PRIOR TO THE FINAL INSPECTION AND/OR TESTING.
4. 100% OF THE SYSTEM IN CONTRACT WILL BE TESTED AND INSPECTED WITH THE CONTRACTOR OR CONTRACTOR'S SUB AND DISTRICT'S ETS STAFF MEMBER PRESENT. INSPECTION WILL INCLUDE, BUT NOT BE LIMITED TO, REMOVING STROBES/HORNS TO CHECK FOR "T-TAPS", REMOVING J-BOX COVERS TO CHECK WIRE GAGE AND SPLICES.
5. FOLLOW ALL REQUIREMENTS AND INSTRUCTIONS PROVIDED BY MANUFACTURER UPON INSTALLATION OF MANUFACTURER'S PRODUCTS AND DEVICES.
6. PRIOR TO REQUESTING FINAL APPROVAL OF THE INSTALLATION, THE INSTALLING CONTRACTOR SHALL FURNISH A WRITTEN STATEMENT TO THE FIRE CODE OFFICIAL THAT THE SUBJECT FIRE PROTECTION SYSTEM HAS BEEN INSTALLED IN ACCORDANCE WITH APPROVED PLANS AND HAS BEEN TESTED IN ACCORDANCE WITH THE MANUFACTURER'S SPECIFICATIONS AND THE APPROPRIATE INSTALLATION STANDARD. ANY DISCREPANCIES BETWEEN THE DRAWINGS AND THE CODE OR RECOGNIZED STANDARDS SHALL BE BROUGHT TO THE ATTENTION OF DSA AND THE ARCHITECT/ENGINEER OF THE PROJECT. ANY DEVIATIONS FROM THE DESIGN STANDARDS SHALL BE NOTED AND COPIES OF THE APPROVALS FOR SUCH DEVIATIONS SHALL BE ATTACHED TO THE WRITTEN STATEMENT. (CFC, SECTION 901.2.1)
7. UPON COMPLETION OF SYSTEM INSTALLATION, THE SYSTEM SHALL BE TESTED IN THE PRESENCE OF AND IN A MANNER ACCEPTABLE TO DSA/I.O.R. CONTRACTOR SHALL SUPPLY NECESSARY TESTING EQUIPMENT, INCLUDING A "SOUND LEVEL METER" TO CHECK ACCEPTABLE NOISE LEVELS OF AUDIBLE DEVICES. PROVIDE TEST RESULTS PER NFPA 72 TO ARCHITECT, D.S.A., I.O.R. AND TO LOCAL FIRE AUTHORITY, PER CFC, SECTION 907.8.2.
8. INSPECTION, TESTING AND MAINTENANCE SHALL BE IN COMPLIANCE WITH NFPA 72, CHAPTER 14, REACCEPTANCE TESTING SHALL BE IN COMPLIANCE WITH NFPA 72, SECTION 14.4.2.
9. THE LOCAL FIRE AUTHORITY SHALL BE NOTIFIED FOR TESTING. THE FIRE AUTHORITY SHALL BE PRESENT AND SHALL BEAR WITNESS FOR TESTING PROCEDURES. DOCUMENTATION FOR WHETHER THE FIRE AUTHORITY WAS PRESENT AND WITNESSED TESTING SHALL BE DOCUMENTED AS PART OF TESTING PROCEDURES DOCUMENTATION.
10. PRIOR TO COMPLETION OF FIRE ALARM SYSTEM THE TWO WAY COMMUNICATION SYSTEM SHALL BE TESTED AND CERTIFIED VIA NFPA 72 EMERGENCY COMMUNICATION SYSTEM SUPPLEMENTARY RECORD OF INSPECTION AND TESTING FORM.
11. THE INSTALLING CONTRACTOR SHALL PROVIDE A COMPLETED RECORD OF COMPLETION PER NFPA 72, FIGURE 7.8.2(A) THROUGH (I) AS APPLICABLE. A COMPLETE RECORD OF THE TESTS AND OPERATIONS OF EACH SYSTEM SHALL BE KEPT UNTIL THE NEXT TEST AND FOR ONE YEAR AFTER PER NFPA 72, SECTION 7.7.1.
12. FIRE ALARM SYSTEM DOCUMENTS SHALL BE HOUSED IN THE DOCUMENT CABINET. THE DOCUMENT CABINET SHALL BE INSTALLED AT THE SYSTEM CONTROL UNIT OR AT ANOTHER APPROVED LOCATION AT THE PROTECTED PREMISES AS REQUIRED BY NFPA 72, SECTION 7.7.2.
13. THE INSTALLING CONTRACTOR SHALL PROVIDE SYSTEM PROGRAMMING FOR SUPERVISORY MONITORING PER CFC, SECTION 907.6.6. SUPERVISORY MONITORING SHALL BE TESTED AND VERIFIED AS SENDING CORRECT SIGNALS IN CONJUNCTION WITH FINAL ACCEPTANCE TEST. OWNER SHALL BE RESPONSIBLE FOR ESTABLISHING AND MAINTAINING A FIRE ALARM SYSTEM MONITORING CONTRACT.

SEQUENCE OF OPERATIONS

ACTION	DEVICE	120 VOLT POWER FAILURE	SYSTEM TROUBLE, WIRING FAULT OR OPEN, GROUND FAULT, LOW BATTERY, CIRCUIT SHORT	MANUAL PULL STATION	AREA SMOKE DETECTOR	AREA or ATTIC DETECTOR
SOUND CONTROL PANEL TROUBLE BUZZER		YES	YES	NO	NO	NO
SOUND CONTROL PANEL SUPERVISORY BUZZER		NO	NO	NO	NO	NO
SOUND CONTROL PANEL ALARM BUZZER		NO	NO	YES	YES	YES
ACTIVATE RELAY FOR CENTRAL STATION MONITORING		YES	YES	YES	YES	YES
ANNUNCIATE AT FIRE ALARM CONTROL PANEL (ALARM)		NO	NO	YES	YES	YES
ANNUNCIATE AT FIRE ALARM CONTROL PANEL (TROUBLE)		YES	YES	NO	NO	NO
ANNUNCIATE AT REMOTE ANNUNCIATOR PANEL (ALARM)		NO	NO	YES	YES	YES
ANNUNCIATE AT REMOTE ANNUNCIATOR PANEL (TROUBLE)		YES	YES	NO	NO	NO
ACTIVATE AUDIBLE NOTIFICATION ALARM SIGNAL THROUGHOUT CAMPUS		NO	NO	YES	YES	YES
ACTIVATE VISUAL NOTIFICATION ALARM SIGNAL THROUGHOUT CAMPUS		NO	NO	YES	YES	YES
ACTIVATE AUDIBLE NOTIFICATION ALARM SIGNAL THROUGHOUT BLDG		NO	NO	YES	YES	YES
ACTIVATE VISUAL NOTIFICATION ALARM SIGNAL THROUGHOUT BLDG		NO	NO	YES	YES	YES
NOTIFY FIRE DEPARTMENT VIA MONITORING STATION –		YES	YES	YES	YES	YES
SOUND AN ALERT TONE FOLLOWED BY VOICE INSTRUCTION		NO	NO	YES	YES	YES

WIRING LEGEND

WIRE DESIGNATION	WIRE IN CONDUIT	WIRE IN CONDUIT UNDERGROUND/WET LOC.	UNDERGROUND/WET WIRE DESIGNATION
INITIATING CIRCUITS Z	2 CONDUCTOR #18 FPL TWISTED/ UNSHEILDED W/OVERALL JACKET	2 CONDUCTOR #18 FPL TWISTED/ UNSHEILDED W/OVERALL JACKET	INITIATING CIRCUITS ZU
POWER CKT. P	2 CONDUCTOR #12 THHN STRANDED	2 CONDUCTOR #12 STRANDED TYPE THWN	POWER CKT. PU
NETWORK CONTROL C	2 CONDUCTOR #12 THHN STRANDED	2 CONDUCTOR #12 STRANDED TYPE THWN	NETWORK CONTROL CU
ANNUNCIATOR D	4 CONDUCTOR #18 FPL TWISTED/ UNSHIELDED W/OVERALL JACKET	4 CONDUCTOR #18 FPL TWISTED/ UNSHIELDED W/OVERALL JACKET	ANNUNCIATOR DU
AUDIBLE LOOP B	2 CONDUCTOR #18 FPL TWISTED/ SHIELDED W/OVERALL JACKET	2 CONDUCTOR #18 FPL TWISTED/ SHIELDED W/OVERALL JACKET	AUDIBLE LOOP BU
AUDIBLE (SPEAKER) A	2 CONDUCTOR #16 FPL TWISTED/ SHIELDED W/OVERALL JACKET	2 CONDUCTOR #16 FPL TWISTED/ SHIELDED W/OVERALL JACKET	AUDIBLE (SPEAKER) AU
VISUAL (STROBE) V	2 CONDUCTOR #12 FPL TWISTED/ UNSHIELDED W/OVERALL JACKET	2 CONDUCTOR #12 FPL TWISTED/ UNSHIELDED W/OVERALL JACKET	VISUAL (STROBE) VU
S-BUS S	4 CONDUCTOR #16 FPLR (2 PAIR)	4 CONDUCTOR #16 FPLR (2 PAIR)	S-BUS SU

NOTE:
1. ALL WIRE TO BE CLASS 'B' PATHWAY SURVIVAL LEVEL 1.
2. ALL CABLING TO BE WEST PENN OR APPROVED EQUAL.
3. COLOR CODE ALL FIRE ALARM CONDUCTORS PER DISTRICT STANDARDS. VERIFY COLOR SCHEMES PRIOR TO ORDERING FIRE ALARM CONDUCTORS.

FIRE ALARM SYMBOL LIST

SYMBOL	DESCRIPTION	MODEL	MANUFACTURER	BACKBOX	MOUNTING HEIGHT	C.S.F.M. NUMBER
VECP	NEW FIRE ALARM/VOICE EVACUATION CONTROL PANEL WITH LED DISPLAY, INTEGRAL MICROPHONE PAGING SYSTEM AND NETWORK ADAPTER CARD (STAND ALONE)	EST4 4-LCDLE 4-NET	EST EST	PROVIDED	5'-6" A.F.F. TO TOP	7170-1657:0508
AMP	ZONED AUDIO AMPLIFIER	ANS2 SERIES	EST	PROVIDED	5'-6" A.F.F. TO TOP	6912-1657:0237
FATC	FIRE ALARM TERMINAL CABINET	N/A	BY ELECTRICIAN	18"SQ. x 6"D U.N.O. (RED)	VERIFY IN FIELD	N/A
FAAP	REMOTE FIRE ALARM ANNUNCIATOR PANEL	4-ANN SERIES	EST	PROVIDED	5'-6" A.F.F. TO TOP	7120-1657:0509
MIC	VOICE EVACUATION PAGING MICROPHONE	4-MIC	EST	PROVIDED	5'-6" A.F.F. TO TOP	7170-1657:0508
SD	AREA SMOKE DETECTOR (ADDRESSABLE)	SIGA-PD	EST	4S DEEP BOX W/ 3-0 RING	CEILING	7272-1657:0331
HD	AREA HEAT DETECTOR (ADDRESS./FIXED 194°D)	SIGA-HRD	EST	4S DEEP BOX W/ 3-0 RING	ABOVE ACCESSIBLE CEILING, U.O.N.	7270-1657:0333
S WP	WEATHERPROOF FIRE ALARM SPEAKER	WG4RF-S	EST	449 WEATHERPROOF SURFACE MOUNT BOX	90" A.F.F. TO TOP	7320-1657:0289
SF cd	FIRE ALARM SPEAKER/STROBE (CEILING)	GCSWF	EST	4S DEEP BOX W/ 4S EXTENSION	CEILING	7320-1657:0516
LS WP	FIRE ALARM LOUDSPEAKER (7.5W)	HPSA15	EST	4S DEEP BOX W/ 4S EXTENSION	CEILING	7320-1657:0241
MS	MANUAL PULL STATION (ADDRESSABLE)	SIGA-278	EST	4S DEEP BOX W/ SINGLE GANG RING	48" A.F.F. TO TOP OF ACTIVATING HANDLE	7150-1657:0129
SYNC	FIRE ALARM SYNC MODULE	G1M	EST	4S DEEP BOX	VERIFY IN FIELD	7300-1657:0201
UDACT	CENTRAL STATION COMMUNICATOR	3-MODCOM	EST	PROVIDED	VERIFY IN FIELD	7165-1657:0306
J	FIRE ALARM JUNCTION BOX	N/A	BY ELECTRICIAN	4S BOX, U.N.O.	VERIFY IN FIELD	N/A

A.F.F. ABOVE FINISHED FLOOR
E.O.L. END OF LINE RESISTOR
(E) EXISTING DEVICE
F.B.O. FURNISHED BY OTHERS
TSP TWISTED SHIELDED PAIR

N/A NOT APPLICABLE
U.N.O. UNLESS NOTED OTHERWISE
VL VERIFY LOCATION IN FIELD
WP WEATHERPROOF DEVICE
cd INDICATED CANDELA RATING OF STROBE DEVICE

CENTRAL STATION MONITORING COMPANY INFORMATION

SSD SYSTEMS
1740 N LEMON STREET
ANAHEIM, CA 92801

PHONE: (714) 449-9900
FAX: (714) 449-9595

CA ALARM LICENSE: ACO-1434
CA CONTRACTOR LICENSE: 557497
UL FILE NUMBER: S1545

PLAN REVIEW REQUIREMENTS AND APPLICABLE CODES AND STANDARDS

1.0 FIRE ALARM PLAN REVIEW

A. FIRE ALARM PLAN REVIEW

1. AS PART OF THE FIRE ALARM PLAN REVIEW, PLANS AND SPECIFICATIONS FOR THE FIRE ALARM SYSTEM HAVE BEEN INCLUDED FOR REVIEW AND COMMENT BY THE DIVISION OF THE STATE ARCHITECT, FIRE & LIFE SAFETY.
2. THE FLOOR PLANS AND SPECIFICATIONS INCLUDE THE FOLLOWING : LOCATIONS OF ALL ALARM-INITIATING AND SIGNALING DEVICES, CONTROL AND TROUBLE SIGNALING EQUIPMENT (FIRE ALARM CONTROL PANEL, BUILDING ANNUNCIATION (FIRE ALARM ANNUNCIATOR).

B. FIRE ALARM COMPONENTS

1. PROVIDE CALIFORNIA STATE FIRE MARSHAL LISTING SHEETS AND U.L. LISTING NUMBERS FOR EACH COMPONENT.
2. EQUIPMENT POWER CONNECTIONS.
3. RISER DIAGRAM SHOWING EACH COMPONENT.
4. VOLTAGE DROP CALCULATIONS.
5. POWER CONNECTIONS TO APPLICABLE COMPONENTS.
6. WIRE AND/OR CABLING TYPES AND SIZES.
7. PROVIDE CATALOG DATA SHEETS FOR ALL FIRE ALARM SYSTEM COMPONENTS.
8. CONTRACTOR TO FURNISH STATEMENT OF COMPLIANCE BEFORE REQUESTING FINAL APPROVAL OF INSTALLATION IN ACCORDANCE WITH CFC, SECTION 901.2.1.
9. A SATISFACTORY TEST OF THE ENTIRE SYSTEM SHALL BE MADE IN THE PRESENCE OF THE PROJECT INSPECTOR AND, IF APPLICABLE, LOCAL FIRE AUTHORITY.
10. THE INSTALLER SHALL SUPPLY THE OWNER WITH A WRITTEN OPERATING, TESTING AND MAINTENANCE INSTRUCTIONS, POINT-TO-POINT AS BUILT DRAWINGS AND EQUIPMENT SPECIFICATIONS. AS BUILT RECORDS SHALL BE MAINTAINED ON PREMISES FOR A MINIMUM OF THREE YEARS PER CFC, SECTION 901.6.3.

C. SCOPE OF WORK

1. INSTALL A FULLY AUTOMATIC, ADDRESSABLE, FIRE ALARM SYSTEM WITH AN EMERGENCY VOICE/ALARM COMMUNICATION SYSTEM WITHIN ALL BUILDINGS IN SCOPE OF PROJECT AS DEFINED PER CFC, SECTION 907.2.3 AND NFPA 72.
2. FIRE ALARM SYSTEM SHALL TRANSMIT THE ALARM, SUPERVISORY AND TROUBLE SIGNALS TO AN APPROVED SUPERVISING STATION IN ACCORDANCE WITH NFPA 72. THE SUPERVISING STATION SHALL BE U.L. LISTED AS UUFX (CENTRAL STATION) PER CFC, SECTION 907.6.6.3.
3. FIRE SPRINKLER SYSTEM UTILIZED FOR HEAT DETECTION IN ALL ABOVE CEILING, ATTIC SPACES AND CONCEALED COMBUSTIBLE AREAS. PROVIDE HEAT DETECTORS WHERE FIRE SPRINKLERS HAVE BEEN OMITTED PER NFPA 72 AND NFPA 13.

2.0 LIST OF CURRENT CALIFORNIA CODE OF REGULATIONS

APPLICABLE CODES AS OF JANUARY 1, 2023

2022 California Administrative Code (CAC), Part 1, Title 24, C.C.R.

2022 California Building Code (CBC), Volumes 1 & 2, Part 2, Title 24, C.C.R. (2021 International Building Code of the International Code Council, with California Amendments.)

2022 California Electrical Code (CEC), Part 3, Title 24, C.C.R. (2020 National Electric Code of the National Fire Protection Assoc., NFPA)

2022 California Mechanical Code (CMC), Part 4, Title 24, C.C.R. (2021 Uniform Mechanical Code of the International Association of Plumbing and Mechanical Officials, IAPMO.)

2022 California Plumbing Code (CPC), Part 5, Title 24, C.C.R. (2021 Uniform Plumbing Code of the International Association of Plumbing and Mechanical Officials, IAPMO.)

2022 California Energy Code, Part 6, Title 24, C.C.R.

2022 California Historical Building Code, Title 24, C.C.R.

2022 California Fire Code (CFC), Part 9, Title 24, C.C.R. (2021 International Fire Code with California Amendments)

2022 California Existing Building Code (CEBC), Part 10, Title 24, C.C.R. (2021 International Existing Building Code of the International Code Council, with amendments)

2022 California Green Building Standards Code (CALGreen), Part 11, Title 24, C.C.R.

2022 California Referenced Standards Code, Part 12, Title 24, C.C.R.

LIST OF FEDERAL CODES AND STANDARDS (if applicable)

Americans with Disabilities Act (ADA), Title II or Title III

For Title II: Uniform Federal Accessibility Standards (UFAS) or ADA Standards for Accessible Design (Appendix A of 28 CFR Part 36.)

For Title III: ADA Standards for Accessible Design (Appendix A of 28 CFR Part 36.)

Americans with Disabilities Act Accessibility Guidelines (ADAAG) (with amendments through September 2002)

PARTIAL LIST OF APPLICABLE NFPA STANDARDS:

NFPA 13-Automatic Sprinkler Systems (CA Amended)	2022 Edition
NFPA 14-Standpipes Systems (CA Amended)	2019 Edition
NFPA 17-Standard for Dry Chemical Extinguishing Systems	2021 Edition
NFPA 17a-Standard for Wet Chemical Systems	2021 Edition
NFPA 20-Installation Stationary Pumps for Fire Protection	2019 Edition
NFPA 22-Water tanks for Private Fire Protection	2019 Edition
NFPA 24-Installation of Private Fire Service Mains (CA Amended)	2019 Edition
NFPA 72-National Fire Alarm and Signaling Code (CA Amended)	2022 Edition
NFPA 80-Fire Door and Other Opening Protectives	2019 Edition
NFPA 92-Standard for Smoke Control Systems	2015 Edition
NFPA 253-Critical Radiant Flux of Floor Covering Systems	2019 Edition
NFPA 720-Carbon Monoxide (CO) Detection and Warning	2015 Edition
NFPA 2001-Clean Agent Fire Extinguishing Systems (CA Amended)	2018 Edition
ICC 300-ICC Standards on Bleachers, Folding and Telescoping Seating and Grandstands	2017 Edition
UL 38-Manual Operating Signal Boxes (with revisions through February 2, 2005 as amended)	1999 Edition
UL 268-Smoke Detectors for Fire Alarm Systems	2009 Edition
UL 268A-Smoke Detectors Duct Applications (with revisions through October 22, 2003 as amended)	2009 Edition
UL 300-Fire Testing of Fire Extinguishing Systems for Protection Of Restaurant Cooking Areas (with revisions through December 2014 as amended)	2005 Edition
UL 464-Audible Signal Appliances (with revisions through October 10, 2003 as amended)	2003 Edition
UL 521-Heat Detectors for Fire Protective Signaling Systems (with revisions through July 20, 2005 as amended)	1999 Edition
UL 864-Control Units for Fire Protective Signaling Systems (with revisions through December 2014)	2003 Edition

Reference code section for NFPA Standards-2022 CBC (SFM) Chapter 35
See Chapter 35 for State of California amendments to NFPA Standards.

COMPLETE FIRE ALARM SUBMITTAL
AUTOMATIC ADDRESSABLE FIRE ALARM SYSTEM WITH EMERGENCY VOICE EVACUATION SYSTEM

STATE:

IDENTIFICATION STAMP
DIV. OF THE STATE ARCHITECT
APP: 03-124281 INC:
REVIEWED FOR
SS ☑ FLS ☑ ACS ☑
DATE: 02/04/2025

ARCHITECT:
architecture
westbergwhite
7700 IRVINE CENTER DR. STE. 100
IRVINE, CA 92618
(714) 508-1780 (714) 508-1780 FAX

CONSULTANT:
tk1sc
COLLABORATIVE
11870 Pierce Street, Suite 160
Riverside, California 92505
951.299.4160 www.tk1sc.com
Project Leader - Bill Voller
Electrical Lead - Bill Voller
tk1s

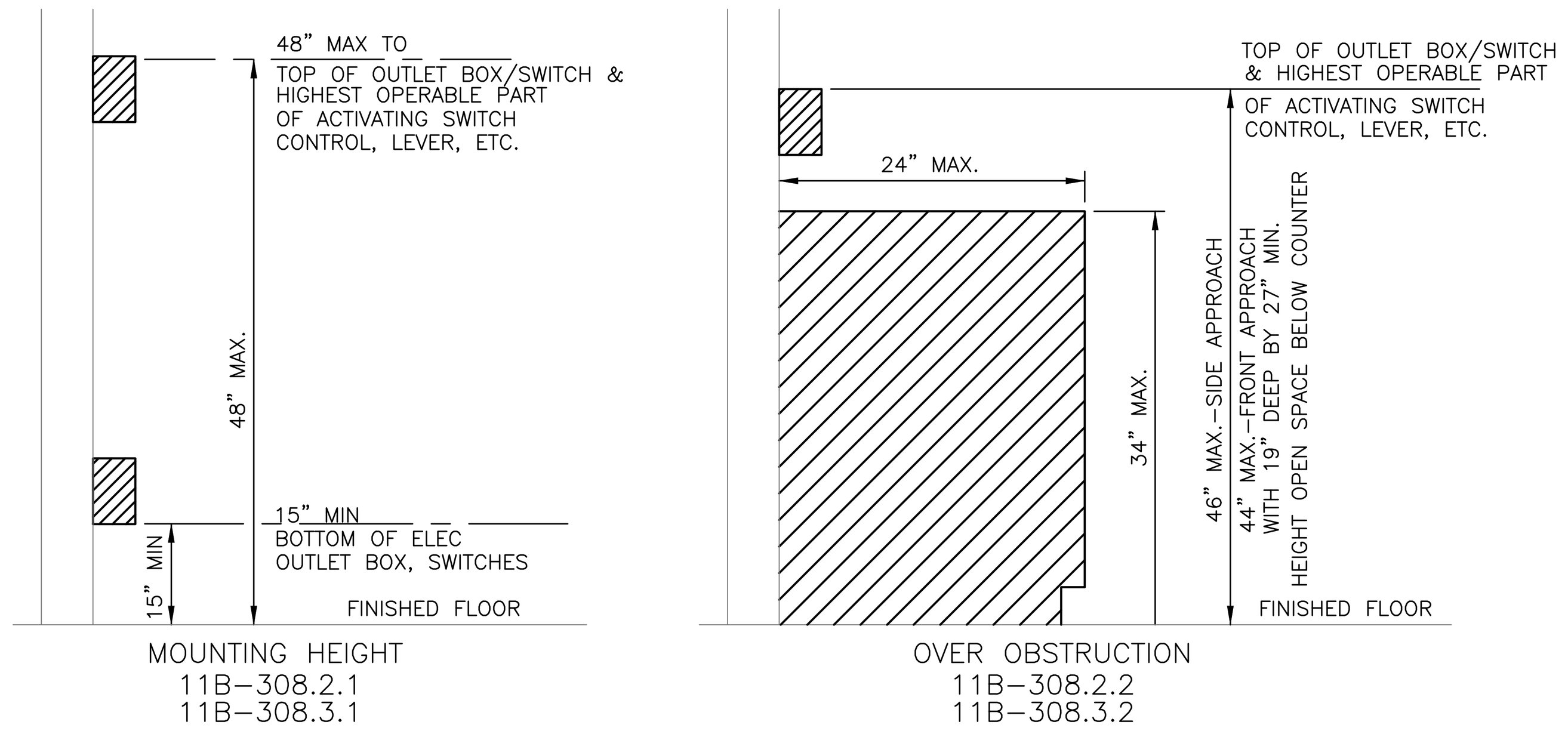

ALL DEVICE HEIGHTS DEPICTED SHALL BE MODIFIED AS REQUIRED BY GOVERNING BUILDING CODES. CONTRACTOR TO VERIFY/RECONCILE APPLICABLE CODE REQUIREMENTS AND ANY DEVICE HEIGHT REQUIREMENTS DEPICTED ON ARCHITECTURAL OR INTERIOR DESIGN PLANS & SPECIFICATIONS PRIOR TO DEVICE ROUGH-IN. CONFLICTS OR LACK OF MOUNTING HEIGHT SPECIFICITY ON THE ARCHITECTURAL OR INTERIOR DESIGN PLANS & SPECIFICATIONS SHALL BE CAUSE FOR THE CONTRACTOR TO ISSUE A FORMAL WRITTEN RFI FOR RESOLUTION. DEVICE MOUNTING HEIGHT CLARIFICATIONS/SPECIFICATIONS SHALL NOT RESULT IN AN ADDITIONAL COST TO THE OWNER – CONTRACTOR SHALL INCLUDE ALL COSTS IN BASE BID.

MOUNTING HEIGHT OVER OBSTRUCTION DETAIL (9)

SCALE: NTS

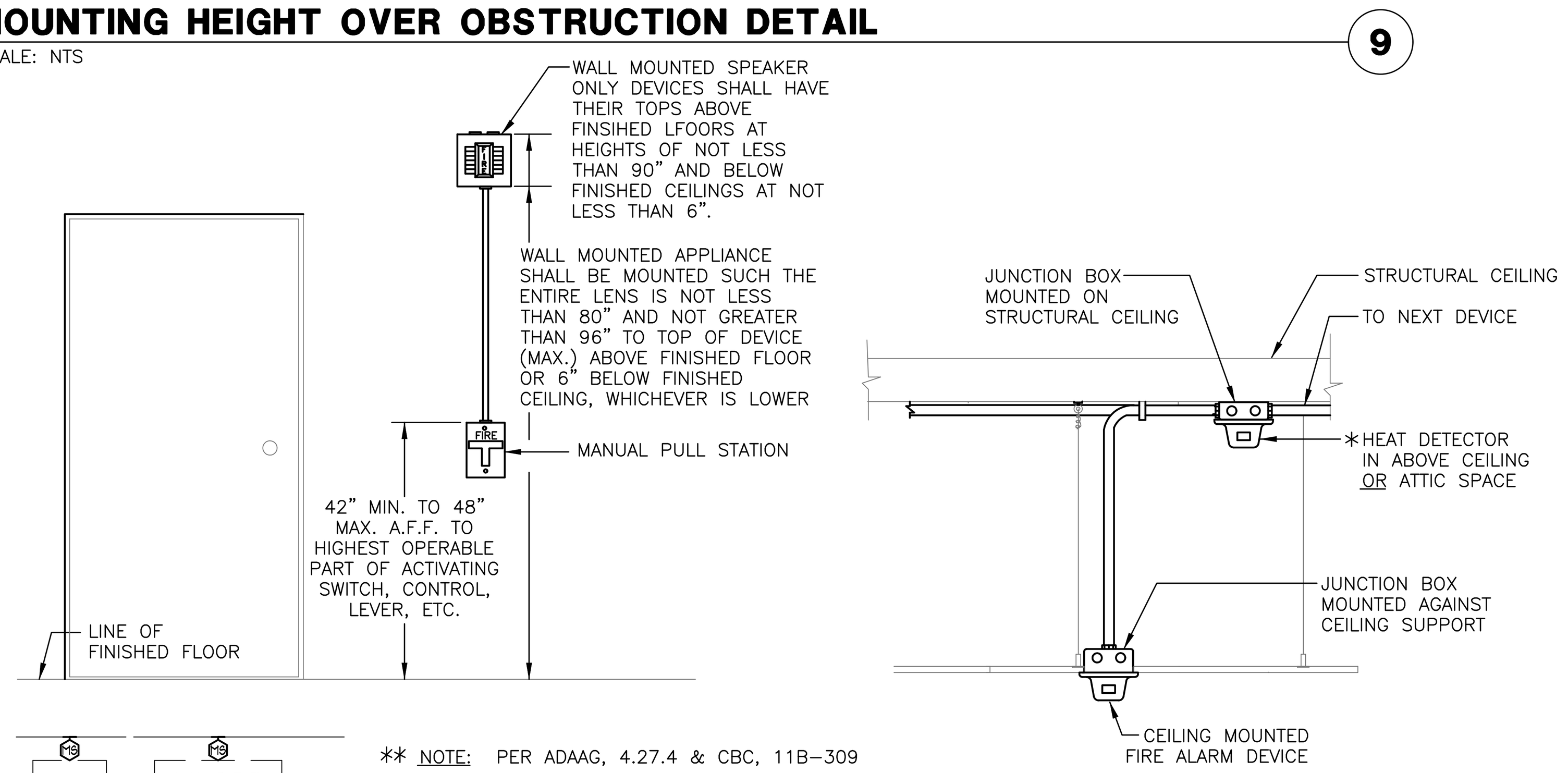

** NOTE: PER ADAAG, 4.27.4 & CBC, 11B-309 CONTROLS AND OPERATING MECHANISMS AT INITIATING DEVICE "SHALL BE OPERABLE WITH ONE HAND AND SHALL NOT REQUIRE TIGHT GRASPING, PINCHING OR TWISTING OF THE WRIST. THE FORCE REQUIRED TO ACTIVATE CONTROLS SHALL BE NO GREATER THAN 5lbf (22.2N)."

* – TEMPERATURE SETTING OF HEAT DETECTOR DEVICE TO BE SET AT MINIMUM OF 20°F. ABOVE THE MAXIMUM EXPECTED TEMPERATURE OF THE SPACE INSTALLED PER NFPA 72, 17.6.2.3.

DEVICE MOUNTING DETAILS (8)

SCALE: N.T.S.

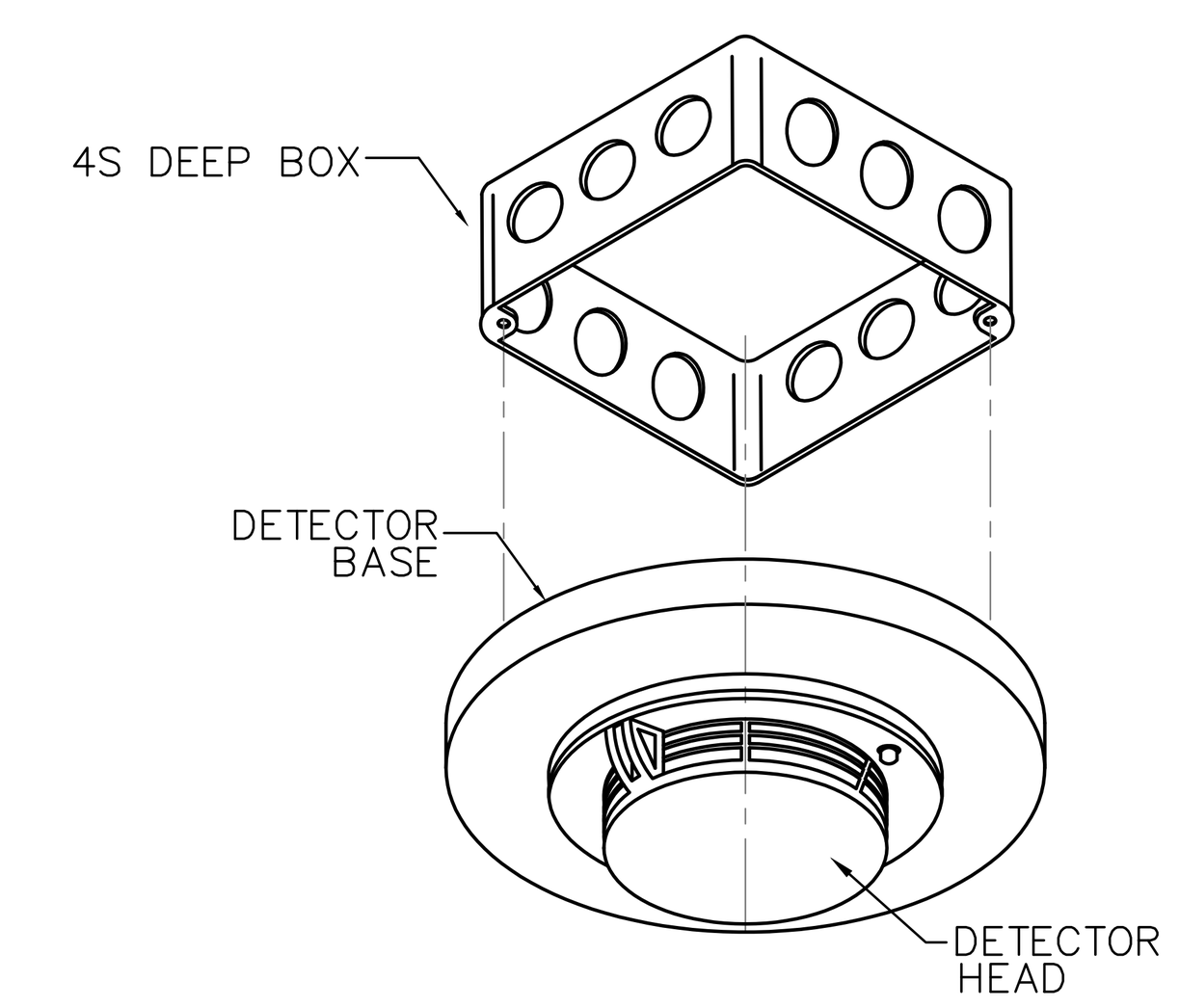

DETECTOR MOUNTING DETAIL (6)

SCALE: N.T.S.

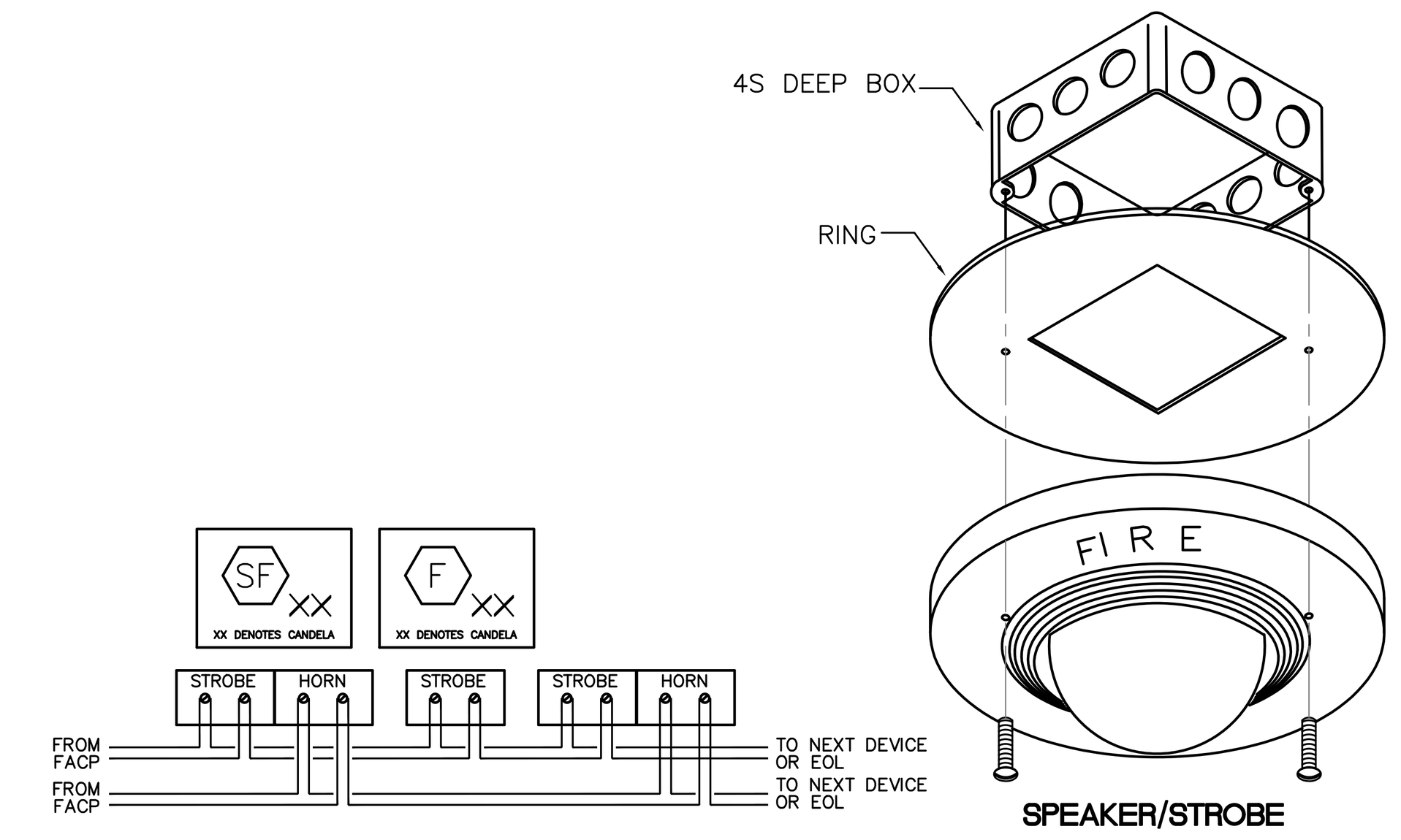

CEILING MTD. AUDIBLE/VISUAL (3)

SCALE: N.T.S.

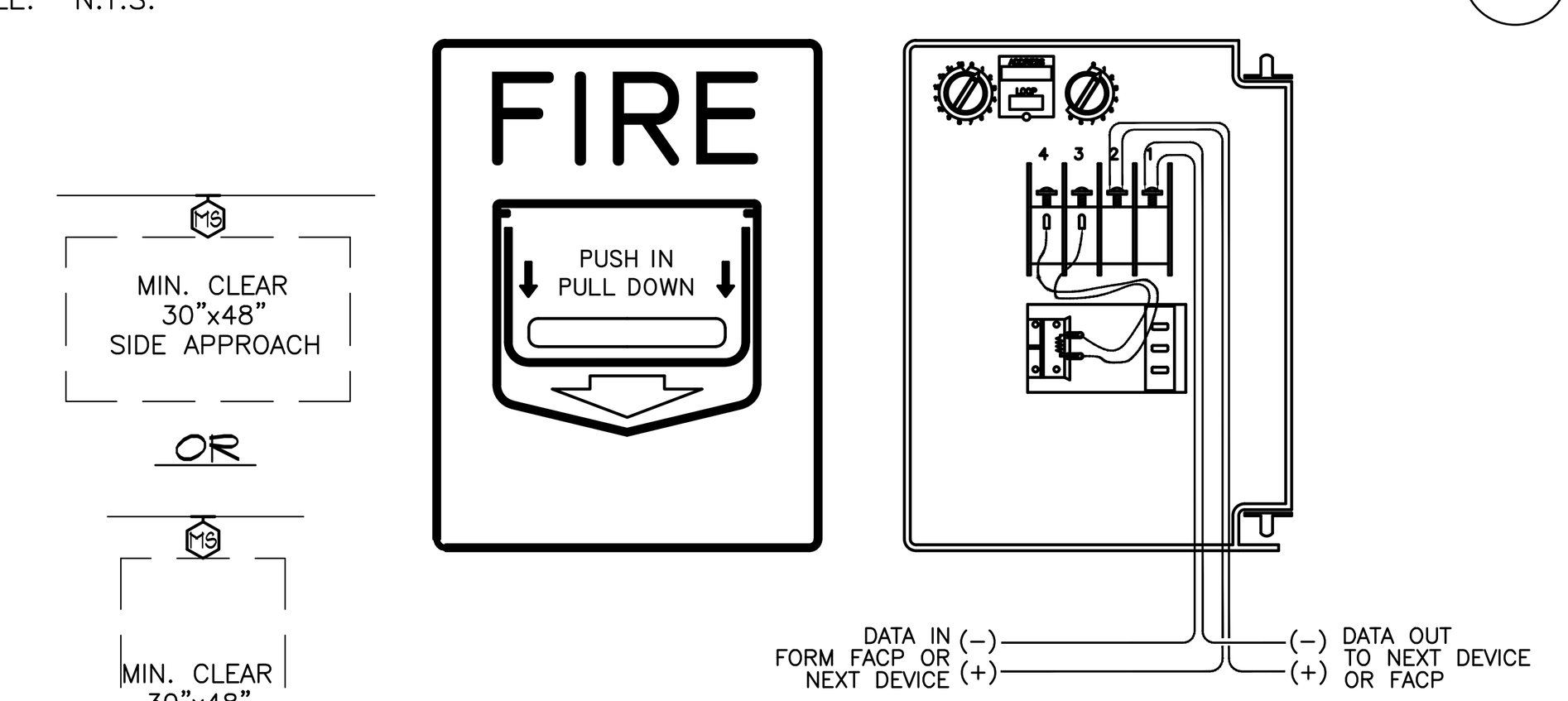

NOTE: PER ADAAG, 4.27.4 & CBC, 11B-309 & CFC, 907.4.2

CONTROLS AND OPERATING MECHANISMS AT INITIATING DEVICE "SHALL BE OPERABLE WITH ONE HAND AND SHALL NOT REQUIRE TIGHT GRASPING, PINCHING OR TWISTING OF THE WRIST. THE FORCE REQUIRED TO ACTIVATE CONTROLS SHALL BE NO GREATER THAN 5lbs (22.2N)."

PULL STATION DETAIL (2)

SCALE: N.T.S.

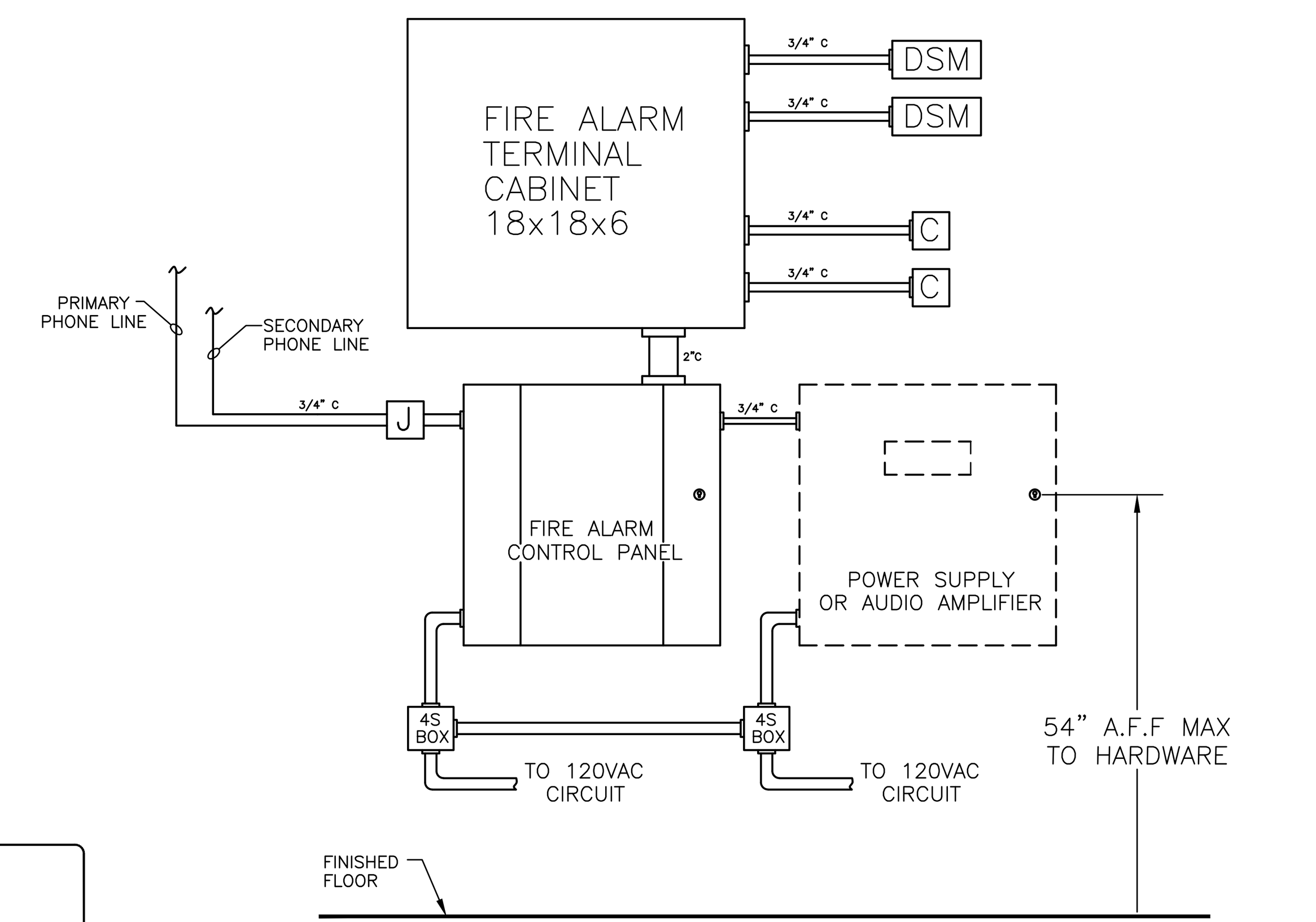

FIRE ALARM PANEL/POWER SUPPLY MOUNTING ELEVATION (5)

SCALE: N.T.S.

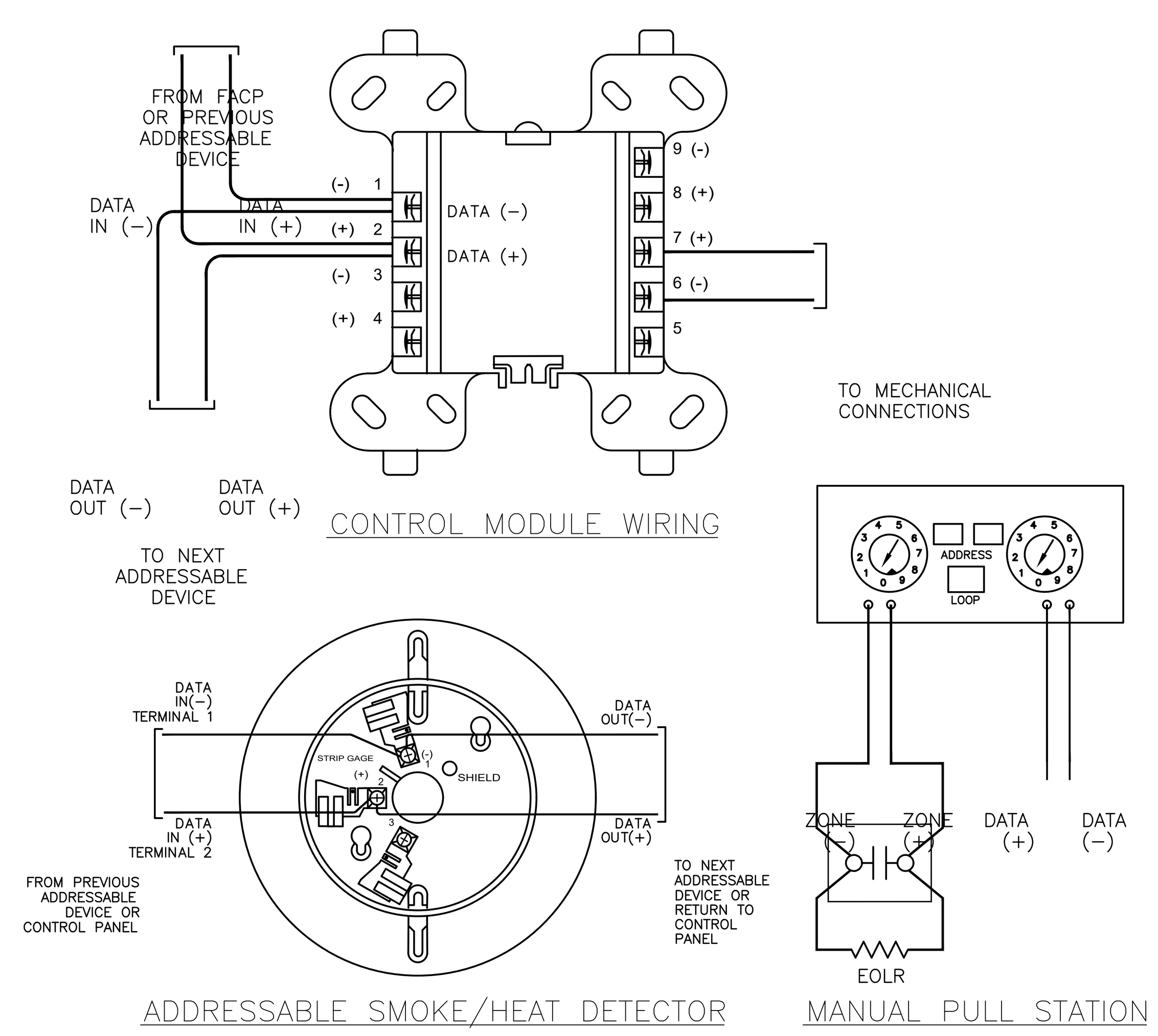

DEVICE WIRING DETAILS (4)

SCALE: N.T.S.

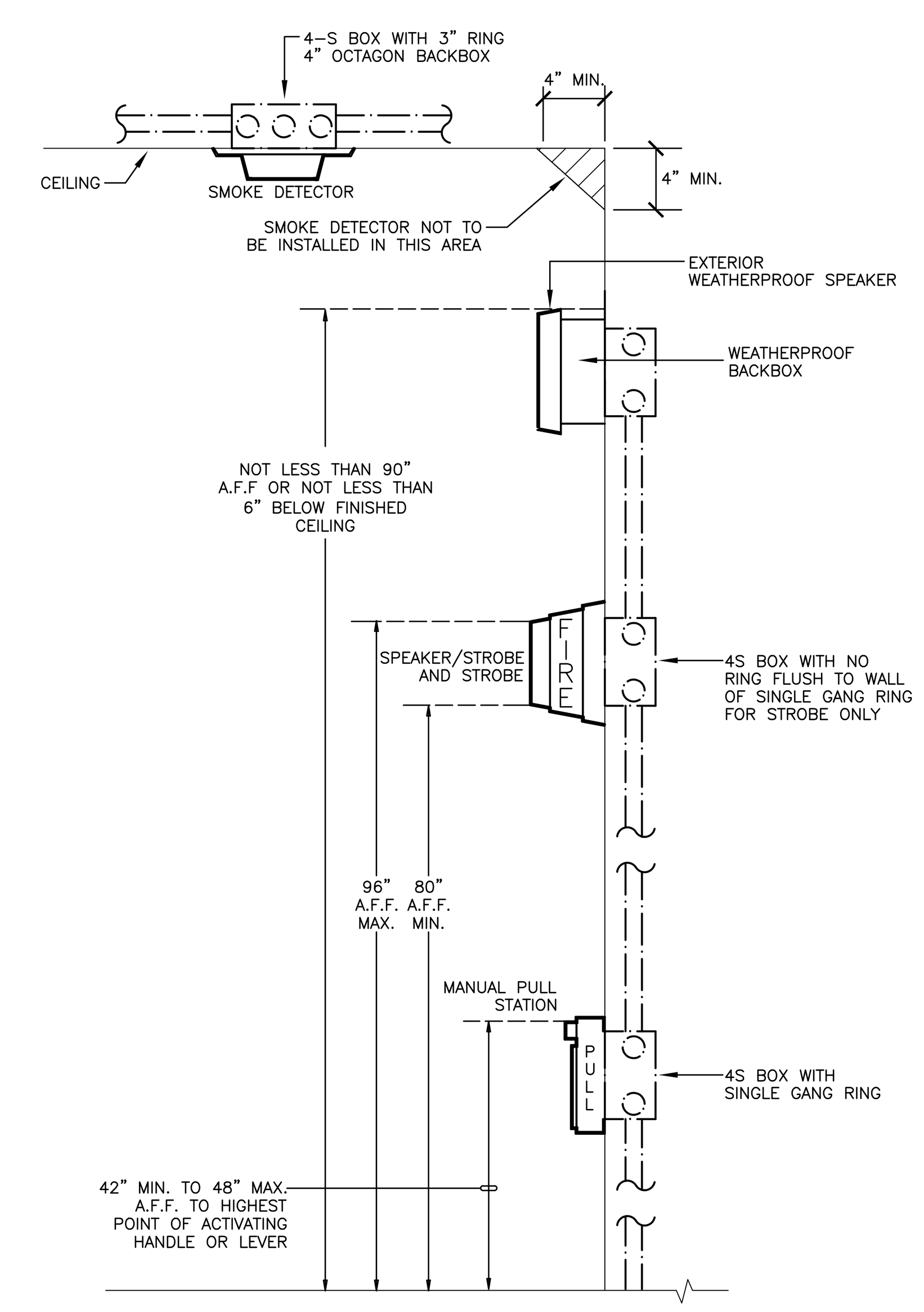

GENERAL NOTES:

1. THE ENTIRE LENS OF STROBE LIGHTS MUST BE BETWEEN 80" AND 96" ABOVE FLOOR FINISH. (NFPA 72, 18.5.5)
2. MANUAL FIRE ALARM BOXES SHALL BE INSTALLED IN ACCORDANCE WITH CFC, SECTIONS 907.4 THROUGH 907.5.
3. WHEN APPLICABLE, MANUAL FIRE ALARM BOXES SHALL BE LOCATED NOT MORE THAN 5 FEET FROM THE ENTRANCE TO EACH EXIT. ADDITIONAL MANUAL FIRE ALARM BOXES SHALL BE LOCATED SO THAT TRAVEL DISTANCE TO THE NEAREST BOX DOES NOT EXCEED 200 FEET. (CFC, 907.4.2.1)

MOUNTING HEIGHT DETAIL (1)

SCALE: N.T.S.

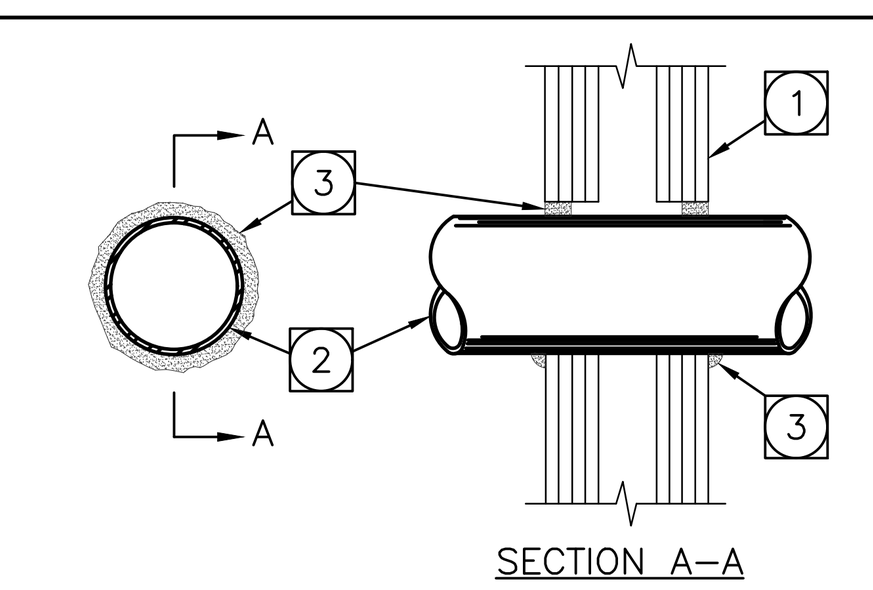

PENETRATION THRU GYPSUM BOARD WALL
NO SCALE

System No.W-L-1252
January 22, 2015
F Ratings – 1, 2, 3 and 4 Hr (See Items 1 and 3)
T Ratings – 0 Hr
L Rating At Ambient – less than 1 CFM/sq ft
L Rating At 400 F – less than 1 CFM/sq ft

1. Wall Assembly – The 1, 2, 3 or 4 hr fire-rated gypsum wallboard/stud wall assembly shall be constructed of the materials and in the manner described in the individual U400, V400 or W400 Series Wall or Partition Designs in the UL Fire Resistance Directory and shall include the following construction features:
   A. Studs – Wall framing may consist of steel channel studs. Steel studs to be min 3-1/2 in. (89 mm) wide by 1-3/8 in. (35 mm) deep channels spaced max 24 in. (610 mm) OC.
   B. Gypsum Board* – Nom 1/2 or 5/8 in. (13 or 16 mm) thick, 4 ft. (122 cm) wide with square or tapered edges. The gypsum wallboard type, thickness, number of layers, fastener type and sheet orientation shall be as specified in the individual U300 or U400 Series Design in the UL Fire Resistance Directory. Max diam of opening is 26 in. (660 mm).
   The hourly F and FH Ratings of the firestop system are equal to the hourly fire rating of the wall assembly in which it is installed.

2. Through Penetrant – One metallic pipe, conduit or tube to be installed either concentrically or eccentrically within the firestop system. The annular space between the pipe, conduit or tube and periphery of opening shall be min 0 in. (point contact) to max 7/8 in. (22 mm). Pipe, conduit or tube to be rigidly supported on both sides of wall assembly.
   A. Steel Pipe – Nom 4 in. (102 mm) diam (or smaller) Schedule 10 (or heavier) steel pipe.
   B. Iron Pipe – Nom 4 in. (102 mm) diam (or smaller) cast or ductile iron pipe.
   C. Conduit – Nom 4 in. (102 mm) diam (or smaller) rigid steel conduit.
   D. Conduit – Nom 4 in. (102 mm) diam (or smaller) steel electrical metallic conduit.
   E. Copper Tubing – Nom 4 in. (102 mm) diam (or smaller) Type L (or heavier) copper tubing.
   F. Copper Pipe – Nom 4 in. (102 mm) diam (or smaller) Regular (or heavier) copper pipe.

3. Fill, Void or Cavity Material* – Sealant – 1. Fill material applied within annulus , flush with both surfaces of wall. Type and thickness of sealant is dependent on F and FH Ratings as indicated in Table below. An additional 1/2 in. (13 mm) diameter bead of sealant applied at penetrant/gypsum board interface at point contact location on both surfaces of wall.
HILTI CONSTRUCTION CHEMICALS, DIV OF HILTI INC –– FS-ONE Sealant, FS-ONE MAX Intumescent Sealant or CP 606 Sealant

F, FH RATINGS (HR)	SEALANT TYPE	SEALANT THICKNESS, IN. (MM)
1,2	FS-ONE, FS-ONE MAX OR CP 606	5/8 (16)
3	FS-ONE, FS-ONE MAX OR CP 606	1 (25)
4	FS-ONE, FS-ONE MAX	1 (25)

*Bearing the UL Classification Marking

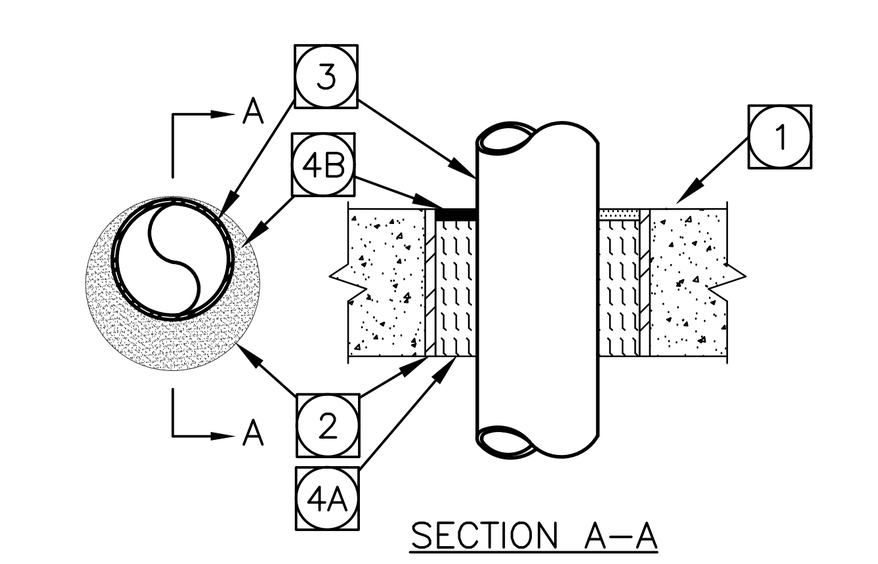

PENETRATION THRU CONCRETE WALL OR FLOOR
NO SCALE

System No. C-AJ-1630
DECEMBER 20, 2013
F Ratings – 2, 3, and 4 Hr (See Item 4)
T Rating – 0 Hr
L Rating At Ambient – less than 1 CFM/sq ft
L Rating At 400 F – less than 1 CFM/sq ft
W Rating – Class I (See Item 4)

1. Floor or Wall Assembly – 1. See Configuration A above. Reinforced lightweight or normal weight (100-150 pcf or 1600-2400 kg/cu meter) concrete as specified in the Table in Item 4 below. Wall may also be constructed of any UL Classified Concrete Blocks'. Max diam of sleeved opening is 32 in. (813 mm).
See Concrete Blocks (CAZT) category in the Fire Resistance Directory for names of manufacturers.

1A. Floor Assembly – See Configuration B above. Min 6 in. (152 mm) thick UL Classified hollow-core Precast Concrete Units'. Max diam of opening is 7 in. (178 mm).
See Precast Concrete Units (CFTV) category in the Fire Resistance Directory for names of manufacturers.

2. Steel Sleeve (Optional) – Nom 32 in. (813 mm) diam (or smaller) Schedule 10 (or heavier) steel pipe sleeve cast or grouted into floor or wall assembly, flush with both surfaces of floor or wall. As an option, sleeve may extend max 2 in. above top surface of floor or beyond one or both surfaces of wall. Steel sleeve may be used in 2 and 3 hr F Rated systems only.

3. Through Penetrants – One metallic pipe, conduit or tubing to be installed either concentrically or eccentrically within the firestop system. Pipe, conduit or tubing to be rigidly supported on both sides of floor or wall assembly. See Table in Item 4 for sizes of penetrants A, B, D and E that may be used. See Item 3C below for size of conduit that may be used. The annular space shall be as specified in Table in Item 4 below. The following types and sizes of metallic pipes, conduits or tubing may be used:
   A. Steel Pipe – –– Schedule 10 (or heavier) steel pipe.
   B. Iron Pipe – Cast or ductile iron pipe.
   C. Conduit – Nom 4 in. (102 mm) diam (or smaller) steel electrical metallic tubing or nom 6 in. (152 mm) diam (or smaller) steel conduit.
   D. Copper Tubing – Type L (or heavier) copper tubing.
   E. Copper Pipe – Regular (or heavier) copper pipe.

4. Firestop System – The F Rating of the system is dependent upon the type of concrete, thickness of concrete, annular space, fill and packing material thickness, packing material density and penetrant size as shown in the Table below. W Rating applies to annular spaces of min 0 in. (point contact) to max 1-7/8 in. and to Configuration A detail only.

F RATING HR	MIN THICK CONCRETE IN.	ANNULAR SPACE IN.	MIN THICK PACKING MTL IN.	MIN DENSITY PACKING MTL PCF KG/CU MTR	MIN THICK FILL MTL IN.	PENETRANT SIZE IN. DIAM (OR SMALLER) D,E COPPER	A,B STEEL IRON
2	5-1/2(140)	0 TO 1-7/8 (0 TO 48)	5 (127)	4 (64)	1/2 (13)	4 (102)	16 (406)
3	4-1/2(114)	0 TO 2-1/8 (0 TO 54)	4-1/4 (108)	4 (64)	1/4 (6)	6 (152)	30 (762)
4	5-1/2(140)	0 TO 1-7/8 (0 TO 48)	5 (127)	4 (64)	1/2 (13)	4 (102)	8 (203)

A. Packing Material –– Min 4-1/4 or 5 in. (108 or 127 mm) thickness of min 4.0 pcf (64 kg/cu meter) mineral wool batt insulation firmly packet into opening as a permanent form as specified in the Table above. Packing material to be recessed from top surface of floor or top end of sleeve, or from both surfaces of wall or ends of sleeve, as required to accommodate the required thickness of fill material. For hollow-core floor applications as shown in Configuration B, one half of the required thickness of mineral wool packing material shall be installed flush with the bottom surface of the floor and the remaining half of the mineral wool packing material installed at the top of the opening and recessed from the top surface of the floor to accommodate the required thickness of the fill material.

B. Fill, Void or Cavity Material' –– Caulk –– Min 1/4 or 1/2 in. (6 or 13 mm) thickness of fill material as specified in the Table above applied within the annulus, flush with top surface of floor or top end of sleeve, or with both surfaces of wall or ends of sleeve. At the point contact location beMeen pipe and concrete or sleeve, a min 1/2 in. (13 mm) diam bead of fill material shall be applied. As an option, for hollow-core floors, the packing material (Item 4A) on the bottom surface of the floor may be recessed to accommodate a 1/4 in. (6 mm) depth of fill material installed flush with bottom surface of floor.
HILTI CONSTRUCTION CHEMICALS, DIV OF HILTI INC –– CFS-S SIL GG (floors or walls) and CFS-S SIL SL (floors only)

'Bearing the UL Classification Mark

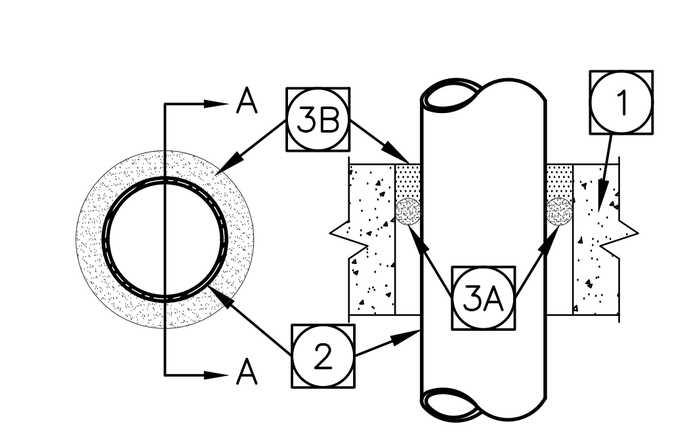

PENETRATION THRU CONCRETE FLOOR
NO SCALE

SYSTEM NO C-AJ-1276
April 20, 2012
F RATING-3 HR
T RATING-0 HR

Floor or Wall Assembly – 1. Floor or Wall Assembly –– Min 4-1/2 in. (114 mm) thick reinforced lightweight or normal weight (100-150 pcf or 1600-2400 kg/m3) concrete. Wall may also be constructed of any UL Classified Concrete Blocks*. Max diam of opening is 6 in. (152 mm).

See Concrete Blocks (CAZT) category in the Fire Resistance Directory for names of manufacturers.

2. Through Penetrants – One metallic pipe, conduit or tubing to be centered within the firestop system. A nom annular space of 3/4 in. (19 mm) is required within the firestop system. Pipe, conduit or tubing to be rigidly supported on both sides of floor or wall assembly. The following types and sizes of metallic pipes, conduits or tubing may be used:
   A. Steel Pipe – Nom 4 in. (102 mm) diam (or smaller) Schedule 10 (or heavier) steel pipe.
   B. Conduit – Nom 4 in. (102 mm) diam (or smaller) steel electrical metallic tubing or steel conduit.

3. Firestop System – The firestop system shall consist of the following:
A. Packing or Forming Materials –– Optional –– One of the following packing or forming materials may be used:

A1. Foam Backer Rod –– Foam backer rod tightly packed into the opening as a permanent form. Packing material to be recessed from the top surface of floor or both surfaces of wall as required to accommodate the required thickness of putty.

A2. Mineral Wool Batt Insulation –– Min 4 pcf (64 kg/m3), tightly packed into the opening as a permanent form. Packing material to be recessed from the top surface of floor or both surfaces of wall as required to accommodate the required thickness of putty.

A3. Forming Material* –– Forming material to be foamed into the opening as a permanent form. Forming material to be recessed from the top surface of floor or both surfaces of wall as required to accommodate the required thickness of putty.
HILTI CONSTRUCTION CHEMICALS, DIV OF HILTI INC –– CF812 or CF-AS CJP Foam Sealant

B. Fill, Void or Cavity Material* –– Putty –– Min 1 in. (25 mm) thickness of putty applied within the annulus, flush with top surface of floor or with both surfaces of wall.
HILTI CONSTRUCTION CHEMICALS, DIV OF HILTI INC –– CP 618 Firestop Putty Stick

*Bearing the UL Classification Mark

THROUGH RATED WALL OR FLOOR PENETRATIONS (U.L. LISTINGS) (7)

SCALE: N.T.S.

STATE:

IDENTIFICATION STAMP
DIV. OF THE STATE ARCHITECT
APP: 03-124281 INC:
REVIEWED FOR
SS ☑ FLS ☑ ACS ☑
DATE: 02/04/2025

ARCHITECT:
westbergwhite architecture
7700 IRVINE CENTER DR. STE. 100
IRVINE, CA 92618
(714) 508-1780 (714) 508-1780 FAX

CONSULTANT:
tk1sc COLLABORATIVE
11870 Pierce Street, Suite 160
Riverside, California 92505
951.299.4160 www.tk1sc.com
Project Leader - Bill Voller
Electrical Lead - Bill Voller
tk1sc Job #: US0027568.7397

REGISTERED PROFESSIONAL ENGINEER RAYMOND W. SWARTZ No. E15610 Ex. 12/31/2025 ELECTRICAL STATE OF CALIFORNIA

PROJECT NAME:

Bellflower Unified School District
Mayfair High School Athletics Fields
6000 North Woodruff Ave
Lakewood, California 90713

CLIENT:

BELLFLOWER UNIFIED SCHOOL DISTRICT
16703 S. Clark Ave.
BELLFLOWER, CALIFORNIA 90706

#	Rev. Date	Description

JOB NO:	15008.01
DATE:	05/28/2024
DRAWN:	TG, XY
CHECK:	RB, JG
ARCHITECT:	PDW
ENGINEER:	

SHEET DESCRIPTION:
FIRE ALARM DETAILS

COMPLETE FIRE ALARM SUBMITTAL
AUTOMATIC ADDRESSABLE FIRE ALARM SYSTEM WITH EMERGENCY VOICE EVACUATION SYSTEM

SHEET NO:
EFA002

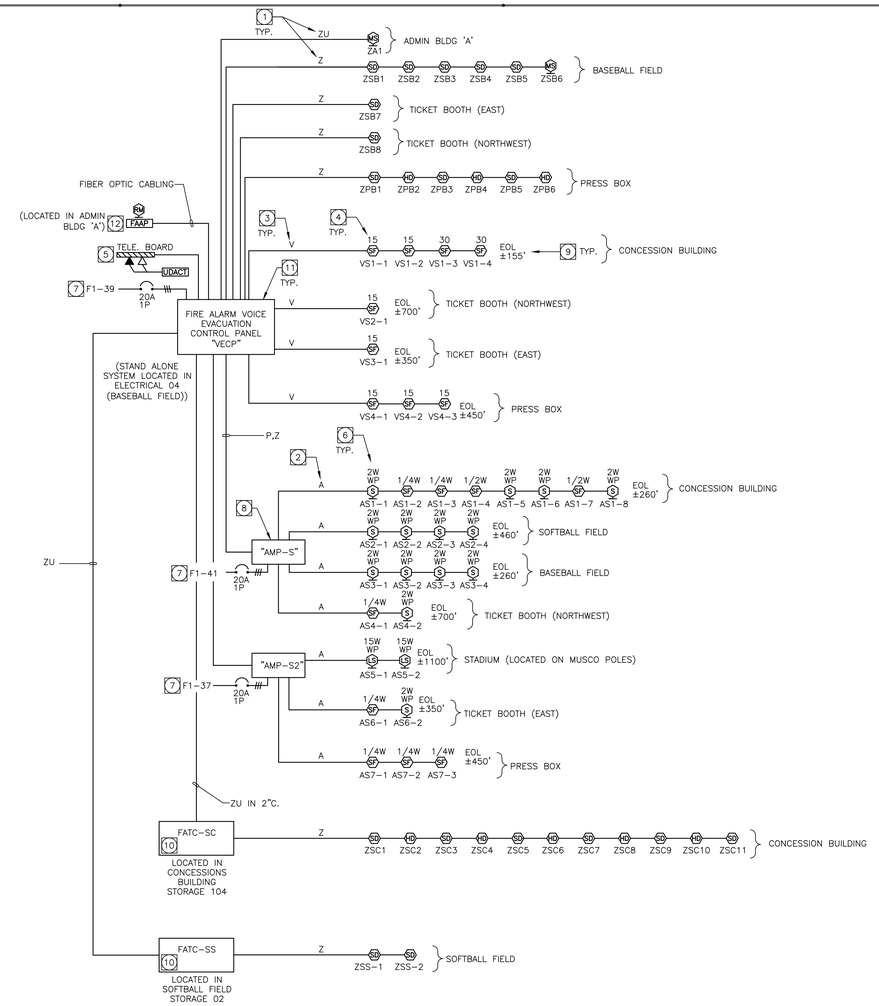

FIRE ALARM SYSTEM RISER DIAGRAM

RISER DIAGRAM SPECIFIC NOTES:

1. 'Z' INDICATES ZONABLE/ADDRESSABLE CIRCUIT, PROVIDE 2#18 TWISTED PAIR PER CIRCUIT. SEE WIRE LEGEND FOR ADDITIONAL INFORMATION.
2. 'A' INDICATES AUDIBLE SPEAKER CIRCUIT, PROVIDE 2#16 TWISTED SHIELDED PAIR PER CIRCUIT. SEE WIRE LEGEND FOR ADDITIONAL INFORMATION.
3. 'V' INDICATES VISIBLE STROBE CIRCUIT, PROVIDE 2#12 PER CIRCUIT. SEE WIRE LEGEND FOR ADDITIONAL INFORMATION.
4. NUMBER INDICATES CANDELA RATING OF STROBE DEVICE.
5. PROVIDE (1) DEDICATED PHONE LINE (LAND LINE) AND (1) DEDICATED APPROVED MEANS OF COMMUNICATION/TRANSMISSION PER NFPA 72 FOR FIRE ALARM SYSTEM MONITORING. CONTRACTOR TO SUPPLY UDACT (UNIVERSAL DIGITAL ALARM COMMUNICATOR TRANSMITTER) WHEN NOT SUPPLIED WITH CONTROL PANEL.
6. INDICATES WATTAGE FOR SPEAKER.
7. PROVIDE 3/4"C. WITH 2#12, 1#12 GRD. TO 120V DEDICATED CIRCUIT FOR POWER. PROVIDE 20AMP, 1-POLE CIRCUIT BREAKER WITH APPROVED LOCK-ON DEVICE, RED INDICATOR AND IDENTIFIED AS "FIRE ALARM CONTROL CIRCUIT" (NFPA 72, 10.5.6.2). CONNECT AS REQUIRED. PROVIDE ALL REQUIRED MOUNTING HARDWARE. MATCH A.I.C. RATING OF DEVICES USED.
8. FIRE ALARM DIGITAL AUDIO AMPLIFIER (AMP). SEE SYMBOL LIST FOR ADDITIONAL INFORMATION.
9. INDICATES LENGTH OF WIRE IN FEET. SEE WIRING DIAGRAM FOR WIRE TYPES. SEE VOLTAGE DROP CALCULATIONS FOR PERCENT DROPPED AND ADDITIONAL INFORMATION.
10. FIRE ALARM TERMINAL CABINET (FATC), LETTER INDICATES BUILDING AREA CABINET IS LOCATED.
11. FIRE ALARM POWER SUPPLY (FAPS), PROVIDE DEDICATED 120V CIRCUIT WITH RED INDICATOR AND APPROVED LOCK-ON DEVICE PER PLANS.
12. FIRE ALARM REMOTE ANNUNCIATOR PANEL (FAAP) AND REMOTE MICROPHONE, VERIFY WITH DISTRICT REPRESENTATIVE, A.H.J. AND ARCHITECT FOR EXACT LOCATION.

FIRE ALARM GENERAL NOTES:

1. NOTIFICATION DEVICES IN ROOMS CONTAINING (2) OR MORE AUDIBLE AND/OR (2) OR MORE VISUAL DEVICES SHALL BE SYNCHRONIZED PER NFPA 72. THIS SHALL INCLUDE AUDIBLE AND VISUAL DEVICES LOCATED IN ADJACENT/ADJOINING SPACES.
2. DO NOT DEVIATE FROM CONDUIT RUNS AS SHOWN ON FLOOR PLANS WITHOUT PRIOR APPROVAL FROM SYSTEM SUPPLIER / ENGINEER. FACTORS SUCH AS EXCESSIVE VOLTAGE DROP, ADDITIONAL PARTS, ENGINEERING, ETC. THAT ARE A RESULT OF CONDUIT RUN DEVIATIONS SHALL BE THE SOLE RESPONSIBILITY OF THE CONTRACTOR.
3. DETECTORS SHALL NOT BE LOCATED IN A DIRECT AIR-FLOW, NOR CLOSER THAN 3 FEET (915 mm) FROM ANY AIR SUPPLY DIFFUSER.
4. THE AUDIBLE ALARM NOTIFICATION APPLIANCES SHALL PROVIDE A SOUND PRESSURE LEVEL OF 15 dBA ABOVE THE AVERAGE AMBIENT SOUND LEVEL OR 5 dBA ABOVE THE MAXIMUM SOUND LEVEL HAVING DURATION OF AT LEAST 60 SECONDS, WHICHEVER IS GREATER, IN EVERY OCCUPIED SPACE WITHIN THE BUILDING PER CFC SECTION 907.5.2.1.1. THE MINIMUM SOUND PRESSURE LEVEL SHALL BE 60 dBA PER NFPA 72, TABLE A.18.4.3.
5. THE AUDIBLE ALARM SIGNAL SHALL BE THE STANDARD FIRE ALARM EVACUATION SIGNAL, ANSI S34.1 AUDIBLE EMERGENCY EVACUATION SIGNAL, "THREE PULSE TEMPORAL PATTERN", AS DESCRIBED IN NFPA 72. EXCEPTION: THE USE OF THE EXISTING EVACUATION SIGNALING SCHEME SHALL BE PERMITTED WHERE APPROVED BY THE ENFORCING AGENT. (CFC, SECTION 907.5.2.1.3)
6. THE EXISTING CAMPUS FIRE ALARM SYSTEM SHALL BE MAINTAINED AND OPERATIONAL AT ALL TIMES DURING ALTERATIONS AND CONSTRUCTION. WHEN PORTIONS OF THE SYSTEM REQUIRE ALTERATIONS, THE REMAINDER OF THE SYSTEM SHALL BE KEPT IN SERVICE. IF NECESSARY TO SHUT DOWN ENTIRE FIRE ALARM SYSTEM, CONTRACTOR SHALL PROVIDE A FIRE WATCH FOR ALL OCCUPIED AREAS OF WORK WHERE THE REQUIRED FIRE ALARM SYSTEM IS OUT OF SERVICE FOR THE DURATION OF THE SYSTEM OUTAGE. FIRE WATCH AND SYSTEM/EQUIPMENT IDENTIFICATIONS SHALL BE PER CFC, SECTION 901.7. LOCAL FIRE AUTHORITY SHALL BE NOTIFIED 48 HOURS IN ADVANCE OF ANY SHUT DOWN.
7. SPRINKLER PROTECTION PROVIDED IN ALL ABOVE CEILING, ATTIC SPACES AND CONCEALED COMBUSTIBLE AREAS PER CBC/CFC, SECTIONS 903.2.3 AND 907.2.3.6.2. PROVIDE HEAT DETECTORS WHERE FIRE SPRINKLERS HAVE BEEN OMITTED PER NFPA 72 AND NFPA 13.
8. EMERGENCY VOICE/ALARM COMMUNICATION SYSTEMS SHALL BE DESIGNED AND INSTALLED IN ACCORDANCE WITH NFPA 72. THE OPERATION OF ANY AUTOMATIC FIRE DETECTOR, SPRINKLER WATERFLOW DEVICE OR MANUAL FIRE ALARM BOX SHALL AUTOMATICALLY SOUND AN ALERT TONE FOLLOWED BY VOICE INSTRUCTIONS GIVING APPROVED INFORMATION AND DIRECTIONS FOR A GENERAL OR STAGED EVACUATION IN ACCORDANCE WITH THE FIRE SAFETY EVACUATION PLANS REQUIRED BY CFC SECTION 404 PER CBC/CFC SECTION 907.5.2.2.
9. EMERGENCY VOICE/ALARM COMMUNICATION SYSTEMS SHALL HAVE THE CAPABILITY TO BROADCAST LIVE VOICE MESSAGES BY PAGING ZONES ON A SELECTIVE AND ALL-CALL BASIS PER CBC/CFC, SECTION 907.5.2.2.
10. EMERGENCY VOICE/ALARM COMMUNICATION SYSTEMS SHALL BE PROVIDED WITH AN APPROVED EMERGENCY POWER SOURCE PER CBC/CFC, SECTION 907.5.2.2.5.

BATTERY SIZING CALCULATION

PROJECT NAME: Mayfair HS Sports Field
PANEL LOCATION: Electrical Room 04
DATE PERFORMED: November 13, 2024

VECP

QTY.	DEVICE NAME	STD-BY (AMPS)		ALARM (AMPS)	
1	CONTROL PANEL	0.2780	0.2780	0.3700	0.3700
1	INITIATION MODULE	0.1440	0.1440	0.2040	0.2040
2	PAGING MICROPHONE	0.2300	0.4600	0.2900	0.5800
2	AUDIO AMPLIFIER	0.0620	0.1240	2.4800	4.9600
1	NETWORK MODULE	0.0980	0.0980	0.0980	0.0980
2	PULL STATION	0.0003	0.0006	0.0004	0.0008
18	SMOKE DETECTOR	0.0005	0.0090	0.0005	0.0081
8	HEAT DETECTOR (CEILING)	0.0005	0.0040	0.0005	0.0040
7	15cd STROBE (CEILING)	0.0000	0.0000	0.0630	0.4410
2	30cd STROBE (CEILING)	0.0000	0.0000	0.0900	0.1800
2	SYNC MODULE	0.0000	0.0000	0.0330	0.0660
1	ANNUNCIATOR	0.1450	0.1450	0.1450	0.1450
1	COMMUNICATOR	0.0600	0.0600	0.0950	0.0950
		0.0000	0.0000	0.0000	0.0000
		0.0000	0.0000	0.0000	0.0000
		0.0000	0.0000	0.0000	0.0000
	TOTALS =		1.3226		7.1519

STAND-BY LOAD = 1.3226 ALARM LOAD = 7.1519 AMPS
STAND-BY TIME = 24 ALARM TIME = 15 / 60 HRS

STAND-BY = 31.7424 ALARM = 1.7880 AMP HRS

TOTAL = STAND-BY + ALARM
= 31.74 + 1.79
= 33.53 Ah (AMP HRS)
MULTIPLY BY DERATING FACTOR OF 1.25 = 41.91 Ah (AMP HRS)

MINIMUM BATTERY SIZE = 41.91 AMPERE HOURS
PROVIDE MIN. (2) 55.00 Ah 12VDC BATTERIES AS REQUIRED FOR 24VDC OPERATION

BATTERY SIZING CALCULATION

PROJECT NAME: Mayfair HS Sports Field
PANEL LOCATION: Electrical Room 04
DATE PERFORMED: November 13, 2024

AMP-S

QTY.	DEVICE NAME	STD-BY (AMPS)		ALARM (AMPS)	
1	AUDIO AMPLIFIER	0.0620	0.0620	2.4800	2.4800
3	SPEAKER (1/4W)	0.0000	0.0000	0.0035	0.0105
2	SPEAKER (1/2W)	0.0000	0.0000	0.0071	0.0142
0	SPEAKER (1W)	0.0000	0.0000	0.0143	0.0000
13	WP SPEAKER (2W)	0.0000	0.0000	0.0283	0.3679
		0.0000	0.0000	0.0000	0.0000
		0.0000	0.0000	0.0000	0.0000
		0.0000	0.0000	0.0000	0.0000
	TOTALS =		0.0620		2.8726

STAND-BY LOAD = 0.0620 ALARM LOAD = 2.8726 AMPS
STAND-BY TIME = 24 ALARM TIME = 15 / 60 HRS

STAND-BY = 1.4880 ALARM = 0.7182 AMP HRS

TOTAL = STAND-BY + ALARM
= 1.49 + 0.72
= 2.21 Ah (AMP HRS)
MULTIPLY BY DERATING FACTOR OF 1.25 = 2.76 Ah (AMP HRS)

MINIMUM BATTERY SIZE = 2.76 AMPERE HOURS
PROVIDE MIN. (2) 7.20 Ah 12VDC BATTERIES AS REQUIRED FOR 24VDC OPERATION

BATTERY SIZING CALCULATION

PROJECT NAME: Mayfair HS Sports Field
PANEL LOCATION: Electrical Room 04
DATE PERFORMED: November 13, 2024

AMP-S2

QTY.	DEVICE NAME	STD-BY (AMPS)		ALARM (AMPS)	
1	AUDIO AMPLIFIER	0.0620	0.0620	2.4800	2.4800
4	SPEAKER (1/4W)	0.0000	0.0000	0.0035	0.0140
2	LOUD SPEAKER (7.5W)	0.0000	0.0000	0.1070	0.2140
1	WP SPEAKER (2W)	0.0000	0.0000	0.0283	0.0283
		0.0000	0.0000	0.0000	0.0000
		0.0000	0.0000	0.0000	0.0000
		0.0000	0.0000	0.0000	0.0000
	TOTALS =		0.0620		2.7363

STAND-BY LOAD = 0.0620 ALARM LOAD = 2.7363 AMPS
STAND-BY TIME = 24 ALARM TIME = 15 / 60 HRS

STAND-BY = 1.4880 ALARM = 0.6841 AMP HRS

TOTAL = STAND-BY + ALARM
= 1.49 + 0.68
= 2.17 Ah (AMP HRS)
MULTIPLY BY DERATING FACTOR OF 1.25 = 2.72 Ah (AMP HRS)

MINIMUM BATTERY SIZE = 2.72 AMPERE HOURS
PROVIDE MIN. (2) 7.20 Ah 12VDC BATTERIES AS REQUIRED FOR 24VDC OPERATION

BATTERY CALCULATIONS GENERAL NOTE:

1. CONTRACTOR TO PROVIDE BATTERY MANUFACTURER DATE STAMP PER NFPA 72. TYPICAL FOR ALL CONTROL PANELS, POWER SUPPLY PANELS AND AUDIO AMPLIFIER PANELS.

VOLTAGE DROP CALCULATIONS
Mayfair HS Sports Field

DEVICE	UL MAX. CURRENT AMPS	NO	VISUAL CIRCUIT VS1	NO	VISUAL CIRCUIT VS2	NO	VISUAL CIRCUIT VS3	NO	VISUAL CIRCUIT VS4
STROBE (CEILING) 15 CD	0.063	2	0.126	1	0.063	1	0.063	3	0.189
STROBE (CEILING) 30 CD	0.090	2	0.180		0.000		0.000		0.000
			0.000		0.000		0.000		0.000
			0.000		0.000		0.000		0.000
TOTAL CURRENT ON CIRCUIT			0.306 AMPS		0.063 AMPS		0.063 AMPS		0.189 AMPS
TOTAL WIRE LENGTH IN FEET			155		700		350		450
% VOLTAGE DROP			**0.77**		**0.72**		**0.36**		**1.38**
WIRE SIZE			#12		#12		#12		#12
CIRCUIT LOCATION			VECP		VECP		VECP		VECP
VOLTS DROPPED			**0.16**		**0.15**		**0.07**		**0.28**

VOLTAGE DROP CALCULATIONS
Mayfair HS Sports Field

DEVICE	UL MAX. CURRENT AMPS	NO	AUDIBLE CIRCUIT AS1	NO	AUDIBLE CIRCUIT AS2	NO	AUDIBLE CIRCUIT AS3	NO	AUDIBLE CIRCUIT AS4	NO	AUDIBLE CIRCUIT AS5	NO	AUDIBLE CIRCUIT AS6	NO	AUDIBLE CIRCUIT AS7
SPEAKER 1/4W (INTERIOR)	0.004	2	0.008		0.000		0.000	1	0.004		0.000	1	0.004	3	0.012
SPEAKER 1/2W (INTERIOR)	0.007	2	0.014		0.000		0.000		0.000		0.000		0.000		0.000
SPEAKER 1W (INTERIOR)	0.014		0.000		0.000		0.000		0.000		0.000		0.000		0.000
WP SPEAKER 2W (EXTERIOR	0.028	4	0.112	4	0.112	4	0.112	1	0.028		0.000	1	0.028		0.000
WP SPEAKER 7.5W (EXTERIOR)	0.107		0.000		0.000		0.000		0.000	2	0.214		0.000		0.000
			0.000		0.000		0.000		0.000		0.000		0.000		0.000
TOTAL CURRENT ON CIRCUIT			0.134 AMPS		0.112 AMPS		0.112 AMPS		0.032 AMPS		0.214 AMPS		0.032 AMPS		0.012 AMPS
TOTAL WIRE LENGTH IN FEET			260		460		260		700		1,100		350		450
% VOLTAGE DROP			**1.43**		**2.11**		**1.20**		**0.92**		**9.66**		**0.46**		**0.22**
WIRE SIZE			#16		#16		#16		#16		#16		#16		#16
CIRCUIT LOCATION			AMP-S		AMP-S		AMP-S		AMP-S		AMP-S2		AMP-S2		AMP-S2
VOLTS DROPPED			**0.29**		**0.43**		**0.24**		**0.19**		**1.97**		**0.09**		**0.05**

VOLTAGE DROP CALCULATIONS GENERAL NOTES:

1. THE LISTED MANUFACTURE OPERATING VOLTAGE RANGE FOR EQUIPMENT AND DEVICES ARE AS FOLLOWS:

   DEVICES = 16 – 33 VDC (STROBES), 70.7 VDC (SPEAKERS)
   EQUIPMENT = +24VDC FILTERED, REGULATED
   BATTERY = 20.4 VDC END OF USEFUL LIFE PER NFPA 72 HANDBOOK AND UL 864.

2. VOLTAGE DROP OPERATING VOLTAGE FORMULA:

$$\left(\frac{\text{WIRE LENGTH} \times \text{TOTAL CURRENT AMPS} \times 21.6}{\text{CIRC. MILS.}}\right) = \text{VOLTS DROPPED}$$

$$\left(\frac{\text{VOLTS DROPPED} \times 100}{20.4}\right) = \%\ \text{VOLTS DROPPED}$$

$$\text{VOLTS DROPPED} - 20.4 = \text{OPERATING VOLTAGE}$$

COMPLETE FIRE ALARM SUBMITTAL
AUTOMATIC ADDRESSABLE FIRE ALARM SYSTEM WITH EMERGENCY VOICE EVACUATION SYSTEM

STATE:

IDENTIFICATION STAMP
DIV. OF THE STATE ARCHITECT
APP: 03-124281 INC:
REVIEWED FOR
SS ☑ FLS ☑ ACS ☑
DATE: 02/04/2025

ARCHITECT:
architecture
westbergwhite
7700 IRVINE CENTER DR. STE. 100
IRVINE, CA 92618
(714) 508-1780 (714) 508-1780 FAX

CONSULTANT:
tk1sc COLLABORATIVE
11870 Pierce Street, Suite 160
Riverside, California 92505
951.299.4160 www.tk1sc.com
Project Leader - Bill Voller
Electrical Lead - Bill Voller
tk1sc Job #: US0027568.7397

REGISTERED PROFESSIONAL ENGINEER
RAYMOND W. SWAIN
No. E15610
Ex. 12/31/2025
ELECTRICAL
STATE OF CALIFORNIA

PROJECT NAME:

Bellflower Unified School District
Mayfair High School Athletics Fields
6000 North Woodruff Ave
Lakewood, California 90713

CLIENT:
BELLFLOWER UNIFIED SCHOOL DISTRICT
16703 S. Clark Ave.
BELLFLOWER, CALIFORNIA 90706

#	Rev. Date	Description

JOB NO: 15008.01
DATE: 05/28/2024
DRAWN: TG, XY
CHECK: RB, JG
ARCHITECT: PDW
ENGINEER:

SHEET DESCRIPTION:
FIRE ALARM RISER DIAGRAM AND SYSTEM CALCULATIONS

SHEET NO:
EFA003

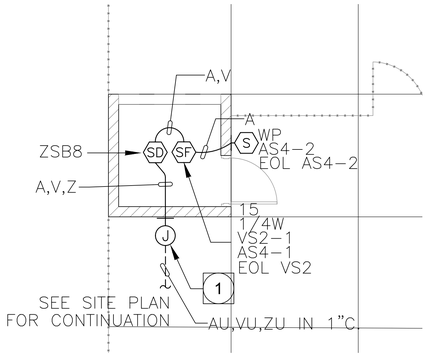

TICKET BOOTH (NORTHWEST) FIRE ALARM PLAN SCALE: 1/4"=1'-0" 3

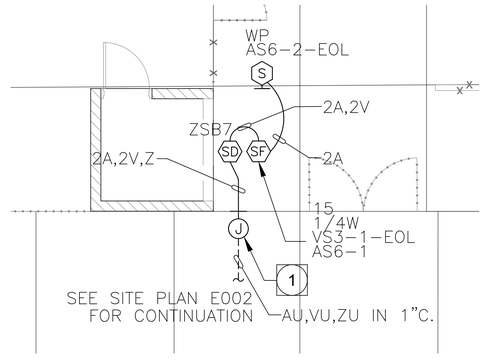

TICKET BOOTH FIRE (EAST) ALARM PLAN SCALE: 1/4"=1'-0" 2

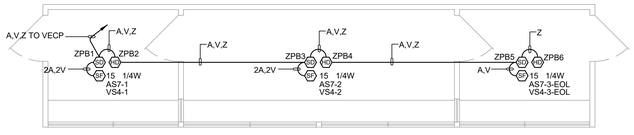

PRESS BOX FIRE ALARM PLAN SCALE: 1/4"=1'-0" 4

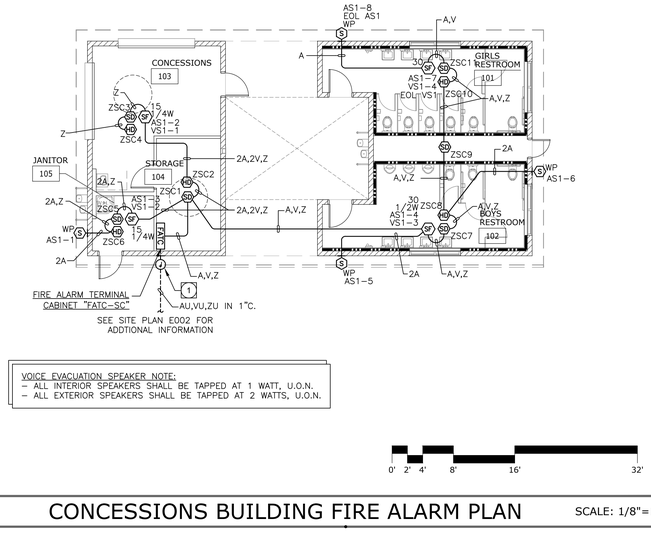

VOICE EVACUATION SPEAKER NOTE:
- ALL INTERIOR SPEAKERS SHALL BE TAPPED AT 1 WATT, U.O.N.
- ALL EXTERIOR SPEAKERS SHALL BE TAPPED AT 2 WATTS, U.O.N.

0' 2' 4' 8' 16' 32'

NORTH

CONCESSIONS BUILDING FIRE ALARM PLAN SCALE: 1/8"=1'-0" 1

PLAN NOTES:

1. PROVIDE ONE (1) 12"X12"X6"D. JUNCTION BOX WITH SCREW COVER TYPE "3R" FOR FIRE ALARM SYSTEM MOUNTED ON THE BACKS OF THE BUIDINGS. JUNCTION BOXES SHALL BE MOUNTED SIDE-BY-SIDE, NOT STACKED.

FIRE ALARM PLAN GENERAL NOTES:

1. NOTIFICATION DEVICES IN ROOMS CONTAINING (2) OR MORE AUDIBLE AND/OR (2) OR MORE VISUAL DEVICES SHALL BE SYNCHRONIZED PER NFPA 72. THIS SHALL INCLUDE AUDIBLE AND VISUAL DEVICES LOCATED IN ADJACENT/ADJOINING SPACES.
2. DO NOT DEVIATE FROM CONDUIT RUNS AS SHOWN ON FLOOR PLANS WITHOUT PRIOR APPROVAL FROM SYSTEM SUPPLIER / ENGINEER. FACTORS SUCH AS EXCESSIVE VOLTAGE DROP, ADDITIONAL PARTS, ENGINEERING, ETC. THAT ARE A RESULT OF CONDUIT RUN DEVIATIONS SHALL BE THE SOLE RESPONSIBILITY OF THE CONTRACTOR.
3. DETECTORS SHALL NOT BE LOCATED IN A DIRECT AIR-FLOW, NOR CLOSER THAN 3 FEET (915 mm) FROM ANY AIR SUPPLY DIFFUSER.
4. THE AUDIBLE ALARM NOTIFICATION APPLIANCES SHALL PROVIDE A SOUND PRESSURE LEVEL OF 15 dBA ABOVE THE AVERAGE AMBIENT SOUND LEVEL OR 5 dBA ABOVE THE MAXIMUM SOUND LEVEL HAVING DURATION OF AT LEAST 60 SECONDS, WHICHEVER IS GREATER, IN EVERY OCCUPIED SPACE WITHIN THE BUILDING PER CFC SECTION 907.5.2.1.1. THE MINIMUM SOUND PRESSURE LEVEL SHALL BE 60 dBA PER NFPA 72, TABLE A.18.4.3.
5. THE VOICE/ALARM COMMUNICATION SYSTEM VOICE MESSAGE SHALL COMPLY WITH NFPA 72, SECTIONS 18.4 AND 24.4 FOR GENERAL REQUIREMENTS, INTELLIGIBILITY, AUDIBILITY, MESSAGE PRIORTY, TONES, ETC.
6. REFER TO ARCHITECTURAL EXTERIOR ELEVATIONS FOR PRECISE OUTLET LOCATIONS.
7. REFER TO ARCHITECTURAL REFLECTED CEILING PLAN FOR EXACT LOCATION OF ALL CEILING MOUNTED DEVICES.
8. IF SHIELDED WIRE IS USED, THE FOLLOWING MUST BE OBSERVED.
   A. METALLIC CONTINUITY OF THE SHIELD MUST BE MAINTAINED AND INSULATED THROUGHOUT THE ENTIRE LENGTH OF THE CABLE.
   B. THE ENTIRE LENGTH OF THE CABLE MUST HAVE A RESISTANCE GREATER THAN 1 MEGOHM TO EARTH.
9. ALL PENETRATIONS THROUGH FIRE RATED WALLS SHALL BE PROTECTED FROM THE SPREAD OF FIRE WITH AN APPROVED FIRE STOP SYSTEM EQUAL TO OR GREATER THAN THE FIRE RATING OF THE STRUCTURE / SURFACE BEING PENETRATED AS IDENTIFIED IN CBC CHAPTER 7. UL OR OTHER LAB TESTING CRITERIA. APPROVED TYPES OF MATERIALS SHALL BE IDENTIFIED WITHIN THE FIRE ALARM SECTION OF THE PROJECT SPECIFICATIONS.
10. A SYSTEM GROUND MUST BE PROVIDED FOR EARTH DETECTION AND LIGHTNING PROTECTION DEVICES. THIS CONNECTION SHALL BE MADE TO AN APPROVED DEDICATED EARTH CONNECTION PER CEC, ARTICLE 250.
11. WIRING IN DUCTS, PLENUMS AND OTHER AIR HANDLING SPACES MUST BE INSTALLED IN ACCORDANCE WITH CEC.
12. UNDERGROUND WIRING MUST BE FREE OF ALL WATER.
13. ALL FIRE ALARM SYSTEM CONDUCTORS SHALL BE RUN IN A DEDICATED FIRE ALARM CONDUIT SYSTEM.
14. WHERE A DETECTOR IS INDICATED TO BE INSTALLED ABOVE THE CEILING AND NO ACCESS TO THE CEILING SPACE EXISTS, THE ELECTRICAL CONTRACTOR SHALL FURNISH ACCESS PANELS. THE DETECTOR SHALL BE EASILY ACCESSIBLE AND THE LOCATION OF THE DETECTOR SHALL BE CLEARLY MARKED.
15. COORDINATE ALL FIRE ALARM DEVICES, ESPECIALLY REMOTE L.E.D.'S FOR DUCT SMOKE DETECTORS, WITH ARCHITECT PRIOR TO ROUGH-IN.
16. FIRE ALARM SYSTEM UTILIZES A COMPLETE COVERAGE, FULLY AUTOMATIC SYSTEM. PROVIDE RELAY MODULE(S) AT FATC/FACP LOCATIONS FOR CONTROL OF HVAC SHUT DOWN, SMOKE/FIRE DAMPER CLOSURE AND DOOR HOLD RELEASES.
17. WHERE NEW DEVICES (AND ASSOCIATED CONDUIT) CANNOT PHYSICALLY BE MOUNTED CONCEALED IN WALLS, RUN IN PANDUIT SURFACE RACEWAY/WIREWAY (AND DEVICES SHALL BE MOUNTED ON SURFACE OUTLET BOXES). REFER TO SPECIFICATIONS. PROVIDE SIZE OF RACEWAY TO ACCOMMODATE THE REQUIRED CONDUCTORS. WHERE CONDUIT IS INDICATED, PROVIDE SURFACE RACEWAY WITH AN EQUAL CROSS SECTION TO THE DIAMETER OF THE CONDUIT INDICATED.
18. DETECTOR SENSITIVITY SHALL BE TESTED USING MANUFACTURER'S CALIBRATED SENSITIVITY INSTRUMENT OR OTHER CALIBRATED TESTING METHOD. (CFC, SECTIONS 907.8.3 AND 907.8.4)
19. THE VOICE/ALARM COMMUNICATION SYSTEM VOICE MESSAGE SHALL COMPLY WITH NFPA 72 SECTIONS 18.4 AND 24.4 FOR GENERAL REQUIREMENTS, INTELLIGIBILITY, AUDIBILITY, MESSAGE PRIORITY, TONES, ETC. REFER TO NFPA 72 ANNEX D, D.1 THROUGH D.6 FOR DETERMINING THE FUNDAMENTALS OF TEST PROTOCOL AND METHOD OF MEASURING INTELLIGIBILITY.
20. THE EXISTING CAMPUS FIRE ALARM SYSTEM SHALL BE MAINTAINED AND OPERATIONAL AT ALL TIMES DURING ALTERATIONS AND CONSTRUCTION. WHEN PORTIONS OF THE SYSTEM REQUIRE ALTERATIONS, THE REMAINDER OF THE SYSTEM SHALL BE KEPT IN SERVICE. IF NECESSARY TO SHUT DOWN ENTIRE FIRE ALARM SYSTEM, CONTRACTOR SHALL PROVIDE FIREWATCH FOR ALL OCCUPIED AREAS OF WORK UNTIL THE FIRE ALARM SYSTEM IS RETURNED TO OPERATIONAL SERVICE. FIREWATCH AND SYSTEM/EQUIPMENT IDENTIFICATION SHALL BE PER THE 2022 CFC, CHAPTER 14. LOCAL FIRE AUTHORITY AND OWNER SHALL BE NOTIFIED 48 HOURS IN ADVANCE OF ANY SHUT DOWN.

COMPLETE FIRE ALARM SUBMITTAL

AUTOMATIC ADDRESSABLE FIRE ALARM SYSTEM WITH EMERGENCY VOICE EVACUATION SYSTEM

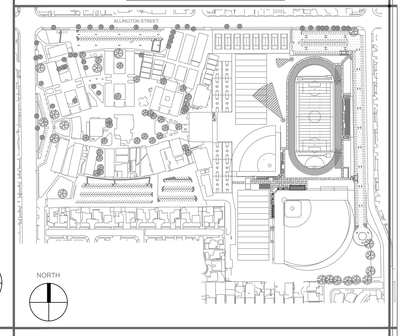

KEYMAP

STATE:

IDENTIFICATION STAMP
DIV. OF THE STATE ARCHITECT
APP: 03-124281 INC:
REVIEWED FOR
SS ☑ FLS ☑ ACS ☑
DATE: 02/04/2025

ARCHITECT:

architecture
westbergwhite
7700 IRVINE CENTER DR. STE. 100
IRVINE, CA 92618
(714) 508-1780 (714) 508-1780 FAX

CONSULTANT:

tk1sc COLLABORATIVE
11870 Pierce Street, Suite 160
Riverside, California 92505
951.299.4160 www.tk1sc.com
Project Leader - Bill Voller
Electrical Lead - Bill Voller
tk1sc Job #: US0027568.7397

REGISTERED PROFESSIONAL ENGINEER
RAYMOND W. SWANSON
No. E15610
Ex. 12/31/2025
ELECTRICAL
STATE OF CALIFORNIA

PROJECT NAME:

Bellflower Unified School District
Mayfair High School Athletics Fields
6000 North Woodruff Ave
Lakewood, California 90713

CLIENT:

BELLFLOWER UNIFIED SCHOOL DISTRICT
16703 S. Clark Ave.
BELLFLOWER, CALIFORNIA 90706

Δ	Rev. Date	Description

JOB NO: 15008.01
DATE: 05/28/2024
DRAWN: TG, XY
CHECK: RB, JG
ARCHITECT: PDW
ENGINEER:

SHEET DESCRIPTION:
CONCESSIONS BUILDING FIRE ALARM PLAN

SHEET NO:
EFA101

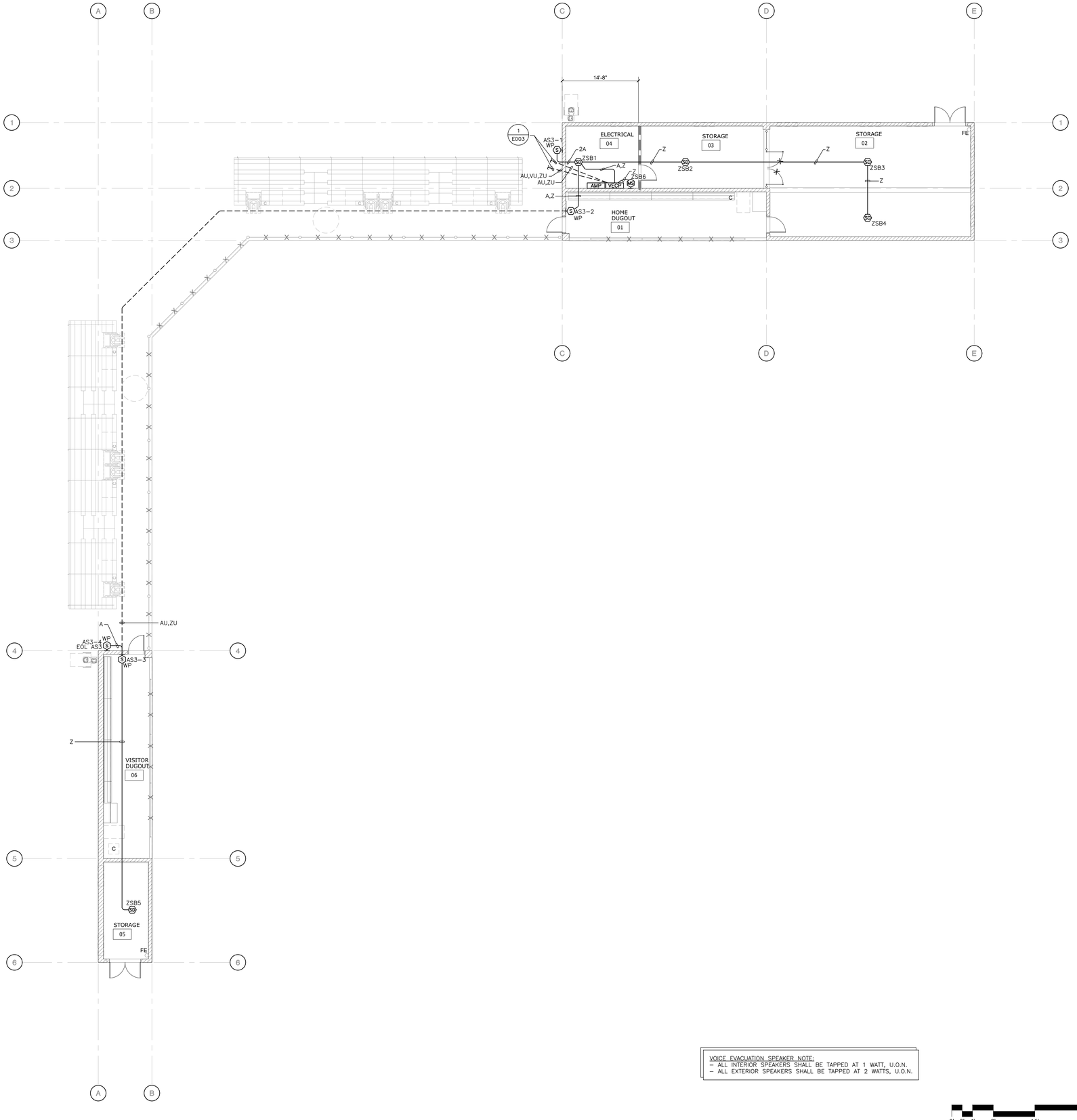

VOICE EVACUATION SPEAKER NOTE:
– ALL INTERIOR SPEAKERS SHALL BE TAPPED AT 1 WATT, U.O.N.
– ALL EXTERIOR SPEAKERS SHALL BE TAPPED AT 2 WATTS, U.O.N.

0' 2' 4' 8' 16' 32'

NORTH

BASEBALL FIELD FIRE ALARM PLAN SCALE: 1/8"=1'-0"

1

PLAN NOTES:

1 ------

FIRE ALARM PLAN GENERAL NOTES:

1. NOTIFICATION DEVICES IN ROOMS CONTAINING (2) OR MORE AUDIBLE AND/OR (2) OR MORE VISUAL DEVICES SHALL BE SYNCHRONIZED PER NFPA 72. THIS SHALL INCLUDE AUDIBLE AND VISUAL DEVICES LOCATED IN ADJACENT/ADJOINING SPACES.
2. DO NOT DEVIATE FROM CONDUIT RUNS AS SHOWN ON FLOOR PLANS WITHOUT PRIOR APPROVAL FROM SYSTEM SUPPLIER / ENGINEER. FACTORS SUCH AS EXCESSIVE VOLTAGE DROP, ADDITIONAL PARTS, ENGINEERING, ETC. THAT ARE A RESULT OF CONDUIT RUN DEVIATIONS SHALL BE THE SOLE RESPONSIBILITY OF THE CONTRACTOR.
3. DETECTORS SHALL NOT BE LOCATED IN A DIRECT AIR–FLOW, NOR CLOSER THAN 3 FEET (915 mm) FROM ANY AIR SUPPLY DIFFUSER.
4. THE AUDIBLE ALARM NOTIFICATION APPLIANCES SHALL PROVIDE A SOUND PRESSURE LEVEL OF 15 dBA ABOVE THE AVERAGE AMBIENT SOUND LEVEL OR 5 dBA ABOVE THE MAXIMUM SOUND LEVEL HAVING DURATION OF AT LEAST 60 SECONDS, WHICHEVER IS GREATER, IN EVERY OCCUPIED SPACE WITHIN THE BUILDING PER CFC SECTION 907.5.2.1.1. THE MINIMUM SOUND PRESSURE LEVEL SHALL BE 60 dBA PER NFPA 72, TABLE A.18.4.3.
5. THE VOICE/ALARM COMMUNICATION SYSTEM VOICE MESSAGE SHALL COMPLY WITH NFPA 72, SECTIONS 18.4 AND 24.4 FOR GENERAL REQUIREMENTS, INTELLIGIBILITY, AUDIBILITY, MESSAGE PRIORTY, TONES, ETC.
6. REFER TO ARCHITECTURAL EXTERIOR ELEVATIONS FOR PRECISE OUTLET LOCATIONS.
7. REFER TO ARCHITECTURAL REFLECTED CEILING PLAN FOR EXACT LOCATION OF ALL CEILING MOUNTED DEVICES.
8. IF SHIELDED WIRE IS USED, THE FOLLOWING MUST BE OBSERVED.
   A. METALLIC CONTINUITY OF THE SHIELD MUST BE MAINTAINED AND INSULATED THROUGHOUT THE ENTIRE LENGTH OF THE CABLE.
   B. THE ENTIRE LENGTH OF THE CABLE MUST HAVE A RESISTANCE GREATER THAN 1 MEGOHM TO EARTH.
9. ALL PENETRATIONS THROUGH FIRE RATED WALLS SHALL BE PROTECTED FROM THE SPREAD OF FIRE WITH AN APPROVED FIRE STOP SYSTEM EQUAL TO OR GREATER THAN THE FIRE RATING OF THE STRUCTURE / SURFACE BEING PENETRATED AS IDENTIFIED IN CBC CHAPTER 7. UL OR OTHER LAB TESTING CRITERIA. APPROVED TYPES OF MATERIALS SHALL BE IDENTIFIED WITHIN THE FIRE ALARM SECTION OF THE PROJECT SPECIFICATIONS.
10. A SYSTEM GROUND MUST BE PROVIDED FOR EARTH DETECTION AND LIGHTNING PROTECTION DEVICES. THIS CONNECTION SHALL BE MADE TO AN APPROVED DEDICATED EARTH CONNECTION PER CEC, ARTICLE 250.
11. WIRING IN DUCTS, PLENUMS AND OTHER AIR HANDLING SPACES MUST BE INSTALLED IN ACCORDANCE WITH CEC.
12. UNDERGROUND WIRING MUST BE FREE OF ALL WATER.
13. ALL FIRE ALARM SYSTEM CONDUCTORS SHALL BE RUN IN A DEDICATED FIRE ALARM CONDUIT SYSTEM.
14. WHERE A DETECTOR IS INDICATED TO BE INSTALLED ABOVE THE CEILING AND NO ACCESS TO THE CEILING SPACE EXISTS, THE ELECTRICAL CONTRACTOR SHALL FURNISH ACCESS PANELS. THE DETECTOR SHALL BE EASILY ACCESSIBLE AND THE LOCATION OF THE DETECTOR SHALL BE CLEARLY MARKED.
15. COORDINATE ALL FIRE ALARM DEVICES, ESPECIALLY REMOTE L.E.D.'S FOR DUCT SMOKE DETECTORS, WITH ARCHITECT PRIOR TO ROUGH–IN.
16. FIRE ALARM SYSTEM UTILIZES A COMPLETE COVERAGE, FULLY AUTOMATIC SYSTEM. PROVIDE RELAY MODULE(S) AT FATC/FACP LOCATIONS FOR CONTROL OF HVAC SHUT DOWN, SMOKE/FIRE DAMPER CLOSURE AND DOOR HOLD RELEASES.
17. WHERE NEW DEVICES (AND ASSOCIATED CONDUIT) CANNOT PHYSICALLY BE MOUNTED CONCEALED IN WALLS, RUN IN PANDUIT SURFACE RACEWAY/WIREWAY (AND DEVICES SHALL BE MOUNTED ON SURFACE OUTLET BOXES). REFER TO SPECIFICATIONS. PROVIDE SIZE OF RACEWAY TO ACCOMMODATE THE REQUIRED CONDUCTORS. WHERE CONDUIT IS INDICATED, PROVIDE SURFACE RACEWAY WITH AN EQUAL CROSS SECTION TO THE DIAMETER OF THE CONDUIT INDICATED.
18. DETECTOR SENSITIVITY SHALL BE TESTED USING MANUFACTURER'S CALIBRATED SENSITIVITY INSTRUMENT OR OTHER CALIBRATED TESTING METHOD. (CFC, SECTIONS 907.8.3 AND 907.8.4)
19. THE VOICE/ALARM COMMUNICATION SYSTEM VOICE MESSAGE SHALL COMPLY WITH NFPA 72 SECTIONS 18.4 AND 24.4 FOR GENERAL REQUIREMENTS, INTELLIGIBILITY, AUDIBILITY, MESSAGE PRIORITY, TONES, ETC. REFER TO NFPA 72 ANNEX D, D.1 THROUGH D.6 FOR DETERMINING THE FUNDAMENTALS OF TEST PROTOCOL AND METHOD OF MEASURING INTELLIGIBILITY.
20. THE EXISTING CAMPUS FIRE ALARM SYSTEM SHALL BE MAINTAINED AND OPERATIONAL AT ALL TIMES DURING ALTERATIONS AND CONSTRUCTION. WHEN PORTIONS OF THE SYSTEM REQUIRE ALTERATIONS, THE REMAINDER OF THE SYSTEM SHALL BE KEPT IN SERVICE. IF NECESSARY TO SHUT DOWN ENTIRE FIRE ALARM SYSTEM, CONTRACTOR SHALL PROVIDE FIREWATCH FOR ALL OCCUPIED AREAS OF WORK UNTIL THE FIRE ALARM SYSTEM IS RETURNED TO OPERATIONAL SERVICE. FIREWATCH AND SYSTEM/EQUIPMENT IDENTIFICATION SHALL BE PER THE 2022 CFC, CHAPTER 14. LOCAL FIRE AUTHORITY AND OWNER SHALL BE NOTIFIED 48 HOURS IN ADVANCE OF ANY SHUT DOWN.

COMPLETE FIRE ALARM SUBMITTAL

AUTOMATIC ADDRESSABLE FIRE ALARM SYSTEM WITH EMERGENCY VOICE EVACUATION SYSTEM

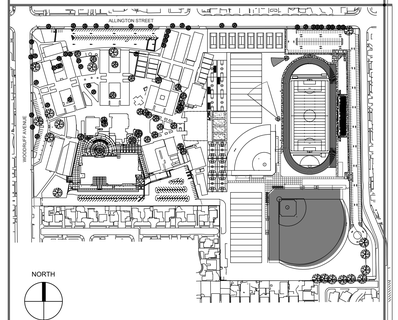

KEYMAP

STATE:

IDENTIFICATION STAMP
DIV. OF THE STATE ARCHITECT
APP: 03-124281 INC:
REVIEWED FOR
SS ☑ FLS ☑ ACS ☑
DATE: 02/04/2025

ARCHITECT:

architecture
westbergwhite
7700 IRVINE CENTER DR. STE. 100
IRVINE, CA 92618
(714) 508-1780 (714) 508-1780 FAX

CONSULTANT:

tk1sc COLLABORATIVE
11870 Pierce Street, Suite 160
Riverside, California 92505
951.299.4160 www.tk1sc.com
Project Leader - Bill Voller
Electrical Lead - Bill Voller
tk1sc Job #: US0027568.7397

REGISTERED PROFESSIONAL ENGINEER
RAYMOND W. SWANSON
No. E15610
Ex. 12/31/2025
ELECTRICAL
STATE OF CALIFORNIA

PROJECT NAME:

Bellflower Unified School District
Mayfair High School Athletics Fields
6000 North Woodruff Ave
Lakewood, California 90713

CLIENT:

BELLFLOWER UNIFIED SCHOOL DISTRICT
16703 S. Clark Ave.
BELLFLOWER, CALIFORNIA 90706

Rev.	Date	Description

JOB NO:	15008.01
DATE:	05/28/2024
DRAWN:	TG, XY
CHECK:	RB, JG
ARCHITECT:	PDW
ENGINEER:	

SHEET DESCRIPTION:

BASEBALL FIELD
FIRE ALARM PLAN

SHEET NO:

EFA102

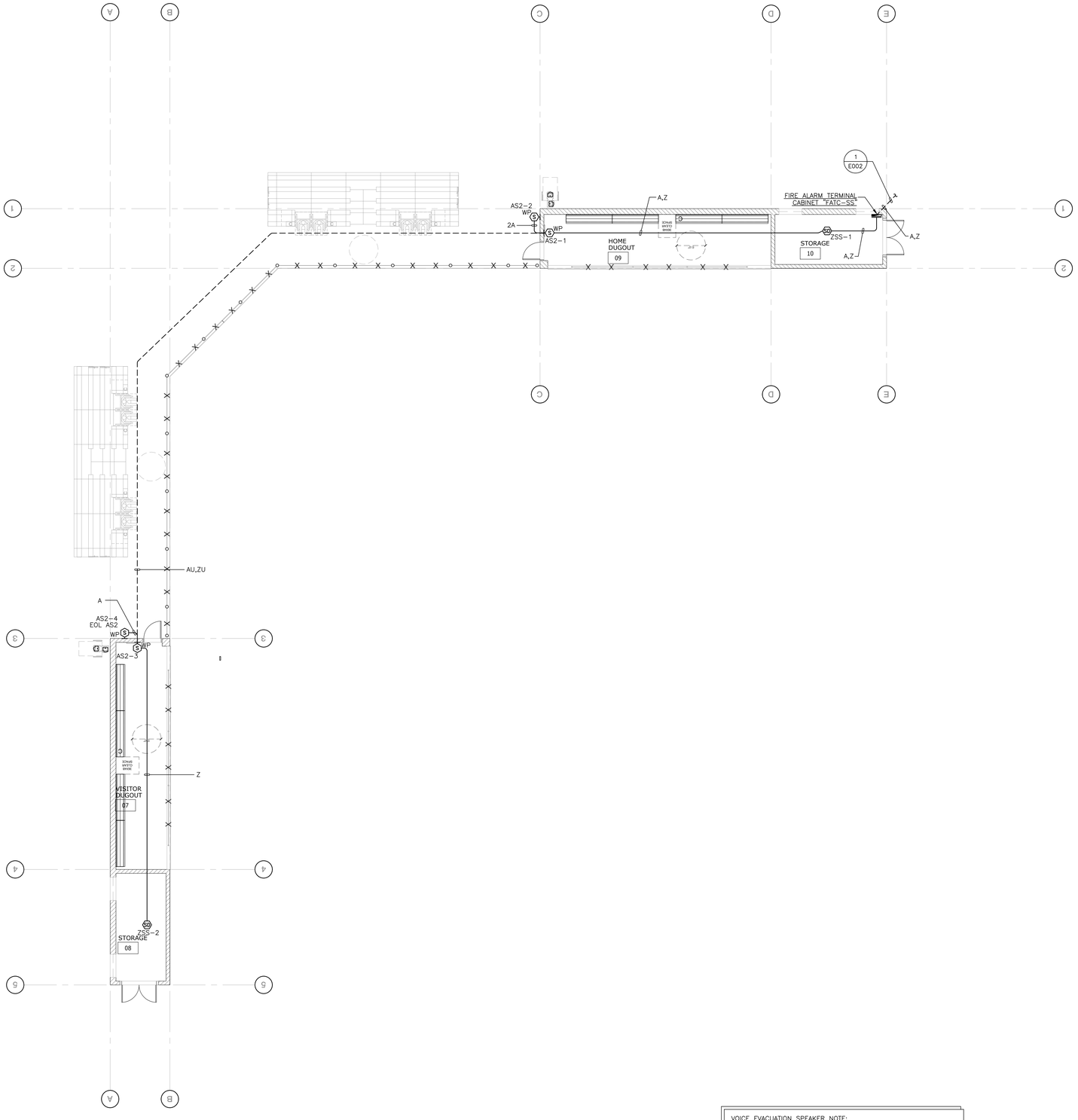

PLAN NOTES:

1 -----

FIRE ALARM PLAN GENERAL NOTES:

1. NOTIFICATION DEVICES IN ROOMS CONTAINING (2) OR MORE AUDIBLE AND/OR (2) OR MORE VISUAL DEVICES SHALL BE SYNCHRONIZED PER NFPA 72. THIS SHALL INCLUDE AUDIBLE AND VISUAL DEVICES LOCATED IN ADJACENT/ADJOINING SPACES.
2. DO NOT DEVIATE FROM CONDUIT RUNS AS SHOWN ON FLOOR PLANS WITHOUT PRIOR APPROVAL FROM SYSTEM SUPPLIER / ENGINEER. FACTORS SUCH AS EXCESSIVE VOLTAGE DROP, ADDITIONAL PARTS, ENGINEERING, ETC. THAT ARE A RESULT OF CONDUIT RUN DEVIATIONS SHALL BE THE SOLE RESPONSIBILITY OF THE CONTRACTOR.
3. DETECTORS SHALL NOT BE LOCATED IN A DIRECT AIR-FLOW, NOR CLOSER THAN 3 FEET (915 mm) FROM ANY AIR SUPPLY DIFFUSER.
4. THE AUDIBLE ALARM NOTIFICATION APPLIANCES SHALL PROVIDE A SOUND PRESSURE LEVEL OF 15 dBA ABOVE THE AVERAGE AMBIENT SOUND LEVEL OR 5 dBA ABOVE THE MAXIMUM SOUND LEVEL HAVING DURATION OF AT LEAST 60 SECONDS, WHICHEVER IS GREATER, IN EVERY OCCUPIED SPACE WITHIN THE BUILDING PER CFC SECTION 907.5.2.1.1. THE MINIMUM SOUND PRESSURE LEVEL SHALL BE 60 dBA PER NFPA 72, TABLE A.18.4.3.
5. THE VOICE/ALARM COMMUNICATION SYSTEM VOICE MESSAGE SHALL COMPLY WITH NFPA 72, SECTIONS 18.4 AND 24.4 FOR GENERAL REQUIREMENTS, INTELLIGIBILITY, AUDIBILITY, MESSAGE PRIORTY, TONES, ETC.
6. REFER TO ARCHITECTURAL EXTERIOR ELEVATIONS FOR PRECISE OUTLET LOCATIONS.
7. REFER TO ARCHITECTURAL REFLECTED CEILING PLAN FOR EXACT LOCATION OF ALL CEILING MOUNTED DEVICES.
8. IF SHIELDED WIRE IS USED, THE FOLLOWING MUST BE OBSERVED.
   A. METALLIC CONTINUITY OF THE SHIELD MUST BE MAINTAINED AND INSULATED THROUGHOUT THE ENTIRE LENGTH OF THE CABLE.
   B. THE ENTIRE LENGTH OF THE CABLE MUST HAVE A RESISTANCE GREATER THAN 1 MEGOHM TO EARTH.
9. ALL PENETRATIONS THROUGH FIRE RATED WALLS SHALL BE PROTECTED FROM THE SPREAD OF FIRE WITH AN APPROVED FIRE STOP SYSTEM EQUAL TO OR GREATER THAN THE FIRE RATING OF THE STRUCTURE / SURFACE BEING PENETRATED AS IDENTIFIED IN CBC CHAPTER 7. UL OR OTHER LAB TESTING CRITERIA. APPROVED TYPES OF MATERIALS SHALL BE IDENTIFIED WITHIN THE FIRE ALARM SECTION OF THE PROJECT SPECIFICATIONS.
10. A SYSTEM GROUND MUST BE PROVIDED FOR EARTH DETECTION AND LIGHTNING PROTECTION DEVICES. THIS CONNECTION SHALL BE MADE TO AN APPROVED DEDICATED EARTH CONNECTION PER CEC, ARTICLE 250.
11. WIRING IN DUCTS, PLENUMS AND OTHER AIR HANDLING SPACES MUST BE INSTALLED IN ACCORDANCE WITH CEC.
12. UNDERGROUND WIRING MUST BE FREE OF ALL WATER.
13. ALL FIRE ALARM SYSTEM CONDUCTORS SHALL BE RUN IN A DEDICATED FIRE ALARM CONDUIT SYSTEM.
14. WHERE A DETECTOR IS INDICATED TO BE INSTALLED ABOVE THE CEILING AND NO ACCESS TO THE CEILING SPACE EXISTS, THE ELECTRICAL CONTRACTOR SHALL FURNISH ACCESS PANELS. THE DETECTOR SHALL BE EASILY ACCESSIBLE AND THE LOCATION OF THE DETECTOR SHALL BE CLEARLY MARKED.
15. COORDINATE ALL FIRE ALARM DEVICES, ESPECIALLY REMOTE L.E.D.'S FOR DUCT SMOKE DETECTORS, WITH ARCHITECT PRIOR TO ROUGH-IN.
16. FIRE ALARM SYSTEM UTILIZES A COMPLETE COVERAGE, FULLY AUTOMATIC SYSTEM. PROVIDE RELAY MODULE(S) AT FATC/FACP LOCATIONS FOR CONTROL OF HVAC SHUT DOWN, SMOKE/FIRE DAMPER CLOSURE AND DOOR HOLD RELEASES.
17. WHERE NEW DEVICES (AND ASSOCIATED CONDUIT) CANNOT PHYSICALLY BE MOUNTED CONCEALED IN WALLS, RUN IN PANDUIT SURFACE RACEWAY/WIREWAY (AND DEVICES SHALL BE MOUNTED ON SURFACE OUTLET BOXES). REFER TO SPECIFICATIONS. PROVIDE SIZE OF RACEWAY TO ACCOMMODATE THE REQUIRED CONDUCTORS. WHERE CONDUIT IS INDICATED, PROVIDE SURFACE RACEWAY WITH AN EQUAL CROSS SECTION TO THE DIAMETER OF THE CONDUIT INDICATED.
18. DETECTOR SENSITIVITY SHALL BE TESTED USING MANUFACTURER'S CALIBRATED SENSITIVITY INSTRUMENT OR OTHER CALIBRATED TESTING METHOD. (CFC, SECTIONS 907.8.3 AND 907.8.4)
19. THE VOICE/ALARM COMMUNICATION SYSTEM VOICE MESSAGE SHALL COMPLY WITH NFPA 72 SECTIONS 18.4 AND 24.4 FOR GENERAL REQUIREMENTS, INTELLIGIBILITY, AUDIBILITY, MESSAGE PRIORITY, TONES, ETC. REFER TO NFPA 72 ANNEX D, D.1 THROUGH D.6 FOR DETERMINING THE FUNDAMENTALS OF TEST PROTOCOL AND METHOD OF MEASURING INTELLIGIBILITY.
20. THE EXISTING CAMPUS FIRE ALARM SYSTEM SHALL BE MAINTAINED AND OPERATIONAL AT ALL TIMES DURING ALTERATIONS AND CONSTRUCTION. WHEN PORTIONS OF THE SYSTEM REQUIRE ALTERATIONS, THE REMAINDER OF THE SYSTEM SHALL BE KEPT IN SERVICE. IF NECESSARY TO SHUT DOWN ENTIRE FIRE ALARM SYSTEM, CONTRACTOR SHALL PROVIDE FIREWATCH FOR ALL OCCUPIED AREAS OF WORK UNTIL THE FIRE ALARM SYSTEM IS RETURNED TO OPERATIONAL SERVICE. FIREWATCH AND SYSTEM/EQUIPMENT IDENTIFICATION SHALL BE PER THE 2022 CFC, CHAPTER 14. LOCAL FIRE AUTHORITY AND OWNER SHALL BE NOTIFIED 48 HOURS IN ADVANCE OF ANY SHUT DOWN.

COMPLETE FIRE ALARM SUBMITTAL

AUTOMATIC ADDRESSABLE FIRE ALARM SYSTEM WITH EMERGENCY VOICE EVACUATION SYSTEM

VOICE EVACUATION SPEAKER NOTE:
- ALL INTERIOR SPEAKERS SHALL BE TAPPED AT 1 WATT, U.O.N.
- ALL EXTERIOR SPEAKERS SHALL BE TAPPED AT 2 WATTS, U.O.N.

0' 2' 4' 8' 16' 32'

NORTH

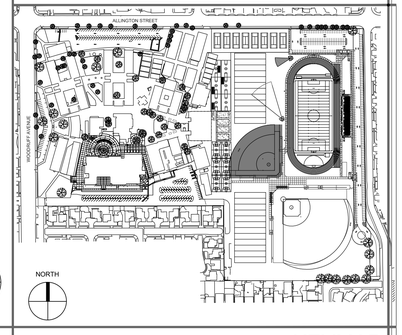

KEYMAP

SOFTBALL FIELD FIRE ALARM PLAN SCALE: 1/8"=1'-0" 1

STATE:

IDENTIFICATION STAMP
DIV. OF THE STATE ARCHITECT
APP: 03-124281 INC:
REVIEWED FOR
SS ☑ FLS ☑ ACS ☑
DATE: 02/04/2025

ARCHITECT:

architecture
westbergwhite
7700 IRVINE CENTER DR. STE. 100
IRVINE, CA 92618
(714) 508-1780 (714) 508-1780 FAX

CONSULTANT:

tk1sc COLLABORATIVE
11870 Pierce Street, Suite 160
Riverside, California 92505
951.299.4160 www.tk1sc.com
Project Leader - Bill Voller
Electrical Lead - Bill Voller
tk1sc Job #: US0027568.7397

REGISTERED PROFESSIONAL ENGINEER
RAYMOND W. SWAN
No. E15610
Ex. 12/31/2025
ELECTRICAL
STATE OF CALIFORNIA

PROJECT NAME:

Bellflower Unified School District
Mayfair High School Athletics Fields
6000 North Woodruff Ave
Lakewood, California 90713

CLIENT:

BELLFLOWER UNIFIED SCHOOL DISTRICT
16703 S. Clark Ave,
BELLFLOWER, CALIFORNIA 90706

Rev.	Date	Description

JOB NO:	15008.01
DATE:	05/28/2024
DRAWN:	TG, XY
CHECK:	RB, JG
ARCHITECT:	PDW
ENGINEER:	

SHEET DESCRIPTION:
SOFTBALL FIELD
FIRE ALARM PLAN

SHEET NO:
EFA103

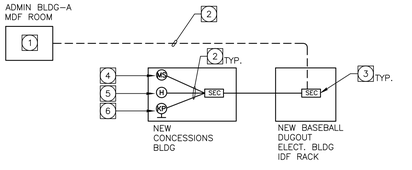

BLOCK DIAGRAM KEY NOTES:

1. MODIFY AND EXPAND EXISTING CONTROL PANEL AS REQUIRED TO ACCOMMODATE ADDITIONAL DEVICES ON THIS PROJECT.
2. CABLING PER MANUFACTURER'S REQUIREMENTS.
3. TERMINAL CABINET COMPLETE WITH ALL TERMINAL STRIPS, POPIT MODULES, TRANSFORMERS, POWER SUPPLIES, ETC. FOR A COMPLETE AND OPERABLE SYSTEM.
4. WALL MOUNT DUAL TECHNOLOGY MOTION SENSOR, BOSCH #ISC–CDL1–W15G, QUANTITY AND LOCATIONS PER PLAN DRAWINGS.
5. HORN, MOUNT ABOVE ACCESSIBLE CEILING. WHERE HARD LID CEILING EXISTS, MOUNT HORN NEAR CEILING HATCH.
6. SECURITY SYSTEM KEYPAD #DMP–690 PER SPECIFICATIONS. LOCATION PER PLAN DRAWINGS. PROVIDE ADDITIONAL POWER SUPPLY DUE TO LONG CABLE RUN. ROUTE AND TERMINATE KEYPAD CABLE BACK TO EXISTING CONTROL PANEL IN BUILDING–A.

INTRUSION ALARM/SECURITY SYSTEM NOTES:

1. DRAWINGS AND LAYOUTS ARE PRIMARILY DIAGRAMMATIC, CONTRACTOR IS RESPONSIBLE FOR FINAL FOOTAGES AND EXACT LOCATIONS.
2. EXPAND EXISTING DMP XR500 CONTROL PANEL LOCATED IN BUILDING–A AND PROVIDE ADDITIONAL EXPANSION MODULES, INCLUDING CABLES, DEVICES, EQUIPMENT, TERMINATIONS, ETC. TO ACCOMMODATE THE NEW KEYPAD AND DEVICES INSTALLED ON THIS PROJECT.
3. ALL INSTALLATIONS MUST COMPLY WITH THE MANUFACTURER'S INSTALLATION INSTRUCTIONS AND REQUIREMENTS.
4. PROVIDE KEYPAD IN CONCESSIONS BUILDING. CONTRACTOR TO CONSULT WITH DISTRICT ON REQUIRED MODEL NUMBER.
5. ALL CABLING SHALL BE PER MANUFACTURERS REQUIREMENTS.
6. ALL CABLING SHALL BE RATED FOR THE ENVIRONMENT FOR WHICH IT IS INSTALLED, PER CALIFORNIA ELECTRICAL CODE (CEC), NEC, AND TIA–568–C STANDARDS. ALL EXTERIOR / UNDERGROUND CABLE SHALL BE WET LOCATION RATED.
7. LOCATE EQUIPMENT IN DEDICATED LOCKABLE CABINET(S).
8. ALL DEVICES ARE TO BE WIRED INDEPENDENTLY, NO LOOPS FOR DATA, DEVICE OR POWER.
9. POWER SUPPLY FOR MOTION DETECTOR PER MANUFACTURER RECOMMENDATIONS. PROVIDE AUTOMATIC SWITCHOVER TO BATTERY ON AC FAIL.
10. NO DOOR CONTACTS ARE REQUIRED ON THIS PROJECT.
11. MOTION DETECTORS SHALL BE CEILING MOUNTED AND POSITIONED FOR BEST AREA COVERAGE.
12. DUE TO VOLTAGE DROP BECAUSE OF EXCESSIVE KEYPAD CABLE LENGTH FROM EXISTING CONTROL PANEL IN ADMIN BUILDING TO THE CONCESSION BUILDING KEYPAD, PROVIDE ADDITIONAL POWER SUPPLY FOR KEYPAD.
13. CONTRACTOR SHALL COORDINATE ALL SYSTEM PROGRAMMING, DEVICE NAMING, AND ZONING DIRECTLY WITH THE DISTRICT STAFF IN THE FIELD.
14. INSTALLATION OF EQUIPMENT AND WIRING MUST MEET ALL APPLICABLE CODES AND STANDARDS INCLUDING BUT NOT LIMITED TO CEC, NEC, NFPA, ANSI/EIA/TIA AND ISO 9001.
15. ALL WORK MUST BE IN COMPLIANCE WITH ANSI/TIA/EIA 569–C, COMMERCIAL BUILDING STANDARDS FOR TELECOMMUNICATIONS PATHWAYS AND SPACES.
16. ALL WORK MUST BE IN COMPLIANCE WITH ANSI/TIA/EIA 568–C, COMMERCIAL BUILDING TELECOMMUNICATIONS CABLING STANDARDS.
17. REFERENCE ALL ELECTRICAL, ARCHITECTURAL AND TELECOMMUNICATIONS DRAWINGS.
18. ANY PENETRATIONS THROUGH EXTERIOR WALLS SHALL BE SEALED BY THE CONTRACTOR AS REQUIRED BY THE NATIONAL ELECTRICAL CODE AND AS DIRECTED BY, AND TO THE SATISFACTION OF, THE OWNER'S PROJECT MANAGER.
19. LABEL ALL CABLES WITH SCHOOL'S DESIGNATED ROOM NUMBER / LOCATION ON PLASTIC COATED CABLE MARKERS WRAPPED AROUND CABLE AT EACH END AND IN EACH TERMINAL CABINET, VAULT, MANHOLE AND PULL BOX.
20. CONTRACTOR SHALL PERFORM SYSTEM TEST FOR PROPER FUNCTIONALITY OF ALL DEVICES, AND FOR PROPER COMMUNICATION WITH MONITORING STATION. INCLUDE ALL COSTS IN BASE BID.

INTRUSION ALARM SECURITY SYSTEM BLOCK DIAGRAM

SCALE: NTS

2

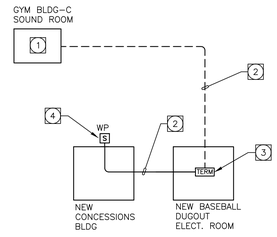

INTRUSION ALARM/SECURITY SYSTEM NOTES:

1. DRAWINGS AND LAYOUTS ARE PRIMARILY DIAGRAMMATIC, CONTRACTOR IS RESPONSIBLE FOR FINAL FOOTAGES AND EXACT LOCATIONS.
2. CONTRACTOR SHALL BE RESPONSIBLE TO EXTEND PAGING SIGNAL FROM THE GYM BUILDING–C TO THE NEW CONCESSION BUILDING, AND PROVIDE ALL HORNS, CABLES, TERMINAL BLOCKS, CONNECTIONS, BACK BOXES, FASTENERS, ETC. AS REQUIRED TO EXTEND EXISTING PAGING SYSTEM TO THE SPEAKER/HORN LOCATIONS INDICATED ON THE PLAN DRAWINGS.
3. CONTRACTOR SHALL VERIFY ALL DEVICE PART NUMBERS WITH DISTRICT MAINTENANCE AND OPERATIONS DEPARTMENT PRIOR TO ORDERING MATERIALS.
4. ALL NEW EQUIPMENT INSTALLED BY CONTRACTOR SHALL BE FULLY COMPATIBLE WITH THE EXISTING PAGING SYSTEM.
4. ALL CABLING SHALL BE PER MANUFACTURERS REQUIREMENTS.
5. ALL CABLING SHALL BE RATED FOR THE ENVIRONMENT FOR WHICH IT IS INSTALLED, PER CALIFORNIA ELECTRICAL CODE (CEC), NEC, AND TIA–568–C STANDARDS. ALL EXTERIOR / UNDERGROUND CABLE SHALL BE WET LOCATION RATED.
6. CONTRACTOR SHALL SCHEDULE A SYSTEM FUNCTION TEST WITH DISTRICT STAFF PRIOR TO PROJECT COMPLETION. CONTRACTOR SHALL ADJUST SYSTEM LEVELS AND PERFORMANCE TO THE SATISFACTION OF THE DISTRICT.

BLOCK DIAGRAM KEY NOTES:

1. EXISTING PAGING SYSTEM HEAD END. MODIFY AS REQUIRED TO POWER THE NEW DEVICES ON THIS PROJECT. INCLUDE ALL COSTS IN BASE BID.
2. 2–CONDUCTOR 16–AWG STRANDED, WET LOCATION RATED CABLING, WEST PENN #AQC225, OR EQUAL.
3. PAGING TERMINAL BLOCK COMPLETE. PROVIDE COMPLETE WITH ALL TERMINAL STRIPS ETC. AS REQUIRED.
4. SURFACE MOUNTED WIDE ANGLE WEATHER PROOF PAGING HORN WITH 30–WATT MULTI–TAP TRANSFORMER, ATLAS–IED #APC–30T. LOCATION PER PLAN DRAWINGS. MOUNT TO FLUSH WEATHERPROOF 4S DEEP J–BOX AND PROVIDE STAINLESS STEEL BLANK COVER PLATE WITH A RUBBER GROMMET TO PASS WIRES THROUGH TO HORN.

PAGING SYSTEM BLOCK DIAGRAM

SCALE: N.T.S.

4

BLOCK DIAGRAM KEY NOTES:

1. AT EXISTING MDF, TERMINATE NEW FIBER OPTIC CABLE AND PROVIDE ADDITIONAL RACK MOUNTED FIBER ENCLOSURE, FIBER ADAPTER PLATES, CONNECTORS, ETC. AS REQUIRED TO TERMINATE ALL NEW FIBER CABLING. LABEL ENCLOSURE AND CONNECTORS. PROVIDE ONE 1–METER DUPLEX FIBER PATCH CORD.
2. PROVIDE AND ROUTE NEW FIBER CABLING THROUGH UNDERGROUND CONDUITS TO EXISTING MDF IN ADMIN BUILDING. SEE SITE PLAN FOR CONDUIT ROUTE.
3. CATEGORY–6 CABLING PER SPECIFICATIONS. CABLE SHALL BE OSP RATED WHEN INSTALLED IN UNDERGROUND CONDUIT. REFER TO FACEPLATE DETAILS FOR REQUIRED QUANTITIES PER OUTLET.
4. DATA AND TELEPHONE OUTLET, QUANTITY AND LOCATIONS PER PLANS. SEE FACEPLATE DETAILS FOR ADDITIONAL INFORMATION.
5. SINGLE CAT–6 DATA OUTLET FOR INDOOR WIRELESS ACCESS POINT. PROVIDE SURFACE MOUNT 1–GANG BOX AND JACK ON WALL. QUANTITY AND LOCATIONS PER PLAN DRAWINGS. SEE FACEPLATE DETAILS FOR ADDITIONAL INFORMATION.
6. PROVIDE FLOOR MOUNT IDF RACK COMPLETE WITH FIBER ENCLOSURE, CAT–6 PATCH PANELS, WIRE MANAGERS, CAT–6 PATCH CORDS, ETC FOR A COMPLETE SYSTEM. REFER TO IDF RACK DETAILS ON SHEET T–003 FOR ADDITIONAL REQUIREMENTS.

DATA/TELEPHONE SYSTEM NOTES:

1. ALL QUANTITIES AND LOCATIONS PER PLAN DRAWINGS.
2. PROVIDE ALL CAT–6 PATCH CORDS PER THE DISTRICT SPECIFICATIONS.
3. CONTRACTOR SHALL TEST AND LABEL ALL CABLES PER THE DISTRICT SPECIFICATIONS.
4. ALL CABLING INSTALLED IN UNDERGROUND CONDUIT SHALL BE OSP–RATED.
5. REFER TO CCTV SURVEILLANCE CAMERA DIAGRAM FOR ADDITIONAL CAT–6 CABLE REQUIREMENTS.

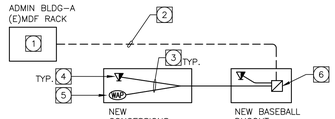

DATA LAN / TELEPHONE SYSTEMS BLOCK DIAGRAM

SCALE: N.T.S.

1

SYSTEM BLOCK DIAGRAM KEY NOTES:

1. **25–PAIR CATEGORY–5E** OSP–RATED COPPER BACKBONE CABLE. TERMINATE ALL PAIRS AT BOTH ENDS. BOND CABLE SHIELD TO TELECOM BUSBAR. SEE SPECIFICATIONS FOR ADDITIONAL INFORMATION. INSTALL IN UNDERGROUND CONDUIT. LABEL ALL CABLES WITH LOCATION OF BOTH ENDS, WITH MACHINE GENERATED LABELS.
2. BUILDING ENTRANCE TERMINAL (BET) PROTECTOR(S) WITH FUSED MODULES PER SPECIFICATIONS. QUANTITY AS REQUIRED TO TERMINATE ALL BACKBONE CABLE PAIRS, TYPICAL. BOND THE BET GROUND LUG(S) TO TELECOM BUSBAR USING A #6 AWG GREEN CONDUCTOR.
3. WALL MOUNT 66M–TYPE TERMINATION BLOCK WITH STAND–OFF BRACKET. TERMINATE CABLE PAIRS IN TIA STANDARDS SEQUENCE. PROVIDE 25–PAIR CAT–5E CABLE FROM 66M–BLOCK TO BET AND TERMINATE ALL PAIRS. CONTRACTOR SHALL LABEL ALL CABLES AND BLOCKS WITH MACHINE GENERATED LABELS. PROVIDE JUMPER WIRE CONNECTIONS BETWEEN STATION CABLES AND UNDERGROUND CABLES TO EXTEND SYSTEM DIAL TONE FROM PHONE SYSTEM TO TELEPHONE JACK.
4. CATEGORY–6 CABLING PER SPECIFICATIONS. CABLE SHALL BE OSP RATED WHEN INSTALLED IN UNDERGROUND CONDUIT. REFER TO FACEPLATE DETAILS FOR REQUIRED QUANTITIES PER OUTLET. TERMINATE CABLE AT JACK LOCATION AND ON 66M BLOCK.
5. TELEPHONE / DATA OUTLET. PROVIDE 1 TELEPHONE 6P6C JACK IN SAME FACEPLATE WITH DATA JACKS. CONTRACTOR TO COORDINATE REQUIRED PIN OUT REQUIREMENTS AND JACK COLOR WITH DISTRICT STAFF IN THE FIELD. TELEPHONE HANDSET IS OWNER FURNISHED OWNER INSTALLED.
6. EXISTING PBX TELEPHONE SYSTEM CABINET. DISTRICT TO PROVIDE ALL STATION CARDS, PROGRAMMING AND CROSS CONNECTIONS FROM PBX SYSTEM TO CONTRACTOR PROVIDED BET/UNDERGROUND CABLE.

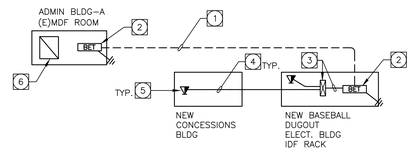

MULTIPAIR BACKBONE CABLE AND TELEPHONE SYSTEMS BLOCK DIAGRAM

SCALE: N.T.S.

3

GENERAL NOTES:

1. INSTALLATION OF EQUIPMENT AND WIRING MUST MEET ALL APPLICABLE CODES AND STANDARDS INCLUDING BUT NOT LIMITED TO CEC, NEC, NFPA, ANSI/EIA/TIA AND ISO 9001.
2. EQUIPMENT AND MATERIALS MUST COMPLY WITH UL LISTING AND EACH ITEM STAMPED OR LABELED AS SUCH.
3. COMPLIANCE WITH ANSI/TIA/EIA 569–B COMMERCIAL BUILDING STANDARDS FOR TELECOMMUNICATIONS PATHWAYS AND SPACES.
4. COMPLIANCE WITH ANSI/TIA/EIA 568–C COMMERCIAL BUILDING TELECOMMUNICATIONS CABLING STANDARDS.
5. DRAWINGS AND LAYOUTS ARE PRIMARILY DIAGRAMMATIC. CONTRACTOR IS RESPONSIBLE FOR FINAL FOOTAGES AND EXACT LOCATIONS.
6. CONTRACTOR SHALL NOTE IN WRITING, ANY DISCREPANCIES BETWEEN DRAWINGS AND SPECIFICATIONS, AS SUCH DISCREPANCIES ARISE, THE MORE STRINGENT SHALL TAKE PRECEDENCE.
7. COMMUNICATIONS CABLES (ANY TYPE) ROUTED THRU FURNITURE SYSTEMS SHALLBE ROUTED VIA DEDICATED COMMUNICATIONS PATHWAY, WHEN AVAILABLE. WHEN DEDICATED COMMUNICATIONS PATHWAY IS UNAVAILABLE, THE ABOVE–MENTIONED CABLES SHALL BE ROUTED IN A BARRIERED SYSTEMS FURNITURE RACEWAY SEPARATE FROM POWER CONDUCTORS PER EIA/TIA STANDARDS AND NEC REQUIREMENTS.
8. CONTRACTOR SHALL VERIFY SYSTEMS FURNITURE TYPE AND CABLE ROUTING/FACEPLATE LOCATION WITHIN SYSTEMS FURNITURE PRIOR TO BID. INCLUDE ALL COSTS IN BASE BID.
9. REFERENCE ALL ELECTRICAL DRAWINGS.
10. REFERENCE ALL TELECOMMUNICATIONS DRAWINGS.
11. REFERENCE ALL ARCHITECTURAL DRAWINGS.
12. REFERENCE ALL ELECTRICAL AND LOW VOLTAGE SYSTEMS SPECIFICATIONS.
13. CONTRACTOR SHALL UTILIZE CONDUIT(S)/SLEEVE(S) SEQUENTIALLY, MAXIMIZING THE CABLE FILL IN EACH BEFORE UTILIZING THE NEXT CONDUIT(S)/SLEEVE(S). MAXIMUM ALLOWABLE CONDUIT FILL SHALL BE BASED ON NEC TABLES FOR CONDUIT FILL.
14. IT IS THE INTENT OF THESE DRAWINGS WHICH ARE PRESENTED IN A DESIGN–BUILD FORMAT, FOR THE CONTRACTOR TO DESIGN, PROVIDE AND INSTALL A COMPLETE, FULLY OPERATIONAL AND TESTED SYSTEMS.
15. CONTRACTOR IS RESPONSIBLE TO FIELD VERIFY ALL EXISTING CONDITIONS PRIOR TO BID. FAILURE TO DO SO WILL NOT RESULT IN ADDITIONAL PAYMENTS TO CONTRACTOR. CONTRACTOR IS RESPONSIBLE FOR FINAL FOOTAGES AND EXACT LOCATIONS.
16. CONTRACTOR IS RESPONSIBLE TO VERIFY ALL PATHWAY ROUTES, DISTANCES AND CONDITIONS PRIOR TO ORDERING AND INSTALLING MATERIALS. CONTRACTOR IS REQUIRED TO MANDREL, SWAB AND MULE TAPE MEASURE EACH CONDUIT PATHWAY PRIOR TO USE.
17. INSTALLATION, RELOCATION AND TESTING OF ALL EQUIPMENT SHALL BE INCLUDED IN BID. IT IS THE CONTRACTOR'S RESPONSIBILITY TO PROVIDE ALL NECESSARY LABOR AND MATERIALS FOR COMPLETE AND FULLY OPERATIONAL SYSTEMS AT NO ADDITIONAL COST TO THE DISTRICT.

STATE:

IDENTIFICATION STAMP
DIV. OF THE STATE ARCHITECT
APP: 03-124281 INC:
REVIEWED FOR
SS ☑ FLS ☑ ACS ☑
DATE: 02/04/2025

ARCHITECT:

architecture
westbergwhite
7700 IRVINE CENTER DR. STE. 100
IRVINE, CA 92618
(714) 508-1780 (714) 508-1780 FAX

CONSULTANT:

tk1sc
COLLABORATIVE
11870 Pierce Street, Suite 160
Riverside, California 92505
951.299.4160 www.tk1sc.com
Project Leader - Bill Voller
Electrical Lead - Bill Voller
tk1sc Job #: US0027568.7397

REGISTERED PROFESSIONAL ENGINEER
RAYMOND W. SWADA
No. E15610
Ex. 12/31/2025
ELECTRICAL
STATE OF CALIFORNIA

PROJECT NAME:

Bellflower Unified School District
Mayfair High School Athletics Fields
6000 North Woodruff Ave
Lakewood, California 90713

CLIENT:

BELLFLOWER UNIFIED SCHOOL DISTRICT
16703 S. Clark Ave.
BELLFLOWER, CALIFORNIA 90706

Rev.	Date	Description

JOB NO:	15008.01
DATE:	05/28/2024
DRAWN:	TG, XY
CHECK:	RB, JG
ARCHITECT:	PDW
ENGINEER:	

SHEET DESCRIPTION:

LOW VOLTAGE SYSTEM DIAGRAMS

SHEET NO:

T001

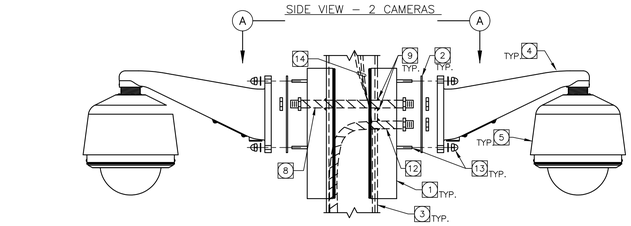

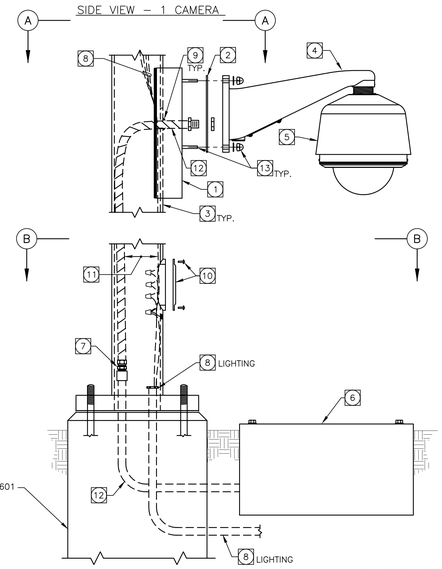

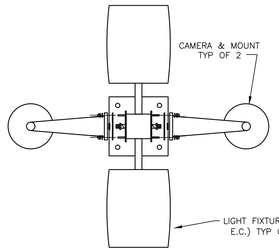

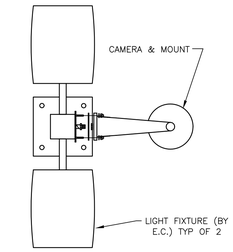

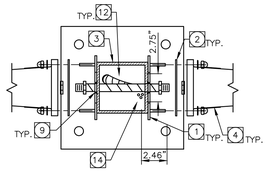

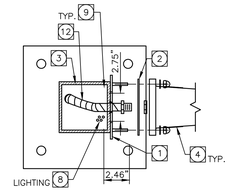

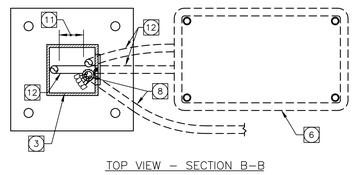

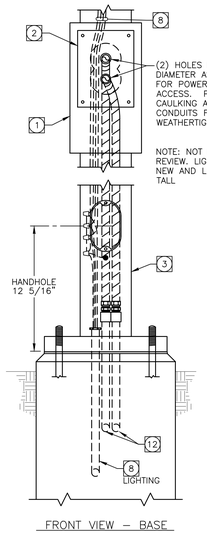

CAMERA POLE MOUNT DETAIL KEY NOTES:

1. POLE MOUNT PROVIDED BY SECURITY CAMERA MANUFACTURER. ATTACH WITH A 1/8" FILLET WELD ALL AROUND THE BRACKET BY POLE MANUFACTURER. MOUNTS THAT REQUIRE METAL STRAPS FASTENED AROUND THE POLE EXTERIOR ARE PROHIBITED. PLATE FINISH TO MATCH POLE FINISH. THIS IS A CRITICAL COORDINATION ITEM. NO ADDITIONAL COSTS WILL BE ACCEPTED BY THE OWNER FOR FAILURE OF THE SECURITY CONTRACTOR TO COORDINATE THIS EFFORT AS REQUIRED BY PROJECT SCHEDULE.
2. CUSTOM FABRICATED BEZEL PLATE BY SECURITY CAMERA MANUFACTURER, AS MAY BE REQUIRED. SIZE AS REQUIRED TO ATTACH THE POLE MOUNT TO THE CAMERA MOUNT. SECURITY CONTRACTOR SHALL PAINT TO MATCH POLE.
3. TALL SITE LIGHTING FIXTURE POLES BY ELECTRICAL CONTRACTOR. SECURITY CONTRACTOR TO PROVIDE ANY ADDITIONAL REINFORCEMENT AS REQUIRED BY LIGHT POLE MANUFACTURER TO SUPPORT CAMERA AND MOUNTING HARDWARE.
4. CAMERA MOUNT WITH PENDENT ARM AND ALL REQUIRED FITTINGS AND COMPONENTS. SECURITY CONTRACTOR SHALL PROVIDE CUSTOM POWDER COAT FINISH TO MATCH POLE.
5. CAMERA ENCLOSURE AND I.P. CAMERA PER PLANS AND SPECIFICATIONS. SECURITY CONTRACTOR SHALL PROVIDE CUSTOM POWDER COAT FINISH TO MATCH POLE.
6. PULLBOX WITH BOLT DOWN COVER EQUIPPED WITH TAMPER–PROOF BOLT HEADS. SEE SITE ELECTRICAL PLAN FOR SIZE AND ACTUAL LOCATIONS. COORDINATE FINAL LOCATION IN FIELD.
7. TRANSITION FROM 1" PVC CONDUIT TO GREY 1" LIQUID TIGHT METAL CONDUIT VIA FEMALE PVC TO LIQUID TIGHT REDUCING CONNECTORS. ROUTE UP POLE AND FASTEN TO CUSTOM BEZEL PLATE. ROUTE LOW VOLTAGE SIGNAL CONDUCTORS TO CAMERA IN THIS CONDUIT RUN.
8. CONDUIT/WIRING FOR LIGHTING, BY E.C..
9. PROVIDE SILICON BUSHING AROUND CONDUITS AT THE PASS THRU POLE. PROVIDE SILICON CAULKING AS REQUIRED TO SUPPLEMENT GASKETING.
10. POLE HAND HOLE COVER WITH TAMPER PROOF SCREWS.
11. STUB/ROUTE SIGNAL CONDUITS AS FAR FROM POWER CONDUITS/CONDUCTORS AS POSSIBLE.
12. SIGNAL CONDUIT FOR CAMERA.
13. MOUNTING STUDS PROVIDED BY SECURITY CAMERA MANUFACTUER SHALL BE SHORT ENOUGH TO ALLOW USE OF CAP OR ACORN NUTS IN LIEU OF STANDARD NUTS.

SPECIFIC INSTALLATION REQUIREMENTS:

1. CONTRACTOR SHALL SUPPLY A COMPLETELY COORDINATED SUBMITTAL DRAWING WITH POLE SUBMITTAL AND, IF APPLICABLE, LIGHTING FIXTURE SUBMITTAL, DEPICTING A COMPLETE AND USABLE LIGHT POLE AND CAMERA MOUNTING DETAIL DEPICTING ALL POLE OPENINGS, MOUNTING HEIGHT OF CAMERA ABOVE GRADE AND ORIENTATION OF CAMERA MOUNTING IN RELATIONSHIP TO LIGHTING FIXTURES. SUBMITTAL SHALL ALSO CONTAIN CAMERA ARM CUT SHEET(S), POLE MOUNTING HARDWARE CUT SHEET(S), CUSTOM COLORS SWATCHES, POWDER COATING SOURCE, ETC. COORDINATE ENTIRE INSTALLATION WITH ALL OTHER REQUIRED TRADES.
2. CONTRACTOR SHALL PROVIDE ALL PARTS, FASTENERS, BRACKETS, MOUNTS, AND ALL OTHER COMPONENTS NECESSARY FOR A COMPLETE AND FULLY FUNCTIONAL SYSTEM, TO THE SATISFACTION OF THE PROJECT ARCHITECT. INCLUDE ALL COSTS IN BASE BID.
3. CONTRACTOR SHALL FINALIZE CAMERA VIEWS WITH THE CAMPUS PROJECT MANAGER AND ADJUST CAMERA AIM AND FIELD OF VIEW AS NECESSARY, TO THE SATISFACTION OF THE CAMPUS PROJECT MANAGER.
4. THE MOUNTING DETAILS ON THIS PAGE ARE DIAGRAMMATIC AND ARE ONLY INTENDED TO CONVEY THE GENERAL SCOPE INVOLVED IN MOUNTING A CAMERA.
5. CONTRACTOR SHALL BE RESPONSIBLE TO PROVIDE AND INSTALL ALL FASTENERS, BRACKETS, ATTACHMENTS, ETC. PER MANUFACTURER'S REQUIREMENTS.
6. PROVIDE ALL CUTTING AND PATCHING OF SURROUNDING SURFACES AS REQUIRED FOR PROPER INSTALLATION. PATCHING SHALL BE OF THE SAME MATERIALS, WORKMANSHIP, AND FINISH, AND ACCURATELY MATCH THE SURROUNDING WORK TO THE SATISFACTION OF THE DISTRICT.
7. CUTTING OF STRUCTURAL MEMBERS SHALL NOT BE DONE WITHOUT NOTIFYING AND OBTAINING ARCHITECT APPROVAL.
8. ALL METALLIC CONDUIT (EMT), SUPPORTS, BOLTS, STRAPS, AND FASTENERS INSTALLED ON EXTERIOR OF ANY STRUCTURE SHALL BE CORROSION–RESISTANT. CONNECTORS AND COUPLERS SHALL BE RAIN TIGHT COMPRESSION FITTINGS.
9. CAMERA WITH BRACKET TOTAL WEIGHT IS APPROXIMATELY 10LBS.

CCTV SURVEILLANCE CAMERA POLE MOUNT DETAIL

SCALE: NTS

1

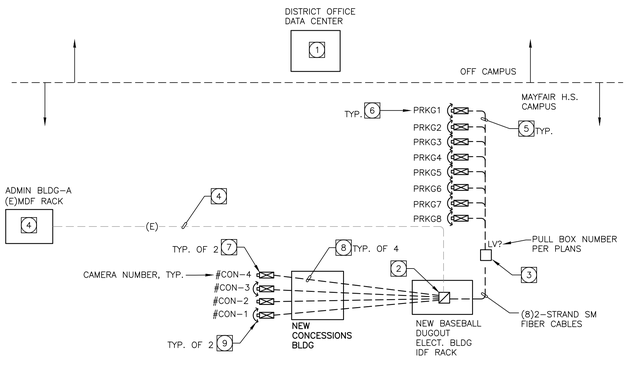

CCTV SURVEILLANCE SYSTEM BLOCK DIAGRAM KEY NOTES:

1. MODIFY EXISTING VMS SYSTEM HEADEND EQUIPMENT LOCATED AT THE DISTRICT DATA CENTER ANNEX 10140 ALONDRA BLVD, BELLFLOWER CA 90706. CONTRACTOR SHALL PROGRAM ALL CAMERAS INSTALLED ON THIS PROJECT INTO THE EXISTING VMS SOFTWARE SYSTEM, CONFIGURE ALL CAMERA SETTINGS, AND VERIFY VIEWING, RECORDING AND PLAYBACK. PROVIDE 1 NEW CAMERA LICENSE FOR EACH NEW CAMERA INSTALLED ON THIS PROJECT. CONTRACTOR SHALL COORDINATE ACCESS AND ALL WORK WITH DISTRICT'S I.T. DIRECTOR.
2. NEW FLOOR MOUNTED LAN IDF CABINET PER LAN BLOCK DIAGRAM. PROVIDE 2RMU RACK MOUNT FIBER ENCLOSURE COMPLETE WITH ADAPTERS, PANELS, CONNECTORS, ETC, TERMINATE ALL CAMERA FIBER STRANDS. TERMINATE CAT–6 CABLES ON CAT–6 PATCH PANEL. PROVIDE ALL COPPER AND FIBER PATCH CORDS TO CONNECT CAMERAS TO LAN NETWORK SWITCH.
3. FLUSH IN–GRADE PULL BOXES, SIZE, QUANTITY AND LOCATIONS PER PLANS. PROVIDE SERVICE LOOP BY WRAPPING FIBER OPTIC CABLE(S) AND CAMERA LOW VOLTAGE POWER CABLES AROUND THE INTERIOR CIRCUMFERENCE OF TEACH PULL BOX. SECURE CABLE TO SIDES OF BOX WITH RACK MOUNTING HARDWARE. PROVIDE YELLOW FIBER OPTIC IDENTIFICATION TAGS ON CABLE BUNDLE WITH MACHINE GENERATED LABELS. CONTRACTOR SHALL SEAL ALL CONDUITS IN PULL BOX TO PREVENT WATER/AIR INGRESS. TYPICAL OF ALL NEW AND EXISTING IN–GRADE PULL BOXES.
4. SHOWN FOR REFERENCE ONLY. REFER TO DATA LAN BLOCK DIAGRAM ON T001.
5. PROVIDE 2–STRAND SINGLE MODE OS2 FIBER OPTIC OSP–RATED CABLE FROM IDF CABINET TO EACH POLE MOUNTED PTZ CAMERA, CORNING TACTICAL CABLE #002U8U–31131–24, OR EQUIVALENT WITH MAXIMUM OUTSIDE DIAMETER OF 0.25 INCHES. ROUTE FIBER INSIDE LIGHT POLE TO CAMERA, TERMINATE FIBER & CONNECT TO CAMERA'S SFP MODULE. E.C. TO PROVIDE 120VAC CIRCUIT TO EACH POLE MOUNT CAMERA. CONNECT PTZ CAMERAS TO 120VAC. COORDINATE WITH E.C. IN FIELD.
6. PROVIDE BOSCH AUTODOME PTZ CAMERA AS NOTED IN THE CAMERA SCHEDULE, QUANTITY AND LOCATIONS PER PLANS, WITH FIBER OPTIC KIT AND SFP MODULE #GV4–SFPSCKT, COMPLETE WITH ALL MOUNTS, ARMS, BRACKETS, PIPES, HARDWARE, CONNECTORS, POWER SUPPLY, WIRING, AND ALL OTHER PARTS REQUIRED FOR A COMPLETE AND FULLY FUNCTIONAL CCTV SYSTEM. INCLUDE ALL COSTS IN BASE BID. MOUNT ON CONCESSION BUILDING AND ON LIGHT POLES (LIGHT POLE BY E.C.) – SEE CAMERA SCHEDULE NOTES AND MOUNTING DETAILS. CONTRACTOR SHALL COORDINATE ALL MOUNTING REQUIREMENTS WITH POLE MANUFACTURER PRIOR TO POLE MANUFACTURE.
7. PROVIDE BOSCH FIXED DOME IP CAMERA AS NOTED IN THE CAMERA SCHEDULE, QUANTITY AND LOCATIONS PER PLANS. PROVIDE COMPLETE WITH BACKBOX, CONDUIT, WALL MOUNTS, PENDANT ARMS, HARDWARE, CONNECTORS, AND ALL OTHER PARTS REQUIRED FOR A COMPLETE AND FULLY FUNCTIONAL SYSTEM. INCLUDE ALL COSTS IN BASE BID. SEE CAMERA SCHEDULE NOTES AND MOUNTING DETAIL. MOUNT LEVEL WITH ADJACENT FIRE ALARM AND SPEAKER DEVICES.
8. PROVIDE CATEGORY–6 4–PAIR UTP CABLE PER SPECIFICATIONS. CABLE SHALL BE OSP–RATED.
9. PROVIDE LOW VOLTAGE POWER SUPPLY AND WIRING TO POWER PTZ CAMERAS MOUNTED ON CONCESSION BUILDING.

CCTV SURVEILLANCE SYSTEM GENERAL NOTES:

1. WORK COVERED UNDER THIS PROJECT CONSISTS OF THE FURNISHING OF ALL NECESSARY LABOR, SUPERVISION, MATERIALS, EQUIPMENT, TESTING, AND SERVICES TO INSTALL AND CORRECTLY CONFIGURE THE NEW CCTV CAMERAS AND MODIFY THE EXISTING VMS SYSTEM AS INDICATED ON THE BID DOCUMENTS.
2. CCTV CONTRACTOR IS RESPONSIBLE TO PROVIDE, INSTALL, PROGRAM, OPTIMALLY CONFIGURE AND MAKE OPERATIONAL ALL COMPONENTS, SYSTEMS AND DEVICES INVOLVED IN THE CCTV PROJECT TO THE SATISFACTION OF THE OWNER'S PROJECT MANAGER AND PROJECT ENGINEER.
3. CONTRACTOR TO PROVIDE AND INSTALL ALL FIRMWARE, HARDWARE AND SOFTWARE, I.P. CAMERAS, ENCLOSURES, MOUNTS, BRACKETS, CAMERA POWER SUPPLIES, CABLING, CONNECTORS, PATCH CORDS, CONDUIT, PATHWAYS, CAMERA LICENSES, PROGRAMMING, CONFIGURATION, ETC. AS REQUIRED FOR A COMPLETE AND FULLY FUNCTIONING SYSTEM.
4. DRAWINGS AND LAYOUTS ARE PRIMARILY DIAGRAMMATIC, CONTRACTOR IS RESPONSIBLE FOR FINAL FOOTAGES AND EXACT LOCATIONS.
5. OBTAIN STATIC IP ADDRESS FROM DISTRICT I.T. DEPARTMENT TO ALLOW VIEWING ACROSS THE DISTRICT WAN AND LAN.
6. FINAL LOCATION OF CAMERAS, AND ALL OTHER HARDWARE TO BE DETERMINED BY OWNER. COORDINATE WITH OWNER IN FIELD PRIOR TO ROUGH–IN.
7. CONTRACTOR SHALL BE MANUFACTURER–TRAINED AND MANUFACTURER–AUTHORIZED TO RECONFIGURE THE EXISTING ONSSI VIDEO MANAGEMENT SOFTWARE, AND INSTALL/CONFIGURE THE NEW CCTV BOSCH CAMERAS. PROOF OF CERTIFICATION MUST BE PROVIDED AT TIME OF BID.
8. CONTRACTOR SHALL PROVIDE ONE ADDITIONAL CAMERA LICENSE FOR EACH NEW CAMERA INSTALLED ON THIS PROJECT.
9. THE CONTRACTOR SHALL RECONFIGURE THE EXISTING ONSSI VMS SOFTWARE AND STORAGE ARRAY LOCATED AT THE DISTRICT'S DATA CENTER ANNEX: 10140 ALONDRA BLVD, BELLFLOWER, CA 90706. CONTRACTOR SHALL FULLY PROGRAM AND CONFIGURE THE VMS SOFTWARE TO ACCESS, VIEW, AND RECORD ALL NEW CAMERAS AS PART OF THIS PROJECT. CONTRACTOR SHALL COORDINATE DIRECTLY WITH THE DISTRICT'S I.T. DEPARTMENT.
10. ALL CABLING SHALL BE INSTALLED AND TERMINATED IN ACCORDANCE WITH ANSI/TIA–568–C.0 STANDARDS.
11. PROVIDE ALL CATEGORY–6 PATCH CORDS AS REQUIRED.
12. ALL EXTERIOR CAMERA CONNECTIONS SHALL BE MADE UTILIZING WEATHERPROOF FITTINGS AND FIXTURES.
13. ALL EXPOSED CONDUIT AND HARDWARE SHALL BE PAINTED TO MATCH SURROUNDING SURFACES. CONTRACT DISTRICT REPRESENTATIVE FOR PAINT COLORS.
14. CONTRACTOR SHALL PROVIDE ALL REQUIRED POWER SUPPLIES, WIRING AND CONDUIT FOR ALL CAMERAS AS REQUIRED. POWER SUPPLY WIRING SHALL BE INSTALLED IN CONDUIT. THE ELECTRICAL CONTRACTOR SHALL PROVIDE 120VAC POWER AT THE CAMERA BRACKET LOCATION ON EACH LIGHT POLE. COORDINATE CONNECTION INTO EACH CAMERA POWER SUPPLY WITH ELECTRICAL CONTRACTOR.
15. CONTRACTOR TO VERIFY FINAL DESIRED FIELDS OF VIEW WITH OWNER PRIOR TO FINAL INSTALLATION. CONTRACTOR SHALL ADJUST ALL FIELDS OF VIEW TO THE SATISFACTION OF THE OWNER. UNLESS OTHERWISE NOTED BY OWNER IN THE FIELD, CONTRACTOR SHALL DISCUSS DESIRED "HOME" SETTING OF PTZ CAMERAS WITH DISTRICT STAFF IN FIELD DURING CAMERA PROGRAMMING.
16. PRIOR TO SYSTEM ACCEPTANCE, CONTRACTOR AND OWNER TOGETHER SHALL VIEW LIVE IMAGES PROVIDED BY EACH CAMERA. CONTRACTOR SHALL ADJUST ALL CAMERA AND FIELD OF VIEW SETTINGS TO THE SATISFACTION OF THE OWNER PRIOR TO PROJECT COMPLETION.
17. CONTRACTOR SHALL LABEL ALL CAMERAS, CABLES, ENCLOSURES, POWER SUPPLIES, ETC. WITH MACHINE–GENERATED LABELS. HAND WRITTEN LABELS ARE PROHIBITED. PROVIDE OWNER WITH SAMPLE LABELING PLAN FOR REVIEW AND APPROVAL PRIOR TO LABELING EQUIPMENT.
18. CONTRACTOR SHALL TEST ALL TERMINATED FIBER STRANDS PER ANSI/TIA–526–7 METHOD A UTILIZING AN OPTICAL POWER METER, CALIBRATED PER FOTP–95. PROVIDE COPY OF TEST RESULTS TO ARCHITECT AND DISTRICT I.T. DEPARTMENT FOR REVIEW PRIOR TO PROJECT COMPLETION. DARK FIBER STRANDS DO NOT NEED TO BE TESTED.
19. REFERENCE GENERAL ELECTRICAL SPECIFICATIONS AND ALL E–SERIES AND T–SERIES PLAN DRAWINGS.

	CAMERA NUMBER	Interior or Exterior	BUILDING	LOCATION	RESOLUTION	PAN/TILT ZOOM	LENS FoV	BOSCH CAMERA PART NO.	RECORD FPS*	RECORD DAYS**	NOTES
1	CON-1	Exterior	Concession bldg	Roof mount	1080p	YES	4.3 - 129 mm	VG5-7230-EPC4 **	15	30	* Mount on light pole 15-16 feet AFG. Contractor shall coordinate all mounting requirements with pole manufacturer prior to pole delivery. Provide all mounts, brackets, power supplies, enclosures, fiber optic connectors, Ethernet single mode SFPs, etc. for a complete and fully functional system. Typical for all pole mounted cameras Provide 120vac connection to pole mounted PTZ cameras. Wall mount fixed cameras shall be powered by PoE switch located in nearest IDF room. Wall mount PTZ cameras requre low voltage power supply and 14/2 cable from power supply to camera. Refer to CCTV Surveillance Camera Block Diagram for additional requirements.
2	CON-2	Exterior	Concession bldg	Exterior wall	1080p	NO	3 - 10 mm	NDI-50052-A3	15	30	
3	CON-3	Exterior	Concession bldg	Roof mount	1080p	YES	4.3 - 129 mm	VG5-7230-EPC4 **	15	30	
4	CON-4	Exterior	Concession bldg	Exterior wall	1080p	NO	3 - 10 mm	NDI-50052-A3	15	30	
5	PRKG1	Exterior	Parking lot	Light pole *	1080p	NO	3 - 10 mm	NDI-50051-A3	15	30	
6	PRKG2	Exterior	Parking lot	Light pole *	1080p	YES	4.3 - 129 mm	VG5-7230-EPC4 *	15	30	
7	PRKG3	Exterior	Parking lot	Light pole *	1080p	YES	4.3 - 129 mm	VG5-7230-EPC4 *	15	30	
8	PRKG4	Exterior	Parking lot	Light pole *	1080p	YES	4.3 - 129 mm	VG5-7230-EPC4 *	15	30	
9	PRKG5	Exterior	Parking lot	Light pole *	1080p	YES	4.3 - 129 mm	VG5-7230-EPC4 *	15	30	
10	PRKG6	Exterior	Parking lot	Light pole *	1080p	YES	4.3 - 129 mm	VG5-7230-EPC4 *	15	30	** Provide local low voltage power supply with conductors to power the PTZ camera. Roof mount or parapet mount with a 3 foot goose neck arm to extend the camera out past the exterior wall.
11	PRKG7	Exterior	Parking lot	Light pole *	1080p	YES	4.3 - 129 mm	VG5-7230-EPC4 *	15	30	
12	PRKG8	Exterior	Parking lot	Light pole *	1080p	YES	4.3 - 129 mm	VG5-7230-EPC4 *	15	30	
	NOTE: Provide Fiber Optic Kit, SFP Modules, Power Supply Box, pole mounts, etc as required for a complete system.										

CCTV CAMERA SCHEDULE

CCTV SURVEILLANCE SYSTEM BLOCK DIAGRAM AND CAMERA SCHEDULE

SCALE: N.T.S.

3

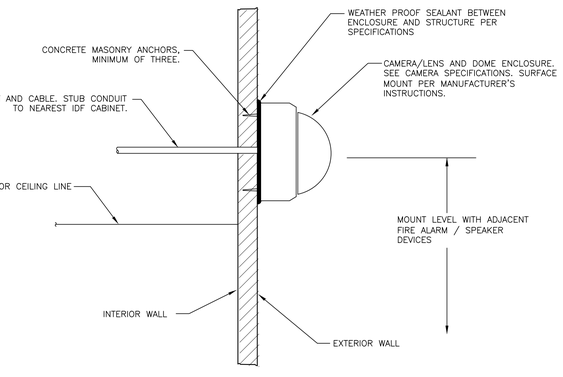

EXTERIOR CAMERA DETAIL- SURFACE WALL MOUNT

SCALE: N.T.S.

2

MOUNTING DETAILS GENERAL NOTES:

1. THE MOUNTING DETAILS ON THIS PAGE ARE DIAGRAMMATIC AND ARE ONLY INTENDED TO CONVEY THE GENERAL SCOPE INVOLVED IN MOUNTING A CAMERA.
2. CONTRACTOR SHALL BE RESPONSIBLE TO PROVIDE AND INSTALL ALL FASTENERS, BRACKETS, ATTACHMENTS, ETC. PER MANUFACTURER'S REQUIREMENTS.
3. PROVIDE ALL CUTTING AND PATCHING OF SURROUNDING SURFACES AS REQUIRED FOR PROPER INSTALLATION. PATCHING SHALL BE OF THE SAME MATERIALS, WORKMANSHIP, AND FINISH, AND ACCURATELY MATCH THE SURROUNDING WORK TO THE SATISFACTION OF THE DISTRICT.
4. CUTTING OF STRUCTURAL MEMBERS SHALL NOT BE DONE WITHOUT NOTIFYING AND OBTAINING ARCHITECT APPROVAL.
5. ALL METALLIC CONDUIT (EMT), SUPPORTS, BOLTS, STRAPS, AND FASTENERS INSTALLED ON EXTERIOR OF ANY STRUCTURE SHALL BE CORROSION–RESISTANT. CONNECTORS AND COUPLERS SHALL BE RAIN TIGHT COMPRESSION FITTINGS.
6. CONTRACTOR SHALL PROVIDE 30–YEAR WEATHERPROOF SEALANT (CLEAR) BETWEEN ALL CAMERA ENCLOSURES AND BUILDING STRUCTURES, AND AT CONDUIT PENETRATIONS THROUGH STRUCTURE EXTERIORS. PROVIDE A CONTINUOUS BEAD OF SEALANT COMPLETELY AROUND THE EDGE OF THE CAMERA ENCLOSURE AND THE STRUCTURE.

STATE:

IDENTIFICATION STAMP
DIV. OF THE STATE ARCHITECT
APP: 03-124281 INC:
REVIEWED FOR
SS ☑ FLS ☑ ACS ☑
DATE: 02/04/2025

ARCHITECT:

architecture
westbergwhite
7700 IRVINE CENTER DR. STE. 100
IRVINE, CA 92618
(714) 508-1780 (714) 508-1780 FAX

CONSULTANT:

tk1sc
COLLABORATIVE
11870 Pierce Street, Suite 160
Riverside, California 92505
951.299.4160 www.tk1sc.com
Project Leader - Bill Voller
Electrical Lead - Bill Voller
tk1sc Job #: US0027568.7397

REGISTERED PROFESSIONAL ENGINEER
RAYMOND W. SWAN
No. E15610
Ex. 12/31/2025
ELECTRICAL
STATE OF CALIFORNIA

PROJECT NAME:

Bellflower Unified School District
Mayfair High School Athletics Fields
6000 North Woodruff Ave
Lakewood, California 90713

CLIENT:

BELLFLOWER UNIFIED
SCHOOL DISTRICT
16703 S. Clark Ave.
BELLFLOWER, CALIFORNIA 90706

#	Rev. Date	Description

JOB NO:	15008.01
DATE:	05/28/2024
DRAWN:	TG, XY
CHECK:	RB, JG
ARCHITECT:	PDW
ENGINEER:	

SHEET DESCRIPTION:

LOW VOLTAGE SYSTEMS
DETAILS

SHEET NO:

T002

LADDER TRAY/RUNWAY SCHEDULE

CABLE TRAY STYLE	TRAY WIDTH	SIDE RAIL HEIGHT	RUNG SPACING	LOAD DEPTH	RADIUS FITTINGS INSIDE BEND RADIUS	TRAY COVER	TRAY COLOR	REMARKS
LADDER	18"	1-1/2"	9"	NA	NA	NO	BLACK	LENGTH PER PLANS

LADDER TRAY SPECIFICATION:

1. CABLE TRAY DESIGN
   UL-LISTED LADDER TRAY SYSTEM SHALL BE MADE OF STRAIGHT SECTIONS, FITTINGS, AND ALL ACCESSORIES. STANDARD LADDER TRAYS SHALL BE UL CLASSIFIED AS EQUIPMENT GROUNDING CONDUCTORS.
2. CABLE TRAY MATERIALS
   STRAIGHT SECTIONS SHALL BE CONSTRUCTED OF 3/8" X 1-1/2" X .065 WALL RECTANGULAR STEEL TUBING. CROSS MEMBERS SHALL BE CONSTRUCTED OF 1/2" X 1" X .065" RECTANGULAR STEEL TUBING AND WELDED AT 9" INTERVALS.
3. CABLE TRAY SEISMIC BRACING REQUIREMENTS
   LADDER TRAY SYSTEM LOCATED IN ANY SEISMIC RISK ZONE OF THE CALIFORNIA BUILDING CODE SEISMIC RISK MAP SHALL BE PROTECTED FROM EARTHQUAKES IN ACCORDANCE WITH THE INTERNATIONAL BUILDING CODE AND, AS APPLICABLE, THE STATE AND LOCAL BUILDING CODES AND REGULATIONS.
4. LADDER TRAY FITTINGS AND ACCESSORIES
   ALL FITTINGS ACCESSORIES SHALL BE FURNISHED AS REQUIRED TO PROTECT, SUPPORT AND INSTALL A COMPLETE LADDER TRAY SYSTEM.
5. LADDER TRAY ROUTING REQUIREMENTS
   LADDER TRAY SHALL BE ROUTED AROUND OBSTRUCTIONS AS REQUIRED, BUT IN NO CASE SHALL TRAY PREVENT REMOVAL OF CEILING TILES OR PANELS, NOR BLOCK ACCESS TO ELECTRICAL, PLUMBING OR MECHANICAL EQUIPMENT.
6. LADDER TRAY SEPARATION REQUIREMENTS
   TRAY USED FOR SUPPORTING COMMUNICATION CABLING SHALL BE SEPARATED FROM ANY ELECTRICAL BRANCH CIRCUIT BY 3" AND ANY ELECTRICAL FEEDER BY 18".
7. THIS DETAIL IS GENERIC IN NATURE AND IS INTENDED TO DEPICT A VARIETY OF LADDER TRAY INSTALLATION SCENARIOS-NOT ALL OF WHICH APPLY TO A GIVEN PROJECT. IT IS THE CONTRACTORS RESPONSIBILITY TO EXAMINE ALL PROJECT PLANS AND PROVIDE A LADDER TRAY INSTALLATION APPROPRIATE TO THE SITUATION, UTILIZING PORTIONS OF THIS DETAIL AS APPLICABLE, THAT RESULT IN NEAT WORKMANSHIP AND COMPLY WITH ANSI/EIA/TIA STANDARDS.
8. FIRE STOPPING REQUIREMENTS
   FIRE STOPPING OF THRU PENETRATIONS WHERE THE TRAY OR ITS CONTENTS PENETRATE A FIRE RATED WALL, FLOOR, ETC., SHALL BE ACCOMPLISHED BY THE E.C. UTILIZING U.L. LISTED FIRE STOPPING METHODS. E.C. SHALL VERIFY TYPES/QUANTITIES OF CABLES TO BE UTILIZED BY THE OWNER AT EACH THRU PENETRATION CONDITION AND PROVIDE A SUITABLE REENTERABLE FIRESTOP SYSTEM LISTED FOR EACH FIRESTOP CONDITION.
9. RADIUS CABLE DROPS
   PROVIDE RADIUS CABLE DROP OUT(S) MEETING EIA/TIA CABLE BENDING CRITERIA AT TRAY STOPPING POINT WITHIN A TELECOMMUNICATIONS CLOSET OR ANY DISCONTINUITY IN TRAY PATH.
10. LADDER TRAY COORDINATION REQUIREMENTS
    CONTRACTOR SHALL COORDINATE TRAY SYSTEM INSTALLATION WITH ALL TRADES PRIOR TO ORDERING AND AGAIN PRIOR TO INSTALLING TRAY SYSTEM.
11. LADDER TRAY LOADING CAPACITIES
    INSTALLED LADDER TRAY SHALL SUPPORT 40 LB/FT WITH MINIMAL DEFLECTION.
12. LADDER TRAY MANUFACTURERS
    LADDER TRAY PRODUCTS ARE SPECIFIED AS COOPER/B-LINE.

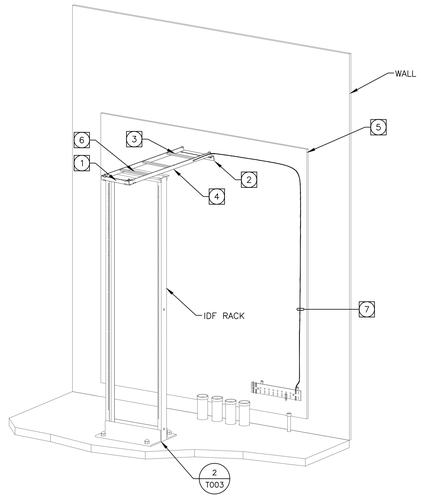

1. RUNWAY END CLOSING KIT. LADDER TRAY TERMINATIONS NOT ADJACENT TO A WALL OR JUNCTION SHALL BE COVERED BY AN END CLOSING KIT. RUBBER GROMMETS OR END CAPS ARE PROHIBITED.
2. RUNWAY WALL ANGLE SUPPORT. SEE DETAIL 6 THIS SHEET FOR MORE INFORMATION.
3. CABLE DROPOUTS SHALL BE USED WHEREVER CABLES ENTER OR LEAVE LADDER TRAY, AND PROVIDE 2 AT EACH RACK (CHATSWORTH #12100-718 OR EQUAL BY COOPER B-LINE).
4. LADDER RUNWAY/TRAY, PER SPECIFICATIONS. SIZE AND LENGTH PER PLANS.
5. PLYWOOD BACKBOARD, BY E.C. SEE PLANS FOR QUANTITY. REFER TO TELECOM PLYWOOD AND GROUND BUS BAR DETAIL THIS SHEET FOR MORE INFORMATION.
6. CHANNEL RACK-TO-RUNWAY MOUNTING PLATE, CHATSWORTH #10595-718, WITH (4) 5/16-18 X 2 1/4" J-BOLTS, (4) 5/16-18 HEX NUTES, (4) 5/16-18 SPLIT LOCK WASHERS, TO SECURE RUNWAY TO TOP OF RACK.
7. LADDER RUNWAY SHALL BE BONDED TO TELECOM BUSBAR WITH #6 AWG SOLID WIRE WITH GREEN INSULATION AND 2 HOLE GROUNDING LUGS ON BOTH ENDS. REFER TO TELECOM PLYWOOD AND GROUND BUS BAR DETAIL THIS SHEET FOR MORE INFORMATION.

LADDER RUNWAY SYSTEM DETAIL — 7
SCALE: NTS

FACE PLATE KEY NOTES:

1. PROVIDE (1) CAT 6, 4 PAIR UTP CABLE(S) TO IDF RACK. TERMINATE STATION END(S) IN STATION CONNECTOR(S) PER DETAILS. TERMINATE RACK END(S) ON CAT-6 PATCH PANEL(S) PER DETAILS.
2. PROVIDE (1) CAT 6, 4 PAIR UTP CABLE(S). TERMINATE STATION END(S) IN STATION CONNECTOR(S) PER DETAILS. TERMINATE IDF ROOM END(S) ON WALL MOUNTED 66M-BLOCKS PER PBX TELEPHONE SYSTEM REQUIREMENTS.
3. PROVIDE DATA CAT-6 STATION CONNECTOR. COLOR OF "DATA" CONNECTOR PER DISTRICT REQUIREMENTS.
4. PROVIDE VOICE 6P6C STATION CONNECTOR. COLOR OF "VOICE" CONNECTOR PER DISTRICT REQUIREMENTS. VERIFY CONNECTOR TYPE WITH DISTRICT STAFF PRIOR TO ORDERING MATERIALS.
5. PROVIDE FACEPLATE. FACEPLATE MATERIAL AND FINISH SHALL MATCH ADJACENT/NEARBY POWER FACEPLATES. SEE SPECIFICATIONS FOR ADDITIONAL FACEPLATE REQUIREMENTS.
6. PROVIDE FACEPLATE LABELING PER SPECIFICATIONS. SEE SPECIFICATIONS FOR ALL OTHER LABELING REQUIREMENTS.
7. PROVIDE BLANK INSERT. ALL UNUSED OPENINGS SHALL BE COVERED WITH A BLANK INSERT MATCHING THE COLOR OF THE FACEPLATE.
8. PROVIDE 2-PORT SURFACE MOUNT DATA BOX. MOUNT ON WALL +72"AFF, OR AS OTHERWISE DIRECTED BY DISTRICT STAFF IN THE FIELD.

WHERE THE FOLLOWING SYMBOLS ARE INDICATED ON THE TECHNOLOGY DRAWINGS, AND/OR ARCHITECTURAL DRAWINGS:

THE FOLLOWING SHALL BE PROVIDED, AS DEPICTED IN THE FOLLOWING DIAGRAMMATIC CONNECTIVITY DETAIL.

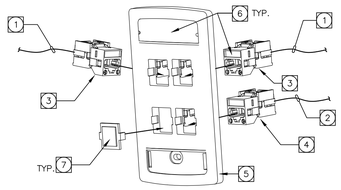

VOICE/DATA COMBINATION OUTLET — 4
SCALE: NTS

WHERE THE FOLLOWING SYMBOLS ARE INDICATED ON THE TECHNOLOGY DRAWINGS, AND/OR ARCHITECTURAL DRAWINGS:

WAP

THE FOLLOWING SHALL BE PROVIDED, AS DEPICTED IN THE FOLLOWING DIAGRAMMATIC CONNECTIVITY DETAIL.

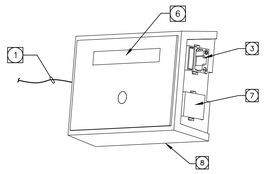

WIRELESS ACCESS POINT OUTLET — 5
SCALE: NTS

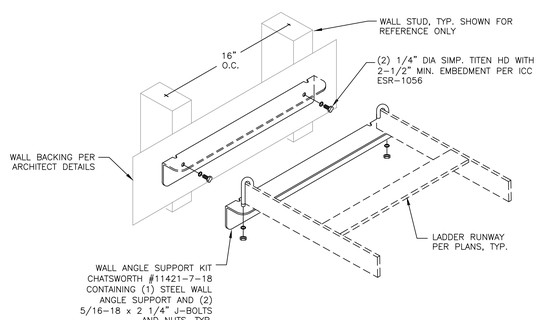

WALL ANGLE SUPPORT DETAIL — 6
SCALE: N.T.S.

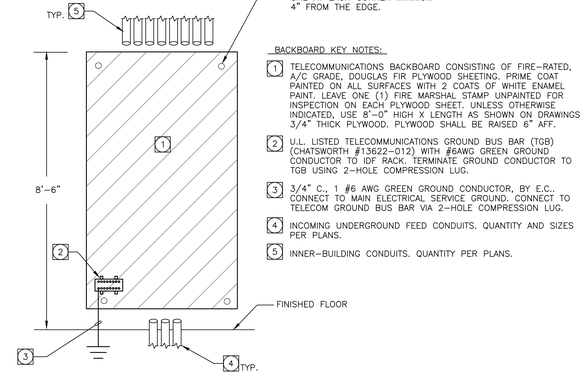

BACKBOARD KEY NOTES:

1. TELECOMMUNICATIONS BACKBOARD CONSISTING OF FIRE-RATED, A/C GRADE, DOUGLAS FIR PLYWOOD SHEETING. PRIME COAT PAINTED ON ALL SURFACES WITH 2 COATS OF WHITE ENAMEL PAINT. LEAVE ONE (1) FIRE MARSHAL STAMP UNPAINTED FOR INSPECTION ON EACH PLYWOOD SHEET. UNLESS OTHERWISE INDICATED, USE 8'-0" HIGH X LENGTH AS SHOWN ON DRAWINGS X 3/4" THICK PLYWOOD. PLYWOOD SHALL BE RAISED 6" AFF.
2. U.L. LISTED TELECOMMUNICATIONS GROUND BUS BAR (TGB) (CHATSWORTH #13622-012) WITH #6AWG GREEN GROUND CONDUCTOR TO IDF RACK. TERMINATE GROUND CONDUCTOR TO TGB USING 2-HOLE COMPRESSION LUG.
3. 3/4" C., 1 #6 AWG GREEN GROUND CONDUCTOR, BY E.C.. CONNECT TO MAIN ELECTRICAL SERVICE GROUND. CONNECT TO TELECOM GROUND BUS BAR VIA 2-HOLE COMPRESSION LUG.
4. INCOMING UNDERGROUND FEED CONDUITS. QUANTITY AND SIZES PER PLANS.
5. INNER-BUILDING CONDUITS. QUANTITY PER PLANS.

TELECOM BACKBOARD AND GROUND BUS BAR — 1
SCALE: NTS

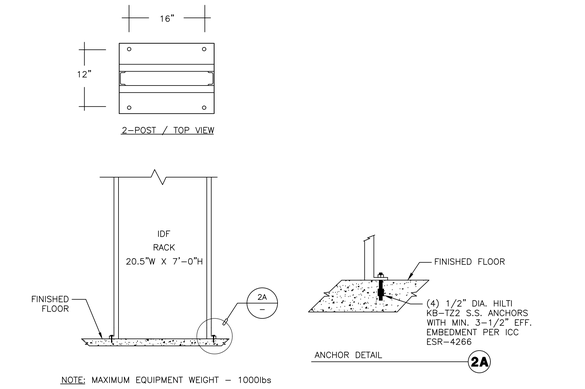

NOTE: MAXIMUM EQUIPMENT WEIGHT - 1000lbs

NOTE: REFER TO PAGES 29/M TO 32/M OF REVISED CALC.

IDF RACK FLOOR MOUNTING DETAIL — 2
SCALE: N.T.S.

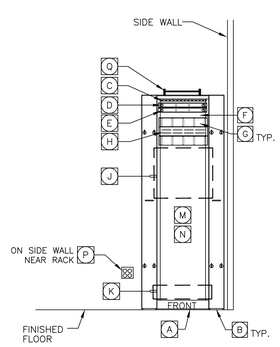

RACK ELEVATION DETAIL NOTES:

A. FLOOR MOUNTED 19" WIDE, 7-FT HIGH, 2-POST U.L.-LISTED RACK PER SPECIFICATIONS. PROVIDE COMPLETE WITH ALL REQUIRED FLOOR MOUNTING HARDWARE AND SECURE TO FLOOR PER FLOOR MOUNTING DETAIL ON THIS SHEET.

B. BLACK, DOUBLE SIDED, 7-FOOT HIGH, 6-INCH WIDE VERTICAL CABLE MANAGER WITH HINGED COVER ON FRONT. PROVIDE ONE ON EACH SIDE OF RACK.

C. RACK MOUNTED GROUND BUS BAR (RGB) (HUBBELL #HBBBHR19KT OR EQUAL). PROVIDE BONDING/GROUNDING FROM THE TELECOMMUNICATIONS GROUND BUSBAR (TGB) TO THIS RACK GROUND BUSBAR AS REQUIRED BY ANSI/TIA-607B. MOUNT TO REAR OF RACK AT TOP POSITION.

D. FIBER OPTIC ENCLOSURE, 1 RMU - PROVIDE SINGLE AND MULTIMODE ADAPTERS, COUPLER PANELS, CONNECTORS, FAN OUT KITS, ETC. AS REQUIRED TO TERMINATE ALL BACKBONE FIBER OPTIC CABLES. TERMINATE ALL STRANDS. FILL ALL UNUSED SLOTS WITHIN THE ENCLOSURE WITH BLANK PANELS. REFERENCE DATA LAN DIAGRAM FOR ADDITIONAL INFORMATION.

E. FIBER OPTIC ENCLOSURE, 1 RMU - PROVIDE SINGLE MODE ADAPTERS, COUPLER PANELS, CONNECTORS, ETC. AS REQUIRED TO ACCOMMODATE FIBER OPTIC CABLES GOING TO CCTV CAMERAS. FILL ALL UNUSED SLOTS WITHIN THE ENCLOSURE WITH BLANK PANELS. REFERENCE CCTV SURVEILLANCE SYSTEM DIAGRAM FOR ADDITIONAL INFORMATION.

F. LEAVE 1U SPACE BLANK FOR FUTURE FIBER OPTIC ENCLOSURE.

G. RACK MOUNTED 2RMU HORIZONTAL WIRE MANAGER. SEE SPECIFICATIONS FOR MORE INFORMATION. PROVIDE ONE MANAGER ABOVE AND BELOW EVERY PATCH PANEL.

H. 48 PORT CATEGORY-6 PATCH PANEL PER SPECIFICATIONS. PROVIDE QUANTITY AS REQUIRED TO TERMINATE ALL CATEGORY-6 CABLES.

J. OWNER-FURNISHED OWNER-INSTALLED NETWORK EQUIPMENT ELECTRONICS, POE SWITCH, ECT. - SHOWN FOR REFERENCE ONLY.

K. OWNER-FURNISHED CONTRACTOR-INSTALLED UPS PER SPECIFICATIONS.

M. CONTRACTOR SHALL PROVIDE AND INSTALL ALL CATEGORY-6 AND FIBER OPTIC DUPLEX PATCH CORDS. PATCH CORDS SHALL BE NEATLY DRESSED TO THE SATISFACTION OF THE DISTRICT.

N. CONTRACTOR SHALL DRESS ALL HORIZONTAL AND BACKBONE CABLES IN A WORKMANSHIP LIKE MANOR UTILIZING 3/4" VELCRO. TYE-WRAPS IN DIRECT CONTACT WITH CABLING IS PROHIBITED. INSPECTION AND APPROVAL BY DISTRICT REPRESENTATIVE IS REQUIRED PRIOR TO ACCEPTANCE OF WORK.

P. ELECTRICAL CONTRACTOR TO PROVIDE (1) NEMA 5-20R 20A 120V/20A CIRCUIT PER ELECTRICAL DRAWINGS, QUAD OUTLETS, VERIFY EXACT LOCATION WITH DISTRICT REPRESENTATIVE PRIOR TO INSTALLATION.

Q. 18"WIDE BLACK LADDER RUNWAY- SECURE TO TOP OF RACK WITH RACK-TO-RUNWAY MOUNTING PLATE, AND TO REAR WALL WITH WALL ANGLE BRACKET. REFER TO LADDER RUNWAY DETAIL FOR MORE INFORMATION.

IDF RACK ELEVATION DETAIL — 3
SCALE: NTS

STATE:

IDENTIFICATION STAMP
DIV. OF THE STATE ARCHITECT
APP: 03-124281 INC:
REVIEWED FOR
SS ☑ FLS ☑ ACS ☑
DATE: 02/04/2025

ARCHITECT:
architecture
westbergwhite
7700 IRVINE CENTER DR. STE. 100
IRVINE, CA 92618
(714) 508-1780 (714) 508-1780 FAX

CONSULTANT:
tk1sc COLLABORATIVE
11870 Pierce Street, Suite 160
Riverside, California 92505
951.299.4160 www.tk1sc.com
Project Leader - Bill Voller
Electrical Lead - Bill Voller
tk1sc Job #: US0027568.7397

REGISTERED PROFESSIONAL ENGINEER
RAYMOND W. SWANSON
No. E15610
Ex. 12/31/2025
ELECTRICAL
STATE OF CALIFORNIA

PROJECT NAME:
Bellflower Unified School District
Mayfair High School Athletics Fields
6000 North Woodruff Ave
Lakewood, California 90713

CLIENT:
BELLFLOWER UNIFIED SCHOOL DISTRICT
16703 S. Clark Ave.
BELLFLOWER, CALIFORNIA 90706

#	Rev. Date	Description

JOB NO:	15008.01
DATE:	05/28/2024
DRAWN:	TG, XY
CHECK:	RB, JG
ARCHITECT:	PDW
ENGINEER:	

SHEET DESCRIPTION:
LOW VOLTAGE SYSTEMS DETAILS

SHEET NO:
T003

GENERAL NOTES:

1– ALL DUCT DIMENSIONS ON DRAWINGS TO BE INSIDE CLEAR.
2– ALL ROOM THERMOSTATS TO BE MOUNTED AT ELEVATION SHOWN ON THIS SHEET. SEE DETAIL BELOW.
3– ALL INDIVIDUAL DUCTWORK BRANCH CONNECTING TO SUPPLY, RETURN, EXHAUST, OUTSIDE AIR, ETC.. AIR TERMINAL SHALL BE EQUIPPED WITH A MANUAL VOLUME DAMPER.
4– ALL SQUARE ELBOWS TO BE PROVIDED WITH TURNING VANES UNLESS OTHERWISE INDICATED.
5– DO NOT USE SQUARE ELBOW WITH TURNING VANES AT THE FIRST CHANGE IN DIRECTION OF AIR AFTER THE FAN DISCHARGE. INSTALL ACOUSTICALLY LINED RADIUS ELBOW.
6– TO DETERMINE THE EXACT NUMBER AND LOCATION OF FIRE DAMPERS AND COMBINATION SMOKE/FIRE DAMPERS THAT MAY BE REQUIRED, THE CONTRACTOR SHALL REVIEW THE ARCHITECTURAL DRAWINGS WHICH INDICATE THE LOCATION OF FIRE RATED WALLS, PARTITIONS AND CEILINGS.
7– COORDINATE LOCATION OF CEILING DIFFUSERS, REGISTERS AND GRILLES WITH ARCHITECTURAL REFLECTED CEILING PLAN AND ELECTRICAL LIGHTING PLAN.
8– FOR BUILDING LOCATIONS, DIMENSIONS AND GRADE ELEVATIONS SEE ARCHITECTURAL AND STRUCTURAL DRAWINGS.
9– PROVIDE WATER PROOFING FOR ALL EQUIPMENT ANCHORAGE ON ROOF AND DUCT PENETRATIONS THRU ROOF PER ARCHITECTURAL DETAILS.
10– ROUND AND RECTANGULAR DUCTWORK IS INTERCHANGEABLE UPON APPROVAL OF MECHANICAL ENGINEER. CONTRACTOR IS TO VERIFY THE EXACT CEILING SPACE AND INTERCHANGE THE DUCT SIZE TO FIT THE CEILING SPACE WITHOUT ADDITIONAL FEE.
11– PROVIDE BACK-DRAFT DAMPER FOR ALL EXHAUST AIR DUCT THRU BUILDING ENVELOPE UNLESS OTHERWISE NOTED.
12– PROVIDE ALL FRESH AIR INTAKES AND EXHAUST OUTLETS WITH HOOD, 1/2" GALVANIZED MESH SCREENS.
13– EXHAUST DUCT TERMINATION SHALL BE MINIMUM 10'–0" AWAY OR 3'–0" ABOVE FROM ANY FRESH AIR INTAKE, OPENABLE WINDOWS, DOORS AND 10'–0" MINIMUM ABOVE GRADE.
14– CONTRACTOR SHALL COORDINATE MOUNTING HEIGHT OF ALL DUCTWORK WITH THE WORK OF ALL OTHER TRADES SUCH AS STRUCTURAL BEAMS, PLUMBING PIPINGS, FIRE SPRINKLER PIPING, ELECTRICAL CONDUITS, LIGHT FIXTURES, ETC.. WHERE REQUIRED OR NOTED ON DRAWINGS, RUN DUCTWORK BETWEEN LIGHT FIXTURES, BEAMS, ETC..
15– PROVIDE WATER PROOFING FOR ALL FLASHING AND COUNTERFLASHING FOR MECHANICAL WORK.
16– THESE DRAWINGS AND SPECIFICATIONS DO NOT INCLUDE NECESSARY COMPONENTS FOR CONSTRUCTION SAFETY.
17– SYMBOLS AND ABBREVIATIONS ON THIS SHEET ARE SHOWN FOR REFERENCE; NOT ALL SYMBOLS AND ABBREVIATIONS MAY BE USED.
18– ALL NOTES ON THIS SHEET REMAIN PART OF THE CONTRACT DOCUMENTS.
19– ASBESTOS OR HAZARDOUS WASTE: IT IS UNDERSTOOD AND AGREED THAT THIS CONTRACT DOES NOT CONTEMPLATE THE HANDLING OF ASBESTOS OR ANY HAZARDOUS WASTE MATERIAL. IF ASBESTOS OR ANY HAZARDOUS WASTE MATERIAL IS ENCOUNTERED, NOTIFY THE OWNER IMMEDIATELY. DO NOT DISTURB, HANDLE OR ATTEMPT TO REMOVE.
20– FOR ACTUAL DIMENSIONS OF LOUVER SIZES SEE ARCHITECTURAL DRAWINGS, PROVIDE AND ATTACH PLENUMS AND OR DUCTS TO ACCOMMODATE THOSE DIMENSIONS AS NEEDED.
21– UNIT NUMBERS FOR MECHANICAL EQUIPMENT SHOWN IN SCHEDULES ARE FOR TYPE OF UNIT ONLY. FOR QUANTITIES & LOCATIONS OF MECHANICAL UNITS, SEE MECHANICAL DRAWINGS.
22– ALL ZONE DAMPERS AND COMBINATION SMOKE FIRE DAMPERS TO BE PERMANENTLY LABELED TO INDICATE THE ROOM(S) THEY SERVE.
23– ALL WORK SHALL CONFORM TO THE 2022 EDITION OF THE CALIFORNIA MECHANICAL CODE, INCLUDING ALL APPLICABLE STATE TITLE 24 AMENDMENTS, CITY AND COUNTY LAWS AND ORDINANCES.
24– THE CONTRACTOR SHALL FURNISH AND INSTALL ACCESS DOORS AND/OR ACCESS PANELS AT LOCATIONS AS NECESSARY TO PROVIDE ACCESSIBILITY FOR SERVICE/ MAINTENANCE OF FIRE/SMOKE DAMPERS, MECHANICAL EQUIPMENT AND DEVICES. ALL ACCESS DOORS AND PANEL LOCATIONS AND SIZES SHALL BE PROVIDED BY CONTRACTOR AND SUBMITTED TO ARCHITECT PRIOR TO INSTALLATION FOR VERIFICATION PURPOSES.
25– CONTRACTOR SHALL VISIT SITE PRIOR TO BID TO VERIFY OPERABILITY, LOCATION AND SIZES OF ALL EXISTING EQUIPMENT/ SERVICES AND INFORM THE ARCHITECT OF ANY DISCREPANCIES.
26– THE CONTRACTOR SHALL FURNISH ALL MATERIALS, LABOR, EQUIPMENT, TRANSPORTATION AND SERVICES NECESSARY FOR COMPLETION OF THE WORK. ALL MATERIALS AND WORK SHALL COMPLY WITH APPLICABLE CODES AND GOVERNING REGULATIONS AND MEET THE APPROVAL OF THE DIVISION OF STATE ARCHITECTS.
27– TAKE ALL PRECAUTIONS NECESSARY TO PROTECT THE MATERIALS BEFORE, DURING AND AFTER INSTALLATION. IN THE EVENT OF DAMAGE, IMMEDIATELY REPAIR ALL DAMAGED AND DEFECTIVE WORK TO THE APPROVAL OF THE ARCHITECT AT NO ADDITIONAL COST TO THE OWNER.
28– ALL SPACE CONDITIONING EQUIPMENT SHALL BE CERTIFIED BY MANUFACTURER TO COMPLY WITH ALL APPLICABLE REQUIREMENTS OF CALIFORNIA BUILDING ENERGY EFFICIENCY STANDARD.
29– INSTALLATION INSTRUCTION FOR ALL LISTED EQUIPMENT SHALL BE MADE AVAILABLE TO THE BUILDING INSPECTOR AT THE TIME OF INSPECTION.
30– PROVIDE AIR DIFFUSERS AND GRILLES TO MATCH THE CURVATURE WHEN AIR DIFFUSERS AND GRILLES APPEARED TO BE CURVED OR TO BE INSTALLED ON A CURVED SURFACE.
31– ALL PARTS OF AN EXPOSED AIR DISTRIBUTION SYSTEM TO BE PAINTED AS REQUIRED PER ARCHITECT. COORDINATE FINISHING COLOR WITH ARCHITECT.

COORDINATION NOTES:

1– THESE DRAWINGS ARE DIAGRAMMATIC AND SHOW IN GENERAL WHERE THE DUCTWORK, PIPING AND OTHER WORK SPECIFIED IN THE HVAC SECTIONS OF THE SPECIFICATIONS IS TO BE LOCATED. THE DRAWINGS DO NOT NECESSARILY INDICATE ANY AND ALL OFFSETS AND CONFIGURATIONS REQUIRED FOR COORDINATION WITH THE SPACE REQUIREMENTS OF OTHER TRADES. THE CONTRACTOR IS RESPONSIBLE FOR THE CORRECT PLACING, LOCATION, AND CONNECTION OF THIS WORK IN RELATION TO THE WORK OF OTHER TRADES.
2– THE CONTRACTOR SHALL EXAMINE ALL MECHANICAL, PLUMBING, ARCHITECTURAL, STRUCTURAL, ELECTRICAL AND OTHER DRAWINGS THAT HAVE BEEN PREPARED FOR THIS PROJECT, AND ACCEPT SUCH CONDITIONS, AND MAKE ALLOWANCES FOR THEM IN PREPARING THE BID.
3– COORDINATE FINISHING COLOR OF ALL AIR TERMINALS WITH ARCHITECT.
4– CONTRACTOR SHALL COORDINATE WITH GENERAL CONTRACTOR FOR SIZE AND LOCATION OF DUCTWORK ROOF OPENINGS AND WITH ELECTRICAL CONTRACTOR FOR ELECTRICAL REQUIREMENTS OF ALL MECHANICAL EQUIPMENT.

POLLUTANT CONTROL NOTES:

1– FOR THE PERIOD OF ROUGH INSTALLATION, OR DURING STORAGE ON THE CONSTRUCTION SITE AND UNTIL FINAL STARTUP OF THE HEATING AND COOLING EQUIPMENT, PROVIDE COVERING OF DUCT OPENINGS AND PROTECTION OF MECHANICAL EQUIPMENT DURING CONSTRUCTION. ALL DUCT AND OTHER RELATED AIR DISTRIBUTION COMPONENT OPENINGS SHALL BE COVERED WITH TAPE, PLASTIC, SHEET METAL OR OTHER METHODS ACCEPTABLE TO THE ENFORCING AGENCY. (5.504.3 CAL GREEN)
2– ADHESIVES, SEALANTS, AND CAULKS USED ON THE PROJECT SHALL MEET THE REQUIREMENTS OF THE CALIFORNIA GREEN BUILDING STANDARDS (5.504.4.1 CAL GREEN)

AIR FILTRATION NOTES:

1– PROVIDE FILTER AT AIR CONDITIONING AND/OR AIR SIDE UNITS FOR OUTSIDE AND RETURN AIR PRIOR TO OCCUPANCY AS REQUIRED PER ASHRAE AND CODE.
2– AIR FILTER SHALL BE A STATE FIRE MARSHAL APPROVED AND LISTED TYPE. PREFORMED FILTERS HAVING COMBUSTIBLE FRAMING SHALL BE TESTED AS A COMPLETE ASSEMBLY. AIR FILTERS IN ALL OCCUPANCIES SHALL BE CLASS 1 OR 2 (AS SHOWN IN THE STATE FIRE MARSHAL LISTING). AIR FILTERS SHALL BE ACCESSIBLE FOR CLEANING OR REPLACEMENT. (408.1 CMC)
3– AIR FILTER MEDIA SHALL PROVIDES AT LEAST A MINIMUM EFFICIENCY REPORTING VALUE (MERV) OF 13.

MANUAL VOLUME DAMPER NOTES:

1– PROVIDE MANUAL VOLUME DAMPERS WITH REMOTE CONTROL WHERE HARD LID CEILING IS INSTALLED OR ACCESS TO TYPICAL MANUAL VOLUME DAMPER IS NOT POSSIBLE. PROVIDE PRODUCTS OF METROPOLITAN AIR TECHNOLOGY, ROTO-TWIST MODEL NUMBER RT-250 SERIES III FOR ROUND DUCT AND MODEL RT-100 SP/CC FOR RECTANGULAR DUCT APPLICATION OR APPROVED EQUAL PRODUCTS. PROVIDE GUIDE CABLE OF REQUIRED LENGTH FOR INSTALLATION OF THE CEILING CUP AND COVER PLATE AT LOCATIONS APPROVED BY ARCHITECT.

ACOUSTICAL DUCT LINING NOTES:

1– ALL SUPPLY AND RETURN AIR DUCTWORK SHALL BE ACOUSTICALLY LINED FROM CONNECTION POINT OF UNIT TO MIN. 20 FEET DOWN STREAM OF THE UNIT OPENING. SEE MECHANICAL DRAWINGS FOR EXTENDED (MORE THAN 20')REQUIREMENT OF DUCT LINING. ALL BRANCH DUCTWORK WITH TAKEOFF FROM MAIN SUPPLY/RETURN DUCTS WITHIN 20 FEET OF THE UNIT OPENING SHALL BE ACOUSTICALLY LINED IN ITS ENTIRETY INCLUDING ANY DUCT FITTINGS, ELBOWS, SUB-BRANCH DUCTS, AND SUPPLY/RETURN DIFFUSER/GRILLE PLENUMS. ALL DUCT FITTINGS AND ELBOWS WHERE SHOWN TO BE CONNECTED TO A LINED DUCTWORK SHOULD BE PROVIDED WITH THE SAME LINING SPECIFIED FOR THE DUCT. DUCT LINING AND INSULATION MATERIAL AND THICKNESS SHALL BE PER SPECIFICATION BOOK.

MEP COMPONENT ANCHORAGE NOTE:

ALL MECHANICAL, PLUMBING, AND ELECTRICAL COMPONENTS SHALL BE ANCHORED AND INSTALLED PER THE DETAILS ON THE DSA APPROVED CONSTRUCTION DOCUMENTS. THE FOLLOWING COMPONENTS SHALL BE ANCHORED OR BRACED TO MEET THE FORCE AND DISPLACEMENT REQUIREMENTS PRESCRIBED IN THE 2022 CBC, SECTIONS 1617A.1.18 THROUGH 1617A.1.26 AND ASCE 7–16 CHAPTER 13, 26, AND 30:

1. ALL PERMANENT EQUIPMENT AND COMPONENTS.
2. TEMPORARY, MOVABLE OR MOBILE EQUIPMENT THAT IS PERMANENTLY ATTACHED (E.G. HARD WIRED) TO THE BUILDING UTILITY SERVICES SUCH AS ELECTRICITY, GAS, OR WATER. "PERMANENTLY ATTACHED" SHALL INCLUDE ALL ELECTRICAL CONNECTIONS EXCEPT PLUGS FOR 110/220 VOLT RECEPTACLES HAVING A FLEXIBLE CABLE.
3. TEMPORARY, MOVABLE OR MOBILE EQUIPMENT WHICH IS HEAVIER THAN 400 POUNDS OR HAS A CENTER OF MASS LOCATED 4 FEET OR MORE ABOVE THE ADJACENT FLOOR OR ROOF LEVEL THAT DIRECTLY SUPPORT THE COMPONENT IS REQUIRED TO BE RESTRAINED IN A MANNER APPROVED BY DSA.

THE FOLLOWING MECHANICAL AND ELECTRICAL COMPONENTS SHALL BE POSITIVELY ATTACHED TO THE STRUCTURE BUT NEED NOT DEMONSTRATE DESIGN COMPLIANCE WITH THE REFERENCES NOTED ABOVE. THESE COMPONENTS SHALL HAVE FLEXIBLE CONNECTIONS PROVIDED BETWEEN THE COMPONENT AND ASSOCIATED DUCTWORK, PIPING, AND CONDUIT. FLEXIBLE CONNECTIONS MUST ALLOW MOVEMENT IN BOTH TRANSVERSE AND LONGITUDINAL DIRECTIONS.

A. COMPONENTS WEIGHING LESS THAN 400 POUNDS AND HAVE A CENTER OF MASS LOCATED 4 FEET OR LESS ABOVE THE ADJACENT FLOOR OR ROOF LEVEL THAT DIRECTLY SUPPORT THE COMPONENT.
B. COMPONENTS WEIGHING LESS THAN 20 POUNDS, OR IN THE CASE OF DISTRIBUTED SYSTEM, LESS THAN 5 POUNDS PER FOOT, WHICH ARE SUSPENDED FROM A ROOF OR FLOOR OR HUNG FROM A WALL.

THE ANCHORAGE OF ALL MECHANICAL, ELECTRICAL AND PLUMBING COMPONENTS SHALL BE SUBJECT TO THE APPROVAL OF THE DESIGN PROFESSIONAL IN GENERAL RESPONSIBLE CHARGE OR STRUCTURAL ENGINEER DELEGATED RESPONSIBILITY AND ACCEPTANCE BY DSA. THE PROJECT INSPECTOR WILL VERIFY THAT ALL COMPONENTS AND EQUIPMENT HAVE BEEN ANCHORED IN ACCORDANCE WITH THE ABOVE REQUIREMENTS.

PIPING, DUCTWORK, AND ELECTRICAL DISTRIBUTION SYSTEM BRACING NOTE

PIPING, DUCTWORK, AND ELECTRICAL DISTRIBUTION SYSTEMS SHALL BE BRACED TO COMPLY WITH THE FORCES AND DISPLACEMENT PRESCRIBED IN ASCE 7–16 SECTION 13.3 AS DEFINED IN ASCE 7–16 SECTIONS 13.6.5, 13.6.6, 13.6.7, 13.6.8; AND THE 2022 CBC, SECTIONS 1617A.1.24, 1617A.1.25 AND 1617A.1.26.

THE METHOD OF SHOWING BRACING AND ATTACHMENT TO THE STRUCTURE FOR THE IDENTIFIED DISTRIBUTION SYSTEM ARE AS NOTED BELOW. WHEN BRACING AND ATTACHMENT ARE BASED ON A PREAPPROVED INSTALLATION GUIDE (E.G., HCAI OPM FOR 2013 CBC OR LATER), COPIES OF THE BRACING SYSTEM INSTALLATION GUIDE OR MANUAL SHALL BE AVAILABLE ON THE JOBSITE PRIOR TO THE START OF AND DURING THE HANGING AND BRACING OF THE DISTRIBUTION SYSTEMS. THE STRUCTURAL ENGINEER OF RECORD SHALL VERIFY THE ADEQUACY OF THE STRUCTURE TO SUPPORT THE HANGER AND BRACE LOADS.

MECHANICAL PIPING (MP), MECHANICAL DUCTS (MD), PLUMBING PIPING (PP), ELECTRICAL DISTRIBUTION SYSTEM (E):

MP☐ MD☒ PP☐ E☐ OPTION 1: DETAILED ON THE APPROVED DRAWING WITH PROJECT SPECIFIC NOTES AND DETAILS.

MP☐ MD☐ PP☐ E☐ OPTION 2: SHALL COMPLY WITH HCAi (OSHPD) PRE-APPROVAL (OPM#) #_____.

STRUCTURAL NOTES:

1– UNLESS SPECIFICALLY SHOWN ON THESE PLANS NO STRUCTURAL MEMBER SHALL BE CUT, NEITHER DRILLED NOR NOTCHED WITHOUT PRIOR WRITTEN AUTHORIZATION FROM THE STRUCTURAL ENGINEER AND THE DIVISION OF THE STATE ARCHITECT/AUTHORITIES HAVING JURISDICTION.
2– CUTTING, BORING, SAW CUTTING OR DRILLING THROUGH THE NEW OR EXISTING STRUCTURAL ELEMENTS TO BE DONE ONLY WHEN SO DETAIL IN THE DRAWINGS OR ACCEPTED BY THE ARCHITECT WITH THE APPROVAL OF DSA/AHJ.
3– ALL WELDING SHALL BE SPECIALLY INSPECTED BY AN AWS-CWI QUALIFIED INSPECTOR APPROVED BY DSA/AHJ.
4– ALL BRACING OF DUCTS AND PIPING SHALL BE INSTALLED IN ACCORDANCE WITH SMACNA MANUAL. SEE SEISMIC RESTRAINT NOTES ON THIS SHEET.
5– WHERE BRACING DETAILS ARE NOT SHOWN ON THE DRAWINGS OR IN THE SMACNA GUIDELINES, THE FIELD INSTALLATION SHALL BE SUBJECTED TO THE APPROVAL OF THE ARCHITECT, STRUCTURAL ENGINEER AND DSA FIELD ENGINEER OR AHJ.
6– A COPY OF THE MANUAL PUBLISHED BY SMACNA SHALL BE PROVIDED BY THE CONTRACTOR AND KEPT ON THE JOB AT ALL TIMES.

COMBINATION SMOKE AND FIRE DAMPER:

1– FIRE DAMPERS SHALL BE STATE FIRE MARSHAL APPROVED, UL LISTED AND INSTALLED STRICTLY IN ACCORDANCE WITH THE MANUFACTURER'S INSTRUCTIONS AND LISTING. MANUFACTURER'S INSTRUCTIONS SHALL BE MADE AVAILABLE TO THE INSPECTING AUTHORITY. DETAILS SHOWN ARE FOR REFERENCE ONLY.

THERMOSTAT & ROOM SENSOR NOTES:

1– TEMPERATURE THERMOSTAT: TEMPERATURE RANGE 55°F TO 85°F SEQUENCE HEATING AND COOLING, ADJUSTABLE TO 10°F BETWEEN HEATING AND COOLING, CAPABILITY TO TERMINATE ALL HEATING AT NO MORE THAN 70°F AND TERMINATE ALL COOLING AT NOT LESS THAN 78°F OR PROVIDE T-STAT TO MEET THE OWNER'S STANDARDS, WHERE APPLICABLE.
2– THE LOCATION OF THERMOSTATS TO BE FINALIZED DURING CONSTRUCTION. IF THE LOCATION OF THE THERMOSTATS SHOWN ON MECHANICAL DRAWINGS ARE IN CONFLICT WITH BUILDING ELEMENTS OR DESIGN, CONTRACTOR SHALL RELOCATE THE THERMOSTAT AND RUN REQUIRED WIRING FOR A SUCCESSFUL INSTALLATION TO ANOTHER LOCATION APPROVED BY MECHANICAL ENGINEER AND ARCHITECT AT NO ADDITIONAL COST TO THE OWNER UP TO MAXIMUM 20' AWAY FROM ORIGINAL LOCATION SHOWN ON MECHANICAL DRAWINGS.
3– DO NOT INSTALL THERMOSTATS WHERE THE OPERATION OF THE DEVICE MAY BE EFFECTED BY:
   a. DIRECT SUNSHINE EFFECT.
   b. MINIMIZED AIR CIRCULATION (BEHIND THE DOORS OR CABINETS OR SIMILAR LOCATIONS).
   c. OUTDOOR TEMPERATURE (ON EXTERIOR WALLS, OR SIMILAR LOCATIONS).
   d. HEAT GENERATING EQUIPMENT (PROVIDE PROPER DISTANCE FROM HEAT GENERATING EQUIPMENT).
   e. LOCATIONS SHOWN ON THE DRAWINGS ARE FOR REFERENCE ONLY. CONTRACTOR SHALL COORDINATE BETWEEN DRAWINGS AND WORKS OF OTHER TRADES AND ENSURE PROPER LOCATION SELECTION FOR INSTALLATION OF THE THERMOSTAT FOR SATISFACTORY OPERATION OF THE DEVICE.
   f. THERMOSTATS SHALL BE INSTALLED AT HEIGHTS SHOWN ON CONTRACT DOCUMENTS AND AS REQUIRED FOR ACCESSIBILITY REGULATIONS.
4– PROVIDE INSULATED THERMOSTAT BOX IF THERMOSTAT TO BE INSTALLED ON EXTERIOR WALL.
5– MOUNTING HEIGHT SHALL MEET THE ACCESS REQUIREMENTS OF THE DIAGRAM BELOW:
6– PROVIDE MIN. 30"X48" CLEAR FLOOR SPACE FOR PARALLEL OR PERPENDICULAR APPROACH AT EACH LOCATION.

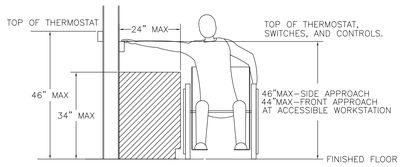

APPLICABLE CODES:

2022 BUILDING STANDARDS ADMINISTRATIVE CODE, PART 1, TITLE 24 C.C.R.
2022 CALIFORNIA BUILDING CODE (CBC), PART 2, TITLE 24 C.C.R.
2022 CALIFORNIA ELECTRICAL CODE (CEC), PART 3, TITLE 24 C.C.R.
2022 CALIFORNIA MECHANICAL CODE (CMC), PART 4, TITLE 24 C.C.R.
2022 CALIFORNIA PLUMBING CODE (CPC), PART 5, TITLE 24 C.C.R.
2022 CALIFORNIA ENERGY CODE, PART 6, TITLE 24 C.C.R.
2022 CALIFORNIA FIRE CODE, PART 9, TITLE 24 C.C.R.
2022 CALIFORNIA GREEN BUILDING STANDARD CODE, PART 11, TITLE 24 C.C.R.
2022 CALIFORNIA REFERENCED STANDARDS, PART 12, TITLE 24 C.C.R.
TITLE 19 C.C.R., PUBLIC SAFETY, STATE FIRE MARSHAL REGULATIONS.

ABBREVIATIONS:

AAV	AUTOMATIC AIR VENT
AC	AIR CONDITIONING
ACD	AUTOMATIC CONTROL DAMPER
ACU	AIR CONDITIONING UNIT
ACV	AUTOMATIC CONTROL VALVE
AD	ACCESS DOOR
AF	AIR FOIL
AFF	ABOVE FINISHED FLOOR
AFS	AUTOMATIC FIRE SPRINKLER
AHU	AIR HANDLING UNIT
AMB	AMBIENT
AMD	AIR MEASURING DEVICE
AN	PIPE ANCHOR
ANV	ANGLE VALVE
AP	ACCESS PANEL
ARCH	ARCHITECTURAL
AT	AIR TERMINAL
ATC	AUTOMATIC TEMPERATURE CONTROL
BC	BALANCING COCK
BDD	BACK DRAFT DAMPER
BFV	BUTTERFLY VALVE
BHP	BRAKE HORSEPOWER
BI	BACKWARD INCLINED
BIW	BACKWARD INCLINED WHEEL
BLV	BALL VALVES
BTU	BRITISH THERMAL UNIT
BTUH	BTU PER HOUR
BV	BALANCING COCK
BOP	BOTTOM OF PIPE
BOD	BOTTOM OF DUCT
CC	COOLING COIL
CD	CEILING DIFFUSER
CFM	CUBIC FEET PER MINUTE
CHWR	CHILLED WATER RETURN
CHWS	CHILLED WATER SUPPLY
CLG	CEILING
COMP	COMPRESSOR
CONDC	CONDENSATE
CONT	CONTINUATION
COP	COEFFICIENT OF PERFORMANCE
CT	FACTORY-FABRICATED COOLING TOWER
CU	CONDENSING UNIT
CV	CHECK VALVE
C	FLOW COEFFICIENT
CWR	CONDENSER WATER RETURN
CWS	CONDENSER WATER SUPPLY
DCV	DEMAND CONTROLLED VENTILATION
D	DROP
D-D	DOUBLE DEFLECTION (PATTERN)
DAD	DUCT ACCESS DOOR
DB	DRY BULB
DCV	DEMAND CONTROLLED VENTILATION
DIAM	DIAMETER
DIFF	DIFFUSER
DL	DOOR LOUVER
DR	DRAIN
E (NAME)	EXISTING PIPE
ESP	EXTERNAL STATIC PRESSURE
EA	EXHAUST AIR
EAR	EXHAUST AIR REGISTER
EER	ENERGY EFFICIENCY RATIO
EF	EXHAUST FAN
EJ	EXPANSION JOINT
ELEC	ELECTRICAL
ENT	ENTERING
ER	ECCENTRIC REDUCER
EWT	ENTERING WATER TEMPERATURE
EXH	EXHAUST
F	FILTER
°F	DEGREE FAHRENHEIT
F&BP	FACE AND BYPASS DAMPERS
F&T	FLOAT AND THERMOSTATIC TRAPS
FLA	FULL LOAD AMPERAGE
FA	FREE AREA
FC	FLEXIBLE CONNECTION
FCU	FAN COIL UNIT
FD	FIRE DAMPER
FIN	FINISHED
FLR	FLOOR
FPM	FEET PER MINUTE
FPS	FEET PER SECOND
FS	FLOW SWITCH
FT	FEET
FF	FINISHED FLOOR
GA	GAUGE
GAL	GALLON
GALV	GALVANIZED
GC	GAS COCK
GLV	GLOBE VALVE
GPM	GALLONS PER MINUTE
GV	GATE VALVE
H	HIGH
HB	HOSE BIBB
HC	HEATING COIL
HEPA-AF	HIGH EFFICIENCY PARTICULATE AIR FILTERS
HP	HORSEPOWER
HPR	HIGH PRESSURE RETURN
HPS	HIGH PRESSURE STEAM
HVAC	HEATING, VENTILATING AND AIR-CONDITIONING
HW	HOT WATER
HWR	HOT WATER RETURN
HWS	HOT WATER SUPPLY
KW	KILOWATT
L	LONG
LRA	LOCKED ROTOR (AMPERAGE)
LAT	LEAVING AIR TEMPERATURE
LBS	POUNDS
LD	LINEAR DIFFUSER
LDB	LEAVING DB TEMPERATURE
LIN FT	LINEAR FEET
LPR	LOW-PRESSURE RETURN
LPS	LOW-PRESSURE STEAM
LVG	LEAVING
LWB	LEAVING WB TEMPERATURE
LWT	LEAVING WATER TEMPERATURE
1-W	ONE WAY (PATTERN)
2-W	TWO WAY (PATTERN)
3-W	THREE WAY (PATTERN)
4-W	FOUR WAY (PATTERN)
MAV	MANUAL AIR VENT
MAX	MAXIMUM
MB	MIXING BOX
MBH	THOUSAND BTU PER HOUR
MCC	MOTOR CONTROL CENTER
MG	GAS – MEDIUM PRESSURE
MIN	MINIMUM
MOT	MOTOR
MPR	MEDIUM PRESSURE RETURN
MPS	MEDIUM PRESSURE STEAM
MU	MAKE-UP WATER
MV	MOTOR OPERATED VALVE
MVD	MANUAL VOLUME DAMPER
MZ-AHU	MULTI-ZONE AIR HANDLING UNITS
MCA	MINIMUM CIRCUIT AMP.
MOCP	MAXIMUM OVER CURRENT PROTECTION
NC	NORMALLY CLOSED
NIC	NOT IN CONTRACT
NO	NORMALLY OPEN
NO.	NUMBER
NPSH	NET POSITIVE SUCTION HEAD
NTS	NOT TO SCALE
OBD	OPPOSED BLADE DAMPER
OAI	OUTSIDE AIR INTAKE
OD	OUTSIDE DIAMETER
OPW	OPERATING WEIGHT
OSA	OUTSIDE AIR
OV	OUTLET VELOCITY
OPNG	OPENING
PD	PRESSURE DROP
PF	PERFORATED (FACE)
PG	PRESSURE GAUGE
PH	PHASE (ELECTRICAL)
POC	POINT OF CONNECTION
POR	POINT OF REMOVAL
PRESS	PRESSURE
PRV	PRESSURE REDUCING VALVE
PS	PRESSURE SWITCH
PSI	POUNDS PER SQUARE INCH
PSIA	PSI ABSOLUTE
PSIG	PSI GAUGE
PT	PLUGGED TEE
PTR	PRESSURE-TEMPERATURE RELIEF VALVE
PVC	POLYVINYL CHLORIDE PIPE
R	RISE
RLA	RATED LOAD (AMPERAGE)
RA	RETURN AIR
RAR	RETURN AIR REGISTER
RAG	RETURN AIR GRILLE
RCT	RECTANGULAR (FACE)
RD	REFRIGERANT DISCHARGE LINE
RD	ROOF DRAINS
REG	REGISTER
RG	RELIEF GRILLE
RHC	REHEATING COIL
RL	REFRIGERANT LIQUID LINE
RPM	REVOLUTION PER MINUTE
RS	REFRIGERANT SUCTION LINE
RV	RELIEF VALVE
SA	SUPPLY AIR
SAC	SPLIT AIR CONDITIONER
SAD	SUPPLY AIR DIFFUSER
SAR	SUPPLY AIR REGISTER
SD	SMOKE DETECTOR
SEER	SEASONAL ENERGY-EFFICIENCY RATIO
SENS	SENSIBLE
SF	SUPPLY FAN
SHR	SENSIBLE HEAT RATIO
SMACNA	SHEET METAL & AIR CONDITIONING NATIONAL ASSOCIATION
SMD	AUTOMATIC SMOKE DAMPER
SOH	SHUT OFF HEAD
SOV	SHUT OFF VALVE
SP	STATIC PRESSURE
SPEC	SPECIFICATION
SQ	SQUARE (FACE)
SQ. FT.	SQUARE FOOT
ST	SOUND TRAP
STR	STRAINER
TA	THROW AWAY (FILTER)\
TC	TEMPERATURE CONTROL
TCP	TEMPERATURE CONTROL PANEL
TCV	AUTOMATIC TEMPERATURE CONTROL VALVE
TD	TRANSFER DUCT
TDH	TOTAL DYNAMIC HEAD
TEFC	TOTALLY ENCLOSED FAN-COOLED MOTOR
TOP	TOP OF PIPE
TOD	TOP OF DUCT
TEMP	TEMPERATURE
TG	TRANSFER GRILLE
TH	THERMOMETER
TV	TURNING VANES
TW	THERMOMETER WELL
TYP	TYPICAL
UC	UNDERCUT (DOOR)
UH	UNIT HEATER
UL	UNDERWRITERS LABORATORY
UN	UNION
UTR	UP THRU ROOF
UV	UNIT VENTILATOR
V	VENT OR ATMOSPHERIC RELIEF
VAC	VACUUM
VAV	VARIABLE AIR VOLUME
VD	VOLUME DAMPER
VIL	VERTICAL IN-LINE
VTR	VENT THRU ROOF
W	WIDE
W/	WITH
W-CLR	WATER COOLER
W C	WATER COOLED
W G	WATER GAUGE (PRESSURE)
W/O	WITHOUT
WB	WET BULB
WBT	WET BULB TEMPERATURE
WG	WATER GAUGE
WMS	WIRE MESH SCREEN
WP	WORKING PRESSURE

HVAC SYMBOLS:

RETURN AIR DUCT UP
SUPPLY AIR DUCT UP
EXHAUST AIR DUCT UP
RETURN AIR DUCT DOWN
SUPPLY AIR DUCT DOWN
EXHAUST AIR DUCT DOWN
OR ELBOWS WITH TURNING VANES
OR TEE DUCT WITH TURNING VANES
OR DUCT WITH ACOUSTICAL LINING
OR D DUCT DROP
OR R DUCT RISE
OR SQUARE TO ROUND TRANSITION
OR ROUND TO ROUND TRANSITION
OR FLEXIBLE DUCT
OR FLEXIBLE CONNECTION
OR RADIUS ELBOW
300 CFM OR 300 CFM SUPPLY AIR RECTANGULAR CEILING DIFFUSER 4-WAY AIR FLOW UNLESS SPECIFIED ON THE FLOOR PLANS, 300 CFM, SEE AIR DISTRIBUTION SCHEDULE FOR SIZE AND MODEL
250 CFM OR 250 CFM RETURN AIR RECTANGLAR CEILING REGISTER /GRILLE, 250 CFM, SEE AIR DISTRIBUTION SCHEDULE FOR SIZE AND MODEL
350 CFM OR 350 CFM EXHAUST AIR GRILLE, 350 CFM, SEE AIR DISTRIBUTION SCHEDULE FOR SIZE AND MODEL.
OR VERTICAL DUCT DROP
OR VERTICAL DUCT RISE
SIDE WALL REGISTER SUPPLY AIR
SIDE WALL REGISTER RETURN AIR
OR F FIRE DAMPER
OR M MOTORIZED DAMPER
S COMBINATION OF SMOKE AND FIRE DAMPER AND ASSOCIATED DUCT SMOKE DETECTOR
B BACK DRAFT DAMPER (w/ direction of flow)
OR MANUAL VOLUME DAMPER
DL DOOR LOUVER
UC UNDERCUT (DOOR)
T3 THERMOSTAT # CORRESPONDS WITH UNIT NUMBER, SEE DETAIL BELOW.
SD DUCT SMOKE DETECTOR
WS WALL SWITCH
PS PRESSURE SENSOR
OS OVERRIDE SWITCH
DS DOOR SENSOR
S SENSOR
Ø DIAMETER / ROUND
SQUARE FEET
ZONE CONTROL DAMPER
BY-PASS DAMPER
POINT OF CONNECTION
POINT OF REMOVAL
S CO2 SENSOR
PIPE DROP
PIPE RISE
R PITCH OF PIPE RISE
D PITCH OF PIPE DROP
UNION
CONCENTRIC REDUCER
ECCENTRIC REDUCER, FLAT TOP
FLANGED CONNECTION
DEAD END, SCREWED CAP
DEAD END, WELDED CAP

SPLIT AIR CONDITIONER SCHEDULE

UNIT SYMBOL		SAC-1
MANUFACTURER		TOSHIBA-CARRIER
REFRIGERANT TYPE		R-410A
INDOOR UNIT	MODEL	RAV-SM182KRTP-UL
	LOCATION	ELECTRICAL-04
	MOUNT TYPE	HIGH WALL
	BLOWER CFM	530 / 424 / 324
	DIMENSIONS (H"xW"xD")	12.6 x 41.3 x 9
	OPERATIONAL WT - LBS	33
OUTDOOR UNIT	MODEL	RAV-SP182AT2P-UL
	LOCATION	ON GRADE
	MOUNT TYPE	CONCRETE PAD
	COOLING CAP. - MBH	18.0
	SEER	19.5
	EER	10.0
	MCA / MOCP	14.0 / 25.0
	V-Ph-Hz	208-1-60
	DIMENSIONS (H"xW"xD")	21.7 x 30.7 x 11.4
	OPERATIONAL WT - LBS	106
DETAIL REFERENCE		6,7,8/M003
REMARKS		(1)(2)(3)(4)(5)(6)

REMARKS

1- INDOOR UNIT RECEIVES POWER FROM OUTDOOR UNIT.

2- UNIT COMPLETE WITH MANUFACTURER'S MOUNTING BRACKET, WIRELESS CONTROLLER, SENSOR, AND CONTROLLER HOLDER.

3- REFRIGERANT AND SUCTION LINES SHALL BE SIZED PER MANUFACTURER'S RECOMMENDATION AND GUIDELINES BASED ON ACTUAL DISTANCE BETWEEN INDOOR AND OUTDOOR UNITS.

4- PROVIDE CONDENSATE PUMP WHERE THE CONDENSATE CANNOT BE HANDLED BY GRAVITY. CONDENSATE PUMP SHALL BE EQUAL TO LITTLE GIANT VCC20 SERIES PRODUCT. SAC MANUFACTURER'S CONDENSATE PUMP IS NOT ACCEPTABLE.

5- PROVIDE WITH MANUFACTURER CERTIFIED START UP.

6- PROVIDE ALL REQUIRED CONTROL WIRING BETWEEN INDOOR AND OUTDOOR UNIT. INSTALL WIRING IN APPROVED CONDUIT.

EXHAUST FAN SCHEDULE

UNIT SYMBOL	EF-1	EF-2	EF-3	EF-4
LOCATION	CONCESSIONS BUILDING	CONCESSIONS BUILDING	CONCESSIONS BUILDING	FIELD STORAGE BUILDING
SERVICE	CONCESSIONS 103/ STORAGE 104/ JANITOR 105	GIRLS RESTROOM 101	BOYS RESTROOM 102	FIELD STORAGE
TYPE	ROOF MOUNTED	ROOF MOUNTED	ROOF MOUNTED	ROOF MOUNTED
MANUFACTURER	COOK	COOK	COOK	COOK
MODEL	120 ACEB	100 ACEB	100 ACEB	165 ACEB
FAN - CFM	700	600	600	2000
EXTERNAL S.P. - "WG	0.25	0.25	0.25	0.25
DRIVE TYPE	BELT	BELT	BELT	BELT
FAN MOTOR - HP	0.167	0.167	0.167	0.25
FAN - RPM	882	1291	1291	841
OUTLET VELOCITY - FPM	740	916	916	1118
TIP SPEED - FPM	2728	3344	3344	3608
DISCHARGE LOCATION	DOWNBLAST	DOWNBLAST	DOWNBLAST	DOWNBLAST
WHEEL TYPE	BACKWARD INCLINED	BACKWARD INCLINED	BACKWARD INCLINED	BACKWARD INCLINED
VOLTAGE / PHASE	115 / 1	115 / 1	115 / 1	115 / 1
CURB TYPE	RCG	RCG	RCG	RCG
OPERATING WEIGHT - LBS	90	90	90	120
DETAIL REFERENCE	1,9/M003	1,9/M003	1,9/M003	1,9/M003
INTERLOCK	SPACE LIGHTING /OCCUPANCY SENSOR	SPACE LIGHTING /OCCUPANCY SENSOR	SPACE LIGHTING /OCCUPANCY SENSOR	DIGITAL LINE VOLTAGE T-STAT
REMARKS	(1)(2)	(1)(2)	(1)(2)	(1)(3)

REMARKS

1- UNIT COMPLETE WITH BACKDRAFT DAMPER, BIRDSCREEN, AND MANUFACTURER'S PREFABRICATED GALVANIZED ROOF CURB. WHERE ROOF IS SLOPED, PROVIDE SLOPED ROOF CURB TO MATCH ROOF FOR A LEVEL UNIT INSTALLATION.

2- INTERLOCK FAN OPERATION WITH SPACE LIGHTING. PROVIDE TIME DELAY SWITCH TO TURN OFF EXHAUST FAN 5 MINUTES AFTER SPACE LIGHTING TURNS OFF.

3- INTERLOCK FAN OPERATION WITH LINE VOLTAGE THERMOSTAT. SET TEMPERATURE TO 80°F (ADJ.) TO TURN ON THE FAN.

STATE:

IDENTIFICATION STAMP
DIV. OF THE STATE ARCHITECT
APP: 03-124281 INC:
REVIEWED FOR
SS ☑ FLS ☑ ACS ☑
DATE: 02/04/2025

ARCHITECT:

architecture
westbergwhite
7700 IRVINE CENTER DR. STE. 100
IRVINE, CA 92618
(714) 508-1780 (714) 508-1780 FAX

CONSULTANT:

1920 E. Warner Ave., Suite 3-H
Santa Ana, CA 92705
Telephone (714) 884-3803
Fax (714) 884-3834
PE: #530.231

REGISTERED PROFESSIONAL ENGINEER
STEVEN M. PETERSEN
No. M 29925
Exp. 06-30-2026

PROJECT NAME:

Bellflower Unified School District
Mayfair High School Sports Fields
6000 North Woodruff Ave
Lakewood, California 90713

CLIENT:

BELLFLOWER UNIFIED
SCHOOL DISTRICT

16703 S. Clark Ave,
BELLFLOWER, CALIFORNIA 90706

Rev.	Date	Description

JOB NO: 15008.01
DATE: 11/13/2024
DRAWN:
CHECK:
ARCHITECT: PDW
ENGINEER:

SHEET DESCRIPTION:
MECHANICAL
SCHEDULES

SHEET NO:
M002

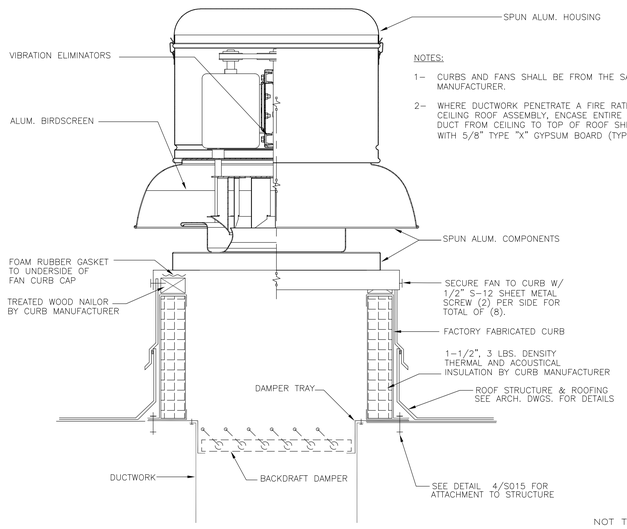

NOTES:

1- CURBS AND FANS SHALL BE FROM THE SAME MANUFACTURER.

2- WHERE DUCTWORK PENETRATE A FIRE RATED CEILING ROOF ASSEMBLY, ENCASE ENTIRE RUN OF DUCT FROM CEILING TO TOP OF ROOF SHEETING WITH 5/8" TYPE "X" GYPSUM BOARD (TYP.)

NOT TO SCALE

EXHAUST FAN DETAIL (1)

NOTE:
FOR GRILLES/DIFFUSERS IN LOCATIONS WHERE THERE ARE HARD LID CEILINGS, FLEXIBLE CONNECTIONS ARE NOT ACCEPTABLE.

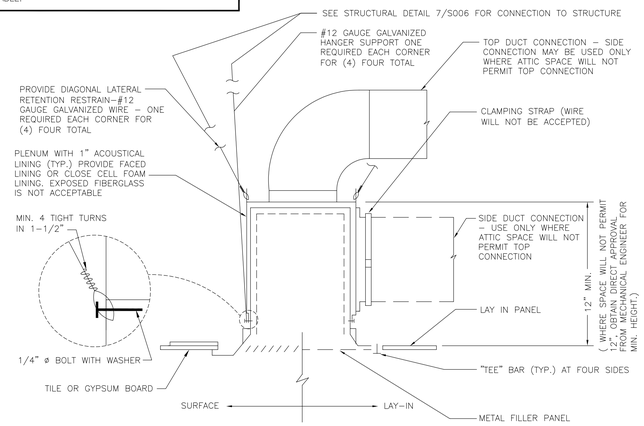

NOT TO SCALE

EXHAUST GRILLE DETAIL (2)

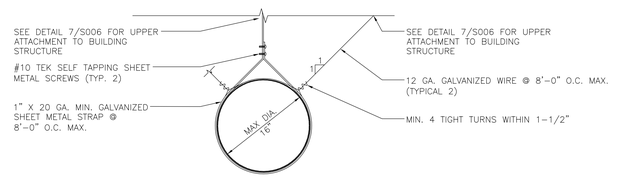

HVAC ROUND DUCT

NOT TO SCALE

SUSPENDED DUCTWORK DETAIL (3)

DIAMETER	4"–20"	22"–30"	32"–40"	
FRAME	20 GA.	20 GA.	20 GA.	GALV. STEEL
BLADES	16 GA.	16 GA.	10 GA.	GALV. STEEL
AXLES	3/8" □	1/2" □	3/4"ø	FULL LENGTH PLATED STEEL AXLE
REGULATOR	VENTLOK 635	VENTLOK 555	VENTLOK 560	FOR NON-INSULATED DUCT
REGULATOR W/ INSUL	VENTLOK 639	VENTLOK 555	VENTLOK 560	2" STANDOFF BRACKET
END BEARING	HIVEL 609	HIVEL 609	STEEL SLEEVE	CLOSED END
END BEARING	VENTLOK 607	VENTLOK 607	STEEL SLEEVE	OPEN END

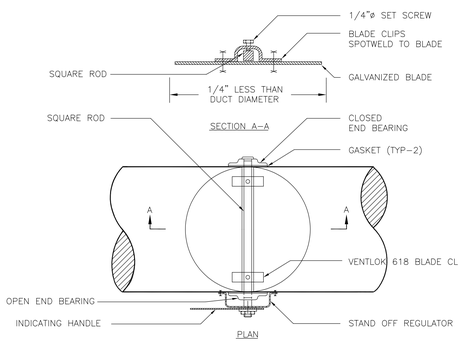

NOT TO SCALE

ROUND VOLUME DAMPER DETAIL (4)

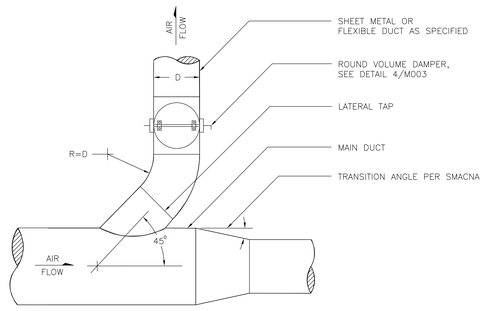

NOTES:
1. PROVIDE MANUAL VOLUME DAMPER FOR ALL BRANCH DUCTWORK.
2. USE FOR SYMBOL ⊥ WHERE BRANCH DUCT IS ROUND FROM ROUND MAIN AND BRANCH DUCT AIR QUANTITY IS 50% OR LESS OF TOTAL AIR FLOW.

NOT TO SCALE

CIRCULAR DUCT LATERAL TAP W/ VOLUME DAMPER DETAIL (5)

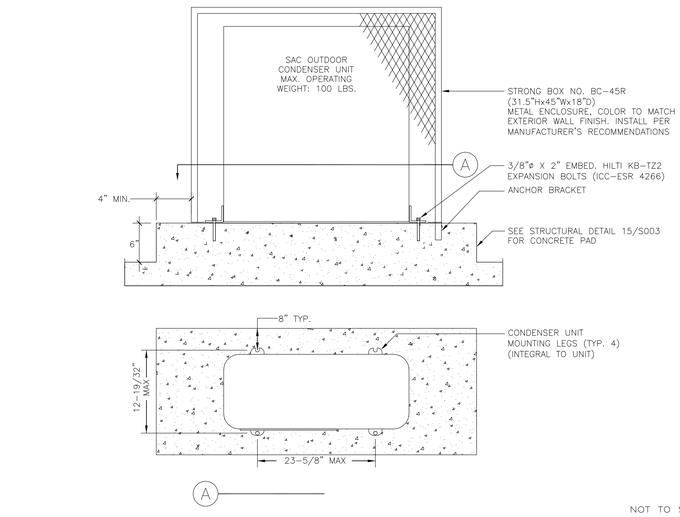

NOT TO SCALE

SPLIT AIR CONDITIONER (OUTDOOR UNIT) DETAIL (6)

WALL MOUNTED INDOOR UNIT INSTALLED ABOVE THE DOOR WITH MANUFACTURER SUPPLIED MOUNTING BRACKET

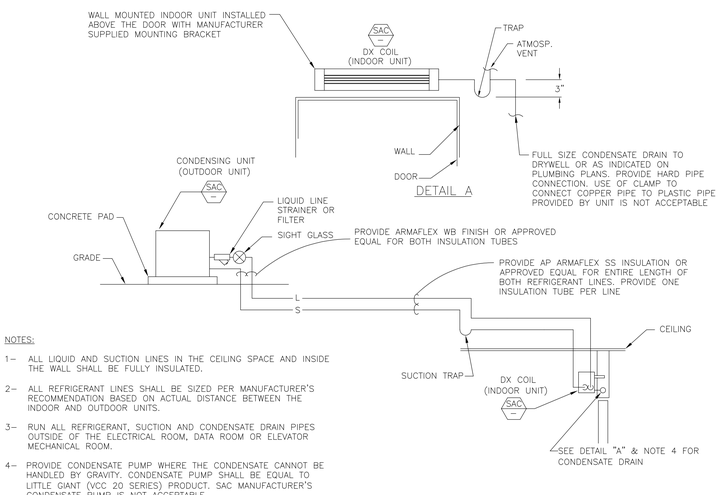

NOTES:

1- ALL LIQUID AND SUCTION LINES IN THE CEILING SPACE AND INSIDE THE WALL SHALL BE FULLY INSULATED.

2- ALL REFRIGERANT LINES SHALL BE SIZED PER MANUFACTURER'S RECOMMENDATION BASED ON ACTUAL DISTANCE BETWEEN THE INDOOR AND OUTDOOR UNITS.

3- RUN ALL REFRIGERANT, SUCTION AND CONDENSATE DRAIN PIPES OUTSIDE OF THE ELECTRICAL ROOM, DATA ROOM OR ELEVATOR MECHANICAL ROOM.

4- PROVIDE CONDENSATE PUMP WHERE THE CONDENSATE CANNOT BE HANDLED BY GRAVITY. CONDENSATE PUMP SHALL BE EQUAL TO LITTLE GIANT (VCC 20 SERIES) PRODUCT. SAC MANUFACTURER'S CONDENSATE PUMP IS NOT ACCEPTABLE.

5- PROVIDE CONDUIT FOR COMMUNICATION WIRING BETWEEN INDOOR AND OUTDOOR UNITS AS REQUIRED.

NOT TO SCALE

SPLIT AIR CONDITIONER - INSTALLATION DETAIL (7)

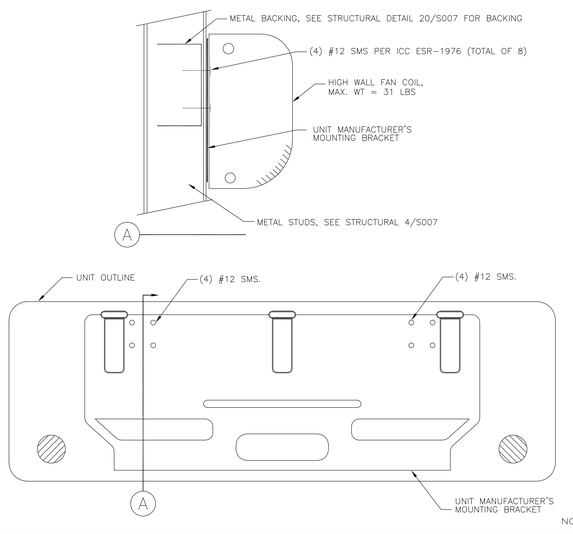

NOT TO SCALE

SPLIT AIR CONDITIONER (INDOOR UNIT) DETAIL (8)

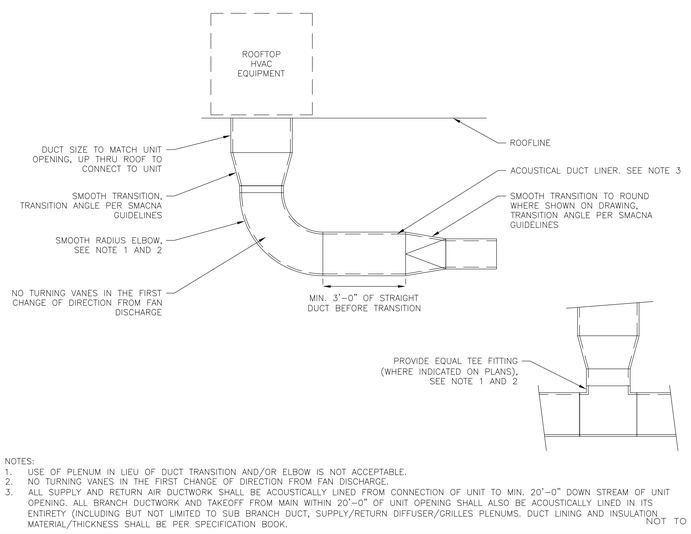

NOTES:
1. USE OF PLENUM IN LIEU OF DUCT TRANSITION AND/OR ELBOW IS NOT ACCEPTABLE.
2. NO TURNING VANES IN THE FIRST CHANGE OF DIRECTION FROM FAN DISCHARGE.
3. ALL SUPPLY AND RETURN AIR DUCTWORK SHALL BE ACOUSTICALLY LINED FROM CONNECTION OF UNIT TO MIN. 20'-0" DOWN STREAM OF UNIT OPENING. ALL BRANCH DUCTWORK AND TAKEOFF FROM MAIN WITHIN 20'-0" OF UNIT OPENING SHALL ALSO BE ACOUSTICALLY LINED IN ITS ENTIRETY (INCLUDING BUT NOT LIMITED TO SUB BRANCH DUCT, SUPPLY/RETURN DIFFUSER/GRILLES PLENUMS. DUCT LINING AND INSULATION MATERIAL/THICKNESS SHALL BE PER SPECIFICATION BOOK.

NOT TO SCALE

DUCT THRU ROOF TO EQUIPMENT ON ROOF DETAIL (9)

STATE:

IDENTIFICATION STAMP
DIV. OF THE STATE ARCHITECT
APP: 03-124281 INC:
REVIEWED FOR
SS ☑ FLS ☑ ACS ☑
DATE: 02/04/2025

ARCHITECT:

architecture
westbergwhite
7700 IRVINE CENTER DR. STE. 100
IRVINE, CA 92618
(714) 508-1780 (714) 508-1780 FAX

CONSULTANT:

1920 E. Warner Ave., Suite 3-H
Santa Ana, CA 92705
Telephone (714) 884-3803
Fax (714) 884-3834
PEI #530.231

REGISTERED PROFESSIONAL ENGINEER
STEVEN M. PETERSEN
PE No. M 29925
Exp. 06-30-2026

PROJECT NAME:

Bellflower Unified School District
Mayfair High School Sports Fields
6000 North Woodruff Ave
Lakewood, California 90713

CLIENT:

BELLFLOWER UNIFIED SCHOOL DISTRICT
16703 S. Clark Ave.
BELLFLOWER, CALIFORNIA 90706

Rev.	Date	Description

JOB NO: 15008.01
DATE: 11/13/2024
DRAWN:
CHECK:
ARCHITECT: PDW
ENGINEER:

SHEET DESCRIPTION:
MECHANICAL DETAILS

SHEET NO:
M003

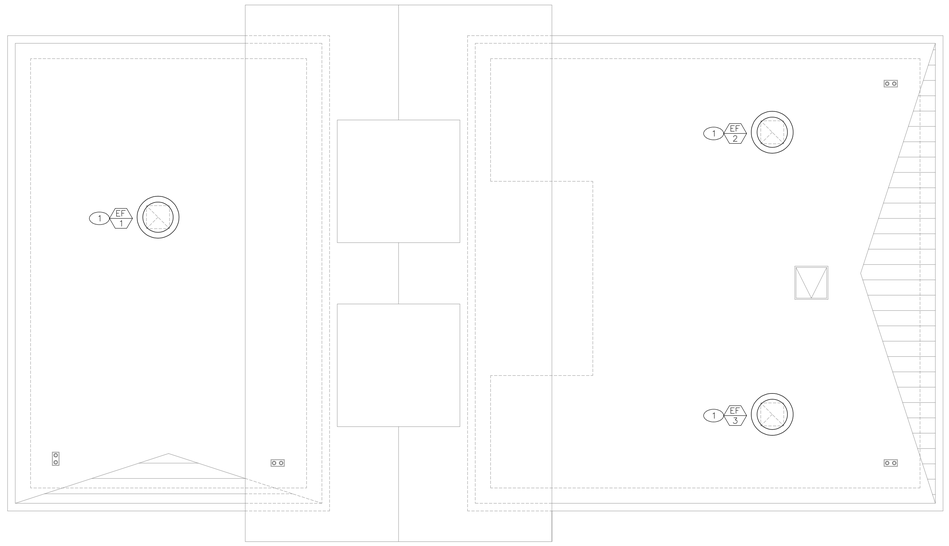

NORTH

CONCESSIONS MECHANICAL ROOF PLAN SCALE: 1/4"=1'-0" 2

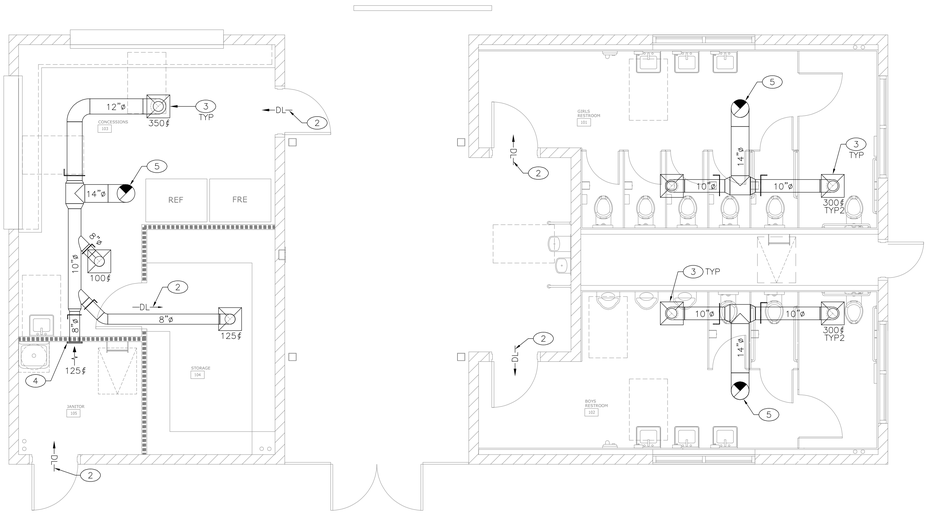

NORTH

CONCESSIONS MECHANICAL FLOOR PLAN SCALE: 1/4"=1'-0" 1

PLAN NOTES

1. EXHAUST FAN UNIT ON ROOF. SEE SCHEDULE AND DETAIL 1/M003 FOR MORE INFORMATION ON INSTALLATION.
2. 26"x14" STEEL, VANDAL-PROOF, SIGHT PROOF NON-VISION, STEEL PAINTABLE FINISH LINK DOOR LOUVER WITH MINIMUM 1.0 SQ. FT. OF FREE AREA AND V STYLE BLADES @ 45° ANGLE AS MANUFACTURED BY DAYTON OR EQUAL. PROVIDE VANDAL-PROOF SCREWS. PROVIDE BIRD SCREEN FOR EXTERIOR DOORS. CONTRACTOR TO COORDINATE WITH OTHER TRADES FOR INSTALLATION. PAINT LOUVER TO MATCH THE DOOR COLOR ON BOTH SIDE TO THE OWNER/ARCHITECT'S SATISFACTION.
3. PROVIDE 14"x14" KRUEGER MODEL EGC5 EGGCRATE TYPE EXHAUST GRILLE. COMPLETE WITH MINIMUM 12" (H) ACOUSTICALLY LINED PLENUM AND FINISH COLOR SHALL MATCH CEILING TYPE. SEE DETAIL 2/M003 FOR ADDITIONAL INFORMATION.
4. PROVIDE KRUEGER MODEL S-5480 SIDEWALL EXHAUST GRILLE. COMPLETE WITH MINIMUM 12" (H) ACOUSTICALLY LINED PLENUM AND FINISH COLOR SHALL MATCH CEILING TYPE.
5. 14"ø EXHAUST AIR DUCT UP AND TRANSITION IN RISE TO EXHAUST FAN OPENING SIZE, UP THRU ROOF TO EXHAUST FAN UNIT ON ROOF.

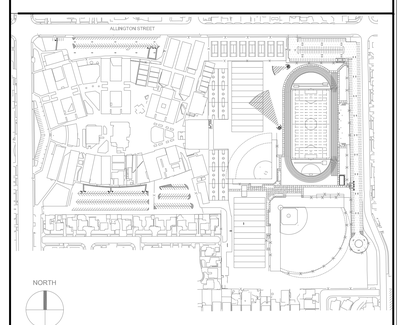

KEYMAP

STATE:

IDENTIFICATION STAMP
DIV. OF THE STATE ARCHITECT
APP: 03-124281 INC:
REVIEWED FOR
SS ☑ FLS ☑ ACS ☑
DATE: 02/04/2025

ARCHITECT:

architecture
westbergwhite
7700 IRVINE CENTER DR. STE. 100
IRVINE, CA 92618
(714) 508-1780 (714) 508-1780 FAX

CONSULTANT:

1920 E. Warner Ave., Suite 3-H
Santa Ana, CA 92705
Telephone (714) 884-3803
Fax (714) 884-3834
PEI #530.231

REGISTERED PROFESSIONAL ENGINEER
STEPHEN M. PITTENGER
No. M 29925
Exp. 06-30-2026

PROJECT NAME:

Bellflower Unified School District
Mayfair High School Sports Fields
6000 North Woodruff Ave
Lakewood, California 90713

CLIENT:

BELLFLOWER UNIFIED SCHOOL DISTRICT
16703 S. Clark Ave.
BELLFLOWER, CALIFORNIA 90706

Rev.	Date	Description

JOB NO: 15008.01
DATE: 11/13/2024
DRAWN:
CHECK:
ARCHITECT: PDW
ENGINEER:

SHEET DESCRIPTION:
CONCESSIONS BUILDING MECHANICAL FLOOR AND ROOF PLANS

SHEET NO:
M101

P:\530\530-231_BUSD_Mayfair_HS_Sports_Fields\Drawings\Mechanical\M101.dwg Jan 13, 2025 - 10:54am iggy

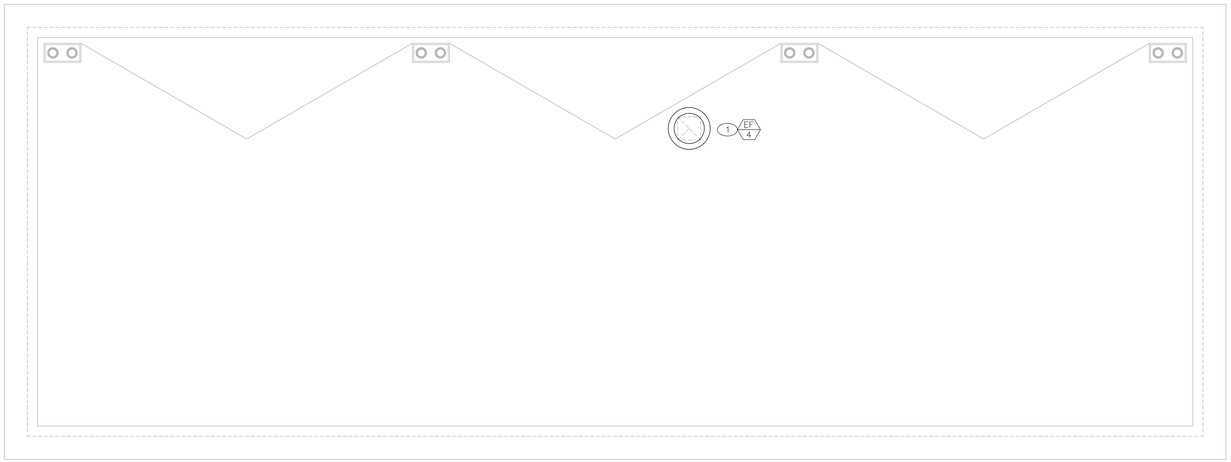

NORTH

FIELD STORAGE BUILDING MECHANICAL ROOF PLAN SCALE: 1/4"=1'-0" 2

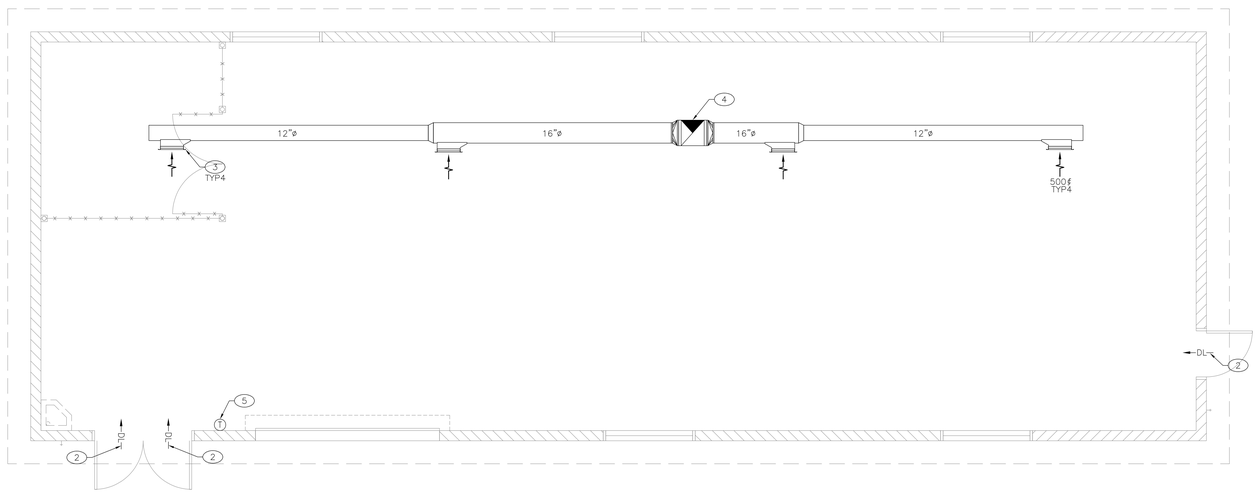

NORTH

FIELD STORAGE BUILDING MECHANICAL FLOOR PLAN SCALE: 1/4"=1'-0" 1

PLAN NOTES

1. EXHAUST FAN UNIT ON ROOF. SEE SCHEDULE AND DETAIL 1/M003 FOR MORE INFORMATION ON INSTALLATION.
2. 26"x14" STEEL, VANDAL-PROOF, SIGHT PROOF NON-VISION, STEEL PAINTABLE FINISH LINK DOOR LOUVER WITH MINIMUM 1.0 SQ. FT. OF FREE AREA AND V STYLE BLADES @ 45° ANGLE AS MANUFACTURED BY DAYTON OR EQUAL. PROVIDE VANDAL-PROOF SCREWS. PROVIDE BIRD SCREEN FOR EXTERIOR DOORS. CONTRACTOR TO COORDINATE WITH OTHER TRADES FOR INSTALLATION. PAINT LOUVER TO MATCH THE DOOR COLOR ON BOTH SIDE TO THE OWNER/ARCHITECT'S SATISFACTION.
3. PROVIDE 18"x6" EXHAUST AIR GRILLE EQUAL TO KRUEGER MODEL S480H WITH CONCEALED SCREWS AND OBD.
4. 20"x18" EXHAUST AIR DUCT UP AND TRANSITION IN RISE TO EXHAUST FAN OPENING SIZE, UP THRU ROOF TO EXHAUST FAN UNIT ON ROOF.
5. PROVIDE LINE VOLTAGE THERMOSTAT. SEE SHEET M001 FOR MOUNTING HEIGHT REQUIREMENTS.

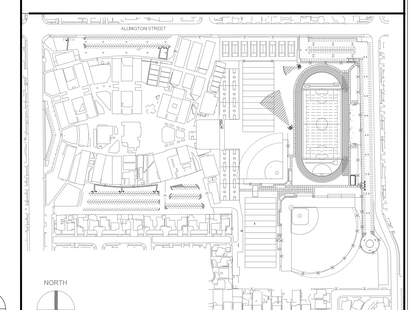

KEYMAP

STATE:

IDENTIFICATION STAMP
DIV. OF THE STATE ARCHITECT
APP: 03-124281 INC:
REVIEWED FOR
SS ☑ FLS ☑ ACS ☑
DATE: 02/04/2025

ARCHITECT:

architecture
westbergwhite
7700 IRVINE CENTER DR. STE. 100
IRVINE, CA 92618
(714) 508-1780 (714) 508-1780 FAX

CONSULTANT:

1920 E. Warner Ave., Suite 3-H
Santa Ana, CA 92705
Telephone (714) 884-3803
Fax (714) 884-3834
PEI #530.231

REGISTERED PROFESSIONAL ENGINEER
STEPHEN M. PITTENGER
No. M 29925
Exp. 06-30-2026

PROJECT NAME:

Bellflower Unified School District
Mayfair High School Sports Fields
6000 North Woodruff Ave
Lakewood, California 90713

CLIENT:

BELLFLOWER UNIFIED SCHOOL DISTRICT
16703 S. Clark Ave,
BELLFLOWER, CALIFORNIA 90706

Rev.	Date	Description

JOB NO: 15008.01
DATE: 11/13/2024
DRAWN:
CHECK:
ARCHITECT: PDW
ENGINEER:

SHEET DESCRIPTION:
FIELD STORAGE BUILDING MECHANICAL FLOOR AND ROOF PLANS

SHEET NO:
M201

P:\530\530-231_BUSD_Mayfair_HS_Sports_Fields\Drawings\Mechanical\M201.dwg Jan 13, 2025 - 10:53am iggy

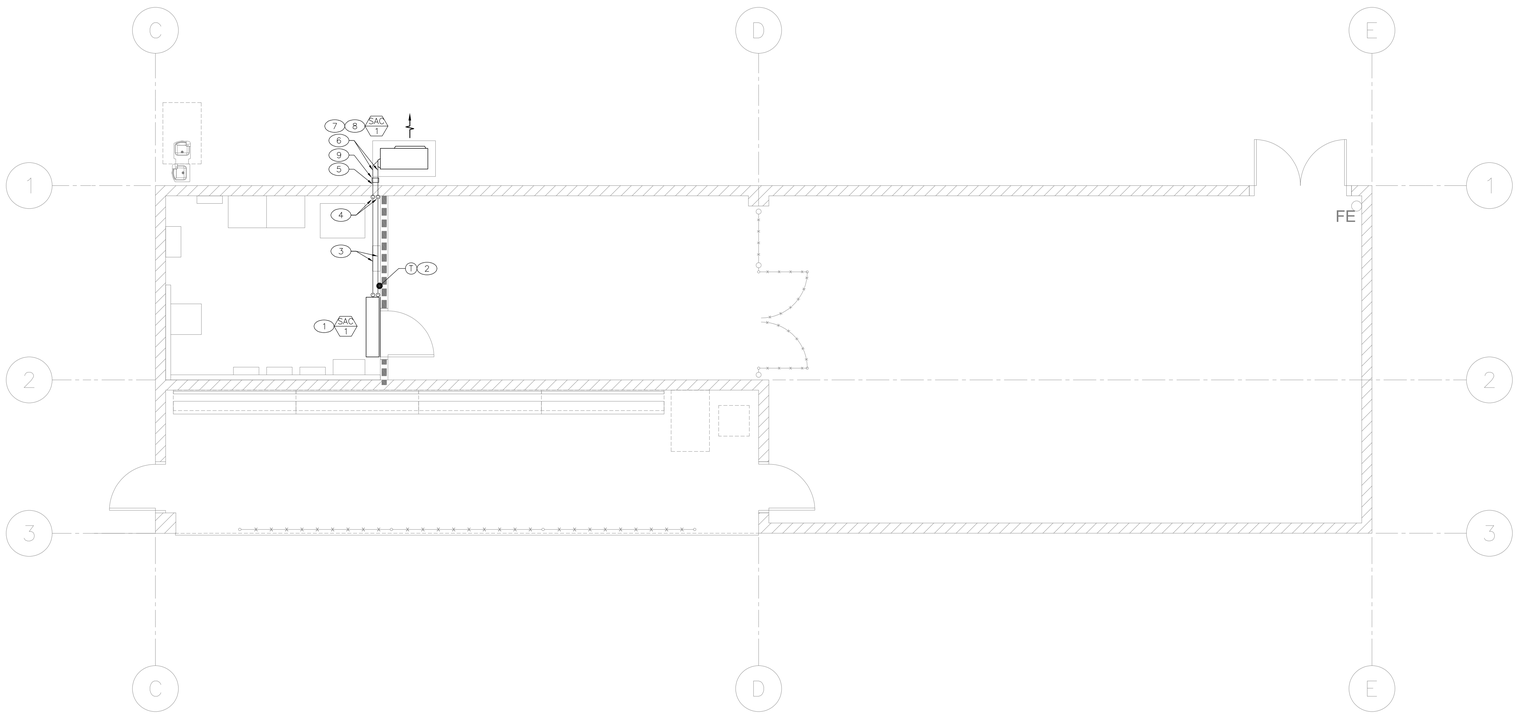

PLAN NOTES

1.– SPLIT AIR CONDITIONER (INDOOR UNIT) COMPLETE WITH UNIT MANUFACTURER'S HIGH WALL MOUNTING BRACKET. SEE SCHEDULE AND DETAILS 7 & 8/M003 FOR ADDITIONAL INFORMATION.

2.– SPLIT AIR CONDITIONER THERMOSTAT WITH MANUFACTURER'S MOUNTING BRACKET. SEE THERMOSTAT NOTE ON SHEET M001 FOR ADDITIONAL INFORMATION.

3.– REFRIGERANT LIQUID AND SUCTION LINES, COMPLETE WITH INDIVIDUALLY CONTINUOUS INSULATION. SECURE TO WALL WITH CHANNEL STRUT. SIZE LINES PER SPLIT AIR CONDITIONER SCHEDULE REMARK 3.

4.– REFRIGERANT LIQUID AND SUCTION LINES DOWN THE FACE OF THE WALL TO 8" ABOVE FINISH FLOOR. PENETRATE THROUGH WALL AND CONNECT TO SPLIT AIR CONDITIONER OUTDOOR UNIT. SEAL PIPE PENETRATIONS WATER-TIGHT. SECURE TO WALL WITH CHANNEL STRUT. PROVIDE CONTINUOUS INSULATION FOR EACH LINE.

5.– PROVIDE SHEET METAL COVER, COMPLETE WITH 3/8" MESH SCREEN.

6.– EXTERIOR CONTINUOUSLY INSULATED REFRIGERANT PIPING, COMPLETE WITH WEATHER-PROOF ALUMINUM JACKET. ROUTE REFRIGERANT PIPING IN SUCH A MANNER THAT DOES NOT CONFLICT WITH SPLIT AIR CONDITIONER PROTECTIVE COVER.

7.– SPLIT AIR CONDITIONER (OUTDOOR UNIT). SEE SCHEDULE AND DETAIL 6/M003 FOR ADDITIONAL INFORMATION.

8.– PROVIDE STRONG BOX NO. BC-45CR (45"Lx31.5"Hx18"W) METAL ENCLOSURE OVER SPLIT AIR CONDITIONER OUTDOOR UNIT. CONTRACTOR TO VERIFY COMPLIANCE WITH EQUIPMENT CLEARANCE REQUIREMENTS.

9.– PROVIDE ERICO NO. PSA10CH13 CADDY PYRAMID STRUT SUPPORT. SECURE PIPING TO STRUT SUPPORT WITH PIPE CLAMPS.

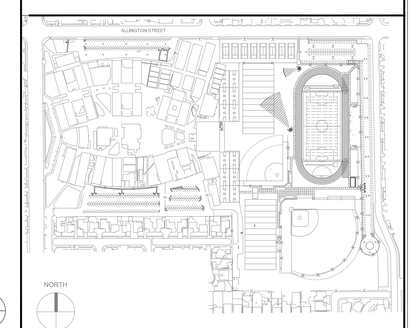

NORTH

BASEBALL HOME DUGOUT MECHANICAL FLOOR PLAN SCALE: 1/4"=1'-0" | 1 | KEYMAP

STATE:

IDENTIFICATION STAMP
DIV. OF THE STATE ARCHITECT
APP: 03-124281 INC:
REVIEWED FOR
SS ☑ FLS ☑ ACS ☑
DATE: 02/04/2025

ARCHITECT:

architecture
westbergwhite
7700 IRVINE CENTER DR. STE. 100
IRVINE, CA 92618
(714) 508-1780 (714) 508-1780 FAX

CONSULTANT:

1920 E. Warner Ave., Suite 3-H
Santa Ana, CA 92705
Telephone (714) 884-3803
Fax (714) 884-3834
PEI #530.231

REGISTERED PROFESSIONAL ENGINEER
STEPHEN M. PITTENGER
No. M 29925
Exp. 06-30-2026

PROJECT NAME:

Bellflower Unified School District
Mayfair High School Sports Fields
6000 North Woodruff Ave
Lakewood, California 90713

CLIENT:

BELLFLOWER UNIFIED SCHOOL DISTRICT
16703 S. Clark Ave,
BELLFLOWER, CALIFORNIA 90706

Rev.	Date	Description

JOB NO: 15008.01
DATE: 11/13/2024
DRAWN:
CHECK:
ARCHITECT: PDW
ENGINEER:

SHEET DESCRIPTION:
BASEBALL HOME DUGOUT MECHANICAL FLOOR PLAN

SHEET NO:
M301

P:\530\530-231_BUSD_Mayfair_HS_Sports_Fields\Drawings\Mechanical\M301.dwg Jan 13, 2025 - 10:51am iggy

PLUMBING ABBREVIATIONS AND SYMBOLS LIST

PLUMBING ABBREVIATIONS

ABV	ABOVE
ABV CLG	ABOVE CEILING
AC	AIR CONDITIONING
AD	ACCESS DOOR
AFF	ABOVE FINISHED FLOOR
AFSR	AUTOMATIC FIRE SPRINKLER RISER
AP	ACCESS PANEL
ARCH	ARCHITECTURAL
@	AT
ATMOS	ATMOSPHERE OR ATMOSPHERIC
BEL	BELOW
BFP	BACKFLOW PREVENTOR
BLV	BALL VALVE
BR	BRANCH
BV	BALANCING VALVE
BWV	BACKWATER VALVE
CD	CONDENSATE
CFH	CUBIC FEET PER HOUR
CFM	CUBIC FEET PER MINUTE
CI	CAST IRON
℄	CENTERLINE
CLG	CEILING
CO	CLEANOUT
CONC	CONCRETE
CONN	CONNECT OR CONNECTION
CONT	CONTINUE OR CONTINUATION
COTG	CLEAN OUT TO GRADE
CW	COLD WATER
CV	CHECK VALVE
DF	DRINKING FOUNTAIN
DIA	DIAMETER
D.I.	DUCTILE IRON
DN	DOWN
DP	DISABLED PERSON
DR	DRAIN
DS	DOWNSPOUT
DWG	DRAWING
E	EXISTING PIPE
EJ	EXPANSION JOINT
EL	ELEVATION
ELEC	ELECTRICAL
EXIST	EXISTING
F	FIRE
°F	DEGREES FAHRENHEIT
FC	FLEXIBLE CONNECTION
FCO	FLOOR CLEAN OUT
FD	FLOOR DRAIN
FLR	FLOOR
FOC	FACE OF CURB
FPM	FEET PER MINUTE
FPS	FEET PER SECOND
FR	FROM
FS	FLOOR SINK
FSH	FIRE SPRINKLER HEAD
FT	FEET
FTR	FLUE THRU ROOF
FU	FIXTURE UNITS
G	GAS–LOW PRESSURE
GA	GAUGE
GAL	GALLON
GALV	GALVANIZED
GC	GAS COCK
GLV	GLOBE VALVE
GPD	GALLONS PER DAY
GPH	GALLONS PER HOUR
GPM	GALLONS PER MINUTE
GPR	GAS PRESSURE REGULATOR
GR	GRADE
GV	GATE VALVE
H	HIGH
HB	HOSE BIBB
HDR	HEADER
HP	HORSEPOWER
HTG	HEATING
HTR	HEATER
HW	HOT WATER
HWR	HOT WATER RETURN
ID	INSIDE DIAMETER
IPS	IRON PIPE SIZE
IE	INVERT ELEVATION
KW	KILOWATT
L	LONG
LAV	LAVATORY
LBS	POUNDS
LF	LINEAR FEET
MBH	THOUSAND BTU PER HOUR
MH	MANHOLE
MIN	MINIMUM
MPG	GAS–MEDIUM PRESSURE
MS	MOP SINK
MUA	MAKE–UP AIR
MV	MOTOR OPERATED VALVE
NC	NORMALLY CLOSED
NIC	NOT IN CONTRACT
NO	NORMALLY OPEN
NO.	NUMBER
NPSH	NET POSITIVE SUCTION HEAD
NTS	NOT TO SCALE
OD	OVERFLOW DRAIN
ODIA	OUTSIDE DIAMETER
OPWT	OPERATING WEIGHT
PG	PRESSURE GAUGE
PH	PHASE (ELECTRICAL)
℄	PROPERTY LINE
POC	POINT OF CONNECTION
POD	POINT OF DISCONNECTION
PPM	PARTS PER MILLION
PRESS	PRESSURE
PRV	PRESSURE REDUCING VALVE
PS	PRESSURE SWITCH
PSI	POUNDS PER SQUARE INCH
PSIA	PSI GAUGE
PT	PLUGGED TEE
PTRV	PRESSURE/TEMPERATURE RELIEF VALVE
PVC	POLYVINYL CHLORIDE
PW	PLUGGED WYE
RD	ROOF DRAIN
REQ'D	REQUIRED
RHB	RECESSED HOSE BIBB
RI&C	ROUGH–IN AND CONNECT
RP	REDUCED PRESSURE
RPM	REVOLUTIONS PER MINUTE
RV	RELIEF VALVE
S	SINK
SD	STORM DRAIN
SHT	SHEET
SOV	SHUT OFF VALVE
SPEC	SPECIFICATION
SQ. FT.	SQUARE FEET
SS	SERVICE SINK
ST	STORAGE TANK
STL	STEEL
STR	STRAINER
TDH	TOTAL DYNAMIC HEAD
TEMP	TEMPERATURE
TH	THERMOMETER
TP	TRAP PRIMER
TYP	TYPICAL
U	URINAL
UH	UNIT HEATER
UL	UNDERWRITERS LABORATORY
UN	UNION
UOS	UNDER OTHER SECTION
UTR	UP THRU ROOF
V	VENT
VB	VACUUM BREAKER
VBF	VENT BELOW FLOOR
VCP	VITRIFIED CLAY PIPE
VTR	VENT THRU ROOF
W	WIDE OR WASTE
W/	WITH
WH	WATER HEATER
WHA	WATER HAMMER ARRESTER
W/O	WITHOUT
WTR	WATER
WCO	WALL CLEANOUT
WC	WATER CLOSET
WT	WEIGHT
YB	YARDBOX

1. SYMBOLS AND ABBREVIATIONS ARE SHOWN FOR REFERENCE; NOT ALL SYMBOLS AND ABBREVIATIONS MAY BE USED.
2. ALL NOTES ON THIS SHEET REMAIN PART OF THE CONTRACT DOCUMENTS.

PLUMBING SYMBOLS

PIPING BRANCH	SANITARY WASTE ABOVE GRADE
PIPE DROP	SANITARY WASTE BELOW GRADE
PIPE RISE	EXISTING SANITARY WASTE
RISER OR DROP	SANITARY VENT ABOVE GRADE
BRANCH – TOP CONNECTION	SANITARY VENT BELOW GRADE
BRANCH – BOTTOM CONNECTION	EXISTING VENT PIPING
UNION (SCREWED)	STORM DRAIN ABOVE GRADE
PLUGGED TEE	STORM DRAIN BELOW GRADE
FLANGED CONNECTION	OVERFLOW DRAIN
CAP ON END OF PIPE	ACID WASTE
RED BRASS NIPPLE	INDIRECT DRAIN
VALVE IN RISER	CONDENSATE DRAIN
GATE VALVE OR SHUT–OFF VALVE	DOMESTIC COLD WATER ABOVE GRADE
GLOBE VALVE	DOMESTIC COLD WATER BELOW GRADE
"Y" TYPE STRAINER	EXISTING DOMESTIC COLD WATER
PRESSURE – TEMPERATURE RELIEF VALVE	DOMESTIC HOT WATER ABOVE GRADE
GAS COCK	DOMESTIC HOT WATER BELOW GRADE
WATER HAMMER ARRESTER	EXISTING DOMESTIC HOT WATER
CHECK VALVE, SWING OR LIFT	GAS – LOW PRESSURE
SLOPE – IN DIRECTION OF ARROW	EXISTING GAS – LOW PRESSURE
FLOW – IN DIRECTION OF ARROW	GAS – MEDIUM PRESSURE
GAS OUTLET/TURRET	EXISTING GAS – MEDIUM PRESSURE
GAS/WATER SHUT–OFF VALVE IN YARDBOX	HOT WATER RETURN ABOVE GRADE
FLOOR CLEANOUT	EXISTING PIPING TO BE ABANDONED
CLEANOUT IN YARDBOX – TRAFFIC WEIGHT	EXISTING PIPING TO BE REMOVED
WALL CLEANOUT	REPRESENTS REMODEL NOTES
HOSE BIBB WITH VACUUM BREAKER	REPRESENTS DETAIL NUMBER REPRESENTS PLUMBING SHEET
CAP PIPING FOR RECONNECTION	REPRESENTS PLUMBING FIXTURE REPRESENTS QUANTITY

GENERAL NOTES

1. THESE DRAWINGS AND SPECIFICATIONS DO NOT INCLUDE NECESSARY COMPONENTS FOR CONSTRUCTION SAFETY.
2. FOR BUILDING LOCATIONS, FINISH FLOOR, AND GRADE ELEVATIONS, SEE ARCHITECTURAL DRAWINGS.
3. FOR PIPING RUNNING THROUGH AND PARALLEL TO FOOTING, SEE STRUCTURAL DRAWINGS.
4. BEFORE COMMENCEMENT OF WORK, THE CONTRACTOR SHALL VERIFY THE EXACT LOCATIONS, ELEVATIONS AND CHARACTERISTICS OF ALL UTILITIES AND PIPING, PRIOR TO START OF ANY TRENCHING, AND SHALL IMMEDIATELY NOTIFY THE ARCHITECT OF ANY DISCREPANCIES.
5. FOR SERVICE CONNECTIONS TO INDIVIDUAL FIXTURES REFER TO SPECIFICATIONS.
6. ALL HOSE BIBBS SHALL BE INSTALLED 18" ABOVE FINISH FLOOR OR GRADE, UNLESS OTHERWISE NOTED.
7. ALL PLUGGED TEES AND PLUGGED WYES SHALL BE LINE SIZE UNLESS OTHERWISE NOTED.
8. ALL PLUMBING FIXTURE VENTS TO TERMINATE A MIN. OF 12 INCHES FROM ANY VERTICAL SURFACE AND 10 FEET FROM, OR 3 FEET ABOVE, ANY OUTSIDE AIR INTAKES.
9. THE CONTRACTOR SHALL COORDINATE THE LOCATION OF ALL CEILING ACCESS PANELS WITH THE ARCHITECTURAL REFLECTED CEILING PLAN AND THE ELECTRICAL LIGHTING LAYOUT.
10. EXACT LOCATIONS AND MOUNTING HEIGHTS OF PLUMBING FIXTURES SHALL BE OBTAINED FROM THE ARCHITECTURAL DRAWINGS
11. CONNECTION BETWEEN INCOMPATIBLE MATERIALS ABOVE GRADE AND INSIDE BUILDING SHALL BE MADE WITH TWO (2) DIELECTRIC UNIONS SEPARATED BY A 12" SECTION OF RED BRASS PIPE.
12. ALL CUTTING OF EXISTING PAVINGS, WALKS AND/OR FLOORS SHALL BE BY MACHINE SAW CUTTING. HOLES FOR PIPING IN CONCRETE WALLS OR FLOORS SHALL BE DONE BY CORE DRILLING EQUIPMENT.
13. THE CONTRACTOR SHALL BE RESPONSIBLE FOR PATCHING AND REPAIRING ALL PAVED AREAS WHICH ARE EXCAVATED AND/OR DAMAGED BY HIS OPERATIONS.
14. ALL CONNECTIONS TO EXISTING SERVICES SHALL BE MADE SUCH THAT INTERRUPTION TIME WILL BE AS SHORT AS POSSIBLE. THE CONTRACTOR SHALL GIVE THE OWNER'S REPRESENTATIVE SUFFICIENT NOTICE OF SUCH INTERRUPTION AND THE ACTUAL SHUT–DOWN TIME SHALL BE AT A TIME DESIGNATED BY THE OWNER'S REPRESENTATIVE.
15. COORDINATE LOCATION OF GAS & CONDENSATE CONNECTIONS ON MECHANICAL EQUIPMENT WITH MECHANICAL CONTRACTOR PRIOR TO INSTALLATION.
16. ALL SHUT–OFF VALVES, OUTSIDE THE BUILDINGS, SHALL BE IN CONCRETE YARD BOXES WITH THE NAME OF THE SERVICE CONSPICUOUSLY CAST IN THE COVER.
17. DURING THE PROGRESS OF WORK THE PLUMBING CONTRACTOR SHALL MAINTAIN AN ACCURATE RECORD OF ALL CHANGES MADE IN THE PLUMBING SYSTEMS. THE RECORD DRAWING SHALL SHOW CHANGES IN MANUFACTURER (WITH NUMBERS AND TRADE NAMES), MATERIALS, SIZES, LOCATIONS AND HOOK–UP POINTS. AS–BUILTS SHALL BE GIVEN TO THE OWNER'S CONSTRUCTION MANAGER AT COMPLETION OF JOB.
18. INSTALL ALL PLUMBING TO AVOID INTERFERENCE WITH ELECTRICAL AND MECHANICAL EQUIPMENT AND STRUCTURAL FRAMING. NO WATER OR DRAIN PIPING PERMITTED OVER OR UNDER ELECTRICAL PANELS.
19. ALL WORK SHALL BE DONE IN ACCORDANCE WITH ALL LOCAL CODES, RULES AND REGULATIONS GOVERNING THIS PROJECT AS SET FORTH BY THE LOCAL ADMINISTRATIVE AUTHORITY.
20. SEE ARCHITECTURAL DRAWINGS FOR ACCESSIBLE FIXTURE LOCATIONS AND MOUNTING HEIGHTS. (INSULATE ALL EXPOSED HOT WATER AND DRAIN PIPING BELOW ACCESSIBLE LAVATORIES AND SINKS WITH PREFORMED INSULATED FITTING COVERS (TRUEBRO OR EQUAL) WITH A MAX. FLAME SPREAD RATING OF 25, MAX. SMOKE RATING OF 50 PER ASTM E–84) OFFSET P–TRAP AGAINST WALL. ALSO, ALL FLUSH VALVES SHALL BE ON WIDE SIDE OF STALL.
21. ALL CONDENSATE PIPING IN ATTIC SPACES SHALL BE INSULATED WITH 3/4" MICRO–LOK INSULATION WITH A MAX. FLAME SPREAD RATING OF 25, MAX. SMOKE RATING OF 50 PER ASTM E–84. ALL CLEANOUTS SHALL BE INSTALLED WHERE READILY ACCESSIBLE.
22. THE CONTRACTOR SHALL COORDINATE ALL CLEANOUT LOCATIONS WITH EQUIPMENT, CABINETS, ETC., AND THE ARCHITECT PRIOR TO ANY INSTALLATION.
23. ALL VALVES, UNIONS, ETC. TO BE SAME SIZE AS PIPE UNLESS OTHERWISE INDICATED ON DRAWINGS.
24. UNIONS SHALL BE PROVIDED AND INSTALLED AFTER EACH SCREW–TYPE VALVE AND PRIOR TO EQUIPMENT CONNECTIONS.
25. BEFORE FABRICATION OR INSTALLATION THIS CONTRACTOR SHALL VERIFY EXACT LOCATIONS OF ALL MECHANICAL EQUIPMENT AND EQUIPMENT PROVIDED UNDER ANOTHER SECTION OF SPECIFICATIONS. EXACT ROUGH–IN LOCATIONS AND REQUIREMENTS SHALL BE COORDINATED IN FIELD.
26. THE PLUMBING CONTRACTOR SHALL COORDINATE ALL REQUIREMENTS FOR ALL POINTS OF CONNECTION WITH THE GENERAL CONTRACTOR AND OTHER TRADES PRIOR TO BID.
27. ALL WASTE AND VENT PIPING SHALL SLOPE AT 2% MIN. UNLESS OTHERWISE INDICATED.
28. ALL VALVES, TRAP PRIMER, WATER HAMMER ARRESTORS OR OTHER EQUIPMENT SHOWN IN WALLS OR ABOVE NON–ACCESSIBLE CEILINGS SHALL BE INSTALLED BEHIND AN ACCESS PANEL.
29. ALL LAVATORIES TO BE EQUIPPED WITH PRESSURE COMPENSATING FLOW CONTROL DEVICES RESTRICTING THE FLOW TO 0.35 GPM., FAUCET CONTROLS SHALL REQUIRE NO MORE THAN 5 LBS/FORCE TO OPERATE.
30. WATER OR SOIL PIPE BELOW GRADE OUTSIDE SHALL HAVE MINIMUM COVER AS RECOMMENDED BY LOCAL AUTHORITIES.
31. BEFORE ANY USE OF WATER SYSTEM IS MADE FOR DOMESTIC PURPOSES, IT SHALL BE STERILIZED BY SLOWLY FILLING THE SYSTEM WITH A WATER–CHLORINE SOLUTION CONTAINING AT LEAST FIFTY (50) PPM OF CHLORINE, AND THE SYSTEM OR PART THEREOF SHALL BE VALVED OFF AND ALLOWED TO STAND FOR TWENTY FOUR (24) HOURS; OR, THE SYSTEM OR PART THEREOF SHALL BE FILLED WITH A WATER–CHLORINE SOLUTION CONTAINING AT LEAST TWO HUNDRED (200) PPM OF CHLORINE AND ALLOWED TO STAND FOR THREE (3) HOURS. FOLLOWING THE ALLOWED STANDING TIME, THE SYSTEM SHALL BE FLUSH WITH CLEAN POTABLE WATER UNTIL THE CHLORINE RESIDUAL IN THE WATER COMING FROM THE SYSTEM DOES NOT EXCEED THE CHLORINE RESIDUAL IN THE FLUSHING WATER. THIS PROCEDURE OF FLUSHING THE SYSTEM SHALL BE REPEATED IF IT IS SHOWN BY BACTERIOLOGICAL EXAMINATION MADE BY AN APPROVED AGENCY THAT CONTAMINATION PERSIST IN THE SYSTEM.
32. ALL ELECTRICAL DEVICES, WIRING AND CONDUITS, ETC., SERVING PLUMBING FIXTURES, INCLUDING BUT NOT LIMITED TO SENSOR OPERATED FAUCETS AND FLUSH VALVES SHALL BE INSTALLED RECESSED, PROVIDED WITH REQUIRED ACCESS PANEL AND COVER. COORDINATE WITH ARCHITECT FOR INSTALLATION LOCATION, DIMENSION AND THE FINISH COLOR OR MATERIAL OF THESE PANELS.
33. ALL PLUMBING WORK SHALL CONFORM TO 2022 CPC.
34. UNLESS SPECIFICALLY SHOWN ON THESE PLANS NO STRUCTURAL MEMBER SHALL BE CUT, NEITHER DRILLED NOR NOTCHED WITHOUT PRIOR WRITTEN AUTHORIZATION FROM THE STRUCTURAL ENGINEER AND THE DIVISION OF THE STATE ARCHITECT.
35. CUTTING, BORING, SAWCUTTING OR DRILLING THROUGH THE NEW OR EXISTING STRUCTURAL ELEMENTS TO BE DONE ONLY WHEN SO DETAILED IN THE DRAWINGS OR ACCEPTED BY THE ARCHITECT OR STRUCTURAL ENGINEER WITH THE APPROVAL OF DSA REPRESENTATIVE.
36. THE SEISMIC ANCHORAGE OF MECHANICAL AND ELECTRICAL EQUIPMENT SHALL CONFORM TO ASCE 7–10 SECTION 13.3.1 AND TABLE 13.6–1. ANCHORAGE DETAILS FOR ROOF/FLOOR MOUNTED EQUIPMENT SHALL BE SHOWN ON PLANS.
37. ALL BRACING OF DUCTS AND PIPING SHALL BE INSTALLED IN ACCORDANCE WITH SMACNA GUIDELINES AS APPROVED BY DSA.
38. WHERE BRACING DETAIL ARE NOT SHOWN ON THE DRAWING OR IN THE GUIDELINES, THE FIELD INSTALLATION SHALL BE SUBJECTED TO THE APPROVAL OF THE ARCHITECT, STRUCTURAL ENGINEER AND DSA FIELD ENGINEER.

GENERAL NOTES

39. A COPY OF THE GUIDELINES PUBLISHED BY SMACNA AND APPROVED BY DSA SHALL BE PROVIDED BY THE CONTRACTOR AND KEPT ON THE JOB AT ALL TIMES.

SPECIAL NOTE

ALL PLUMBING DRAWINGS CONTAINED IN THIS SET SHALL DISPLAY THE DIVISION OF THE STATE ARCHITECT STAMP BEFORE THESE DRAWINGS CAN BE USED AS CONSTRUCTION DOCUMENTS.

COORDINATION

THESE DRAWINGS ARE DIAGRAMMATIC AND SHOW IN GENERAL WHERE THE PIPING AND OTHER WORK SPECIFIED IN THE DIVISION 22000 SECTIONS OF THE SPECIFICATIONS IS TO BE LOCATED. THE DRAWINGS DO NOT NECESSARILY INDICATE ANY AND ALL OFFSETS AND CONFIGURATIONS REQUIRED FOR COORDINATION WITH THE SPACE REQUIREMENTS OF OTHER TRADES. THE CONTRACTOR IS RESPONSIBLE FOR THE CORRECT PLACING, LOCATION AND CONNECTION OF THIS WORK IN RELATION TO THE WORK OF OTHER TRADES.

THE CONTRACTOR, SHALL EXAMINE ALL MECHANICAL, ARCHITECTURAL, STRUCTURAL, ELECTRICAL AND OTHER DRAWINGS THAT HAVE BEEN PREPARED FOR THIS PROJECT, AND ACCEPT SUCH CONDITIONS, AND MAKE ALLOWANCES FOR THEM IN PREPARING THE BID.

SEISMIC RESTRAINT NOTES

ALL MECHANICAL, PLUMBING, AND ELECTRICAL COMPONENTS SHALL BE ANCHORED AND INSTALLED PER THE DETAILS ON THE DSA APPROVED CONSTRUCTION DOCUMENTS. THE FOLLOWING COMPONENTS SHALL BE ANCHORED OR BRACED TO MEET FORCE AND DISPLACEMENT REQUIREMENTS PRESCRIBED IN THE 2022 CBC SECTIONS 1617A.1.18 THROUGH 1617A.1.26 AND ASCE 7–16 CHAPTER 13, 26, AND 30:

1. ALL PERMANENT EQUIPMENT AND COMPONENTS
2. TEMPORARY, MOVABLE OR MOBILE EQUIPMENT THAT IS PERMANENTLY ATTACHED (E.G. HARD WIRED) TO THE BUILDING UTILITY SERVICES SUCH AS ELECTRICITY, GAS OR WATER. "PERMANENTLY ATTACHED" SHALL INCLUDE ALL ELECTRICAL CONNECTIONS EXCEPT PLUGS FOR 110/220 VOLT RECEPTACLES HAVING A FLEXIBLE CABLE.
3. TEMPORARY, MOVABLE OR MOBILE EQUIPMENT WHICH IS HEAVIER THAN 400 POUNDS OR HAS A CENTER OF MASS LOCATED 4 FEET OR MORE ABOVE THE ADJACENT FLOOR OR ROOF LEVEL THAT DIRECTLY SUPPORT THE COMPONENT IS REQUIRED TO BE RESTRAINED IN A MANNER APPROVED BY DSA.

THE FOLLOWING MECHANICAL AND ELECTRICAL COMPONENTS SHALL BE POSITIVELY ATTACHED TO THE STRUCTURE BUT NEED NOT DEMONSTRATE DESIGN COMPLIANCE WITH THE REFERENCES NOTED ABOVE. THE COMPONENTS SHALL HAVE FLEXIBLE CONNECTIONS PROVIDED BETWEEN THE COMPONENT AND ASSOCIATED DUCTWORK, PIPING AND CONDUIT. FLEXIBLE CONNECTIONS MUST ALLOW MOVEMENT IN BOTH TRANSVERSE AND LONGITUDINAL DIRECTIONS:

A. COMPONENTS WEIGHING LESS THAN 400 POUNDS AND HAVING A CENTER OF MASS LOCATED 4 FEET OR LESS ABOVE THE ADJACENT FLOOR OR ROOF LEVEL THAT DIRECTLY SUPPORT THE COMPONENT.
B. COMPONENTS WEIGHING LESS THAN 20 POUNDS, OR IN THE CASE OF DISTRIBUTED SYSTEMS, LESS THAN 5 POUNDS PER FOOT, WHICH ARE SUSPENDED FROM A ROOF OR FLOOR OR HUNG FROM A WALL.

THE ANCHORAGE OF ALL MECHANICAL, ELECTRICAL AND PLUMBING COMPONENTS SHALL BE SUBJECT TO THE APPROVAL OF THE DESIGN PROFESSIONAL IN GENERAL RESPONSIBLE CHARGE OR STRUCTURAL ENGINEER DELEGATED RESPONSIBILITY AND ACCEPTANCE BY DSA. THE PROJECT INSPECTOR WILL VERIFY THAT ALL COMPONENTS AND EQUIPMENT HAVE BEEN ANCHORED IN ACCORDANCE WITH THE ABOVE REQUIREMENTS.

PIPING, DUCTWORK, AND ELECTRICAL DISTRIBUTION SYSTEM BRACING NOTE

PIPING, DUCTWORK, AND ELECTRICAL DISTRIBUTION SYSTEMS SHALL BE BRACED TO COMPLY WITH THE FORCES AND DISPLACEMENT PRESCRIBED IN ASCE 7–16 SECTION 13.3 AS DEFINED IN ASCE 7–16 SECTIONS 13.6.5, 13.6.6, 13.6.7, 13.6.8; AND 2022 CBC, SECTIONS 1617A.1.24, 1617A.1.25 AND 1617A.1.26.

THE METHOD OF SHOWING BRACING AND ATTACHMENT TO THE STRUCTURE FOR THE IDENTIFIED DISTRIBUTION SYSTEM ARE AS NOTED BELOW. WHEN BRACING AND ATTACHMENTS ARE BASED ON A PRE–APPROVED INSTALLATION GUIDE (E.G., HCAI OPM FOR 2013 CBC OR LATER), COPIES OF THE BRACING SYSTEM INSTALLATION GUIDE OR MANUAL SHALL BE AVAILABLE ON THE JOBSITE PRIOR TO THE START OF AND DURING THE HANGING AND BRACING OF THE DISTRIBUTION SYSTEMS. THE STRUCTURAL ENGINEER OF RECORD SHALL VERIFY THE ADEQUACY OF THE STRUCTURE TO SUPPORT THE HANGER AND BRACE LOADS.

MECHANICAL PIPING (MP), MECHANICAL DUCTS (MD), PLUMBING PIPING (PP), ELECTRICAL DISTRIBUTION SYSTEM (E):

MP☐ MD☐ PP☒ E☐ OPTION 1: DETAILED ON THE APPROVED DRAWING WITH PROJECT SPECIFIC NOTES AND DETAILS

MP☐ MD☐ PP☐ E☐ OPTION 2: SHALL COMPLY WITH HCAI PRE–APPROVED (OPM#) #_____.

STATE:

IDENTIFICATION STAMP
DIV. OF THE STATE ARCHITECT
APP: 03-124281 INC:
REVIEWED FOR
SS ☑ FLS ☑ ACS ☑
DATE: 02/04/2025

ARCHITECT:

architecture
westbergwhite
7700 IRVINE CENTER DR. STE. 100
IRVINE, CA 92618
(714) 508-1780 (714) 508-1780 FAX

CONSULTANT:

1920 E. Warner Ave., Suite 3–H
Santa Ana, CA 92705
Telephone (714) 884–3803
Fax (714) 884–3834
PE# 530.231

REGISTERED PROFESSIONAL ENGINEER
KATHLEEN M. PETERSEN
No. M 29925
Exp. 06–30–2026

PROJECT NAME:

Bellflower Unified School District
Mayfair High School Sports Fields
6000 North Woodruff Ave
Lakewood, California 90713

CLIENT:

BELLFLOWER UNIFIED SCHOOL DISTRICT
16703 S. Clark Ave.
BELLFLOWER, CALIFORNIA 90706

#	Rev. Date	Description

JOB NO: 15008.01
DATE: 11/13/2024
DRAWN:
CHECK:
ARCHITECT: PDW
ENGINEER:

SHEET DESCRIPTION:
PLUMBING ABBREVIATIONS AND SYMBOLS LIST

SHEET NO:
P001

P:\530\530-231_BUSD_Mayfair_HS_Sports_Fields\Drawings\Plumbing\P001.dwg Jan 13, 2025 - 10:42am iggy

PIPE MATERIAL SCHEDULE

AG: ABOVE GRADE
BG: BELOW GRADE

SERVICES		C.I. NO-HUB	SCH. 40 PVC	COPPER DWV	SDR-35	SCH 40 GALV. STEEL	COPPER TYPE M	COPPER TYPE L	COPPER TYPE K	SCH. 80 PVC	YELLOW PE PIPE	DUCTILE IRON	REMARKS
WATER	AG						●						IAPMO IS 3-2006
	BG								●				IAPMO IS 8-2006
WASTE	AG	●											IAPMO IS 6-2006
	BG	●			●								IAPMO IS 1-2006
VENT	AG	●											IAPMO IS 9-2006
	BG	●											IAPMO IS 9-2006
INDIRECT WASTE	AG					●							IAPMO IS 3-2006 CD
	BG					●							IAPMO IS 3-2006 CD WRAPPED
STORM DRAIN	INSIDE	●											IAPMO IS 1-2006
	OUTSIDE	●											IAPMO IS 1-2006

FIXTURE UNIT LOAD CALCULATION (CONCESSIONS BLDG.)

FIXTURE	QTY	WSFU	TWSFU	DFU	TDFU
WATER CLOSET (FV)	9	–	155	6	54
URINAL <WATERLESS>	3	–	<45>	5	15
LAVATORY	6	1	6	2	12
SINK	1	2	2	3	6
SERVICE SINK	1	3	3	3	3
HOSE BIBB	4	2.5/1	5.5	–	–
FLOOR DRAIN	5	–	–	–	–
TOTAL			171.5 @ 85 GPM <216.5>@95 GPM		90 @ 65 GPM

HOT WATER DEMAND CALCULATION (CONCESSIONS BLDG.)

FIXTURE	QUANTITY	GPH	TOTAL GPH
SINK	1	5	5
SERVICE SINK	1	15	15
TOTAL			20

1) 20 GPH MAX. DEMAND
2) (20 GPH)(0.40 DEMAND FACTOR) = 8 GPH PROBABLE DEMAND
3) (8 GPH PROBABLE DEMAND)(1 STORAGE FACTOR) = 8 GALLONS
4) A 10 GALLON ELECTRIC WATER HEATER WILL BE PROVIDED.

PLUMBING FIXTURE SCHEDULE

ITEM	FIXTURE	ROUGH-IN CONNECTIONS: COLD WATER	HOT WATER	WASTE	VENT	INDIRECT WASTE	DESCRIPTION
WC 1	WATER CLOSET	1"	–	4"	2"	–	AMERICAN STANDARD "AFWALL MILLENIUM" NO. 3353.101, WHITE, ELONGATED BOWL, WALL HUNG, BACK SPUD, COMPLETE WITH SLOAN "ROYAL" NO. 152-1.28, 1.28 GPF, LOW CONSUMPTION CONCEALED FLUSHOMETER VALVE WITH PUSH BUTTON AND VACUUM BREAKER. PROVIDE CHURCH NO. 9500SSC ELONGATED OPEN FRONT SEAT AND JOSAM SINGLE VERTICAL CARRIER ASSEMBLY. SEE ARCHITECTURAL DRAWINGS FOR MOUNTING HEIGHT.
WC 2	WATER CLOSET (ACCESSIBLE)	1"	–	4"	2"	–	AMERICAN STANDARD "AFWALL MILLENIUM" NO. 3353.101, WHITE, ELONGATED BOWL, WALL HUNG, BACK SPUD, COMPLETE WITH SLOAN "ROYAL" NO. 143-1.28, 1.28 GPF, LOW CONSUMPTION CONCEALED FLUSHOMETER VALVE WITH HANDLE AND VACUUM BREAKER. LOCATE HANDLE ON WIDE SIDE OF STALL. PROVIDE CHURCH NO. 9500SSC ELONGATED OPEN FRONT SEAT AND JOSAM SINGLE VERTICAL CARRIER ASSEMBLY. SET TOP OF SEAT AT 17"-19" A.F.F.
U 1	URINAL	<3/4">	–	2"	1-1/2"	–	SLOAN "WATERFREE" NO. WES-1000, COMPLETE WITH MOUNTING BRACKET. PROVIDE CHROME PLATED COLD WATER STUB-OUT THRU FACE OF WALL WITH CHROME ESCUTCHEON PLATE AND CHROME PIPING CAPPED COMPLETE WITH A WALL CLEANOUT ABOVE EVERY URINAL. PROVIDE 16 ADDITIONAL REPLACEMENT CARTRIDGES PER FIXTURE. SEE ARCHITECTURAL DRAWINGS FOR MOUNTING HEIGHT.
U 2	URINAL (ACCESSIBLE)	<3/4">	–	2"	1-1/2"	–	SLOAN "WATERFREE" NO. WES-1000, COMPLETE WITH MOUNTING BRACKET. PROVIDE CHROME PLATED COLD WATER STUB-OUT THRU FACE OF WALL WITH CHROME ESCUTCHEON PLATE AND CHROME PIPING CAPPED COMPLETE WITH A WALL CLEANOUT ABOVE EVERY URINAL. PROVIDE 16 ADDITIONAL REPLACEMENT CARTRIDGES PER FIXTURE. SET RIM HEIGHT AT +17".
L 1	LAVATORY (ACCESSIBLE)	1/2"	–	2"	1-1/2"	–	AMERICAN STANDARD "LUCERNE" NO. 0355.012, WHITE, VITREOUS CHINA, WALL HUNG, 4" CENTERS AND SUPPORT ARMS. PROVIDE CHICAGO NO. 857-205824AB DECK MOUNTED METERING FAUCET, NO. E38JKABCP 0.35 GPM AERATOR, McGUIRE NO. 155WC OFF-SET GRID STRAINER, CHROME PLATED 17 GA. L.A. PATTERN CAST BRASS P-TRAP WITH SECURED ESCUTCHEON, CHICAGO NO. 1017-ABCP STOP AND RIGID SUPPLY. PROVIDE TRUEBRO PREFORMED INSULATED FITTING COVERS. SEE ARCHITECTURAL DRAWINGS FOR MOUNTING HEIGHT.
S 1	HAND SINK (ACCESSIBLE)	1/2"	1/2"	2"	1-1/2"	–	ELKAY NO. ELVWO22191, WALL HUNG, SINGLE HOLE, STAINLESS STEEL, COMPLETE WITH CHICAGO NO. 50-E35ABCP, 1.5 GPM FAUCET FLOW AERATOR, LEVER HANDLES, CHICAGO NO. 327-X1-12TPCP GRID STRAINER, CHICAGO NO. 1017-ABCP STOPS AND RIGID SUPPLIES AND CHROME PLATED 17 GA. L.A. PATTERN CAST BRASS P-TRAP WITH SECURED ESCUTCHEON. PROVIDE TRUEBRO PREFORMED INSULATED FITTING COVERS. SET TOP OF SINK AT +34" MAX.
SS 1	SERVICE SINK	3/4"	3/4"	3"	2"	–	CECO NO. 871, 28"x28", FLOOR CORNER TYPE COMPLETE WITH CHICAGO NO. 897-CCP FAUCET WITH VACUUM BREAKER, PAIL HOOK, WALL BRACE AND LEVER HANDLES. PROVIDE 3'-0" LONG BLACK RUBBER HOSE AND STAINLESS STEEL MOP RACK.
DF 1	REMOTE DRINKING FOUNTAIN (ACCESSIBLE)	3/4"	–	2"	–	–	ELKAY NO. LK4420, DUAL HEIGHT, LEAD-FREE STAINLESS STEEL BUBBLER, BARRIER FREE, 316 STAINLESS STEEL PEDESTAL DRINKING FOUNTAIN, COMPLETE WITH SHUT-OFF VALVE WITH ACCESS PANEL. SET A.D.A. BUBBLER HEIGHT AT +36". COLOR BY ARCHITECT.
HB 1	HOSE BIBB	3/4"	–	–	–	–	ACORN NO. 8121CP-LF, WALL MOUNTED, LEAD FREE, CHROME PLATED WITH VACUUM BREAKER AND LOOSE TEE KEY.
IM 1	ICE MAKER	3/4"	–	–	–	–	WATER-TITE GUY GRAY NO. MIB1AB, LOW LEAD, QUARTER TURN 1/2" SWEAT CONNECTION, FILTRINE NO. IN-10NS5, IN-LINE WATER FILTER FOR DRINKING WATER APPLICATIONS, 10" LONG x 2"ø, 10-125 PSI, NON SHOCK.
FD 1	FLOOR DRAIN	1/2"	–	2"	1-1/2"	–	JOSAM NO. 30000-6AD-2-49-92-VP, GALVANIZED CAST IRON, SECURE FLASHING AND CLAMP COLLAR, 6" ROUND ADJUSTABLE BRONZE STRAINER WITH VANDAL-PROOF SCREWS AND TRAP PRIMER CONNECTION.
TP 1	TRAP PRIMER	1/2"	–	–	–	–	P.P.P. INC. "PRIME-RITE", INSTALL COMPLETE WITH SHUT-OFF VALVE AND ACCESS PANEL (WHERE APPLICABLE).
WHA 1	WATER HAMMER ARRESTOR	1"	–	–	–	–	P.P.P. INC. MODEL SC, COPPER BODY, SIZED AND INSTALLED PER MANUFACTURER'S RECOMMENDATIONS. INSTALL COMPLETE WITH ACCESS PANEL (WHERE APPLICABLE).
WH 1	ELECTRIC WATER HEATER	3/4"	3/4"	–	–	–	A.O. SMITH NO. DEL-10, 10 GALLON STORAGE, NON-SIMULTANEOUS ELEMENT AT 2.5 KW COMPLETE WITH T&P VALVE. APPROX. OPER. WT= 150 LBS. PROVIDE "APOLLO" RV SERIES THERMAL EXPANSION VALVE IN LIEU OF EXPANSION TANK. 208V-1ø-60Hz. PROVIDE HOLDRITE NO. 5-SWHP-W EQUIPMENT PLATFORM.
RD 1	ROOF DRAIN	SEE PLANS FOR SIZE					J.R. SMITH NO. 1330Y-R-C-U-CID, NO-HUB OUTLETS, UNDER DECK CLAMP AND VANDAL PROOF CAST IRON DOME COMPLETE WITH SUMP RECIEVER.
OD 1	OVERFLOW DRAIN	SEE PLANS FOR SIZE					J.R. SMITH NO. 1330Y-WD-R-C-U-CID, NO-HUB OUTLETS, UNDER DECK CLAMP AND VANDAL PROOF CAST IRON DOME COMPLETE WITH 2" HIGH WATER DAM & SUMP RECIEVER.

NOTES:
1.- THE ABOVE ITEMS SHALL BE PROVIDED AND INSTALLED IN FULL ACCORDANCE WITH MANUFACTURER'S RECOMMENDATIONS.
2.- COORDINATE LOCATION AND ARRANGEMENT OF ACCESSIBLE FIXTURES WITH THE ARCHITECTURAL PLANS.
3.- MANUAL FAUCET CONTROLS AT LAVS/SINKS SHALL REQUIRE NO GREATER THAN 5 LBS. OF FORCE TO ACTIVATE CONTROLS.
4.- ALL FAUCET TRIM SHALL COMPLY WITH LATEST A81953 REQUIREMENTS.
5.- THE ABOVE ITEMS SHALL COMPLY WITH THE 2022 CALIFORNIA GREEN BUILDING STANDARDS CODE.
6.- PROVIDE PRE-FORMED INSULATED COVERS BY "TRUBRO" TO ALL EXPOSED PIPING BELOW LAV/SINK.

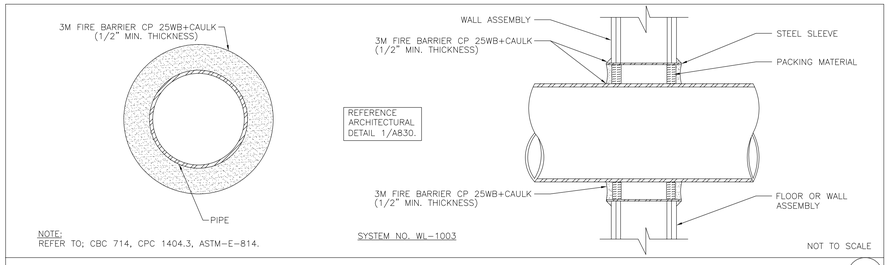

PIPE PENETRATION THRU RATED WALL DETAIL 9

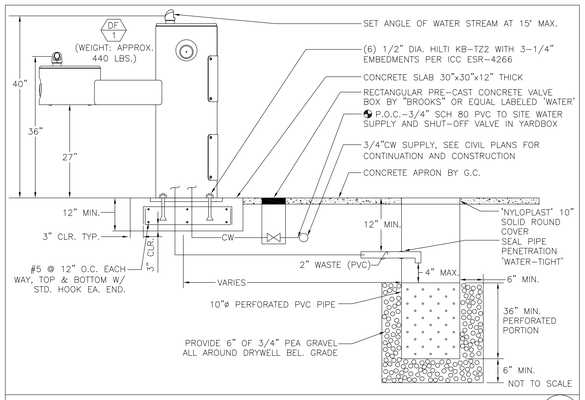

REMOTE DRINKING FOUNTAIN DETAIL 8

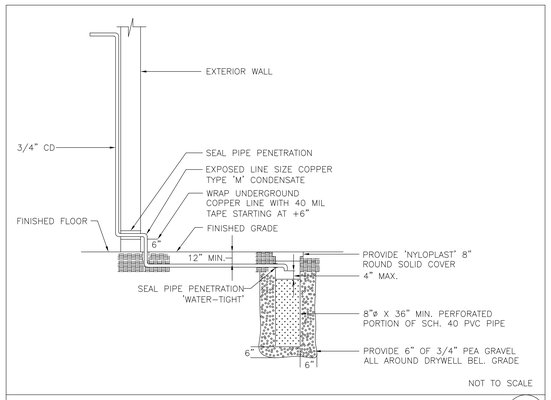

CONDENSATE DRAIN DRYWELL DETAIL 7

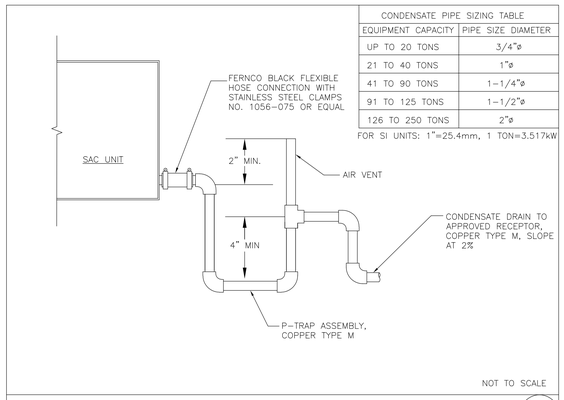

CONDENSATE DRAIN DETAIL 6

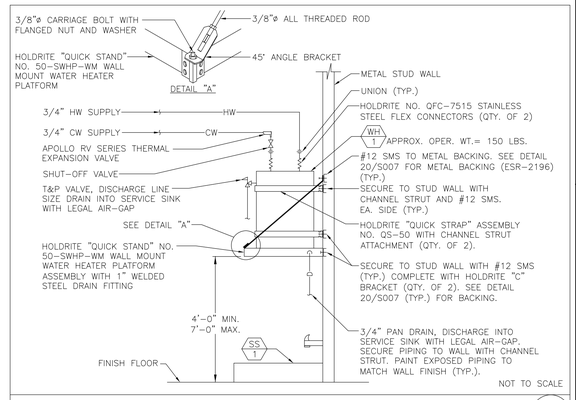

WATER HEATER DETAIL 5

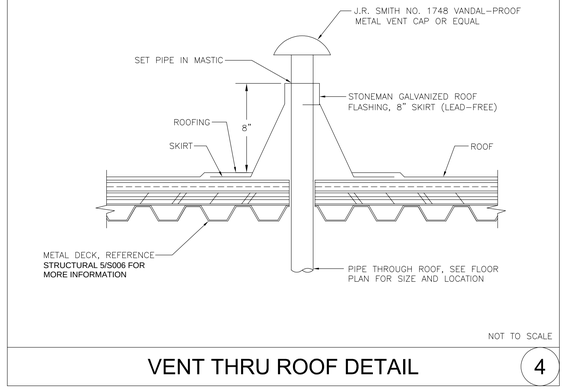

VENT THRU ROOF DETAIL 4

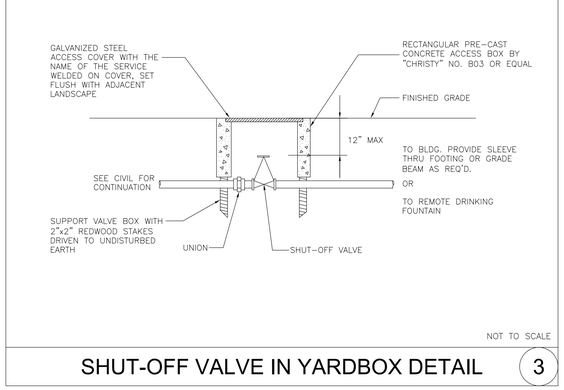

SHUT-OFF VALVE IN YARDBOX DETAIL 3

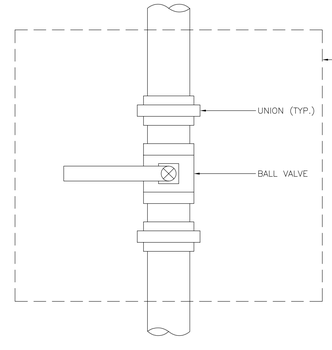

RECESSED VALVE DETAIL 2

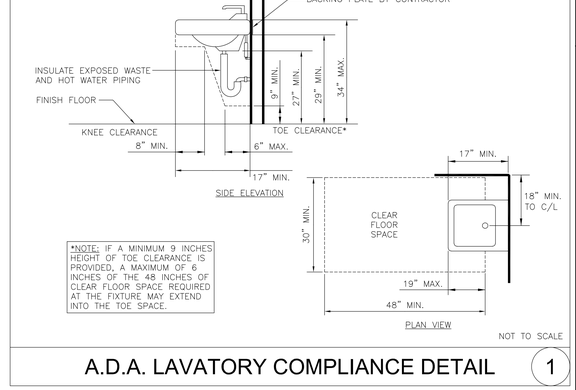

A.D.A. LAVATORY COMPLIANCE DETAIL 1

STATE:

IDENTIFICATION STAMP
DIV. OF THE STATE ARCHITECT
APP: 03-124281 INC:
REVIEWED FOR
SS ☑ FLS ☑ ACS ☑
DATE: 02/04/2025

ARCHITECT:
architecture
westbergwhite
7700 IRVINE CENTER DR. STE. 100
IRVINE, CA 92618
(714) 508-1780 (714) 508-1780 FAX

CONSULTANT:
1920 E. Warner Ave., Suite 3-H
Santa Ana, CA 92705
Telephone (714) 884-3803
Fax (714) 884-3834
PE: #530.231

REGISTERED PROFESSIONAL ENGINEER
STEPHEN M. PIZZARELLI
No. M 29925
Exp. 06-30-2026

PROJECT NAME:
Bellflower Unified School District
Mayfair High School Sports Fields
6000 North Woodruff Ave
Lakewood, California 90713

CLIENT:
BELLFLOWER UNIFIED SCHOOL DISTRICT
16703 S. Clark Ave,
BELLFLOWER, CALIFORNIA 90706

Rev.	Date	Description

JOB NO: 15008.01
DATE: 11/13/2024
DRAWN:
CHECK:
ARCHITECT: PDW
ENGINEER:

SHEET DESCRIPTION:
PLUMBING SCHEDULES AND DETAILS

SHEET NO:
P002

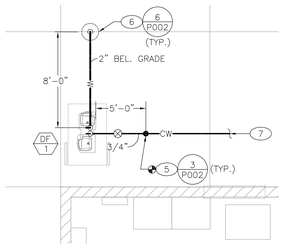

SOUTHWEST SIDE

NORTH

REMOTE DF'S @ BASEBALL FIELD SCALE: 1/4"=1'-0" | 7

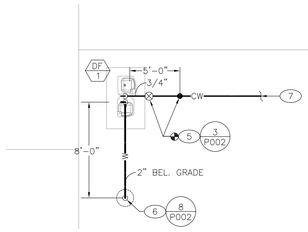

NORTH

REMOTE DF'S @ VISITOR BLEACHERS SCALE: 1/4"=1'-0" | 8

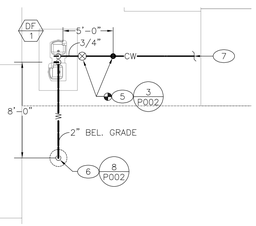

NORTH

REMOTE DF'S @ VISITOR BLEACHERS SCALE: 1/4"=1'-0" | 9

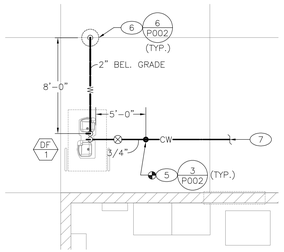

NORTHEAST SIDE

NORTH

REMOTE DF'S @ BASEBALL FIELD SCALE: 1/4"=1'-0" | 6

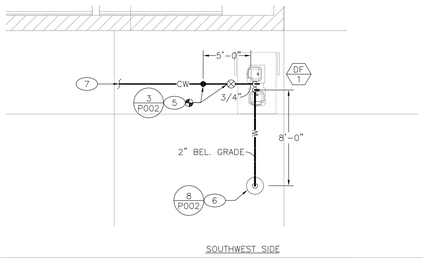

SOUTHWEST SIDE

NORTH

REMOTE DF'S @ SOFTBALL FIELD SCALE: 1/4"=1'-0" | 5

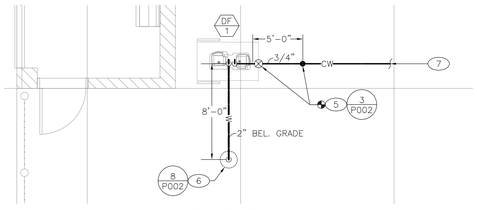

NORTHEAST SIDE

NORTH

REMOTE DF'S @ SOFTBALL FIELD SCALE: 1/4"=1'-0" | 4

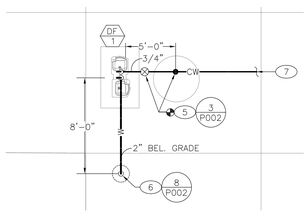

NORTHWEST SIDE

NORTH

REMOTE DF'S @ HOME BLEACHERS SCALE: 1/4"=1'-0" | 3

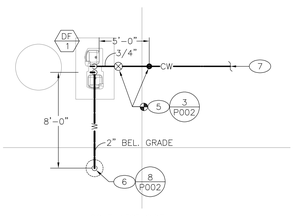

SOUTHWEST SIDE

NORTH

REMOTE DF'S @ HOME BLEACHERS SCALE: 1/4"=1'-0" | 2

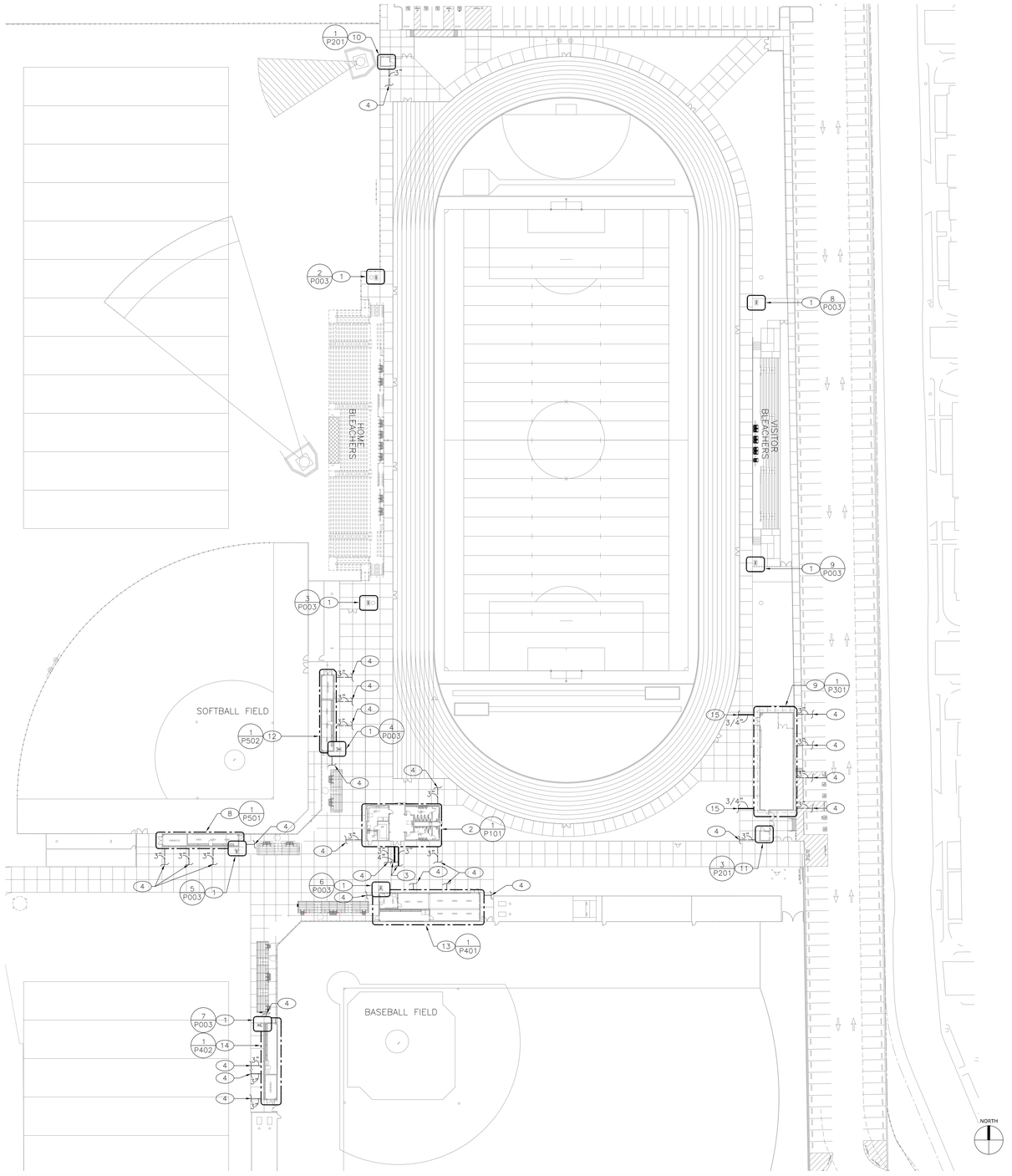

NORTH

PARTIAL PLUMBING SITE PLAN SCALE: 1"=40'-0" | 1

PLAN NOTES

1.– SEE ENLARGED REMOTE DRINKING FOUNTAIN PLANS ON THIS SHEET FOR MORE INFORMATION.

2.– TOILET/CONCESSION BUILDING, SEE PLUMBING FLOOR PLAN SHEET P101 FOR MORE INFORMATION.

3.– 3" CW AND 4" WASTE PIPING BEL. GRADE. SEE CIVIL PLANS FOR CONTINUATION AND CONSTRUCTION OF SITE DOMESTIC COLD WATER AND SANITARY SEWER.

4.– 3" SD PIPING BEL. GRADE. SEE CIVIL PLANS FOR CONTINUATION AND CONSTRUCTION OF SITE STORM DRAIN.

5.– P.O.C.– 3/4" CW TO SITE DOMESTIC COLD WATER. EXTEND SERVICE AS INDICATED COMPLETE WITH SHUT-OFF VALVE IN YARDBOX. PATCH GRADE TO MATCH EXISTING.

6.– DISCHARGE 2" WASTE TO DRY WELL. PATCH GRADE TO MATCH EXISTING.

7.– SEE CIVIL DRAWINGS, (UTILITY SHEET C301) FOR CONTINUATION AND CONSTRUCTION OF SITE DOMESTIC COLD WATER.

8.– SOFTBALL HOME DUGOUT, SEE PLUMBING FLOOR PLAN SHEET P501 FOR MORE INFORMATION.

9.– FIELD STORAGE BUILDING, SEE PLUMBING FLOOR PLAN SHEET P301 FOR MORE INFORMATION.

10.– TICKET BOOTH BUILDING (HOME), SEE PLUMBING FLOOR PLAN 1/P201 FOR MORE INFORMATION.

11.– TICKET BOOTH BUILDING (VISITOR), SEE PLUMBING FLOOR PLAN 3/P201 FOR MORE INFORMATION.

12.– SOFTBALL VISITOR DUGOUT, SEE PLUMBING FLOOR PLAN SHEET P502 FOR MORE INFORMATION.

13.– BASEBALL HOME DUGOUT, SEE PLUMBING FLOOR PLAN SHEET P401 FOR MORE INFORMATION.

14.– BASEBALL VISITOR DUGOUT, SEE PLUMBING FLOOR PLAN SHEET P402 FOR MORE INFORMATION.

15.– 3/4" CW PIPING BEL. GRADE. SEE CIVIL PLANS FOR CONTINUATION AND CONSTRUCTION OF SITE DOMESTIC COLD WATER.

STATE:

IDENTIFICATION STAMP
DIV. OF THE STATE ARCHITECT
APP: 03-124281 INC:
REVIEWED FOR
SS ☑ FLS ☑ ACS ☑
DATE: 02/04/2025

ARCHITECT:

architecture
westbergwhite
7700 IRVINE CENTER DR. STE. 100
IRVINE, CA 92618
(714) 508-1780 (714) 508-1780 FAX

CONSULTANT:

1920 E. Warner Ave., Suite 3-H
Santa Ana, CA 92705
Telephone (714) 884-3803
Fax (714) 884-3834
PE: #530.231

REGISTERED PROFESSIONAL ENGINEER
STEPHEN M. PITZER
No. M 29925
Exp. 06-30-2026

PROJECT NAME:

Bellflower Unified School District
Mayfair High School Sports Fields
6000 North Woodruff Ave
Lakewood, California 90713

CLIENT:

BELLFLOWER UNIFIED
SCHOOL DISTRICT
16703 S. Clark Ave.
BELLFLOWER, CALIFORNIA 90706

#	Rev. Date	Description

JOB NO: 15008.01
DATE: 11/13/2024
DRAWN:
CHECK:
ARCHITECT: PDW
ENGINEER:

SHEET DESCRIPTION:
PLUMBING SITE PLAN

SHEET NO:
P003

P:\530\530-23I_BUSD_Mayfair_HS_Sports_Fields\Drawings\Plumbing\P003.dwg Jan 13, 2025 - 10:43am iggy

STATE OF CALIFORNIA
Domestic Water Heating System
CALIFORNIA ENERGY COMMISSION

CERTIFICATE OF COMPLIANCE	NRCC-PLB-E
Project Name: Mayfair HS Sports Field Concession	**Report Page:** (Page 1 of 7)
Project Address:	**Date Prepared:** 2024-06-04T12:27:30-04:00

This document is used to demonstrate compliance for nonresidential occupancies with requirements in 110.1, 110.3, 120.3, and 140.5, and with requirements in 141.0 for additions and alterations, for domestic water heating scopes using the prescriptive path. For high-rise residential and hotel/motel occupancies compliance is demonstrated with requirements in 110.1, 110.3, 160.4 and 170.2(d), and with requirements 180.1 for additions and 180.2 for alterations.

A. GENERAL INFORMATION

01	Project Location (city)	Bellflower	02	Climate Zone	8
03	Occupancy Types Within Project (select all that apply):				

● School or Classroom

B. PROJECT SCOPE

This table includes domestic water heating systems that are within the scope of the permit application and are demonstrating compliance using the prescriptive paths outlined in 140./170.2(d) and 141.0(a)/ 180.1, or 141.0(b)2N / 180.2 for additions or alterations. Solar water heating systems are documented on the NRCC-SAB compliance document. Combined hydronic water heating systems are documented on the NRCC-MCH compliance document.

01	02	03		
My project consists of (check all that apply):	System Type[1,2]	System Components		
☒ New system (DHW system being installed for the first time)	Individual System (serving nonresidential spaces)	☒ Equipment	☒ Distribution	☒ Controls
☐ System Alteration (equipment, distribution or controls)		☐ Equipment	☐ Distribution	☐ Controls

[1] *FOOTNOTES: Point of use water heaters, or other non-central systems used to serve nonresidential spaces, are considered individual systems.*
[2] *Dwelling units refers to hotel/motel guest rooms and units in a multifamily residential occupancy.*
[3] *DHW systems serving 2 or more dwelling units are considered "Central Systems" for multifamily occupancies*

C. COMPLIANCE RESULTS

Table C will indicate if the project data input into the compliance document is compliant with water heating requirements. If this table says "DOES NOT COMPLY" or "COMPLIES with Exceptional Conditions" refer to Table D. or the table indicated as not compliant for guidance.

01	02	03	04
Domestic Hot Water Equipment	Distribution Systems	Controls	**Compliance Results**
Table F	Table G	Table H	
Yes	Yes	Yes	COMPLIES

D. EXCEPTIONAL CONDITIONS

This table is auto-filled with uneditable comments because of selections made or data entered in tables throughout the form.

STATE OF CALIFORNIA
Domestic Water Heating System
CALIFORNIA ENERGY COMMISSION

CERTIFICATE OF COMPLIANCE	NRCC-PLB-E
Project Name: Mayfair HS Sports Field Concession	**Report Page:** (Page 2 of 7)
	Date Prepared: 2024-06-04T12:27:30-04:00

E. ADDITIONAL REMARKS

This table includes remarks made by the permit applicant to the Authority Having Jurisdiction.

STATE OF CALIFORNIA
Domestic Water Heating System
CALIFORNIA ENERGY COMMISSION

CERTIFICATE OF COMPLIANCE	NRCC-PLB-E
Project Name: Mayfair HS Sports Field Concession	**Report Page:** (Page 3 of 7)
	Date Prepared: 2024-06-04T12:27:30-04:00

F. DOMESTIC HOT WATER EQUIPMENT

This table is used to demonstrate compliance with mandatory equipment requirements in 110.1 and 110.3. Compliance with prescriptive requirements in 140.5(c) / 170.2(d) must also be demonstrated and with 141.0 / 180.1/ 180.2 for addition and alteration scopes.

Equipment Schedule: Water Heating Efficiency and Standby Loss

03	04			05		06		
System Name	WH-1	Exception to 140.5(c)/ 170.2(d)3	Exceptions Do Not Apply	☐	Gas Service Water Heating System >= 1MMBtu/h[1]	Capacity-weighted Average Efficiency %		
07	08	09	10		11	12	13	14	15
Name or Item Tag	Equipment Type	Volume (gal)	Rated Input Capacity (Btu/h)	Max GPM/ First Hour Rating (FHR)	Rated Efficiency	Minimum Efficiency Required	Efficiency Unit	Designed Standby Loss	Maximum Standby Loss
WH-1	Commercial Electric Storage Water Heater	10	8,530					1	3

[1] *FOOTNOTE: In systems >= 1MMBtu/h with multiple units, gas water heaters with input capacity > 100,000 Btu/h may meet 90% Et requirements via an input capacity-weighted average.*
[2] *FOOTNOTE: Compliant equipment may be found in the Modernized Appliance Efficiency Database System (MAEDBS) on the Energy Commission website: https://cacertappliances.energy.ca.gov/Pages/Search/AdvancedSearch.aspx*

Water Heating Equipment All Occupancies

	Yes	No	Not Applicable	Requirement
18	☒	☐	☐	Unfired storage tank insulation shall have Internal + External >=R-16 OR External >=R-3.5. Label required per 110.3(c)3
19	☐	☐	☒	New state buildings 60% of energy for service water heating from site solar energy or recovered energy per 110.3(c)5
20	☐	☐	☒	Isolation valves for instantaneous water heater with input rating >6.8 kBTUH or 2 kW has been specified per 110.3(c)6
21	☒	☐	☐	School buildings < 25,000 ft^2 and < 4 stories must install a heat pump water heating system per 140.5(a)1. Water heating systems serving an individual bathroom space may be an instantaneous electric water heater.

STATE OF CALIFORNIA
Domestic Water Heating System
CALIFORNIA ENERGY COMMISSION

CERTIFICATE OF COMPLIANCE	NRCC-PLB-E
Project Name: Mayfair HS Sports Field Concession	**Report Page:** (Page 4 of 7)
	Date Prepared: 2024-06-04T12:27:30-04:00

G. DOMESTIC HOT WATER DISTRIBUTION SYSTEM

This table is used to demonstrate compliance for nonresidential occupancies with distribution requirements in 120.3 and 140.5. For multifamily and hotel/motel occupancies, compliance is demonstrated with requirements 110.3(c), 160.4, 170.2(d).

Mandatory Pipe Insulation All Occupancies

13	☐	For systems serving dwelling units, pipe insulation must meet the minimum insulation requirements in Table 160.4-A (see blow) except: • Piping that penetrates framing members shall not be required to have pipe insulation for the distance of the framing penetration. Piping that penetrates metal framing shall use grommets, plugs, wrapping or other insulating material to assure that no contact is made with the metal framing. Insulation shall abut securely against all framing members • Piping installed in interior or exterior walls shall not be required to have pipe insulation if all of the requirements are met for compliance with Quality Insulation Installation (QII) as specified in the Reference Residential Appendix RA3.5. • Piping surrounded with a minimum of 1 inch of wall insulation, 2 inches of crawlspace insulation, or 4 inches of attic insulation, shall not be required to have pipe insulation.
14	☒	For systems serving nonresidential spaces, pipe insulation for the following applications is specified to comply with Table 120.3-A (see below) per 120.3: • Recirculating system piping, including supply and return piping of the water heater • The first 8 ft of hot and cold outlet piping, including between storage tank and heat trap, for a nonrecirculating storage system • Pipes that are externally heated
15	☒	Insulation shall be protected from damage, including that due to sunlight, moisture, equipment maintenance, and wind. Insulation exposed to weather shall be installed with a cover suitable for outdoor service per 120.3(b) / 160.4(f). Pipe insulation buried below grade must be installed in a water proof and non-crushable casing or sleeve.

TABLE 120.3-A / 160.4-A PIPE INSULATION THICKNESS

Fluid Temperature Range (°F)	Conductivity Range (Btu-in per hour per ft^2 per °F)	Insulation Mean Rating Temp (°F)	Nominal Pipe Diameter (in)			
			< 1	1 to < 1.5	1.5 to < 4	1.5 to < 4 Multifamily & Hotel/Motel
			Minimum Insulation Required			
105-140	0.22 - 0.28	100	1.0 in or R-7.7	1.5 in or R-12.5	1.5 in or R-11	2.0 in or R-16

STATE OF CALIFORNIA
Domestic Water Heating System
CALIFORNIA ENERGY COMMISSION

CERTIFICATE OF COMPLIANCE	NRCC-PLB-E
Project Name: Mayfair HS Sports Field Concession	**Report Page:** (Page 5 of 7)
	Date Prepared: 2024-06-04T12:27:30-04:00

H. DOMESTIC HOT WATER CONTROLS

This table is used to demonstrate compliance with control requirements in 110.3 for all occupancies. For multifamily residential and hotel/motel occupancies, compliance is also demonstrated with requirements in 160.4(e) / 170.2(d).

	Yes	No	Not Applicable	Requirement
01	☒	☐	☐	Construction documents require manufacturer certification that service water-heating systems are equipped with automatic temperature controls capable of adjusting temperature settings per 110.3(a).
02	☐	☐	☒	Systems with capacity > 167,000 BTUH equipped with outlet temperature controls per 110.3(c)1 unless covered by California Plumbing Code 613.0.
03	☒	☐	☐	Controls for circulating pumps or electrical heat trace systems are capable of automatically turning off the system per §110.3(c)2 unless systems serves healthcare facility.
04	☐	☐	☒	For recirculation systems serving multiple dwelling units, design includes automatic pump controls per 170.2(d) or 180.1(b)3 for addiions.
05	☐	☐	☒	For recirculation systems serving individual dwelling units, design includes manual on/off controls as specified in Reference Appendix RA4.4.9 per 170.2(d).
06	☐	☐	☒	Combustion air positive shut-off shall be provided per 160.4(3).on all newly installed commercial boilers as follows: • Boilers with input capacity >= 2.5 MMBtu/h, in which the boiler is designed to operate with a nonpositive vent static pressure • Boilers where one stack serves two or more boilers with a total combined input capacity per stack of 2.5 MMBtu/h.
07	☐	☐	☒	Boiler combustion air fans with motor >= 10 hp shall meet one of the following • The fan motor shall be driven by a variable speed drive OR • The fan motor shall include controls that limit the fan motor demand to <=30% of the total design wattage at 50% of the design air volume.
08	☐	☐	☒	Newly installed boilers with an input capacity (d:gte/) 5MMBtu/h and a steady state full-load combustion efficiency < 90% shall maintain excess (stack-gas) oxygen concentrations <= 5% by volume on a dry basis over firing rates of 20-100%. Combustion air volume shall be controlled with respect to firing rate or flue gas oxygen concentration. Use of a common gas and combustion air control linkage or jack shaft is prohibited.

STATE OF CALIFORNIA
Domestic Water Heating System
CALIFORNIA ENERGY COMMISSION

CERTIFICATE OF COMPLIANCE	NRCC-PLB-E
Project Name: Mayfair HS Sports Field Concession	**Report Page:** (Page 6 of 7)
	Date Prepared: 2024-06-04T12:27:30-04:00

I. DECLARATION OF REQUIRED CERTIFICATES OF INSTALLATION

Selections have been made based on information provided in this document. If any selection have been changed by permit applicant, an explanation should be included in Table E. Additional Remarks. These documents must be provided to the building inspector during construction and can be found online

Form/Title
NRCI-PLB-E - Must be submitted for all buildings

J. DECLARATION OF REQUIRED CERTIFICATES OF ACCEPTANCE

There are no forms required for this project.

K. DECLARATION OF REQUIRED CERTIFICATES OF VERIFICATION

There are no forms required for this project.

STATE OF CALIFORNIA
Domestic Water Heating System
CALIFORNIA ENERGY COMMISSION

CERTIFICATE OF COMPLIANCE	NRCC-PLB-E
Project Name: Mayfair HS Sports Field Concession	**Report Page:** (Page 7 of 7)
Project Address:	**Date Prepared:** 2024-06-04T12:27:30-04:00

DOCUMENTATION AUTHOR'S DECLARATION STATEMENT

I certify that this Certificate of Compliance documentation is accurate and complete.

Documentation Author Name: MATTHEW PEZESHKI	Documentation Author Signature:
Company: Pezeshki Engineering Inc.	Signature Date:
Address:	CEA/ HERS Certification Identification (if applicable):
City/State/Zip:	Phone:

RESPONSIBLE PERSON'S DECLARATION STATEMENT

I certify the following under penalty of perjury, under the laws of the State of California:

1. The information provided on this Certificate of Compliance is true and correct.
2. I am eligible under Division 3 of the Business and Professions Code to accept responsibility for the building design or system design identified on this Certificate of Compliance (responsible designer)
3. The energy features and performance specifications, materials, components, and manufactured devices for the building design or system design identified on this Certificate of Compliance conform to the requirements of Title 24, Part 1 and Part 6 of the California Code of Regulations.
4. The building design features or system design features identified on this Certificate of Compliance are consistent with the information provided on other applicable compliance documents, worksheets, calculations, plans and specifications submitted to the enforcement agency for approval with this building permit application.
5. I will ensure that a completed signed copy of this Certificate of Compliance shall be made available with the building permit(s) issued for the building, and made available to the enforcement agency for all applicable inspections. I understand that a completed signed copy of this Certificate of Compliance is required to be included with the documentation the builder provides to the building owner at occupancy.

Responsible Designer Name:	Responsible Designer Signature:
Company:	Date Signed:
Address:	License:
City/State/Zip:	Phone:

STATE:

IDENTIFICATION STAMP
DIV. OF THE STATE ARCHITECT
APP: 03-124281 INC:
REVIEWED FOR
SS ☑ FLS ☑ ACS ☑
DATE: 02/04/2025

ARCHITECT:

architecture
westbergwhite
7700 IRVINE CENTER DR. STE. 100
IRVINE, CA 92618
(714) 508-1780 (714) 508-1780 FAX

CONSULTANT:

1920 E. Warner Ave., Suite 3-H
Santa Ana, CA 92705
Telephone (714) 884-3803
Fax (714) 884-3634
PE# 530.231

REGISTERED PROFESSIONAL ENGINEER
MATTHEW M. PEZESHKI
No. M 29925
Exp. 06-30-2026

PROJECT NAME:

Bellflower Unified School District
Mayfair High School Sports Fields
6000 North Woodruff Ave
Lakewood, California 90713

CLIENT:

BELLFLOWER UNIFIED SCHOOL DISTRICT
16703 S. Clark Ave,
BELLFLOWER, CALIFORNIA 90706

Rev.	Date	Description

JOB NO: 15008.01
DATE: 11/13/2024
DRAWN:
CHECK:
ARCHITECT: PDW
ENGINEER:

SHEET DESCRIPTION:
DOMESTIC WATER HEATING SYSTEM CERTIFICATE OF COMPLIANCE

SHEET NO:
P004

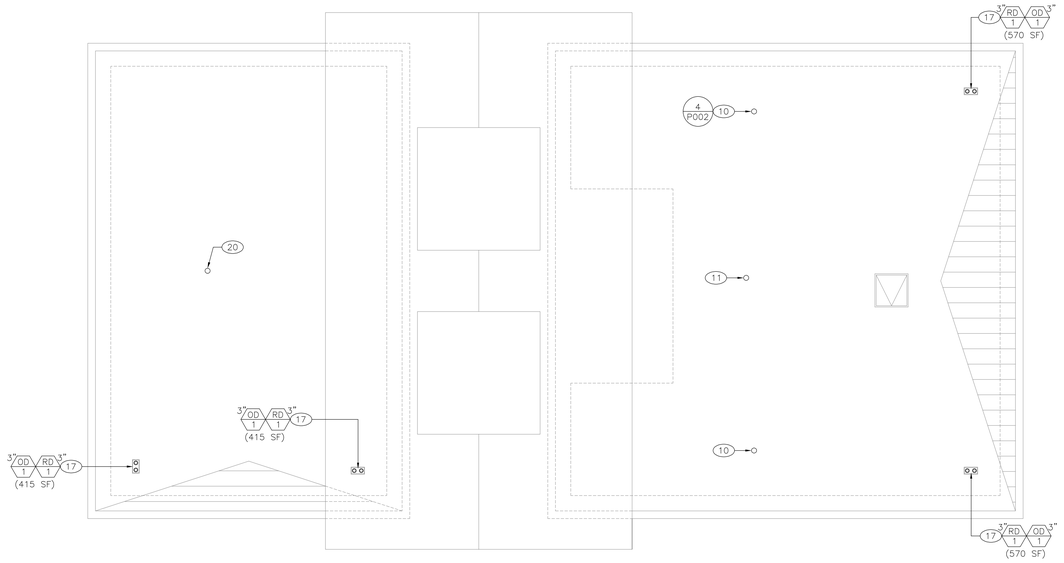

CODE COMPLIANCE

RAINFALL RATE BASED ON 3"/HR, 1/4" TABLE 1103.2, 2022 CPC.

NORTH

CONCESSIONS PLUMBING ROOF PLAN

SCALE: 1/4"=1'-0"

2

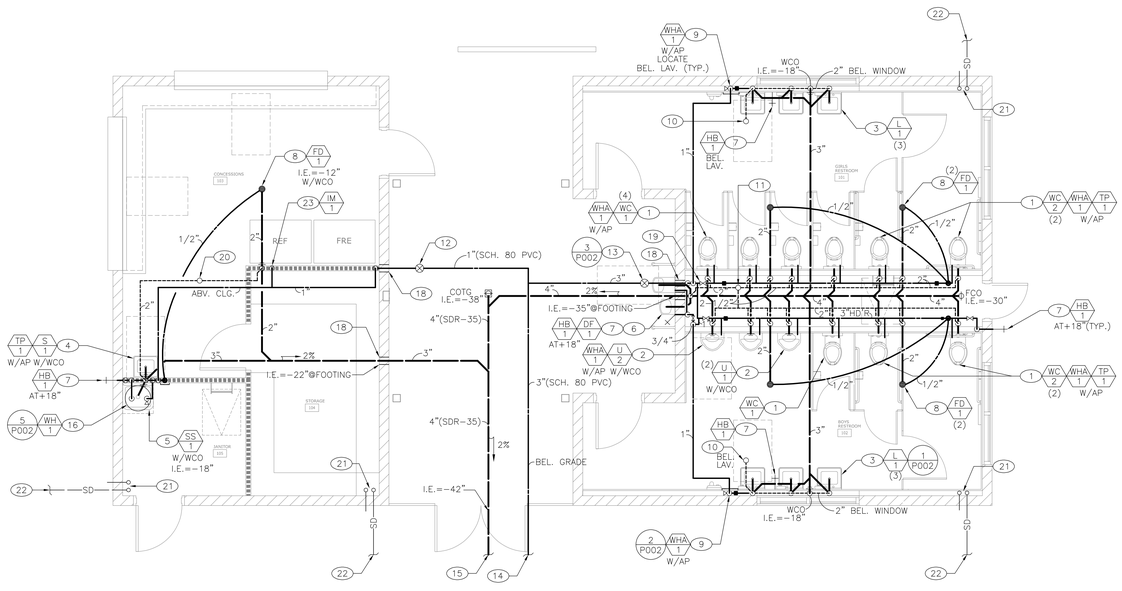

NORTH

CONCESSIONS BUILDING PLUMBING FLOOR PLAN

SCALE: 1/4"=1'-0"

1

PLAN NOTES

1.– PROVIDE 4" WASTE, 2" VENT AND 1" CW TO EACH WATER CLOSET.

2.– PROVIDE 2" WASTE, 1–1/2" VENT, AND 3/4" CW COMPLETE WITH CAPPED CHROME PLATED STUB–OUT TO EACH URINAL.

3.– PROVIDE 2" WASTE, 1–1/2" VENT AND 1/2" CW TO EACH LAVATORY.

4.– PROVIDE 2" WASTE, 1–1/2" VENT AND 1/2" HW & CW TO SINK. EXTEND 1/2" CW TO TRAP PRIMER ASSEMBLY.

5.– PROVIDE 3" WASTE, 2" VENT AND 3/4" HW & CW TO SERVICE SINK. LOCATE WCO AWAY FROM WASHABLE PANELS.

6.– PROVIDE 2" WASTE, 1–1/2" VENT AND 3/4" CW TO DRINKING FOUNTAIN.

7.– PROVIDE 3/4" CW TO HOSE BIBB.

8.– PROVIDE 2" WASTE, 1–1/2" VENT AND 1/2" PRIMER LINE TO EACH FLOOR DRAIN.

9.– 1" CW DN. IN WALL COMPLETE WITH SHUT–OFF AND ACCESS PANEL. EXTEND 1" HEADER TO SERVE LAVATORIES, WATER HAMMER ARRESTOR AND HOSE BIBB.

10.– 2" VENT THRU ROOF. PAINT VTR TO MATCH ROOF FINISH.

11.– 4" VENT THRU ROOF. PAINT VTR TO MATCH ROOF FINISH.

12.– 1" CW SHUT–OFF VALVE IN YARDBOX.

13.– 3" CW SHUT–OFF VALVE IN YARDBOX.

14.– 3" COLD WATER, FOR CONTINUATION AND CONSTRUCTION, SEE CIVIL PLANS.

15.– 4" SANITARY SEWER, FOR CONTINUATION AND CONSTRUCTION, SEE CIVIL PLANS.

16.– PROVIDE 3/4" HW & CW TO ELECTRIC WATER HEATER MOUNTED ABOVE SERVICE SINK.

17.– 3" SD & OD DN. THRU ROOF.

18.– PIPE SLEEVE THRU FOOTING, SEE STRUCTURAL DETAIL 3/S003, FOR MORE INFORMATION (TYP.).

19.– LINE–SIZE SHUT–OFF VALVE (TYP.).

20.– 3" VENT THRU ROOF. PAINT VTR TO MATCH ROOF FINISH.

21.– 3" SD AND OD UP WITH 3" SD AND OD DN FACE OF WALL. 3" SD DN. TO BEL. GRADE. DAYLIGHT 3" OD THRU WALL AT +8" AND SPILL INTO SPLASHBLOCK.

22.– 3" STORM DRAIN, FOR CONTINUATION AND CONSTRUCTION, SEE CIVIL PLANS.

23.– PROVIDE 3/4" CW TO ICE MAKER.

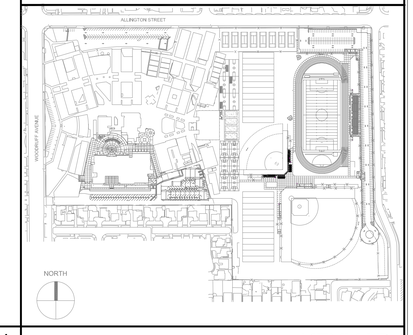

KEYMAP

STATE:

IDENTIFICATION STAMP
DIV. OF THE STATE ARCHITECT
APP: 03-124281 INC:
REVIEWED FOR
SS ☑ FLS ☑ ACS ☑
DATE: 02/04/2025

ARCHITECT:

architecture
westbergwhite
7700 IRVINE CENTER DR. STE. 100
IRVINE, CA 92618
(714) 508-1780 (714) 508-1780 FAX

CONSULTANT:

1920 E. Warner Ave., Suite 3–H
Santa Ana, CA 92705
Telephone (714) 884–3803
Fax (714) 884–3834
PE: #530.231

REGISTERED PROFESSIONAL ENGINEER
STEPHEN M. PETERSEN
No. M 29925
Exp. 06–30–2026

PROJECT NAME:

Bellflower Unified School District
Mayfair High School Sports Fields
6000 North Woodruff Ave
Lakewood, California 90713

CLIENT:

BELLFLOWER UNIFIED SCHOOL DISTRICT
16703 S. Clark Ave,
BELLFLOWER, CALIFORNIA 90706

Rev.	Date	Description

JOB NO: 15008.01
DATE: 11/13/2024
DRAWN:
CHECK:
ARCHITECT: PDW
ENGINEER:

SHEET DESCRIPTION:
CONCESSIONS BUILDING PLUMBING FLOOR AND ROOF PLANS

SHEET NO:

P101

P:\530\530-231_BUSD_Mayfair_HS_Sports_Fields\Drawings\Plumbing\P101.dwg Jan 13, 2025 – 10:45am iggy

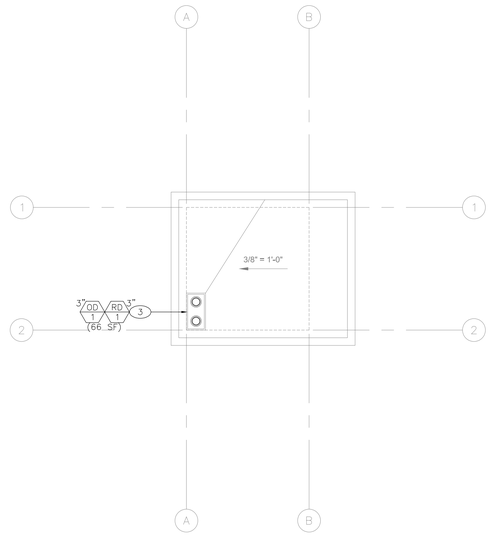

NORTH

TICKET BOOTH BUILDING (VISITOR) PLUMBING ROOF PLAN SCALE: 1/4"=1'-0" 4

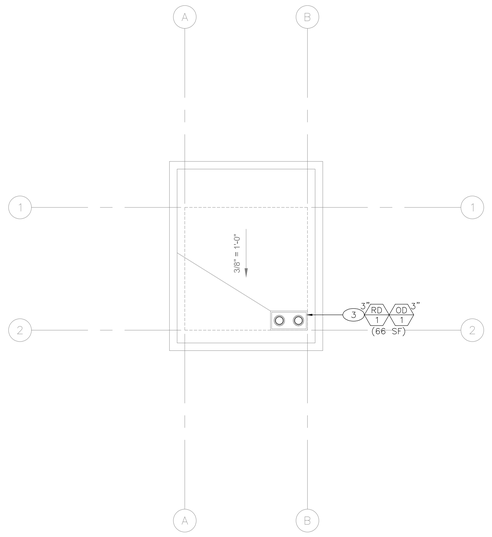

NORTH

TICKET BOOTH BUILDING (HOME) PLUMBING ROOF PLAN SCALE: 1/4"=1'-0" 2

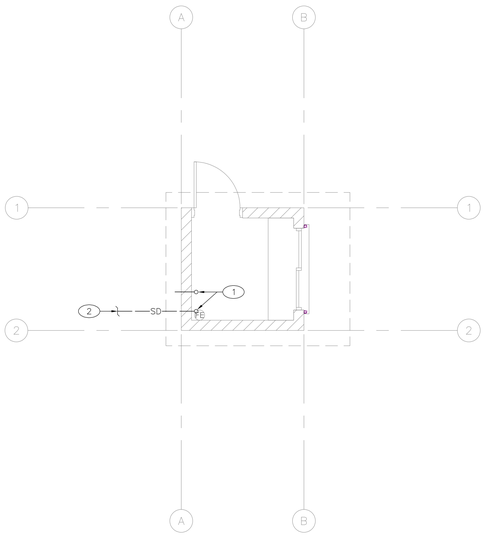

NORTH

TICKET BOOTH BUILDING (VISITOR) PLUMBING FLOOR PLAN SCALE: 1/4"=1'-0" 3

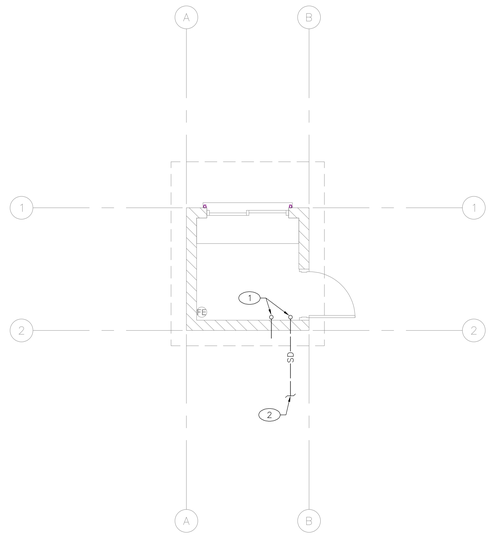

NORTH

TICKET BOOTH BUILDING (HOME) PLUMBING FLOOR PLAN SCALE: 1/4"=1'-0" 1

PLAN NOTES

1.– 3" SD AND OD UP WITH 3" SD AND OD DN FACE OF WALL. 3" SD DN. TO BEL. GRADE. DAYLIGHT 3" OD THRU WALL AT +8" AND SPILL INTO SPLASHBLOCK.

2.– 3" STORM DRAIN, FOR CONTINUATION AND CONSTRUCTION, SEE CIVIL PLANS.

3.– 3" SD & OD DN. THRU ROOF.

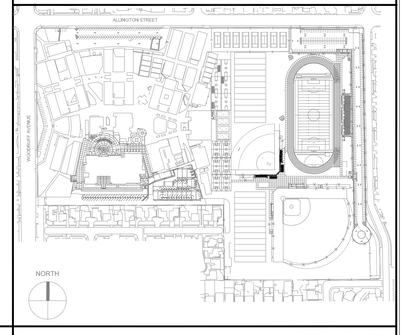

KEYMAP

STATE:

IDENTIFICATION STAMP
DIV. OF THE STATE ARCHITECT
APP: 03-124281 INC:
REVIEWED FOR
SS ☑ FLS ☑ ACS ☑
DATE: 02/04/2025

ARCHITECT:

architecture
westbergwhite
7700 IRVINE CENTER DR. STE. 100
IRVINE, CA 92618
(714) 508-1780 (714) 508-1780 FAX

CONSULTANT:

1920 E. Warner Ave., Suite 3-H
Santa Ana, CA 92705
Telephone (714) 884-3803
Fax (714) 884-3834
PE: #530.231

REGISTERED PROFESSIONAL ENGINEER
MATTHEW M. PITZER
No. M 29925
Exp. 06-30-2026

PROJECT NAME:

Bellflower Unified School District
Mayfair High School Sports Fields
6000 North Woodruff Ave
Lakewood, California 90713

CLIENT:

BELLFLOWER UNIFIED
SCHOOL DISTRICT

16703 S. Clark Ave,
BELLFLOWER, CALIFORNIA 90706

Rev.	Date	Description

JOB NO: 15008.01
DATE: 11/13/2024
DRAWN:
CHECK:
ARCHITECT: PDW
ENGINEER:

SHEET DESCRIPTION:
TICKET BOOTH
PLUMBING FLOOR AND
ROOF PLANS

SHEET NO:

P201

P:\530\530-231_BUSD_Mayfair_HS_Sports_Fields\Drawings\Plumbing\P201.dwg Jan 13, 2025 - 10:45am iggy

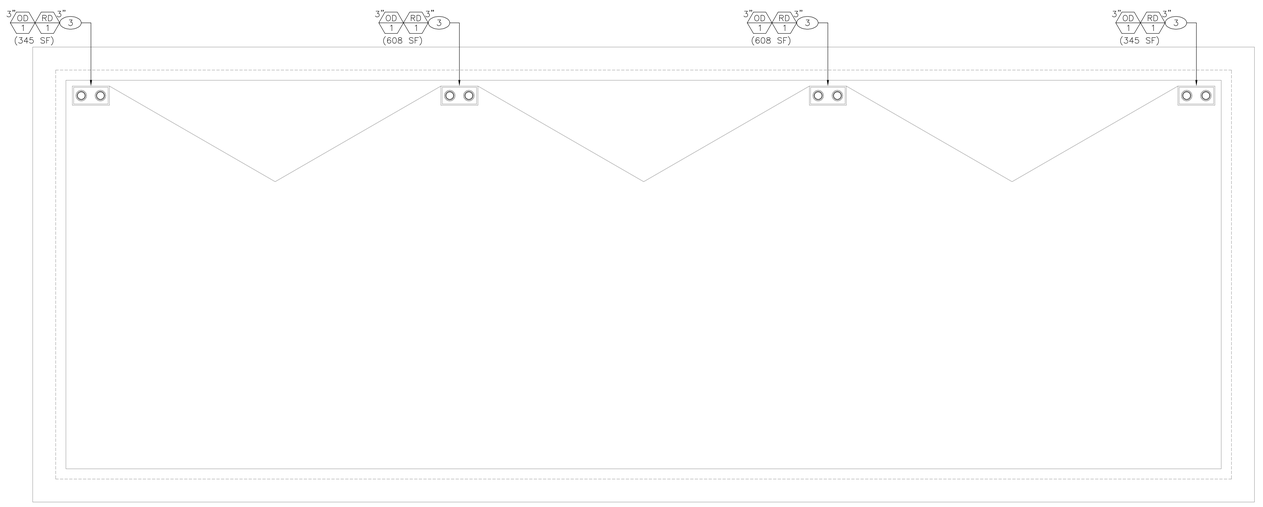

NORTH

FIELD STORAGE BUILDING PLUMBING ROOF PLAN SCALE: 1/4"=1'-0" 2

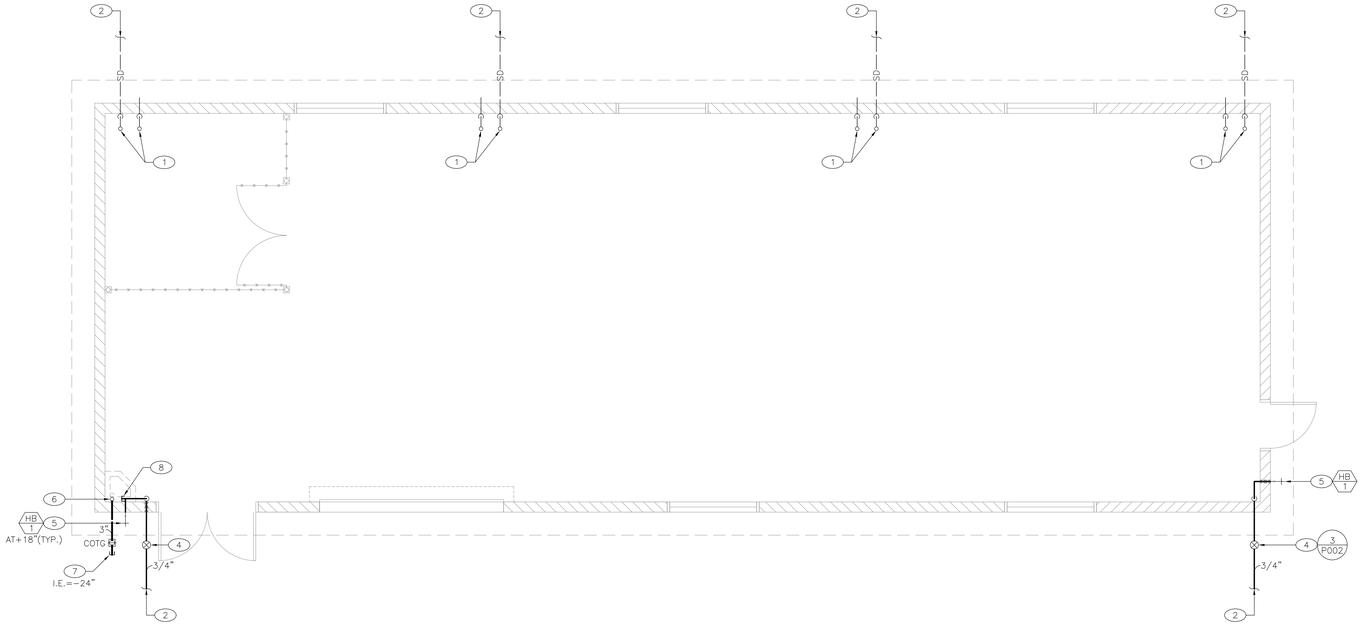

NORTH

FIELD STORAGE BUILDING PLUMBING FLOOR PLAN SCALE: 1/4"=1'-0" 1

PLAN NOTES

1.– 3" SD & OD DN. THRU ROOF.

2.– 3" STORM DRAIN, FOR CONTINUATION AND CONSTRUCTION, SEE CIVIL PLANS.

3.– 3" SD & OD DN. THRU ROOF.

4.– 3/4" CW SHUT–OFF VALVE IN YARDBOX.

5.– PROVIDE 3/4" CW TO HOSE BIBB. SEAL PIPE PENETRATION WATER–TIGHT THRU CMU WALL.

6.– CAP 3" WASTE ABV. FLR. FOR FUTURE SERVICE SINK.

7.– CAP 3" WASTE BEL. GRADE UPSTREAM OF CLEANOUT TO GRADE FOR FUTURE CONNECTION.

8.– CAP 3/4" CW FOR FUTURE SERVICE SINK.

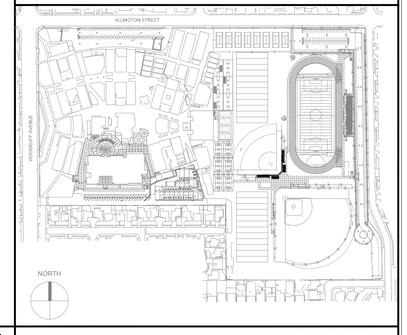

KEYMAP

STATE:

IDENTIFICATION STAMP
DIV. OF THE STATE ARCHITECT
APP: 03-124281 INC:
REVIEWED FOR
SS ☑ FLS ☑ ACS ☑
DATE: 02/04/2025

ARCHITECT:

architecture
westbergwhite
7700 IRVINE CENTER DR. STE. 100
IRVINE, CA 92618
(714) 508-1780 (714) 508-1780 FAX

CONSULTANT:

1920 E. Warner Ave., Suite 3–H
Santa Ana, CA 92705
Telephone (714) 884–3803
Fax (714) 884–3834
PEI #530.231

REGISTERED PROFESSIONAL ENGINEER
STEPHEN M. PIZZARELLI
No. M 29925
Exp. 06–30–2026

PROJECT NAME:

Bellflower Unified School District
Mayfair High School Sports Fields
6000 North Woodruff Ave
Lakewood, California 90713

CLIENT:

BELLFLOWER UNIFIED SCHOOL DISTRICT
16703 S. Clark Ave,
BELLFLOWER, CALIFORNIA 90706

Rev.	Date	Description

JOB NO: 15008.01
DATE: 11/13/2024
DRAWN:
CHECK:
ARCHITECT: PDW
ENGINEER:

SHEET DESCRIPTION:
FIELD STORAGE BUILDING PLUMBING FLOOR AND ROOF PLANS

SHEET NO:
P301

P:\530\530-231_BUSD_Mayfair_HS_Sports_Fields\Drawings\Plumbing\P301.dwg Jan 13, 2025 - 10:46am iggy

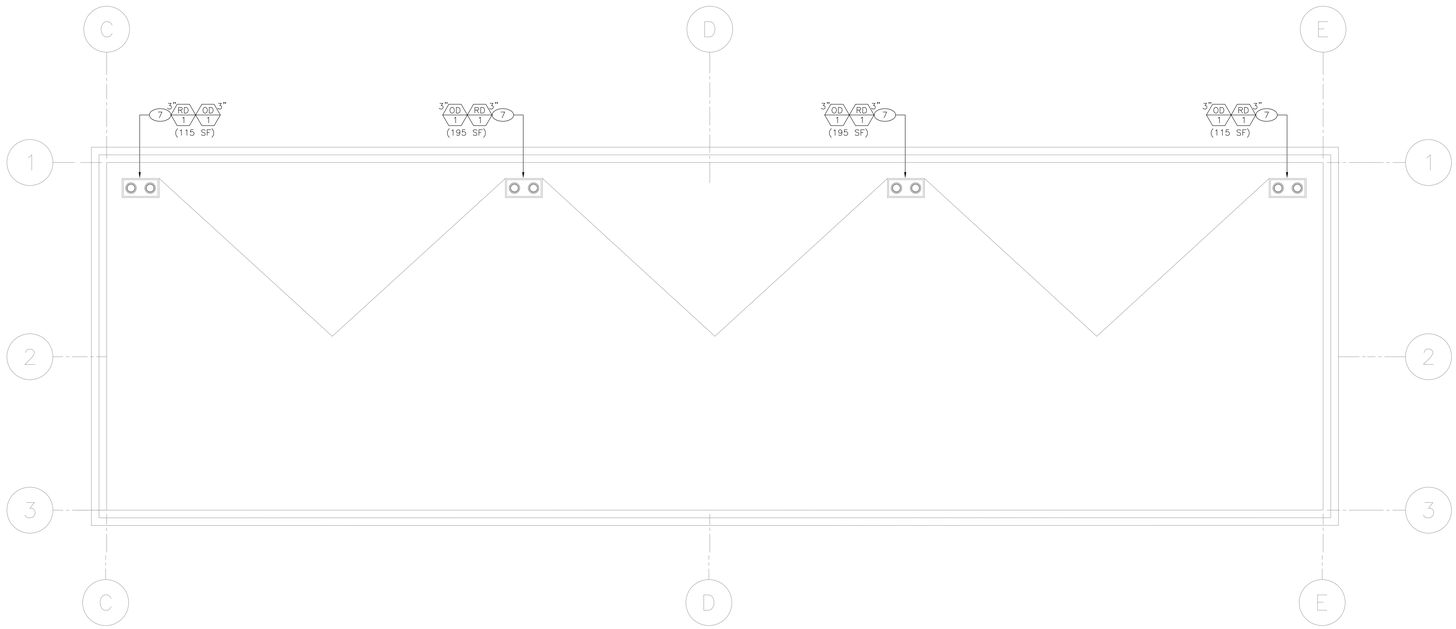

BASEBALL HOME DUGOUT PLUMBING ROOF PLAN SCALE: 1/4"=1'-0" 2

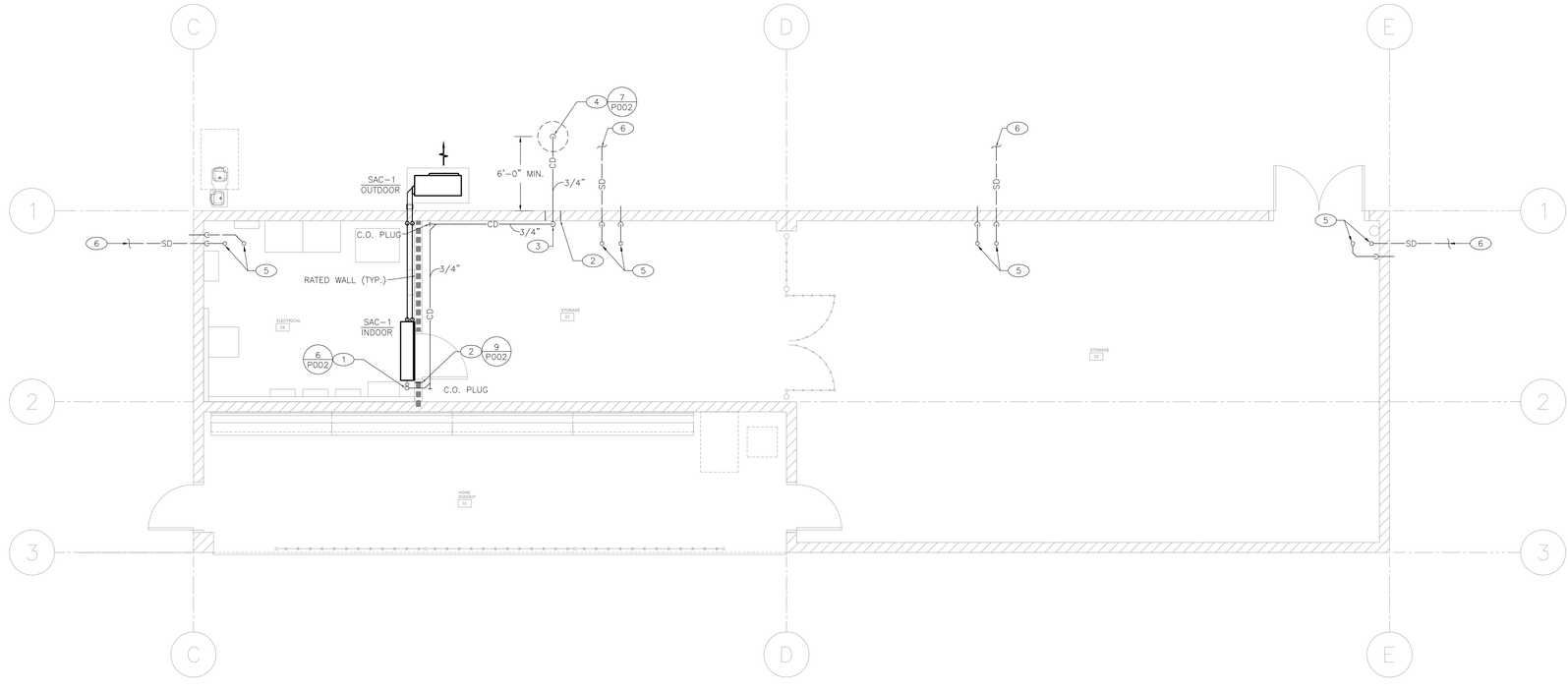

BASEBALL HOME DUGOUT PLUMBING FLOOR PLAN SCALE: 1/4"=1'-0" 1

PLAN NOTES

1.– PROVIDE 3/4" CD PIPING COMPLETE WITH TRAP AND VENT. EXTEND PIPING AS INDICATED. ROUTE 3/4" CD PIPING "TIGHT" TO WALL.

2.– SEAL PIPE PENETRATION THRU RATED WALL "WATER–TIGHT" (TYP.).

3.– 3/4" CD PIPING DN. FACE OF WALL. SECURE PIPING TO WALL WITH CHANNEL STRUT. 3/4" CD TO PENETRATE WALL PER DETAIL 7/P002.

4.– DISCHARGE 3/4" CD PIPING TO DRYWELL BEL GRADE. PATCH GRADE TO MATCH EXISTING.

5.– 3" SD & OD UP THRU ROOF.

6.– 3" STORM DRAIN, FOR CONTINUATION AND CONSTRUCTION, SEE CIVIL PLANS.

7.– 3" STORM DRAIN, FOR CONTINUATION AND CONSTRUCTION, SEE CIVIL PLANS

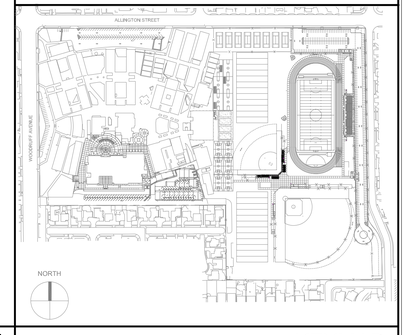

KEYMAP

STATE:

IDENTIFICATION STAMP
DIV. OF THE STATE ARCHITECT
APP: 03-124281 INC:
REVIEWED FOR
SS ☑ FLS ☑ ACS ☑
DATE: 02/04/2025

ARCHITECT:

architecture
westbergwhite
7700 IRVINE CENTER DR. STE. 100
IRVINE, CA 92618
(714) 508-1780 (714) 508-1780 FAX

CONSULTANT:

1920 E. Warner Ave., Suite 3–H
Santa Ana, CA 92705
Telephone (714) 884–3803
Fax (714) 884–3834
PEI #530.231

REGISTERED PROFESSIONAL ENGINEER
STEPHEN M. PITTENGER
No. M 29925
Exp. 06–30–2026

PROJECT NAME:

Bellflower Unified School District
Mayfair High School Sports Fields
6000 North Woodruff Ave
Lakewood, California 90713

CLIENT:

BELLFLOWER UNIFIED
SCHOOL DISTRICT

16703 S. Clark Ave,
BELLFLOWER, CALIFORNIA 90706

Rev.	Date	Description

JOB NO: 15008.01
DATE: 11/13/2024
DRAWN:
CHECK:
ARCHITECT: PDW
ENGINEER:

SHEET DESCRIPTION:
BASEBALL HOME DUGOUT PLUMBING FLOOR AND ROOF PLANS

SHEET NO:

P401

P:\530\530-231_BUSD_Mayfair_HS_Sports_Fields\Drawings\Plumbing\P401.dwg Jan 13, 2025 - 10:46am iggy

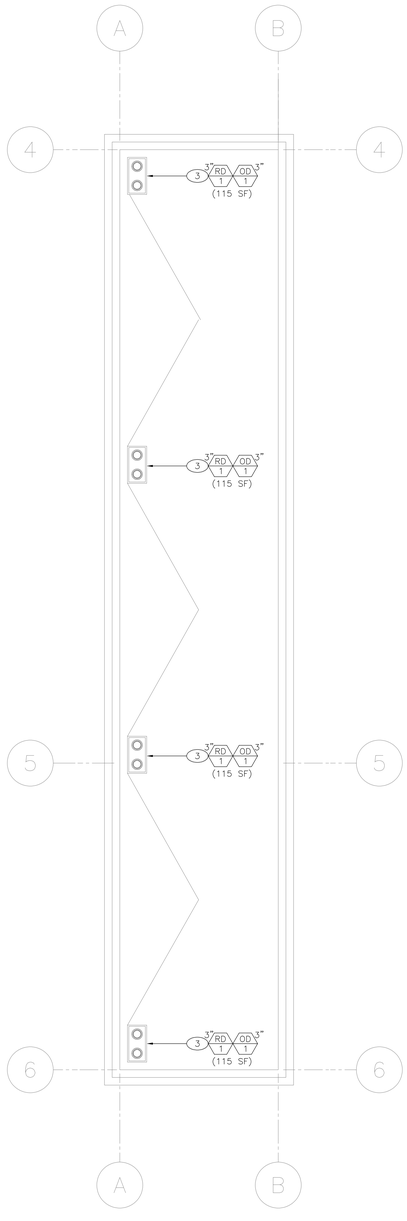

NORTH

BASEBALL VISITOR DUGOUT PLUMBING ROOF PLAN SCALE: 1/4"=1'-0" 2

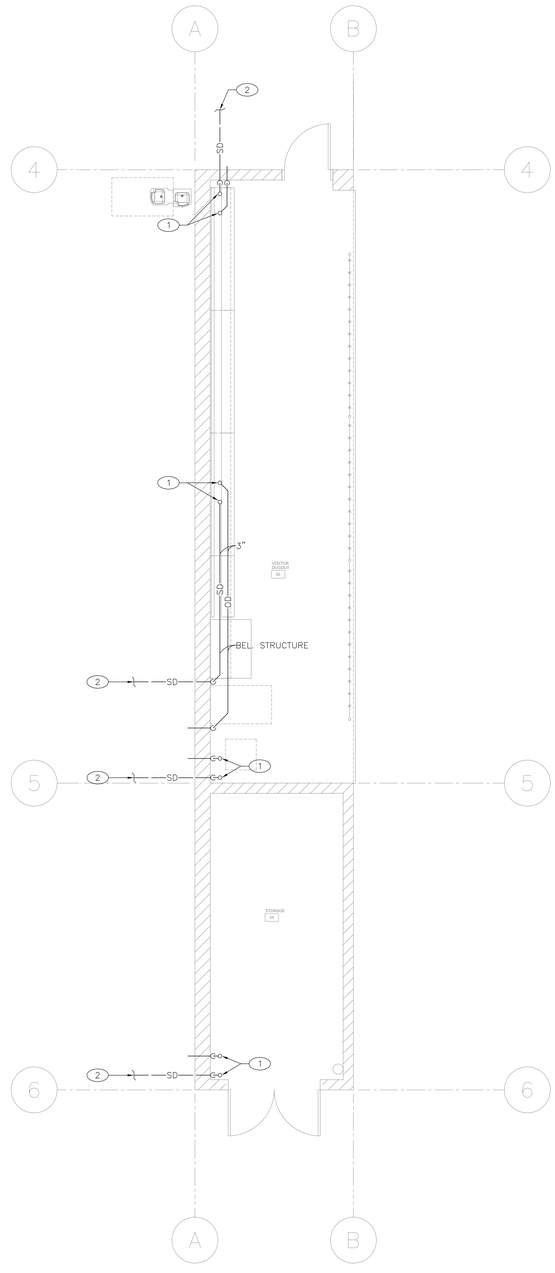

NORTH

BASEBALL VISITOR DUGOUT PLUMBING FLOOR PLAN SCALE: 1/4"=1'-0" 1

PLAN NOTES

1.– 3" SD & OD DN. THRU ROOF.

2.– 3" STORM DRAIN, FOR CONTINUATION AND CONSTRUCTION, SEE CIVIL PLANS.

3.– 3" SD & OD DN. THRU ROOF.

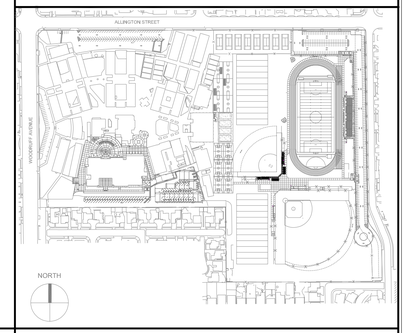

KEYMAP

STATE:

IDENTIFICATION STAMP
DIV. OF THE STATE ARCHITECT
APP: 03-124281 INC:
REVIEWED FOR
SS ☑ FLS ☑ ACS ☑
DATE: 02/04/2025

ARCHITECT:

architecture
westbergwhite
7700 IRVINE CENTER DR. STE. 100
IRVINE, CA 92618
(714) 508-1780 (714) 508-1780 FAX

CONSULTANT:

1920 E. Warner Ave., Suite 3-H
Santa Ana, CA 92705
Telephone (714) 884-3803
Fax (714) 884-3834
PEI #530.231

REGISTERED PROFESSIONAL ENGINEER
STEPHEN M. PITTENGER
No. M 29925
Exp. 06-30-2026

PROJECT NAME:

Bellflower Unified School District
Mayfair High School Sports Fields
6000 North Woodruff Ave
Lakewood, California 90713

CLIENT:

BELLFLOWER UNIFIED SCHOOL DISTRICT
16703 S. Clark Ave.
BELLFLOWER, CALIFORNIA 90706

#	Rev. Date	Description

JOB NO: 15008.01
DATE: 11/13/2024
DRAWN:
CHECK:
ARCHITECT: PDW
ENGINEER:

SHEET DESCRIPTION:
BASEBALL VISITOR DUGOUT PLUMBING FLOOR AND ROOF PLANS

SHEET NO:
P402

P:\530\530-231_BUSD_Mayfair_HS_Sports_Fields\Drawings\Plumbing\P402.dwg Jan 13, 2025 - 10:47am iggy

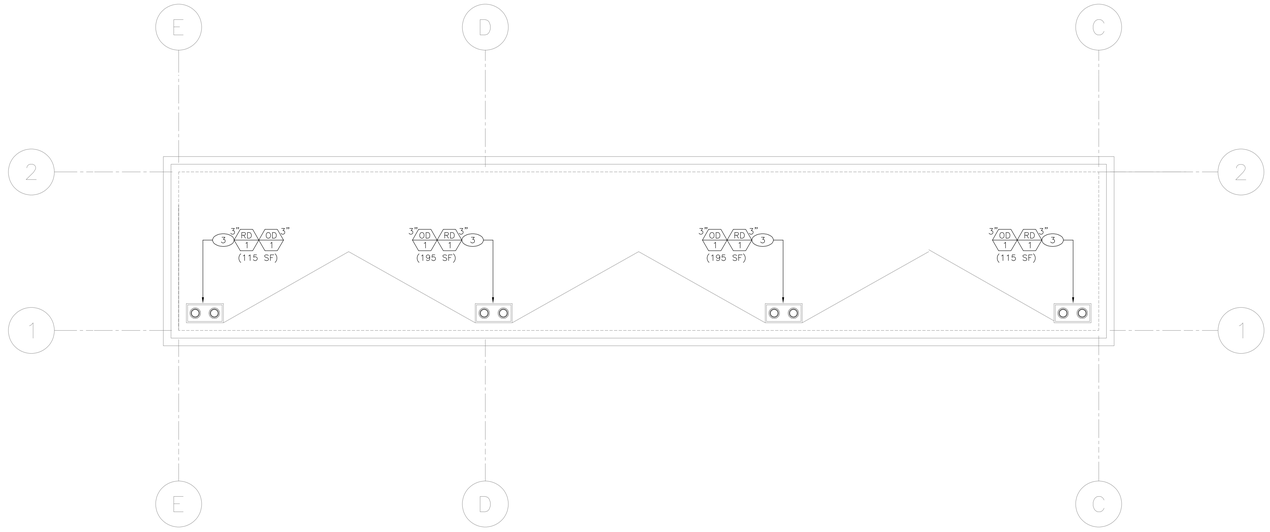

NORTH

SOFTBALL HOME DUGOUT PLUMBING ROOF PLAN SCALE: 1/4"=1'-0" 2

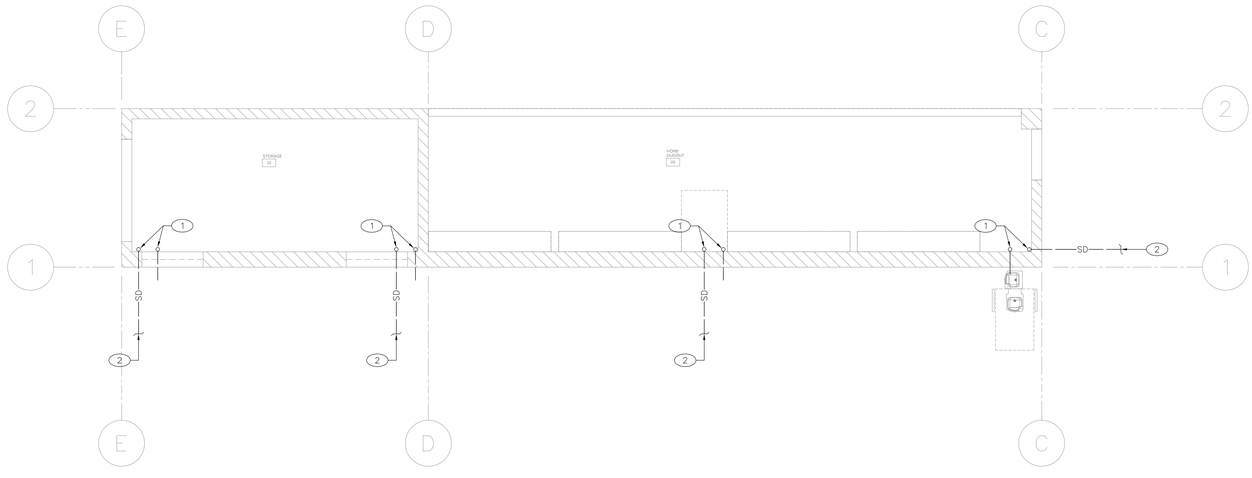

NORTH

SOFTBALL HOME DUGOUT PLUMBING FLOOR PLAN SCALE: 1/4"=1'-0" 1

PLAN NOTES

1.– 3" SD & OD DN. THRU ROOF.

2.– 3" STORM DRAIN, FOR CONTINUATION AND CONSTRUCTION, SEE CIVIL PLANS.

3.– 3" SD & OD DN. THRU ROOF.

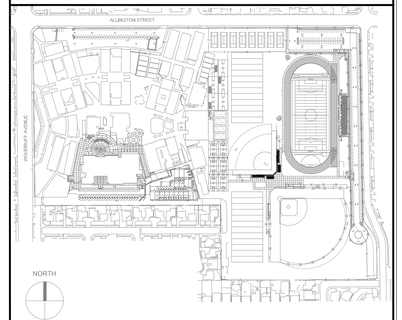

KEYMAP

STATE:

IDENTIFICATION STAMP
DIV. OF THE STATE ARCHITECT
APP: 03-124281 INC:
REVIEWED FOR
SS ☑ FLS ☑ ACS ☑
DATE: 02/04/2025

ARCHITECT:

architecture
westbergwhite
7700 IRVINE CENTER DR. STE. 100
IRVINE, CA 92618
(714) 508-1780 (714) 508-1780 FAX

CONSULTANT:

1920 E. Warner Ave., Suite 3-H
Santa Ana, CA 92705
Telephone (714) 884-3803
Fax (714) 884-3834
PEI #530.231

REGISTERED PROFESSIONAL ENGINEER
STEPHEN M. PITTENGER
No. M 29925
Exp. 06-30-2026

PROJECT NAME:

Bellflower Unified School District
Mayfair High School Sports Fields
6000 North Woodruff Ave
Lakewood, California 90713

CLIENT:

BELLFLOWER UNIFIED SCHOOL DISTRICT
16703 S. Clark Ave,
BELLFLOWER, CALIFORNIA 90706

Rev.	Date	Description

JOB NO: 15008.01
DATE: 11/13/2024
DRAWN:
CHECK:
ARCHITECT: PDW
ENGINEER:

SHEET DESCRIPTION:
SOFTBALL HOME DUGOUT PLUMBING FLOOR AND ROOF PLANS

SHEET NO:
P501

P:\530\530-231_BUSD_Mayfair_HS_Sports_Fields\Drawings\Plumbing\P501.dwg Jan 13, 2025 - 10:47am iggy

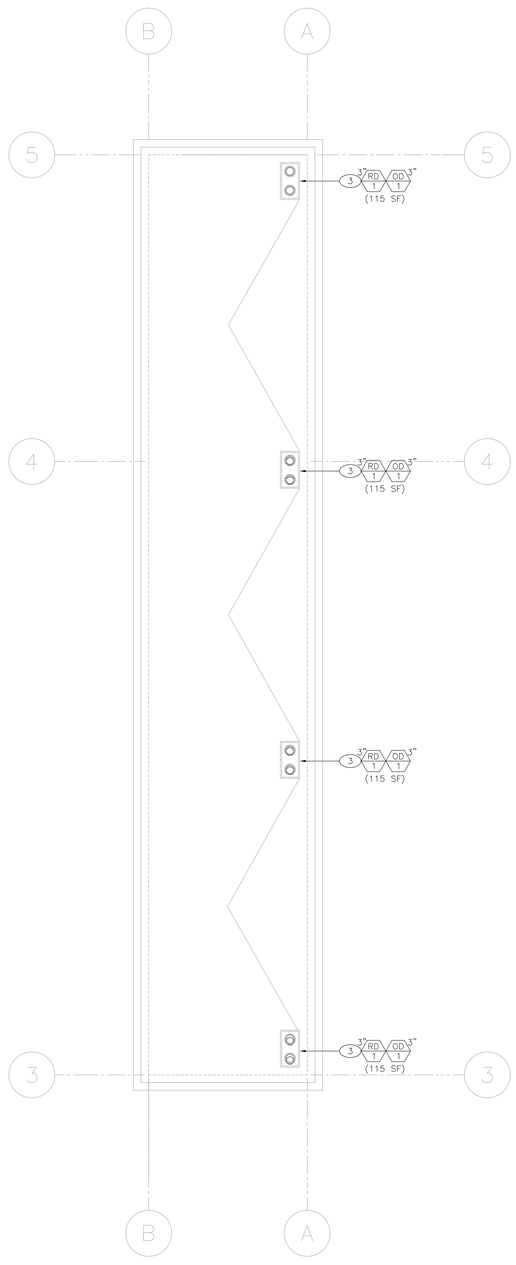

SOFTBALL VISITOR DUGOUT PLUMBING ROOF PLAN SCALE: 1/4"=1'-0" 2

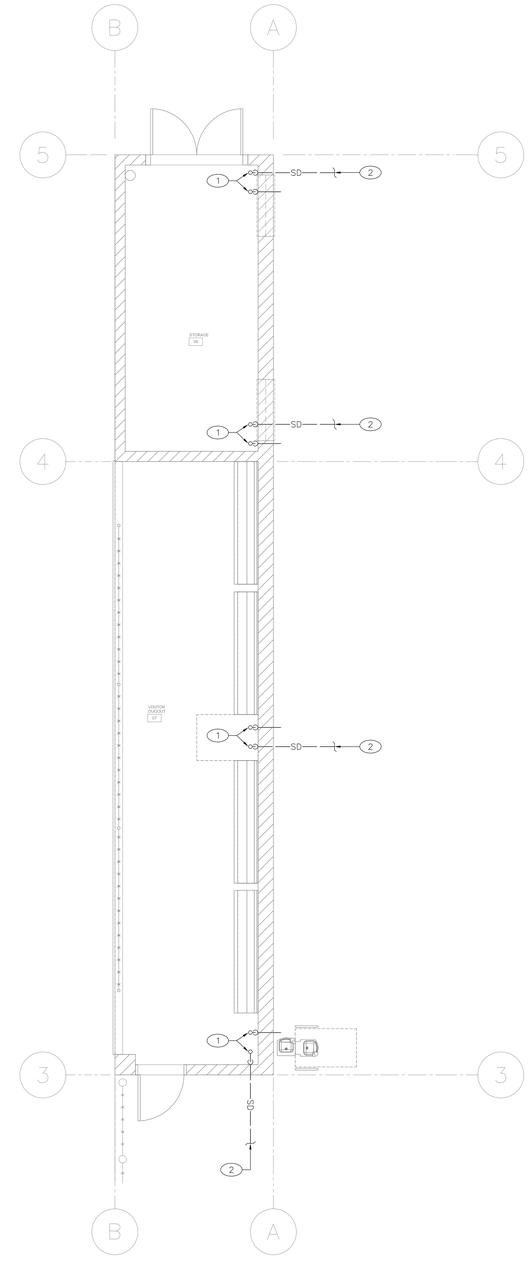

SOFTBALL VISITOR DUGOUT PLUMBING FLOOR PLAN SCALE: 1/4"=1'-0" 1

PLAN NOTES

1.– 3" SD & OD DN. THRU ROOF.

2.– 3" STORM DRAIN, FOR CONTINUATION AND CONSTRUCTION, SEE CIVIL PLANS.

3.– 3" SD & OD DN. THRU ROOF.

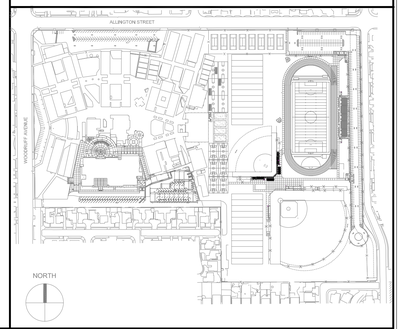

KEYMAP

STATE:

IDENTIFICATION STAMP
DIV. OF THE STATE ARCHITECT
APP: 03-124281 INC:
REVIEWED FOR
SS ☑ FLS ☑ ACS ☑
DATE: 02/04/2025

ARCHITECT:

architecture
westbergwhite
7700 IRVINE CENTER DR. STE. 100
IRVINE, CA 92618
(714) 508-1780 (714) 508-1780 FAX

CONSULTANT:

1920 E. Warner Ave., Suite 3-H
Santa Ana, CA 92705
Telephone (714) 884-3803
Fax (714) 884-3834
PEI #530.231

REGISTERED PROFESSIONAL ENGINEER
STEPHEN M. PITTENGER
No. M 29925
Exp. 06-30-2026

PROJECT NAME:

Bellflower Unified School District
Mayfair High School Sports Fields
6000 North Woodruff Ave
Lakewood, California 90713

CLIENT:

BELLFLOWER UNIFIED
SCHOOL DISTRICT
16703 S. Clark Ave.
BELLFLOWER, CALIFORNIA 90706

#	Rev. Date	Description

JOB NO: 15008.01
DATE: 11/13/2024
DRAWN:
CHECK:
ARCHITECT: PDW
ENGINEER:

SHEET DESCRIPTION:
SOFTBALL VISITOR DUGOUT PLUMBING FLOOR AND ROOF PLANS

SHEET NO:
P502

P:\530\530-231_BUSD_Mayfair_HS_Sports_Fields\Drawings\Plumbing\P502.dwg Jan 13, 2025 - 10:48am iggy

IDENTIFICATION STAMP
DIV. OF THE STATE ARCHITECT
APP: 03-124281 INC:
REVIEWED FOR
SS ☑ FLS ☑ ACS ☑
DATE: 02/04/2025

BELLFLOWER UNIFIED SCHOOL DISTRICT
MAYFAIR HIGH SCHOOL
LAKEWOOD, CALIFORNIA

ENGINEER STAMP

REGISTERED PROFESSIONAL ENGINEER
BRIAN T. DEAN
S 6087
STRUCTURAL
STATE OF CALIFORNIA
S&S
01/08/25
PRINCIPAL

SHEET TITLE	PAGE #
COVER PAGE	B1 OF B35
GENERAL NOTES	B2 OF B35
HOME	
FOOTING LAYOUT	B3 OF B35
EXIT FOOTING LAYOUTS	B4 OF B35
PIER DETAILS	B5 OF B35
PIER DETAILS	B6 OF B35
UNDERSTRUCTURE LAYOUT / ELEVATION VIEWS	B7 OF B35
EXIT UNDERSTRUCTURE LAYOUTS	B8 OF B35
SECTION VIEWS	B9 OF B35
SECTION VIEWS	B10 OF B35
SEATING LAYOUT	B11 OF B35
EXIT LAYOUTS	B12 OF B35
LEFT EXIT VIEWS	B13 OF B35
RIGHT EXIT VIEWS	B14 OF B35
SEAT BRACKET LAYOUT	B15 OF B35
PRESS BOX LAYOUT	B16 OF B35
PRESS BOX FRAMING PLAN	B17 OF B35
OMITTED	B18 OF B35
PRESS BOX DETAILS	B19 OF B35
PRESS BOX DETAILS	B20 OF B35
PRESS BOX CEILING DETAILS	B21 OF B35
APPENDIX "A" MATERIAL SPECS	B21.1 OF B35

SHEET TITLE	PAGE #
VISITOR	
FOOTING LAYOUT	B22 OF B35
UNDERSTRUCTURE LAYOUT / ELEVATION VIEWS	B23 OF B35
EXIT UNDERSTRUCTURE LAYOUTS	B24 OF B35
SECTION VIEWS	B25 OF B35
SEATING LAYOUT	B26 OF B35
EXIT LAYOUTS	B27 OF B35
EXITS	B28 OF B35
EXITS	B29 OF B35
DETAILS	
PLANK DETAILS	B30 OF B35
EXIT DETAILS	B31 OF B35
EXIT DETAILS	B32 OF B35
GRANDSTAND DETAILS	B33 OF B35
GRANDSTAND DETAILS	B34 OF B35
GRANDSTAND DETAILS	B35 OF B35

REV. ⚠ ***09/27/24***

OWNER/REPRESENTATIVE/ARCHITECTURAL REVIEW

PLEASE REVIEW THE DRAWINGS FOR COMPLIANCE WITH YOUR ORDER. PLEASE INDICATE ANY CHANGES OR COMMENTS ON THE DRAWINGS.

☐ APPROVED

☐ APPROVED AS NOTED

☐ REVISE AND RE-SUBMIT

SIGNATURE

TITLE

DATE

AWS CWF CERTIFIED WELDING FABRICATOR®

AISC CERTIFIED FABRICATOR

Southern® BLEACHER COMPANY
GRANDSTANDS ▪ BLEACHERS ▪ STADIUMS

PO Box One, Graham, Texas 76450
801 Fifth Street.
Phone: 940/549-0733 Fax: 940/549-1365

Established 1946

GENERAL INFORMATION

	RISE	TREAD	ROWS	LENGTH	SEAT COUNT
HOME	12"	26"	16	181'-6"	1,511
VISITOR	8"	26"	7	133'-6"	518

DATE: 05/10/24
JOB # 24094
BELLFLOWER UNIFIED SCHOOL DISTRICT
MAYFAIR HIGH SCHOOL
LAKEWOOD, CALIFORNIA

SHEET B1 OF B35

REF:

IDENTIFICATION STAMP
DIV. OF THE STATE ARCHITECT
APP: 03-124281 INC:
REVIEWED FOR
SS ☑ FLS ☑ ACS ☑
DATE: 02/04/2025

GENERAL REQUIREMENTS:

1. CONFLICTS: NOTES AND DETAILS ON THE DRAWINGS TAKE PRECEDENCE OVER THE GENERAL NOTES AND TYPICAL DETAILS IN CASE OF CONFLICT.
2. CODES: ALL MATERIALS AND WORK SHALL CONFORM TO THE REQUIREMENTS OF THE CALIFORNIA CODE OF REGULATIONS, TITLE 24, PART 2, 2022 CALIFORNIA BUILDING CODE (CBC) & 2017 ICC 300.
3. SIMILAR WORK: WHERE CONSTRUCTION DETAILS ARE NOT SHOWN OR NOTED FOR ANY PART OF THE WORK, SUCH DETAILS SHALL BE THE SAME AS FOR SIMILAR WORK SHOWN ON THE DRAWINGS.
4. EXCAVATIONS: OWNER TO LOCATE AND PROTECT UNDERGROUND OR CONCEALED CONDUIT, PLUMBING OR OTHER UTILITIES WHERE NEW WORK IS BEING PERFORMED.

DESIGN CRITERIA

1. DEAD LOADS:
   BLEACHERS (INCLUDES GIRDERS).......................... 10 PSF
2. LIVE LOADS:
   LIVE LOAD.. 100 PSF
   SEATS.. 120 PLF
   FOOTBOARDS... 100 PSF
   SWAY (PERPENDICULAR)....................................... 10 PLF
   SWAY (PARALLEL).. 24 PLF
   GUARDRAILS AND HANDRAILS*............................ 50 PLF
   * OR A 200 POUND CONCENTRATED LOAD APPLIED TO RAIL AT ANY POINT IN ANY DIRECTION.

   PRESS BOX:
   DEAD LOADS
   FLOOR.. 15 PSF
   ROOF.. 15 PSF
   LIVE LOADS
   FLOOR/ROOF...................................... 100 PSF

3. LATERAL LOADS:

A) SEISMIC - SHORT PERIOD
SPECTRAL RESPONSE.. S_S = 1.553 g
ONE - SECOND PERIOD
SPECTRAL RESPONSE.. S_1 = 0.555 g
SITE CLASSIFICATION... D
SITE COEFFICIENT.. Fa = 1.00
SITE COEFFICIENT.. Fv = 1.745
ADJUSTED SPECTRAL RESPONSE........................ S_{MS} = 1.637 g
ADJUSTED SPECTRAL RESPONSE........................ S_{M1} = 2.030 g
DESIGN SPECTRAL RESPONSE............................. S_{DS} = 1.090 g (2/3 Sms)
DESIGN SPECTRAL RESPONSE............................. S_{D1} = 1.350 g (2/3 Sm1)
RISK CATEGORY: III
I = 1.25
SEISMIC DESIGN CATEGORY............................... D

LATERAL SYSTEMS:

BOTH DIRECTIONS: CH. 15 ALL OTHER SELF-SUPPORTING STRUCTURES
R = 1.25
Rho = 1
Cs = 1.090 (1.0E)
V = pCsW = 1.090W (1.0E strength)

A) WIND:
1. ULTIMATE DESIGN WIND SPEED, V_{ult} = 101mph
2. RISK CATEGORY = III
3. WIND EXPOSURE = C
4. APPLICABLE INTERNAL PRESSURE COEFFICIENT (GCpi)=0.55

FOUNDATION:

1. GEOTECHNICAL INVESTIGATION: JOHN R. BYERLY INCORPORATED
   DATED: 01/30/17 (REPORT), 05/20/2024 (UPDATE)
   REPORT DATA: RPT. NO. 3982 (REPORT), RPT. NO. 8322 (UPDATE)
   FILE NO. S-13836
2. SOIL PRESSURES:
   SOIL BEARING... 2,000 psf
   COEFFICIENT OF FRICTION.................................. 0.40
   PASSIVE PRESSURE... 350 pcf
3. SOIL REMOVAL AND RECOMPACTION: PER GEOTECHNICAL INVESTIGATION AND THE CONTRACT DOCUMENTS. SOILS WORK SHALL BE OBSERVED AND TESTED BY THE GEOTECHNICAL ENGINEER.
4. GEOTECHNICAL ENGINEER: SHALL OBSERVE FOOTINGS BEFORE PLACEMENT OF REINFORCING OR CONCRETE. FOOTING OBSERVATION AND COMPACTION REPORTS SHALL BE SENT TO THE ARCHITECT AND DSA.
5. SOIL PREPARATION: AS INDICATED IN THE GEOTECHNICAL INVESTIGATION REPORT AND AS SPECIFIED IN THE PROJECT SPECIFICATIONS. COORDINATE WITH GEOTECHNICAL ENGINEERS.
6. MANDATORY MINIMUM FORMWORK (unless fully formed).

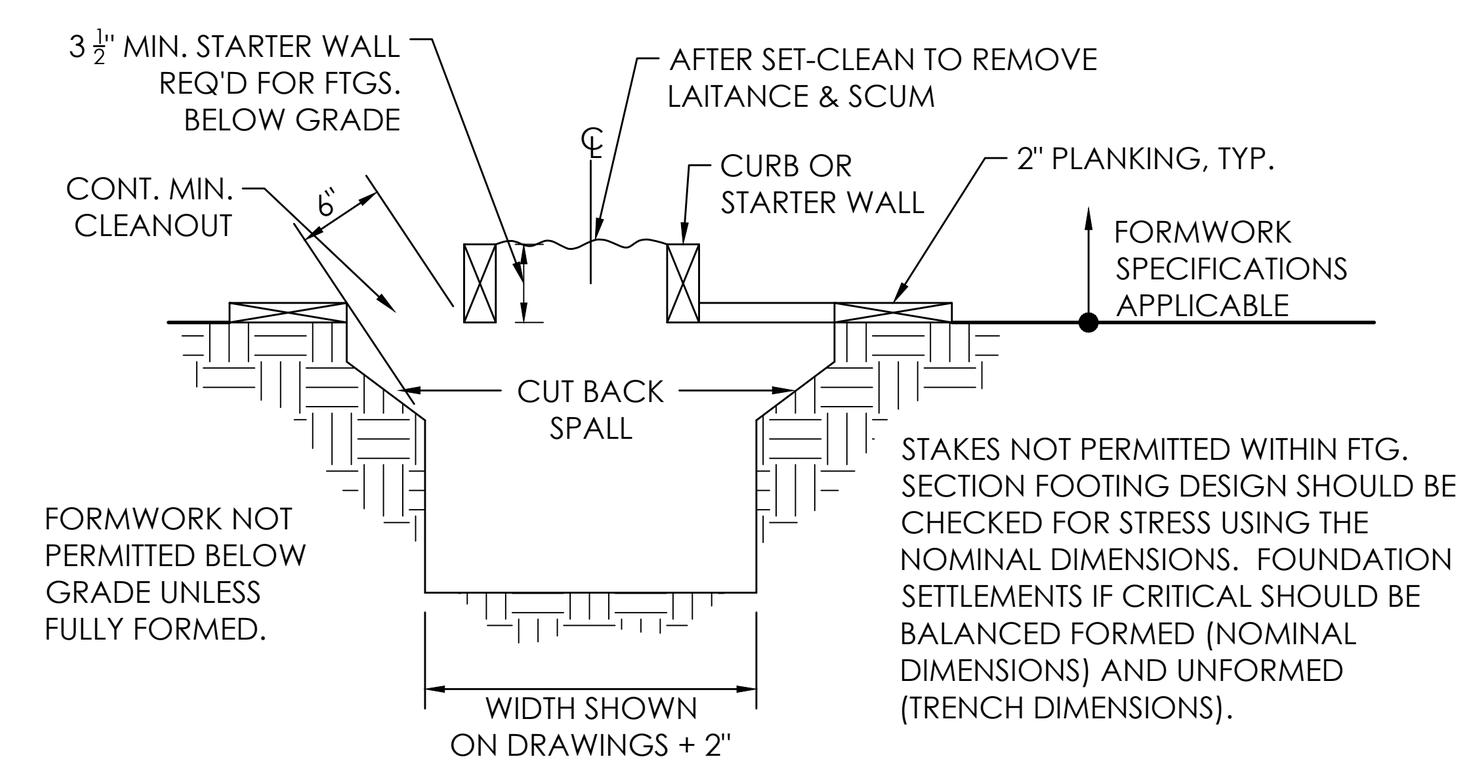

A. STARTER WALL REQUIRED FOR ALL MASONRY OR CONCRETE WALLS.
B. FOUNDATION CONCRETE MAY BE PLACED DIRECTLY INTO NEAT EXCAVATIONS PROVIDED THE FOUNDATION TRENCH WALLS ARE STABLE AS DETERMINED BY THE ARCHITECT (STRUCTURAL ENGINEER) SUBJECT TO THE APPROVAL OF THE DIVISION OF THE STATE ARCHITECT. IN SUCH CASE THE MINIMUM FORMWORK SHOWN ON THE DRAWINGS IS MANDATORY TO INSURE CLEAN EXCAVATIONS IMMEDIATELY PRIOR TO AND DURING THE PLACING OF CONCRETE.

7. FOUNDATIONS GEOTECHNICAL / GRADING REQUIREMENTS:

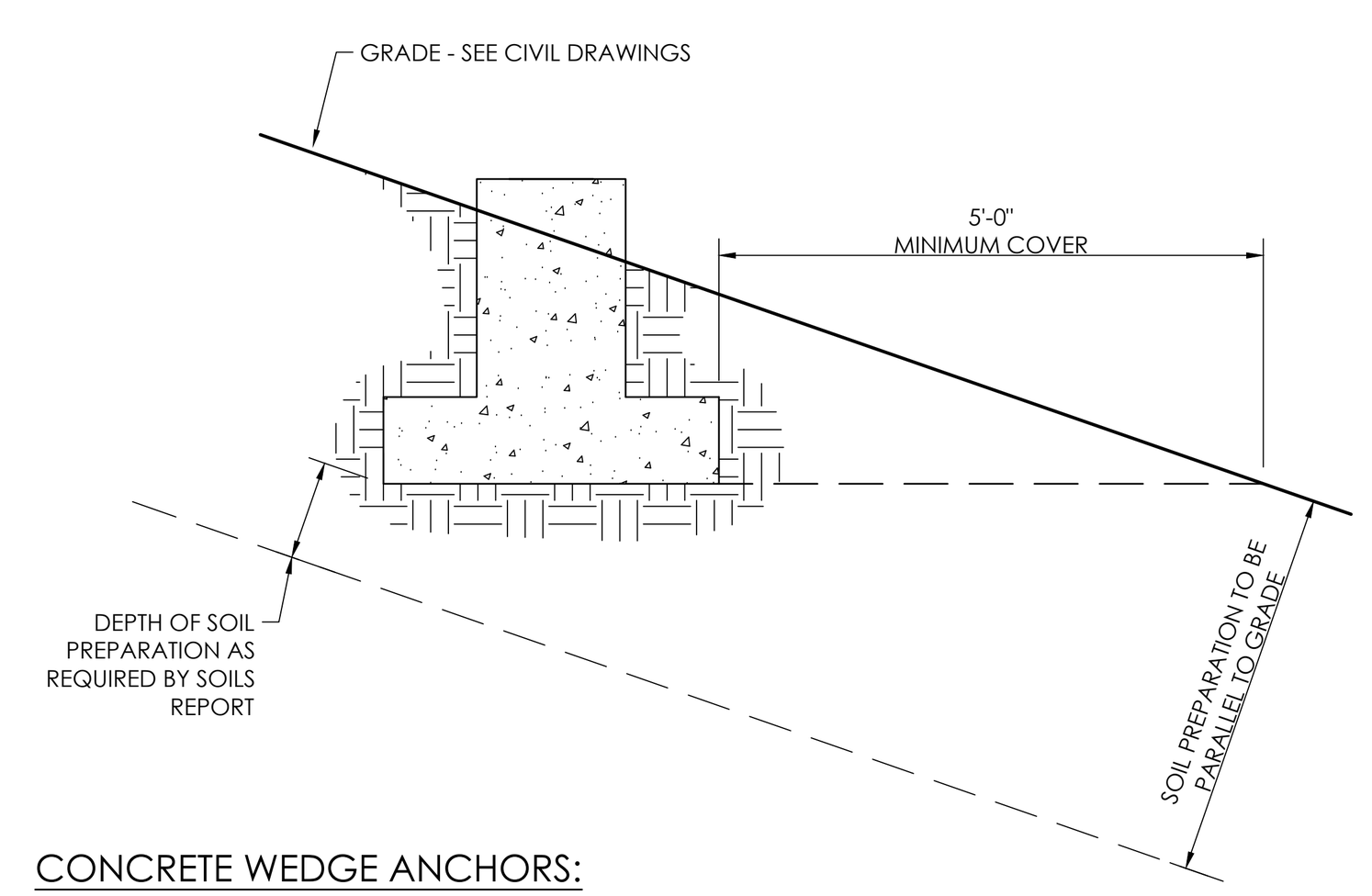

CONCRETE WEDGE ANCHORS:

1. ANCHOR DIAMETER REFERS TO THE THREAD SIZE FOR THE WEDGE ANCHOR.
2. APPLY PROOF TEST LOADS TO WEDGE ANCHORS WITHOUT REMOVING THE NUT IF POSSIBLE. IF NOT, REMOVE NUT & INSTALL A THREADED COUPLER TO THE SAME TIGHTNESS OF THE ORIGINAL NUT USING A TORQUE WRENCH & APPLY LOAD.
3. REACTION LOADS FROM TEST FIXTURES MAY BE APPLIED CLOSE TO THE ANCHOR BEING TESTED, PROVIDED THE ANCHOR IS NOT RESTRAINED FROM WITHDRAWING BY THE FIXTURE(S).
4. TEST EQUIPMENT IS TO BE CALIBRATED BY AN APPROVED TESTING LABORATORY IN ACCORDANCE WITH STANDARD RECOGNIZED PROCEDURES.
5. THE FOLLOWING CRITERIA APPLY FOR THE ACCEPTANCE OF INSTALLED ANCHORS:

   HYDRAULIC RAM METHOD:
   THE ANCHOR SHOULD HAVE NO OBSERVABLE MOVEMENT AT THE APPLICABLE TEST LOAD. FOR WEDGE ANCHORS, A PRACTICAL WAY TO DETERMINE OBSERVABLE MOVEMENT IS THAT THE WASHER UNDER THE NUT BECOMES LOOSE.

   TORQUE WRENCH METHOD:
   WEDGE TYPE:
   THE APPLICABLE TEST TORQUE MUST BE REACHED WITHIN THE FOLLOWING LIMITS:

   ONE-HALF (1/2) TURN OF THE NUT:
   ONE-QUARTER (1/4) TURN OF THE NUT FOR
   THE 3/8 IN. SLEEVE ANCHOR ONLY.

6. TESTING SHOULD OCCUR 24 HOURS MINIMUM AFTER INSTALLATION OF THE SUBJECT ANCHORS.
7. TESTING VALUES:

HILTI SS KB TZ2 SS ICC-ESR-4266 HARD ROCK TEST VALUES CONCRETE			
ANCHOR DIA. (IN.)	MINIMUM EMBEDMENT (NOMINAL)	TENSION TEST LOAD (LBS.)	TORQUE (FT.-LBS.)
3/8	3"	2,990	30
1/2	3 3/4"	4,433	40
5/8	4 1/2"	6,053	60
3/4	5 1/2"	7,831	125
1	6-3/8"	9660	185

CONCRETE NOTES:

1. MAXIMUM SIZE AGGREGATE SHALL BE AS FOLLOWS:
   1 1/2"Ø
   AGGREGATE FOR CONCRETE SHALL CONFORM TO ASTM C33.
   GRADING OF AGGREGATE SHALL CONFORM TO TITLE 24, PART 2 CHAPTER 19-A. CBC.
2. MINIMUM COMPRESSIVE STRENGTH OF CONCRETE AT 28 DAYS SHALL BE 3,000 PSI. SLUMP = 5" MAX. W/C RATIO IS 0.50 MAX.
3. ALL REINFORCING SHALL BE ASTM A615 GRADE 40 FOR #3, GRADE 60 FOR #4 AND LARGER. REINF. TO BE WELDED SHALL BE ASTM A706.
4. ALL DIMENSIONS SHOWN FOR LOCATION OF REINFORCING STEEL ARE TO FACE OF BAR AND DENOTE CLEAR COVERAGE. UNLESS SPECIFICALLY NOTED, CONCRETE COVERAGE SHALL BE AS FOLLOWS:
   3" FOR CONCRETE DEPOSITED DIRECTLY AGAINST GROUND (EXCEPT SLABS)
   2" FOR CONCRETE EXPOSED TO GROUND OR WEATHER BUT PLACED IN FORMS.
   PLACE REINF. AT MID-THICKNESS FOR SLABS ON GROUND.
5. CONCRETE SHALL NOT BE DROPPED THROUGH REINF. STEEL (AS IN WALL) SO TO CAUSE SEGREGATION OF AGGREGATES. IN SUCH CASES, HOPPERS AND VERTICAL CHUTES OR TRUNKS SHALL BE USED. CHUTES OR TRUNKS SHALL BE OF VARIABLE LENGTHS SO THAT FREE UNCONFINED FALL OF CONCRETE SHALL NOT EXCEED FIVE (5) FEET AND SUFFICIENT NUMBER SHALL BE USED TO INSURE THE CONCRETE BEING LEVEL AT ALL TIMES.
6. HORIZONTAL CONSTRUCTION JOINTS SHALL HAVE ENTIRE SURFACE REMOVED TO EXPOSED CLEAN AGGREGATE SOLIDLY EMBEDDED.
7. ALL STEEL COLUMN BASE PLATES AND STEEL BEAMS BEARING ON CONCRETE SHALL BEAR UPON 1" DRYPACK AND LEVELING NUTS EXCEPT AS NOTED OTHERWISE.
8. WHERE STEEL MEMBERS BEAR IN CONCRETE, GAPS BETWEEN BASE PLATE AND CONCRETE SHOULD BE DRY-PACKED WITH NON-SHRINK GROUT AFTER STEEL IS IN PLACE. GROUT SHALL BE PER CONCRETE CONTRACTOR AND SHALL BE 5 KSI MINIMUM.
9. PROVIDE MINIMUM LAP SPLICES FOR CONTINUOUS REINFORCEMENT PER THE SCHEDULE PROVIDED BELOW. PROVIDE MINIMUM DEVELOPMENT FOR HOOKED BARS PER THE SCHEDULE BELOW.

TYPICAL LAP SPLICES AND DEVELOPMENT U.N.O. PER PLAN *3000 psi Conc., 60 ksi Rebar, 2" Clr. Min.*		
Bar Size	Hook Dev. Length (Ldh)	Lap Splice
#3	6"	17"
#4	8"	23"
#5	10"	28"
#6	12"	34"
#7	14"	49"

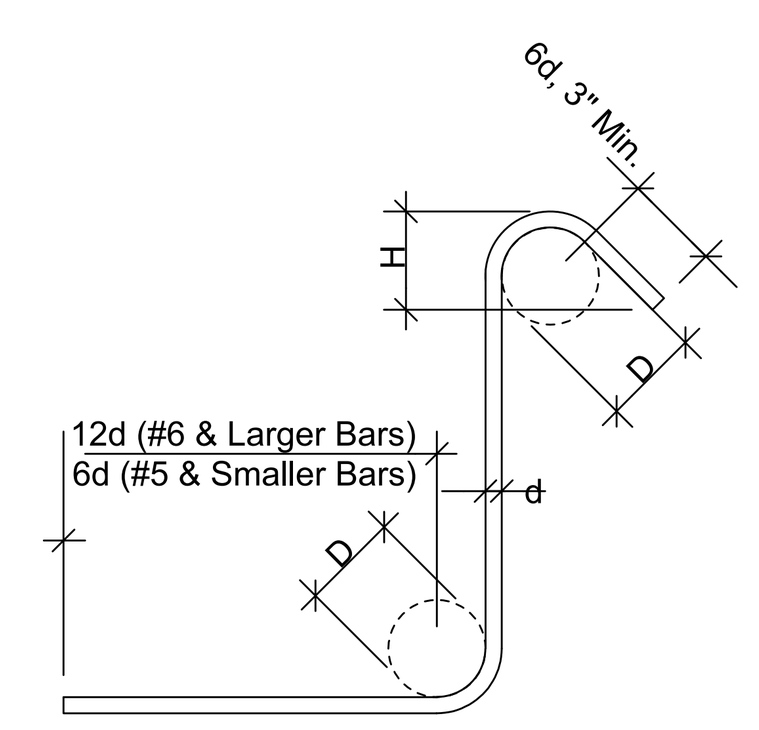

STANDARD TIES & STIRRUPS

Bar Size	D	H
#3	1 1/2"	2 1/2"
#4	2"	3"
#5	2 1/2"	3 3/4"
#6	4 1/2"	4 1/2"
#7	5 1/4"	5 1/4"
#8	6"	6"

NOTE: *All bar bend diameters and end lengths must conform to the CRSI Manual of Standard Practice.*

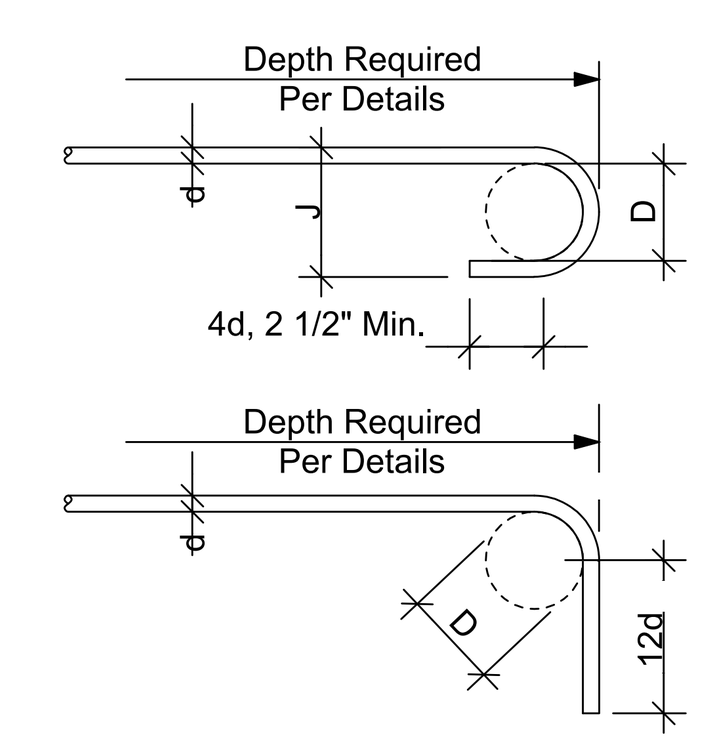

STANDARD END HOOKS

Bar Size	D	J
#3	2 1/4"	3"
#4	3"	4"
#5	3 3/4"	5"
#6	4 1/2"	6"
#7	5 1/4"	7"
#8	6"	8"
#9	9 1/2"	11 3/4"
#10	10 3/4"	13 1/4"

CONCRETE - EPOXY ANCHORED THREADED RODS:

1. MATERIALS: (ICC ESR 4868)
   HILTI HIT-HY200 V3 EPOXY ADHESIVE
   CONCRETE (MIN)......................... F'c = 3,000 PSI STONE AGGREGATE
   THREADED RODS.......................... ASTM F1554 Gr. 55 (Fy= 55ksi MIN.) , HDG
   NUTS... ASTM A-563 HEX, GRADE A, HDG
2. INSTALLATION:

A. CARBIDE-TIPPED DRILL BITS ANSI B212.15-1994.
B. HOLES DRILLED WITH HOLLOW BIT, NO CLEANING OR BRUSHING REQUIRED.
C. INSTALLATION AND ALLOWABLE LOADING:

HILTI HIT-HY200 V3 HARD ROCK TEST VALUES CONCRETE				
ROD DIAM. (IN.)	BIT DIAM. (IN.)	MIN. EMBED. (IN.)	MIN EDGE DIST. (IN.)	TENSION TEST LOAD (LBS.)
3/8	7/16	3-3/8	5-1/4	2,213
1/2	9/16	4-1/2	6-3/8	4,276
5/8	3/4	4-1/2	7-1/2	5,123

3. CAPACITY LOADS ARE STRENGTH DESIGN LOADS.
4. DO NOT INSTALL IN CONCRETE THAT IS LESS THAN 7 DAYS OLD.
5. MINIMUM MEMBER THICKNESS TO RECEIVE ROD SHALL BE NO LESS THAN 1.5 TIMES THE ANCHOR EMBEDMENT DEPTH.
6. ANCHORS SHALL BE INSTALLED IN HAMMER DRILLED HOLES

STRUCTURAL STEEL:

1. CODES: AISC SPECIFICATION FOR STRUCTURAL STEEL FOR BUILDINGS; MANUAL OF STEEL CONSTRUCTION (15TH EDITION); STRUCTURAL WELDING CODE AWS D1.1 AND AWS D1.4. PIPES SHALL BE IDENTIFIED WITH MILL IDENTIFICATION IN ACCORDANCE WITH ASTM A-53 AND TUBE SHAPES IN ACCORDANCE WITH ASTM A-500.
2. IDENTIFICATION: ROLLED STRUCTURAL STEEL SHAPES SHALL BE IDENTIFIED WITH MILL IDENTIFICATION MARKS IN CONFORMANCE WITH ASTM A6.
3. MATERIALS:
   STRUCTURAL SHAPES
   WIDE FLANGE.................................. ASTM A992/A572, Fy = Gr. 50 (Fy = 50 ksi Min.), UNO
   CHANNELS AND ANGLES............... ASTM A529, Fy = Gr. 50 (Fy = 50 ksi Min.), UNO
   SWAYRODS...................................... ASTM A529, Fy = Gr. 50 (Fy = 50 ksi Min.), UNO
   HSS SHAPES (TUBE COLUMNS).......... ASTM A-500 GRADE B - 46 KSI
   PLATES ½" THICK OR LESS.................. ASTM A36 Gr. 36 (Fy = 36 ksi Min.), UNO
   PLATES GREATER THAN ½" THICK.... ASTM A572 Gr. 50 (Fy = 50 ksi Min.), UNO
   BOLTS.. ASTM A-307, A325N TYPICAL U.N.O (HOT DIP GALVANIZED)
   NUTS.. HEAVY HEX (HOT DIP GALVANIZED)
   NON-SHRINK GROUT....................... ASTM C-1107 5,000 PSI (NON-METALLIC)
   ANCHOR BOLTS............................... ASTM F1554 Gr. 55 (Fy=55 ksi Min.) (HOT DIP GALVANIZED)
4. WELDING: ALL WELDING SHALL BE IN CONFORMANCE WITH AWS D1.1. WELDS ARE ALL AROUND WITH TYPE ER70S-6 WIRE MIG U.N.O.
5. ALL STEEL SHALL BE HOT DIP GALVANIZED TO CURRENT A.S.T.M. A-123.
6. ALL FIELD CONNECTIONS ARE NON-SLIP CRITICAL U.N.O. ALL CONNECTIONS ARE DESIGNED TO UTILIZE A307 BOLTS. IT IS ACCEPTABLE TO USE A325N BOLTS IN LIEU OF THE A307 BOLTS WITHOUT NEEDING THE TESTS AND SPECIAL INSPECTIONS FOR HIGH STRENGTH BOLTS. THE INSTALLATION OF THESE BOLTS ARE TO BE TIGHTENED A SNUG TIGHT CONDITION AS SPECIFIED BY AISC. BOLT HOLES IN STANDARD CONNECTIONS SHALL BE STANDARD WITH 1/16" OVER SIZING FROM BOLT DIAMETER AND 1/8" OVERSIZED FOR ANCHORAGE LOCATIONS.
7. SWAYROD THREADS SHALL BE PINGED WITH A HAMMER TO ELIMINATE REMOVAL OF NUT, AFTER FINAL TIGHTENING.

COLD FORMED MEMBERS (PRESS BOX):

MATERIALS:

STEEL PROPERTIES			
TUBE	4" SQUARE X 11 GA. TUBE	A500 GRADE B	Fy = 46ksi, MIN.
DIAGONAL ANGLE	L2 X 2 X 3/16"	A572 / A529	Fy = 50ksi, MIN.
BELLY PAN ANGLE	L2 X 2 X 1/8"	A572 / A529	Fy = 50ksi, MIN.
CEES	4 X 2 1/2 X 14 GA.	A1011 / A653	Fy = 55ksi, MIN.
FLAT STRAP	4" X 14 GA.	A1011 / A653	Fy = 55ksi, MIN.
ROOF PLATE	11GA. OR 1/8"	A1011 / A653 / A786	Fy = 27ksi, MIN.

1. CODES AND FABRICATION: STEEL STUD MANUFACTURER'S ASSOCIATION ICC ESR 3064P OR APPROVED EQUAL.
2. COLD FORMED SHAPES SHALL BE LIMITED TO A THICKNESS OF 11 GAGE OR THINNER.

ALUMINUM:

1. MATERIALS: ALUMINUM
   SHAPES.........................ALLOY 6061-T6 OR 6005-T5 (Fy = 35 KSI)
   PLANKING....................ALLOY 6063-T6 (Fy = 25 KSI)
2. DISSIMILAR MATERIALS: WHERE ALUMINUM SURFACES ARE IN CONTACT WITH STEEL, THE STEEL SHALL BE GALVANIZED.
3. MILL FINISHED ALUMINUM WILL BECOME DISCOLORED DUE TO OXIDATION WHICH IS A NATURAL PHENOMENON & SHOULD BE EXPECTED.
4. ANODIZED ALUMINUM HANDRAIL IS 1 1/4" PIPE SIZE.
5. ALUMINUM TO CONFORM TO 2020 ALUMINUM DESIGN MANUAL.
6. WELDING: ALL WELDING SHALL BE IN CONFORMANCE WITH AWS A5.10. WELDS ARE ALL AROUND WITH TYPE 5356 FILLER METAL. O.N.O.

SPECIAL INSPECTION/INSPECTOR REQUIREMENTS
REQUIREMENTS FOR SPECIAL INSPECTION:

1. PROJECT INSPECTOR: IN ACCORDANCE WITH TITLE 24, PART I, SECTIONS 4-333 AND 4-342.
2. CERTIFIED SPECIAL INSPECTOR: EMPLOYED BY THE DISTRICT AND APPROVED BY THE ARCHITECT, STRUCTURAL ENGINEER AND DSA.
3. REPORTS: PREPARED BY THE SPECIAL INSPECTOR AND SIGNED BY A CIVIL ENGINEER. SUBMITTED TO THE DSA, THE ARCHITECT, AND ENGINEER. ALL DISCREPANCIES SHALL BE BROUGHT TO THE IMMEDIATE ATTENTION OF THE CONTRACTOR FOR CORRECTION; THEN, IF NOT CORRECTED, TO THE ARCHITECT, ENGINEER AND THE DSA (CBC 1704A.2.4).
4. THE SPECIAL INSPECTION IS TO BE CONTINUOUS DURING THE PERFORMANCE OF THE WORK UNLESS OTHERWISE SPECIFIED.

SUMMARY OF STRUCTURAL CONTINUOUS AND PERIODIC SPECIAL INSPECTION:

1. RESPONSIBILITY: IT IS THE RESPONSIBILITY OF THE PROJECT INSPECTOR TO INFORM THE SPECIAL INSPECTOR OR INSPECTION AGENCY AT LEAST ONE WORKING DAY PRIOR TO PERFORMING ANY WORK THAT REQUIRES SPECIAL INSPECTION.
2. SPECIAL INSPECTIONS:
   A) CONCRETE (CBC 1705A.3): DURING THE TAKING OF TEST SPECIMENS AND PLACING OF REINFORCED CONCRETE.
   B) BOLTS INSTALLED IN CONCRETE (CBC 1705A.3): PRIOR TO AND DURING THE PLACEMENT OF CONCRETE AROUND BOLTS.
   C) REINFORCING STEEL (CBC 1705A.3): DURING PLACING OF REINFORCING STEEL FOR ALL CONCRETE SPECIFIED TO HAVE SPECIAL INSPECTION.
   D) STRUCTURAL WELDING AND FABRICATION (CBC 1705A.2, 1705A.2.5 & 1704A.2.5):
      1. DURING ALL SHOP AND FIELD WELDING IN ACCORDANCE WITH AWS D1.1 DURING SHOP FABRICATION.
      2. WELDING INSPECTORS ARE TO BE AWS QC-1 CERTIFIED.
      3. INSPECTION SHALL BE PER AWS D1.1, D1.3 OR D1.4 AND INCLUDE VERIFICATION THAT THE WPS IS BEING FOLLOWED.
      4. ALL STEEL AND WELDING MATERIALS SHALL BE IDENTIFIED AS REQUIRED BY THEIR ASTM OR AWS STANDARD.
      5. ALL SUBMITTED TO THE OWNER BY THEIR WELDING INSPECTOR, NOT THE BLEACHER FABRICATOR.
   E) CONCRETE ANCHORS: FOR ALL THREADED ROD AND REINFORCING STEEL ANCHORED WITH EPOXY ADHESIVE IN CONCRETE; FOR ALL EXPANSION ANCHORS IN CONCRETE. INSPECTION / TESTING SHALL BE IN CONFORMANCE WITH THE ANCHOR MANUFACTURER'S EVALUATION REPORT AND SHALL INCLUDE AS A MINIMUM VERIFICATION OF HOLE DEPTH AND DIAMETER, CLEAN OUT, ALL MATERIALS, INSTALLATION TORQUE AND PROOF LOAD TESTS.
   F) YEARLY INSPECTION: AFTER THE INSTALLATION, THE OWNER SHALL CONDUCT ANNUAL INSPECTIONS AS REQUIRED BY ICC/ANSI 300, SECTION 105.2. THE OWNER WILL ALSO MAINTAIN COPIES OF ALL ANNUAL INSPECTIONS REPORTS AND MAKE THEM AVAILABLE ON SITE FOR DSA REVIEW, UPON REQUEST.

THIS DRAWING AND ALL INFORMATION THEREIN IS THE PROPERTY OF THE SOUTHERN BLEACHER COMPANY, TAYLOR & SYFAN AND IS CONFIDENTIAL AND MUST NOT BE MADE PUBLIC OR COPIED. THIS DRAWING IS LOANED SUBJECT TO RE-TURN UPON DEMAND AND, IS NOT TO BE USED DIRECTLY OR INDIRECTLY IN ANY WAY DETRIMENTAL TO OUR INTERESTS.

TAYLOR & SYFAN
STRUCTURAL ENGINEERS
CENTRAL COAST OFFICE
Ph: (626) 793-7438
Fax: (626) 793-7439
Toll: (800) 579-3881
553 S. Oak Knoll Ave. Pasadena, CA 91101
http://www.taylorsyfan.com/

Southern® BLEACHER COMPANY
GRANDSTANDS ▪BLEACHERS ▪STADIUMS
PO Box One, Graham, Texas 76450
801 Fifth Street.
Phone: 940/549-0733 Fax: 940/549-1365
Established 1946

REGISTERED PROFESSIONAL ENGINEER
BRIAN T. DEAN
S 6087
STRUCTURAL
STATE OF CALIFORNIA
S&S
01/08/25
PRINCIPAL

TYPE: GENERAL NOTES
HOME & VISITOR

TITLE: BELLFLOWER UNIFIED SCHOOL DISTRICT
MAYFAIR HIGH SCHOOL
LAKEWOOD, CALIFORNIA

REV	BY	DATE	DESCRIPTION
1	HC	09/27/24	DSA COMMENTS

DATE: 05/10/24 DRAWN: HC CHECKED: DMC
JOB NUMBER: #24094
SHEET B2 OF B35

22" X 34" (11x17 = 1/2 indicated scale)

24094

IDENTIFICATION STAMP
DIV. OF THE STATE ARCHITECT
APP: 03-124281 INC:
REVIEWED FOR
SS ☑ FLS ☑ ACS ☑
DATE: 02/04/2025

A = GRID LETTERS
1 = GRID LINE
P1 = EXIT PAD

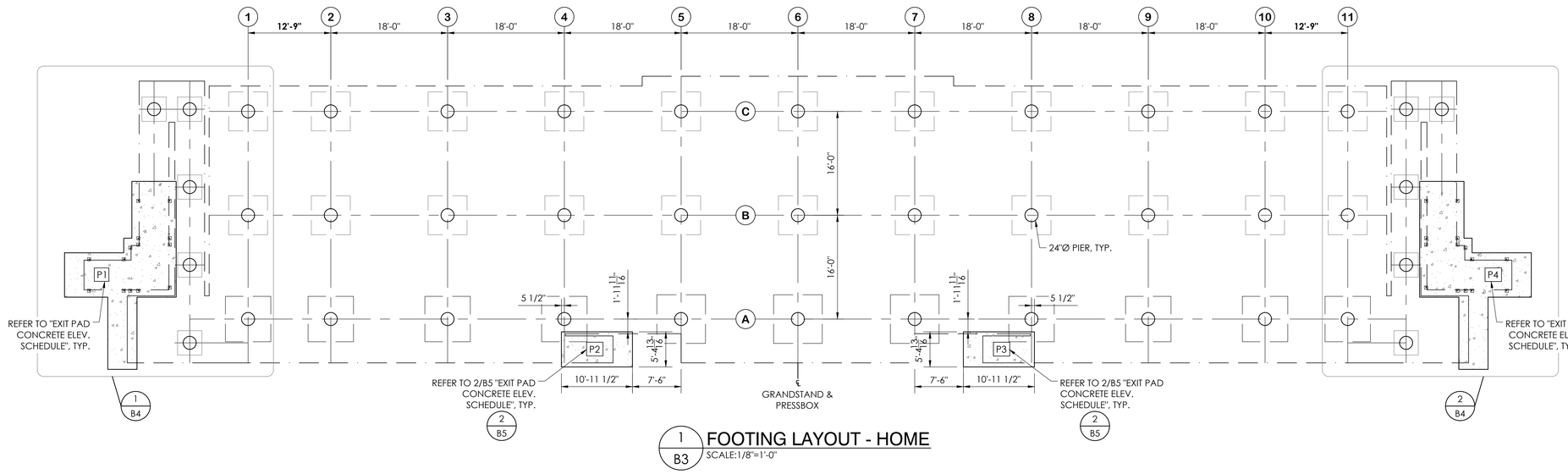

1 B3 FOOTING LAYOUT - HOME
SCALE:1/8"=1'-0"

FOUNDATION NOTES

1. GENERAL CONTRACTOR SHALL VERIFY ALL DIMENSIONS PRIOR TO START OF CONSTRUCTION. SEE SHEET B5 FOR FOOTING SCHEDULE.
2. REINFORCING STEEL SHALL BE ASTM A615 GRADE 60.
3. CONCRETE SHALL HAVE A MINIMUM COMPRESSIVE STRENGTH OF 3000 PSI AT 28 DAYS.
4. MAXIMUM HORIZ. TOLERANCE OF ANCHOR BOLT PLACEMENT SHALL BE ±⅛".
5. ALL ANCHOR BOLTS SHALL HAVE A 3½" PROJECTION (±⅛") ABOVE THE TOP OF PIER ELEVATION, UNLESS SPECIFICALLY NOTED OTHERWISE.
6. THE CONCRETE FOUNDATION CONTRACTOR IS RESPONSIBLE FOR NON SHRINK GROUTING.
7. THE ELEVATION AT THE TOP OF THE CONCRETE PIER IS DESIGNED TO BE 1" BELOW THE BOTTOM OF STEEL ELEVATION. THE TOLERANCE FOR THE BOTTOM OF STEEL ELEVATION IS ±½". THE TOP OF CONCRETE ELEVATION MAY BE RAISED TO MATCH THE BOTTOM OF STEEL ELEVATION, AT THE CONCRETE CONTRACTORS DISCRETION. THE CONTRACTOR OF THE CONCRETE FOUNDATIONS IS RESPONSIBLE FOR ANY ADJUSTMENTS REQUIRED.
8. ALL UNDERGROUND UTILITIES ARE TO BE LOCATED AND MARKED DURING THE REVIEW PROCESS BY THE OWNERS REPRESENTATIVE PRIOR TO FOUNDATION EXCAVATION.
9. REMOVE/RELOCATE THE UNDERGROUND UTILITIES AS REQUIRED WHERE UNDERGROUND UTILITIES CONFLICT WITH THE NEW FOOTINGS.

THIS DRAWING AND ALL INFORMATION THEREIN IS THE PROPERTY OF THE SOUTHERN BLEACHER COMPANY, INC. EXCEPT WITH ITS CONSENT, IN WHOLE OR IN PART, THIS DRAWING IS NOT TO BE COPIED. THIS DRAWING IS LOANED SUBJECT TO ITS RETURN UPON DEMAND AND, IS NOT TO BE USED DIRECTLY OR INDIRECTLY IN ANY WAY DETRIMENTAL TO OUR INTERESTS.

STRUCTURAL ENGINEERS
JOHN L. TAYLOR | No. S087 | 12-31-25
BRIAN T. DEAK | No. S087 | 12-31-25
COPLEY | No. 19282 | 12-31-25
COPLEY | No. 19282 | 12-31-25
553 S. Oak Knoll Ave. Pasadena, CA 91101
TAYLOR & YEAMAN
Southern BLEACHER COMPANY
GRANDSTANDS • BLEACHERS • STADIUMS
Established 1926
PO Box One, Graham, Texas 76450
901 Bluff Street
Phone: 940-549-0733 Fax: 940-549-1365

REGISTERED PROFESSIONAL ENGINEER
BRIAN T. DEAK
S 6087
STRUCTURAL
STATE OF CALIFORNIA
S&S 01/08/25
PRINCIPAL

NO.	DESCRIPTION:	DATE	REV BY
	DSA COMMENTS	05/10/24	HC

DRAWN BY: HC
CHECKED BY: DMC
JOB NUMBER #24094
SHEET B3 OF B35

FOOTING LAYOUT - HOME
12" RISE X 26" TREAD / 181'-6" (16 ROWS)

BELLFLOWER UNIFIED SCHOOL DISTRICT
MAYFAIR HIGH SCHOOL
LAKEWOOD, CALIFORNIA

22" X 34" (11x17 = 1/2 indicated scale)

24094

IDENTIFICATION STAMP
DIV. OF THE STATE ARCHITECT
APP: 03-124281 INC:
REVIEWED FOR
SS ☑ FLS ☑ ACS ☑
DATE: 02/04/2025

A = GRID LETTERS (GRANDSTAND)
1 = GRID NUMBERS (GRANDSTAND)
R1 = EXIT PIER NUMBERS
P1 = EXIT PAD

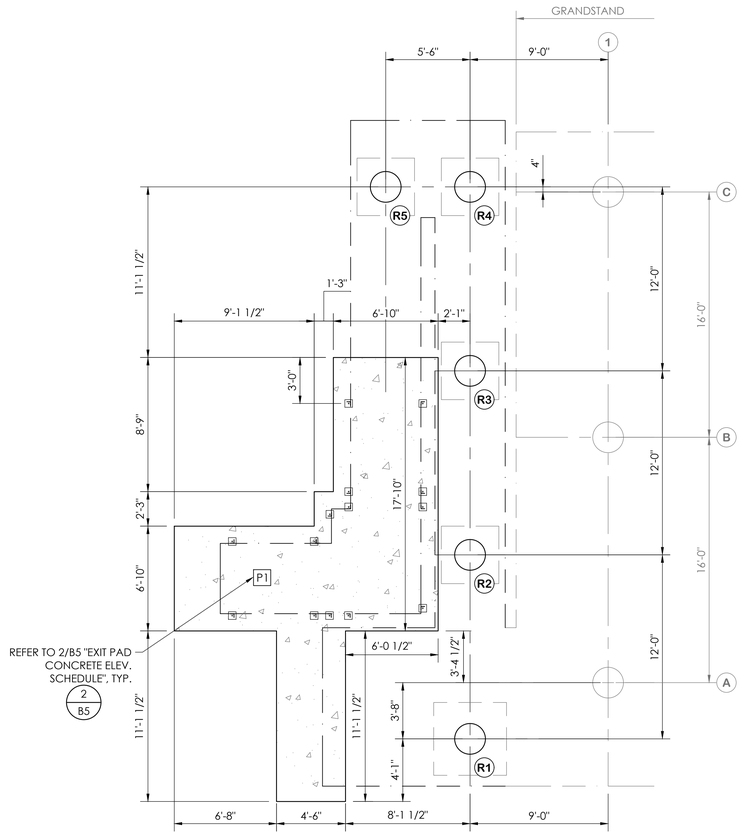

1/B4 EXIT FOOTING LAYOUT - HOME
SCALE:1/4"=1'-0"

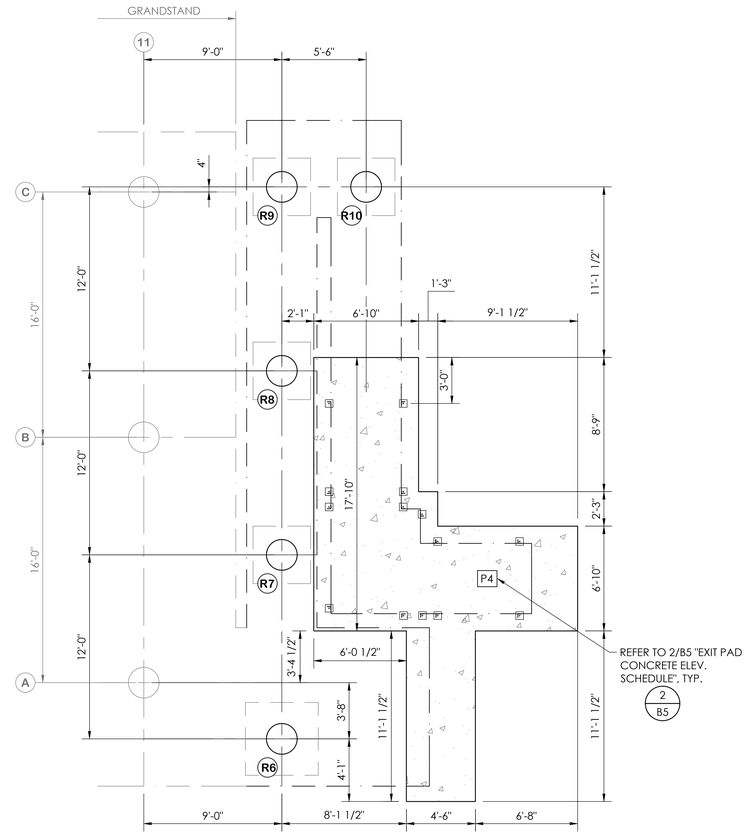

2/B4 EXIT FOOTING LAYOUT - HOME
SCALE:1/4"=1'-0"

THIS DRAWING AND ALL INFORMATION THEREIN IS THE PROPERTY OF THE SOUTHERN BLEACHER COMPANY, EXCEPT WITH ITS CONSENT, AS NOT TO BE VIEWED, REUSE OR COPIED. THIS DRAWING IS LOANED SUBJECT TO ITS RETURN UPON DEMAND AND, IS NOT TO BE USED DIRECTLY OR INDIRECTLY IN ANY WAY DETRIMENTAL TO OUR INTERESTS.

STRUCTURAL ENGINEERS
TAYLOR & YEAMAN
CORP. No. 6063 215 2438
CORP. No. 6106 215 2438
CORP. No. 6106 215 2438
553 S. Oak Knoll Ave. Pasadena, CA 91101
Phone: (626) 795-7674
Southern BLEACHER COMPANY
GRANDSTANDS • BLEACHERS • STADIUMS
PO Box One, Graham, Texas 76450
911 Bluff Street Phone: 940/549-0733 Fax: 940/549-1365
Established 1926

REGISTERED PROFESSIONAL ENGINEER
BRIAN T. DEAN
S 6087
STRUCTURAL
STATE OF CALIFORNIA
S&S 01/08/25
PRINCIPAL

NO	DESCRIPTION	DATE	REVD BY
1	DSA COMMENTS	4/07/24	HC

DRAWN	CHECKED
05/10/24	HC	DMC

JOB NUMBER #24094

SHEET B4 OF B35

EXIT FOOTING LAYOUTS - HOME
12' RISE X 26' TREAD / 181'-6" (16 ROWS)

BELLFLOWER UNIFIED SCHOOL DISTRICT
MAYFAIR HIGH SCHOOL
LAKEWOOD, CALIFORNIA

22" X 34" (1:1x17 = 1/2 indicated scale)

24094

IDENTIFICATION STAMP
DIV. OF THE STATE ARCHITECT
APP: 03-124281 INC:
REVIEWED FOR
SS ☑ FLS ☑ ACS ☑
DATE: 02/04/2025

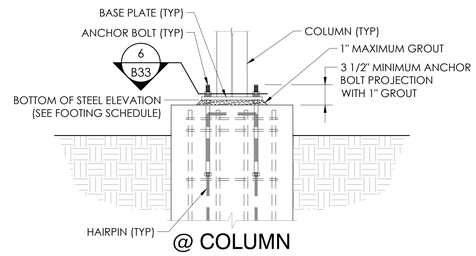

@ COLUMN

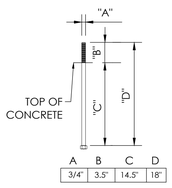

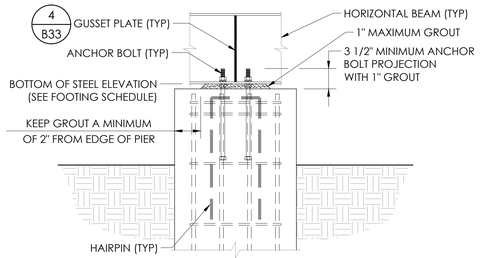

@ HORIZONTAL BEAM

1 B5 TOP OF PIER DETAIL
NOT TO SCALE

EXIT PADS TO BE FLAT AND LEVEL

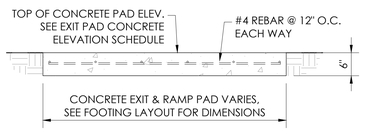

2 B5 MINIMUM EXIT PAD DETAIL
NOT TO SCALE

EXIT PAD CONCRETE ELEVATION SCHEDULE

(P = CONCRETE PAD)	TOP OF CONCRETE ELEV.
P1	100'-0"
P2	100'-0"
P3	100'-0"
P4	100'-0"

NOTE:
REFER TO CIVIL DRAWING SHEET C300 FOR SUBGRADE PREPARATION (BY OTHERS).

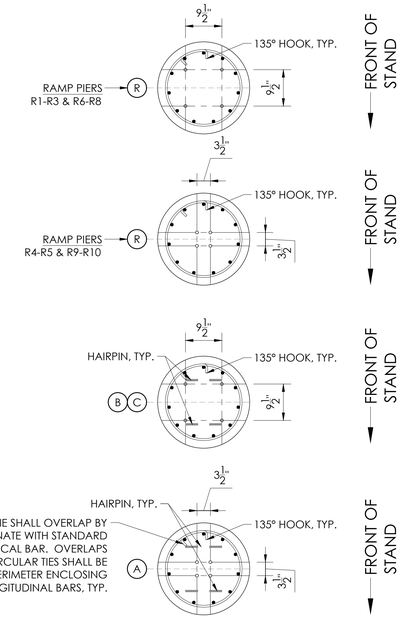

FOOTING SCHEDULE

NOTE: WHEN PEDESTAL HEIGHT IS 16" OR LESS, PEDESTALS SHALL BE POURED MONOLITHICALLY WITH PAD FOOTING

FOOTING # (A = GRIDLINE) (R = RAMP PIER)	TOP OF PIER ELEV.	BOTTOM OF STEEL ELEV.	GROUT	"H"	"D"	"H2"	"W"	FOOTING REINFORCEMENT	PIER DIAMETER	ANCHOR BOLTS
A (G.L. 1-2 & 10-11)	101'-9 13/16"	101'-10 13/16"	1"	14"	19"	38" MAX.	7'-0" X 7'-0"	(7) #6 EACH WAY BOTTOM & #5 @ 18" O.C. TOP	24"Ø	(4)3/4"Ø X 18" HEADED ANCHOR BOLTS
A (G.L. 3-4 & 8-9)	101'-9 13/16"	101'-10 5/8"	1"	14"	19"	38" MAX.	7'-0" X 7'-0"	(7) #6 EACH WAY BOTTOM & #5 @ 18" O.C. TOP	24"Ø	(4)3/4"Ø X 18" HEADED ANCHOR BOLTS
A (G.L. 5-7)	101'-7 3/4"	101'-8 3/4"	1"	14"	19"	38" MAX.	7'-6" X 7'-6"	(7) #6 EACH WAY BOTTOM & #5 @ 18" O.C. TOP	24"Ø	(4)3/4"Ø X 18" HEADED ANCHOR BOLTS
B (G.L. 1-11)	100'-5"	100'-6"	1"	14"	19"	26" MAX.	6'-0" X 6'-0"	(6) #6 EACH WAY BOTTOM	24"Ø	(4)3/4"Ø X 18" HEADED ANCHOR BOLTS
C (G.L. 1-11)	100'-5"	100'-6"	1"	14"	19"	26" MAX.	6'-0" X 6'-0"	(6) #6 EACH WAY BOTTOM	24"Ø	(4)3/4"Ø X 18" HEADED ANCHOR BOLTS
R1 & R6	100'-5"	100'-6"	1"	14"	19"	50" MAX.	4'-9" X 4'-9"	(5) #6 EACH WAY BOTTOM	24"Ø	(4)3/4"Ø X 18" HEADED ANCHOR BOLTS
R2-R3 & R7-B8	100'-5"	100'-6"	1"	14"	19"	50" MAX.	3'-9" X 3'-9"	(4) #6 EACH WAY BOTTOM	24"Ø	(4)3/4"Ø X 18" HEADED ANCHOR BOLTS
R4-R5 & R9-R10	101'- 0 3/4"	101'-1 3/4"	1"	14"	19"	26" MAX.	3'-9" X 3'-9"	(4) #6 EACH WAY BOTTOM	24"Ø	(4)3/4"Ø X 18" HEADED ANCHOR BOLTS

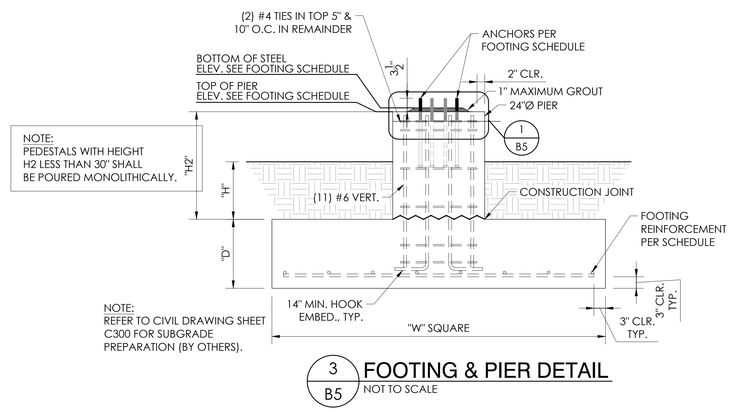

3 B5 FOOTING & PIER DETAIL
NOT TO SCALE

THIS DRAWING AND ALL INFORMATION THEREIN IS THE PROPERTY OF THE SOUTHERN BLEACHER COMPANY, EXCEPT WHERE OWNERSHIP HAS NOT BEEN VESTED IN SBC. IT IS NOT TO BE COPIED. THIS DRAWING IS LOANED SUBJECT TO RETURN UPON DEMAND AND, IS NOT TO BE USED DIRECTLY OR INDIRECTLY IN ANY WAY DETRIMENTAL TO OUR INTERESTS.

STRUCTURAL ENGINEERS
TAYLOR & YEAMAN
CORONA 951.817.2308
FONTANA 909.429.4249
COVINA 626.332.2408
553 S. Oak Knoll Ave. Pasadena, CA 91101
Southern BLEACHER COMPANY
GRANDSTANDS • BLEACHERS • STADIUMS
Established 1926
PO Box One, Graham, Texas 76450
Phone: 940-549-0733 Fax: 940-549-1365
REGISTERED PROFESSIONAL ENGINEER
BRIAN T. DEAN
S 6087
STRUCTURAL
STATE OF CALIFORNIA
S&S 01/08/25
PRINCIPAL

PIER DETAILS - HOME
12" RISE X 26" TREAD / 181'-6" (16 ROWS)

BELLFLOWER UNIFIED SCHOOL DISTRICT
MAYFAIR HIGH SCHOOL
LAKEWOOD, CALIFORNIA

REV'T #	DATE	DESCRIPTION	DSA COMMENTS
1	05/10/24	HC	DMC

DATE 05/10/24 DRAWN HC CHECKED DMC

JOB NUMBER #24094

SHEET B5 OF B35

22" X 34" (1) x17 = 1/2 indicated scale)

24094

IDENTIFICATION STAMP
DIV. OF THE STATE ARCHITECT
APP: 03-124281 INC:
REVIEWED FOR
SS ☑ FLS ☑ ACS ☑
DATE: 02/04/2025

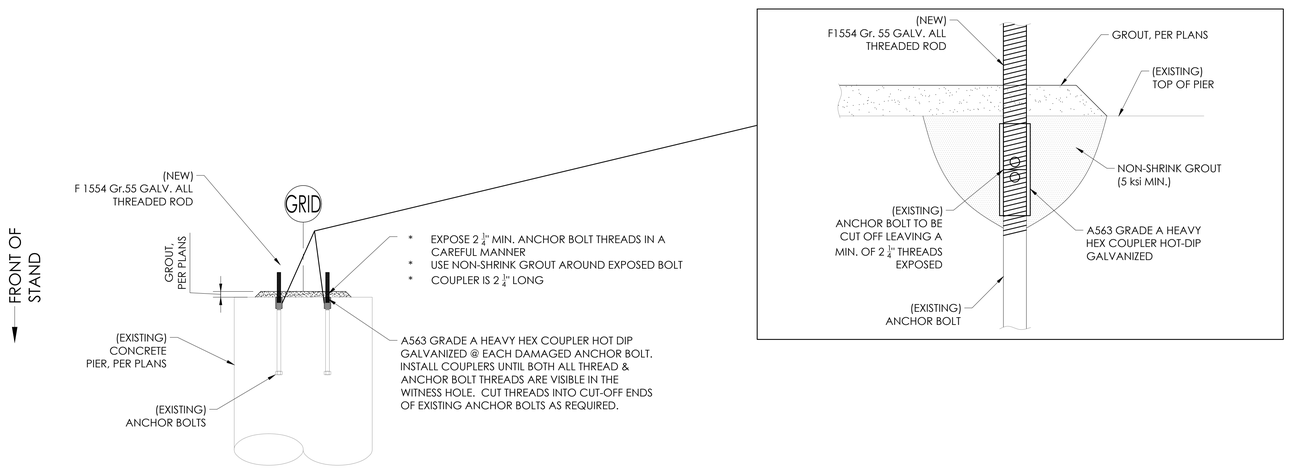

1 / B6 DETAIL @ DAMAGED F1554 Gr. 55 BOLTS
NOT TO SCALE

DETAIL TO BE USED IF REQUIRED

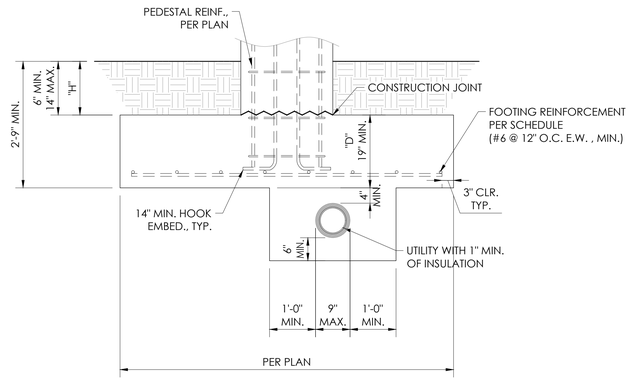

2 / B6 FOOTING DETAIL @ UTILITY
NOT TO SCALE

DETAIL TO BE USED IF REQUIRED

THIS DRAWING AND ALL INFORMATION THEREIN IS THE PROPERTY OF THE SOUTHERN BLEACHER COMPANY AND IS LOANED HEREWITH. AS NOT TO BE USED, COPIED, OR REPRODUCED IN ANY WAY DETRIMENTAL TO OUR INTERESTS. THIS DRAWING IS LOANED SUBJECT TO RETURN UPON DEMAND AND, IS NOT TO BE USED DIRECTLY OR INDIRECTLY IN ANY WAY DETRIMENTAL TO OUR INTEREST.

STRUCTURAL ENGINEERS
JOSEPH L. TAYLOR (562) 757-2408
CHARLES A. TAYLOR (626) 792-2439
DOUG TAYLOR (626) 792-2439
553 S. Oak Knoll Ave. Pasadena, CA 91101
TAYLOR & YEAMAN
Southern BLEACHER COMPANY
GRANDSTANDS • BLEACHERS • STADIUMS
PO Box One, Graham, Texas 76450
911 Hillcrest Phone: 940/549-0733 Fax: 940/549-1365
Established 1926

REGISTERED PROFESSIONAL ENGINEER
BRIAN T. DEAN
S 6087
STRUCTURAL
STATE OF CALIFORNIA
S&S 01/08/25
PRINCIPAL

PIER DETAILS - HOME
12" RISE X 26" TREAD / 181'-6" (16 ROWS)

BELLFLOWER UNIFIED SCHOOL DISTRICT
MAYFAIR HIGH SCHOOL
LAKEWOOD, CALIFORNIA

REV	BY	DATE	DESCRIPTION
	HC	8/8/24	B&A COMMENTS

DATE: 05/10/24 | DRAWN: HC | CHECKED: DMC
JOB NUMBER: #24094
SHEET: B6 | OF: B35

22" X 34" (11x17 = 1/2 indicated scale)

24094

IDENTIFICATION STAMP
DIV. OF THE STATE ARCHITECT
APP: 03-124281 INC:
REVIEWED FOR
SS ☑ FLS ☑ ACS ☑
DATE: 02/04/2025

A = GRID LINE
1 = STRINGER NUMBERS
B1 = BEAM NUMBERS
= ROLL OVER SPLICE
----- = 3/4" SWAY ROD

NOTE: SEATING LAYOUT SHOWN FOR REFERENCE ONLY, SEE SHEET B11 FOR SEATING LAYOUT

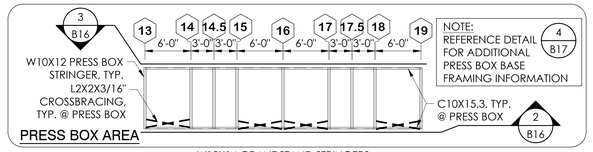

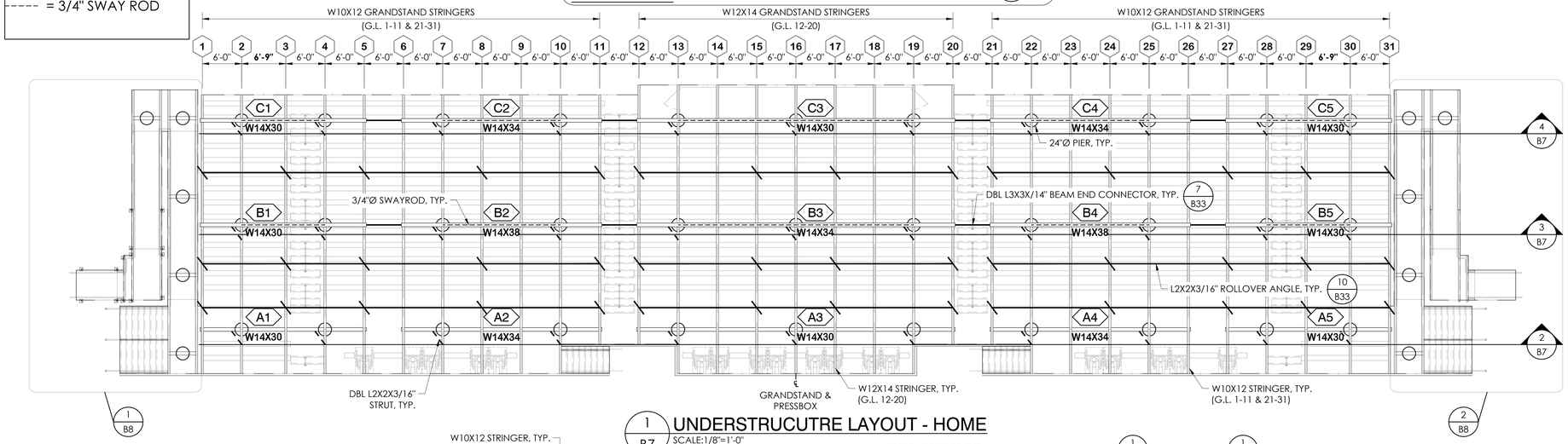

1 B7 UNDERSTRUCUTRE LAYOUT - HOME
SCALE:1/8"=1'-0"

NOTE: REFERENCE UNDERSTRUCTURE LAYOUT 1/B7 FOR STRINGER G.L. (GRID LINE) NUMBERING.

NOTE: REFERENCE FOOTING LAYOUT 1/B3 FOR COLUMN G.L. (GRID LINE) NUMBERING.

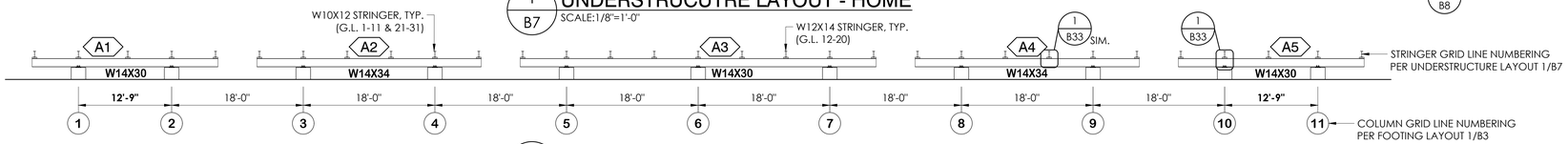

2 B7 ELEVATION VIEW "A" ROW - HOME
SCALE:1/8"=1'-0"

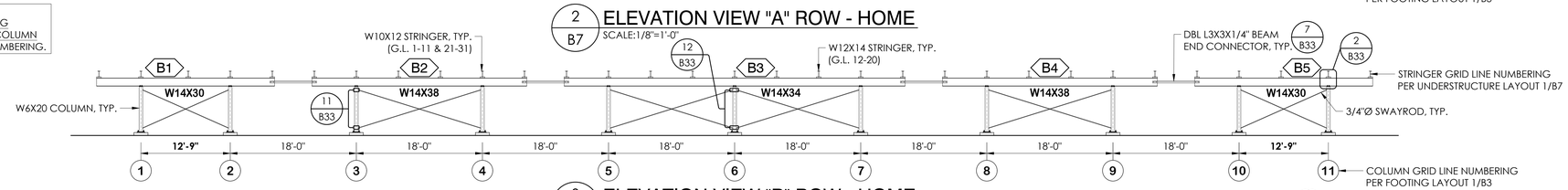

3 B7 ELEVATION VIEW "B" ROW - HOME
SCALE:1/8"=1'-0"

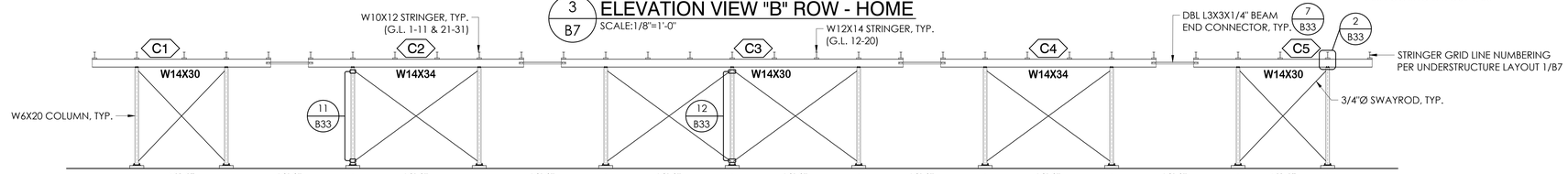

4 B7 ELEVATION VIEW "C" ROW - HOME
SCALE:1/8"=1'-0"

STRUCTURAL ENGINEERS
TAYLOR & YEAMAN
CORONA Tel: (951) 737-3436 Fax: (951) 737-2428
COVINA Tel: (626) 332-2408 Fax: (626) 332-2413
553 S. Oak Knoll Ave. Pasadena, CA 91101

THIS DRAWING AND ALL INFORMATION THEREIN IS THE PROPERTY OF THE SOUTHERN BLEACHER COMPANY. EXCEPT FOR THE ACCOMPANYING ARCHITECTURAL WORK OF WHICH IT IS PART, THIS DRAWING IS NOT TO BE COPIED. THIS DRAWING IS LOANED SUBJECT TO RETURN UPON DEMAND AND, IS NOT TO BE USED DIRECTLY OR INDIRECTLY IN ANY WAY DETRIMENTAL TO OUR INTERESTS.

Southern BLEACHER COMPANY
GRANDSTANDS • BLEACHERS • STADIUMS
PO Box One, Graham, Texas 76450
Phone: 940/549-0733 Fax: 940/549-1365
Established 1926

REGISTERED PROFESSIONAL ENGINEER
BRIAN T. DEAN
S 6087
STRUCTURAL
STATE OF CALIFORNIA
S&S 02/08/25
PRINCIPAL

UNDERSTRUCTURE LAYOUT / ELEVATION VIEWS - HOME
12" RISE X 26" TREAD / 181'-6" (16 ROWS)

BELLFLOWER UNIFIED SCHOOL DISTRICT
MAYFAIR HIGH SCHOOL
LAKEWOOD, CALIFORNIA

NO	DESCRIPTION	DATE	BY
	DSA COMMENTS		

DATE	DRAWN	CHECKED
05/10/24	HC	DMC

JOB NUMBER #24094

SHEET B7 OF B35

22" X 34" (1) x 17 = 1/2 (indicated scale)

24094

IDENTIFICATION STAMP
DIV. OF THE STATE ARCHITECT
APP: 03-124281 INC:
REVIEWED FOR
SS ☑ FLS ☑ ACS ☑
DATE: 02/04/2025

R1 = RAMP STRINGER NUMBERS
H1 = RAMP BEAM NUMBERS

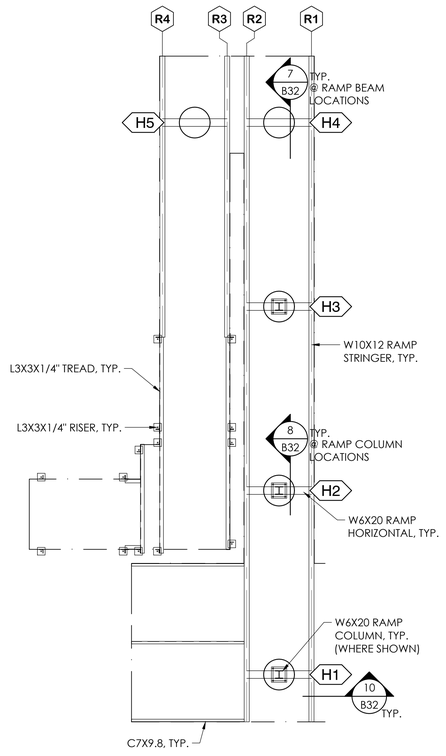

1/B8 EXIT UNDERSTRUCTURE LAYOUT - HOME
SCALE:1/4"=1'-0"

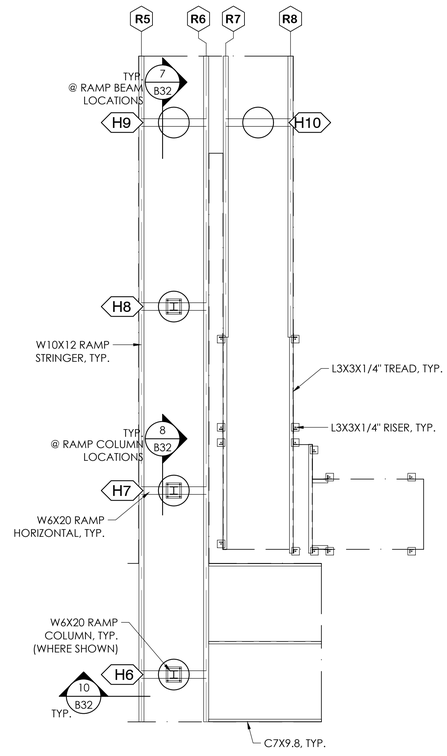

2/B8 EXIT UNDERSTRUCTURE LAYOUT - HOME
SCALE:1/4"=1'-0"

THIS DRAWING AND ALL INFORMATION THEREIN IS THE PROPERTY OF THE SOUTHERN BLEACHER COMPANY, SYSTEMS INTERNATIONAL AND NOT TO BE USED, COPIED, REVISED OR REPRODUCED WITHOUT THE WRITTEN CONSENT OF THE SOUTHERN BLEACHER COMPANY. THIS DRAWING IS LOANED SUBJECT TO RETURN UPON DEMAND AND, IS NOT TO BE USED DIRECTLY OR INDIRECTLY IN ANY WAY DETRIMENTAL TO OUR INTERESTS.

STRUCTURAL ENGINEERS
TAYLOR & YEAN
SAN DIEGO | Ph: (619) 297-2408 | Fax: (619) 297-2418
COVINA | Ph: (626) 339-9663 | Fax: (626) 339-1554
OAKLEY | Ph: (925) 625-7450 | Fax: (925) 625-7451
553 S. Oak Knoll Ave. Pasadena, CA 91101
www.taylor-yean.com
Southern BLEACHER COMPANY
GRANDSTANDS • BLEACHERS • STADIUMS
Established 1946
P.O Box One, Graham, Texas 76450
901 Hwy 380 West Phone: 940-549-0733 Fax: 940-549-1365

REGISTERED PROFESSIONAL ENGINEER
BRIAN T. DEAN
S 6087
STRUCTURAL
STATE OF CALIFORNIA
S&S 01/08/25
PRINCIPAL

BELLFLOWER UNIFIED SCHOOL DISTRICT
MAYFAIR HIGH SCHOOL
LAKEWOOD, CALIFORNIA

EXIT UNDERSTRUCTURE LAYOUTS - HOME
12" RISE X 26" TREAD / 181'-6" (16 ROWS)

NO	DESCRIPTION	DATE	BY
1	ISSUED FOR BID ADDENDUM #1	10/07/24	HC

DRAWN	CHECKED
HC	DMC

05/10/24

JOB NUMBER #24094

SHEET B8 OF B35

22" X 34" (1:1x17 = 1/2 indicated scale)

24094

IDENTIFICATION STAMP
DIV. OF THE STATE ARCHITECT
APP: 03-124281 INC:
REVIEWED FOR
SS ☑ FLS ☑ ACS ☑
DATE: 02/04/2025

ITEM DESCRIPTION

1. W 14 X 30 (50 ksi)
2. W 14 X 34 (50 ksi)
3. W 14 X 38 (50 ksi)
4. W 10 X 12 (50 ksi)
5. W 12 X 14 (50 ksi)
6. W 6 X 20 (50 ksi)
7. L 3 X 3 X 1/4 (50 ksi)
8. L 2 X 2 X 3/16 (50 ksi)
9. L 2 X 1 1/2 X 3/16 (50 ksi)
10. L 2 1/2 X 2 X 3/16 (50 ksi)
11. 12 X 12 X 5/8 PLATE
12. 6 X 8 X 3/8 PLATE
13. 3/4 X REQ'D LENGTH SWAY ROD (50 ksi)
14. 3/4 X 18 ANCHOR BOLT W/2 HEX HEAD NUTS & FLAT WASHER
15. 9 GAUGE GALV. STEEL CHAINLINK FENCE
16. ANODIZED ALUMINUM RAIL (SEE NOTES)
17. 3 X 3/8 GUSSET PLATE (A36)
18. 5 X 3/8 GUSSET PLATE (A36)
19. 2 X 1/4 GUSSET PLATE (A36)

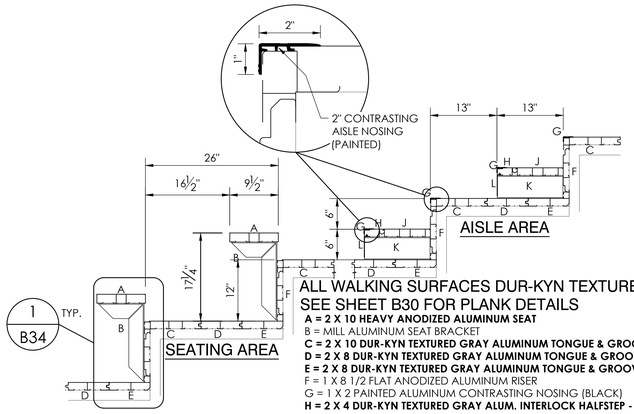

ALL WALKING SURFACES DUR-KYN TEXTURED GRAY
SEE SHEET B30 FOR PLANK DETAILS

A = 2 X 10 HEAVY ANODIZED ALUMINUM SEAT
B = MILL ALUMINUM SEAT BRACKET
C = 2 X 10 DUR-KYN TEXTURED GRAY ALUMINUM TONGUE & GROOVE 2001 TREAD - NOSE
D = 2 X 8 DUR-KYN TEXTURED GRAY ALUMINUM TONGUE & GROOVE TREAD (#69432)
E = 2 X 8 DUR-KYN TEXTURED GRAY ALUMINUM TONGUE & GROOVE 2001 TREAD - HEEL
F = 1 X 8 1/2 FLAT ANODIZED ALUMINUM RISER
G = 1 X 2 PAINTED ALUMINUM CONTRASTING NOSING (BLACK)
H = 2 X 4 DUR-KYN TEXTURED GRAY ALUM. INTERLOCK HALFSTEP - NOSE W/RISER
J = 2 X 9 DUR-KYN TEXTURED GRAY ALUM. INTERLOCK HALFSTEP - DECK
K = 4 1/2" MILL ALUMINUM HALFSTEP BRACKET
L = 4 1/2" ANODIZED ALUMINUM INTERLOCK STEP RISER

3 B9 PLANK ARRANGEMENT
NOT TO SCALE 12" X 26"

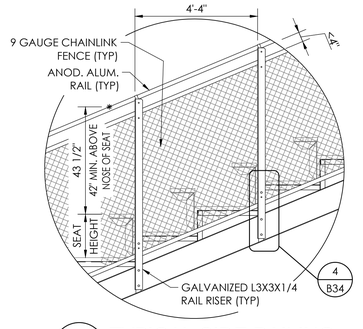

4 B9 TYPICAL SIDE RAILING
SCALE:1/2"=1'-0"

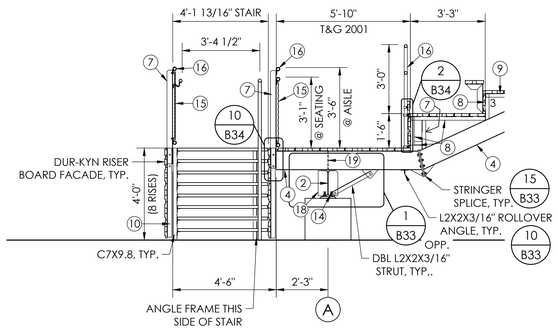

2 B9 SECTION VIEW - HOME
SCALE:3/8"=1'-0"

1 B9 SECTION VIEW - HOME
SCALE:3/8"=1'-0"

THE DRAWING AND ALL INFORMATION THEREIN IS THE PROPERTY OF THE SOUTHERN BLEACHER COMPANY DIVISION OF TAYLOR-WOOD ENGINEERING, AND NOT TO BE COPIED. THIS DRAWING IS LOANED SUBJECT TO RETURN UPON DEMAND AND, IS NOT TO BE USED DIRECTLY OR INDIRECTLY IN ANY WAY DETRIMENTAL TO OUR INTERESTS.

STRUCTURAL ENGINEERS
CERTIFICATE OF AUTHORIZATION
CA 2-2418
TX 1626
NV 0362
553 S. Oak Knoll Ave. Pasadena, CA 91101
TAYLOR & YEAMAN
Southern BLEACHER COMPANY
GRANDSTANDS • BLEACHERS • STADIUMS
PO Box One, Graham, Texas 76450
Office: 940/549-0733 Fax: 940/549-1365
Established 1926

REGISTERED PROFESSIONAL ENGINEER
BRIAN T. DEAL
S 6087
STRUCTURAL
STATE OF CALIFORNIA
S&S 01/08/25
PRINCIPAL

SECTION VIEWS - HOME
12" RISE X 26" TREAD / 181'-6" (16 ROWS)

BELLFLOWER UNIFIED SCHOOL DISTRICT
MAYFAIR HIGH SCHOOL
LAKEWOOD, CALIFORNIA

REV	BY	DATE	DESCRIPTION
			DSA COMMENTS

DATE 05/10/24 ORIG. HC CHECK DMC
JOB NUMBER #24094
SHEET B9 OF B35

22" X 34" (11x17 = 1/2 indicated scale)

24094

IDENTIFICATION STAMP
DIV. OF THE STATE ARCHITECT
APP: 03-124281 INC:
REVIEWED FOR
SS ☑ FLS ☑ ACS ☑
DATE: 02/04/2025

ITEM DESCRIPTION

1. W 14 X 30 (50 ksi)
2. W 14 X 34 (50 ksi)
3. W 14 X 38 (50 ksi)
4. W 10 X 12 (50 ksi)
5. W 12 X 14 (50 ksi)
6. W 6 X 20 (50 ksi)
7. L 3 X 3 X 1/4 (50 ksi)
8. L 2 X 2 X 3/16 (50 ksi)
9. L 2 X 1 1/2 X 3/16 (50 ksi)
10. L 2 1/2 X 2 X 3/16 (50 ksi)
11. 12 X 12 X 5/8 PLATE
12. 6 X 8 X 3/8 PLATE
13. 3/4 X REQ'D LENGTH SWAY ROD (50 ksi)
14. 3/4 X 18 ANCHOR BOLT W/2 HEX HEAD NUTS & FLAT WASHER
15. 9 GAUGE GALV. STEEL CHAINLINK FENCE
16. ANODIZED ALUMINUM RAIL (SEE NOTES)
17. 3 X 3/8 GUSSET PLATE (A36)
18. 5 X 3/8 GUSSET PLATE (A36)
19. 2 X 1/4 GUSSET PLATE (A36)

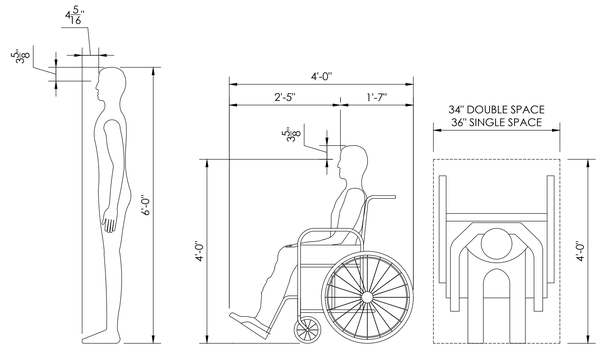

2 / B10 SIGHT LINE PARAMETERS
NOT TO SCALE

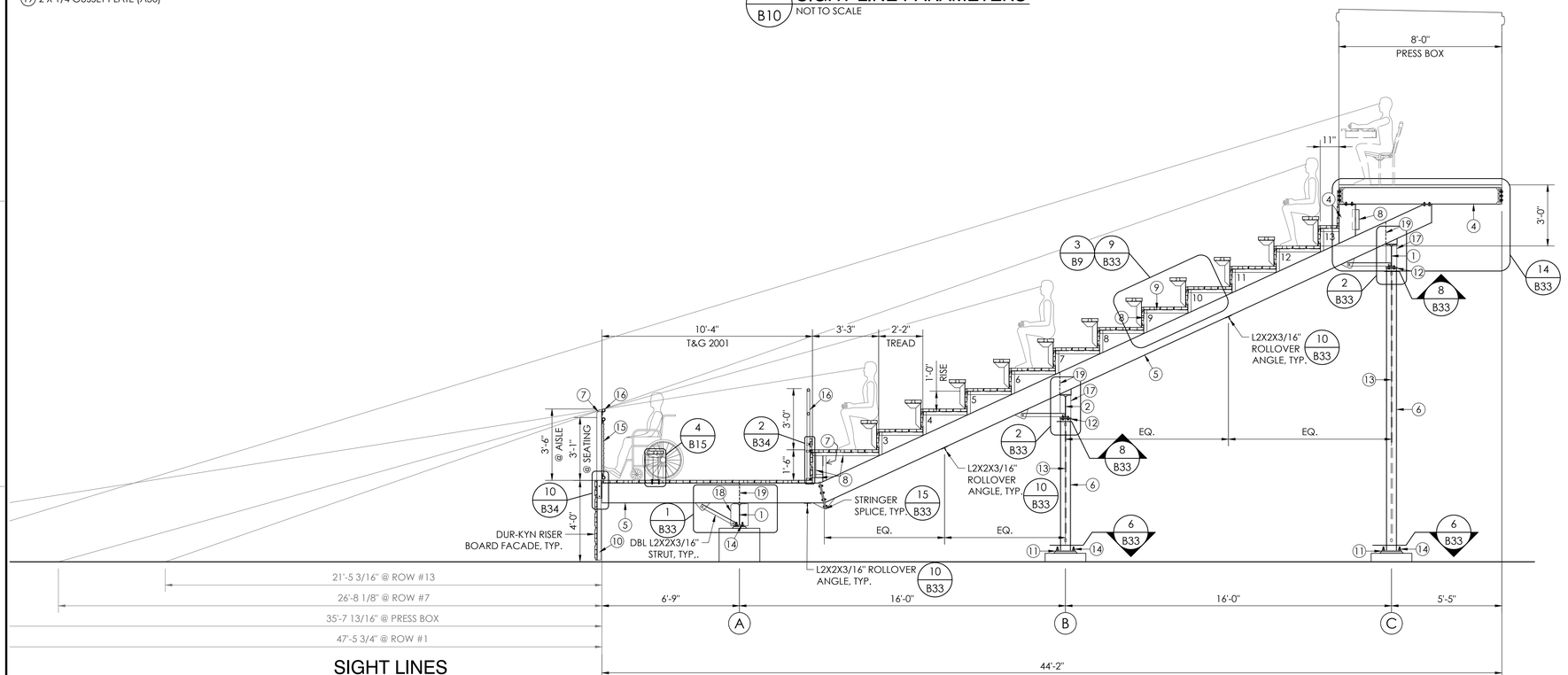

SIGHT LINES

1 / B10 SECTION VIEW @ PRESS BOX AREA - HOME
SCALE:3/8"=1'-0"

THIS DRAWING AND ALL INFORMATION THEREIN IS THE PROPERTY OF THE SOUTHERN BLEACHER COMPANY. EXCEPT FOR USE ON CONTRACTED WORK, NEITHER THIS NOR ANY PART OF IT MAY BE COPIED. THIS DRAWING IS LOANED SUBJECT TO ITS RETURN UPON DEMAND AND, IS NOT TO BE USED DIRECTLY OR INDIRECTLY IN ANY WAY DETRIMENTAL TO OUR INTERESTS.

STRUCTURAL ENGINEERS
TAYLOR & SYFAN
553 S. Oak Knoll Ave. Pasadena, CA 91101
CONTACT: Eric Syfan
PH: (626) 792-2428
FAX: (626) 792-2429
CONTACT: Kyle Taylor
PH: (626) 792-2428
FAX: (626) 792-2429
Southern BLEACHER COMPANY
GRANDSTANDS • BLEACHERS • STADIUMS
PO Box One, Graham, Texas 76450
911 Hillcrest Phone: 940/549-0733 Fax: 940/549-1365
Established 1926

REGISTERED PROFESSIONAL ENGINEER
BRIAN T. DEAN
S 6087
STRUCTURAL
STATE OF CALIFORNIA
S&S 01/08/25
PRINCIPAL

SECTION VIEWS - HOME
12" RISE X 26" TREAD / 181'-6" (16 ROWS)

BELLFLOWER UNIFIED SCHOOL DISTRICT
MAYFAIR HIGH SCHOOL
LAKEWOOD, CALIFORNIA

REV	BY	DATE	DESCRIPTION
1	HC	3/07/24	DSA COMMENTS

DATE	DRAWN	CHECKED
05/10/24	HC	DMC

JOB NUMBER #24094

SHEET B10 OF B35

22" X 34" (11x17 = 1/2 indicated scale)

24094

IDENTIFICATION STAMP
DIV. OF THE STATE ARCHITECT
APP: 03-124281 INC:
REVIEWED FOR
SS ☑ FLS ☑ ACS ☑
DATE: 02/04/2025

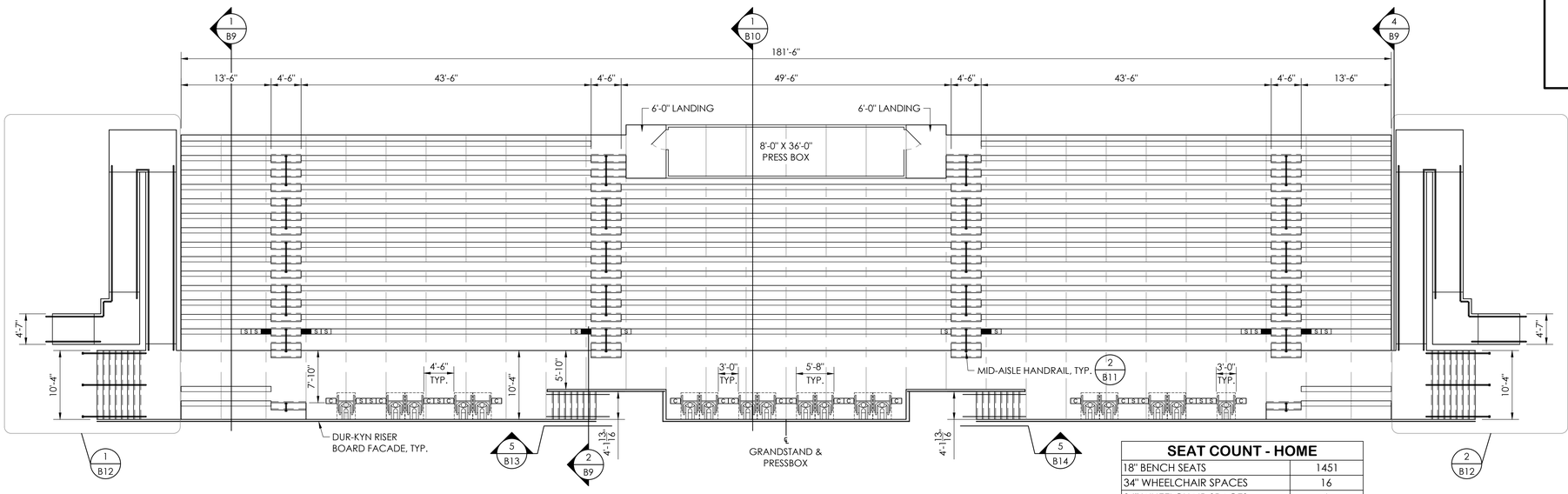

1 B11 SEATING LAYOUT - HOME
SCALE:1/8"=1'-0"

SEAT COUNT - HOME	
18" BENCH SEATS	1451
34" WHEELCHAIR SPACES	16
36" WHEELCHAIR SPACES	2
18" COMPANION SEATS [C]	18
18" SEMI-AMBULANT SEATS [S]	18
18" AISLE SEATS ■	6
TOTAL SEAT COUNT	**1511**

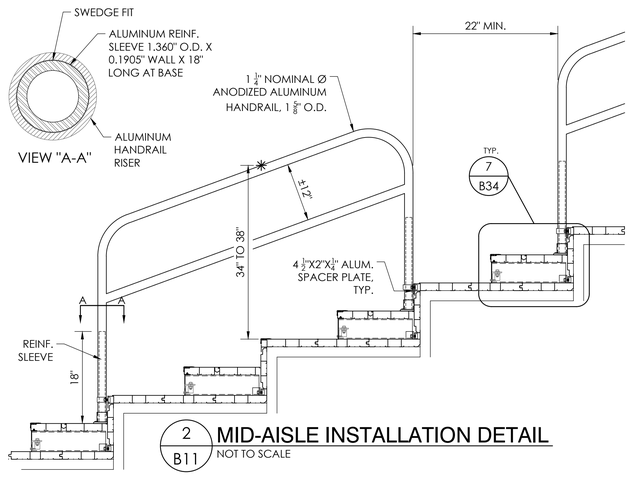

2 B11 MID-AISLE INSTALLATION DETAIL
NOT TO SCALE

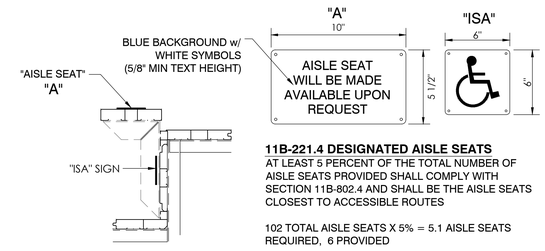

11B-221.4 DESIGNATED AISLE SEATS
AT LEAST 5 PERCENT OF THE TOTAL NUMBER OF AISLE SEATS PROVIDED SHALL COMPLY WITH SECTION 11B-802.4 AND SHALL BE THE AISLE SEATS CLOSEST TO ACCESSIBLE ROUTES

102 TOTAL AISLE SEATS X 5% = 5.1 AISLE SEATS REQUIRED, 6 PROVIDED

■ = AISLE SEATS

3 B11 DESIGNATED AISLE SEATS
NOT TO SCALE

THIS DRAWING AND ALL INFORMATION THEREIN IS THE PROPERTY OF THE SOUTHERN BLEACHER COMPANY, SYDELL/1994 AND CANNOT BE VIEWED, REVIEWED NOR COPIED. THIS DRAWING IS LOANED SUBJECT TO RETURN UPON DEMAND AND, IS NOT TO BE USED DIRECTLY OR INDIRECTLY IN ANY WAY DETRIMENTAL TO OUR INTERESTS.

STRUCTURAL ENGINEERS
CHICAGO, IL (630) 717-2408
DENVER, CO (720) 272-2439
LOS ANGELES, CA (626) 744-0434
553 S. Oak Knoll Ave. Pasadena, CA 91101
www.taylor-yeh.com

TAYLOR & YEH
Southern BLEACHER COMPANY
GRANDSTANDS • BLEACHERS • STADIUMS
Established 1926
PO Box One, Graham, Texas 76450
901 Hwy 380 Phone: 940/549-0733 Fax: 940/549-1365

REGISTERED PROFESSIONAL ENGINEER
BRIAN T. DEAL
S 6087
STRUCTURAL
STATE OF CALIFORNIA
S&S 01/08/25
PRINCIPAL

NO	DESCRIPTION	DATE	REV'D BY
1	SEATING LAYOUT - HOME 12" RISE X 26" TREAD / 181'-6" (16 ROWS)	05/10/24	HC
2	DSA COMMENTS	02/04/25	HC

DATE 05/10/24 DRAWN HC CHECKED DMC

JOB NUMBER #24094

SHEET B11 OF B35

BELLFLOWER UNIFIED SCHOOL DISTRICT
MAYFAIR HIGH SCHOOL
LAKEWOOD, CALIFORNIA

22" X 34" (11x17 = 1/2 indicated scale)

24094

IDENTIFICATION STAMP
DIV. OF THE STATE ARCHITECT
APP: 03-124281 INC:
REVIEWED FOR
SS ☑ FLS ☑ ACS ☑
DATE: 02/04/2025

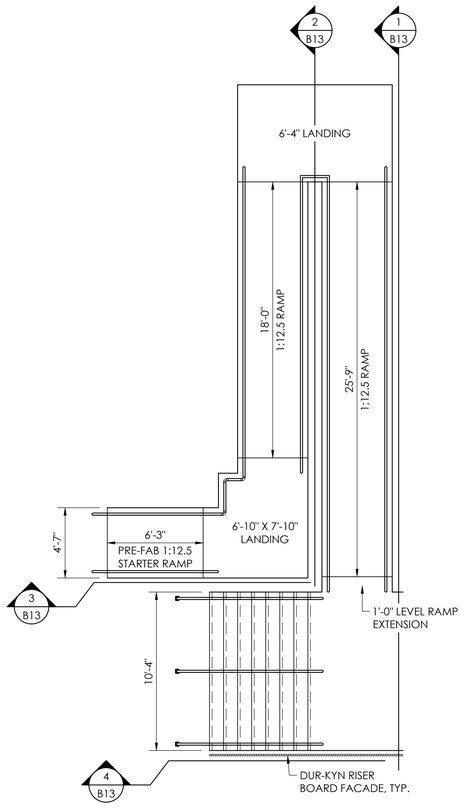

1 B12 **EXIT LAYOUT - HOME**
SCALE:1/4"=1'-0"

NOTE:
HANDRAIL ON INSIDE OF RAMPS TO RUN CONTINUOUS.

CBC 1014.6: HANDRAILS ARE CONTINUOUS TO ADJACENT RAMP.

11B-505.3: INSIDE HANDRAILS ON SWITCHBACK OR DOGLEG STAIRS AND RAMPS SHALL BE CONTINUOUS BETWEEN FLIGHTS OR RUNS.

11B-505.10: HANDRAIL EXTENSIONS: EXCEPTION 1: EXTENSIONS SHALL NOT BE REQUIRED FOR CONTINUOUS HANDRAILS AT THE INSIDE TURNS OF SWITCHBACK OR DOGLEG STAIRS AND RAMPS.

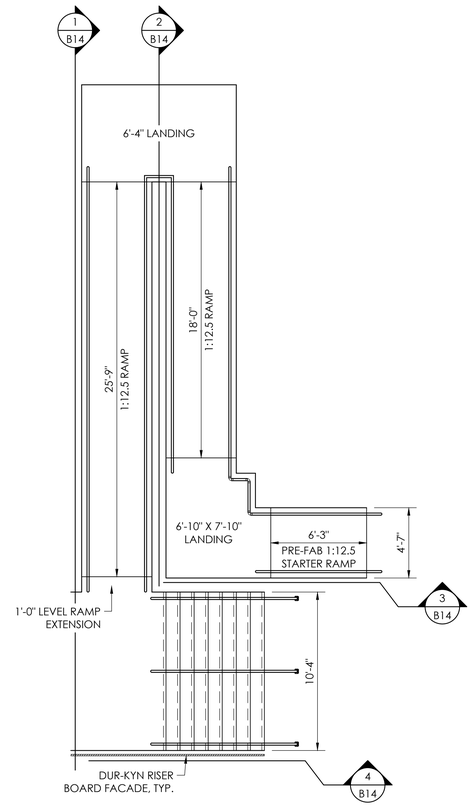

2 B12 **EXIT LAYOUT - HOME**
SCALE:1/4"=1'-0"

THIS DRAWING AND ALL INFORMATION THEREIN IS THE PROPERTY OF THE SOUTHERN BLEACHER COMPANY. EXCEPT WITH ACCOMPANYING ARCHITECTURAL PLANS NOT REVIEWED NOR COPIED. THIS DRAWING IS LOANED SUBJECT TO RETURN UPON DEMAND AND, IS NOT TO BE USED DIRECTLY OR INDIRECTLY IN ANY WAY DETRIMENTAL TO OUR INTERESTS.

STRUCTURAL ENGINEERS
TAYLOR & YEAGAN
553 S. Oak Knoll Ave. Pasadena, CA 91101
PH: (626) 793-2428
FAX: (626) 793-2429
EMAIL: info@tayeag.com

Southern BLEACHER COMPANY
GRANDSTANDS • BLEACHERS • STADIUMS
PO Box One, Graham, Texas 76450
911 Hillcrest Street
Phone: 940-549-0733 Fax: 940-549-1365
Established 1926

REGISTERED PROFESSIONAL ENGINEER
BRIAN T. DEAL
S 6087
STRUCTURAL
STATE OF CALIFORNIA
S&S 01/08/25
PRINCIPAL

EXIT LAYOUTS - HOME
12" RISE X 26" TREAD / 181'-6" (16 ROWS)

BELLFLOWER UNIFIED SCHOOL DISTRICT
MAYFAIR HIGH SCHOOL
LAKEWOOD, CALIFORNIA

REV	DATE	DESCRIPTION	BY
1	10/07/24	DSA COMMENTS	HC

DATE: 05/10/24 | DRAWN: HC | CHECKED: DMC
JOB NUMBER: #24094
SHEET: B12 | OF: B35

22" X 34" (11x17 = 1/2 indicated scale)

24094

IDENTIFICATION STAMP
DIV. OF THE STATE ARCHITECT
APP: 03-124281 INC:
REVIEWED FOR
SS ☑ FLS ☑ ACS ☑
DATE: 02/04/2025

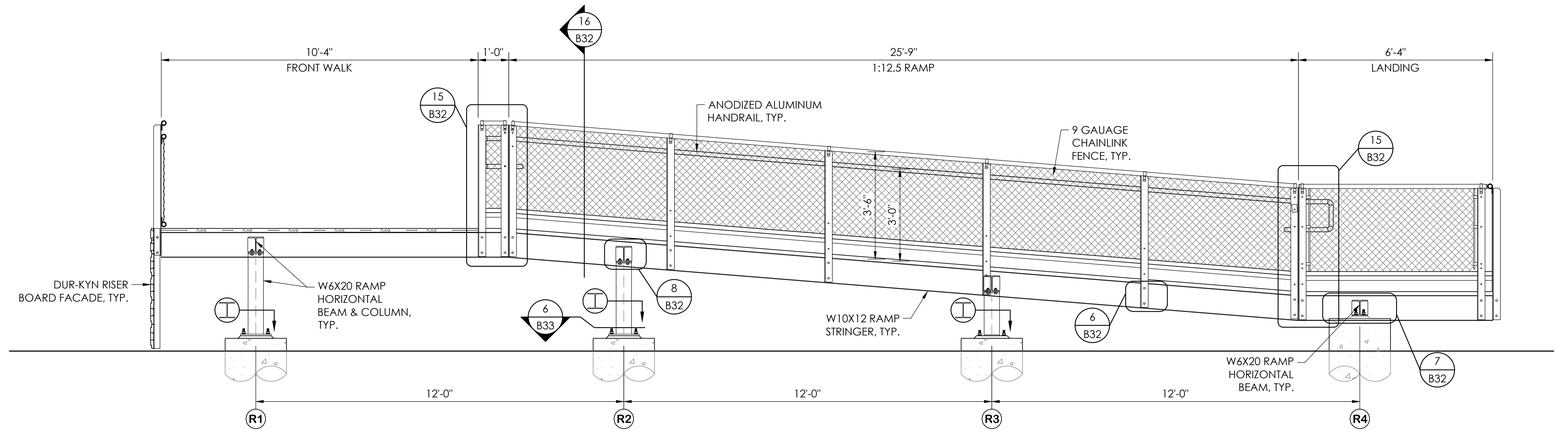

1 B13 LEFT END RAMP DETAIL - HOME
SCALE:1/2"=1'-0"

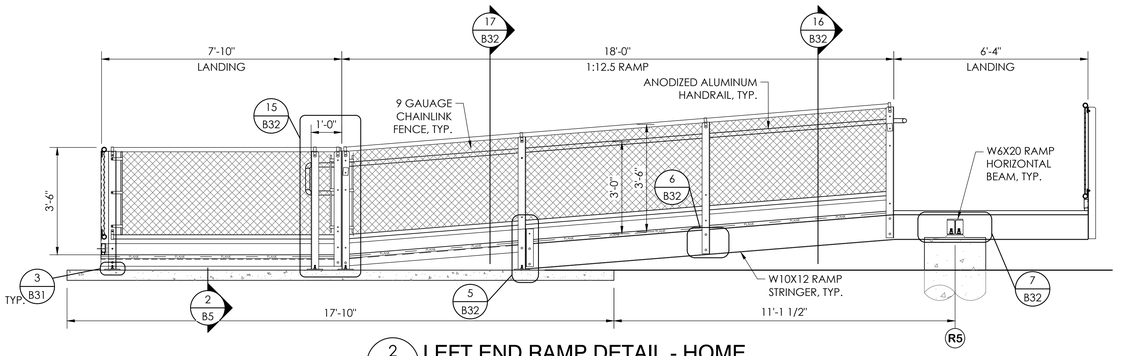

2 B13 LEFT END RAMP DETAIL - HOME
SCALE:1/2"=1'-0"

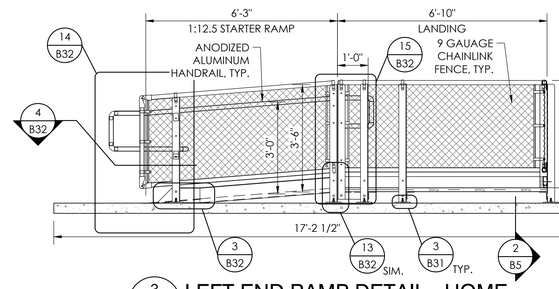

3 B13 LEFT END RAMP DETAIL - HOME
SCALE:1/2"=1'-0"

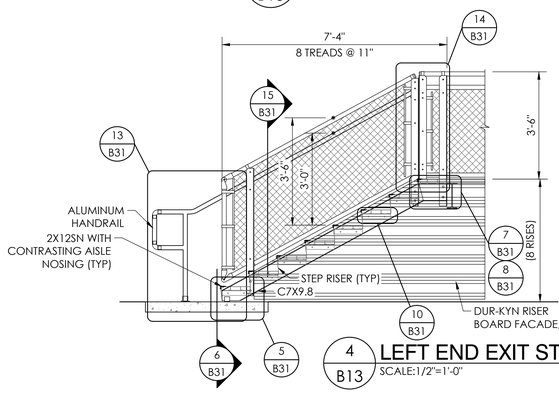

4 B13 LEFT END EXIT STAIRS - HOME
SCALE:1/2"=1'-0"

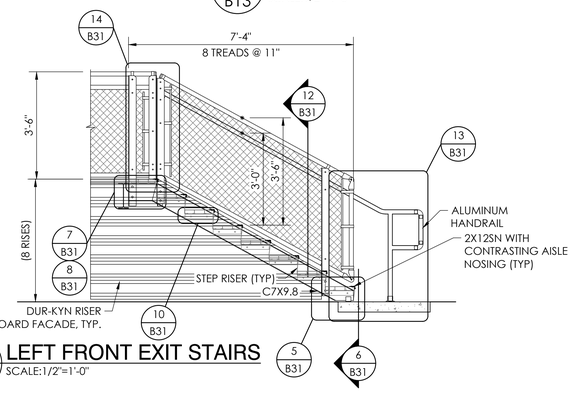

5 B13 LEFT FRONT EXIT STAIRS
SCALE:1/2"=1'-0"

THIS DRAWING AND ALL INFORMATION THEREIN IS THE PROPERTY OF THE SOUTHERN BLEACHER COMPANY, INC. IT IS NOT TO BE LOANED, ALTERED OR REVISED NOR IS IT TO BE COPIED. THIS DRAWING IS LOANED SUBJECT TO ITS RETURN UPON DEMAND AND, IS NOT TO BE USED DIRECTLY OR INDIRECTLY IN ANY WAY DETRIMENTAL TO OUR INTERESTS.

STRUCTURAL ENGINEERS
STEVEN L. TAYLOR
CHRIS A. TAYLOR
553 S. Oak Knoll Ave. Pasadena, CA 91101
Tel: (626) 792-2428
Fax: (626) 792-2429

TAYLOR & YEAMAN

Southern BLEACHER COMPANY
GRANDSTANDS • BLEACHERS • STADIUMS
PO Box One, Graham, Texas 76450
911 Elm Street Phone: 940/549-0733 Fax: 940/549-1365
Established 1926

REGISTERED PROFESSIONAL ENGINEER
BRIAN T. DEAN
S 6087
STRUCTURAL
STATE OF CALIFORNIA
S6S 01/08/25
PRINCIPAL

LEFT EXIT VIEWS - HOME
12" RISE X 26" TREAD / 181'-6" (16 ROWS)

BELLFLOWER UNIFIED SCHOOL DISTRICT
MAYFAIR HIGH SCHOOL
LAKEWOOD, CALIFORNIA

NO.	BY	DATE	DESCRIPTION
3	HC	05/10/24	DSA COMMENTS
2	HC	03/28/24	BIDDER
1	HC	12/07/23	DSA

DRAWN HC CHECKED DMC
JOB NUMBER #24094
SHEET B13 OF B35

22" X 34" (11x17 = 1/2 indicated scale)

24094

IDENTIFICATION STAMP
DIV. OF THE STATE ARCHITECT
APP: 03-124281 INC:
REVIEWED FOR
SS ☑ FLS ☑ ACS ☑
DATE: 02/04/2025

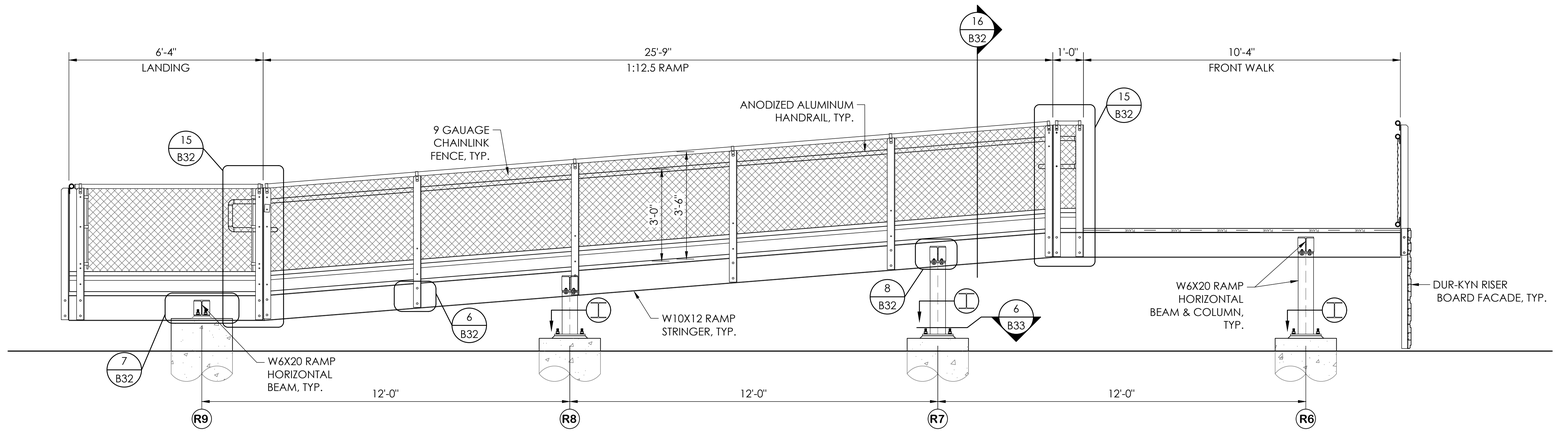

1 B14 **RIGHT END RAMP DETAIL - HOME**
SCALE:1/2"=1'-0"

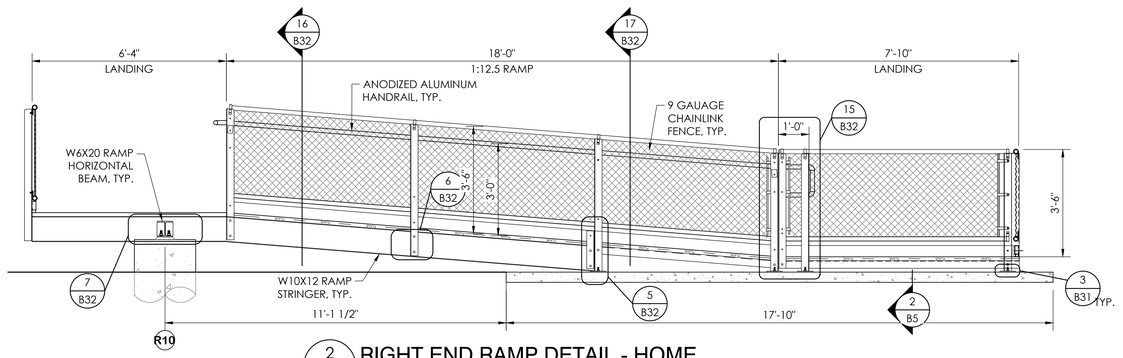

2 B14 **RIGHT END RAMP DETAIL - HOME**
SCALE:1/2"=1'-0"

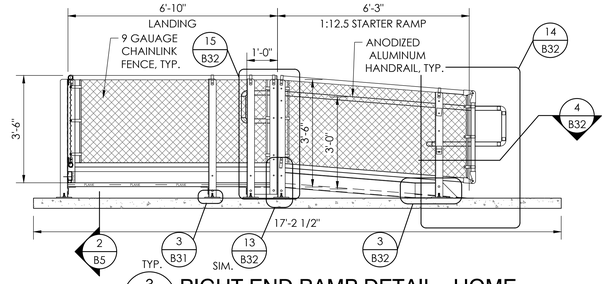

3 B14 **RIGHT END RAMP DETAIL - HOME**
SCALE:1/2"=1'-0"

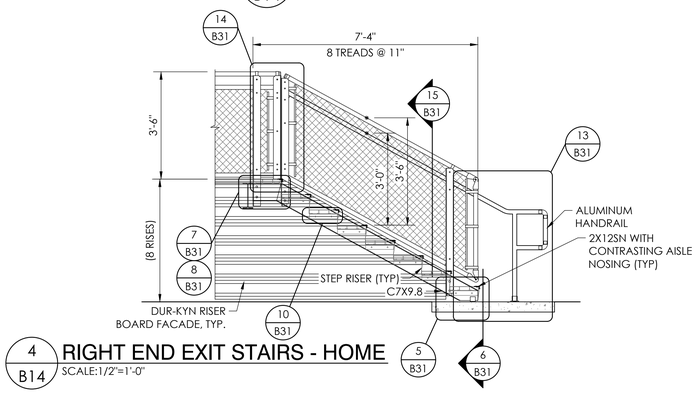

4 B14 **RIGHT END EXIT STAIRS - HOME**
SCALE:1/2"=1'-0"

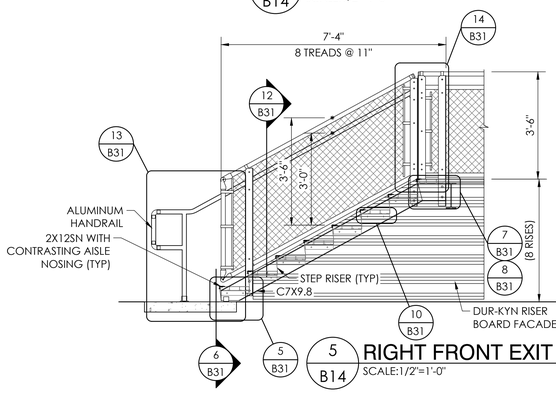

5 B14 **RIGHT FRONT EXIT STAIRS**
SCALE:1/2"=1'-0"

THIS DRAWING AND ALL INFORMATION THEREIN IS THE PROPERTY OF THE SOUTHERN BLEACHER COMPANY. EXCEPT EXPRESS WRITTEN CONSENT, NO PART OF THIS DRAWING MAY BE COPIED. THIS DRAWING IS LOANED SUBJECT TO ITS RETURN UPON DEMAND AND, IS NOT TO BE USED DIRECTLY OR INDIRECTLY IN ANY WAY DETRIMENTAL TO OUR INTERESTS.

STRUCTURAL ENGINEERS
TAYLOR & SYFAN
CONSULTING
553 S. Oak Knoll Ave. Pasadena, CA 91101
Ph: (626) 792-2428
Fax: (626) 792-2429
CORP. C.O.A. 2428
EXP. 12/31/26

Southern BLEACHER COMPANY
GRANDSTANDS • BLEACHERS • STADIUMS
PO Box One, Graham, Texas 76450
Phone: 940/549-0733 Fax: 940/549-1365
Established 1926

REGISTERED PROFESSIONAL ENGINEER
BRIAN T. DEAL
S 6087
STRUCTURAL
STATE OF CALIFORNIA
S&S 01/08/25
PRINCIPAL

REV	BY	DATE	DESCRIPTION
1	HC	05/10/24	DSA COMMENTS

DRAWN HC | CHECKED DMC

JOB NUMBER #24094

SHEET B14 OF B35

RIGHT EXIT VIEWS - HOME
12" RISE X 26" TREAD / 181'-6" (16 ROWS)

BELLFLOWER UNIFIED SCHOOL DISTRICT
MAYFAIR HIGH SCHOOL
LAKEWOOD, CALIFORNIA

22" X 34" (11x17 = 1/2 indicated scale)

24094

IDENTIFICATION STAMP
DIV. OF THE STATE ARCHITECT
APP: 03-124281 INC:
REVIEWED FOR
SS ☑ FLS ☑ ACS ☑
DATE: 02/04/2025

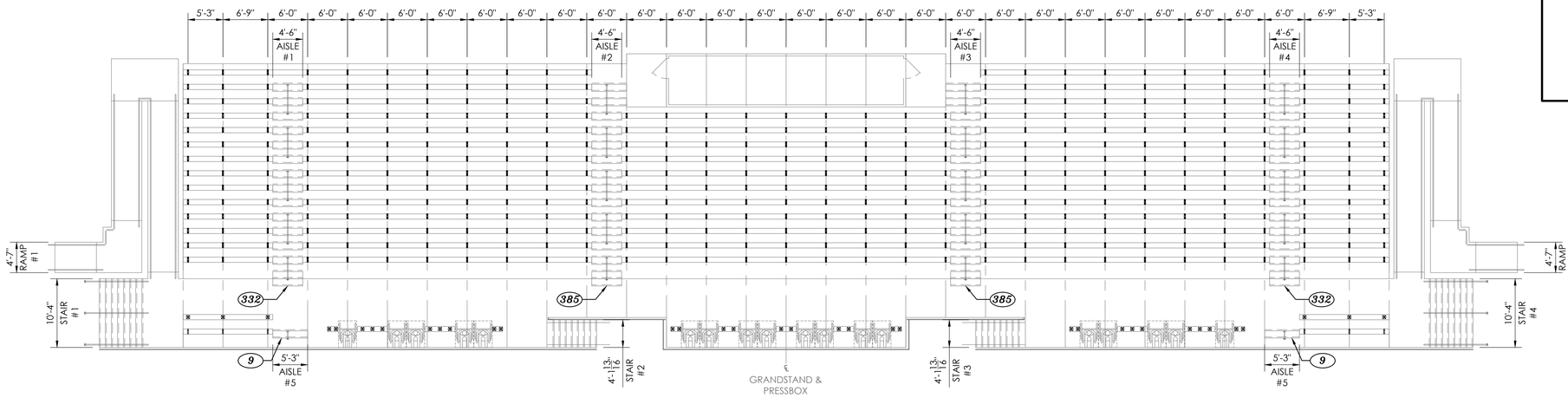

1 / B15 SEAT BRACKET LAYOUT
SCALE: 1/8"=1'-0"

BRACKET COUNT		
*	SEATING PER SECTION	
	"L" BRACKETS (12" X 26" JIG)	407
	"T" BRACKETS (10" X 26" JIG)	6
	MAVERICK BENCH LEGS	36

AISLE WIDTH CALCULATIONS:

AISLE #1 & #4
REQUIRED AISLE WIDTH = 332 SEATS X 0.08" PER SEAT = 26.56"
<4'-0" CODE MINIMUM <4'-6" PROVIDED - OK

AISLE #2 & #3
REQUIRED AISLE WIDTH = 385 SEATS X 0.08" PER SEAT = 30.80"
<4'-0" CODE MINIMUM <4'-6" PROVIDED - OK

AISLES #5 & #6
REQUIRED AISLE WIDTH = 9 SEATS X 0.08" PER SEAT = 0.72"
<4'-0" CODE MINIMUM <5'-3" PROVIDED - OK

AISLE ACCESSWAY (DEAD END AISLE):
26" TREAD DEPTH
CLEAR WIDTH = DEPTH (26") LESS SEAT WIDTH (9.5") = 16.5"
10 SEATS FIRST 12" CLEAR = 10 SEATS
0.3" EACH ADDITIONAL SEAT: 16.5"-12" / 0.6" = 7 SEATS
MAXIMUM SEATS BETWEEN AISLES: 17 SEATS
MAXIMUM WIDTH BETWEEN AISLES: 17 X 1.5' / SEAT = 25'-6"
MAXIMUM ROW LENGTH SHOWN = 13'-6"

AISLE ACCESSWAY (SEATING EACH SIDE):
26" TREAD DEPTH
CLEAR WIDTH = DEPTH (26") LESS SEAT WIDTH (9.5") = 16.5"
21 SEATS FIRST 12" CLEAR = 21 SEATS
0.3" EACH ADDITIONAL SEAT: 16.5"-12" / 0.3" = 15 SEATS
MAXIMUM SEATS BETWEEN AISLES: 36 SEATS
MAXIMUM WIDTH BETWEEN AISLES: 36 X 1.5' / SEAT = 54'-0"
MAXIMUM ROW LENGTH SHOWN = 49'-6"

EXIT WIDTH CALCULATIONS:
STAIRS #1 & #4 @ 10'-3" = 20'-6"
STAIRS #2 & #3 @ 4'-1 13/16" = 8'-3 5/8"
28'-9 5/8" TOTAL STAIR EXIT WIDTH

RAMPS #1 & #2 @ 4'-7" = 9'-2"
9'-2" TOTAL RAMP EXIT WIDTH

STAIR EXIT CAPACITY
28'-9 5/8" X 150 PEOPLE PER FOOT = 4320 STAIR EXIT CAPACITY FURNISHED
RAMP EXIT CAPACITY
9'-2" X 200 PEOPLE PER FOOT = 1833 RAMP EXIT CAPACITY FURNISHED
6153 TOTAL EXIT CAPACITY
(ACTUAL CAPACITY 1511)

NOTE:
ALL DIMENSIONS SHOWN ON SEAT BRACKET LAYOUT
ARE TO/FROM THE WELDED EDGE OF THE BRACKET

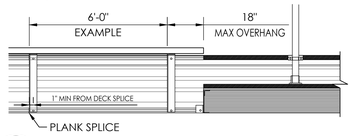

2 / B15 SEAT BRACKET SPACING
NOT TO SCALE

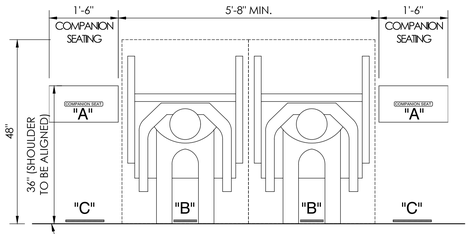

3 / B15 SIGN DETAIL
NOT TO SCALE

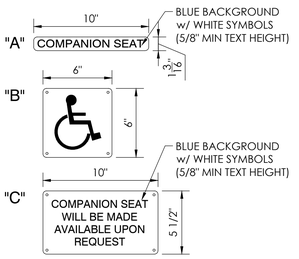

SIGNAGE TYP. @ WHEELCHAIR AREAS
A = COMPANION: 1 3/16" X 10" PLASTIC
B = ACCESSIBLE: 6" X 6" 0.040 ALUM.
C = COMPANION: 5 1/2" X 10" 0.040 ALUM.

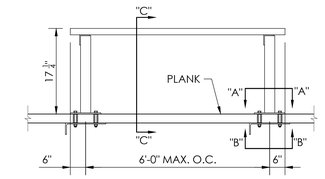

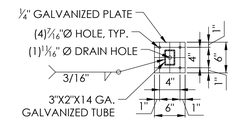

SECTION "A"-"A"

SECTION "B"-"B"

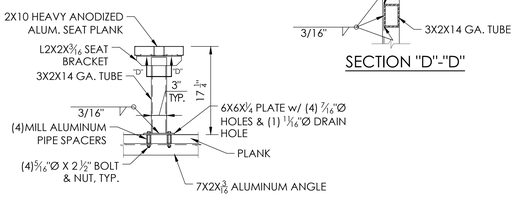

SECTION "C"-"C"

SECTION "D"-"D"

4 / B15 MAVERICK BENCH DETAIL
NOT TO SCALE

THIS DRAWING AND ALL INFORMATION THEREIN IS THE PROPERTY OF THE SOUTHERN BLEACHER COMPANY. EXCEPT AS OTHERWISE EXPRESSLY AGREED TO IN WRITING, THIS DRAWING IS NOT TO BE COPIED, REPRODUCED, OR USED IN ANY MANNER WHATSOEVER. THIS DRAWING IS LOANED SUBJECT TO ITS RETURN UPON DEMAND AND, IS NOT TO BE USED DIRECTLY OR INDIRECTLY IN ANY WAY DETRIMENTAL TO OUR INTERESTS.

STRUCTURAL ENGINEERS
CHICAGO, IL 312.263.2408
DENVER, CO 720.932.2439
LOS ANGELES, CA 626.683.1900
553 S. Oak Knoll Ave. Pasadena, CA 91101

TAYLOR & YEAGAN

Southern BLEACHER COMPANY
GRANDSTANDS • BLEACHERS • STADIUMS
PO Box One, Graham, Texas 76450
911 Elm Street Phone: 940/549-0733 Fax: 940/549-1365
Established 1926

REGISTERED PROFESSIONAL ENGINEER
BRIAN T. DEAL
S 6087
STRUCTURAL
STATE OF CALIFORNIA
S&S 01/08/25
PRINCIPAL

REV	BY	DATE	DESCRIPTION
1	HC	3/10/25	DSA COMMENTS

DRAWN: HC
CHECKED: DMC
05/10/24
JOB NUMBER #24094
SHEET B15 OF B35

SEAT BRACKET LAYOUT - HOME
12" RISE X 26" TREAD / 18'-6" (16 ROWS)

BELLFLOWER UNIFIED SCHOOL DISTRICT
MAYFAIR HIGH SCHOOL
LAKEWOOD, CALIFORNIA

22" X 34" (11x17 = 1/2 indicated scale)

24094

IDENTIFICATION STAMP
DIV. OF THE STATE ARCHITECT
APP: 03-124281 INC:
REVIEWED FOR
SS ☑ FLS ☑ ACS ☑
DATE: 02/04/2025

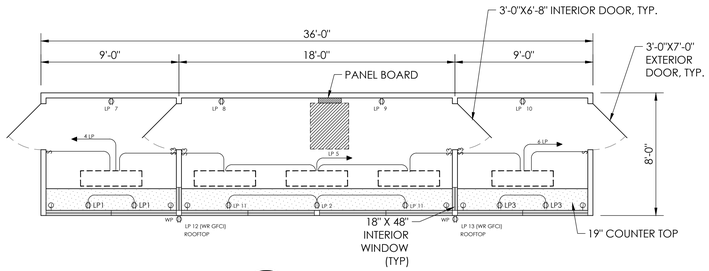

1 B16 **PLAN VIEW**
SCALE: 1/4"=1'-0"

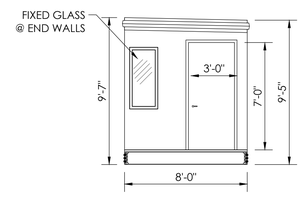

4 B16 **SIDE VIEW**
SCALE: 1/4"=1'-0"

PRESS BOX COLOR SELECTION SCHEDULE				
EXTERIOR SHEET METAL COMPONENTS				
SIGNATURE 200 STANDARD COLORS FOR PRESS BOX COLOR SELECTION. PLEASE MARK COLOR SELECTIONS FOR EACH MATERIAL ON THIS COLOR SCHEDULE.	MATERIALS: EXTERIOR SIDING	ROOF TRIM	WINDOW / DOOR TRIM	EXTERIOR DOORS
HAWAIIAN BLUE				
CRIMSON RED				
FERN GREEN				
BURNISHED SLATE				
POLAR WHITE				
ASH GREY				
SADDLE TAN				
DESERT SAND				
KOKO BROWN				
SOLAR WHITE				
CHARCOAL GREY				
COBALT BLUE				
RUSTIC RED				
LIGHT STONE				
WINDOW FRAMES				
WHITE				
BRONZE				
TAN				
SILVER				

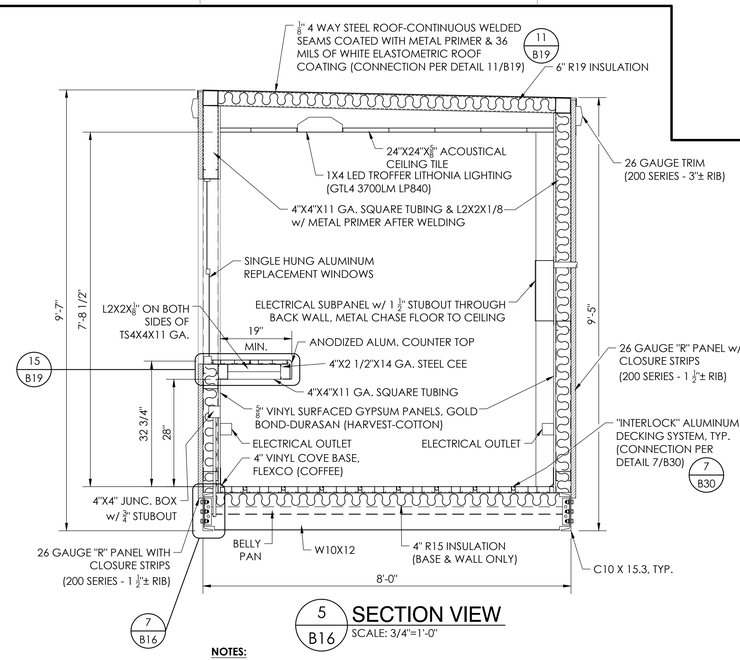

5 B16 **SECTION VIEW**
SCALE: 3/4"=1'-0"

NOTES:
WALL PANELS ARE ATTACHED: #12 TEK SCREWS, 5/16" WASHER HEAD AND SEALER. SCREWS EACH SIDE OF HIGH RIB: 6 TOP, 6 INTERMEDIATE & 6 BOTTOM.

LAP SCREWS ARE PLACED AT EACH END OF THE PANELS, AT THE INTERMEDIATE SUPPORT AND AT THE MID POINT BETWEEN SUPPORTS (TEK #14)

PANEL BOARD SCHEDULE									
PANEL LP — 100 AMP - 16 CIRCUIT W/ EQUIPMENT GROUND — 240/120 VOLTS — 1 PH.									
MOUNTING: ☐ FLUSH ☒ SURFACE — 10,000 SYN. A.I.C. MIN. — 100 AMP MAIN BREAKER									
	BREAKER SIZE	BREAKER POLE	CIR. #	BUS A	BUS B	CIR. #	BREAKER SIZE	BREAKER POLE	
(2) DUPLEX RECEPTACLE FRONT WALL	20	1	1			2	20	1	DUPLEX RECEPTACLE FRONT WALL
(2) DUPLEX RECEPTACLE FRONT WALL	20	1	3			4	20	1	LIGHTS
LIGHTS	20	1	5			6	20	1	LIGHTS
DUPLEX RECEPTACLE BACK WALL	20	1	7			8	20	1	DUPLEX RECEPTACLE BACK WALL
DUPLEX RECEPTACLE BACK WALL	20	1	9			10	20	1	DUPLEX RECEPTACLE BACK WALL
(2) DUPLEX RECEPTACLE FRONT WALL	20	1	11			12	20	1	SPARE
SPARE	20	1	13			14	20	1	SPARE
SPARE	20	1	15			16			SPACE

20A. 125V. DUPLEX RECPT.
$3 20A. 125V. 3 POLE SWITCH
$ 20A. 125V. SINGLE POLE SWITCH
J 4X4X2 1/8" JUNCTION BOX W/ 3/4"C STUBOUT
LED FIXTURE: INDY, LOW PROFILE, LAY-IN FIXTURE (S1X4BL-S550U-WH3)

CONDUIT WILL BE 1/2" EMT, 1/2" STEELFLEX, OR SURFACE RACEWAY UNLESS OTHERWISE NOTED

WIRING ON 20A BREAKERS WILL BE #12 = THWN - THHN

EQUIPMENT GROUND RUN IN ALL CONDUITS OR NON-METALLIC SURFACE RACEWAYS

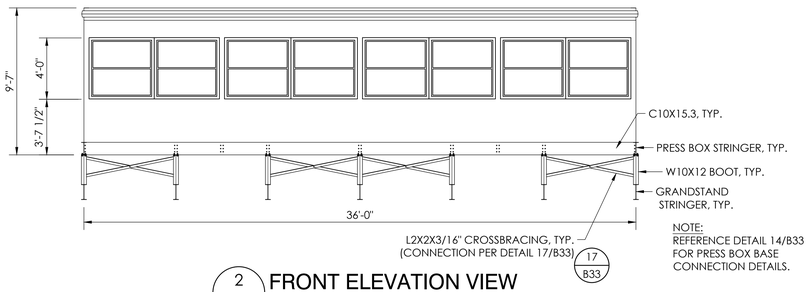

2 B16 **FRONT ELEVATION VIEW**
SCALE: 1/4"=1'-0"

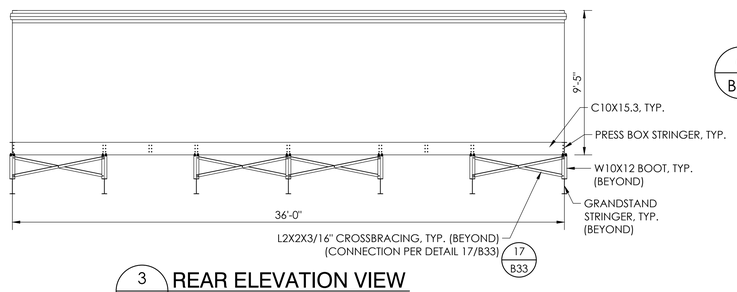

3 B16 **REAR ELEVATION VIEW**
SCALE: 1/4"=1'-0"

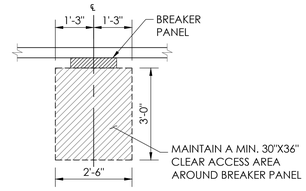

6 B16 **BREAKER PANEL ACCESS**
NOT TO SCALE

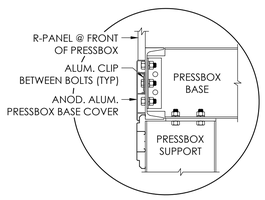

7 B16 **PRESS BOX BASE TRIM DETAIL**
NOT TO SCALE

THIS DRAWING AND ALL INFORMATION THEREIN IS THE PROPERTY OF THE SOUTHERN BLEACHER COMPANY. TATA & HOWARD CONTRACTORS, INC. AND NOT TO BE REUSED, COPIED. THIS DRAWING IS LOANED SUBJECT TO RETURN UPON DEMAND AND, IS NOT TO BE USED DIRECTLY OR INDIRECTLY IN ANY WAY DETRIMENTAL TO OUR INTERESTS.

STRUCTURAL ENGINEERS
STRUCTURAL
CORAL
CORAL
CORAL
553 S. Oak Knoll Ave., Pasadena, CA 91101
TAYLOR & YEAMAN
Southern BLEACHER COMPANY
GRANDSTANDS • BLEACHERS • STADIUMS
PO Box One, Graham, Texas 76450
901 Hwy 380 West
Phone: 940/549-0733 Fax: 940/549-1365
Established 1946

REGISTERED PROFESSIONAL ENGINEER
BRIAN T. DEAN
S 6087
STRUCTURAL
STATE OF CALIFORNIA
S&S 01/08/25
PRINCIPAL

REV	BY	DATE	DESCRIPTION
1	HC	05/10/24	DSA COMMENTS

PROJECT: PRESS BOX LAYOUT - HOME
8'-0" X 36'-0" PRESS BOX

BELLFLOWER UNIFIED SCHOOL DISTRICT
MAYFAIR HIGH SCHOOL
LAKEWOOD, CALIFORNIA

DATE: 05/10/24 DRAWN: HC CHECKED: DMC
JOB NUMBER: #24094
SHEET: B16 OF: B35

22" X 34" (11x17 = 1/2 indicated scale)

24094

IDENTIFICATION STAMP
DIV. OF THE STATE ARCHITECT
APP: 03-124281 INC:
REVIEWED FOR
SS ☑ FLS ☑ ACS ☑
DATE: 02/04/2025

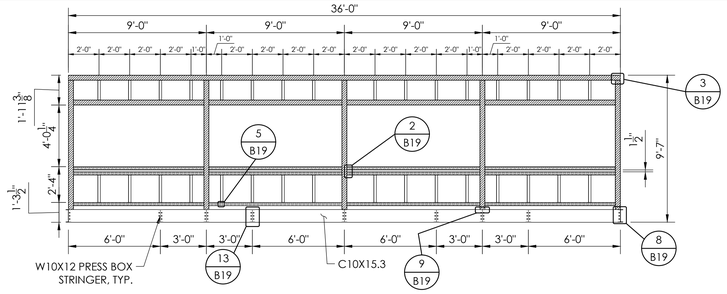

1 B17 FRONT ELEVATION FRAMING
SCALE: 1/4"=1'-0"

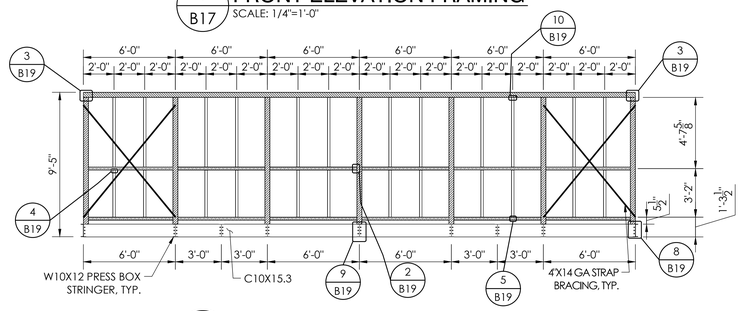

2 B17 REAR ELEVATION FRAMING
SCALE: 1/4"=1'-0"

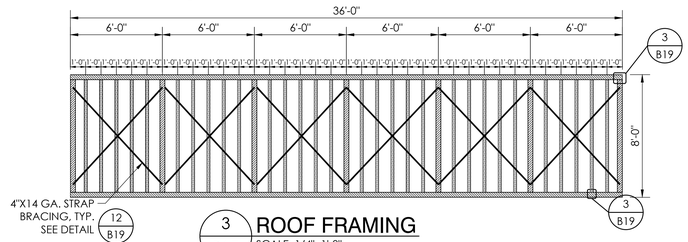

3 B17 ROOF FRAMING
SCALE: 1/4"=1'-0"

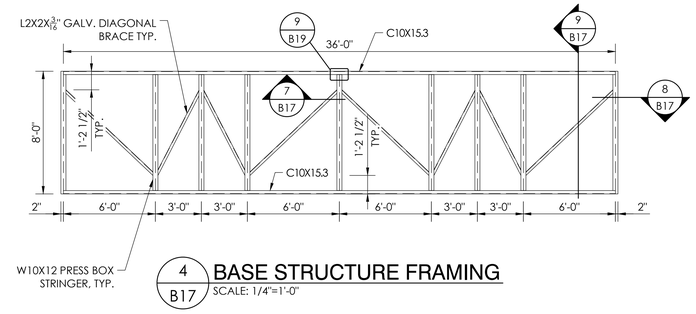

4 B17 BASE STRUCTURE FRAMING
SCALE: 1/4"=1'-0"

STEEL KEY

= 4" SQUARE X 11 GA. TUBING TYP.
= 4X2 1/2X14 GA. CEE
= 2 X 2 X 1/8" ANGLE
= 4"X14 GA. STRAP BRACING, TYP. SEE DETAIL 12 B19

STEEL PROPERTIES			
TUBE	4" SQUARE X 11 GA. TUBE	A500 GRADE B	Fy = 46ksi, MIN.
DIAGONAL ANGLE	L2 X 2 X 3/16"	A572 / A529	Fy = 50ksi, MIN.
BELLY PAN ANGLE	L2 X 2 X 1/8"	A572 / A529	Fy = 50ksi, MIN.
CEES	4 X 2 1/2 X 14 GA.	A1011 / A653	Fy = 55ksi, MIN.
FLAT STRAP	4" X 14 GA.	A1011 / A653	Fy = 55ksi, MIN.
ROOF PLATE	11GA. OR 1/8"	A1011 / A653 / A786	Fy = 27ksi, MIN.

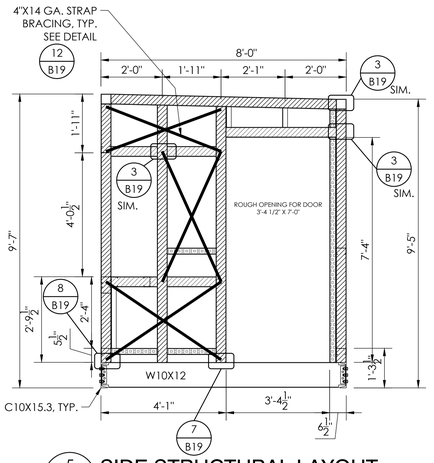

5 B17 SIDE STRUCTURAL LAYOUT
SCALE: 1/2"=1'-0" (RIGHT END)

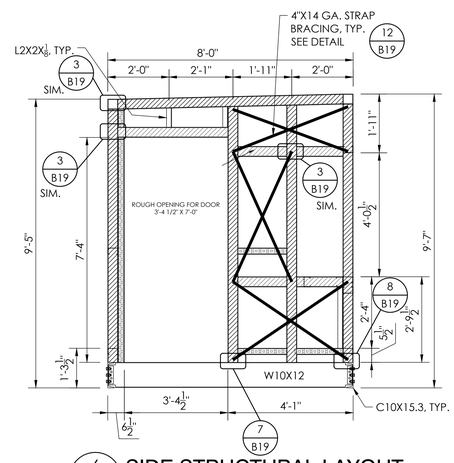

6 B17 SIDE STRUCTURAL LAYOUT
SCALE: 1/2"=1'-0" (LEFT END)

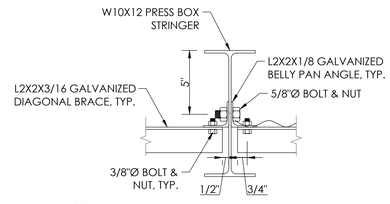

7 B17 BELLY PAN ATTACHMENT
NOT TO SCALE

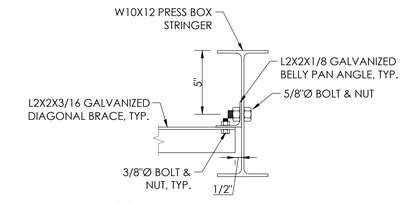

8 B17 BELLY PAN ATTACHMENT
NOT TO SCALE

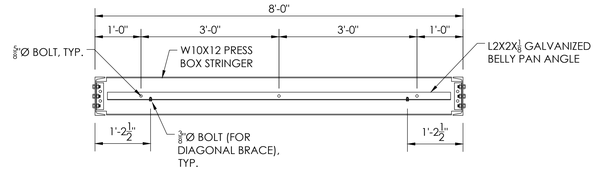

9 B17 BELLY PAN ANGLE ATTACHMENT
NOT TO SCALE

THIS DRAWING AND ALL INFORMATION THEREIN IS THE PROPERTY OF THE SOUTHERN BLEACHER COMPANY, DIVISION OF TAYLOR-WOOD ENGINEERING, AND NOT TO BE REVIEWED NOR COPIED. THIS DRAWING IS LOANED SUBJECT TO RETURN UPON DEMAND AND, IS NOT TO BE USED DIRECTLY OR INDIRECTLY IN ANY WAY DETRIMENTAL TO OUR INTERESTS.

STRUCTURAL ENGINEERS
STATE LICENSE NUMBERS
ARIZONA 51766 | NEVADA 17877
COLORADO 47408 | OREGON 79452
COLORADO 47421 | TEXAS 106465
553 S. Oak Knoll Ave. Pasadena, CA 91101
TAYLOR & YEAMAN
Southern BLEACHER COMPANY
GRANDSTANDS • BLEACHERS • STADIUMS
Established 1926
PO Box One, Graham, Texas 76450
Phone: 940/549-0733 Fax: 940/549-1365
www.southernbleacher.com

REGISTERED PROFESSIONAL ENGINEER
BRIAN T. DEAN
S 6087
STRUCTURAL
STATE OF CALIFORNIA
S&S 01/08/25
PRINCIPAL

NO.	DATE	DESCRIPTION	BY
1	05/10/24	DSA COMMENTS	HC

DRAWN: HC | CHECKED: DMC

JOB NUMBER #24094

SHEET B17 OF B35

22" X 34" (11x17 = 1/2 indicated scale)

BELLFLOWER UNIFIED SCHOOL DISTRICT
MAYFAIR HIGH SCHOOL
LAKEWOOD, CALIFORNIA

PRESS BOX FRAMING LAYOUT - HOME
8'-0" X 36'-0" PRESS BOX

24094

IDENTIFICATION STAMP
DIV. OF THE STATE ARCHITECT
APP: 03-124281 INC:
REVIEWED FOR
SS ☑ FLS ☑ ACS ☑
DATE: 02/04/2025

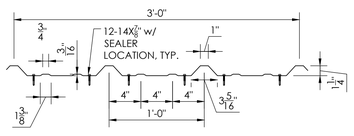

SECTION PROPERTIES								
			NEGATIVE BENDING			POSITIVE BENDING		
PANEL	Fy	WEIGHT	Ixe	Sxe	Maxo	Ixe	Sxe	Maxo
GAUGE	(KSI)	(PSF)	(IN.4/FT.)	(IN.3/FT.)	(KIP-IN.)	(IN.4/FT.)	(IN.3/FT.)	(KIP-IN.)
26	60*	0.94	0.0309	0.0449	1.8019	0.0382	0.0381	1.6759

*Fy IS 80 ksi REDUCED TO 60 ksi IN ACCORDANCE WITH THE 2020 EDITION OF THE NORTH AMERICAN SPECIFICATION FOR DESIGN OF COLD-FORMED STEEL STRUCTURAL MEMBERS. - FOR ASTM A653 A3.1.3

1 B19 "R" PANEL DETAIL
NOT TO SCALE

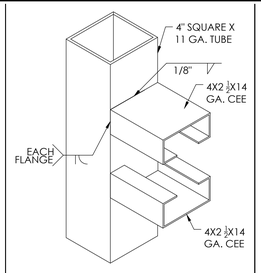

2 B19 WELD DETAIL
NOT TO SCALE

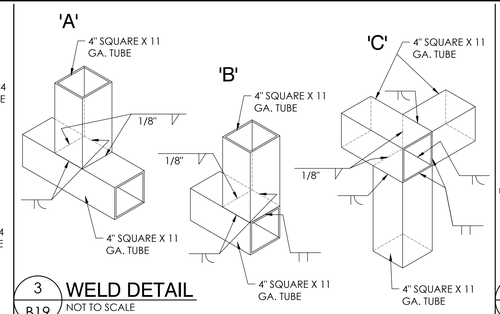

3 B19 WELD DETAIL
NOT TO SCALE

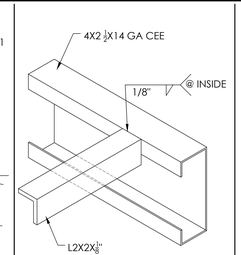

4 B19 WELD DETAIL
NOT TO SCALE

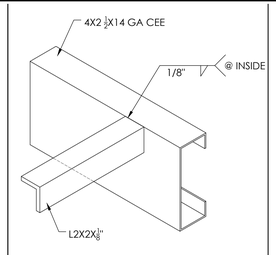

5 B19 WELD DETAIL
NOT TO SCALE

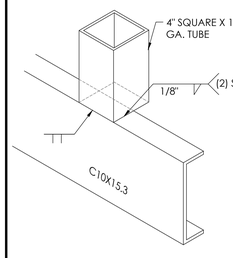

6 B19 WELD DETAIL
NOT TO SCALE

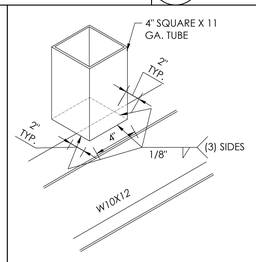

7 B19 WELD DETAIL
NOT TO SCALE

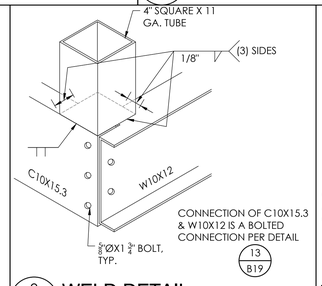

8 B19 WELD DETAIL
NOT TO SCALE

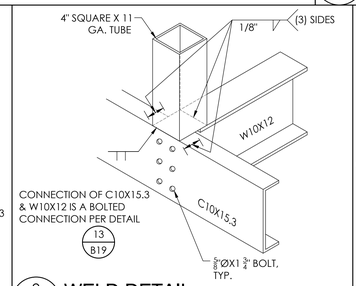

9 B19 WELD DETAIL
NOT TO SCALE

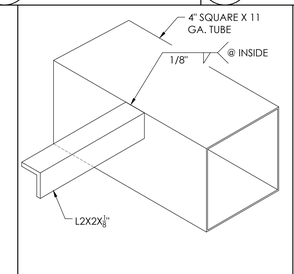

10 B19 WELD DETAIL
NOT TO SCALE

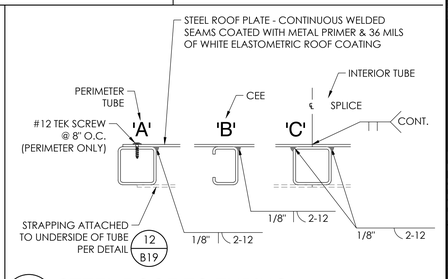

11 B19 STEEL ROOF TO TUBING
NOT TO SCALE

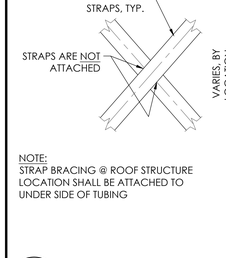

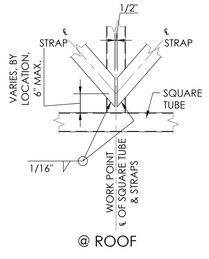

@ ROOF

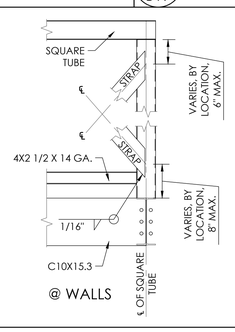

@ WALLS

12 B19 TYP. STRAP CONN. DETAIL
NOT TO SCALE

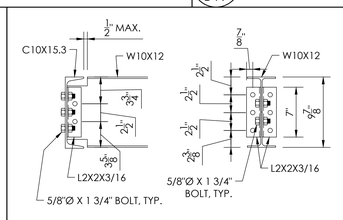

13 B19 CHANNEL CONN. DETAIL
NOT TO SCALE

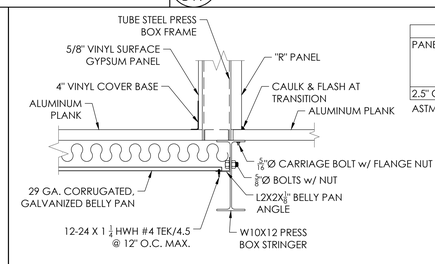

SECTION PROPERTIES							
PANEL SELECTION	WIDTH in.	YIELD ksi	WEIGHT psf	TOP IN COMPRESSION		BOTTOM IN COMPRESSION	
				Ixx (IN.4/FT.)	Sxx (IN.3/FT.)	Ixx (IN.4/FT.)	Sxx (IN.3/FT.)
2.5" CORRUGATED, 29 GA.	24	60	.62	0.0050	0.0191	0.0050	0.0185

ASTM A792 GALVALUME

14 B19 LANDING TRANSITION DETAIL
NOT TO SCALE

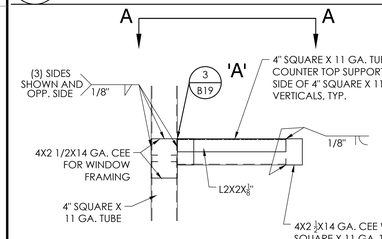

15 B19 COUNTER TOP DETAIL
NOT TO SCALE

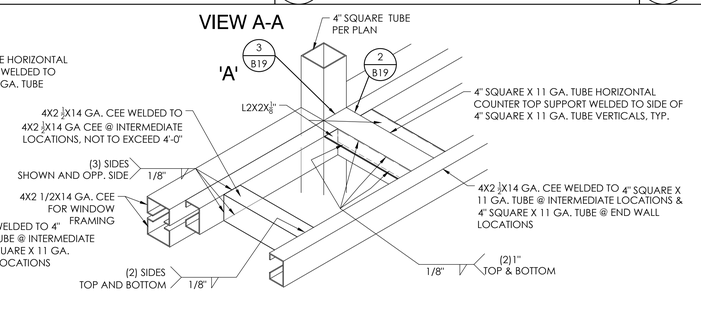

16 B19 NOT USED
NOT TO SCALE

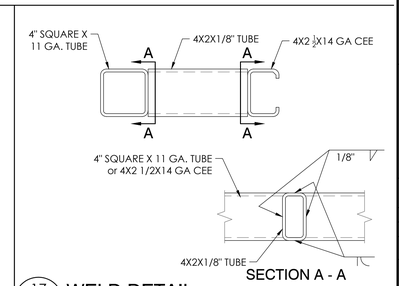

SECTION A - A

17 B19 WELD DETAIL
NOT TO SCALE

SUNDT CIVIL ENGINEERS
CIVIL | STRUCTURAL | MECHANICAL | ELECTRICAL
553 S. Oak Knoll Ave. Pasadena, CA 91101
T 626.792.2458 F 626.792.2428
TAYLOR & YEAGER
Southern BLEACHER COMPANY
GRANDSTANDS • BLEACHERS • STADIUMS
PO Box One, Graham, Texas 76450
911 Hillcrest Phone: 940-549-0733 Fax: 940-549-1365
Established 1926

THIS DRAWING AND ALL INFORMATION THEREIN IS THE PROPERTY OF THE SOUTHERN BLEACHER COMPANY. EXCEPT EXPRESS WRITTEN CONSENT, NO PART OF THIS DRAWING MAY BE COPIED. THIS DRAWING IS LOANED SUBJECT TO ITS RETURN UPON DEMAND AND, IS NOT TO BE USED DIRECTLY OR INDIRECTLY IN ANY WAY DETRIMENTAL TO OUR INTERESTS.

REGISTERED PROFESSIONAL ENGINEER
BRIAN T. DEAN
S 6087
STRUCTURAL
STATE OF CALIFORNIA
S&S 01/08/25
PRINCIPAL

PRESS BOX DETAILS - HOME
8'-0" X 36'-0" PRESS BOX

BELLFLOWER UNIFIED SCHOOL DISTRICT
MAYFAIR HIGH SCHOOL
LAKEWOOD, CALIFORNIA

NO.	BY	DATE	DESCRIPTION
1	HC	05/10/24	DSA COMMENTS

DRAWN: HC CHECKED: DMC

JOB NUMBER #24094

SHEET B19 OF B35

22" X 34" (11x17 = 1/2 indicated scale)

24094

IDENTIFICATION STAMP
DIV. OF THE STATE ARCHITECT
APP: 03-124281 INC:
REVIEWED FOR
SS ☑ FLS ☑ ACS ☑
DATE: 02/04/2025

1 NOT USED
B20 NOT TO SCALE

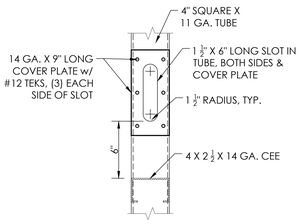

THIS DETAIL ONLY USED AS NEEDED
2 B20 CONDUIT SLOT DETAIL #1
NOT TO SCALE

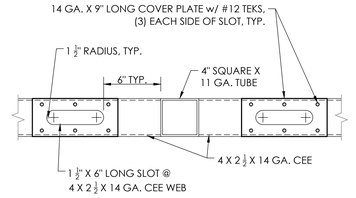

THIS DETAIL ONLY USED AS NEEDED
3 B20 CONDUIT SLOT DETAIL #2
NOT TO SCALE

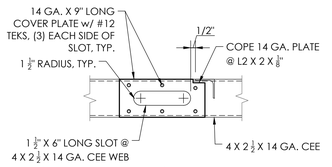

THIS DETAIL ONLY USED AS NEEDED
4 B20 CONDUIT SLOT DETAIL #3
NOT TO SCALE

SECTION PROPERTIES				
METAL STUD FRAMING / INTERIOR	3 5/8" X 1 1/4"	25 GA.	33 ksi	ASTM C645
METAL TRACK	3 5/8" X 1"	25 GA.	33 ksi	ASTM C645

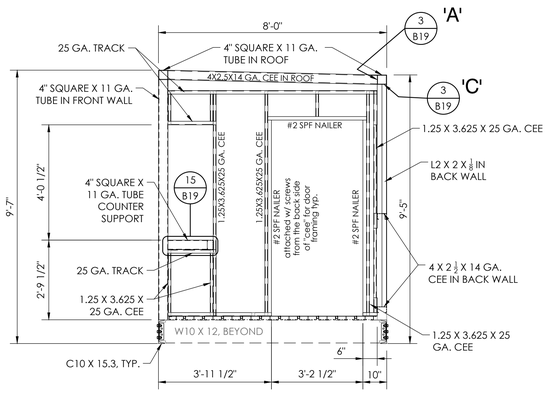

5 B20 INTERIOR WALL FRAME LAYOUT
NOT TO SCALE

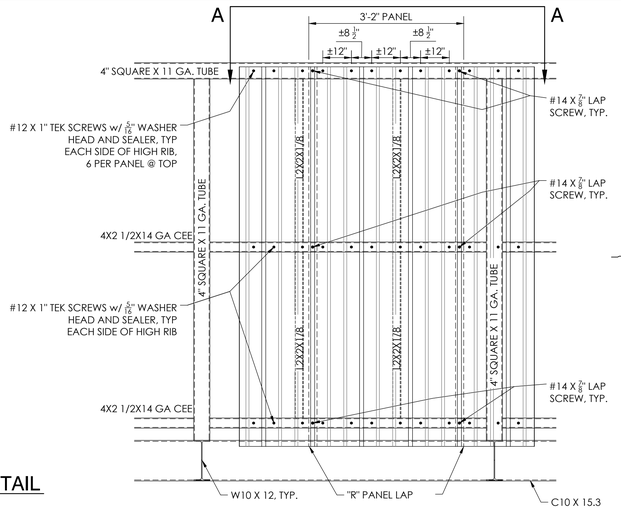

6 B20 "R" PANEL ATTACHMENT DETAIL
NOT TO SCALE

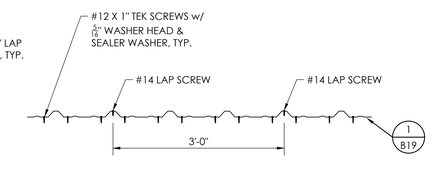

SECTION A-A

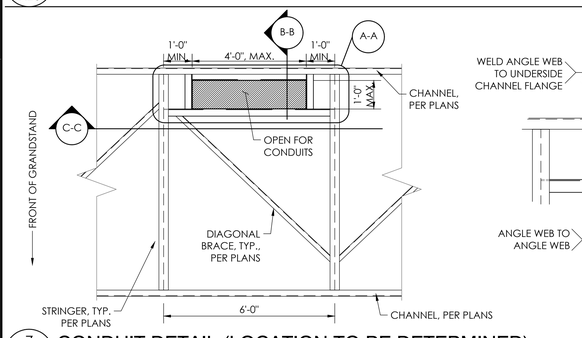

7 B20 CONDUIT DETAIL (LOCATION TO BE DETERMINED)
NOT TO SCALE

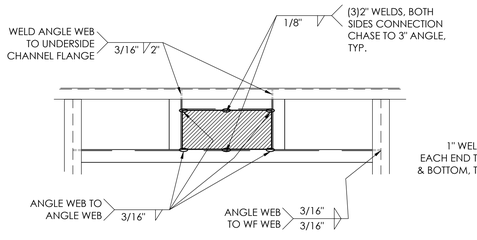

A-A WELD LOCATIONS

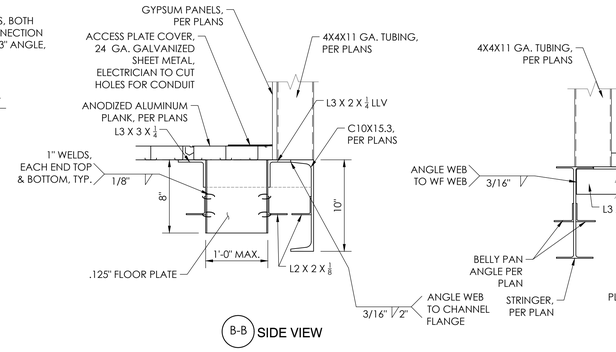

B-B SIDE VIEW

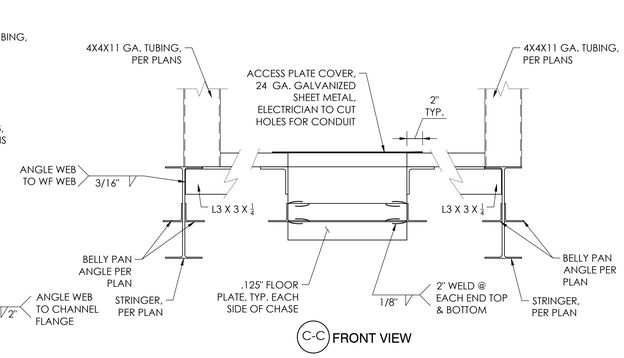

C-C FRONT VIEW

SUNDT CLEAR ENGINEERS
CORONA | 951.817.2308 | 951.817.2309
FRESNO | 559.256.2400 | 559.256.2401
SAN DIEGO | 619.236.1262 | 619.236.1272
553 S. Oak Knoll Ave. Pasadena, CA 91101

THIS DRAWING AND ALL INFORMATION THEREIN IS THE PROPERTY OF THE SOUTHERN BLEACHER COMPANY. SUCH ITEMS ARE NOT TO BE LOANED, REVISED NOR REUSED NOR COPIED. THIS DRAWING IS LOANED SUBJECT TO ITS RETURN UPON DEMAND AND, IS NOT TO BE USED DIRECTLY OR INDIRECTLY IN ANY WAY DETRIMENTAL TO OUR INTERESTS.

TAYLOR & YEAGAN
Southern BLEACHER COMPANY
GRANDSTANDS • BLEACHERS • STADIUMS
Established 1926
PO Box One, Graham, Texas 76450
401 Hillcrest Phone: 940/549-0733 Fax: 940/549-1365

REGISTERED PROFESSIONAL ENGINEER
BRIAN T. DEAL
S 6087
STRUCTURAL
STATE OF CALIFORNIA
S&S 01/08/25
PRINCIPAL

DEV #	DATE	DESCRIPTION
		DSA COMMENTS
	05/10/24	HC

DATE 05/10/24 | DRAWN HC | CHECKED DMC
JOB NUMBER #24094
SHEET B20 | OF B35

PRESS BOX DETAILS - HOME
8'-0" X 36'-0" PRESS BOX

BELLFLOWER UNIFIED SCHOOL DISTRICT
MAYFAIR HIGH SCHOOL
LAKEWOOD, CALIFORNIA

22" X 34" (11x17 = 1/2 indicated scale)

24094

IDENTIFICATION STAMP
DIV. OF THE STATE ARCHITECT
APP: 03-124281 INC:
REVIEWED FOR
SS ☑ FLS ☑ ACS ☑
DATE: 02/04/2025

1.8 SERVICES WITHIN THE CEILING:

1.8.1 ALL FLEXIBLE SPRINKLER HOSE FITTINGS, CEILING-MOUNTED AIR TERMINALS OR OTHER SERVICES SHALL BE POSITIVELY ATTACHED TO THE CEILING SUSPENSION SYSTEMS BY MECHANICAL MEANS TO RESIST A HORIZONTAL FORCE EQUAL TO THE WEIGHT OF THE COMPONENT. SCREWS OR APPROVED FASTENERS ARE REQUIRED. A MINIMUM OF TWO ATTACHMENTS ARE REQUIRED AT EACH COMPONENT.

1.8.2 FLEXIBLE SPRINKLER HOSE FITTINGS, CEILING-MOUNTED AIR TERMINALS OR OTHER SERVICES WEIGHING LESS THAN OR EQUAL TO 20 lbs. SHALL HAVE (1) #12 GAGE SLACK SAFETY WIRE ATTACHED TO THE TERMINAL OR SERVICE TO THE STRUCTURE ABOVE.

1.8.3 FLEXIBLE SPRINKLER HOSE FITTINGS, CEILING-MOUNTED AIR TERMINALS OR OTHER SERVICES WEIGHING MORE THAN 20 lbs. SHALL BE SUPPORTED INDEPENDENTLY FROM THE STRUCTURE ABOVE BUT IF LESS THAN OR EQUAL TO 56 lbs SHALL HAVE TWO (2) #12 GAUGE SLACK SAFETY WIRES AT DIAGONAL CORNERS ATTACHED TO THE TERMINAL OR SERVICE TO THE STRUCTURE ABOVE.

1.8.4 FLEXIBLE SPRINKLER HOSE FITTINGS, CEILING MOUNTED AIR TERMINALS OR OTHER SERVICES WEIGHING MORE THAN 56 lbs. SHALL BE INDEPENDENTLY SUPPORTED DIRECTLY FROM THE STRUCTURE ABOVE BY NOT LESS THAN FOUR (4) TAUT #12 GAUGE WIRES ATTACHED TO THE TERMINAL OR SERVICE AND TO THE STRUCTURE ABOVE.

1.9 OTHER DEVISES WITHIN THE CEILING:

MISCELLANEOUS LIGHTWEIGHT DEVICES WEIGHING 20 POUNDS OR LESS, SUCH AS STROBE LIGHTS, OCCUPANCY SENSORS, SPEAKERS, EXIT SIGNS, ETC., SHALL BE ATTACHED TO THE CEILING GRID PER SECTION 1.8.1 ABOVE. IN ADDITION, DEVICES WEIGHING MORE THAN 10 POUNDS SHALL HAVE ONE #12-GAUGE SLACK SAFETY WIRE ANCHORED TO THE STRUCTURE ABOVE PER SECTION 1.8.2 ABOVE.

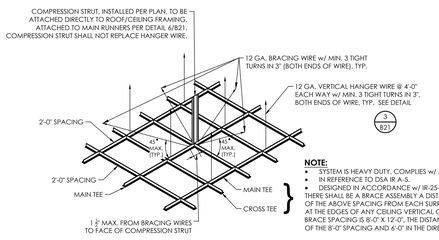

NOTE:
- SYSTEM IS HEAVY DUTY, COMPLIES w/ ASCE7
- IN REFERENCE TO DSA IR A-5,
- DESIGNED IN ACCORDANCE w/ IR-25-2.19 (REVISED 03/18/22)

THERE SHALL BE A BRACE ASSEMBLY A DISTANCE OF NOT MORE THAN ONE HALF OF THE ABOVE SPACING FROM EACH SURROUNDS WALL, EXPANSION JOINT AND AT THE EDGES OF ANY CEILING VERTICAL OFFSET. FOR EXAMPLE: WHERE THE BRACE SPACING IS 8'-0" X 12'-0". THE DISTANCE SHALL BE 4'-0" IN THE DIRECTION OF THE 8'-0" SPACING AND 6'-0" IN THE DIRECTION OF THE 12'-0" SPACING.

NOTE:
BRACING NOT TO BE MORE THAN 12'-0" BY 12'-0" O.C.

2/B21 SUSPENDED CEILING BRACING ASSEMBLY
NOT TO SCALE

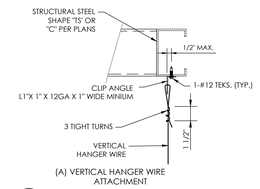

(A) VERTICAL HANGER WIRE ATTACHMENT

3/B21 VERTICAL HANGER WIRE ATTACHMENT
NOT TO SCALE

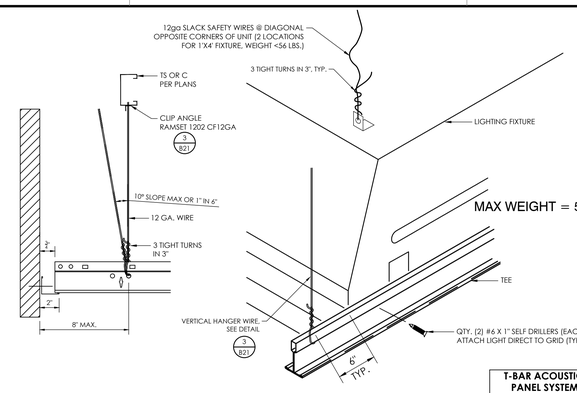

MAX WEIGHT = 56 LBS.

5/B21 ISOMETRIC VIEW OF LIGHT FIXTURE @ RUNNER
NOT TO SCALE

T-BAR ACOUSTICAL CEILING PANEL SYSTEM SCHEDULE

HEAVY DUTY / ASTM CLASS / FIRE RATED

USG BRANDS: ICC-ES ESR-1222

USG - DXL-26 HD/FR (12' MAINS)
USG - DXL-424 FR (4' CROSS Ts)
USG - DXL-216 FR (2' CROSS Ts)
M7HD 12' ANGLES 7/8 (ALTERNATE)
DXF - DXF-129 (1' CROSS Ts)
2" WALL ANGLE

ARMSTRONGS BRAND: ICC-ES ESR-1308

PRELUDE FIRE GUARD
8301 12' MAINS
XL8341 4' CROSS Ts
XL8323 2' CROSS Ts
XL8313 1' CROSS Ts
(DC7301) 7/8" ANGLE HD (ALTERNATE)
BERC 2 CLIP SEISMIC CLIP (ALTERNATE)
BRFC CLIP SEISMIC CLIP (ALTERNATE)
2" WALL ANGLE

NOTE:
RUNNER MUST HAVE AN INTEGRAL SPLICE JOINT WHEN JOINED WITH ADJACENT RUNNERS.

TYPICAL DESIGN WHEN USING 2" ANGLE HORIZONTAL SPREADER STRUT

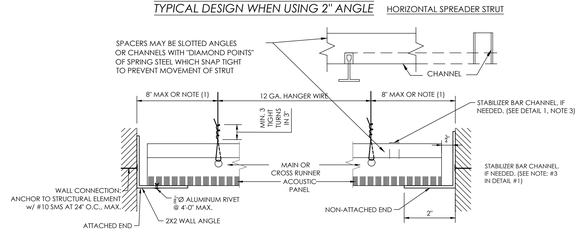

"FIXED" END **"FREE" END**

NOTE:
(1) 8" FROM WALL OR 1/4 OF THE LENGTH OF THE END RUNNER, WHICHEVER IS LESS, WHEN RUNNER EXCEEDS 8"

4/B21 MAIN OR CROSS RUNNER DETAIL
NOT TO SCALE

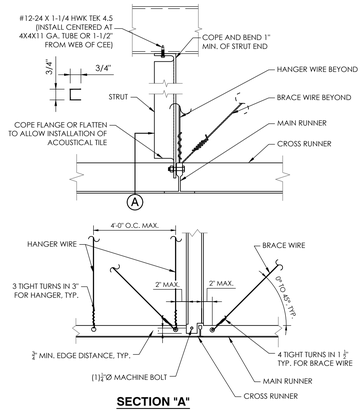

SECTION "A"

6/B21 COMPRESSION STRUT DETAIL
NOT TO SCALE

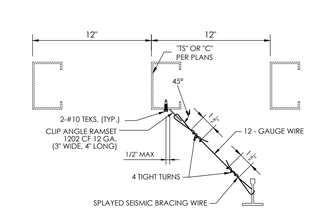

(B) SPLAYED SEISMIC BRACING WIRE ATTACHMENT

7/B21 SPLAYED SEISMIC BRACING WIRE ATTACHMENT
NOT TO SCALE

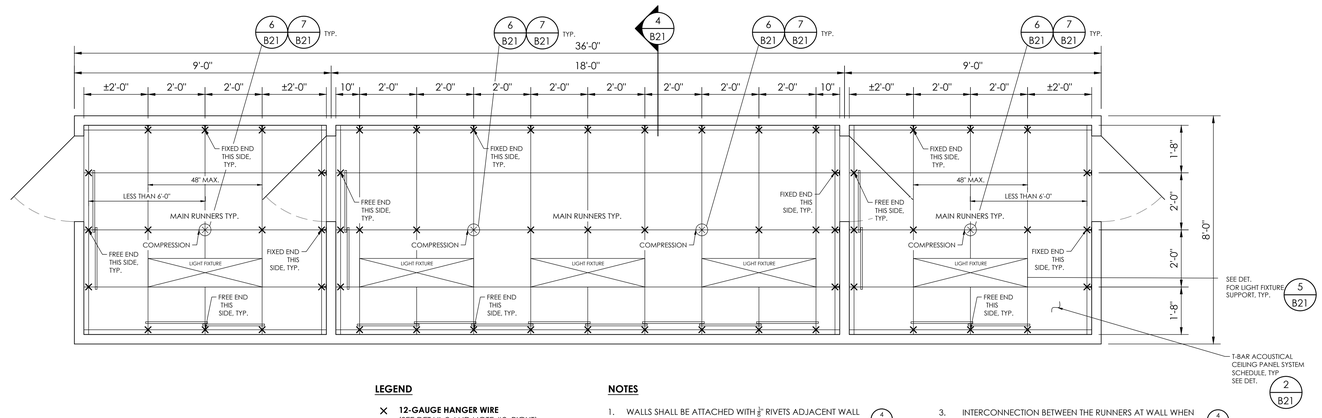

1/B21 REFLECTED CEILING PLAN
NOT TO SCALE

LEGEND

- ✕ **12-GAUGE HANGER WIRE** (SEE DETAIL 2 AND NOTE #2, RIGHT)
- ⊗ **LATERAL BRACING LOCATION** (USE WHEN CEILING EXCEEDS 12'-0" X 12'-0" AND ARE DIRECTLY ATTACHED TO ROOF FRAMING)
- **RIVITED**

NOTES

1. WALLS SHALL BE ATTACHED WITH 1/4" RIVETS ADJACENT WALL SHALL REST ON 2" WALL ANGLE (2/B21)
2. ADDITIONAL HANGER WIRES ARE REQUIRED AT ALL WALLS, 8" MAX DISTANCE FROM WALL OR 1/4 DISTANCES THE LENGTH OF THE MEMBER, WHICHEVER IS SHORTER. HANGER MAY BE OMITTED WHEN GRID MEMBERS ARE 8" OR LESS. (4/B21)
3. INTERCONNECTION BETWEEN THE RUNNERS AT WALL WHEN RUNNER EXCEEDS 12" @ UNATTACHED WALLS (TYP. DESIGN). OMIT SPACERS WHEN SEISMIC CLIPS ARE USED. (2/B21)
4. COMPRESSION STRUT AND BRACING OCCURS AT LOCATIONS NOTED IN DETAIL AND WHERE SHOWN ON CEILING PLAN.

NOTE: ALL SUSPENSION SYSTEM WORK TO COMPLY WITH ASTM C636 AND SECTION 5.2 OF ASTM E580.

THE DRAWING AND ALL INFORMATION THEREIN IS THE PROPERTY OF THE SOUTHERN BLEACHER COMPANY. SUCH DATA WAS CONCEIVED, MOVED TO EXIST AND/OR COPIED. THIS DRAWING IS LOANED SUBJECT TO ITS RETURN UPON DEMAND AND, IS NOT TO BE USED DIRECTLY OR INDIRECTLY IN ANY WAY DETRIMENTAL TO OUR INTERESTS.

STRUCTURAL ENGINEERS
JOSEPH L. TAYLOR 1926-1997
DONALD E. TAYLOR 1926-2018
DOUGLAS E. TAYLOR 1929-2018
RICHARD C. TAYLOR 1933-2018
553 S. Oak Knoll Ave. Pasadena, CA 91101
TAYLOR & YEAMAN
PO Box One, Graham, Texas 76450
Phone: 940/549-0733 Fax: 940/549-1365
Established 1926
Southern BLEACHER COMPANY
GRANDSTANDS • BLEACHERS • STADIUMS

REGISTERED PROFESSIONAL ENGINEER BRIAN T. DEAL S 6087 STRUCTURAL STATE OF CALIFORNIA
S&S 01/08/25
PRINCIPAL

REV	BY	DATE	DESCRIPTION
1	HC	08/24	DSA COMMENTS

05/10/24 HC DMC
JOB NUMBER #24094
SHEET B21 OF B35

PRESS BOX CEILING DETAILS - HOME
8'-0" X 36'-0" PRESS BOX

BELLFLOWER UNIFIED SCHOOL DISTRICT
MAYFAIR HIGH SCHOOL
LAKEWOOD, CALIFORNIA

22" X 34" (11x17 = 1/2 indicated scale)

24094

IDENTIFICATION STAMP
DIV. OF THE STATE ARCHITECT
APP: 03-124281 INC:
REVIEWED FOR
SS ☑ FLS ☑ ACS ☑
DATE: 02/04/2025

A.1 STEEL STRUCTURAL SYSTEM

	ENGINEERED PER:
4" X 4" X 1/8" (11 GA.) SQUARE TUBING	ASTM A500 GRADE 'B' 46ksi
2" X 2" X 1/8" ANGLE	ASTM A572 GRADE 50
WIDE FLANGE BEAM	ASTM A992 Fy=50ksi
CHANNEL	ASTM A572 GRADE 50
1/8" ROOF PLATE	ASTM A653 A786 Fy=27ksi
4" X 2" 14-GAUGE CEE	ASTM A1011 Fy=55ksi
PLATE UP TO 1/2" THICK	ASTM A36
11 GA STRAPS AND CEES WELDS: TYPE ER70S-6 WIRE MIG	A 1011 / A653 Fy=55ksi, min
4" PUNCHED CEE STUD 3-5/8" UN-PUNCHED DEEP LEG TRACK 4" UN-PUNCHED DEEP LEG TRACK	25 GA. - ASTM C645-04 20 GA. CW - ASTM C645-04 20 GA. STRUCT. - ASTM C955-03 18 GA. STRUCT. - ASTM C955-03 25 GA. - ASTM C645-04 20 GA. CW - ASTM C645-04 20 GA. STRUCT. - ASTM C955-04 18 GA. STRUCT. - ASTM C955-04

A.2 SIDING/ACCESSORIES

	(MFG. COLOR DESIGNATION)
26-GA. (0.0181") MBCI PBR PANEL	ASTM A792-03, A924-04, AZ50, AZ55 NON-COMBUSTIBLE, CLASS A Fy=60ksi, Fu=61.5KSI
#14 X 7/8" LAP SCREWS	
SCREWS-METAL TO METAL #12 - 1" W/ 5/16" WASHER HEAD & WASHER	(MFG. COLOR DESIGNATION)
PANEL CLOSURES STRIPS	
26-GA. FLAT	ASTM A792-03, A924-04, AZ50, AZ55 NON-COMBUSTIBLE, CLASS A
SEALANT, DEGUSSA, SONOLASTIC NP1, ONE-COMPONENT ELASTOMERIC, GUN-GRADE POLYURETHANE SEALANT	UL = TYPE II / CLASS I

A.3 WINDOWS

WINDOW, SINGLE SERIES 8200 SINGLE HUNG - U FACTOR .420 THERMALLY BROKEN ALUMINUM BY DON YOUNG COMPANY TEMPERED GLASS BY CARDINAL IG, UNLIMITED IN SIZE	AAMA / NWWDA 101 / I.S.2. RATED H-C30 54X90 SGCC #2328, LAB ID #550

A.4 ELECTRICAL

SPECIAL NOTE: ALL ELECTRICAL COMPONENTS SHALL BE APPROVED PER NEC AND UL /CSA LISTED.

A.4.1 BREAKER PANEL

_LUG_AMP PANEL W/ MAIN DISCONNECT	UL LISTED EQUAL TO HOMELINE, GE, WESTINGHOUSE LOAD CENTERS BEARING A UL LABEL SIZED PER DRAWINGS
FLUSH MOUNT BREAKER COVER	UL LISTED EQUAL TO HOMELINE, GE, WESTINGHOUSE LOAD CENTERS BEARING A UL LABEL SIZED PER DRAWINGS
20 AMP SINGLE POLE BREAKERS	UL LISTED EQUAL TO HOMELINE, GE, WESTINGHOUSE LOAD CENTERS BEARING A UL LABEL SIZED PER DRAWINGS
DOUBLE POLE BREAKERS	UL LISTED EQUAL TO HOMELINE, GE, WESTINGHOUSE LOAD CENTERS BEARING A UL LABEL SIZED PER DRAWINGS

A.4.2 J-BOXES

4" X 4" X 2-1/8" - 1/2 & 3/4 KO-RACO #235 OR #4SDVB-SPL-PL W/FLANGE	UL LISTED, EQUAL TO RACO, BOWERS, STEEL CITY
4" X 4" X 1-1/2" - 1/2 & 3/4 KO-RACO #196 OR #4SDVB-SPL-PL W/FLANGE	UL LISTED, EQUAL TO RACO, BOWERS, STEEL CITY
4" X 4" X 1-1/2" METAL BOXES W/ 1/2", 3/4" KO, RACO #192 OR #4S-SPL-DR	UL LISTED, EQUAL TO RACO, BOWERS, STEEL CITY
4" X 4" X 2-1/8" METAL BOXES RACO #232 OR #4SD-SPL	UL LISTED, EQUAL TO RACO, BOWERS, STEEL CITY
PLASTER RINGS, 1 GANG, RACO #768 OR #8468C	UL LISTED, EQUAL TO RACO, BOWERS, STEEL CITY
PLASTER RINGS, 2 GANG, RACO #769 OR #8470A	UL LISTED, EQUAL TO RACO, BOWERS, STEEL CITY
WEATHER TIGHT, 1 GANG BOX #21H4-2	UL LISTED, EQUAL TO RACO, BOWERS, STEEL CITY
EXTENSION RINGS, RACO #187 OR #4SSBESPL	UL LISTED, EQUAL TO RACO, BOWERS, STEEL CITY
	UL LISTED, EQUAL TO RACO, BOWERS, STEEL CITY

A.4.3 CONDUIT

EMT CONDUIT	UL LISTED, EQUAL TO RACO, ALLIED, BOWERS APPROVED PER NEC
FLEXIBLE METAL CONDUIT (FMC)	UL LISTED, EQUAL TO RACO, ALLIED, BOWERS APPROVED PER NEC

A.4.4 CONNECTORS

S.S. EMT CONNECTOR	UL LISTED, EQUAL TO RACO, BOWERS, STEEL CITY, NEER, APPROVED PER NEC
3/4" S.S. EMT CONNECTOR TC-502	UL LISTED, EQUAL TO RACO, BOWERS, STEEL CITY, NEER, APPROVED PER NEC
1/2" S.S. EMT CONNECTOR TC-501	UL LISTED, EQUAL TO RACO, BOWERS, STEEL CITY, NEER, APPROVED PER NEC
1/2" FLEX CONNECTOR SC50	UL LISTED, EQUAL TO RACO, BOWERS, STEEL CITY, NEER, APPROVED PER NEC
3/4" FLEX CONNECTOR SC75	UL LISTED, EQUAL TO RACO, BOWERS, STEEL CITY, NEER, APPROVED PER NEC
1/2" FLEX COUPLING, RACO #2272	UL LISTED, EQUAL TO RACO, BOWERS, STEEL CITY, NEER, APPROVED PER NEC
1/2" FLEX COUPLING, RACO #2273	UL LISTED, EQUAL TO RACO, BOWERS, STEEL CITY, NEER, APPROVED PER NEC
1/2" FLEX TO ½" EMT COUPLING NEE EFC-75	UL LISTED, EQUAL TO RACO, BOWERS, STEEL CITY, NEER, APPROVED PER NEC
1/2" EMT COUPLINGS	UL LISTED, EQUAL TO RACO, BOWERS, STEEL CITY, NEER, APPROVED PER NEC
1/2" EMT OFF-SET CONNECTORS, NEE #TN-50	UL LISTED, EQUAL TO RACO, BOWERS, STEEL CITY, NEER, APPROVED PER NEC

A.4.5 RECEPTACLES - SWITCHES

DUPLEX RCPT-LIGHT ALMOND 20A, 120V P&S 26352-LA 20A 5-20R	UL LISTED, APPROVED PER NEC
DUPLEX RCPT-LIGHT ALMOND-WR-GFCI, 20A, 120V P&S 2097TRWRLA GFCI	UL LISTED, APPROVED PER NEC
SINGLE POLE DECORATOR SWITCH LIGHT ALMOND P&S #TM870LA, 15A, 120V OR EQUAL	UL LISTED, APPROVED PER NEC
3-WAY DECORATOR SWITCH LIGHT ALMOND P&S #TM873LA, 15A, 120V OR EQUAL	UL LISTED, APPROVED PER NEC
OCCUPANCY SENSOR DECORATOR SWITCH - 15A, 120V, W/ MANUAL ON/OFF SINGLE POLE LIGHT ALMOND - P&S RWU600BICC4 3-WAY LIGHT ALMOND - P&S RW3U600I OR EQUAL	UL LISTED, APPROVED PER NEC

A.4.6 COVER PLATES

SWITCH COVER-LIGHT ALMOND #2132V	UL LISTED, EQUAL TO LEVITON, HUBBELL, P&S
PLUG COVER-LIGHT ALMOND #2134V	UL LISTED, EQUAL TO LEVITON, HUBBELL, P&S
BLANK METAL COVER-1 GANG.-LEV #84014	UL LISTED, EQUAL TO LEVITON, HUBBELL, P&S
PLUG COVER-SURFACE, RACO #902 OR #8365N	UL LISTED, EQUAL TO RACO, BOWERS, STEEL CITY
FLAT COVER PLATE-SURFACE, RACO #752 OR #8465	UL LISTED, EQUAL TO RACO, BOWERS, STEEL CITY APPROVED PER NEC
WEATHER TIGHT COVER-PLUGS-1GANG #2CCD	UL LISTED, EQUAL TO RED DOT

A.4.7 LIGHTS

1'X4' LED TROFFER LITHONIA LIGHTING GTL4 3700LM LP840 DRIVER INFO: CONSTANT CURRENT, CLASS 2, 4 CHANNEL W/ 0-10V DIMMING. 120-277VAC 0.29A @ 120V. INPUT WATTS: 35W	UL LISTED & LABELED PER MANUFACTURER IESNA LM-79 AND LM-80 TESTED D.O.E. "LIGHTING FACTS" LABEL DESIGN LIGHTS CONSORTIUM (DLC) LISTED. DLC PRODUCT CODE: P76QGDBU
LED INFO: 30W-4000K-81CRI-3451 LUMENS-3745 L-70 LIFESPAN: 75,000 HR	IES LM-80 AND TM-21
ASTRALITE EEU-3-RW 7 WATT LED COMBO EXIT/EMERGENCY LIGHT 120/277V. (2) FULLY ADJUSTABLE LIGHTING HEADS 90 MIN. BATTERY BACK-UP	DAMP LOCATION LISTED U.L. 924 ETL LISTED
PROFESSIONAL GRADE VINYL ELECTRICAL TAPE SCOTCH 3M	UL LISTED 539H INSULATING TAPE FLAME RETARDANT

A.4.8 WIRE & MISC.

12 AWG-600V-THHN-THWN-COPPER/SOLID	UL LISTED, EQUAL TO GENERAL CABLE CORP.
IDEAL INDUSTRIES IN SURE PUSH-IN CONNECTORS MOD. 32/33/34	UL LISTED, CSA CERTIFIED, 105°C 600V. RATED (1000V. IN SIGNS & LIGHT FIXTURES)
IDEAL INDUSTRIES B-CAP WIRE NUTS OR EQUAL	UL LISTED, CSA CERTIFIED, 105°C 600V. RATED
REDUCING WASHERS	UL LISTED, EQUAL TO RACO, BOWERS, STEEL CITY
3/4" STRAPS FOR EMT-RACO #2083 OR #MED45	UL LISTED, EQUAL TO RACO, BOWERS, STEEL CITY
STRAPS FOR FLEX	UL LISTED, EQUAL TO RACO, BOWERS, STEEL CITY
CONDUIT BUSHINGS	
J-BOX PLUGS SNAP IN SEALS	UL LISTED EQUAL TO GB ELECTRICAL
IDS CADDY FASTENERS W/ BOLTS & NUTS	UL LISTED EQUAL TO ERICO, IDS
BAR HANGER SUPPORTS	UL LISTED EQUAL TO ERICO

A.4.9 WIREMOLD

#2300BC-BASE-COVER-8' LENGTH	UL LISTED RACEWAY, E90378, RJTX,UL5 UL94V-0, E90377, RJYT, NEC 352B
#2300WC-WIRE CLIP	UL LISTED RACEWAY, E90378, RJTX,UL5 UL94V-0, E90377, RJYT, NEC 352B
#2306-COVER CLIP	UL LISTED RACEWAY, E90378, RJTX,UL5 UL94V-0, E90377, RJYT, NEC 352B
#2310A-ENTRANCE END FITTING	UL LISTED RACEWAY, E90378, RJTX,UL5 UL94V-0, E90377, RJYT, NEC 352B
#2310B-BLANK END FITTING	UL LISTED RACEWAY, E90378, RJTX,UL5 UL94V-0, E90377, RJYT, NEC 352B
#2311-90* FLAT ELBOW	UL LISTED RACEWAY, E90378, RJTX,UL5 UL94V-0, E90377, RJYT, NEC 352B
#2315-TEE	UL LISTED RACEWAY, E90378, RJTX,UL5 UL94V-0, E90377, RJYT, NEC 352B
#2317-INTERNAL ELBOW	UL LISTED RACEWAY, E90378, RJTX,UL5 UL94V-0, E90377, RJYT, NEC 352B
#2318-EXTERNAL ELBOW	UL LISTED RACEWAY, E90378, RJTX,UL5 UL94V-0, E90377, RJYT, NEC 352B
#2347-DEVICE BOX-1 GANG	UL LISTED RACEWAY, E90378, RJTX,UL5 UL94V-0, E90377, RJYT, NEC 352B
32347-2-DEVICE BOX-2 GANG	UL LISTED RACEWAY, E90378, RJTX,UL5 UL94V-0, E90377, RJYT, NEC 352B
	UL LISTED RACEWAY, E90378, RJTX,UL5 UL94V-0, E90377, RJYT, NEC 352B

A.4.10 MISCELLANEOUS

3/4" X 4" GALVANIZED NIPPLE	
GALVANIZED FLOOR FLANGE 3/4"	ASTM C665, CLASS I UL FHC 25/50

A.5 INTERIOR FINISHES

A.5.1 CEILING

CERTAINTEED HHF-154 BIOSHIELD 2'X2'X5/8" CEILING TILE	UL LISTED CLASS I FLAME 15/SMOKE 5
WALL ANGLE - GALV. WA15-15 12'	FIREGUARD, CLASS I
MAIN TEE - CS12-12-15 MR X 12'	FIREGUARD, CLASS I
CROSS TEE - CS2-12-12 CT X 2'	FIREGUARD, CLASS I
RIVETS	
12-GA. WIRE (GALVANIZED)	
14-GA. HANGER CLIPS	UL LISTED EQUAL TO RAMSET 1202 CF

A.5.2 VINYL INTERIOR

WALLBOARDS - DURASAN VINYL COVERD GYPSUM SHEETROCK, COLOR: HARVEST COTTON 5/8" THICK, 4' X 8'	VINYL - UL LISTED CLASS I, ASTM E84-04, C960-04, C1396-02, FLAME 25 / SMOKE 50 OR LESS
OUTSIDE CORNER - 10' OUTSIDE CORNER, DURASAN, 2-PART SNAP ON, INTERIOR-GALVANIZED STEEL, VINYL EXTERIOR, SANTA FE-PORCELAIN	CLASS A ASTM E84-04, FLAME 25 / SMOKE 50 OR LESS
INSIDE CORNER - 10' INSIDE CORNER, DURASAN, 1 PIECE, INTERIOR-GALVANIZED STEEL, VINYL EXTERIOR, SANTA FE-PORCELAIN	CLASS A ASTM E84-04, FLAME 25 / SMOKE 50 OR LESS
8' BATT STRIPS-DURASAN, 2-PART SNAP ON, INTERIOR-GALVANIZED STEEL, VINYL EXTERIOR, SANTA FE-PORCELAIN	CLASS I FLAME 25 / SMOKE 50 OR LESS
	ASTM C557
ADHESIVE, DAP - DRYWALL	

A.5.3 FLOORING & BASE

VINYL BASE-COLOR: FLEXCO (COFFEE)

VINYL BASE ADHESIVE, DURABOND D-731

A.5.4 INTERIOR DOORS

3' X 6'-8" BIRCH DOOR UNIT INTERIOR W/ 5-1/2" TIMELY METAL FRAMES, SOLID CORE DOOR	
LATEX CAULK, EQUAL TO ACE ACRYLINK LATEX CAULK, GENERAL PURPOSE	ASTM-C-834-95
GALS EXT OIL BASE / RUST NOT METAL PAINT	NFPA CLASS II
PAINT INT. LATEX / WATER BASE	NON FLAMMABLE
PASSAGE HARDWARE / COMMERCIAL / GRADE, LIGHT DUTY SCHLAGE, ELAN COMMERCIAL PASSAGE F10 ELA 626	ADA APPROVED ANSI GRADE 2

A.5.5 COUNTER TOP

TOWER ANODIZED ALUMINUM 2 -PIECE INTERLOCKING 1" THICK COUNTERTOP	EXTRUDED ALUMINUM

A.6 HARDWARE

A.6.1 EXTERIOR DOORS

DOOR FRAME CECO, SERIES SU WELDED STEEL FRAMES, 5'-3/4" X 3' X 7'-0" WITH WOOD STUD ANCHORS, 16 GA., HEAVY DUTY, PRIMER PAINT COAT	UL LISTED 10B, EQUAL TO CECO, STEEL DOOR FRAME ANSI A250.8 -1998, ASTM A366, A620, A568 PRIMER PAINT COAT ANSI A250.10
DOOR CECO - HMD CP 18 A60 3068 F BW 1 3/4" (C1; LC1) POLYSTYRENE INSULATION PRIMER PAINT COAT R-11.1 AS CALCULATED	UL LISTED 10B, EQUAL TO CECO, STEEL DOOR ANSI A250.4 PERFORMANCE TEST, 18 AND 16 GAGE: LEVEL A (1,000,000 CYCLES) PRIMER PAINT COAT ANSI A250.10
ANCHORS WOOD & METAL STUD ANCHORS/ TYPE WS PER DOOR MANUFACTURER	UL LISTED, EQUAL TO CECO
HINGES PBB INC., FULL MORTISE TEMPLATE HINGES 4-1/2"X4" GA. 0.134 +\- .005 PB81	UL LISTED EQUAL TO PBB ANSI TEMPLATE ANSI A8133
THRESHOLD PEMKO-171 A36, MILL FINISH ALUMINUM 5"X1/2"	UL LISTED EQUAL TO HAGER ADA APPROVED
DOOR SWEEP-WEATHERSTRIP NATIONAL GUARD 101VA	
DOOR CLOSURE CAL-ROYAL CR441 ALUMINUM	ANSI/BHMA A1564.4 GRADE 1
1/4" FOAM WEATHER STRIPPING	
EXIT DEVICE, CAL-ROYAL A2200EO36-ALUM	ANSI/BHMA A156.3 GRADE 1
TRIM, CAL-ROYAL ENTOOL, US26D	ANSI/BHMA A156.3 GRADE 1

A.7 ROOFING

ADHESIVE MULE-HIDE, ACRYLIC WATER BASE BONDING	NON-FLAMMABLE, NON-TOXIC UL LISTED AS EXTERNAL FIRE EXPOSURE ONLY
ADHESIVE MULE-HIDE, BLACK SEAM ADHESIVE	AS EXTERNAL FIRE EXPOSURE ONLY
ROOF HATCH (OPTIONAL) 14 GA. GALV. STEEL, INSULATED, NON-COMBUSTIBLE 30" X 36" TYPE 'S' BILCO (LADDER) 30" X 54" TYPE 'NB' BILCO (SHIP STAIR)	COVER: 40 psf MIN. LIVE LOAD OR 20 psf WIND UPLOAD
ROOF COATING ACRYLINK G ACRYLIC ROOF COATING BY ISOPRIME ACRYLIC ROOF COATINGS, INC. ACRYCAULK	UL 790, CLASS A, ASTM E108 ASTM D 6083 UL 790, CLASS A

A.8 INSULATION

POLY ENCAPSULATED FIBERGLASS INSULATION - JOHNS MANVILLE - JM COMFORTTHERM INSULATION R-VALUE PER PLAN	ATSM C665, TYPE II, CLASS A, CAT. 1 OR 2 IBC, ALL TYPES ATSM E84 FLAME SPREAD <25 ATSM E84 SMOKE DEVELOPMENT <50
ARMORFLECT WHITE CONTINUOUS WRAP INSULATION: R-8.7 CONT. 1/4" FIBERGLASS CORE BONDED TO REINFORCED SCRIM FACING	ATSM C518, ASTM E84, ASTM E96, ASTM C1104 FLAME SPREAD <25, SMOKE DEVELOPED <50 VAPOR RETARDER (PERMS) <0.5 WATER VAPOR SORPTION LESS THAN 5%

NOTES:

STANDARDS LISTED ARE REFERENCE TO THE MANUFACTURERS PRODUCT REFERENCE STANDARD OR IBC REFERENCE STANDARD NUMBER.

1 / B28 APPENDIX "A" - MATERIAL SPECS
NOT TO SCALE

DCM Inc.
DOYLES CONSTRUCTION & MFG.
624 Sixth Street
P.O. Box 451
Graham, Texas 76450
Phone: (940) 549-5517
Fax: (940) 549-9438

THIS DRAWING AND ALL INFORMATION THEREIN IS THE PROPERTY OF THE SOUTHERN BLEACHER COMPANY, TAYLOR & SYFAN AND IS CONFIDENTIAL AND MUST NOT BE MADE PUBLIC OR COPIED. THIS DRAWING IS LOANED SUBJECT TO RE-TURN UPON DEMAND AND, IS NOT TO BE USED DIRECTLY OR INDIRECTLY IN ANY WAY DETRIMENTAL TO OUR INTERESTS.

TAYLOR & SYFAN
STRUCTURAL ENGINEERS
CENTRAL COAST OFFICE Ph: (626) 793-7438 Fax: (626) 793-7439 Toll: (800) 579-3881
553 S. Oak Knoll Ave. Pasadena, CA 91101
http://www.taylorsyfan.com/

Southern® BLEACHER COMPANY
GRANDSTANDS ▪BLEACHERS ▪STADIUMS
PO Box One, Graham, Texas 76450
801 Fifth Street.
Phone: 940/549-0733 Fax: 940/549-1365
Established 1946

REGISTERED PROFESSIONAL ENGINEER BRIAN T. DEAN S 6087 STRUCTURAL STATE OF CALIFORNIA
S&S 01/08/25
PRINCIPAL

TYPE: APPENDIX "A" MATERIAL SPECS
8'-0" X 36'-0" PRESS BOX

TITLE: BELLFLOWER UNIFIED SCHOOL DISTRICT
MAYFAIR HIGH SCHOOL
LAKEWOOD, CALIFORNIA

REV	BY	DATE	DESCRIPTION
	HC	09/27/24	DSA COMMENTS

DATE	DRAWN	CHECKED
05/10/24	HC	DMC

JOB NUMBER #24094

SHEET	OF
B21.1	B35

24094

22" X 34" (11x17 = 1/2 indicated scale)

IDENTIFICATION STAMP
DIV. OF THE STATE ARCHITECT
APP: 03-124281 INC:
REVIEWED FOR
SS ☑ FLS ☑ ACS ☑
DATE: 02/04/2025

A	= GRID LINE
1	= COLUMN LINE
— — —	= GRID LINE
— · — —	= OUTLINE OF GRANDSTAND
———	= OUTLINE OF CONCRETE

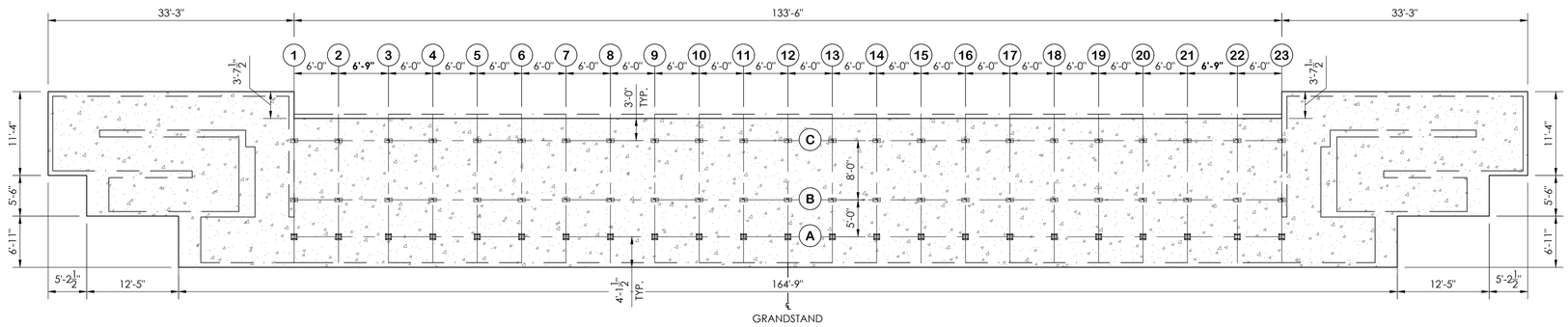

1 / B22 FOOTING LAYOUT - VISITOR
SCALE:1/8"=1'-0"

FOUNDATION NOTES

1. OWNER/OWNERS REP SHALL VERIFY ALL DIMENSIONS PRIOR TO START OF CONSTRUCTION.
2. REINFORCING STEEL SHALL BE ASTM A615 GRADE 60.
3. CONCRETE SHALL HAVE A MINIMUM COMPRESSIVE STRENGTH OF 3000 PSI AT 28 DAYS.
4. MAXIMUM HORIZ. TOLERANCE OF ANCHOR BOLT PLACEMENT SHALL BE ±⅛".
5. THE CONCRETE FOUNDATION CONTRACTOR IS RESPONSIBLE FOR NON SHRINK GROUTING.
6. IF GROUT IS REQUIRED: THE ELEVATION AT THE TOP OF THE CONCRETE PIER IS DESIGNED TO BE 1" BELOW THE BOTTOM OF STEEL ELEVATION. THE TOLERANCE FOR THE BOTTOM OF STEEL ELEVATION IS ±½". THE TOP OF CONCRETE ELEVATION MAY BE RAISED TO MATCH THE BOTTOM OF STEEL ELEVATION, AT THE CONCRETE CONTRACTORS DISCRETION. THE CONTRACTOR OF THE CONCRETE FOUNDATIONS IS RESPONSIBLE FOR ANY ADJUSTMENTS REQUIRED.
7. ALL UNDERGROUND UTILITIES ARE TO BE LOCATED AND MARKED DURING THE REVIEW PROCESS BY THE OWNERS REPRESENTATIVE PRIOR TO FOUNDATION EXCAVATION.
8. REMOVE/RELOCATE THE UNDERGROUND UTILITIES AS REQUIRED WHERE UNDERGROUND UTILITIES CONFLICT WITH THE NEW FOOTINGS.

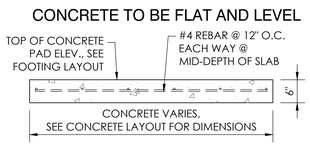

2 / B22 MINIMUM CONCRETE DETAIL
NOT TO SCALE

NOTE:
REFER TO CIVIL DRAWING SHEET C300 FOR SUBGRADE PREPARATION (BY OTHERS).

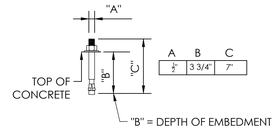

3 / B22 WEDGE ANCHOR DETAIL
NOT TO SCALE

1/2"Ø HILTI KB-TZ2 SS WEDGE ANCHOR
(MIN. EMBEDMENT = 3 3/4")

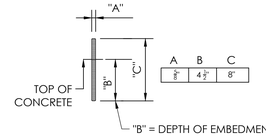

4 / B22 THREADED ROD DETAIL
NOT TO SCALE

5/8"Ø X 8" HDG ALL THREADED ROD w/ HIT-HY 200-R V3 ADHESIVE SAFE SET & 1" MAX. GROUT (MIN. EMBEDMENT = 4 1/2")

THREADED ROD WITH EPOXY MAY BE USED IN LIEU OF KB-TZ2 WEDGE ANCHOR

THIS DRAWING AND ALL INFORMATION THEREIN IS THE PROPERTY OF THE SOUTHERN BLEACHER COMPANY. SUCH DATA WAS CONCEIVED, MOVED OR VIEWED WHICH COPIED. THIS DRAWING IS LOANED SUBJECT TO RETURN UPON DEMAND AND, IS NOT TO BE USED DIRECTLY OR INDIRECTLY IN ANY WAY DETRIMENTAL TO OUR INTERESTS.

STRUCTURAL ENGINEERS
CHICAGO, IL 312.787.2408
DENVER, CO 720.420.2478
COVINA, CA 626.252.4200
553 S. Oak Knoll Ave. Pasadena, CA 91101
www.taylor-yeaman.com

TAYLOR & YEAMAN
Southern BLEACHER COMPANY
GRANDSTANDS • BLEACHERS • STADIUMS
PO Box Otto, Graham, Texas 76450
911 Elm Street Phone: 940/549-0733 Fax: 940/549-1365
Established 1926

REGISTERED PROFESSIONAL ENGINEER
BRIAN T. DEAL
S 6087
STRUCTURAL
STATE OF CALIFORNIA
S&S 01/08/25
PRINCIPAL

NO	DESCRIPTION	DATE	BY
1	DSA COMMENTS	01/08/25	HC

DATE	DRAWN	CHECKED
05/10/24	HC	DMC

JOB NUMBER #24094

SHEET B22 OF B35

FOOTING LAYOUT - VISITOR
8' RISE X 26" TREAD / 133'-6" (7 ROWS)

BELLFLOWER UNIFIED SCHOOL DISTRICT
MAYFAIR HIGH SCHOOL
LAKEWOOD, CALIFORNIA

22" X 34" (11x17 = 1/2 indicated scale)

24094

IDENTIFICATION STAMP
DIV. OF THE STATE ARCHITECT
APP: 03-124281 INC:
REVIEWED FOR
SS ☑ FLS ☑ ACS ☑
DATE: 02/04/2025

A = GRID LINE
1 = STRINGER NUMBERS

NOTE: SEATING LAYOUT SHOWN FOR REFERENCE ONLY, SEE SHEET B26 FOR SEATING LAYOUT

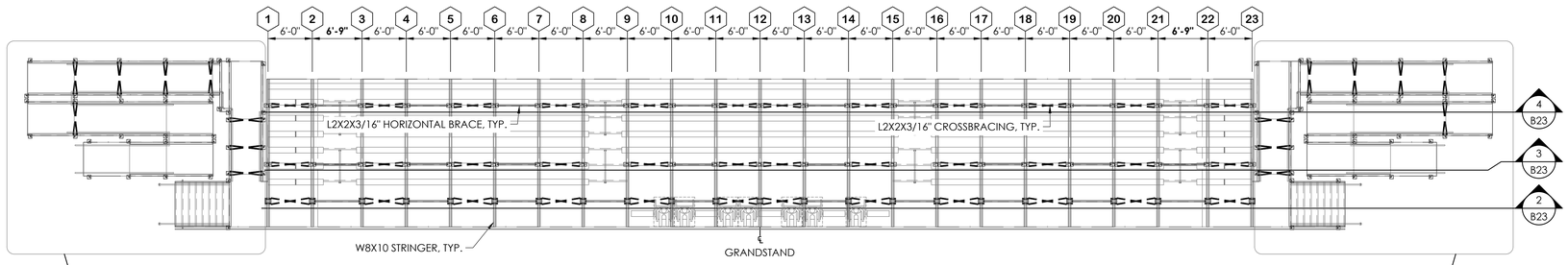

1 B23 UNDERSTRUCTURE LAYOUT - VISITOR
SCALE:1/8"=1'-0"

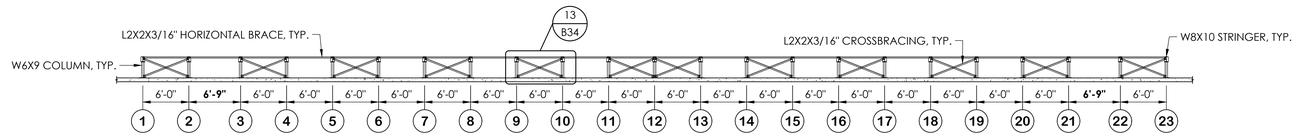

2 B23 ELEVATION VIEW "A" ROW - VISITOR
SCALE:1/8"=1'-0"

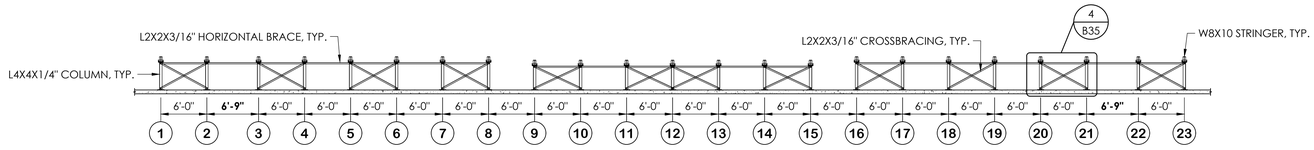

3 B23 ELEVATION VIEW "B" ROW - VISITOR
SCALE:1/8"=1'-0"

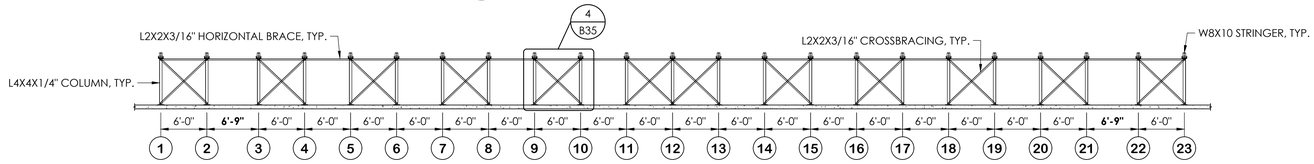

4 B23 ELEVATION VIEW "C" ROW - VISITOR
SCALE:1/8"=1'-0"

THIS DRAWING AND ALL INFORMATION THEREIN IS THE PROPERTY OF THE SOUTHERN BLEACHER COMPANY, EXCEPT AS OTHERWISE CONVEYED, AND NOT TO BE REPRODUCED OR COPIED. THIS DRAWING IS LOANED SUBJECT TO RETURN UPON DEMAND AND, IS NOT TO BE USED DIRECTLY OR INDIRECTLY IN ANY WAY DETRIMENTAL TO OUR INTEREST.

STRUCTURAL ENGINEERS
TAYLOR & YEAMAN
553 S. Oak Knoll Ave. Pasadena, CA 91101
(626) 792-2428
(626) 792-2429
(626) 792-2430
(626) 792-2431
(626) 792-2432
(626) 792-2433
Fax (626) 792-2434

Southern BLEACHER COMPANY
GRANDSTANDS • BLEACHERS • STADIUMS
Established 1926
PO Box One, Graham, Texas 76450
Phone: 940-549-1733 Fax: 940-549-1365

REGISTERED PROFESSIONAL ENGINEER
BRIAN T. DEAN
S 6087
STRUCTURAL
STATE OF CALIFORNIA
S&S 01/08/25
PRINCIPAL

UNDERSTRUCTURE LAYOUT / ELEVATION VIEWS - VISITOR
8" RISE X 26" TREAD / 133-6" (7 ROWS)

BELLFLOWER UNIFIED SCHOOL DISTRICT
MAYFAIR HIGH SCHOOL
LAKEWOOD, CALIFORNIA

DEV	BY	DATE	DESCRIPTION
	HC	05/10/24	DSA COMMENTS

DATE 05/10/24 | DRAWN HC | CHECKED DMC

JOB NUMBER #24094

SHEET B23 OF B35

22" X 34" (11x17 = 1/2 indicated scale)

24094

IDENTIFICATION STAMP
DIV. OF THE STATE ARCHITECT
APP: 03-124281 INC:
REVIEWED FOR
SS ☑ FLS ☑ ACS ☑
DATE: 02/04/2025

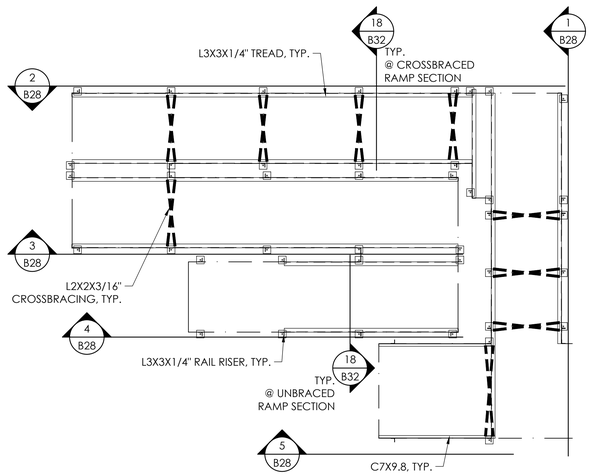

1 B24 EXIT UNDERSTRUCTURE LAYOUT - VISITOR
SCALE:1/4"=1'-0"

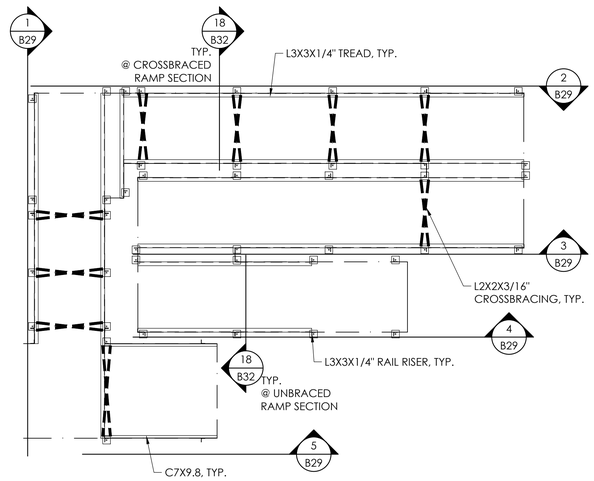

2 B24 EXIT UNDERSTRUCTURE LAYOUT - VISITOR
SCALE:1/4"=1'-0"

THE DRAWING AND ALL INFORMATION THEREIN IS THE PROPERTY OF THE SOUTHERN BLEACHER COMPANY, SYCP & SYKA ASSOCIATES, AND NOT TO BE USED, COPIED, THIS DRAWING IS LOANED SUBJECT TO RE-TURN UPON DEMAND AND, IS NOT TO BE USED DIRECTLY OR INDIRECTLY IN ANY WAY DETRIMENTAL TO OUR INTERESTS.

STRUCTURAL ENGINEERS
TAYLOR & YEAMAN
STRUCTURAL
CIVIL
MECHANICAL
ELECTRICAL
COAST
553 S. Oak Knoll Ave. Pasadena, CA 91101
626 795 7478
626 795 7479
626 795 7480
626 795 7481
Southern BLEACHER COMPANY
GRANDSTANDS •BLEACHERS •STADIUMS
PO Box One, Graham, Texas 76450
911 Hillcrest Phone: 940-549-0733 Fax: 940-549-1365
Established 1926

REGISTERED PROFESSIONAL ENGINEER
BRIAN T. DEAN
S 6087
STRUCTURAL
STATE OF CALIFORNIA
S&S 01/08/25
PRINCIPAL

EXIT UNDERSTRUCTURE LAYOUTS - VISITOR
8" RISE X 26" TREAD / 133'-6" (7 ROWS)

BELLFLOWER UNIFIED SCHOOL DISTRICT
MAYFAIR HIGH SCHOOL
LAKEWOOD, CALIFORNIA

NO	DESCRIPTION	DATE	REV BY
	DSA COMMENTS	6/03/24	HC

DRAWN BY: HC
CHECKED BY: DMC
DATE: 05/10/24

JOB NUMBER #24094

SHEET B24 OF B35

22" X 34" (11x17 = 1/2 indicated scale)

24094

IDENTIFICATION STAMP
DIV. OF THE STATE ARCHITECT
APP: 03-124281 INC:
REVIEWED FOR
SS ☑ FLS ☑ ACS ☑
DATE: 02/04/2025

ITEM DESCRIPTION

1. W 8 X 10 (50 ksi)
2. W 6 X 9 (50 ksi)
3. L 3 X 3 X 1/4 (50 ksi)
4. L 4 X 4 X 1/4 (50 ksi)
5. L 2 X 2 X 3/16 (50 ksi)
6. L 2 X 1 1/2 X 3/16 (50 ksi)
7. L 2 1/2 X 2 X 3/16 (50 ksi)
8. 10 X 10 X 3/8 PLATE
9. 8 X 12 X 1/2 PLATE
10. 1/2"Ø HILTI KB TZ2 SS WEDGE ANCHORS (MIN. EMBEDMENT = 3 3/4")
11. 9 GAUGE GALV. STEEL CHAINLINK FENCE
12. ANODIZED ALUMINUM RAIL
13. 2 X 1/4 GUSSET PLATE (A36)

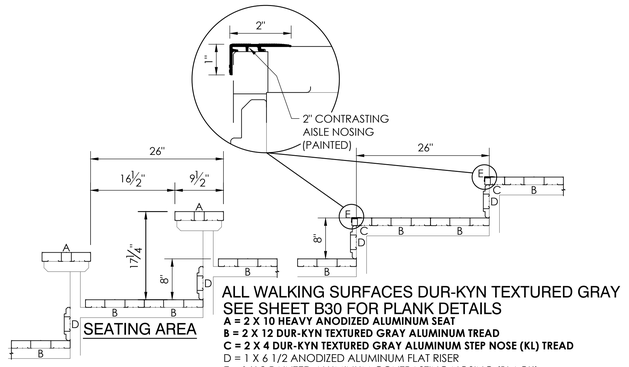

ALL WALKING SURFACES DUR-KYN TEXTURED GRAY
SEE SHEET B30 FOR PLANK DETAILS
A = 2 X 10 HEAVY ANODIZED ALUMINUM SEAT
B = 2 X 12 DUR-KYN TEXTURED GRAY ALUMINUM TREAD
C = 2 X 4 DUR-KYN TEXTURED GRAY ALUMINUM STEP NOSE (KL) TREAD
D = 1 X 6 1/2 ANODIZED ALUMINUM FLAT RISER
E = 1 X 2 PAINTED ALUMINUM CONTRASTING NOSING (BLACK)

3 / B25 PLANK ARRANGEMENT
NOT TO SCALE 8" X 26"

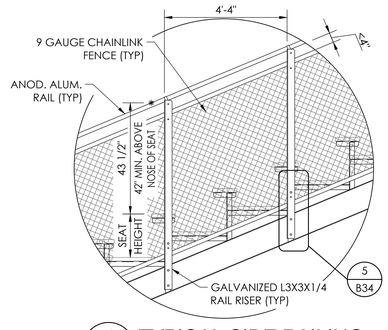

4 / B25 TYPICAL SIDE RAILING
SCALE:1/2"=1'-0"

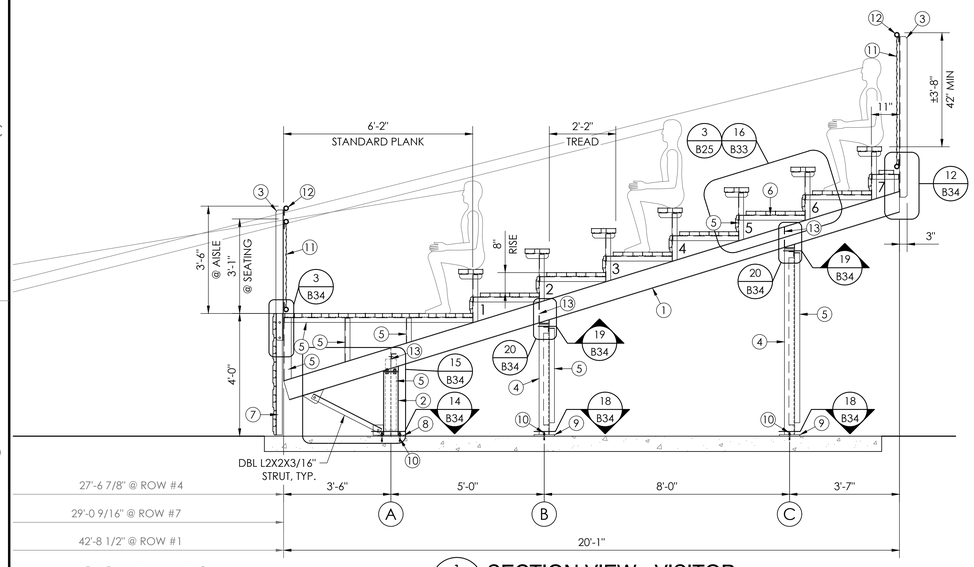

SIGHT LINES

1 / B25 SECTION VIEW - VISITOR
SCALE:1/2"=1'-0"

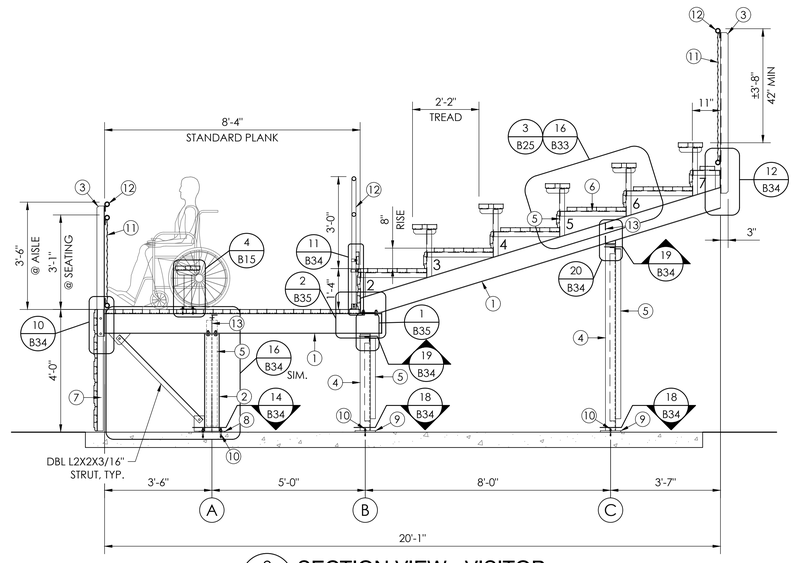

2 / B25 SECTION VIEW - VISITOR
SCALE:1/2"=1'-0"

THE DRAWING AND ALL INFORMATION THEREIN IS THE PROPERTY OF THE SOUTHERN BLEACHER COMPANY, EXCEPT WHERE OTHERWISE INDICATED. IT MAY NOT BE COPIED. THIS DRAWING IS LOANED SUBJECT TO RE-TURN UPON DEMAND AND, IS NOT TO BE USED DIRECTLY OR INDIRECTLY IN ANY WAY DETRIMENTAL TO OUR INTERESTS.

STRUCTURAL ENGINEERS
CENTRAL | FL (561) 757-2408 | FAX (561) 757-2481
COAST | FL (305) 235-2481 | FAX (305) 235-2482
553 S. Oak Knoll Ave. Pasadena, CA 91101

TAYLOR & YP FAN

PO Box One, Graham, Texas 76450
Phone: (940) 549-0733 Fax: (940) 549-1365

Southern BLEACHER COMPANY
GRANDSTANDS • BLEACHERS • STADIUMS
Established 1926

REGISTERED PROFESSIONAL ENGINEER
BRIAN T. DEAN
S 6087
STRUCTURAL
STATE OF CALIFORNIA
S&S 01/08/25
PRINCIPAL

SECTION VIEWS - VISITOR
8" RISE X 26" TREAD / 133'-6" (7 ROWS)

BELLFLOWER UNIFIED SCHOOL DISTRICT
MAYFAIR HIGH SCHOOL
LAKEWOOD, CALIFORNIA

REV'T #	DATE	DESCRIPTION	DSA COMMENTS
			HC/DMC 8/27/24

DATE 05/10/24 | DRAWN HC | CHECKED DMC

JOB NUMBER #24094

SHEET B25 | OF B35

22" X 34" (11x17 = 1/2 indicated scale)

24094

IDENTIFICATION STAMP
DIV. OF THE STATE ARCHITECT
APP: 03-124281 INC:
REVIEWED FOR
SS ☑ FLS ☑ ACS ☑
DATE: 02/04/2025

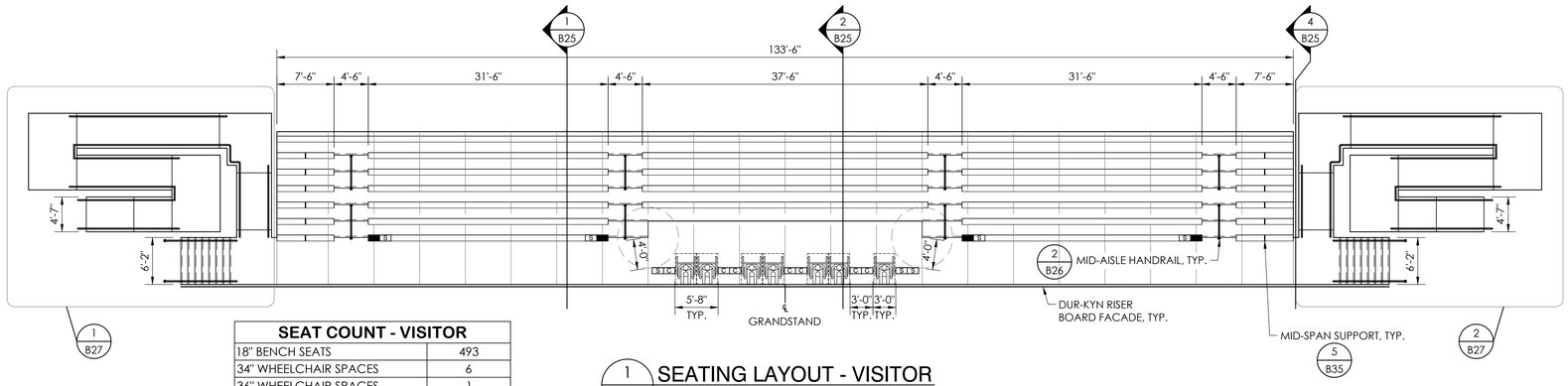

1 B26 **SEATING LAYOUT - VISITOR**
SCALE:1/8"=1'-0"

SEAT COUNT - VISITOR	
18" BENCH SEATS	493
34" WHEELCHAIR SPACES	6
36" WHEELCHAIR SPACES	1
18" COMPANION SEATS C	7
18" SEMI-AMBULANT SEATS S	7
18" AISLE SEATS ■	4
TOTAL SEAT COUNT	**518**

11B-802 Wheelchair spaces, companion seats, and designated aisle seats and semi-ambulant seats

11B-802.1.2 Width. A single wheelchair space shall be 36 inches (914 mm) wide minimum. Where two adjacent wheelchair spaces are provided, each wheelchair space shall be 33 inches (838 mm) wide minimum.

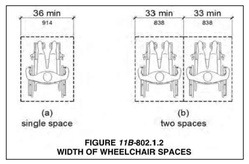

FIGURE *11B-802.1.2*
WIDTH OF WHEELCHAIR SPACES

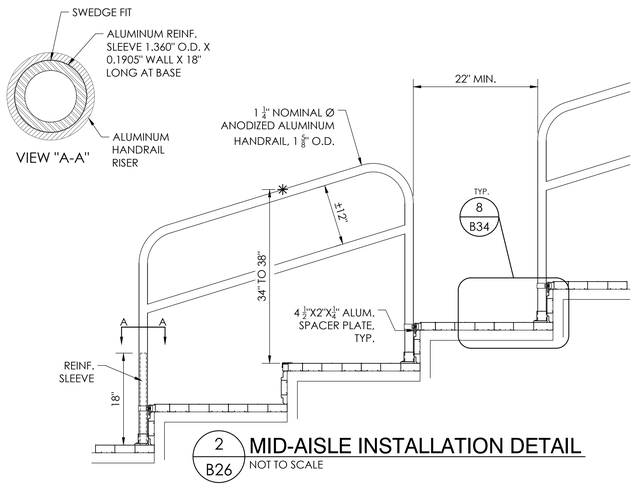

2 B26 **MID-AISLE INSTALLATION DETAIL**
NOT TO SCALE

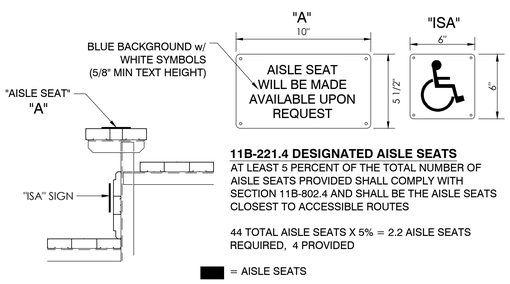

11B-221.4 DESIGNATED AISLE SEATS
AT LEAST 5 PERCENT OF THE TOTAL NUMBER OF AISLE SEATS PROVIDED SHALL COMPLY WITH SECTION 11B-802.4 AND SHALL BE THE AISLE SEATS CLOSEST TO ACCESSIBLE ROUTES

44 TOTAL AISLE SEATS X 5% = 2.2 AISLE SEATS REQUIRED, 4 PROVIDED

■ = AISLE SEATS

3 B26 **DESIGNATED AISLE SEATS**
NOT TO SCALE

THE DRAWING AND ALL INFORMATION THEREIN IS THE PROPERTY OF THE SOUTHERN BLEACHER COMPANY, EXCEPT WHERE OTHERWISE NOTED. NEITHER THIS OR COPIES THIS DRAWING IS LOANED SUBJECT TO ITS RETURN UPON DEMAND AND, IS NOT TO BE USED DIRECTLY OR INDIRECTLY IN ANY WAY DETRIMENTAL TO OUR INTERESTS.

STRUCTURAL ENGINEERS
TAYLOR & YEAMAN
CORPORATE OFFICE
553 S. Oak Knoll Ave. Pasadena, CA 91101
Tel: (626) 792-2428
Fax: (626) 792-2429
Southern BLEACHER COMPANY
PO Box One, Graham, Texas 76450
Phone: 940/549-0733 Fax:940/549-1365
Established 1926
GRANDSTANDS • BLEACHERS • STADIUMS

REGISTERED PROFESSIONAL ENGINEER
BRIAN T. DEAL
S 6087
STRUCTURAL
STATE OF CALIFORNIA
S&S 01/08/25
PRINCIPAL

REV	DATE	DESCRIPTION
1	02/04/25	DSA COMMENTS

DATE	DRAWN	CHECKED
05/10/24	HC	DMC

JOB NUMBER **#24094**

SHEET **B26** OF **B35**

SEATING LAYOUT - VISITOR
8" RISE X 26" TREAD / 133'-6" (7 ROWS)

BELLFLOWER UNIFIED SCHOOL DISTRICT
MAYFAIR HIGH SCHOOL
LAKEWOOD, CALIFORNIA

22" X 34" (11x17 = 1/2 indicated scale)

24094

IDENTIFICATION STAMP
DIV. OF THE STATE ARCHITECT
APP: 03-124281 INC:
REVIEWED FOR
SS ☑ FLS ☑ ACS ☑
DATE: 02/04/2025

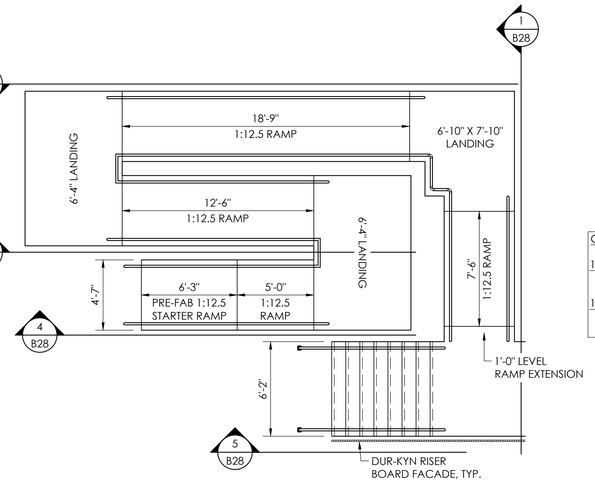

1 B27 **EXIT LAYOUT - VISITOR**
SCALE:1/4"=1'-0"

NOTE:
HANDRAIL ON INSIDE OF RAMPS
TO RUN CONTINUOUS.

CBC 1014.6: HANDRAILS ARE CONTINUOUS TO ADJACENT RAMP.

11B-505.3: INSIDE HANDRAILS ON SWITCHBACK OR DOGLEG STAIRS AND RAMPS SHALL BE CONTINUOUS BETWEEN FLIGHTS OR RUNS.

11B-505.10: HANDRAIL EXTENSIONS: EXCEPTION 1: EXTENSIONS SHALL NOT BE REQUIRED FOR CONTINUOUS HANDRAILS AT THE INSIDE TURNS OF SWITCHBACK OR DOGLEG STAIRS AND RAMPS.

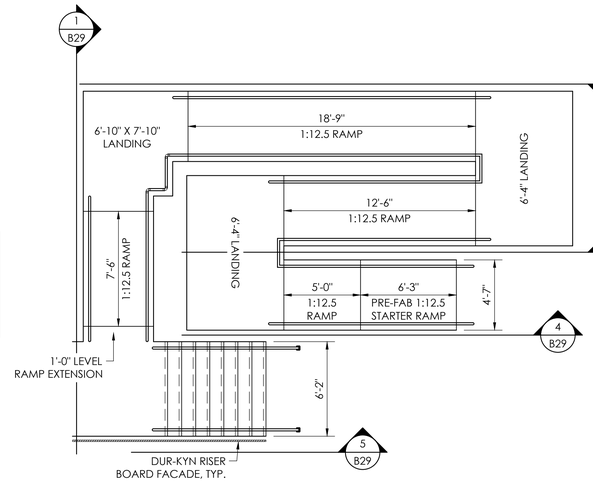

2 B27 **EXIT LAYOUT - VISITOR**
SCALE:1/4"=1'-0"

THIS DRAWING AND ALL INFORMATION THEREON IS THE PROPERTY OF THE SOUTHERN BLEACHER COMPANY AND SHALL NOT BE LOANED, REUSED OR REVISED NOR BE COPIED. THIS DRAWING IS LOANED SUBJECT TO ITS TURN UPON DEMAND AND, IS NOT TO BE USED DIRECTLY OR INDIRECTLY IN ANY WAY DETRIMENTAL TO OUR INTERESTS.

STRUCTURAL ENGINEERS
TAYLOR & YEAGAN
553 S. Oak Knoll Ave. Pasadena, CA 91101
ANDREW C. TAYLOR (626) 797-2408
CHRIS A. YEAGAN (626) 797-2409
DAVID E. COATE (626) 797-2410
Southern BLEACHER COMPANY
GRANDSTANDS • BLEACHERS • STADIUMS
PO Box One, Graham, Texas 76450
911 Hillcrest Phone: 940/549-0733 Fax: 940/549-1365
Established 1926

REGISTERED PROFESSIONAL ENGINEER
BRIAN T. DEAL
S 6087
STRUCTURAL
STATE OF CALIFORNIA
S&S 01/08/25
PRINCIPAL

REV	BY	DATE	DESCRIPTION
1	HC	05/10/24	DSA COMMENTS

EXIT LAYOUTS - VISITOR
8" RISE X 26" TREAD / 133'-6" (7 ROWS)

BELLFLOWER UNIFIED SCHOOL DISTRICT
MAYFAIR HIGH SCHOOL
LAKEWOOD, CALIFORNIA

05/10/24 | HC | DMC
JOB NUMBER #24094
SHEET B27 OF B35

22" X 34" (11x17 = 1/2 indicated scale)

24094

IDENTIFICATION STAMP
DIV. OF THE STATE ARCHITECT
APP: 03-124281 INC:
REVIEWED FOR
SS ☑ FLS ☑ ACS ☑
DATE: 02/04/2025

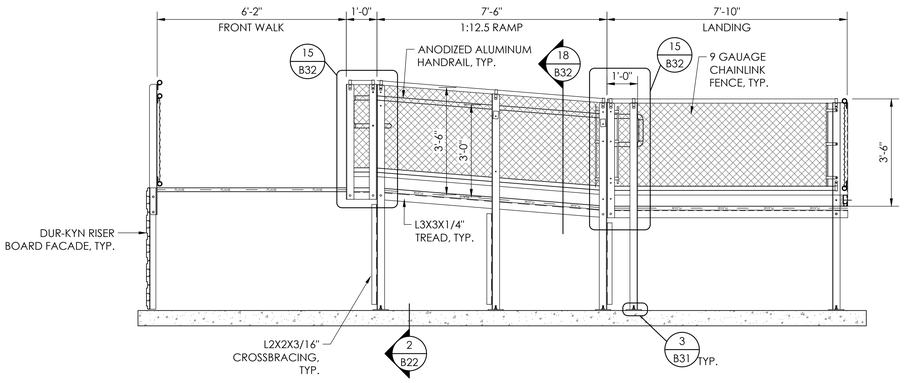

1 B28 LEFT END RAMP DETAIL - VISITOR
SCALE:1/2"=1'-0"

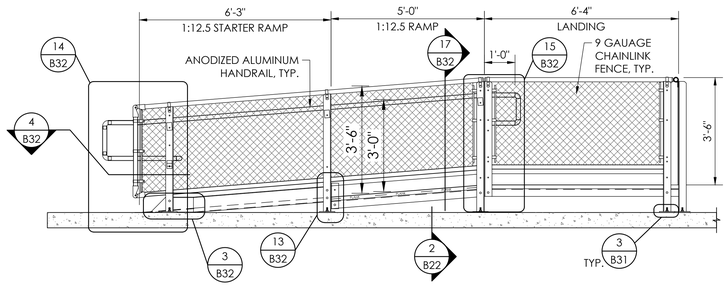

4 B28 LEFT END RAMP DETAIL - VISITOR
SCALE:1/2"=1'-0"

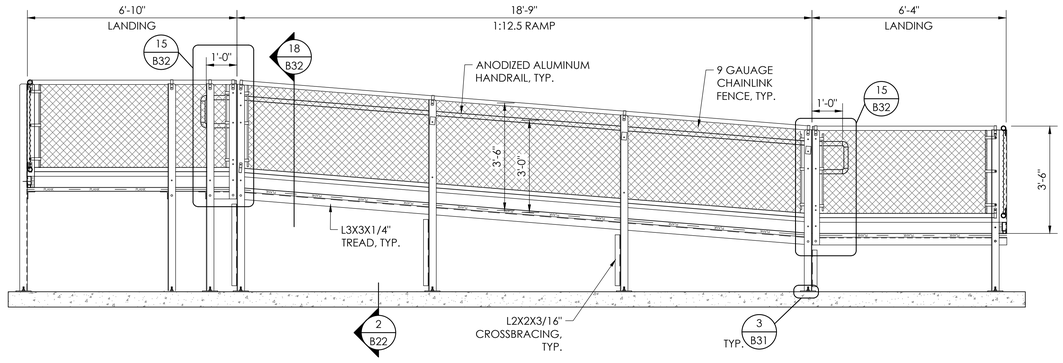

2 B28 LEFT END RAMP DETAIL - VISITOR
SCALE:1/2"=1'-0"

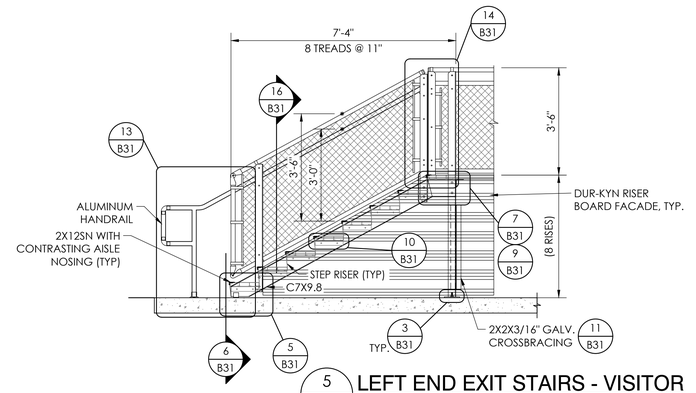

5 B28 LEFT END EXIT STAIRS - VISITOR
SCALE:1/2"=1'-0"

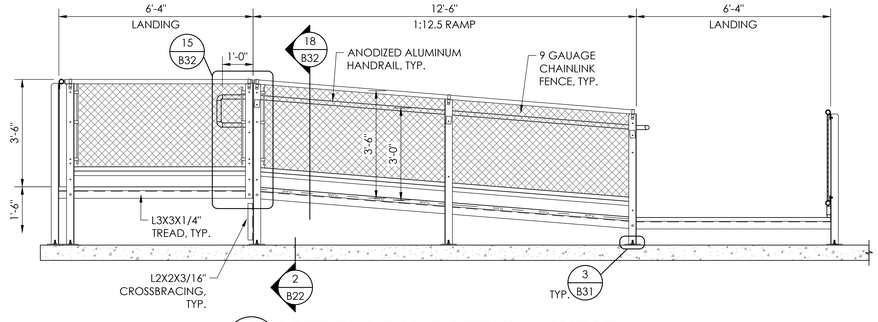

3 B28 LEFT END RAMP DETAIL - VISITOR
SCALE:1/2"=1'-0"

THIS DRAWING AND ALL INFORMATION THEREIN IS THE PROPERTY OF THE SOUTHERN BLEACHER COMPANY, INC. AND IS NOT TO BE LOANED, REVISED, ALTERED OR REUSE IN ANY FORM OR MEDIUM WITHOUT THE EXPRESS WRITTEN CONSENT OF THE SOUTHERN BLEACHER COMPANY, INC. IT IS NOT TO BE COPIED. THIS DRAWING IS LOANED SUBJECT TO RETURN UPON DEMAND AND, IS NOT TO BE USED DIRECTLY OR INDIRECTLY IN ANY WAY DETRIMENTAL TO OUR INTEREST.

STRUCTURAL ENGINEERS
TAYLOR & YEAMAN
CHICAGO, IL Tel: (630) 232-2408 Fax: (630) 232-2418
DENVER, CO Tel: (720) 279-2439 Fax: (720) 279-2438
DOHA, QATAR Tel: (974) 4421 2232
553 S. Oak Knoll Ave. Pasadena, CA 91101
Southern BLEACHER COMPANY
GRANDSTANDS • BLEACHERS • STADIUMS
PO Box One, Graham, Texas 76450
Phone: (940) 549-0733 Fax: (940) 549-1365
Established 1926

REGISTERED PROFESSIONAL ENGINEER
BRIAN T. DEAL
S 6087
STRUCTURAL
STATE OF CALIFORNIA
S&S 01/08/25
PRINCIPAL

NO	DESCRIPTION	DATE	BY
1	DSA COMMENTS	10/25/24	HC

DATE	DRAWN	CHECKED
05/10/24	HC	DMC

JOB NUMBER #24094

SHEET B28 OF B35

EXITS - VISITOR
8" RISE X 26" TREAD / 133'-6" (7 ROWS)

BELLFLOWER UNIFIED SCHOOL DISTRICT
MAYFAIR HIGH SCHOOL
LAKEWOOD, CALIFORNIA

22" X 34" (11x17 = 1/2 indicated scale)

24094

IDENTIFICATION STAMP
DIV. OF THE STATE ARCHITECT
APP: 03-124281 INC:
REVIEWED FOR
SS ☑ FLS ☑ ACS ☑
DATE: 02/04/2025

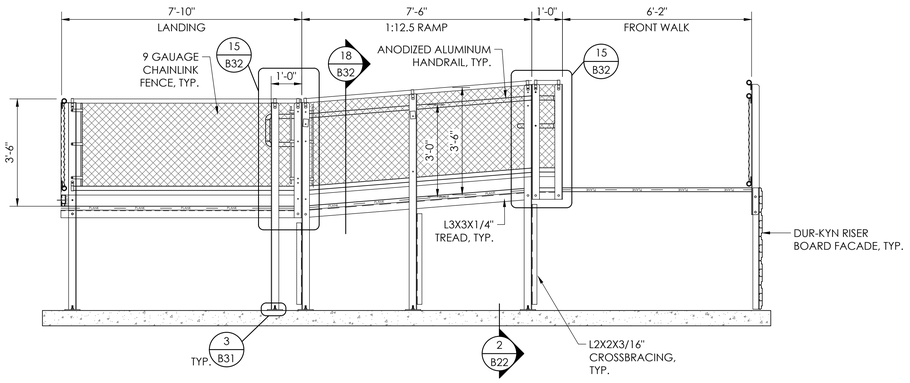

1 B29 RIGHT END RAMP DETAIL - VISITOR
SCALE:1/2"=1'-0"

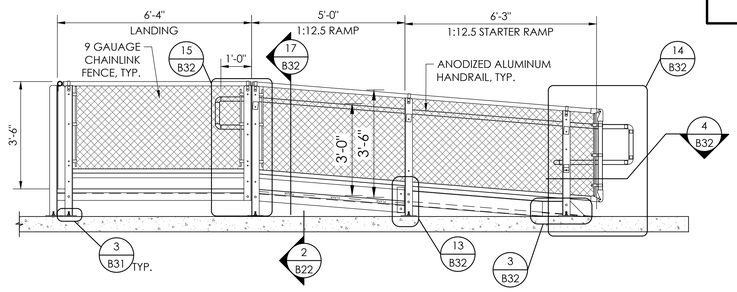

4 B29 RIGHT END RAMP DETAIL - VISITOR
SCALE:1/2"=1'-0"

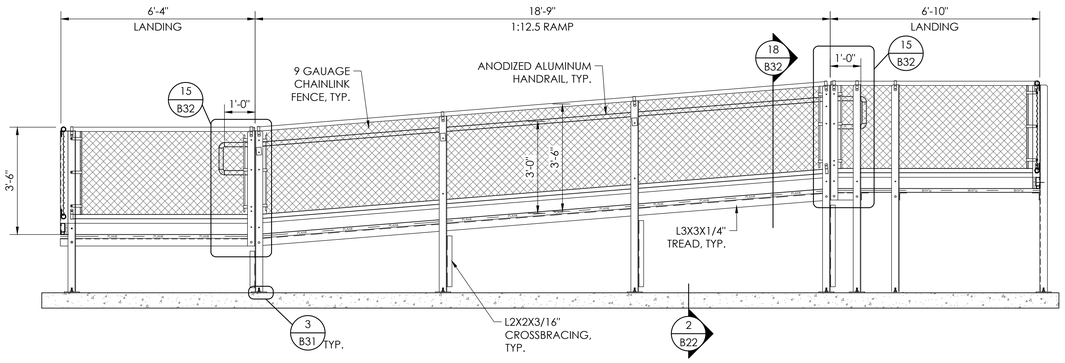

2 B29 RIGHT END RAMP DETAIL - VISITOR
SCALE:1/2"=1'-0"

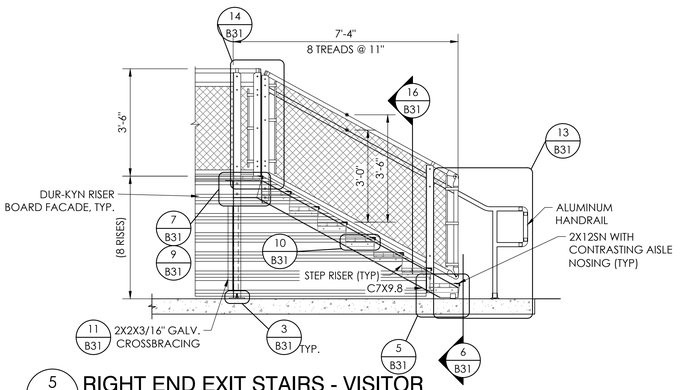

5 B29 RIGHT END EXIT STAIRS - VISITOR
SCALE:1/2"=1'-0"

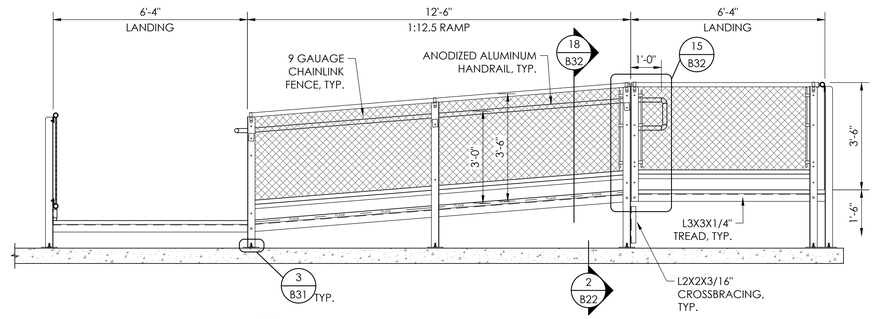

3 B29 RIGHT END RAMP DETAIL - VISITOR
SCALE:1/2"=1'-0"

THIS DRAWING AND ALL INFORMATION THEREIN IS THE PROPERTY OF THE SOUTHERN BLEACHER COMPANY, SYSTEMS AND CONCEPTS, AND NOT TO BE REVIEWED NOR BE COPIED. THIS DRAWING IS LOANED SUBJECT TO ITS RETURN UPON DEMAND AND, IS NOT TO BE USED DIRECTLY OR INDIRECTLY IN ANY WAY DETRIMENTAL TO OUR INTERESTS.

STRUCTURAL ENGINEERS
TAYLOR & YEAMAN
CORPORATION
CORBETT
CORBETT
553 S. Oak Knoll Ave. Pasadena, CA 91101
626 792 2488
626 792 2489
626 792 2490
626 792 2491
Southern BLEACHER COMPANY
GRANDSTANDS • BLEACHERS • STADIUMS
PO Box One, Graham, Texas 76450
911 Elm Street Phone: 940/549-0733 Fax: 940/549-1365
Established 1926

REGISTERED PROFESSIONAL ENGINEER
BRIAN T. DEAN
S 6087
STRUCTURAL
STATE OF CALIFORNIA
S&S 01/08/25
PRINCIPAL

NO	DESCRIPTION	DATE	BY
1	DSA COMMENTS	4/01/24	HC

DRAWN	CHECKED
05/10/24	HC DMC

JOB NUMBER #24094

SHEET B29 OF B35

EXITS - VISITOR
8" RISE X 26" TREAD / 133'-6" (7 ROWS)

BELLFLOWER UNIFIED SCHOOL DISTRICT
MAYFAIR HIGH SCHOOL
LAKEWOOD, CALIFORNIA

22" X 34" (1:1x1.7 = 1/2 indicated scale)

24094

IDENTIFICATION STAMP
DIV. OF THE STATE ARCHITECT
APP: 03-124281 INC:
REVIEWED FOR
SS ☑ FLS ☑ ACS ☑
DATE: 02/04/2025

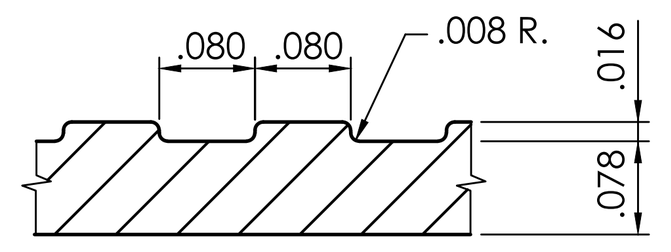

NOTE: TYPICAL FOR ALL PLANKS.

1 FLUTED SURFACE DETAIL
B30 NOT TO SCALE

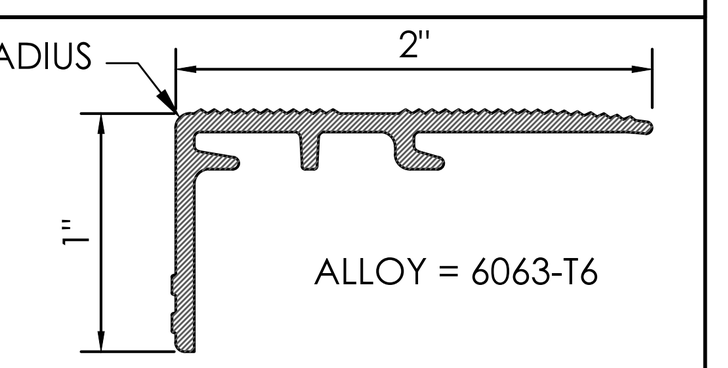

2 ALUMINUM AISLE NOSING
B30 NOT TO SCALE

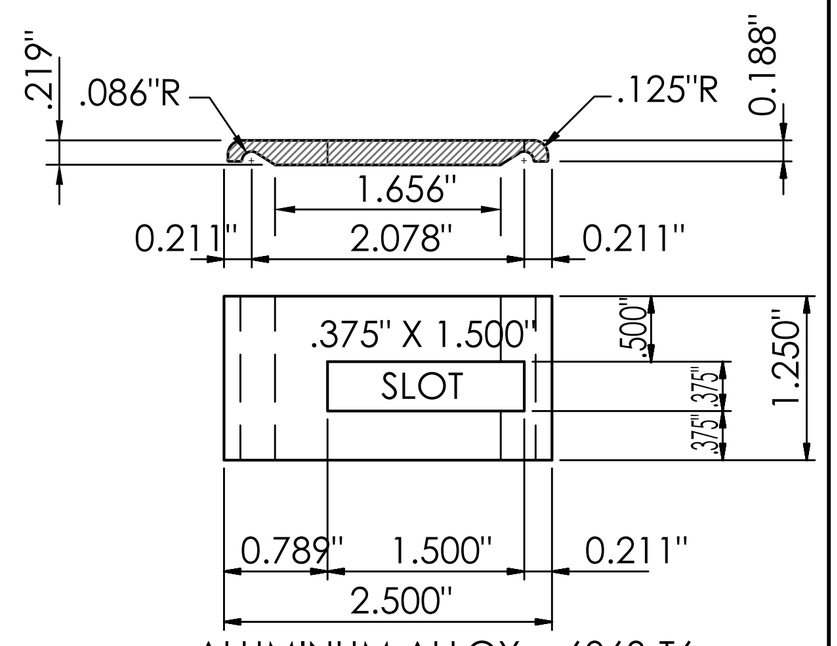

ALUMINUM ALLOY = 6063-T6
EST. AREA = .488 SQ. IN.
EST. WT/FT. = .586 LB.
EST. PERIMETER = 5.427 IN.

3 HOLD DOWN CLIP DETAIL
B30 NOT TO SCALE

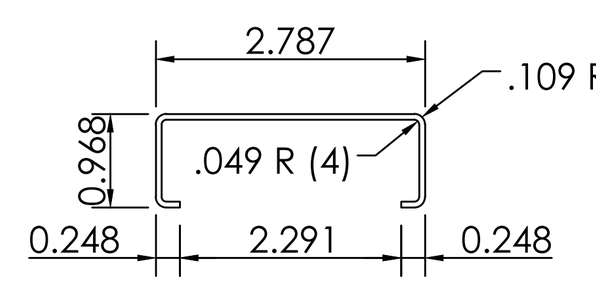

ALUMINUM JOINT SLEEVE
.060 WALL , 0.337#/FT.
1. Ix = .031 IN. e-4
2. MATERIAL - 6063 T-6
3. MIN. MAT. PROP. - 25000 PSI
4. E = 10,000,000 PSI
5. C = .699 IN.

4 ALUMINUM JOINT SLEEVE DETAIL
B30 NOT TO SCALE

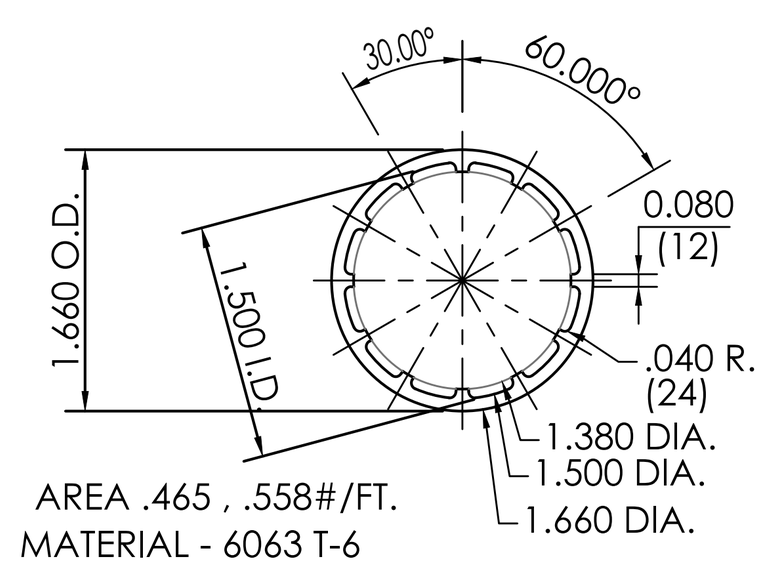

AREA .465 , .558#/FT.
MATERIAL - 6063 T-6

5 1 5/8" O.D. ALUMINUM RAIL DETAIL
B30 NOT TO SCALE 6063 T6

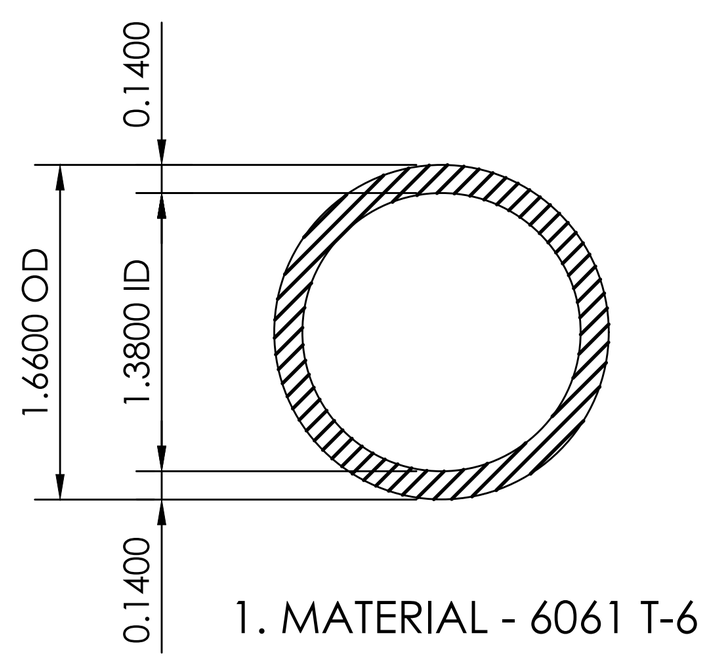

1. MATERIAL - 6061 T-6

6 SCHED. 40 ALUMINUM PIPE DETAIL
B30 NOT TO SCALE

NOTE: PLANK SHOWN IN DETAIL IS A 2X10. ALL OTHER PLANK USED SHALL BE SIMILAR.

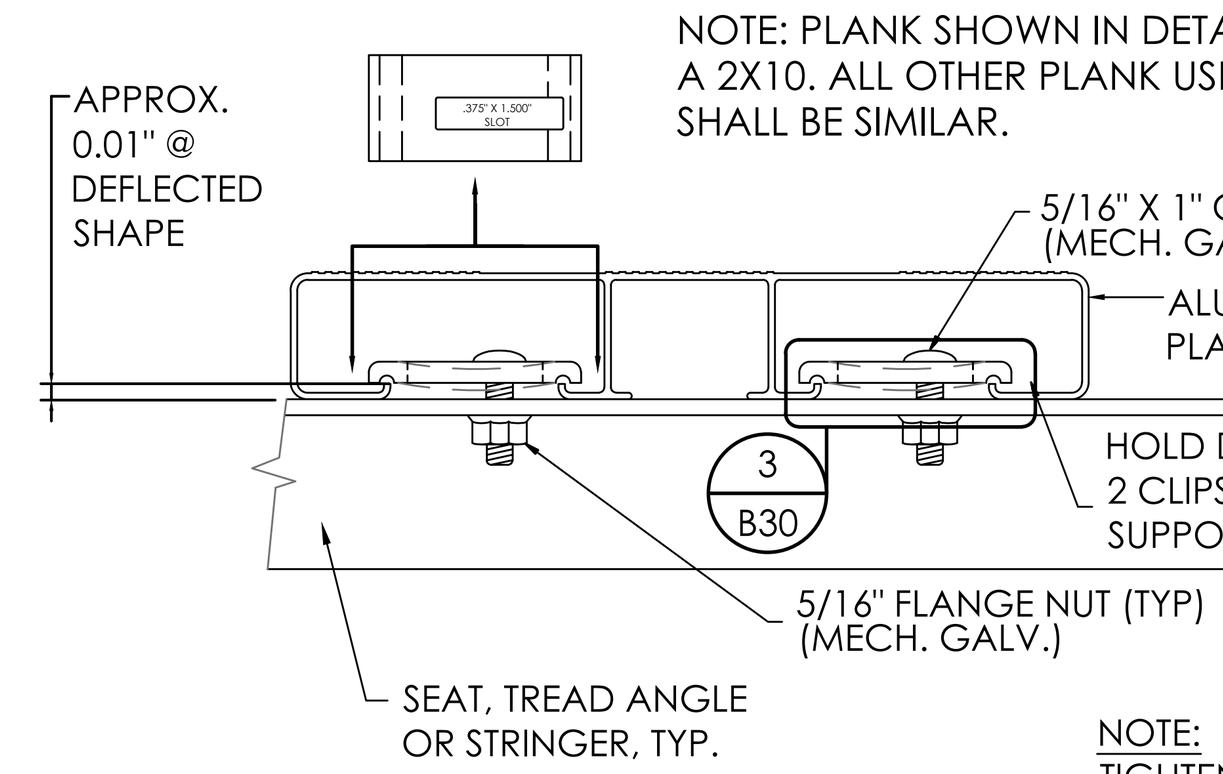

NOTE:
TIGHTEN NUTS 1 TO 1-1/2 TURNS FROM SNUG -OR- 15 FT-LB TORQUE -OR- UNTIL CLIP IS PARTIALLY DEFLECTED AND OBSERVED TO BE IN CONTACT WITH OR WITHIN 0.01" OF CONTACT WITH STRUCTURE BELOW.

7 PLANK INSTALLATION DETAIL
B30 NOT TO SCALE

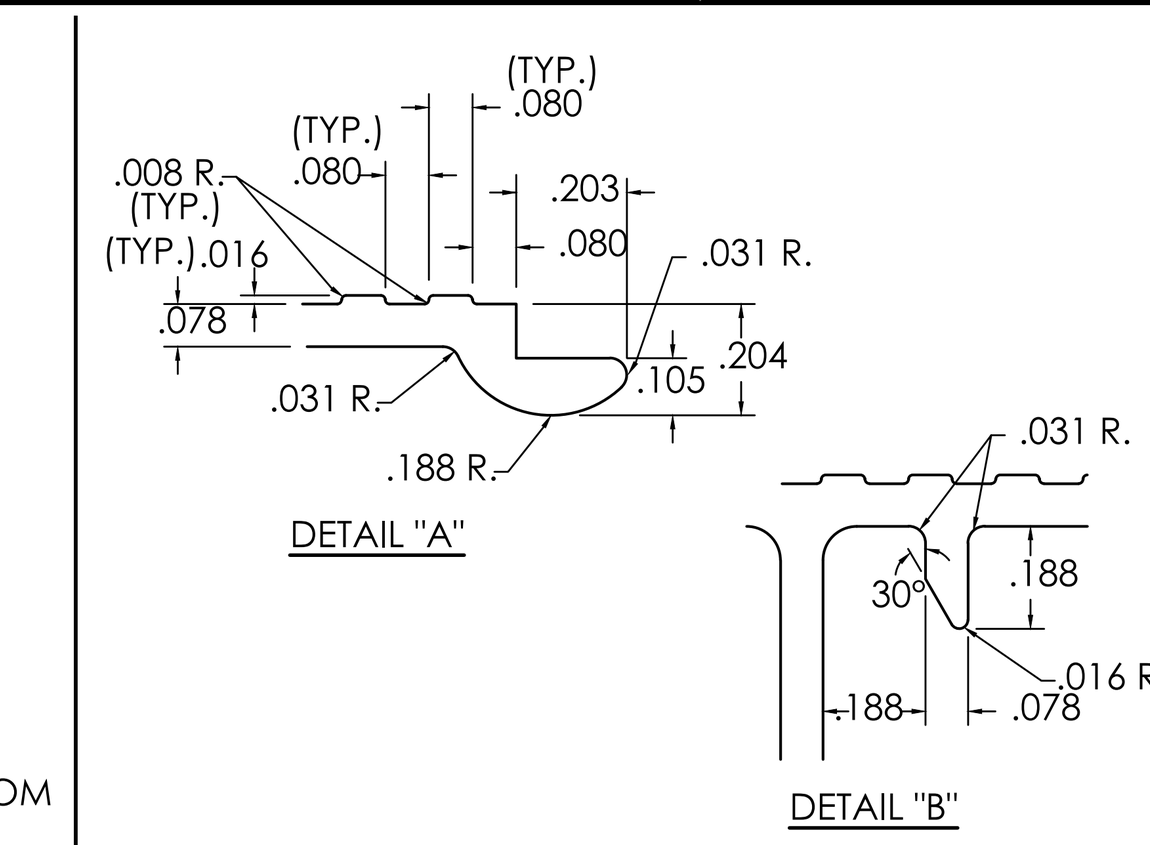

8 INTERLOCK PLANK DETAIL
B30 NOT TO SCALE

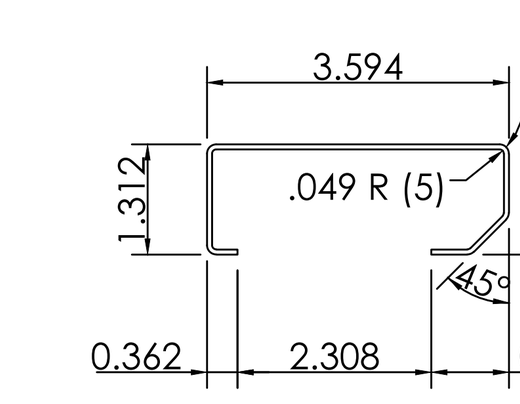

STANDARD ALUMINUM PLANK SLEEVE
.060 WALL , 0.497#/FT.
1. Ix = .097 IN. e-4
2. MATERIAL - 6063 T-6
3. MIN. MAT. PROP. - 25000 PSI
4. E = 10,000,000 PSI
5. C = .891 IN.

9 STANDARD ALUMINUM PLANK SLEEVE
B30 NOT TO SCALE

1. INSERT THE JOINT SLEEVE APPROX. HALFWAY INTO THE PLANK, ANCHOR WITH HARDWARE PROVIDED.

PAN HEAD TEK 24 (1/2" ZINC PLATED)

2. SLIDE THE END OF THE NEXT PLANK OVER THE JOINT SLEEVE UNTIL THE PLANKS ARE SNUG AGAINST EACH OTHER. DO NOT ANCHOR THIS PLANK TO THE JOINT SLEEVE.

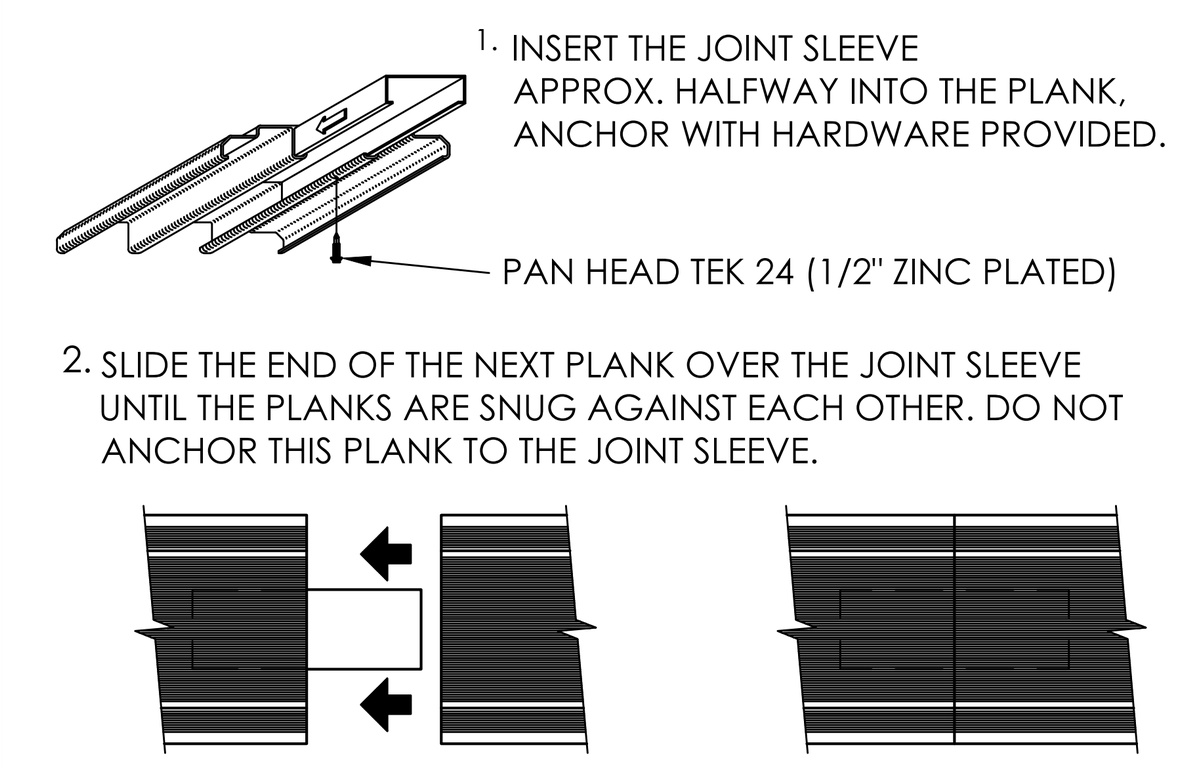

10 RISER JOINT SLEEVE INSTALLATION DETAIL
B30 NOT TO SCALE

1. LOCATE THE END CAP AS SHOWN. (WITH WIDEST FLANGE ON BOTTOM FOR CHANNEL E.C., AND NARROW FLANGE ON TOP FOR ANGLE E.C. .)

2. MECHANICALLY FASTEN THROUGH BOTTOM FLANGE OF CHANNEL E.C., AND TOP FLANGE OF ANGLE E.C. (CHANNEL E.C. SHOULD BE TAPPED INTO PLACE WITH A RUBBER MALLET AS NECESSARY .)

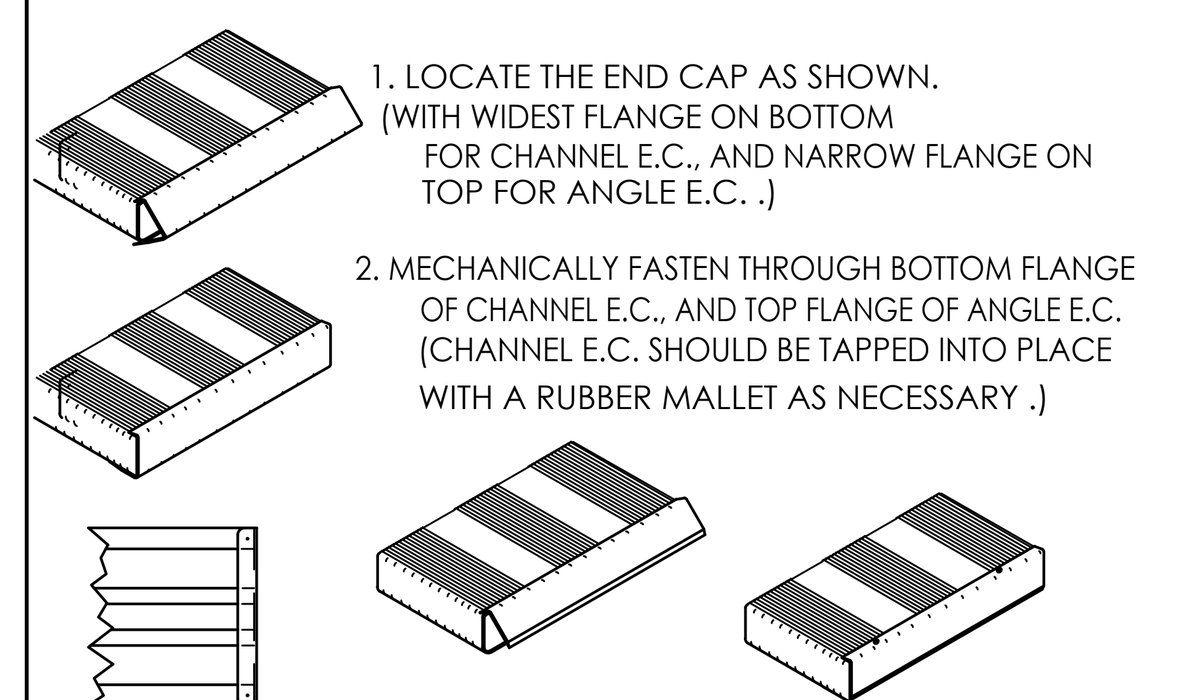

11 ENDCAP INSTALLATION DETAIL
B30 NOT TO SCALE

JOINT SLEEVE 12" LONG(TYP)

1. INSERT THE TWIN JOINT SLEEVES APPROXIMATELY HALFWAY INTO THE PLANK, STAGGERED 1/2"±. ANCHOR WITH #24 TEK SCREW.

2. SLIDE THE END OF THE NEXT PLANK OVER THE TWIN JOINT SLEEVES UNTIL THE PLANKS ARE SNUG AGAINST EACH OTHER. DO NOT ANCHOR THIS PLANK TO THE TWIN JOINT SLEEVES.

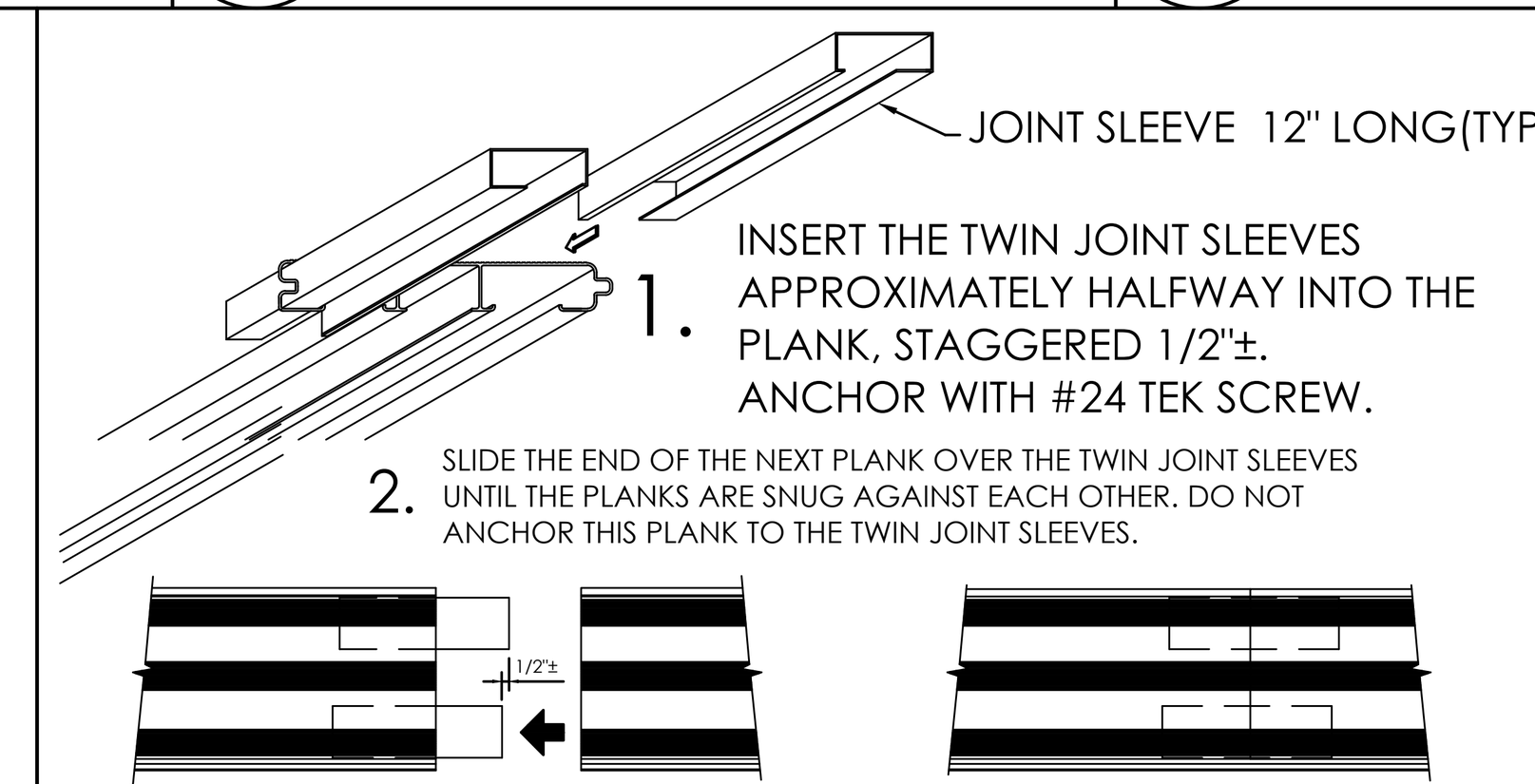

12 TONGUE & GROOVE JOINT SLEEVE INSTALLATION
B30 NOT TO SCALE

1. INSERT THE TWIN JOINT SLEEVES APPROXIMATELY HALFWAY INTO THE PLANK, STAGGERED 1/2"±. ANCHOR WITH HARDWARE PROVIDED.

2. SLIDE THE END OF THE NEXT PLANK OVER THE TWIN JOINT SLEEVES UNTIL THE PLANKS ARE SNUG AGAINST EACH OTHER. DO NOT ANCHOR THIS PLANK TO THE TWIN JOINT SLEEVES.

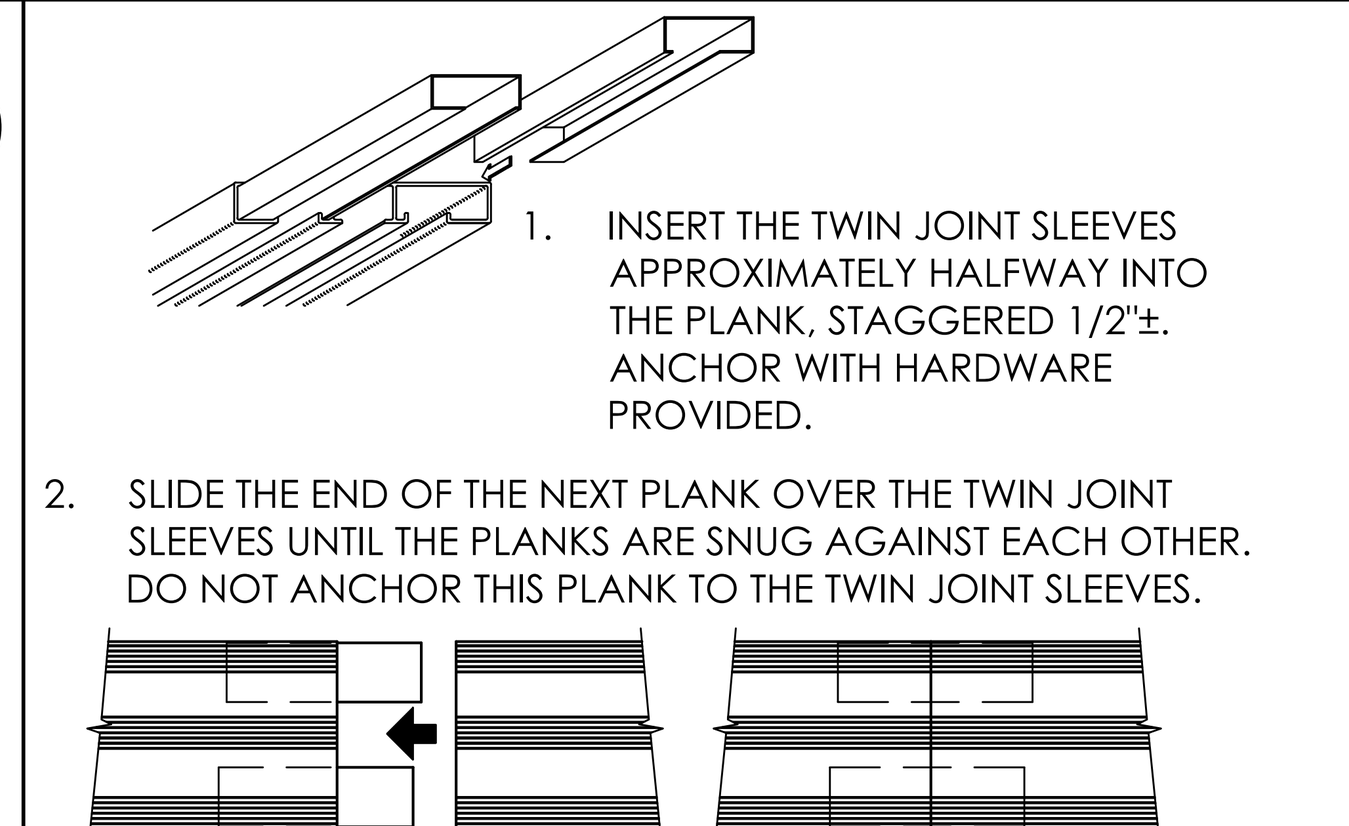

13 JOINT SLEEVE INSTALLATION DETAIL
B30 NOT TO SCALE

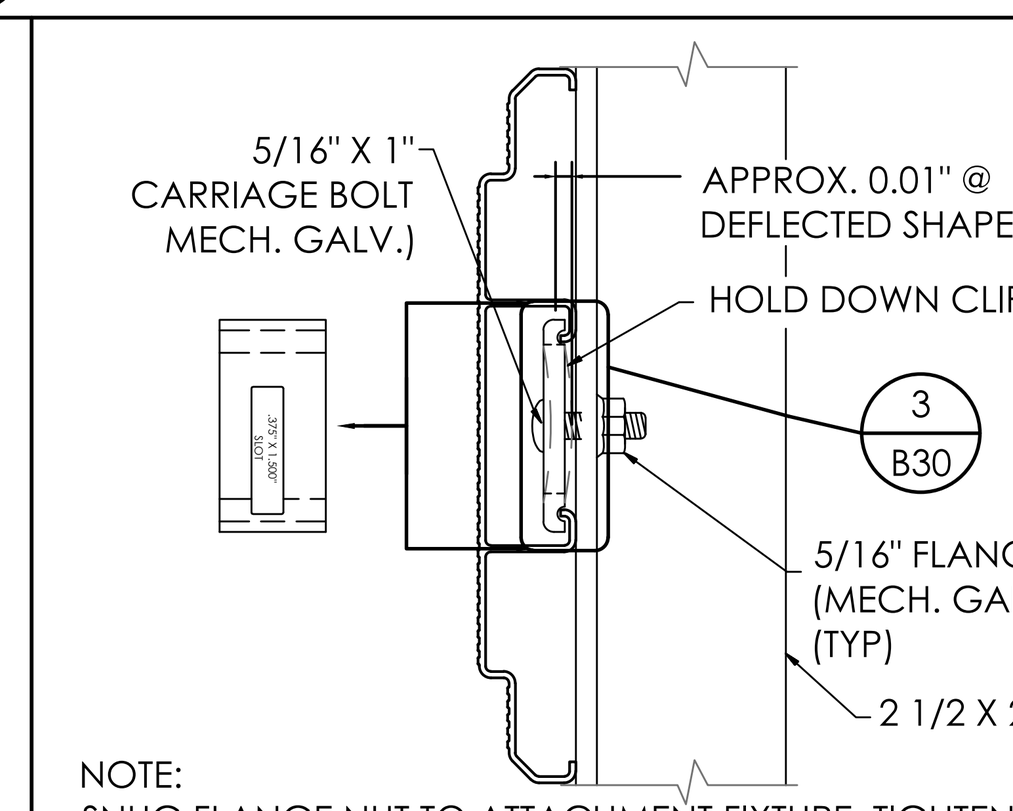

NOTE:
SNUG FLANGE NUT TO ATTACHMENT FIXTURE. TIGHTEN 1 TO 1½ TURNS TILL HOLDDOWN CLIP IS PARTIALLY DEFLECTED

14 RISER BOARD FACADE INSTALLATION DETAIL
B30 NOT TO SCALE

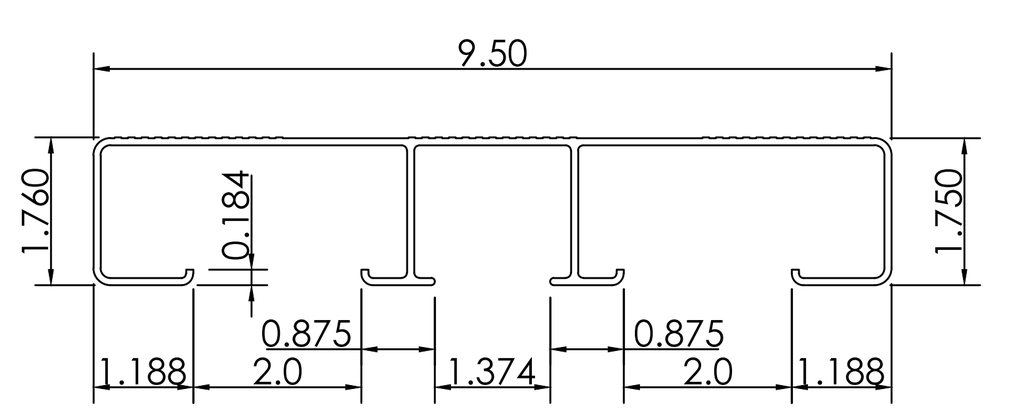

2X10 HEAVY ALUMINUM PLANK
.075 WALL , 1.769#/FT.
1. Ix = .843 IN. e-4
2. MATERIAL - 6063 T-6
3. MIN. MAT. PROP. - 25000 PSI
4. E = 10,000,000 PSI
5. C = 1.10 IN.

15 2 X 10 HEAVY ALUMINUM PLANK DETAIL
B30 NOT TO SCALE

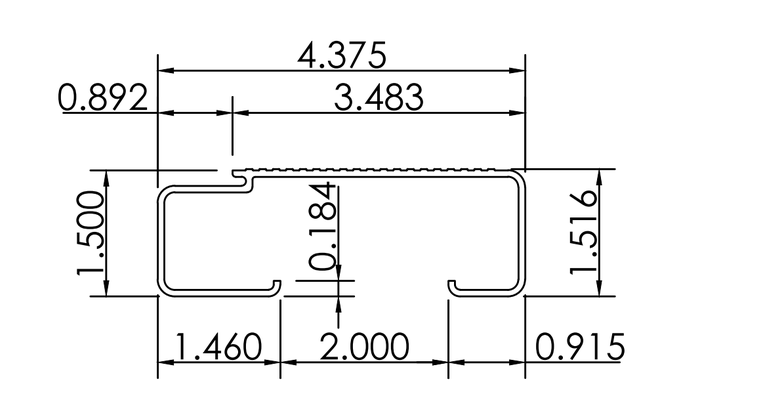

2X4 1/2 ALUMINUM STEPNOSE PLANK
.078 WALL , 0.828#/FT.
1. Ix = .231 IN. e-4
2. MATERIAL - 6063 T-6
3. MIN. MAT. PROP. - 25000 PSI
4. E = 10,000,000 PSI
5. C = .921 IN.

16 2X4 1/2 ALUMINUM STEPNOSE PLANK DETAIL
B30 NOT TO SCALE

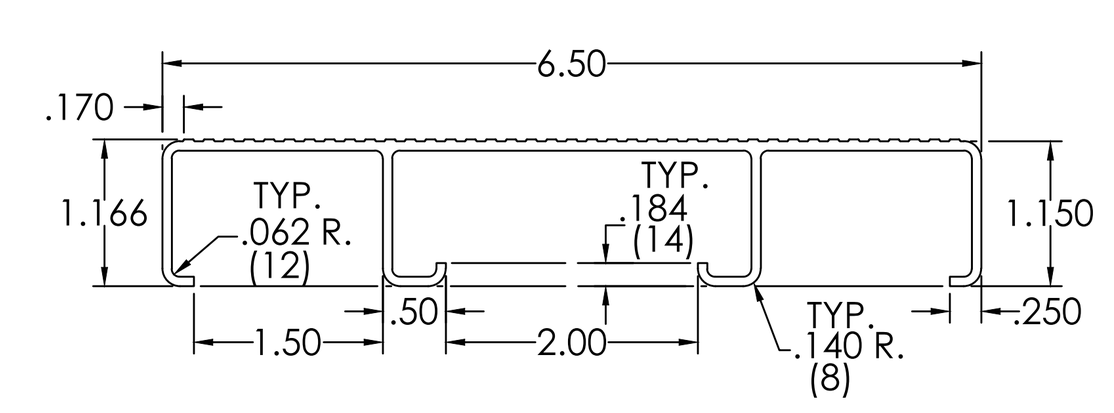

1X6 1/2 ALUMINUM TOE BOARD
.078 WALL , 1.132#/FT.
1. Ix = 0.154 in^4
2. MATERIAL - 6063 T-6
3. MIN. MAT. PROP. - 25000 PSI
4. E = 10,000,000 PSI
5. C = 0.8.22 in

17 1X6 1/2 ALUMINUM (VERT.) TOEBOARD PLANK DETAIL
B30 NOT TO SCALE

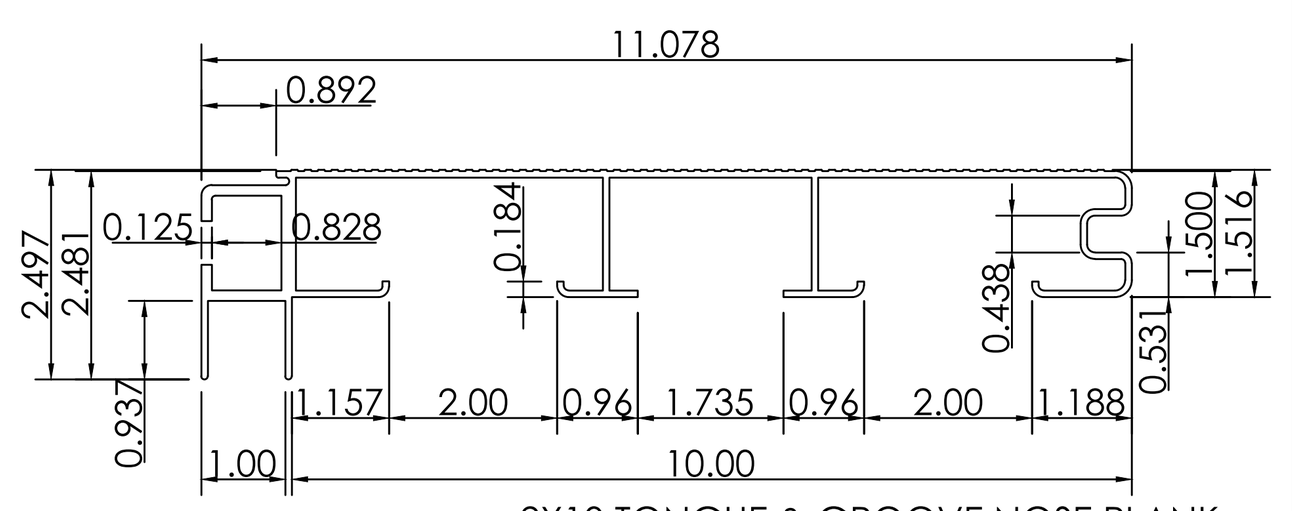

2X10 TONGUE & GROOVE NOSE PLANK
.078 WALL , 2.750#/FT.
1. Ix = 1.05 IN. e-4
2. MATERIAL - 6063 T-6
3. MIN. MAT. PROP. - 25000 PSI
4. E = 10,000,000 PSI
5. C = .813 IN.

18 2 X 10 TONGUE & GROOVE ALUMINUM NOSE PLANK DETAIL
B30 NOT TO SCALE

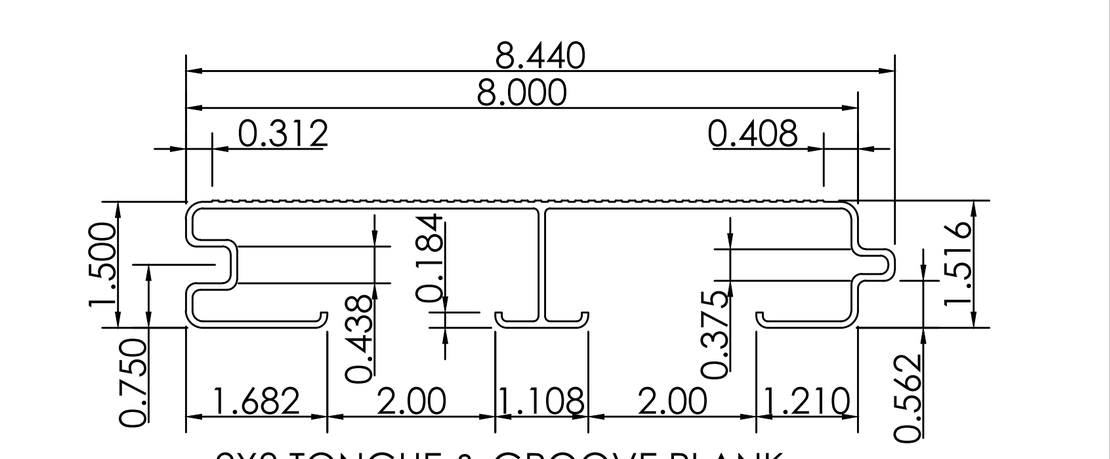

2X8 TONGUE & GROOVE PLANK
.078 WALL , 1.711#/FT.
1. Ix = .511 IN. e-4
2. MATERIAL - 6063 T-6
3. MIN. MAT. PROP. - 25000 PSI
4. E = 10,000,000 PSI
5. C = .927 IN.

19 2 X 8 ALUMINUM TONGUE & GROOVE PLANK DETAIL
B30 NOT TO SCALE

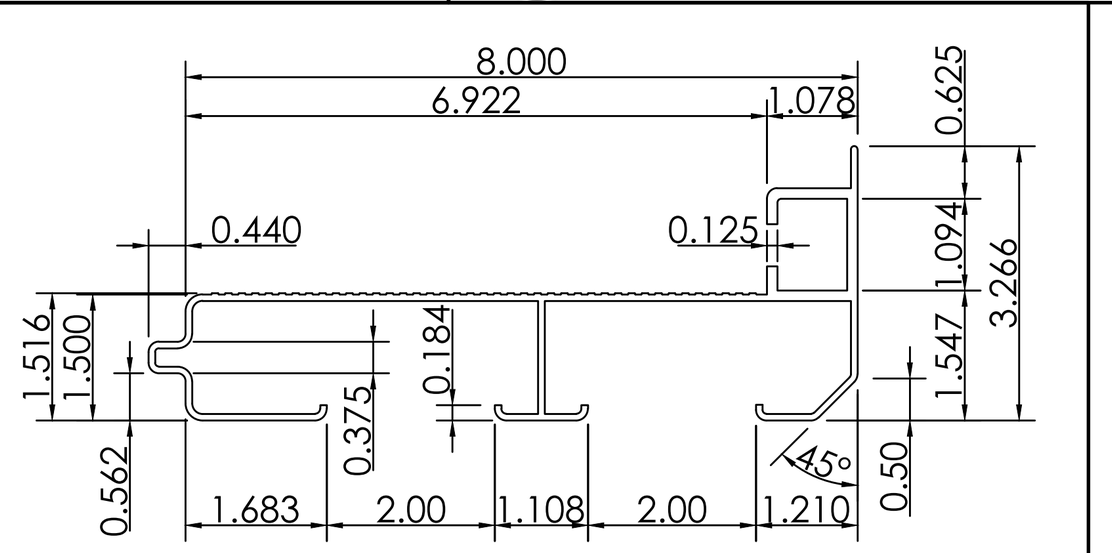

2X8 TONGUE & GROOVE HEEL PLANK
.078 WALL , 2.145#/FT.
1. Ix = 1.18 IN. e-4
2. MATERIAL - 6063 T-6
3. MIN. MAT. PROP. - 25000 PSI
4. E = 10,000,000 PSI
5. C = 1.28 IN.

20 2 X 8 TONGUE & GROOVE ALUMINUM HEEL PLANK DETAIL
B30 NOT TO SCALE

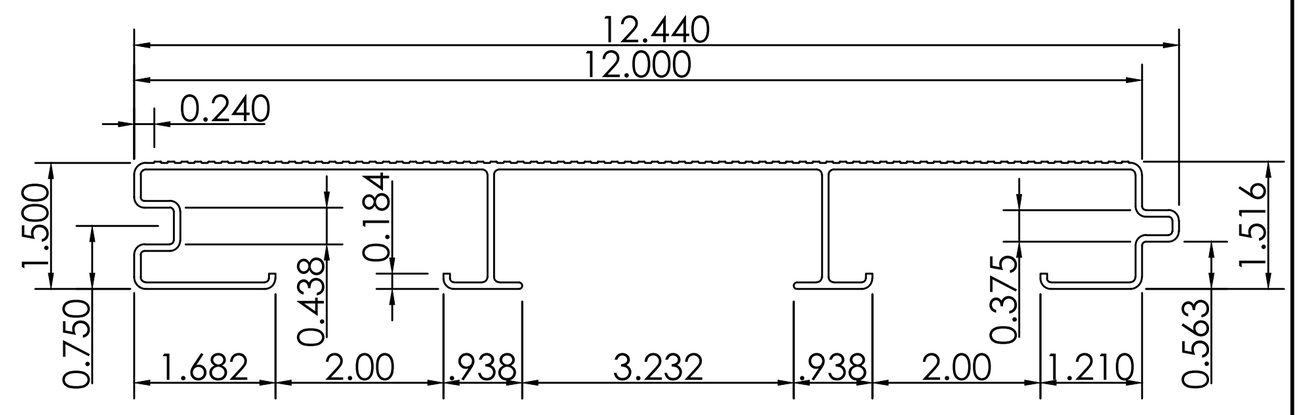

2X12 TONGUE & GROOVE PLANK
.078 WALL , 2.344#/FT.
1. Ix = .676 IN. e-4
2. MATERIAL - 6063 T-6
3. MIN. MAT. PROP. - 25000 PSI
4. E = 10,000,000 PSI
5. C = .986 IN.

21 2 X 12 ALUMINUM TONGUE & GROOVE PLANK DETAIL
B30 NOT TO SCALE

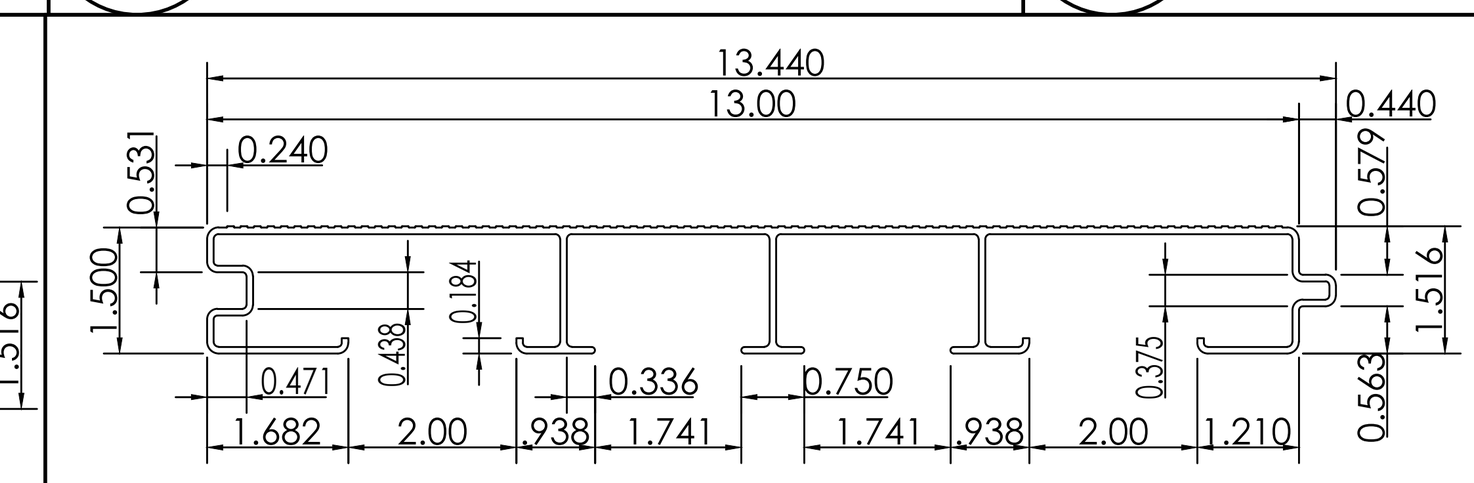

2X13 ALUMINUM TONGUE & GROOVE PLANK
.078 WALL , 3.040#/FT.
1. Ix = .769 IN. e-4
2. MATERIAL - 6063 T-6
3. MIN. MAT. PROP. - 25000 PSI
4. E = 10,000,000 PSI
5. C = .968 IN.

22 2 X 13 ALUMINUM TONGUE & GROOVE PLANK DETAIL
B30 NOT TO SCALE

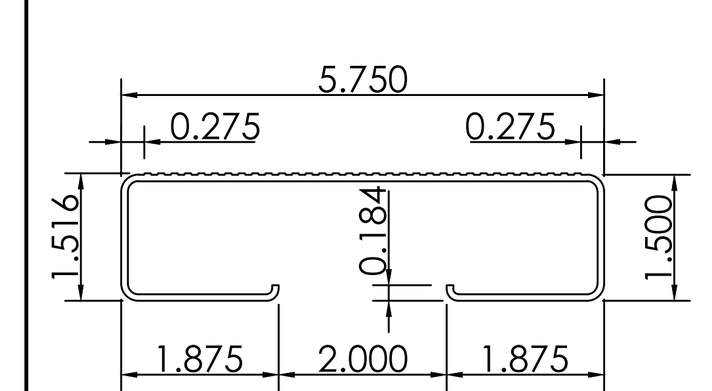

2X6 ALUMINUM PLANK
.078 WALL , 1.177#/FT.
1. Ix = .402 IN. e-4
2. MATERIAL - 6063 T-6
3. MIN. MAT. PROP. - 25000 PSI
4. E = 10,000,000 PSI
5. C = .890 IN.

23 2X6 ALUMINUM PLANK DETAIL
B30 NOT TO SCALE

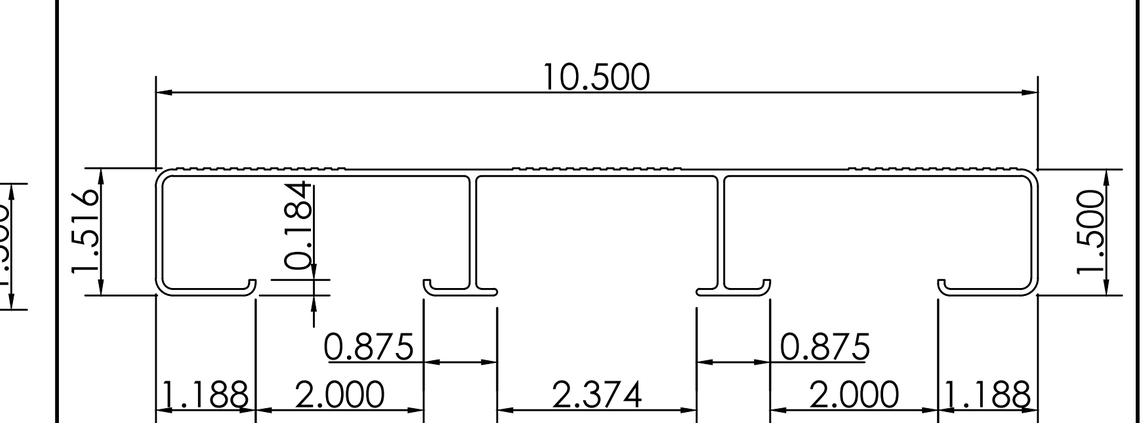

2X11 ALUMINUM PLANK
.078 WALL , 1.936#/FT.
1. Ix = .573 IN. e-4
2. MATERIAL - 6063 T-6
3. MIN. MAT. PROP. - 25000 PSI
4. E = 10,000,000 PSI
5. C = .987 IN.

24 2 X 11 ALUMINUM PLANK DETAIL
B30 NOT TO SCALE

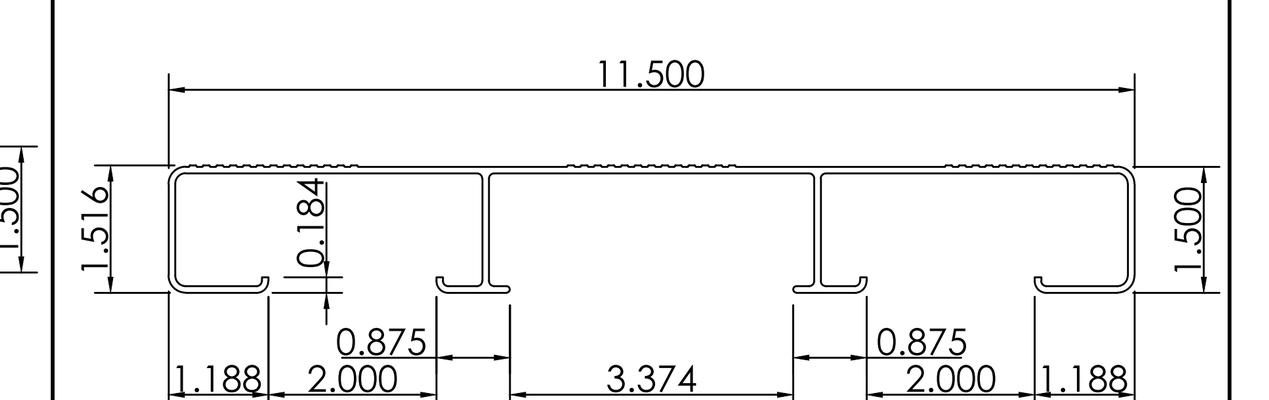

2X12 ALUMINUM PLANK
.078 WALL , 2.029#/FT.
1. Ix = .591 IN. e-4
2. MATERIAL - 6063 T-6
3. MIN. MAT. PROP. - 25000 PSI
4. E = 10,000,000 PSI
5. C = 1.01 IN.

25 2X12 ALUMINUM PLANK DETAIL
B30 NOT TO SCALE

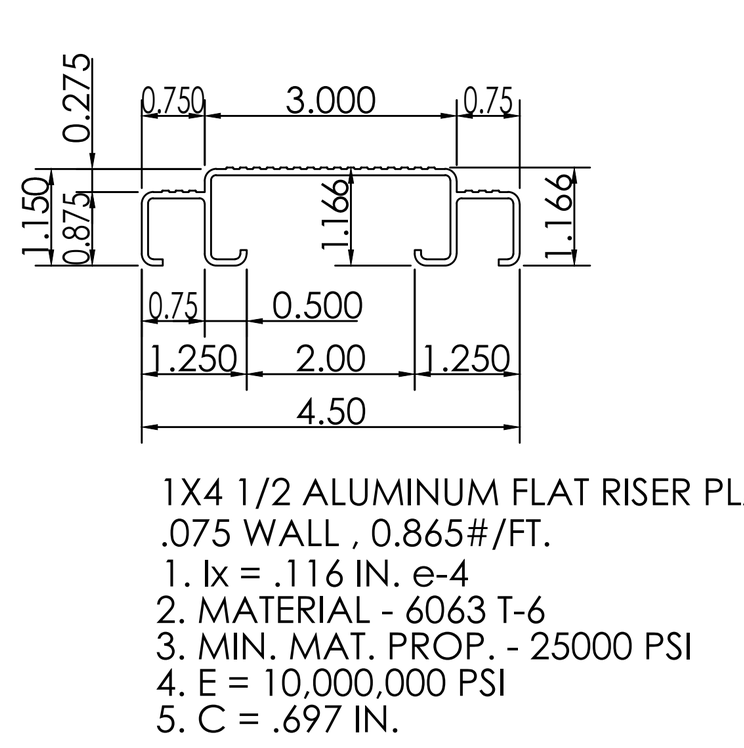

1X4 1/2 ALUMINUM FLAT RISER PLANK
.075 WALL , 0.865#/FT.
1. Ix = .116 IN. e-4
2. MATERIAL - 6063 T-6
3. MIN. MAT. PROP. - 25000 PSI
4. E = 10,000,000 PSI
5. C = .697 IN.

26 1 X 4 1/2 ALUMINUM FLAT RISER PLANK DETAIL
B30 NOT TO SCALE

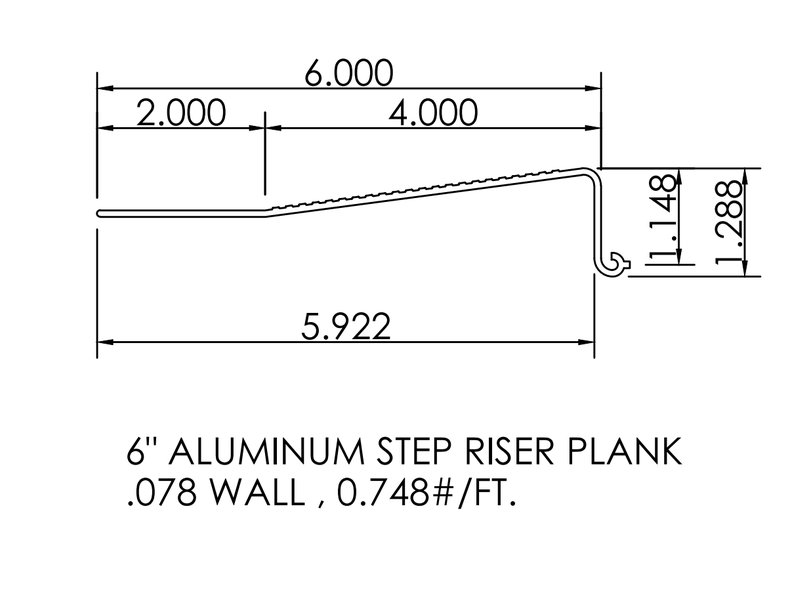

6" ALUMINUM STEP RISER PLANK
.078 WALL , 0.748#/FT.

27 6" ALUMINUM STEP RISER PLANK DETAIL
B30 NOT TO SCALE

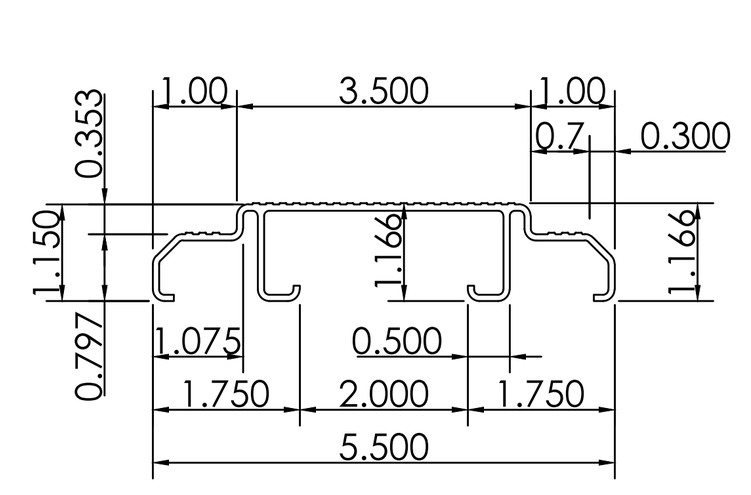

1X5 1/2 ALUMINUM FLAT RISER PLANK
.075 WALL , 0.982#/FT.
1. Ix = .125 IN. e-4
2. MATERIAL - 6063 T-6
3. MIN. MAT. PROP. - 25000 PSI
4. E = 10,000,000 PSI
5. C = .720 IN.

28 1 X 5 1/2 ALUMINUM FLAT RISER PLANK DETAIL
B30 NOT TO SCALE

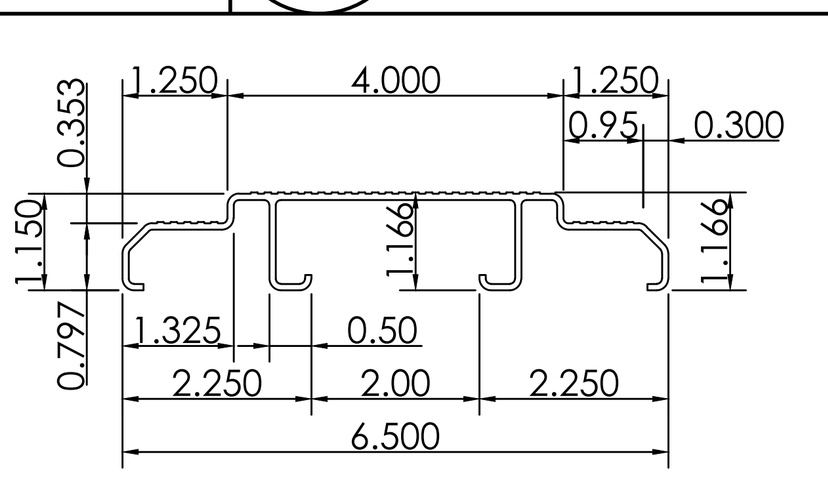

1X6 1/2 ALUMINUM FLAT RISER PLANK
.075 WALL , 1.081#/FT.
1. Ix = .131 IN. e-4
2. MATERIAL - 6063 T-6
3. MIN. MAT. PROP. - 25000 PSI
4. E = 10,000,000 PSI
5. C = .740 IN.

29 1 X 6 1/2 ALUMINUM FLAT RISER PLANK DETAIL
B30 NOT TO SCALE

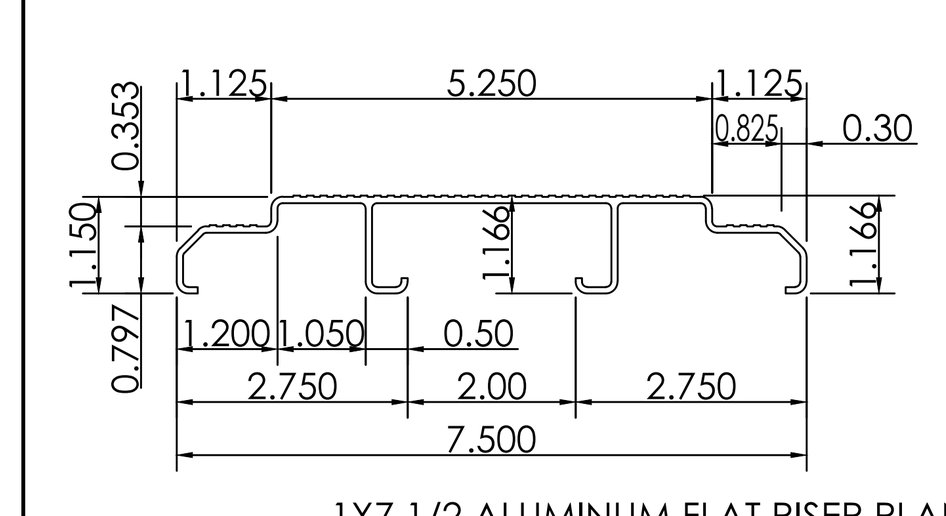

1X7 1/2 ALUMINUM FLAT RISER PLANK
.075 WALL , 1.181#/FT.
1. Ix = .144 IN. e-4
2. MATERIAL - 6063 T-6
3. MIN. MAT. PROP. - 25000 PSI
4. E = 10,000,000 PSI
5. C = .779 IN.

30 1 X 7 1/2 ALUMINUM FLAT RISER PLANK DETAIL
B30 NOT TO SCALE

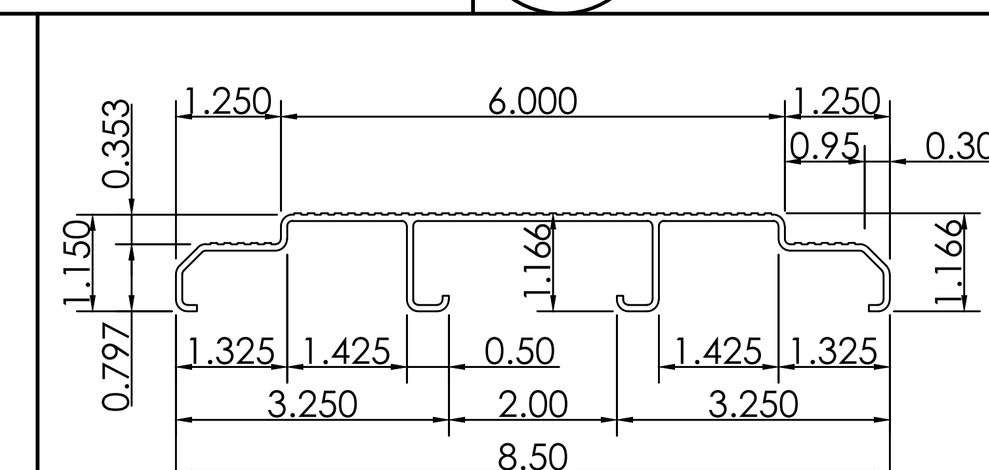

1X8 1/2 ALUMINUM FLAT RISER PLANK
.075 WALL , 1.283#/FT.
1. Ix = .151 IN. e-4
2. MATERIAL - 6063 T-6
3. MIN. MAT. PROP. - 25000 PSI
4. E = 10,000,000 PSI
5. C = .799 IN.

31 1 X 8 1/2 ALUMINUM FLAT RISER PLANK DETAIL
B30 NOT TO SCALE

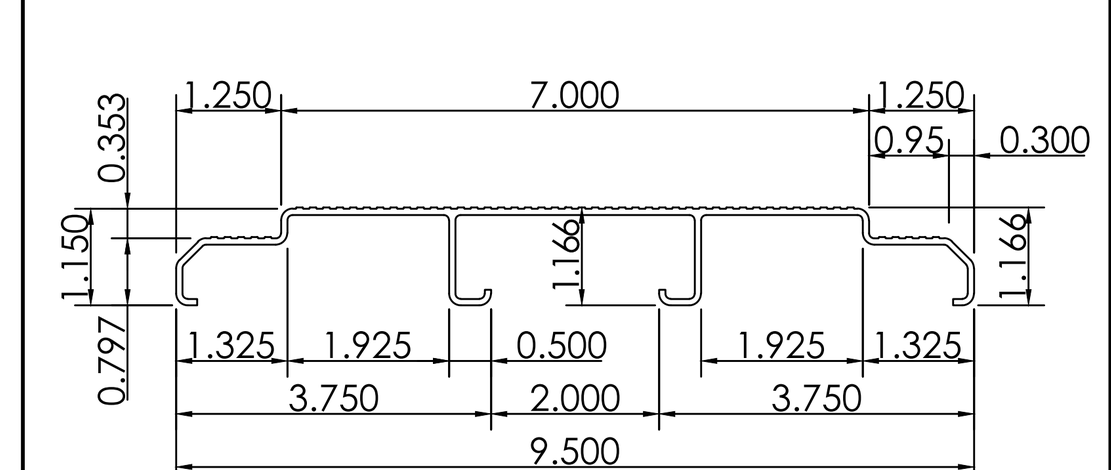

1X9 1/2 ALUMINUM FLAT RISER PLANK
.075 WALL , 1.381#/FT.
1. Ix = .159 IN. e-4
2. MATERIAL - 6063 T-6
3. MIN. MAT. PROP. - 25000 PSI
4. E = 10,000,000 PSI
5. C = .822 IN.

32 1 X 9 1/2 ALUMINUM FLAT RISER PLANK DETAIL
B30 NOT TO SCALE

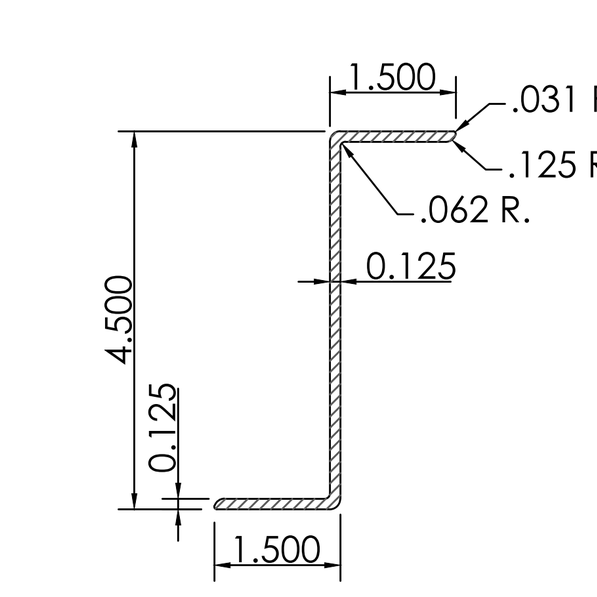

ALLOY = 6061-T6
ESTIMATED AREA = 0.895 SQ. IN.
ESTIMATED WEIGHT PER FT. = 1.074 LBS.
ESTIMATED PERIMETER = 14.45 IN.

33 4 1/2" ALUMINUM "Z" BRACKET DETAIL
B30 NOT TO SCALE

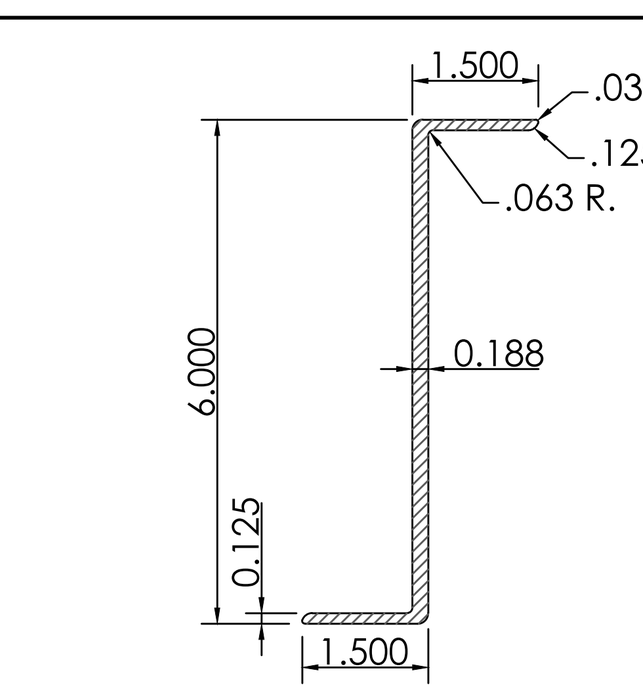

ALLOY = 6061-T6
ESTIMATED AREA = 1.445 SQ. IN.
ESTIMATED WEIGHT PER FT. = 1.734 LBS.
ESTIMATED PERIMETER = 17.34 IN.

34 6" ALUMINUM "Z" BRACKET DETAIL
B30 NOT TO SCALE

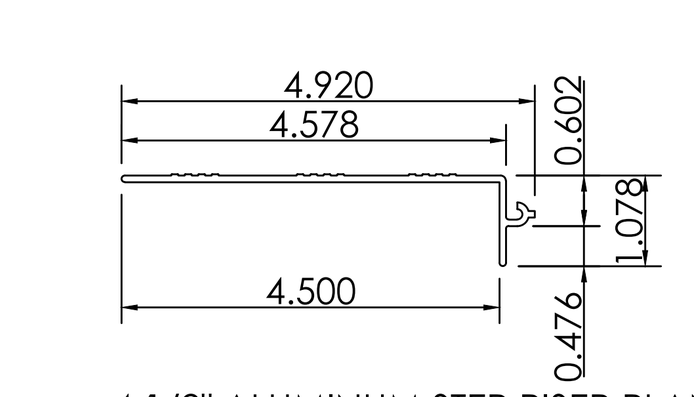

4 1/2" ALUMINUM STEP RISER PLANK
.078 WALL , 0.540#/FT.

35 4 1/2" ALUMINUM STEP RISER PLANK DETAIL
B30 NOT TO SCALE

THIS DRAWING AND ALL INFORMATION THEREIN IS THE PROPERTY OF THE SOUTHERN BLEACHER COMPANY, TAYLOR & SYFAN AND IS CONFIDENTIAL AND MUST NOT BE MADE PUBLIC OR COPIED. THIS DRAWING IS LOANED SUBJECT TO RE-TURN UPON DEMAND AND, IS NOT TO BE USED DIRECTLY OR INDIRECTLY IN ANY WAY DETRIMENTAL TO OUR INTERESTS.

TAYLOR & SYFAN
STRUCTURAL ENGINEERS
CENTRAL COAST OFFICE Ph: (626) 793-7438 Fax: (626) 793-7439 Toll: (800) 579-3881
553 S. Oak Knoll Ave. Pasadena, CA 91101
http://www.taylorsyfan.com/

Southern® BLEACHER COMPANY
GRANDSTANDS • BLEACHERS • STADIUMS
PO Box One, Graham, Texas 76450
801 Fifth Street.
Phone: 940/549-0733 Fax: 940/549-1365
Established 1946

REGISTERED PROFESSIONAL ENGINEER
BRIAN T. DEAN
S 6087
STRUCTURAL
STATE OF CALIFORNIA
S&S 01/08/25
PRINCIPAL

TYPE: PLANK DETAILS
HOME & VISITOR

TITLE: BELLFLOWER UNIFIED SCHOOL DISTRICT
MAYFAIR HIGH SCHOOL
LAKEWOOD, CALIFORNIA

REV	BY	DATE	DESCRIPTION
	HC	09/27/24	DSA COMMENTS

DATE	DRAWN	CHECKED
05/10/24	HC	DMC

JOB NUMBER #24094

SHEET B30 OF B35

22" X 34" (11x17 = 1/2 indicated scale)

24094

IDENTIFICATION STAMP
DIV. OF THE STATE ARCHITECT
APP: 03-124281 INC:
REVIEWED FOR
SS ☑ FLS ☑ ACS ☑
DATE: 02/04/2025

GALV. RAIL CLAMP, TYP.
1 ⅝" O.D. RAIL, TYP.
1 1/2"
3/4"
6"
RAIL RISER, TYP.
⅜" X 1 ¼" CARRIAGE BOLT w/ NUT & LOCK WASHER, TYP.

1 B31 RAIL RISER ATTACHMENT DETAIL
NOT TO SCALE

3 1/4"
1 ¾" NOMINAL PIPE SIZE (1 ⅝" O.D. ACTUAL) OFFSET HANDRAIL FASTENED TO ALUMINUM STANDOFF BRACKET w/ (2) TEK/3 #12-14X1"
1 1/2"
2.68"
ALUMINUM STANDOFF BRACKET FOR HANDRAIL BOLTED TO RAIL RISER w/ ⅜ X 1 ¼ CAP BOLT w/ LW, HEX NUT, TYP.

2 B31 HANDRAIL DETAIL
NOT TO SCALE

MIG 1a
3/16"
L3X3X¼" RAIL RISER
½"Ø HILTI KB TZ2 ICC-ESR-4266 w/ 3 ¾" MIN. EMBED.
6X6X⅜" PLATE
6"
4 1/2"
3"
3"
4 1/2"
6"

3 B31 BASE PLATE ATTACHMENT DETAIL
NOT TO SCALE

3"
1/8"
3 1/2"
3/4"
A
A
1"
FENCE, TYP.
4 3/8" X1" X1/8" TENSION BAR CLAMP, TYP.
1 1/2"
4 3/8"
3/8" X1 1/4" CARRIAGE BOLT w/ NUT & LOCK WASHER, TYP.
3" X 3" X 1/4" SIDE FENCE TO BACK FENCE TRANSITION RAIL RISER ANGLE @ REAR & ENDS OF BLEACHER, TYP.
ELEVATION VIEW

FENCE
9/16" X 3/16"X REQUIRED LENGTH TENSION BAR
SIDE FENCE TO BACK FENCE TRANSITION RAIL RISER ANGLE AT REAR & ENDS OF BLEACHER
4 3/8" X 1" X 1/8" TENSION BAR CLAMP (TYP)
3/8" X 1 1/4" CARRIAGE BOLT w/ NUT & LOCK WASHER, TYP.
9/16" X 3/16" X REQ'D. LENGTH TENSION BAR (TYP)
CHAINLINK FENCE
POSITION BEFORE TIGHTENING BOLT
POSITION AFTER TIGHTENING BOLT
1/8"
5/8"
VIEW A - A

4 B31 TENSION BAR CLAMP DETAIL
NOT TO SCALE

MIG 1A
3/16"
1.0 1/2"
MIG 2A
3/16"
1 1/8"
2" COPE (TYP)
2 11/32"
6 1/4"
2"
2 9/16"
4"
9 1/8"
2 9/16"
1 9/16"
C7X9.8
4 1/2"
2"
L3 X 2 X 3/16 @ 3"
2"
1/2"Ø HILTI SS KB TZ2 ICC-ESR-4266 w/ 3 3/4" MIN. EMBED.
3/16"
MIG 1A
3/16"
3/16"
MIG 1A
11"
L2 X 2 X 3/16 (TYP. ALL STEP RAIL RISER CLIPS)
7/16" HOLES FOR ATTACHMENT OF STEP PLANK CLIP, TYP.

5 B31 LOWER PART/STEP FRAME DETAIL
NOT TO SCALE
(6" RISE X 11" TREAD SHOWN, OTHER RISES SIMILAR)

STEP RISER (TYP)
2X12 STEP NOSE PLANK (TYP)
2 B30 CONTRASTING AISLE NOSING (TYP)
HEX HEAD TEK #3 12X14X1 (5) EVENLY SPACED
STEP RISER CUT TO FIT
HEX HEAD TEK #3 12X14X1 (5) EVENLY SPACED
3/8"Ø HILTI SS KB TZ2 ICC-ESR-4266 w/ 3" MIN. EMBEDMENT, TYP.
L2X2X1/8
1/2"Ø HILTI SS KB TZ2 ICC-ESR-4266 w/ 3 3/4" MIN. EMBED.
3/8"Ø HILTI SS KB TZ2 ICC-ESR-4266 w/ 3" MIN. EMBED., TYP.
L2X2X1/8

6 B31 STEP RISERS @ BOTTOM OF EXIT STEPS
NOT TO SCALE

EXIT STEP STRINGER, TYP.
13 B33 SIM.
1 1/2"
"A"
"A"
4"
7"
5"
151.39°
5/8"Ø X 1 3/4" STRUCT. BOLT TYP.
L3X3X1/4 RAIL RISER TYP.
3/16"
L2X2X3/16 CLIP (TYP)
VIEW "A" - "A"

7 B31 UPPER PART / STEP FRAME CONNECTION DETAIL
NOT TO SCALE

PLAN VIEW (MIDDLE OF STRINGER)
1 1/8"
C7X9.8
STRINGER
L3X3X1/4 RAIL RISER
PLAN VIEW (END OF STRINGER)
1 1/8"
C7X9.8
STRINGER
1 1/2"
L3X3X1/4 RAIL RISER
13 B33 SIM.
L3X3X¼ RAIL RISER
3/16"
2"
4"
6"
C7X9.8
½"
1½"
L3X3X¼ CLIP
L2X2X3/16 CLIP (1 1/2" COPE BOTH ENDS) w/ (2) 5/8"Ø BOLTS, WELDED TO C7X9.8
RAMP STRINGER

8 B31 STAIR CONNECTION DETAIL
NOT TO SCALE

PLAN VIEW
1 1/8"
C7X9.8
L3X3X¼ RAIL RISER, TO GRADE
L3X3X¼ RAIL RISER
3/16"
2"
4"
6"
C7X9.8
L2X2X3/16 CLIP (½" COPE BOTH ENDS) w/ (2) ⅝"Ø BOLTS, WELDED TO C7X9.8

9 B31 STAIR CONNECTION DETAIL
NOT TO SCALE

2 X 12 STEP NOSE ALUMINUM PLANK
(2)⅝"Ø X 1 ½" GALVANIZED CAP BOLT, NUT & LOCK WASHER & FLAT WASHER, TYP.
L2X1 ½X3/16" STEP PLANK CLIP
STAIR STRINGER
VIEW A - A

CONTRASTING AISLE NOSING @ ALL EXTERIOR TREADS & UPPER APPROACH
2X12 STEP NOSE ALUMINUM PLANK
STAIR STRINGER, TYP.
2.1449"
7"
2.1449"
A
A
L2X1 ½X3/16
2.3125"
6.25"
2.3125"
11"
¾" SLOTTED HOLE w/ ⅜"ØX1 ½" GALVANIZED CAP SCREW, NUT & LOCK WASHER & FLAT WASHER, TYP.

10 B31 STEP CONNECTION DETAIL
NOT TO SCALE

VERTICAL, SIZE PER PLAN, TYP.
4 1/2" COPE TYP.
L2X2X3/16 CROSSBRACING @ ALTERNATE BAYS, TYP.
⅜"Ø BOLTS TYP. THIS LOCATION
3/4" TYP.
A-A
⅜"Ø BOLT, TYP.
3" TYP.
PER PLAN

⅜" GALV. CAP BOLT @ CROSSBRACE, TYP.
VERTICAL, SIZE PER PLAN
L2X2X3/16 BRACE, COPED
SECTION "A-A"

11 B31 CROSSBRACE DETAIL
NOT TO SCALE

5'-0 1/8"
4'-4" CLEAR
3'-9 13/16"
2 B31 TYP.
TREAD MOUNTED HANDRAIL
1 B31 TYP.
ANODIZED ALUMINUM HANDRAIL, TYP.
L3X3X¼ GALV. RAIL RISER, TYP.
ALUMINUM TREAD PLANK, TYP.
L2X1 ½X3/16 PLANK CLIP, TYP.
STAIR PLANK TO RUN TO FACADE
ANGLE FRAME THIS SIDE OF STAIR

12 B31 EXIT STEP SECTION
NOT TO SCALE

SWEDGE FIT
ALUMINUM REINF. SLEEVE 1.360"O.D. X 0.1905" WALL X 18" LONG AT BASE
ALUM. HANDRAIL RISER
VIEW "A-A"
±1'-0½" (MIN. 1 TREAD
1'-0½"
1 ½" ANOD. ALUM. HANDRAIL, TYP.
1'-5 11/16"
3'-6"
3'-0"
A
A
CONCRETE EXIT PAD
18" ALUM. REINF. SLEEVE
MANUFACTURED MILL ALUMINUM ROUND FLANGE FLOOR MOUNTED PIPE FITTING, TYP.
⅝"Ø HILTI SS KB TZ2 ICC-ESR-4266 W/ 3 ¾" MIN. EMBED.

13 B31 HANDRAIL CONNECTION DETAIL @ STAIR
NOT TO SCALE

VIEW A-A
A
A
12" LEVEL, MIN.
B
B
VIEW B-B
STAND-OFF BRACKET FOR HANDRAIL
3'-0"
3'-6"
PLANK

14 B31 STAIR HANDRAIL TERMINATION DETAIL
NOT TO SCALE

10'-4"
10'-0 3/8" CLEAR
9'-6 3/16"
1 B31 TYP.
ANODIZED ALUMINUM HANDRAIL, TYP.
L3X3X¼ GALV. RAIL RISER, TYP.
TREAD MOUNTED HANDRAIL, TYP.
2 B31 TYP.
36"
42"
36"
ALUMINUM TREAD PLANK, TYP.
L2X1 ½X¼ PLANK CLIP, TYP.
L2X2X3/16" MID-SPAN SUPPORT FRAME, TYP.
C7X9.8, TYP.

15 B31 EXIT STEP SECTION
NOT TO SCALE

6'-2"
5'-10 3/8" CLEAR
5'-4 3/16"
1 B31 TYP.
ANODIZED ALUMINUM HANDRAIL, TYP.
L3X3X1/4 GALV. RAIL RISER, TYP.
2 B31 TYP.
42"
36"
ALUMINUM TREAD PLANK, TYP.
STAIR ANGLE FAB, TYP.
4 B34 TYP.
STAIR STRINGER, SIZE PER PLAN, TYP.

16 B31 EXIT STEP SECTION
NOT TO SCALE

THIS DRAWING AND ALL INFORMATION THEREIN IS THE PROPERTY OF THE SOUTHERN BLEACHER COMPANY, EXCEPTING AS SO CONVEYED, AND NOT TO BE COPIED. THIS DRAWING IS LOANED SUBJECT TO ITS RETURN UPON DEMAND AND, IS NOT TO BE USED DIRECTLY OR INDIRECTLY IN ANY WAY DETRIMENTAL TO OUR INTERESTS.

SUBSTRUCTURE ENGINEERS
STRUCTURAL
CIVIL
COASTAL
553 S. Oak Knoll Ave. Pasadena, CA 91101
Tel: (626) 792-2248
Fax: (626) 792-2249
TAYLOR & SYFAN
Southern BLEACHER COMPANY
GRANDSTANDS • BLEACHERS • STADIUMS
PO Box One, Graham, Texas 76450
Phone: (940) 549-0733 Fax: (940) 549-1365
Established 1926

REGISTERED PROFESSIONAL ENGINEER
BRIAN T. DEAL
S 6087
STRUCTURAL
STATE OF CALIFORNIA
S&S 01/08/25
PRINCIPAL

REV	DATE	DESCRIPTION
1	8/1	DSA COMMENTS

DATE	DRAWN	CHECKED
05/10/24	HC	DMC

JOB NUMBER #24094

SHEET B31 OF B35

BELLFLOWER UNIFIED SCHOOL DISTRICT
MAYFAIR HIGH SCHOOL
LAKEWOOD, CALIFORNIA

EXIT DETAILS
HOME & VISITOR

22" X 34" (11x17 = 1/2 indicated scale)

24094

IDENTIFICATION STAMP
DIV. OF THE STATE ARCHITECT
APP: 03-124281 INC:
REVIEWED FOR
SS ☑ FLS ☑ ACS ☑
DATE: 02/04/2025

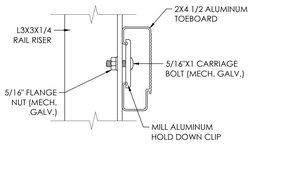

1 B32 TOEBOARD ATTACHMENT DETAIL
NOT TO SCALE

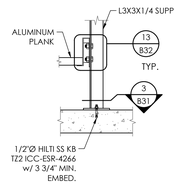

2 B32 RAIL RISER CONNECTION DETAIL
NOT TO SCALE

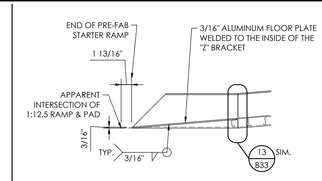

3 B32 STARTER RAMP WELD DETAIL
NOT TO SCALE

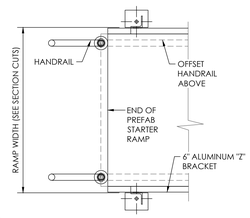

4 B32 END OF RAMP DETAIL
NOT TO SCALE

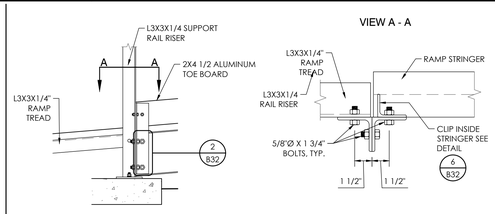

5 B32 L3X3X1/4" RAMP & WIDE FLANGE RAMP CONNECTION DETAIL
NOT TO SCALE

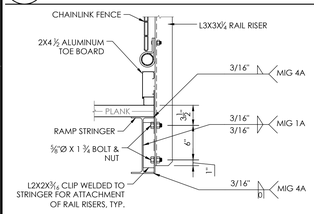

6 B32 RAIL RISER ATTACHMENT DETAIL
NOT TO SCALE

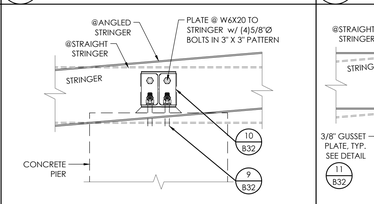

7 B32 RAMP BEAM DETAIL @ STRINGER
NOT TO SCALE

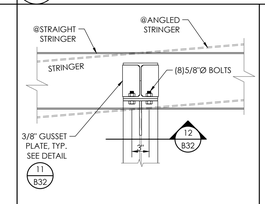

8 B32 COLUMN @ RAMP
NOT TO SCALE

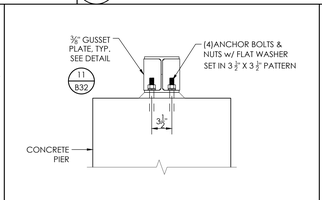

9 B32 RAMP BEAM DETAIL @ PIER
NOT TO SCALE

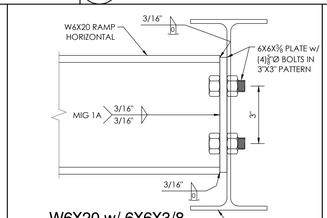

10 B32 W6X20 w/ 6X6X3/8 PLATE WELD DETAIL
NOT TO SCALE

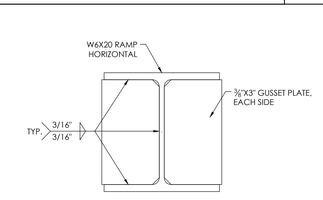

11 B32 GUSSET PLATE DETAIL
NOT TO SCALE

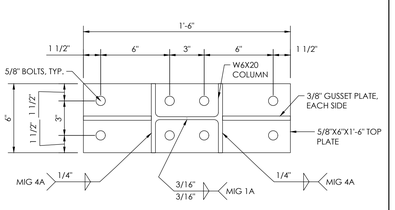

12 B32 RAMP COLUMN CONNECTION DETAIL
NOT TO SCALE

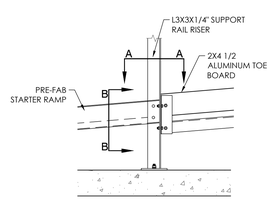

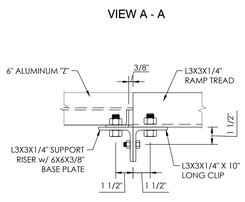

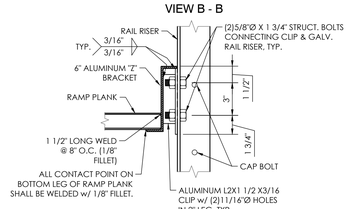

13 B32 PRE-FAB RAMP ATTACHMENT @ L3X3X1/4 RAMP
NOT TO SCALE

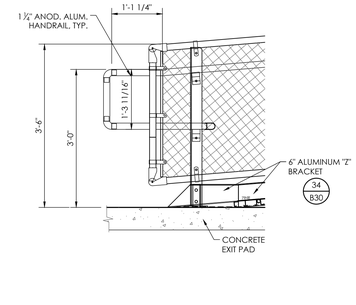

14 B32 HANDRAIL CONNECTION DETAIL @ RAMP
NOT TO SCALE

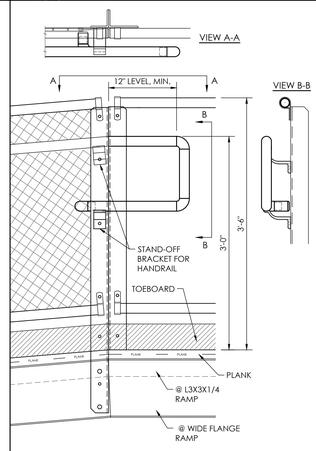

15 B32 TOP RAMP HANDRAIL TERMINATION DETAIL
NOT TO SCALE

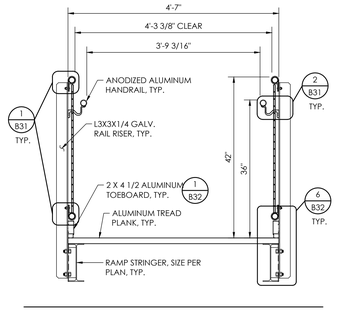

16 B32 RAMP SECTION DETAIL
NOT TO SCALE

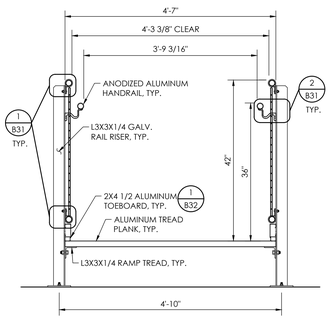

17 B32 RAMP SECTION DETAIL
NOT TO SCALE

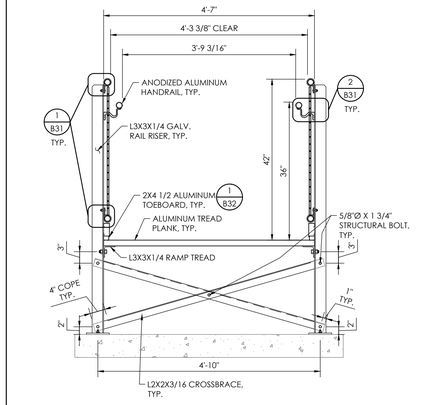

18 B32 RAMP SECTION w/ CROSSBRACE CONNECTION DETAIL
NOT TO SCALE

THIS DRAWING AND ALL INFORMATION THEREIN IS THE PROPERTY OF THE SOUTHERN BLEACHER COMPANY. SUCH LEGAL ACCUMULATION, AS NOT REVIEWED MUST BE COPIED. THIS DRAWING IS LOANED SUBJECT TO RETURN UPON DEMAND AND, IS NOT TO BE USED DIRECTLY OR INDIRECTLY IN ANY WAY DETRIMENTAL TO OUR INTERESTS.

STRUCTURAL ENGINEERS
TAYLOR & YEAGAN
2700 N. Main, Suite 450, Fort Worth, TX 76164 (817) 332-2428

IDENTIFICATION STAMP
DIV. OF THE STATE ARCHITECT
APP: 03-124281 INC:
REVIEWED FOR
SS ☑ FLS ☑ ACS ☑
DATE: 02/04/2025

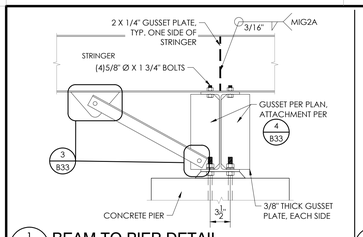

1 B33 BEAM TO PIER DETAIL
NOT TO SCALE

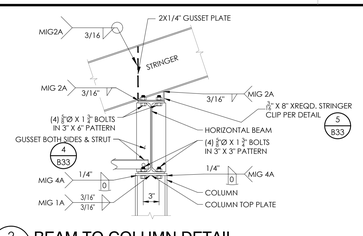

2 B33 BEAM TO COLUMN DETAIL
NOT TO SCALE

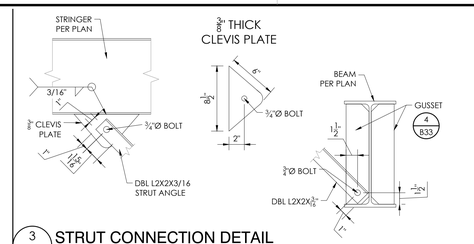

3 B33 STRUT CONNECTION DETAIL
NOT TO SCALE

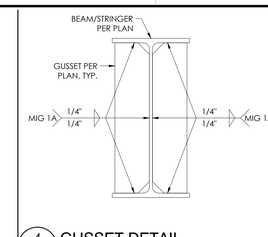

4 B33 GUSSET DETAIL
NOT TO SCALE

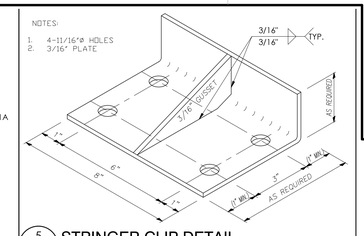

5 B33 STRINGER CLIP DETAIL
NOT TO SCALE

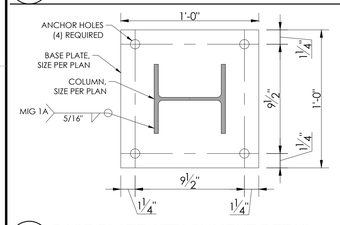

6 B33 BASE PLATE ATTACHMENT DETAIL
NOT TO SCALE

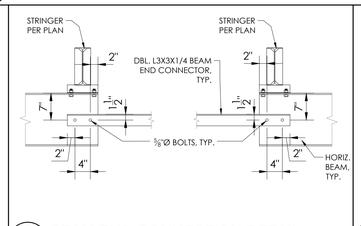

7 B33 BEAM END CONNECTION DETAIL
NOT TO SCALE

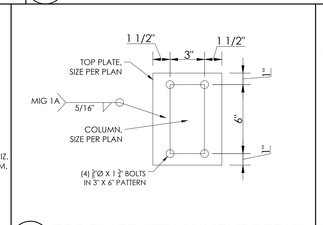

8 B33 TOP PLATE ATTACHMENT DETAIL
NOT TO SCALE

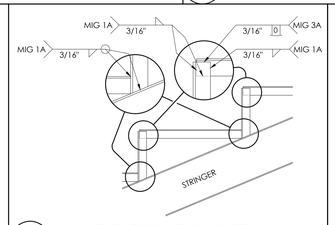

9 B33 ANGLE FABRICATION DETAIL
NOT TO SCALE

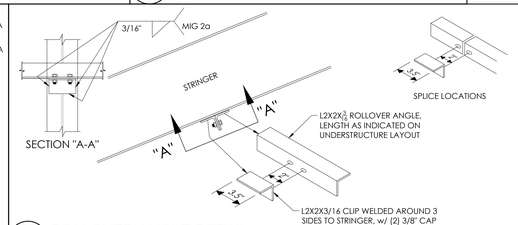

10 B33 ROLLOVER ANGLE DETAIL
NOT TO SCALE

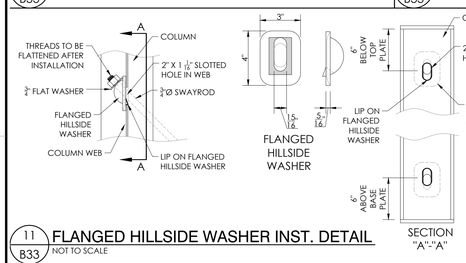

11 B33 FLANGED HILLSIDE WASHER INST. DETAIL
NOT TO SCALE

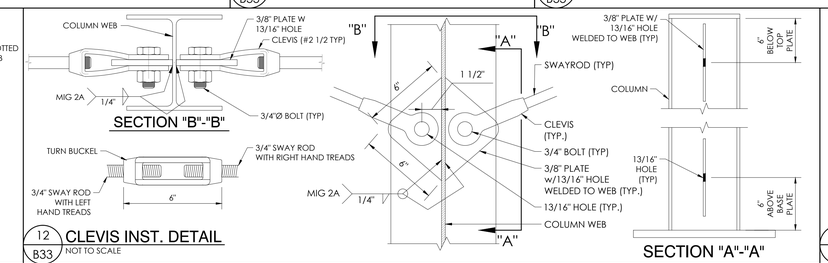

12 B33 CLEVIS INST. DETAIL
NOT TO SCALE

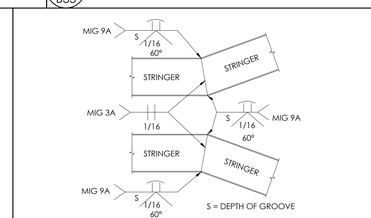

13 B33 STRINGER SNOOTER JOINT CONNECTION
NOT TO SCALE

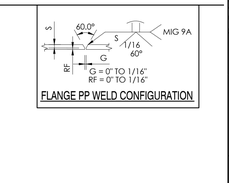

FLANGE PP WELD CONFIGURATION

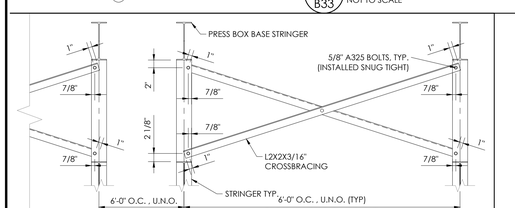

14 B33 PRESS BOX BASE DETAIL
NOT TO SCALE

15 B33 SNOOTER CONNECTION DETAIL
NOT TO SCALE

16 B33 ANGLE FABRICATION DETAIL
NOT TO SCALE

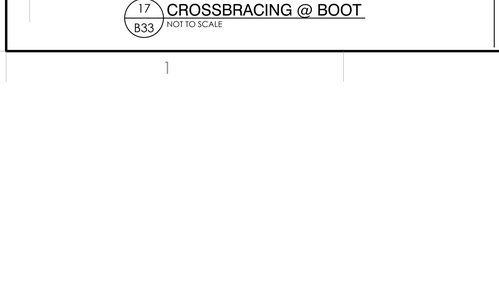

17 B33 CROSSBRACING @ BOOT
NOT TO SCALE

STRUCTURAL ENGINEERS
TAYLOR & YEAGAN
Southern BLEACHER COMPANY
GRANDSTANDS • BLEACHERS • STADIUMS
553 S. Oak Knoll Ave. Pasadena, CA 91101
T 626 792 2428
F 626 792 2429
CONTACT: Tim Yeagan
EXT 226
CELL 626 487 2428
Established 1926
PO Box One, Graham, Texas 76450
Phone: 940/549-0733 Fax: 940/549-1365

THIS DRAWING AND ALL INFORMATION THEREIN IS THE PROPERTY OF THE SOUTHERN BLEACHER COMPANY, EXCEPTING WHERE OTHERWISE NOTED OR REVISED. NOT TO BE COPIED. THIS DRAWING IS LOANED SUBJECT TO ITS RETURN UPON DEMAND AND, IS NOT TO BE USED DIRECTLY OR INDIRECTLY IN ANY WAY DETRIMENTAL TO OUR INTERESTS.

REGISTERED PROFESSIONAL ENGINEER
BRIAN T. DEAN
S 6087
STRUCTURAL
STATE OF CALIFORNIA
S&S 01/08/25
PRINCIPAL

BELLFLOWER UNIFIED SCHOOL DISTRICT
MAYFAIR HIGH SCHOOL
LAKEWOOD, CALIFORNIA

GRANDSTAND DETAILS
HOME & VISITOR

DEV #	DATE	DESCRIPTION	BY/DTA
			DBA COMMENTS

DATE: 05/10/24 | DRAWN: HC | CHECKED: DMC
JOB NUMBER: #24094
SHEET: B33 | OF: B35

22" X 34" (11x17 = 1/2 indicated scale)

24094

IDENTIFICATION STAMP
DIV. OF THE STATE ARCHITECT
APP: 03-124281 INC:
REVIEWED FOR
SS ☑ FLS ☑ ACS ☑
DATE: 02/04/2025

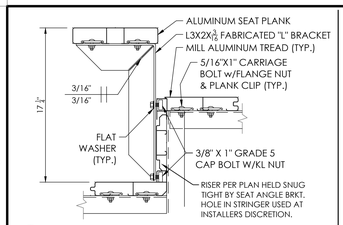

1 B34 "L" BRACKET DETAIL
NOT TO SCALE

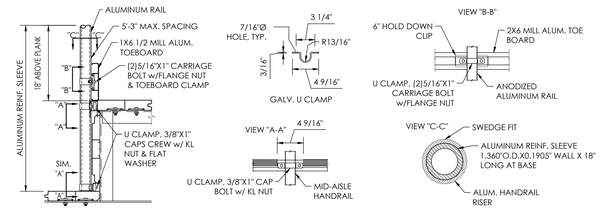

2 B34 RAIL ATTACHMENT DETAIL
NOT TO SCALE

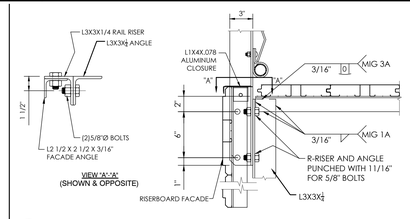

3 B34 FRONT RAIL RISER ATTACHMENT DETAIL
NOT TO SCALE

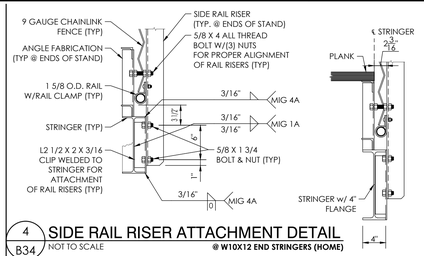

4 B34 SIDE RAIL RISER ATTACHMENT DETAIL
NOT TO SCALE @ W10X12 END STRINGERS (HOME)

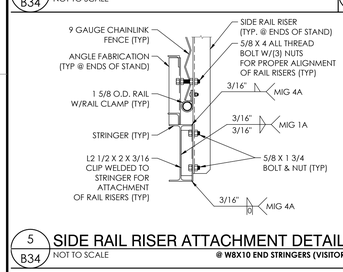

5 B34 SIDE RAIL RISER ATTACHMENT DETAIL
NOT TO SCALE @ W8X10 END STRINGERS (VISITOR)

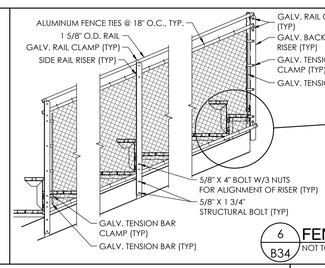

6 B34 FENCE ATTACHMENT DETAIL
NOT TO SCALE

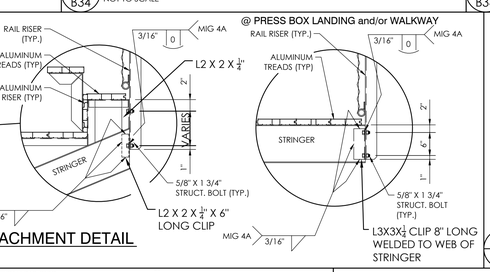

7 B34 TONGUE & GROOVE 2001 HALF STEP & HANDRAIL ATTACHMENT DETAIL
NOT TO SCALE

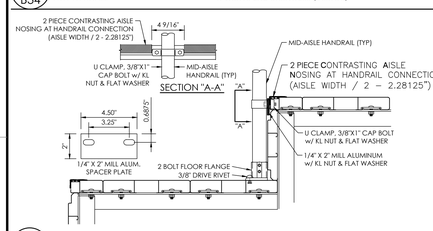

8 B34 HANDRAIL ATTACHMENT DETAIL
NOT TO SCALE

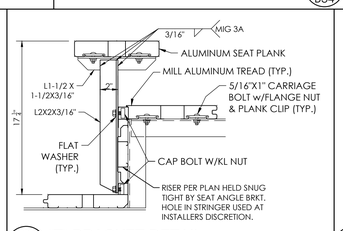

9 B34 "T" BRACKET DETAIL
NOT TO SCALE

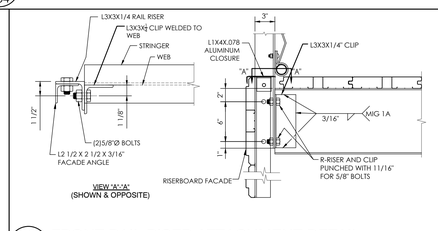

10 B34 FRONT RAIL RISER ATTACHMENT DETAIL
NOT TO SCALE

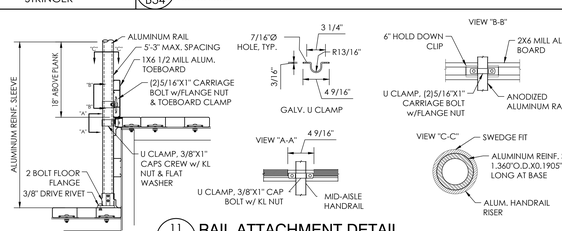

11 B34 RAIL ATTACHMENT DETAIL
NOT TO SCALE

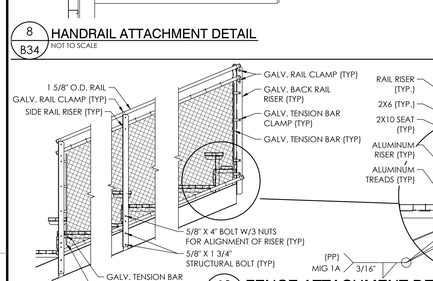

12 B34 FENCE ATTACHMENT DETAIL
NOT TO SCALE

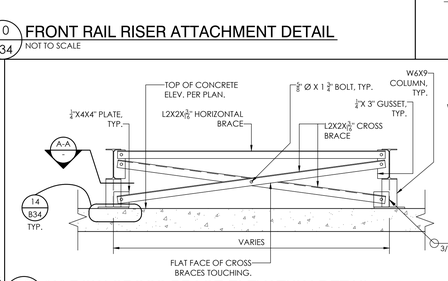

13 B34 "A" ROW CROSS BRACE ELEVATION DETAIL
NOT TO SCALE

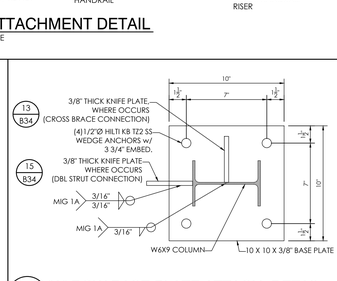

14 B34 "A" ROW BASE PLATE ATTACH. DETAIL
NOT TO SCALE

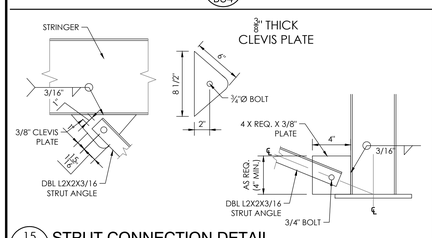

15 B34 STRUT CONNECTION DETAIL
NOT TO SCALE

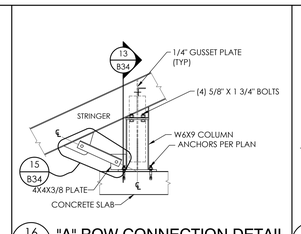

16 B34 "A" ROW CONNECTION DETAIL
NOT TO SCALE

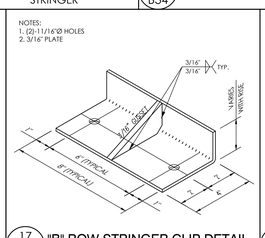

17 B34 "B" ROW STRINGER CLIP DETAIL
NOT TO SCALE

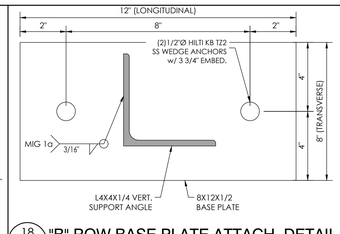

18 B34 "B" ROW BASE PLATE ATTACH. DETAIL
NOT TO SCALE

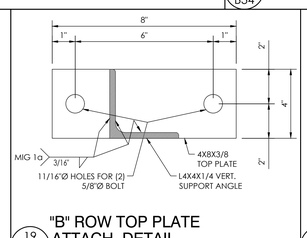

19 B34 "B" ROW TOP PLATE ATTACH. DETAIL
NOT TO SCALE

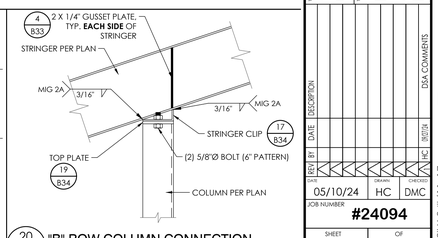

20 B34 "B" ROW COLUMN CONNECTION
NOT TO SCALE

TAYLOR & SYFAN
Southern BLEACHER COMPANY
GRANDSTANDS • BLEACHERS • STADIUMS
Established 1926
STRUCTURAL ENGINEERS
STEVEN L. TAYLOR 10/31/2026
DOUGLAS E. SYFAN 12/31/2026
CORY D. CLARK 12/31/2026
553 S. Oak Knoll Ave. Pasadena, CA 91101
PO Box 070, Graham, Texas 76450
Phone: 940/549-0733 Fax: 940/549-1365

THIS DRAWING AND ALL INFORMATION THEREIN IS THE PROPERTY OF THE SOUTHERN BLEACHER COMPANY. EXCEPT WHERE OTHERWISE INDICATED THIS SET OF PLANS WAS CONVEYED, AND NOT TO BE COPIED. THIS DRAWING IS LOANED SUBJECT TO RETURN UPON DEMAND AND, IS NOT TO BE USED DIRECTLY OR INDIRECTLY IN ANY WAY DETRIMENTAL TO OUR INTERESTS.

REGISTERED PROFESSIONAL ENGINEER
BRIAN T. DEAL
S 6087
STRUCTURAL
STATE OF CALIFORNIA
S&S 01/08/25
PRINCIPAL

BELLFLOWER UNIFIED SCHOOL DISTRICT
MAYFAIR HIGH SCHOOL
LAKEWOOD, CALIFORNIA

GRANDSTAND DETAILS
HOME & VISITOR

NO	BY	DATE	DESCRIPTION
3	HC	05/10/24	DSA COMMENTS
2	HC	03/28/24	RESPONSE
1	HC	02/16/24	DSA SUBMITTAL

05/10/24 | HC | DMC
JOB NUMBER #24094
SHEET B34 | OF B35

22" X 34" (11x17 = 1/2 indicated scale)

24094

IDENTIFICATION STAMP
DIV. OF THE STATE ARCHITECT
APP: 03-124281 INC:
REVIEWED FOR
SS ☑ FLS ☑ ACS ☑
DATE: 02/04/2025

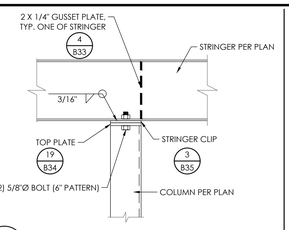

1 B35 "B" ROW COLUMN CONNECTION
NOT TO SCALE

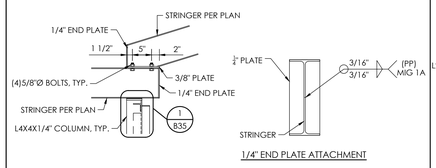

2 B35 CONNECTION DETAIL
NOT TO SCALE

1/4" END PLATE ATTACHMENT

NOTES:
1. (2)-11/16"Ø HOLES
2. 3/16" PLATE

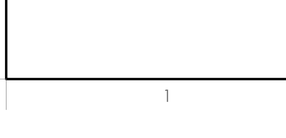

3 B35 "B" ROW STRINGER CLIP
NOT TO SCALE

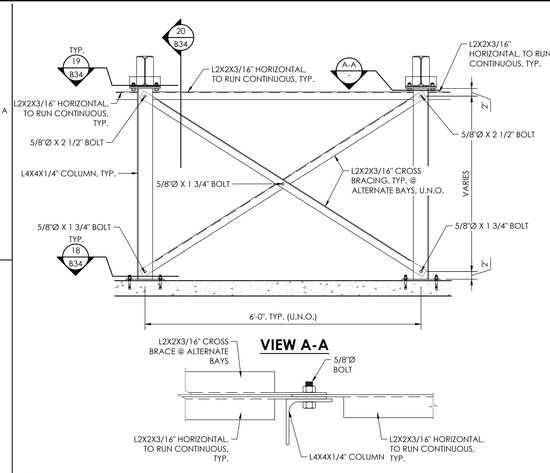

4 B35 L4X4X1/4" COLUMNS CROSSBRACING ELEVATION DETAIL
NOT TO SCALE

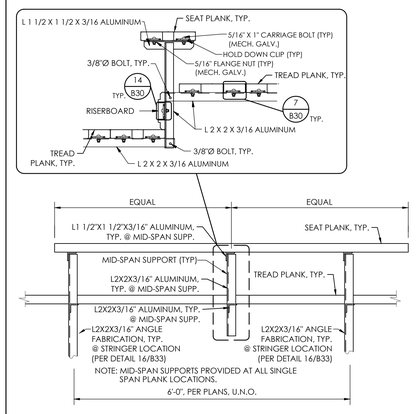

5 B35 MID-SPAN SUPPORT DETAIL
NOT TO SCALE

THIS DRAWING AND ALL INFORMATION THEREIN IS THE PROPERTY OF THE SOUTHERN BLEACHER COMPANY. EXCEPT WITH WRITTEN CONSENT, AS MAY BE FAIR USE COPIED. THIS DRAWING IS LOANED SUBJECT TO RETURN UPON DEMAND AND, IS NOT TO BE USED DIRECTLY OR INDIRECTLY IN ANY WAY DETRIMENTAL TO OUR INTERESTS.

STRUCTURAL ENGINEERS
TAYLOR & YEAMAN
CORPORATION
553 S. Oak Knoll Ave. Pasadena, CA 91101
PH (626) 792-2428
FAX (626) 792-2429
Southern BLEACHER COMPANY
GRANDSTANDS • BLEACHERS • STADIUMS
PO Box One, Graham, Texas 76450
Phone: 940-549-1733 Fax: 940-549-1365
Established 1946

REGISTERED PROFESSIONAL ENGINEER
BRIAN T. DEAL
S 6087
STRUCTURAL
STATE OF CALIFORNIA
S&S 01/08/25
PRINCIPAL

REV	BY	DATE	DESCRIPTION

IDENTIFICATION STAMP
DIV. OF THE STATE ARCHITECT
APP: 03-124281 INC:
REVIEWED FOR
SS ☑ FLS ☑ ACS ☑
DATE: 02/04/2025

BELLFLOWER UNIFIED SCHOOL DISCTRICT
MAYFAIR HIGH SCHOOL
LAKEWOOD, CALIFORNIA

SHEET TITLE	*PAGE #*
COVER PAGE	BB1 OF BB5
SECTION VIEW	BB2 OF BB5
PLAN VIEWS	BB3 OF BB5
ANGLE FAB/GUARDRAIL DETAILS	BB4 OF BB5
ALUMINUM PLANK DETAILS	BB5 OF BB5

REGISTERED PROFESSIONAL ENGINEER
BRIAN T. DEAN
S 6087
STRUCTURAL
STATE OF CALIFORNIA
S&S 09/25/24
PRINCIPAL

OWNER/REPRESENTATIVE/ARCHITECTURAL REVIEW

PLEASE REVIEW THE DRAWINGS FOR COMPLIANCE WITH YOUR ORDER. PLEASE INDICATE ANY CHANGES OR COMMENTS ON THE DRAWINGS.

☐ APPROVED — SIGNATURE

☐ APPROVED AS NOTED — TITLE

☐ REVISE AND RE-SUBMIT — DATE

AWS CWF CERTIFIED WELDING FABRICATOR®

AISC CERTIFIED FABRICATOR

Southern® BLEACHER COMPANY
GRANDSTANDS ▪ BLEACHERS ▪ STADIUMS

PO Box One, Graham, Texas 76450
801 Fifth Street.
Phone: 940/549-0733 Fax: 940/549-1365

Established 1946

GENERAL INFORMATION

	RISE	TREAD	ROWS	LENGTH	SEAT COUNT
BASEBALL	8"	24"	5	55'-6"	147
SOFTBALL	8"	24"	5	33'-0"	82

DATE: 9/24/24
JOB # 24094.1
BELLFLOWER UNIFIED SCHOOL DISCTRICT
MAYFAIR HIGH SCHOOL
LAKEWOOD, CALIFORNIA

SHEET BB1 OF BB5

REF:

IDENTIFICATION STAMP
DIV. OF THE STATE ARCHITECT
APP: 03-124281 INC:
REVIEWED FOR
SS ☑ FLS ☑ ACS ☑
DATE: 02/04/2025

ITEM DESCRIPTION

1. L 1 1/2 X 1 1/2 X 3/16 GALV. A36/A572 GRADE 50
2. L 2 X 1 1/2 X 3/16 GALV. A36/A572 GRADE 50
3. L 2 X 2 X 3/16 GALV. A36/A572 GRADE 50
4. L 2 1/2 X 2 X 3/16 GALV. A36/A572 GRADE 50
5. L 3 X 3 X 1/4 GALV. A36/A572 GRADE 50
6. ANODIZED ALUMINUM RAIL (SEE NOTE) (17 BB5)
7. 9 GAUGE CHAIN LINK FENCE (2" SQUARE MESH)
8. L 2 X 1 1/2 X 3/16 ALUMINUM (6061-T6 ALLOY)
9. L 2 X 2 X 3/16 ALUMINUM (6061-T6 ALLOY)
10. 1 5/8 SCH. 40 ANODIZED ALUMINUM PIPE (6061-T6 ALLOY) (6 BB5)
11. 3/8Ø STAINLESS STEEL CONCRETE WEDGE ANCHOR (18 BB5)

DESIGN LOADING

TREAD & SEAT AREA (GROSS AREA) 100psf.
SEAT (PERPENDICULAR SWAY) 10 lbs/lf.
SEAT (PARALLEL SWAY) 24lbs/lf.
HANDRAILS (PERPENDICULAR) 50 lbs/lf.
HANDRAILS (VERTICAL) 100 lbs/lf.
SEAT & TREAD 120 lbs/lf.

NOTES

1. STRUCTURAL SHAPES MEET ONE OF THE FOLLOWING ASTM SPECIFICATIONS: A572 GRADE 50, A529-50, OR A500 GRADE B.
2. WELDS ARE ALL AROUND WITH TYPE ER70S-6 WIRE MIG.
3. ALL STEEL TO BE HOT DIPPED GALVANIZED TO A.S.T.M. A-123-89 ae1.
4. STRUCTURAL BOLTS ARE HOT DIPPED GALV. AND ARE EQUAL TO OR GREATER THAN A-307.
5. ANODIZED ALUMINUM RAIL IS 1 1/4" NOMINAL PIPE SIZE. (17 BB5)
6. ANODIZED ALUMINUM SCH. 40 PIPE IS 1 1/4" NOMINAL PIPE SIZE. (6 BB5)

NOTE: 5 ROW NON-ELEVATED BLEACHERS ARE EXEMPT FROM DSA STRUCTURAL & FLS REVIEW PER DSA IR A-22 SECTION 1.2.1 AND APPENDIX-CONSTRUCTION PROJECTS AND ITEMS ELIGIBLE FOR EXEMPTION

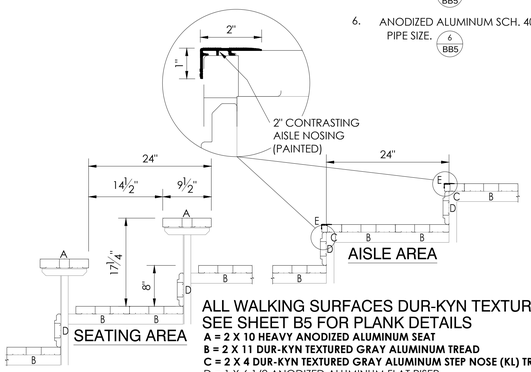

ALL WALKING SURFACES DUR-KYN TEXTURED GRAY
SEE SHEET B5 FOR PLANK DETAILS
A = 2 X 10 HEAVY ANODIZED ALUMINUM SEAT
B = 2 X 11 DUR-KYN TEXTURED GRAY ALUMINUM TREAD
C = 2 X 4 DUR-KYN TEXTURED GRAY ALUMINUM STEP NOSE (KL) TREAD
D = 1 X 6 1/2 ANODIZED ALUMINUM FLAT RISER
E = 1 X 1 PAINTED ALUMINUM CONTRASTING NOSING (BLACK)

1 BB2 PLANK ARRANGEMENT
NOT TO SCALE 8" X 24"

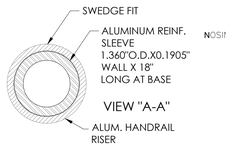

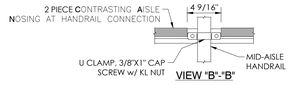

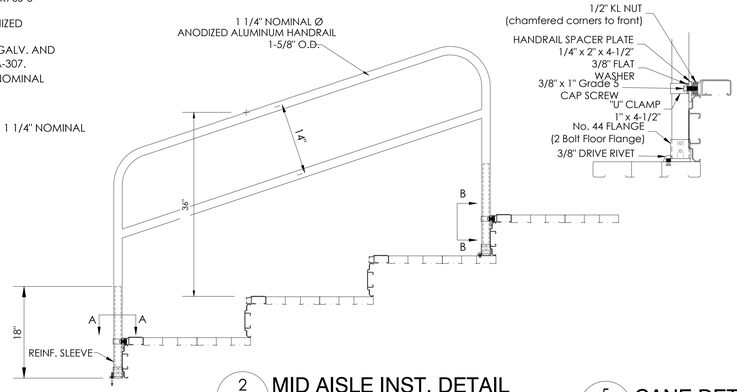

2 BB2 MID AISLE INST. DETAIL
N.T.S.

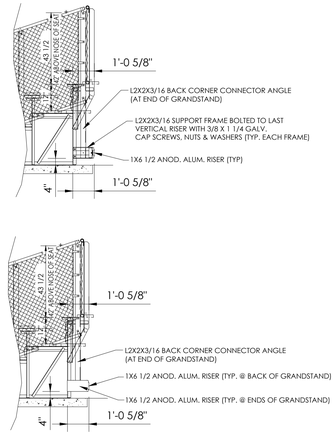

5 BB2 CANE DETECTION DETAIL @ BACK OF GRANDSTAND
SCALE:NONE

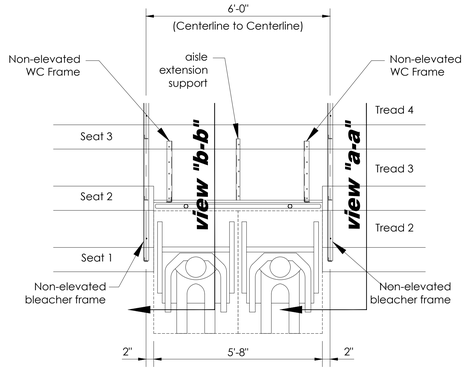

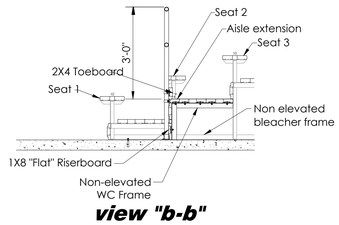

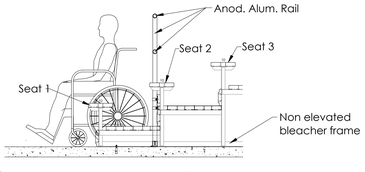

NOTE: DOUBLE WHEELCHAIR AREA SHOWN, SINGLE WHEELCHAIR AREA SIMILAR.

3 BB2 DOUBLE NON-ELEVATED WHEELCHAIR AREA DETAIL
SCALE:NONE

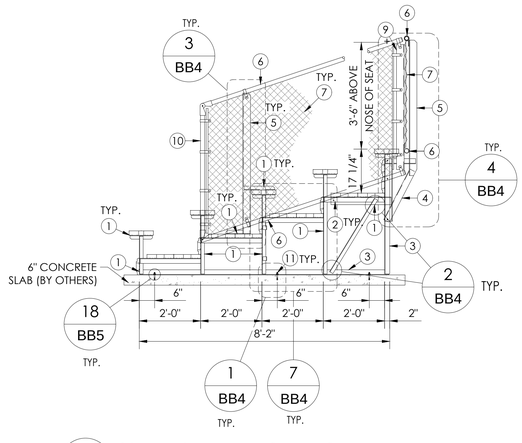

4 BB2 SIDE VIEW: 5 ROW NON-ELEVATED
SCALE:1/2"=1'-0"

DETAIL NUMBER / SHEET NUMBER

STRUCTURAL ENGINEERS
5533 S. Oak Knoll Ave. Pasadena, CA 91101
CORONA (951) 279-2788
CERRITOS (562) 924-2644
FRESNO (559) 431-1650
http://www.taylorsyfan.com

TAYLOR & SYFAN
Southern BLEACHER COMPANY
GRANDSTANDS • BLEACHERS • STADIUMS
PO Box One, Graham, Texas 76450
801 Fifth Street
Phone: 940.549.0733 Fax: 940.549.1365
Established 1946

THIS DRAWING AND ALL INFORMATION THEREIN IS THE PROPERTY OF THE SOUTHERN BLEACHER COMPANY, LP/GP & SYFAN AND SCORPORA, AND MUST BE RETURNED UPON REQUEST. THIS DRAWING IS LOANED SUBJECT TO ITS TURN UPON DEMAND AND IS NOT TO BE USED DIRECTLY OR INDIRECTLY IN ANY WAY DETRIMENTAL TO OUR INTERESTS.

REGISTERED PROFESSIONAL ENGINEER
BRIAN T. DEAK
S 6087
STRUCTURAL
STATE OF CALIFORNIA
S&S 09/25/24
PRINCIPAL

SECTION VIEW
8" RISE X 24" TREAD / 55'-6" (5 ROWS)

BELLFLOWER UNIFIED SCHOOL DISCTRICT
MAYFAIR HIGH SCHOOL
LAKEWOOD, CALIFORNIA

REV BY	DATE	DESCRIPTION

DATE	DRAWN	CHECKED
9/24/24	MG	DMC

JOB NUMBER #24094.1

SHEET BB2 OF BB5

22" X 34" (1:1x17 = 1/2 indicated scale)

24094.1

IDENTIFICATION STAMP
DIV. OF THE STATE ARCHITECT
APP: 03-124281 INC:
REVIEWED FOR
SS ☑ FLS ☑ ACS ☑
DATE: 02/04/2025

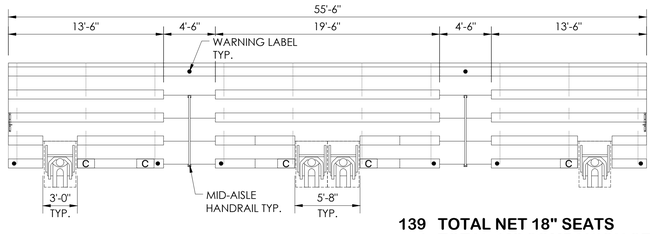

1 BB3 SEATING LAYOUT
SCALE:3/16"=1'-0"

139 TOTAL NET 18" SEATS
4 TOTAL 18" COMPANION SEATS
2 TOTAL NET 33" WHEELCHAIR SPACES
2 TOTAL NET 36" WHEELCHAIR SPACES
147 TOTAL SEATING CAPACITY

(2) UNITS REQUIRED

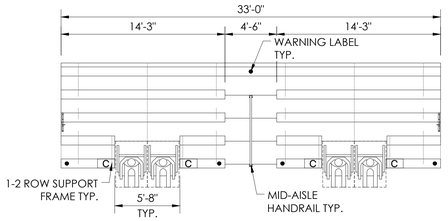

1 BB3 SEATING LAYOUT
SCALE:3/16"=1'-0"

74 TOTAL NET 18" SEATS
4 TOTAL 18" COMPANION SEATS
4 TOTAL NET 33" WHEELCHAIR SPACES
82 TOTAL SEATING CAPACITY

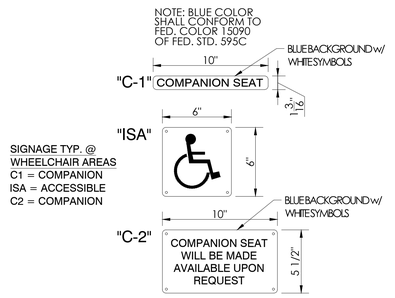

7 BB3 SIGNAGE & SEAT TYPE LEGEND
NOT TO SCALE

NOTE: CONCRETE SLAB NOT BY BLEACHER MANUFACTURER

= BORDERLINE OF CONCRETE SLAB
= BORDERLINE OF GRANDSTAND

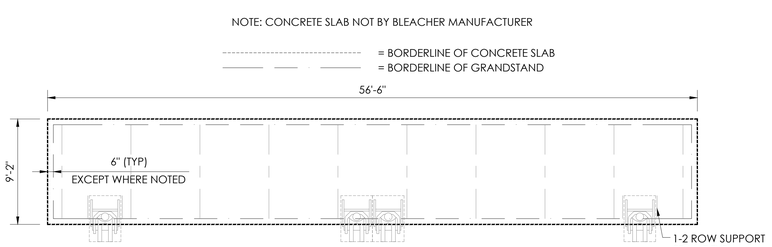

2 BB3 CONCRETE LAYOUT
SCALE:3/16"=1'-0"

ANGLE FRAME UNITS MUST BE ANCHORED TO RESIST WIND LOADS, AS PRESCRIBED BY BUILDING CODE.

NOTE:
1. CONCRETE SLAB DIMENSIONS LISTED ARE MINIMUM REQUIREMENTS FOR ANGLE FRAME BLEACHER INSTALLATION
2. CONCRETE SLAB ON GRADE TO BE LEVEL. BLEACHERS ARE DESIGNED FOR INSTALLATION ON UNIFORM, LEVEL SURFACE

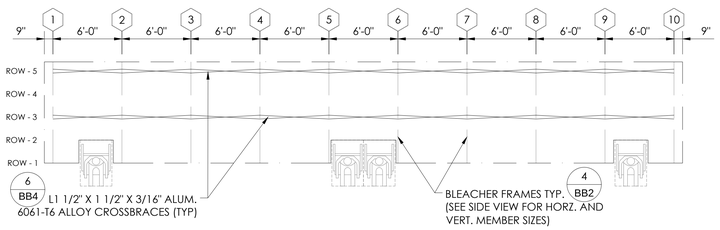

3 BB3 CROSSBRACING LAYOUT
SCALE: 3/16"=1'-0"

NOTE: CONCRETE SLAB NOT BY BLEACHER MANUFACTURER

= BORDERLINE OF CONCRETE SLAB
= BORDERLINE OF GRANDSTAND

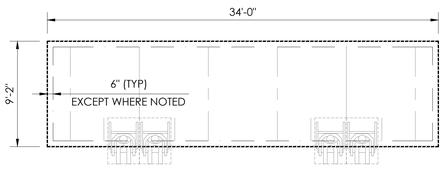

2 BB3 CONCRETE LAYOUT
SCALE:3/16"=1'-0"

ANGLE FRAME UNITS MUST BE ANCHORED TO RESIST WIND LOADS, AS PRESCRIBED BY BUILDING CODE.

NOTE:
1. CONCRETE SLAB DIMENSIONS LISTED ARE MINIMUM REQUIREMENTS FOR ANGLE FRAME BLEACHER INSTALLATION
2. CONCRETE SLAB ON GRADE TO BE LEVEL. BLEACHERS ARE DESIGNED FOR INSTALLATION ON UNIFORM, LEVEL SURFACE

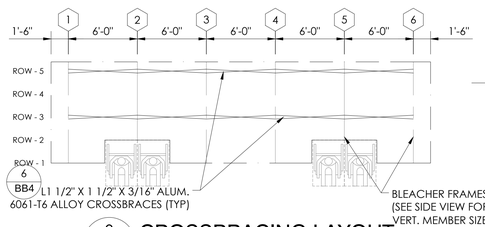

3 BB3 CROSSBRACING LAYOUT
SCALE: 3/16"=1'-0"

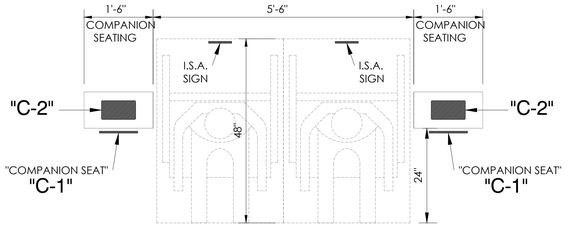

ICC/ANSI A117.1 CHAPTER 8
FRONT OR REAR ACCESS 48" MIN.
SIDE ACCESS 60" MIN.

8 BB3 WHEELCAIR AREA SIGNAGE DETAIL
NOT TO SCALE

NOTE: 1. CONCRETE SLAB DESIGN/DETAIL LISTED IS THE MINIMUM REQUIREMENTS FOR ANGLE FRAME BLEACHER INSTALLATION. ALL CONCRETE WORK IS BY OTHERS & NOT BY BLEACHER MANUFACTURER.
2. BLEACHERS ARE DESIGNED FOR INSTALLATION ON UNIFORM, LEVEL SURFACE.
3. CONCRETE SLAB DIMENSIONS LISTED ARE FOR BLEACHER SUBSTRUCTURE ONLY.

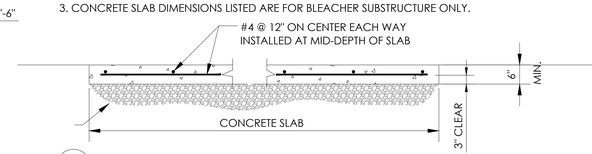

9 BB3 CONCRETE SLAB DETAIL
SCALE:NONE

NOTE: 5 ROW NON-ELEVATED BLEACHERS ARE EXEMPT FROM DSA STRUCTURAL & FLS REVIEW PER DSA IR A-22 SECTION 1.2.1 AND APPENDIX-CONSTRUCTION PROJECTS AND ITEMS ELIGIBLE FOR EXEMPTION

1 DETAIL NUMBER / SHEET NUMBER

THIS DRAWING AND ALL INFORMATION THEREIN IS THE PROPERTY OF TAYLOR & YEAMAN AND SOUTHERN BLEACHER COMPANY. TAYLOR & YEAMAN CONFIDENTIAL AND MUST NOT BE MADE PUBLIC OR COPIED. THIS DRAWING IS LOANED, SUBJECT TO RETURN UPON DEMAND, AND MAY NOT BE USED DIRECTLY OR INDIRECTLY IN ANY WAY DETRIMENTAL TO OUR INTERESTS.

TAYLOR & YEAMAN
STRUCTURAL ENGINEERS
COSTA MESA OFFICE
553 S. Coast Dr. Suite 300, Costa Mesa, CA 92626
Ph: (949) 752-7458
Fax: (949) 752-7488
Cell: (949) 378-3381
http://www.taylorandyeaman.com
Southern BLEACHER COMPANY
GRANDSTANDS • BLEACHERS • STADIUMS
Established 1946
PO Box One, Graham, Texas 76450
801 Fifth Street.
Phone: 940-549-0733 Fax 940-549-1565

REGISTERED PROFESSIONAL ENGINEER
BRIAN T. DEAN
S 6087
STRUCTURAL
STATE OF CALIFORNIA
S&S 09/25/24
PRINCIPAL

PHASE: PLAN VIEWS
8" RISE X 24" TREAD / 55'-6" (5 ROWS)

BELLFLOWER UNIFIED SCHOOL DISCTRICT
MAYFAIR HIGH SCHOOL
LAKEWOOD, CALIFORNIA

REV BY	DATE	DESCRIPTION

DATE	DRAWN	CHECKED
9/24/24	MG	DMC

JOB NUMBER #24094.1

SHEET BB3 OF BB5

22" X 34" (1 x 1/2 indicated scale)

24094.1

IDENTIFICATION STAMP
DIV. OF THE STATE ARCHITECT
APP: 03-124281 INC:
REVIEWED FOR
SS ☑ FLS ☑ ACS ☑
DATE: 02/04/2025

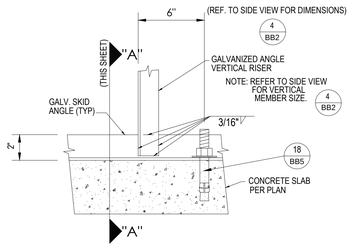

VERTICAL ANGLE ATTACH. TO SKID ANGLE
1 / BB4 NO SCALE

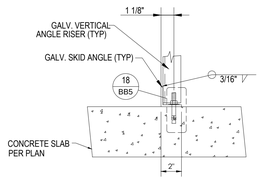

SECTION "A"-"A"
NO SCALE

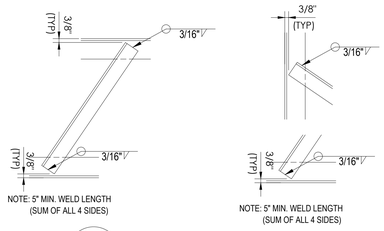

ATTACHMENT DETAIL
2 / BB4 NO SCALE

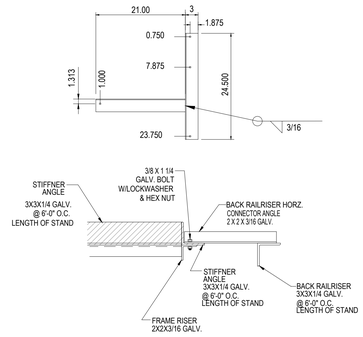

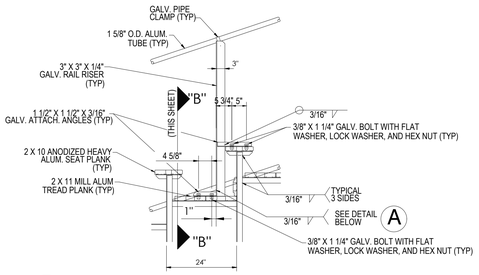

SIDE RAILRISER ATTACHMENT
3 / BB4 NO SCALE

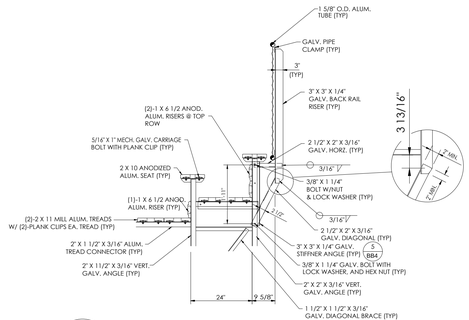

BACK RAIL RISER ATTACH. DETAIL
4 / BB4 NO SCALE

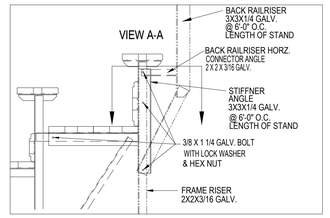

STIFFNER ANGLE DETAIL
5 / BB4 SCALE: NONE

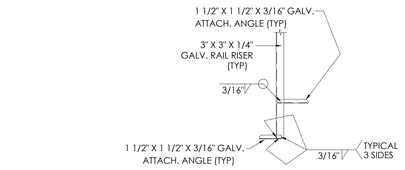

WELD DETAIL
A / NO SCALE

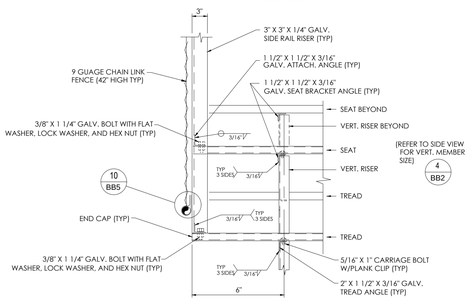

SECTION "B"-"B"
NO SCALE

1.USING THE LAYOUT DRAWING SUPPLIED, LAY OUT THE FRAMES WITH THE FRONTS ALIGNED. THE FRAMES MUST BE ON LEVEL SLAB AND APPROXIMATELY 6 FT. APART.

2. BOLT ALL CROSSBRACE ANGLES OF EQUAL LENGTH TOGETHER IN PAIRS, USING 3/8" X 1 1/4" BOLT, HEX NUT & LOCK WASHER THROUGH THE CENTER HOLES.

3. START STANDING UP THE FRAMES AND INSTALLING THE CROSSBRACES AS PER THE LAYOUT DRAWING USING 3/8" X 1 1/4" BOLT FOR ALL CONNECTIONS.

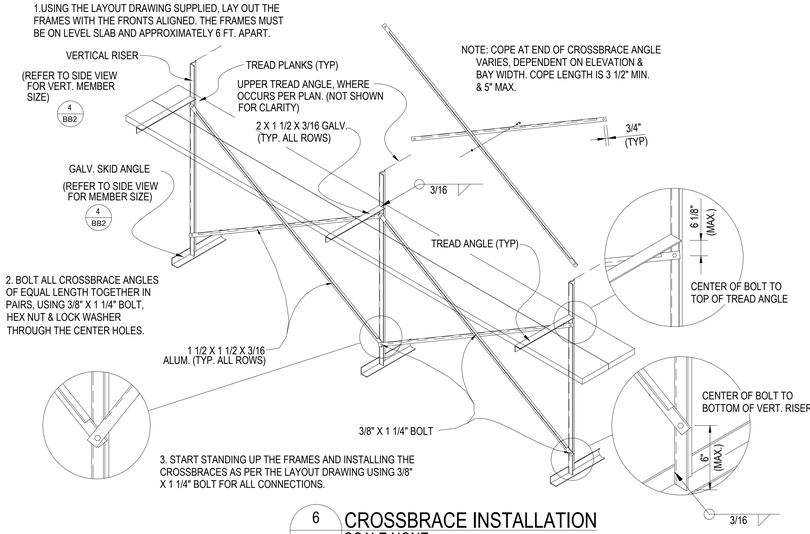

CROSSBRACE INSTALLATION
6 / BB4 SCALE:NONE

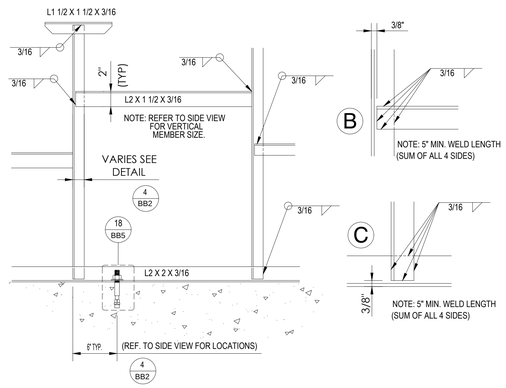

ANGLE FAB DETAIL
7 / BB4 SCALE: NONE

DETAIL NUMBER / SHEET NUMBER

THIS DRAWING AND ALL INFORMATION THEREON IS THE PROPERTY OF TAYLOR & SYFAN CONSULTING ENGINEERS. TAYLOR & SYFAN AND IS CONFIDENTIAL AND MUST BE MADE PUBLIC OR COPIED. THIS DRAWING IS LOANED SUBJECT TO RECALL AND MUST BE RETURNED UPON REQUEST. IT IS NOT TO BE LOANED OR GIVEN DIRECTLY OR INDIRECTLY IN ANY WAY DETRIMENTAL TO OUR INTERESTS.

TAYLOR & SYFAN
STRUCTURAL ENGINEERS
CORONA
COSTA MESA
LOS ANGELES
5533 S. Calle Kinsell Avenue, Corona, CA 91101
Ph: (951) 253-1258
Fax: (951) 253-1268
http://www.taylorsyfan.com
Southern
BLEACHER COMPANY
GRANDSTANDS ●BLEACHERS ●STADIUMS
PO Box One, Graham, Texas 76450
Phone: 940/549-0733 Fax: 940/549-1365
801 Fifth Street
Established 1946

REGISTERED PROFESSIONAL ENGINEER
BRIAN T. DEAN
S 6087
STRUCTURAL
STATE OF CALIFORNIA
S.E.S
09/25/24
PRINCIPAL

ANGLE FAB/GUARDRAIL DETAILS
8" RISE X 24" TREAD / 55°-6" (5 ROWS)

BELLFLOWER UNIFIED SCHOOL DISCTRICT
MAYFAIR HIGH SCHOOL
LAKEWOOD, CALIFORNIA

REV	BY	DATE	DESCRIPTION

DATE: 9/24/24 | DRAWN: MG | CHECKED: DMC

JOB NUMBER: #24094.1

SHEET: BB4 | OF: BB5

22" X 34" (1 1x17 = 1/2 indicated scale)

24094.1

IDENTIFICATION STAMP
DIV. OF THE STATE ARCHITECT
APP: 03-124281 INC:
REVIEWED FOR
SS ☑ FLS ☑ ACS ☑
DATE: 02/04/2025

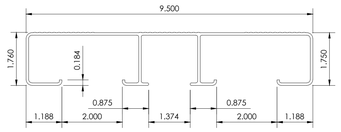

2X10 HEAVY ALUMINUM PLANK
.075 WALL , 1.769#/FT.
1. Ix = .843 IN. e-4
2. MATERIAL - 6063 T-6
3. MIN. MAT. PROP. - 25000 PSI
4. E = 10,000,000 PSI
5. C = 1.10 IN.

1 BB5 — 2 X 10 HEAVY ALUMINUM PLANK DETAIL
NOT TO SCALE

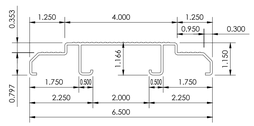

1X6 1/2 ALUMINUM FLAT RISER PLANK
.075 WALL , 1.081#/FT.
1. Ix = .131 IN. e-4
2. MATERIAL - 6063 T-6
3. MIN. MAT. PROP. - 25000 PSI
4. E = 10,000,000 PSI
5. C = .740 IN.

2 BB5 — 1 X 6.5 ALUMINUM RISER PLANK DETAIL
NOT TO SCALE

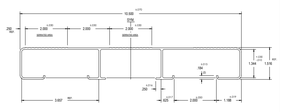

2X12 ALUMINUM PLANK
.078 WALL , 2.029#/FT.
1. Ix = .591 IN. e-4
2. MATERIAL - 6063 T-6
3. MIN. MAT. PROP. - 25000 PSI
4. E = 10,000,000 PSI
5. C = 1.01 IN.

3 BB5 — 2 X 11 ALUMINUM PLANK DETAIL
NOT TO SCALE

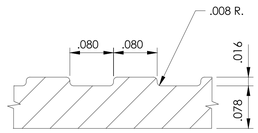

NOTE: TYPICAL FOR ALL PLANKS.

4 BB5 — FLUTED SURFACE DETAIL
NOT TO SCALE

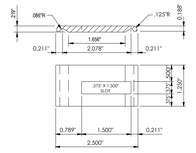

5 BB5 — HOLD DOWN CLIP DETAIL
NOT TO SCALE

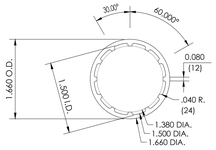

AREA .465 , .5584#/FT.
MATERIAL - 6063 T-6

6 BB5 — 1 5/8" O.D. ALUMINUM RAIL DETAIL
NOT TO SCALE

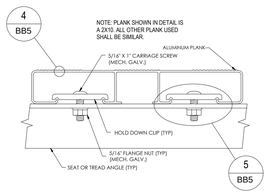

7 BB5 — PLANK INSTALLATION DETAIL
NOT TO SCALE

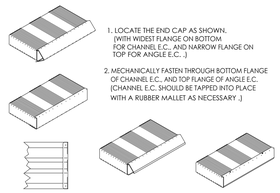

8 BB5 — ENDCAP INSTALLATION DETAIL
NOT TO SCALE

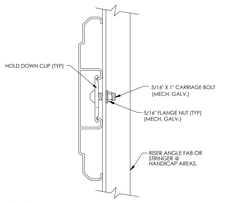

9 BB5 — RISER PLANK INSTALLATION DETAIL
NOT TO SCALE

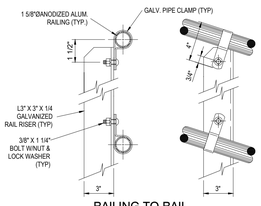

RAILING TO RAIL
10 BB5 — RISER ATTACHMENT DETAIL
NOT TO SCALE

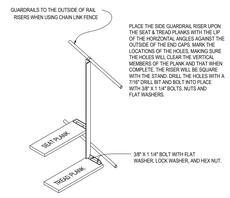

11 BB5 — SIDE GUARDRAIL RISER INSTALLATION
NOT TO SCALE

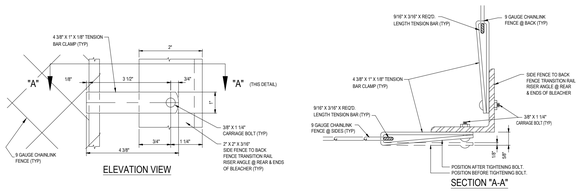

12 BB5 — TENSION BAR CLAMP INSTALLATION DETAIL
SCALE: NONE

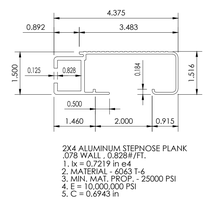

2X4 ALUMINUM STEPNOSE PLANK
.078 WALL , 0.828#/FT.
1. Ix = 0.7219 in e4
2. MATERIAL - 6063 T-6
3. MIN. MAT. PROP. - 25000 PSI
4. E = 10,000,000 PSI
5. C = 0.6943 in

13 BB5 — 2X4 KL ALUMINUM STEPNOSE PLANK DETAIL
NOT TO SCALE

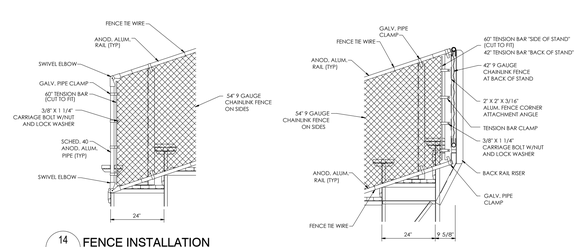

14 BB5 — FENCE INSTALLATION
NOT TO SCALE

1. ATTACH 1 1/2" X 1 1/2" X 3/16" AISLE EXTENSION ANGLE BRACES TO THE TREAD PLANKS WITH 5/16" X 1" CARRIAGE BOLTS AND HOLD-DOWN CLIPS.

2. CENTER AISLE EXTENSION PLANK ON THE ANGLES AND ATTACH WITH 5/16" BOLTS AND CLIPS AS ABOVE. THERE SHOULD BE ABOUT A 3" OVERHANG ON EACH SIDE OF THE AISLE EXTENSION ANGLES.

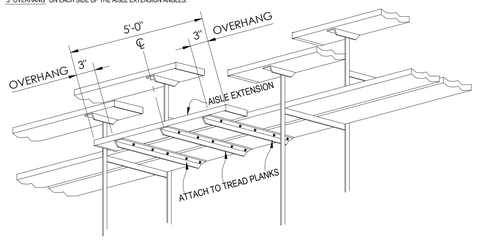

15 BB5 — AISLE EXTENSION INSTALLATION
NOT TO SCALE

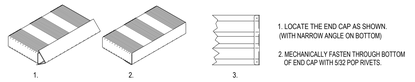

1. LOCATE THE END CAP AS SHOWN. (WITH NARROW ANGLE ON BOTTOM)

2. MECHANICALLY FASTEN THROUGH BOTTOM OF END CAP WITH 5/32 POP RIVETS.

16 BB5 — ANGLE END CAP INSTALLATION @ SIDE RAIL RISER
NOT TO SCALE

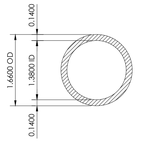

1. MATERIAL - 6063 T-6

17 BB5 — SCHED. 40 ALUMINUM PIPE DETAIL
NOT TO SCALE

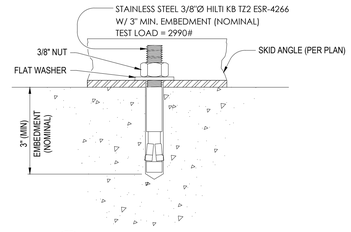

18 BB5 — WEDGE ANCHOR DETAIL
NO SCALE

STRUCTURAL ENGINEERS
5533 S. Oak Knoll Ave. Pasadena, CA 91101
(http://www.taylorsouthern.com)
CONTACT | PH. | FAX
CHRIS | (626) 792-7439
BRIAN | (626) 792-7439

TAYLOR & YFFAH
Southern BLEACHER COMPANY
GRANDSTANDS • BLEACHERS • STADIUMS
PO Box One, Graham, Texas 76450
901 FHS Street
Phone: 940/549-0755 Fax: 940/549-1365
Established 1946

THIS DRAWING AND ALL INFORMATION THEREIN IS THE PROPERTY OF THE SOUTHERN BLEACHER COMPANY. IT IS NOT TO BE LOANED, COPIED, OR MADE PUBLIC IN ANY FORM OR MANNER WHATSOEVER WITHOUT THE WRITTEN CONSENT OF THE SOUTHERN BLEACHER COMPANY. ALL DRAWINGS ARE TO BE RETURNED UPON DEMAND AND, IS NOT TO BE USED DIRECTLY OR INDIRECTLY IN ANY WAY DETRIMENTAL TO OUR INTERESTS.

DETAIL NUMBER
SHEET NUMBER

REGISTERED PROFESSIONAL ENGINEER
BRIAN T. DEAL
S 6087
STRUCTURAL
STATE OF CALIFORNIA
S&S 09/25/24
PRINCIPAL

ALUMINUM PLANK DETAILS
8" RISE X 24" TREAD / 55°-6" (5 ROWS)

BELLFLOWER UNIFIED SCHOOL DISCTRICT
MAYFAIR HIGH SCHOOL
LAKEWOOD, CALIFORNIA

REV	BY	DATE	DESCRIPTION

DATE	DRAWN	CHECKED
9/24/24	MG	DMC

JOB NUMBER #24094.1

SHEET BB5 OF BB5

22" X 34" (1:1x17 = 1/2 indicated scale)

24094.1

IDENTIFICATION STAMP
DIV. OF THE STATE ARCHITECT
APP: 03-124281 INC:
REVIEWED FOR
SS ☑ FLS ☑ ACS ☑
DATE: 02/04/2025

GENERAL NOTES:

APPLICABLE BUILDING CODE

All construction and workmanship shall conform to the 2022 California Building Code, California Code of Regulations – Title 24, Parts 1 & 2.

This pole and foundation standard has been designed for lateral loads on the completed structure as follows:

Wind Design Data:
- Vult = 95 MPH (Exposure C); Vasd = 74 MPH (Exposure C)
- Risk Category = II
- See Pole Foundation Schedule for maximum pole wind forces.

Seismic Design Data:
- Ie = 1.0
- Risk Category = II (Self Supporting Poles)
- Ss = 1.553
- S1 = 0.555
- Site Class = D
- Sms = 1.090
- Sm = 1.350
- Seismic Design Category = D
- Basic Seismic-Force-Resisting System = Non-Building Structure, not similar to buildings
- Cs = 0.389 (STRENGTH LEVEL)
- R = 1.5
- Ω = 1.5
- Analysis Procedure = Equivalent Lateral Force Procedure
- See Pole Foundation Schedule for maximum pole seismic forces.

GENERAL CONSTRUCTION

These notes shall be used in conjunction with the plans and any discrepancies shall be brought to the attention of the Registered Design Professional (RDP) in Responsible Charge.

Contractor must check all dimensions, clearances and job conditions before starting work. The RDP in Responsible Charge shall be notified immediately of any discrepancies or possible deficiencies.

The drawings and specifications represent the finished structure. All bracing, temporary supports, shoring, etc., is the sole responsibility of the Contractor. Observation visits to the job site by the RDP in Responsible Charge do not include inspection of construction procedures. The Contractor is solely responsible for all construction methods and for safety conditions at the worksite. These visits by RDP in Responsible Charge shall not be construed as continuous and detailed inspections.

Design, material, equipment, and products other than those described below or indicated on the drawings may be considered for use, provided prior approval is obtained from the School District, the RDP in Responsible Charge, and DSA.

All changes to the approved plans after a contract for construction has been awarded, affecting structural, access or life-safety portions of the project, shall be made by means of construction change documents (CCD) approved by DSA, as required by Section 4-338, Part 1, Title 24, CCR. All CCD shall be prepared and signed by the RDP in general Responsible Charge.

Substitutions shall be considered as a CCD and shall be approved by DSA prior to fabrication or use.

A Class 1 or Class 2 Project Inspector employed by the School District (Owner) and approved by DSA shall provide continuous inspection of the work, the duties of the inspector are defined in Section 4-342, Part 1, Title 24, CCR.

All Tests And Inspections shall be performed by an independent lab employed by the School District and approved by DSA.

Reference pole location on the Architectural, Structural, and/or Electrical drawings for actual pole placement and site location. Pole shall be located 5'-0" min. from adjacent structures below 50'-0" A.G.L., unless noted otherwise.

LIGHT POLE FOUNDATIONS

Reference geotechnical report prepared by John R. Byerly, Inc., Dated January 30, 2017; Report no. 3982; File no. S-13836.

Allowable Vertical soil Capacity – 275 PSF (Skin Friction).

Allowable Lateral Bearing capacity: 350 PSF/FT to maximum 3,000 PSF.

A representative of John R. Byerly, Inc. should be available at the time of the foundation installation to verify the soil design parameters and to provide assistance if any problems arise in foundation installation.

The Contractor must familiarize himself with the complete geotechnical report, and borings and contact the above firm to understand the soil conditions and the possibility of ground water pumping and excavation stabilization or bracing during the foundation installation and placement of concrete.

Soil formations that will require special design considerations or excavation procedures may exist. Pole foundations may need to be reanalyzed according to the soil conditions that exist.

If any discrepancies or inconsistencies arise, notify the RDP in Responsible Charge of such discrepancies.

All piers and concrete must bear on and against firm undisturbed soil as determined by the Geotechnical Engineer.

Place plywood collar around perimeter at the top of foundation excavation to prevent soil from entering pier.

All excavations must be free of loose soil, and debris prior to foundation installation and placement of concrete. Casing or drilling slurry may be required if caving occurs. Review and approval of the Geotechnical Engineer and DSA is required.

All excavations must be free of water or concrete shall be placed by the Tremie Method in accordance with ACI standard 336. Concrete placed by the Tremie Method shall have a minimum ultimate strength of 1,000 PSI greater than required under "Concrete Cast-In-Place" and a maximum slump of 8".

CONCRETE (CAST-IN-PLACE)

Concrete backfill without steel reinforcement shall attain a minimum ultimate compressive strength at 28 day test of 3,000 psi (2,500psi used for structural design). Batch plant inspection not required.

All concrete shall attain a minimum strength of 2,500 psi prior to steel pole erection.

Use Type II/V Portland cement or as directed by the Geotechnical Engineer.

Portland Cement ASTM C-150.

Aggregate ASTM C-33. 1" maximum aggregate size. ⅜" max agg. size acceptable where pump mixes are used at unreinforced concrete backfill.

Mix in conformance with ASTM C-94, ACI 318 SECTIONS 19.3 and 26.4.

Place concrete immediately after completion of excavation and inspection by the Geotechnical Engineer and the DSA Inspector. Under no circumstances shall piers be allowed to remain open for more than 12 hours without the approval of the Geotechnical Engineer. Excavations shall be covered and protected until filled with concrete.

Concrete shall be placed in one continuous operation (no construction joint) with special equipment to assure a maximum freefall of 5 ft and to prevent concrete from striking the sides of the excavation. Freefall of concrete is unacceptable through water or drilling slurry.

Vibrate concrete full depth, except for concrete with slump greater than 6", then vibrate only upper 10'-0". Concrete placed under water shall have a slump of 6"-8".

STEEL POLE

Steel pole sections conform to the California Code of Regulations T.24, Part 2, Chapter 22A.

All steel conforms to referenced ASTM specifications. (See Pole Data Table for each pole type).

All weldment conforms with AWS D1.1-15 specification for GMAW fillet utilizing E70S-X filler metal or SAW fillet utilizing F7XX-EXXX or F8XX-EXXX filler metal.
GMAW procedure conforms to AWS A5.18.
SAW procedure conforms to AWS A5.23.

Longitudinal seam welds for pole sections shall have 60% minimum penetration; Except longitudinal seam welds on the female section of telescopic field splices shall be full penetration groove welds for a length equal to the minimum splice length plus 6 inches. See drawing number MD1 for seam weld details.

Pole sections hot dipped galvanized to ASTM A123 latest standards.

All miscellaneous structural steel items conform to AISC 360-16.

Steel pole sections shall be assembled in the field by attaching two 1.5 ton "come alongs" to jacking ears, using full effort on each simultaneously, to ensure minimum overlaps as indicated on the "MS" sheet(s) and detail G/MD1.

PRECAST BASE

The precast concrete base conforms to California Code of Regulations, T.24, part 2, Chapter 19A and to Building Code Requirements for Reinforced Concrete, ACI 318-19. Precast bases are an ICC approved product under ESR-3765.

See detail "A" on "MS" sheet(s) for material strengths and specifications.

TESTING AND INSPECTION

Testing and inspection in accordance with Title 24, Part 1 & Part 2 & project DSA 103 form.

EXCAVATIONS & FOUNDATIONS:
Inspection of cast-in-place deep foundations – 1705A.8 & Table 1705A.8

CONCRETE MATERIALS: 1903A.1
Portland cement – 1910A.1
Concrete aggregates – 1903A.5
Prestressing steel and anchorages – 1910A.3

CONCRETE QUALITY:
Proportions of concrete – Reference ACI 318 Section 26.4.3.1 Through 26.4.4.1.
Strength tests of concrete – 1905A.1.17 and ACI 318 Section 26.12 & 26.5.3.2.

CONCRETE INSPECTION: 1705A.3 & Table 1705A.3
Job site – Reference ACI 318 Section 26.5.1,26.5.2.1(a) & (b),26.6.1.2(d), 26.11.1.1(a).
Batch Plant Inspection Not Required – 1705A.3.3.2
Prestressed concrete – 1704A.2.5, 1705A.3.4

STEEL MATERIALS:
Structural steel – 2202A.1 & 2205A.1
Cold formed steel – 2210A.1
Identification – 2202A.1
High strength bolt identification – table 1705A.2.1 & DSA IR 17-9

STEEL QUALITY:
Tests of structural steel & cold formed steel – 2202A.1
Tests of high strength bolts, nuts, & washers – 2213A.1 & DSA IR 17-8

STRUCTURAL STEEL INSPECTIONS: Table 1705A.2.1
Shop fabrication inspection – 1704A2.5
Welding – 1705A.2.5, DSA IR 17-3 and AWS D1.1.
High strength bolt installation – Table 1705A.2.1 & DSA IR 17-9
(Including Skidmore-Wilhelm bolt tension pre-installation verification testing)
(NOTE: ALL WELDING SHALL BE CONTINUOUSLY INSPECTED BY AN AWS CWI CERTIFIED INSPECTOR APPROVED BY DSA)

These plans are for construction approval. An application number and approval of these drawings by the Division of The State Architect of California must be secured to build from these plans.

INDEX OF SHEETS

MT1	NOTES, FOUNDATION DETAIL
MS1	90B POLE DETAILS
MD1	ATTACHMENT DETAILS
MD2	ATTACHMENT DETAILS
MD3	ATTACHMENT DETAILS

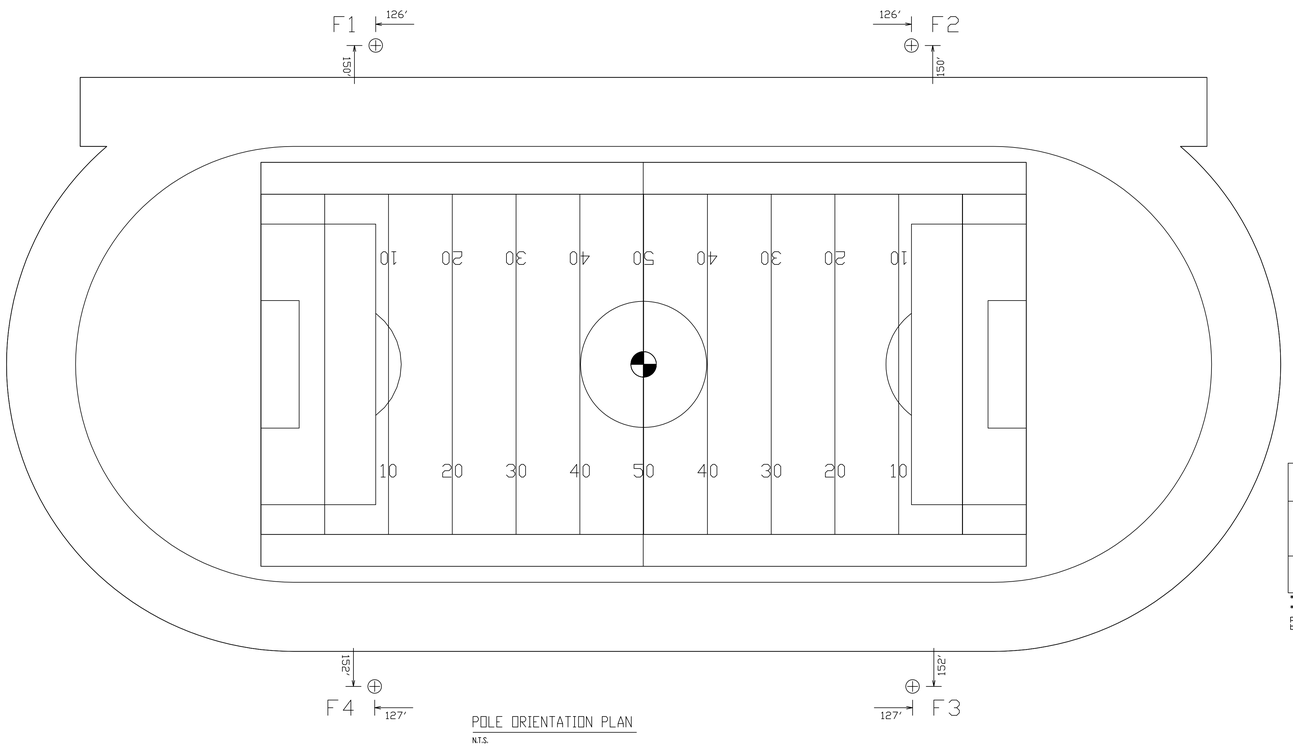

POLE ORIENTATION PLAN
N.T.S.

NOTE: THIS PLAN IS A PICTORIAL REPRESENTATION OF THE SITE LAYOUT. REFERENCE APPROPRIATE ARCHITECTURAL SITE PLAN FOR ALL NECESSARY INFORMATION.

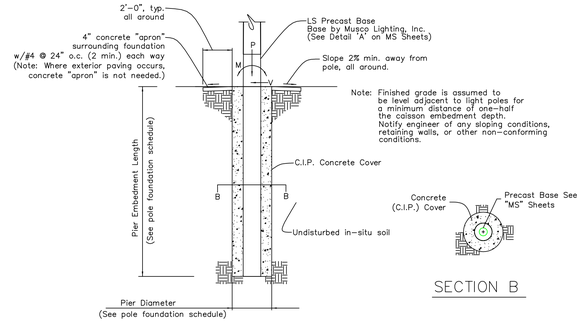

A FOUNDATION DETAIL
N.T.S.

POLE FOUNDATION SCHEDULE

POLE TYPE-# OF FIXTURES (MAX) (LSS=LIGHT STRUCTURE)	MARK (SEE POLE ORIENTATION PLAN)	WIND OR SEISMIC (SEISMIC FORCE INCLUDES OVERSTRENGTH FACTOR=1.5)	ASD LEVEL FORCES (MAX)			C.I.P. DEEP FOUNDATION		PRECAST BASE
			MOMENT (M) FT-LBS*	SHEAR (V) LBS	VERTICAL (P) LBS**	DIAMETER INCHES	EMBEDMENT FEET	EMBEDMENT LENGTH
LSS90B-10	F1-F4	SEISMIC	181,900	2,919	7,140	36"	18'-0"	18'-0"
		WIND	145,300	2,537	4,476			

*Moment (M) computed below grade at Shear (V) = 0.
**Vertical (P) load includes steel pole, light fixtures, and attachments. Vertical (P) load for wind is the dressed pole weight for erection purposes. Vertical (P) load for seismic also includes weight of precast base above groundline. Reference Detail "A" on MS Sheet(s) for precast base weight.

Information contained herein is the confidential property of Musco Sports Lighting, LLC and/or its parent companies, affiliates, successors and assigns. Reproduction, distribution, or use of the information other than its limited, intended purpose without express written permission is prohibited.
Musco products referenced or shown are protected by one or more of the following patents. U.S. Patents: 4947303; 4994718; 5075828; 5134557; 5161883; 5211473; 5229681; 5377611; 5398478; 5423281; 5426577; 5600537; 5794387; 5856721; 6036338; 6203176; 6250596; 6340790; 6398392; 6681110; 6833675; 6929385; 6969034; 6988697; 7059572; D337168; D353797; D353911; D411096. Other patents pending.

DSA-TITLE1_E

Mayfair High School Football
FIELD LIGHTING
LakewoodCA

REGISTERED PROFESSIONAL ENGINEER * WINFIELD * CIVIL * STRUCTURAL * STATE OF CALIFORNIA
Exp. 6-30-25

CONSULTANT
rtm engineering consultants
1 Ada, Suite 100, Irvine, CA 92618
949.753.8181
WWW.RTMEC.COM
RTM JOB NO.: 383.319

musco Lighting
CORPORATE OFFICE:
P.O. Box 808
100 1st Avenue West
Oskaloosa, Iowa 52577
800/825-6020

SHEET: SEE PLAN
DRAWING TITLE: NOTES, FOUNDATION DETAIL
REVISIONS
REFERENCE:

PROJECT NO. 188508
DATE: 05/21/2024
DRAWN BY: V.Alexander
DRAWING NO. MT1
1 OF 5

IDENTIFICATION STAMP
DIV. OF THE STATE ARCHITECT
APP: 03-124281 INC:
REVIEWED FOR
SS ☑ FLS ☑ ACS ☑
DATE: 02/04/2025

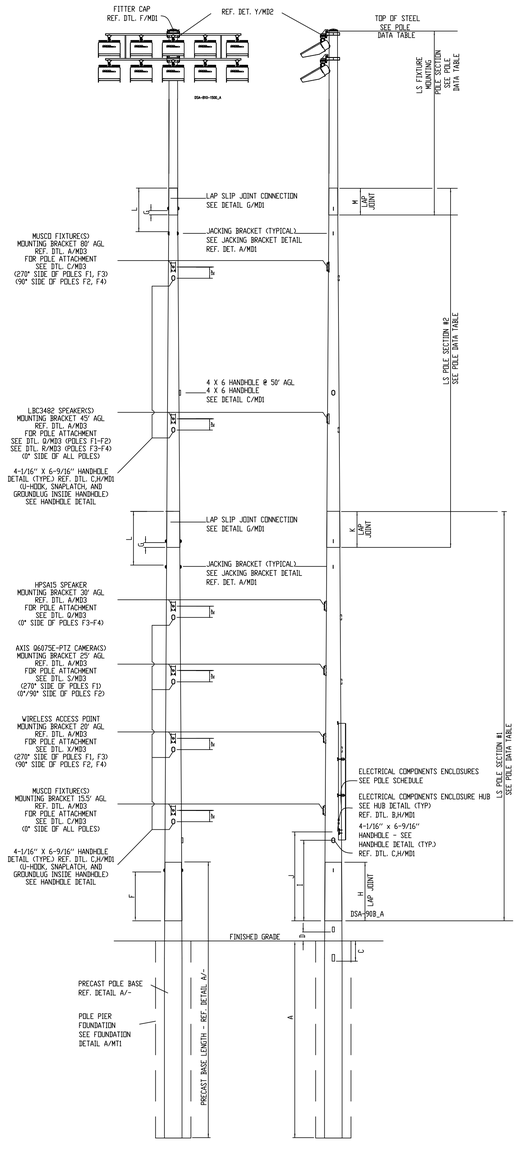

LSS90B POLE FRONT VIEW
N.T.S.

LSS90B POLE SIDE VIEW
N.T.S. DSA-90BASE_A

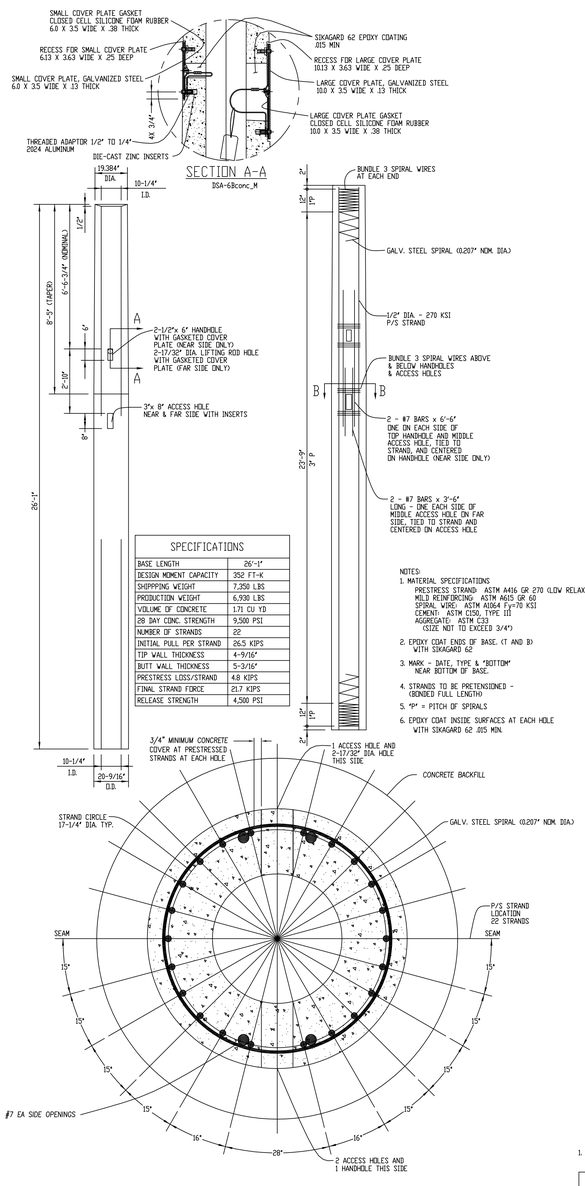

SPECIFICATIONS	
BASE LENGTH	26'-1"
DESIGN MOMENT CAPACITY	252 FT-K
SHIPPING WEIGHT	7,350 LBS
PRODUCTION WEIGHT	6,930 LBS
VOLUME OF CONCRETE	1.71 CU YD
28 DAY CONC. STRENGTH	9,500 PSI
NUMBER OF STRANDS	22
INITIAL PULL PER STRAND	26.5 KIPS
TIP WALL THICKNESS	4-9/16"
BUTT WALL THICKNESS	5-3/16"
PRESTRESS LOSS/STRAND	4.8 KIPS
FINAL STRAND FORCE	21.7 KIPS
RELEASE STRENGTH	4,500 PSI

NOTES:
1. MATERIAL SPECIFICATIONS
PRESTRESS STRAND: ASTM A416 GR 270 (LOW RELAXATION)
MILD REINFORCING: ASTM A615 GR 60
SPIRAL WIRE: ASTM A1064 Fy=70 KSI
CEMENT: ASTM C150, TYPE III
AGGREGATE: ASTM C33
(SIZE NOT TO EXCEED 3/4")
2. EPOXY COAT ENDS OF BASE. (T AND B)
WITH SIKAGARD 62
3. MARK - DATE, TYPE & "BOTTOM"
NEAR BOTTOM OF BASE.
4. STRANDS TO BE PRETENSIONED -
(BONDED FULL LENGTH)
5. "P" = PITCH OF SPIRALS
6. EPOXY COAT INSIDE SURFACES AT EACH HOLE
WITH SIKAGARD 62 .015 MIN.

PLAN SECTION B-B

A TYPE 6B PRECAST BASE DETAIL
N.T.S. DSA-68conc_M

NOTATION	DIMENSION LSS90B
A	18'-0"
C	2'-0" NOM.
D	1'-0" NOM.
F	4'-10" NOM.
G	1'-6"
H	6'-5 7/8" NOM. 5'-3 3/4" MIN.
I	8'-1 1/2" NOM.
J	9'-3 1/2" NOM.
K	4'-7 7/8" NOM. 3'-1 3/8" MIN.
L	5'-6 1/2" NOM.
M	3'-3 1/4" NOM. 2'-4" MIN.

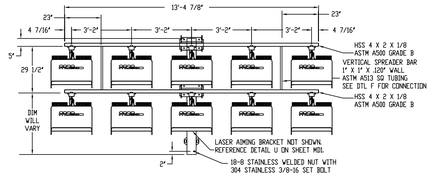

B 10 FIXTURE CONFIGURATION
N.T.S. DSA-B10C-1500_A

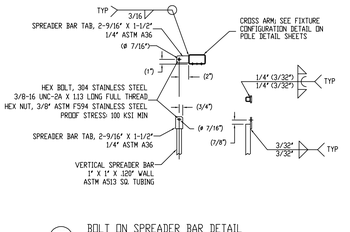

F BOLT ON SPREADER BAR DETAIL
SCALE: N.T.S. DSA-SpreaderBarBoltOn-LED_A

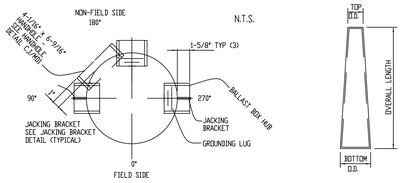

POLE ORIENTATION
N.T.S.

TOP/MIDDLE/BOTTOM
POLE SECTION

1. CONTAINS COMBINED EPA OF LIGHT FIXTURES, CROSS ARM AND MISCELLANEOUS FIXTURE MOUNTING APPARATUS.

FIXTURE WEIGHT 79.8 LBS. THIS INCLUDES THE WEIGHT OF FIXTURE, CROSS ARM & MISC. MOUNTING APPARATUS, ELECTRICAL BALLAST BOX WEIGHT 20 LBS PER FIXTURE SERVICED

POLE SCHEDULE						
SITE LOCATION	POLE MARK	REFERENCE LOCATION	POLE TYPE	FIXTURE CONFIGURATION	TOTAL EPA[1]	BALLAST BOX REQUIREMENTS
SEE SITE PLAN (BY OTHERS)	F1-F4	SEE POLE ORIENTATION PLAN	LSS90B	10 - SEE DETAIL B/MS1	34.9	SEE DETAIL SL.RL.D/M01

DSA-POLESCHE_C

POLE DATA TABLE											
POLE TYPE	PIECE MARK	MAX NUMBER OF X-ARMS	POLE SECTION	TOP O.D. (INCHES)	BTM. O.D. (INCHES)	OVERALL LENGTH	STRAIGHT LENGTH	TAPER LENGTH	THICKNESS (INCHES)	TOP OF STEEL NOMINAL	ASTM REFERENCE
LSS90B	MP-1BTT-1	2	FIXTURE MOUNTING	9.462"	12.000"	18'-1 1/2"	-----	18'-1 1/2"	.179	87'-5 7/8"	A595A (Fy=55 ksi) or A572, Gr 55 or 65
	MP-5BTTDSA-5		#2	11.183"	15.965"	34'-1 7/8"	-----	34'-1 7/8"	.179	-----	A595A (Fy=55 ksi) or A572, Gr 55 or 65
	MP-7BTDSA-D		#1	14.954"	20.770"	41'-6 1/2"	-----	41'-6 1/2"	.239	-----	A595A (Fy=55 ksi) or A572, Gr 55 or 65
	MP-6BDSA		PRECAST BASE	FOR PRECAST MEMBER PROPERTIES SEE PRECAST BASE DETAIL A/-							

DSA-90B1T_A

DSA-96_A

Mayfair High School Football
FIELD LIGHTING
LakewoodCA

CONSULTANT
rtm engineering consultants
1 Addison Street, Suite 100, Berkeley, CA 94704-1182
510.540.7331 www.rtmengr.com
RTM JOB NO.: 363.219

musco Lighting
CORPORATE OFFICE:
P.O. Box 808
100 1st Avenue West
Oskaloosa, Iowa 52577
800/825-6020

DRAWING TITLE: POLE DETAIL
SCALE: SEE PLAN
REVISIONS
REFERENCE

PROJECT NO. 188508

DATE: 05/21/2024

DRAWN BY: V.Alexander

DRAWING NO. MS1
2 OF 5

IDENTIFICATION STAMP
DIV. OF THE STATE ARCHITECT
APP: 03-124281 INC:
REVIEWED FOR
SS ☑ FLS ☑ ACS ☑
DATE: 02/04/2025

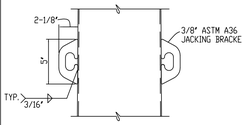

A JACKING BRACKET DETAIL
N.T.S. DSA-3RDSHEET_T

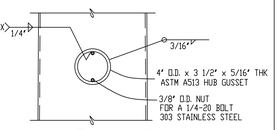

B HUB DETAIL
N.T.S. DSA-3RDSHEET_T

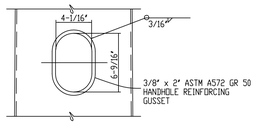

C HANDHOLE SLEEVE DETAIL
N.T.S. DSA-3RDSHEET_T

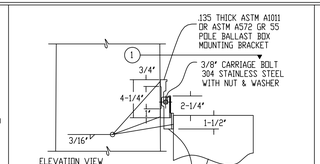

D MOUNTING BRACKET DETAIL
N.T.S. DSA-3RDSHEET_T

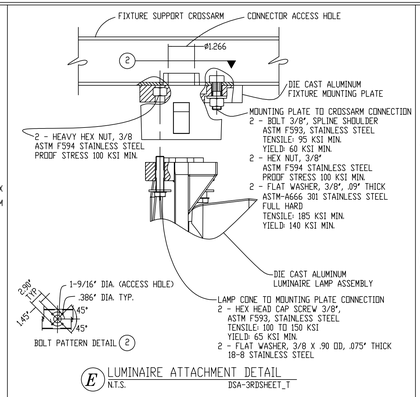

E LUMINAIRE ATTACHMENT DETAIL
N.T.S. DSA-3RDSHEET_T

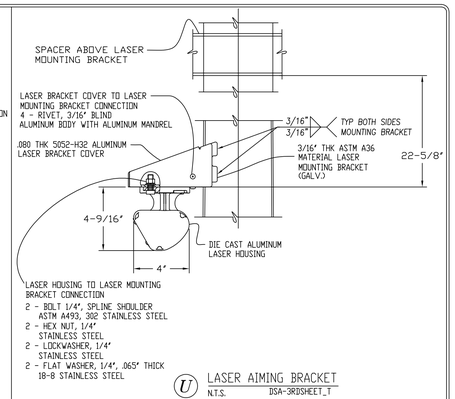

U LASER AIMING BRACKET
N.T.S. DSA-3RDSHEET_T

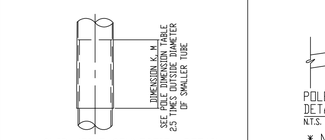

G SLIP JOINT CONNECTION DETAIL
N.T.S. DSA-LAP

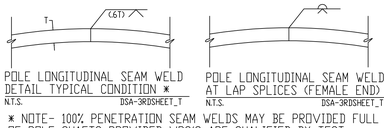

POLE LONGITUDINAL SEAM WELD DETAIL TYPICAL CONDITION *
N.T.S. DSA-3RDSHEET_T

POLE LONGITUDINAL SEAM WELD DETAIL AT LAP SPLICES (FEMALE END) *
N.T.S. DSA-3RDSHEET_T

* NOTE- 100% PENETRATION SEAM WELDS MAY BE PROVIDED FULL LENGTH OF POLE SHAFTS PROVIDED WPS'S ARE QUALIFIED BY TEST.

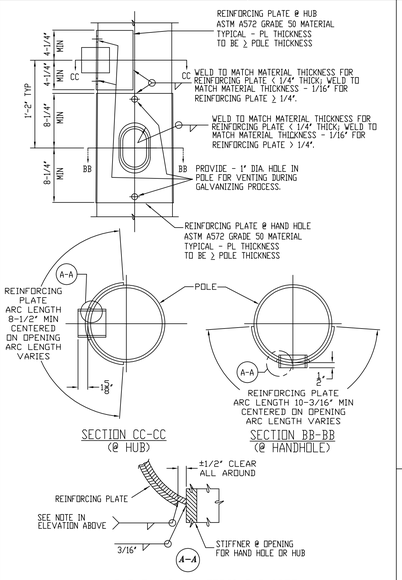

H HANDHOLE/HUB REINFORCING GUSSET
N.T.S.

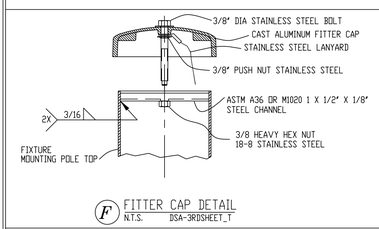

F FITTER CAP DETAIL
N.T.S. DSA-3RDSHEET_T

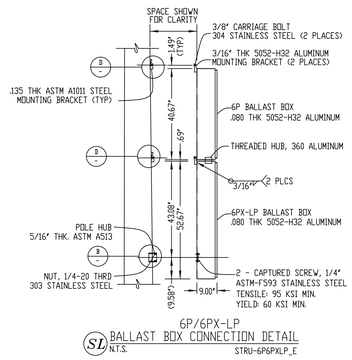

SL BALLAST BOX CONNECTION DETAIL
N.T.S.
6P/6PX-LP
STRU-6P6PXLP_E

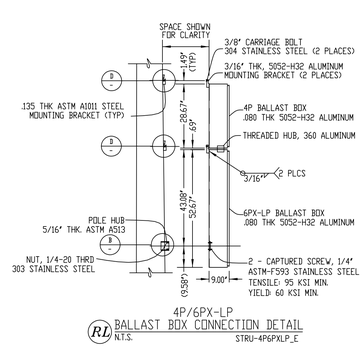

RL BALLAST BOX CONNECTION DETAIL
N.T.S.
4P/6PX-LP
STRU-4P6PXLP_E

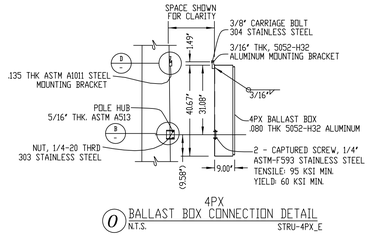

O BALLAST BOX CONNECTION DETAIL
N.T.S.
4PX
STRU-4PX_E

Information contained herein is the confidential property of Musco Sports Lighting, LLC and/or its parent companies, affiliates, successors and assigns. Reproduction, distribution, or use of the information other than its limited, intended purpose without express written permission is prohibited. Musco products referenced or shown are protected by one or more of the following patents. U.S. Patents: 4947303; 4994718; 5075828; 5134557; 5161883; 5211473; 5229681; 5377611; 5398478; 5423281; 5426577; 5600537; 5794387; 5856721; 6036338; 6203176; 6250596; 6340790; 6398392; 6681110; 6833675; 6929385; 6969034; 6988697; 7059572; D337168; D353797; D353911; D411096. Other patents pending.

Mayfair High School Football
FIELD LIGHTING
LakewoodCA

REGISTERED PROFESSIONAL ENGINEER
VINCENT ALEXANDER
No. E-30625
Exp. 6-30-25
STRUCTURAL
STATE OF CALIFORNIA

CONSULTANT
rtm engineering consultants
engineering consultants
1 Kaiser Plaza, Suite 1445, Oakland, CA 94612
Tel (510) 465-2336
Web www.rtmec.com
RTM JOB NO.: 343.219

musco Lighting
CORPORATE OFFICE:
P.O. Box 808
100 1st Avenue West
Oskaloosa, Iowa 52577
800/825-6020

DRAWING TITLE: ATTACHMENT DETAILS
SCALE: SEE PLAN
REVISIONS
REFERENCES

PROJECT NO. 188508
DATE: 05/21/2024
DRAWN BY: V.Alexander
DRAWING NO. MD1
3 OF 5

STRU-MDS

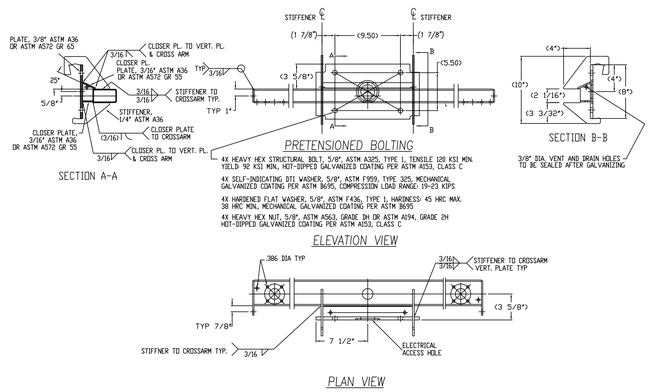

T BOLT ON CROSSARM DETAIL
SCALE: N.T.S. DSA-BOLTonBAR-LED_A_1

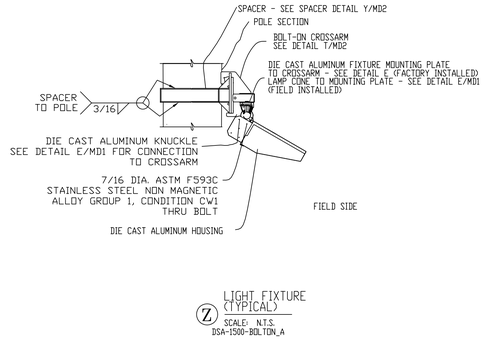

Z LIGHT FIXTURE (TYPICAL)
SCALE: N.T.S.
DSA-1500-BOLTON_A

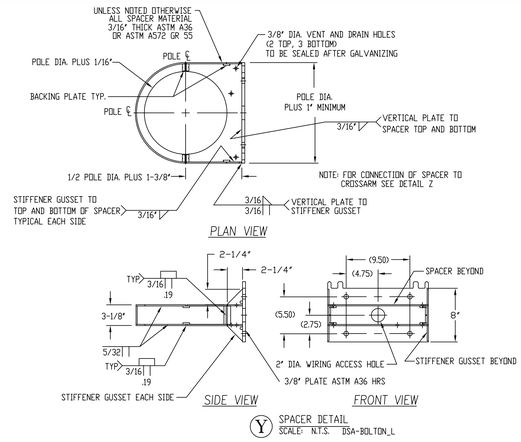

Y SPACER DETAIL
SCALE: N.T.S. DSA-BOLTON_L

Information contained herein is the confidential property of Musco Sports Lighting, LLC and/or its parent companies, affiliates, successors and assigns. Reproduction, distribution, or use of the information other than its limited, intended purpose without express written permission is prohibited. Musco products referenced or shown are protected by one or more of the following patents. U.S. Patents: 4947303; 4994718; 5075828; 5134557; 5161883; 5211473; 5229681; 5377611; 5398478; 5423281; 5426577; 5600537; 5794387; 5856721; 6036338; 6203176; 6250596; 6340790; 6398392; 6681110; 6833675; 6929385; 6969034; 6988697; 7059572; D337168; D353797; D353911; D411096. Other patents pending.

IDENTIFICATION STAMP
DIV. OF THE STATE ARCHITECT
APP: 03-124281 INC:
REVIEWED FOR
SS ☑ FLS ☑ ACS ☑
DATE: 02/04/2025

Mayfair High School Football
FIELD LIGHTING
LakewoodCA

CONSULTANT
rtm
engineering group, inc.
1 Ada Suite 100 Irvine, CA 92618
949.753.8181
WWW.RTMEG.COM
RTM JOB NO.: 343.219

musco Lighting
CORPORATE OFFICE:
P.O. Box 808
100 1st Avenue West
Oskaloosa, Iowa 52577
800/825-6020

DRAWING TITLE: ATTACHMENT DETAILS
SCALE: SEE PLAN
REVISIONS:
REFERENCE:

PROJECT NO. 188508

DATE: 05/21/2024

DRAWN BY: V.Alexander

DRAWING NO. MD2
4 OF 5

1780-MD2

IDENTIFICATION STAMP
DIV. OF THE STATE ARCHITECT
APP: 03-124281 INC:
REVIEWED FOR
SS ☑ FLS ☑ ACS ☑
DATE: 02/04/2025

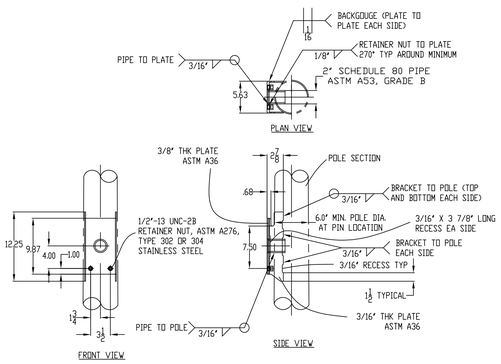

A BRACKET DETAIL
N.T.S. DSA-Brk-Dtl-L_A

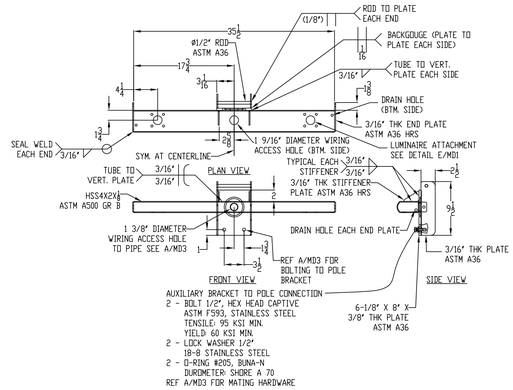

C 2P AUXILIARY MOUNTING BRACKET
N.T.S. DSA-2P FIXTURE MOUNT_E

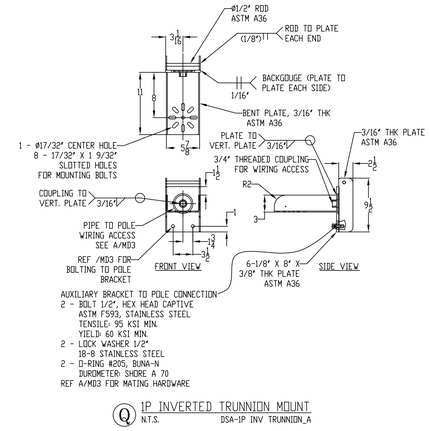

Q 1P INVERTED TRUNNION MOUNT
N.T.S. DSA-1P INV TRUNNION_A

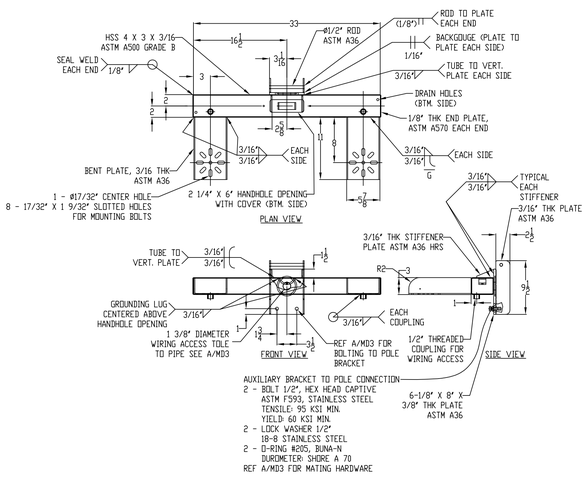

R 2P INVERTED TRUNNION MOUNT
N.T.S. DSA-2P INV TRUNNION_A

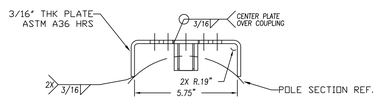

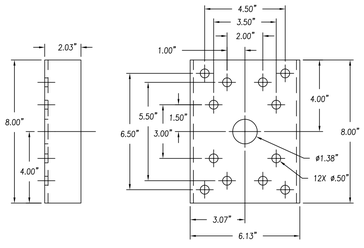

S 1P CAMERA CHANNEL
N.T.S.

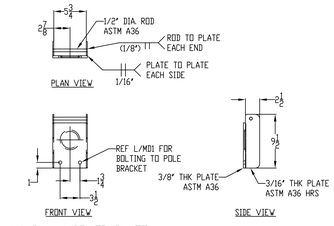

X BLANK COVER PLATE
N.T.S. DSA-BLANK PLATE_A

Information contained herein is the confidential property of Musco Sports Lighting, LLC and/or its parent companies, affiliates, successors and assigns. Reproduction, distribution, or use of the information other than its limited, intended purpose without express written permission is prohibited. Musco products referenced or shown are protected by one or more of the following patents. U.S. Patents: 4947303; 4994718; 5075828; 5134557; 5161883; 5211473; 5229681; 5377611; 5398478; 5423281; 5426577; 5600537; 5794387; 5856721; 6036338; 6203176; 6250596; 6340790; 6398392; 6681110; 6833675; 6929385; 6969034; 6988697; 7059572; D337168; D353797; D353911; D411096. Other patents pending.

Mayfair High School Football
FIELD LIGHTING
LakewoodCA

CONSULTANT
rtm engineering consultants
1 Main Street, Chatham, NJ 07928
Ph: (973) 822-0006
RTM JOB NO.: 353.319

musco Lighting
CORPORATE OFFICE:
P.O. Box 808
100 1st Avenue West
Oskaloosa, Iowa 52577
800/825-6020

DRAWING TITLE: ATTACHMENT DETAILS
SCALE: SEE PLAN
REVISIONS
REFERENCE:

PROJECT NO. 188508
DATE: 05/21/2024
DRAWN BY: V.Alexander
DRAWING NO. MD3
5 OF 5

STRU-MD3

IDENTIFICATION STAMP
DIV. OF THE STATE ARCHITECT
APP: 03-124281 INC:
REVIEWED FOR
SS ☑ FLS ☑ ACS ☑
DATE: 02/04/2025

GENERAL NOTES

1. ALL DIMENSIONS, CONDITIONS AND ELEVATIONS ARE TO BE FIELD VERIFIED BY THE CONTRACTOR PRIOR TO COMMENCING WORK OR FABRICATION. IF ANY DISCREPANCIES ARE FOUND OR IF ANY CONDITION EXISTS NOT AS SHOWN ON THE DRAWINGS THE ENGINEER SHALL BE NOTIFIED IMMEDIATELY.

2. THE CONTRACTOR WILL HOLD HARMLESS, INDEMNIFY AND DEFEND THE OWNER, THE ENGINEER, AND HIS CONSULTANTS, AND EACH OF THEIR OFFICERS AND EMPLOYEES AND AGENTS, FROM ANY AND ALL LIABILITY CLAIMS, LOSSES OR DAMAGE ARISING OR ALLEGED TO ARISE FROM THE PERFORMANCE OF THE WORK DESCRIBED HEREIN, BUT NOT INCLUDING THE SOLE NEGLIGENCE OF THE OWNER, THE ENGINEER AND HIS CONSULTANTS, AND EACH OF THEIR OFFICERS AND EMPLOYEES AND AGENTS.

3. THE CONTRACT DRAWINGS AND SPECIFICATIONS REPRESENT THE DESIGN INTENT. UNLESS OTHERWISE SHOWN, THEY DO NOT INDICATE THE METHOD OF CONSTRUCTION. THE CONTRACTOR SHALL SUPERVISE AND DIRECT THE WORK AND HE SHALL BE SOLELY RESPONSIBLE FOR ALL CONSTRUCTION MEANS, METHODS, TECHNIQUES, SEQUENCES, AND PROCEDURES.

IN ACCORDANCE WITH GENERALLY ACCEPTED CONSTRUCTION PRACTICES, THE CONTRACTOR WILL BE SOLELY AND COMPLETELY RESPONSIBLE FOR THE CONDITIONS OF THE JOB SITE, INCLUDING SAFETY OF ALL PERSONS AND PROPERTY DURING PERFORMANCE OF THE WORK. THIS REQUIREMENT WILL APPLY CONTINUOUSLY AND NOT BE LIMITED TO NORMAL WORKING HOURS.

ALL WORK SHALL CONFORM TO THE LATEST APPLICABLE CONSTRUCTION SAFETY REQUIREMENTS OF O.S.H.A. AND ANY OTHER GOVERNMENTAL ENTITY HAVING JURISDICTION.

4. THE DUTY OF THE ENGINEER TO CONDUCT CONSTRUCTION REVIEW OF THE CONTRACTOR'S PERFORMANCE IS NOT INTENDED TO INCLUDE REVIEW OF THE ADEQUACY OF THE CONTRACTOR'S SAFETY MEASURES, IN, ON, OR NEAR THE CONSTRUCTION SITE.

5. ANY SUPPORT SERVICES PERFORMED BY THE ENGINEER OR HIS REPRESENTATIVES DURING CONSTRUCTION SHALL BE DISTINGUISHED FROM CONTINUOUS AND DETAILED INSPECTION SERVICES WHICH ARE FURNISHED BY OTHERS. THESE SUPPORT SERVICES PERFORMED BY THE ENGINEER WHETHER OF MATERIAL OR WORK AND WHETHER PERFORMED PRIOR TO, DURING, OR AFTER COMPLETION OF CONSTRUCTION ARE PERFORMED SOLELY FOR THE PURPOSE OF ASSISTING IN QUALITY CONTROL AND IN ACHIEVING CONFORMANCE WITH CONTRACT DRAWINGS AND SPECIFICATION, BUT THEY DO NOT GUARANTEE THE CONTRACTOR'S PERFORMANCE AND SHALL NOT BE CONSTRUED AS SUPERVISION OF CONSTRUCTION.

6. ANY CHANGES TO THE APPROVED SET OF PLANS WITHOUT NOTIFYING THE ENGINEER PRIOR TO SUCH CHANGES ABSOLVES SAID ENGINEER FROM ANY AND ALL RESPONSIBILITY WITH RESPECT TO LIABILITY, DAMAGE OR EXTRA WORK RESULTING FROM SAID CHANGES.

7. NOTES AND DETAILS ON THE DRAWINGS SHALL TAKE PRECEDENCE OVER THESE GENERAL NOTES.

8. THE TYPICAL DETAILS SHOWN ON THESE SHEETS SHALL APPLY IN ALL CASES UNLESS SPECIFICALLY SHOWN OTHERWISE. WHERE NO DETAIL IS SHOWN, CONSTRUCTION SHALL BE AS SHOWN FOR OTHER SIMILAR WORK.

9. DESIGN LOADS: RISK CATEGORY II OR RISK CATEGORY III
ROOF LIVE LOAD: 20 PSF REDUCIBLE ROOF DEAD LOAD: 3 PSF
SNOW LOAD: $P_g = P_s = 20$ PSF & 30.5 PSF $C_e = 1.1$ $C_t = 1.2$ $C_s = 1.0$
$I_B = 1.0$ RISK CATEGORY II $I_B = 1.1$ RISK CATEGORY II ICE LOAD = 0 PSF

SEISMIC: $I_E = 1.0$ AT RISK CATEGORY II $I_E = 1.25$ AT RISK CATEGORY III

SEISMIC DESIGN CATEGORY = E $\rho = 1.3$ FOR OFFSET CONFIGURATION

STRUCTURE IS A STEEL ORDINARY CANTILEVERED COLUMN SYSTEM (G2 PER ASCE7-16)
R = 1.25/0.7 (FOR WORKING STRESS)
$C_a = 1.25$ $C_d = 1.25$
SOIL SITE CLASS = D
FOR 12' COLUMN HEIGHT T = 0.361
FOR 14' COLUMN HEIGHT T = 0.45
FOR 16' COLUMN HEIGHT T = 0.497

BASE SHEAR: $V = \rho \times C_s \times W$
RISK CATEGORY II $V = 0.728W$ (ASD) FOR $S_{DS} = 1.0$
LOW SEISMIC & RC II $V=0.728W$ (ASD) FOR $S_{DS} = 0.8$
RISK CATEGORY II $V = 1.82W$ (ASD) FOR $S_{DS} = 2.5$
HIGH SEISMIC & RC II $V=1.82W$ (ASD) FOR $S_{DS} = 2.0$

WIND LOAD: 107 MPH, EXPOSURE C RISK CATEGORY II OR RISK CATEGORY III
Kd = 0.85 Kz = 0.90 Kzt = 1.0 Ke = 1.00
$q_h = 21.42$ ($q_h = 0.00256 \times Kz \times Ke \times Kzt \times Kd \times V^2 \times 0.6$ (FOR WORKING STRESS)). THE STRUCTURE IS DESIGNED FOR CLEAR & OBSTRUCTED WIND FLOWS. MAXIMUM BASIC WIND LOAD FOR PROJECT LOCATED IN SPECIAL WIND REGIONS SHALL BE EQUAL TO OR LESS THAN 130 mph AND CONFORM WITH THE ADOPTED ORDINANCE OF THE CITY, COUNTY OR CITY AND COUNTY IN WHICH THE PROJECT SITE IS LOCATED AND SHALL BE APPROVED BY DSA-SS.

10. GOVERNING CODE: 2022 CBC

11. ALLOWABLE SOIL BEARING IS BASED ON 1500 PSF & 100 PCF×2 PASSIVE PRESSURE PER CBC TABLE 1806.2 & SECTION 1806A.3.4. SKIN FRICTION IS PER 1810A.3.3.1.4 & IS EQUAL TO 1500/6=250 PSF. FOR UPLIFT SKIN FRICTION SHALL BE 125 PSF (S.F. OF .2). 1/3 INCREASE WAS NOT USED FOR ANY VALUES. TOP OF PIER IS ASSUMED TO BE MADE ONE-HALF INCH.

12. ALL WORK TO BE PERFORMED UNDER THE CONTINUOUS INSPECTION OF A D.S.A. APPROVED INSPECTOR.

13. ALL WORK SHALL CONFORM TO TITLE 24, CALIFORNIA CODE OF REGULATIONS (CCR).

14. CHANGES TO THE APPROVED DRAWINGS AND SPECIFICATIONS SHALL BE MADE BY AN ADDENDA OR A CONSTRUCTION CHANGE DOCUMENT APPROVED BY THE DIVISION OF THE STATE ARCHITECT, AS REQUIRED BY SECTION 4-338, PART 1, TITLE 24, CCR AND THE ENGINEER.

15. A PROJECT INSPECTOR EMPLOYED BY THE DISTRICT (OWNER) AND APPROVED BY THE OFFICE OF THE STATE ARCHITECT SHALL PROVIDE CONTINUOUS INSPECTION OF THE WORK. THE DUTIES OF THE INSPECTOR ARE DEFINED IN SECTION 4-342, PART 1, TITLE 24, CCR.

CONCRETE NOTES

1. ALL MOLDS, ORNAMENTS, GROOVES, ETC. SHOWN ON THE ARCHITECTURAL DRAWINGS SHALL BE PROVIDED FOR IN THE FORM WORK BEFORE THE CONCRETE IS POURED.

2. ALL REINFORCING STEEL, ANCHOR BOLTS, DOWELS AND OTHER EMBEDS SHALL BE IN PLACE AND SECURED TO FORM WORK PRIOR TO POURING OF CONCRETE.

3. REFER TO BOTH ARCHITECTURAL AND MECHANICAL DRAWINGS FOR LOCATION OF PLUMBING FIXTURES.

4. NO PIPES OR DUCTS SHALL BE PLACED IN CONCRETE WALLS OR STRUCTURAL SLABS UNLESS SPECIFICALLY DETAILED.

5. CONSTRUCTION JOINTS NOT INDICATED ON THE DRAWINGS SHALL BE SO MADE AND LOCATED AS NOT TO IMPAIR THE STRENGTH OF THE STRUCTURE. PROVISION SHALL BE MADE FOR TRANSFER OF SHEAR AND OTHER FORCES THROUGHOUT THE JOINTS. THE CONTRACTOR SHALL OBTAIN THE ARCHITECTS APPROVAL OF CONSTRUCTION JOINT LOCATION IN ALL STRUCTURAL SLAB, BEAMS AND SHEAR WALLS.

6. SIDES OF FOOTINGS MAY BE POURED AGAINST STABLE EARTH.

7. THE QUALITY AND DESIGN OF CONCRETE SHALL COMPLY WITH TITLE 24 PART 2 EXCEPT ITEMS NOT SPECIFICALLY COVERED THEREIN SHALL CONFORM TO ACI 318.

8. ALL REINFORCING SHALL BE NEW STOCK DEFORMED BARS CONFORMING TO ASTM A615.

A. #4 BARS AND SMALLER_____ GRADE 40 OR 60
B. #5 BARS AND LARGER_____GRADE 60
C. SEPARATE BARS 1-1/2 DIAMETERS CLEAR OR 1-1/2" CLEAR, WHICHEVER IS LARGER.

9. MINIMUM CONCRETE COVER FOR REINFORCING SHALL BE AS FOLLOWS:
CAST AGAINST EARTH (EXCEPT SLABS ON GRADE).....3"
SLABS ON GRADE.....1-1/2"
EXPOSED TO EARTH OR WEATHER
#5 BARS AND SMALLER.....1-1/2"
#6 BARS AND LARGER.....2"
NOT EXPOSED TO WEATHER OR IN CONTACT WITH GROUND
SLABS, WALLS, JOISTS
#11 BARS AND SMALLER.....3/4"
#14 AND #18 BARS.....1-1/2"
BEAMS, GIRDERS, COLUMNS
PRINCIPAL REINFORCING, TIES
STIRRUPS, OR SPIRALS.....1-1/2"
SHELLS AND FOLDED PLATE MEMBERS
#5 BARS AND SMALLER.....1/2"
#6 BARS AND LARGER.....3/4"

10. CONCRETE SHALL HAVE FOLLOWING MINIMUM REQUIREMENTS FOR THE FOLLOWING EXPOSURE CATEGORIES AND CLASSES:
F0- 3000 PSI AT 28 DAYS & MAXIMUM WATER TO CEMENT RATIO OF 0.5,
F2- 4500 PSI AT 28 DAYS & MAXIMUM WATER TO CEMENT RATIO OF 0.45. VERIFY COMPLIANCE W/ ACI TABLE 19.3.3.1.

11. THE ENGINEER DOES NOT PROVIDE CONTRACT ADMINISTRATION FOR THE PROJECT, INCLUDING REVIEW OF CONCRETE MIXES.

12. PER ACI SECTION 19.3.2.1, FOOTING SHALL NOT BE EXPOSED TO FREEZING AND THAWING CYCLES, SHALL NOT BE EXPOSED TO WATER-SOLUBLE SULFATE IN SOIL BY PERCENT OF MASS 20.10%, SHALL NOT BE EXPOSED TO EXTERNAL SOURCE OF CHLORIDES.

13. CEMENT SHALL COMPLY W/ ASTM C150 AND AGGREGATE SHALL COMPLY W/ ASTM C33.

STRUCTURAL STEEL NOTES

1. ALL STRUCTURAL STEEL EXCEPT W SHAPES SHALL CONFORM TO ASTM A-36 AND SHALL BE FABRICATED AND ERECTED AS PER AISC SPECIFICATIONS FOR BUILDINGS. W SHAPES SHALL CONFORM TO ASTM A992.

2. STRUCTURAL PIPE SHALL CONFORM TO ASTM A-53 GRADE "B" AND STRUCTURAL TUBING SHALL CONFORM TO ASTM A-500 GRADE "B". F_y=46KSI.

3. ALL LIGHT GAGE STEEL TO CONFORM TO ASTM A653 GRADE 55 FOR ALL STRUCTURAL SHAPES, A653 GRADE 33 FOR ALL BLOCKING, FLASHINGS, MISCELLANEOUS CONNECTION PLATES, AND ANGLES.

4. ALL UNFINISHED BOLTS SHALL BE ASTM A-307 UNLESS NOTED OTHERWISE.

5. USE AISC USUAL GAGES FOR BOLT HOLES IN ALL STEEL SECTIONS UNLESS OTHERWISE NOTED.

6. THE STEEL FABRICATOR SHALL PROVIDE ADEQUATE TEMPORARY BRACING FOR ERECTION.

7. ALL BOLT HOLES ARE TO BE 1/16" OVERSIZED. ALL BOLTS SHALL HAVE WASHERS INSTALLED UNDER BOTH HEAD & NUT. SELF DRILLING SCREWS SHALL BE PER ESR-1976 OR EQUAL.

8. ALL STEEL SHALL BE PROTECTED FROM WEATHER AS FOLLOWS: STRUCTURAL STEEL SHALL BE HOT-DIP GALVANIZED (MINIMUM ASTM A123 OR A153, CLASS D) OR PAINTED WITH ZINC-RICH PRIMER, UNDERCOAT, AND FINISH COAT; OR EQUIVALENT PAINT SYSTEM. COLD-FORMED STEEL MEMBERS SHALL BE 55% ALUMINUM-ZINC ALLOY COATED PER ASTM A792/A792M STANDARD IN ACCORDANCE TO AISI S200 TABLE A4-1, OF 60 COATING DESIGNATION.

ALL EXPOSED STEEL FASTENERS, INCLUDING CAST-IN-PLACE ANCHOR BOLTS/RODS, SHALL BE STAINLESS STEEL (TYPE 304 MINIMUM), HOT-DIP GALVANIZED (ASTM A153, CLASS D MINIMUM), OR PROTECTED WITH CORROSION-PREVENTIVE COATING THAT DEMONSTRATED NO MORE THAN 2% OF RED RUST IN MINIMUM 1,000 HOURS OF EXPOSURE IN SALT SPRAY TEST PER ASTM B117. ZINC-PLATED FASTENERS DO NOT COMPLY WITH THIS REQUIREMENT. (EXAMPLE PROPRIETARY COATINGS THAT DO COMPLY WITH THE 1,000 HOUR REQUIREMENT INCLUDE BUT ARE NOT NECESSARILY LIMITED TO: GUK GUARD BY SIMPSON, KWIK-COTE BY HILTI, STALGARD BY ELCO, VISTACORR BY SFS INTEC, ETC.)

GOVERNING CODES:

1. 2022 CALIFORNIA BUILDING STANDARDS ADMINISTRATIVE CODE (PART 1, TITLE 24, CCR).
2. 2022 CALIFORNIA BUILDING CODE, VOLUMES 1 & 2 (PART 2, TITLE 24, CCR).
3. 2022 CALIFORNIA ELECTRICAL CODE (PART 3, TITLE 24, CCR).
4. 2022 CALIFORNIA FIRE CODE (PART 9, TITLE 24, CCR).

NOTES

1. COVERS ARE NOT DESIGNED TO BE ENCLOSED OR FOR STORAGE OF COMBUSTIBLE MATERIALS.
2. WALKWAY COVER HAS BEEN CHECKED FOR CLEAR & OBSTRUCTED WIND FLOW CONDITIONS & CAN BE WITHIN 6" MIN. FROM AN EXISTING BUILDING.
3. WALKWAY PIER FOOTING HAS BEEN CHECKED FOR D.S.A. BULLETIN 09-06 REV..
4. ALL WORK SHALL COMPLY WITH C.F.C. CHAPTER 33 DURING CONSTRUCTION.

TESTING & INSPECTIONS REQUIREMENTS

1. INSPECTOR CLASS (MINIMUM REQUIREMENTS)
2. SELECTION OF THE PROJECT INSPECTOR AND TESTING AGENCY
BY THE SCHOOL DISTRICT AND APPROVED BY D.S.A., A/E OF RECORD AND STRUCTURAL ENGINEER
3. COST OF THE PROJECT INSPECTOR (CA ADMIN. CODE 4-333(B) AND TESTING AGENCY (CA ADMIN. CODE 4-335)
BY THE SCHOOL DISTRICT
4. COPIES OF THE REPORT TO
ARCHITECT; STRUCTURAL ENGINEER; SCHOOL DISTRICT; D.S.A. (ORIGINAL); IOR; MANUFACTURER

NOTICE OF DISCLAIMER FOR STRUCTURAL ENGINEERING RESPONSIBILITY

1. PER TITLE 24, PART 1, SECTION 4-316 (D & E) OF THE CALIFORNIA CODE OF REGULATIONS, THE DISTRICT SHALL HIRE AN ARCHITECT OR STRUCTURAL ENGINEER TO BE IN GENERAL RESPONSIBLE CHARGE OF SITE SPECIFIC PROJECT.
2. FOR SITE SPECIFIC PROJECT GERARD HOMER & ASSOCIATES IS NOT THE DESIGN PROFESSIONAL IN GENERAL RESPONSIBLE CHARGE.
3. FOR SITE SPECIFIC PROJECT GERARD HOMER & ASSOCIATES RESPONSIBILITY IS LIMITED TO THE PREPARATION OF PLANS AND SPECIFICATIONS FOR A PORTION OF THE PROJECT AS DESIGNED BY THE ARCHITECT FOR INCORPORATION INTO THE PROJECT.
4. STRUCTURAL OBSERVATION OF CONSTRUCTION IS SPECIFICALLY EXCLUDED FROM GERARD HOMER & ASSOCIATES RESPONSIBILITY FOR SITE SPECIFIC PROJECT.

SHADE STRUCTURE TESTING & INSPECTION GUIDELINE

THE DSA-103 GUIDELINES SHOWN ON THIS SHEET IS FOR ILLUSTRATION PURPOSES ONLY TO ASSIST IN THE COMPLETION OF FUTURE PROJECT-SPECIFIC FORM DSA-103. A FORM DSA-103 IS TO BE COMPLETED FOR EACH APPLICATION THAT THIS PC IS BEING INCORPORATED INTO AND THE EXAMPLE FORM DSA-103 IS TO BE CROSSED OUT ON THIS DRAWING.

DSA 103-22 LIST OF STRUCTURAL TESTS & SPECIAL INSPECTIONS – 2022 CBC

IMPORTANT: THIS FORM IS ONLY A SUMMARY LIST OF STRUCTURAL TESTS AND SOME OF THE SPECIAL INSPECTIONS REQUIRED FOR THE PROJECT. GENERALLY, THE STRUCTURAL TESTS AND INSPECTIONS NOTED ON THIS FORM ARE THOSE THAT WILL BE PERFORMED BY THE GEOTECHNICAL ENGINEER OF RECORD, LABORATORY OF RECORD, OR SPECIAL INSPECTOR. THE ACTUAL COMPLETE TEST AND INSPECTION PROGRAM MUST BE PERFORMED AS DETAILED ON THE DSA APPROVED DOCUMENTS. THE APPENDIX AT THE BOTTOM OF THIS FORM IDENTIFIES WORK NOT SUBJECT TO DSA REQUIREMENTS FOR SPECIAL INSPECTION OR STRUCTURAL TESTING. THE PROJECT INSPECTOR IS RESPONSIBLE FOR PROVIDING INSPECTION OF ALL FACETS OF CONSTRUCTION, INCLUDING BUT NOT LIMITED TO, SPECIAL INSPECTIONS NOT LISTED ON THIS FORM SUCH AS STRUCTURAL WOOD FRAMING, HIGH-LOAD WOOD DIAPHRAGMS, COLD-FORMED STEEL FRAMING, ANCHORAGE OF NON-STRUCTURAL COMPONENTS, ETC., PER TITLE 24, PART 2, CHAPTER 17A (2022 CBC).

**NOTE: UNDEFINED SECTION & TABLE REFERENCES FOUND IN THIS DOCUMENT ARE FROM THE CBC, OR CALIFORNIA BUILDING CODE.

NOTE: REFERENCES ARE TO THE 2022 EDITION OF THE CALIFORNIA BUILDING CODE (CBC) UNLESS OTHERWISE NOTED.

TEST OR SPECIAL INSPECTION
SOILS
S1. GENERAL:
a. VERIFY THAT: SITE HAS BEEN PREPARED PROPERLY PRIOR TO PLACEMENT OF CONTROLLED FILL AND/OR EXCAVATIONS FOR FOUNDATIONS. FOUNDATION EXCAVATIONS ARE EXTENDED TO PROPER DEPTH AND HAVE REACHED PROPER MATERIAL. MATERIALS BELOW FOOTINGS ARE ADEQUATE TO ACHIEVE THE DESIGN BEARING CAPACITY.
S4. CAST-IN-PLACE DEEP FOUNDATIONS (PIERS);
a. INSPECT DRILLING OPERATIONS AND MAINTAIN COMPLETE AND ACCURATE RECORDS FOR EACH PIER.
b. VERIFY PIER LOCATIONS, DIAMETERS, PLUMBNESS & LENGTHS. RECORD CONCRETE OR GROUT VOLUMES.
c. CONCRETE PIERS
CONCRETE
C1. CAST IN PLACE CONCRETE
MATERIAL VERIFICATION AND TESTING:
a. VERIFY USE OF REQUIRED DESIGN MIX.
b. IDENTIFY, SAMPLE & TEST REINFORCING STEEL.
c. DURING CONCRETE PLACEMENT, FABRICATE SPECIMENS FOR STRENGTH TESTS, SLUMP & AIR CONTENT TESTS, AND DETERMINE THE TEMPERATURE OF THE CONCRETE.
d. TEST CONCRETE (COMPRESSION). T-6
e. BATCH PLANT INSPECTION – PERIODIC, DESIGN COMPLIES WITH 1705A.3.3.1 ITEM 2.
STEEL
S/A1. STRUCTURAL STEEL, COLD-FORMED STEEL & ALUMINUM USED FOR STRUCTURAL PURPOSES
MATERIAL VERIFICATION & TESTING:
a. VERIFY IDENTIFICATION OF ALL MATERIALS AND: – MILL CERTIFICATES INDICATE MATERIAL PROPERTIES THAT COMPLY WITH REQUIREMENTS. – MATERIAL SIZES, TYPES AND GRADES COMPLY WITH REQUIREMENTS.
b. TEST UNIDENTIFIED MATERIALS
c. EXAMINE SOME WELDS OF HSS SHAPES
INSPECTION:
d. VERIFY AND DOCUMENT STEEL FABRICATION PER DSA-APPROVED CONSTRUCTION DOCUMENTS.

NOTICE OF DISCLAIMER FOR STRUCTURAL ENGINEERING RESPONSIBILITY

5. ALL CONSTRUCTION ACTIVITIES RELATED TO STRUCTURAL ENGINEERING SHALL BE DELEGATED TO A QUALIFIED ENGINEER BY THE DESIGN PROFESSIONAL IN GENERAL RESPONSIBLE CHARGE. THESE ACTIVITIES INCLUDE, BUT ARE NOT LIMITED TO APPROVAL OF INSPECTOR QUALIFICATIONS, STRUCTURAL OBSERVATION OF CONSTRUCTION, REVIEW OF INSPECTION REPORTS, AND SIGNING OFF THE VERIFIED REPORTS FOR COMPLETED WORK. GERARD HOMER & ASSOCIATES SHALL NOT BE LISTED ON THE DSA 1 OR BE REQUIRED TO SIGN A DSA 1.DEL.
6. GERARD HOMER & ASSOCIATES WILL BE RESPONSIBLE FOR RESPONDING TO QUESTIONS PERTAINING TO THE PLANS AND SPECIFICATIONS FOR THE SHELTER OF THE PC WHICH ARISE DURING PLAN CHECK AND CONSTRUCTION.
7. THE ARCHITECT OR DSA SHALL NOT ADD TO OR CHANGE THIS PC WITHOUT PERMISSION FROM GERARD HOMER & ASSOCIATES.

REVISIONS

NO.	DATE	BY	DESCRIPTION

REGISTERED PROFESSIONAL ENGINEER GERARD HOMER EXP. 3-31-24 S23757 STRUCTURAL STATE OF CALIFORNIA

PRE-CHECK (PC) DOCUMENT
CODE: 2022 C.B.C.
A SEPARATE PROJECT APPLICATION FOR CONSTRUCTION IS REQUIRED.

PROJECT: SINGLE POST WALKWAY COVER VALLEY SCHOOL SHELTERS

SHEET INDEX

S1 FOUNDATION PLANS, GENERAL NOTES, DETAILS
S2 ROOF FRAMING PLANS
S3 SECTION, TYPICAL ELEVATION, DETAILS
S4 SECTION, DETAIL

BUILDING DATA

A-2 FOR LUNCH SHELTER
A-3 OCCUPANCY FOR GENERAL ASSEMBLY
II-B CONSTRUCTION
ALLOW. AREA = 6500 SQ.FT.
HEIGHT = 8'-0" MIN. TO 16'-0" MAX. COLUMN HEIGHT

IDENTIFICATION STAMP
DIV. OF THE STATE ARCHITECT
APP: 02-114147 INC:
REVIEWED FOR
SS ☑ FLS ☑ ACS ☐
DATE: 9/1/2023

16765 SYPERT SCHOOL RD.
HOLLAND, TX. 76534
PH.: (559) 734-6675
Email: ghomersesg@gmail.com
Gerard Homer and Associates
STRUCTURAL ENGINEERS

DWN BY: B.G.H. | CHKD BY: G.B.H.
DATE: 8/30/23
PROJECT NO: 23020
DRAWING TITLE
FOUNDATION PLAN
GENERAL NOTES
DETAILS
SHEET NUMBER
S1
OF 4 SHEETS

GENERAL NOTES

NOTES FOR ACHITECT TO VERIFY & COMPLY

1. GRADING PLANS, DRAINAGE IMPROVEMENTS, ROAD AND ACCESS REQUIREMENTS AND ENVIRONMENTAL HEALTH CONSIDERATIONS SHALL COMPLY.

2. SUBSTITUTIONS AFFECTING DSA REGULATED ITEMS SHALL BE CONSIDERED AS A CONSTRUCTION CHANGE DOCUMENT OR ADDENDUM, AND SHALL BE APPROVED BY DSA PRIOR TO FABRICATION AND INSTALLATION PER DSA IR A-6 AND SECTION 338(C) PART 1, TITLE 24 CCR.

3. LOCATION OF ELECTRICAL COMPONENTS MOUNTED TO COLUMNS SHALL COMPLY WITH ASCE 24-14, SECTION 7.2.

4. THE ARCHITECT SHALL VERIFY COMPLIANCE W/ 88/34 (OR PC-7, SECTION 5.8) IF COVER IS NEAR A SLOPE AND NOTIFY THE P.C. ENGINEER. IF COVER IS NEAR A SLOPE, THE INSTALLATION OF THIS STRUCTURE SHALL NOT BE SUBMITTED AS OVER-THE-COUNTER.

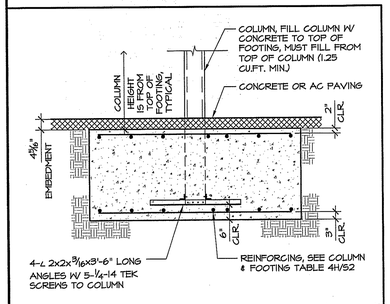

OPTIONAL SPREAD FOOTING @ ADDITIONAL COST — SCALE ½" = 1'-0" — 8B

SHEET INDEX & STRUCTURAL TESTS AND INSPECTIONS SHEET — 4K

SITE SPECIFIC INFORMATION TABLE

1.557	SEISMIC COEFFICIENT, Sa			SELECT OCCUPANT LOAD FACTOR (OLF)	DETERMINATION OF BAY SPACING FOR COVER NEXT TO RISK CATEGORY III & $S_{DS} > 2.0$
0.557	SEISMIC COEFFICIENT, S1 ②	95	WIND SPEED (3 SEC. GUST) ⊕ MPH	X ASSEMBLY–CONCENTRATED (7 SQ. FT./OCCUPANT)	
1.2	SEISMIC COEFFICIENT, Fa	C	WIND EXPOSURE CATEGORY	ASSEMBLY–NONCONCENTRATED (15 SQ. FT. /OCCUPANT)	25' BAYS x 2.0 = ____ MAXIMUM BAY SPACING IN FEET **
2.2	SEISMIC COEFFICIENT, Fv	9	WIDTH OF COVER AREA IN FT.	26 DETERMINE OCCUPANT LOAD = AREA/OLF	ACTUAL S_{DS} x 1.25 =
1.858	SEISMIC COEFFICIENT, Sms	20	LENGTH OF COVERED AREA IN FT.	DETERMINE RISK CATEGORY	** BAY SPACING ON PLAN VIEWS TO BE REVISED TO MATCH & USE HIGHER SEISMIC COLUMNS & FOOTINGS.
1.238	SEISMIC COEFFICIENT, Sm1 ①	180	AREA IN SQ. FT.	X RISK CATEGORY II OCCUPANTS ≤ 300	
1.295	SITE SPECIFIC, Ce ③	1	NUMBER OF BAYS	RISK CATEGORY III OCCUPANTS > 300	
1.245	SEISMIC COEFFICIENT, Sds	12	MAXIMUM COLUMN HEIGHT IN FT.	RISK CATEGORY III ADJACENT TO RISK CATEGORY III BUILDING	
1.228	SEISMIC COEFFICIENT, Sd1	1/2 IN 12	ROOF SLOPE IN./FT.	NOTE: DUE TO REDUNDANCY FACTOR THERE CAN BE NO REDUCTION IN S_{DS} PER ASCE 7-16 12.8.1.3 FOR COVERS.	

① FOR THE SITE CLASS D, Sm1 SHALL BE INCREASED BY 50% UNLESS A SITE SPECIFIC GROUND MOTION HAZARD ANALYSIS IS PERFORMED. Sms SHALL NOT BE LESS THAN Sm1.

② FOR SITE CLASS E WITH S1 GREATER THAN OR EQUAL TO 0.2, PROVIDED T IS LESS THAN OR EQUAL TO Ts, EQUATION 12.8-2 SHALL BE USED.

③ PER ASCE 7-16 EQUATION 12.8-2.

GEOHAZARD REPORTS				LIQUEFIABLE SOIL OR SITE CLASS F & E			
GEOHAZARD REPORT	REQUIRED	X	NOT REQUIRED	LIQUEFIABLE SOILS	YES	X	NO

GEOHAZARD REPORTS ARE NOT REQUIRED FOR CANTILEVERED COLUMN OPEN STRUCTURES PROVIDED THEY ARE CONSTRUCTED OF METAL, DO NOT EXCEED 4,000 SF. IN PLAN AREA AND ARE NOT LOCATED WITHIN STATE OR LOCAL GEOHAZARD ZONES. THE STRUCTURES MAY BE SPLIT INTO MULTIPLE SEISMICALLY SEPARATED STRUCTURES TO STAY BELOW THE 4,000 SF. TRIGGER.

IF STRUCTURE IS LOCATED IN AN AREA WITH LIQUEFIABLE SOIL OR SITE CLASS F & E, OVER-THE-COUNTER SUBMITTAL IS NOT ALLOWED AND REGULAR PROJECT SUBMITTAL IS REQUIRED. IF SITE IS NOT IN A MAPPED LIQUEFACTION HAZARD ZONE, IT MAY BE PRESUMED THAT NO LIQUEFACTION HAZARD EXISTS ON THAT SITE UNLESS A SITE-SPECIFIC GEOTECHNICAL REPORT IDENTIFIES SUCH HAZARD.

CONCRETE EXPOSURE		CONCRETE EXPOSURE
X	CONCRETE EXPOSURE FO	CONCRETE EXPOSURE F2*

* F2 IS REQUIRED FOR ANY SNOW LOAD 30 PSF OR GREATER.

IF SITE SPECIFIC PROJECT IS LOCATED IN A FLOOD ZONE OTHER THAN X, A LETTER STAMPED AND SIGNED FROM A SOILS ENGINEER IS REQUIRED TO VALIDATE THE ALLOWABLE SOIL VALUES SPECIFIED ON THIS P.C., SEE GENERAL NOTES NUMBER 11.

SINGLE POLE WALKWAY OPTIONS TABLE

LOADING	COLUMN HEIGHT	ROOF PANEL OPTION		PROJECTION
X 30 PSF LL	12' HEIGHT	X	McELROY MES4-RIB	8'-0"
20 PSF SL	14' HEIGHT		AEP SPAN HR-36	X 10'-0"
30 PSF SL	16' HEIGHT		3 P.S.F.[3] MISC. DEAD LOAD	12'-0"
ROOF PITCH	COLUMN LOCATION	SEISMIC		14'-0"
X 2:12 MAX.	X OFF-SET	LOWER *	YES	CONFIGURATION PER 6K/S4
4:12 MAX.	CENTERED	X HIGHER **	X NO	"A" "B" "C" X "D"
		RC III $S_{DS} > 2.0$		

* R.C. II $S_{ds} \leq 1.0$ & R.C. III $S_{ds} \leq 0.80$
** R.C. II $S_{ds} \leq 2.5$ & R.C. III $S_{ds} \leq 2.0$

1. SEE 6H/S3 FOR ROOF DECK PROFILES & SECTION PROPERTIES.
2. LIVE LOAD, LL = ROOF LIVE LOAD.
3. SNOW LOAD, SL = SNOW LOAD.
4. 3 P.S.F. MISC. DEAD LOAD NOT ALLOWED WITH SNOW LOAD. MISC. DEAD LOAD CAN INCLUDE SPRINKLERS OR SOLAR. BOTH ARE NOT ELIGIBLE FOR OVER THE COUNTER PLAN CHECK. LOADS CAN NOT BE SUPPORTED BY ROOF PANELS. ONLY THE BEAMS & PURLINS CAN SUPPORT MISC. DEAD LOAD.
5. SEE SITE SPECIFIC TABLE.
6. FOR SNOW LOAD, IF THE HORIZONTAL SEPARATION DISTANCE BETWEEN ADJACENT STRUCTURES, s, IS LESS THAN 20 FT. (6.1 M) AND LESS THAN SIX TIMES THE VERTICAL SEPARATION DISTANCE (6h), THEN THE REQUIREMENTS FOR THE LEEWARD DRIFT OF SECTION 7.7.1 SHALL BE USED TO DETERMINE THE DRIFT LOAD ON THE LOWER STRUCTURE. IF THE SNOW DRIFT ANALYSIS IS REQUIRED IT SHALL BE PROVIDED BY THE PC APPLICANT & THE SITE APPLICATION IS NOT ELIGIBLE FOR OVER THE COUNTER SUBMITTAL.

OPTIONS TABLE & SITE SPECIFIC INFORMATION TABLE — 8K

IDENTIFICATION STAMP
DIV. OF THE STATE ARCHITECT
APP: 03-124281 INC:
REVIEWED FOR
SS ☑ FLS ☑ ACS ☑
DATE: 02/04/2025

COLUMN & FOOTING TABLE (NOTE 6)

COLUMN HEIGHT	ROOF PITCH	LOAD	LOWER SEISMIC (S_{DS} ≤ 1.0 RISK CATEGORY II) (S_{DS} ≤ 0.8 RISK CATEGORY III) ≤ 12'–0" PROJECTION: COLUMN SIZE	PILE FOOTING	ALTERNATE SPREAD FOOTING (8B/S1) 1	LOWER SEISMIC ≤ 14'–0" PROJECTION: COLUMN SIZE	PILE FOOTING	ALTERNATE SPREAD FOOTING (8B/S1) 1	HIGHER SEISMIC (S_{DS} ≤ 2.5 RISK CATEGORY II) (S_{DS} ≤ 2.0 RISK CATEGORY III) (8) ≤ 12'–0" PROJECTION: COLUMN SIZE	PILE FOOTING	ALTERNATE SPREAD FOOTING (8B/S1) 1	HIGHER SEISMIC ≤ 14'–0" PROJECTION: COLUMN SIZE	PILE FOOTING	ALTERNATE SPREAD FOOTING (8B/S1) 1
12' COLUMN HEIGHT	2:12 MAX.	20psf LL/SL	HSS8x8x¼	2'-0"Φx10'-3" DEEP	9'-3"SQx2'-6" THICK (4)	HSS10x8x5/16	2'-0"Φx11'-9" DEEP	10'-4"SQx2'-6" THICK (4)	HSS8x8x5/16	2'-0"Φx11'-10" DEEP	10'-6"SQx2'-6" THICK (4)	HSS10x8x5/16	2'-0"Φx13'-2" DEEP	11'-4"SQx2'-6" THICK (5)
		30psf SL												
	4:12 MAX.	20psf LL/SL	HSS10x8x5/16	2'-0"Φx12'-2" DEEP	9'-8"SQx2'-6" THICK (4)	HSS10x8x3/8	2'-0"Φx13'-0" DEEP	10'-10"SQx2'-6" THICK (4)	HSS10x8x5/16	2'-0"Φx12'-2" DEEP		HSS10x8x3/8	2'-0"Φx13'-6" DEEP	
		30psf SL												
14' COLUMN HEIGHT	2:12 MAX.	20psf LL/SL	HSS8x8x¼	2'-0"Φx10'-8" DEEP	9'-8"SQx2'-6" THICK (4)	HSS10x8x5/16	2'-0"Φx12'-2" DEEP	10'-10"SQx2'-6" THICK (4)	HSS8x8x5/16	2'-0"Φx12'-3" DEEP	11'-0"SQx2'-6" THICK (5)			
		30psf SL	HSS8x8x5/16							2'-0"Φx12'-6" DEEP		HSS10x8x3/8	2'-0"Φx13'-6" DEEP	11'-10"SQx2'-6" THICK (5)
	4:12 MAX.	20psf LL/SL	HSS10x8x5/16	2'-0"Φx12'-6" DEEP	9'-10"SQx2'-6" THICK (4)	HSS10x8x3/8	2'-0"Φx13'-2" DEEP	11'-0"SQx2'-6" THICK (5)	HSS10x8x3/8					
		30psf SL												
16' COLUMN HEIGHT	2:12 MAX.	20psf LL/SL	HSS8x8x5/16	2'-0"Φx11'-0" DEEP	10'-0"SQx2'-6" THICK (4)	HSS10x8x5/16	2'-0"Φx12'-6" DEEP	11'-3"SQx2'-6" THICK (5)	HSS10x8x3/8	2'-0"Φx12'-8" DEEP	11'-4"SQx2'-6" THICK (5)	HSS10x8x½	2'-0"Φx14'-0" DEEP	12'-4"SQx2'-6" THICK (5)
		30psf SL								2'-0"Φx12'-8" DEEP				
	4:12 MAX.	20psf LL/SL	HSS10x8x3/8	2'-0"Φx12'-8" DEEP	10'-2"SQx2'-6" THICK (4)	HSS10x8x½	2'-0"Φx13'-6" DEEP							
		30psf SL												

NOTES:
1. ALTERNATE SPREAD FOOTINGS ARE OPTIONAL FOOTINGS @ AN ADDITIIONAL COST.
2. NO SNOW LOAD ALLOWED W/ 9 P.S.F. MISC. DEAD LOAD.
3. COLUMN EMBEDMENT OF PILE FOOTING TO EXTEND INTO FOOTING 3"-6" MAX. FROM BOTTOM, SEE SECTION 6K/S3.
4. PROVIDE 8-#6 REBARS EACH WAY @ TOP & BOTTOM OF FOOTING. PROVIDE 10-#6 REBARS EACH WAY @ TOP & BOTTOM OF FOOTING.
5. IF SITE SPECIFIC PROJECT IS LOCATED IN A FLOOD ZONE OTHER THAN ZONE X, A LETTER STAMPED AND SIGNED FROM A SOILS ENGINEER IS REQUIRED TO VALIDATE THE ALLOWABLE SOIL VALUES SPECIFIED ON THIS P.C., SEE GENERAL NOTES NUMBER 11.
6. MINIMUM PIER SPACING IS 3 DIAMETERS.
7. Sds MAXIMUM OR REDUCE BAY SPACING. SEE SITE SPECIFIC INFORMATION TABLE ON SHEET S1.
8. IF THE STRUCTURE IS LOCATED NEAR A SLOPE, THE ARCHITECT SHALL SHOW COMPLIANCE WITH IR PC-1 SECTION 5.8 OR NOTIFY THE P.C. ENGINEER.

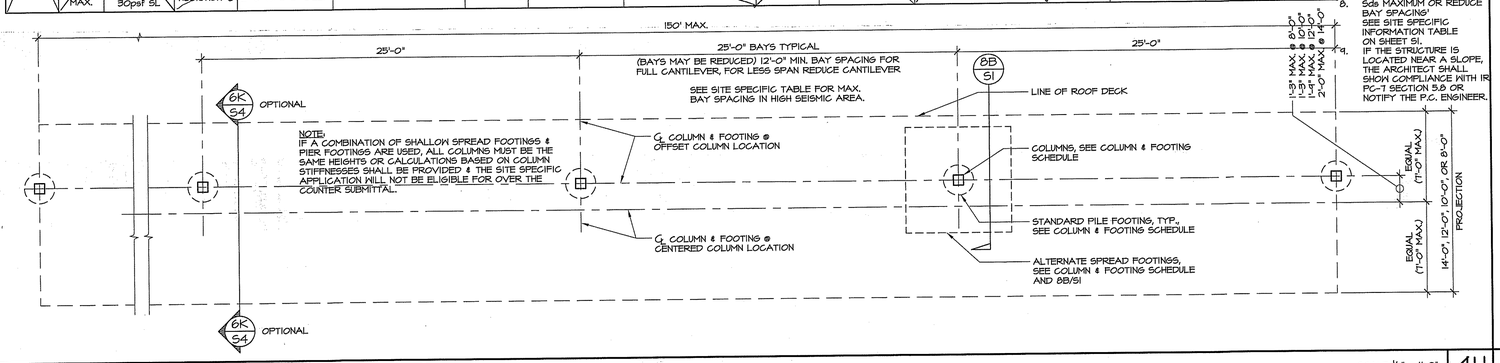

FOUNDATION PLAN — SCALE ¼" = 1'-0" — 4H

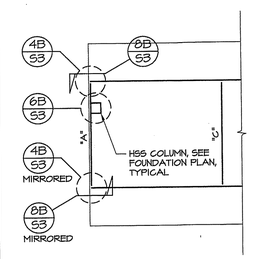

PLAN @ UPPER ROOF WHERE STEP OCCURS

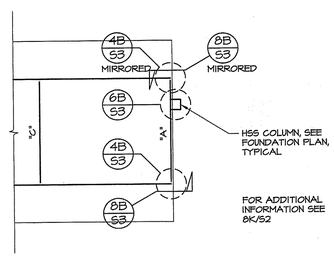

PLAN @ LOWER ROOF WHERE STEP OCCURS

ROOF FRAMING PLAN — SCALE ¼" = 1'-0" — 4K

PROJECT: SINGLE POST WALKWAY COVER VALLEY SCHOOL SHELTERS

IDENTIFICATION STAMP
DIV. OF THE STATE ARCHITECT
APP: 02-121474-CC
REVIEWED FOR
SS ☑ FLS ☑ ACS ☑ CL
DATE: 9/1/2023

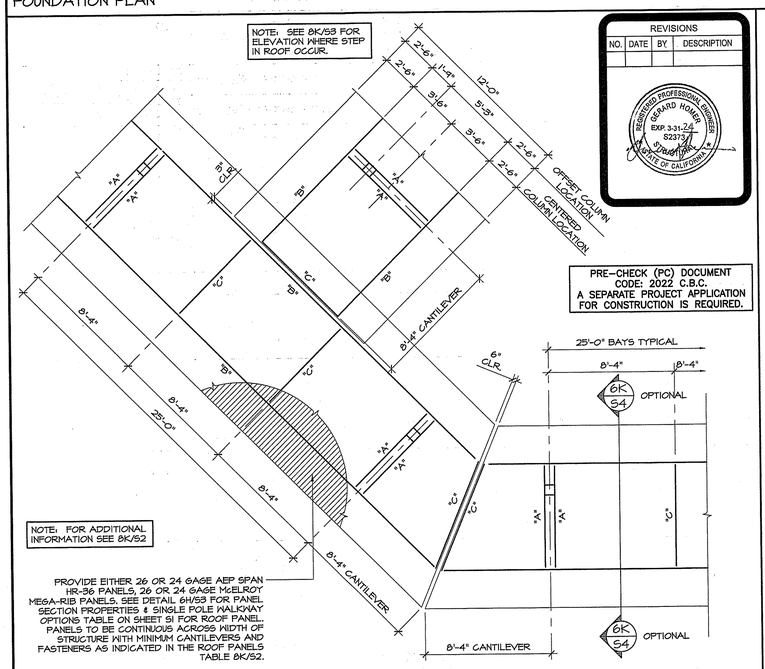

ROOF FRAMING PLAN @ 45° OPTION — SCALE ¼" = 1'-0" — 8B

REVISIONS

NO.	DATE	BY	DESCRIPTION

REGISTERED PROFESSIONAL ENGINEER GERARD HOMER EXP. 3-31-24 62373 STRUCTURAL STATE OF CALIFORNIA

PRE-CHECK (PC) DOCUMENT
CODE: 2022 C.B.C.
A SEPARATE PROJECT APPLICATION FOR CONSTRUCTION IS REQUIRED.

ROOF PANEL TABLE (1, 3, 4, & 6)

ROOF PITCH	LOAD	MINIMUM REQUIRED CANTILEVER LENGTHS @ 6'–0" CENTER SPAN (3)	MINIMUM REQUIRED CANTILEVER LENGTHS @ 7'–0" CENTER SPAN (3)	MINIMUM REQUIRED CANTILEVER LENGTHS @ 8'–0" CENTER SPAN (3, & 5)	SCREWS PER PANEL PER SUPPORT
2:12² MAX.	20psf LL/SL	NO CANTILEVER REQUIRED	1'-0" MIN.	0'-6" MIN.	(4)- #12-14x1" LONG W/ ½"ø TWINSEAL WASHERS
	30psf SL		1'-6" MIN.	1'-0" MIN.	
4:12 MAX.	20psf LL/SL		1'-6" MIN.	1'-4" MIN.	(5)- #12-14x1" LONG W/ ½"ø TWINSEAL WASHERS
	30psf SL		2'-0" MIN.	2'-0" MIN.	

1. SEE 8K/S1 FOR ROOF PANEL OPTIONS AND 6H/S3 FOR PROFILES & PROPERTIES.
2. ¼ IN 12 MINIMUM.
3. WHEN NOT USING STANDARD LAYOUTS SHOW ON ROOF FRAMING PLAN BELOW, THE ROOF PANELS MUST MEET THE MINIMUM REQUIRED CANTILEVER LENGTHS.
4. LENGTHS OF CANTILEVERS MUST BE EQUAL EACH SIDE, TYPICAL.
5. MUST USE 24 GAGE ROOF PANEL OPTIONS @ 8'-0" CENTER SPAN LAYOUT OPTION.
6. MAXIMUM ALLOWABLE CANTILEVER AT 24 GAGE ROOF PANELS IS 3'-0". IN NO CASE SHALL THE ROOF PANEL LENGTH EXCEED THE 14'-0" MAXIMUM ROOF PROJECTION.

BEAM TABLE

PITCH	PROJECTION	LOADING	COLUMN OFFSET	CROSS BEAM "A"	SIDE BEAM "B"	BLOCKING & END CLOSURES "C"
1/4:12 MIN. 3:12 MAX.	≤ 12'-0"	20psf LL/SL	0'-0" TO 1'-9"	C14x2½x12 GAGE	C14x2½x12 GAGE	20 GAGE CEE W/ 1½" OR 2" FLANGES, DEPTH TO MATCH SIDE BEAM DEPTH, SEE 2F & 4F/S3
		30psf SL	0'-0" TO 1'-9"	C14x2½x12 GAGE	C18x2½x12 GAGE	
	> 12'-0", ≤ 14'-0"	20psf LL/SL	0'-0" TO 1'-9"	C14x2½x12 GAGE	C18x2½x12 GAGE	
			1'-10" TO 2'-0"	C16x3½x12 GAGE		
		30psf SL	0'-0" TO 0'-10"	C14x2½x12 GAGE		
			0'-11" TO 1'-8"	C16x3½x12 GAGE		
			1'-9" TO 2'-0"	C16x3½x10 GAGE		
4:12 MAX.	≤ 12'-0"	20psf LL/SL	0'-0" TO 1'-9"	C14x2½x12 GAGE	C18x2½x12 GAGE	
		30psf SL	0'-0" TO 1'-9"	C14x2½x12 GAGE	C18x2½x12 GAGE	
	> 12'-0", ≤ 14'-0"	20psf LL/SL	0'-0" TO 1'-3"	C14x2½x12 GAGE		
			1'-4" TO 2'-0"	C16x3½x12 GAGE	C18x2½x12 GAGE	
			2'-0"	C16x3½x10 GAGE		
		30psf SL	0'-0" TO 0'-5"	C14x2½x12 GAGE		
			0'-6" TO 1'-2"	C16x3½x12 GAGE	C18x2½x10 GAGE	
			1'-3" TO 2'-0"	C16x3½x10 GAGE		

NO 3 PSF MISC. DEAD LOAD ALLOWED WITH SNOW LOAD

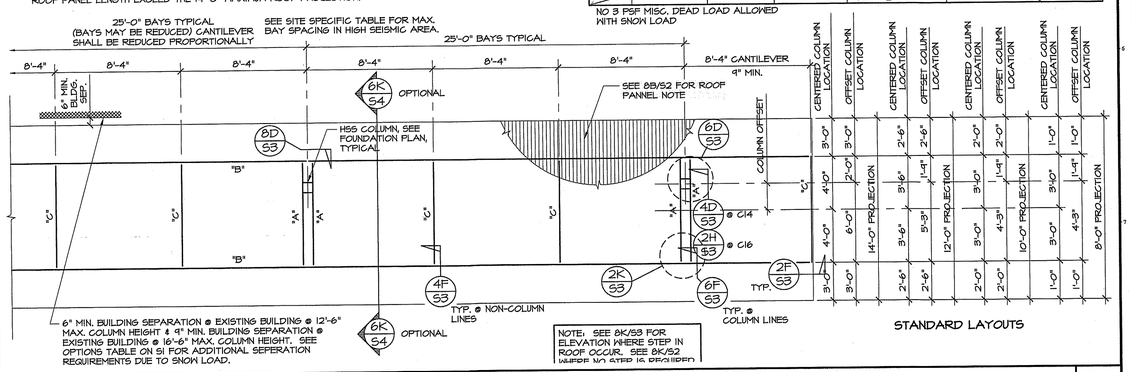

6" MIN. BUILDING SEPARATION @ EXISTING BUILDINGS @ 12'-6" MAX. COLUMN HEIGHT & 9" MIN. BUILDING SEPARATION @ EXISTING BUILDING @ 16'-6" MAX. COLUMN HEIGHT. SEE OPTIONS TABLE ON S1 FOR ADDITIONAL SEPERATION REQUIREMENTS DUE TO SNOW LOAD.

NOTE: SEE 8K/S3 FOR ELEVATION WHERE STEP IN ROOF OCCUR. SEE 8K/S2 WHERE NO STEP IS REQUIRED

STANDARD LAYOUTS

ROOF FRAMING PLANS — SCALE ¼" = 1'-0" — 8K

Gerard Homer and Associates
STRUCTURAL ENGINEERS
16765 SYPERT SCHOOL RD.
HOLLAND, TX. 76534
PH.: (559) 734-8675
Email: ghomersse@gmail.com

DWN BY: B.G.H.	CHKD BY: G.B.H.
DATE: 8/30/23	
PROJECT NO: 23020 24065	
DRAWING TITLE: ROOF FRAMING PLANS	
SHEET NUMBER: S2 OF 4 SHEETS	

IDENTIFICATION STAMP
DIV. OF THE STATE ARCHITECT
APP: 03-124281 INC:
REVIEWED FOR
SS ☑ FLS ☑ ACS ☑
DATE: 02/04/2025

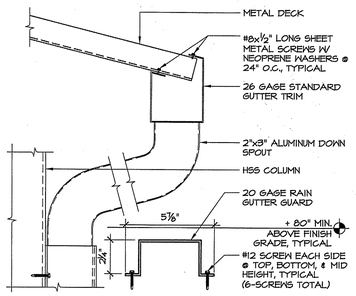

BOX GUTTER SCALE 3" = 1'-0" 2B

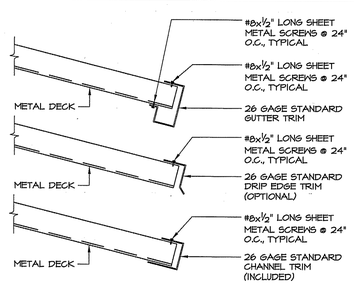

FASCIA OPTIONS SCALE 3" = 1'-0" 2D

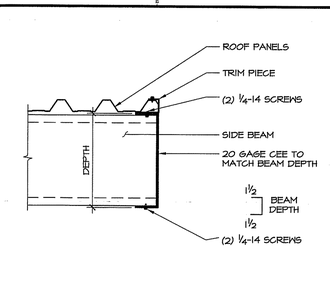

BEAM END SCALE 1½" = 1'-0" 2F

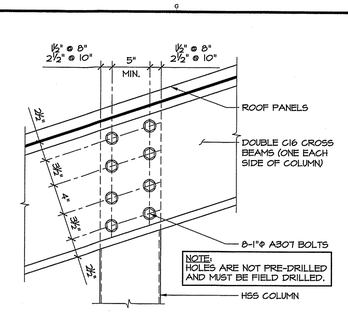

16" CROSS BEAM TO COLUMN SCALE 1½" = 1'-0" 2H

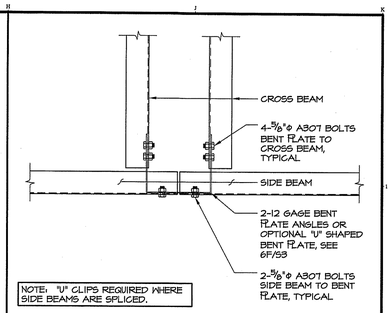

SIDE BEAMS TO CROSS BEAMS SCALE 1½" = 1'-0" 2K

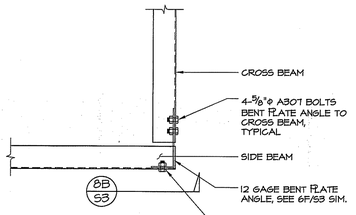

BEAM TO BEAM SCALE 1½" = 1'-0" 4B

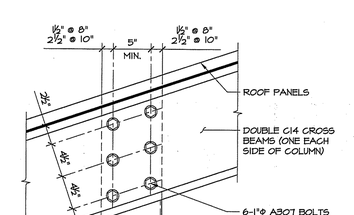

14" CROSS BEAM TO COLUMN SCALE 1½" = 1'-0" 4D

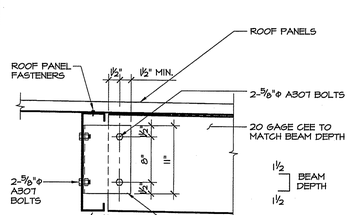

BRACE TO BEAM SCALE 1½" = 1'-0" 4F

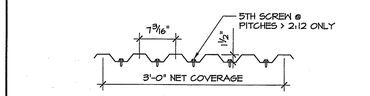

Fy = 80,000 PSI PER ASTM A653 OR ASTM A792
Fy = 50,000 PSI @ 24 GAUGE PANELS ONLY

AEP SPAN HR-36 SECTION PROPERTIES

GAUGE	Wt. (lbs./ft.²)	I+ (in.⁴/ft.)	S+ (in.³/ft.)	I- (in.⁴/ft.)	S- (in.³/ft.)
24	1.2	0.1116	0.1234	0.1141	0.1156
26	0.98	0.0825	0.0845	0.0838	0.0834

McELROY MEGA-RIB SECTION PROPERTIES

GAUGE	Wt. (lbs./ft.²)	I+ (in.⁴/ft.)	S+ (in.³/ft.)	I- (in.⁴/ft.)	S- (in.³/ft.)
24	1.22	0.1038	0.1228	0.1038	0.1228
26	0.98	0.0761	0.0841	0.0761	0.0841

SECTION PROPERTIES ARE EFFECTIVE SECTION PROPERTIES TYP.

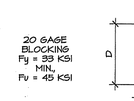

CEE SECTION PROPERTIES

SECTION DxB	GAGE	WEIGHT lb/ft.	Ae in.²	AXIS X-X Ix in.⁴	AXIS X-X Sx in.³	AXIS Y-Y Iy in.⁴	AXIS Y-Y Sy in.³	L in.
C14x1½	20	2.05	0.117	7.093	0.742	0.068	0.05	-
C14x2½	12	7.14	1.14	53.354	7.622	1.414	0.715	0.916
C16x1½	20	2.29	0.1172	9.492	0.853	0.069	0.051	-
C16x3½	10	11.02	1.8	112.26	13.517	4.32	1.582	0.989
C18x2½	10	10.59	1.619	118.0	12.233	1.84	0.897	0.916
C18x1½	20	2.54	0.1174	12.261	0.964	0.07	0.051	-
C18x2½	12	8.57	1.149	100.08	9.8	1.49	0.725	0.916

MATERIAL PROPERTIES SCHEDULES 6H

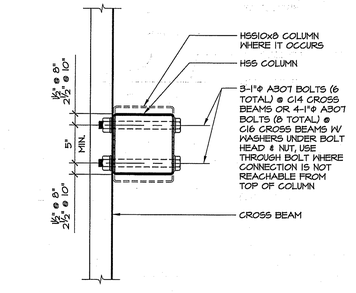

BEAM TO COLUMN SCALE 1½" = 1'-0" 6B

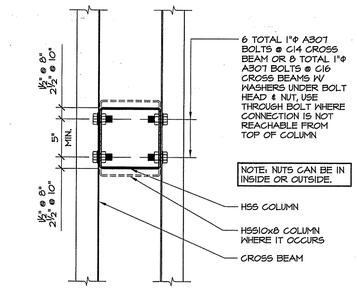

BEAM TO COLUMN SCALE 1½" = 1'-0" 6D

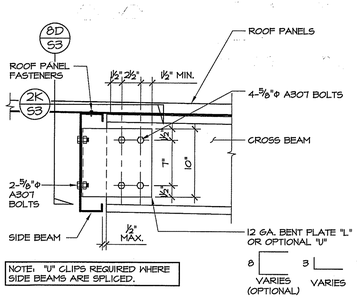

BEAM TO BEAM SCALE 1½" = 1'-0" 6F

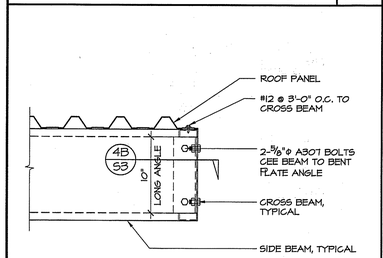

BEAM TO BEAM SCALE 1½" = 1'-0" 8B

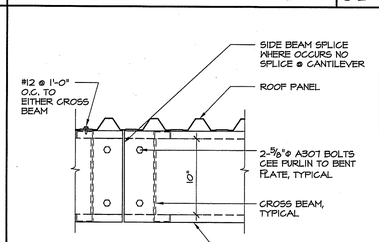

SIDE BEAM SPLICE SCALE 1½" = 1'-0" 8D

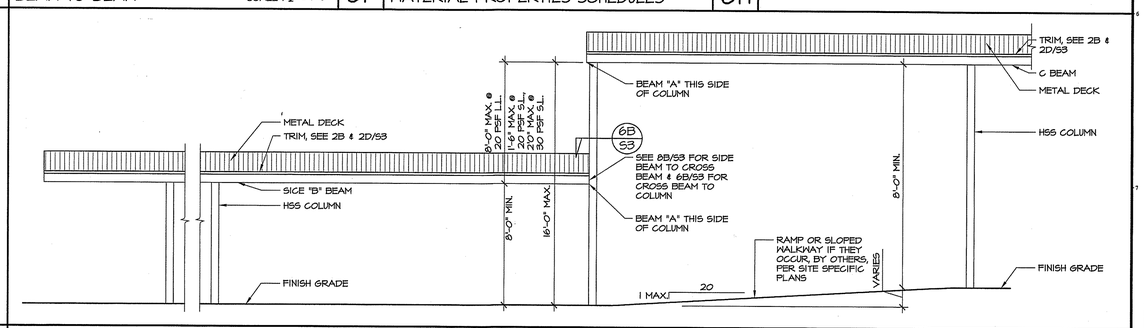

ELEVATION SCALE ¼" = 1'-0" 8K

PROJECT:
SINGLE POST WALKWAY COVER
VALLEY SCHOOL SHELTERS

REVISIONS

NO.	DATE	BY	DESCRIPTION

REGISTERED PROFESSIONAL ENGINEER GERARD HOMER EXP. 3-31-24 S23737 STATE OF CALIFORNIA

PRE-CHECK (PC) DOCUMENT
CODE: 2022 C.B.C.
A SEPARATE PROJECT APPLICATION FOR CONSTRUCTION IS REQUIRED.

IDENTIFICATION STAMP
DIV. OF THE STATE ARCHITECT
APP: 02-124476 PC
REVIEWED FOR
SS ☑ FLS ☑ ACS ☑ CDS ☐
DATE: 9/1/2023

16765 SYPERT SCHOOL RD.
HOLLAND, TX. 76534
PH.: (559) 734-6675
Email: ghomres@gmail.com
Gerard Homer and Associates
STRUCTURAL ENGINEERS

DWN BY: B.G.H. | CHKD BY: G.B.H.

DATE: 8/30/23

PROJECT NO: 23020 S4065

DRAWING TITLE
SECTION
TYPICAL ELEVATION
DETAILS

SHEET NUMBER
S3
OF 4 SHEETS

IDENTIFICATION STAMP
DIV. OF THE STATE ARCHITECT
APP: 03-124281 INC:
REVIEWED FOR
SS ☑ FLS ☑ ACS ☑
DATE: 02/04/2025

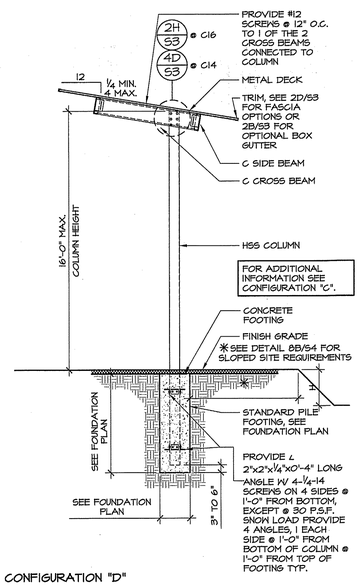

CONFIGURATION "D"

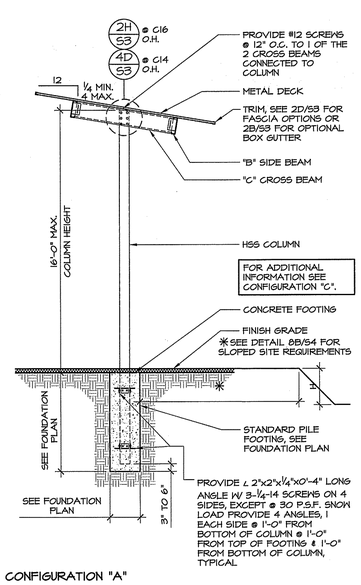

CONFIGURATION "A"

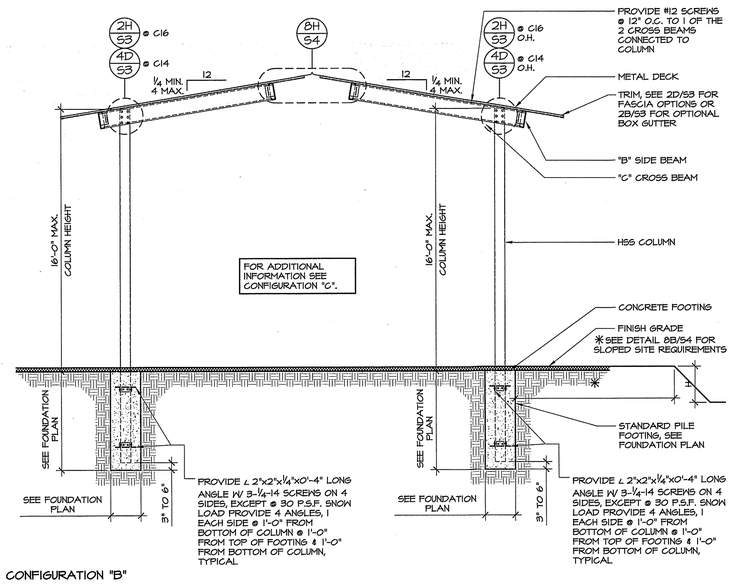

CONFIGURATION "B"

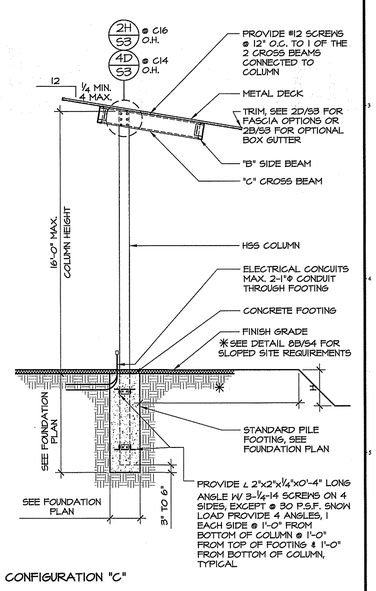

CONFIGURATION "C"

SECTIONS

SCALE ¼" = 1'-0" | 6K

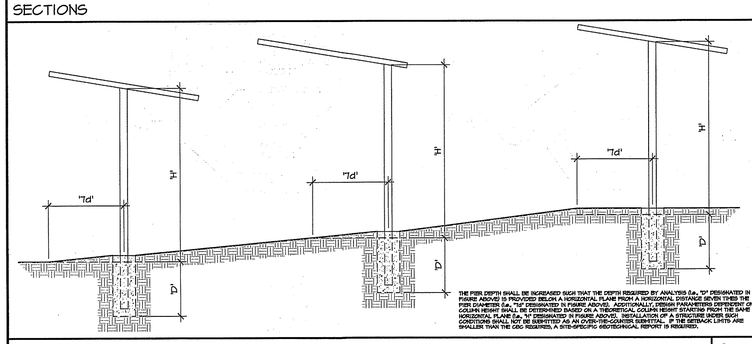

SLOPED SITE FIGURE | SCALE ¼" = 1'-0" | 8D

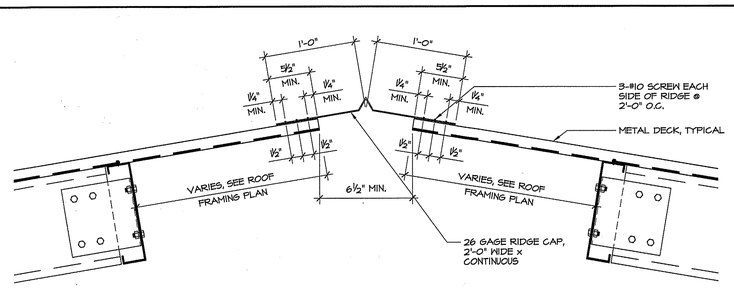

RIDGE CAP | SCALE 1½" = 1'-0" | 8H

PRE-CHECK (PC) DOCUMENT
CODE: 2022 C.B.C.
A SEPARATE PROJECT APPLICATION FOR CONSTRUCTION IS REQUIRED.

REVISIONS			
NO.	DATE	BY	DESCRIPTION

REGISTERED PROFESSIONAL ENGINEER
GERARD HOMER
EXP. 3-31-24
S23737
STRUCTURAL
STATE OF CALIFORNIA

8K

PROJECT:
SINGLE POST WALKWAY COVER
VALLEY SCHOOL SHELTERS

IDENTIFICATION STAMP
DIV. OF THE STATE ARCHITECT
APP: 02-321474 PC
REVIEWED FOR
SS ☑ FLS ☑ ACS ☑
DATE: 9/1/2023

16765 SYPERT SCHOOL RD.
HOLLAND, TX. 76534
PH.: (559) 734-6575
Email: ghomerse@gmail.com
Gerard Homer and Associates
STRUCTURAL ENGINEERS

DWN BY: B.S.H.	CHKD BY: G.B.H.
DATE: 8/30/23	
PROJECT NO: 23020 24045	

DRAWING TITLE
SECTION
TYPICAL ELEVATION
DETAILS

SHEET NUMBER
S4
OF 4 SHEETS

IDENTIFICATION STAMP
DIV. OF THE STATE ARCHITECT
APP: 03-124281 INC:
REVIEWED FOR
SS ☑ FLS ☑ ACS ☑
DATE: 02/04/2025

EXAMPLE DSA 103 FORM TO BE REPLACED BY SITE SPECIFIC DSA 103 PER IR PC-1 1.3

DSA 103-22: LISTING OF STRUCTURAL TESTS & SPECIAL INSPECTIONS, 2022 CBC

	S1. GENERAL:			
	Test or Special Inspection	Type	Performed By	Code References and Notes
☑	a. Verify that: • Site has been prepared properly prior to placement of controlled fill and/or excavations for foundations. • Foundation excavations are extended to proper depth and have reached proper material. • Materials below footings are adequate to achieve the design bearing capacity.	Periodic	GE*	* By geotechnical engineer or his or her qualified representative. (See Appendix (end of this form) form for exemptions.)

	S2. SOIL COMPACTION AND FILL:			
	Test or Special Inspection	Type	Performed By	Code References and Notes
☐	a. Perform classification and testing of fill materials.	Test	LOR*	* Under the supervision of the geotechnical engineer.
☑	b. Verify use of proper materials, densities and inspect lift thicknesses, placement and compaction during placement of fill.	Continuous	GE*	* By geotechnical engineer or his or her qualified representative. (Refer to specific items identified in the Appendix (end of this form) form for exemptions where soils SI and testing may be conducted under the supervision of a geotechnical engineer or LOR's engineering manager. In such cases, the LOR's form DSA 291 shall satisfy the soil SI and test reporting requirements for the exempt items.)
☑	c. Compaction testing.	Test	LOR*	* Under the supervision of the geotechnical engineer. (Refer to specific items identified in the Appendix (end of this form) for exemptions where soils testing may be conducted under the supervision of a geotechnical engineer or LOR's engineering manager. In such cases, the LOR's form DSA 291 shall satisfy the soil test reporting requirements for the exempt items.)

	C1. CAST-IN-PLACE CONCRETE			
	Test or Special Inspection	Type	Performed By	Code References and Notes
☑	a. Verify use of required design mix.	Periodic	SI	Table 1705A.3 Item 5, 1910A.1.
☑	b. Identifiy, sample, and test reinforcing steel.	Test	LOR	1910A.2; ACI 318-19 Ch.20 and Section 26.6.1.2; DSA IR 17-10. (See Appendix (end of this form) for exemptions.)
☑	c. During concrete placement, fabricate specimens for strength tests, perform slump and air content tests, and determine the temperature of the concrete.	Test	LOR	Table 1705A.3 Item 6; ACI 318-19 Sections 26.5 & 26.12.
☑	d. Test concrete (f'c).	Test	LOR	1905A.1.17; ACI 318-19 Section 26.12.
☑	e. Batch plant inspection: Continuous	See Notes	SI	Default of 'Continuous' per 1705A.3.3. If approved by DSA, batch plant inspection may be reduced to 'Periodic' subject to requirements in Section 1705A.3.3.1, or eliminated per 1705A.3.3.2. See IR 17-13. (See Appendix (end of this form) for exemptions.)

	S/A1. STRUCTURAL STEEL, COLD-FORMED STEEL AND ALUMINUM USED FOR STRUCTURAL PURPOSES			
	Test or Special Inspection	Type	Performed By	Code References and Notes
☑	a. Verify identification of all materials and: • Mill certificates indicate material properties that comply with requirements. • Material sizes, types and grades comply with requirements.	Periodic	*	Table 1705A.2.1 Item 3a–3c. 2202A.1; AISI S100-20 Section A3.1 & A3.2, AISI S240-20 Section A3 & A5, AISI S220-20 Sections A4 & A6. * By special inspector or qualified technician when performed off-site.
☑	b. Test unidentified materials	Test	LOR	2202A.1.
☐	c. Examine seam welds of HSS shapes	Periodic	SI	DSA IR 17-3.
☑	d. Verify and document steel fabrication per DSA-approved construction documents.	Periodic	SI	Not applicable to cold-formed steel light-frame construction, except for trusses (1705A.2.4).
☐	e. Buckling restrained braces.	Test	LOR	Testing and special inspections in accordance with IR 22-4.

	S/A3. WELDING:			
	Test or Special Inspection	Type	Performed By	Code References and Notes
☑	a. Verify weld filler material identification markings per AWS designation listed on the DSA-approved documents and the WPS.	Periodic	SI	1705A.2.5, Table 1705A.2.1 Items 4 & 5; AWS D1.1 and AWS D1.8 for structural steel; AWS D1.2 for Aluminum; AWS D1.3 for cold-formed steel; AWS D1.4 for reinforcing steel; DSA IR 17-3.
☑	b. Verify weld filler material manufacturer's certificate of compliance.	Periodic	SI	DSA IR 17-3.
☑	c. Verify WPS, welder qualifications and equipment.	Periodic	SI	DSA IR 17-3.

	S/A4. SHOP WELDING (IN ADDITION TO SECTION S/A3):			
	Test or Special Inspection	Type	Performed By	Code References and Notes
☑	a. Inspect groove welds, multi-pass fillet welds, single pass fillet welds > 5/16", plug and slot welds.	Continuous	SI	Table 1705A.2.1 Items 5a.1–4; AISC 360-16 (and AISC 341-16 as applicable); DSA IR 17-3.
☑	b. Inspect single-pass fillet welds ≤ 5/16", floor and roof deck welds.	Periodic	SI	1705A.2.2, Table 1705A.2.1 Items 5a.5 & 5a.6; AISC 360-16 (and AISC 341-16 as applicable); DSA IR 17-3.
☐	c. Inspect welding of stairs and railing systems.	Periodic	SI	1705A.2.1; AISC 360-16 (and AISC 341-16 as applicable); AWS D1.1 & D1.3; DSA IR 17-3.
☐	d. Verification of reinforcing steel weldability other than ASTM A706.	Periodic	SI	1705A.3.1; AWS D1.4; DSA IR 17-3. Verify carbon equivalent reported on mill certificates.
☐	e. Inspect welding of reinforcing steel.	Continuous	SI	Table 1705A.2.1 Item 5b, 1705A.3.1, Table 1705A.3 Item 2, 1903A.8; AWS D1.4; DSA IR 17-3.

KEY TO COLUMNS

1. TYPE	2. PERFORMED BY
Continuous – Indicates that a continuous special inspection is required Periodic – Indicates that a periodic special inspection is required Test – Indicates that a test is required	GE (Geotechnical Engineer) – Indicates that the special inspection shall be performed by a registered geotechnical engineer or his or her authorized representative. LOR (Laboratory of Record) – Indicates that the test or special inspection shall be performed by a testing laboratory accepted in the DSA Laboratory Evaluation and Acceptance (LEA) Program. See CAC Section 4-335. PI (Project Inspector) – Indicates that the special inspection may be performed by a project inspector when specifically approved by DSA. SI (Special Inspection) – Indicates that the special inspection shall be performed by an appropriately qualified/approved special inspector.

1. Soils Testing and Inspection: Geotechnical Verified Report Form DSA 293
2. Structural Testing and Inspection: Laboratory Verified Report Form DSA 291
3. Concrete Batch Plant Inspection: Laboratory Verified Report Form DSA 291
4. Shop Welding Inspection: Laboratory Verified Report Form DSA 291, or, for independently contracting SI, Special Inspection Verified Report Form DSA 292

DSA TESTING AND INSPECTION FORM 12

SCOPE OF WORK:

THIS PROJECT INCLUDES FREE-STANDING OUTDOOR SCOREBOARDS, AND FREE-STANDING OUTDOOR MARQUEES FOR INSTALLATION AT SITES MEETING THE SEISMIC AND WIND DESIGN CRITERIA NOTED.

SCOPE OF WORK

PARTIAL LIST OF APPLICABLE CODES AS OF JANUARY 1, 2023:

2022 BUILDING STANDARDS ADMINISTRATIVE CODE, PART 1, TITLE 24 C.C.R.
2022 CALIFORNIA BUILDING CODE (CBC), PART 2, TITLE 24 C.C.R.
(2021 INTERNATIONAL BUILDING CODE VOLUMES 1-2 AND CALIFORNIA AMENDMENTS)
2022 CALIFORNIA ELECTRICAL CODE (CEC), PART 3, TITLE 24 C.C.R.
(2021 NATIONAL ELECTRICAL CODE AND CALIFORNIA AMENDMENTS)
2022 CALIFORNIA MECHANICAL CODE (CMC) PART 4, TITLE 24 C.C.R.
(2021 UNIFORM MECHANICAL CODE AND CALIFORNIA AMENDMENTS)
2022 CALIFORNIA PLUMBING CODE (CPC), PART 5, TITLE 24 C.C.R.
(2021 UNIFORM PLUMBING CODE AND CALIFORNIA AMENDMENTS)
2022 CALIFORNIA ENERGY CODE, PART 6, TITLE 24 C.C.R.
2022 CALIFORNIA FIRE CODE, PART 9, TITLE 24 C.C.R.
(2021 INTERNATIONAL FIRE CODE AND CALIFORNIA AMENDMENTS)
2022 CALIFORNIA REFERENCED STANDARDS, PART 12, TITLE 24 C.C.R.
TITLE 19 C.C.R., PUBLIC SAFETY, STATE FIRE MARSHAL REGULATIONS.

APPLICABLE STANDARDS:

FOR A LIST OF APPLICABLE STANDARDS, INCLUDING CALIFORNIA AMENDMENTS TO THE NFPA STANDARDS. REFER TO CBC CHAPTER 35 AND CFC CHAPTER 80.

APPLICABLE CODE INFORMATION 8

REFER TO DSA POLICY 07-02 FOR ADDITIONAL INFORMATION. ALL SITE-SPECIFIC CONSTRUCTION DOCUMENTS SHALL INCLUDE SITE-SPECIFIC PLANS AND DETAILS AS WELL AS THE RELEVANT PC DRAWINGS. THE FOLLOWING INFORMATION SHALL BE INCLUDED:

1. THE SPECIFIC OPTION OR VARIATION CHOSEN FOR THE PROJECT SHALL BE CLEARLY IDENTIFIED.
2. AN ELECTRICAL SITE PLAN INDICATING ALL STRUCTURES ON SITE WITH DSA NUMBERS. THE SCOREBOARD SHALL BE LOCATED ON THIS SITE PLAN ALONG WITH ELECTRICAL PANEL SERVING THE SCOREBOARD. SITE SPECIFIC CABLING, GROUNDING DETAILS, SAFETY DISCONNECT LOCATIONS , AND TRENCHING PER CE.C. ARTICLE 600 SHALL BE PROVIDED. CALIFORNIA LICENSED ENGINEER TO SIGN AND STAMP DRAWINGS.
3. ACCESSIBLE PATH OF TRAVEL AND ACCESSIBLE SEATING FOR OPERATOR SHALL BE PROVIDED WHEN WIRELESS CONTROLLERS ARE NOT PROVIDED.
4. THE PC SHEET INDEX SHALL BE MODIFIED TO SHOW ONLY THOSE SHEETS THAT ARE PART OF THE SUBMITTAL.
5. PROJECTS INCORPORATING DRAWINGS FROM MORE THAN ONE PC SHALL HAVE DUPLICATE SHEETS NUMBERS MODIFIED TO AVOID DUPLICATION.
6. CROSS OUT ALL PRIOR SITE-SPECIFIC PROJECT APPROVAL STAMPS INCLUDING THE DSA PC APPROVAL STAMP.
7. OBTAIN SITE PLAN APPROVAL FROM THE LOCAL FIRE AUTHORITY.
8. SITE-SPECIFIC WIND AND SEISMIC DESIGN CRITERIA SHALL BE PROVIDED ON CONSTRUCTION DOCUMENTS.

SITE-SPECIFIC PROJECT REQUIREMENTS 13

FOR JOB SPECIFIC USE - CHECK BOXES THAT APPLY

	ITEM	VALUE
☐	RISK CATEGORY	II
☐	SEISMIC IMPORTANCE FACTOR	1.0
☐	SITE CLASS	D
☐ ☐	MAPPED SPECTRAL ACCELERATION S_S / S_1	2.811 / 1.081
☐ ☐	DESIGN SPECTRAL ACCELERATION S_{DS} / S_{D1}	2.249 / NULL
☐	SEISMIC DESIGN CATEGORY	E
	BASIC SEISMIC FORCE RESISTING SYSTEM	SIGNS AND BILLBOARDS PER ASCE 7-16 CHAPTER 15
	RESPONSE MODIFICATION FACTOR (R)	3.0
	OVERSTRENGTH FACTOR (Ω_0)	1.75
	Cs	0.75

- WIND ANALYSIS :
  ANALYSIS AND DESIGN IS IN CONFORMANCE WITH THE PROVISIONS OF THE 2022 CBC CHAPTER 16 - SECTION 1609A (WIND LOADS)

ITEM	VALUE
ASCE 7-16 PROCEDURE	MWFRS - SOLID SIGN (CH. 29)
BASIC WIND SPEED (V)	100 MPH 130 MPH (SPECIAL WIND REGION)
EXPOSURE	C
GUST FACTOR (G)	0.85
DIRECTIONALITY FACTOR (K_d)	0.85
VELOCITY PRESSURE EXPOSURE COEFFICENT (K_{zt})	1.00
RISK CATEGORY	II

- DESIGN CODE:
  2022 EDITION OF THE CALIFORNIA BUILDING CODE
- DESIGN VERTICAL LOADS:
  SELF-WEIGHT AS NOTED ON DRAWINGS
- DESIGN SNOW LOADS:
  P_g = 0 PSF
- SEISMIC ANALYSIS :
  ANALYSIS AND DESIGN IS IN CONFORMANCE WITH THE PROVISIONS OF THE 2022 CBC CHAPTER 16 - SECTION 1613A (EARTHQUAKE LOADS)

GENERAL NOTES:

1. ALL WORK, INCLUDING WORKMANSHIP AND MATERIALS SHALL CONFORM TO THE REQUIREMENTS OF TITLE 24 CALIFORNIA CODE OF REGULATIONS AND THE 2022 EDITION OF THE CALIFORNIA BUILDING CODE.
2. THE CONTRACTOR SHALL VERIFY ALL DIMENSIONS AND CONDITIONS AT THE SITE. REPORT CONDITIONS DISCOVERED THAT ARE NOT RECOGNIZED BY THE DOCUMENTS TO THE OWNER'S REPRESENTATIVE IMMEDIATELY.
3. COORDINATE STRUCTURAL DETAILS AND DIMENSIONS WITH RELATED REQUIREMENTS ON OTHER DRAWINGS. IF CONFLICTING INFORMATION IS SHOWN ON THE CONSTRUCTION DOCUMENTS, THE MORE STRINGENT REQUIREMENTS SHALL BE FOLLOWED.
4. THE OWNER'S REPRESENTATIVE WILL INTERPRET THE INTENT OF THE DOCUMENTS IN CASE OF POSSIBLE CONFLICT OR DISCREPANCY BETWEEN STRUCTURAL AND OTHER DISCIPLINE.
5. CONTRACTOR SHALL BE FULLY RESPONSIBLE FOR FURNISHING AND INSTALLING ADEQUATE SHORING, BRACING, OR ANY OTHER MEANS THAT REQUIRED TO SAFELY EXECUTE ALL WORK.
6. DETAILS NOTED AS TYP. OR TYPICAL APPLY IN ALL CASES WHETHER OR NOT SPECIFICALLY REFERENCED.
7. ALL ITEMS ARE NEW AND PROVIDED AS PART OF THIS PROJECT.
8. CHANGES TO THE APPROVED DRAWINGS AND SPECIFICATIONS SHALL BE MADE BY A REVISION OR CONSTRUCTION CHANGE DOCUMENT (CCD) APPROVED BY THE DIVISION OF THE STATE ARCHITECT AS REQUIRED BY SECTION4-338, PART 1, TITLE 24, CCR.
9. MATERIAL REQUIREMENTS:

STRUCTURAL STEEL:	ASTM A-992
PLATES & WASHERS:	A36
WELDING:	AWS D1.1
BOLTS:	ASTM A307
CONCRETE:	f'c=4500 psi (normal weight) @28 DAYS TYPE = V CEMENT MAXIMUM WATER/CEMENT RATIO = 0.45
REINFORCING STEEL:	ASTM A-615 GRADE 60

10. FOUNDATION:
PRESUMPTIVE DESIGN VALUE PER CBC TABLE 1806A.2 TYPE OF SOIL = CLASS 5 DESIGN SOIL PRESSURE = 1500 psf (DEAD LOAD + LIVE LOAD) DESIGN LATERAL BEARING PRESSURE = 100 pcf LATERAL BEARING PRESSURE MAY BE INCREASED BY 1/3 PER CBC 1806.1
11. ALL STEEL EXPOSED TO WEATHER SHALL BE PAINTED PER AISC 360.
12. THESE PC DRAWINGS ARE NOT APPLICABLE IN AREAS WITH LIQUEFIABLE SOILS.
13. IT IS THE RESPONSIBILITY OF THE MANUFACTURER TO DESIGN PRE-MANUFACTURED SCORE AND DISPLAY BOARDS, SIGNS, ELECTRICAL EQUIPMENT AND LIGHT FIXTURES IN ACCORDANCE WITHH 2022 CBC. THE INTERNAL FRAMEWORK AND ENCLOSURE OF SUCH COMPONENTS ARE NOT REVIEWED BY DSA.

PRODUCT SPECIFICATION:

1. POST-INSTALLED ANCHORAGE: SEE REFERENCED TEST REPORT AND MANUFACTURER RECOMMENDATIONS FOR MATERIAL REQUIREMENTS AND INSTALLATION REQUIREMENTS. ALL ICC ESR REPORTS FOR ANCHORS TO BE CURRENT AT TIME OF INSTALLATION.

1.1 CONCRETE ANCHOR SYSTEMS:
EXPANSION (WEDGE ANCHORS): HILTI KWIK BOLT TZ2 (ICC ESR - 4266 w/ LARR SUPPLEMENT).

1.2 MASONRY ANCHOR SYSTEMS:
EXPANSION (WEDGE ANCHORS) TO GROUTED CMU: HILTI KWIK BOLT TZ2 (ICC ESR-4561 w/ LARR SUPPLEMENT).
ANCHORS SHALL BE TESTED AND INSPECTED PER THE ANCHOR'S TESTING REPORT.
ANCHORS SHALL BE TESTED AT A RATE OF 50% FOR NON-STRUCTURAL APPLICATIONS, AND 100% FOR ALL OTHER STRUCTURAL APPLICATIONS. TORQUE TEST VALUES SHALL BE PER THE ANCHOR'S TESTING REPORT.

2. METAL FASTENER: SEE REFERENCED TEST REPORT AND MANUFACTURER RECOMMENDATIONS FOR MATERIAL REQUIREMENTS AND INSTALLATION REQUIREMENTS.

2.1 METAL FASTENER SYSTEMS: ITW BUILDEX TEKS SELF-DRILLING FASTENERS (ICC ESR - 1976 w/ LARR SUPPLEMENT).

QUALITY CONTROL:

1. TESTING AND INSPECTION SHALL BE IN CONFORMANCE WITH THE REQUIREMENTS OF THE SITE-SPECIFIC DSA-103 FORM.
2. A "DSA CERTIFIED" PROJECT INSPECTOR EMPLOYED BY THE DISTRICT (OWNER) AND APPROVED BY THE DIVISION OF THE STATE ARCHITECT SHALL PROVIDE CONTINUOUS INSPECTION OF THE WORK THE DUTIES OF THE INSPECTOR ARE DEFINED IN SECTION 4-342, PART 1, TITLE 24 CCR.
3. CONCRETE MIX DESIGN SHALL BE STAMPED AND SIGNED BY A CALIFORNIA REGISTERED CIVIL ENGINEER.
4. NOTIFY STRUCTURAL ENGINEER IF GROUNDWATER IS ENCOUNTERED.
5. A DSA ACCEPTED TESTING LABORATORY DIRECTLY EMPLOYED BY THE DISTRICT (OWNER) SHALL CONDUCT ALL THE REQUIRED TESTS AND INSPECTIONS FOR THE PROJECT.

GENERAL NOTES & STRUCTURAL DESIGN CRITERIA 15

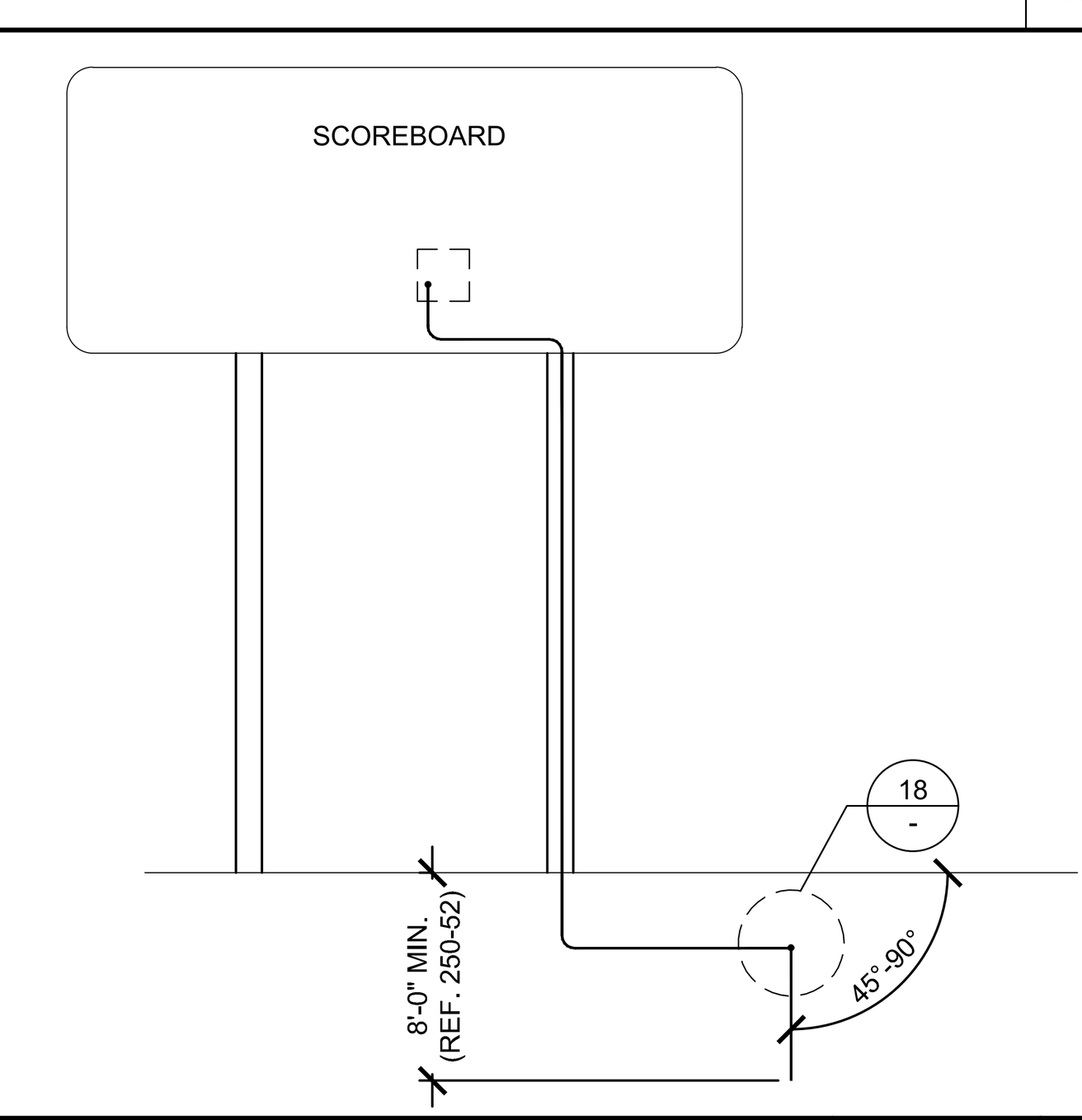

GROUNDING DETAIL SCALE: NTS 17

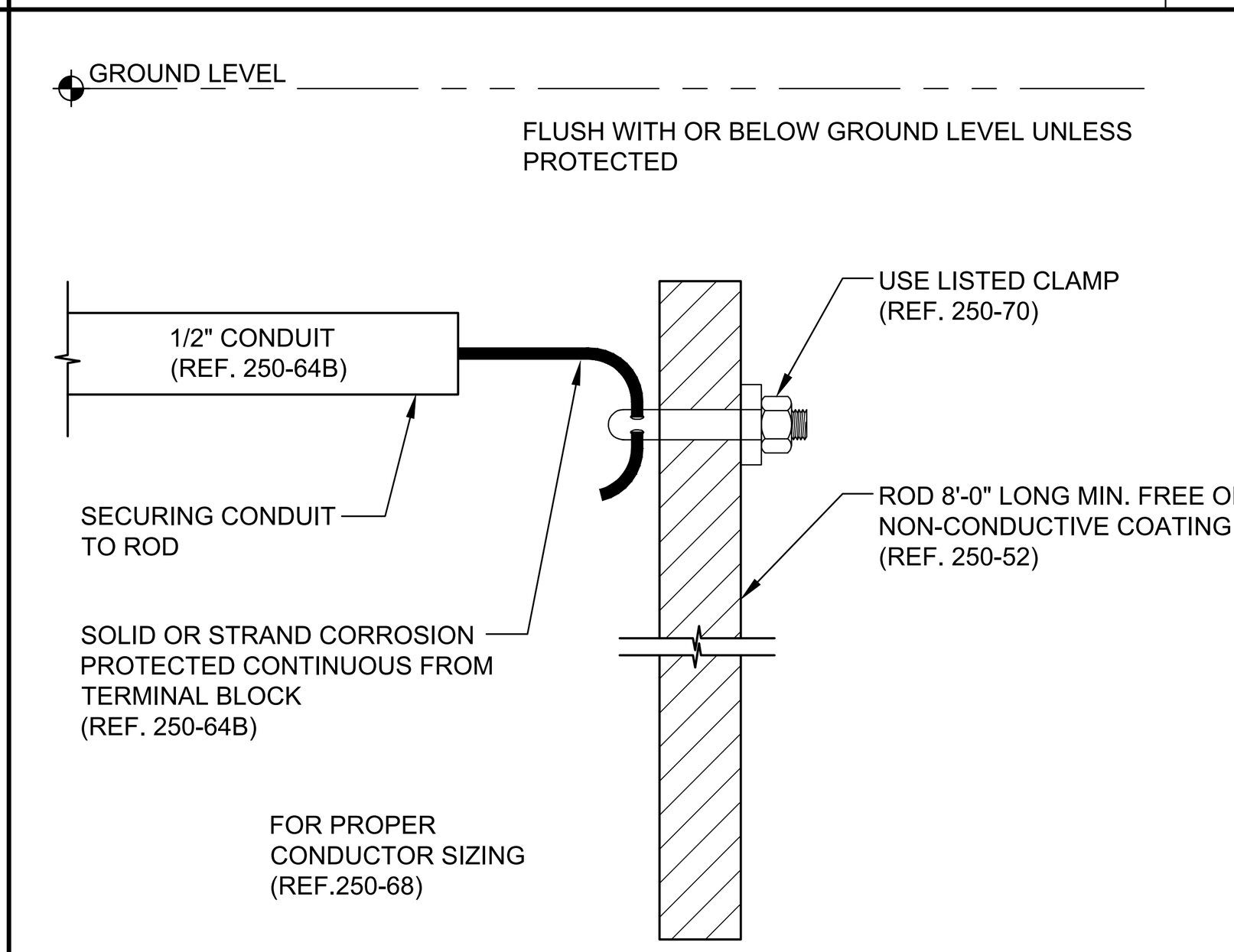

GROUND SECTION DETAIL SCALE: NTS 18

(E) - EXISTING
(N) - NEW
- POUNDS
A.B. - ANCHOR BOLT
ARCH. - ARCHITECTURAL
BLKG. - BLOCKING
BM. - BEAM
BOTT. - BOTTOM
BTWN. - BETWEEN
CJP - COMPLETE JOINT PENETRATION
CLINE - CENTERLINE
CLR. - CLEAR, CLEARANCE
CMU - CONCRETE MASONRY UNIT
COL. - COLUMN
CONC. - CONCRETE
CONN. - CONNECTION
CONT. - CONTINUOUS
DBL. - DOUBLE
DC - DEMAND CRITICAL
DIA. - DIAMETER
DIAG. - DIAGONAL
DO - DITTO
DWG. - DRAWING
E.F. - EACH FACE
E.W. - EACH WAY
EA. - EACH
EMBED. - EMBEDMENT
EQ. - EQUAL
EXIST. - EXISTING
FLR. - FLOOR
FTG. - FOOTING
GA. - GAUGE
GLBM - GLULAM BEAM
GALV. - GALVANIZED
GR. - GRADE
HORIZ. - HORIZONTAL
H.R. - HARD ROCK
HSS-HOLLOW STEEL SECTION
LLH - LONG LEG HORIZONTAL
LLV - LONG LEG VERTICAL
LT.WT. - LIGHTWEIGHT
MAX. - MAXIMUM
M.B. - MACHINE BOLT
MECH. - MECHANICAL
MIN. - MINIMUM
NS/FS - NEAR SIDE/FAR SIDE
NTS - NOT TO SCALE
N.W. - NORMAL WEIGHT
O.C. - ON CENTER
O.H. - OPPOSITE HAND
OPN'G. - OPENING
OPP. - OPPOSITE
PLT. - PLATE
P.P. - PARTIAL PENETRATION
PT - PRETENSIONED
REINF. - REINFORCEMENT
REQ'D. - REQUIRED
SC - SLIP CRITICAL
SCHED. - SCHEDULE
SHT'G. - SHEATHING
SIM. - SIMILAR
SLRS - SEISMIC LOAD RESISTING SYSTEM
S.O.G. - SLAB ON GRADE
SPECS. - SPECIFICATIONS
SPCG. - SPACING
SQ. - SQUARE
STIFF. - STIFFENER
STL. - STEEL
STRUC. - STRUCTURAL
SYM. - SYMMETRICAL
T&B - TOP AND BOTTOM
THK. - THICK
TOC - TOP OF CONCRETE
TOF - TOP OF FOOTING
TOGB - TOP OF GRADE BEAM
TOS - TOP OF STEEL
TYP. - TYPICAL
U.N.O. - UNLESS NOTED OTHERWISE
VERT. - VERTICAL
W.A. - WEDGE (EXPANSION) ANCHOR
W/ - WITH
W.P. - WORK POINT
WT. - WEIGHT
WWF - WELDED WIRE FABRIC

ABBREVIATIONS 19

Sheet Index

Sheet Number	Sheet Title
S-1	GENERAL NOTES
S-2	GENERAL NOTES SECTIONS AND DETAILS OUTDOOR SCOREBOARD
S-3	GENERAL NOTES SECTIONS AND DETAILS MARQUEE

TOTAL # OF SHEETS = 3

PRE-CHECK (PC) DOCUMENT
CODE: 2022 CBC
A separate project application for construction is required.

ABV SCOREBOARD SERVICES, INC.
1270 Avenida Acaso, Unit F
Camarillo, CA 93012
(805) 484-2889

REGISTERED PROFESSIONAL ENGINEER KIM CARAVALHO No. 4896 STRUCTURAL STATE OF CALIFORNIA
DATE:10-25-2023
FOR BRANDOW & JOHNSTON

EST. 1945
BRANDOW & JOHNSTON
STRUCTURAL+CIVIL ENGINEERS (B&J HBK, INC.)
700 S FLOWER ST #1200, LOS ANGELES, CA 90017
T: (213) 596-4500 WWW.BJSCE.COM
B&J PROJECT #: S23-0100

IDENTIFICATION STAMP
DIV. OF THE STATE ARCHITECT
APP: 03-123415 PC
REVIEWED FOR
SS ☑ FLS ☑ ACS ☑ CG ☐
DATE: 10/30/2023

SHEET TITLE: GENERAL NOTES

DRAWN: J.G.
JOB NO.: S23-0100
SCALE: AS NOTED
DATE: 09-08-2023
SHEET NO. S-1

PLOT DATE: 10-24-23

CAD FILE: \\bnjfs01\bnj_cad$\23\s23-0100 - fair-play - 2023 cbc dsa scoreboard pc\Drawings\CAD_Sheets\S-1 GENERAL NOTES.dwg

IDENTIFICATION STAMP
DIV. OF THE STATE ARCHITECT
APP: 03-124281 INC:
REVIEWED FOR
SS ☑ FLS ☑ ACS ☑
DATE: 02/04/2025

NOTES:
1. THE SCOREBOARD /VIDEOBOARD DESIGN IS BEYOND THE SCOPE OF THIS PC.
2. MANUFACTURER'S DATA FOR THE SIGN AND BOARDS SHALL BE SUBMITTED WITH SITE SPECIFIC APPLICATION.

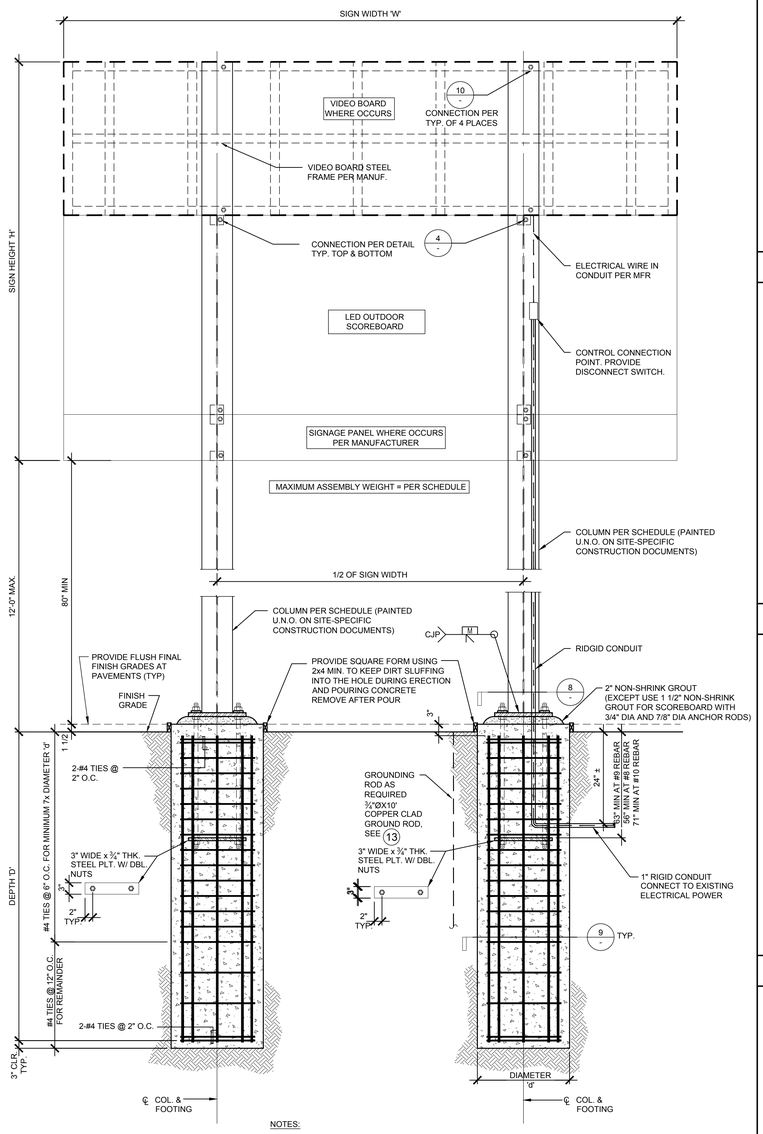

NOTES:
- PRIOR TO PLACEMENT OF COLUMNS, CAISSON EXCAVATION TO BE CLEANED OF ALL LOOSE MATERIAL AND MAINTAINED CLEAN DURING POURING OF CONCRETE.
- VIBRATE CONCRETE FULL DEPTH.
- SCOREBOARD MESSAGING IS ELECTRONIC AND OPERATED BY REMOTE CONTROL.
- FOR SLOPED SITES, THE FOOTING DEPTH SHALL BE INCREASED SO THAT THE DEPTH SPECIFIED IN THIS DETAIL IS PROVIDED BELOW A HORIZONTAL PLANE PROJECTED A DISTANCE OF 7x FOOTING DIAMETER.

SCOREBOARD | SCALE: NTS | 17

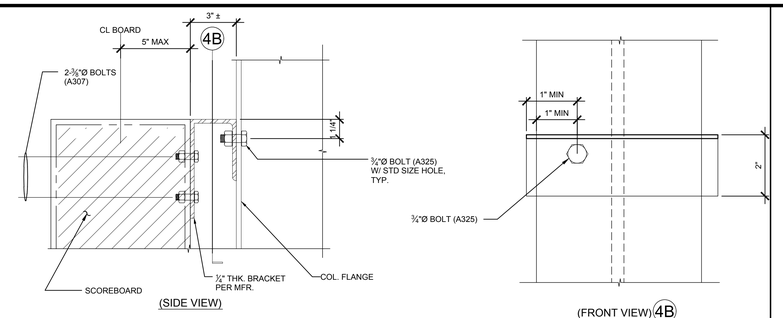

TYPICAL SCOREBOARD ATTACHMENT TO SUPPORT COLUMN | SCALE: NTS | 4

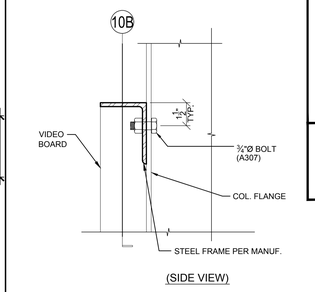

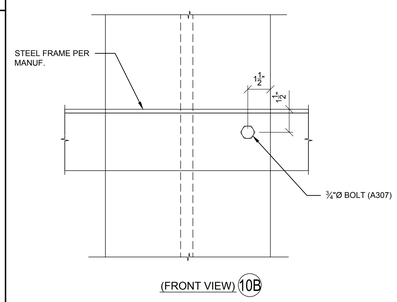

NOTES:
1. ALTERNATELY ROUTE CONDUIT OVER BASE PLATE.
2. USE STANDARD BOLT HOLE SIZES FOR ANCHORS (NOT OVERSIZED HOLES)

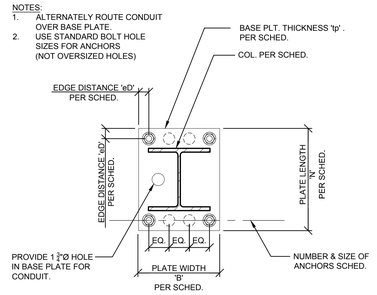

BASE PLATE DETAIL | SCALE: NTS | 8

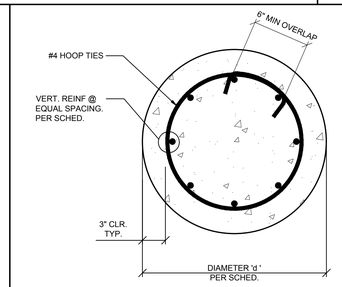

PLAN DETAIL | SCALE: NTS | 9

VIDEO BOARD STEEL FRAME ATTACHMENT | SCALE: NTS | 10

	ASSEMBLY CRITERIA				COLUMN BASE CRITERIA						PIER FOOTING CRITERIA			WIRELESS CONTROLLER?
	SCOREBOARD		MAX.WT.	COLUMN	BASE PLATE (ASTM A572 GR 50)			ANCHOR THREADED ROD HEAVY HEX HEAD (ASTM F1554 GR 55)			FOOTING SIZE			
CHECK OPTION	'W'	'H'		SIZE	'B'	'N'	'tp'	NUMBER AND SIZE		'eD'	'd'	'D'	LONGITUDINAL REIF.	
☐	9'-0"-14'-0"	≤ 4'-0"	840 #	W8X21	14''	18''	1 1/4"	(4)	3/4"Ø	2''	2'-6"	7'-6"	6-#9	YES ☐ NO ☐
☐	14'-0"	≤ 8'-0"	1,680 #	W10X33	14''	20''	1 5/8"	(4)	1 1/8" Ø	2''	2'-6"	10'-0"	6-#9	YES ☐ NO ☐
☐	14'-0"	≤ 10'-0"	2,100 #	W12X40	16"	22''	1 3/4"	(4)	1 1/8" Ø	2''	3'-0"	10'-3"	9-#9	YES ☐ NO ☐
☐	20'-0"	≤ 10'-6"	2,100 #	W12X50	16''	22''	2"	(6)	1 1/8" Ø	2''	3'-0"	12'-0"	9-#9	YES ☐ NO ☐
☐	26'-0"	≤ 8'-0"	3,120 #	W12X45	16''	22''	1 7/8"	(6)	1 1/8"Ø	2''	3'-0"	11'-6"	9-#9	YES ☐ NO ☐
☐	26'-0"	≤ 10'-0"	3,900 #	W12X53	20''	24''	2 1/8"	(6)	1 3/8"Ø	3"	3'-0"	13'-0"	9-#9	YES ☐ NO ☐
☐	≥ 20'-0" ≤ 26'-0"	≤ 12'-0"	4,680 #	W12X72	22''	25''	2 1/4"	(6)	1 1/2"Ø	3"	3'-6"	13'-6"	12-#9	YES ☐ NO ☐
☐	≥ 20'-0" ≤ 26'-0"	≤ 15'-0"	5,850 #	W12X87	22''	25''	2 5/8"	(6)	1 3/4"Ø	3"	4'-0"	16'-3"	15-#9	YES ☐ NO ☐
☐	≥ 20'-0" ≤ 26'-0"	≤ 20'-0"	7,800 #	W14X109	28''	30''	2 7/8"	(8)	1 1/2"Ø	3 1/2''	4'-0"	19'-0"	15-#9	YES ☐ NO ☐
☐	≥ 20'-0" ≤ 26'-0"	≤ 26'-0"	10,140 #	W14X159	32''	32''	3 5/8"	(8)	2"Ø	3 1/2''	5'-0"	20'-6"	20-#10	YES ☐ NO ☐

SPECIAL WIND REGION SCOREBOARD TABLE | SCALE: NTS | 15

	ASSEMBLY CRITERIA				COLUMN BASE CRITERIA						PIER FOOTING CRITERIA			WIRELESS CONTROLLER?
	SCOREBOARD		MAX.WT.	COLUMN	BASE PLATE (ASTM A572 GR 50)			ANCHOR THREADED ROD HEAVY HEX HEAD (ASTM F1554 GR 55)			FOOTING SIZE			
CHECK OPTION	'W'	'H'		SIZE	'B'	'N'	'tp'	NUMBER AND SIZE		'eD'	'd'	'D'	LONGITUDINAL REIF.	
☐	9'-0"-14'-0"	≤ 4'-0"	840 #	W8X21	12''	18''	1"	(4)	3/4"Ø	2''	2'-6"	7'-0"	5-#8	YES ☐ NO ☐
☐	14'-0"	≤ 8'-0"	1,680 #	W10X33	14''	20''	1 3/8"	(4)	7/8" Ø	2''	2'-6"	9'-0"	5-#8	YES ☐ NO ☐
☐	14'-0"	≤ 10'-0"	2,100 #	W12X40	14''	22''	1 1/2"	(4)	7/8"Ø	2''	3'-0"	9'-0"	7-#8	YES ☐ NO ☐
☐	20'-0"	≤ 10'-6"	2,100 #	W12X45	16''	22''	1 5/8"	(6)	7/8"Ø	2''	3'-0"	10'-6"	7-#8	YES ☐ NO ☐
☐	26'-0"	≤ 8'-0"	3,120 #	W12X40	16''	22''	1 5/8"	(4)	1 1/8"Ø	2''	3'-0"	10'-6"	7-#8	YES ☐ NO ☐
☐	26'-0"	≤ 10'-0"	3,900 #	W12X50	16''	22''	1 3/4"	(6)	1"Ø	2''	3'-0"	11'-6"	7-#8	YES ☐ NO ☐
☐	≥ 20'-0" ≤ 26'-0"	≤ 12'-0"	4,680 #	W12X58	18''	24''	2"	(6)	1 1/8"Ø	3"	3'-0"	12'-6"	7-#8	YES ☐ NO ☐
☐	≥ 20'-0" ≤ 26'-0"	≤ 15'-0"	5,850 #	W12X65	18''	24''	2 1/4"	(6)	1 1/4"Ø	3"	3'-6"	14'-0"	9-#8	YES ☐ NO ☐
☐	≥ 20'-0" ≤ 26'-0"	≤ 20'-0"	7,800 #	W14X90	22''	28''	2 1/2"	(6)	1 3/8"Ø	3"	4'-0"	17'-6"	10-#9	YES ☐ NO ☐
☐	≥ 20'-0" ≤ 26'-0"	≤ 26'-0"	10,140 #	W14X132	28''	28''	2 7/8"	(8)	1 1/2"Ø	3"	4'-0"	20'-0"	15-#9	YES ☐ NO ☐

SCOREBOARD TABLE | SCALE: NTS | 20

PRE-CHECK (PC) DOCUMENT
CODE: 2022 CBC
A separate project application for construction is required.

ABV SCOREBOARD SERVICES, INC.
1270 Avenida Acaso, Unit F
Camarillo, CA 93012
(805) 484-2889

REGISTERED PROFESSIONAL ENGINEER
TIM CARAVALHO
No. 4896
STRUCTURAL
STATE OF CALIFORNIA
DATE:10-25-2023
FOR BRANDOW & JOHNSTON

EST. 1945
BRANDOW & JOHNSTON
STRUCTURAL • CIVIL ENGINEERS (B&J HBK, INC.)
700 S FLOWER ST #1100, LOS ANGELES, CA 90017
T: (213) 596-4500 WWW.BJSCE.COM
B&J PROJECT #: S23-0100

IDENTIFICATION STAMP
DIV. OF THE STATE ARCHITECT
APP: 03-123415 PC
REVIEWED FOR
SS ☑ FLS ☑ ACS ☑ CG ☐
DATE: 10/30/2023

SHEET TITLE: GENERAL NOTES SECTIONS AND DETAILS OUTDOOR SCOREBOARD

DRAWN:	J.G.
JOB NO.:	S23-0100
SCALE:	AS NOTED
DATE:	09-08-2023
SHEET NO.	S-2

IDENTIFICATION STAMP
DIV. OF THE STATE ARCHITECT
APP: 03-124281 INC:
REVIEWED FOR
SS ☑ FLS ☑ ACS ☑
DATE: 02/04/2025

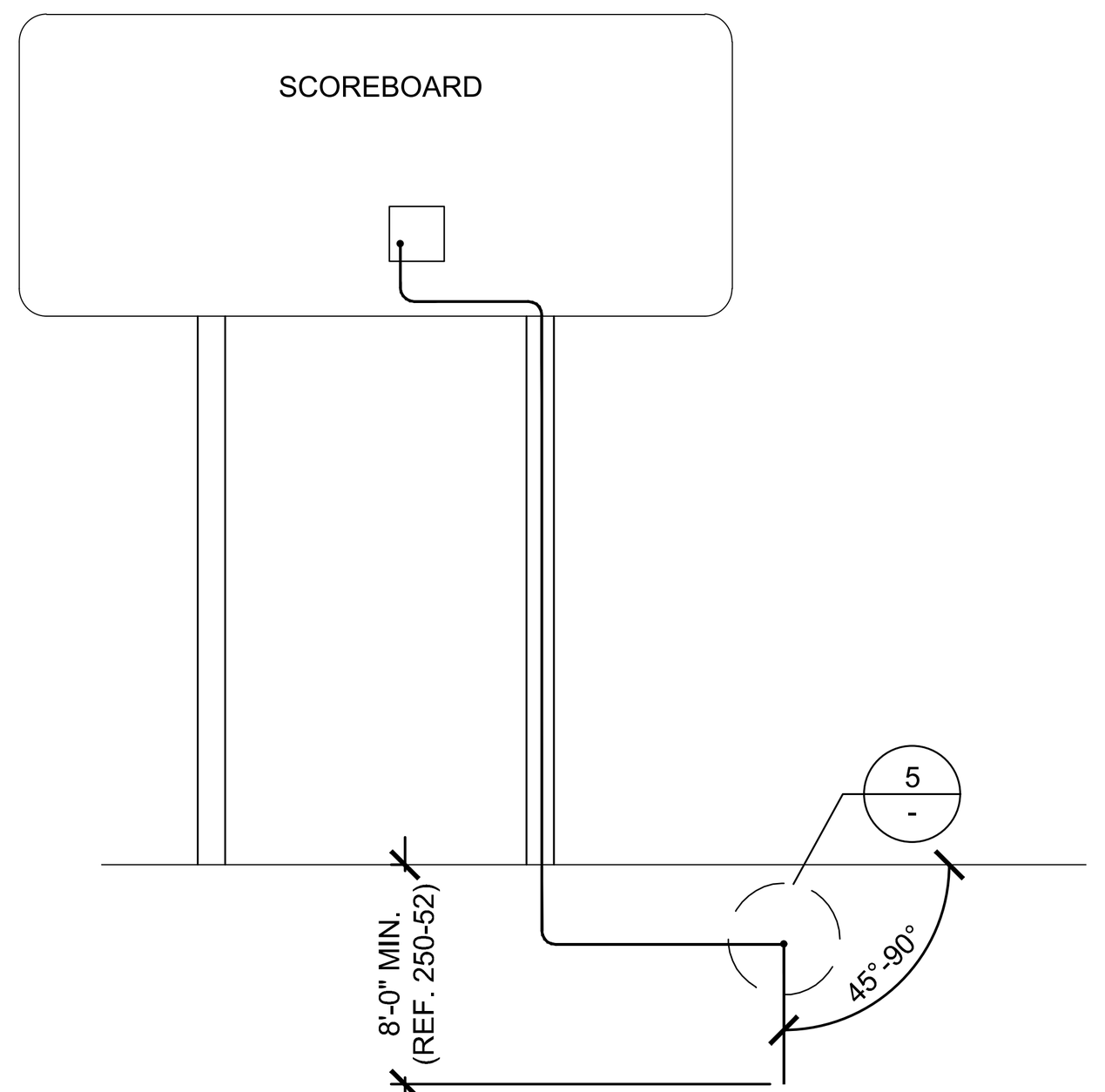

GROUNDING DETAIL 1

NOTE: ALTERNATELY ROUTE CONDUIT OVER BASE PLATE

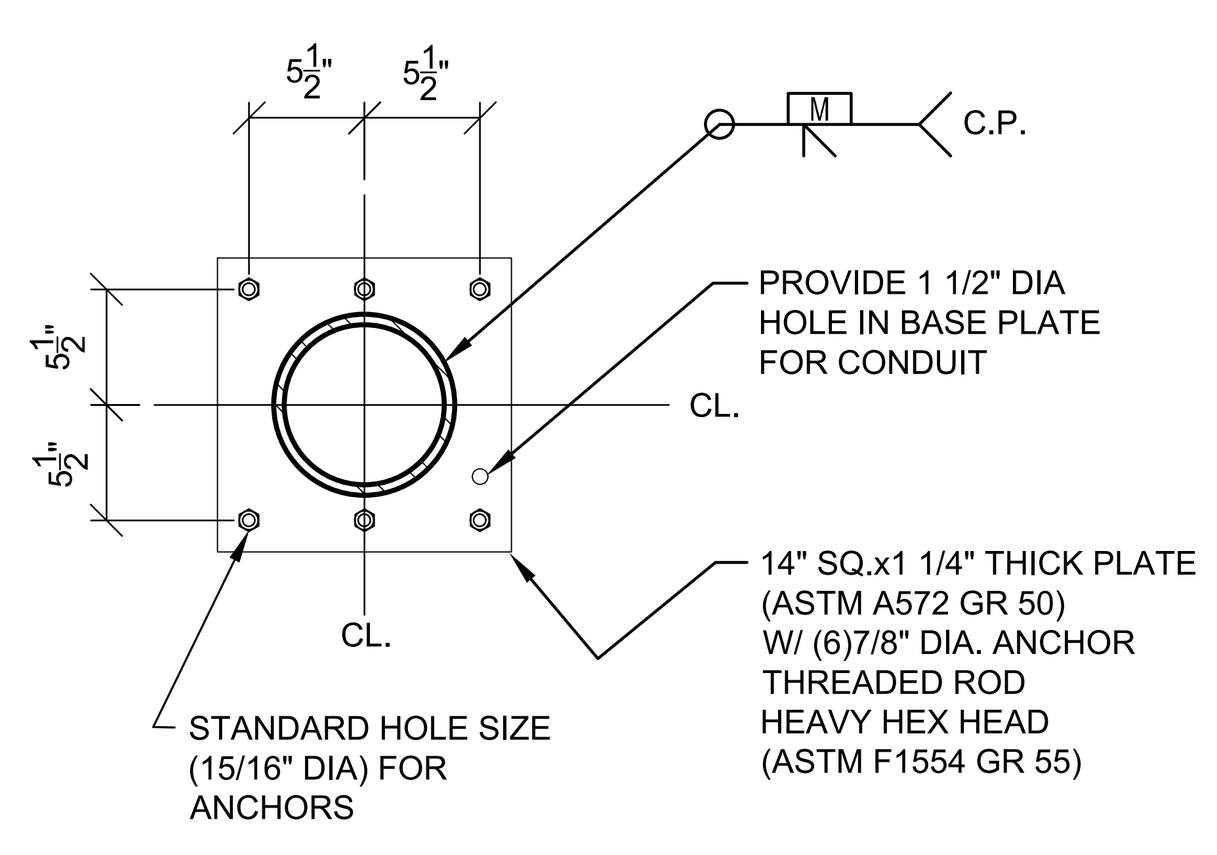

BASE PLATE DETAIL — SCALE: NTS — 2

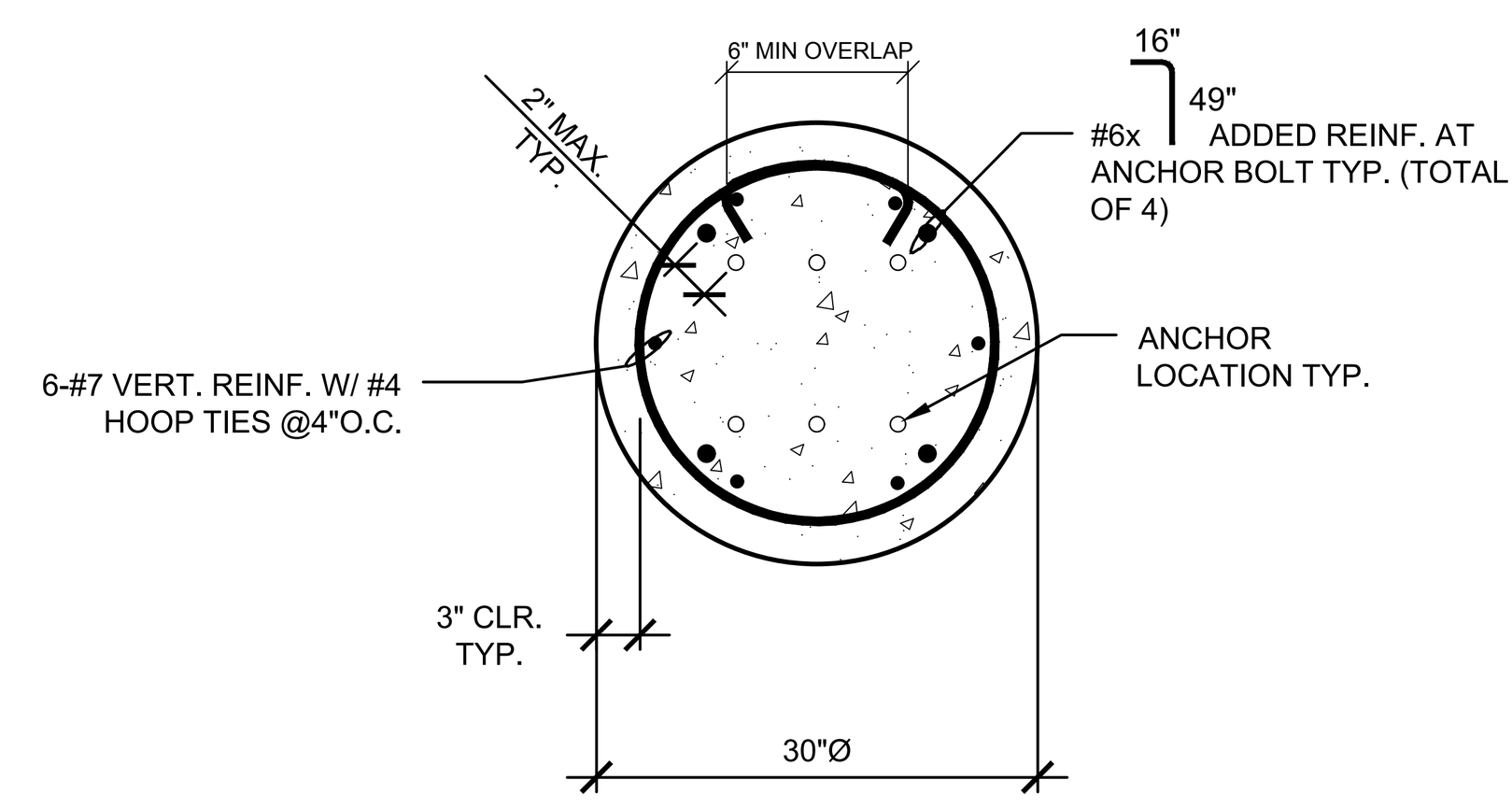

PLAN DETAIL — SCALE: NTS — 3

FOR JOB SPECIFIC USE - CHECK BOXES THAT APPLY

	ITEM	VALUE
☐	RISK CATEGORY	II
☐	SEISMIC IMPORTANCE FACTOR	1.0
☐	SITE CLASS	D
☐ ☐	MAPPED SPECTRAL ACCELERATION S_S S_1	2.811 1.081
☐ ☐	DESIGN SPECTRAL ACCELERATION S_{DS} S_{D1}	2.249 NULL
☐	SEISMIC DESIGN CATEGORY	E
	BASIC SEISMIC FORCE RESISTING SYSTEM	SIGNS AND BILLBOARDS PER ASCE 7-16 CHAPTER 15
	RESPONSE MODIFICATION FACTOR (R)	3.0
	OVERSTRENGTH FACTOR (Ω_o)	1.75
	Cs	0.75

- WIND ANALYSIS :
  ANALYSIS AND DESIGN IS IN CONFORMANCE WITH THE PROVISIONS OF THE 2022 CBC CHAPTER 16 - SECTION 1609A (WIND LOADS)

ITEM	VALUE
ASCE 7-16 PROCEDURE	MWFRS - SOLID SIGN (CH. 29)
BASIC WIND SPEED (V)	100 MPH 130 MPH (SPECIAL WIND REGION)
EXPOSURE	C
GUST FACTOR (G)	0.85
DIRECTIONALITY FACTOR (K_d)	0.85
VELOCITY PRESSURE EXPOSURE COEFFICENT (K_{zt})	1.00
RISK CATEGORY	II

WIRELESS CONTROLLER?	YES ☐ NO ☐

- DESIGN CODE:
  2022 EDITION OF THE CALIFORNIA BUILDING CODE
- DESIGN VERTICAL LOADS:
  SELF-WEIGHT AS NOTED ON DRAWINGS
- DESIGN SNOW LOADS:
  P_g = 0 PSF
- SEISMIC ANALYSIS :
  ANALYSIS AND DESIGN IS IN CONFORMANCE WITH THE PROVISIONS OF THE 2022 CBC CHAPTER 16 - SECTION 1613A (EARTHQUAKE LOADS)

GENERAL NOTES:

1. ALL WORK, INCLUDING WORKMANSHIP AND MATERIALS SHALL CONFORM TO THE REQUIREMENTS OF TITLE 24 CALIFORNIA CODE OF REGULATIONS AND THE 2022 EDITION OF THE CALIFORNIA BUILDING CODE.
2. THE CONTRACTOR SHALL VERIFY ALL DIMENSIONS AND CONDITIONS AT THE SITE. REPORT CONDITIONS DISCOVERED THAT ARE NOT RECOGNIZED BY THE DOCUMENTS TO THE OWNER'S REPRESENTATIVE IMMEDIATELY.
3. COORDINATE STRUCTURAL DETAILS AND DIMENSIONS WITH RELATED REQUIREMENTS ON OTHER DRAWINGS. IF CONFLICTING INFORMATION IS SHOWN ON THE CONSTRUCTION DOCUMENTS, THE MORE STRINGENT REQUIREMENTS SHALL BE FOLLOWED.
4. THE OWNER'S REPRESENTATIVE WILL INTERPRET THE INTENT OF THE DOCUMENTS IN CASE OF POSSIBLE CONFLICT OR DISCREPANCY BETWEEN STRUCTURAL AND OTHER DISCIPLINE.
5. CONTRACTOR SHALL BE FULLY RESPONSIBLE FOR FURNISHING AND INSTALLING ADEQUATE SHORING, BRACING, OR ANY OTHER MEANS THAT REQUIRED TO SAFELY EXECUTE ALL WORK.
6. DETAILS NOTED AS TYP. OR TYPICAL APPLY IN ALL CASES WHETHER OR NOT SPECIFICALLY REFERENCED.
7. ALL ITEMS ARE NEW AND PROVIDED AS PART OF THIS PROJECT.
8. CHANGES TO THE APPROVED DRAWINGS AND SPECIFICATIONS SHALL BE MADE BY A REVISION OR CONSTRUCTION CHANGE DOCUMENT (CCD) APPROVED BY THE DIVISION OF THE STATE ARCHITECT AS REQUIRED BY SECTION4-338, PART 1, TITLE 24, CCR.
9. MATERIAL REQUIREMENTS:

STRUCTURAL STEEL:	ASTM A-992
PLATES & WASHERS:	A36
WELDING:	AWS D1.1
BOLTS:	ASTM A307
CONCRETE:	f'c=4500 psi (normal weight) @28 DAYS TYPE = V CEMENT MAXIMUM WATER/CEMENT RATIO = 0.45
REINFORCING STEEL:	ASTM A-615 GRADE 60

10. FOUNDATION:
    PRESUMPTIVE DESIGN VALUE PER CBC TABLE 1806A.2 TYPE OF SOIL = CLASS 5 DESIGN SOIL PRESSURE = 1500 psf (DEAD LOAD + LIVE LOAD) DESIGN LATERAL BEARING PRESSURE = 100 pcf LATERAL BEARING PRESSURE MAY BE INCREASED BY 1/3 PER CBC 1806.1
11. ALL STEEL EXPOSED TO WEATHER SHALL BE PAINTED PER AISC 360.
12. THESE PC DRAWINGS ARE NOT APPLICABLE IN AREAS WITH LIQUEFIABLE SOILS.
13. IT IS THE RESPONSIBILITY OF THE MANUFACTURER TO DESIGN PRE-MANUFACTURED SCORE AND DISPLAY BOARDS, SIGNS, ELECTRICAL EQUIPMENT AND LIGHT FIXTURES IN ACCORDANCE WITHH 2022 CBC. THE INTERNAL FRAMEWORK AND ENCLOSURE OF SUCH COMPONENTS ARE NOT REVIEWED BY DSA.

PRODUCT SPECIFICATION:

1. POST-INSTALLED ANCHORAGE: SEE REFERENCED TEST REPORT AND MANUFACTURER RECOMMENDATIONS FOR MATERIAL REQUIREMENTS AND INSTALLATION REQUIREMENTS. ALL ICC ESR REPORTS FOR ANCHORS TO BE CURRENT AT TIME OF INSTALLATION.

1.1 CONCRETE ANCHOR SYSTEMS:
EXPANSION (WEDGE ANCHORS): HILTI KWIK BOLT TZ2 (ICC ESR - 4266 w/ LARR SUPPLEMENT).

1.2 MASONRY ANCHOR SYSTEMS:
EXPANSION (WEDGE ANCHORS) TO GROUTED CMU: HILTI KWIK BOLT TZ2 (ICC ESR-4561 w/ LARR SUPPLEMENT).
ANCHORS SHALL BE TESTED AND INSPECTED PER THE ANCHOR'S TESTING REPORT.
ANCHORS SHALL BE TESTED AT A RATE OF 50% FOR NON-STRUCTURAL APPLICATIONS, AND 100% FOR ALL OTHER STRUCTURAL APPLICATIONS. TORQUE TEST VALUES SHALL BE PER THE ANCHOR'S TESTING REPORT.

2. METAL FASTENER: SEE REFERENCED TEST REPORT AND MANUFACTURER RECOMMENDATIONS FOR MATERIAL REQUIREMENTS AND INSTALLATION REQUIREMENTS.

2.1 METAL FASTENER SYSTEMS: ITW BUILDEX TEKS SELF-DRILLING FASTENERS (ICC ESR - 1976 w/ LARR SUPPLEMENT).

QUALITY CONTROL:
1. TESTING AND INSPECTION SHALL BE IN CONFORMANCE WITH THE REQUIREMENTS OF THE SITE-SPECIFIC DSA-103 FORM.
2. A "DSA CERTIFIED" PROJECT INSPECTOR EMPLOYED BY THE DISTRICT (OWNER) AND APPROVED BY THE DIVISION OF THE STATE ARCHITECT SHALL PROVIDE CONTINUOUS INSPECTION OF THE WORK THE DUTIES OF THE INSPECTOR ARE DEFINED IN SECTION 4-342, PART 1, TITLE 24 CCR.
3. CONCRETE MIX DESIGN SHALL BE STAMPED AND SIGNED BY A CALIFORNIA REGISTERED CIVIL ENGINEER.
4. NOTIFY STRUCTURAL ENGINEER IF GROUNDWATER IS ENCOUNTERED.
5. A DSA ACCEPTED TESTING LABORATORY DIRECTLY EMPLOYED BY THE DISTRICT (OWNER) SHALL CONDUCT ALL THE REQUIRED TESTS AND INSPECTIONS FOR THE PROJECT.

GENERAL NOTES — SCALE: NONE — 15

PRE-CHECK (PC) DOCUMENT
CODE: 2022 CBC
A separate project application for construction is required.

ABV SCOREBOARD SERVICES, INC.
1270 Avenida Acaso, Unit F
Camarillo, CA 93012
(805) 484-2889

REGISTERED PROFESSIONAL ENGINEER
KIM CARAVALHO
No. 4896
STRUCTURAL
STATE OF CALIFORNIA
DATE: 10-25-2023
FOR BRANDOW & JOHNSTON

EST. 1945
BRANDOW & JOHNSTON
STRUCTURAL+CIVIL ENGINEERS (B&J HBK, INC.)
700 S FLOWER ST #1200, LOS ANGELES, CA 90017
T: (213) 596-4500 WWW.BJSCE.COM
B&J PROJECT #: S23-0100

IDENTIFICATION STAMP
DIV. OF THE STATE ARCHITECT
APP: 03-123415 PC
REVIEWED FOR
SS ☑ FLS ☑ ACS ☑ CG ☐
DATE: 10/30/2023

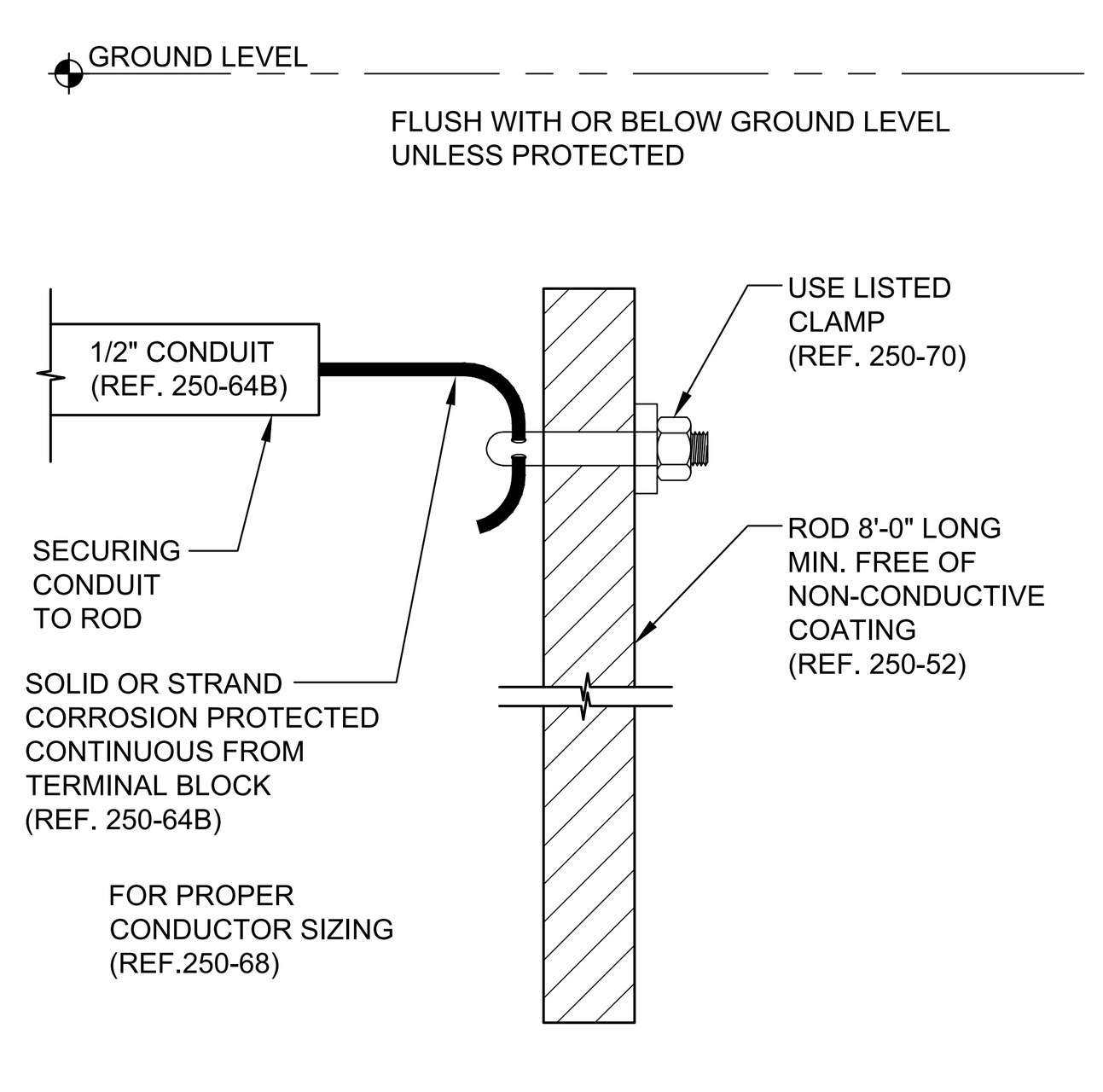

GROUND SECTION DETAIL — SCALE: NTS — 5

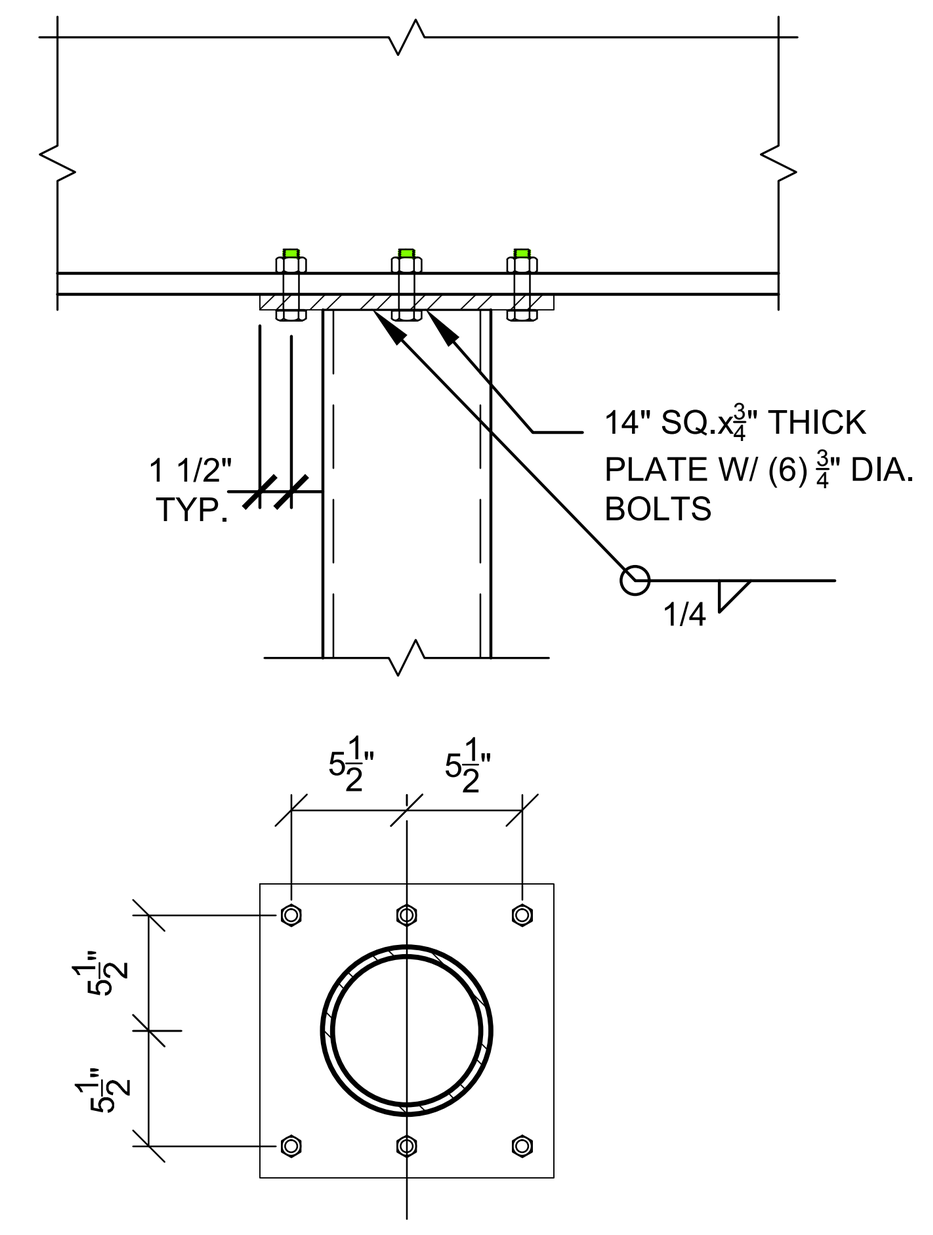

DETAIL — SCALE: NTS — 6

NOTES:
1. THE MARQUEE DESIGN IS BEYOND THE SCOPE OF THIS PC
2. MANUFACTURER'S DATA FOR THE SIGN AND DISPLAY SHALL BE SUBMITTED WITH SITE SPECIFIC APPLICATION.

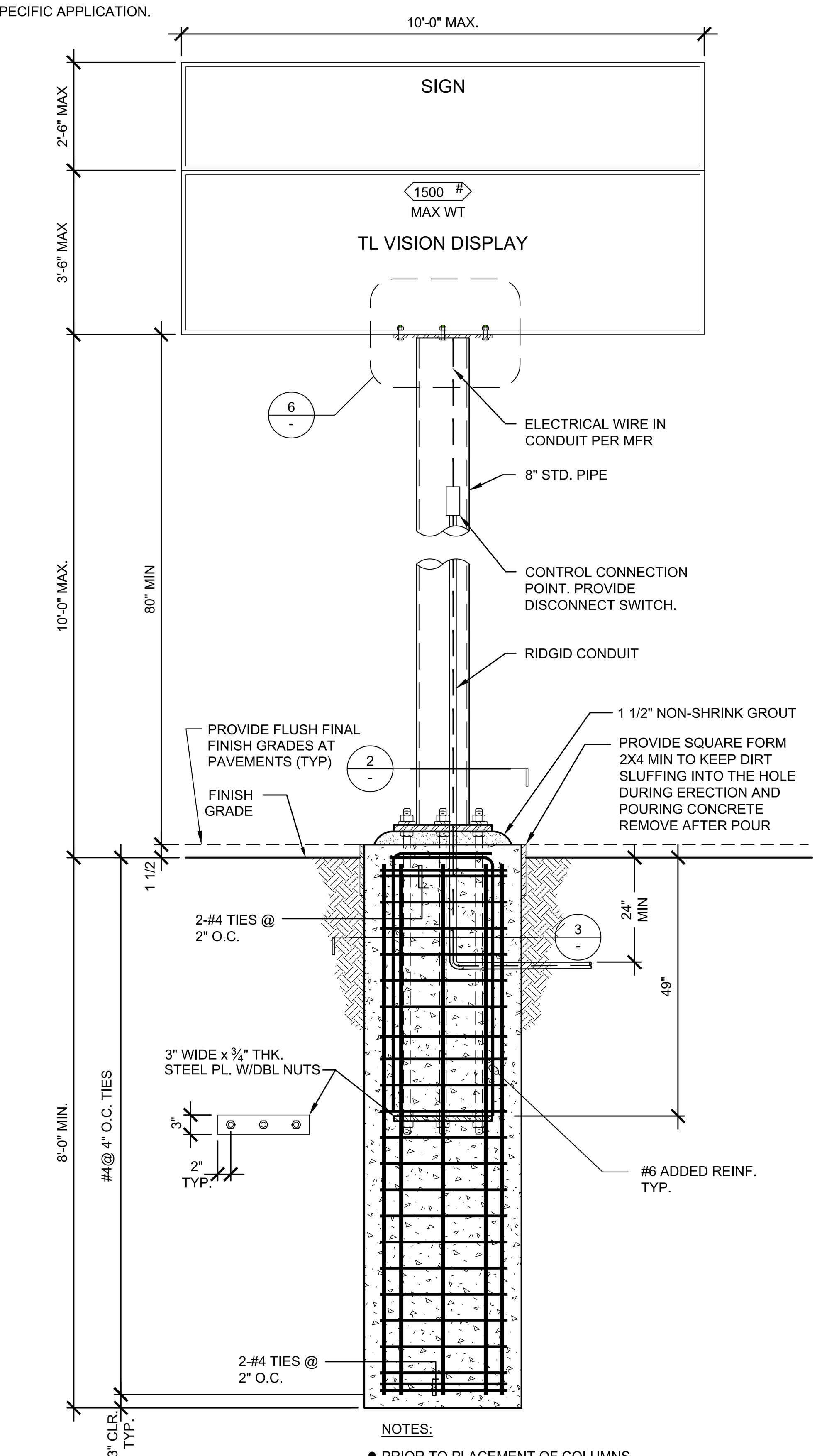

NOTES:
- PRIOR TO PLACEMENT OF COLUMNS, CAISSON EXCAVATION TO BE CLEANED OF ALL LOOSE MATERIAL AND MAINTAINED CLEAN DURING POURING OF CONCRETE.
- VIBRATE CONCRETE FULL DEPTH.
- FOR SLOPED SITES, THE FOOTING DEPTH SHALL BE INCREASED SO THAT THE DEPTH SPECIFIED IN THIS DETAIL IS PROVIDED BELOW A HORIZONTAL PLANE PROJECTED A DISTANCE OF 7x FOOTING DIAMETER.

MARQUEE — SCALE: NTS — 18

EXAMPLE DSA 103 FORM TO BE REPLACED BY SITE SPECIFIC DSA 103 PER IR PC-1 1.3

DSA 103-22: LISTING OF STRUCTURAL TESTS & SPECIAL INSPECTIONS, 2022 CBC

	S1. GENERAL:			
	Test or Special Inspection	Type	Performed By	Code References and Notes
☑	a. Verify that: • Site has been prepared properly prior to placement of controlled fill and/or excavations for foundations. • Foundation excavations are extended to proper depth and have reached proper material. • Materials below footings are adequate to achieve the design bearing capacity.	Periodic	GE*	* By geotechnical engineer or his or her qualified representative. (See Appendix (end of this form) form for exemptions.)

	S2. SOIL COMPACTION AND FILL:			
	Test or Special Inspection	Type	Performed By	Code References and Notes
☐	a. Perform classification and testing of fill materials.	Test	LOR*	* Under the supervision of the geotechnical engineer.
☑	b. Verify use of proper materials, densities and inspect lift thicknesses, placement and compaction during placement of fill.	Continuous	GE*	* By geotechnical engineer or his or her qualified representative. (Refer to specific items identified in the Appendix (end of this form) form for exemptions where soils SI and testing may be conducted under the supervision of a geotechnical engineer or LOR's engineering manager. In such cases, the LOR's form DSA 291 shall satisfy the soil SI and test reporting requirements for the exempt items.)
☑	c. Compaction testing.	Test	LOR*	* Under the supervision of the geotechnical engineer. (Refer to specific items identified in the Appendix (end of this form) for exemptions where soils testing may be conducted under the supervision of a geotechnical engineer or LOR's engineering manager. In such cases, the LOR's form DSA 291 shall satisfy the soil test reporting requirements for the exempt items.)

	C1. CAST-IN-PLACE CONCRETE			
	Test or Special Inspection	Type	Performed By	Code References and Notes
☑	a. Verify use of required design mix.	Periodic	SI	Table 1705A.3 Item 5, 1910A.1.
☑	b. Identifiy, sample, and test reinforcing steel.	Test	LOR	1910A.2; ACI 318-19 Ch.20 and Section 26.6.1.2; DSA IR 17-10. (See Appendix (end of this form) for exemptions.)
☑	c. During concrete placement, fabricate specimens for strength tests, perform slump and air content tests, and determine the temperature of the concrete.	Test	LOR	Table 1705A.3 Item 6; ACI 318-19 Sections 26.5 & 26.12.
☑	d. Test concrete (f'c).	Test	LOR	1905A.1.17; ACI 318-19 Section 26.12.
☑	e. Batch plant inspection: Continuous	See Notes	SI	Default of 'Continuous' per 1705A.3.3. If approved by DSA, batch plant inspection may be reduced to 'Periodic' subject to requirements in Section 1705A.3.3.1, or eliminated per 1705A.3.3.2. See IR 17-13. (See Appendix (end of this form) for exemptions.)

	S/A1. STRUCTURAL STEEL, COLD-FORMED STEEL AND ALUMINUM USED FOR STRUCTURAL PURPOSES			
	Test or Special Inspection	Type	Performed By	Code References and Notes
☑	a. Verify identification of all materials and: • Mill certificates indicate material properties that comply with requirements. • Material sizes, types and grades comply with requirements.	Periodic	*	Table 1705A.2.1 Item 3a–3c. 2202A.1; AISI S100-20 Section A3.1 & A3.2, AISI S240-20 Section A3 & A5, AISI S220-20 Sections A4 & A6. * By special inspector or qualified technician when performed off-site.
☑	b. Test unidentified materials	Test	LOR	2202A.1.
☐	c. Examine seam welds of HSS shapes	Periodic	SI	DSA IR 17-3.
☑	d. Verify and document steel fabrication per DSA-approved construction documents.	Periodic	SI	Not applicable to cold-formed steel light-frame construction, except for trusses (1705A.2.4).
☐	e. Buckling restrained braces.	Test	LOR	Testing and special inspections in accordance with IR 22-4.

	S/A3. WELDING:			
	Test or Special Inspection	Type	Performed By	Code References and Notes
☑	a. Verify weld filler material identification markings per AWS designation listed on the DSA-approved documents and the WPS.	Periodic	SI	1705A.2.5, Table 1705A.2.1 Items 4 & 5; AWS D1.1 and AWS D1.8 for structural steel; AWS D1.2 for Aluminum; AWS D1.3 for cold-formed steel; AWS D1.4 for reinforcing steel; DSA IR 17-3.
☑	b. Verify weld filler material manufacturer's certificate of compliance.	Periodic	SI	DSA IR 17-3.
☑	c. Verify WPS, welder qualifications and equipment.	Periodic	SI	DSA IR 17-3.

	S/A4. SHOP WELDING (IN ADDITION TO SECTION S/A3):			
	Test or Special Inspection	Type	Performed By	Code References and Notes
☑	a. Inspect groove welds, multi-pass fillet welds, single pass fillet welds > 5/16", plug and slot welds.	Continuous	SI	Table 1705A.2.1 Items 5a.1–4; AISC 360-16 (and AISC 341-16 as applicable); DSA IR 17-3.
☑	b. Inspect single-pass fillet welds ≤ 5/16", floor and roof deck welds.	Periodic	SI	1705A.2.2, Table 1705A.2.1 Items 5a.5 & 5a.6; AISC 360-16 (and AISC 341-16 as applicable); DSA IR 17-3.
☐	c. Inspect welding of stairs and railing systems.	Periodic	SI	1705A.2.1; AISC 360-16 (and AISC 341-16 as applicable); AWS D1.1 & D1.3; DSA IR 17-3.
☐	d. Verification of reinforcing steel weldability other than ASTM A706.	Periodic	SI	1705A.3.1; AWS D1.4; DSA IR 17-3. Verify carbon equivalent reported on mill certificates.
☐	e. Inspect welding of reinforcing steel.	Continuous	SI	Table 1705A.2.1 Item 5b, 1705A.3.1, Table 1705A.3 Item 2, 1903A.8; AWS D1.4; DSA IR 17-3.

KEY TO COLUMNS

1. TYPE	2. PERFORMED BY
Continuous – Indicates that a continuous special inspection is required Periodic – Indicates that a periodic special inspection is required Test – Indicates that a test is required	GE (Geotechnical Engineer) – Indicates that the special inspection shall be performed by a registered geotechnical engineer or his or her authorized representative. LOR (Laboratory of Record) – Indicates that the test or special inspection shall be performed by a testing laboratory accepted in the DSA Laboratory Evaluation and Acceptance (LEA) Program. See CAC Section 4-335. PI (Project Inspector) – Indicates that the special inspection may be performed by a project inspector when specifically approved by DSA. SI (Special Inspection) – Indicates that the special inspection shall be performed by an appropriately qualified/approved special inspector.

1. Soils Testing and Inspection: Geotechnical Verified Report Form DSA 293
2. Structural Testing and Inspection: Laboratory Verified Report Form DSA 291
3. Concrete Batch Plant Inspection: Laboratory Verified Report Form DSA 291
4. Shop Welding Inspection: Laboratory Verified Report Form DSA 291, or, for independently contracting SI, Special Inspection Verified Report Form DSA 292

DSA TESTING AND INSPECTION FORM — 16

REFER TO DSA POLICY 07-02 FOR ADDITIONAL INFORMATION. ALL SITE-SPECIFIC CONSTRUCTION DOCUMENTS SHALL INCLUDE SITE-SPECIFIC PLANS AND DETAILS AS WELL AS THE RELEVANT PC DRAWINGS. THE FOLLOWING INFORMATION SHALL BE INCLUDED:

1. THE SPECIFIC OPTION OR VARIATION CHOSEN FOR THE PROJECT SHALL BE CLEARLY IDENTIFIED.
2. AN ELECTRICAL SITE PLAN INDICATING ALL STRUCTURES ON SITE WITH DSA NUMBERS. THE SCOREBOARD SHALL BE LOCATED ON THIS SITE PLAN ALONG WITH ELECTRICAL PANEL SERVING THE SCOREBOARD. SITE SPECIFIC CABLING, GROUNDING DETAILS, SAFETY DISCONNECT LOCATIONS , AND TRENCHING PER CE.C. ARTICLE 600 SHALL BE PROVIDED. CALIFORNIA LICENSED ENGINEER TO SIGN AND STAMP DRAWINGS.
3. ACCESSIBLE PATH OF TRAVEL AND ACCESSIBLE SEATING FOR OPERATOR SHALL BE PROVIDED WHEN WIRELESS CONTROLLERS ARE NOT PROVIDED.
4. THE PC SHEET INDEX SHALL BE MODIFIED TO SHOW ONLY THOSE SHEETS THAT ARE PART OF THE SUBMITTAL.
5. PROJECTS INCORPORATING DRAWINGS FROM MORE THAN ONE PC SHALL HAVE DUPLICATE SHEETS NUMBERS MODIFIED TO AVOID DUPLICATION.
6. CROSS OUT ALL PRIOR SITE-SPECIFIC PROJECT APPROVAL STAMPS INCLUDING THE DSA PC APPROVAL STAMP.
7. OBTAIN SITE PLAN APPROVAL FROM THE LOCAL FIRE AUTHORITY.
8. SITE-SPECIFIC WIND AND SEISMIC DESIGN CRITERIA SHALL BE PROVIDED ON CONSTRUCTION DOCUMENTS.

SITE-SPECIFIC PROJECT REQUIREMENTS — 19

PARTIAL LIST OF APPLICABLE CODES AS OF JANUARY 1, 2023:
2022 BUILDING STANDARDS ADMINISTRATIVE CODE, PART 1, TITLE 24 C.C.R.
2022 CALIFORNIA BUILDING CODE (CBC), PART 2, TITLE 24 C.C.R.
(2021 INTERNATIONAL BUILDING CODE VOLUMES 1-2 AND CALIFORNIA AMENDMENTS)
2022 CALIFORNIA ELECTRICAL CODE (CEC), PART 3, TITLE 24 C.C.R.
(2021 NATIONAL ELECTRICAL CODE AND CALIFORNIA AMENDMENTS)
2022 CALIFORNIA MECHANICAL CODE (CMC) PART 4, TITLE 24 C.C.R.
(2021 UNIFORM MECHANICAL CODE AND CALIFORNIA AMENDMENTS)
2022 CALIFORNIA PLUMBING CODE (CPC), PART 5, TITLE 24 C.C.R.
(2021 UNIFORM PLUMBING CODE AND CALIFORNIA AMENDMENTS)
2022 CALIFORNIA ENERGY CODE, PART 6, TITLE 24 C.C.R.
2022 CALIFORNIA FIRE CODE, PART 9, TITLE 24 C.C.R.
(2021 INTERNATIONAL FIRE CODE AND CALIFORNIA AMENDMENTS)
2022 CALIFORNIA REFERENCED STANDARDS, PART 12, TITLE 24 C.C.R.
TITLE 19 C.C.R., PUBLIC SAFETY, STATE FIRE MARSHAL REGULATIONS.

APPLICABLE STANDARDS:

FOR A LIST OF APPLICABLE STANDARDS, INCLUDING CALIFORNIA AMENDMENTS TO THE NFPA STANDARDS. REFER TO CBC CHAPTER 35 AND CFC CHAPTER 80.

APPLICABLE CODE INFORMATION — 20

SHEET TITLE: GENERAL NOTES SECTIONS AND DETAILS MARQUEE

DRAWN:	J.G.
JOB NO.:	S23-0100
SCALE:	AS NOTED
DATE:	09-08-2023
SHEET NO.	S-3

APPENDIX B

CalEEMod INPUT AND RESULTS FOR AIR QUALITY ANALYSIS

Criteria Emissions Summary

Activity	Category	Criteria Emissions (lbs/d)				
		ROG	CO	NO_X	PM_{10}	$PM_{2.5}$
Soccer Work	Off-road - Phase 1	1.87	16.86	16.76	0.76	0.70
	Off-road - Phase 2	0.54	5.77	5.42	0.22	0.20
	Vendors	0.11	0.96	0.27	0.02	0.03
	Employees	0.67	9.74	0.35	0.02	0.06
	Demolition	---	---	---	0.59	0.09
	Grading Fugitive	---	---	---	0.21	0.02
Soccer Work Maximum Daily		***3.2***	***33.3***	***22.8***	***1.8***	***1.1***
Stadium Work	Off-road - Phase 1	1.08	9.73	9.93	0.42	0.39
	Off-road - Phase 2	0.47	6.45	4.87	0.17	0.16
	Vendors	0.10	0.95	0.21	0.01	0.03
	Employees	0.56	8.15	0.30	0.02	0.05
	Parking Lot	11.84	---	---	---	---
Stadium Work Maximum Daily		***14.1***	***25.3***	***15.3***	***0.6***	***0.6***

GHG Emissions Summary

Activity	Category	GHG Emissions (tonnes)			
		CO_2	CH_4	N_2O	CO_2e
Soccer Work	Off-road - Phase 1	73.33	0.0030	N/A	73.40
	Off-road - Phase 2	21.55	0.0009	N/A	21.57
	Vendors	4.70	0.0001	0.0008	4.95
	Employees	22.15	0.0009	0.0006	22.36
Soccer Work Total		***121.7***	***0.005***	***0.001***	***122.3***
Stadium Work	Off-road - Phase 1	14.16	0.0006	N/A	14.18
	Off-road - Phase 2	33.58	0.0013	N/A	33.61
	Vendors	4.39	0.0001	0.0007	4.60
	Employees	24.99	0.0011	0.0007	25.23
Stadium Work Total		***77.1***	***0.003***	***0.001***	***77.6***
Grand Total for Project		***198.9***	***0.008***	***0.003***	***199.9***

Construction Employee Commute

Construction Employee Vehicle Activity

Activity	Total Trips (days)	Trips per day	Round Trip (mi)	VMT per day	Total VMT (mi)
Soccer Work - Phase 1	55	20	30	600	32,914
Soccer Work - Phase 2	37	26	30	780	28,526
			Soccer Work Total	***1,380***	***61,440***
Stadium Work - Phase 1	18	8	30	225	3,954
Stadium Work - Phase 2	70	31	30	930	65,366
			Stadium Work Total	***1,155***	***69,319***
			Totals	***2,085***	***134,685***

Construction Employee Criteria Emissions

Activity	Pounds per Day				
	ROG	CO	NO_X	PM_{10}	$PM_{2.5}$
Soccer Work - Phase 1	0.291	4.236	0.154	0.011	0.026
Soccer Work - Phase 2	0.378	5.507	0.200	0.014	0.034
Soccer Work Total	***0.67***	***9.74***	***0.35***	***0.02***	***0.06***
Stadium Work - Phase 1	0.109	1.589	0.058	0.004	0.010
Stadium Work - Phase 2	0.451	6.566	0.239	0.016	0.040
Stadium Work Total	***0.56***	***8.15***	***0.30***	***0.02***	***0.05***

Construction Employee GHG Emissions

Activity	Total Tonnes			
	CO_2	CH_4	N_2O	CO_2e
Soccer Work - Phase 1	11.87	0.0005	0.0003	11.98
Soccer Work - Phase 2	10.28	0.0004	0.0003	10.38
Soccer Work Total	***22.1***	***0.001***	***0.001***	***22.4***
Stadium Work - Phase 1	1.43	0.00006	0.00004	1.44
Stadium Work - Phase 2	23.57	0.0010	0.0007	23.79
Stadium Work Total	***25.0***	***0.001***	***0.001***	***25.2***
Project Totals	***48.6***	***0.002***	***0.001***	***49.0***

Vendor Activity

Vendors Vehicle Activity

Activity Phase	Vehicle Type (EMFAC)	Days per Phase	Trips per day	Round Trip (mi)	VMT per day	Total VMT (mi)
Soccer Work - Phase 1	MDV	55	1.00	30	30	1,646
	LHD1	55	2.00	30	60	3,291
Soccer Work - Phase 2	T6 Instate Construction Small	37	0.25	30	8	274
	MDV	37	1.00	30	30	1,097
	LHD1	37	2.00	30	60	2,194
				Soccer Work Total	***188***	***8,503***
Stadium Work - Phase 1	MDV	18	1.00	30	30	527
	LHD1	18	2.00	30	60	1,054
Stadium Work - Phase 2	MDV	70	1.00	30	30	2,109
	LHD1	70	2.00	30	60	4,217
				Stadium Work Total	***180***	***7,907***
				Project Totals	***368***	***16,410***

Vendors Criteria Emissions

Activity Phase	Vehicle Type (EMFAC)	Pounds per Day				
		ROG	CO	NO_X	PM_{10}	$PM_{2.5}$
Soccer Work - Phase 1	MDV	0.014	0.221	0.012	0.001	0.001
	LHD1	0.037	0.252	0.094	0.005	0.013
Soccer Work - Phase 2	T6 Instate Construction Small	0.003	0.010	0.062	0.005	0.004
	MDV	0.014	0.221	0.012	0.001	0.001
	LHD1	0.037	0.252	0.094	0.005	0.013
	Soccer Work Total	***0.11***	***0.96***	***0.27***	***0.02***	***0.03***
Stadium Work - Phase 1	MDV	0.014	0.221	0.012	0.001	0.001
	LHD1	0.037	0.252	0.094	0.005	0.013
Stadium Work - Phase 2	MDV	0.014	0.221	0.012	0.001	0.001
	LHD1	0.037	0.252	0.094	0.005	0.013
	Stadium Work Total	***0.10***	***0.95***	***0.21***	***0.01***	***0.03***

Vendors GHG Emissions

Activity Phase	Vehicle Type (EMFAC)	Total Tonnes			
		CO_2	CH_4	N_2O	CO_2e
Soccer Work - Phase 1	MDV	0.79	0.0000	0.0000	0.81
	LHD1	1.95	0.0001	0.0004	2.07
Soccer Work - Phase 2	T6 Instate Construction	0.14	0.0000	0.0001	0.16
	MDV	0.53	0.0000	0.0000	0.54
	LHD1	1.30	0.0000	0.0003	1.38
Soccer Work Total		***4.7***	***0.000***	***0.001***	***4.9***
Stadium Work - Phase 1	MDV	0.25	0.0000	0.0000	0.26
	LHD1	0.62	0.0000	0.0001	0.66
Stadium Work - Phase 2	MDV	1.02	0.0000	0.0001	1.03
	LHD1	2.49	0.0001	0.0005	2.65
Stadium Work Total		***4.4***	***0.000***	***0.001***	***4.6***
Project Totals		***9.1***	***0.0003***	***0.0015***	***9.5***

Off-road Equipment Emissions

Soccer Field Work - Phase 1

Equipment Type	Activity						Criteria Emission Factors (g/bhp-hr)					Criteria Emissions (lbs/d)					GHG EmFacs (g/bhp-hr)		GHG Emissions (tonnes)		
	BHP	Load Factor	Length (wkday)	hrs/ day	Avg Daily Number	total hours	ROG	CO	NO_X	PM_{10}	$PM_{2.5}$	ROG	CO	NO_X	PM_{10}	$PM_{2.5}$	CO_2	CH_4	CO_2	CH_4	CO_2e
Rubber Tired Dozer	367	0.40	55	8	1.0	439	0.371	2.902	3.506	0.154	0.142	0.96	7.51	9.08	0.40	0.37	532.2	0.022	34.28	0.0014	34.32
Concrete/Industrial Saw	33	0.73	55	5	1.0	274	0.439	4.348	3.635	0.101	0.093	0.12	1.15	0.97	0.03	0.02	575.0	0.023	3.80	0.0002	3.80
Tractors/Loaders/Backhoes	84	0.37	55	8	1.0	439	0.201	1.663	1.950	0.079	0.073	0.11	0.91	1.07	0.04	0.04	527.2	0.021	7.19	0.0003	7.20
Rubber Tired Loader	150	0.36	55	2	0.8	110	0.225	3.283	1.602	0.085	0.078	0.04	0.63	0.31	0.02	0.01	526.2	0.021	2.49	0.0001	2.50
Off Highway Truck	376	0.38	55	2	1.0	110	0.340	3.419	2.859	0.159	0.146	0.21	2.15	1.80	0.10	0.09	528.6	0.021	8.29	0.0003	8.29
Bore/Drill Rig	83	0.50	55	3	1.0	165	0.142	3.249	1.745	0.051	0.047	0.04	0.89	0.48	0.01	0.01	522.6	0.022	3.57	0.0002	3.57
Grader	148	0.41	55	6	1.0	329	0.340	3.419	2.859	0.159	0.146	0.27	2.74	2.29	0.13	0.12	531.2	0.022	10.61	0.0004	10.62
Trencher	40	0.50	55	6	0.8	329	0.540	4.108	3.646	0.162	0.149	0.11	0.87	0.77	0.03	0.03	587.9	0.024	3.10	0.0001	3.10
						Totals						***1.9***	***16.9***	***16.8***	***0.8***	***0.7***		***Totals***	***73.3***	***0.003***	***73.4***

Soccer Field Work - Phase 2

Equipment Type	Activity						Criteria Emission Factors (g/bhp-hr)					Criteria Emissions (lbs/d)					GHG Emission Factors (g/bhp-hr)		GHG Emissions (tonnes)		
	BHP	Load Factor	Length (wkday)	hrs/ day	Avg Daily Number	total hours	ROG	CO	NO_X	PM_{10}	$PM_{2.5}$	ROG	CO	NO_X	PM_{10}	$PM_{2.5}$	CO_2	CH_4	CO_2	CH_4	CO_2e
Truck-mounted Crane	150	0.29	37	2	1.0	73	0.210	3.169	1.661	0.085	0.078	0.04	0.61	0.32	0.02	0.01	527.5	0.021	1.68	0.0001	1.68
Crane	367	0.29	37	6	1.0	219	0.201	1.663	1.950	0.079	0.073	0.28	2.34	2.75	0.11	0.10	527.6	0.021	12.32	0.0005	12.33
Aerial Lift	46	0.31	37	8	1.0	293	0.154	3.086	2.877	0.021	0.019	0.04	0.78	0.72	0.01	0.00	586.9	0.024	2.45	0.0001	2.45
Roller	36	0.38	37	4	1.0	146	0.567	4.113	3.678	0.166	0.153	0.07	0.50	0.44	0.02	0.02	586.9	0.024	1.17	0.0000	1.18
Paver	81	0.42	37	4	1.5	146	0.248	3.445	2.646	0.139	0.128	0.11	1.55	1.19	0.06	0.06	526.5	0.021	3.93	0.0002	3.93
						Totals						***0.5***	***5.8***	***5.4***	***0.2***	***0.2***		***Totals***	***21.6***	***0.001***	***21.6***
						Theoretical Daily Maximum for Soccer Field Work						***2.4***	***22.6***	***22.2***	***0.98***	***0.90***		***Totals***			

Stadium Work - Phase 1

Equipment Type	Activity						Criteria Emission Factors (g/bhp-hr)					Criteria Emissions (lbs/d)					GHG Emission Factors (g/bhp-hr)		GHG Emissions (tonnes)		
	BHP	Load Factor	Length (wkday)	hrs/ day	Avg Daily Number	total hours	ROG	CO	NO_X	PM_{10}	$PM_{2.5}$	ROG	CO	NO_X	PM_{10}	$PM_{2.5}$	CO_2	CH_4	CO_2	CH_4	CO_2e
Rubber Tired Dozer	367	0.40	18	8	1.0	141	0.353	2.726	3.223	0.142	0.131	0.91	7.06	8.34	0.37	0.34	532.6	0.022	10.99	0.0005	11.00
Concrete/Industrial Saw	33	0.73	18	5	0.5	88	0.413	4.315	3.526	0.085	0.078	0.05	0.57	0.47	0.01	0.01	574.4	0.005	0.61	0.0000	0.61
Tractors/Loaders/Backhoes	84	0.37	18	8	1.0	141	0.184	3.481	1.885	0.063	0.058	0.10	1.91	1.03	0.03	0.03	529.7	0.021	2.31	0.0001	2.32
Rubber Tired Loader	150	0.36	18	2	0.3	35	0.211	3.293	1.398	0.073	0.067	0.01	0.20	0.08	0.00	0.00	526.4	0.021	0.25	0.0000	0.25
						Totals						***1.1***	***9.7***	***9.9***	***0.4***	***0.4***		***Totals***	***14.2***	***0.001***	***14.2***

Stadium Work - Phase 2

Equipment Type	Activity						Criteria Emission Factors (g/bhp-hr)					Criteria Emissions (lbs/d)					GHG Emission Factors (g/bhp-hr)		GHG Emissions (tonnes)		
	BHP	Load Factor	Length (wkday)	hrs/ day	Avg Daily Number	total hours	ROG	CO	NO_X	PM_{10}	$PM_{2.5}$	ROG	CO	NO_X	PM_{10}	$PM_{2.5}$	CO_2	CH_4	CO_2	CH_4	CO_2e
Aerial Lift	46	0.31	70	8	2.0	562	0.152	3.075	2.874	0.021	0.019	0.08	1.55	1.45	0.01	0.01	586.9	0.024	9.41	0.0004	9.42
Forklift	82	0.20	70	6	1.0	422	0.246	3.579	2.342	0.112	0.103	0.05	0.78	0.51	0.02	0.02	527.10	0.021	3.65	0.0001	3.65
Tractors/Loaders/Backhoes	84	0.37	70	7	1.0	492	0.184	3.481	1.885	0.063	0.058	0.09	1.67	0.90	0.03	0.03	529.7	0.021	8.10	0.0003	8.11
Off Highway Truck	376	0.38	70	2	1.0	141	0.313	3.397	2.528	0.140	0.129	0.20	2.14	1.59	0.09	0.08	529.2	0.021	10.63	0.0004	10.64
Cement and Mortar Mixer	10	0.56	70	4	2.0	281	0.553	3.255	4.198	0.163	0.150	0.05	0.32	0.41	0.02	0.01	570.2	0.023	1.80	0.0001	1.80
						Totals						***0.5***	***6.5***	***4.9***	***0.2***	***0.2***		***Totals***	***33.6***	***0.001***	***33.6***
						Theoretical Daily Maximum for Stadium Work						***1.6***	***16.2***	***14.8***	***0.6***	***0.5***		***Totals***			

Project Total

GHG Emissions (tonnes)		
CO_2	CH_4	CO_2e
142.6	***0.006***	***142.8***

Demolition Activity Dust

Dust emissions from demolition activities uses a methodology described in the report prepared for the USEPA by Midwest Research Institute (*Gap Filling PM10 Emission Factors for Selected Open Area Dust Sources* , 1988)

Since there is no AP-42 factor for demolition, MRI used an emission factor based on the calculation using the AP-42 equation for batch drop operations. The emission factor (lb PM/ton of debris) = EF_D was adjusted from TSP to PM_{10} and $PM_{2.5}$ to generate the following emission factors:

Emission Factors (lbs/ton of debris)

$EF_{D\text{-}PM10}$ =	0.0011
$EF_{D\text{-}PM2.5}$ =	0.00017

Total Building Weight

MRI used estimation of building tonnage using the *building waste tonnage – structural floor space* relationship determined from a 1976 analysis by Murphy and Chatterjee of the demolition of 12 commercial brick, concrete, and steel buildings. It yielded the following factor: 0.046 tons of waste material per bulding square foot..

(Emissions in lbs) $E_D = EF_D \times SF \times 0.046$ (tons/ft^2)

Building ft^2 = *1,200* *days =* *2*

Pollutant	Emissions	
	total lbs	lbs/d
PM_{10}	0.06	0.030
$PM_{2.5}$	0.01	0.005

Debris Loading

Emission factor for loading is taken from a default EFL-TSP of 0.058 lb/ton multiplied by AP-42's default particle size multipliers (PM_{10} = 0.35 & $PM_{2.5}$ = 0.053):

Emission Factors (lbs/ton of debris)

$EF_{L\text{-}PM10}$ = 0.0203

$EF_{L\text{-}PM2.5}$ = 0.003074

Pollutant	Emissions	
	total lbs	lbs/d
PM_{10}	1.12	0.560
$PM_{2.5}$	0.17	0.085

Total from Demolition

Pollutant	Emissions	
	total lbs	lbs/d
PM_{10}	1.18	0.591
$PM_{2.5}$	0.18	0.090

Grading Fugitive Dust

Fugitive dust emissions from grading equipment passes are estimated using the methodology described in Section 11.9, Western Surface Coal Mining, of the EPA AP-42.

AP-42 estimates the emission factor of PM_{10} applying a scaling factor to that of PM_{15}. Similarly, the emission factor of $PM_{2.5}$ is scaled from that of total suspended particulates (TSP). The equations used to calculate the emission factors for PM_{15} and TSP and the scaling factor for those of PM_{10} and $PM_{2.5}$ are presented below:

Emission Factors (lbs/day)

EF PM_{15} =	$0.051 \times S^{2.0}$ =	2.571
EF PM_{TSP} =	$0.04 \times S^{2.5}$ =	5.373

S = *mean vehicle speed (mph). The AP-42 default value is* *7.1*

EF PM_{10} =	$EF_{PM15} \times F_{PM10}$ =	1.5
EF $PM_{2.5}$ =	$EF_{PMTSP} \times F_{PM2.5}$ =	0.167

F_{PM10} = *PM_{10} scaling factor. The AP-42 default value is* *0.6*

$F_{PM2.5}$ = *$PM_{2.5}$ scaling factor. The AP-42 default value is* *0.031*

Emissions

The grading dust emissions are calculated by multiplying the emission factors with the total vehicle miles traveled (VMT) for the grading equipment (i.e., grader). The VMT for grader (VMT_G) are estimated based on the dimensions of the grading area and the blade width of the grading equipment.

Emissions (lb) = **EF × VMT_G** *# of Days = 12*

Pollutant	Emissions	
	total lbs	lbs/d
PM_{10}	2.52	0.210
$PM_{2.5}$	0.27	0.023

where VMT = $A_S \div W_b \times$ ft^2 per acre ÷ ft per mile = 1.6

A_S = *conservative acreage of disturbance is approximately 25% of gross acreage* *2.4*

W_b = *Blade width of the grading equipment. (default based on Caterpillar's 140 Motor Grader.* *12*

Parking Lot Paving

CalEEMod equation:

$$E_{AP} = EF_{AP} \times A_{Parking}$$

therefore:

EF_{AP} =	*2.62*	*lb/acre*	*(SCAQMD default)*
$A_{Parking}$ =	*1.8*	*acre*	
E_{AP} =	**4.72**	**lb**	VOC

Parking Lot Painting

CalEEMod equation:

$$E_{AC}\,(lb/ft^2) = EF_{AC} \times A_{Parking}$$

and

$$EF_{AC} = C_{VOC} \div 454(g/lb) \times 3.785(L/gal) \div 180\ ft^2$$

and

$$A_{Parking} = A_{PL} \times P\%$$

A_{PL} =	*78,408*	ft^2	
P% =	*6%*		*(SCAQMD default)*

therefore:

EF_{AC} =	*0.01158*	*lb/ft²*	
$A_{Parking}$ =	*4,704*	ft^2	
E_{AC} =	**54.47**	**lb**	VOC

E_{PL} = E_{AP} + E_{AC}

E_{PL} = 59.19 lb

default paving days for less that 1 acre - 5

E_{PL} = 11.84 lb/day

2025 Offroad Emission Factors

Equipment Type	BHP	Load Factor	Emission Factor (g/bhp-hr)						
			ROG	CO	NO_X	PM_{10}	$PM_{2.5}$	CO_2	CH_4
Aerial Lift	46	0.31	0.154	3.086	2.877	0.021	0.019	586.9	0.024
Bore/Drill Rig	83	0.50	0.142	3.249	1.745	0.051	0.047	522.6	0.022
Cement and Mortar Mixer	10	0.56	0.553	3.255	4.200	0.164	0.151	570.2	0.023
Concrete/Industrial Saw	33	0.73	0.439	4.348	3.635	0.101	0.093	575.0	0.023
Crane	367	0.29	0.201	1.663	1.950	0.079	0.073	527.6	0.021
Truck Crane	150	0.29	1.096	4.710	9.154	0.678	0.624	495.8	0.152
Forklifts	82	0.20	0.210	3.169	1.661	0.085	0.078	527.5	0.021
Grader	148	0.41	0.340	3.419	2.859	0.159	0.146	531.2	0.022
Off-Highway Truck	376	0.38	0.177	1.174	1.086	0.038	0.035	528.6	0.021
Paver	81	0.42	0.248	3.445	2.646	0.139	0.128	526.5	0.021
Roller	36	0.38	0.567	4.113	3.678	0.166	0.153	586.9	0.024
Rubber Tired Dozer	367	0.40	0.371	2.902	3.506	0.154	0.142	532.2	0.022
Rubber Tired Loader	150	0.36	0.225	3.283	1.602	0.085	0.078	526.2	0.021
Tractors/Loaders/Backhoes	84	0.37	1.610	5.357	12.621	1.018	0.937	527.2	0.021
Trencher	40	0.50	0.540	4.108	3.646	0.162	0.149	587.9	0.024

From: CalEEMod Users Guide - Appendix G (March 2021)

2026 Offroad Emission Factors

Equipment Type	BHP	Load Factor	Emission Factor (g/bhp-hr)						
			ROG	CO	NO_X	PM_{10}	$PM_{2.5}$	CO_2	CH_4
Aerial Lift	46	0.31	0.152	3.075	2.874	0.021	0.019	586.9	0.024
Bore/Drill Rig	83	0.50	0.128	3.253	1.639	0.040	0.037	525.1	0.210
Cement and Mortar Mixer	10	0.56	0.553	3.255	4.198	0.163	0.150	570.2	0.023
Concrete/Industrial Saw	33	0.73	0.413	4.315	3.526	0.085	0.078	574.4	0.005
Crane	367	0.29	0.198	1.637	1.837	0.075	0.069	527.5	0.021
Truck Crane	150	0.29	1.096	4.710	9.154	0.678	0.624	495.8	0.152
Forklifts	82	0.20	0.246	3.579	2.342	0.112	0.103	527.1	0.021
Grader	148	0.41	0.313	3.397	2.528	0.140	0.129	530.8	0.022
Off-Highway Truck	376	0.38	0.176	1.178	1.011	0.036	0.033	529.2	0.021
Paver	81	0.42	0.237	3.431	2.533	0.129	0.119	525.8	0.021
Roller	36	0.38	0.542	4.093	3.614	0.154	0.142	586.9	0.024
Rubber Tired Dozer	367	0.40	0.353	2.726	3.223	0.142	0.131	532.6	0.022
Rubber Tired Loader	150	0.36	0.211	3.293	1.398	0.073	0.067	526.4	0.021
Tractors/Loaders/Backhoes	84	0.37	0.184	3.481	1.885	0.063	0.058	529.7	0.021
Trencher	40	0.50	0.506	4.047	3.536	0.141	0.130	588.1	0.024

From: CalEEMod Users Guide - Appendix G (June 2025)

EMFAC2025 (v2.0.0) Emission Rates

Calendar Year 2026

EMFAC2007 Vehicle Categories

Los Angeles County portion of South Coast Air Basin

Vehicle Info			Emission Factor (grams/mile)											
Type	Fuel	VMT (miles/year)	ROG	CO	NO_x	PM_{10}			$PM_{2.5}$			CO_2	CH_4	N_2O
						Exhaust	TW+BW	Total	Exhaust	TW+BW	Total			
LDA	GAS	27,279,865,462	0.2368	3.1965	0.0978	0.0032	0.0047	0.0078	0.0034	0.0156	0.0190	334.39	0.0153	0.0093
LDA	DSL	48,827,815	0.1048	0.9642	0.4485	0.0663	0.0047	0.0710	0.0693	0.0158	0.0851	301.72	0.0049	0.2982
LDT1	GAS	2,935,353,792	0.4112	4.7862	0.2938	0.0042	0.0054	0.0096	0.0046	0.0177	0.0223	394.22	0.0282	0.0197
LDT1	DSL	868,789	0.3838	2.0922	1.5405	0.2971	0.0059	0.3030	0.3106	0.0190	0.3296	488.38	0.0178	0.0501
LDT2	GAS	18,640,292,270	0.1660	2.9723	0.1153	0.0027	0.0052	0.0079	0.0030	0.0172	0.0201	393.60	0.0136	0.0098
LDT2	DSL	30,940,490	0.0351	0.3537	0.0767	0.0096	0.0052	0.0148	0.0100	0.0173	0.0273	354.68	0.0016	0.3849
Weighted Average for Employees			***0.220***	***3.202***	***0.117***	***0.003***	***0.005***	***0.008***	***0.003***	***0.016***	***0.020***	***360.5***	***0.0155***	***0.0101***
LHD1	GAS	1,216,667,844	0.3608	2.5399	0.4414	0.0013	0.0293	0.0306	0.0014	0.0860	0.0874	630.35	0.0238	0.0321
LHD1	DSL	509,035,971	0.0904	0.3859	1.3545	0.0221	0.0303	0.0524	0.0231	0.0900	0.1131	498.03	0.0042	0.3319
Weighted Average for LHD1			***0.281***	***1.904***	***0.711***	***0.007***	***0.030***	***0.037***	***0.008***	***0.087***	***0.095***	***591.3***	***0.0180***	***0.1205***
MDV	GAS	10,855,043,501	0.2176	3.4306	0.1838	0.0028	0.0053	0.0081	0.0030	0.0174	0.0205	483.11	0.0187	0.0134
MDV	DSL	326,383,912	0.0141	0.3137	0.0403	0.0035	0.0051	0.0086	0.0037	0.0168	0.0205	433.02	0.0007	0.3910
Weighted Average for MDV			***0.212***	***3.340***	***0.180***	***0.003***	***0.005***	***0.008***	***0.003***	***0.017***	***0.020***	***481.6***	***0.0182***	***0.0244***
T6 instate const small	DSL	18,227	0.166	0.619	3.745	0.164	0.142	0.306	0.157	0.059	0.216	1,176.4	0.6037	0.5554

Notes: - Emission factors come from 2026 EMFAC2025 (v2.0.0) and represent Estimated Annual Emission Rates for Los Angeles County in the South Coast Air Basin

- Employee weighted Average is 69% LDA + 6% LDT1 + 25% LDT2 based on VMT

Construction Data

Activity	Soccer	Stadium
Start of Phase	Sep-25	May-26
End of Phase	Jan-26	Sep-26
# of days	128	123
5 d/w # of days	91	87.85714286
6 d/w # of days	110	105
Distance to nearest const waste disposal (1-way)	3.1	
Site acreage	5.73	5

grading, trenching, demolition	60%	20%
Installation, construction	40%	80%
5 d/w # of days	55	18
	37	70
6 d/w # of days	66	21
	44	84

Equipment List

Soccer Field Work

Phase 1 Activity	Off-road	Vendors (On-road)
Includes: demolition of existing parking lot, removal of dirt for sub drainage system and drainage system below artificial turf	Rubber Tired Dozer Concrete/Industrial Saw Tractors/Loaders/Backhoes Rubber Tired Loader Off-Highway Truck Bore/Drill Rig Grader Trencher	MDV LHD1

Phase 2 Activity	Off-road	Vendors (On-road)
Includes: installation of lighting system, installation of new artificial turf, install new scoreboard, install pad for placement of mobile bleachers.	Truck-mounted Crane Crane Aerial Lift Roller Paver	T6 instate construction small MDV LHD1

Stadium Work

Phase 1 Activity	Off-road	Vendors (On-road)
Includes: demolishing small masonry block bathroom building, visitor bleachers, and abandoned light poles	Concrete/Industrial Saw Tractors/Loaders/Backhoes Rubber Tired Loader	MDV LHD1

Phase 2 Activity	Off-road	Vendors (On-road)
Includes: installation of visitor bleachers, construction of combined restroom/concession building. Installation of ticket booth.	Aerial Lift Forklift Tractors/Loaders/Backhoes Cement and Mortar Mixer Cement and Mortar Mixer Off Highway Truck	MDV LHD1

APPENDIX C

SPECIES OCCURRENCE POTENTIAL TABLES

Plant Species Occurrence Pontential

Scientific Name (=Synonym)	Common Name (=Synonym)	Federal/State Status	Other Status	General Habitat Description in California	Plant Elevation Range (feet amsl)	BSA Contains Potential Suitable Habitats	BSA is Located Within the Plant Species' Known:		Potential For Occurrence in the BSA
							Elevation Range	General Distribution	
Listed Endangered, Threatened, Candidate and State Rare Plants: Plants with official status under the federal Endangered Species Act (ESA), the California Endangered Species Act (CESA), and/or the Native Plant Protection Act (NPPA). A species may have other sensitive designations in addition to their federal or state listing.									
Astragalus pycnostachyus var. lanosissimus	Ventura marsh milk-vetch	FE, SE, CRPR: 1B.1		Lifeform: perennial herb Habitats: coastal back dune habitat and the edges of coastal salt marshes, brackish marshes, coastal meadows and seeps Soils: seeps on sandy bluffs Bloom Period: June to October	3 – 115	No	Yes	Yes	**Not expected to occur.** The BSA does not contain suitable dune, marsh, meadow or other listed habitat to support this species.
Berberis nevinii (=Mahonia nevinii)	Nevin's barberry	FE, SE, CRPR: 1B.1		Lifeform: perennial evergreen shrub Habitats: alluvial scrub community, chaparral community, and along the margins of dry washes. Steep, north-facing slopes, and rocky slopes. Soils: sandy, gravelly, coarse soils Bloom Period: February to June	0 – 2,706	No	Yes	Yes	**Not expected to occur.** The BSA does not contain suitable scrub, chaparral or other listed habitat to support this species.
Chloropyron maritimum ssp. maritimum (=Cordylanthus maritimus ssp. maritimus)	salt marsh bird's-beak	FE, SE, CRPR: 1B.2		Lifeform: annual herb Habitats: portions of salt marshes subject to periodic inundation from high tides, non-tidal areas or in areas of perched water tables. Dunes, coastal strands, wetland-riparian. Wetlands, Drainages, or Seeps: Yes Bloom Period: May to November	0 - 98	No	Yes	Yes	**Not expected to occur.** The BSA does not contain suitable marsh, dune, tidal, wetland or other listed habitat to support this species.
Eryngium aristulatum var. parishii	San Diego button-celery	FE, SE, CRPR: 1B.1		Lifeform: annual/perennial herb Habitats: moist depressions surrounded by coastal scrub chaparral, and valley and foothill grasslands Soils: vernal pools and moist clay depressions in poorly-drained adobe soil grasslands Wetlands, Drainages, or Seeps: Yes Bloom Period: April to June	66 – 2,034	No	Yes	Yes	**Not expected to occur.** The BSA does not contain suitable scrub, chaparral, grassland or other listed habitat to support this species.
Nasturtium gambelii (=Rorippa gambelii)	Gambel's water cress	FE, ST, CRPR: 1B.1		Lifeform: perennial rhizomatous herb Habitats: freshwater and brackish marshes or swamps and grows on the margins of lakes and slowly flowing streams. During periods of drought, plants can be found growing on mud. Soils: sandy, saturated, typically high organic content Bloom Period: April to October	16 – 1,082	No	Yes	Yes	**Not expected to occur.** The BSA does not contain suitable marsh, swamp or other listed habitat to support this species.
Orcuttia californica (=Orcuttia californica var. californica)	California Orcutt grass	FE, SE, CRPR: 1B.1		Lifeform: annual herb Habitats: Vernal pools, wetlands, valley grasslands, wetland-riparian Soils: Clay soils Bloom Period: April to August	49 – 2,165	No	Yes	Yes	**Not expected to occur.** The BSA does not contain suitable wetland, grassland or other listed habitat to support this species.
Pentachaeta lyonii	Lyon's pentachaeta	FE, SE, CRPR: 1B.1		Lifeform: annual herb Habitats: openings of chaparral, coastal sage scrub and valley and foothill grasslands Soils: rocky clay soils of volcanic origin Bloom Period: February to August	0 – 2,066	No	Yes	Yes	**Not expected to occur.** The BSA does not contain suitable chaparral, scrub, grassland or other listed habitat to support this species.
Sensitive Plants: These plants have no official status under the ESA, the CESA, and/or the NPPA; however they are designated as sensitive or locally important by federal agencies, state agencies, and/or local conservation agencies and organizations.									
Abronia maritima	red sand verbena (=sticky sand verbena)	CRPR: 4.2		Lifeform: perennial herb Habitats: coastal dunes Soils: sandy Bloom Period: February to October	<100	No	Yes	Yes	**Not expected to occur.** The BSA does not contaion suitable coastal dune habitat to support this species.
Abronia villosa var. aurita	chaparral sand-verbena	CRPR: 1B.1		Lifeform: annual herb Habitats: chaparral, coastal scrub, and desert dunes Soils: sandy soils Bloom Period: January to September	0 – 5,248	No	Yes	Yes	**Not expected to occur.** The BSA does not contain suitable chaparral, scrub, or dune habitat to support this species.
Aphanisma blitoides	aphanisma (= San Diego coastalcreeper)	CRPR 1B.2		Lifeform: annual herb Habitats: coastal sage scrub or sandy areas like coastal bluff scrub and coastal dunes Soils: sandy or alkaline soils Bloom Period: February to June	3 – 1,000	No	Yes	Yes	**Not expected to occur.** The BSA does not contain suitable sandy or scrub habitats to support this species.

Astragalus hornii var. hornii	Horn's milk-vetch	CRPR 1B.1		Lifeform: annual herb Habitat: meadows and seeps, playas; also lake margins and alkaline areas. Salty flats. Soil: alkaline Bloom period: May to October / May to September	195 - 2790	No	No	Yes	**Not expected to occur.** The BSA is outside the species known elevation range and does not contain suitable meadows, seeps or other listed to support this species.
Atriplex coulteri	Coulter's saltbush	CRPR 1B.2		Lifeform: perennial herb Habitats : Coastal bluff scrub, coastal dunes, coastal scrub, valley and foothill grassland; ocean bluffs, ridgetops, as well as alkaline low places. Soils: alkaline or clay soils Bloom Period: March to October	10 – 1,510	No	Yes	Yes	**Not expected to occur.** The BSA does not contain suitable scrub, grasslands or other listed habitat to support this species.
Atriplex pacifica	South Coast saltscale	CRPR 1B.2		Lifeform: annual herb Habitats: Coastal scrub, coastal bluff scrub, playas, coastal dunes. Soils: alkaline soils Bloom Period: March to October	0 - 459	No	Yes	Yes	**Not expected to occur.** The BSA does not contain suitable scrub, dune or other listed habitat to support this species.
Atriplex parishii	Parish's brittlescale (=Parish's saltbush)	CRPR: 1B.1		Lifeform: annual herb Habitats: coastal bluff scrub, coastal dunes, coastal scrub, chenopod scrub and playas. Vernal pools. Freshwater wetlands, shadscale, alkali sink, wetland-riparian. Soils: alkaline or clay soils Bloom Period: March to October	0 – 1,542	No	Yes	Yes	**Not expected to occur.** The BSA does not contain suitable scrub, dune, or otherlisted habitat to support this species.
Atriplex serenana var. davidsonii	Davidson's saltscale (=Davidson's saltbush, bractscale)	CRPR: 1B.2		Lifeform: annual herb Habitats: coastal bluff scrub and coastal scrub, alkali vernal pools, alkali annual grasslands, alkali playa, and vernal plains. Soil: alkaline Bloom Period: April to October	33 – 656	No	Yes	Yes	**Not expected to occur.** The BSA does not contain suitable bluff, grassland, or other listed habitat to support this species.
Calochortus plummerae	Plummer's mariposa lily	CRPR: 4.2		Lifeform: perennial bulbiferous herb Habitats: chaparral, cismontane woodlands, coastal scrub, valley and foothill grasslands, and lower montane coniferous forests. Coastal sage scrub. Yellow pine forest. Foothill woodlands. Soils: dry, rocky slopes and soils Bloom Period: May to July	0 – 5,576	No	Yes	Yes	**Not expected to occur.** The BSA does not contain suitable chaparral, grassland, scrub, or other listed habitats to support this species.
Calochortus weedii var. intermedius	intermediate mariposa lily (=Weeds mariposa lily)	CRPR: 1B.2		Lifeform: perennial bulbiferous herb Habitats: dry, rocky open slopes and rock outcrops in coastal scrub and chaparral. Valley grasslands. Soil: heavy, rocky soil. dry Bloom Period: May to July	0 – 2,804	No	Yes	Yes	**Not expected to occur.** The BSA does not contain suitable chaparral, scrub, or other listed habitats to support this species.
Calystegia felix	lucky morning-glory	CRPR: 1B.1		Lifeform: annual rhizomatous herb Habitats: meadows and seeps (sometimes alkaline) and alluvial riparian scrub Soils: silty loam and alkaline soils Wetlands, Drainages, or Seeps: Yes Bloom Period: March to September	98 - 705	No	Yes	Yes	**Not expected to occur.** The BSA does not contain suitable meadow or other listed habitats to support this species.
Camissoniopsis lewisii	Lewis' evening-primrose (Lewis' suncup)	CRPR: 3		Lifeform: annual herb Habitats: coastal bluff scrub, cismontane woodlands, coastal dunes, coastal scrub, and valley and foothill grasslands Soils: sandy or clay soils Bloom Period: March to June	0 - 984	No	Yes	Yes	**Not expected to occur.** The BSA does not contain suitable scrub, grassland, or other listed habitats to support this species.
Centromadia parryi ssp. australis (=Hemizonia parryi ssp. australis)	southern tarplant	CRPR: 1B.1		Lifeform: annual herb Habitats: Fresh and saltwater marshes and swamps, and in vernally mesic sites within valley and foothill grasslands and vernal pools. Coastal scrub. Soils: poorly drained or alkaline soils Bloom Period: May to November	0 – 1,574	No	Yes	Yes	**Not expected to occur.** The BSA does not contain suitable scrub, marsh, or other listed habitats to support this species.
Cistanthe maritima	seaside cistanthe (=Seaside Calandrinia)	CRPR: 4.2		Lifeform: annual herb Habitats: coastal scrub, valley grassland, sea bluffs Soil: sandy soils Bloom Period: Feb to May	0 - 1,500	No	Yes	Yes	**Not expected to occur.** The BSA does not contain suitable scrub, grassland, or other listed habitats to support this species.
Convolvulus simulans	small-flowered morning-glory	CRPR: 4.2		Lifeform: annual herb Habitats: openings in chaparral, coastal sage scrub, and valley and foothill grasslands Soils: friable clay soils, devoid of shrubs Bloom Period: March to July	98 – 2,296	No	Yes	Yes	**Not expected to occur.** The BSA does not contain suitable scrub, grassland, or other listed habitats to support this species.

Dudleya multicaulis	many-stemmed dudleya	CRPR: 1B.2		Lifeform: perennial herb Habitats: barrens, rocky places, and ridgelines as well as thinly vegetated openings in chaparral, valley and foothill grasslands, and coastal sage scrub. Sandstone outcrops, coastal plains. Soils: clay soils, heavy soils, often clay Bloom Period: April to July	0 – 2,591	No	Yes	Yes	**Not expected to occur.** The BSA does not contain suitable chaparral, scrub, or other listed habitats to support this species.
Eleocharis parvula (=Heleocharis parvula)	small spikerush	CRPR: 4.3		Lifeform: perennial herb Habitats: Marshes and swamps. Wetlands. Salt-marsh. Coastal. Riparian. Soil: brackish wet soil. Bloom Period: (Apr)Jun - Aug(Sep)	5-9,910	No	Yes	Yes	**Not expected to occur.** The BSA does not contain suitable swamp or other listed habitats to support this species.
Helianthus nuttallii ssp. parishii	Los Angeles sunflower	CRPR: 1A		Lifeform: perennial rhizomatous herb Habitats: coastal salt and freshwater marshes and swamps. Wetland-riparian. Bloom Period: August to October	33 – 5,000	No	Yes	Yes	**Not expected to occur.** The BSA does not contain suitable swamp or other listed habitats to support this species.
Hordeum intercedens	vernal barley (=bobtail barley)	CRPR: 3.2		Lifeform: annual herb Habitats: coastal dunes, vernal pools and (sometimes dry) saline flats and depressions in valley and foothill grasslands. Alkaline flats. Soils: alkali flats and flood plains Bloom Period: March to June	16 – 3,280	No	Yes	Yes	**Not expected to occur.** The BSA does not contain suitable dunes, grasslands, or other listed habitats to support this species.
Isocoma menziesii var. decumbens	decumbent goldenbush	CRPR 1B.2		Lifeform: perennial shrub Habitats: Coastal scrub, chaparral. Often in disturbed sites. Dunes, hillsides, arroyos. Soils: sandy soils Bloom Period: April to November	35 - 820	No	Yes	Yes	**Not expected to occur.** The BSA does not contain suitable dunes, chaparral, or other listed habitats to support this species.
Juglans californica (=Juglans californica var. californica)	Southern California black walnut	CRPR: 4.2	IUCN:NT	Lifeform: perennial deciduous tree Habitats: utilizes a variety of habitats in Southern California, coastal scrub and rarely occurs in chaparral, slopes, canyons and alluvial habitats Bloom Period: March to August	100 – 2,952	No	Yes	Yes	**Low potential to occur.** The BSA is within the known distribution range and the species may be used for ornamental landscaping. It was not observed within the project site during the field surveys.
Juncus acutus ssp. leopoldii (=Juncus acutus var. sphaerocarpus)	southwestern spiny rush	CRPR: 4.2		Lifeform: perennial rhizomatous herb Habitats: Coastal strands, wetland-riparian, alkaline seeps, meadows, salt-marshes, dunes, coastal/moist saline areas. Soils: "any or most" as long as its moist Bloom Period: March to June / June - August	10 – 2,952	No	Yes	Yes	**Not expected to occur.** The nearest sightings are approximately three miles southeast in habitat that is not representative of the BSA.
Lasthenia glabrata ssp. coulteri	Coulter's goldfields	CRPR 1B.1		Lifeform: annual herb Habitats: Coastal salt marshes, playas, vernal pools, sinks, and grasslands. Soils: Usually found on alkaline/saline soils. Bloom Period: February to June	3 – 4,002	No	Yes	Yes	**Not expected to occur.** The BSA does not contain suitable salt marshes, grasslands, or other listed habitats to support this species.
Lycium californicum	California box-thorn	CRPR: 4.2		Lifeform: perennial shrub Habitats: coastal bluff scrub, coastal sage scrub Soil: sandy or clay, tolerates saline soil Bloom Period: March to August	150 - 490	No	Yes	Yes	**Not expected to occur.** The nearest sightings are along the Los Angeles River, approximately five miles southwest of the project site, in habitat that is not representative of the BSA.
Nama stenocarpa	mud nama	CRPR 2B.2		Lifeform: annual/perennial herb Habitats: Marshes and swamps, lake shores, stream/river banks, intermittently wet areas, freshwater wetland-riparian areas. Bloom Period: January to July	15 - 1,640	No	Yes	Yes	**Not expected to occur.** The BSA does not contain suitable marshes or other listed habitats to support this species.
Navarretia prostrata	prostrate vernal pool navarretia (=prostrate navarretia)	CRPR 1B.2		Lifeform: annual herb Habitats: coastal scrub, valley and foothill grasslands, alkaline washes, meadows and seeps, and vernal pools. Mesic, alkaline sites. Soils: alkaline soils Bloom Period: April to July	10 - 3,970	No	Yes	Yes	**Not expected to occur.** The BSA does not contain suitable meadow, grassland, or other listed habitat to support this species.

Nemacaulis denudata var. denudata	coast woolly-heads	CRPR 1B.2		Lifeform: annual herb Habitats: coastal dunes, grasslands, beaches Soils: sandy Bloom Period: April to September	0 - 328	No	Yes	Yes	**Not expected to occur.** The BSA does not contain suitable sandy or grassland habitats to support this species.
Phacelia ramosissima var. austrolitoralis	south coast branching phacelia	CRPR: 3.2		Lifeform: perennial herb Habitats: chaparral, coastal scrub, coastal dunes, saline marshes and swamps Soils: rocky (sometimes), sandy Bloom Period: March to August	15 - 985	No	Yes	Yes	**Not expected to occur.** The BSA does not contain suitable marshes or other listed habitats to support this species.
Phacelia stellaris	Brand's star phacelia	CRPR 1B.1		Lifeform: annual herb Habitats: open areas in coastal dunes, coastal scrub, coastal strands. Soil: prefers looser soils Bloom Period: March to June / March to May	3 - 1,312	No	Yes	Yes	**Not expected to occur.** The BSA does not contain suitable dunes or other listed habitats to support this species.
Quercus engelmannii	Engelmann oak	CRPR: 4.2		Lifeform: perennial deciduous tree Habitats: foothills, slopes and in arroyos and dry fans, cismontane woodlands, chaparral, riparian woodlands, and valley and foothill grasslands Soil: tolerates dry soil Bloom Period: March to June	0 – 4,264	No	Yes	Yes	**Low potential to occur.** The BSA is within the known distribution range and the species may be used for ornamental landscaping within the BSA. The nearest confirmed sightings are approximately one mile southeast of the project site. It was not observed within the project site during the field surveys.
Sagittaria sanfordii	Sanford's arrowhead	CRPR: 1B.2		Lifeform: perennial rhizomatous herb (emergent) Habitats: marshes and swamps, ditches, sloughs, ponds or slow-moving streams. Soils: silty or muddy substrates Bloom Period: May to November	0 – 2,132	No	Yes	Yes	**Not expected to occur.** The BSA does not contain marshes, ponds, or other listed suitable habitat to support this species.
Sidalcea neomexicana	salt spring checkerbloom (=mountain sidalcea)	CRPR 2B.2		Lifeform: perennial herb Habitats: Playas, chaparral, coastal scrub, lower montane coniferous forest, Mojavean desert scrub, alkali springs and marshes, mesic sites. Soil: loamy or clay Bloom Period: March to June	49 – 5,018	No	Yes	Yes	**Not expected to occur.** The BSA does not contain scrubs, forrests, or other listed suitable habitat to support this species.
Suaeda taxifolia	woolly seablite	CRPR: 4.2		Lifeform: perennial evergreen shrub Habitats: coastal bluff scrub, coastal dunes, salt marshes and swamps. Wetland-riparian. Soil: can survive in high salt concentrations Bloom Period: January to December	0 - 50	No	Yes	Yes	**Not expected to occur.** The BSA does not contain scrubs, marshes, or other listed suitable habitat to support this species.
Suaeda esteroa	estuary seablite	CRPR 1B.2		Lifeform: perennial fleshy herb Habitats: coastal salt marshes and swamps often growing with *Salicornia subterminalis.* Soils: clay, silt, and sand substrates Bloom Period: May to January	0 - 16	No	Yes	Yes	**Not expected to occur.** The BSA does not contaion suitable marsh or swamp habitat to support this species.
Symphyotrichum defoliatum (=Aster bernardinus)	San Bernardino aster	CRPR: 1B.2		Lifeform: perennial rhizomatous herb Habitats: cismontane woodlands, coastal scrub, lower montane coniferous forests, meadows and seeps, freshwater marshes and swamps, and vernally mesic valley and foothill grasslands. Disturbed sites. Soils: moist fine alluvial soils Bloom Period: July to November	7 – 6,691	No	Yes	Yes	**Not expected to occur.** The BSA does not contain marsh, grassland, or other listed habitat to support this species.

Legend and Notes

Federal Endangered Species Act (ESA) Listing Codes:

- **FE = federally listed as endangered:** any species of plant or animal that is in danger of extinction throughout all or a significant portion of their range.
- **FT = federally listed as threatened:** any species of plant or animal that is considered likely to become endangered throughout all or a significant portion of its range within the foreseeable future.
- **FDR** = federally delisted as a result of population recovery

California Endangered Species Act (CESA) Listing Codes:

- **SE = state-listed as endangered:** "endangered species" means a native species or subspecies of a bird, mammal, fish, amphibian, reptile, or plant which is in serious danger of becoming extinct throughout all, or a significant portion, of its range due to one or more causes, including loss of habitat, change in habitat, overexploitation, predation, competition, or disease (Fish and Game Code § 2062).
- **ST = state-listed as threatened:** "threatened species" means a native species or subspecies of a bird, mammal, fish, amphibian, reptile, or plant that, although not presently threatened with extinction, is likely to become an endangered species in the foreseeable future in the absence of the special protection and management efforts (Fish and Game Code § 2067).
- **SCE = state candidate for listing as endangered:** a native species or subspecies of a bird, mammal, fish, amphibian, reptile, or plant that the Fish and Game Commission has formally noticed published in the California Regulatory Notice Register as being under review by CDFW for addition to the list of endangered species, or a species for which the Fish and Game Commission has published a notice of proposed regulation to add the species to the list (Fish and Game Code § 2068).
- **SR = state rare:** A species, subspecies, or variety of native plant is rare when, although not presently threatened with extinction, it is in such small numbers throughout its range that it may become endangered if its present environment worsens (Fish and Game Code § 1901).

California Rare Plant Ranks (Formerly known as CNPS Lists): the CNPS is a statewide, nonprofit organization that maintains, with CDFW, an Inventory of Rare and Endangered Plants of California. In the spring of 2011, CNPS and CDFW officially changed the name "CNPS List" or "CNPS Ranks" to "California Rare Plant Rank" (or CPRP). This was done to reduce confusion over the fact that CNPS and CDFW jointly manage the Rare Plant Status Review Groups and the rank assignments are the product of a collaborative effort and not solely a CNPS assignment.

- **CRPR: 1A** = California Rare Plant Rank 1A - plants presumed extirpated in California and either rare or extinct elsewhere: the plants with a CRPA of 1A are presumed extirpated because they have not been seen or collected in the wild in California for many years. This rank includes plants that are both presumed extinct as well as those plants which are presumed extirpated in California. All of the plants constituting CRPR 1A meet the definitions of § 2062 and § 2067 (CESA) of the Fish and Game Code, and are eligible for state listing. Should these taxa be rediscovered, it is mandatory that they be fully considered during preparation of environmental documents relating to CEQA.
- **CRPR 1B** = California Rare Plant Rank 1B - plants rare, threatened, or endangered in California and elsewhere: plants with a CRPR of 1B are rare throughout their range with the majority of them endemic to California. Most of the plants that are ranked 1B have declined significantly over the last century. All of the plants constituting CRPR 1B meet the definitions of § 2062 and § 2067 (CESA) of the Fish and Game Code, and are eligible for state listing. It is mandatory that they be fully considered during preparation of environmental documents relating to CEQA.
- **CRPR 2B** = California Rare Plant Rank 2B - plants rare, threatened, or endangered in California, but more common elsewhere: except for being common beyond the boundaries of California, plants with a CRPR of 2B would have been ranked 1B. From the federal perspective, plants common in other states or countries are not eligible for consideration under the provisions of the ESA. All of the plants constituting CRPR 2B meet the definitions of § 2062 and § 2067 (CESA) of the Fish and Game Code, and are eligible for state listing. It is mandatory that they be fully considered during preparation of environmental documents relating to CEQA.
- **CRPR 3** = California Rare Plant Rank 3 - plants about which more information is needed - a review list: the plants that comprise CRPR 3 are united by one common theme – CNPS and CDFW lack the necessary information to assign them to one of the other ranks or to reject them. Nearly all of the plants constituting CRPR 3 are taxonomically problematic. Some of the plants constituting CRPR 3 meet the definitions of § 2062 and § 2067 (CESA) of the Fish and Game Code, and are eligible for state listing. CNPS strongly recommends that CRPR 3 plants be evaluated for consideration during preparation of environmental documents relating to CEQA.
- **CRPR 4** = California Rare Plant Rank 4 - plants of limited distribution - a watch list: the plants in this category are of limited distribution or infrequent throughout a broader area in California. While CNPS and CDFW cannot call these plants "rare" from a statewide perspective, they are uncommon enough that their status should be monitored regularly. Should the degree of endangerment or rarity of a CRPR 4 plant change, CNPS and CDFW will transfer it to a more appropriate rank. Some of the plants constituting CRPR 4 meet the definitions of § 2062 and § 2067 (CESA) of the Fish and Game Code, and few, if any, are eligible for state listing. Nevertheless, many of them are significant locally, and CNPS strongly recommends that CRPR 4 plants be evaluated for consideration during preparation of environmental documents relating to CEQA.

California Native Plant Society (CNPS) Threat Ranks: The CNPS Threat Rank is an extension added onto the California Rare Plant Rank (CRPR) (as a decimal code) and designates the level of threats by a 1 to 3 ranking with 1 being the most threatened and 3 being the least threatened. A Threat Rank is present for all CRPR 1B's, 2B's, 4's, and the majority of CRPR 3's. CRPR 4 plants are seldom assigned a Threat Rank of .1, as they generally have large enough populations to not have significant threats to their continued existence in California; however, certain conditions exist to make the plant a species of concern and hence be assigned a CRPR. In addition, all CRPR 1A and 2A (presumed extirpated in California), and some CRPR 3 (need more information) plants, which lack threat information, do not have a Threat Rank extension.

- **.1** = seriously threatened in California (over 80% of occurrences threatened / high degree and immediacy of threat)
- **.2** = moderately threatened in California (20-80% occurrences threatened / moderate degree and immediacy of threat)
- **.3** = not very threatened in California (<20% of occurrences threatened / low degree and immediacy of threat or no current threats known)

?" indicates CDFW's best estimate of the rank with known insufficient samples over the full expected range of the type, but existing information points to this rank.

Other:

- **Annual**: grows from seed and reproduce within a single year.
- **Perennial:** lives more than one year.
- **Deciduous:** plants shed their leaves for part of the year.
- **Evergreen:** plants retain their leaves for an entire year.
- **Mesic habitat:** a habitat with a moderate or well-balanced supply of moisture.
- **Herbs**: plants that are herbaceous and lack above-ground woody tissue.
  - **Bulbiferous herb:** plants that have fleshy underground storage organs typically derived from scale leaves (this category includes cormiferous and other similar plants in which storage organs have other origins).
  - **Rhizomatous herb:** plants that have underground stems (rhizomes), typically bearing shoots which develop into new plants.
  - **Stoloniferous herb:** plants that have above-ground runners (stolons) which typically root and produce new plants.
- **Shrubs:** smaller woody perennials that retain most of their above-ground woody tissue and are typically many-stemmed.
- **Trees:** larger woody perennials that retain all of their above-ground wood tissue and are typically single-stemmed.

Notes:

The BSA contains approximate elevations of 51 to 63 feet above mean sea level (amsl).
(placeholder: The BSA encompasses a lower montane landscape on the coastal side of southern California mountain ranges (cismontane).
Yes = the BSA is located within the plant species' known distribution, elevation range, and/or the BSA contains suitable habitats and/or soils to support the plant species. The plant species has a potential to occur within the BSA. Further evaluation is needed.
No = the BSA is located outside the plant species' known distribution, elevation range, and/or the BSA lacks suitable habitats and/or soils to support the plant species. It is highly unlikely for the plant species to have a potential to occur within the BSA. No further evaluation is needed.
Present = observed within the BSA during surveys.
A CNPS elevation range is provided for each taxon in feet. The stated range is for the California portion of a plant's range only (if the taxon also occurs outside the state). These CNPS elevation range data are accumulated from literature, herbarium specimens, and field survey information.

Plant Species Occurrence Potential

Scientific Name (=Synonym)	Common Name (=Synonym)	Federal/State Status	Other Status	General Habitat Descriptions in California	The BSA: Located Within Species' Distribution and/or Range (if known)	The BSA: Contains Suitable Foraging, Roosting, and/or Breeding Habitats	Potential For Occurrence in the BSA
Listed Endangered, Threatened, and Candidate Wildlife: Wildlife with official status under the federal Endangered Species Act (ESA) and/or the California Endangered Species Act (CESA). A species may have other sensitive designations in addition to their federal or state listing.							
Listed Invertebrates							
Bombus crotchii	Crotch's bumble bee	SCE	IUCN: EN	Habitats: grasslands and shrublands. Hotter and drier environment than other bumblebee species. Prefers milkweeds, dusty maidens, lupines, medics, phacelias, sages, clarkias, poppies, and wild buckwheats. This species occurs primarily in California, including the Mediterranean region, Pacific Coast, Western Desert, Great Valley, and adjacent foothills through most of southwestern California.	Yes	Yes	**Low potential to occur.** The BSA does not contain suitable native habitat like sages, poppies, or wild buckwheats, however, it includes non-native grasses.The nearest CNDDB observation occurred on May 30, 2017 approximately 1.87 miles northeast of the BSA. The nearest recorded research grade observation on INaturalist occurred on June 1, 2020 approximately 4.2 miles southeast of BSA near El Dorado East Regional Park.
Danaus plexippus pop. 1	monarch butterfly	FPT: California overwintering population	IUCN: EN	Habitats:Winter roost sites extend along the coast from northern Mendocino to Baja California, Mexico. Roosts located in wind-protected tree groves (eucalyptus, Monterey pine, cypress), with nectar and water sources nearby.	Yes	Yes	**Low potential to occur.** The BSA does not contain suitable tree groves. The CNDDB database has six recorded observations within 10 miles, the closest one occurred on June 2021 approximately 2.45 miles south of the BSA.
Euphydryas editha quino (=Euphydryas editha wrighti)	quino checkerspot butterfly	FE		Habitats: grasslands, remnant forbland, open coastal sage scrub, open chamise chaparral, open red shank chaparral, juniper woodland, and semi-desert scrub, open or sparsely vegetated rounded hilltops, ridgelines, rocky outcrops of chaparral and coastal sage scrub Soils: loamy soils with moderate to high amounts of clay Characteristics: adult butterflies will only deposit eggs on species they recognize as host plants	Yes	No	**Not expected to occur.** The BSA does not contain suitable chaparral or woodland habitat to support this species. This species is sedentary so it is unlikely they will pass through the BSA.
Glaucopsyche lygdamus palosverdesensis	Palos Verdes blue butterfly	FE		Habitats: coastal scrub habitat, cool and often foggy canyons and terraces on the Palos Verdes Peninsula. Catepillars feed on native species like deerweed and Santa Barbara milk vetch. Characteristics: Adult flying period is ~January-May.	Yes	No	**Not expected to occur.** The BSA does not contain coastal scrub habitat with deerweed or Santa Barbara milk vetch (which the catepillars feed on).
Listed Amphibians							
Spea hammondii	western spadefoot	FPT; SSC	IUCN:NT	Habitats: coastal sage scrub, open chaparral, pine-oak woodlands and grassland habitats, grasslands with vernal pools or mixed grassland/coastal sage scrub areas Characteristics: upland habitats adjacent to potential breeding sites in burrows approximating 1 meter in depth	Yes	No	**Not expected to occur.** The BSA does not contain suitable sage scrub, woodlands, or other listed habitat to support this species. The open fields of the BSA include non-native grasslands
Listed Reptiles							
Actinemys pallida =(Emys marmorata pallida); =(Actinemys marmorata pallida); = (Clemmys marmorata pallida)	southwestern pond turtle (=southern western pond turtle; = western pond turtle)	FPT; SSC	IUCN:VU	Habitat: A thoroughly aquatic turtle of small ponds, small lakes, marshes, rivers, intermittent streams, creeks, permanent and ephemeral shallow wetlands, stock ponds, sewage treatment lagoons, and irrigation ditches. Typically occurs with abundant aquatic vegetation, and either rocky or muddy bottoms. They are found below 6000 ft elevation in woodland, forest, and grassland habitats. Microhabitat: Needs basking sites such as logs, rocks, cattail mats, grassy open fields and exposed banks. Also needs upland habitat up to 0.5 km from water for egg-laying. May enter brackish water and even seawater. Adjacent upland areas provide overwintering and estivation sites.	Yes	No	**Not expected to occur.** The BSA contains a channelized stream though lacks abundant aquatic vegetation and upland habitat for foraging and egg-laying.
Chelonia mydas	green turtle (=green sea turtle)	FT	IUCN:EN	Habitats: habitat and they rarely leave the water except to lay eggs, feeding occurs in shallow, low-energy waters with abundant submerged vegetation, and also in convergence zones in the open ocean, sand may be coarse to fine. Observed in chanellized rivers. Characteristics: nesting occurs on high energy beaches with deep sand.	Yes	No	**Not expected to occur.** The BSA does not contain suitable aquatic and sandy habitats to support this turtle.
Listed Birds							
Agelaius tricolor	tricolored blackbird	ST, SSC	BCC, IUCN:EN	Habitats: fresh water, preferably in emergent wetland with tall, dense cattails (*Typha* sp.) or tules, natural grassland. Woodland, agricultural cropland, rural areas. Characteristics: species is not migratory, but is nomadic and highly colonial	Yes	No	**Not expected to occur**. The BSA does not contain suitable wetland or agricultural habitat.
Athene cunicularia	burrowing owl	SCE, SSC	BCC, IUCN:LC	Habitats: open, dry, flat ground or low rolling hills with sparse vegetation and available burrows; may be found in desert, rural, urban, and suburban habitats Characteristics: prefer to use existing burrows dug by small mammals (e.g., gophers), but will also dig their own burrows in suitably soft soils or occupy manmade structures such as pipes or concrete piles.	Yes	No	**Not expected to occur.** The BSA is within an urban area with open fields, however, no burrows were observed during the field surveys. The nearest research grade observation on INaturalist occurred on January 9, 2020 approximately 2.63 miles southwest of the BSA.
Buteo swainsoni	Swainson's hawk	ST, WL	IUCN:LC	Habitats: large, open areas with abundant prey in association with suitable nest trees, native grasslands or lightly grazed pastures and croplands, open deserts, sparse shrub lands. Common nesting trees include willow, black locust, oak, aspen, cottonwood, and conifers. Characteristics: pairs often nest near the tops of a solitary tree or small group of trees along streams. Sometimes nests are build in mesquite bushes ~3ft off the ground. Observed to nest in power poles or transmission towers.	Yes	Yes	**Not expected to occur.** The BSA does not contain suitable habitat such as native grassland, lightly grazed pastures, open deserts, or sparse shrubland.
Charadrius nivosus nivosus (=Charadrius alexandrinus nivosus)	western snowy plover - Pacific coastal population	FT, SSC		Habitats: coastal beaches, sand spits, dune-backed beaches, sparsely-vegetated dunes, beaches at creek and river mouths, and salt pans at lagoons and estuaries, sparsely vegetated ground at alkaline or saline lakes, reservoirs, and pond; on riverine sand bars; and at sewage, salt-evaporation, and agricultural waste-water ponds	Yes	No	**Not expected to occur.** The BSA does not contain suitable undisturbed breeding habitats or large aquatic feeding grounds to support this species.
Coccyzus americanus occidentalis	western yellow-billed cuckoo	FT; SE		Habitats: relatively dense growths of trees and shrubs in riparian habitats that lines rivers and streams Characteristics: Cuckoos have large home ranges, often exceeding 50 acres, and sometimes approaching 100 acres	Yes	No	**Not expected to occur.** The BSA does not contain dense shrub growth as the channel is cemented. The nearest recorded CNDDB observation occurred on June 22 of 1912 approximately a half mile east of the project site. The most recent observation occurred on June 23 of 1923 approximately 5.9 miles away, along the channelized portion of Los Angeles River nears Long Beach.
Empidonax traillii extimus	southwestern willow flycatcher	FE; SE		Habitats: dense riparian tree and shrub communities associated with rivers, swamps, lakes, surface water, and other wetlands. Saturated soil, or herbaceous wetland plants. Woody riparian vegetation Characteristics: adults arrive in ~May then leave by ~August, juveniles depart in September	Yes	No	**Not expected to occur.** The BSA does not contain suitable wetland habitat to support this species.
Passerculus sandwichensis beldingi	Belding's savannah sparrow	SE	BCC	Habitats:mud flats, shorelines, and rock jetties, coastal salt marshes in the upper intertidal marsh zone	Yes	No	**Not expected to occur.** The BSA does not contain suitable marsh or shoreline habitat to support this species.
Polioptila californica californica	coastal California gnatcatcher	FT; SSC		Habitats: small, non-migratory, permanent resident of coastal sage scrub	Yes	No	**Not expected to occur.** The BSA does not contain suitable coastal sage scrub habitat, which this species is a permanent resident of .
Rallus obsoletus levipes (=Rallus longirostris levipes)	light-footed rail (=light-footed clapper rail) (=light-footed Ridgway's rail)	FE, SE, fully protected		Habitats: coastal southern California, marshes, lagoons, freshwater habitats. Characteristics: require shallow water and mudflats for foraging. They are most active in mornings and evenings as they rest mid-day.	Yes	No	**Not expected to occur.** The BSA does not contain suitable freshwater habitat as the water feature as been cemented.
Riparia riparia	bank swallow	ST	IUCN:LC	Habitats: naturally eroding habitats of major lowland river systems, sandy, vertical bluffs or riverbanks. Characteristics: birds build nests within two to three-foot deep burrows that are dug perpendicularly into near vertical earthen banks along streams, coastal bluffs, and sand and gravel pits. Migratory.	Yes	No	**Not expected to occur.** The BSA does not contain suitable bluff or natural riverbank habitats to support this species.
Sternula antillarum browni (=Sterna antillarum browni)	California least tern	FE, SE, fully protected Season of Concern: nesting colony		Habitats: bare or sparsely vegetated flat substrates, beaches or sandbars near the coast, nearby shallow water. Near estuaries, bays, or harbors where small fish are abundant.	Yes	No	**Not expected to occur.** The BSA does not contain suitable undisturbed coastal beach or sandbar breeding habitats or aquatic/pelagic feeding grounds to support this species.
Vireo bellii pusillus	least Bell's vireo	FE; SE		Habitats: dry, intermittent streams, on the desert slopes mesquite (Prosopis sp.) and sandbar willow in canyon locations, willow-dominated riverine riparian habitats with well-developed overstories, understories, and low densities of aquatic and herbaceous cover. Characteristics: Least Bell's vireos winter in southern Baja California, Mexico (habitats of mesquite scrub within arroyos, palm groves, and hedgerows bordering agricultural and residential areas). Travel south in September and return north by mid-March to late April. They breed in southern California.	Yes	No	**Not expected to occur.** The BSA does not contain suitable riparian habitat to support this species. The nearest confirmed sightings is approximately two miles southeast of the project site in similar habitat to the BSA. Sightings would likely be due to passing through the BSA.

Scientific Name (=Synonym)	Common Name (=Synonym)	Federal/State Status	Other Status	General Habitat Descriptions in California	The BSA:		Potential For Occurrence in the BSA
					Located Within Species' Distribution and/or Range (if known)	Contains Suitable Foraging, Roosting, and/or Breeding Habitats	
Listed Mammals							
Perognathus longimembris pacificus	Pacific pocket mouse	FE, SSC		Habitats: open, shrubby vegetation, including coastal strand, coastal dunes, weedy vegetation on river alluvium, and open coastal sage scrub Characteristics: Nocturnal, feeds on seeds, lives in burrows of fine-grained, alluvial sandy soil near the ocean.	No	No	**Not expected to occur.** The BSA does not contain suitable shrubby, sandy, or other listed habitat suitable for supporting this species, and though the BSA may be in the historical range, the species considered exterpated outside of small pockets within southern California (which do not intersect the BSA).
Sensitive Wildlife: These animals have no official status under the ESA and/or the CESA; however they are designated as sensitive or locally important by federal agencies, state agencies, and/or local conservation agencies and organizations							
Sensitive Invertebrates							
Bombus pensylvanicus	American bumble bee	Special Animals List	ICUN: VU	Habitat: farmland, open fields, gardens, orchards. Commonly visited plants include Vetches (Vicia), clovers (Trefoilium), goldenrods (Solidago), St. John's wort (Hypericum perforatum), boneset (Eupatorium), sunflowers (Helianthus), lilies (Erythronium) and columbines (Aquilegia). Characteristics: nest in low grass, underground or on the ground surface. Colony tends to pollinate in summer /autumn. The queen dies in the cold weeks of autumn after producing more queens, which mate then hibernate for the winter. Late emerging (May-October).	Yes	Yes	**Moderate potential to occur.** The BSA includes open fields of non-native low grasslands. The CNDDB database has recorded 49 observations within 10 miles, the closest occurred on June 24, 2023 approximately 1.56 miles south of the BSA.
Cicindela hirticollis gravida (=Pacific Hairy-necked tiger beetle)	sandy beach tiger beetle (=Pacific hairy-necked tiger beetle)	Special Animals List		Habitats: moist sand near rivers, the ocean swales behind dunes, or upper beaches beyond normal high tides. Littoral-riparian areas. Historically observed on the Pacific coasts from Baja California to Santa Cruz County California. Characteristics: burrow in moist, typically sandy, soils along shorelines of rivers, lakes, and oceans (distant enough not to flood)	Yes	No	**Not expected to occur.** The BSA does not contain moist, sandy substrates suitable for burrowing as the channel has been cemented.
Cicindela latesignata	western beach tiger beetle	Special Animals List		Habitats: salt marsh, mud flat, or other estuarine habitat and any other associated habitats (usually nearby beaches) where a adults and/or larvae or have recently occurred with potential for persistence or regular recurrence. Historically observed from Los Angeles to Baja California. Observed on washed up kelp of beaches.	Yes	No	**Not expected to occur.** The BSA does not contain suitable marsh, estuarine, or other listed habitat to support this species.
Cicindela senilis frosti	senile tiger beetle	Special Animals List		Habitats: tidal salt marshes along southern CA coastline. Inland salt marsh of Lake Elsinore.	Yes	No	**Not expected to occur.** The BSA does not contain suitable habitat to support this species such as tidal salt marshes.
Glyptostoma gabrielense	San Gabriel chestnut	Special Animals List		Habitats: humid spots in semi-arid country; rocky hills and mountains at low elevations; found under dead cacti or vegetation debris, surface during moist conditions but aestivate underground or below rock piles during hot, dry seasons. Characteristics: need moisture (greatest threat is drying out). consume decaying plant material, as well as fungi and bacteria.	Yes	No	**Not expected to occur.** The BSA is within the known distribution range but the BSA is not within rocky hills or mountains.
Gonidea angulata	western ridged mussel	Special Animals List	IUCN:VU	Habitat: Fish-bearing, permanently inundated habitat, low gradient, well-oxygenated, creeks, streams, and rivers. Sometimes lakes. Silt, clay, and sand to boulder substrates. Originally found in most of California, now extirpated in southern and central California. Characteristics: larvae partake in a parasitic lifestage specific to only certain fish species. Takes 30 years to reach five inches.	Yes	No	**Not expected to occur.** The BSA is not expected to contain fish species due to the previous developments of the channel.
Habroscelimorpha gabbii	western tidal-flat tiger beetle	Special Animals List		Habitats: salty coastal habitats including salt marshes, tidal flats, beaches	Yes	No	**Not expected to occur.** The he CNDDB reports known occurences within the BSA, however the BSA lacks coastal habitats like salt marshes, tidal flats, and beaches.
Sensitive Reptiles							
Anniella stebbinsi	southern California legless lizard	SSC		Habitats: occurs in many habitats with sandy soil. Coastal sand dunes and a variety of interior habitats, including sandy washes and alluvial fans. Observed in developed urban areas. Population occurs in Piute and Tehachapi mountains at elevation of 400-900 m in oak woodland and mixed conifer forest	Yes	No	**Not expected to occur.** The BSA is within the species known distribution range, however, the BSA lacks sandy habitat.
Aspidoscelis tigris stejnegeri (=Cnemidophorus tigris multiscutatus)	San Diegan whiptail (=coastal whiptail)	SSC		Habitats: variety of ecosystems, primarily hot and dry open areas with sparse foliage such as deserts, chaparral and semiarid, found in open, often rocky areas with little vegetation or sunny microhabitats within shrub or grassland. Ground may be firm soil, sandy, or rocky	Yes	No	**Low potential to occur.** The BSA does not contain suitable desert, chaparral, or other listed habitat suited to support this species.
Phrynosoma blainvillii (=Phrynosoma coronatum) (=Phrynosoma coronatum blainvillei)	Blainville's horned lizard (=coast horned lizard) (=San Diego horned lizard)	SSC	IUCN:LC	Habitats: coastal sage scrub, annual grassland, chaparral, oak woodland, riparian woodland and coniferous forest. Loose, fine soils with a high sand fraction (necessary for burrowing, a tactic to protect themselves from extreme hear and predators); an abundance of native ants or other insects; and open areas with limited overstory for basking.	Yes	No	**Not expected to occur.** The BSA does not contain suitable burrowing sands, chaparral, or other listed habitat suitable for supporting this species.
Thamnophis sirtalis pop. 1	south coast gartersnake	SSC		Habitats: Riparian, marsh and upland habitats, meadows.	Yes	No	**Not expected to occur.** The BSA does not contain suitable riparian, marsh, or other listed habitat to support this species.
Sensitive Birds							
Astur cooperii (=Accipiter cooperii)	Cooper's hawk	WL	IUCN:LC	Habitats: ususally mature forest, mostly conifer, also near open woodland and forest edge; usually builds nest on horizontal limb near trunk 6-18m above ground. Observed in suburban/urban areas. Characteristics: tolerant of human activities near the nest and is often seen nesting and feeding in urban/residential areas	Yes	Yes	**Present.** This species was observed near the Palo Verde Lateral Storm channel inside the project site.
Buteo regalis	ferruginous hawk	WL	IUCN:LC	Habitats: open terrain, grasslands of plains and foothills, agricultural, and arid areas with an abundance of prey species. Observed in trees, utility poles, towers, fence posts, rocky outcrops, cliffs, and ground are perching substrates used by ferruginous hawks Characteristics: Visit California in the winter, ~ September-April.	Yes	Yes	**Low potential to occur.** The BSA contains suitable perching substrates for this species. Sightings would likely relate to passingthrough the BSA. The CNDDB has only one observation within 10 miles, it occurred on November 28, 1997 approximately 5.66 miles southeast of the BSA. The nearest research grade observation on INaturalist occurred on January 5, 2015, approximately 2.86 miles southeast of the BSA.
Campylorhynchus brunneicapillus sandiegensis	coastal cactus wren (=San Diego cactus wren)	SSC	BCC	Habitats: Cholla or prickly-pear cacti in the desert, urban, suburban parks, or coastal sage scrub . Characteristics: Nest in cacti	Yes	No	**Not expected to occur.** The BSA does not contain suitable nesting cactus vegetation to support this species.
Pelecanus occidentalis californicus	California brown pelican	Special Animals List, Delisted		Habitats: colonies or rookeries, coastal waters or inland seas (Salton Sea). jetty, mudflat, or estuary. Characteristics: they do not roost overnight on water	Yes	No	**Not expected to occur.** The BSA does not contain suitable undisturbed coastal island breeding habitats, roosting sites, or large aquatic/pelagic feeding grounds to support this species.
Selasphorus sasin	Allen's hummingbird	BCC		Habitats: sparse to dense scrub habitats and sparse to open woodlands Characteristics: nest on twig or fork of tree or shrub	Yes	Yes	**Present.** This species was observed inside the BSA.
Sensitive Mammals							
Eumops perotis californicus	western mastiff bat	SSC		Habitats: low-lying desert areas of southern California, desert riparian, desert wash, desert scrub, desert succulent shrub, alkali desert scrub, palm oasis, conifer and deciduous woodlands, coastal scrub, annual and perennial grasslands, chaparral, urban. Roosts in crevices in cliff faces, high buildings, trees, and tunnels Characteristics: bats often are found in large groups	Yes	Yes	**Low potential to occur.** The BSA contains urban and palm habitat suitable for supporting this species.
Lasionycteris noctivagans	silver-haired bat	Special Animals List	IUCN:LC	Habitats: coastal and montane coniferous forests, valley foothill woodlands, pinyon-juniper woodlands, and valley foothill and montane riparian habitats Characteristics: a forest dweller, feeding over streams, ponds, and open brushy areas	Yes	No	**Not expected to occur.** The BSA does not contain suitable woodlands or riparian habitats to support this species.
Lasiurus xanthinus	western yellow bat	SSC	IUCN:LC	Habitats: valley foothill riparian, desert riparian, desert wash, and palm oasis habitats. This species almost exclusively roosts in palms. Open, grassy areas. Residential areas. Close proximity to rivers or ponds. Characteristics: occurs year-round in California	Yes	No	**Not expected to occur.** The BSA does not contain suitable riparian, desert wash or palm oasis habitats to support this species.
Microtus californicus stephensi	south coast marsh vole	SSC		Habitats: occurs in a narrow band of wetland communities and associated grasslands in the immediate coastal zone from southern Ventura County to northern Orange County.	Yes	No	**Not expected to occur.** The BSA does not contain suitable wetland or coastal habitats to support this species.
Nyctinomops macrotis	big free-tailed bat	SSC	IUCN:LC	Habitats: rugged, rocky habitats in arid landscapes, located in a variety of plant associations including desert shrub, woodlands, and evergreen forests. This bat roosts mainly in the crevices of cliff rocks although may roost in buildings, caves, and tree cavities. Characteristics: appears to be associated with lowlands primarily below 5,900 ft in the southwestern U.S.	Yes	Yes	**Low potential to occur.** The BSA does not contain suitable desert, woodland, or evergreen forests, however, this species has been known to roost in buildings. The BSA is within the known distribution range.
Sorex ornatus salicornicus	southern California saltmarsh shrew	SSC		Habitats: coastal marses. Require fairly dense vegetation and woody debris for cover	Yes	No	**Not expected to occur.** The BSA lacks suitable habitat such as dense vegetation and woody debris for cover.
Taxidea taxus	American badger	SSC	IUCN:LC	Habitats: alpine meadows to elevations as low as Death Valley. Requires open areas such as plains and prairies, farmland, and the edges of woods Characteristics: requirements - sufficient food, friable soils, and relatively open, uncultivated ground	Yes	No	**Not expected to occur.** The BSA does not contain sufficient expansive open areas to support this species.

Scientific Name (=Synonym)	Common Name (=Synonym)	Federal/State Status	Other Status	General Habitat Descriptions in California	The BSA:		Potential For Occurrence in the BSA
					Located Within Species' Distribution and/or Range (if known)	Contains Suitable Foraging, Roosting, and/or Breeding Habitats	
Legend and Notes							

Federal Endangered Species Act (ESA) Listing Codes:
- **FE =** federally listed as endangered: any species of plant or animal that is in danger of extinction throughout all or a significant portion of their range.
- **FT =** federally listed as threatened: any species of plant or animal that is considered likely to become endangered throughout all or a significant portion of its range within the foreseeable future.
- **FC =** federal candidate for listing: candidate species are plants and animals for which the USFWS has sufficient information on their biological status and threats to propose them for listing as endangered or threatened under the ESA, but for which development of a proposed listing regulation is precluded by higher priority listing actions to address species in greater need. A proposed regulation has not yet been published in the Federal Register for these species.
- **FPE =** federally proposed for listing as endangered: a candidate species that has been proposed by USFWS or NMFS for listing as endangered and the proposed rule, but not a final rule, to list has been published in the Federal Register.
- **FPT =** federally proposed for listing as threatened: a candidate species that has been proposed by USFWS or NMFS for listing as threatened and the proposed rule, but not a final rule, to list has been published in the Federal Register.

California Endangered Species Act (CESA) Listing Codes:
- **SE =** state-listed as endangered: "endangered species" means a native species or subspecies of a bird, mammal, fish, amphibian, reptile, or plant which is in serious danger of becoming extinct throughout all, or a significant portion, of its range due to one or more causes, including loss of habitat, change in habitat, overexploitation, predation, competition, or disease (Fish and Game Code § 2062).
- **ST =** state-listed as threatened: "threatened species" means a native species or subspecies of a bird, mammal, fish, amphibian, reptile, or plant that, although not presently threatened with extinction, is likely to become an endangered species in the foreseeable future in the absence of the special protection and management efforts (Fish and Game Code § 2067).
- **SCE =** state candidate for listing as endangered: a native species or subspecies of a bird, mammal, fish, amphibian, reptile, or plant that the Fish and Game Commission has formally noticed published in the California Regulatory Notice Register as being under review by CDFW for addition to the list of endangered species, or a species for which the Fish and Game Commission has published a notice of proposed regulation to add the species to the list (Fish and Game Code § 2068).

California Department of Fish and Wildlife (CDFW) Designations:
- **SSC =** species of special concern: a species of special concern is a species, subspecies, or distinct population of an animal (fish, amphibian, reptile, bird and mammal) native to California that currently satisfies one or more of the following (not necessarily mutually exclusive) criteria: is extirpated from the state or, in the case of birds, in its primary seasonal or breeding role; is listed as federally-, but not state-, threatened or endangered; meets the state definition of threatened or endangered, but has not formally been listed; is experiencing, or formerly experienced, serious (noncyclical) population declines or range retractions (not reversed) that, if continued or resumed, could qualify it for state threatened or endangered status; has naturally small populations exhibiting high susceptibility to risk from any factor(s), that if realized, could lead to declines that would qualify it for state threatened or endangered status.
- **Fully protected:** fully protected animal species may not be taken or possessed at any time and no licenses or permits may be issued for their take except for collecting these species for necessary scientific research and relocation of the bird species for the protection of livestock. Lists were created for fish (Fish and Game Code § 5515), amphibians and reptiles (Fish and Game Code § 5050), birds (Fish and Game Code § 3511) and mammals (Fish and Game Code § 4700).
- **WL =** watch list: consisting of taxa that were previously SSCs, but do not meet SSC criteria. These are species for which there is concern and a need for additional information to clarify status.
- **Special Animals List:** The Special Animals List contains taxa that are actively inventoried, tracked, and mapped by the CNDDB, as well as taxa for which mapped data may not yet be incorporated into CNDDB user products.

United States Fish and Wildlife Service (USFWS) Designations:
- **BCC =** bird of conservation concern: a bird of conservation concern is listed in the USFWS' 2021 Birds of Conservation Concern report. The report identifies species, subspecies, and populations of all migratory and non-migratory bird species (beyond those already designated as federally threatened or endangered) that, without additional conservation actions, are likely to become candidates for listing under the ESA. While all of the bird species included in the report is priorities for conservation action, the list makes no finding with regard to whether they warrant consideration for ESA listing.

Notes:
- **Yes=** the BSA is located within the wildlife species' known distribution, elevation range, and/or the BSA contains suitable habitats or conditions to support the species. The wildlife species has a potential to occur within the BSA. Further evaluation is needed.
- **No =** the BSA is located outside the wildlife species' known distribution, elevation range, and/or the BSA lacks suitable habitats or conditions to support the species. It is highly unlikely for the wildlife species to have a potential to occur within the BSA. No further evaluation is needed.
- **Present =** observed within the BSA during surveys.
- **Elevation** = the BSA contains elevations ranging from approximately 51 to 63 feet above mean sea level (amsl).

Glossary:
- **Alluvial fan**: a wide, cone-shaped deposit of rocks, sand, gravel, and finer materials that has been deposited by a stream as it flows out of a mountainous area onto a plain.
- **Alluvium**: river or stream deposits, such as sand and silt.
- **Aquatic:** growing, living in, or frequenting water, usually open water.
- **Estivate:** to spend the summer in a dormant condition.
- **Estuary**: an area in which salt water from the ocean mixes with flowing fresh water, usually at the wide mouth of a river.
- **Extinct**: refers to a plant or animal that no longer exists anywhere.
- **Extirpated**: refers to a plant or animal or vegetation type that has been locally eliminated, but is not extinct.
- **Friable**: easily crumbled.
- **Hibernate**: to spend the winter in a dormant condition.
- **Home range**: the area in which an individual animal travels in the scope of normal activities: not to be confused with range or distribution which refers to entire taxa.
- **Migratory**: refers to animals which travel seasonally. Migrations may be local or over long distances.
- **Nocturnal**: active at night.
- **Pelagic:** referring to the ocean surface or the open sea, as opposed to coastal waters.
- **Range**: defined here as the maximum geographic extent of a taxon or habitat; does not imply suitable conditions exist through the defined limits.
- **Resident:** refers to animal taxa which remain in a given location throughout the year.
- **Riparian**; on, relating to, or near the banks of a river or stream.
- **Temperate**: used here to describe climates neither extremely hot nor extremely cold.
- **Vernal pools**: seasonal wetlands that form in depressions on the soil surface above a water-restricting layer of soil or rock. Plant and animal taxa endemic to vernal pools are those which can adapt to a unique cycle of flooding, temporary ponding, and drying.
- **Wetland:** a general term referring to the transitional zone between aquatic and upland areas. Some wetlands are flooded or saturated only during certain seasons of the year.

APPENDIX D

CULTURAL RESOURCES ASSESSMENT

PHASE I
CULTURAL RESOURCES SURVEY

FOR THE

MAYFAIR MIDDLE/HIGH SCHOOL ATHLETIC FIELD IMPROVEMENTS PROJECT

BELLFLOWER UNIFIED SCHOOL DISTRICT
LOS ANGELES COUNTY, CALIFORNIA

Prepared for:

Bellflower Unified School District, OEHS
16703 Clark Avenue
Bellflower, CA 90706

Prepared by:

Stephen O'Neil, M.A., RPA
Megan B. Doukakis, M.A.

UltraSystems Environmental Inc.
16431 Scientific Way
Irvine, CA 92618
(949) 788-4900

June 2025

PHASE I
CULTURAL RESOURCES SURVEY

FOR THE

MAYFAIR MIDDLE/HIGH SCHOOL ATHLETIC FIELD IMPROVEMENTS PROJECT

Bellflower Unified School District
Los Angeles County, California

Bellflower Unified School District
16703 Clark Avenue
Bellflower, CA 90706

June 2025

Prepared by: _____ Date: June 5, 2025
Megan B. Doukakis M.A.
UltraSystems Environmental Inc.

Reviewed by: _____ Date: June 5, 2025
Stephen O'Neil, M.A., RPA
UltraSystems Environmental Inc.

TABLE OF CONTENTS

1.0 Introduction 1-1
1.1 Overview 1-1

2.0 Settings 2-1
2.1 Natural Setting 2-1
2.2 Cultural Setting 2-1
2.2.1 Prehistoric Context 2-1
2.2.2 Ethnohistoric Context 2-2
2.2.3 Historic Context 2-4

3.0 Research Methods 3-1
3.1 Records Search 3-1
3.2 Field Survey 3-1
3.3 Native American Outreach 3-1

4.0 Findings 4-1
4.1 Records Search 4-1
4.1.1 Previously Located Archaeological Sites 4-1
4.1.2 Previous Archaeological Investigations 4-1
4.2 Native American Outreach 4-3
4.3 Pedestrian Survey Results 4-4

5.0 Management Considerations 5-1
5.1 Site Evaluation Criteria 5-1
5.2 Potential Effects 5-1

6.0 Conclusions and Recommendations 6-1

7.0 References 2

TABLES

Table 4.1-1 - Known Cultural Resources Within a Half-Mile Radius of the APE 4-1
Table 4.1-2 - Known Cultural Resource Studies Within a Half-Mile Radius of the APE 4-2

FIGURES

Figure 4.3-1 – North Field Along Allington Street; View to West 4-5
Figure 4.3-2 – Main Baseball Field; View to West 4-6
Figure 4.3-3 – Edge of Track Field With DG; View to Southwest 4-7
Figure 4.3-4 – Mature Trees in South Field Along Mapleleaf Street; View to West 4-8

ATTACHMENTS

Attachment A Mayfair Middle/High School Site Maps
Attachment B Personnel Background
Attachment C Native American Heritage Commission Records Search and Native American Contacts
Attachment D CHRIS Records Search

1.0 INTRODUCTION

1.1 Overview

UltraSystems Environmental, Inc. (UltraSystems) conducted a Phase I cultural resources survey on behalf of the Bellflower Unified School District (BUSD or District), of the Mayfair Middle/High School campus. The District plans to implement an Athletic Field Improvements Project (Project) at Mayfair High School in Lakewood, California.

The District proposes the redevelopment and enhancement of existing athletic facilities located along the western edge of the campus. The project does not involve an increase in student enrollment, expansion of academic buildings, or a change in school operations. Instead, it is a modernization effort to improve the athletic and support infrastructure on the existing school site.

Project components include:

- Construction of a new synthetic track and field facility.
- Development of a new practice field and a new softball field.
- Reconstruction of the baseball field.
- Installation of associated amenities such as a shade structure, score table, home dugout, and two storage buildings.
- Construction of a ticket booth, men's and women's restroom building, and bleacher seating area with stadium-safe ingress/egress pathways.
- Construction of a new field storage building.
- Development of a new parking lot.
- Installation of new fencing and perimeter landscaping.
- Installation of field lights for the track and field on four 90-foot poles.
- A new vehicular access driveway from Allington Street for improved access to athletic facilities.

Mayfair Middle/High School is located at 6000 Woodruff Avenue in Lakewood, California (**Attachment A**, Figure 1). The campus is bounded by Allington Street to the north, Canehill Avenue to the east, a residential neighborhood on the south and Woodruff Avenue on the west. Regional access to the campus is provided by South Street off the San Gabriel (Interstate 605) Freeway to the east and Bellflower Boulevard off the Corona (State Route 91) Freeway from the north (**Attachment A**, Figure 2). The archival study area includes a 0.5-mile radius buffer surrounding the Project site's Area of Potential Effect (APE), which is situated in a fully developed urban landscape surrounded by single family residential use. This Project is mapped on the *Los Alamitos, Calif.*, USGS 7.5-minute quadrangle map, Township 03 South, Range 12 West, in the NW ¼ of the SE ¼ of Section 34, within lands of the Rancho Los Coyotes (**Attachment A**, Figure 3).

Area of Potential Effect

The APE for the undertaking encompasses the maximum extent of potential ground disturbance required by the project design (see **Attachment A**, **Map 3**).

1.2 Methods

A cultural resources records search was completed at the South Central Coastal Information Center (SCCIC) at California University Fullerton, which is the local California Historic Resources

Information System (CHRIS) facility. The project site is included in the search radius for archival studies. The records search was conducted to identify previously recorded cultural resources (prehistoric and historic archaeological sites/isolates, historic buildings, structures, objects, or districts) and to also identify previous cultural resource surveys within the project area. These records included a review of previously recorded prehistoric and historic archaeological resources and of listed cultural resource survey reports within that same geographical area. The cultural resources record search was conducted by UEI staff. The Native American Heritage Commission (NAHC) was contacted requesting a Sacred Lands File (SLF) search and a list of local tribes to contact. A field pedestrian survey was also conducted.

UEI Assistant Project Archaeologist Megan B. Doukakis, M.A., conducted the records search and contacted the Native American Heritage Commission (NAHC) requesting a Sacred Lands File (SLF) search and prepared this report. Stephen O'Neil, M.A., RPA, who qualifies as a Principal Prehistoric Archaeologist and Historic Archaeologist per United States Secretary of the Interior Standards (see **Attachment B**) is the Principal Investigator for this study.

A search of the Built Environment Resources Directory (BERD) provided by the Office of Historic Preservation (2025) for potential historic properties listed in the National Register of Historic Places (NRHP) was conducted by Ms. Doukakis for this project on June 4, 2025 -- see **Section 4.4**.

Disposition of Data

This report will be filed with the SCCIC, California State University Fullerton; the Bellflower School District; and UltraSystems Environmental, Inc., Irvine, California. All field notes and other documentation related to the study will remain on file at the Irvine office of UltraSystems.

2.0 SETTINGS

2.1 Natural Setting

Lakewood is situated eight miles north of the Pacific Ocean on the "South Bay" inland from Long Beach harbor, on the floodplain of the San Gabriel River. This is a portion of the Los Angeles Basin, a flat plain that extends in all directions, north and south from the ocean to the San Gabriel Mountains east to the Chino Hills and west to the Santa Monica Mountains. Prior to urbanization, creeks flowed across the Los Angeles Basin (a plain) from the San Gabriel Mountains to the ocean with little hindrance. Lakewood lies between the San Gabriel River to the east and the Los Angeles River to the west, though these water courses often meandered across the plain to different physical locations over time with multiple exits to the ocean. The plain was primarily grassland and costal scrub brush. The rivers and creeks contained riparian habitat as well as estuaries at their ocean exits. The general climate is typical of southern California with mild, rainy winters, and warm, dry summers. Summer temperatures can exceed 80° Fahrenheit in the afternoon, though this is moderated by ocean breezes.

The Project site is located in the City of Lakewood, in the southeast corner of Los Angeles County, which is shown on the *Los Alamitos, California*, 1964 (photorevised 1981) USGS quadrangle map. Lakewood is bordered by the cities of Downey to the north, Norwalk and Cerritos to the east, Lakewood to the south, and north Long Beach and Paramount to the west. Mayfair Middle/High School is at an elevation ranging from approximately 74 to 78 feet with a slight slope to the southeast, located approximately 1,000 feet west of the current channel of the San Gabriel River. According to the United States Census Bureau, the city of Lakewood has an area of approximately 6.17 square miles (16 square kilometers). The city is served by Interstate 605/San Gabriel Freeway along its eastern flank, which connects with Interstate 405/San Diego Freeway to the south, the Intertstae-5/Santa Ana Freeway to the north, and State Route 91/Corona Freeway intersecting the southern portion of Lakewood traversing east/west

2.2 Cultural Setting

2.2.1 Prehistoric Context

The term "prehistoric period" refers to the period of pre-contact Native California lifeways and traditions prior to the arrival of Euroamericans.

It is widely acknowledged that human occupation in the Americas began only about 13,000 or more years ago (all dates presented here are calibrated radiocarbon ages or calendar dates). However, recent discoveries in areas outside of California have pushed that age back several thousand years more, to about 15,000 or even perhaps up to nearly 20,000 years ago (Smith and Barker 2017).

To describe and understand the cultural processes that occurred during prehistory, archaeologists have routinely developed a number of chronological frameworks to correlate technological and cultural changes recognized in the archaeological record. These summaries bracket certain time spans into distinct archaeological horizons, traditions, complexes, and phases.

There are many such models even for the various sub-regions of Southern California (cf. Grayson 2011; Jones and Klar 2007; Warren 1984). Given the variety of environments and the mosaic of diverse cultures within California, prehistory is typically divided into specific sub-regions that include: the Interior of Southeastern California and the Mojave Desert (Warren and Crabtree 1986) and San Diego and the Colorado Desert (Meighan 1954; True 1958, 1970).

Many archaeologists tend to follow the regional syntheses adapted from a scheme developed by William J. Wallace in 1955 and modified by others (Chartkoff and Chartkoff 1984; Moratto 1984; Sutton et al. 2007; Wallace 1978; Warren 1968; and others). Although the beginning and ending dates vary, the general framework of prehistory in the study area consists of the following four periods:

- **Paleoindian and Lake Mojave Periods** [Pleistocene and Early Holocene] (ca. 11000 B.C. to 6000 B.C.). This time period is characterized by highly mobile foraging strategies and a broad-spectrum of subsistence pursuits. These earliest expressions of aboriginal occupation in America were marked by the use of large dart or spear points (Fluted and Concave Base Points) that are an element of the Western Clovis expression. Following the earliest portions of this time span there was a change in climate coincident with the retreat of the glaciers. Large bodies of water existed and lakeside aboriginal adaptations were common. Large stemmed points (Western Stemmed – Lake Mojave and Silver Lake) accompanied by a wide variety of formalized stone tools were employed with the aid of atlatls and are representative of an adaptation that was in part focused on lacustrine environments.

- **Millingstone Horizon** [Middle Holocene] (ca. 6000 B.C. to A.D. 1000), during which mobile hunter-gatherers became more sedentary and plant foods and small game animals came to the forefront of indigenous subsistence strategies. This prehistoric cultural expression is often characterized by a large number of millingstones, with especially well-made, deep-basin metates and formalized, portable handstones (manos). Additionally, the cultural assemblage is dominated by an abundance of scraping tools (including scraper planes and pounding/pulping implements), and only a slight representation of dart tipped - projectile points (Pinto, Elko and Gypsum types).

- **Late Prehistoric Period** (ca. A.D. 1000 to 1500), during which a more complex social organization, more diversified subsistence base and an extensive use of the bow and arrow is evidenced. Small, light arrow points (Rose Spring Series), expedient millingstones and, later, pottery mark this period along with the full development of regional Native cultures and tribal territories;

- **Protohistoric Period** (ca. A.D. 1500 to 1700s) ushered in contacts with Europeans, and thereby led to the Historic Period (ca. A.D. 1700 to contemporary times). Small arrow points are recognized with types identified as Desert Side-notched and Cottonwood forms.

2.2.2 Ethnohistoric Context

The Project area lies within the area of the Gabrielino/Tongva ethnolinguistic group (Bean and Smith 1978:538), who speak a language classified as a member of the Uto-Aztecan language stock family. Gabrielino is specifically identified as an element of the Northern Takic Branch of that linguistic group.

The Gabrielino were considered the most populous, wealthiest, and therefore most powerful ethnic nationality in aboriginal southern California (Bean and Smith 1978:538). Unfortunately, most Gabrielino cultural practices had declined long before systematic ethnographic studies were instituted. Today, the leading sources on Gabrielino culture are Johnston (1962), Bean and Smith (1978), and McCawley (1996).

According to the recent research of several prehistorians, Takic groups were not the first inhabitants of the region. Archeologists suggest that the Takic in-migration may have occurred as early as the

Middle Holocene, replacing or intermarrying with indigenous Hokan speakers (Howard and Raab 1993; Porcasi 1998). By the time of European contact, Gabrielino territory included the southern Channel Islands and the Los Angeles Basin reaching east into the present-day San Bernardino-Riverside area and south to the San Joaquin Hills in central Orange County.

Different groups of the Gabrielino adopted varied subsistence practices, based on varying combinations of gathering, hunting, and/or fishing. Because of the similarities to other southern California tribes in economic activities, inland Gabrielino groups' industrial arts, dominated by basket weaving, were also similar to those of their neighbors (Kroeber 1925). Coastal Gabrielino material culture, on the other hand, reflected an elaborately developed artisanship most recognized through the medium of steatite, which was rivaled by few other groups in southern California.

The intricacies of Gabrielino social organization are not well known. There appeared to have been at least three hierarchically ordered social classes, topped with an elite consisting of the chiefs, their immediate families, and the very rich (Bean and Smith 1978). Clans owned resources rights on the land, and property boundaries were marked by the clan's personalized symbol. Villages were politically autonomous, composed of non-localized lineages, each with its own leader. The dominant lineage's leader was usually the village chief, whose office was generally hereditary through the male line. Several villages could be allied under the leadership of a single chief. The villages were frequently engaged in warfare against one another, resulting in what some consider to be in a state of constant enmity between coastal and inland Gabrielino groups.

As early as 1542 the Gabrielino were in contact with the Spanish during the historic expedition of Juan Rodríguez Cabrillo. However it was not until 1769 that the Spaniards took steps to colonize Gabrielino territory. The first Franciscan mission establishment in Gabrielino territory and the broader region was Mission San Gabriel, founded in 1772. Priests from here proselytized the Tongva throughout the Los Angeles Basin region. Rapidly most of the Gabrielino people were incorporated into Mission San Gabriel and other missions in southern California (Engelhardt 1931). Due to introduced diseases, dietary deficiencies, and forceful *reduccion* (removal of non-agrarian Native populations to the mission compound), Gabrielino population dwindled rapidly from these impacts. By 1900, the Gabrielino Native community had almost ceased to exist as a culturally identifiable group. In the late 20th century, however, a renaissance of Native American activism and cultural revitalization among a number of groups of Gabrielino descendants took place. Among the results of this movement has been a return to a traditional name for the tribe, "Tongva," which is employed by several of the bands and organizations representing tribal members. Many of the bands focus on maintaining and teaching traditional knowledge, with special focus on language, place names and natural resources, along with effort to preserve prehistoric resources and ancestral remains.

The Lakewood region, which is situated along the southeastern Los Angeles Basin and adjacent to the San Gabriel River, was a prime location for prehistoric settlement. Villages in the area included *Chokiishnga* along the west bank of San Gabriel River about two and a half miles north of the Project area in Santa Fe Springs, and the Native "community of *Huutgna* was also located in this vicinity" (McCawley 1996:58). In the Los Nietos area of Santa Fe Springs, another mile to the north-northeast, was the village of *Naxaaw'nga* which "was lost long ago to a rampaging flood on the San Gabriel River" (McCawley 1996:58), which demonstrates the wide meanderings of this river and extent of its floodplain. The other large village known at the Contact Era was *Povuu'nga,* on a hill just west of the River near its mouth in Long Beach (McCawley 1996:71).

2.2.3 Historic Context

2.2.3.1 Spanish / Mexican Era

Spanish occupation of California began in 1769, in San Diego. However, the first Europeans to explore the area that would become the state of California were members of the A.D. 1542 expedition of Juan Rodriguez Cabrillo. Cabrillo sailed along the coast of California, but did not explore the interior. Europeans did not attempt inland exploration until 1769, when Lieutenant Colonel Gaspar de Portolá led an overland expedition from San Diego to Monterey. This expedition of 62 people passed north and east of the current study area in August 1769 (Brown 2001), as they traveled from the Whittier Narrows (the pass for the San Gabriel River, situated seven and a half miles north of Lakewood) toward the village of *Yangna* near the current Los Angeles civic center. Mission San Gabriel was established in the San Gabriel Valley Basin in 1772, and the Los Angeles pueblo was established as a civilian settlement on September 4, 1781 (Engelhardt 1931).

Large tracts of Mission San Gabriel lands were used for the support of the mission and provided for the large population of Tongva Native Americans. The mission lands were held in trust for Native peoples by the Franciscan missionaries for eventual redistribution. The lands along the coast, however, were open for early settlement by the colonists from New Spain.

As early as 1780s, Spanish soldiers petitioned the governor of California, Pedro Fages, for use of the lands on which to graze their herds of livestock on land where Lakewood now is situated. The largest tract, consisting of all the lands between the San Gabriel and Santa Ana Rivers, and from the Whittier Hills to the Pacific Ocean, was given to Corporal Manuel Perez Nieto, a soldier of the Royal Presidion at San Diego (Bandy and Bandy 1998:188), a full 300,000 acres for pasturage of his horses and cattle. The extent was protested by Mission San Gabriel and later reduced to a mere 167,000 acres, where he and his family lived, grew, built adobe haciendas through Spanish rule and into Mexican liberty. Mexico rebelled against Spain in 1810, and by 1821 Mexico, including California, achieved independence. The Mexican Republic began to grant private land to citizens to encourage emigration to California. These massive land grant ranchos took up large sections of land in California, including the Spanish tracts from the earlier period. Ranchos surrounded the mission lands in all directions. Following 1832, the Rancho Los Nietos was divided into five smaller ranchos and given to Nietos' heirs, each grant still ranging in tens of thousands of acres. The city of Lakewood was made up of portions of three of these – Ranchos Santa Gertrudis, Los Coyotes and Los Cerritos. Mayfair Middle/High School sits on the portion that was carved out of what once was the Los Coyotes, which had been inherited by Juan Jose Nieto, the eldest son (Bandy and Bandy 1998:192). Rancho Los Coyotes passed from Nieto ownership in 1840 to Juan Bautista Leandri, an Italian, and then on to subsequent owners and divided into farms during the American era.

The Mexican-American War of 1846 saw the invasion of California from both land and sea. Following several skirmishes in the San Diego and Los Angeles areas, and the capture of the territorial capital in Monterey, the United States rule was firmly established. Following the rapid influx of population to the north because of the Gold Rush of 1849, California was made a state in 1850. The economic and social order was slow to change in the southern portion of the state, however, and rancheros were left in control of their vast estates through the 1860s. Los Angeles was a part of the "Cow Counties" and had little representation in the state legislature because of the sparse population. This allowed the predominantly Anglo population of the north to pass laws aimed at breaking up the ranches for settlement by Eastern farmers and, coupled with devastating droughts in the early 1860s that crippled many livestock raisers, dismemberment of these large holdings soon followed. This helped pave the way for the "Boom of the Eighties" which saw an influx of people from the rest of the

United States and the beginning of many of the towns we see today (Dumke 1944). This was the first spurt of growth for Los Angeles, and satellite communities started to form around the city to the east, south and west. The plains between these areas came to be filled with farms and orchards. The three local Nieto rancho holdings, however, remained largely used for cattle ranching.

2.2.3.2 The American Period to Founding of Lakewood

In 1860's, with a series of natural disasters the Golden Age of Ranchos and the cattle boom came to an end (Lakewood 2017). Due to annual flooding from the San Gabriel River during the winter and spring, cattle raising became more and more difficult. A loose settlement of isolated farms developed around the river and was eventually dubbed the New River Colony (Lakewood 2017). The soil built up and became good quality soil for garden crops. Control over access to river water and related feuds were a problem in the early 1900's. The New San Gabriel Improvement Association was created for river management in 1906 and in 1917 the County Flood Control District was formed.

The Somerset ranch was founded in 1869 and comprised 4,000 acres from Alondra Boulevard to Atresia Boulevard in what would become southern Lakewood. In 1906, Los Angeles real estate entrepreneur, Frank E. Woodruff, controlled 1,000 acres and further subdivide the area into one-acre farms (Lakewood 2017). With the formation of the Somerset School District the first school in this area was built in 1909. In 1910 a larger school was built on Somerset Avenue, what was later to be named Lakewood Boulevard. This infrastructure appealed to families which lead to a population increase in the area, eventually resulting in a much-needed addition to be made onto the school in 1914 (Lakewood 2017).

The naming of the town "Lakewood" did not come until after 1910. There are three versions of the story of how the name Lakewood was chosen. One is that the name was decided on in a town meeting; another is that it was chosen at the urging of a single prominent townsperson without general community approval; thirdly was that several names were put in a hat and the name "Lakewood" was drawn (Lakewood 2017).

In the 1940's the population of Lakewood grew rapidly from 11,000 to 44,000, an expansion paralleled throughout Southern California as a result of World War II-related employment and the following post-war boom. A massive amount of building projects took place to accommodate the large number of new residents. In 1956 the Lakewood Chamber of Commerce led the charge for incorporation of the city. That next year, the now 51-year old community was granted a Certificate of City on September 3, 1957 as California's 348th city (Lakewood 2017).

The Mayfair High School was fully built and opened to enrollment in 1963, the buildings, athletic fields and overall campus size as it exists today.

2.2.3.3 Project Site Land Use History

Use of the project site during the 20th century to present could be largely determined using historic aerial photos and USGS topographic maps (NETROnline 2017). An aerial photo from 1953 (the earliest available) indicates that the Lakewood community had already started to fill in with businesses and residences, with all major roads constructed to the north, west and south of the future campus. There were still large open lots along the northern west side of the campus, and an airport lay along three-quarters of the east length of the campus extending to the already channelized San Gabriel River. The aerial photo of 1963 is the first to show the high school campus as well as complete

residential development on all four sides of the campus. This remains unchanged is subsequent aerial photos through 2012.

Topographic maps from the 1920s through 1934 (NETROnline 2017) show open farm land throughout the region, with somewhat meandering dirt roads and sparse settlement, and the San Gabriel River in its current course but not channelized. One of the east/west roads follows a path that would become Allington Street in future years (the north border of the campus). There is a single structure shown approximately where the north portion of Mayfair Middle/High School campus would be, possibly representing a dairy farm. By 1942 the campus area is still open farm land, though the main streets of South, Woodruff and Palo Verde had been built and the river had been channelized. By 1951 an airport labeled "Lakewood Airport" is shown with a northeast/southwest oriented runway and associated buildings at the south end adjacent to what would become the southern east boundary of the campus; however the airport never encroached on school property itself. At this time there were also scattered homes along the east side of Woodruff parallel to the campus, but likewise not on what would become school land. The high school itself is not shown in the 1957 reprint of the 1950 topographic map. As noted above a 1963 aerial photo shows that it had been built by this time, indicating a lag in updating the 1963 USGS map. The 1966 through 1982 topo maps show the school and surrounding neighborhood as it exists today, fully built with dense residential development on all four sides.

3.0 RESEARCH METHODS

This cultural resources inventory and related archival research included a background archaeological records check (archival research) at the SCCIC, California State University, Fullerton, a Sacred Lands File (SLF) search request to the NAHC, and the list of local Native American entities to contact from the NAHC. A pedestrian cultural resource survey of the entire Project area was conducted. This report presents the results of all of these cultural resource studies including cultural resource management recommendations.

3.1 Records Search

A cultural resource records search was conducted by Megan B. Doukakis at the SCCIC on March 27, 2025 to identify historic properties on or near the proposed Project site. The California State Historic Resources Inventory for Los Angeles County was reviewed to identify local cultural resources that have been previously evaluated for historic significance, as well as survey reports.

Also searched and reviewed were: the California State Historic Resources Inventory for Los Angeles County that was reviewed to identify local cultural resources within the Project area and vicinity that have been previously evaluated for historic significance; the National Register of Historic Places (2024); Listed Properties and Determined Eligible Properties (2024); California Register of Historical Resources (2024); California Points of Historical Interest (2024); California Historical Landmarks (2024); Built Environment Resource Directory (OHP 2024).

For the current study, the scope of the records search included a 0.5-mile radius buffer zone of the Project's APE to assess the sensitivity of the Project site for subsurface archaeological resources and to assist in determining the potential to encounter such resources, especially prehistoric—i.e., Native American—cultural remains, during earth-moving activities associated with the undertaking.

3.2 Field Survey

On February 23, 2017, Archaeologist Stephen O'Neil, M.A., RPA, personally visited the Project area to conduct a pedestrian survey. During the survey, the Project site was carefully inspected for any indication of human activities dating to the prehistoric or historic periods (i.e., 50 years or older). Because of the fully built environment of the site, direct observation of the ground was limited to landscaping around the edges of the parking lot and around the current structure.

3.3 Native American Outreach

On March 24, 2025, Ms. Doukakis sent a request to the NAHC via email notifying them of the proposed Project activities and describing its location. The NAHC was requested to conduct a search of its SLF (**Attachment C**), as well as to make recommendations as to the local Native American tribes and organizations that should be contacted regarding knowledge they may have on local traditional cultural properties and possible concerns they may have about potential impacts to cultural resources resulting from implementation of the proposed Project. The Commission's SLF results were received by email on April 7, 2025. The 19 tribes and Native American individuals recommended by the NAHC were contacted by mail and email on April 17, 2025.

3.4 National Register of Historic Places

A search of the BERD listing NRHP properties was reviewed to determine if there are any buildings on the Project site or in the immediate area had been evaluated for the Register and listed. This was conducted by Mrs. Doukakis on June 4, 2025.

4.0 FINDINGS

4.1 Records Search

4.1.1 Previously Located Archaeological Sites

Based on the cultural resources records search conducted at the SCCIC, no prehistoric cultural resource sites or isolates, have been recorded within the Project area boundary. Also, there are no known prehistoric cultural resource sites or isolates recorded within the 0.5-mile radius buffer zone surrounding the Project boundary. There are two historic cultural resources within the 0.5-mile radius buffer zone. P-19-188840 is a is a transmission line lattice tower located in a car storage area and was constructed pre-1965. This historic property was evaluated for nomination to the National Register of Historical Places and was determined to be not eligible. P-19-190631 is a transmission line lattice tower that runs parallel to the San Gabriel River north and east of the project site that was over 50 years old (Crawford 2013). This historic property was evaluated for nomination to the National Register of Historical Places and was determined to be not eligible (**Table 4.1-1**).

Table 4.1-1
KNOWN CULTURAL RESOURCES WITHIN A HALF-MILE RADIUS OF THE APE

Site Number	Author(s)	Date	Description
P-19-188840	K.A. Crawford	2010	A steel lattice type transmission tower Clearwire CA-LOS5835a/LA35XC835D located in a car storage area. Constructed pre-1965. The tower is 140' in height AGL and has a square base with concrete footings. A set of small metal storage areas are located within the legs of the structure and three horizontal arms
P-19-190631	K.A. Crawford	2013	A steel lattice type transmission tower T-Mobile West, LLC LA02654A LA654 SCE/Woodruff. Constructed 1959 by Southern California Edison, the tower is in good condition. Part of a line of towers extending across the urban area located in a mixed commercial and residential area.

4.1.2 Previous Archaeological Investigations

According to records at the SCCIC, there have been nine cultural resource surveys identified with the 0.5 mile radius project buffer of the Project Site Boundary (**Table 4.1-2**) (**Attachment D**). One of these surveys, LA-11429, included the Project site, but did not note any prehistoric or historic cultural resources within the Project boundary (McKenna 2011). Two of the reports noted historic cultural resources located in the 0.5 mile radius project buffer. Both of these reports are investigations on Lattice Transmission towers and noted the two historic cultural resources described in Section 4.1.1 (LA-10695, Bonner and Crawford 2010, LA-12420, Bonner and Crawford 2013).

The remaining six cultural resource surveys did not note any prehistoric or historic cultural resources within the 0.5 mile radius project buffer (**Attachment D**).

Table 4.1-2
KNOWN CULTURAL RESOURCE STUDIES WITHIN A HALF-MILE RADIUS OF THE APE

Report Number	Author(s)	Date	Title	Resources
LA-03707	Clewlow, C. William Jr.	1974	Preliminary Report of the Potential Impact on Archaeological Resources of the Proposed Gas Transmission Pipeline From Los Angeles Harbor to Yorba Linda - Southern California Gas Co.: Environmental Analysis	30-000277
LA-05117	Lapin, Philippe	1999	Cultural Resource Assessment for Pacific Bell Mobile Services Facility La 654-01, County of Los Angeles, California	N/A
LA-07873	Wlodarski, Robert J.	2006	Records Search and Field Reconnaissance for Royal Street Communications, Llc La0578a (sce Woodruff and South Street), Woodruff Avenue at South Street Lakewood, California 90713	N/A
LA-07985	Bonner, Wayne H. and Kathleen A. Crawford	2006	Direct Ape Historic Architectural Assessment for Royal Street Communications, LLC Candidate La0579a (SCE Cerritos Tower), Dumoni Avenue and 183rd Street, Cerritos, Los Angeles County, California	N/A
LA-10695	Bonner, Wayne H. and Kathleen A. Crawford	2010	Cultural Resources Records Search, Site Visit Results, and Direct APE Historic Architectural Assessment for Clearwire Candidate CA-LOS5835A/LA35XC835D (Cerritos Auto Square), 10903 Auto Square Drive, Cerritos, Los Angeles County, California	19-188840
LA-10836	C. Marr	2008	Bellflower Municipal Water Systems Master Plan.	19-186110, 19-187698
LA-11429	McKenna, Jeanette A.	2011	Archaeological/cultural Resources Records Search, City of Lakewood Overview	19-004195, 19-186110, 19-187655, 19-187943, 19-188841, 19-188842
LA-12420	Bonner, Wayne H. and Kathleen A. Crawford	2013	Cultural Resources Records Search and Site Visit Results for T-Mobile West, LLC Candidate LA02654A (LA654A SCE/Woodruff), 5414 Woodruff Avenue, Lakewood, Los Angeles County, California	19-190631
LA-13096	McKenna, Jeanette A.	2015	A Phase I Cultural Resources Investigation Of The Mesa Verde Development, Inc., Garden House Project Area In Bellflower, Los Angeles County, California	N/A

4.2 Native American Outreach

On March 24, 2025, Ms. Doukakis submitted a request to the NAHC via email for a Sacred Lands File (SLF) search within the 0.5-mile Project buffer. The results of the search request were received April 7, 2025, at the office of UltraSystems from Mr. Andrew Green, Cultural Resources Analyst. The NAHC letter stated that "As requested, a record search of the Native American Heritage Commission (NAHC) Sacred Lands File (SLF) was completed based on information submitted for the above referenced project. The results were negative. [emphasis in the original]." (See **Attachment C**.)

UltraSystems prepared letters to each of the 19 tribal contacts named by the NAHC (**Attachment C)**. On April 17, 2025 Ms. Doukakis mailed and emailed letters with accompanying maps describing the Project and showing the Project's location to all 19 contacts. The letter and email requested a reply if they have knowledge of cultural resources in the area that they wished to share, and asking if they had any questions or concerns regarding the Project.

Brandy Salas sent an email on April 18, 2025 responding for Chairperson Andy Salas and Christina Swindall Martinez, Secretary of the Gabrielino Band of Mission Indians – Kizh Nation asked for the lead agency's contact information. This was provided on April 23, 2025.

Christina Conley, Cultural Resource Administrator for the Gabrielino Tongva Indians of California Tribal Council and on behalf of Chairperson Robert F. Dorame, responded by email on April 17, 2025. Mr. Conley indicated that the project APE is less than a mile from a recorded site and ground disturbance will need to be monitored. On April 23, 2025, Ms. Doukakis asked if they would provide any information about the recorded site. Ms. Conley responded on April 23, 2025 indicating that a half mile radius search is inadequate for tribal cultural resources and some tribes require 3 miles of clearance to satisfy concerns. The site that was mentioned is located less than a mile away near the intersection of the 91/605 Freeways.

Vanessa Minott, Tribal Administrator for the Santa Rosa Band of Cahuilla Indians and on behalf of Tribal Chairman Steven Estrada responded by email on April 21, 2025. Ms. Minott indicated that the tribe would defer any comments to the Soboba Band of Luiseno Indians. .

Following up on the initial letter and email contacts, telephone calls were conducted by Assistant Project Archaeologist Megan B. Doukakis on May 30, 2025 the 12 tribal contacts who had not already responded to UltraSystems' mailing and email. Telephone calls were placed with Erica Schenk, Chairperson, BobbyRay Esparza, Cultural Director, and Anthony Madrigal, Tribal Historic Preservation Officer of the Cahuilla Band of Indians, Anthony Morales, Chairperson of the Gabrielino/Tongva San Gabriel Band of Mission Indians, Sandonne Goad, Chairperson of the Gabrielino / Tongva Nation, Sam Dunlap, Cultural Resource Director of the Gabrielino-Tongva Tribe, Joyce Perry, Cultural Resource Director of the Juaneño Band of Mission Indians Acjachemen Nation – Belardes, and Shannon Wingfield, Secretary of the Juaneño Band of Mission Indians Acjachemen Nation 84A at which there were no answers; messages describing the project, There have been no responses to the left messages. Two calls would not be completed as the phone lines were disconnected; these were to Charles Alvarez, Chairperson of the Gabrielino-Tongva Tribe and Heidi Lucero, Tribal Historic Preservation Officer/Most Likely Descendent of the Juaneño Band of Mission Indians Acjachemen Nation 84A.

In a call to Nathan Banda, Chairman for the Juaneño Band of Mission Indians Acjachemen Nation 84A, he indicated that the tribe will defer to the Gabrielino groups.

In a call to Joseph Ontiveros, Tribal Historic Preservation Officer for the Soboba Band of Luiseno Indians and on behalf of Jessica Valdez, Cultural Resource Specialist, Mr. Ontiveros indicated that the tribe would defer to the Gabrielino/Tongva San Gabriel Band of Mission Indians.

A phone call was received from Shannon Wingfield, Secretary for the Juaneno Band of Mission Indians Acjachemen Nation 84A on June 5, 2025 and a message was left. The phone call was returned by Mrs. Doukakis on June 6, 2025. Ms. Wingfield indicated that the project is not within their ancestral territory but they may have information about potential sites near the project area. Ms. Wingfield will check her resources for this information and will pass on any material she finds. Ms. Wingfield also indicated that the tribe can provide monitors if the Gabrielino groups are unable to.

These contacts and replies are described in the contact log in **Attachment C**.

4.3 Pedestrian Survey Results

On February 23, 2017, Mr. O'Neil conducted a Phase I pedestrian cultural resources survey using standard archaeological procedures and techniques that meet the Secretary of Interior's standards and guidelines for cultural resources inventory. He was escorted on the school campus by Mr. Daniel Buffington, Acting Director of Maintenance and Operations for the BUSD.

Proposed improvements to the athletic field modifications at Mayfair Middle/High School are planned to take place in the east half of the campus grounds. This will take place in the open grass field with a soccer field in the northeast corner bordering Allington Street on the north and Canehill Avenue on the east (**Figure 4.3-1**), two baseball fields to the south of that with open grass area to the east up to Canehill Avenue, and the track and field in the southeast corner including a strip of open grass along the south side bordering Mapleleaf Street to the south. Along the east boundary of the fields an open water channel separates the campus from Canehill Avenue. Survey transects were conducted in an opportunistic manner in conformity with the available exposed ground surface. Unobstructed open field extends over half of the athletic fields area (the soccer field, the northern baseball field, and open area around them) with generally well-maintained grass lawn. There are several open patches of soil where the grass is sparse or non-existent that were especially observed during the survey. The larger southern baseball field was partially covered with decomposed granite (DG) around the in-field (**Figure 4.3-2**). The track field circular running area and the straight sprint area were also covered with DG, but the interior portion was otherwise was covered with grass (**Figure 4.3-3**). The eastern edge of the fields had a fence bordering the water channel. Along the fence line were mature trees, a few of which had been cut down with the stumps remaining. There was some open soil around the trunks of both the live and dead trees that was examined. Likewise, there were mature trees along the south border of the fields (inside the fence separating the school from Mapleleaf Street), which had some open soil around the trunks that was examined (**Figure 4.3-4**). At the edge of the track was the only location with noticeable gopher tunnel tailings, which were scattered by hand and observed for any subsurface cultural material that might have been brought up. There was very little ground surface visibility, being <10%.

The result of the pedestrian survey was negative for both prehistoric and historic sites and isolates.

Figure 4.3-1
NORTH FIELD ALONG ALLINGTON STREET; VIEW TO WEST



Figure 4.3-2
MAIN BASEBALL FIELD; VIEW TO WEST



Figure 4.3-3
EDGE OF TRACK FIELD WITH DC; VIEW TO SOUTHWEST



Figure 4.3-4
MATURE TREES IN SOUTH FIELD ALONG MAPLELEAF STREET; VIEW TO WEST



4.4 National Register of Historic Places

A search of the BERD provided by the Office of Historic Preservation (2025) was conducted for this Project on June 4, 2025 by Mrs. Doukakis.

It was determined that the Project APE does not have any resources present that have been evaluated under the National Register. However, the 0.5-mile radius has five resources present that have been evaluated under the NRHP (BERD).

Property Number	Address	Construction Date	Evaluation
96947	6056 Adenmoor Avenue, Lakewood	1945	6Y
N/A	5729 Bigelow Street, Lakewood	1951	6Y
N/A	6113 Candor Street, Lakewood	1955	6Y
N/A	6313 Candor Street, Lakewood	1954	6Y
83108	5922 Coldbrook Avenue, Lakewood	1943	6Y

The five resources noted in the 0.5 mile radius are all single-family residences that date from 1943 to 1955. All of these resources have been determined to be ineligible for the National Register of Historic Places by consensus through the Section 106 process and was not evaluated for the California Register or local listing (6Y).

5.0 MANAGEMENT CONSIDERATIONS

5.1 Site Evaluation Criteria

Evaluation of significance under the California Environmental Quality Act (CEQA) uses criteria found in eligibility statements for the California Register of Historical Resources (CRHR). Generally, a resource is to be considered historically significant if it meets the criteria for listing in the California Register of Historical Resources in the state historic preservation law [Public Resources Code § 5024.1; California Code of Regulations § 15064.5(a)(3)]. These criteria provide that a resource may be listed as a potentially significant historical resource if it:

- Is associated with the events that have made a significant contribution to the broad patterns of California history and cultural heritage.
- Is associated with the lives of person important in our past.
- Embodies the distinctive characteristics of a type, period, region, or method of construction, or represents the work of an important creative individual, or possesses high artistic value.
- Has yielded, or may be likely to yield, information important in prehistory or history.

No cultural resources were identified during the present investigation; therefore, evaluation was not required for this study.

5.2 Potential Effects

No known, potentially significant cultural resources will be adversely impacted by the proposed Project. However, the presence of buried cultural (prehistoric and/or historic archaeological) resources cannot be ruled out given that prehistoric sites and burials have been found within the area bounded by the San Gabriel River and Lakewood Boulevard that parallel the Mayfair Middle/High School project site. Also, the potential for prehistoric and historic resources at the site could not be determined during the pedestrian survey as no ground surface was visible at the time

6.0 CONCLUSIONS AND RECOMMENDATIONS

No prehistoric or historic archaeological resources were observed during the field survey. The possibility of subsurface cultural and or historical deposits is minimal. The previous cultural resources surveys within the half-mile buffer zone resulted in no archaeological sites or isolates being recorded. The fully built environmental of the Project site and elevation relative to adjacent roads suggests that ground here has been significantly cut and filled, with no original surface soil remaining. While seven historic properties were identified within the half-mile buffer zone, none are within the APE, and the results of the pedestrian assessment indicate it is highly unlikely that historic properties will be adversely affected by construction of the Project.

The cultural resource study findings at the SCCIC suggest that there is a low potential for finding resources. One response was received from the contacted tribes. The Gabrielino Tongva Indians of California Tribal Council indicated that the project APE is less than a mile from a recorded site and ground disturbance will need to be monitored.

Furthermore, the surface area of the project was fully covered with a grass lawn and DG, and so little ground surface could be observed during the pedestrian survey. It is recommended that during subsurface into native soil (river alluvium is commonly found within two feet of the current surface) that a qualified archaeological monitor and a tribal monitor be present. If prehistoric and/or historic items are observed during subsurface activities, work should be stopped in that area and allow the qualified archaeologist to assess the findings and retrieve the material.

If human remains are encountered during excavations associated with this Project, work will halt and the Los Angeles County Coroner will be notified (§ 5097.98 of the Public Resources Code). The Coroner will determine whether the remains are recent human origin or older Native American ancestry. If the coroner, with the aid of the supervising archaeologist, determines that the remains are prehistoric, they will contact the NAHC. The NAHC will be responsible for designating the most likely descendant (MLD), who will be responsible for the ultimate disposition of the remains, as required by § 7050.5 of the California Health and Safety Code. The MLD will make recommendations within 24 hours of his or her notification by the NAHC. These recommendations may include scientific removal and nondestructive analysis of human remains and items associated with Native American burials (§ 7050.5 of the Health and Safety Code).

7.0 REFERENCES

Bean, Lowell John, and Charles R. Smith
1978 Gabrielino. In Robert F. Heizer (ed.), Handbook of North American Indians, Vol. 8: *California*; pp. 538-549. Smithsonian Institution, Washington, D.C.

Bundy, Marcy, and Maurice Bundy
1998 *Saddleback Ancestors: Rancho Families of Orange County, California*. Revised Edition. Orange County Genealogical Society, Orange, California.

Bonner, Wayne H. and Kathleen A. Crawford
2010 Cultural Resources Records Search, Site Visit Results, and Direct APE Historic Architectural Assessment for Clearwire Candidate CA-LOS5835A/LA35XC835D (Cerritos Auto Square), 10903 Auto Square Drive, Cerritos, Los Angeles County, California. Report LA-10695. On file at the South Central Coastal Information Center, California State University, Fullerton, California.

2013 Cultural Resources Records Search and Site Visit Results for T-Mobile West, LLC Candidate LA02654A (LA654A SCE/Woodruff), 5414 Woodruff Avenue, Lakewood, Los Angeles County, California. Report LA-12420. On file at the South Central Coastal Information Center, California State University, Fullerton, California.

Brown, Alan K. (editor)
2001 *A Description of Distant Roads: Original Journals of the First Expedition into California 1769-1770, by Juan Crespí*. San Diego State University Press, San Diego, California.

Chartkoff, Joseph L., and Kerry Kona Chartkoff
1984 *The Archaeology of California*. Stanford University Press, Stanford, California.

City of Lakewood
2017 The Lakewood Story: History, Traditions, and Values. http://www.Lakewood.org/about/history.asp. Accessed October 24, 2017.

Crawford, K.A.
2010 Primary Record: Clearwire CA-LOS5835a/LA35XC835D (transmission tower). P-19-188840. On file at the South Central Coastal Information Center, California State University, Fullerton, California.

2013 Primary Record: T-Mobile West LLC LA02654A LA654 SCE/Woodruff [transmission tower]. P-19-190631. On file at the South Central Coastal Information Center, California State University, Fullerton, California.

Dumke, Glenn S.
1944 *The Boom of the Eighties in Southern California*. Huntington Library, San Marino, California.

Engelhardt, Zephryn, O.F.M.
1931 *San Gabriel Mission and the Beginnings of Los Angeles*. Franciscan Herald Press, Chicago.

Grayson, Donald K.
2011 *The Great Basin: A Natural Prehistory*. University of California Press, Berkeley.

Howard, W. J., and L. M. Raab
1993 Olivella Grooved Rectangle Beads as Evidence of an Early Period Southern California Channel Island Interaction Sphere. *Pacific Coast Archaeological Society Quarterly* 29(3):1-11.

Johnston, Bernice E.
1962 *California's Gabrielino Indians*. Southwest Museum, Los Angeles

Jones, Terry L., and Kathryn A. Klar (edited by)
2007 *California Prehistory: Colonization, Culture, and Complexity*. AltaMira Press, New York.

Kroeber, Alfred
1925 Handbook of the Indians of California. *Bureau of American Ethnology Bulletin* No. 78, Washington, D.C.

McCawley, William
1996 *The First Angelinos: The Gabrielino Indians of Los Angeles*. Malki Museum Press, Banning, California / Ballena Press, Novato, California.

McKenna, Jeanette A.
2011 Archaeological / Cultural Resources Records Search, City of Lakewood. Report LA-11429. On file at the South Central Coastal Information Center, California State University, Fullerton, California.

Meighan, C. W.
1954 A Late Complex in Southern California Prehistory. *Southwest Journal of Anthropology* 10(2):215-227.

Moratto, Michael J.
1984 *California Archaeology*. Academic Press, Orlando, Florida.

NETROnline
2017 Historic Aerials by NETROnline. http://www.historicaerials.com/aerials. Accessed October 24, 2017.

Office of Historic Preservation
2025 Built Environment Resources Directory. https://ohp.parks.ca.gov/?page_id=30338. Accessed June 4, 2025.

O'Neil, Stephen, and Megan Black
2017 *Phase I Cultural Resources Survey for the Bellflower Middle/High School Athletic Field Improvements Project*. Prepared for: Bellflower Unified School District, OEHS, Bellflower, California. Prepared by: UltraSystems Environmental, Inc., Irvine, California. On file, Bellflower Unified School District, Bellflower, California.

Porcasi, Judith F.
1998 Middle Holocene Ceramic Technology on the Southern California Coast: New Evidence from Little Harbor, Santa Catalina Island. *Journal of California and Great Basin Anthropology* 20:270-284.

Smith, Geoffrey, M., and Pat Barker
2017 *The Terminal Pleistocene/Early Holocene Record in the Northwestern Great Basin: What we Know, What We Don't Know, and How We May Be Wrong*. http://dx.doi.org/10.108/-20555563.2016.1272395 (Paleoamerican, Center for the Study of the First Americans, Texas A&M University). Accessed on-line at February 10, 2017.

Sutton, Mark Q., Mark E. Basgall, Jill K. Gardner, and Mark W. Allen
2007 Advances in Understanding Mojave Desert Prehistory. *In California Prehistory: Colonization, Culture, Complexity*, edited by Terry L. Jones and Kathryn A. Klar, pp. 229-257. AltaMira Press, Lanham, Maryland.

True, Delbert L.
1958 An Early Complex in San Diego County, California. *American Antiquity* 23(3):255-263.

1970 Investigations of a Late Prehistoric Complex in Cuyamaca Rancho State Park, San Diego County, California. *Archaeological Survey Monographs* 1. University of California, Los Angeles.

USGS (United States Geological Survey, U.S. Department of the Interior)
1964 *Los Alamitos, Calif*. 7.5', (photorevised 1981) USGS Quadrangle map.

Wallace, William J.
1955 A Suggested Chronology for Southern California Coastal Archaeology. *Southwestern Journal of Archaeology* 11(3):214-230.

1978 Post-Pleistocene Archeology, 9,000 to 2,000 BC. In Robert F. Heizer (ed.), Handbook of North American Indians, Vol. 8: *California*; pp. 25-36. Smithsonian Institution, Washington, D.C.

Warren, Claude N.
1968 Cultural Traditions and Ecological Adaptations on the Southern California Coast. In Cynthia Irwin-Williams (ed.), Archaic Prehistory in Western United State, pp. 1-14. *Eastern New Mexico University Contributions in Anthropology* 1(3). Portales, New Mexico.

1984 The Desert Region. In Michael J. Moratto (ed.), *California Archaeology*, pp. 339-430. Academic Press, Orlando, Florida.

Warren, Claude N., and Robert H. Crabtree
1986 Prehistory of the Southwestern Area. In Warren L. D'Azevedo (ed.), Handbook of North American Indians, Vol. 11: *Great Basin*, pp. 183-193. Smithsonian Institution, Washington, D.C.

ATTACHMENTS

ATTACHMENT A

PROJECT MAPS

Map 1
Project Regional Location Map



Path: \\Gissvr\gis\Projects\7322_Mayfair_ISMND\MXDs\7322_Mayfair_2_0_Regional_Location_2025_03_18.mxd
March 18, 2025

Service Layer Credits: Sources: Esri, HERE, Garmin, USGS, Intermap, INCREMENT P, NRCan, Esri Japan, METI, Esri China (Hong Kong), Esri Korea, Esri (Thailand), NGCC, (c) OpenStreetMap contributors, and the GIS User Community, Esri, HERE, Garmin, (c) OpenStreetMap contributors, and the GIS user community; UltraSystems Environmental, Inc., 2025.

Scale 1:633,600

N

0 5 10 Miles

0 5 10 Kilometers

Legend

- Project Location
- County Boundary

Mayfair Middle/High School Athletic Field Improvements

Regional Location

UltraSystems environmental • management • planning

Map 2
Project Study Area



Path: \\Gissvr\gis\Projects\7322_Mayfair_ISMND\MXDs\7322_Mayfair_2_0_Project_Location_2025_03_18.mxd
March 18, 2025
Service Layer Credits: Sources: Esri, HERE, Garmin, USGS, Intermap, INCREMENT P, NRCan, Esri Japan, METI, Esri China (Hong Kong), Esri Korea, Esri (Thailand), NGCC, (c) OpenStreetMap contributors, and the GIS User Community, Source: Esri, Maxar, Earthstar Geographics, and the GIS User Community; USGS, 2007; LA County Assessor, 2015-2016; LA County, 2016; UltraSystems Environmental, Inc., 2025

Scale 1:7,200

N

0 300 600 Feet

0 100 200 Meters

Legend

Mayfair High School Boundary

City Boundary

Mayfair Middle/High School Athletic Field Improvements

Project Location

UltraSystems
environmental • management • planning

Map 3
Topographic Map of Project Study Area

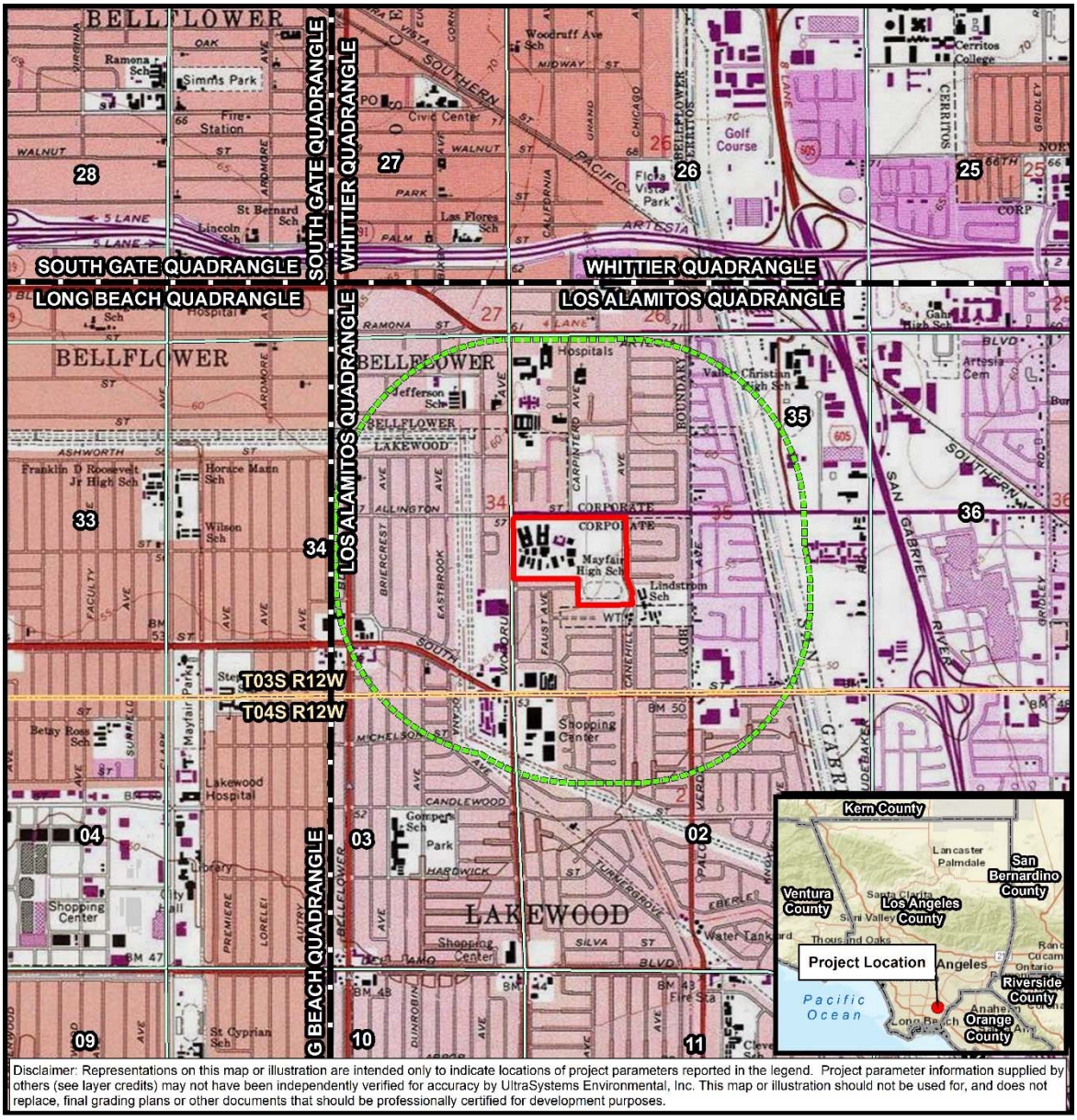

Path: \\Gissvr\gis\Projects\7322_Mayfair_ISMND\MXDs\7322_Mayfair_4_5_Topo_2025_03_18.mxd
March 19, 2025

Service Layer Credits: Sources: Esri, HERE, Garmin, USGS, Intermap, INCREMENT P, NRCan, Esri Japan, METI, Esri China (Hong Kong), Esri Korea, Esri (Thailand), NGCC, (c) OpenStreetMap contributors, and the GIS User Community, Copyright:© 2013 National Geographic Society, i-cubed; California Department of Conservation, 2019; CALAtlas, 2022; UltraSystems Environmental, Inc., 2025.

Scale 1:24,000

N

0 1,000 2,000 Feet

0 250 500 Meters

Legend

- Mayfair High School Boundary
- Half-Mile Radius
- Quadrangle Boundary
- Township Boundary
- Section Boundary

Mayfair Middle/High School Athletic Field Improvements

Topographic Map
Quadrangle: Los Alamitos
Township:3S Range:12W
Section: 35

UltraSystems environmental • management • planning

ATTACHMENT B

PERSONNEL BACKGROUND

Stephen O'Neil, M.A., RPA

Cultural Resources Manager, Cultural Anthropology/Archaeology

Education

- M.A., Anthropology (Ethnography emphasis), California State University, Fullerton, CA, 2002
- B.A., Anthropology, California State University, Long Beach, CA, 1979

Professional and Institutional Affiliations

- California Mission Studies Association
- City of Laguna Beach Environmental Sustainability Committee, appointed 2012
- Orange County Natural History Museum; Board Member
- Pacific Coast Archaeological Society; Board Member and Past President
- Society of California Archaeology

Professional Registrations and Licenses

- Register of Professional Archaeologists (No. 16104) (current)
- Riverside County, CA, Cultural Resource Consultant (No. 259) (current)
- Cultural Resource Field Director, BLM Permit (CA-13-19) – California, 2013
- NEPA and CEQ Consultation for Environmental Professionals; course by the National Association of Environmental Professionals, 2013

Professional Experience

Mr. O'Neil has 30 years of experience as a cultural anthropologist in California. He has researched and written on archaeology, ethnography, and history. Mr. O'Neil has archaeological experience in excavation, survey, monitoring, and lab work. Most of this has been on Native American prehistoric sites, but also includes Spanish, Mexican, and American period adobe sites. His supervisory experience includes excavation and survey crew chief and project director of an adobe house excavation. He has a wide range of expertise in Phase I & II Environmental Site Assessments, archaeological resource assessment surveys, salvage operations, and cultural background studies for various EIR projects. Mr. O'Neil has worked for cultural resource management firms as well as government agencies and Native American entities. He has prepared technical reports as well as published journal articles.

Select project experience

Inglewood Avenue Corridor Widening Project, City of Lawndale, Los Angeles County, CA: 2013-2014

Mr. O'Neil directed and conducted archaeological field survey, cultural resource records search, Native American contacts and report writing for this project. The City of Lawndale is widening Inglewood Avenue from Marine Avenue north. The project uses Caltrans funds and the cultural resources report was prepared in Caltrans format. A separate historic properties report was prepared as well. Prepared for Huitt-Zollars Engineering.

Via Ballena Storm Drain Relocation, City of San Clemente, Orange County, CA: 2013

Mr. O'Neil directed and conducted archaeological field survey, cultural resource records search, Native American contacts and report writing for this project. This residential area has a damaged storm drain under Via Ballena that was causing earth movement and erosion. The meet requirements for state funding, and cultural resources inventory report was required. Prepared for the City of San Clemente

Pine Canyon Road – Three Points Road to Lake Hughes Road, Los Angeles County, CA: 2013

Mr. O'Neil directed and conducted archaeological field survey, cultural resource records search, Native American contacts and report writing for this project. This nine-mile portion of Pine Canyon Road lies partially within the Angeles National Forest. A series of widening and culvert repairs is planned by the Los Angeles County Department of Public Works (LACDPW). An assessment was made of possible cultural resources, historic and prehistoric that may be affected by the construction, and four historic sites were recorded. Prepared for LACDPW.

Alton Parkway Extension Project, Cities of Irvine and Lake Forest, Orange County, CA: 2012

Mr. O'Neil directed and conducted archaeological and paleontological monitoring, archaeological excavation, cultural resource records search, Native American contacts and report writing for this project. Alton Parkway was extended 2.1 miles between the cities of Irvine and Lake Forest. For the portion within the City of Irvine, UltraSystems conducted monitoring and excavation services. One prehistoric site was excavated and reported on; a series of living features were discovered and also reported. The final monitoring report described the paleontological and archaeological findings. A separate technical report on the archaeological excavations was also prepared. Mr. O'Neil directed research into historic and prehistoric background, and prepared the final assessment of potential impacts. Prepared for the Orange County Department of Public Works.

NEPA and CEQA Documentation, Los Angeles Regional Interoperable Communications System (LA-RICS), Los Angeles County, CA: 2011-2014

Mr. O'Neil is part of UltraSystems team currently preparing technical studies and NEPA and CEQA documentation toward the construction of LA-RICS, an $800-million emergency communications system due to be operational in 2016. LA-RICS will provide a highly coordinated emergency communications system to all first-responders to natural and man-made disasters throughout Los Angeles County. Mr. O'Neil is the cultural and historical resources studies team leader, directing five researchers. These studies include coordination of field visits to all 260-plus locations for an archaeologist and/or an architectural historian with agency escorts to observe and record any on-site prehistoric and historic features, performing records and literature searches at archaeology information centers and local archives, contacting local agencies for historically listed structures and districts, coordinate public notices of the project throughout Los Angeles County, consultation with the Native American Heritage Commission and all local tribal organizations, and direct consultation with the California State Historic Preservation Officer (SHPO). This information was compiled by Mr. O'Neil and is used to prepare FCC historical resource forms which were submitted to the SHPO for review.

Megan B. Doukakis, M.A.

Assistant Project Archaeologist

Education

- M.A. Public Archaeology, California State University, Northridge, 2012–2018
- B.A., Anthropology, California State University, Long Beach, 2011
- University of California, Los Angeles - Pimu Catalina Archaeological Field School, 2010
- International Scholar Laureate Program: Delegation on Anthropology and Archaeology in China, 2009
- Earthwatch Institute, "Unearthing Mallorca's Past" archaeological excavation, Mallorca, Spain, 2005

Professional and Institutional Affiliations

- Phi Kappa Phi National Honor Society, 2011
- Sigma Alpha Lambda, National Leadership and Honor Organization, 2010
- Society for California Archaeology Membership 2012–2015

Professional Experience

Ms. Doukakis has over 12 years of experience as an archaeologist in California. She has conducted pedestrian archaeological survey, test and full scale excavations, archaeological monitoring, laboratory curation of archaeological materials to comply with state and federal historic preservation laws in Southern California and abroad. Ms. Doukakis has authored a number of Phase I, II, and III, ISMND, ICRMP, FCC form, EIR documents and project proposals. She has extensive experience with the California Historical Resources Information System as well as conducting paleontology record searches and the Native American Heritage Commission in conducting record searches and consulting with Native American groups. Ms. Doukakis is proficient at project management and project scheduling for large and small-scale projects.

Select Project Experience

Results of the Condition Assessment, Site Monitoring, and Effects Treatment Plan (CASMET) Marine Corps Base Camp Pendleton, San Diego County, CA
Client: Marine Corps Base Camp Pendleton, Duration: 5/11 to 9/11

Mrs. Doukakis conducted survey and excavation for the USMC Base Camp Pendleton condition assessment project. Areas were tested around Camp Pendleton for the presence and condition of cultural material previously recorded. She also conducted laboratory work and curation for the material collected within excavations. Mrs. Doukakis contributed to the final report with background records searches and prehistoric and historic background writing for the report.

Archaeological Excavation Results Report for the Alton Parkway Extension Project, Orange County, CA
Client: Orange County Department of Public Works; Contract: $357,170, 10/10 to 6/12

Mrs. Doukakis participated in the Alton Parkway project, City of Irvine, Orange County, CA. She was responsible for cleaning and cataloging the artifacts recovered from the excavation and surface collections. She also contributed to the final report by compiling the historical background information.

Identification and Evaluation of Historic Properties ADA Wheelchair Access Ramp Improvement Project, City of Lake Forest, Orange County, CA
Client: City of Lake Forest/Penco, Contract: $2,981.62, Duration: 6/12 to 7/12

Mrs. Doukakis contributed to the cultural resource records search, field survey, Native American contacts and report writing for this project. This residential area required wheelchair access ramps on every corner in this neighborhood. An assessment of the possible cultural resources that may be affected with this construction was made for the City of Lake Forest. Mrs. Doukakis contributed the historic and prehistoric background, and the assessment of the possible resources in the area.

Tenaska Solar Projects Imperial Solar Energy Center–South; Imperial Solar Energy Center–West; and Wistaria Ranch, Imperial County, CA
Client: Tenaska/CSOLAR Development, Contract: $3,441,809, 10/13 to 8/15.

Mrs. Doukakis conducted Native American contacts for field monitoring, coordinated with subcontractors to initiate cultural and paleontological field surveys, for the several solar energy projects being handled by UltraSystems Environmental in the El Centro area, Imperial County, CA. She contributed different parts of the survey report and monitoring program documents, including historic and prehistoric background, editorial review. At ISEC- West, Mrs. Doukakis was responsible for contacting and organizing Tribal monitors for this project. She contacted tribal organizations and inquired about their interest in providing tribal monitors for this project. directly organized with Native American groups to sign agreements, and fill out tax paperwork. She was also responsible for organizing and keeping track of and gathering field log from monitors from six tribal groups. She also recovered previously recorded artifacts in the field before the start of the project.

NEPA and CEQA Documentation, Los Angeles Regional Interoperable Communications System -Long Term Evolution, Los Angeles County, CA
Client: LARICS Joint Powers Authority, Contract: $3,051,312, 1/12 to 1/15.

UltraSystems' team prepared technical studies and NEPA and CEQA documentation toward the construction of LA-RICS-LTE, an $800-million emergency communications system that will provide a highly coordinated emergency communications system to all first-responders to natural and man-made disasters throughout Los Angeles County. For this project Mrs. Doukakis conducted record searches at the South Central Coastal Information Center for the Department of Commerce on over 300 project sites throughout the County of Los Angeles. She helped prepare letters to the NAHC and tribal organizations associated with the project area. Mrs. Doukakis contributed to contacting, organizing, and scheduling architectural historians to conduct historical research around the project areas. Letters were written for contact to local agencies and cities. A public notice was constructed and published in three local newspapers. Mrs. Doukakis also constructed hundreds of Federal Communications Commission 620 and 621 forms for submission to California State Historic Preservation Office.

Newton Canyon Monitoring Project, CA
Client: County of Los Angeles Department of Public Works, Contract: $2,930.00, Duration: 7/13 to 12/13
Mrs. Doukakis was an archaeological monitor for this project. She monitored all ground disturbing activities as well as lightly surveying the area for cultural material. Mrs. Doukakis also conducted the records center research at the South Central Coastal Information Center at CSUF. Through email, letter, and telephone correspondence, Mrs. Doukakis contacted the NAHC and associated tribal groups

ATTACHMENT C

Native American Heritage Commission Records Search and Native American Contacts

Sacred Lands File & Native American Contacts List Request

Native American Heritage Commission
1550 Harbor Blvd, Suite 100
West Sacramento, CA 95691
916-373-3710
916-373-5471 – Fax
nahc@nahc.ca.gov

Information Below is Required for a Sacred Lands File Search

Project: Mayfair High School Athletic Field Improvement Project (UEI#7322)

County: Los Angeles

USGS Quadrangle Name: Los Alamitos

Township: 3S **Range:** 12W **Section(s):** 35

Company/Firm/Agency: UltraSystems Environmental

Street Address: 16431 Scientific Way

City: Irvine **Zip:** 92618

Phone: 310-850-8127

Fax: n/a

Email: mblack@ultrasystems.com

Project Description:

Mayfair High School is located at 6000 Woodruff Avenue, Lakewood, CA and is bounded by Allington Street to the north, Arabella Street to the south, Woodruff Avenue to the east, and Canehill to the west.The proposed project includes the following new features: track & field; practice field; softball field; baseball field; shade structure and score table; men's and womens restroom; home dugout and storage building; storage building, ticket booth; stadium bleachers, parking lot; and new fencing and landscaping.

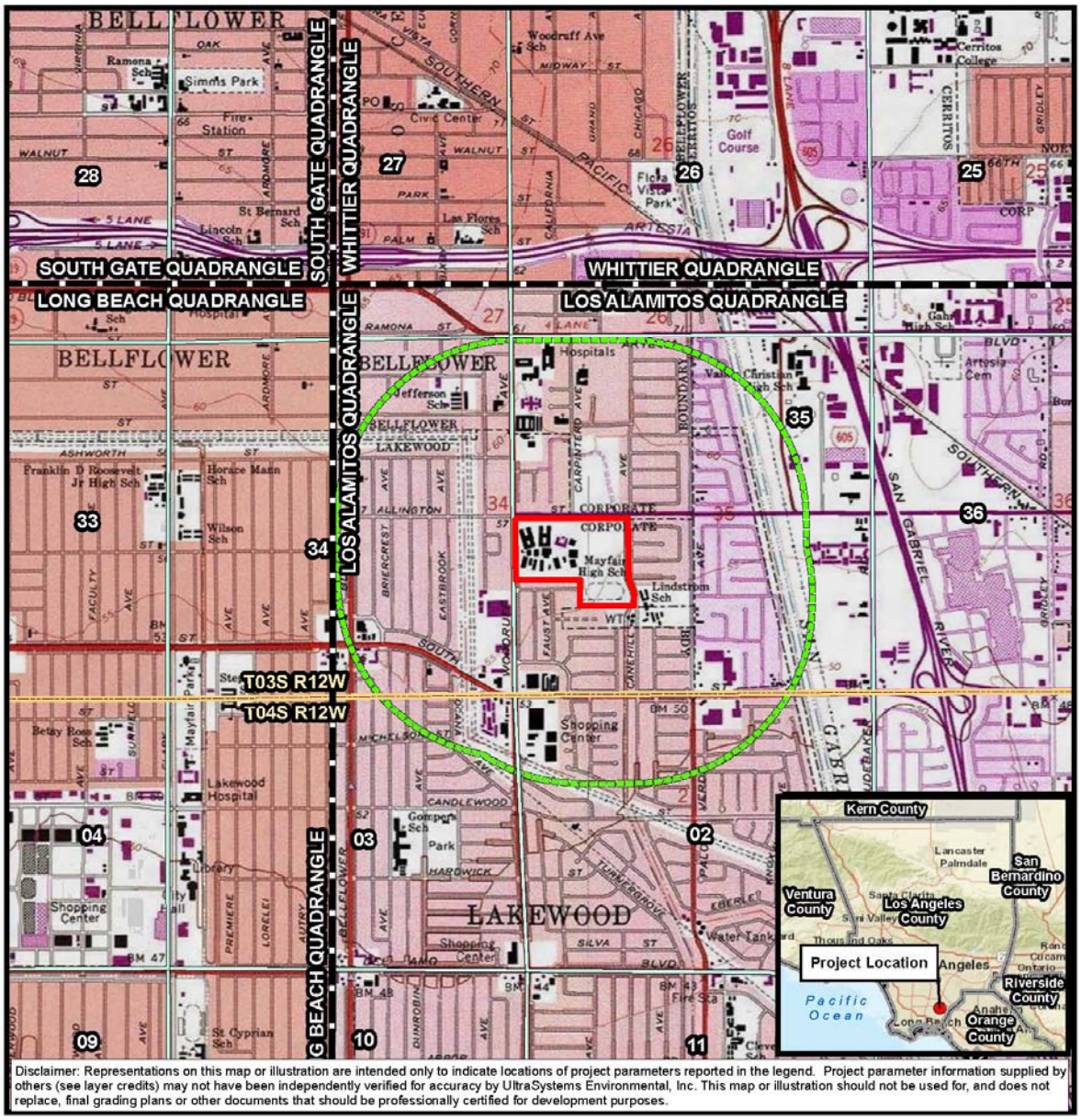

Disclaimer: Representations on this map or illustration are intended only to indicate locations of project parameters reported in the legend. Project parameter information supplied by others (see layer credits) may not have been independently verified for accuracy by UltraSystems Environmental, Inc. This map or illustration should not be used for, and does not replace, final grading plans or other documents that should be professionally certified for development purposes.

December 2, 2016

Path: \\Gissvr\gis\Projects\7322_Mayfair_ISMND\MXDs\7322_Mayfair_4_5_Topo_2025_03_18.mxd
Service Layer Credits: Sources: Esri, HERE, Garmin, USGS, Intermap, INCREMENT P, NRCan, Esri Japan, METI, Esri China (Hong Kong), Esri Korea, Esri (Thailand), NGCC, (c) OpenStreetMap contributors, and the GIS User Community, Copyright © 2013 National Geographic Society, i-cubed; California Department of Conservation, 2019; CALAtlas, 2022; UltraSystems Environmental, Inc., 2025.

Scale 1:24,000

N

0 1,000 2,000 Feet

0 250 500 Meters

Legend

- Mayfair High School Boundary
- Half-Mile Radius
- Quadrangle Boundary
- Township Boundary
- Section Boundary

Mayfair Middle/High School Athletic Field Improvements

Topographic Map
Quadrangle: Los Alamitos
Township:3S Range:12W
Section: 35

UltraSystems environmental • management • planning

STATE OF CALIFORNIA — Gavin Newsom, Governor

NATIVE AMERICAN HERITAGE COMMISSION

CHAIRPERSON
Reginald Pagaling
Chumash

VICE-CHAIRPERSON
Buffy McQuillen
Yokayo Pomo, Yuki, Nomlaki

SECRETARY
Sara Dutschke
Miwok

PARLIAMENTARIAN
Wayne Nelson
Luiseño

COMMISSIONER
Isaac Bojorquez
Ohlone-Costanoan

COMMISSIONER
Stanley Rodriguez
Kumeyaay

COMMISSIONER
Reid Milanovich
Cahuilla

COMMISSIONER
Bennae Calac
Pauma-Yuima Band of Luiseño Indians

COMMISSIONER
Vacant

ACTING EXECUTIVE SECRETARY
Steven Quinn

NAHC HEADQUARTERS
1550 Harbor Boulevard
Suite 100
West Sacramento,
California 95691
(916) 373-3710
nahc@nahc.ca.gov

April 7, 2025

Megan Black Doukakis
UltraSystems Environmental

Via Email to: mblack@ultrasystems.com

Re: Mayfair High School Athletic Field Improvement Project, Los Angeles County

To Whom It May Concern:

As requested, a record search of the Native American Heritage Commission (NAHC) Sacred Lands File (SLF) was completed based on information submitted for the above referenced project. The results were negative. Please note that tribes do not always record their sacred sites in the SLF, nor are they required to do so. As such, a SLF search is not a substitute for consultation with all tribes that are traditionally and culturally affiliated with a project's geographic area.

Attached is a list of Native American tribes who may also have knowledge of cultural resources in the project area. This list should provide a starting place in locating areas of potential adverse impact within the proposed project area. Please contact all of those listed; if they cannot supply information, they may recommend others with specific knowledge. If within two weeks of notification, a response has not been received, the Commission requests that you follow-up with a telephone call or email to ensure that the project information was received.

If you receive notification of a change of address or phone number from a tribe, please notify the NAHC so that we can assure that our lists contain current information.

In addition to engaging in tribal consultation, you should consult the appropriate regional California Historical Research Information System (CHRIS) archaeological Information Center to determine whether it has information regarding the presence of recorded archaeological sites within the project area.

If you have any questions or need additional information, please contact me at Andrew.Green@nahc.ca.gov.

Sincerely,

Andrew Green

Andrew Green
Cultural Resources Analyst

Attachment

Native American Heritage Commission
Native American Contact List
Los Angeles County
4/7/2025

Tribe Name	Contact Person	Contact Address	Phone #	Email Address
Cahuilla Band of Indians	BobbyRay Esparza, Cultural Director	52701 CA Highway 371 Anza, CA, 92539	(951) 763-5549	besparza@cahuilla-nsn.gov
Cahuilla Band of Indians	Anthony Madrigal, Tribal Historic Preservation Officer	52701 CA Highway 371 Anza, CA, 92539	(951) 763-5549	anthonymad2002@gmail.com
Cahuilla Band of Indians	Erica Schenk, Chairperson	52701 CA Highway 371 Anza, CA, 92539	(951) 590-0942	chair@cahuilla-nsn.gov
Gabrieleno Band of Mission Indians - Kizh Nation	Andrew Salas, Chairperson	P.O. Box 393 Covina, CA, 91723	(844) 390-0787	admin@gabrielenoindians.org
Gabrieleno Band of Mission Indians - Kizh Nation	Christina Swindall Martinez, Secretary	P.O. Box 393 Covina, CA, 91723	(844) 390-0787	admin@gabrielenoindians.org
Gabrieleno/Tongva San Gabriel Band of Mission Indians	Anthony Morales, Chairperson	P.O. Box 693 San Gabriel, CA, 91778	(626) 483-3564	GTTribalcouncil@aol.com
Gabrielino Tongva Indians of California Tribal Council	Robert Dorame, Chairperson	P.O. Box 490 Bellflower, CA, 90707	(562) 761-6417	gtongva@gmail.com
Gabrielino Tongva Indians of California Tribal Council	Christina Conley, Cultural Resource Administrator	P.O. Box 941078 Simi Valley, CA, 93094	(626) 407-8761	christina.marsden@alumni.usc.edu
Gabrielino/Tongva Nation	Sandonne Goad, Chairperson	106 1/2 Judge John Aiso St., #231 Los Angeles, CA, 90012	(951) 807-0479	sgoad@gabrielino-tongva.com
Gabrielino-Tongva Tribe	Sam Dunlap, Cultural Resource Director	P.O. Box 3919 Seal Beach, CA, 90740	(909) 262-9351	tongvatcr@gmail.com
Gabrielino-Tongva Tribe	Charles Alvarez, Chairperson	23454 Vanowen Street West Hills, CA, 91307	(310) 403-6048	Chavez1956metro@gmail.com
Juaneno Band of Mission Indians Acjachemen Nation - Belardes	Joyce Perry, Cultural Resource Director	4955 Paseo Segovia Irvine, CA, 92603	(949) 293-8522	kaamalam@gmail.com
Juaneno Band of Mission Indians Acjachemen Nation 84A	Heidi Lucero, THPO/MLD	31411-A La Matanza Street San Juan Capistrano, CA, 92675	(562) 879-2884	thpo@jbmian.com
Juaneno Band of Mission Indians Acjachemen Nation 84A	Shannon Wingfield, Secretary	31411-A La Matanza Street San Juan Capistrano, CA, 92675	(949) 488-3484	webmaster@jbmian.com
Juaneno Band of Mission Indians Acjachemen Nation 84A	Nathan Banda, Chairman	31411-A La Matanza Street San Juan Capistrano, CA, 92675	(949) 426-8804	nbanda@jbmian.com
Santa Rosa Band of Cahuilla Indians	Vanessa Minott, Tribal Administrator	P.O. Box 391820 Anza, CA, 92539	(951) 659-2700	vminott@santarosa-nsn.gov
Santa Rosa Band of Cahuilla Indians	Steven Estrada, Tribal Chairman	P.O. Box 391820 Anza, CA, 92539	(951) 659-2700	sestrada@santarosa-nsn.gov
Soboba Band of Luiseno Indians	Joseph Ontiveros, Tribal Historic Preservation Officer	P.O. Box 487 San Jacinto, CA, 92581	(951) 663-5279	jontiveros@soboba-nsn.gov
Soboba Band of Luiseno Indians	Jessica Valdez, Cultural Resource Specialist	P.O. Box 487 San Jacinto, CA, 92581	(951) 663-6261	jvaldez@soboba-nsn.gov

This list is current only as of the date of this document. Distribution of this list does not relieve any person of statutory responsibility as defined in Section 7050.5 of the Health and Safety Code, Section 5097.94 of the Public Resources Code and Section 5097.98 of the Public Resources Code.

This list is only applicable for contacting local Native Americans with regard to cultural resources assessment for the proposed Mayfair High School Athletic Field

04/07/2025 02:11 PM
1 of 1

UltraSystems
environmental•management•planning

April 15, 2025

Charles Alvarez, Chairperson
Gabrielino-Tongva Tribe
23454 Vanowen Street
West Hills, CA, 91307

Subject: Cultural Resources Inventory, Mayfair High School Athletic Field Improvement Project in the City of Lakewood, Los Angeles County, California. UltraSystems Environmental Project No. 7322.

Dear Chairperson Alvarez,

UltraSystems Environmental, Inc. (UEI) has been contracted by the Bellflower Unified School District (District) to conduct a cultural resources inventory in support of the Mayfair High School Athletic Field Improvement Project. The proposed Project will consist of replacing the existing softball, baseball and track fields and bleachers, and lighting improvements around the track field. UltraSystems is conducting a cultural resources study to evaluate the potential presence of prehistoric and historic resources within the project boundary.

The District is proposing to replace the existing softball field, baseball field, and track and field with artificial turf at Mayfair Middle/High School. Additionally, the District proposes to replace the bleachers and to construct a combined restroom/concession building, two ticket booths and, a parking lot. The new track and field would include sports lighting at four pole locations and a pole mounted amplified sound system. A scoreboard would also be installed. In addition, site drainage would be improved through the installation of a Stormtech chamber system west of the baseball field and south and east of the parking lot to retain and treat storm water runoff prior to offsite discharge as well as a sub drainage system under the track and field.

As part of the cultural resources study for the Project, I am writing to request your input on potential Native American resources in or near the Area of Potential Effect (APE). In a letter dated April 7, 2025, the Native American Heritage Commission stated: "A record search of the Native American Heritage Commission (NAHC) *Sacred Lands File* was completed for the area of potential project effect (APE) referenced above with negative results [emphasis in the original]." They recommended that local Native American individuals and organizations be contacted for further information, including the Gabrielino-Tongva Tribe.

The project is specifically located at 6000 South Woodruff Avenue in Lakewood, California and on the *Los Alamitos, Calif.*, USGS topographical quadrangle, R 12 W, T 03 S, in the N ½ of the SW ¼ of Section 35, within lands of the Rancho Los Coyotes. Mayfair High School is bounded by Allington Street on the north, Canehill Avenue on the east, residential buildings on the south, and Woodruff Avenue on the west. The subject property is surrounded by single and multi-family homes.

This is shown on the enclosed map with the Project area depicted with a one-half mile buffer zone.

Thank you for your help.

Sincerely,

Megan B Doukakis

Megan Black Doukakis|, M.A.,
Assistant Project Archaeologist
(949) 788-4900, ext. 228
mblack@ultrasystems.com

Corporate Office – Orange County
16431 Scientific Way
Irvine, CA 92618-7443
Telephone: 949.788.4900, ext. 276
Facsimile: 949.788.4901
Website: www.ultrasystems.com

EXAMPLE

Mayfair Middle/High School Athletic Field Improvements Project, Bellflower Unified School District, City of Lakewood, Los Angeles County, California. [UEI #7322]
Native American Contact Log

Name	Tribe/Affiliation	Letter Contacts	E-mail Contacts	Telephone Contacts	Comments
Andrew Green, Cultural Resources Analyst	Native American Heritage Commission	N/A	March 24, 2025	N/A	Request for Sacred Lands File search and local Native American representatives contact information. Reply received April 7, 2025 from Andrew Green.
BobbyRay Esparza, Cultural Director	Cahuilla Band of Indians	April 17, 2025	April 17, 2025	May 30, 2025	Letter and email describing the project and requesting input on concerns was sent April 17, 2025. A telephone call was made on May 30, 2025. The tribal receptionist transferred my call to Mr. Esparza's phone. There was no answer and a message was left. No response has been received.
Anthony Madrigal, Tribal Historic Preservation Officer	Cahuilla Band of Indians	April 17, 2025	April 17, 2025	May 30, 2025	Letter and email describing the project and requesting input on concerns was sent April 17, 2025. A telephone call was made on May 30, 2025. The tribal receptionist transferred my call to BobbyRay Esparza's phone. There was no answer and a message was left. No response has been received.
Erica Schenk, Chairperson	Cahuilla Band of Indians	April 17, 2025	April 17, 2025	May 30, 2025	Letter and email describing the project and requesting input on concerns was sent April 17, 2025. A telephone call was made on May 30, 2025. The tribal receptionist transferred my call to BobbyRay Esparza's phone. There was no answer and a message was left. No response has been received.
Andrew Salas, Chairperson	Gabrielino Band of Mission Indians-Kizh Nation	April 17, 2025	April 17, 2025	N/A	Letter and email describing project and requesting input on concerns was sent April 17, 2025. An email reply was received April 18, 2025 from Brandy Salas asking for the lead agency's contact information. This was provided on April 23, 2025. No further response has been received.

Name	Tribe/Affiliation	Letter Contacts	E-mail Contacts	Telephone Contacts	Comments
Christina Swindall Martinez, Secretary	Gabrielino Band of Mission Indians-Kizh Nation	April 17, 2025	April 17, 2025	N/A	Letter and email describing the project and requesting input on concerns was sent April 17, 2025. An email reply was received April 18, 2025 from Brandy Salas asking for the lead agency's contact information. This was provided on April 23, 2025. No further response has been received.
Anthony Morales, Chairperson	Gabrielino/Tongva San Gabriel Band of Mission Indians	April 17, 2025	April 17, 2025	May 30, 2025	Letter and email describing the project and requesting input on concerns was sent April 17, 2025. A phone call was made May 30, 2025. There was no answer and a message was left. No response to date.
Robert F. Dorame, Chairperson	Gabrielino Tongva Indians of California Tribal Council	April 17, 2025	April 17, 2025	N/A	Letter and email describing project and requesting input on concerns was sent April 17, 2025. An email reply was received April 17, 2025 from Christina Conley. See below.
Christina Conley, Cultural Resource Administrator	Gabrielino Tongva Indians of California Tribal Council	April 17, 2025	April 17, 2025	N/A	Letter and email describing project and requesting input on concerns was sent April 17, 2025. An email reply was received April 17, 2025 from Ms. Conley indicating that the project APE is less than a mile from a recorded site and ground disturbance will need to be monitored. On April 23, 2025, Ms. Doukakis asked if they would provide any information about the recorded site. Ms. Conley responded on April 23, 2025 that a half mile radius search is inadequate for tribal cultural resources and some tribes require 3 miles of clearance to satisfy concerns. The site that was mentioned is located less than a mile away near the intersection of the 91/605.

Name	Tribe/Affiliation	Letter Contacts	E-mail Contacts	Telephone Contacts	Comments
Sandonne Goad, Chairperson	Gabrieleno / Tongva Nation	April 17, 2025	April 17, 2025	May 30, 2025	Letter and email describing the project and requesting input on concerns was sent April 17, 2025. A phone call was made May 30, 2025. There was no answer and a message was left. No response to date.
Sam Dunlap, Cultural Resource Director	Gabrielino-Tongva Tribe	April 17, 2025	April 17, 2025	May 30, 2025	Letter and email describing the project and requesting input on concerns was sent April 17, 2025. A phone call was made May 30, 2025. There was no answer and a message was left. No response to date.
Charles Alvarez, Chairperson	Gabrielino-Tongva Tribe	April 17, 2025	April 17, 2025	May 30, 2025	Letter and email describing project and requesting input on concerns was sent April 17, 2025. The letter was returned as undeliverable. A phone call was made on May 30, 2025. The phone line was disconnected. No response to date.
Joyce Perry, Cultural Resource Director	Juaneno Band of Mission Indians Acjachemen Nation - Belardes	April 17, 2025	April 17, 2025	May 30, 2025	Letter and email describing the project and requesting input on concerns was sent April 17, 2025. A phone call was made May 30, 2025. There was no answer and a message was left. No response to date.
Heidi Lucero, THPO/MLD	Juaneno Band of Mission Indians Acjachemen Nation 84A	April 17, 2025	April 17, 2025	May 30, 2025	Letter and email describing project and requesting input on concerns was sent April 17, 2025. A phone call was made on May 30, 2025. The phone line was disconnected. No response to date.

Name	Tribe/Affiliation	Letter Contacts	E-mail Contacts	Telephone Contacts	Comments
Shannon Wingfield, Secretary	Juaneno Band of Mission Indians Acjachemen Nation 84A	April 17, 2025	April 17, 2025	May 30, 2025	Letter and email describing the project and requesting input on concerns was sent April 17, 2025. A phone call was made May 30, 2025. There was no answer and a message was left. A phone call was received from Ms. Wingfield on June 5, 2025 and a message was left. The phone call was returned by Mrs. Doukakis on June 6, 2025. Ms. Wingfield indicated that the project is not within their ancestral territory but they may have information about potential sites near the project area. Ms. Wingfield will check her resources for this information and will pass on any material she finds. Ms. Wingfield also indicated that the tribe can provide monitors if the Gabrielino groups are unable to.
Nathan Banda, Chairman	Juaneno Band of Mission Indians Acjachemen Nation 84A	April 17, 2025	April 17, 2025	May 30, 2025	Letter and email describing the project and requesting input on concerns was sent April 17, 2025. A phone call was made May 30, 2025. Chairman Banda indicated that the will defer to the Gabrielino groups.
Vanessa Minott, Tribal Administrator	Santa Rosa Band of Cahuilla Indians	April 17, 2025	April 17, 2025	N/A	Letter and email describing the project and requesting input on concerns was sent April 17, 2025. An email response was received on April 21, 2025 from Ms. Minott indicating that the tribe would defer any comments to the Soboba Band of Luiseno Indians. .
Steven Estrada, Tribal Chairman	Santa Rosa Band of Cahuilla Indians	April 17, 2025	April 17, 2025	N/A	Letter and email describing the project and requesting input on concerns was sent April 17, 2025. An email response was received on April 21, 2025 from Ms. Minott indicating that the tribe would defer any comments to the Soboba Band of Luiseno Indians. .

Name	Tribe/Affiliation	Letter Contacts	E-mail Contacts	Telephone Contacts	Comments
Joseph Ontiveros, Tribal Historic Preservation Officer	Soboba Band of Luiseno Indians	April 17, 2025	April 17, 2025	May 30, 2025	Letter and email describing the project and requesting input on concerns was sent April 17, 2025. A phone call was made on May 30, 2025. Mr. Ontiveros indicated that the tribe would defer to the Gabrielino/Tongva San Gabriel Band of Mission Indians.
Jessica Valdez, Cultural Resource Specialist	Soboba Band of Luiseno Indians	April 17, 2025	April 17, 2025	N/A	Letter and email describing the project and requesting input on concerns was sent April 17, 2025. A phone call was made on May 30, 2025. Mr. Ontiveros indicated that the tribe would defer to the Gabrielino/Tongva San Gabriel Band of Mission Indians.

From: Christina Marsden Conley <christina.marsden@alumni.usc.edu>
Sent: Thursday, April 17, 2025 4:15 PM
To: Megan Black <mblack@ultrasystems.com>
Subject: Re: Project 7322 - Cultural Resources Inventory, Mayfair High School Athletic Field Improvement Project in the City of Lakewood, Los Angeles County, California

Hi Megan,
Your APE is less than a mile from a recorded site. We will need to monitor ground disturbances.
Let me know your next steps,
Take care,
Christina

tehoovet taamet
CHRISTINA CONLEY
•Tribal Cultural Resource Administrator Under Tribal Chair, Robert Dorame
•California Native American Heritage Commission contact
•UCLA Scholar-in-Residence
•CSUDH NAGPRA Oversight Committee
•Catalina Tribal Coalition
•First Peoples of LA Advisory Council Member
•Coalition of California of State Tribes, Executive Board

https://www.gtioc.org

https://file.lacounty.gov/SDSInter/lac/1137966_AREPORTONHARMSCountyofLosAngeles.pdf

<image002.png>

GABRIELINO TONGVA INDIANS OF CALIFORNIA
The Gabrielino Tongva Indians of California tribe is a direct descendant, traditionally and culturally

recognized in the State of California as the aboriginal tribe to encompass the entire Los Angeles Basin area to Laguna Beach, extending to the Channel Islands of Santa Catalina, San Nicholas and San Clemente Islands

This e-mail transmission and any documents, files or previous e-mail messages attached to it, maybe privileged and confidential and is intended only for the use of the intended recipient of this message. If you are not the intended recipient, or a person responsible for delivering it to the intended recipient, you are hereby notified that any review, disclosure, retention, copying, dissemination, distribution or use of any of the information contained in, or attached to this e-mail transmission is STRICTLY PROHIBITED. If you have received this transmission in error, please immediately notify me by return email or by telephone at the above number and delete the message and its attachments.

On Apr 23, 2025, at 3:39 PM, Megan Black <mblack@ultrasystems.com> wrote:

Thank you for providing this response. It will be included in our Cultural Resources Report.

Can you provide any information about the recorded site located a mile from the project APE? Our records search covered a half-mile area from the project and did not reveal any prehistoric sites. I would appreciate any information that you could offer on this.

Best regards,

Megan Black Doukakis | Assistant Project Archaeologist | M.A.

UltraSystems Environmental | **WBE/DBE/SBE/WOSB**
16431 Scientific Way Irvine, CA 92618
Office **949.788.4900 Ext. 228** Fax 949.788.4901
Cell 310.850.8127

Please note that I am working remotely. I can best be reached via email or cell.

<image001.jpg>

please consider the environment before printing this e-mail. Thank you.

E-Mail Confidentiality Notice: The information contained in this e-mail message is intended only for the personal and confidential use of the recipient(s) named above. This message may be an attorney-client communication and/or work product and as such is privileged and confidential. If the reader of this message is not the intended recipient, you are hereby notified that you have received this document in error and that any review, dissemination, distribution, or copying of this message is strictly prohibited. If you have received this communication in error, please notify us immediately by e-mail, and delete the original message.

From: Christina Marsden Conley <christina.marsden@alumni.usc.edu>
Sent: Wednesday, April 23, 2025 7:17 PM
To: Megan Black <mblack@ultrasystems.com>
Subject: Re: Project 7322 - Cultural Resources Inventory, Mayfair High School Athletic Field Improvement Project in the City of Lakewood, Los Angeles County, California

Good evening,
A half mile is inadequate for tribal cultural resources. In fact, some tribes require 3 miles of clearance to satisfy concerns. The site I am referring to is less than a mile and is near the intersection of the 91/605.

tehoovet taamet
CHRISTINA CONLEY
•Tribal Cultural Resource Administrator Under Tribal Chair, Robert Dorame

•California Native American Heritage Commission contact
•UCLA Scholar-in-Residence
•CSUDH NAGPRA Oversight Committee
•Catalina Tribal Coalition
•First Peoples of LA Advisory Council Member
•Coalition of California of State Tribes, Executive Board

https://www.gtioc.org

https://file.lacounty.gov/SDSInter/lac/1137966_AREPORTONHARMSCountyofLosAngeles.pdf

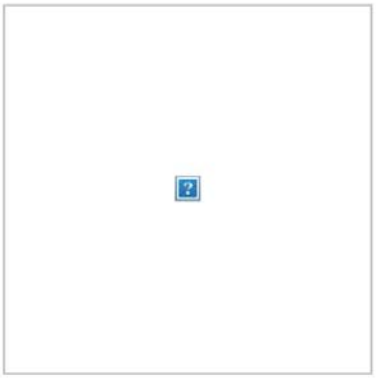

GABRIELINO TONGVA INDIANS OF CALIFORNIA
The Gabrielino Tongva Indians of California tribe is a direct descendant, traditionally and culturally recognized in the State of California as the aboriginal tribe to encompass the entire Los Angeles Basin area to Laguna Beach, extending to the Channel Islands of Santa Catalina, San Nicholas and San Clemente Islands

---

From: Gabrieleno Administration <admin@gabrielenoindians.org>
Sent: Friday, April 18, 2025 11:30 AM
To: Megan Black <mblack@ultrasystems.com>
Subject: Re: Project 7322 - Cultural Resources Inventory, Mayfair High School Athletic Field Improvement Project in the City of Lakewood, Los Angeles County, California

Hello Megan

Thank you for your email. Can you please provide the lead person/agency's contact information?

Best regards,
Brandy Salas

Tribal Administrative Coordinator
Gabrieleño Band of Mission Indians - Kizh Nation

PO Box 393
Covina, CA 91723

Office: 844-390-0787

website: www.gabrielenoindians.org



The region where Gabrieleño culture thrived for more than twelve thousand years encompassed most of Los Angeles County, more than half of Orange County and portions of Riverside and San Bernardino counties. It was the labor of the Gabrieleño who built the missions, ranchos and the pueblos of Los Angeles. They were trained in the trades, and they did the construction and maintenance, as well as the farming and managing herds of livestock. The Gabrieleño are the ones who did all this work, and they really are the foundation of the early economy of the Los Angeles area. That's a contribution that Los Angeles has not recognized--the fact that in its early decades, without the Gabrieleño, the community simply would not have survived.

On Wed, Apr 23, 2025 at 2:59 PM Megan Black <mblack@ultrasystems.com> wrote:

The Lead Agency will be the Bellflower Unified School District. Here is the contact below:

Patrick Turner, Facilities Director

15330 S. Woodruff Avenue, Bellflower, CA 90706

(562) 804-6500 Ext. 6001

pturner@busd.k12.ca.us

Best regards,

Megan Black Doukakis | Assistant Project Archaeologist | M.A.

UltraSystems Environmental | WBE/DBE/SBE/WOSB

16431 Scientific Way Irvine, CA 92618
Office **949.788.4900 Ext. 228** Fax 949.788.4901

Cell 310.850.8127

From: Gabrieleno Administration
To: Megan Black
Subject: Re: Project 7322 - Cultural Resources Inventory, Mayfair High School Athletic Field Improvement Project in the City of Lakewood, Los Angeles County, California
Date: Wednesday, April 23, 2025 3:14:27 PM
Attachments: image001.jpg
image002.jpg

Thank you

Best regards,
Brandy Salas

Tribal Administrative Coordinator
Gabrieleño Band of Mission Indians - Kizh Nation
PO Box 393
Covina, CA 91723
Office: 844-390-0787
website: www.gabrielenoindians.org

The region where Gabrieleño culture thrived for more than twelve thousand years encompassed most of Los Angeles County, more than half of Orange County and portions of Riverside and San Bernardino counties. It was the labor of the Gabrieleño who built the missions, ranchos and the pueblos of Los Angeles. They were trained in the trades, and they did the construction and maintenance, as well as the farming and managing herds of livestock. The Gabrieleño are the ones who did all this work, and they really are the foundation of the early economy of the Los Angeles area. That's a contribution that Los Angeles has not recognized--the fact that in its early decades, without the Gabrieleño, the community simply would not have survived.

From: Vanessa Minott <vminott@santarosa-nsn.gov>
Sent: Monday, April 21, 2025 7:46 AM
To: Megan Black <mblack@ultrasystems.com>
Subject: Re: Project 7322 - Cultural Resources Inventory, Mayfair High School Athletic Field Improvement Project in the City of Lakewood, Los Angeles County, California

Acha'i Tamit,
Thank you for reaching out to Santa Rosa Band of Cahuilla Indians. We defer any comments to Soboba Band of Luiseno Indians cultural resource department.

Respectfully,

Vanessa Minott,

Tribal Administrator



Santa Rosa Band of Cahuilla Indians

P.O. Box 391820

Anza, CA 92539

951-659-2700 ext. 102

760-668-0460 work cell

From: Megan Black
To: Vanessa Minott
Subject: RE: Project 7322 - Cultural Resources Inventory, Mayfair High School Athletic Field Improvement Project in the City of Lakewood, Los Angeles County, California
Date: Wednesday, April 23, 2025 2:51:00 PM
Attachments: image002.jpg
image003.png
image004.jpg

Thank you for providing a response for the Santa Rosa Band of Cahuilla Indians on this project.

Best regards,

Megan Black Doukakis | Assistant Project Archaeologist | M.A.

UltraSystems Environmental | WBE/DBE/SBE/WOSB
16431 Scientific Way Irvine, CA 92618
Office **949.788.4900 Ext. 228** Fax 949.788.4901
Cell 310.850.8127

Please note that I am working remotely. I can best be reached via email or cell.



please consider the environment before printing this e-mail. Thank you.

E-Mail Confidentiality Notice: The information contained in this e-mail message is intended only for the personal and confidential use of the recipient(s) named above. This message may be an attorney-client communication and/or work product and as such is privileged and confidential. If the reader of this message is not the intended recipient, you are hereby notified that you have received this document in error and that any review, dissemination, distribution, or copying of this message is strictly prohibited. If you have received this communication in error, please notify us immediately by e-mail, and delete the original message.

ATTACHMENT D

CHRIS Records Search Bibliography

Report List

7322 Mayfair HS Athletic Field Improvements

Report No.	Other IDs	Year	Author(s)	Title	Affiliation	Resources
LA-03707		1974	Clewlow, C. William Jr.	Preliminary Report of the Potential Impact on Archaeological Resources of the Proposed Gas Transmission Pipeline From Los Angeles Harbor to Yorba Linda - Southern California Gas Co.: Environmental Analysis	University of California, Los Angeles Archaeological Survey	30-000277
LA-05117		1999	Lapin, Philippe	Cultural Resource Assessment for Pacific Bell Mobile Services Facility La 654-01, County of Los Angeles, California	LSA Associates, Inc.	
LA-07873		2006	Wlodarski, Robert J.	Records Search and Field Reconnaissance for Royal Street Communications, Llc La0578a (sce Woodruff and South Street), Woodruff Avenue at South Street Lakewood, California 90713	Cellular, Archaeological Resource, Evaluations	
LA-07985		2006	Bonner, Wayne H. and Kathleen A. Crawford	Direct Ape Historic Architectural Assessment for Royal Street Communications, Llc Candidate La0579a (sce Cerritos Tower), Dumoni Avenue and 183rd Street, Cerritos, Los Angeles County, California	Michael Brandman Associates	
LA-10695		2010	Bonner, Wayne H. and Kathleen A. Crawford	Cultural Resources Records Search, Site Visit Results, and Direct APE Historic Architectural Assessment for Clearwire Candidate CA-LOS5835A/LA35XC835D (Cerritos Auto Square), 10903 Auto Square Drive, Cerritos, Los Angeles County, California	Michael Brandman Associates	19-188840
LA-10836		2008	Marr, Charlie	Bellflower Municipal Water System Master Plan	RBF Consulting	
LA-11429		2011	McKenna, Jeanette A.	Archaeological/cultural Resources Records Search, City of Lakewood Overview	McKenna et al.	19-004195, 19-186110, 19-187655, 19-187943, 19-188841, 19-188842
LA-12420		2013	Bonner, Wayne H. and Kathleen A. Crawford	Cultural Resources Records Search and Site Visit Results for T-Mobile West, LLC Candidate LA02654A (LA654A SCE/Woodruff), 5414 Woodruff Avenue, Lakewood, Los Angeles County, California	Environmental Assessment Specialists, Inc.	19-190631
LA-13096		2015	McKenna, Jeanette A.	A PHASE I CULTURAL RESOURCES INVESTIGATION OF THE MESA VERDE DEVELOPMENT, INC., GARDEN HOUSE PROJECT AREA IN BELLFLOWER, LOS ANGELES COUNTY, CALIFORNIA	McKENNA et al.	

Page 1 of 1

SCCIC 3/27/2025 11:22:30 AM

APPENDIX E1

GEOTECHNICAL REPORT

John R. Byerly
INCORPORATED

GEOTECHNICAL INVESTIGATION

MAYFAIR HIGH SCHOOL

SPORTS FIELD MODERNIZATION

LAKEWOOD, CALIFORNIA

BELLFLOWER UNIFIED SCHOOL DISTRICT

GEOTECHNICAL ENGINEERS • TESTING AND INSPECTION
2257 South Lilac Ave., Bloomington, CA 92316-2903
Bloomington (909) 877-1324 Riverside (909) 783-1910 Fax (909) 877-5210

John R. Byerly
INCORPORATED

GEOTECHNICAL INVESTIGATION

JANUARY 30, 2017

MAYFAIR HIGH SCHOOL

SPORTS FIELD MODERNIZATION

6000 NORTH WOODRUFF AVENUE

LAKEWOOD, CALIFORNIA

CLIENT:

BELLFLOWER UNIFIED SCHOOL DISTRICT

15330 WOODRUFF AVENUE

BELLFLOWER, CALIFORNIA

ATTENTION: DAN BUFFINGTON

RPT. NO.: 3982
FILE NO.: S-13836

DISTRIBUTION:
(2) CLIENT
(2) WESTBERG+WHITE ARCHITECTS

GEOTECHNICAL ENGINEERS • TESTING AND INSPECTION
2257 South Lilac Ave., Bloomington, CA 92316-2903
Bloomington (909) 877-1324 Riverside (909) 783-1910 Fax (909) 877-5210

INTRODUCTION

During August and September of 2016, an investigation of the soil conditions underling the proposed improvements associated with the sports field modernization at the existing Mayfair High School was conducted by this firm. The purpose of our investigation was to evaluate the surface and subsurface conditions at the site with respect to safe and economical foundation types, vertical and lateral bearing values, liquefaction and seismic settlement potential, support of concrete slabs-on-grade, and site preparation. Included in the recommendations are the seismic design parameters as required by the California Building Code and the ASCE Standard 7-10. Recommendations are also provided for the design of asphalt concrete and portland cement concrete pavement for the proposed parking and driveway areas. The geologic conditions attendant to the site have been evaluated by our consulting engineering geologist, Terra Geosciences, as required by the California Geological Survey. The geologic hazards report is presented herewith as Enclosure 9. Our geotechnical investigation, together with our conclusions and recommendations, is discussed in detail in the following report.

This report has been prepared for the exclusive use of the Bellflower Unified School District and their design consultants for specific application to the project described herein. Should the project be modified, the conclusions and recommendations presented in this report should be reviewed by the geotechnical engineer. Our professional services have been performed, our findings obtained, and our recommendations prepared in accordance with generally accepted engineering principles and practices. This warranty is in lieu of all other warranties, express or implied.

PROJECT DESCRIPTION

For the preparation of this report, we reviewed the project annotated fire access and code analysis site plan prepared by Westberg+White Architects. We understand that planned improvements to the existing Mayfair High School will consist of a synthetic track and field, bleachers, and Musco sports lighting at four pole locations. Proposed construction will also include a combined restroom/concession building and two ticket booths. Dugouts and storage buildings are planned for the new baseball and softball fields. The proposed structures will be permanent buildings incorporating concrete slab-on-grade floors. Relatively light foundation loads

are anticipated. Two practice fields will be constructed in the western portion of the sports field area. We also understand that a new parking lot and drive area are proposed immediately north and east of the track and field. As part of the development, a "water capture facility" is planned within the southerly practice field area to retain and dispose of storm water runoff. The site for the sports field modernization appears to be at the approximate desired grade, and no significant additional cuts and fills seem likely. The site configuration and proposed development are illustrated on Enclosure 1.

REVIEW OF PREVIOUS GEOTECHNICAL REPORTS

To assist in the preparation of this report, the following reports were reviewed:

(a) Geotechnical Investigation, Mayfair Middle/High School, Proposed Two-Story Classroom Buildings, 6000 North Woodruff Avenue, Lakewood, California, John R. Byerly, Inc., Rpt. No. 5130, January 15, 2009

(b) Geotechnical Investigation, Mayfair Middle/High School, Proposed Two-Story STEAM Building, 6000 North Woodruff Avenue, Lakewood, California, John R. Byerly, Inc., Rpt. No. 3505, January 13, 2016

A geotechnical investigation was performed for the then-proposed two-story classroom buildings by our firm as described in Reference (a). The subsurface explorations consisted of eight test borings drilled with a truck-mounted flight-auger to depths of up to 56.5 feet below the existing ground surface. Artificial fill consisting of loose to medium dense silty sands was encountered in all of these explorations to depths ranging from 2.0 feet to 3.0 feet. The natural soils immediately underlying the fill consisted of loose silty sands and sands, and soft clayey silts with traces of sands. All other natural soils encountered in these test borings were loose to medium dense sands and silty sands, and stiff clayey silts. The natural soils were generally loose and compressible to depths ranging from 3.0 feet to 20.0 feet. Ground water was encountered at depths of 16.0 to 17.5 feet. Bedrock was not encountered in these test borings. Laboratory testing included maximum density, consolidation, expansion index, and chemical test determinations. The near-surface soils encountered in these test borings have a very low to low expansion potential in accordance with ASTM D 4829. At that time, our analysis revealed a potential for liquefaction in Borings 1 and 8 below a depth of 11 feet. Liquefaction at

these depths is not likely to result in disruption of the foundation soils. The analysis also revealed a potential for a total dynamic settlement of 14.71 inches and 13.85 inches in Borings 1 and 8, respectively. This report presented grading and foundation design recommendations for the then-proposed two-story classroom buildings. Grading recommendations included overexcavation and recompaction of the existing soils below and within 6 feet of the proposed building areas, including roof overhang footings, to a depth of 6 feet below existing grade, 6 feet below proposed finished grade, or to a depth below the bottom of the footings equal to twice the width of the footings, whichever was deepest. The seismic design parameters presented in this investigation were based on the requirements of the 2007 California Building Code.

Reference (b) describes our additional investigation of the soil conditions underlying the area of the new two-story STEAM building. Due to the change in location and dimensions of the new building, three additional explorations were needed to conform to the requirements of the 2013 California Building Code and to confirm our initial findings. These additional borings were drilled with a limited-access track-mounted flight-auger to depths of up to 76.5 feet below the existing ground surface. Standard penetration tests were performed as these borings were advanced to determine the base of potentially liquefiable deposits. Artificial fill consisting of loose to medium dense silty sands was encountered in these test borings to depths of up to 3 feet. The natural soils immediately underlying the fill consisted of loose silty sands. The loose natural soils extended to a depth of about 10 feet. All other underlying natural soils encountered in these test borings generally consisted of medium dense to very dense silty sands, sands, and sands with silt. Free ground water was encountered at depths of 18.7 to 23.5 feet. Bedrock was not encountered in these test borings. The revised liquefaction analyses for Borings 1 and 8 (January 2009) and Borings 1A, 2A, and 3A (January 2016) indicated a potential for liquefaction for the soil in the depth interval of 15 feet to 57 feet. The soil below a depth range of 51 feet to 57 feet is very dense and is not subject to liquefaction. Liquefaction below a depth of 15 feet, and with the presence of a compacted fill mat for immediate foundation support, would not result in interruption of the foundation bearing soil. While the presence of a compacted fill mat will preclude the interruption of the foundation bearing soil, the liquefaction will result in dynamic settlement. This analysis indicates uniform soil conditions with respect to dynamic settlement and suggests that the maximum potential for

differential dynamic settlement would be about 2.1 inches. The seismic design parameters presented in this investigation were based on the requirements of the 2013 California Building Code.

SITE CONDITIONS

The existing Mayfair High School is located on the east side of Woodruff Avenue and south of Allington Street in the city of Lakewood. An Index Map showing the general vicinity of the site is presented on the following page. The coordinates of the site are latitude 33.8640° N and longitude 118.1127° W utilizing the North American Datum 1983 (NAD 1983). The current high school campus is active and is occupied by existing buildings and associated parking, driveways, hardscape, and landscape areas. The area to be developed is currently occupied by ball fields and a track and field. The adjacent surrounding properties are occupied by single-family residences. The area topography is generally flat, and the site slopes downward to the southeast at an average gradient of less than 1 percent.

FIELD AND LABORATORY INVESTIGATION

The soils underlying the proposed track and field, bleachers, combined restroom/concession building, two ticket booths, and sports lighting areas were explored by means of eight test borings drilled with a limited-access track-mounted flight-auger to depths of up to 71 feet below the existing ground surface. Also, five shallow borings were drilled to a depth of 6 feet in the vicinity of the new parking lot and driveway and ball field areas. The approximate locations of the explorations are indicated on Enclosure 1. The soils encountered were examined and visually classified by one of our field engineers. A summary of the soil classifications appears as Enclosure 2. The exploration logs show subsurface conditions at the dates and locations indicated, and may not be representative of other locations and times. The stratification lines presented on the logs represent the approximate boundaries between soil types, and the transitions may be gradual. A hollow-stem auger with an outside diameter of 8.5 inches was utilized. The inside diameter of the auger was 4.5 inches.

INDEX MAP

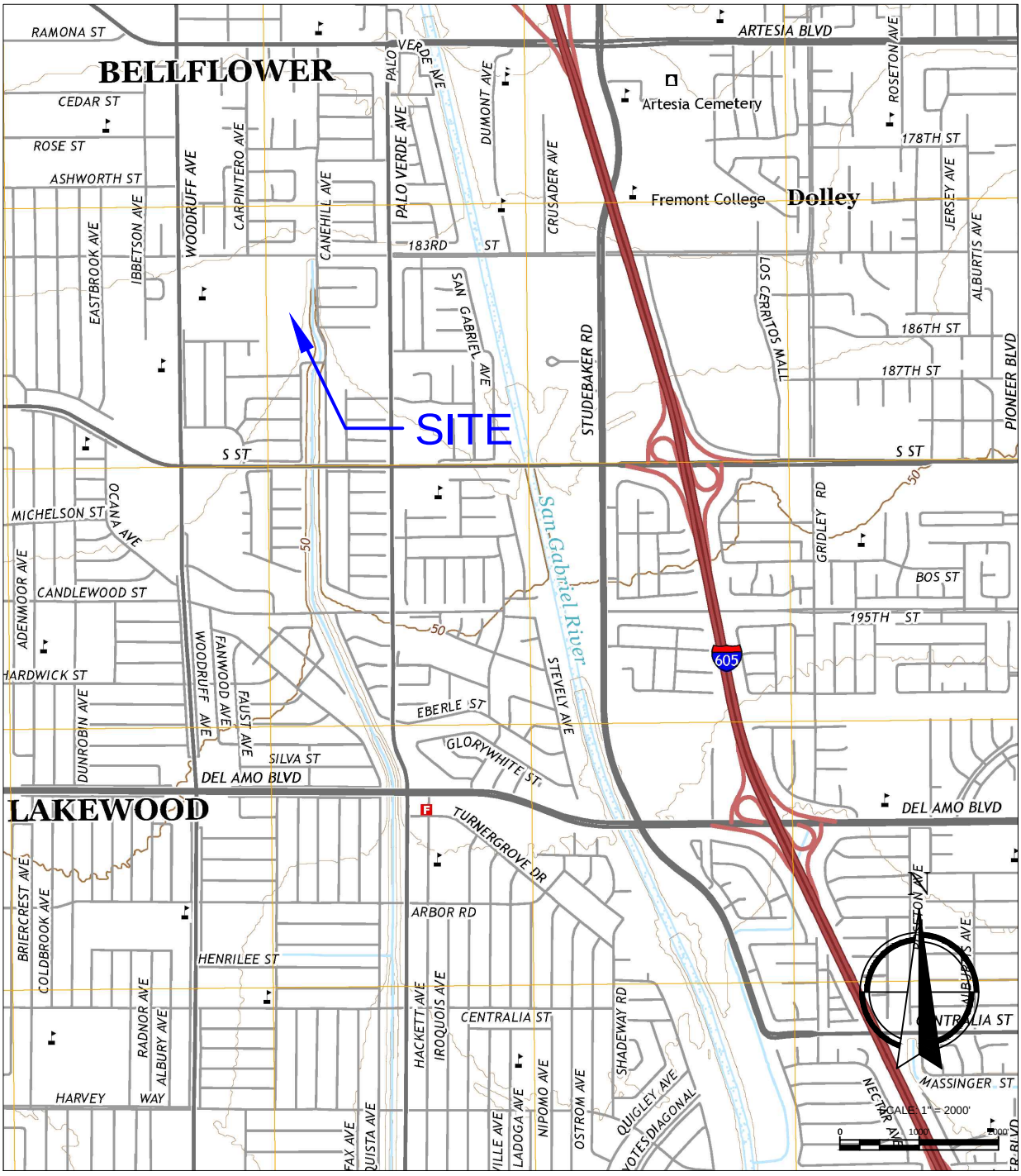

SOURCE DOCUMENTS: USGS LOS ALAMITOS QUADRANGLE, CALIFORNIA, 7.5 MINUTE SERIES, 2015

TOWNSHIP AND RANGE: SECTION 35, T3S, R12W

LATITUDE: 33.8640° N

LONGITUDE: 118.1127° W

John R. Byerly INCORPORATED

Rpt. No.: 3982
File No.: S-13836

Bulk and relatively undisturbed samples were obtained at selected levels within the explorations and returned to our laboratory for testing and evaluation. The driving energy or blow counts required to advance the sampler at each sample interval were also noted. Relatively undisturbed soil samples were recovered at various intervals in the borings with a California sampler. The California sampler was a 2.9-inch outside diameter, 2.5-inch inside diameter, split-barrel sampler lined with brass tubes. The sampler was 18 inches long. The sampler conformed to the requirements of ASTM D 3550. A 140-pound automatic trip hammer was lifted hydraulically and was dropped 30 inches for each blow. Standard penetration tests were performed as Boring 4 was advanced. The standard penetration test blow counts are shown on the log for Boring 4. Standard penetration testing was performed with a 2.0-inch outside diameter, 1.5-inch inside diameter, split-barrel sampler. The sampler was 18 inches long. The inside diameter of the sampler shoe was 1.4 inches. The sampler was unlined. The sampler conformed to the requirements of ASTM D 1586. A 140-pound automatic trip hammer was lifted hydraulically and was dropped 30 inches for each blow. An efficiency value of 1.0 was assumed for the automatic trip hammer.

Included in our laboratory testing were moisture/density determinations on all undisturbed samples. Optimum moisture content/maximum dry density relationships were established for typical soil types so that the relative compaction of the subsoils could be computed. Consolidation testing was conducted to evaluate the compressibility characteristics of the soil. Direct shear testing was conducted on selected samples to determine their strength parameters. A composite sample of potential subgrade soil was tested for gradation, sand equivalent, and “R” value for pavement design purposes. The moisture/density data are presented on the boring logs, Enclosure 2. Maximum density test data appear on Enclosure 3. The results of the consolidation and direct shear testing are shown on Enclosures 4 and 5, respectively. Subgrade soil test data are summarized on Enclosure 6. Chemical testing, comprised of pH, soluble sulfate, chloride, redox potential, and resistivity testing, was also performed. The chemical test results are presented in the “Chemical Test Results” section of this report.

SOIL CONDITIONS

Artificial fill consisting of loose to medium dense sands and silty sands with occasional concrete debris was encountered in Borings 1 through 9 to depths ranging from 1.0 foot to 2.0 feet. The fill appears to be associated with previous grading at the site. The natural soils consisted of loose to dense silty sands, sands, sands with silt, and stiff clayey silts. Consolidation tests indicate a potential for 4.8 to 8.0 percent hydroconsolidation in the upper natural soil. Based on published geologic reports for this area, dense alluvial soil is considered to extend to a depth of at least 100 feet beneath the site. Free ground water was encountered at depths of 18.3 to 25.3 feet. The depths of fill, depths to competent natural soil, and depths to ground water encountered are itemized on the following table:

Boring Number	Depth of Fill (ft.)	Depth to Competent Natural Soil (ft.)	Depth to Ground Water (ft.)
B-1	2.0	*	**
B-2	1.0	9.0	**
B-3	1.0	10.0	20.2
B-4	1.5	10.0	24.4
B-5	1.5	10.0	18.3
B-6	1.0	10.0	**
B-7	2.0	*	**
B-8	1.0	7.0	**
B-9	2.0	*	**
B-10	0.0	10.0	**
B-11	0.0	10.0	25.3
B-12	0.0	5.0	**
B-13	0.0	7.0	**

* Competent natural soil was not encountered within the maximum depth penetrated

** Free ground water was not encountered within the maximum depth penetrated

Bedrock was not encountered at our exploration locations. The near-surface soils encountered in our test borings are granular, non-plastic soil, and are considered to have a very low expansion potential in accordance with ASTM D 4829.

LIQUEFACTION AND DYNAMIC SETTLEMENT

Liquefaction is a phenomenon that occurs when a soil undergoes a transformation from a solid state to a liquefied condition due to the effects of increased pore-water pressure. Loose saturated soils with particle sizes in the medium sand to silt range are particularly susceptible to liquefaction when subjected to seismic ground shaking. Affected soils lose all strength during liquefaction, and foundation failure can occur.

Free ground water was encountered at depths of 16.0 feet to 17.5 feet as described in Reference (a). Free ground water was also encountered in the investigation described in Reference (b) at depths of 18.7 to 23.5 feet. Lastly, free ground water was encountered at our current boring locations at depths of 18.3 to 25.3 feet. Based on ground water data, our consulting engineering geologist estimates that the shallowest historic depth to ground water is expected to have been 15 feet below existing grade. For the purpose of our liquefaction analysis, we have conservatively assumed an historic high ground water level at a depth of 15 feet. We have also assumed that the upper 10 feet of existing soil will be recompacted and that the bottom of overexcavation would be scarified to a depth of at least 12 inches. The engineered fill was assumed to have an “N” value of 30.

It is anticipated that major earthquake ground shaking will occur during the lifetime of the proposed development from the seismically active Newport-Inglewood fault zone located approximately 6.7 miles southwest of the site. This fault would create the most significant earth shaking event. Based on an earthquake magnitude of 7.2, a peak horizontal ground acceleration of 0.591g is assigned to the site. To evaluate the potential for liquefaction and seismically induced settlement of the subsoils, the soils were analyzed for relative density. The most effective measurement of relative density of sands with respect to liquefaction potential is standard penetration resistance. Standard penetration tests were performed as Boring 4 was advanced to a depth of 71 feet to determine the base of potentially liquefiable deposits. Dense silty sands were encountered in Boring 4 at a depth of 60 feet and greater. The standard penetration test “N” values are presented on the boring log for Boring 4. In addition, the California sampler blow count data were also evaluated. Equivalent standard penetration test blow counts were estimated for Borings 3, 5, 10, and 11, which were drilled to depths of 21 feet to 31 feet. To convert the number of blow counts obtained from the California sampler to

equivalent standard penetration test blow counts, the California sampler blow counts were multiplied by a factor of 0.7.

The standard penetration data provided input for the LiquefyPro Version 4.3 program for liquefaction potential and seismically induced settlement. As recommended in Special Publication 117A (Revised) Release, "Guidelines for Evaluating and Mitigating Seismic Hazards in California, March 2009," a safety factor of 1.3 was used in this analysis. We have assumed that the upper 10 feet of soil will be overexcavated and replaced as engineered fill and that the bottom of overexcavation would be scarified to a depth of 12 inches. The engineered fill was assumed to have an "N" value of 30. The results of this evaluation for five borings are shown on Enclosure 8. The liquefaction analyses for all five borings indicate a potential for liquefaction for the soil in the depth interval of 15 feet to 61 feet. The soil below a depth of 61 feet is dense and is not subject to liquefaction. Liquefaction at a depth of 15 feet and deeper, with the presence of a compacted fill mat for immediate foundation support, would not result in interruption of the foundation bearing soil. While the presence of a compacted fill mat will preclude the interruption of the foundation bearing soil, the liquefaction will result in dynamic settlement. The analyses also estimate the potential for dynamic settlement. Boring 4 was drilled to a depth of 71 feet. The other four borings were drilled to depths of 21 feet to 31 feet. For each of the four shorter borings, the estimate of dynamic settlement attributable to the soil column encountered in that boring was added to the estimate of dynamic settlement from the bottom of that boring to a depth of 71 feet as obtained from Boring 4. Our estimate of the potential dynamic settlement in each boring, including that settlement obtained from the lower portion of Boring 4, is summarized in the following table.

Boring No.	Estimate of Dynamic Settlement from Boring Data (inches)	Projected Estimate of Additional Dynamic Settlement from the Lower Portion of Boring 4 (inches)	Total Estimate of Dynamic Settlement (inches)
3	5.9	8.3 (Boring 4)	14.2
4	14.4	---	14.4
5	2.4	12.0 (Boring 4)	14.4
10	2.6	12.0 (Boring 4)	14.6
11	6.0	8.3 (Boring 4)	14.3

The analysis and the soil classifications indicate uniform soil conditions with respect to dynamic settlement and suggest that the maximum potential for differential dynamic settlement would be about 0.4 inch. For a minimum building width of 27 feet, 0.4 inch of differential settlement would result in an angular distortion of 1:810, which we consider acceptable.

CONCLUSIONS

It appears that the existing artificial fill is non-uniform and undocumented, varying from loose to medium dense. In addition, the upper natural soils are loose to depths ranging from about 5.0 to 10.0 feet. To assure uniform and acceptable foundation conditions, we recommend the artificial fill and the loose upper natural soil within the new structure areas be densified by subexcavation and recompaction where existing improvements will allow. The existing artificial fill and loose natural soils should also be overexcavated in the areas of the planned Musco poles. Complete stabilization of the existing artificial fill under pavement areas would require removal and recompaction of the existing artificial fill. If areas of artificial fill deeper than 3 feet are encountered, the cost of complete removal and recompaction of the existing fill within pavement areas may not be warranted. Substantial stabilization can be obtained by removal and recompaction of the upper 3 feet of artificial fill. Recommendations for foundation design and slabs-on-grade are provided below for a very low (Expansion Index of 0 to 20) expansion potential. Subsequent to grading, the combined restroom/concession building and ticket booths may be safely founded on conventional continuous footings. The bleachers can be supported by shallow spread and/or continuous footings. The light poles will be supported on precast prestress piers placed in drilled or excavated holes and grouted into place. Detailed recommendations are provided below.

RECOMMENDATIONS

SHALLOW FOUNDATION DESIGN

Where the site is prepared as recommended, the bleachers, combined restroom/concession building, and ticket booths may be founded on conventional continuous and/or spread footings. These footings should be at least 12 inches wide, should be placed at least 12 inches below the lowest final adjacent grade, and should be designed for a maximum safe soil bearing pressure

of 2,000 pounds per square foot for dead plus live loads. This value may be increased by one-third for wind and seismic loading.

The continuous footings should be reinforced with at least four No. 5 bars, two placed near the top and two near the bottom of the footings. This recommendation for foundation reinforcement is based on geotechnical considerations. Structural design may require additional foundation reinforcement.

FOUNDATION DESIGN FOR LIGHT STANDARDS

Musco field lighting poles utilize precast and prestress pier footing elements. It is our understanding that pier diameters of 18 inches and 20 inches are preferred. For piers with embedment depths of 16 feet and 18 feet, an allowable average skin friction of 245 pounds per square foot and 275 pounds per square foot may be assumed, respectively. These values may be increased by one-third for wind or seismic loading. Lateral load capacity of the pier footings may be computed using any accepted pole footing formula assuming an allowable lateral earth pressure of 350 pounds per square foot per foot of depth to a maximum of 3,000 pounds per square foot. Where the precast pier footing is deepened to provide at least a 5-foot horizontal clear distance between the top edge of the footing and the face of an adjacent descending slope, no reduction in the allowable passive pressure is needed.

SEISMIC DESIGN PARAMETERS

The development of the seismic ground motion parameters is described in detail in the geologic hazards report performed in our behalf by Terra Geosciences (Enclosure 9). In summary, the California Building Code and the ASCE Standard 7-10 coefficients and factors are provided in the following table:

Factor or Coefficient	***Value***
Latitude	33.8640° N
Longitude	118.1127° W
Mapped S_S	1.540g
Mapped S_1	0.596g

Factor or Coefficient	*Value*
F_a	1.0
F_v	1.5
Final S_{MS}	1.540g
Final S_{M1}	0.894g
Final S_{DS}	1.027g
Final S_{D1}	0.596g
PGA	0.591g
T_L	8 seconds
Site Class	D

LATERAL LOADING

For shallow footings, resistance to lateral loads will be provided by passive earth pressure and basal friction. For footings bearing against compacted fill, passive earth pressure may be considered to develop at a rate of 350 pounds per square foot per foot of depth. Basal friction may be computed at 0.4 times the normal dead load. The resistance from basal friction and passive earth pressure may be combined directly without reduction. The allowable lateral resistance may be increased by one-third for wind and seismic loading.

SLABS-ON-GRADE

Concrete slab-on-grade design recommendations are listed below. The slab-on-grade recommendations assume underlying utility trench backfills and pad subgrade soils have been densified to a relative compaction of at least 90 percent (ASTM D 1557).

1. It is our opinion that the compacted fill soils should provide adequate support for concrete slabs-on-grade without the use of a gravel base. The final pad surface should be rolled to provide a smooth dense surface upon which to place the concrete.

2. The slab-on-grade floor should be at least 4 inches thick – structural considerations may require a thicker slab. The concrete slab-on-grade may be designed using a modulus of subgrade reaction of 250 pounds per cubic inch.

3. We recommended that the concrete slab-on-grade be reinforced with 6"x6"-W2.9/W2.9 welded wire fabric or No. 3 bars at 24 inches on-center each way or equivalent. All slab reinforcement should be supported by chairs or precast concrete blocks to ensure positioning of the reinforcement within the middle third of the slab. Lifting of unsupported reinforcement during concrete placement should not be allowed.

4. Slabs to receive moisture-sensitive floor coverings should be underlain with a moisture vapor retardant membrane, such as 10-mil Stego Wrap or equivalent. The moisture vapor retardant membrane should conform to ASTM E 1745-11 (Standard Specification for Plastic Water Vapor Retarders Used in Contact with Soil or Granular Fill under Concrete Slabs). The moisture vapor retardant membrane should be lapped into the footing excavation to provide full coverage of the subgrade soils. Punctures and/or holes cut for plumbing should be taped to minimize moisture emissions through the membrane. The project inspector and/or a representative of the geotechnical engineer should inspect the placement of the moisture vapor retardant membrane prior to covering. Installation of the moisture vapor retardant membrane should be performed in accordance with ASTM E 1643-11 (Standard Practice for Selection, Design, Installation and Inspection of Water Vapor Retarders Used in Contact with Earth or Granular Fill under Concrete Slabs).

5. A 2-inch layer of clean sand (SE>30, no more than 7 percent passing the No. 200 sieve) should be placed over the moisture vapor retardant membrane to promote uniform setting of the concrete. Concrete should be placed on the sand blanket when the sand is damp. Excess moisture should not be allowed to accumulate within the sand blanket prior to concrete placement. At the time of concrete placement, the moisture content of the sand blanket above the moisture vapor retardant membrane should not exceed 2 percent <u>below</u> the optimum moisture content.

6. In lieu of placing the sand blanket described above and to further minimize future moisture vapor emissions through the slabs-on-grade, the slab concrete may be placed directly on the moisture vapor retardant membrane. Placing concrete directly on the moisture vapor retardant membrane will increase shrinkage and curling forces and make finishing more difficult. To accommodate these concerns, the structural engineer should provide appropriate mix design criteria for concrete placed directly on the moisture vapor retardant membrane.

7. We recommend a maximum water-cement ratio of 0.50 for all building slab concrete. Architectural or structural considerations may require the utilization of a lower water-cement ratio. Where slab concrete is placed directly on the moisture vapor retardant membrane without the presence of an intervening layer of absorptive sand, a lower maximum water-cement ratio may be needed.

8. Preparation of the concrete floor slabs should conform to ASTM F 710-11 (Standard Practice for Preparing Concrete Floors to Receive Resilient Flooring) and the manufacturer's recommendations. Moisture vapor emission tests should be performed to verify acceptable moisture emission rates prior to flooring installation.

SITE PREPARATION

We assume that the site will be prepared in accordance with the California Building Code and the current City of Lakewood Grading Ordinance. The recommendations presented below are to establish additional grading criteria. These recommendations should be considered preliminary and are subject to modification or expansion based on a geotechnical review of the project foundation and grading plans.

- All areas to be graded should be stripped of organic matter, man-made obstructions, and other deleterious materials. Underground utilities should be removed and relocated or abandoned. All cavities created during site clearing should be cleaned of loose and disturbed soil, shaped to provide access for construction equipment, and backfilled with fill placed and compacted as described below.

- Existing artificial fill should be removed from all building areas, the bleacher areas, pavement areas, and from the areas of the planned Musco field lighting poles. The depth of existing artificial fill encountered in our borings ranged from 1.0 foot to 2.0 feet. The existing artificial fill may extend to greater depths in areas not explored. The removals should extend beyond the building and bleacher areas and beyond the field lighting pole locations a horizontal distance at least equal to the depth of removal or 5 feet, whichever distance is greater. The existing artificial fill need not be removed to depths greater than 3 feet within proposed pavement areas. Organic matter and other unsuitable debris

should be separated from the removed fill and hauled from the site. The removed artificial fill should be stockpiled pending replacement or be placed in areas previously prepared.

- Overexcavation

    - Combined restroom/concession building, ticket booths, and bleacher areas and Musco field lighting pole areas – The upper natural soil encountered in our explorations is loose and is not considered competent. The depth of loose natural soil encountered in our explorations ranged from 5.0 feet to 10.0 feet below the presently existing ground surface. The natural soil should be over-excavated to a depth of at least 10 feet. The overexcavation should extend beyond the building, ticket booths, and bleacher areas and pole locations a horizontal distance at least equal to the depth of overexcavation below the final ground surface. A representative of this firm should observe the bottom of all excavations.

    - Hardscape areas – Should natural soil be encountered at a depth of less than 3 feet below portland cement concrete pavement areas, the soils exposed in the subexcavated surface should be scarified to a minimum depth of 12 inches.

- Approved subexcavated surfaces and all other surfaces to receive fill should be scarified to a minimum depth of 12 inches, moisture conditioned to near the optimum moisture content, and densified to a minimum relative compaction of 90 percent (ASTM D 1557).

- The on-site soils should provide adequate quality fill material provided they are free from significant organic matter and other deleterious materials and are at acceptable moisture contents. Any asphalt and portland cement concrete removed during site clearing may be pulverized into fragments not exceeding 3 inches in greatest dimension and incorporated into the fill at all levels in the building areas. Pulverized asphalt and concrete should not be placed at the planned field lighting pole locations. Import fill should be inorganic, granular, non-expansive soil free from rocks or lumps greater than 8 inches in maximum dimension and should exhibit a very low expansion potential (expansion index less than 21), negligible sulfate content (less than 1,000 ppm soluble

sulfate by weight), and low corrosion potential. Prior to bringing import fill to the site, the contractor should obtain certification to verify that the proposed import meets the State of California Department of Toxic Substance Control (DTSC) environmental standards. Proposed import should be sampled at the source and tested by this firm for expansion index, soluble sulfate content, and corrosion potential.

- All fill should be placed in 8-inch or less lifts, moisture conditioned to near the optimum moisture content, and densified to a minimum relative compaction of 90 percent (ASTM D 1557).

- The surface of the site should be graded to provide positive drainage away from the structures. Drainage should be directed to established swales and then to appropriate drainage structures to minimize the possibility of erosion. Water should not be allowed to pond adjacent to footings.

SHRINKAGE AND SUBSIDENCE

Volume change in going from cut to fill conditions is anticipated where near-surface grading will occur. Assuming the fill will be compacted to an average relative compaction of 93 percent, an average cut-fill shrinkage of 15 percent is estimated. Further volume loss will occur through subsidence during preparation of the natural ground surface. Although the contractor's methods and equipment utilized in preparing the natural ground will have a significant effect on the amount of natural ground subsidence that will occur, our experience indicates as much as 0.15 foot of subsidence in areas prepared to receive fill should be anticipated. These values are exclusive of losses due to stripping or removal of subsurface obstructions.

PRELIMINARY ASPHALT CONCRETE AND PORTLAND CEMENT CONCRETE PAVEMENT

Representative samples of upper soils at the site have been tested for relevant subgrade properties. A Traffic Index of 5.0 was assumed for interior parking and driveway areas for conventional vehicular traffic and fire lanes, and a Traffic Index of 6.0 was assumed where heavier truck or bus traffic will be accommodated. Recommendations for portland cement concrete (PCC) for hardscape are also presented below. In conjunction with the test data

shown on Enclosure 6, we believe the sections presented on the following table should provide durable pavement.

Location	TI	"R" Value	Thickness (Inches) Asphalt Concrete	Aggregate Base
Pavement areas for conventional passenger cars and light trucks	5.0	48	2.5	4.0
Pavement areas for heavier trucks and busses	6.0	48	3.0	5.0

Location	TI	"R" Value	Thickness (Inches) Portland Cement Concrete
Pavement areas for conventional passenger cars and light trucks	5.0	48	4.5
Pavement areas for heavier trucks or busses	6.0	48	6.5

The foregoing thickness is for unreinforced concrete placed directly on the compacted subgrade soil. Aggregate base is not geotechnically required for the PCC pavement sections; however, if aggregate base is to be utilized for the PCC pavement, we recommend a minimum of 4 inches of aggregate base placed over the 12 inches of compacted subgrade soil. The design engineer may wish to provide some level of reinforcement to minimize the width of shrinkage cracks.

For hardscape areas to receive only pedestrian traffic, we recommend the PCC pavement be at least 3.5 inches in thickness and be placed directly on the compacted subgrade soil. Prior to the placement of hardscape concrete, we recommend that the final subgrade surface be scarified to a depth of at least 12 inches, moisture conditioned to within 2 percent of the optimum moisture content, and densified to a minimum relative compaction of 90 percent (ASTM D 1557). There are no geotechnical conditions indicating the need for reinforcement of the concrete pavement. The design engineer may wish to provide some level of reinforcement to minimize the width of shrinkage cracks.

Prior to the placement of aggregate base, we recommend that the final subgrade surface be scarified to a depth of at least 12 inches, moisture conditioned to within 2 percent of the optimum moisture content, and compacted to a minimum relative compaction of at least 90 percent (ASTM D 1557).

Concrete should be proportioned for a maximum slump of 4 inches and to achieve a minimum compressive strength of 3,000 psi at 28 days. If additional workability is desired, a plasticizing or water-reducing admixture should be utilized in lieu of increasing the water content. The control joints for the 3.5-inch-thick pavement should be spaced no more than 10.5 feet on-center each way. The control joints for the 4.5-inch-thick pavement should be spaced no more than 13.5 feet on-center each way. The control joints for the 6.5-inch-thick pavement should be spaced no more than 19.5 feet on-center each way. Control joints should be established either by hand groovers, plastic inserts, or saw-cutting as soon as the concrete can be cut without dislodging aggregate. Cutting the control joints the day after the concrete pour will likely result in uncontrolled shrinkage cracks. Concrete should not be placed in hot and windy weather. Water curing should commence immediately after the final finishing and should continue for at least 7 days.

The above designs are preliminary and for estimating purposes only. We recommend that during the process of rough grading, observation and additional testing of the actual subgrade soils should be performed. Final pavement design sections can then be determined. The foregoing pavement sections assume that utility trench backfill below all proposed pavement areas will be compacted to at least 90 percent relative compaction. The upper 12 inches of subgrade below asphalt concrete pavement areas should be compacted to at least 90 percent relative compaction. Aggregate base should be densified to at least 95 percent relative compaction. Suggested specifications for aggregate base material are presented on Enclosure 7.

CHEMICAL TEST RESULTS

The chemical test results from a sample taken from Boring 3 between the ground surface and a depth of 7 feet are shown on the following table:

Analysis	Result	Units
Saturated Resistivity	1550	ohm-cm
Chloride	80	ppm
Sulfate	90	ppm
pH	7.7	pH units
Redox Potential	171	mV

The chemical test results from a sample taken from Boring 11 between the ground surface and a depth of 7 feet are shown on the following table:

Analysis	Result	Units
Saturated Resistivity	1200	ohm-cm
Chloride	80	ppm
Sulfate	140	ppm
pH	8.0	pH units
Redox Potential	172	mV

The soil tested in Borings 3 and 11 exhibited negligible soluble sulfate content; therefore, sulfate-resistant concrete will not be required for this project. The soil in Borings 3 and 11 exhibits a low saturated resistivity and may be corrosive to buried ferrous-metal pipes. All other tested parameters are consistent with low corrosion potential. If buried ferrous metal pipe is to be utilized, we recommend further sampling and testing be performed during construction. If the test results continue to indicate a high corrosion potential, recommendations for corrosion protection should be obtained from a corrosion engineer.

FOUNDATION AND GRADING PLAN REVIEW

The project foundation and grading plans should be reviewed by the geotechnical engineer. Additional recommendations may be required at that time.

CONSTRUCTION OBSERVATIONS

All grading operations, including the preparation of the natural ground surface, should be observed and compaction tests performed by this firm. No fill should be placed on any prepared surface until that surface has been evaluated by the representative of the geotechnical engineer. The footing excavations for the bleachers, combined restroom/ concession building, and ticket booths should be evaluated by a representative of the geotechnical engineer. A representative of the geotechnical engineer should be present during the excavation of the field lighting pole footings to verify embedment depths and to observe the bottom of all excavations prior to placement of the precast piers.

The conclusions and recommendations presented in this report are based upon the field and laboratory investigation described herein and represent our best engineering judgment. Should conditions be encountered in the field that appear different from those described in this report, we should be contacted immediately in order that appropriate recommendations might be prepared.

Respectfully submitted,

JOHN R. BYERLY, INC.



John R. Byerly, Geotechnical Engineer
President

JRB:MLL:jet

Enclosures: (1) Plot Plan
(2) Test Boring Logs
(3) Maximum Density Determinations
(4) Consolidation Test Results
(5) Direct Shear Test Results
(6) Subgrade Soil Tests
(7) Specifications for Aggregate Base
(8) Liquefaction and Dynamic Settlement Analysis
(9) Geologic Hazards Report

LEGEND

APPROX. BORING LOCATION

ALLINGTON STREET

WOODRUFF AVE.

CANFIELD AVE.

CLASSROOM UNIT P

CLASSROOM UNIT N

RELOCATABLE CLASSROOMS

LUNCH SHELTER

GYM - C

PRACTICE FIELD

TRACK & FIELD

SOFTBALL FIELD

BASEBALL FIELD

PARKING LOT

PROJECT #2 - PARKING OVER DRAINAGE CHANNEL

PROJECT #1

DUGOUTS/STORAGE BUILDINGS

NEW 5 X 7 TICKET BOOTH

NEW WOMENS RESTROOM

RESTROOM/CONCESSIONS BUILDING

EXISTING NON-ACCESSIBLE MENS AND WOMENS RESTOOM NOT IN SCOPE OF WORK

EXISTING ACCESSIBLE MENS AND WOMENS RESTOOM (A# 69608) NOT IN SCOPE OF WORK

EXISTING FIRE LANE

PROPOSED WATER CAPTURE FACILITY

(E) FIRE HYDRANT

B-1 B-2 B-3 B-4 B-5 B-6 B-7 B-8 B-9 B-10 B-11 B-12 B-13

N

SCALE: 1" = 150'

0 150' 300'

SOURCE DOCUMENT: WESTBERG+WHITE, INC.

John R. Byerly INCORPORATED	GEOTECHNICAL INVESTIGATION	MAYFAIR HIGH SCHOOL 6000 NORTH WOODRUFF AVENUE LAKEWOOD, CALIFORNIA	Enclosure 1 Rpt. No.: 3982 File No.: S-13836

Boring 1

Boring Date: 8/15/2016
Surface Elevation:
Drilling Method: Truck-Mounted Flight-Auger

Depth	Std. Pen. "N" Value Blows/Ft.	Dry Density (PCF)	Moisture Content (%)	Rel. Compaction (%)	Water Table		
0	36	105	3.5	89	GWT not encountered	SM	Gray silty fine sand, damp and medium dense (FILL)
	14	97	10.1	82		SM	Gray silty fine sand, moist and loose (ORIGINAL GROUND)
5	15	99	9.2	84			
10							Total Depth at 6.0 Feet No Free Ground Water Encountered
15							
20							
25							
30							
35							

SuperLog CivilTech Software, USA www.civiltech.com File: C:\Superlog4\PROJECTS-13836 (Rpt. No. 3982).log Date: 10/13/2016

LOG OF BORING

Boring 2

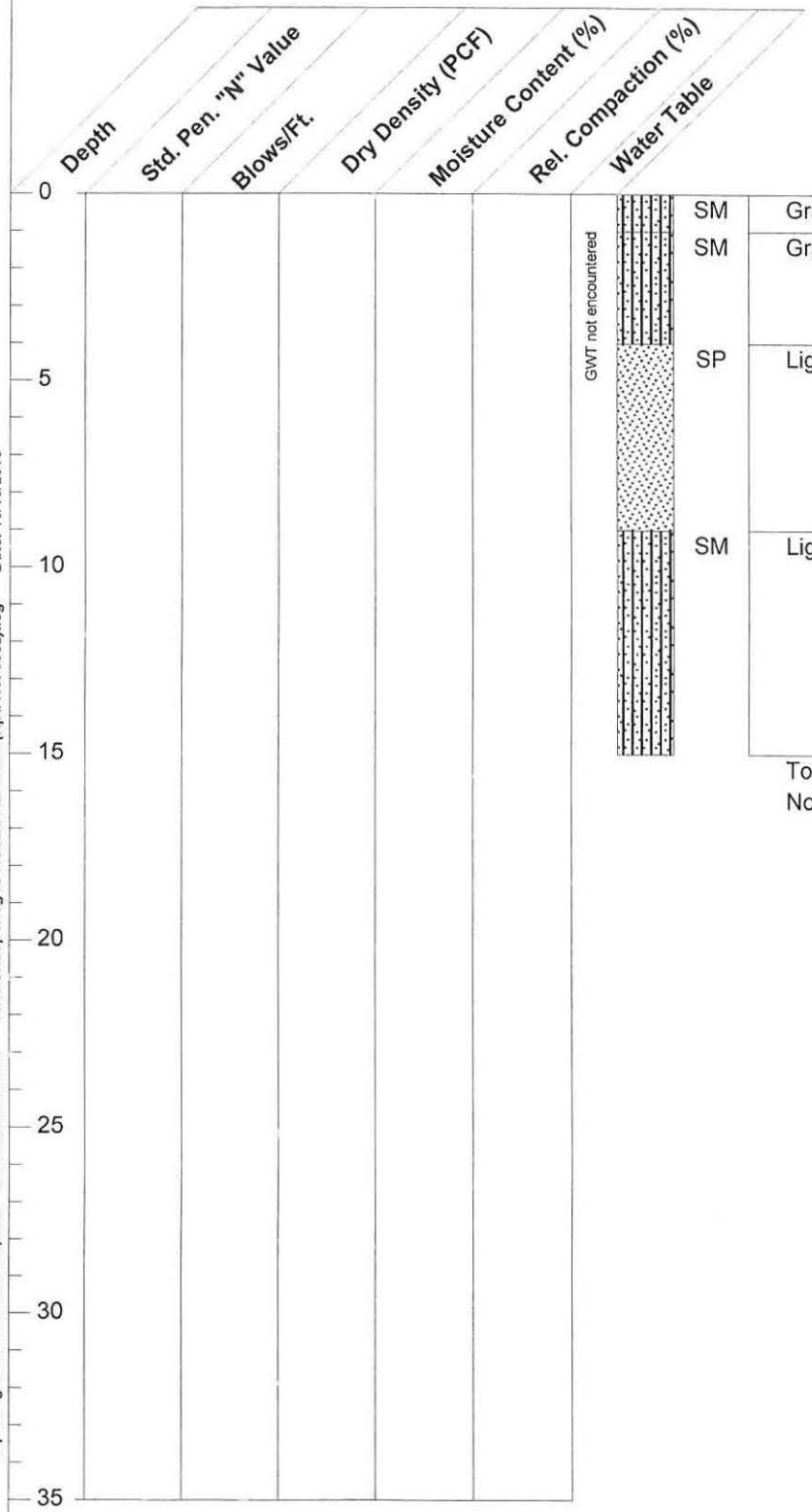

Boring Date: 8/15/2016
Surface Elevation:
Drilling Method: Truck-Mounted Flight-Auger

SM	Gray silty fine sand, damp and medium dense (FILL)
SM	Gray silty fine sand, moist and loose (ORIGINAL GROUND)
SP	Light gray fine sand, damp and loose
SM	Light gray-brown silty fine sand, moist and medium dense

Total Depth at 15.0 Feet
No Free Ground Water Encountered

SuperLog CivilTech Software, USA www.civiltech.com File: C:\Superlog4\PROJECTS-13836 (Rpt. No. 3982).log Date: 10/13/2016

LOG OF BORING

Boring 3

Boring Date: 8/15/2016
Surface Elevation:
Drilling Method: Truck-Mounted Flight-Auger

Depth	Std. Pen. "N" Value Blows/Ft.	Dry Density (PCF)	Moisture Content (%)	Rel. Compaction (%)	Water Table		
0						SM	Gray-brown silty fine sand, damp and medium dense (FILL)
	18	105	2.7	87		SP	Light gray fine sand, dry and medium dense (ORIGINAL GROUND)
	15	95	3.6	79			- becoming damp and loose at 3.0 feet
5	11	98	3.1	81			
	11	98	3.4	81		SP	Light gray-brown fine sand, damp and loose
10	18	104	3.8	86			- becoming medium dense at 10.0 feet
15	17	104	14.0	88		SM	Gray silty fine sand, very moist and medium dense
20	16	105	22.9	89	▼	SM	Dark gray silty fine sand, very moist and medium dense
							- becoming saturated at 20.2 feet
25	20	---	---	---			
30	19	103	23.4	87		SM	Dark gray silty fine sand, very moist and dense
35							Total Depth at 31.0 Feet
							Free Ground Water Encountered at 20.2 Feet

SuperLog CivilTech Software, USA www.civiltech.com File: C:\Superlog4\PROJECTS\S-13836 (Rpt. No. 3982).log Date: 1/27/2017

LOG OF BORING

Boring 4

Boring Date: 8/15/2016
Surface Elevation:
Drilling Method: Truck-Mounted Flight-Auger

Depth	Std. Pen. "N" Value	Blows/Ft.	Dry Density (PCF)	Moisture Content (%)	Rel. Compaction (%)	Water Table		
0		22	104	3.1	88		SM	Gray-brown silty fine sand with concrete debris, damp and medium dense (FILL)
		11	97	4.1	80		SP	
	9	12	100	3.0	83		SP	Gray fine sand, damp and loose (ORIGINAL GROUND) Light gray fine sand, dry and loose
10	10	14	100	15.1	85		SM	Gray silty fine sand, very moist and medium dense
	15	16	---	---	---			
20	13	18	103	22.7	87		SM	Gray-brown silty fine sand, very moist and medium dense
	10	14	99	27.0	85	▼		- becoming saturated at 24.4 feet
30	11	16	---	---	---			
	15						SP	Gray fine sand, wet and medium dense
40	22							
	13						ML	Dark gray clayey silt, very moist and stiff
50	21							
	20						SM	Olive-gray silty fine sand, wet and medium dense
60	32						SM	Olive-gray silty fine sand, wet and dense
	35							
70								

SuperLog CivilTech Software, USA www.civiltech.com File: C:\Superlog4\PROJECTS\S-13836 (Rpt. No. 3982).log Date: 10/13/2016

LOG OF BORING

Boring 4

Boring Date: 8/15/2016
Surface Elevation:
Drilling Method: Truck-Mounted Flight-Auger

Depth	Std. Pen. "N" Value	Blows/Ft.	Dry Density (PCF)	Moisture Content (%)	Rel. Compaction (%)	Water Table		
70	46						SM	Olive-gray silty fine sand, wet and dense
								Total Depth at 71.0 Feet
								Free Ground Water Encountered at 24.4 Feet
80								
90								
100								
110								
120								
130								
140								

SuperLog CivilTech Software, USA www.civiltech.com File: C:\Superlog4\PROJECTS-13836 (Rpt. No. 3982).log Date: 1/30/2017

LOG OF BORING

Boring 5

Boring Date: 8/15/2016
Surface Elevation:
Drilling Method: Truck-Mounted Flight-Auger

Depth	Std. Pen. "N" Value Blows/Ft.	Dry Density (PCF)	Moisture Content (%)	Rel. Compaction (%)	Water Table		
0	16	102	2.6	84		SP	Light gray-brown fine sand, dry and loose (FILL)
	6	93	3.7	77		SP	Light gray-brown fine sand, damp and loose (ORIGINAL GROUND)
5	8	94	3.6	78			
	10	97	2.8	80			- becoming dry at 7.0 feet
10	19	105	4.1	87			- becoming damp and medium dense at 10.0 feet
15	19	100	13.2	85	▼	SM	Gray-brown silty fine sand, very moist and medium dense
							- becoming saturated at 18.3 feet
20	17	---	---	---			

Total Depth at 21.0 Feet
Free Ground Water Encountered at 18.3 Feet

25
30
35

SuperLog CivilTech Software, USA www.civiltech.com File: C:\Superlog4\PROJECTS-13836 (Rpt. No. 3982).log Date: 1/27/2017

LOG OF BORING

Boring 6

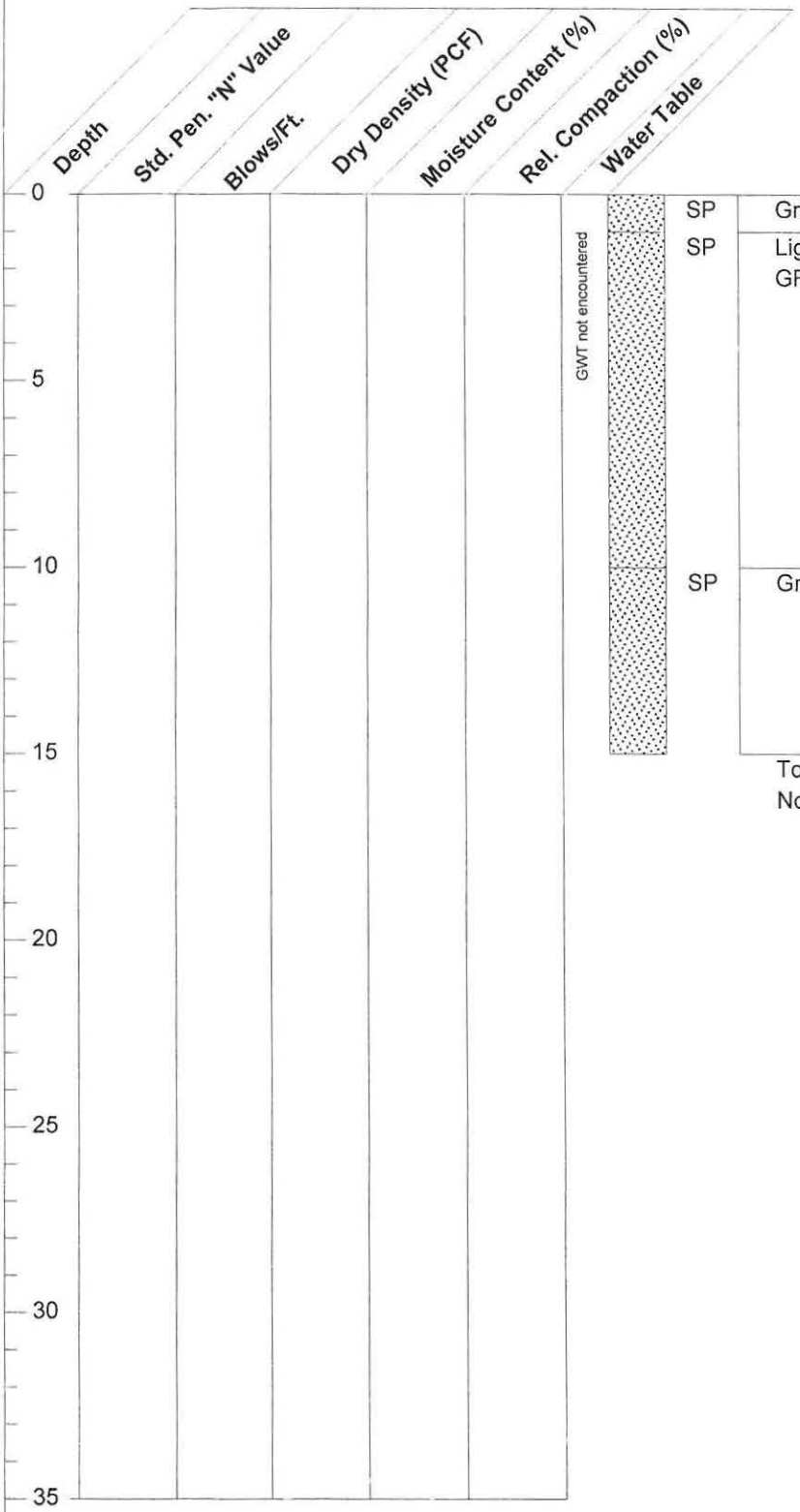

Boring Date: 8/15/2016
Surface Elevation:
Drilling Method: Truck-Mounted Flight-Auger

SP	Gray-brown fine sand, damp and medium dense (FILL)
SP	Light gray-brown fine sand, damp and loose (ORIGINAL GROUND)
SP	Gray-brown fine sand, damp and medium dense

Total Depth at 15.0 Feet
No Free Ground Water Encountered

SuperLog CivilTech Software, USA www.civiltech.com File: C:\Superlog4\PROJECTS-13836 (Rpt. No. 3982).log Date: 10/13/2016

LOG OF BORING

Boring 7

Boring Date: 8/15/2016
Surface Elevation:
Drilling Method: Truck-Mounted Flight-Auger

Depth	Std. Pen. "N" Value Blows/Ft.	Dry Density (PCF)	Moisture Content (%)	Rel. Compaction (%)	Water Table		
0	16	100	8.9	85	GWT not encountered	SM	Dark gray-brown silty fine sand, moist and medium dense (ORIGINAL GROUND)
	10	94	7.3	80		SM	Gray-brown silty sand, moist and loose
5	12	97	8.0	82			
							Total Depth at 6.0 Feet
							No Free Ground Water Encountered
10							
15							
20							
25							
30							
35							

SuperLog CivilTech Software, USA www.civiltech.com File: C:\Superlog4\PROJECTS-13836 (Rpt. No. 3982).log Date: 10/13/2016

LOG OF BORING

Boring 8

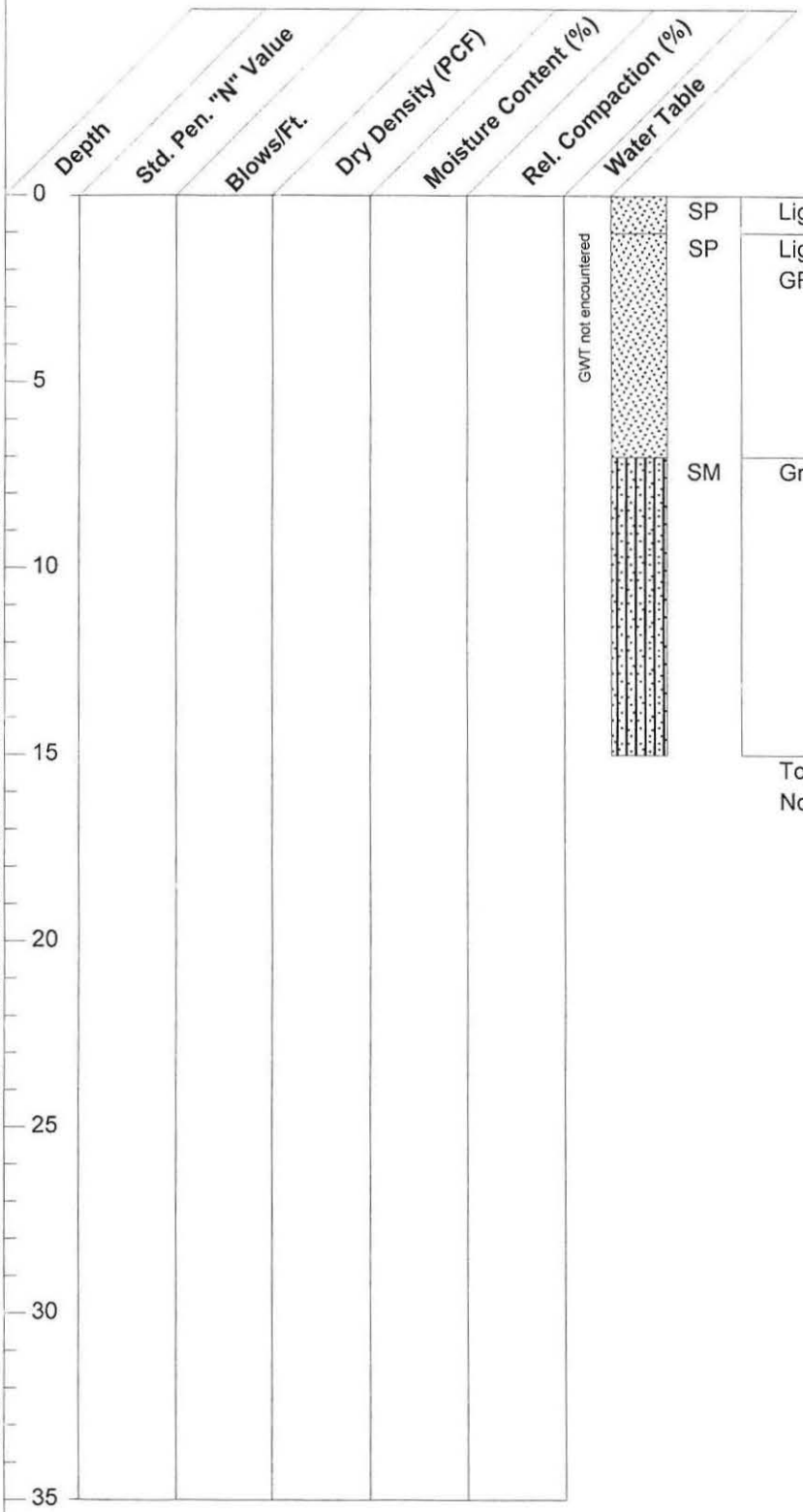

Boring Date: 8/15/2016
Surface Elevation:
Drilling Method: Truck-Mounted Flight-Auger

SP	Light gray-brown fine sand, damp and medium dense (FILL)
SP	Light gray-brown fine sand, damp and loose (ORIGINAL GROUND)
SM	Gray-brown silty fine sand, moist and medium dense

Total Depth at 15.0 Feet
No Free Ground Water Encountered

SuperLog CivilTech Software, USA www.civiltech.com File: C:\Superlog4\PROJECTS-13836 (Rpt. No. 3982).log Date: 10/13/2016

LOG OF BORING

Boring 9

Boring Date: 8/15/2016
Surface Elevation:
Drilling Method: Truck-Mounted Flight-Auger

Depth	Std. Pen. "N" Value Blows/Ft.	Dry Density (PCF)	Moisture Content (%)	Rel. Compaction (%)	Water Table		
0	23	105	1.4	87	GWT not encountered	SP	Gray-brown fine sand, dry and medium dense (FILL)
	11	98	3.9	81		SP	Gray-brown fine sand, damp and loose (ORIGINAL GROUND)
5	13	100	6.3	83			

Total Depth at 6.0 Feet
No Free Ground Water Encountered

10
15
20
25
30
35

SuperLog CivilTech Software, USA www.civiltech.com File: C:\Superlog4\PROJECTS-13836 (Rpt. No. 3982).log Date: 10/13/2016

LOG OF BORING

Boring 10

Boring Date: 8/15/2016
Surface Elevation:
Drilling Method: Truck-Mounted Flight-Auger

Depth	Std. Pen. "N" Value Blows/Ft.	Dry Density (PCF)	Moisture Content (%)	Rel. Compaction (%)	Water Table		
0	37	104	3.6	88	GWT not encountered	SM	Light gray-brown silty fine sand, damp and medium dense (ORIGINAL GROUND)
	24	96	5.5	81			- becoming loose at 3.0 feet
5	21	93	6.2	79		SM	Gray silty fine sand, damp and loose
	24	97	4.5	82			
10	15	104	6.5	86		SP	Gray-brown fine sand, damp and medium dense
15	18	105	14.5	87		SP	Dark gray-brown fine sand, very moist and medium dense
20	24	---	---	---			
25							Total Depth at 21.0 Feet No Free Ground Water Encountered
30							
35							

SuperLog CivilTech Software, USA www.civiltech.com File: C:\Superlog4\PROJECTS-13836 (Rpt. No. 3982).log Date: 10/13/2016

LOG OF BORING

Boring 11

Boring Date: 8/15/2016
Surface Elevation:
Drilling Method: Truck-Mounted Flight-Auger

Depth	Std. Pen. "N" Value Blows/Ft.	Dry Density (PCF)	Moisture Content (%)	Rel. Compaction (%)	Water Table		
0	12	97	9.0	82		SM	Gray-brown silty fine sand, moist and loose (ORIGINAL GROUND)
	9	92	7.7	78			
5	11	96	8.3	81			
	10	96	7.9	80		SP	Gray-brown fine sand with silt, moist and loose
10	16	103	11.2	86			- becoming medium dense at 10.0 feet
15	18	105	15.7	87		SP	Gray-brown fine sand, very moist and medium dense
20	16	101	24.0	86		SM	Dark gray silty fine sand, very moist and medium dense
25	21	105	20.1	89	▼		- becoming saturated at 25.3 feet
30	19	103	23.8	87		SM	Gray-brown silty fine sand, very moist and medium dense
35							Total Depth at 31.0 Feet Free Ground Water Encountered at 25.3 Feet

SuperLog CivilTech Software, USA www.civiltech.com File: C:\Superlog4\PROJECTS-13836 (Rpt. No. 3982).log Date: 10/13/2016

LOG OF BORING

Boring 12

Boring Date: 8/15/2016
Surface Elevation:
Drilling Method: Truck-Mounted Flight-Auger

Depth	Std. Pen. "N" Value Blows/Ft.	Dry Density (PCF)	Moisture Content (%)	Rel. Compaction (%)	Water Table		
0	21	103	2.5	87	GWT not encountered	SM	Light gray silty fine sand, dry and medium dense (ORIGINAL GROUND)
	14	100	1.8	83		SP	Light gray-brown fine sand, dry and loose
5	14	103	2.1	85			- becoming medium dense at 5.0 feet
							Total Depth at 6.0 Feet No Free Ground Water Encountered
10							
15							
20							
25							
30							
35							

SuperLog CivilTech Software, USA www.civiltech.com File: C:\Superlog4\PROJECTS-13836 (Rpt. No. 3982).log Date: 10/13/2016

LOG OF BORING

Boring 13

Boring Date: 8/15/2016
Surface Elevation:
Drilling Method: Truck-Mounted Flight-Auger

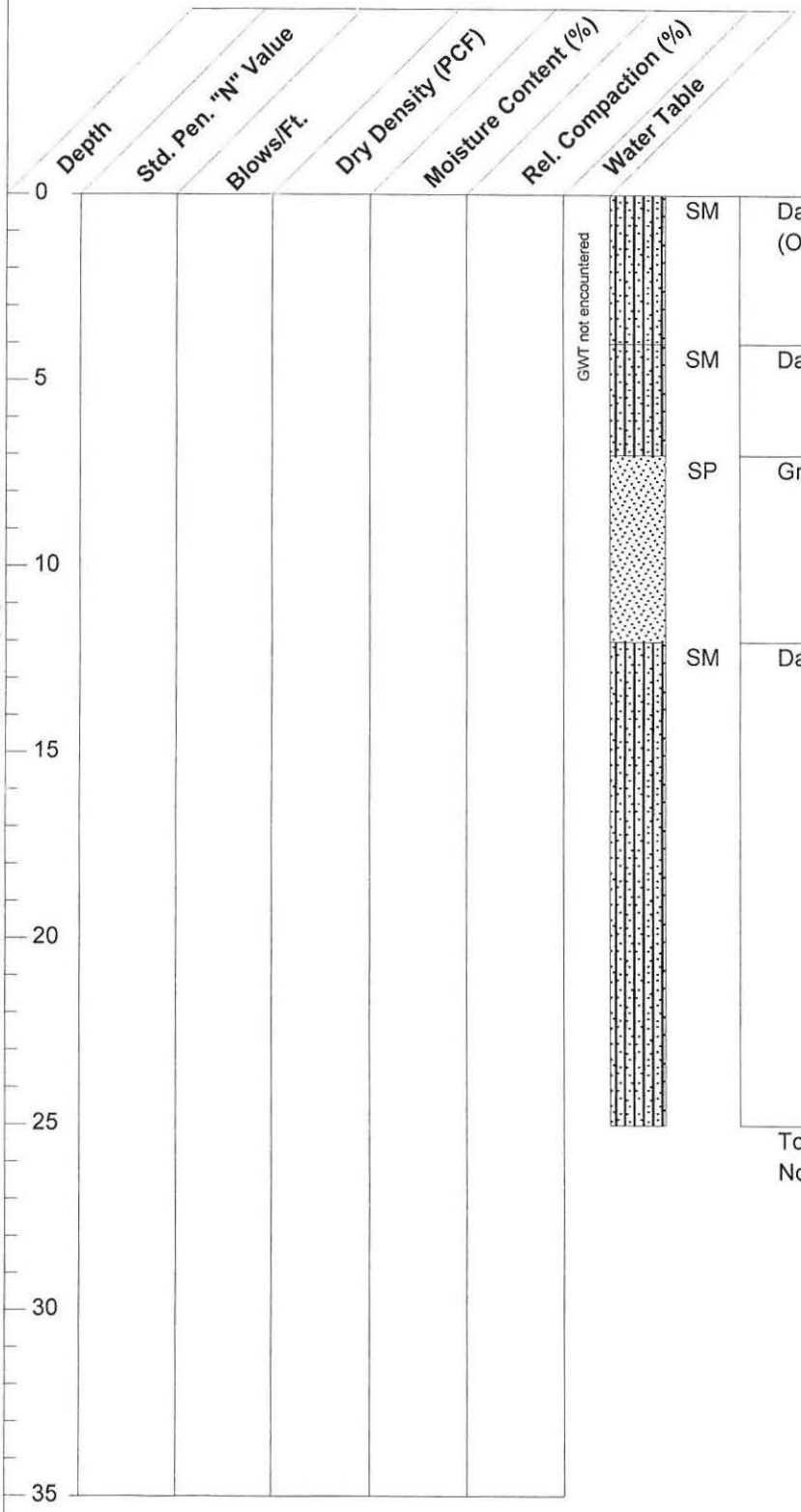

SM	Dark gray silty fine sand, moist and medium dense (ORIGINAL GROUND)
SM	Dark gray-brown silty fine sand, moist and loose
SP	Gray-brown fine sand, damp and medium dense
SM	Dark gray silty fine sand, very moist and medium dense

Total Depth at 25.0 Feet
No Free Ground Water Encountered

SuperLog CivilTech Software, USA www.civiltech.com File: C:\Superlog4\PROJECTS-13836 (Rpt. No. 3982).log Date: 10/13/2016

LOG OF BORING

Moisture/Density Relationship
ASTM D 1557 (Method A)

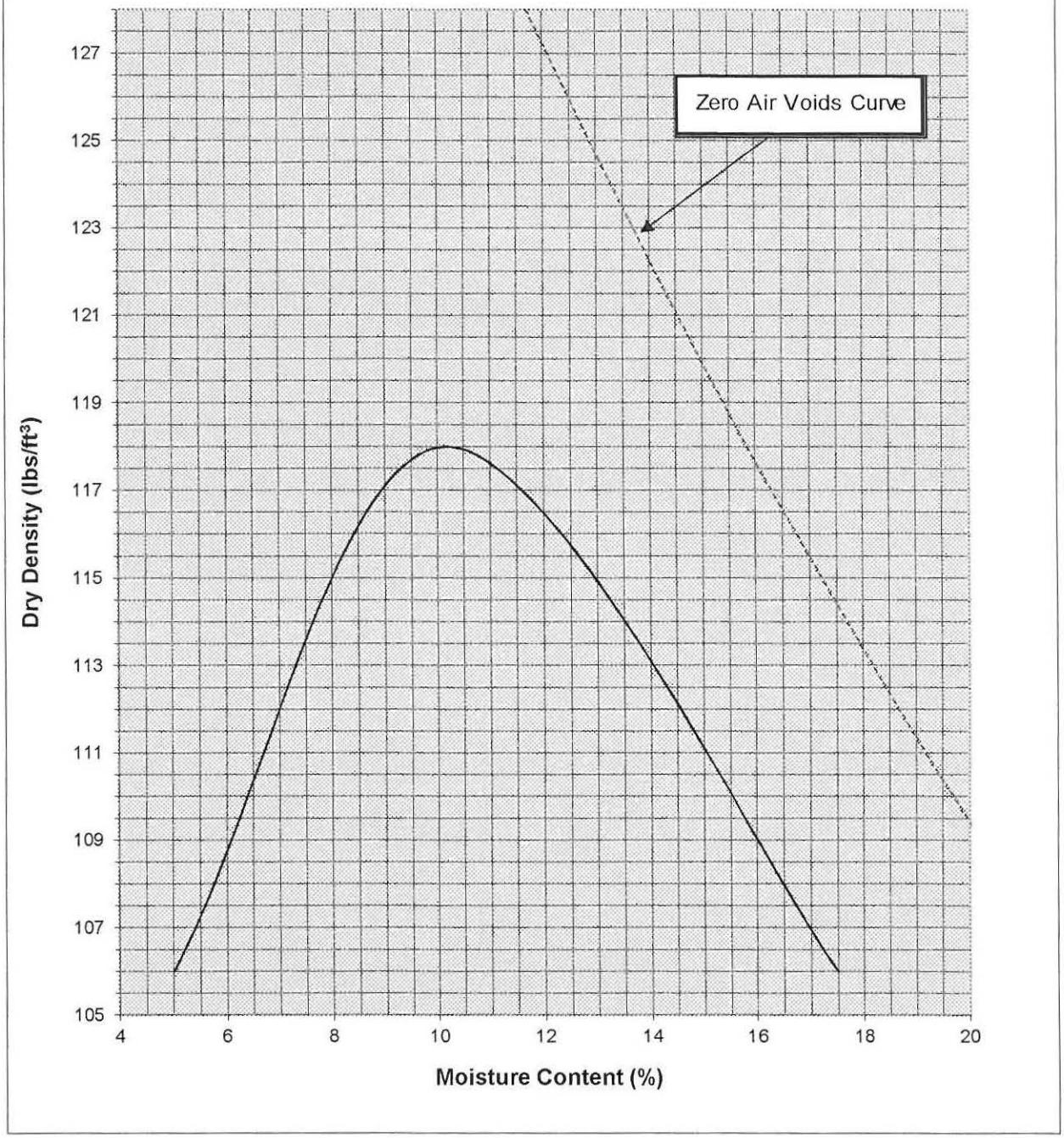

Boring No.	B-4
Depth (ft.)	10.0
Optimum Moisture (%)	10.2
Maximum Dry Density (pcf)	118.0
Soil Classification	Gray silty fine sand (SM)

Moisture/Density Relationship
ASTM D 1557 (Method A)

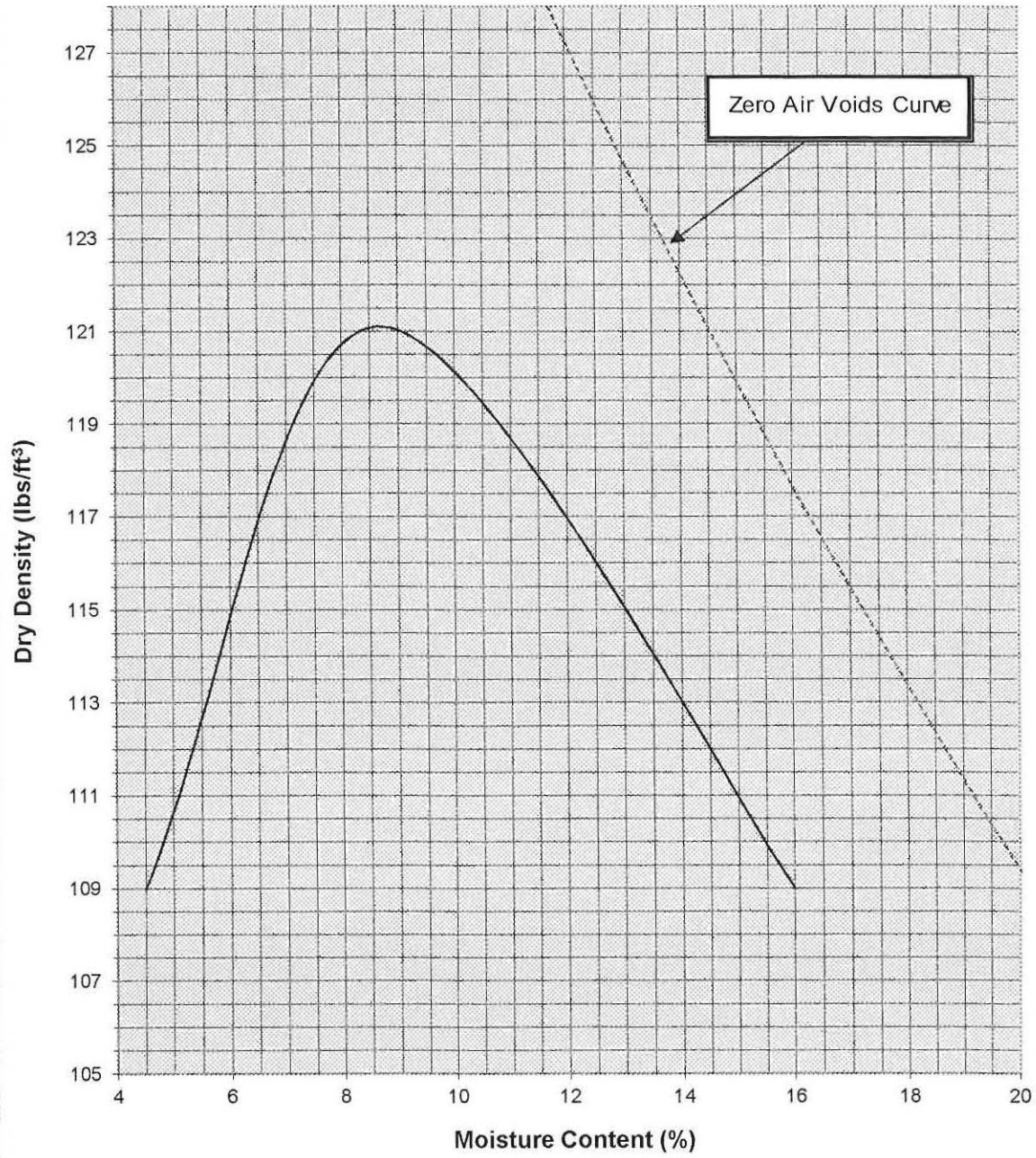

Boring No.	B-5
Depth (ft.)	5.0
Optimum Moisture (%)	8.7
Maximum Dry Density (pcf)	121.1
Soil Classification	Light gray-brown fine sand (SP)

Moisture/Density Relationship
ASTM D 1557 (Method A)

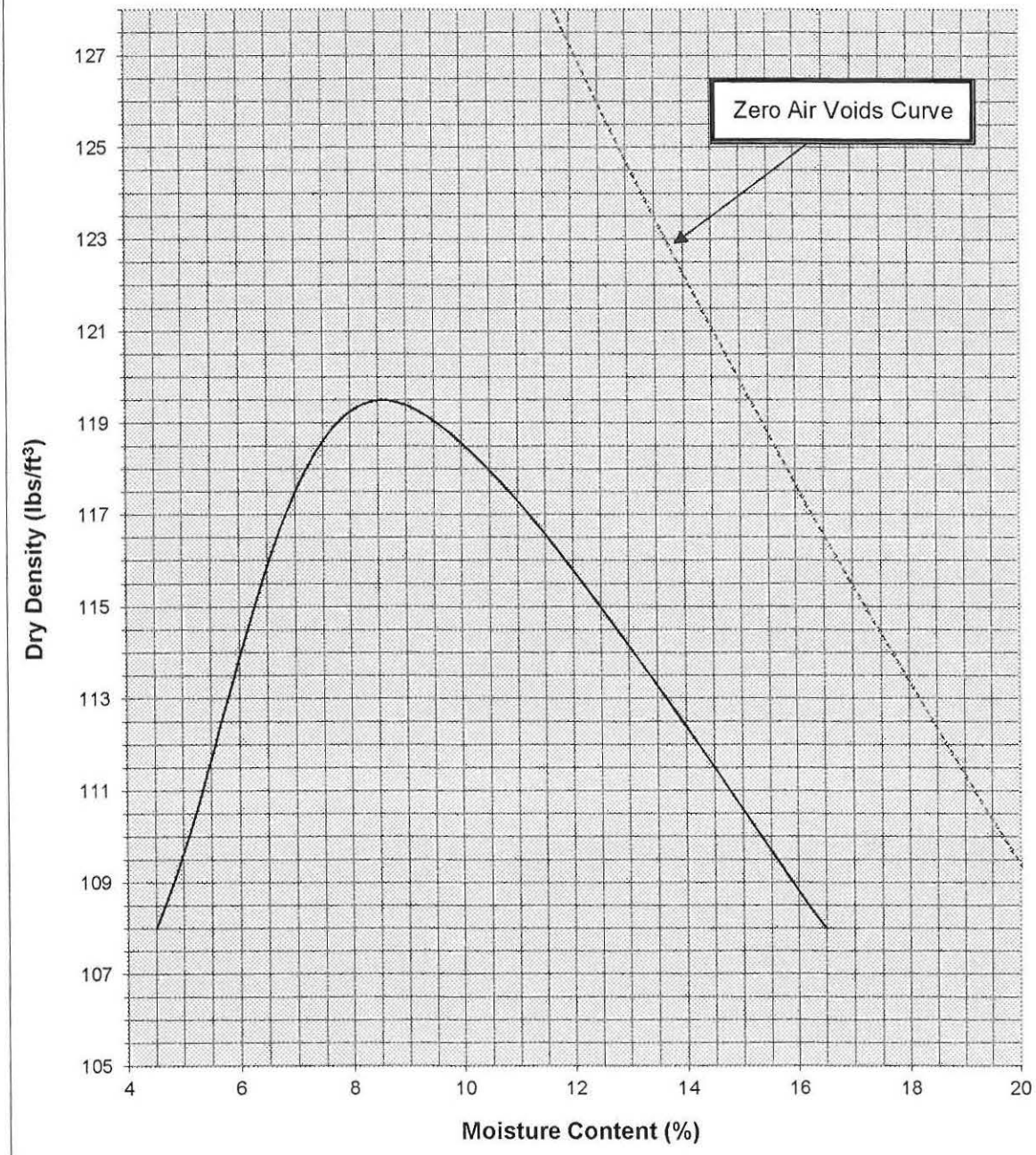

Boring No.	B-11
Depth (ft.)	7.0
Optimum Moisture (%)	8.6
Maximum Dry Density (pcf)	119.5
Soil Classification	Gray-brown fine sand with silt (SP)

John R. Byerly
INCORPORATED

Consolidation Test Results

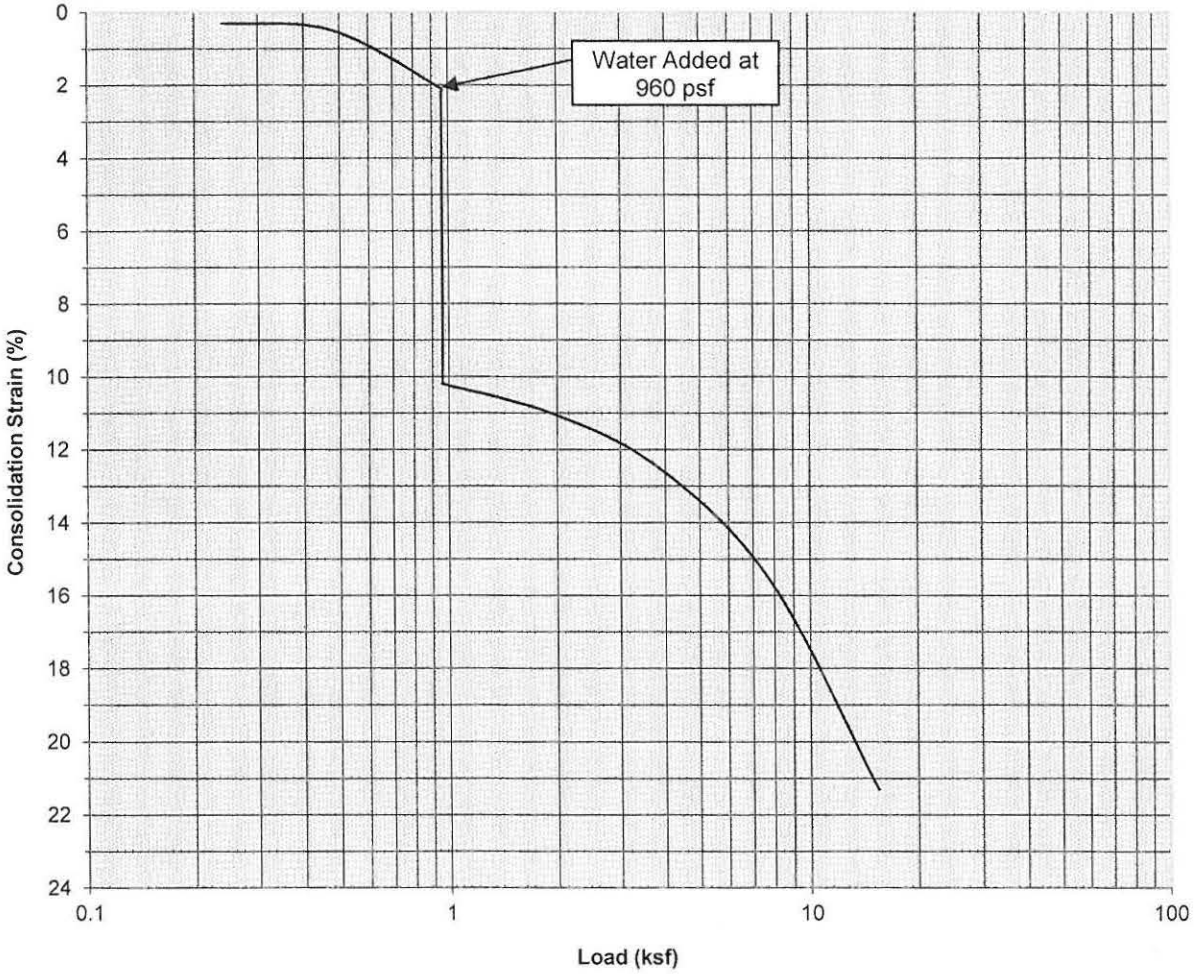

Classification: SM

Boring Number:	10	Initial Moisture Content (%)	6.2
Depth (ft)	5.0	Final Moisture Content (%)	26.9
Specimen Diameter (in)	2.4	Initial Dry Density (pcf)	93
Specimen Thickness (in)	1.0		

GEOTECHNICAL ENGINEERS • TESTING AND INSPECTION
2257 South Lilac Ave., Bloomington, CA 92316-2907
Bloomington(909) 877-1324 Riverside (909) 783-1910 Fax (909) 877-5210

John R. Byerly
INCORPORATED

Consolidation Test Results

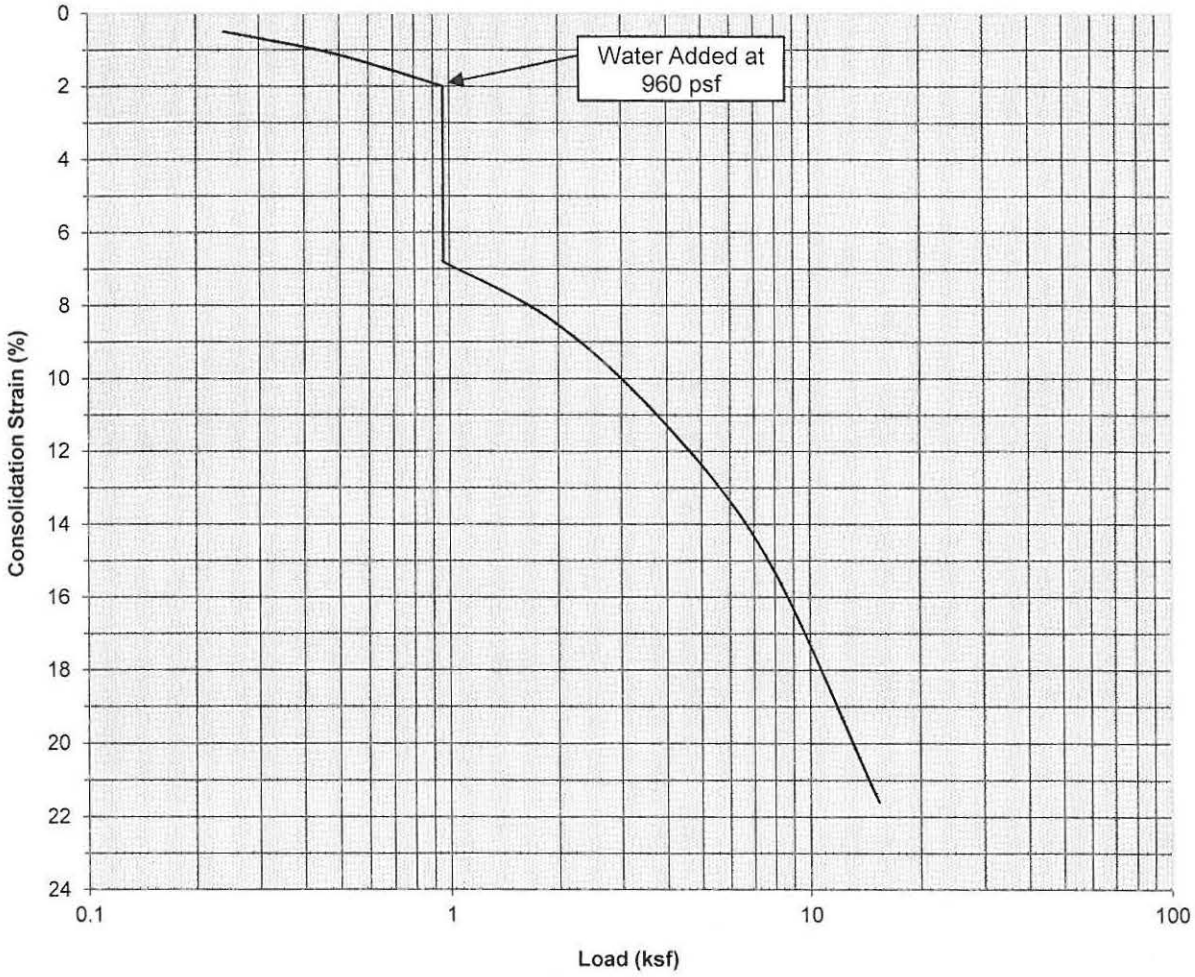

Classification: SM

Boring Number:	11	Initial Moisture Content (%)	7.7
Depth (ft)	3.0	Final Moisture Content (%)	34.9
Specimen Diameter (in)	2.4	Initial Dry Density (pcf)	92
Specimen Thickness (in)	1.0		

GEOTECHNICAL ENGINEERS • TESTING AND INSPECTION
2257 South Lilac Ave., Bloomington, CA 92316-2907
Bloomington(909) 877-1324 Riverside (909) 783-1910 Fax (909) 877-5210

John R. Byerly
INCORPORATED

DIRECT SHEAR TESTS

Test Boring No.	Depth of Sample (Ft.)	Angle of Internal Friction (°)	Cohesion (PSF)
B-3	7.0	31	0
B-5	15.0	33	50

Enclosure 5
Rpt. No.: 3982
File No.: S-13836

RESULTS OF SUBGRADE SOIL TESTS

California Department of Transportation Test Methods 202, 217, & 301
ASTM Designations C136 and D2419

PROJECT: Mayfair High School

Sample No.	Location	Percent Passing Sieve Size: 3"	2½"	2"	1½"	1"	3/4"	1/2"	3/8"	No. 4	No. 8	No. 16	No. 30	No. 50	No. 100	No. 200	Sand Equiv.
1	B-1 at 0-5'					100	99	99	99	99	97	95	94	87	69	47	11
2	B-7 at 0-5'										100	99	99	97	80	60	8

STABILOMETER "R" VALUE

Sample No.		2	
Moisture Content (%)	13.3	13.7	14.2
Dry Density (lbs./cu. ft.)	115.9	114.1	112.9
Exudation Pressure (psi)	482	341	213
Expansion Pressure (psf)	142.890	121.240	103.920
"R" Value	54	50	46
"R" Value at 300 PSI Exudation		48	

Enclosure 6
Rpt. No.: 3982
File No.: S-13836

John R. Byerly
INCORPORATED

SUGGESTED SPECIFICATIONS FOR CLASS II BASE

Sieve Size	Percent Finer Than
1 Inch	100
3/4 Inch	90 - 100
No. 4	35 - 60
No. 30	10 - 30
No. 200	2 - 9
Sand Equivalent (Minimum)	25
“R” Value (minimum) at 300 psi Exudation	78

Enclosure 7
Rpt. No.: 3982
File No.: S-13836

LIQUEFACTION ANALYSIS

MAYFAIR HIGH SCHOOL - SPORTS FIELD MODERNIZATION

Hole No.=B-3 Water Depth=15.0 ft Surface Elev.=58 feet above MSL Magnitude=7.2
Acceleration=0.591g

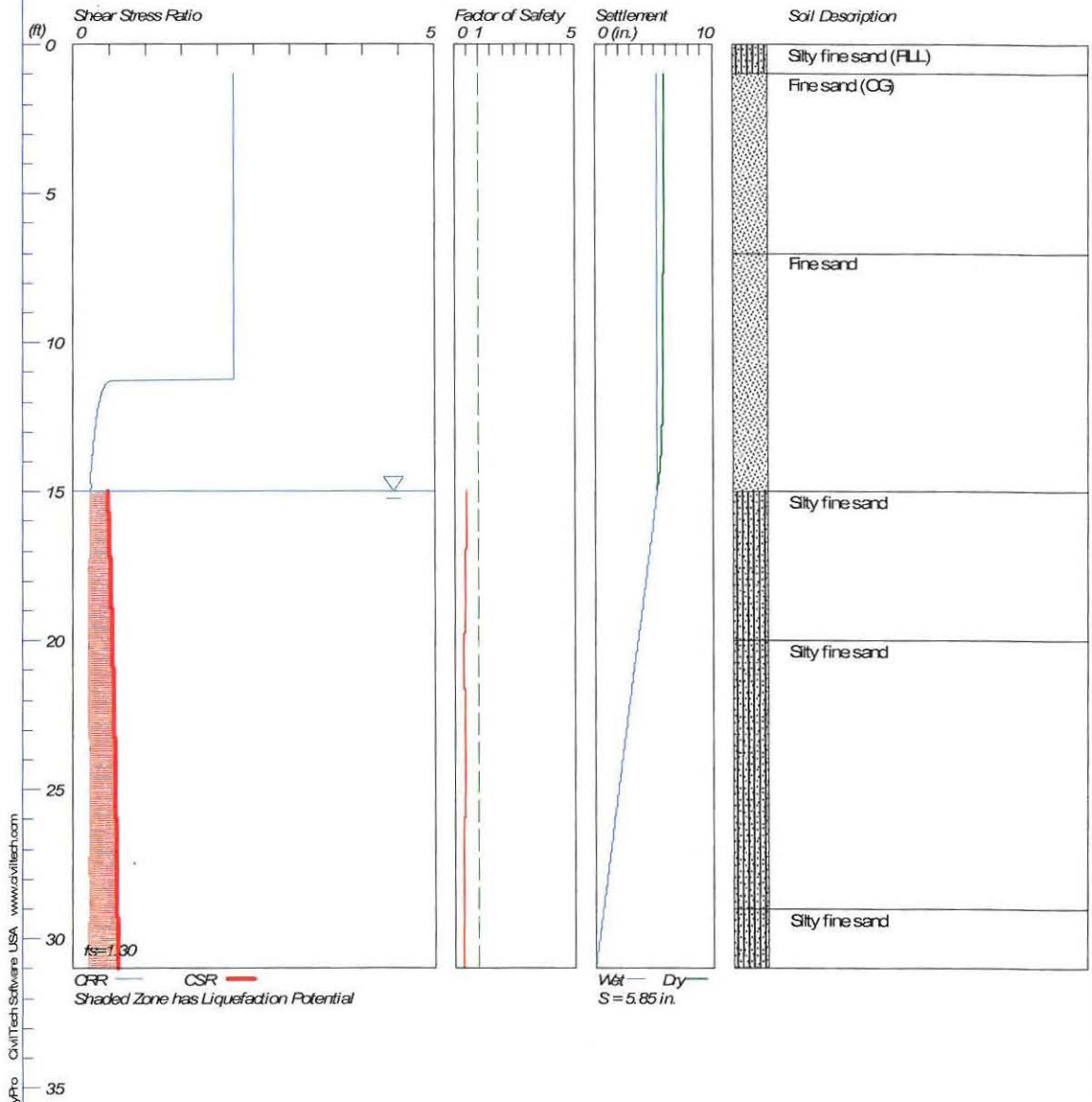

CivilTech Corporation

S-13836

****

LIQUEFACTION ANALYSIS CALCULATION SHEET

Version 4.3
Copyright by CivilTech Software
www.civiltech.com
(425) 453-6488 Fax (425) 453-5848

****

Licensed to John R Byerly, John R. Byerly, Inc. 1/27/2017 3:29:50 PM

Input File Name: C:\Liquefy4\S-13836.3.liq
Title: MAYFAIR HIGH SCHOOL - SPORTS FIELD MODERNIZATION
Subtitle: S-13836

Surface Elev.=58 feet above MSL
Hole No.=B-3
Depth of Hole= 31.0 ft
Water Table during Earthquake= 15.0 ft
Water Table during In-Situ Testing= 20.2 ft
Max. Acceleration= 0.59 g
Earthquake Magnitude= 7.2
User defined factor of safty (applied to CSR) User fs=1.3
fs=user, Plot one CSR (fs=user)

Hammer Energy Ratio, Ce=1
Borehole Diameter, Cb=1.15
Sampeling Method, Cs=1
SPT Fines Correction Method: Stark/Olson et al.*
Settlement Analysis Method: Ishihara / Yoshimine*
Fines Correction for Liquefaction: Stark/Olson et al.*
Fine Correction for Settlement: Post-Liq. Correction *
Average Input Data: Smooth*
* Recommended Options

Input Data:

Depth ft	SPT	Gamma pcf	Fines %
1.0	30.0	130.0	1.0
3.0	30.0	130.0	1.0
5.0	30.0	130.0	1.0
7.0	30.0	130.0	1.0
10.0	30.0	130.0	1.0
15.0	12.0	118.6	35.0
20.0	11.0	129.0	35.0
25.0	14.0	125.0	35.0
30.0	13.0	127.1	35.0

Output Results:
Settlement of saturated sands=5.27 in.
Settlement of dry sands=0.58 in.
Total settlement of saturated and dry sands=5.85 in.
Differential Settlement=2.927 to 3.863 in.

Depth ft	CRRm	CSRfs w/fs	F.S.	S_sat. in.	S_dry in.	S_all in.

1.00	2.22	0.50	5.00	5.27	0.58	5.85
2.00	2.22	0.50	5.00	5.27	0.58	5.85
3.00	2.22	0.50	5.00	5.27	0.58	5.85
4.00	2.22	0.49	5.00	5.27	0.58	5.85
5.00	2.22	0.49	5.00	5.27	0.57	5.84
6.00	2.22	0.49	5.00	5.27	0.57	5.84
7.00	2.22	0.49	5.00	5.27	0.56	5.83
8.00	2.22	0.49	5.00	5.27	0.54	5.81
9.00	2.22	0.49	5.00	5.27	0.53	5.80
10.00	2.22	0.49	5.00	5.27	0.52	5.79
11.00	2.22	0.49	5.00	5.27	0.50	5.77
12.00	0.37	0.48	5.00	5.27	0.47	5.74
13.00	0.30	0.48	5.00	5.27	0.41	5.68
14.00	0.26	0.48	5.00	5.27	0.28	5.54
15.00	0.25	0.48	0.51*	5.27	0.00	5.27
16.00	0.24	0.50	0.48*	4.96	0.00	4.96
17.00	0.23	0.51	0.46*	4.63	0.00	4.63
18.00	0.23	0.52	0.43*	4.31	0.00	4.31
19.00	0.22	0.53	0.41*	3.97	0.00	3.97
20.00	0.21	0.54	0.39*	3.62	0.00	3.62
21.00	0.22	0.55	0.40*	3.28	0.00	3.28
22.00	0.22	0.56	0.40*	2.94	0.00	2.94
23.00	0.23	0.57	0.40*	2.60	0.00	2.60
24.00	0.23	0.58	0.41*	2.28	0.00	2.28
25.00	0.24	0.58	0.41*	1.96	0.00	1.96
26.00	0.24	0.59	0.40*	1.64	0.00	1.64
27.00	0.23	0.60	0.39*	1.31	0.00	1.31
28.00	0.24	0.60	0.39*	0.98	0.00	0.98
29.00	0.23	0.61	0.38*	0.66	0.00	0.66
30.00	0.23	0.61	0.37*	0.33	0.00	0.33
31.00	0.23	0.62	0.37*	0.00	0.00	0.00

* F.S.<1, Liquefaction Potential Zone
(F.S. is limited to 5, CRR is limited to 2, CSR is limited to 2)

Units Depth = ft, Stress or Pressure = tsf (atm), Unit Weight = pcf, Settlement = in.

CRRm Cyclic resistance ratio from soils
CSRfs Cyclic stress ratio induced by a given earthquake (with user request factor of safety)
F.S. Factor of Safety against liquefaction, F.S.=CRRm/CSRfs
S_sat Settlement from saturated sands
S_dry Settlement from dry sands
S_all Total settlement from saturated and dry sands
NoLiq No-Liquefy Soils

****

LIQUEFACTION ANALYSIS CALCULATION SHEET

Version 4.3
Copyright by CivilTech Software
www.civiltech.com
(425) 453-6488 Fax (425) 453-5848

****

Licensed to John R Byerly, John R. Byerly, Inc. 1/27/2017 3:29:58 PM

Input File Name: C:\Liquefy4\S-13836.3.liq
Title: MAYFAIR HIGH SCHOOL - SPORTS FIELD MODERNIZATION
Subtitle: S-13836

Input Data:

Surface Elev.=58 feet above MSL
Hole No.=B-3
Depth of Hole=31.0 ft
Water Table during Earthquake= 15.0 ft
Water Table during In-Situ Testing= 20.2 ft
Max. Acceleration=0.59 g
Earthquake Magnitude=7.2
User defined factor of safty (applied to CSR) User fs=1.3
fs=user, Plot one CSR (fs=user)

Hammer Energy Ratio, Ce=1
Borehole Diameter, Cb=1.15
Sampeling Method, Cs=1
SPT Fines Correction Method: Stark/Olson et al.*
Settlement Analysis Method: Ishihara / Yoshimine*
Fines Correction for Liquefaction: Stark/Olson et al.*
Fine Correction for Settlement: Post-Liq. Correction *
Average Input Data: Smooth*
* Recommended Options

Depth ft	SPT	Gamma pcf	Fines %
1.0	30.0	130.0	1.0
3.0	30.0	130.0	1.0
5.0	30.0	130.0	1.0
7.0	30.0	130.0	1.0
10.0	30.0	130.0	1.0
15.0	12.0	118.6	35.0
20.0	11.0	129.0	35.0
25.0	14.0	125.0	35.0
30.0	13.0	127.1	35.0

Output Results: (Interval = 1.00 ft)

CSR Calculation:

Depth ft	gamma pcf	sigma tsf	gamma' pcf	sigma' tsf	rd	CSR	fs (user)	CSRfs w/fs
1.00	130.0	0.065	130.0	0.065	1.00	0.38	1.3	0.50

2.00	130.0	0.130	130.0	0.130	1.00	0.38	1.3	0.50
3.00	130.0	0.195	130.0	0.195	0.99	0.38	1.3	0.50
4.00	130.0	0.260	130.0	0.260	0.99	0.38	1.3	0.49
5.00	130.0	0.325	130.0	0.325	0.99	0.38	1.3	0.49
6.00	130.0	0.390	130.0	0.390	0.99	0.38	1.3	0.49
7.00	130.0	0.455	130.0	0.455	0.98	0.38	1.3	0.49
8.00	130.0	0.520	130.0	0.520	0.98	0.38	1.3	0.49
9.00	130.0	0.585	130.0	0.585	0.98	0.38	1.3	0.49
10.00	130.0	0.650	130.0	0.650	0.98	0.37	1.3	0.49
11.00	127.7	0.714	127.7	0.714	0.97	0.37	1.3	0.49
12.00	125.4	0.778	125.4	0.778	0.97	0.37	1.3	0.48
13.00	123.2	0.840	123.2	0.840	0.97	0.37	1.3	0.48
14.00	120.9	0.901	120.9	0.901	0.97	0.37	1.3	0.48
15.00	118.6	0.961	56.2	0.961	0.97	0.37	1.3	0.48
16.00	120.7	1.021	58.3	0.989	0.96	0.38	1.3	0.50
17.00	122.8	1.082	60.4	1.019	0.96	0.39	1.3	0.51
18.00	124.8	1.143	62.4	1.050	0.96	0.40	1.3	0.52
19.00	126.9	1.206	64.5	1.082	0.96	0.41	1.3	0.53
20.00	129.0	1.270	66.6	1.114	0.95	0.42	1.3	0.54
21.00	128.2	1.335	65.8	1.147	0.95	0.42	1.3	0.55
22.00	127.4	1.398	65.0	1.180	0.95	0.43	1.3	0.56
23.00	126.6	1.462	64.2	1.212	0.95	0.44	1.3	0.57
24.00	125.8	1.525	63.4	1.244	0.94	0.44	1.3	0.58
25.00	125.0	1.588	62.6	1.276	0.94	0.45	1.3	0.58
26.00	125.4	1.650	63.0	1.307	0.94	0.45	1.3	0.59
27.00	125.8	1.713	63.4	1.339	0.94	0.46	1.3	0.60
28.00	126.3	1.776	63.9	1.371	0.93	0.46	1.3	0.60
29.00	126.7	1.839	64.3	1.403	0.93	0.47	1.3	0.61
30.00	127.1	1.903	64.7	1.435	0.93	0.47	1.3	0.61
31.00	127.1	1.966	64.7	1.467	0.92	0.47	1.3	0.62

CSR is based on water table at 15.0 during earthquake

CRR Calculation from SPT or BPT data:

Depth ft	SPT	Cebs	Cr	sigma'	Cn	(N1)60	Fines %	d(N1)60	(N1)60f	CRR7.5
1.00	30.00	1.15	0.75	0.065	1.70	43.99	1.0	0.00	43.99	2.00
2.00	30.00	1.15	0.75	0.130	1.70	43.99	1.0	0.00	43.99	2.00
3.00	30.00	1.15	0.75	0.195	1.70	43.99	1.0	0.00	43.99	2.00
4.00	30.00	1.15	0.75	0.260	1.70	43.99	1.0	0.00	43.99	2.00
5.00	30.00	1.15	0.75	0.325	1.70	43.99	1.0	0.00	43.99	2.00
6.00	30.00	1.15	0.75	0.390	1.60	41.43	1.0	0.00	41.43	2.00
7.00	30.00	1.15	0.75	0.455	1.48	38.36	1.0	0.00	38.36	2.00
8.00	30.00	1.15	0.75	0.520	1.39	35.88	1.0	0.00	35.88	2.00
9.00	30.00	1.15	0.85	0.585	1.31	38.34	1.0	0.00	38.34	2.00
10.00	30.00	1.15	0.85	0.650	1.24	36.37	1.0	0.00	36.37	2.00
11.00	26.40	1.15	0.85	0.714	1.18	30.53	7.8	0.67	31.20	2.00
12.00	22.80	1.15	0.85	0.778	1.13	25.27	14.6	2.30		

27.58	0.33							
	13.00	19.20	1.15	0.85	0.840	1.09	20.48	21.4	3.94
24.41	0.27							
	14.00	15.60	1.15	0.85	0.901	1.05	16.06	28.2	5.57
21.63	0.24							
	15.00	12.00	1.15	0.95	0.961	1.02	13.37	35.0	7.20
20.57	0.22							
	16.00	11.80	1.15	0.95	1.021	0.99	12.76	35.0	7.20
19.96	0.22							
	17.00	11.60	1.15	0.95	1.082	0.96	12.19	35.0	7.20
19.39	0.21							
	18.00	11.40	1.15	0.95	1.143	0.94	11.65	35.0	7.20
18.85	0.20							
	19.00	11.20	1.15	0.95	1.206	0.91	11.14	35.0	7.20
18.34	0.20							
	20.00	11.00	1.15	0.95	1.270	0.89	10.66	35.0	7.20
17.86	0.19							
	21.00	11.60	1.15	0.95	1.311	0.87	11.07	35.0	7.20
18.27	0.20							
	22.00	12.20	1.15	0.95	1.344	0.86	11.50	35.0	7.20
18.70	0.20							
	23.00	12.80	1.15	0.95	1.376	0.85	11.92	35.0	7.20
19.12	0.21							
	24.00	13.40	1.15	0.95	1.408	0.84	12.34	35.0	7.20
19.54	0.21							
	25.00	14.00	1.15	0.95	1.440	0.83	12.75	35.0	7.20
19.95	0.22							
	26.00	13.80	1.15	0.95	1.471	0.82	12.43	35.0	7.20
19.63	0.21							
	27.00	13.60	1.15	0.95	1.503	0.82	12.12	35.0	7.20
19.32	0.21							
	28.00	13.40	1.15	1.00	1.534	0.81	12.44	35.0	7.20
19.64	0.21							
	29.00	13.20	1.15	1.00	1.566	0.80	12.13	35.0	7.20
19.33	0.21							
	30.00	13.00	1.15	1.00	1.599	0.79	11.82	35.0	7.20
19.02	0.21							
	31.00	13.00	1.15	1.00	1.631	0.78	11.71	35.0	7.20
18.91	0.20							

CRR is based on water table at 20.2 during In-Situ Testing

Factor of Safety, - Earthquake Magnitude= 7.2:

Depth ft	sigC' tsf	CRR7.5 tsf	Ksigma	CRRv	MSF	CRRm	CSRfs w/fs	F.S. CRRm/CSRfs
1.00	0.04	2.00	1.00	2.00	1.11	2.22	0.50	5.00
2.00	0.08	2.00	1.00	2.00	1.11	2.22	0.50	5.00
3.00	0.13	2.00	1.00	2.00	1.11	2.22	0.50	5.00
4.00	0.17	2.00	1.00	2.00	1.11	2.22	0.49	5.00
5.00	0.21	2.00	1.00	2.00	1.11	2.22	0.49	5.00
6.00	0.25	2.00	1.00	2.00	1.11	2.22	0.49	5.00
7.00	0.30	2.00	1.00	2.00	1.11	2.22	0.49	5.00
8.00	0.34	2.00	1.00	2.00	1.11	2.22	0.49	5.00
9.00	0.38	2.00	1.00	2.00	1.11	2.22	0.49	5.00
10.00	0.42	2.00	1.00	2.00	1.11	2.22	0.49	5.00
11.00	0.46	2.00	1.00	2.00	1.11	2.22	0.49	5.00
12.00	0.51	0.33	1.00	0.33	1.11	0.37	0.48	5.00
13.00	0.55	0.27	1.00	0.27	1.11	0.30	0.48	5.00
14.00	0.59	0.24	1.00	0.24	1.11	0.26	0.48	5.00
15.00	0.62	0.22	1.00	0.22	1.11	0.25	0.48	0.51 *

16.00	0.66	0.22	1.00	0.22	1.11	0.24	0.50	0.48 *
17.00	0.70	0.21	1.00	0.21	1.11	0.23	0.51	0.46 *
18.00	0.74	0.20	1.00	0.20	1.11	0.23	0.52	0.43 *
19.00	0.78	0.20	1.00	0.20	1.11	0.22	0.53	0.41 *
20.00	0.83	0.19	1.00	0.19	1.11	0.21	0.54	0.39 *
21.00	0.85	0.20	1.00	0.20	1.11	0.22	0.55	0.40 *
22.00	0.87	0.20	1.00	0.20	1.11	0.22	0.56	0.40 *
23.00	0.89	0.21	1.00	0.21	1.11	0.23	0.57	0.40 *
24.00	0.92	0.21	1.00	0.21	1.11	0.23	0.58	0.41 *
25.00	0.94	0.22	1.00	0.22	1.11	0.24	0.58	0.41 *
26.00	0.96	0.21	1.00	0.21	1.11	0.24	0.59	0.40 *
27.00	0.98	0.21	1.00	0.21	1.11	0.23	0.60	0.39 *
28.00	1.00	0.21	1.00	0.21	1.11	0.24	0.60	0.39 *
29.00	1.02	0.21	1.00	0.21	1.11	0.23	0.61	0.38 *
30.00	1.04	0.21	1.00	0.21	1.11	0.23	0.61	0.37 *
31.00	1.06	0.20	1.00	0.20	1.11	0.23	0.62	0.37 *

* F.S.<1: Liquefaction Potential Zone. (If above water table: F.S.=5)
(F.S. is limited to 5, CRR is limited to 2, CSR is limited to 2)

CPT convert to SPT for Settlement Analysis:
Fines Correction for Settlement Analysis:

Depth ft	Ic	qc/N60	qc1 tsf	(N1)60	Fines %	d(N1)60	(N1)60s
1.00	-	-	-	43.99	1.0	0.10	44.08
2.00	-	-	-	43.99	1.0	0.10	44.08
3.00	-	-	-	43.99	1.0	0.10	44.08
4.00	-	-	-	43.99	1.0	0.10	44.08
5.00	-	-	-	43.99	1.0	0.10	44.08
6.00	-	-	-	41.43	1.0	0.10	41.53
7.00	-	-	-	38.36	1.0	0.10	38.46
8.00	-	-	-	35.88	1.0	0.10	35.98
9.00	-	-	-	38.34	1.0	0.10	38.44
10.00	-	-	-	36.37	1.0	0.10	36.47
11.00	-	-	-	30.53	7.8	0.74	31.27
12.00	-	-	-	25.27	14.6	1.34	26.61
13.00	-	-	-	20.48	21.4	1.90	22.38
14.00	-	-	-	16.06	28.2	2.43	18.49
15.00	-	-	-	13.37	35.0	2.92	16.29
16.00	-	-	-	12.76	35.0	2.92	15.68
17.00	-	-	-	12.19	35.0	2.92	15.10
18.00	-	-	-	11.65	35.0	2.92	14.57
19.00	-	-	-	11.14	35.0	2.92	14.06
20.00	-	-	-	10.66	35.0	2.92	13.58
21.00	-	-	-	11.07	35.0	2.92	13.99
22.00	-	-	-	11.50	35.0	2.92	14.42
23.00	-	-	-	11.92	35.0	2.92	14.84
24.00	-	-	-	12.34	35.0	2.92	15.26
25.00	-	-	-	12.75	35.0	2.92	15.67
26.00	-	-	-	12.43	35.0	2.92	15.35
27.00	-	-	-	12.12	35.0	2.92	15.04
28.00	-	-	-	12.44	35.0	2.92	15.36
29.00	-	-	-	12.13	35.0	2.92	15.05
30.00	-	-	-	11.82	35.0	2.92	14.74
31.00	-	-	-	11.71	35.0	2.92	14.62

Settlement of Saturated Sands:
Settlement Analysis Method: Ishihara / Yoshimine*

Depth	CSRfs	F.S.	Fines	(N1)60s	Dr	ec	dsz	dsv	S

	ft	w/fs		%		%	%	in.	in.	in.
	30.95	0.62	0.37	35.0	14.63	60.55	2.771	0.017	0.017	
0.017										
	30.00	0.61	0.37	35.0	14.74	60.77	2.757	0.017	0.315	
0.332										
	29.00	0.61	0.38	35.0	15.05	61.37	2.721	0.016	0.329	
0.660										
	28.00	0.60	0.39	35.0	15.36	61.97	2.684	0.016	0.324	
0.984										
	27.00	0.60	0.39	35.0	15.04	61.36	2.722	0.016	0.328	
1.312										
	26.00	0.59	0.40	35.0	15.35	61.96	2.685	0.016	0.324	
1.637										
	25.00	0.58	0.41	35.0	15.67	62.56	2.648	0.016	0.320	
1.956										
	24.00	0.58	0.41	35.0	15.26	61.77	2.696	0.016	0.321	
2.277										
	23.00	0.57	0.40	35.0	14.84	60.96	2.746	0.016	0.327	
2.604										
	22.00	0.56	0.40	35.0	14.42	60.13	2.796	0.017	0.333	
2.937										
	21.00	0.55	0.40	35.0	13.99	59.27	2.857	0.017	0.339	
3.276										
	20.00	0.54	0.39	35.0	13.58	58.45	2.915	0.017	0.347	
3.622										
	19.00	0.53	0.41	35.0	14.06	59.42	2.846	0.017	0.345	
3.968										
	18.00	0.52	0.43	35.0	14.57	60.43	2.778	0.017	0.337	
4.305										
	17.00	0.51	0.46	35.0	15.10	61.48	2.714	0.016	0.329	
4.635										
	16.00	0.50	0.48	35.0	15.68	62.59	2.647	0.016	0.321	
4.956										
	15.00	0.48	0.51	35.0	16.29	63.75	2.576	0.015	0.313	
5.269										

Settlement of Saturated Sands=5.269 in.
dsz is per each segment: dz=0.05 ft
dsv is per each print interval: dv=1 ft
S is cumulated settlement at this depth

Settlement of Dry Sands:

Depth	sigma'	sigC'	(N1)60s	CSRfs	Gmax	g*Ge/Gm	g_eff	ec7.5	Cec	ec
dsz	dsv	S								
ft	tsf	tsf		w/fs	tsf			%		%
in.	in.	in.								
14.95	0.96	0.62	16.49	0.48	897.4	5.1E-4	1.0000	1.2651	0.98	
1.5E-2	0.015	0.015								1.2437
14.00	0.90	0.59	18.49	0.48	904.2	4.8E-4	0.7987	0.8708	0.98	
1.0E-2	0.261	0.276								0.8560
13.00	0.84	0.55	22.38	0.48	930.3	4.4E-4	0.4473	0.3806	0.98	
4.5E-3	0.135	0.411								0.3741
12.00	0.78	0.51	26.61	0.48	948.3	4.0E-4	0.2729	0.1845	0.98	
2.2E-3	0.062	0.473								0.1814
11.00	0.71	0.46	31.27	0.49	959.0	3.6E-4	0.1771	0.0945	0.98	
1.1E-3	0.031	0.505								0.0929
10.00	0.65	0.42	36.47	0.49	962.8	3.3E-4	0.1206	0.0481	0.98	

0.0473	5.7E-4	0.016	0.521							
	9.00	0.59	0.38	38.44	0.49	929.6	3.1E-4	0.0949	0.0334	0.98
0.0328	3.9E-4	0.009	0.530							
	8.00	0.52	0.34	35.98	0.49	857.3	3.0E-4	0.3094	0.1273	0.98
0.1251	1.5E-3	0.014	0.544							
	7.00	0.46	0.30	38.46	0.49	819.9	2.7E-4	0.1312	0.0461	0.98
0.0453	5.4E-4	0.018	0.562							
	6.00	0.39	0.25	41.53	0.49	778.8	2.5E-4	0.0695	0.0220	0.98
0.0216	2.6E-4	0.007	0.569							
	5.00	0.33	0.21	44.08	0.49	725.2	2.2E-4	0.0470	0.0148	0.98
0.0146	1.8E-4	0.004	0.574							
	4.00	0.26	0.17	44.08	0.49	648.6	2.0E-4	0.0392	0.0124	0.98
0.0122	1.5E-4	0.003	0.577							
	3.00	0.20	0.13	44.08	0.50	561.7	1.7E-4	0.0383	0.0121	0.98
0.0119	1.4E-4	0.003	0.580							
	2.00	0.13	0.08	44.08	0.50	458.7	1.4E-4	0.0265	0.0084	0.98
0.0083	9.9E-5	0.002	0.582							
	1.00	0.07	0.04	44.08	0.50	324.3	1.0E-4	0.0199	0.0063	0.98
0.0062	7.4E-5	0.002	0.584							

Settlement of Dry Sands=0.584 in.
dsz is per each segment: dz=0.05 ft
dsv is per each print interval: dv=1 ft
S is cumulated settlement at this depth

Total Settlement of Saturated and Dry Sands=5.853 in.
Differential Settlement=2.927 to 3.863 in.

Units Depth = ft, Stress or Pressure = tsf (atm), Unit Weight = pcf, Settlement = in.

SPT	Field data from Standard Penetration Test (SPT)
BPT	Field data from Becker Penetration Test (BPT)
qc	Field data from Cone Penetration Test (CPT)
fc	Friction from CPT testing
Gamma	Total unit weight of soil
Gamma'	Effective unit weight of soil
Fines	Fines content [%]
D50	Mean grain size
Dr	Relative Density
sigma	Total vertical stress [tsf]
sigma'	Effective vertical stress [tsf]
sigC'	Effective confining pressure [tsf]
rd	Stress reduction coefficient
CSR	Cyclic stress ratio induced by earthquake
fs	User request factor of safety, apply to CSR
w/fs	With user request factor of safety inside
CSRfs	CSR with User request factor of safety
CRR7.5	Cyclic resistance ratio (M=7.5)
Ksigma	Overburden stress correction factor for CRR7.5
CRRv	CRR after overburden stress correction, CRRv=CRR7.5 * Ksigma
MSF	Magnitude scaling factor for CRR (M=7.5)
CRRm	After magnitude scaling correction CRRm=CRRv * MSF
F.S.	Factor of Safety against liquefaction F.S.=CRRm/CSRfs
Cebs	Energy Ratio, Borehole Dia., and Sample Method Corrections
Cr	Rod Length Corrections
Cn	Overburden Pressure Correction
(N1)60	SPT after corrections, (N1)60=SPT * Cr * Cn * Cebs
d(N1)60	Fines correction of SPT

(N1)60f	(N1)60 after fines corrections, (N1)60f=(N1)60 + d(N1)60
Cq	Overburden stress correction factor
qc1	CPT after Overburden stress correction
dqc1	Fines correction of CPT
qc1f	CPT after Fines and Overburden correction, qc1f=qc1 + dqc1
qc1n	CPT after normalization in Robertson's method
Kc	Fine correction factor in Robertson's Method
qc1f	CPT after Fines correction in Robertson's Method
Ic	Soil type index in Suzuki's and Robertson's Methods
(N1)60s	(N1)60 after seattlement fines corrections
ec	Volumetric strain for saturated sands
ds	Settlement in each Segment dz
dz	Segment for calculation, dz=0.050 ft
Gmax	Shear Modulus at low strain
g_eff	gamma_eff, Effective shear Strain
g*Ge/Gm	gamma_eff * G_eff/G_max, Strain-modulus ratio
ec7.5	Volumetric Strain for magnitude=7.5
Cec	Magnitude correction factor for any magnitude
ec	Volumetric strain for dry sands, ec=Cec * ec7.5
NoLiq	No-Liquefy Soils

References:

NCEER Workshop on Evaluation of Liquefaction Resistance of Soils. Youd, T.L., and Idriss, I.M., eds., Technical Report NCEER 97-0022.

SP117. Southern California Earthquake Center. Recommended Procedures for Implementation of DMG Special Publication 117, Guidelines for Analyzing and Mitigating Liquefaction in California. University of Southern California. March 1999.

LIQUEFACTION ANALYSIS

MAYFAIR HIGH SCHOOL - SPORTS FIELD MODERNIZATION

Hole No.=B-4 Water Depth=15.0 ft Surface Elev.=58 feet above MSL *Magnitude=7.2*
Acceleration=0.591g

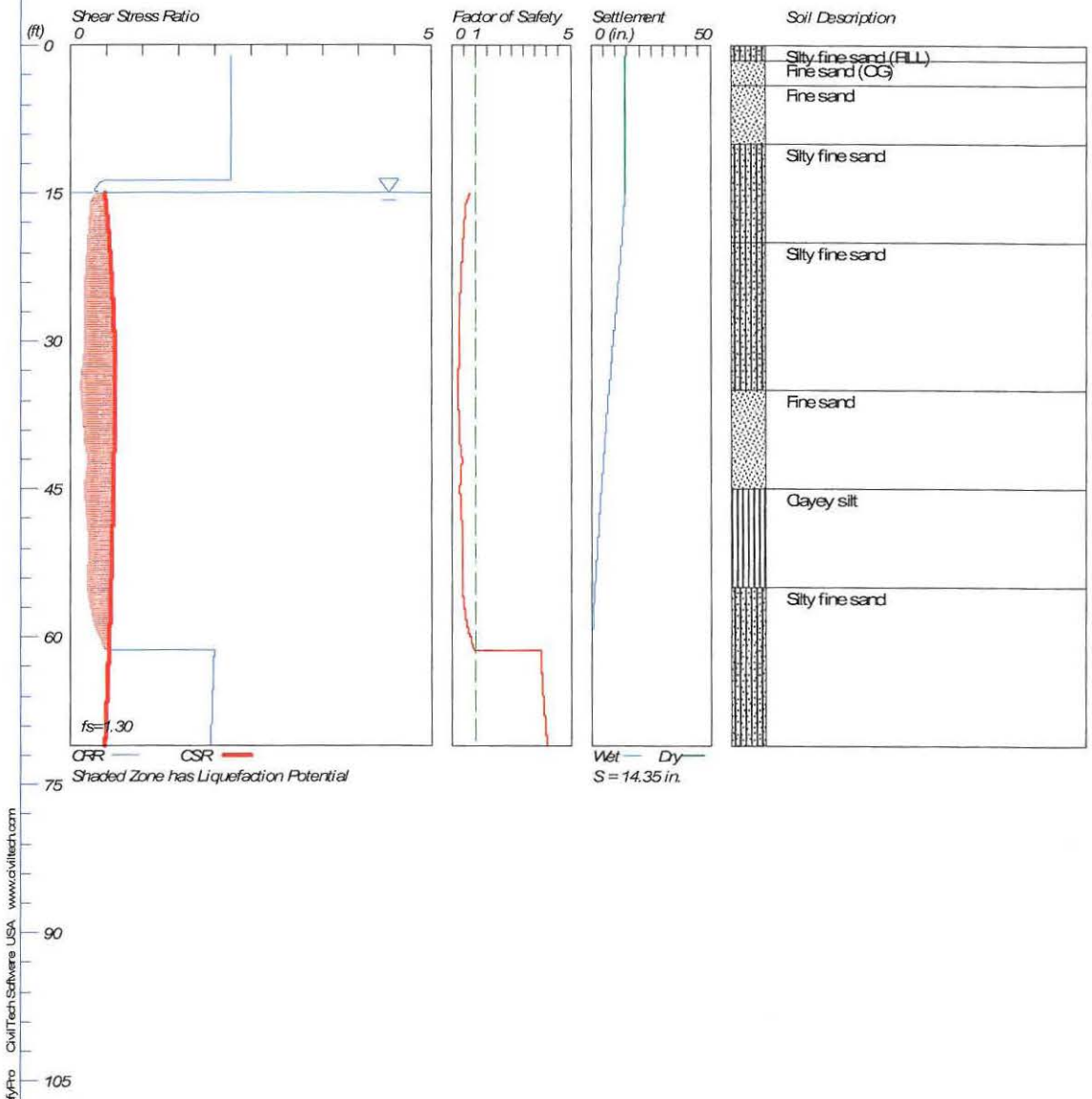

LiquefyPro CivilTech Software USA www.civiltech.com

CivilTech Corporation S-13836

****

LIQUEFACTION ANALYSIS CALCULATION SHEET

Version 4.3
Copyright by CivilTech Software
www.civiltech.com
(425) 453-6488 Fax (425) 453-5848

****

Licensed to John R Byerly, John R. Byerly, Inc. 1/27/2017 3:32:44 PM

Input File Name: C:\Liquefy4\S-13836.4.liq
Title: MAYFAIR HIGH SCHOOL - SPORTS FIELD MODERNIZATION
Subtitle: S-13836

Surface Elev.=58 feet above MSL
Hole No.=B-4
Depth of Hole= 71.0 ft
Water Table during Earthquake= 15.0 ft
Water Table during In-Situ Testing= 24.4 ft
Max. Acceleration= 0.59 g
Earthquake Magnitude= 7.2
User defined factor of safty (applied to CSR) User fs=1.3
fs=user, Plot one CSR (fs=user)

Hammer Energy Ratio, Ce=1
Borehole Diameter, Cb=1.15
Sampeling Method, Cs=1
SPT Fines Correction Method: Stark/Olson et al.*
Settlement Analysis Method: Ishihara / Yoshimine*
Fines Correction for Liquefaction: Stark/Olson et al.*
Fine Correction for Settlement: Post-Liq. Correction *
Average Input Data: Smooth*
* Recommended Options

Input Data:

Depth ft	SPT	Gamma pcf	Fines %
1.0	30.0	130.0	35.0
3.0	30.0	130.0	1.0
5.0	30.0	130.0	1.0
6.0	30.0	130.0	1.0
10.0	30.0	130.0	35.0
11.0	30.0	130.0	35.0
16.0	15.0	115.0	35.0
21.0	13.0	126.4	35.0
26.0	10.0	125.7	35.0
31.0	11.0	125.0	35.0
35.0	15.0	125.0	1.0
40.0	22.0	125.0	1.0
45.0	13.0	125.0	85.0
50.0	21.0	125.0	85.0
55.0	20.0	125.0	35.0
60.0	32.0	130.0	35.0
65.0	35.0	130.0	35.0
70.0	46.0	130.0	35.0

Output Results:

Settlement of saturated sands=14.07 in.
Settlement of dry sands=0.28 in.
Total settlement of saturated and dry sands=14.35 in.
Differential Settlement=7.176 to 9.472 in.

Depth ft	CRRm	CSRfs w/fs	F.S.	S_sat. in.	S_dry in.	S_all in.
1.00	2.22	0.50	5.00	14.07	0.28	14.35
2.00	2.22	0.50	5.00	14.07	0.28	14.35
3.00	2.22	0.50	5.00	14.07	0.28	14.35
4.00	2.22	0.49	5.00	14.07	0.27	14.34
5.00	2.22	0.49	5.00	14.07	0.27	14.34
6.00	2.22	0.49	5.00	14.07	0.27	14.34
7.00	2.22	0.49	5.00	14.07	0.26	14.33
8.00	2.22	0.49	5.00	14.07	0.24	14.31
9.00	2.22	0.49	5.00	14.07	0.23	14.30
10.00	2.22	0.49	5.00	14.07	0.22	14.30
11.00	2.22	0.49	5.00	14.07	0.21	14.29
12.00	2.22	0.48	5.00	14.07	0.20	14.27
13.00	2.22	0.48	5.00	14.07	0.17	14.24
14.00	0.41	0.48	5.00	14.07	0.11	14.18
15.00	0.36	0.48	0.75*	14.07	0.00	14.07
16.00	0.29	0.50	0.58*	13.84	0.00	13.84
17.00	0.27	0.51	0.54*	13.56	0.00	13.56
18.00	0.26	0.52	0.51*	13.27	0.00	13.27
19.00	0.25	0.53	0.47*	12.97	0.00	12.97
20.00	0.24	0.54	0.45*	12.66	0.00	12.66
21.00	0.23	0.55	0.42*	12.35	0.00	12.35
22.00	0.22	0.56	0.40*	12.02	0.00	12.02
23.00	0.21	0.57	0.38*	11.68	0.00	11.68
24.00	0.21	0.58	0.36*	11.32	0.00	11.32
25.00	0.20	0.59	0.34*	10.95	0.00	10.95
26.00	0.19	0.59	0.32*	10.57	0.00	10.57
27.00	0.19	0.60	0.32*	10.19	0.00	10.19
28.00	0.20	0.61	0.32*	9.80	0.00	9.80
29.00	0.20	0.61	0.32*	9.43	0.00	9.43
30.00	0.20	0.62	0.32*	9.06	0.00	9.06
31.00	0.20	0.62	0.32*	8.69	0.00	8.69
32.00	0.18	0.62	0.30*	8.32	0.00	8.32
33.00	0.17	0.62	0.27*	7.95	0.00	7.95
34.00	0.15	0.62	0.25*	7.59	0.00	7.59
35.00	0.15	0.62	0.24*	7.22	0.00	7.22
36.00	0.16	0.62	0.26*	6.87	0.00	6.87
37.00	0.17	0.62	0.28*	6.53	0.00	6.53
38.00	0.18	0.62	0.30*	6.21	0.00	6.21
39.00	0.19	0.61	0.31*	5.90	0.00	5.90
40.00	0.20	0.61	0.33*	5.60	0.00	5.60
41.00	0.22	0.61	0.36*	5.31	0.00	5.31
42.00	0.25	0.61	0.41*	5.02	0.00	5.02
43.00	0.23	0.61	0.38*	4.73	0.00	4.73
44.00	0.21	0.60	0.35*	4.43	0.00	4.43
45.00	0.20	0.60	0.32*	4.11	0.00	4.11
46.00	0.21	0.60	0.35*	3.80	0.00	3.80
47.00	0.22	0.60	0.37*	3.50	0.00	3.50
48.00	0.23	0.59	0.39*	3.22	0.00	3.22
49.00	0.25	0.59	0.42*	2.96	0.00	2.96
50.00	0.26	0.59	0.44*	2.70	0.00	2.70
51.00	0.26	0.58	0.44*	2.45	0.00	2.45
52.00	0.25	0.58	0.44*	2.19	0.00	2.19
53.00	0.25	0.58	0.43*	1.93	0.00	1.93
54.00	0.24	0.57	0.43*	1.65	0.00	1.65

55.00	0.24	0.57	0.42*	1.36	0.00	1.36
56.00	0.26	0.56	0.47*	1.08	0.00	1.08
57.00	0.29	0.56	0.51*	0.82	0.00	0.82
58.00	0.31	0.55	0.57*	0.57	0.00	0.57
59.00	0.35	0.55	0.64*	0.35	0.00	0.35
60.00	0.42	0.54	0.78*	0.17	0.00	0.17
61.00	0.47	0.54	0.87*	0.04	0.00	0.04
62.00	1.99	0.53	3.73	0.00	0.00	0.00
63.00	1.99	0.53	3.75	0.00	0.00	0.00
64.00	1.98	0.52	3.78	0.00	0.00	0.00
65.00	1.98	0.52	3.80	0.00	0.00	0.00
66.00	1.97	0.51	3.83	0.00	0.00	0.00
67.00	1.96	0.51	3.86	0.00	0.00	0.00
68.00	1.96	0.50	3.89	0.00	0.00	0.00
69.00	1.95	0.50	3.92	0.00	0.00	0.00
70.00	1.95	0.49	3.95	0.00	0.00	0.00
71.00	1.94	0.49	3.99	0.00	0.00	0.00

* F.S.<1, Liquefaction Potential Zone
(F.S. is limited to 5, CRR is limited to 2, CSR is limited to 2)

Units Depth = ft, Stress or Pressure = tsf (atm), Unit Weight = pcf, Settlement = in.

CRRm Cyclic resistance ratio from soils
CSRfs Cyclic stress ratio induced by a given earthquake (with user request factor of safety)
F.S. Factor of Safety against liquefaction, F.S.=CRRm/CSRfs
S_sat Settlement from saturated sands
S_dry Settlement from dry sands
S_all Total settlement from saturated and dry sands
NoLiq No-Liquefy Soils

****

LIQUEFACTION ANALYSIS CALCULATION SHEET

Version 4.3
Copyright by CivilTech Software
www.civiltech.com
(425) 453-6488 Fax (425) 453-5848

****

Licensed to John R Byerly, John R. Byerly, Inc. 1/27/2017 3:32:51 PM

Input File Name: C:\Liquefy4\S-13836.4.liq
Title: MAYFAIR HIGH SCHOOL - SPORTS FIELD MODERNIZATION
Subtitle: S-13836

Input Data:

Surface Elev.=58 feet above MSL
Hole No.=B-4
Depth of Hole=71.0 ft
Water Table during Earthquake= 15.0 ft
Water Table during In-Situ Testing= 24.4 ft
Max. Acceleration=0.59 g
Earthquake Magnitude=7.2
User defined factor of safty (applied to CSR) User fs=1.3
fs=user, Plot one CSR (fs=user)

Hammer Energy Ratio, Ce=1
Borehole Diameter, Cb=1.15
Sampeling Method, Cs=1
SPT Fines Correction Method: Stark/Olson et al.*
Settlement Analysis Method: Ishihara / Yoshimine*
Fines Correction for Liquefaction: Stark/Olson et al.*
Fine Correction for Settlement: Post-Liq. Correction *
Average Input Data: Smooth*
* Recommended Options

Depth ft	SPT	Gamma pcf	Fines %
1.0	30.0	130.0	35.0
3.0	30.0	130.0	1.0
5.0	30.0	130.0	1.0
6.0	30.0	130.0	1.0
10.0	30.0	130.0	35.0
11.0	30.0	130.0	35.0
16.0	15.0	115.0	35.0
21.0	13.0	126.4	35.0
26.0	10.0	125.7	35.0
31.0	11.0	125.0	35.0
35.0	15.0	125.0	1.0
40.0	22.0	125.0	1.0
45.0	13.0	125.0	85.0
50.0	21.0	125.0	85.0
55.0	20.0	125.0	35.0
60.0	32.0	130.0	35.0
65.0	35.0	130.0	35.0
70.0	46.0	130.0	35.0

Output Results: (Interval = 1.00 ft)

CSR Calculation:

Depth ft	gamma pcf	sigma tsf	gamma' pcf	sigma' tsf	rd	CSR	fs (user)	CSRfs w/fs
1.00	130.0	0.065	130.0	0.065	1.00	0.38	1.3	0.50
2.00	130.0	0.130	130.0	0.130	1.00	0.38	1.3	0.50
3.00	130.0	0.195	130.0	0.195	0.99	0.38	1.3	0.50
4.00	130.0	0.260	130.0	0.260	0.99	0.38	1.3	0.49
5.00	130.0	0.325	130.0	0.325	0.99	0.38	1.3	0.49
6.00	130.0	0.390	130.0	0.390	0.99	0.38	1.3	0.49
7.00	130.0	0.455	130.0	0.455	0.98	0.38	1.3	0.49
8.00	130.0	0.520	130.0	0.520	0.98	0.38	1.3	0.49
9.00	130.0	0.585	130.0	0.585	0.98	0.38	1.3	0.49
10.00	130.0	0.650	130.0	0.650	0.98	0.37	1.3	0.49
11.00	130.0	0.715	130.0	0.715	0.97	0.37	1.3	0.49
12.00	127.0	0.779	127.0	0.779	0.97	0.37	1.3	0.48
13.00	124.0	0.842	124.0	0.842	0.97	0.37	1.3	0.48
14.00	121.0	0.903	121.0	0.903	0.97	0.37	1.3	0.48
15.00	118.0	0.963	55.6	0.963	0.97	0.37	1.3	0.48
16.00	115.0	1.021	52.6	0.990	0.96	0.38	1.3	0.50
17.00	117.3	1.079	54.9	1.017	0.96	0.39	1.3	0.51
18.00	119.6	1.139	57.2	1.045	0.96	0.40	1.3	0.52
19.00	121.8	1.199	59.4	1.074	0.96	0.41	1.3	0.53
20.00	124.1	1.260	61.7	1.104	0.95	0.42	1.3	0.54
21.00	126.4	1.323	64.0	1.136	0.95	0.42	1.3	0.55
22.00	126.3	1.386	63.9	1.168	0.95	0.43	1.3	0.56
23.00	126.1	1.449	63.7	1.200	0.95	0.44	1.3	0.57
24.00	126.0	1.512	63.6	1.232	0.94	0.44	1.3	0.58
25.00	125.8	1.575	63.4	1.263	0.94	0.45	1.3	0.59
26.00	125.7	1.638	63.3	1.295	0.94	0.46	1.3	0.59
27.00	125.6	1.701	63.2	1.327	0.94	0.46	1.3	0.60
28.00	125.4	1.764	63.0	1.358	0.93	0.47	1.3	0.61
29.00	125.3	1.826	62.9	1.390	0.93	0.47	1.3	0.61
30.00	125.1	1.889	62.7	1.421	0.93	0.47	1.3	0.62
31.00	125.0	1.952	62.6	1.452	0.92	0.47	1.3	0.62
32.00	125.0	2.014	62.6	1.484	0.91	0.48	1.3	0.62
33.00	125.0	2.077	62.6	1.515	0.91	0.48	1.3	0.62
34.00	125.0	2.139	62.6	1.546	0.90	0.48	1.3	0.62
35.00	125.0	2.202	62.6	1.578	0.89	0.48	1.3	0.62
36.00	125.0	2.264	62.6	1.609	0.88	0.48	1.3	0.62
37.00	125.0	2.327	62.6	1.640	0.87	0.47	1.3	0.62
38.00	125.0	2.389	62.6	1.671	0.86	0.47	1.3	0.62
39.00	125.0	2.452	62.6	1.703	0.86	0.47	1.3	0.61
40.00	125.0	2.514	62.6	1.734	0.85	0.47	1.3	0.61
41.00	125.0	2.577	62.6	1.765	0.84	0.47	1.3	0.61
42.00	125.0	2.639	62.6	1.797	0.83	0.47	1.3	0.61
43.00	125.0	2.702	62.6	1.828	0.82	0.47	1.3	0.61
44.00	125.0	2.764	62.6	1.859	0.82	0.47	1.3	0.60
45.00	125.0	2.827	62.6	1.891	0.81	0.46	1.3	0.60
46.00	125.0	2.889	62.6	1.922	0.80	0.46	1.3	0.60
47.00	125.0	2.952	62.6	1.953	0.79	0.46	1.3	0.60
48.00	125.0	3.014	62.6	1.984	0.78	0.46	1.3	0.59
49.00	125.0	3.077	62.6	2.016	0.78	0.45	1.3	0.59
50.00	125.0	3.139	62.6	2.047	0.77	0.45	1.3	0.59
51.00	125.0	3.202	62.6	2.078	0.76	0.45	1.3	0.58
52.00	125.0	3.264	62.6	2.110	0.75	0.45	1.3	0.58
53.00	125.0	3.327	62.6	2.141	0.74	0.44	1.3	0.58
54.00	125.0	3.389	62.6	2.172	0.73	0.44	1.3	0.57
55.00	125.0	3.452	62.6	2.204	0.73	0.44	1.3	0.57

56.00	126.0	3.514	63.6	2.235	0.72	0.43	1.3	0.56
57.00	127.0	3.578	64.6	2.267	0.71	0.43	1.3	0.56
58.00	128.0	3.641	65.6	2.300	0.70	0.43	1.3	0.55
59.00	129.0	3.705	66.6	2.333	0.69	0.42	1.3	0.55
60.00	130.0	3.770	67.6	2.366	0.69	0.42	1.3	0.54
61.00	130.0	3.835	67.6	2.400	0.68	0.42	1.3	0.54
62.00	130.0	3.900	67.6	2.434	0.67	0.41	1.3	0.53
63.00	130.0	3.965	67.6	2.468	0.66	0.41	1.3	0.53
64.00	130.0	4.030	67.6	2.501	0.65	0.40	1.3	0.52
65.00	130.0	4.095	67.6	2.535	0.65	0.40	1.3	0.52
66.00	130.0	4.160	67.6	2.569	0.64	0.40	1.3	0.51
67.00	130.0	4.225	67.6	2.603	0.63	0.39	1.3	0.51
68.00	130.0	4.290	67.6	2.637	0.62	0.39	1.3	0.50
69.00	130.0	4.355	67.6	2.670	0.61	0.38	1.3	0.50
70.00	130.0	4.420	67.6	2.704	0.60	0.38	1.3	0.49
71.00	130.0	4.485	67.6	2.738	0.60	0.37	1.3	0.49

CSR is based on water table at 15.0 during earthquake

CRR Calculation from SPT or BPT data:

Depth ft	SPT	Cebs	Cr	sigma'	Cn	(N1)60	Fines %	d(N1)60	(N1)60f	CRR7.5
1.00	30.00	1.15	0.75	0.065	1.70	43.99	35.0	7.20	51.19	2.00
2.00	30.00	1.15	0.75	0.130	1.70	43.99	18.0	3.12	47.11	2.00
3.00	30.00	1.15	0.75	0.195	1.70	43.99	1.0	0.00	43.99	2.00
4.00	30.00	1.15	0.75	0.260	1.70	43.99	1.0	0.00	43.99	2.00
5.00	30.00	1.15	0.75	0.325	1.70	43.99	1.0	0.00	43.99	2.00
6.00	30.00	1.15	0.75	0.390	1.60	41.43	1.0	0.00	41.43	2.00
7.00	30.00	1.15	0.75	0.455	1.48	38.36	9.5	1.08	39.44	2.00
8.00	30.00	1.15	0.75	0.520	1.39	35.88	18.0	3.12	39.00	2.00
9.00	30.00	1.15	0.85	0.585	1.31	38.34	26.5	5.16	43.50	2.00
10.00	30.00	1.15	0.85	0.650	1.24	36.37	35.0	7.20	43.57	2.00
11.00	30.00	1.15	0.85	0.715	1.18	34.68	35.0	7.20	41.88	2.00
12.00	27.00	1.15	0.85	0.779	1.13	29.90	35.0	7.20	37.10	2.00
13.00	24.00	1.15	0.85	0.842	1.09	25.57	35.0	7.20	32.77	2.00
14.00	21.00	1.15	0.85	0.903	1.05	21.60	35.0	7.20	28.80	0.37
15.00	18.00	1.15	0.95	0.963	1.02	20.04	35.0	7.20	27.24	0.32
16.00	15.00	1.15	0.95	1.021	0.99	16.21	35.0	7.20	23.41	0.26
17.00	14.60	1.15	0.95	1.079	0.96	15.35	35.0	7.20	22.55	0.25
18.00	14.20	1.15	0.95	1.139	0.94	14.54	35.0	7.20	21.74	0.24
19.00	13.80	1.15	0.95	1.199	0.91	13.77	35.0	7.20		

20.97	0.23								
	20.00	13.40	1.15	0.95	1.260	0.89	13.04	35.0	7.20
20.24	0.22								
	21.00	13.00	1.15	0.95	1.323	0.87	12.35	35.0	7.20
19.55	0.21								
	22.00	12.40	1.15	0.95	1.386	0.85	11.51	35.0	7.20
18.71	0.20								
	23.00	11.80	1.15	0.95	1.449	0.83	10.71	35.0	7.20
17.91	0.19								
	24.00	11.20	1.15	0.95	1.512	0.81	9.95	35.0	7.20
17.15	0.19								
	25.00	10.60	1.15	0.95	1.558	0.80	9.28	35.0	7.20
16.48	0.18								
	26.00	10.00	1.15	0.95	1.590	0.79	8.66	35.0	7.20
15.86	0.17								
	27.00	10.20	1.15	0.95	1.621	0.79	8.75	35.0	7.20
15.95	0.17								
	28.00	10.40	1.15	1.00	1.653	0.78	9.30	35.0	7.20
16.50	0.18								
	29.00	10.60	1.15	1.00	1.684	0.77	9.39	35.0	7.20
16.59	0.18								
	30.00	10.80	1.15	1.00	1.716	0.76	9.48	35.0	7.20
16.68	0.18								
	31.00	11.00	1.15	1.00	1.747	0.76	9.57	35.0	7.20
16.77	0.18								
	32.00	12.00	1.15	1.00	1.779	0.75	10.35	26.5	5.16
15.51	0.17								
	33.00	13.00	1.15	1.00	1.810	0.74	11.11	18.0	3.12
14.23	0.15								
	34.00	14.00	1.15	1.00	1.841	0.74	11.87	9.5	1.08
12.95	0.14								
	35.00	15.00	1.15	1.00	1.872	0.73	12.61	1.0	0.00
12.61	0.14								
	36.00	16.40	1.15	1.00	1.904	0.72	13.67	1.0	0.00
13.67	0.15								
	37.00	17.80	1.15	1.00	1.935	0.72	14.72	1.0	0.00
14.72	0.16								
	38.00	19.20	1.15	1.00	1.966	0.71	15.75	1.0	0.00
15.75	0.17								
	39.00	20.60	1.15	1.00	1.998	0.71	16.76	1.0	0.00
16.76	0.18								
	40.00	22.00	1.15	1.00	2.029	0.70	17.76	1.0	0.00
17.76	0.19								
	41.00	20.20	1.15	1.00	2.060	0.70	16.18	17.8	3.07
19.26	0.21								
	42.00	18.40	1.15	1.00	2.091	0.69	14.63	34.6	7.10
21.73	0.24								
	43.00	16.60	1.15	1.00	2.123	0.69	13.10	51.4	7.20
20.30	0.22								
	44.00	14.80	1.15	1.00	2.154	0.68	11.60	68.2	7.20
18.80	0.20								
	45.00	13.00	1.15	1.00	2.185	0.68	10.11	85.0	7.20
17.31	0.19								
	46.00	14.60	1.15	1.00	2.217	0.67	11.28	85.0	7.20
18.48	0.20								
	47.00	16.20	1.15	1.00	2.248	0.67	12.43	85.0	7.20
19.63	0.21								
	48.00	17.80	1.15	1.00	2.279	0.66	13.56	85.0	7.20
20.76	0.22								
	49.00	19.40	1.15	1.00	2.311	0.66	14.68	85.0	7.20
21.88	0.24								
	50.00	21.00	1.15	1.00	2.342	0.65	15.78	85.0	7.20
22.98	0.25								

51.00	20.80	1.15	1.00	2.373	0.65	15.53	75.0	7.20
22.73	0.25							
52.00	20.60	1.15	1.00	2.404	0.64	15.28	65.0	7.20
22.48	0.25							
53.00	20.40	1.15	1.00	2.436	0.64	15.03	55.0	7.20
22.23	0.24							
54.00	20.20	1.15	1.00	2.467	0.64	14.79	45.0	7.20
21.99	0.24							
55.00	20.00	1.15	1.00	2.498	0.63	14.55	35.0	7.20
21.75	0.24							
56.00	22.40	1.15	1.00	2.530	0.63	16.19	35.0	7.20
23.39	0.26							
57.00	24.80	1.15	1.00	2.562	0.62	17.82	35.0	7.20
25.02	0.28							
58.00	27.20	1.15	1.00	2.595	0.62	19.42	35.0	7.20
26.62	0.31							
59.00	29.60	1.15	1.00	2.628	0.62	21.00	35.0	7.20
28.20	0.35							
60.00	32.00	1.15	1.00	2.661	0.61	22.56	35.0	7.20
29.76	0.42							
61.00	32.60	1.15	1.00	2.695	0.61	22.84	35.0	7.20
30.04	0.47							
62.00	33.20	1.15	1.00	2.729	0.61	23.11	35.0	7.20
30.31	2.00							
63.00	33.80	1.15	1.00	2.762	0.60	23.39	35.0	7.20
30.59	2.00							
64.00	34.40	1.15	1.00	2.796	0.60	23.66	35.0	7.20
30.86	2.00							
65.00	35.00	1.15	1.00	2.830	0.59	23.93	35.0	7.20
31.13	2.00							
66.00	37.20	1.15	1.00	2.864	0.59	25.28	35.0	7.20
32.48	2.00							
67.00	39.40	1.15	1.00	2.898	0.59	26.62	35.0	7.20
33.82	2.00							
68.00	41.60	1.15	1.00	2.931	0.58	27.94	35.0	7.20
35.14	2.00							
69.00	43.80	1.15	1.00	2.965	0.58	29.25	35.0	7.20
36.45	2.00							
70.00	46.00	1.15	1.00	2.999	0.58	30.55	35.0	7.20
37.75	2.00							
71.00	46.00	1.15	1.00	3.033	0.57	30.38	35.0	7.20
37.58	2.00							

CRR is based on water table at 24.4 during In-Situ Testing

Factor of Safety, - Earthquake Magnitude= 7.2:

Depth ft	sigC' tsf	CRR7.5 tsf	Ksigma	CRRv	MSF	CRRm	CSRfs w/fs	F.S. CRRm/CSRfs
1.00	0.04	2.00	1.00	2.00	1.11	2.22	0.50	5.00
2.00	0.08	2.00	1.00	2.00	1.11	2.22	0.50	5.00
3.00	0.13	2.00	1.00	2.00	1.11	2.22	0.50	5.00
4.00	0.17	2.00	1.00	2.00	1.11	2.22	0.49	5.00
5.00	0.21	2.00	1.00	2.00	1.11	2.22	0.49	5.00
6.00	0.25	2.00	1.00	2.00	1.11	2.22	0.49	5.00
7.00	0.30	2.00	1.00	2.00	1.11	2.22	0.49	5.00
8.00	0.34	2.00	1.00	2.00	1.11	2.22	0.49	5.00
9.00	0.38	2.00	1.00	2.00	1.11	2.22	0.49	5.00
10.00	0.42	2.00	1.00	2.00	1.11	2.22	0.49	5.00
11.00	0.46	2.00	1.00	2.00	1.11	2.22	0.49	5.00
12.00	0.51	2.00	1.00	2.00	1.11	2.22	0.48	5.00

13.00	0.55	2.00	1.00	2.00	1.11	2.22	0.48	5.00
14.00	0.59	0.37	1.00	0.37	1.11	0.41	0.48	5.00
15.00	0.63	0.32	1.00	0.32	1.11	0.36	0.48	0.75 *
16.00	0.66	0.26	1.00	0.26	1.11	0.29	0.50	0.58 *
17.00	0.70	0.25	1.00	0.25	1.11	0.27	0.51	0.54 *
18.00	0.74	0.24	1.00	0.24	1.11	0.26	0.52	0.51 *
19.00	0.78	0.23	1.00	0.23	1.11	0.25	0.53	0.47 *
20.00	0.82	0.22	1.00	0.22	1.11	0.24	0.54	0.45 *
21.00	0.86	0.21	1.00	0.21	1.11	0.23	0.55	0.42 *
22.00	0.90	0.20	1.00	0.20	1.11	0.22	0.56	0.40 *
23.00	0.94	0.19	1.00	0.19	1.11	0.21	0.57	0.38 *
24.00	0.98	0.19	1.00	0.19	1.11	0.21	0.58	0.36 *
25.00	1.01	0.18	1.00	0.18	1.11	0.20	0.59	0.34 *
26.00	1.03	0.17	1.00	0.17	1.11	0.19	0.59	0.32 *
27.00	1.05	0.17	1.00	0.17	1.11	0.19	0.60	0.32 *
28.00	1.07	0.18	0.99	0.18	1.11	0.20	0.61	0.32 *
29.00	1.09	0.18	0.99	0.18	1.11	0.20	0.61	0.32 *
30.00	1.12	0.18	0.99	0.18	1.11	0.20	0.62	0.32 *
31.00	1.14	0.18	0.98	0.18	1.11	0.20	0.62	0.32 *
32.00	1.16	0.17	0.98	0.16	1.11	0.18	0.62	0.30 *
33.00	1.18	0.15	0.98	0.15	1.11	0.17	0.62	0.27 *
34.00	1.20	0.14	0.98	0.14	1.11	0.15	0.62	0.25 *
35.00	1.22	0.14	0.97	0.13	1.11	0.15	0.62	0.24 *
36.00	1.24	0.15	0.97	0.14	1.11	0.16	0.62	0.26 *
37.00	1.26	0.16	0.97	0.15	1.11	0.17	0.62	0.28 *
38.00	1.28	0.17	0.96	0.16	1.11	0.18	0.62	0.30 *
39.00	1.30	0.18	0.96	0.17	1.11	0.19	0.61	0.31 *
40.00	1.32	0.19	0.96	0.18	1.11	0.20	0.61	0.33 *
41.00	1.34	0.21	0.96	0.20	1.11	0.22	0.61	0.36 *
42.00	1.36	0.24	0.95	0.23	1.11	0.25	0.61	0.41 *
43.00	1.38	0.22	0.95	0.21	1.11	0.23	0.61	0.38 *
44.00	1.40	0.20	0.95	0.19	1.11	0.21	0.60	0.35 *
45.00	1.42	0.19	0.94	0.18	1.11	0.20	0.60	0.32 *
46.00	1.44	0.20	0.94	0.19	1.11	0.21	0.60	0.35 *
47.00	1.46	0.21	0.94	0.20	1.11	0.22	0.60	0.37 *
48.00	1.48	0.22	0.94	0.21	1.11	0.23	0.59	0.39 *
49.00	1.50	0.24	0.93	0.22	1.11	0.25	0.59	0.42 *
50.00	1.52	0.25	0.93	0.24	1.11	0.26	0.59	0.44 *
51.00	1.54	0.25	0.93	0.23	1.11	0.26	0.58	0.44 *
52.00	1.56	0.25	0.92	0.23	1.11	0.25	0.58	0.44 *
53.00	1.58	0.24	0.92	0.22	1.11	0.25	0.58	0.43 *
54.00	1.60	0.24	0.92	0.22	1.11	0.24	0.57	0.43 *
55.00	1.62	0.24	0.92	0.22	1.11	0.24	0.57	0.42 *
56.00	1.64	0.26	0.91	0.24	1.11	0.26	0.56	0.47 *
57.00	1.67	0.28	0.91	0.26	1.11	0.29	0.56	0.51 *
58.00	1.69	0.31	0.91	0.28	1.11	0.31	0.55	0.57 *
59.00	1.71	0.35	0.91	0.32	1.11	0.35	0.55	0.64 *
60.00	1.73	0.42	0.90	0.38	1.11	0.42	0.54	0.78 *
61.00	1.75	0.47	0.90	0.42	1.11	0.47	0.54	0.87 *
62.00	1.77	2.00	0.90	1.80	1.11	1.99	0.53	3.73
63.00	1.80	2.00	0.90	1.79	1.11	1.99	0.53	3.75
64.00	1.82	2.00	0.89	1.79	1.11	1.98	0.52	3.78
65.00	1.84	2.00	0.89	1.78	1.11	1.98	0.52	3.80
66.00	1.86	2.00	0.89	1.78	1.11	1.97	0.51	3.83
67.00	1.88	2.00	0.88	1.77	1.11	1.96	0.51	3.86
68.00	1.91	2.00	0.88	1.76	1.11	1.96	0.50	3.89
69.00	1.93	2.00	0.88	1.76	1.11	1.95	0.50	3.92
70.00	1.95	2.00	0.88	1.75	1.11	1.95	0.49	3.95
71.00	1.97	2.00	0.87	1.75	1.11	1.94	0.49	3.99

* F.S.<1: Liquefaction Potential Zone. (If above water table: F.S.=5)
(F.S. is limited to 5, CRR is limited to 2, CSR is limited to 2)

CPT convert to SPT for Settlement Analysis:
Fines Correction for Settlement Analysis:

Depth ft	Ic	qc/N60	qc1 tsf	(N1)60	Fines %	d(N1)60	(N1)60s
1.00	-	-	-	43.99	35.0	2.92	46.91
2.00	-	-	-	43.99	18.0	1.62	45.61
3.00	-	-	-	43.99	1.0	0.10	44.08
4.00	-	-	-	43.99	1.0	0.10	44.08
5.00	-	-	-	43.99	1.0	0.10	44.08
6.00	-	-	-	41.43	1.0	0.10	41.53
7.00	-	-	-	38.36	9.5	0.89	39.25
8.00	-	-	-	35.88	18.0	1.62	37.51
9.00	-	-	-	38.34	26.5	2.30	40.64
10.00	-	-	-	36.37	35.0	2.92	39.29
11.00	-	-	-	34.68	35.0	2.92	37.60
12.00	-	-	-	29.90	35.0	2.92	32.82
13.00	-	-	-	25.57	35.0	2.92	28.48
14.00	-	-	-	21.60	35.0	2.92	24.52
15.00	-	-	-	20.04	35.0	2.92	22.96
16.00	-	-	-	16.21	35.0	2.92	19.13
17.00	-	-	-	15.35	35.0	2.92	18.27
18.00	-	-	-	14.54	35.0	2.92	17.46
19.00	-	-	-	13.77	35.0	2.92	16.69
20.00	-	-	-	13.04	35.0	2.92	15.96
21.00	-	-	-	12.35	35.0	2.92	15.27
22.00	-	-	-	11.51	35.0	2.92	14.43
23.00	-	-	-	10.71	35.0	2.92	13.63
24.00	-	-	-	9.95	35.0	2.92	12.87
25.00	-	-	-	9.28	35.0	2.92	12.20
26.00	-	-	-	8.66	35.0	2.92	11.58
27.00	-	-	-	8.75	35.0	2.92	11.67
28.00	-	-	-	9.30	35.0	2.92	12.22
29.00	-	-	-	9.39	35.0	2.92	12.31
30.00	-	-	-	9.48	35.0	2.92	12.40
31.00	-	-	-	9.57	35.0	2.92	12.49
32.00	-	-	-	10.35	26.5	2.30	12.65
33.00	-	-	-	11.11	18.0	1.62	12.74
34.00	-	-	-	11.87	9.5	0.89	12.75
35.00	-	-	-	12.61	1.0	0.10	12.70
36.00	-	-	-	13.67	1.0	0.10	13.77
37.00	-	-	-	14.72	1.0	0.10	14.81
38.00	-	-	-	15.75	1.0	0.10	15.84
39.00	-	-	-	16.76	1.0	0.10	16.86
40.00	-	-	-	17.76	1.0	0.10	17.86
41.00	-	-	-	16.18	17.8	1.61	17.79
42.00	-	-	-	14.63	34.6	2.89	17.52
43.00	-	-	-	13.10	51.4	3.95	17.05
44.00	-	-	-	11.60	68.2	4.78	16.38
45.00	-	-	-	10.11	85.0	5.38	15.50
46.00	-	-	-	11.28	85.0	5.38	16.66
47.00	-	-	-	12.43	85.0	5.38	17.81
48.00	-	-	-	13.56	85.0	5.38	18.94
49.00	-	-	-	14.68	85.0	5.38	20.06
50.00	-	-	-	15.78	85.0	5.38	21.16
51.00	-	-	-	15.53	75.0	5.05	20.58
52.00	-	-	-	15.28	65.0	4.64	19.92
53.00	-	-	-	15.03	55.0	4.15	19.18
54.00	-	-	-	14.79	45.0	3.57	18.36
55.00	-	-	-	14.55	35.0	2.92	17.47
56.00	-	-	-	16.19	35.0	2.92	19.11
57.00	-	-	-	17.82	35.0	2.92	20.74

58.00	-	-	-	19.42	35.0	2.92	22.34
59.00	-	-	-	21.00	35.0	2.92	23.92
60.00	-	-	-	22.56	35.0	2.92	25.48
61.00	-	-	-	22.84	35.0	2.92	25.76
62.00	-	-	-	23.11	35.0	2.92	26.03
63.00	-	-	-	23.39	35.0	2.92	26.31
64.00	-	-	-	23.66	35.0	2.92	26.58
65.00	-	-	-	23.93	35.0	2.92	26.84
66.00	-	-	-	25.28	35.0	2.92	28.20
67.00	-	-	-	26.62	35.0	2.92	29.54
68.00	-	-	-	27.94	35.0	2.92	30.86
69.00	-	-	-	29.25	35.0	2.92	32.17
70.00	-	-	-	30.55	35.0	2.92	33.47
71.00	-	-	-	30.38	35.0	2.92	33.29

Settlement of Saturated Sands:
Settlement Analysis Method: Ishihara / Yoshimine*

Depth ft	CSRfs w/fs	F.S.	Fines %	(N1)60s	Dr %	ec %	dsz in.	dsv in.	S in.
70.95	0.49	3.99	35.0	33.30	98.05	0.000	0.000	0.000	0.000
70.00	0.49	3.95	35.0	33.47	98.47	0.000	0.000	0.000	0.000
69.00	0.50	3.92	35.0	32.17	95.18	0.000	0.000	0.000	0.000
68.00	0.50	3.89	35.0	30.86	92.03	0.000	0.000	0.000	0.000
67.00	0.51	3.86	35.0	29.54	89.02	0.000	0.000	0.000	0.000
66.00	0.51	3.83	35.0	28.20	86.12	0.000	0.000	0.000	0.000
65.00	0.52	3.80	35.0	26.84	83.34	0.000	0.000	0.000	0.000
64.00	0.52	3.78	35.0	26.58	82.80	0.000	0.000	0.000	0.000
63.00	0.53	3.75	35.0	26.31	82.26	0.000	0.000	0.000	0.000
62.00	0.53	3.73	35.0	26.03	81.72	0.000	0.000	0.000	0.000
61.00	0.54	0.87	35.0	25.76	81.18	0.952	0.006	0.037	0.037
60.00	0.54	0.78	35.0	25.48	80.64	1.201	0.007	0.132	0.169
59.00	0.55	0.64	35.0	23.92	77.67	1.717	0.010	0.181	0.351
58.00	0.55	0.57	35.0	22.34	74.76	1.956	0.012	0.223	0.574
57.00	0.56	0.51	35.0	20.74	71.86	2.110	0.013	0.245	0.818
56.00	0.56	0.47	35.0	19.11	68.94	2.260	0.014	0.262	1.081
55.00	0.57	0.42	35.0	17.47	65.95	2.442	0.015	0.283	1.363
54.00	0.57	0.43	45.0	18.36	67.58	2.343	0.014	0.287	1.650
53.00	0.58	0.43	55.0	19.18	69.06	2.253	0.014	0.275	1.925
52.00	0.58	0.44	65.0	19.92	70.39	2.178	0.013	0.265	2.191

51.00	0.58	0.44	75.0	20.58	71.58	2.125	0.013	0.258
2.449								
50.00	0.59	0.44	85.0	21.16	72.63	2.077	0.012	0.252
2.701								
49.00	0.59	0.42	85.0	20.06	70.65	2.167	0.013	0.255
2.955								
48.00	0.59	0.39	85.0	18.94	68.63	2.279	0.014	0.267
3.222								
47.00	0.60	0.37	85.0	17.81	66.57	2.405	0.014	0.281
3.503								
46.00	0.60	0.35	85.0	16.66	64.44	2.534	0.015	0.297
3.800								
45.00	0.60	0.32	85.0	15.50	62.24	2.668	0.016	0.312
4.113								
44.00	0.60	0.35	68.2	16.38	63.91	2.566	0.015	0.313
4.426								
43.00	0.61	0.38	51.4	17.05	65.17	2.490	0.015	0.303
4.729								
42.00	0.61	0.41	34.6	17.52	66.04	2.437	0.015	0.295
5.024								
41.00	0.61	0.36	17.8	17.79	66.54	2.406	0.014	0.290
5.314								
40.00	0.61	0.33	1.0	17.86	66.66	2.399	0.014	0.288
5.602								
39.00	0.61	0.31	1.0	16.86	64.81	2.511	0.015	0.295
5.897								
38.00	0.62	0.30	1.0	15.84	62.90	2.628	0.016	0.309
6.206								
37.00	0.62	0.28	1.0	14.81	60.91	2.749	0.016	0.323
6.529								
36.00	0.62	0.26	1.0	13.77	58.82	2.888	0.017	0.338
6.867								
35.00	0.62	0.24	1.0	12.70	56.62	3.046	0.018	0.356
7.224								
34.00	0.62	0.25	9.5	12.75	56.73	3.038	0.018	0.365
7.588								
33.00	0.62	0.27	18.0	12.74	56.69	3.041	0.018	0.365
7.953								
32.00	0.62	0.30	26.5	12.65	56.50	3.054	0.018	0.366
8.319								
31.00	0.62	0.32	35.0	12.49	56.16	3.078	0.018	0.368
8.687								
30.00	0.62	0.32	35.0	12.40	55.97	3.092	0.019	0.370
9.057								
29.00	0.61	0.32	35.0	12.31	55.78	3.106	0.019	0.372
9.429								
28.00	0.61	0.32	35.0	12.22	55.59	3.119	0.019	0.374
9.802								
27.00	0.60	0.32	35.0	11.67	54.38	3.205	0.019	0.383
10.185								
26.00	0.59	0.32	35.0	11.58	54.19	3.219	0.019	0.386
10.571								
25.00	0.59	0.34	35.0	12.20	55.53	3.123	0.019	0.380
10.951								
24.00	0.58	0.36	35.0	12.87	56.97	3.021	0.018	0.369
11.320								
23.00	0.57	0.38	35.0	13.63	58.54	2.909	0.017	0.355
11.675								
22.00	0.56	0.40	35.0	14.43	60.15	2.795	0.017	0.342
12.017								
21.00	0.55	0.42	35.0	15.27	61.79	2.695	0.016	0.329
12.346								
20.00	0.54	0.45	35.0	15.96	63.12	2.614	0.016	0.318

12.664	19.00	0.53	0.47	35.0	16.69	64.50	2.531	0.015	0.308
12.973	18.00	0.52	0.51	35.0	17.46	65.92	2.444	0.015	0.298
13.271	17.00	0.51	0.54	35.0	18.27	67.41	2.353	0.014	0.288
13.559	16.00	0.50	0.58	35.0	19.13	68.98	2.258	0.014	0.276
13.835	15.00	0.48	0.75	35.0	22.96	75.89	1.577	0.009	0.236
14.072									

Settlement of Saturated Sands=14.072 in.
dsz is per each segment: dz=0.05 ft
dsv is per each print interval: dv=1 ft
S is cumulated settlement at this depth

Settlement of Dry Sands:

Depth	sigma'	sigC'	(N1)60s	CSRfs	Gmax	g*Ge/Gm	g_eff	ec7.5	Cec	ec
dsz	dsv	S								
ft	tsf	tsf		w/fs	tsf			%		%
in.	in.	in.								
14.95	0.96	0.62	23.15	0.48	1005.9	4.6E-4	0.6020	0.4899	0.98	0.4816
5.8E-3	0.006	0.006								
14.00	0.90	0.59	24.52	0.48	994.5	4.4E-4	0.4565	0.3446	0.98	0.3388
4.1E-3	0.102	0.107								
13.00	0.84	0.55	28.48	0.48	1009.3	4.0E-4	0.2935	0.1804	0.98	0.1773
2.1E-3	0.059	0.166								
12.00	0.78	0.51	32.82	0.48	1017.8	3.7E-4	0.1976	0.0971	0.98	0.0955
1.1E-3	0.031	0.197								
11.00	0.72	0.46	37.60	0.49	1020.1	3.4E-4	0.1379	0.0513	0.98	0.0504
6.0E-4	0.017	0.214								
10.00	0.65	0.42	39.29	0.49	987.0	3.2E-4	0.1101	0.0365	0.98	0.0359
4.3E-4	0.010	0.224								
9.00	0.59	0.38	40.64	0.49	947.0	3.0E-4	0.0892	0.0282	0.98	0.0277
3.3E-4	0.007	0.232								
8.00	0.52	0.34	37.51	0.49	869.3	2.9E-4	0.2635	0.0986	0.98	0.0969
1.2E-3	0.011	0.243								
7.00	0.46	0.30	39.25	0.49	825.5	2.7E-4	0.1243	0.0414	0.98	0.0407
4.9E-4	0.015	0.258								
6.00	0.39	0.25	41.53	0.49	778.8	2.5E-4	0.0695	0.0220	0.98	0.0216
2.6E-4	0.007	0.265								
5.00	0.33	0.21	44.08	0.49	725.2	2.2E-4	0.0470	0.0148	0.98	0.0146
1.8E-4	0.004	0.269								
4.00	0.26	0.17	44.08	0.49	648.6	2.0E-4	0.0392	0.0124	0.98	0.0122
1.5E-4	0.003	0.272								
3.00	0.20	0.13	44.08	0.50	561.7	1.7E-4	0.0383	0.0121	0.98	0.0119
1.4E-4	0.003	0.275								
2.00	0.13	0.08	45.61	0.50	463.9	1.4E-4	0.0261	0.0083	0.98	0.0081
9.7E-5	0.002	0.278								
1.00	0.07	0.04	46.91	0.50	331.1	9.8E-5	0.0192	0.0061	0.98	0.0060
7.2E-5	0.002	0.279								

Settlement of Dry Sands=0.279 in.
dsz is per each segment: dz=0.05 ft
dsv is per each print interval: dv=1 ft
S is cumulated settlement at this depth

Total Settlement of Saturated and Dry Sands=14.351 in.
Differential Settlement=7.176 to 9.472 in.

Units Depth = ft, Stress or Pressure = tsf (atm), Unit Weight = pcf, Settlement = in.

SPT	Field data from Standard Penetration Test (SPT)
BPT	Field data from Becker Penetration Test (BPT)
qc	Field data from Cone Penetration Test (CPT)
fc	Friction from CPT testing
Gamma	Total unit weight of soil
Gamma'	Effective unit weight of soil
Fines	Fines content [%]
D50	Mean grain size
Dr	Relative Density
sigma	Total vertical stress [tsf]
sigma'	Effective vertical stress [tsf]
sigC'	Effective confining pressure [tsf]
rd	Stress reduction coefficient
CSR	Cyclic stress ratio induced by earthquake
fs	User request factor of safety, apply to CSR
w/fs	With user request factor of safety inside
CSRfs	CSR with User request factor of safety
CRR7.5	Cyclic resistance ratio (M=7.5)
Ksigma	Overburden stress correction factor for CRR7.5
CRRv	CRR after overburden stress correction, CRRv=CRR7.5 * Ksigma
MSF	Magnitude scaling factor for CRR (M=7.5)
CRRm	After magnitude scaling correction CRRm=CRRv * MSF
F.S.	Factor of Safety against liquefaction F.S.=CRRm/CSRfs
Cebs	Energy Ratio, Borehole Dia., and Sample Method Corrections
Cr	Rod Length Corrections
Cn	Overburden Pressure Correction
(N1)60	SPT after corrections, (N1)60=SPT * Cr * Cn * Cebs
d(N1)60	Fines correction of SPT
(N1)60f	(N1)60 after fines corrections, (N1)60f=(N1)60 + d(N1)60
Cq	Overburden stress correction factor
qc1	CPT after Overburden stress correction
dqc1	Fines correction of CPT
qc1f	CPT after Fines and Overburden correction, qc1f=qc1 + dqc1
qc1n	CPT after normalization in Robertson's method
Kc	Fine correction factor in Robertson's Method
qc1f	CPT after Fines correction in Robertson's Method
Ic	Soil type index in Suzuki's and Robertson's Methods
(N1)60s	(N1)60 after seattlement fines corrections
ec	Volumetric strain for saturated sands
ds	Settlement in each Segment dz
dz	Segment for calculation, dz=0.050 ft
Gmax	Shear Modulus at low strain
g_eff	gamma_eff, Effective shear Strain
g*Ge/Gm	gamma_eff * G_eff/G_max, Strain-modulus ratio
ec7.5	Volumetric Strain for magnitude=7.5
Cec	Magnitude correction factor for any magnitude
ec	Volumetric strain for dry sands, ec=Cec * ec7.5
NoLiq	No-Liquefy Soils

References:

NCEER Workshop on Evaluation of Liquefaction Resistance of Soils. Youd, T.L., and Idriss, I.M., eds., Technical Report NCEER 97-0022.

SP117. Southern California Earthquake Center. Recommended Procedures for Implementation of DMG Special Publication 117, Guidelines for Analyzing and Mitigating Liquefaction in California. University of Southern California. March 1999.

LIQUEFACTION ANALYSIS

MAYFAIR HIGH SCHOOL - SPORTS FIELD MODERNIZATION

Hole No.=B-5 Water Depth=15.0 ft Surface Elev.=57 feet above MSL *Magnitude=7.2*
Acceleration=0.591g

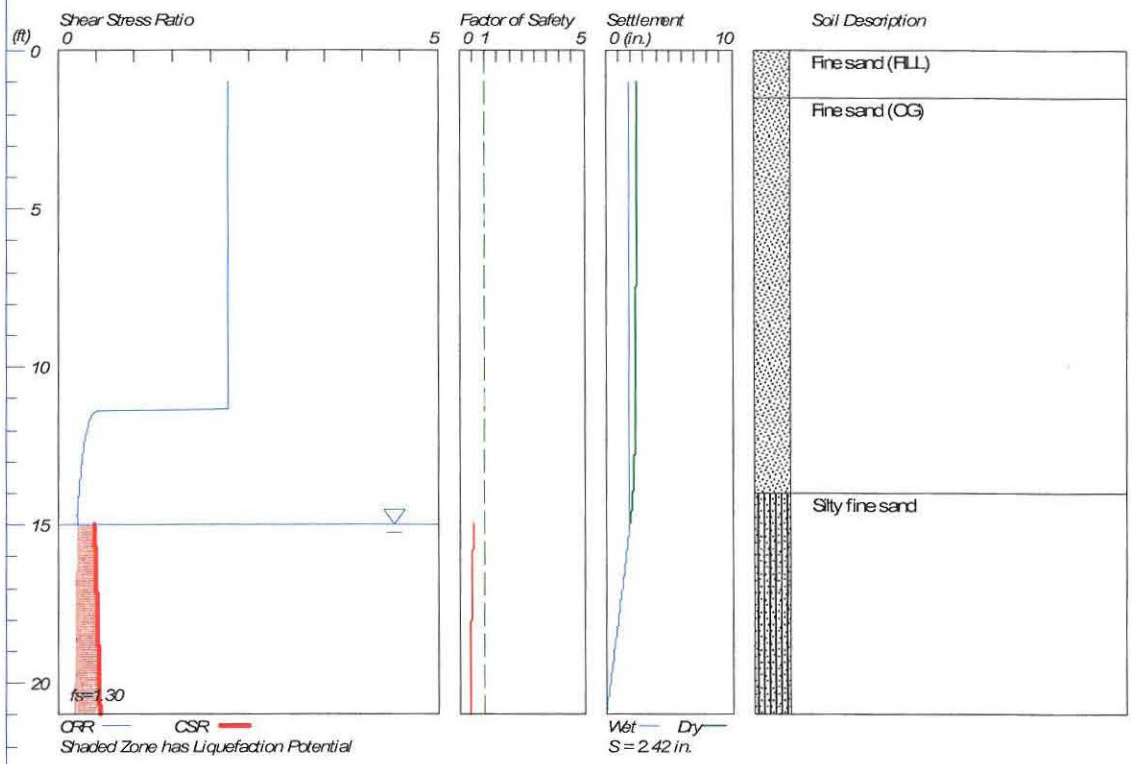

LiquefyPro CivilTech Software USA www.civiltech.com

CivilTech Corporation S-13836

****

LIQUEFACTION ANALYSIS CALCULATION SHEET

Version 4.3
Copyright by CivilTech Software
www.civiltech.com
(425) 453-6488 Fax (425) 453-5848

****

Licensed to John R Byerly, John R. Byerly, Inc. 1/27/2017 3:35:43 PM

Input File Name: C:\Liquefy4\S-13836.5.liq
Title: MAYFAIR HIGH SCHOOL - SPORTS FIELD MODERNIZATION
Subtitle: S-13836

Surface Elev.=57 feet above MSL
Hole No.=B-5
Depth of Hole= 21.0 ft
Water Table during Earthquake= 15.0 ft
Water Table during In-Situ Testing= 18.3 ft
Max. Acceleration= 0.59 g
Earthquake Magnitude= 7.2
User defined factor of safty (applied to CSR) User fs=1.3
fs=user, Plot one CSR (fs=user)

Hammer Energy Ratio, Ce=1
Borehole Diameter, Cb=1.15
Sampeling Method, Cs=1
SPT Fines Correction Method: Stark/Olson et al.*
Settlement Analysis Method: Ishihara / Yoshimine*
Fines Correction for Liquefaction: Stark/Olson et al.*
Fine Correction for Settlement: Post-Liq. Correction *
Average Input Data: Smooth*
* Recommended Options

Input Data:

Depth ft	SPT	Gamma pcf	Fines %
1.0	30.0	130.0	1.0
3.0	30.0	130.0	1.0
5.0	30.0	130.0	1.0
7.0	30.0	130.0	1.0
10.0	30.0	130.0	1.0
15.0	13.0	113.2	35.0
20.0	12.0	115.0	35.0

Output Results:
Settlement of saturated sands=1.89 in.
Settlement of dry sands=0.53 in.
Total settlement of saturated and dry sands=2.42 in.
Differential Settlement=1.209 to 1.596 in.

Depth ft	CRRm	CSRfs w/fs	F.S.	S_sat. in.	S_dry in.	S_all in.
1.00	2.22	0.50	5.00	1.89	0.53	2.42
2.00	2.22	0.50	5.00	1.89	0.53	2.42

3.00	2.22	0.50	5.00	1.89	0.52	2.41
4.00	2.22	0.49	5.00	1.89	0.52	2.41
5.00	2.22	0.49	5.00	1.89	0.52	2.41
6.00	2.22	0.49	5.00	1.89	0.51	2.40
7.00	2.22	0.49	5.00	1.89	0.51	2.40
8.00	2.22	0.49	5.00	1.89	0.49	2.38
9.00	2.22	0.49	5.00	1.89	0.47	2.36
10.00	2.22	0.49	5.00	1.89	0.46	2.35
11.00	2.22	0.49	5.00	1.89	0.45	2.34
12.00	0.38	0.48	5.00	1.89	0.42	2.31
13.00	0.32	0.48	5.00	1.89	0.36	2.25
14.00	0.27	0.48	5.00	1.89	0.24	2.13
15.00	0.26	0.48	0.55*	1.89	0.00	1.89
16.00	0.25	0.50	0.51*	1.59	0.00	1.59
17.00	0.25	0.51	0.48*	1.29	0.00	1.29
18.00	0.24	0.52	0.46*	0.97	0.00	0.97
19.00	0.23	0.53	0.44*	0.65	0.00	0.65
20.00	0.23	0.54	0.42*	0.33	0.00	0.33
21.00	0.23	0.55	0.41*	0.00	0.00	0.00

* F.S.<1, Liquefaction Potential Zone
(F.S. is limited to 5, CRR is limited to 2, CSR is limited to 2)

Units Depth = ft, Stress or Pressure = tsf (atm), Unit Weight = pcf, Settlement = in.

CRRm Cyclic resistance ratio from soils
CSRfs Cyclic stress ratio induced by a given earthquake (with user request factor of safety)
F.S. Factor of Safety against liquefaction, F.S.=CRRm/CSRfs
S_sat Settlement from saturated sands
S_dry Settlement from dry sands
S_all Total settlement from saturated and dry sands
NoLiq No-Liquefy Soils

****

LIQUEFACTION ANALYSIS CALCULATION SHEET

Version 4.3
Copyright by CivilTech Software
www.civiltech.com
(425) 453-6488 Fax (425) 453-5848

****

Licensed to John R Byerly, John R. Byerly, Inc. 1/27/2017 3:35:50 PM

Input File Name: C:\Liquefy4\S-13836.5.liq
Title: MAYFAIR HIGH SCHOOL - SPORTS FIELD MODERNIZATION
Subtitle: S-13836

Input Data:

Surface Elev.=57 feet above MSL
Hole No.=B-5
Depth of Hole=21.0 ft
Water Table during Earthquake= 15.0 ft
Water Table during In-Situ Testing= 18.3 ft
Max. Acceleration=0.59 g
Earthquake Magnitude=7.2
User defined factor of safty (applied to CSR) User fs=1.3
fs=user, Plot one CSR (fs=user)

Hammer Energy Ratio, Ce=1
Borehole Diameter, Cb=1.15
Sampeling Method, Cs=1
SPT Fines Correction Method: Stark/Olson et al.*
Settlement Analysis Method: Ishihara / Yoshimine*
Fines Correction for Liquefaction: Stark/Olson et al.*
Fine Correction for Settlement: Post-Liq. Correction *
Average Input Data: Smooth*
* Recommended Options

Depth ft	SPT	Gamma pcf	Fines %
1.0	30.0	130.0	1.0
3.0	30.0	130.0	1.0
5.0	30.0	130.0	1.0
7.0	30.0	130.0	1.0
10.0	30.0	130.0	1.0
15.0	13.0	113.2	35.0
20.0	12.0	115.0	35.0

Output Results: (Interval = 1.00 ft)

CSR Calculation:

Depth ft	gamma pcf	sigma tsf	gamma' pcf	sigma' tsf	rd	CSR	fs (user)	CSRfs w/fs
1.00	130.0	0.065	130.0	0.065	1.00	0.38	1.3	0.50
2.00	130.0	0.130	130.0	0.130	1.00	0.38	1.3	0.50
3.00	130.0	0.195	130.0	0.195	0.99	0.38	1.3	0.50

4.00	130.0	0.260	130.0	0.260	0.99	0.38	1.3	0.49
5.00	130.0	0.325	130.0	0.325	0.99	0.38	1.3	0.49
6.00	130.0	0.390	130.0	0.390	0.99	0.38	1.3	0.49
7.00	130.0	0.455	130.0	0.455	0.98	0.38	1.3	0.49
8.00	130.0	0.520	130.0	0.520	0.98	0.38	1.3	0.49
9.00	130.0	0.585	130.0	0.585	0.98	0.38	1.3	0.49
10.00	130.0	0.650	130.0	0.650	0.98	0.37	1.3	0.49
11.00	126.6	0.714	126.6	0.714	0.97	0.37	1.3	0.49
12.00	123.3	0.777	123.3	0.777	0.97	0.37	1.3	0.48
13.00	119.9	0.838	119.9	0.838	0.97	0.37	1.3	0.48
14.00	116.6	0.897	116.6	0.897	0.97	0.37	1.3	0.48
15.00	113.2	0.954	50.8	0.954	0.97	0.37	1.3	0.48
16.00	113.6	1.011	51.2	0.980	0.96	0.38	1.3	0.50
17.00	113.9	1.068	51.5	1.005	0.96	0.39	1.3	0.51
18.00	114.3	1.125	51.9	1.031	0.96	0.40	1.3	0.52
19.00	114.6	1.182	52.2	1.057	0.96	0.41	1.3	0.53
20.00	115.0	1.239	52.6	1.083	0.95	0.42	1.3	0.54
21.00	115.0	1.297	52.6	1.110	0.95	0.43	1.3	0.55

CSR is based on water table at 15.0 during earthquake

CRR Calculation from SPT or BPT data:

Depth ft	SPT	Cebs	Cr	sigma'	Cn	(N1)60	Fines %	d(N1)60	(N1)60f	CRR7.5
1.00	30.00	1.15	0.75	0.065	1.70	43.99	1.0	0.00	43.99	2.00
2.00	30.00	1.15	0.75	0.130	1.70	43.99	1.0	0.00	43.99	2.00
3.00	30.00	1.15	0.75	0.195	1.70	43.99	1.0	0.00	43.99	2.00
4.00	30.00	1.15	0.75	0.260	1.70	43.99	1.0	0.00	43.99	2.00
5.00	30.00	1.15	0.75	0.325	1.70	43.99	1.0	0.00	43.99	2.00
6.00	30.00	1.15	0.75	0.390	1.60	41.43	1.0	0.00	41.43	2.00
7.00	30.00	1.15	0.75	0.455	1.48	38.36	1.0	0.00	38.36	2.00
8.00	30.00	1.15	0.75	0.520	1.39	35.88	1.0	0.00	35.88	2.00
9.00	30.00	1.15	0.85	0.585	1.31	38.34	1.0	0.00	38.34	2.00
10.00	30.00	1.15	0.85	0.650	1.24	36.37	1.0	0.00	36.37	2.00
11.00	26.60	1.15	0.85	0.714	1.18	30.77	7.8	0.67	31.44	2.00
12.00	23.20	1.15	0.85	0.777	1.13	25.73	14.6	2.30	28.04	0.34
13.00	19.80	1.15	0.85	0.838	1.09	21.15	21.4	3.94	25.08	0.28
14.00	16.40	1.15	0.85	0.897	1.06	16.93	28.2	5.57	22.50	0.25
15.00	13.00	1.15	0.95	0.954	1.02	14.54	35.0	7.20	21.74	0.24
16.00	12.80	1.15	0.95	1.011	0.99	13.91	35.0	7.20	21.11	0.23
17.00	12.60	1.15	0.95	1.068	0.97	13.32	35.0	7.20	20.52	0.22
18.00	12.40	1.15	0.95	1.125	0.94	12.77	35.0	7.20		

19.97	0.22							
	19.00	12.20	1.15	0.95	1.160	0.93	12.37	35.0	7.20
19.57	0.21							
	20.00	12.00	1.15	0.95	1.186	0.92	12.04	35.0	7.20
19.24	0.21							
	21.00	12.00	1.15	0.95	1.213	0.91	11.90	35.0	7.20
19.10	0.21							

CRR is based on water table at 18.3 during In-Situ Testing

Factor of Safety, - Earthquake Magnitude= 7.2:

Depth ft	sigC' tsf	CRR7.5 tsf	Ksigma	CRRv	MSF	CRRm	CSRfs w/fs	F.S. CRRm/CSRfs
1.00	0.04	2.00	1.00	2.00	1.11	2.22	0.50	5.00
2.00	0.08	2.00	1.00	2.00	1.11	2.22	0.50	5.00
3.00	0.13	2.00	1.00	2.00	1.11	2.22	0.50	5.00
4.00	0.17	2.00	1.00	2.00	1.11	2.22	0.49	5.00
5.00	0.21	2.00	1.00	2.00	1.11	2.22	0.49	5.00
6.00	0.25	2.00	1.00	2.00	1.11	2.22	0.49	5.00
7.00	0.30	2.00	1.00	2.00	1.11	2.22	0.49	5.00
8.00	0.34	2.00	1.00	2.00	1.11	2.22	0.49	5.00
9.00	0.38	2.00	1.00	2.00	1.11	2.22	0.49	5.00
10.00	0.42	2.00	1.00	2.00	1.11	2.22	0.49	5.00
11.00	0.46	2.00	1.00	2.00	1.11	2.22	0.49	5.00
12.00	0.50	0.34	1.00	0.34	1.11	0.38	0.48	5.00
13.00	0.54	0.28	1.00	0.28	1.11	0.32	0.48	5.00
14.00	0.58	0.25	1.00	0.25	1.11	0.27	0.48	5.00
15.00	0.62	0.24	1.00	0.24	1.11	0.26	0.48	0.55 *
16.00	0.66	0.23	1.00	0.23	1.11	0.25	0.50	0.51 *
17.00	0.69	0.22	1.00	0.22	1.11	0.25	0.51	0.48 *
18.00	0.73	0.22	1.00	0.22	1.11	0.24	0.52	0.46 *
19.00	0.75	0.21	1.00	0.21	1.11	0.23	0.53	0.44 *
20.00	0.77	0.21	1.00	0.21	1.11	0.23	0.54	0.42 *
21.00	0.79	0.21	1.00	0.21	1.11	0.23	0.55	0.41 *

* F.S.<1: Liquefaction Potential Zone. (If above water table: F.S.=5)
(F.S. is limited to 5, CRR is limited to 2, CSR is limited to 2)

CPT convert to SPT for Settlement Analysis:
Fines Correction for Settlement Analysis:

Depth ft	Ic	qc/N60	qc1 tsf	(N1)60	Fines %	d(N1)60	(N1)60s
1.00	-	-	-	43.99	1.0	0.10	44.08
2.00	-	-	-	43.99	1.0	0.10	44.08
3.00	-	-	-	43.99	1.0	0.10	44.08
4.00	-	-	-	43.99	1.0	0.10	44.08
5.00	-	-	-	43.99	1.0	0.10	44.08
6.00	-	-	-	41.43	1.0	0.10	41.53
7.00	-	-	-	38.36	1.0	0.10	38.46
8.00	-	-	-	35.88	1.0	0.10	35.98
9.00	-	-	-	38.34	1.0	0.10	38.44
10.00	-	-	-	36.37	1.0	0.10	36.47
11.00	-	-	-	30.77	7.8	0.74	31.50
12.00	-	-	-	25.73	14.6	1.34	27.07
13.00	-	-	-	21.15	21.4	1.90	23.05
14.00	-	-	-	16.93	28.2	2.43	19.36
15.00	-	-	-	14.54	35.0	2.92	17.46
16.00	-	-	-	13.91	35.0	2.92	16.83

17.00	-	-	-	13.32	35.0	2.92	16.24
18.00	-	-	-	12.77	35.0	2.92	15.69
19.00	-	-	-	12.37	35.0	2.92	15.29
20.00	-	-	-	12.04	35.0	2.92	14.96
21.00	-	-	-	11.90	35.0	2.92	14.82

Settlement of Saturated Sands:
Settlement Analysis Method: Ishihara / Yoshimine*

Depth ft	CSRfs w/fs	F.S.	Fines %	(N1)60s	Dr %	ec %	dsz in.	dsv in.	S in.
20.95	0.55	0.41	35.0	14.83	60.95	2.747	0.016	0.016	0.016
20.00	0.54	0.42	35.0	14.96	61.19	2.732	0.016	0.312	0.329
19.00	0.53	0.44	35.0	15.29	61.85	2.692	0.016	0.325	0.654
18.00	0.52	0.46	35.0	15.69	62.61	2.645	0.016	0.320	0.974
17.00	0.51	0.48	35.0	16.24	63.66	2.582	0.015	0.313	1.288
16.00	0.50	0.51	35.0	16.83	64.76	2.515	0.015	0.306	1.593
15.00	0.48	0.55	35.0	17.46	65.92	2.444	0.015	0.297	1.891

Settlement of Saturated Sands=1.891 in.
dsz is per each segment: dz=0.05 ft
dsv is per each print interval: dv=1 ft
S is cumulated settlement at this depth

Settlement of Dry Sands:

Depth ft	sigma' dsz tsf	sigC' dsv tsf	(N1)60s	CSRfs w/fs	Gmax tsf	g*Ge/Gm	g_eff	ec7.5 %	Cec	ec %
14.95	0.95	0.62	17.65	0.48	914.7	5.0E-4	1.0000	1.1587	0.98	1.1390
1.4E-2	0.014	0.014								
14.00	0.90	0.58	19.36	0.48	915.8	4.7E-4	0.7143	0.7338	0.98	0.7214
8.7E-3	0.228	0.242								
13.00	0.84	0.54	23.05	0.48	938.1	4.3E-4	0.4201	0.3439	0.98	0.3381
4.1E-3	0.118	0.360								
12.00	0.78	0.50	27.07	0.48	953.1	3.9E-4	0.2644	0.1746	0.98	0.1717
2.1E-3	0.058	0.418								
11.00	0.71	0.46	31.50	0.49	961.2	3.6E-4	0.1751	0.0923	0.98	0.0907
1.1E-3	0.030	0.448								
10.00	0.65	0.42	36.47	0.49	962.8	3.3E-4	0.1206	0.0481	0.98	0.0473
5.7E-4	0.016	0.463								
9.00	0.59	0.38	38.44	0.49	929.6	3.1E-4	0.0949	0.0334	0.98	0.0328
3.9E-4	0.009	0.473								
8.00	0.52	0.34	35.98	0.49	857.3	3.0E-4	0.3094	0.1273	0.98	0.1251
1.5E-3	0.014	0.487								
7.00	0.46	0.30	38.46	0.49	819.9	2.7E-4	0.1312	0.0461	0.98	0.0453
5.4E-4	0.018	0.505								
6.00	0.39	0.25	41.53	0.49	778.8	2.5E-4	0.0695	0.0220	0.98	0.0216
2.6E-4	0.007	0.512								

	5.00	0.33	0.21	44.08	0.49	725.2	2.2E-4	0.0470	0.0148	0.98
0.0146	1.8E-4	0.004	0.517							
	4.00	0.26	0.17	44.08	0.49	648.6	2.0E-4	0.0392	0.0124	0.98
0.0122	1.5E-4	0.003	0.520							
	3.00	0.20	0.13	44.08	0.50	561.7	1.7E-4	0.0383	0.0121	0.98
0.0119	1.4E-4	0.003	0.523							
	2.00	0.13	0.08	44.08	0.50	458.7	1.4E-4	0.0265	0.0084	0.98
0.0083	9.9E-5	0.002	0.525							
	1.00	0.07	0.04	44.08	0.50	324.3	1.0E-4	0.0199	0.0063	0.98
0.0062	7.4E-5	0.002	0.527							

Settlement of Dry Sands=0.527 in.
dsz is per each segment: dz=0.05 ft
dsv is per each print interval: dv=1 ft
S is cumulated settlement at this depth

Total Settlement of Saturated and Dry Sands=2.418 in.
Differential Settlement=1.209 to 1.596 in.

Units Depth = ft, Stress or Pressure = tsf (atm), Unit Weight = pcf, Settlement = in.

SPT	Field data from Standard Penetration Test (SPT)
BPT	Field data from Becker Penetration Test (BPT)
qc	Field data from Cone Penetration Test (CPT)
fc	Friction from CPT testing
Gamma	Total unit weight of soil
Gamma'	Effective unit weight of soil
Fines	Fines content [%]
D50	Mean grain size
Dr	Relative Density
sigma	Total vertical stress [tsf]
sigma'	Effective vertical stress [tsf]
sigC'	Effective confining pressure [tsf]
rd	Stress reduction coefficient
CSR	Cyclic stress ratio induced by earthquake
fs	User request factor of safety, apply to CSR
w/fs	With user request factor of safety inside
CSRfs	CSR with User request factor of safety
CRR7.5	Cyclic resistance ratio (M=7.5)
Ksigma	Overburden stress correction factor for CRR7.5
CRRV	CRR after overburden stress correction, CRRv=CRR7.5 * Ksigma
MSF	Magnitude scaling factor for CRR (M=7.5)
CRRm	After magnitude scaling correction CRRm=CRRv * MSF
F.S.	Factor of Safety against liquefaction F.S.=CRRm/CSRfs
Cebs	Energy Ratio, Borehole Dia., and Sample Method Corrections
Cr	Rod Length Corrections
Cn	Overburden Pressure Correction
(N1)60	SPT after corrections, (N1)60=SPT * Cr * Cn * Cebs
d(N1)60	Fines correction of SPT
(N1)60f	(N1)60 after fines corrections, (N1)60f=(N1)60 + d(N1)60
Cq	Overburden stress correction factor
qc1	CPT after Overburden stress correction
dqc1	Fines correction of CPT
qc1f	CPT after Fines and Overburden correction, qc1f=qc1 + dqc1
qc1n	CPT after normalization in Robertson's method
Kc	Fine correction factor in Robertson's Method
qc1f	CPT after Fines correction in Robertson's Method
Ic	Soil type index in Suzuki's and Robertson's Methods

(N1)60s	(N1)60 after seattlement fines corrections
ec	Volumetric strain for saturated sands
ds	Settlement in each Segment dz
dz	Segment for calculation, dz=0.050 ft
Gmax	Shear Modulus at low strain
g_eff	gamma_eff, Effective shear Strain
g*Ge/Gm	gamma_eff * G_eff/G_max, Strain-modulus ratio
ec7.5	Volumetric Strain for magnitude=7.5
Cec	Magnitude correction factor for any magnitude
ec	Volumetric strain for dry sands, ec=Cec * ec7.5
NoLiq	No-Liquefy Soils

References:

NCEER Workshop on Evaluation of Liquefaction Resistance of Soils. Youd, T.L., and Idriss, I.M., eds., Technical Report NCEER 97-0022.

SP117. Southern California Earthquake Center. Recommended Procedures for Implementation of DMG Special Publication 117, Guidelines for Analyzing and Mitigating Liquefaction in California. University of Southern California. March 1999.

LIQUEFACTION ANALYSIS

MAYFAIR HIGH SCHOOL - SPORTS FIELD MODERNIZATION

Hole No.=B-10 Water Depth=15.0 ft Surface Elev.=60 feet above MSL Magnitude=7.2
Acceleration=0.591g

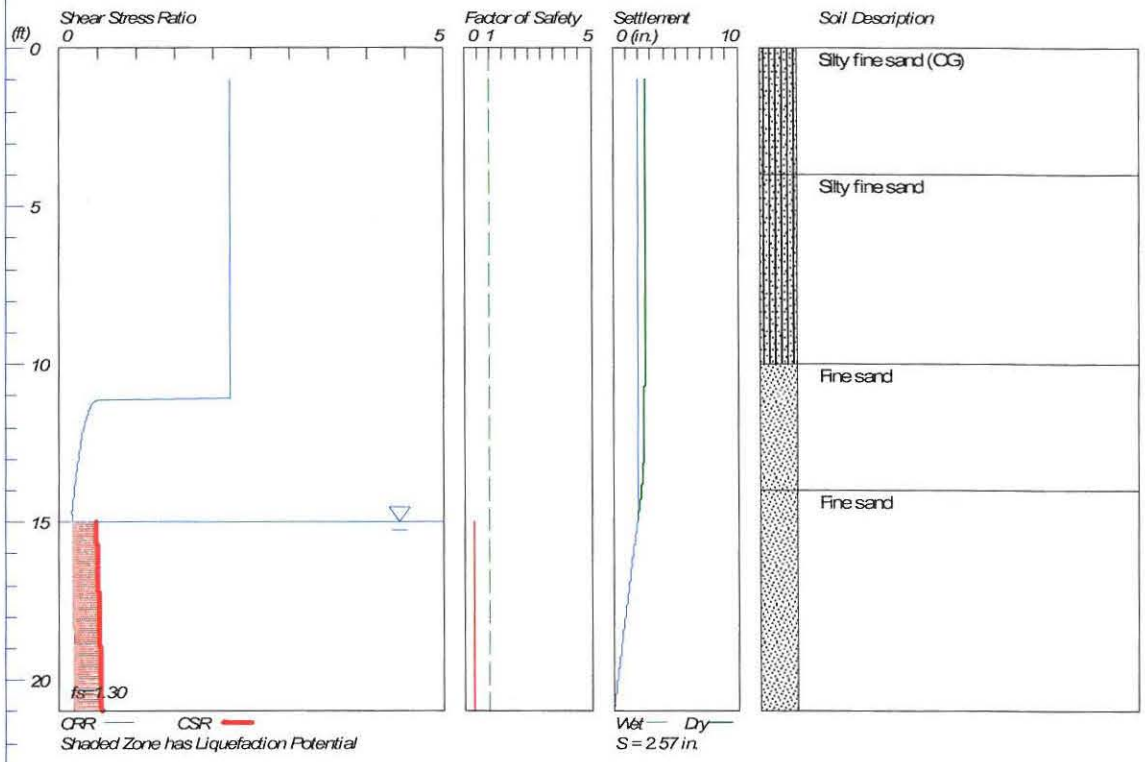

LiquefyPro CivilTech Software USA www.civiltech.com

CivilTech Corporation

S-13836

****

LIQUEFACTION ANALYSIS CALCULATION SHEET

Version 4.3
Copyright by CivilTech Software
www.civiltech.com
(425) 453-6488 Fax (425) 453-5848

****

Licensed to John R Byerly, John R. Byerly, Inc. 1/27/2017 3:38:02 PM

Input File Name: C:\Liquefy4\S-13836.10.liq
Title: MAYFAIR HIGH SCHOOL - SPORTS FIELD MODERNIZATION
Subtitle: S-13836

Surface Elev.=60 feet above MSL
Hole No.=B-10
Depth of Hole= 21.0 ft
Water Table during Earthquake= 15.0 ft
Water Table during In-Situ Testing= 25.0 ft
Max. Acceleration= 0.59 g
Earthquake Magnitude= 7.2
User defined factor of safty (applied to CSR) User fs=1.3
fs=user, Plot one CSR (fs=user)

Hammer Energy Ratio, Ce=1
Borehole Diameter, Cb=1.15
Sampeling Method, Cs=1
SPT Fines Correction Method: Stark/Olson et al.*
Settlement Analysis Method: Ishihara / Yoshimine*
Fines Correction for Liquefaction: Stark/Olson et al.*
Fine Correction for Settlement: Post-Liq. Correction *
Average Input Data: Smooth*
* Recommended Options

Input Data:

Depth ft	SPT	Gamma pcf	Fines %
1.0	30.0	130.0	35.0
3.0	30.0	130.0	35.0
5.0	30.0	130.0	35.0
7.0	30.0	130.0	35.0
10.0	30.0	130.0	1.0
15.0	13.0	120.2	1.0
20.0	17.0	125.0	1.0

Output Results:
Settlement of saturated sands=1.90 in.
Settlement of dry sands=0.67 in.
Total settlement of saturated and dry sands=2.57 in.
Differential Settlement=1.287 to 1.699 in.

Depth ft	CRRm	CSRfs w/fs	F.S.	S_sat. in.	S_dry in.	S_all in.
1.00	2.22	0.50	5.00	1.90	0.67	2.57
2.00	2.22	0.50	5.00	1.90	0.67	2.57

3.00	2.22	0.50	5.00	1.90	0.67	2.57
4.00	2.22	0.49	5.00	1.90	0.67	2.57
5.00	2.22	0.49	5.00	1.90	0.66	2.57
6.00	2.22	0.49	5.00	1.90	0.66	2.56
7.00	2.22	0.49	5.00	1.90	0.65	2.56
8.00	2.22	0.49	5.00	1.90	0.64	2.54
9.00	2.22	0.49	5.00	1.90	0.63	2.53
10.00	2.22	0.49	5.00	1.90	0.62	2.52
11.00	2.22	0.49	5.00	1.90	0.60	2.51
12.00	0.33	0.48	5.00	1.90	0.57	2.47
13.00	0.25	0.48	5.00	1.90	0.50	2.40
14.00	0.20	0.48	5.00	1.90	0.33	2.23
15.00	0.17	0.48	0.36*	1.90	0.00	1.90
16.00	0.18	0.50	0.36*	1.57	0.00	1.57
17.00	0.18	0.51	0.36*	1.25	0.00	1.25
18.00	0.19	0.52	0.36*	0.93	0.00	0.93
19.00	0.19	0.53	0.36*	0.62	0.00	0.62
20.00	0.20	0.54	0.36*	0.31	0.00	0.31
21.00	0.19	0.55	0.35*	0.00	0.00	0.00

* F.S.<1, Liquefaction Potential Zone
(F.S. is limited to 5, CRR is limited to 2, CSR is limited to 2)

Units Depth = ft, Stress or Pressure = tsf (atm), Unit Weight = pcf, Settlement = in.

CRRm Cyclic resistance ratio from soils
CSRfs Cyclic stress ratio induced by a given earthquake (with user request factor of safety)
F.S. Factor of Safety against liquefaction, F.S.=CRRm/CSRfs
S_sat Settlement from saturated sands
S_dry Settlement from dry sands
S_all Total settlement from saturated and dry sands
NoLiq No-Liquefy Soils

****

LIQUEFACTION ANALYSIS CALCULATION SHEET

Version 4.3
Copyright by CivilTech Software
www.civiltech.com
(425) 453-6488 Fax (425) 453-5848

****

Licensed to John R Byerly, John R. Byerly, Inc. 1/27/2017 3:38:11 PM

Input File Name: C:\Liquefy4\S-13836.10.liq
Title: MAYFAIR HIGH SCHOOL - SPORTS FIELD MODERNIZATION
Subtitle: S-13836

Input Data:

Surface Elev.=60 feet above MSL
Hole No.=B-10
Depth of Hole=21.0 ft
Water Table during Earthquake= 15.0 ft
Water Table during In-Situ Testing= 25.0 ft
Max. Acceleration=0.59 g
Earthquake Magnitude=7.2
User defined factor of safty (applied to CSR) User fs=1.3
fs=user, Plot one CSR (fs=user)

Hammer Energy Ratio, Ce=1
Borehole Diameter, Cb=1.15
Sampeling Method, Cs=1
SPT Fines Correction Method: Stark/Olson et al.*
Settlement Analysis Method: Ishihara / Yoshimine*
Fines Correction for Liquefaction: Stark/Olson et al.*
Fine Correction for Settlement: Post-Liq. Correction *
Average Input Data: Smooth*
* Recommended Options

Depth ft	SPT	Gamma pcf	Fines %
1.0	30.0	130.0	35.0
3.0	30.0	130.0	35.0
5.0	30.0	130.0	35.0
7.0	30.0	130.0	35.0
10.0	30.0	130.0	1.0
15.0	13.0	120.2	1.0
20.0	17.0	125.0	1.0

Output Results: (Interval = 1.00 ft)

CSR Calculation:

Depth ft	gamma pcf	sigma tsf	gamma' pcf	sigma' tsf	rd	CSR	fs (user)	CSRfs w/fs
1.00	130.0	0.065	130.0	0.065	1.00	0.38	1.3	0.50
2.00	130.0	0.130	130.0	0.130	1.00	0.38	1.3	0.50
3.00	130.0	0.195	130.0	0.195	0.99	0.38	1.3	0.50

4.00	130.0	0.260	130.0	0.260	0.99	0.38	1.3	0.49
5.00	130.0	0.325	130.0	0.325	0.99	0.38	1.3	0.49
6.00	130.0	0.390	130.0	0.390	0.99	0.38	1.3	0.49
7.00	130.0	0.455	130.0	0.455	0.98	0.38	1.3	0.49
8.00	130.0	0.520	130.0	0.520	0.98	0.38	1.3	0.49
9.00	130.0	0.585	130.0	0.585	0.98	0.38	1.3	0.49
10.00	130.0	0.650	130.0	0.650	0.98	0.37	1.3	0.49
11.00	128.0	0.715	128.0	0.715	0.97	0.37	1.3	0.49
12.00	126.1	0.778	126.1	0.778	0.97	0.37	1.3	0.48
13.00	124.1	0.841	124.1	0.841	0.97	0.37	1.3	0.48
14.00	122.2	0.902	122.2	0.902	0.97	0.37	1.3	0.48
15.00	120.2	0.963	57.8	0.963	0.97	0.37	1.3	0.48
16.00	121.2	1.023	58.8	0.992	0.96	0.38	1.3	0.50
17.00	122.1	1.084	59.7	1.022	0.96	0.39	1.3	0.51
18.00	123.1	1.145	60.7	1.052	0.96	0.40	1.3	0.52
19.00	124.0	1.207	61.6	1.082	0.96	0.41	1.3	0.53
20.00	125.0	1.269	62.6	1.113	0.95	0.42	1.3	0.54
21.00	125.0	1.332	62.6	1.145	0.95	0.42	1.3	0.55

CSR is based on water table at 15.0 during earthquake

CRR Calculation from SPT or BPT data:

Depth ft	SPT	Cebs	Cr	sigma'	Cn	(N1)60	Fines %	d(N1)60	(N1)60f	CRR7.5
1.00	30.00	1.15	0.75	0.065	1.70	43.99	35.0	7.20	51.19	2.00
2.00	30.00	1.15	0.75	0.130	1.70	43.99	35.0	7.20	51.19	2.00
3.00	30.00	1.15	0.75	0.195	1.70	43.99	35.0	7.20	51.19	2.00
4.00	30.00	1.15	0.75	0.260	1.70	43.99	35.0	7.20	51.19	2.00
5.00	30.00	1.15	0.75	0.325	1.70	43.99	35.0	7.20	51.19	2.00
6.00	30.00	1.15	0.75	0.390	1.60	41.43	35.0	7.20	48.63	2.00
7.00	30.00	1.15	0.75	0.455	1.48	38.36	35.0	7.20	45.56	2.00
8.00	30.00	1.15	0.75	0.520	1.39	35.88	23.7	4.48	40.36	2.00
9.00	30.00	1.15	0.85	0.585	1.31	38.34	12.3	1.76	40.10	2.00
10.00	30.00	1.15	0.85	0.650	1.24	36.37	1.0	0.00	36.37	2.00
11.00	26.60	1.15	0.85	0.715	1.18	30.76	1.0	0.00	30.76	2.00
12.00	23.20	1.15	0.85	0.778	1.13	25.71	1.0	0.00	25.71	0.29
13.00	19.80	1.15	0.85	0.841	1.09	21.11	1.0	0.00	21.11	0.23
14.00	16.40	1.15	0.85	0.902	1.05	16.88	1.0	0.00	16.88	0.18
15.00	13.00	1.15	0.95	0.963	1.02	14.47	1.0	0.00	14.47	0.16
16.00	13.80	1.15	0.95	1.023	0.99	14.90	1.0	0.00	14.90	0.16
17.00	14.60	1.15	0.95	1.084	0.96	15.32	1.0	0.00	15.32	0.17
18.00	15.40	1.15	0.95	1.145	0.93	15.72	1.0	0.00		

15.72	0.17							
	19.00	16.20	1.15	0.95	1.207	0.91	16.11	1.0	0.00
16.11	0.17							
	20.00	17.00	1.15	0.95	1.269	0.89	16.48	1.0	0.00
16.48	0.18							
	21.00	17.00	1.15	0.95	1.332	0.87	16.09	1.0	0.00
16.09	0.17							

CRR is based on water table at 25.0 during In-Situ Testing

Factor of Safety, - Earthquake Magnitude= 7.2:

Depth ft	sigC' tsf	CRR7.5 tsf	Ksigma	CRRv	MSF	CRRm	CSRfs w/fs	F.S. CRRm/CSRfs
1.00	0.04	2.00	1.00	2.00	1.11	2.22	0.50	5.00
2.00	0.08	2.00	1.00	2.00	1.11	2.22	0.50	5.00
3.00	0.13	2.00	1.00	2.00	1.11	2.22	0.50	5.00
4.00	0.17	2.00	1.00	2.00	1.11	2.22	0.49	5.00
5.00	0.21	2.00	1.00	2.00	1.11	2.22	0.49	5.00
6.00	0.25	2.00	1.00	2.00	1.11	2.22	0.49	5.00
7.00	0.30	2.00	1.00	2.00	1.11	2.22	0.49	5.00
8.00	0.34	2.00	1.00	2.00	1.11	2.22	0.49	5.00
9.00	0.38	2.00	1.00	2.00	1.11	2.22	0.49	5.00
10.00	0.42	2.00	1.00	2.00	1.11	2.22	0.49	5.00
11.00	0.46	2.00	1.00	2.00	1.11	2.22	0.49	5.00
12.00	0.51	0.29	1.00	0.29	1.11	0.33	0.48	5.00
13.00	0.55	0.23	1.00	0.23	1.11	0.25	0.48	5.00
14.00	0.59	0.18	1.00	0.18	1.11	0.20	0.48	5.00
15.00	0.63	0.16	1.00	0.16	1.11	0.17	0.48	0.36 *
16.00	0.67	0.16	1.00	0.16	1.11	0.18	0.50	0.36 *
17.00	0.70	0.17	1.00	0.17	1.11	0.18	0.51	0.36 *
18.00	0.74	0.17	1.00	0.17	1.11	0.19	0.52	0.36 *
19.00	0.78	0.17	1.00	0.17	1.11	0.19	0.53	0.36 *
20.00	0.83	0.18	1.00	0.18	1.11	0.20	0.54	0.36 *
21.00	0.87	0.17	1.00	0.17	1.11	0.19	0.55	0.35 *

* F.S.<1: Liquefaction Potential Zone. (If above water table: F.S.=5)
(F.S. is limited to 5, CRR is limited to 2, CSR is limited to 2)

CPT convert to SPT for Settlement Analysis:
Fines Correction for Settlement Analysis:

Depth ft	Ic	qc/N60	qc1 tsf	(N1)60	Fines %	d(N1)60	(N1)60s
1.00	-	-	-	43.99	35.0	2.92	46.91
2.00	-	-	-	43.99	35.0	2.92	46.91
3.00	-	-	-	43.99	35.0	2.92	46.91
4.00	-	-	-	43.99	35.0	2.92	46.91
5.00	-	-	-	43.99	35.0	2.92	46.91
6.00	-	-	-	41.43	35.0	2.92	44.35
7.00	-	-	-	38.36	35.0	2.92	41.28
8.00	-	-	-	35.88	23.7	2.08	37.96
9.00	-	-	-	38.34	12.3	1.14	39.48
10.00	-	-	-	36.37	1.0	0.10	36.47
11.00	-	-	-	30.76	1.0	0.10	30.86
12.00	-	-	-	25.71	1.0	0.10	25.81
13.00	-	-	-	21.11	1.0	0.10	21.21
14.00	-	-	-	16.88	1.0	0.10	16.97
15.00	-	-	-	14.47	1.0	0.10	14.57
16.00	-	-	-	14.90	1.0	0.10	15.00

17.00	-	-	-	15.32	1.0	0.10	15.42
18.00	-	-	-	15.72	1.0	0.10	15.82
19.00	-	-	-	16.11	1.0	0.10	16.21
20.00	-	-	-	16.48	1.0	0.10	16.58
21.00	-	-	-	16.09	1.0	0.10	16.19

Settlement of Saturated Sands:
Settlement Analysis Method: Ishihara / Yoshimine*

Depth ft	CSRfs w/fs	F.S.	Fines %	(N1)60s	Dr %	ec %	dsz in.	dsv in.	S in.
20.95	0.55	0.35	1.0	16.21	63.60	2.585	0.016	0.016	0.016
20.00	0.54	0.36	1.0	16.58	64.30	2.543	0.015	0.292	0.308
19.00	0.53	0.36	1.0	16.21	63.59	2.586	0.016	0.308	0.616
18.00	0.52	0.36	1.0	15.82	62.85	2.631	0.016	0.313	0.929
17.00	0.51	0.36	1.0	15.42	62.09	2.677	0.016	0.319	1.247
16.00	0.50	0.36	1.0	15.00	61.28	2.726	0.016	0.324	1.572
15.00	0.48	0.36	1.0	14.57	60.43	2.778	0.017	0.330	1.902

Settlement of Saturated Sands=1.902 in.
dsz is per each segment: dz=0.05 ft
dsv is per each print interval: dv=1 ft
S is cumulated settlement at this depth

Settlement of Dry Sands:

Depth ft	sigma' dsz ft	sigC' dsv tsf	S tsf	(N1)60s	CSRfs w/fs	Gmax tsf	g*Ge/Gm	g_eff	ec7.5 %	Cec	ec %
14.95	0.96	0.62	14.78	0.48	866.2	5.3E-4	1.0000	1.4570	0.98	1.4324	
	1.7E-2	0.017	0.017								
14.00	0.90	0.59	16.97	0.48	879.3	4.9E-4	0.9679	1.1795	0.98	1.1595	
	1.4E-2	0.310	0.327								
13.00	0.84	0.55	21.21	0.48	914.1	4.4E-4	0.4967	0.4533	0.98	0.4456	
	5.3E-3	0.172	0.499								
12.00	0.78	0.51	25.81	0.48	938.8	4.0E-4	0.2873	0.2025	0.98	0.1991	
	2.4E-3	0.071	0.570								
11.00	0.71	0.46	30.86	0.49	954.9	3.6E-4	0.1806	0.0984	0.98	0.0967	
	1.2E-3	0.033	0.604								
10.00	0.65	0.42	36.47	0.49	962.8	3.3E-4	0.1206	0.0481	0.98	0.0473	
	5.7E-4	0.016	0.620								
9.00	0.59	0.38	39.48	0.49	937.9	3.0E-4	0.0921	0.0302	0.98	0.0296	
	3.6E-4	0.009	0.629								
8.00	0.52	0.34	37.96	0.49	872.8	2.9E-4	0.2519	0.0915	0.98	0.0900	
	1.1E-3	0.011	0.640								
7.00	0.46	0.30	41.28	0.49	839.5	2.7E-4	0.1096	0.0347	0.98	0.0341	
	4.1E-4	0.013	0.653								
6.00	0.39	0.25	44.35	0.49	796.0	2.4E-4	0.0629	0.0199	0.98	0.0196	
	2.3E-4	0.006	0.659								

	5.00	0.33	0.21	46.91	0.49	740.3	2.2E-4	0.0447	0.0141	0.98
0.0139	1.7E-4	0.004	0.663							
	4.00	0.26	0.17	46.91	0.49	662.2	1.9E-4	0.0380	0.0120	0.98
0.0118	1.4E-4	0.003	0.666							
	3.00	0.20	0.13	46.91	0.50	573.5	1.7E-4	0.0366	0.0116	0.98
0.0114	1.4E-4	0.003	0.669							
	2.00	0.13	0.08	46.91	0.50	468.2	1.4E-4	0.0258	0.0082	0.98
0.0080	9.6E-5	0.002	0.671							
	1.00	0.07	0.04	46.91	0.50	331.1	9.8E-5	0.0192	0.0061	0.98
0.0060	7.2E-5	0.002	0.673							

Settlement of Dry Sands=0.673 in.
dsz is per each segment: dz=0.05 ft
dsv is per each print interval: dv=1 ft
S is cumulated settlement at this depth

Total Settlement of Saturated and Dry Sands=2.575 in.
Differential Settlement=1.287 to 1.699 in.

Units Depth = ft, Stress or Pressure = tsf (atm), Unit Weight = pcf, Settlement = in.

SPT	Field data from Standard Penetration Test (SPT)
BPT	Field data from Becker Penetration Test (BPT)
qc	Field data from Cone Penetration Test (CPT)
fc	Friction from CPT testing
Gamma	Total unit weight of soil
Gamma'	Effective unit weight of soil
Fines	Fines content [%]
D50	Mean grain size
Dr	Relative Density
sigma	Total vertical stress [tsf]
sigma'	Effective vertical stress [tsf]
sigC'	Effective confining pressure [tsf]
rd	Stress reduction coefficient
CSR	Cyclic stress ratio induced by earthquake
fs	User request factor of safety, apply to CSR
w/fs	With user request factor of safety inside
CSRfs	CSR with User request factor of safety
CRR7.5	Cyclic resistance ratio (M=7.5)
Ksigma	Overburden stress correction factor for CRR7.5
CRRv	CRR after overburden stress correction, CRRv=CRR7.5 * Ksigma
MSF	Magnitude scaling factor for CRR (M=7.5)
CRRm	After magnitude scaling correction CRRm=CRRv * MSF
F.S.	Factor of Safety against liquefaction F.S.=CRRm/CSRfs
Cebs	Energy Ratio, Borehole Dia., and Sample Method Corrections
Cr	Rod Length Corrections
Cn	Overburden Pressure Correction
(N1)60	SPT after corrections, (N1)60=SPT * Cr * Cn * Cebs
d(N1)60	Fines correction of SPT
(N1)60f	(N1)60 after fines corrections, (N1)60f=(N1)60 + d(N1)60
Cq	Overburden stress correction factor
qc1	CPT after Overburden stress correction
dqc1	Fines correction of CPT
qc1f	CPT after Fines and Overburden correction, qc1f=qc1 + dqc1
qc1n	CPT after normalization in Robertson's method
Kc	Fine correction factor in Robertson's Method
qc1f	CPT after Fines correction in Robertson's Method
Ic	Soil type index in Suzuki's and Robertson's Methods

(N1)60s	(N1)60 after seattlement fines corrections
ec	Volumetric strain for saturated sands
ds	Settlement in each Segment dz
dz	Segment for calculation, dz=0.050 ft
Gmax	Shear Modulus at low strain
g_eff	gamma_eff, Effective shear Strain
g*Ge/Gm	gamma_eff * G_eff/G_max, Strain-modulus ratio
ec7.5	Volumetric Strain for magnitude=7.5
Cec	Magnitude correction factor for any magnitude
ec	Volumetric strain for dry sands, ec=Cec * ec7.5
NoLiq	No-Liquefy Soils

References:

NCEER Workshop on Evaluation of Liquefaction Resistance of Soils. Youd, T.L., and Idriss, I.M., eds., Technical Report NCEER 97-0022.

SP117. Southern California Earthquake Center. Recommended Procedures for Implementation of DMG Special Publication 117, Guidelines for Analyzing and Mitigating Liquefaction in California. University of Southern California. March 1999.

LIQUEFACTION ANALYSIS

MAYFAIR HIGH SCHOOL - SPORTS FIELD MODERNIZATION

Hole No.=B-11 Water Depth=15.0 ft Surface Elev.=60 feet above MSL Magnitude=7.2
Acceleration=0.591g

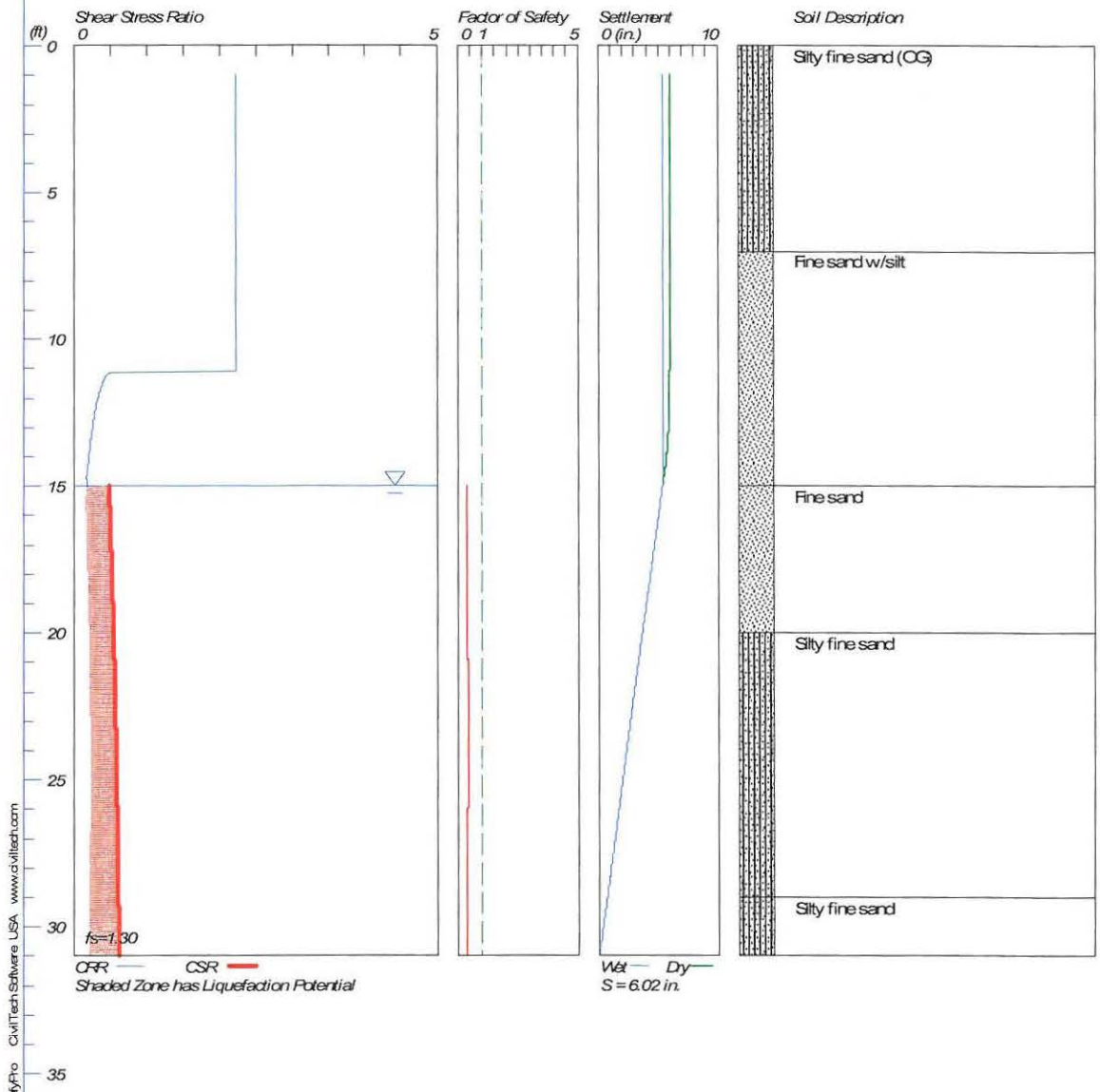

CivilTech Corporation S-13836

****

LIQUEFACTION ANALYSIS CALCULATION SHEET

Version 4.3
Copyright by CivilTech Software
www.civiltech.com
(425) 453-6488 Fax (425) 453-5848

****

Licensed to John R Byerly, John R. Byerly, Inc. 1/27/2017 3:40:09 PM

Input File Name: C:\Liquefy4\S-13836.11.liq
Title: MAYFAIR HIGH SCHOOL - SPORTS FIELD MODERNIZATION
Subtitle: S-13836

Surface Elev.=60 feet above MSL
Hole No.=B-11
Depth of Hole= 31.0 ft
Water Table during Earthquake= 15.0 ft
Water Table during In-Situ Testing= 25.3 ft
Max. Acceleration= 0.59 g
Earthquake Magnitude= 7.2
User defined factor of safty (applied to CSR) User fs=1.3
fs=user, Plot one CSR (fs=user)

Hammer Energy Ratio, Ce=1
Borehole Diameter, Cb=1.15
Sampeling Method, Cs=1
SPT Fines Correction Method: Stark/Olson et al.*
Settlement Analysis Method: Ishihara / Yoshimine*
Fines Correction for Liquefaction: Stark/Olson et al.*
Fine Correction for Settlement: Post-Liq. Correction *
Average Input Data: Smooth*
* Recommended Options

Input Data:

Depth ft	SPT	Gamma pcf	Fines %
1.0	30.0	130.0	35.0
3.0	30.0	130.0	35.0
5.0	30.0	130.0	35.0
7.0	30.0	130.0	1.0
10.0	30.0	130.0	1.0
15.0	13.0	121.5	1.0
20.0	11.0	125.2	35.0
25.0	15.0	126.1	35.0
30.0	13.0	127.5	35.0

Output Results:
Settlement of saturated sands=5.34 in.
Settlement of dry sands=0.68 in.
Total settlement of saturated and dry sands=6.02 in.
Differential Settlement=3.012 to 3.976 in.

Depth ft	CRRm	CSRfs w/fs	F.S.	S_sat. in.	S_dry in.	S_all in.

1.00	2.22	0.50	5.00	5.34	0.68	6.02
2.00	2.22	0.50	5.00	5.34	0.68	6.02
3.00	2.22	0.50	5.00	5.34	0.68	6.02
4.00	2.22	0.49	5.00	5.34	0.68	6.02
5.00	2.22	0.49	5.00	5.34	0.67	6.01
6.00	2.22	0.49	5.00	5.34	0.67	6.01
7.00	2.22	0.49	5.00	5.34	0.66	6.00
8.00	2.22	0.49	5.00	5.34	0.64	5.99
9.00	2.22	0.49	5.00	5.34	0.63	5.97
10.00	2.22	0.49	5.00	5.34	0.62	5.96
11.00	2.22	0.49	5.00	5.34	0.61	5.95
12.00	0.33	0.48	5.00	5.34	0.57	5.91
13.00	0.25	0.48	5.00	5.34	0.50	5.84
14.00	0.20	0.48	5.00	5.34	0.33	5.67
15.00	0.17	0.48	0.36*	5.34	0.00	5.34
16.00	0.17	0.50	0.35*	5.01	0.00	5.01
17.00	0.18	0.51	0.36*	4.67	0.00	4.67
18.00	0.19	0.52	0.37*	4.32	0.00	4.32
19.00	0.20	0.53	0.38*	3.98	0.00	3.98
20.00	0.21	0.54	0.39*	3.63	0.00	3.63
21.00	0.22	0.55	0.40*	3.29	0.00	3.29
22.00	0.23	0.56	0.40*	2.95	0.00	2.95
23.00	0.23	0.57	0.41*	2.62	0.00	2.62
24.00	0.24	0.58	0.41*	2.29	0.00	2.29
25.00	0.24	0.58	0.42*	1.98	0.00	1.98
26.00	0.24	0.59	0.40*	1.66	0.00	1.66
27.00	0.23	0.60	0.38*	1.33	0.00	1.33
28.00	0.23	0.60	0.38*	1.00	0.00	1.00
29.00	0.22	0.61	0.37*	0.68	0.00	0.68
30.00	0.22	0.61	0.35*	0.34	0.00	0.34
31.00	0.22	0.62	0.35*	0.00	0.00	0.00

* F.S.<1, Liquefaction Potential Zone
(F.S. is limited to 5, CRR is limited to 2, CSR is limited to 2)

Units Depth = ft, Stress or Pressure = tsf (atm), Unit Weight = pcf, Settlement = in.

CRRm Cyclic resistance ratio from soils
CSRfs Cyclic stress ratio induced by a given earthquake (with user request factor of safety)
F.S. Factor of Safety against liquefaction, F.S.=CRRm/CSRfs
S_sat Settlement from saturated sands
S_dry Settlement from dry sands
S_all Total settlement from saturated and dry sands
NoLiq No-Liquefy Soils

****

LIQUEFACTION ANALYSIS CALCULATION SHEET

Version 4.3
Copyright by CivilTech Software
www.civiltech.com
(425) 453-6488 Fax (425) 453-5848

****

Licensed to John R Byerly, John R. Byerly, Inc. 1/27/2017 3:40:17 PM

Input File Name: C:\Liquefy4\S-13836.11.liq
Title: MAYFAIR HIGH SCHOOL - SPORTS FIELD MODERNIZATION
Subtitle: S-13836

Input Data:

Surface Elev.=60 feet above MSL
Hole No.=B-11
Depth of Hole=31.0 ft
Water Table during Earthquake= 15.0 ft
Water Table during In-Situ Testing= 25.3 ft
Max. Acceleration=0.59 g
Earthquake Magnitude=7.2
User defined factor of safty (applied to CSR) User fs=1.3
fs=user, Plot one CSR (fs=user)

Hammer Energy Ratio, Ce=1
Borehole Diameter, Cb=1.15
Sampeling Method, Cs=1
SPT Fines Correction Method: Stark/Olson et al.*
Settlement Analysis Method: Ishihara / Yoshimine*
Fines Correction for Liquefaction: Stark/Olson et al.*
Fine Correction for Settlement: Post-Liq. Correction *
Average Input Data: Smooth*
* Recommended Options

Depth ft	SPT	Gamma pcf	Fines %
1.0	30.0	130.0	35.0
3.0	30.0	130.0	35.0
5.0	30.0	130.0	35.0
7.0	30.0	130.0	1.0
10.0	30.0	130.0	1.0
15.0	13.0	121.5	1.0
20.0	11.0	125.2	35.0
25.0	15.0	126.1	35.0
30.0	13.0	127.5	35.0

Output Results: (Interval = 1.00 ft)

CSR Calculation:

Depth ft	gamma pcf	sigma tsf	gamma' pcf	sigma' tsf	rd	CSR	fs (user)	CSRfs w/fs
1.00	130.0	0.065	130.0	0.065	1.00	0.38	1.3	0.50

2.00	130.0	0.130	130.0	0.130	1.00	0.38	1.3	0.50
3.00	130.0	0.195	130.0	0.195	0.99	0.38	1.3	0.50
4.00	130.0	0.260	130.0	0.260	0.99	0.38	1.3	0.49
5.00	130.0	0.325	130.0	0.325	0.99	0.38	1.3	0.49
6.00	130.0	0.390	130.0	0.390	0.99	0.38	1.3	0.49
7.00	130.0	0.455	130.0	0.455	0.98	0.38	1.3	0.49
8.00	130.0	0.520	130.0	0.520	0.98	0.38	1.3	0.49
9.00	130.0	0.585	130.0	0.585	0.98	0.38	1.3	0.49
10.00	130.0	0.650	130.0	0.650	0.98	0.37	1.3	0.49
11.00	128.3	0.715	128.3	0.715	0.97	0.37	1.3	0.49
12.00	126.6	0.778	126.6	0.778	0.97	0.37	1.3	0.48
13.00	124.9	0.841	124.9	0.841	0.97	0.37	1.3	0.48
14.00	123.2	0.903	123.2	0.903	0.97	0.37	1.3	0.48
15.00	121.5	0.964	59.1	0.964	0.97	0.37	1.3	0.48
16.00	122.2	1.025	59.8	0.994	0.96	0.38	1.3	0.50
17.00	123.0	1.087	60.6	1.024	0.96	0.39	1.3	0.51
18.00	123.7	1.148	61.3	1.055	0.96	0.40	1.3	0.52
19.00	124.5	1.210	62.1	1.086	0.96	0.41	1.3	0.53
20.00	125.2	1.273	62.8	1.117	0.95	0.42	1.3	0.54
21.00	125.4	1.335	63.0	1.148	0.95	0.42	1.3	0.55
22.00	125.6	1.398	63.2	1.180	0.95	0.43	1.3	0.56
23.00	125.7	1.461	63.3	1.211	0.95	0.44	1.3	0.57
24.00	125.9	1.524	63.5	1.243	0.94	0.44	1.3	0.58
25.00	126.1	1.587	63.7	1.275	0.94	0.45	1.3	0.58
26.00	126.4	1.650	64.0	1.307	0.94	0.45	1.3	0.59
27.00	126.7	1.713	64.3	1.339	0.94	0.46	1.3	0.60
28.00	126.9	1.777	64.5	1.371	0.93	0.46	1.3	0.60
29.00	127.2	1.840	64.8	1.403	0.93	0.47	1.3	0.61
30.00	127.5	1.904	65.1	1.436	0.93	0.47	1.3	0.61
31.00	127.5	1.968	65.1	1.468	0.92	0.47	1.3	0.62

CSR is based on water table at 15.0 during earthquake

CRR Calculation from SPT or BPT data:

Depth ft	SPT	Cebs	Cr	sigma'	Cn	(N1)60	Fines %	d(N1)60	(N1)60f	CRR7.5
1.00	30.00	1.15	0.75	0.065	1.70	43.99	35.0	7.20	51.19	2.00
2.00	30.00	1.15	0.75	0.130	1.70	43.99	35.0	7.20	51.19	2.00
3.00	30.00	1.15	0.75	0.195	1.70	43.99	35.0	7.20	51.19	2.00
4.00	30.00	1.15	0.75	0.260	1.70	43.99	35.0	7.20	51.19	2.00
5.00	30.00	1.15	0.75	0.325	1.70	43.99	35.0	7.20	51.19	2.00
6.00	30.00	1.15	0.75	0.390	1.60	41.43	18.0	3.12	44.55	2.00
7.00	30.00	1.15	0.75	0.455	1.48	38.36	1.0	0.00	38.36	2.00
8.00	30.00	1.15	0.75	0.520	1.39	35.88	1.0	0.00	35.88	2.00
9.00	30.00	1.15	0.85	0.585	1.31	38.34	1.0	0.00	38.34	2.00
10.00	30.00	1.15	0.85	0.650	1.24	36.37	1.0	0.00	36.37	2.00
11.00	26.60	1.15	0.85	0.715	1.18	30.76	1.0	0.00	30.76	2.00
12.00	23.20	1.15	0.85	0.778	1.13	25.70	1.0	0.00		

25.70	0.29								
	13.00	19.80	1.15	0.85	0.841	1.09	21.10	1.0	0.00
21.10	0.23								
	14.00	16.40	1.15	0.85	0.903	1.05	16.87	1.0	0.00
16.87	0.18								
	15.00	13.00	1.15	0.95	0.964	1.02	14.46	1.0	0.00
14.46	0.16								
	16.00	12.60	1.15	0.95	1.025	0.99	13.59	7.8	0.67
14.27	0.15								
	17.00	12.20	1.15	0.95	1.087	0.96	12.79	14.6	2.30
15.09	0.16								
	18.00	11.80	1.15	0.95	1.148	0.93	12.03	21.4	3.94
15.97	0.17								
	19.00	11.40	1.15	0.95	1.210	0.91	11.32	28.2	5.57
16.89	0.18								
	20.00	11.00	1.15	0.95	1.273	0.89	10.65	35.0	7.20
17.85	0.19								
	21.00	11.80	1.15	0.95	1.335	0.87	11.16	35.0	7.20
18.36	0.20								
	22.00	12.60	1.15	0.95	1.398	0.85	11.64	35.0	7.20
18.84	0.20								
	23.00	13.40	1.15	0.95	1.461	0.83	12.11	35.0	7.20
19.31	0.21								
	24.00	14.20	1.15	0.95	1.524	0.81	12.57	35.0	7.20
19.77	0.21								
	25.00	15.00	1.15	0.95	1.587	0.79	13.01	35.0	7.20
20.21	0.22								
	26.00	14.60	1.15	0.95	1.630	0.78	12.49	35.0	7.20
19.69	0.21								
	27.00	14.20	1.15	0.95	1.662	0.78	12.03	35.0	7.20
19.23	0.21								
	28.00	13.80	1.15	1.00	1.694	0.77	12.19	35.0	7.20
19.39	0.21								
	29.00	13.40	1.15	1.00	1.726	0.76	11.73	35.0	7.20
18.93	0.20								
	30.00	13.00	1.15	1.00	1.759	0.75	11.27	35.0	7.20
18.47	0.20								
	31.00	13.00	1.15	1.00	1.791	0.75	11.17	35.0	7.20
18.37	0.20								

CRR is based on water table at 25.3 during In-Situ Testing

Factor of Safety, - Earthquake Magnitude= 7.2:

Depth ft	sigC' tsf	CRR7.5 tsf	Ksigma	CRRv	MSF	CRRm	CSRfs w/fs	F.S. CRRm/CSRfs
1.00	0.04	2.00	1.00	2.00	1.11	2.22	0.50	5.00
2.00	0.08	2.00	1.00	2.00	1.11	2.22	0.50	5.00
3.00	0.13	2.00	1.00	2.00	1.11	2.22	0.50	5.00
4.00	0.17	2.00	1.00	2.00	1.11	2.22	0.49	5.00
5.00	0.21	2.00	1.00	2.00	1.11	2.22	0.49	5.00
6.00	0.25	2.00	1.00	2.00	1.11	2.22	0.49	5.00
7.00	0.30	2.00	1.00	2.00	1.11	2.22	0.49	5.00
8.00	0.34	2.00	1.00	2.00	1.11	2.22	0.49	5.00
9.00	0.38	2.00	1.00	2.00	1.11	2.22	0.49	5.00
10.00	0.42	2.00	1.00	2.00	1.11	2.22	0.49	5.00
11.00	0.46	2.00	1.00	2.00	1.11	2.22	0.49	5.00
12.00	0.51	0.29	1.00	0.29	1.11	0.33	0.48	5.00
13.00	0.55	0.23	1.00	0.23	1.11	0.25	0.48	5.00
14.00	0.59	0.18	1.00	0.18	1.11	0.20	0.48	5.00
15.00	0.63	0.16	1.00	0.16	1.11	0.17	0.48	0.36 *

16.00	0.67	0.15	1.00	0.15	1.11	0.17	0.50	0.35 *
17.00	0.71	0.16	1.00	0.16	1.11	0.18	0.51	0.36 *
18.00	0.75	0.17	1.00	0.17	1.11	0.19	0.52	0.37 *
19.00	0.79	0.18	1.00	0.18	1.11	0.20	0.53	0.38 *
20.00	0.83	0.19	1.00	0.19	1.11	0.21	0.54	0.39 *
21.00	0.87	0.20	1.00	0.20	1.11	0.22	0.55	0.40 *
22.00	0.91	0.20	1.00	0.20	1.11	0.23	0.56	0.40 *
23.00	0.95	0.21	1.00	0.21	1.11	0.23	0.57	0.41 *
24.00	0.99	0.21	1.00	0.21	1.11	0.24	0.58	0.41 *
25.00	1.03	0.22	1.00	0.22	1.11	0.24	0.58	0.42 *
26.00	1.06	0.21	1.00	0.21	1.11	0.24	0.59	0.40 *
27.00	1.08	0.21	0.99	0.21	1.11	0.23	0.60	0.38 *
28.00	1.10	0.21	0.99	0.21	1.11	0.23	0.60	0.38 *
29.00	1.12	0.20	0.99	0.20	1.11	0.22	0.61	0.37 *
30.00	1.14	0.20	0.98	0.20	1.11	0.22	0.61	0.35 *
31.00	1.16	0.20	0.98	0.19	1.11	0.22	0.62	0.35 *

* F.S.<1: Liquefaction Potential Zone. (If above water table: F.S.=5)
(F.S. is limited to 5, CRR is limited to 2, CSR is limited to 2)

CPT convert to SPT for Settlement Analysis:
Fines Correction for Settlement Analysis:

Depth ft	Ic	qc/N60	qc1 tsf	(N1)60	Fines %	d(N1)60	(N1)60s
1.00	-	-	-	43.99	35.0	2.92	46.91
2.00	-	-	-	43.99	35.0	2.92	46.91
3.00	-	-	-	43.99	35.0	2.92	46.91
4.00	-	-	-	43.99	35.0	2.92	46.91
5.00	-	-	-	43.99	35.0	2.92	46.91
6.00	-	-	-	41.43	18.0	1.62	43.06
7.00	-	-	-	38.36	1.0	0.10	38.46
8.00	-	-	-	35.88	1.0	0.10	35.98
9.00	-	-	-	38.34	1.0	0.10	38.44
10.00	-	-	-	36.37	1.0	0.10	36.47
11.00	-	-	-	30.76	1.0	0.10	30.86
12.00	-	-	-	25.70	1.0	0.10	25.80
13.00	-	-	-	21.10	1.0	0.10	21.20
14.00	-	-	-	16.87	1.0	0.10	16.96
15.00	-	-	-	14.46	1.0	0.10	14.56
16.00	-	-	-	13.59	7.8	0.74	14.33
17.00	-	-	-	12.79	14.6	1.34	14.12
18.00	-	-	-	12.03	21.4	1.90	13.93
19.00	-	-	-	11.32	28.2	2.43	13.75
20.00	-	-	-	10.65	35.0	2.92	13.57
21.00	-	-	-	11.16	35.0	2.92	14.07
22.00	-	-	-	11.64	35.0	2.92	14.56
23.00	-	-	-	12.11	35.0	2.92	15.03
24.00	-	-	-	12.57	35.0	2.92	15.49
25.00	-	-	-	13.01	35.0	2.92	15.93
26.00	-	-	-	12.49	35.0	2.92	15.41
27.00	-	-	-	12.03	35.0	2.92	14.95
28.00	-	-	-	12.19	35.0	2.92	15.11
29.00	-	-	-	11.73	35.0	2.92	14.65
30.00	-	-	-	11.27	35.0	2.92	14.19
31.00	-	-	-	11.17	35.0	2.92	14.09

Settlement of Saturated Sands:
Settlement Analysis Method: Ishihara / Yoshimine*

Depth	CSRfs	F.S.	Fines	(N1)60s	Dr	ec	dsz	dsv	S

	ft	w/fs		%		%	%	in.	in.	in.
	30.95	0.62	0.35	35.0	14.09	59.48	2.841	0.017	0.017	
0.017										
	30.00	0.61	0.35	35.0	14.19	59.68	2.827	0.017	0.323	
0.340										
	29.00	0.61	0.37	35.0	14.65	60.59	2.769	0.017	0.335	
0.676										
	28.00	0.60	0.38	35.0	15.11	61.50	2.713	0.016	0.329	
1.004										
	27.00	0.60	0.38	35.0	14.95	61.19	2.732	0.016	0.330	
1.334										
	26.00	0.59	0.40	35.0	15.41	62.08	2.678	0.016	0.324	
1.659										
	25.00	0.58	0.42	35.0	15.93	63.06	2.618	0.016	0.318	
1.977										
	24.00	0.58	0.41	35.0	15.49	62.22	2.669	0.016	0.317	
2.294										
	23.00	0.57	0.41	35.0	15.03	61.34	2.723	0.016	0.324	
2.618										
	22.00	0.56	0.40	35.0	14.56	60.41	2.779	0.017	0.330	
2.948										
	21.00	0.55	0.40	35.0	14.07	59.45	2.844	0.017	0.337	
3.285										
	20.00	0.54	0.39	35.0	13.57	58.42	2.917	0.018	0.346	
3.631										
	19.00	0.53	0.38	28.2	13.75	58.79	2.891	0.017	0.348	
3.979										
	18.00	0.52	0.37	21.4	13.93	59.16	2.864	0.017	0.345	
4.325										
	17.00	0.51	0.36	14.6	14.12	59.54	2.837	0.017	0.342	
4.667										
	16.00	0.50	0.35	7.8	14.33	59.96	2.807	0.017	0.339	
5.005										
	15.00	0.48	0.36	1.0	14.56	60.41	2.779	0.017	0.335	
5.340										

Settlement of Saturated Sands=5.340 in.
dsz is per each segment: dz=0.05 ft
dsv is per each print interval: dv=1 ft
S is cumulated settlement at this depth

Settlement of Dry Sands:

	Depth	sigma'	sigC'	(N1)60s	CSRfs	Gmax	g*Ge/Gm	g_eff	ec7.5	Cec	ec
	dsz	dsv	S								
	ft	tsf	tsf		w/fs	tsf			%		%
	in.	in.	in.								
	14.95	0.96	0.62	14.77	0.48	866.7	5.3E-4	1.0000	1.4585	0.98	1.4339
	1.7E-2	0.017	0.017								
	14.00	0.90	0.59	16.96	0.48	879.7	5.0E-4	0.9728	1.1863	0.98	1.1663
	1.4E-2	0.310	0.327								
	13.00	0.84	0.55	21.20	0.48	914.3	4.4E-4	0.4980	0.4547	0.98	0.4470
	5.4E-3	0.173	0.500								
	12.00	0.78	0.51	25.80	0.48	938.9	4.0E-4	0.2876	0.2028	0.98	0.1994
	2.4E-3	0.071	0.572								
	11.00	0.71	0.46	30.86	0.49	954.9	3.6E-4	0.1806	0.0984	0.98	0.0967
	1.2E-3	0.033	0.605								
	10.00	0.65	0.42	36.47	0.49	962.8	3.3E-4	0.1206	0.0481	0.98	

0.0473	5.7E-4	0.016	0.621							
	9.00	0.59	0.38	38.44	0.49	929.6	3.1E-4	0.0949	0.0334	0.98
0.0328	3.9E-4	0.009	0.631							
	8.00	0.52	0.34	35.98	0.49	857.3	3.0E-4	0.3094	0.1273	0.98
0.1251	1.5E-3	0.014	0.645							
	7.00	0.46	0.30	38.46	0.49	819.9	2.7E-4	0.1312	0.0461	0.98
0.0453	5.4E-4	0.018	0.663							
	6.00	0.39	0.25	43.06	0.49	788.2	2.4E-4	0.0657	0.0208	0.98
0.0204	2.5E-4	0.007	0.670							
	5.00	0.33	0.21	46.91	0.49	740.3	2.2E-4	0.0447	0.0141	0.98
0.0139	1.7E-4	0.004	0.674							
	4.00	0.26	0.17	46.91	0.49	662.2	1.9E-4	0.0380	0.0120	0.98
0.0118	1.4E-4	0.003	0.677							
	3.00	0.20	0.13	46.91	0.50	573.5	1.7E-4	0.0366	0.0116	0.98
0.0114	1.4E-4	0.003	0.680							
	2.00	0.13	0.08	46.91	0.50	468.2	1.4E-4	0.0258	0.0082	0.98
0.0080	9.6E-5	0.002	0.682							
	1.00	0.07	0.04	46.91	0.50	331.1	9.8E-5	0.0192	0.0061	0.98
0.0060	7.2E-5	0.002	0.684							

Settlement of Dry Sands=0.684 in.
dsz is per each segment: dz=0.05 ft
dsv is per each print interval: dv=1 ft
S is cumulated settlement at this depth

Total Settlement of Saturated and Dry Sands=6.024 in.
Differential Settlement=3.012 to 3.976 in.

Units Depth = ft, Stress or Pressure = tsf (atm), Unit Weight = pcf, Settlement = in.

SPT	Field data from Standard Penetration Test (SPT)
BPT	Field data from Becker Penetration Test (BPT)
qc	Field data from Cone Penetration Test (CPT)
fc	Friction from CPT testing
Gamma	Total unit weight of soil
Gamma'	Effective unit weight of soil
Fines	Fines content [%]
D50	Mean grain size
Dr	Relative Density
sigma	Total vertical stress [tsf]
sigma'	Effective vertical stress [tsf]
sigC'	Effective confining pressure [tsf]
rd	Stress reduction coefficient
CSR	Cyclic stress ratio induced by earthquake
fs	User request factor of safety, apply to CSR
w/fs	With user request factor of safety inside
CSRfs	CSR with User request factor of safety
CRR7.5	Cyclic resistance ratio (M=7.5)
Ksigma	Overburden stress correction factor for CRR7.5
CRRv	CRR after overburden stress correction, CRRv=CRR7.5 * Ksigma
MSF	Magnitude scaling factor for CRR (M=7.5)
CRRm	After magnitude scaling correction CRRm=CRRv * MSF
F.S.	Factor of Safety against liquefaction F.S.=CRRm/CSRfs
Cebs	Energy Ratio, Borehole Dia., and Sample Method Corrections
Cr	Rod Length Corrections
Cn	Overburden Pressure Correction
(N1)60	SPT after corrections, (N1)60=SPT * Cr * Cn * Cebs
d(N1)60	Fines correction of SPT

(N1)60f	(N1)60 after fines corrections, (N1)60f=(N1)60 + d(N1)60
Cq	Overburden stress correction factor
qc1	CPT after Overburden stress correction
dqc1	Fines correction of CPT
qc1f	CPT after Fines and Overburden correction, qc1f=qc1 + dqc1
qc1n	CPT after normalization in Robertson's method
Kc	Fine correction factor in Robertson's Method
qc1f	CPT after Fines correction in Robertson's Method
Ic	Soil type index in Suzuki's and Robertson's Methods
(N1)60s	(N1)60 after seattlement fines corrections
ec	Volumetric strain for saturated sands
ds	Settlement in each Segment dz
dz	Segment for calculation, dz=0.050 ft
Gmax	Shear Modulus at low strain
g_eff	gamma_eff, Effective shear Strain
g*Ge/Gm	gamma_eff * G_eff/G_max, Strain-modulus ratio
ec7.5	Volumetric Strain for magnitude=7.5
Cec	Magnitude correction factor for any magnitude
ec	Volumetric strain for dry sands, ec=Cec * ec7.5
NoLiq	No-Liquefy Soils

References:

NCEER Workshop on Evaluation of Liquefaction Resistance of Soils. Youd, T.L., and Idriss, I.M., eds., Technical Report NCEER 97-0022.

SP117. Southern California Earthquake Center. Recommended Procedures for Implementation of DMG Special Publication 117, Guidelines for Analyzing and Mitigating Liquefaction in California. University of Southern California. March 1999.

ENCLOSURE 9

GEOLOGIC HAZARDS REPORT

SPORTS FIELD MODERNIZATION PROJECT

MAYFAIR MIDDLE / HIGH SCHOOL

6000 N. WOODRUFF AVENUE, LAKEWOOD, CALIFORNIA

TERRA GEOSCIENCES

TERRA GEOSCIENCES

GEOLOGIC HAZARDS REPORT

SPORTS FIELD MODERNIZATION PROJECT

MAYFAIR MIDDLE / HIGH SCHOOL

6000 N. WOODRUFF AVENUE, LAKEWOOD, CALIFORNIA

Project No. 282362-3

August 18, 2016

Prepared for:

John, R. Byerly, Inc.
2257 South Lilac Avenue
Bloomington, CA 92316

Consulting Engineering Geology & Geophysics

P.O. Box 1090, Loma Linda, CA 92354 • 909 796-4667

John R. Byerly, Inc.
2257 South Lilac Avenue
Bloomington, CA 92316

Attention: Mr. John R. Byerly

Regarding: Geologic Hazards Report
Mayfair Middle/High School
Sports Field Modernization Project
6000 N. Woodruff Avenue, Lakewood, California
JRB File No. S-13836

Reference: Terra Geosciences
Geologic Hazards Report, Mayfair Middle/High School
Proposed New Building
6000 N. Woodruff Avenue, Lakewood, California
Project No. 282362-2, dated December 14, 2015

INTRODUCTION

At your request, this firm has prepared a geologic hazards report for the sports field modernization project to be constructed within the subject school site as referenced above. The purpose of this study was to evaluate the existing geologic conditions of the property and any corresponding potential geologic and/or seismic hazards, with respect to the proposed development from a geologic standpoint.

This geologic hazards report has been prepared utilizing the suggested "Checklist for the Review of Engineering Geology and Seismology Reports for California Public Schools, Hospitals, and Essential Services Buildings" (CGS Note 48, 2013), along with the Geologic portion of the "*Factors to Be Included in the Geological and Environmental Hazards Report*," which is included as Appendix H of the "School Site Selection and Approval Guide," prepared by the School Facility Planning Division, California Department of Education, and the Geohazard Reports requirements outlined by the DSA (2013 and 2013b).

Accompanying Map and Appendices

Plate 1 - Regional Geologic Map
Appendix A - Ground Motion Analysis Data
Appendix B - References

PROJECT SUMMARY

Based on the information that has been provided, we understand that new sports fields are proposed to be constructed along the eastern portion of the subject school site. We understand that this report will be appended into the geotechnical report prepared for the site by John R. Byerly, Inc. (JRB), therefore, some descriptive sections such as site description, proposed development, etc., have been purposely omitted as they are described in detail in the main report.

No grading plans were available for this evaluation, and no field or subsurface exploration was performed by this firm. Only a field reconnaissance and a review of available geologic and geotechnical data in our files were undertaken, including the previous geologic hazards report prepared for the site by our firm, as referenced on Page 1. This review also included the provided exploratory boring logs (drilled August 15, 2016) prepared by JRB, which were excavated within the proposed development area.

The scope of services provided for this evaluation included the following:

- ***Review of available published and unpublished geologic/seismic data in our files pertinent to the site, including the provided boring logs and our previous report as referenced above.***
- ***Evaluation of the local and regional tectonic setting and historical seismic activity, including a CBC ground motion summary.***
- ***Preparation of this report presenting our findings, conclusions, and recommendations from a geologic standpoint.***

GEOLOGIC SETTING

The subject property is located in southwestern California, within a natural geomorphic province known as the Peninsular Ranges. The Peninsular Ranges is generally characterized by steep, elongated ranges and valleys that trend northwesterly. The northern end of this province includes the Los Angeles Basin, which is a northwest-trending alluvial lowland plain about 50 miles long and 20 miles wide. The Los Angeles Basin is, in turn, comprised of several structural blocks or subdivisions which are separated by major zones of faulting or flexures in the basement rock.

More specifically, the site is located within the Central Block of the Los Angeles Basin, which is wedge-shaped and approximately 55 miles long from northwest to southeast, ranging from 10 to 20 miles wide. This block is generally bounded by the Santa Monica Mountains to the north, the Whittier Fault Zone to the northeast, the Newport-Inglewood Fault Zone to the southwest, and the San Joaquin Hills to the southeast. This block contains a maximum thickness of 32,000 feet of marine and non-marine clastic sedimentary rocks of late Cretaceous through Pleistocene age.

Locally, the subject site is shown to be underlain by Quaternary age (Holocene to late Pleistocene) young alluvial fan deposits comprised mostly of unconsolidated to slightly consolidated, undissected to slightly dissected boulder, cobble, gravel, sand, and silt deposits (CGS, 2012), as shown on Plate 1 (map symbol Qyf). Mapping by Saucedo et al. (2003) indicates the site to be underlain by Holocene and late Pleistocene age poorly consolidated clay, sand, gravel, and cobbles. Additionally, mapping by Tinsley and Fumal (1985) indicates the site to be underlain by medium-grained sediments (sand) of Holocene age.

Subsurface exploration performed by JRB during August 2016, indicates the proposed construction area to be predominantly underlain by loose to dense alluvial deposits comprised predominantly of interbedded silty fine sand, fine-grained sand, and occasional silt and clayey silt, to a depth of at least 71 feet.

GROUNDWATER

The subject school site is located within the Coastal Plain Groundwater Basin of Los Angeles County. The coastal plain is bordered to the north, northeast, and southwest by mountains and hills which have been uplifted by folding and faulting. This basin receives the majority of groundwater as runoff and deep percolation from the San Gabriel Mountains to the north. More specifically, the site is located within the Central Basin, which is one of four subbasins of the greater Coastal Plain. The Central Basin is bordered to the west by the Newport-Inglewood fault system; the north by the La Brea High, which is a anticline that brings impermeable rocks to the surface; the northeast and east by emergent less permeable Tertiary rocks of the Elysian, Repetto, Merced and Puente Hills; with the southeast boundary roughly following Coyote Creek, which is a regional drainage province boundary which generally coincides with the Los Angeles-Orange County line.

Locally, within this basin, the site lies upon the Downey Plain which has been formed predominantly by recent alluvial deposition, along with some minor erosion that has occurred. Alluvial fans have formed by the Los Angeles and Rio Hondo-San Gabriel River systems which have coalesced to form a very gentle plain. During past flood times these large rivers have swung over most of the area depositing their debris. The subject site lies between these two rivers.

During on-site subsurface exploration by JRB (August, 2016), groundwater was encountered as shallow as 18± feet in depth. In addition, based on seismic hazard mapping performed by the California Division of Mines and Geology (1999), the site is shown to be located with a zone of potential liquefaction, which generally indicates present or historic groundwater levels of 50 feet or less. Based on data provided by the California Division of Mines and Geology (1998), historic groundwater elevations are estimated to be around 15± feet. As a note, mapping by Mendenhall (1905), indicates that the site lies within an area of historic artesian conditions.

FAULTING

There are at least 41 major late Quaternary active/potentially active faults within a 100 kilometer radius of the site (Blake 1989-2000b), some of which are shown on the Regional Fault Map, Figure 1, below. Of these, there are no active faults known to traverse the site, based on available published literature and our field reconnaissance, nor is the site located within a State of California "Alquist-Priolo Earthquake Fault Zone" for fault rupture hazard (Bryant and Hart, 2007). The nearest mapped (zoned) “active” fault is for the Newport-Inglewood Fault (On-shore), which is shown to be located approximately 6¾± miles to the southwest (C.D.M.G., 1986).

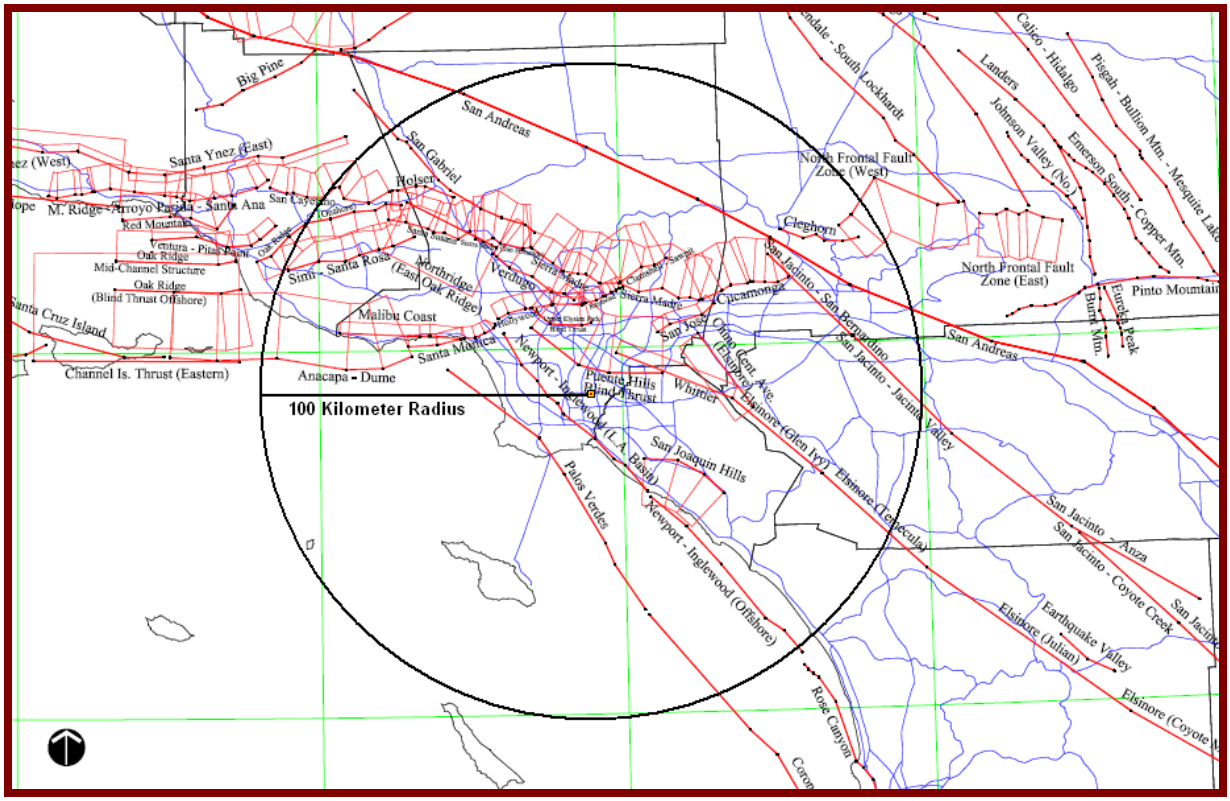

FIGURE 1- Regional Fault Map (from CGS California Fault Model, 2002).

The Newport-Inglewood Fault (mapped on-shore segment) is approximately 65.5± kilometers in length and has an estimated rupture area of 980.5± square kilometers. This fault is characterized by right-lateral, strike-slip movement, with an associated slip-rate of 1 ±0.5 mm/year, and a characteristic return interval of 1,006 years, with an estimated Maximum Moment Magnitude Earthquake of M_W7.2. The "maximum moment” (M_W) earthquake is the maximum earthquake that is specific to that source based on estimated rupture dimensions for that segment of the design fault. Values for the “maximum moment magnitude” earthquake and associated fault data as outlined above have been compiled from data provided by the C.D.M.G. (1996); Cao et al. (2003); and Petersen et al. (2008).

The Newport-Inglewood Fault Zone consists of a series of northwest-trending, right-lateral strike-slip faults and form short, discontinuous, generally left-stepping en-echelon patterns when at or near the surface (Bryant, 1988). Within this zone, there are associated northwest- to west-trending, right-stepping anticlinal folds and numerous short subsidiary normal and reverse faults. This fault zone is seismically active of which the 1933 Long Beach Earthquake occurred as discussed further in this report.

As shown on Plate 1, a concealed/inferred fault traverses approximately 1½± miles to the southwest which is referred to as the Los Alamitos Fault. Not much is known about this fault but it is believed to be approximately 11 kilometers in length and at least late Quaternary in age. The type of faulting or recency of activity is not known at this time. This fault may be part of a larger fault system referred to as the Compton-Los Alamitos fault zone (Southern California Earthquake Data Center, 2008). It has been noted that the distribution of earthquake epicenters along smaller branch faults striking sub-parallel to the trace of the main fault zone are also seismically active and may be due to seismogenic slip (Hauksson, 1987). Such clusters occur along the Los Alamitos fault but may simply be a result of the strain accumulation or adjustment to the nearby 1933 Long Beach Earthquake. Also as shown on Plate 1, another concealed/inferred fault trace is shown approximately four miles to the southeast. The linear extrapolation of this fault appears to trend within 3,500± feet to the southwest of the site. However, no literature identifies this fault and it is believed that it is associated with the Compton-Los Alamitos fault zone as discussed above and is not considered to be active at this time.

CBC GROUND MOTION ANALYSIS

Included for this study was an assessment of the seismic ground motion parameters of the subject site with respect to the most recently adopted 2013 California Building Code (CBC) and ASCE Standard 7-10 as partially summarized and tabulated below, with the calculation data (U.S.G.S. Design Maps, 2013) presented within Appendix A, for reference. Geographically, the project construction area is located at Latitude 33.8640 and Longitude -118.1127 (WGS 1984 coordinates).

- ***Mapped Spectral Acceleration Parameters (CBC 1613A.5.1)***- Based on maps prepared by the U.S.G.S. (Risk-Adjusted Maximum Considered Earthquake (MCE_R) Ground Motion Parameter for the Conterminous United States for the 0.2 and 1-second Spectral Response Acceleration (5% of Critical Damping; Site Class B), a value of 1.540g for the 0.2 second period (S_s) and 0.596g for the 1.0 second period (S_1) was calculated (ASCE 7 Figures 22-1, 22-2, and CBC 1613A.3.1).

- ***Site Classification (CBC 1613A.5.2 and CBC 1613A.5.5)***- Based on the presence of mapped Quaternary age alluvial deposits underlying the site and exploratory boring test data provided by JRB (2016), the design Site Class would be **"D."** This Class is defined as having the upper 100 feet (30 meters) of the subsurface being

underlain by stiff soil with average shear-wave velocities of 180 to 360 meters/second and standard penetration blow counts ranging from 15 to 50.

- ***Seismic Design Category (CBC 1616A.1.3)***- Based on the existing school site facilities (Risk Category III; CBC Table 1604.5) and using the U.S. Seismic Design Maps web application (U.S.G.S., 2013), the mapped spectral response acceleration parameter at the one-second period (S_1=0.596g), was found to be less than 0.75g which classifies the site to be in Seismic Design Category **"D."**

TABLE 1 – SUMMARY OF SEISMIC DESIGN PARAMETERS

Factor or Coefficient	Value
S_S	**1.540g**
S_1	**0.596g**
F_a	**1.0**
F_v	**1.5**
S_{DS}	**1.027g**
S_{D1}	**0.596g**
S_{MS}	**1.540g**
S_{M1}	**0.894g**
T_L	**8 Seconds**
PGA_M	**0.591g**
Site Class	**D**
Seismic Design Category	**D**

HISTORIC SEISMICITY

A computerized search, based on Southern California historical earthquake catalogs, has been performed using the computer programs EQSEARCH (Blake, 1989-2000a) and EPI (Reeder, 1997). The following table and discussion summarizes the historic seismic events (greater than or equal to M4.0) that have been estimated and/or recorded during this time period of 1800 to August 2016, within a 100 kilometer radius of the subject site.

TABLE 2 - HISTORIC SEISMIC EVENTS; 1800-2016 (100 kilometer radius)

Richter Magnitude (M)	No. of Events
4.0 - 4.9	398
5.0 - 5.9	45
6.0 - 6.9	12
7.0 - 7.9	1
8.0+	0

It should be noted that pre-instrumental seismic events (generally before 1932) have been estimated from isoseismal maps (Toppozada, et al., 1981 and 1982). These data have been compiled generally based on the reported intensities throughout the region, thus focusing in on the most likely epicentral location. Instrumentation beyond 1932 has greatly increased the accuracy of locating earthquake epicenters. A summary of the historic earthquake data is as follows:

- At least 58 significant historical earthquakes of magnitude 5.0 and greater, during the period of 1800 to August 2016, have been estimated and/or recorded within a 62 mile (100 kilometer) radius of the site.

- The closest recorded notable earthquake epicenter (magnitude 4.0 or greater) is a M4.0 event of March 11, 1933, located approximately ¼± mile to the northeast.

- The nearest estimated significant historic earthquake epicenter (pre-1932) that was documented was approximately 11½ miles to the northeast (December 25, 1903, M5.0).

- The largest estimated historical earthquake magnitude within a 62 mile radius of the site is a M7.0 event that occurred on September 24, 1827, located 52± miles west.

- The nearest recorded significant historic earthquake epicenter was the M5.4 October 2, 1933 event, located approximately 5½ miles to the south-southeast.

- The largest recorded historical earthquake was the M6.7 Northridge event, located approximately 34 miles to the northwest (January 17, 1994).

- The largest estimated ground acceleration estimated to have been experienced at the site was 0.195g which resulted from the M5.4 earthquake of October 2, 1933, which was located approximately six miles south-southeast of the subject school site (Blake, 1989-2000b).

The most notable earthquake to occur in the local region was the M6.3 Long Beach Earthquake, which occurred approximately 19± miles to the south-southeast, on March 11, 1933. Other notable earthquakes that have occurred in the region (not listed above) include a M5.0 event was located approximately 17 miles to the northwest (July 16, 1920). In 1941, two earthquakes of M5.4 (November 14, 1941) and M4.9 (October 22, 1941) occurred, being 10± and 7± miles to the southwest, respectively.

An Earthquake Epicenter Map which includes magnitudes 4.0 and greater for a 100 kilometer (62 mile) radius, and a Microseismicity Map which includes magnitudes 0.0 and greater for a 10 mile radius, have been included below as Figures 2 and 3, respectively, for reference purposes. These maps were prepared using the Northern California Earthquake Data Center database NCEDC (2014) of instrumentally recorded events from the period of 1932 to August 2016.

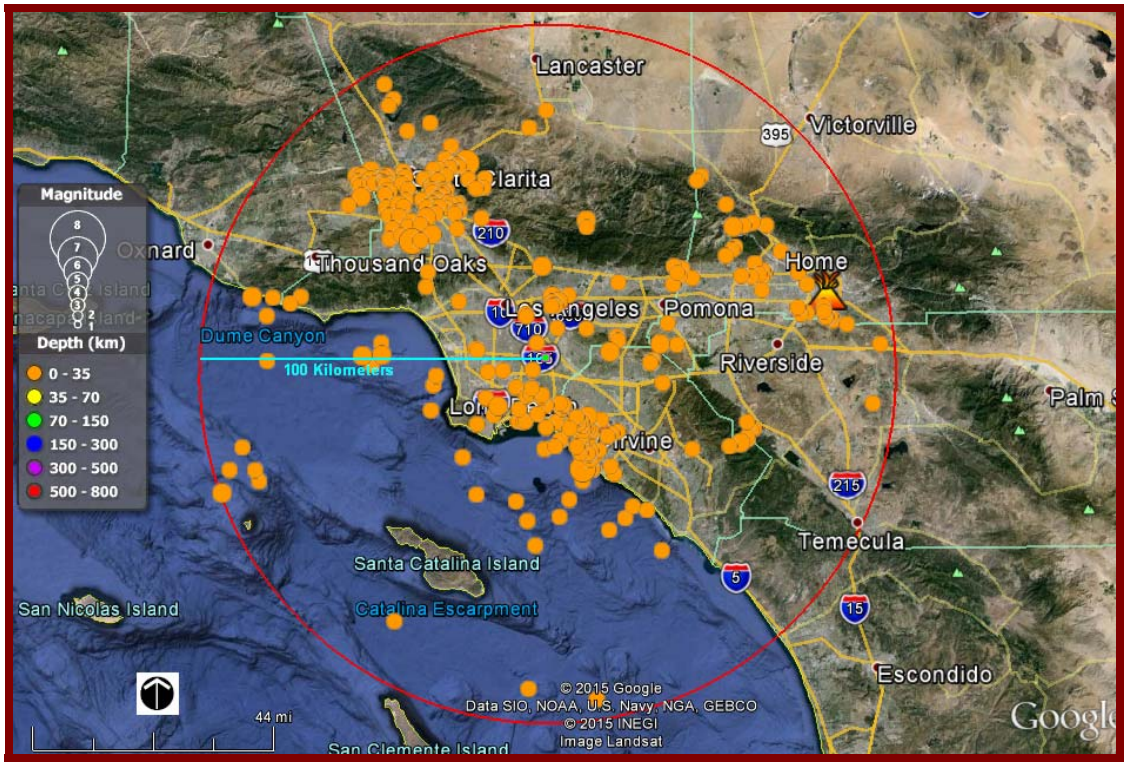

FIGURE 2- Earthquake Epicenter Map showing events of M4.0+ within a 100 kilometer radius.

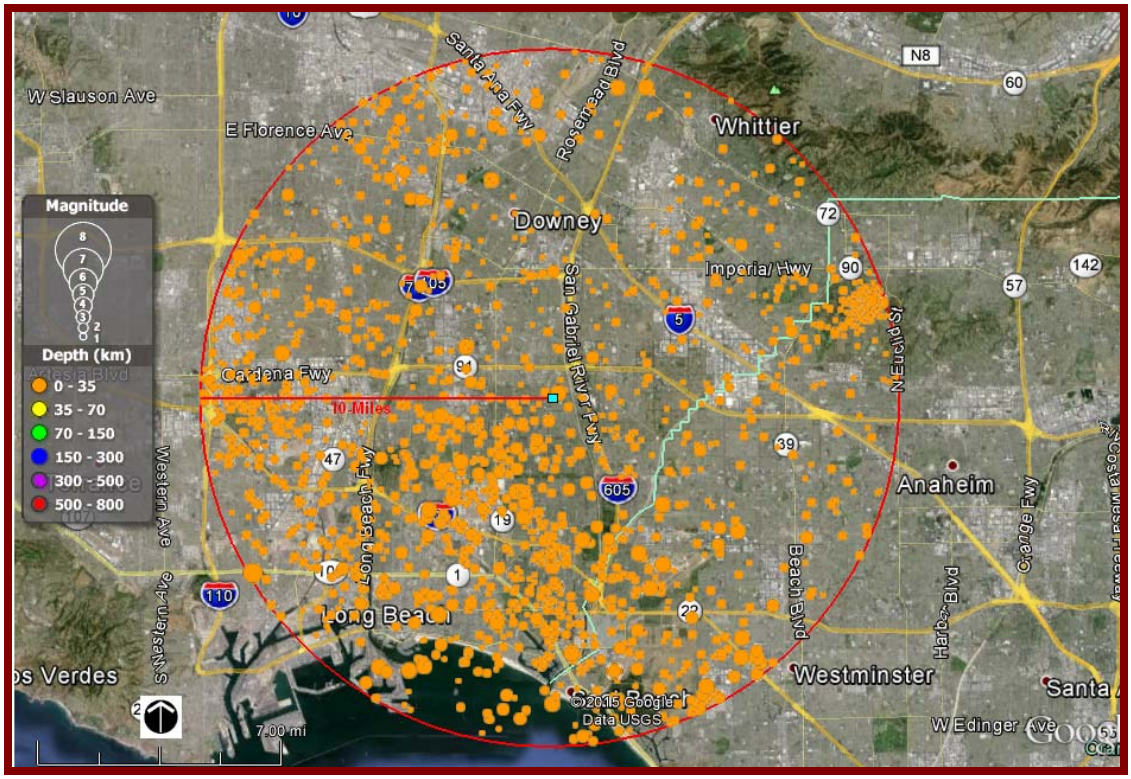

FIGURE 3- Microseismicity Map showing events of M0.0+ within a 10 mile radius.

SECONDARY SEISMIC HAZARDS

Secondary permanent or transient seismic hazards generally associated with severe ground shaking during an earthquake are ground rupture, liquefaction, ground lurching / lateral spreading, seiches or tsunamis, flooding (water storage facility failure), landsliding, rockfalls, and seismically-induced settlement. These hazards are discussed below.

Ground Rupture:

Ground rupture is generally considered most likely to occur along pre-existing faults. Since there are no faults that are known to traverse the site, the potential for ground rupture is considered to be very low to nil.

Liquefaction:

In general, liquefaction is a phenomenon that occurs where there is a loss of strength or stiffness in the soils from repeated disturbances of saturated cohesionless soil that can result in the settlement of buildings, ground failures, or other related hazards. The main factors contributing to this phenomenon are: 1) cohesionless, granular soils having relatively low densities (usually of Holocene age); 2) shallow groundwater (generally less than 40 feet); and 3) moderate-high seismic ground shaking. Due to the shallow groundwater encountered (locally as shallow as 18± feet) and recorded historic artesian conditions (Mendenhall, 1905); moderate-high seismic potentials; and the overlying unconsolidated alluvial deposits (based on previous geologic mapping and the provided exploratory boring data), a potential for liquefaction may exist. In addition, the C.D.M.G. (1999) and Los Angeles County (1990) indicate the subject site to be located within a zone of potential liquefaction.

Ground Lurching/Lateral Spreading:

Ground lurching is the horizontal movement of soil, sediments, or fill located on relatively steep embankments or scarps as a result of seismic activity, forming irregular ground surface cracks. The potential for lateral spreading or lurching is highest in areas underlain by soft, saturated materials, especially where bordered by steep banks or adjacent hard ground. Due to the relatively flat-lying nature of the site and distance from embankments (San Gabriel River channel at a minimum distance of 3,200± feet to the east), the potential for ground lurching and/or lateral spreading is considered to be very low.

Flooding (Water Storage Facility Failure):

The proposed new sports fields approach as close as 2,100± feet west of the San Gabriel Valley River Channel, which drains a very large watershed area of the San Gabriel Mountains and Valley. Four major dams are located within the foothills of the San Gabriel Mountains, which could ultimately drain and overflow the river channels and flood basin boundaries in the event of a catastrophic event causing failure. Since

the integrity of the dams is not known, the potential for flooding at the site should be considered a possibility.

Seiches/Tsunamis:

Based on the far distance of large, open bodies of water and the elevation of the site with respect to sea level, the possibility of seiches/tsunamis is considered nil.

Landsliding:

Due to the low-lying relief of the site, landsliding due to seismic shaking is considered nil.

Rockfalls:

Since no large rock outcrops are present at or adjacent to the site, the possibility of rockfalls during seismic shaking is nil.

Seismically-Induced Settlement:

Seismically-induced settlement generally occurs within areas of loose, granular soils during periods of strong ground motion. Since the subject school site is underlain by generally loose to dense interbedded silty fine sand, fine-grained sand, and occasional silt and clayey silt, based on the subsurface data and SPT blow counts from the exploratory boring excavations performed by JRB (2016), seismically-induced settlement is considered possible.

OTHER GEOLOGIC HAZARDS

There are other potential geologic hazards not necessarily associated with seismic activity that occur statewide. These hazards include; natural hazardous materials (such as methane gas, hydrogen-sulfide gas, and tar seeps); Radon-222 gas; naturally occurring asbestos; volcanic hazards; and regional subsidence. Of these hazards, there are none that appear to impact the site.

FLOODING

According to the Federal Emergency Management Agency (FEMA), the subject site is not located within the boundaries of a 100-year flood (Community Panel No. 06037C 1980F, September 26, 2008). The site is shown to be located within “Other Flood Areas - Zone X,” which is defined as “Areas of 0.2% annual chance flood; areas of 1% annual chance flood with average depths of less than 1 foot or with drainage areas less than 1 square mile; and areas protected by levees from 1% annual chance flood.” All flooding potentials and drainage issues should be properly evaluated by the design Civil Engineer.

CONCLUSIONS AND RECOMMENDATIONS

General:

Based on our review of available pertinent published and unpublished geologic/seismic literature (including the site-specific boring log data), construction of the proposed sports field modernization project appears to be feasible from a geologic standpoint, providing that our recommendations are considered during planning and construction.

Conclusions:

1. Based on available published surficial geologic mapping sources, the proposed construction areas within the existing school site is underlain by Quaternary age (Holocene to late Pleistocene) unconsolidated to slightly consolidated, undissected to slightly dissected boulder, cobble, gravel, sand, and silt deposits. Subsurface exploration by John R. Byerly, Inc. indicates the site to be predominantly underlain by loose to dense, interbedded silty fine sand, fine-grained sand, and occasional silt and clayey silt, to a depth of at least 71 feet.

2. Based on our literature research, field reconnaissance, and previous study performed by our firm, no active faults are known to traverse the subject school site. The nearest mapped active fault zoned by the State of California is the Newport-Inglewood Fault (On-shore), which is shown to be located approximately 6¾ miles to the southwest. This fault has an estimated Maximum Moment Magnitude Earthquake of M_W7.2.

3. Based on current subsurface exploration by JRB, groundwater was encountered as shallow as 18± feet. Based on historic data, groundwater levels may have approached within 15± feet of the ground surface locally and has been noted to be in an area of historic artesian conditions. Due to variable regional groundwater withdrawal and/or recharge, the nearby location of the San Gabriel River (groundwater recharge source) to the east of the site, and the permeable nature of the underlying earth materials, intermittent groundwater conditions could be expected throughout the life of the subject site.

4. At this time, there is a possibility for the subject school site to be impacted by liquefaction, seismically-induced settlement, and possible flood inundation. There are no other permanent or transient secondary seismic hazards that are believed to be present at the site.

5. The primary geologic hazard that exists at the site is that of ground shaking. Moderate-severe ground shaking could be anticipated during the life of the proposed new sports fields. Ground shaking from earthquakes accounts for nearly all earthquake losses.

***Recommendations*:**

1. It is recommended that all structures be designed to at least meet the current California Building Code provisions in the latest CBC edition (2013) and the ASCE Standard 7-10, where applicable, such as outlined in this report. However, it should be noted that the building code is intended as a minimum construction design and is often the maximum level to which structures are designed. Essential structures (school site facilities) that are built to minimum code are designed to at least remain operational after an earthquake. It is the responsibility of both the property owner and project structural engineer to determine the risk factors with respect to using CBC minimum design values for the proposed school facilities. This information should be carefully reviewed prior to construction.

2. The potential for liquefaction and seismically-induced settlement should be properly evaluated by the project Geotechnical Engineer. Any appropriate site-specific mitigation measures should be implemented as recommended, if warranted. For evaluation purposes, a high groundwater level of 15 feet along with an associated peak ground acceleration of 0.591g appears to be appropriate values when evaluating liquefaction potentials.

3. All flooding potentials and drainage issues should be properly evaluated by the design Civil Engineer.

CLOSURE

Our conclusions and recommendations are based on an interpretation of available existing geologic/seismic data. No subsurface exploration was performed by this firm for this evaluation. We make no warranty, either express or implied. Should conditions be encountered at a later date or more information becomes available that appear to be different than those indicated in this report, we reserve the right to reevaluate our conclusions and recommendations and provide appropriate mitigation measures, if warranted. If this report is not understood, it is the responsibility of the owner, contractor, engineer, and/or governmental agency, etc., to contact this office for further clarification.

Respectfully submitted,
TERRA GEOSCIENCES



Donn C. Schwartzkopf
Certified Engineering Geologist
CEG 1459



REGIONAL GEOLOGIC MAP

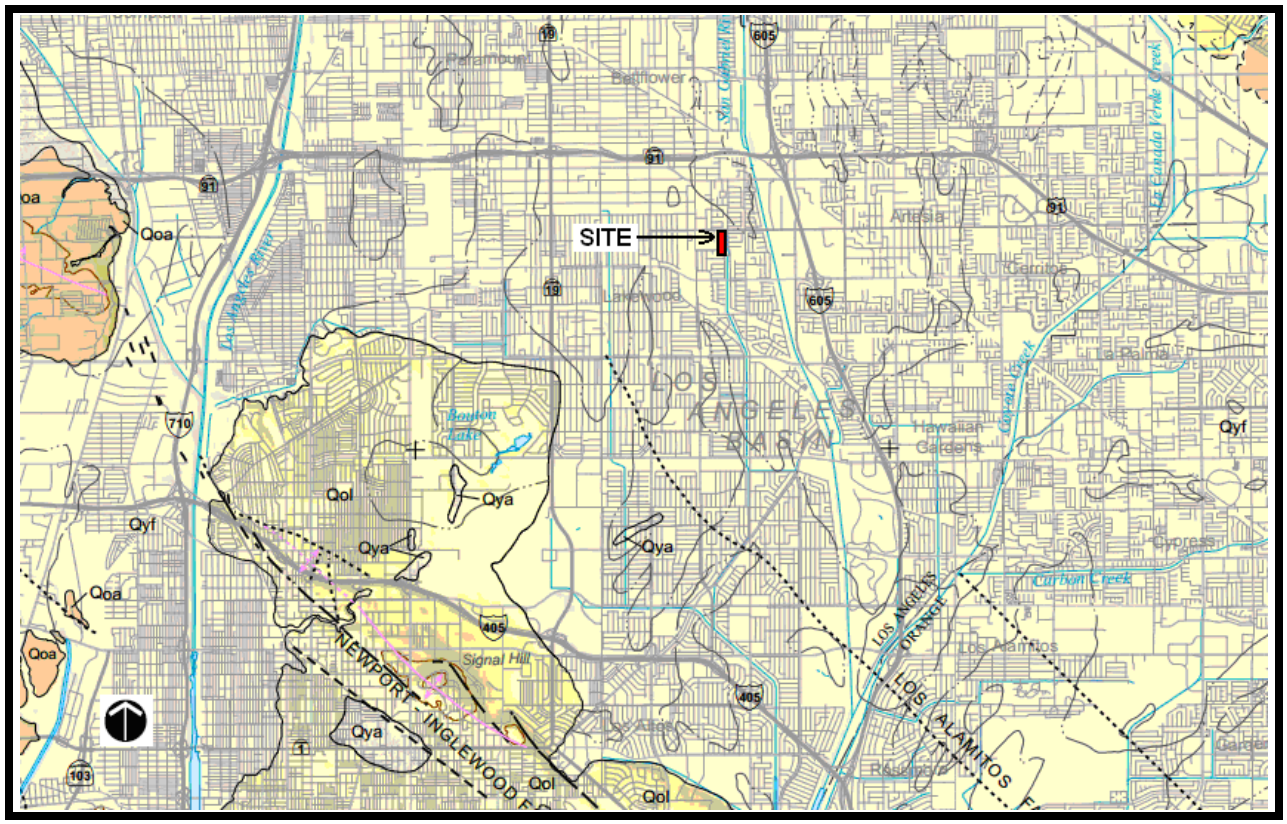

BASE MAP: CGS, 2012, Special Report 217, Plate 8, Long Beach 30' x 60' Quadrangle, Scale 1"=1.9± miles'

PARTIAL LEGEND

Qyf	**YOUNGER ALLUVIUM**	Young alluvial fan deposits of unconsolidated to slightly consolidated, undissected to slightly dissected boulder, cobble, gravel, sand, and silt.
Qol	**OLD PARALIC DEPOSITS**	Slightly to moderately consolidated, moderately dissected fine-grained sand, silt, mud, and clay from lake, playa, and estuarine deposits of various types.
———	**GEOLOGIC CONTACT**	Accuracy of location ranges from well located to inferred.
▬·····▬	**FAULT**	Solid where well located, dashed where approximate, dotted where concealed.

APPENDIX A

GROUND MOTION ANALYSIS DATA

USGS Design Maps Summary Report

User-Specified Input

Report Title	Mayfair Middle/High School Wed August 3, 2016 18:23:21 UTC
Building Code Reference Document	ASCE 7-10 Standard (which utilizes USGS hazard data available in 2008)
Site Coordinates	33.864°N, 118.1127°W
Site Soil Classification	Site Class D – "Stiff Soil"
Risk Category	I/II/III

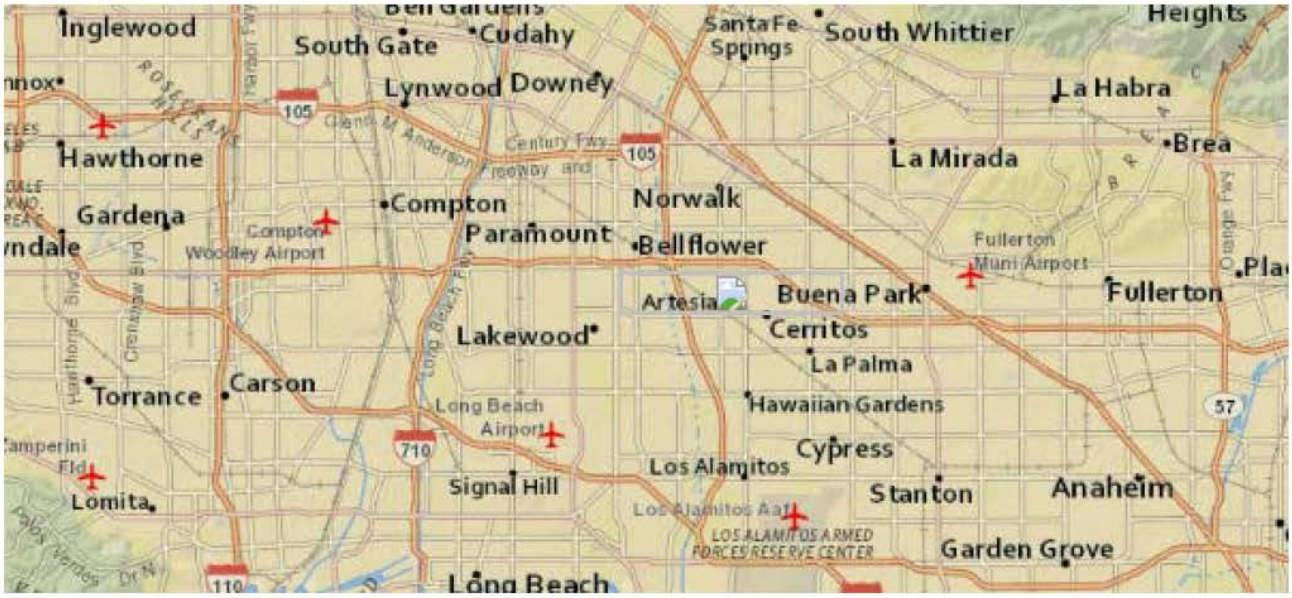

USGS-Provided Output

S_S =	1.540 g	S_{MS} =	1.540 g	S_{DS} =	1.027 g
S_1 =	0.596 g	S_{M1} =	0.894 g	S_{D1} =	0.596 g

For information on how the SS and S1 values above have been calculated from probabilistic (risk-targeted) and deterministic ground motions in the direction of maximum horizontal response, please return to the application and select the "2009 NEHRP" building code reference document.

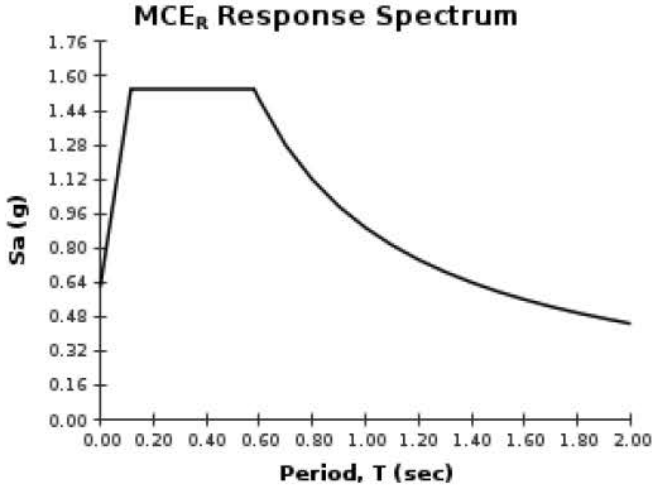

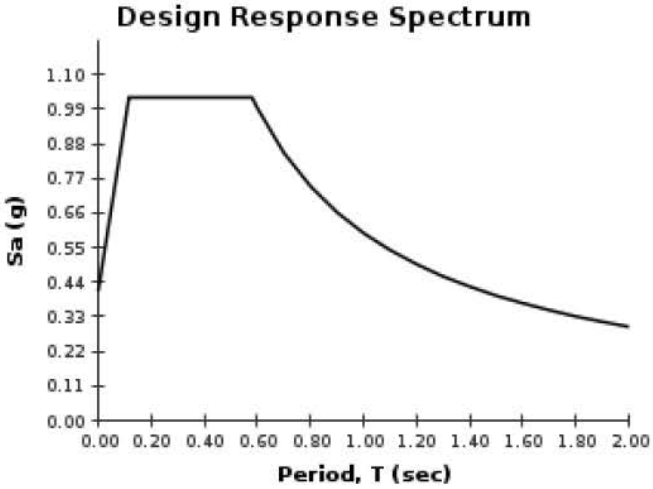

For PGA_M, T_L, C_{RS}, and C_{R1} values, please view the detailed report.

USGS Design Maps Detailed Report

ASCE 7-10 Standard (33.864°N, 118.1127°W)

Site Class D – "Stiff Soil", Risk Category I/II/III

Section 11.4.1 — Mapped Acceleration Parameters

Note: Ground motion values provided below are for the direction of maximum horizontal spectral response acceleration. They have been converted from corresponding geometric mean ground motions computed by the USGS by applying factors of 1.1 (to obtain S_S) and 1.3 (to obtain S_1). Maps in the 2010 ASCE-7 Standard are provided for Site Class B. Adjustments for other Site Classes are made, as needed, in Section 11.4.3.

From Figure 22-1 [1] $S_S = 1.540$ g

From Figure 22-2 [2] $S_1 = 0.596$ g

Section 11.4.2 — Site Class

The authority having jurisdiction (not the USGS), site-specific geotechnical data, and/or the default has classified the site as Site Class D, based on the site soil properties in accordance with Chapter 20.

Table 20.3–1 Site Classification

Site Class	$\bar{v}_s$	$\bar{N}$ or $\bar{N}_{ch}$	$\bar{s}_u$
A. Hard Rock	>5,000 ft/s	N/A	N/A
B. Rock	2,500 to 5,000 ft/s	N/A	N/A
C. Very dense soil and soft rock	1,200 to 2,500 ft/s	>50	>2,000 psf
D. Stiff Soil	600 to 1,200 ft/s	15 to 50	1,000 to 2,000 psf
E. Soft clay soil	<600 ft/s	<15	<1,000 psf
	Any profile with more than 10 ft of soil having the characteristics: • Plasticity Index PI > 20, • Moisture content $w \geq 40\%$, and • Undrained shear strength $\bar{s}_u$ < 500 psf		
F. Soils requiring site response analysis in accordance with Section 21.1	See Section 20.3.1		

For SI: 1ft/s = 0.3048 m/s 1lb/ft² = 0.0479 kN/m²

Section 11.4.3 — Site Coefficients and Risk–Targeted Maximum Considered Earthquake (MCE_R) Spectral Response Acceleration Parameters

Table 11.4–1: Site Coefficient F_a

Site Class	Mapped MCE_R Spectral Response Acceleration Parameter at Short Period				
	$S_S \le 0.25$	$S_S = 0.50$	$S_S = 0.75$	$S_S = 1.00$	$S_S \ge 1.25$
A	0.8	0.8	0.8	0.8	0.8
B	1.0	1.0	1.0	1.0	1.0
C	1.2	1.2	1.1	1.0	1.0
D	1.6	1.4	1.2	1.1	1.0
E	2.5	1.7	1.2	0.9	0.9
F	See Section 11.4.7 of ASCE 7				

Note: Use straight–line interpolation for intermediate values of S_S

For Site Class = D and S_s = 1.540 g, F_a = 1.000

Table 11.4–2: Site Coefficient F_v

Site Class	Mapped MCE_R Spectral Response Acceleration Parameter at 1–s Period				
	$S_1 \le 0.10$	$S_1 = 0.20$	$S_1 = 0.30$	$S_1 = 0.40$	$S_1 \ge 0.50$
A	0.8	0.8	0.8	0.8	0.8
B	1.0	1.0	1.0	1.0	1.0
C	1.7	1.6	1.5	1.4	1.3
D	2.4	2.0	1.8	1.6	1.5
E	3.5	3.2	2.8	2.4	2.4
F	See Section 11.4.7 of ASCE 7				

Note: Use straight–line interpolation for intermediate values of S_1

For Site Class = D and S_1 = 0.596 g, F_v = 1.500

Equation (11.4–1): $S_{MS} = F_a S_S = 1.000 \times 1.540 = 1.540$ g

Equation (11.4–2): $S_{M1} = F_v S_1 = 1.500 \times 0.596 = 0.894$ g

Section 11.4.4 — Design Spectral Acceleration Parameters

Equation (11.4–3): $S_{DS} = \frac{2}{3} S_{MS} = \frac{2}{3} \times 1.540 = 1.027$ g

Equation (11.4–4): $S_{D1} = \frac{2}{3} S_{M1} = \frac{2}{3} \times 0.894 = 0.596$ g

Section 11.4.5 — Design Response Spectrum

From Figure 22-12 [3] $T_L = 8$ seconds

Figure 11.4–1: Design Response Spectrum

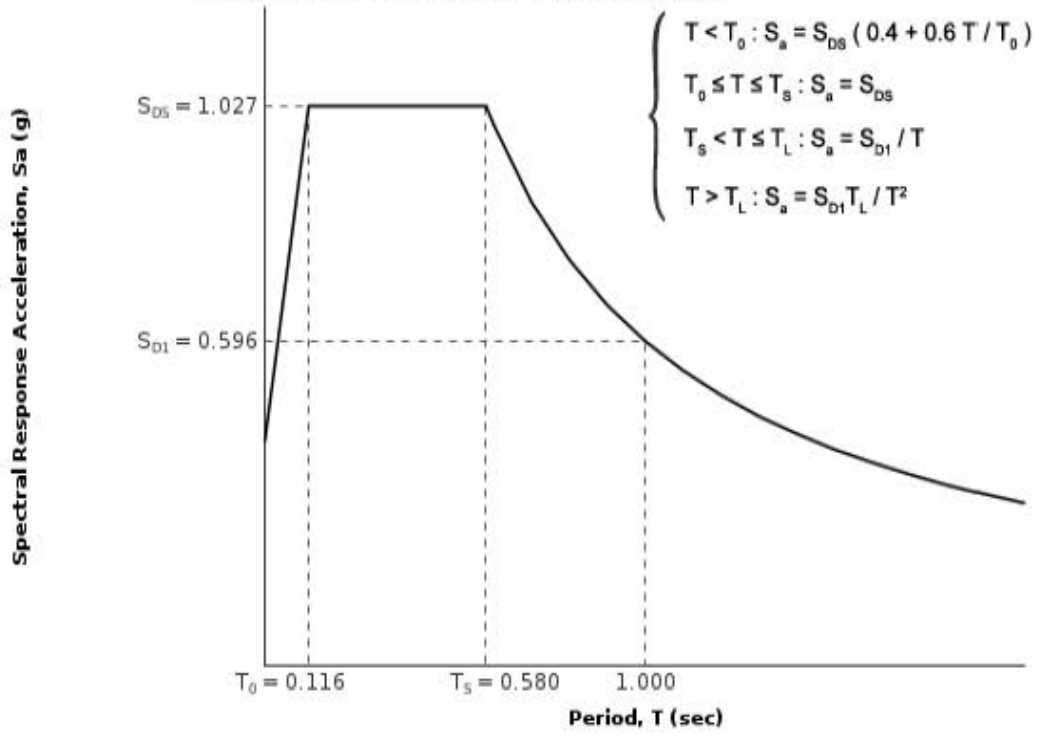

Section 11.4.6 — Risk-Targeted Maximum Considered Earthquake (MCE_R) Response Spectrum

The MCE_R Response Spectrum is determined by multiplying the design response spectrum above by 1.5.

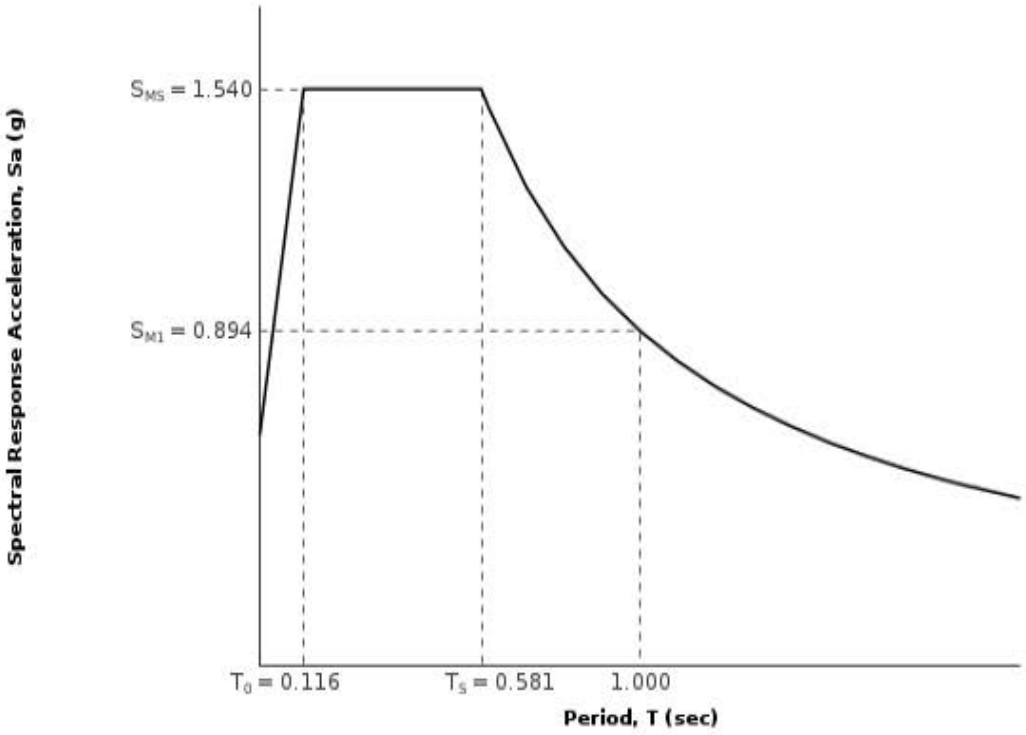

Section 11.8.3 — Additional Geotechnical Investigation Report Requirements for Seismic Design Categories D through F

From Figure 22-7 [4] PGA = 0.591

Equation (11.8–1): $PGA_M = F_{PGA}PGA = 1.000 \times 0.591 = 0.591$ g

Table 11.8–1: Site Coefficient F_{PGA}

Site Class	Mapped MCE Geometric Mean Peak Ground Acceleration, PGA				
	PGA ≤ 0.10	PGA = 0.20	PGA = 0.30	PGA = 0.40	PGA ≥ 0.50
A	0.8	0.8	0.8	0.8	0.8
B	1.0	1.0	1.0	1.0	1.0
C	1.2	1.2	1.1	1.0	1.0
D	1.6	1.4	1.2	1.1	1.0
E	2.5	1.7	1.2	0.9	0.9
F	See Section 11.4.7 of ASCE 7				

Note: Use straight–line interpolation for intermediate values of PGA

For Site Class = D and PGA = 0.591 g, F_{PGA} = 1.000

Section 21.2.1.1 — Method 1 (from Chapter 21 – Site-Specific Ground Motion Procedures for Seismic Design)

From Figure 22-17 [5] $C_{RS} = 0.986$

From Figure 22-18 [6] $C_{R1} = 1.019$

Section 11.6 — Seismic Design Category

Table 11.6-1 Seismic Design Category Based on Short Period Response Acceleration Parameter

VALUE OF S_{DS}	RISK CATEGORY		
	I or II	III	IV
$S_{DS} < 0.167g$	A	A	A
$0.167g \le S_{DS} < 0.33g$	B	B	C
$0.33g \le S_{DS} < 0.50g$	C	C	D
$0.50g \le S_{DS}$	D	D	D

For Risk Category = I and S_{DS} = 1.027 g, Seismic Design Category = D

Table 11.6-2 Seismic Design Category Based on 1-S Period Response Acceleration Parameter

VALUE OF S_{D1}	RISK CATEGORY		
	I or II	III	IV
$S_{D1} < 0.067g$	A	A	A
$0.067g \le S_{D1} < 0.133g$	B	B	C
$0.133g \le S_{D1} < 0.20g$	C	C	D
$0.20g \le S_{D1}$	D	D	D

For Risk Category = I and S_{D1} = 0.596 g, Seismic Design Category = D

Note: When S_1 is greater than or equal to 0.75g, the Seismic Design Category is **E** for buildings in Risk Categories I, II, and III, and **F** for those in Risk Category IV, irrespective of the above.

Seismic Design Category ≡ "the more severe design category in accordance with Table 11.6-1 or 11.6-2" = D

Note: See Section 11.6 for alternative approaches to calculating Seismic Design Category.

References

1. *Figure 22-1*: http://earthquake.usgs.gov/hazards/designmaps/downloads/pdfs/2010_ASCE-7_Figure_22-1.pdf
2. *Figure 22-2*: http://earthquake.usgs.gov/hazards/designmaps/downloads/pdfs/2010_ASCE-7_Figure_22-2.pdf
3. *Figure 22-12*: http://earthquake.usgs.gov/hazards/designmaps/downloads/pdfs/2010_ASCE-7_Figure_22-12.pdf
4. *Figure 22-7*: http://earthquake.usgs.gov/hazards/designmaps/downloads/pdfs/2010_ASCE-7_Figure_22-7.pdf
5. *Figure 22-17*: http://earthquake.usgs.gov/hazards/designmaps/downloads/pdfs/2010_ASCE-7_Figure_22-17.pdf
6. *Figure 22-18*: http://earthquake.usgs.gov/hazards/designmaps/downloads/pdfs/2010_ASCE-7_Figure_22-18.pdf

APPENDIX B

REFERENCES



REFERENCES

American Society of Civil Engineers (ASCE), 2010, Minimum Design Loads for Buildings and other Structures, ASCE Standard 7-10, 650 pp.

Barrows, A.G., 1974, A Review of the Geology and Earthquake History of the Newport-Inglewood Structural Zone, Southern California, C.D.M.G. Special Report 114.

Blake, T.F. 1989-2000a, EQSEARCH, A computer program for the estimation of peak horizontal acceleration from Southern California Historical Earthquake Catalog, Version 3.00b.

Boore, D.M., Joyner, W.B., and Fumal, T.E., 1997, Equations for Estimating Horizontal Response Spectra and Peak Acceleration from Western North American Earthquakes: A Summary of Recent Work, *in*, Seismological Research Letters, Volume 68, pp. 128-153.

Bryant, W.A., 1988, Recently Active Traces of the Newport-Inglewood Fault Zone, Los Angeles and Orange Counties, California, C.D.M.G. Open-File Report 88-14.

Bryant, W.A. and Hart, E.W., 2007, "Fault Rupture Hazard Zones in California," California Division of Mines & Geology Special Publication 42, Interim Revision 2007.

California Building Standards Commission, 2013, California Building Code (CBC), California Code of Regulations, Title 24, Part 2, Volume 2, 792 pp.

California Division of Mines & Geology (C.D.M.G.), 1986, "Guidelines to Geologic/Seismic Reports," Note No. 42.

California Division of Mines & Geology (C.D.M.G.), 1996, Probabilistic Seismic Hazard Assessment for the State of California, C.D.M.G. Open File Report 96-08.

California Division of Mines & Geology (C.D.M.G.), 1998, Seismic Hazard Report for the Los Alamitos 7½' Quadrangle, Los Angeles County, California, Seismic Hazard Zone Report 019.

California Division of the State Architect (DSA), 2013a, Geohazard Reports Requirements, Interpretation of Regulations Document IR A-4, 4 pp.

California Division of the State Architect (DSA), 2013b, Geohazard Reports Requirements, Interpretation of Regulations Document IR A-4.13, 4 pp.

California Geological Survey (C.G.S.), 1998, Seismic Hazard Zone Report for the Los Alamitos 7.5-Minute Quadrangle, Los Angeles County, California, Seismic Hazard Zone Report 019, 42 pp.

California Geological Survey (C.G.S.), 2008, Guidelines for Evaluating and Mitigating Seismic Hazards, in California C.D.M.G. Special Publication 117.

California Geological Survey (CGS), 2013, Checklist for the Review of Engineering Geology and Seismology Reports for California Public Schools, Hospitals, and Essential Services Buildings, Note 48, October 2013.

Cao, T., Bryant, W.A., Rowshandel, B., Branum, D., and Wills, C.J., 2003, The Revised 2002 California Probabilistic Seismic Hazard Maps, June 2003, California Geological Survey.

Fumal, T.E., and Tinsley, J.C., 1985, Mapping Shear-Wave Velocities of Near Surface Geologic Materials, in Ziony, J.I. (ed.), Evaluating Earthquake Hazard in the Los Angeles Region - An Earth Science Perspective, U.S.G.S. Professional Paper 1360, pp. 127-149.

Hauksson, E., 1987, Seismotectonics of the Newport-Inglewood Fault Zone in the Los Angeles Basin, Southern California, Bulletin of the Seismological Society of America, Volume 77, No. 2, pp. 539-561, April 1987.

Larson, R., and Slosson, J., 1992, The Role of Seismic Hazard Evaluation in Engineering Reports, in Engineering Geology Practice in Southern California, AEG Special Publication No. 4, pp. 191-194.

Mendenhall, W.C., 1905, Development of Underground Waters in the Central Coastal Plain Region of Southern California, U.S.G.S. Water-Supply and Irrigation Paper No. 138, 105 p.

Northern California Earthquake Data Center (NCEDC), 2014, University of California Berkeley Seismological Laboratory Dataset, doi:10.7932/NCEDC.

Petersen, M.D. et al., 2008, Documentation for the 2008 Update of the United States National Seismic Hazard Maps, United States Geological Survey Open-File Report 2008-1128.

Reeder, W., 1997, EPI, Earthquake Epicenter Computer Program, EPI Software Company.

Southern California Earthquake Data Center, 2008, Faults in Southern California, Web Site Address http://www.data.scec.org/fault_index/alamitos.html.

Sydnor, R.H., 2004, Engineering Geology and Seismology for Public School and Hospitals; to Accompany California Geological Survey Note 48 Checklist, 264 pp.

Tinsley, J. S., and Fumal, T. E., 1985, Mapping Quaternary Sedimentary Deposits for Areal Variations in Shaking Response, *in* Ziony, J.I. (ed.), Evaluating Earthquake Hazard in the Los Angeles Region - An Earth Science Perspective, U.S.G.S. Professional Paper 1360, pp. 101-125.

Toppozada, T.R., et al., 1981, Preparation of Isoseismal Maps and Summaries of Reported Effects for pre-1900 California Earthquakes, C.D.M.G. Open File Report 81-11.

Toppozada, T.R., and Parke, D.L., 1982, Areas Damaged by California Earthquakes, 1900 - 1949, C.D.M.G. Open File Report 82-17.

Trieman, J.A., 1991, Whittier Fault Zone, Los Angeles and Orange Counties, California, C.D.M.G; Fault Evaluation Report FER-222., 17pp.

Welsh, James L., 1986, Ground Water Management in the Central and West Coast Basins of Los Angeles Counties, *in*, Hydrology of Southern California, Geological Society of America Volume and Guide Book, Field Trip No. 17, pp. 43-50.

United States Geological Survey (U.S.G.S.), 2013, U.S. Seismic "Design Maps" Web Application, Version 3.1.0 (http://geohazards.usgs.gov/designmaps/us/application.php).

Yeats, R. S., 2004, Tectonics of the San Gabriel Basin and Surroundings, Southern California, *in*, Geological Society of America Bulletin Volume 116, No. 9/10, p. 1158-1182.

Yerkes, R.F., et.al. 1965, Geology of the Los Angeles Basin, California, - An Introduction, U.S.G.S. Professional Paper 420-A.

Ziony, J.I., and Yerkes, R.F., 1985, Evaluating Earthquake and Surface Faulting Potential, in Evaluating Earthquake Hazards in the Los Angeles Region, U.S.G.S. Professional Paper 1360.

MAPS UTILIZED

California Division of Mines & Geology (C.D.M.G.), 1962, Geologic Map of California, Long Beach Sheet, Scale 1:250,000.

California Division of Mines and Geology (C.D.M.G.), 1986 Long Beach 7½' Quadrangle, Earthquake Fault Zone Map, Scale 1" = 2,000'.

California Division of Mines and Geology (C.D.M.G.), 1991, El Monte 7½' Quadrangle, Earthquake Fault Zone Map, Scale 1" = 2,000'.

California Division of Mines & Geology (C.D.M.G.), 1999, Official Map of Seismic Hazard Zones, Los Alamitos 7½' Quadrangle, Scale 1:24,000.

California Geological Survey (CGS), 2012, Geologic Compilation of Quaternary Surficial Deposits in Southern California, Onshore Portion of the Long Beach 30' X 60' Quadrangle, CGS Special Report 217, Plate 8, Scale 1:100,000.

Federal Emergency Management Agency (FEMA), 2008, Flood Insurance Rate Map, Community Panel No. 06037C 1980F, September 26, 2008, Scale 1:24,000.

Jennings, C.W., 1994, Fault Activity Map of California and Adjacent Areas, Scale 1:750,000, C.D.M.G. Geologic Data Map No. 8.

Saucedo, G.J., Greene, H.G., Kennedy, M.P. and Bezore, S.P., 2003, Geologic Map of the Long Beach 30' x 60' Quadrangle, California, California Geological Survey Regional Geologic Map Series, Map No. 5, Sheet 1 of 2, Scale 1:1000,000.

Schoellhamer, J. E., et al., 1954, Geology of the Los Angeles Basin, C.D.M.G. Bulletin 170, Part II, Chapter 5, Plate 1, Scale 1:62,500.

Tinsley, J. S., and Fumal, T. E., 1985, Mapping Quaternary Sedimentary Deposits for Areal Variations in Shaking Response, *in* Ziony, J.I. (ed.), Evaluating Earthquake Hazard in the Los Angeles Region - An Earth Science Perspective, U.S.G.S. Professional Paper 1360, pp. 101-125.

Yerkes, R.F. and Campbell, R.H., 1997, Preliminary Geologic Map of the West Half, Los Angeles 30' x 60' Quadrangle, U.S.G.S. U.S.G.S. Open File Report 97-0483, Scale 1:100,000.

Yerkes, R.F. and Campbell, R.H., 2005, Geologic Map of the Los Angeles 30' x 60' Quadrangle, Southern California, U.S.G.S. U.S.G.S. Open File Report 2005-1019, Scale 1:100,000.

Ziony, J.I., and Jones, L.M., 1989, Map Showing Late Quaternary Faults and 1978-1984 Seismicity of the Los Angeles Region, California, U.S.G.S. Miscellaneous Field Studies Map MF-1964.

APPENDIX E2

PALEONTOLOGICAL RECORDS SEARCH

Natural History Museum
of Los Angeles County
900 Exposition Boulevard
Los Angeles, CA 90007

tel 213.763.DINO
www.nhm.org

Research & Collections

e-mail: paleorecords@nhm.org

April 6, 2025

UltraSystems Environmental
Attn: Megan Black Doukakis

re: Paleontological resources records search for the Mayfair Middle/High School Athletic Field Improvements Project (Project No. 7322)

Dear Megan:

I have conducted a thorough search of our paleontology collection records for the locality and specimen data for proposed development at the Mayfair Middle/High School Athletic Field Improvements project area as outlined on the portion of the Los Alamitos USGS topographic quadrangle map that you sent to me via e-mail on April 4, 2025. We do not have any fossil localities that lie directly within the proposed project area, but we do have fossil localities nearby from the same sedimentary deposits that may occur in the proposed project area, either at the surface or at depth.

The following table shows the closest known localities in the collection of the Natural History Museum of Los Angeles County (NHMLA).

Locality Number	Location	Formation	Taxa	Depth
LACM VP 3660	Cover St & Pixie Ave; Lakewood	Unknown formation (Pleistocene)	Mammoth (*Mammuthus*)	19 feet bgs
LACM VP 3245; LACM IP 423, 2668	South side of the San Diego Freeway where it crosses Cherry Ave	Fernando Formation (dark grey sand & silt)	Fish (Osteichthyes) in a dense shell bed	37 feet bgs
LACM VP 3382	NE of the intersection of Artesia Blvd and Williams Ave., Compton	Unknown formation (Pleistocene; brown clay silt)	Mammoth (*Mammuthus*)	5 feet bgs

Table continued on next page

Locality Number	Location	Formation	Taxa	Depth
LACM VP 3319	Intersection of Carson St. & Alameda St	Unnamed formation (Pleistocene)	Mammoth (*Mammuthus*)	30 feet bgs
LACM VP 7493	30 yards south of Pacific Coast Highway & 10 yards west of Grand Avenue; Long Beach	Lakewood Formation	Camel family (Camelidae)	8.5 feet bgs

VP, Vertebrate Paleontology; IP, Invertebrate Paleontology; bgs, below ground surface

This records search covers only the records of the NHMLA. It is not intended as a paleontological assessment of the project area for the purposes of CEQA or NEPA. Potentially fossil-bearing units are present in the project area, either at the surface or in the subsurface. As such, NHMLA recommends that a full paleontological assessment of the project area be conducted by a paleontologist meeting Federal (43 Code of Federal Regulations Part 49.110) or Society of Vertebrate Paleontology standards.

Sincerely,



Alyssa Bell, Ph.D.
Natural History Museum of Los Angeles County

APPENDIX F

PRELIMINARY WATER QUALITY MANAGEMENT PLAN

Mayfair High School

PALO VERDE LATERAL (PD 132) WATERSHED STUDY

JULY 2017 | VERSION 1

Prepared By:

Jimmy Medellin, P.E.
Kimley-Horn and Associates, Inc.
765 The City Drive, Suite 200
Orange, CA 92868
714-705-1318



Kimley»Horn

Kimley-Horn and Associate, Inc.

Contents

Introduction and Purpose 3

Hydrology analysis 5

- Drainage boundaries 5
- Hydrologic Parameters 6
- Hydrology Analysis 6

Hydraulic Analysis 7

- Existing Palo Verde Channel Hydraulics 7
- Project Site Hydraulics 8
- field observation 9

Conclusions 11

Figures

Figure 1: Mayfair High School Location Map 3

Figure 2: Palo Verde Channel Lateral (PD 132) 4

Figure 3: Ashworth Street and Dunrobin Avenue Dip Crossing 5

Figure 4: Palo Verde Channel Lateral Downstream of Mapleleaf Street 7

Figure 5: Mayfair High School – Sports Fields Concept 8

Figure 6: Proposed Palo Verde Lateral Storm Drain Section 9

Figure 7: Mapleleaf Street Culvert during January 22, 2017 Rain Event 9

Figure 8: Canehill Avenue during January 22, 2017 Rain Event 10

Exhibits

Exhibit 1: Mayfair High School - Palo Verde Channel Hydrology Map

Appendices

Appendix A: Field Inspection Photos

Appendix B: Hydrology Analysis

Appendix C: Hydraulic Analysis

INTRODUCTION AND PURPOSE

Mayfair High School is a high school and middle school in the Bellflower Unified School District ("District") located in Lakewood, CA. The District desires to build a surface parking lot over the existing Palo Verde lateral storm channel, which is a segment of the Los Cerritos Drainage System. The proposed project would extend the underground storm drain system approximately 1,050 feet south of the existing outlet along Allington Street. The parking lot and storm drain project will be in conjunction with the design for a new track and football field, stadium bleachers, baseball field, and practice fields on the school campus. A location map of the project site is shown on Figure 1.



Figure 1: Mayfair High School Location Map

Kimley-Horn met with staff from the Los Angeles County Public Works Department design and hydrology sections on October 4, 2016, to discuss the proposed channel modifications at Mayfair High School. The County recommended completing a new hydrology study for the upstream watershed to determine the peak flow to the existing channel as well as study limits for the hydraulic model.

Kimley-Horn was tasked with completing the watershed study for the existing Palo Verde channel and the proposed storm drain improvements. The existing Palo Verde Lateral is an open trapezoidal channel within the school limits from Allington Street to Mapleleaf Street. The concrete-lined channel has a trapezoidal cross section, with a bottom width of 5 feet, channel depth of 6.5 feet, and top width of 24.5 feet. The average slope of the channel is 0.0014 ft/ft. Per the record drawings, an existing 72-inch reinforced concrete pipe (RCP; Private Drain (PD) No. 131) and 75-inch RCP storm drain (Miscellaneous Transfer Drain (MTD)

185) outlet at the upstream end of the open channel, and a 7.5-ft (W) x 6-ft (H) double box culvert is located at Mapleleaf Street at the southern project limit. Figure 2 shows a topographic survey and photos of the existing channel.

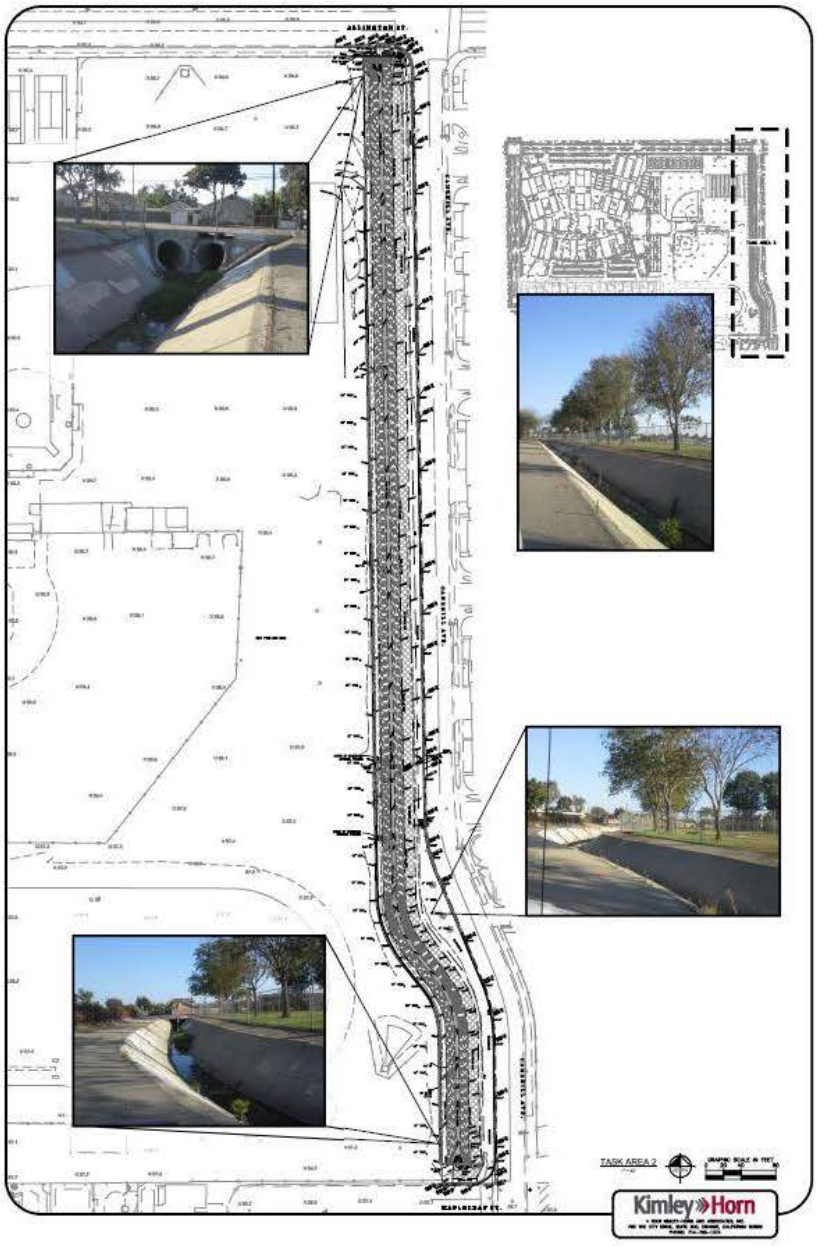

Figure 2: Palo Verde Channel Lateral (PD 132)

HYDROLOGY ANALYSIS

DRAINAGE BOUNDARIES

The drainage boundaries for the Palo Verde Lateral watershed were initially based on a hydrology study completed by the Los Angeles County Department of Public Works Department in 2011. The major drainage boundaries were confirmed to be Alondra Boulevard to the north; Bellflower Boulevard to the west; and Palo Verde Avenue to the east. The drainage boundaries were verified using the 2006 10-foot Digital Elevation Model (DEM), the Los Angeles County Storm Drain System web based map viewer, City of Bellflower storm drain maps, and field verification. The effective Federal Emergency Management Agency (FEMA) effective Flood Insurance Rate Map (FIRM panel 0637C1980F) shows that the school and channel is mapped as shaded Zone X, which are areas of 0.2%; areas of 1% annual chance flood with average depths of less than 1 foot or with drainage areas less than 1 square mile; and areas protected by levees from the 1% annual chance flood.

The 2006 10-foot DEM was acquired as part Los Angeles Regional Imagery Acquisition Consortium (LAR-IAC), and made public with the partnership with the U.S. Geological Survey (USGS). The DEM was converted into contours data using ArcGIS to help establish high and low points within the watershed. A field study was completed to verify locations of existing catch basins, cross gutters, and other existing drainage features such as the dip crossing at Ashworth Street and Dunrobin Avenue dip crossing shown on Figure 3.

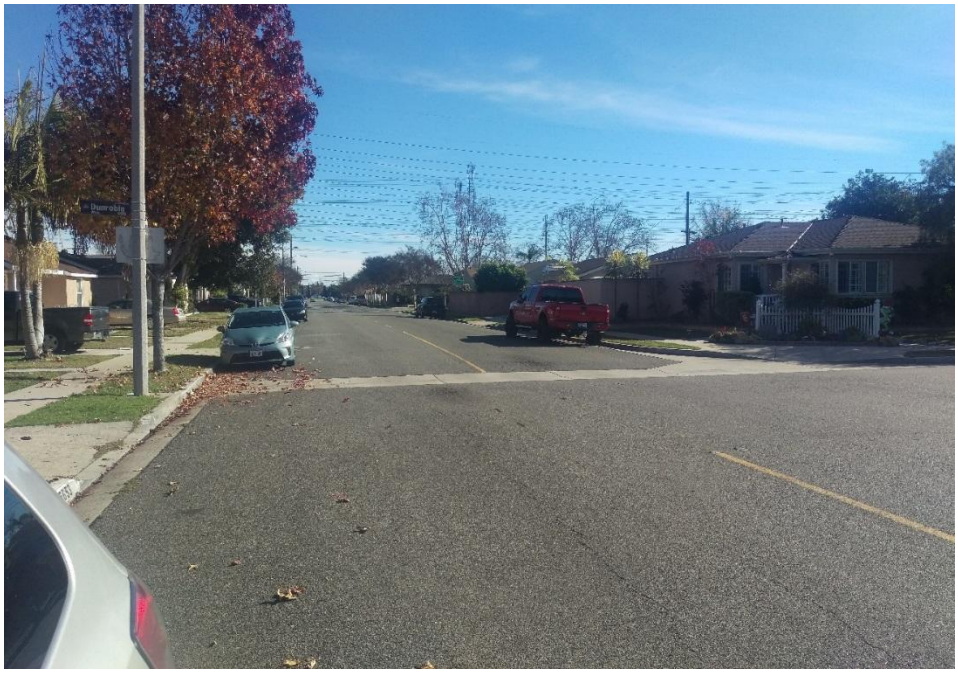

Figure 3: Ashworth Street and Dunrobin Avenue Dip Crossing

Kimley-Horn was able to verify the drainage boundaries delineated by the 2011 Los Angeles County Study except for a relatively small area at the northwest corner of the watershed area. Stormwater emanating from this area is collected by a City of Bellflower storm drain that connects to a 72-inch County storm drain (Project No. 1903). The final watershed limits are shown on Exhibit 1. Several photos taken during the field investigation have been included in Appendix A.

HYDROLOGIC PARAMETERS

Hydrologic parameters for the project area were determined using the Los Alamitos and Whitter hydrologic maps found in Appendix B of the Hydrology Manual. Copies of the hydrologic maps are included in Appendix B. The hydrologic maps show the 5.6-inch 50-year, 24-hour isohyet crosses the Mayfair High School campus, and the 6.0-inch isohyet crosses the centroid of the upper watershed. A multiplication 0.714 was used to calculate the 10-year, 24-hour duration rainfall depth. The calculated rainfall depths for the 10-year storm ranged from 4.0 to 4.1 inches.

The landuse for the project area includes: low-rise apartments, high-density single family residential, major medical health care facilities, old and modern strip development, and maintenance yards. The soil types within the watershed area were types 6 and 7. Aerial maps of the watershed area were used to select the proper percentage of pervious areas based on the landuse. Drainage basin areas, flowpath lengths, and slopes were determined by using the digital topography data in ArcGIS.

HYDROLOGY ANALYSIS

This hydrology study was completed in accordance with the 2006 Los Angeles County Hydrology Manual (LACDPW, 2006). The hydrology manual was updated to reflect the results of a rainfall frequency analysis used to develop a new rainfall intensity-duration frequency relationship, a dimensionless mass curve, and rainfall isohyetal maps for the updated Hydrology Manual. The isohyetal method more accurately defines the spatial variability of rainfall and the average rainfall over the watershed and its subareas compared to the hydrologic maps from the 1991 Hydrology Manual. In addition, Los Angeles County adopted a regression equation for determining the time of concentration of a watershed. The time of concentration (Tc) is the time required for runoff from the most hydrologically remote point of the subarea to reach the subarea outlet. Once the Tc is calculated, the rainfall intensity-duration-frequency relationship is then used to determine the rainfall intensity. The original channel was designed in 1958 and was based on different hydrologic design parameters.

The Aquaveo Watershed Modeling System (WMS Version 10.1) Los Angeles County Modified Rational Method (MODRAT) module was used to complete the hydrologic modeling. WMS offers a Geographic Information Systems (GIS) interface that allows a user to delineate a watershed and subareas using digital terrain data. Kimley-Horn used the digital topographic data of the Mayfair campus, Los Angeles County

hydrology maps, and storm drain as-built information from both Los Angeles County and the City of Bellflower maps in order to develop the hydrologic model.

The results of the current study show that the 10-year and 50-year peak flows were 732 cfs and 1,170 cfs, respectively. A detailed comparison with the County study could not be completed because the hydrologic parameters used by the County were not available. Given that the source of rainfall, landuse, and soils data for both studies was the Los Angeles County Hydrology Manual, the primary difference for the higher peak flow results can be the difference in overall watershed time of concentration. The Los Angeles County Storm Drain System web-based map viewer does not show the City of Bellflower local storm drain system. It is possible that the City storm drain system was not incorporated for the County study. The inclusion of this storm drain should result in a lower Time of Concentration and higher peak discharge. The hydrology analysis results are found in Appendix B.

HYDRAULIC ANALYSIS

EXISTING PALO VERDE CHANNEL HYDRAULICS

A hydraulic analysis of the Palo Verde Channel was performed using Civil Design Water Surface Pressure Gradient (WSPG) for Windows to determine the capacity of the existing trapezoidal channel and upstream storm drain system. The downstream extent of the model was approximately 1000 feet downstream of the culvert at Mapleleaf Street, and after the trapezoidal channel has transitioned to a 10-ft wide rectangular channel as shown on Figure 4.



Figure 4: Palo Verde Channel Lateral Downstream of Mapleleaf Street

The Capital Flood or 50-year flow results of the 2011 County study (857 cfs) was used to run the initial hydraulic model. The WSPG results showed that the channel would be overtopped for this flowrate. Per the Los Angeles County Flood Control District Hydraulic Design Manual (LACDPW, 1982), the freeboard for trapezoidal channels with average flow velocities of 35 fps or less is 2.5 feet. The flowrate that would provide 2.5 feet of freeboard was calculated to be 370 cfs. Additional hydraulic analysis showed that the culvert at Mapleleaf Street would seal at 600 cfs. This flowrate was used for design of the proposed underground conduit.

PROJECT SITE HYDRAULICS

The proposed project would extend the underground storm drain system approximately 1,050 feet south of the existing outlet along Allington Street. The parking lot and storm drain project will be in conjunction with the design for a new track and football field, stadium bleachers, baseball field, and practice fields on the school campus. A concept of the proposed improvements is shown in Figure 5.



Figure 5: Mayfair High School – Sports Fields Concept

Using a peak flow of 600 cfs, three 72-inch diameter reinforced concrete pipes would be able convey flow underneath the proposed parking lot. A section of the proposed storm drain is shown on Figure 6.

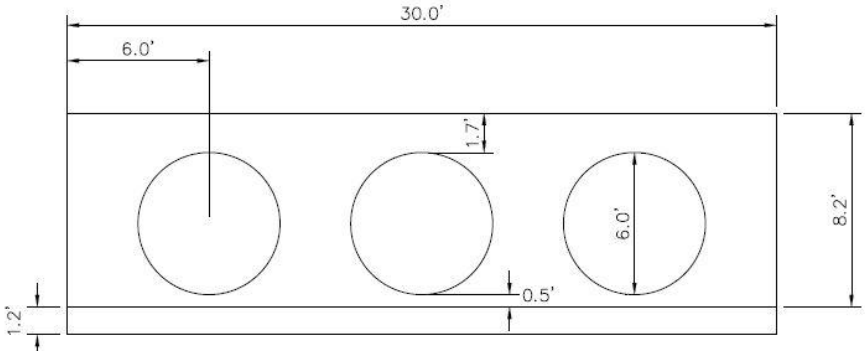

Figure 6: Proposed Palo Verde Lateral Storm Drain Section

FIELD OBSERVATION

A site visit was completed on January 22, 2017, during a significant rain event that produced the highest recorded precipitation at Long Beach Airport (3.87 inches), which is approximately 3.6 miles from Mayfair High. Observations during the storm event showed that the culvert at Mapleleaf street was almost at full capacity as shown on Figure 7. In addition, flooding was observed along the east side of Canehill Avenue, directly north of Allignton Street as shown on Figure 8. This appears to be a surface drainage issue because the storm drains at the Palo Verde Channel inlet were not observed to be flowing full. Furthermore, there was no presence of flooding at the existing catch basins near the intersection of Canehill Avenue and Arabella Street.



Figure 7: Mapleleaf Street Culvert during January 22, 2017 Rain Event

The proposed storm drain system will be designed not to impact or worsen flooding conditions within local streets. The proposed design would not cover the inlet or outlet of the channel, allowing for the channel to overtop during large storm events similar to existing conditions.



Figure 8: Canehill Avenue during January 22, 2017 Rain Event

CONCLUSIONS

A preliminary hydrology and hydraulics study was performed for the proposed Mayfair High School development. The following are the primary conclusions of the hydrology and hydraulics study.

- Stormwater emanating from the existing project site discharge to two different Los Angeles County storm drain systems. The City of Bellflower storm drain system connects to the County storm drain with a northern watershed boundary at Alondra Boulevard. The total watershed area was determined to be 878 acres.

- The 2011 hydrology study was conducted by Los Angeles County Public Works showed the 50-year peak flow to the Palo Verde Channel was 857 cfs. A new hydrology analysis was completed for the upstream watershed. The results of the current study show that the 10-year and 50-year flow was 732 cfs and 1,170 cfs, respectively.

- A new storm drain system will be constructed to collect convey stormwater underneath a proposed parking lot within the Mayfair High School campus. This new storm drain will discharge to the existing Palo Verde trapezoidal channel approximately 1,050 feet south of the inlet at Allington Street.

- A preliminary hydraulic study was showed that four (4) 72-inch pipes would be required to convey the County 50-year flow (857 cfs) through the Mayfair campus. A new hydraulic model was created to model the existing Palo Verde Channel with the downstream extent 1000 feet downstream of Mapleleaf Street. The hydraulics results showed that the channel would overtop for the County 50-year flowrate, and a new flowrate would have to be selected for design.

- The hydraulic analysis results for the existing channel determined that a flowrate of 370 cfs would provide 2.5 feet of freeboard within the channel. Additional hydraulic analysis showed that the culvert at Mapleleaf Street would seal at 600 cfs.

- The underground storm drain system was sized to allow for a maximum flowrate of 600 cfs, matching the capacity of the existing box culvert at Mapleleaf Street. A hydraulic analysis was completed to ensure that storm drain laterals were not impacted by the proposed project. The proposed storm drain would be designed to allow larger storms to overflow the channel at the inlet and outlet, similar to existing conditions. Three (3) 72-inch reinforced concrete pipes would be required to convey the peak flow of 600 cfs.

APPENDIX A: FIELD INSPECTION PHOTOS

Mayfair High School Watershed Study Field Photos



Palo Verde Channel (PD 132) outlet



Existing Catch Basin at Canehill Ave. (East), north of Arabella St.



Existing Catch Basin at Canehill Ave. (West), north of Arabella St.



Palo Verde Channel (PD 132) inlet at Allington St.

Mayfair High School Watershed Study Field Photos



Palo Verde Channel (PD 132) looking north from South St.



Existing cross gutter at Canehill Ave. (East), facing Destino St.

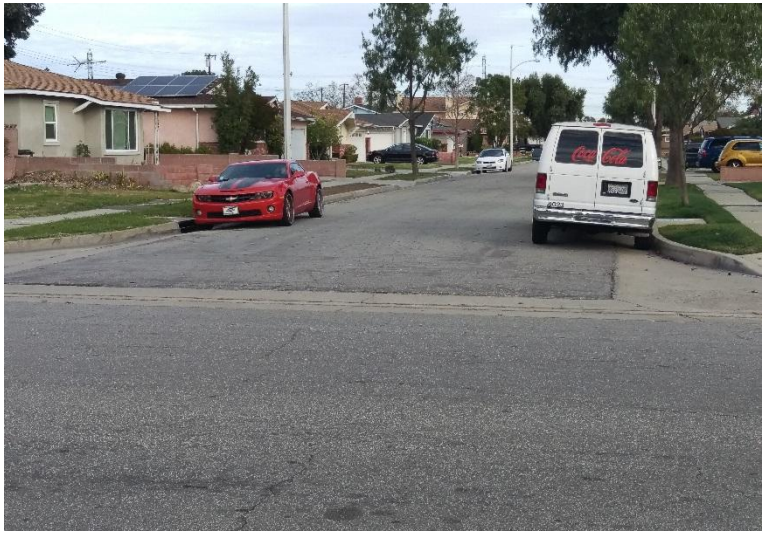

Existing cross gutter at Canehill Ave. (East), facing Acoro St.



14-ft Catch Basin on Canehill Ave. (East), north of Elgers St.

Mayfair High School Watershed Study Field Photos



Palo Verde Channel (PD 132) inlet at Allington St.



Cross culvert at Bellflower Bike Trail near Flora Vista Street.



Intersection of Bellflower Blvd. and Flora Vista St. (West Watershed Boundary)



21-ft Catch Basin on California Ave. (East), north of Flora Vista St.

APPENDIX B: HYDROLOGY ANALYSIS



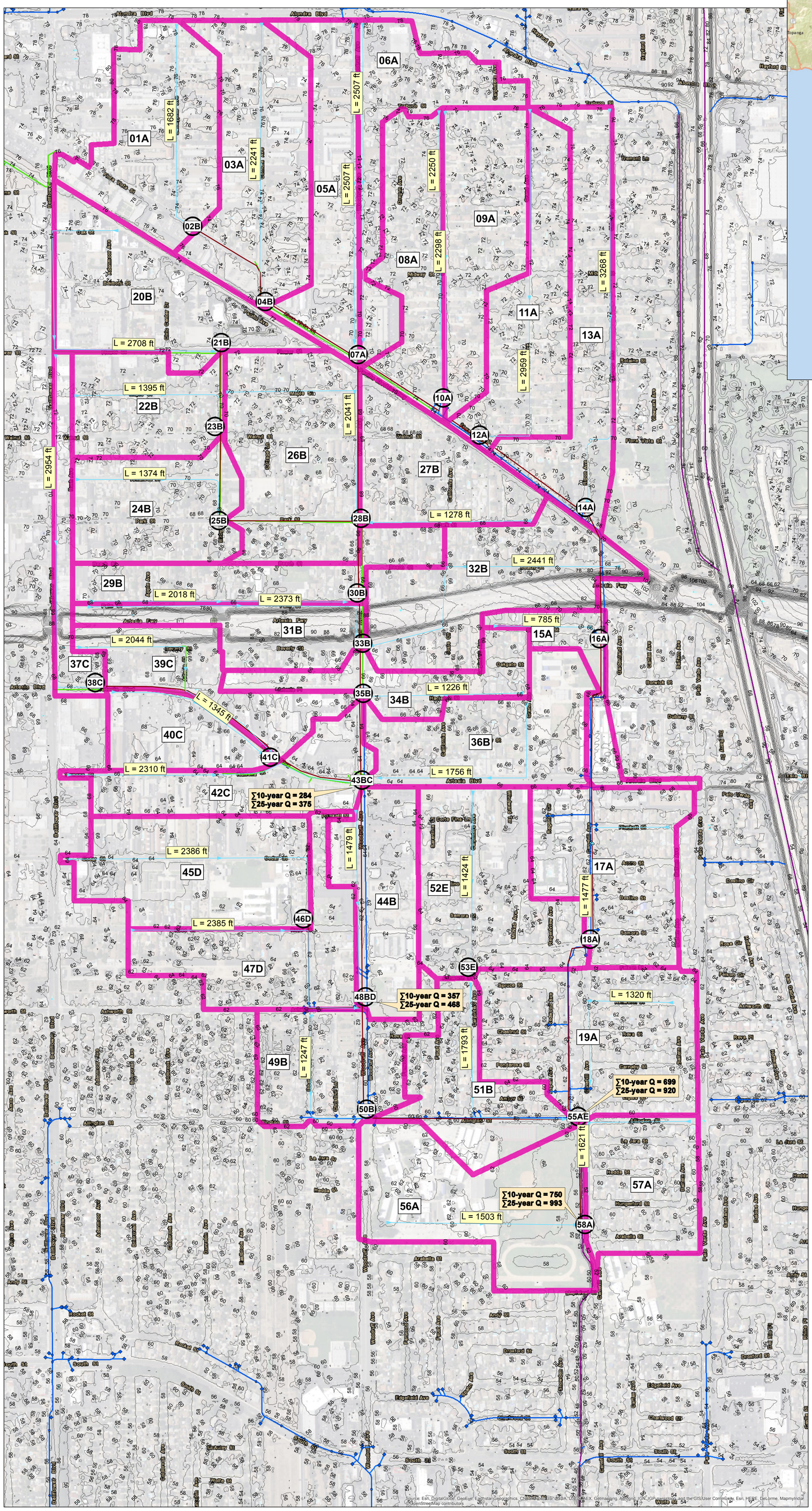
01A
03A
05A
06A
08A
09A
11A
13A
20B
22B
24B
26B
27B
29B
31B
32B
34B
36B
37C
39C
40C
42C
44B
45D
47D
49B
51B
52E
56A
57A
L = 1682 ft
L = 2241 ft
L = 2507 ft
L = 2507 ft
L = 2250 ft
L = 2298 ft
L = 3268 ft
L = 2708 ft
L = 1395 ft
L = 2041 ft
L = 2959 ft
L = 2954 ft
L = 1374 ft
L = 1278 ft
L = 2441 ft
L = 2018 ft
L = 2373 ft
L = 785 ft
L = 2044 ft
L = 1226 ft
L = 1345 ft
L = 2310 ft
L = 1756 ft
L = 2386 ft
L = 1479 ft
L = 1424 ft
L = 1477 ft
L = 2385 ft
L = 1320 ft
L = 1247 ft
L = 1793 ft
L = 1621 ft
L = 1503 ft
∑10-year Q = 284
∑25-year Q = 375
∑10-year Q = 357
∑25-year Q = 468
∑10-year Q = 699
∑25-year Q = 920
∑10-year Q = 750
∑25-year Q = 993
Alondra Blvd
Artesia Blvd
Bellflower Blvd
Woodruff Ave
Orizaba Ave
Oregon Ave
Gridley Rd
Gridley Cir
Gridley Ave
Tarbuck St
Tarbuck Cir
Tarbuck Ave
Tyrone Ave
Tyrone Ln
Tyrone St
Hayford St
Alondra Blvd
Oak St
Belmont Ave
Belmont Cir
Belmont Dr
Belmont Ln
Belmont Pl
Belmont Way
Belmont Shore
Belmont Shore Cir
Belmont Shore Ln
Belmont Shore Pl
Belmont Shore Way
Belmont Shore Mobile Estates
Belmont Shore Mobile Estates Cir
Belmont Shore Mobile Estates Ln
Belmont Shore Mobile Estates Pl
Belmont Shore Mobile Estates Way
Belmont Shore Mobile Estates Ct
Belmont Shore Mobile Estates Dr
Belmont Shore Mobile Estates Ave
Belmont Shore Mobile Estates St
Belmont Shore Mobile Estates Blvd
Belmont Shore Mobile Estates Rd
Belmont Shore Mobile Estates Pkwy
Belmont Shore Mobile Estates Ter
Belmont Shore Mobile Estates Trl
Belmont Shore Mobile Estates Hwy
Belmont Shore Mobile Estates Fwy
Belmont Shore Mobile Estates Expy
Belmont Shore Mobile Estates Tpke
Belmont Shore Mobile Estates Aly
Belmont Shore Mobile Estates Sq

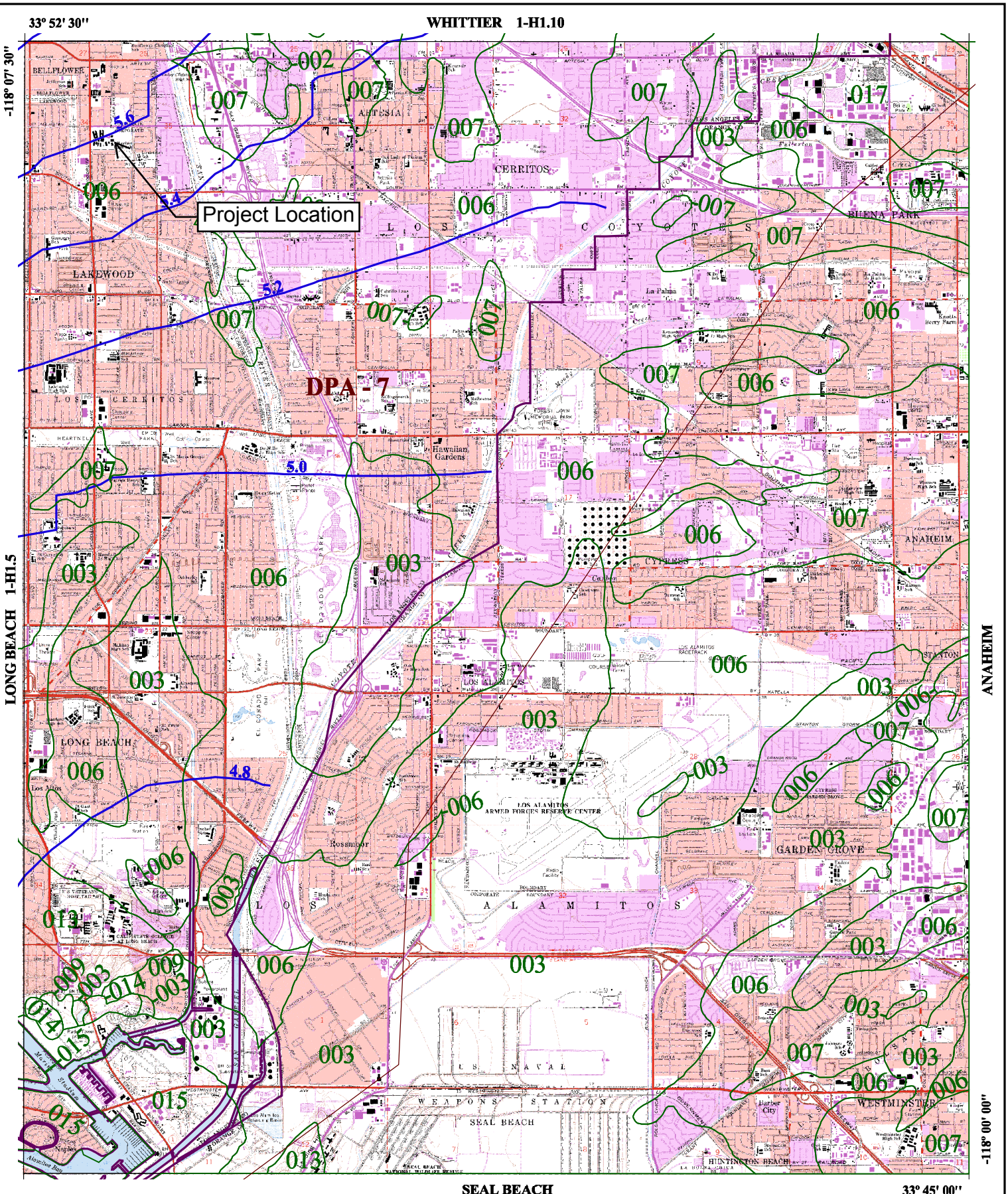

016 SOIL CLASSIFICATION AREA

7.2 INCHES OF RAINFALL

DPA - 6 DEBRIS POTENTIAL AREA

N W E S

1 0 1 2 Miles

25-YEAR 24-HOUR ISOHYET REDUCTION FACTOR: 0.878
10-YEAR 24-HOUR ISOHYET REDUCTION FACTOR: 0.714

LOS ALAMITOS
50-YEAR 24-HOUR ISOHYET

1-H1.6

LOS ANGELES COUNTY PUBLIC WORKS Public Service That Works

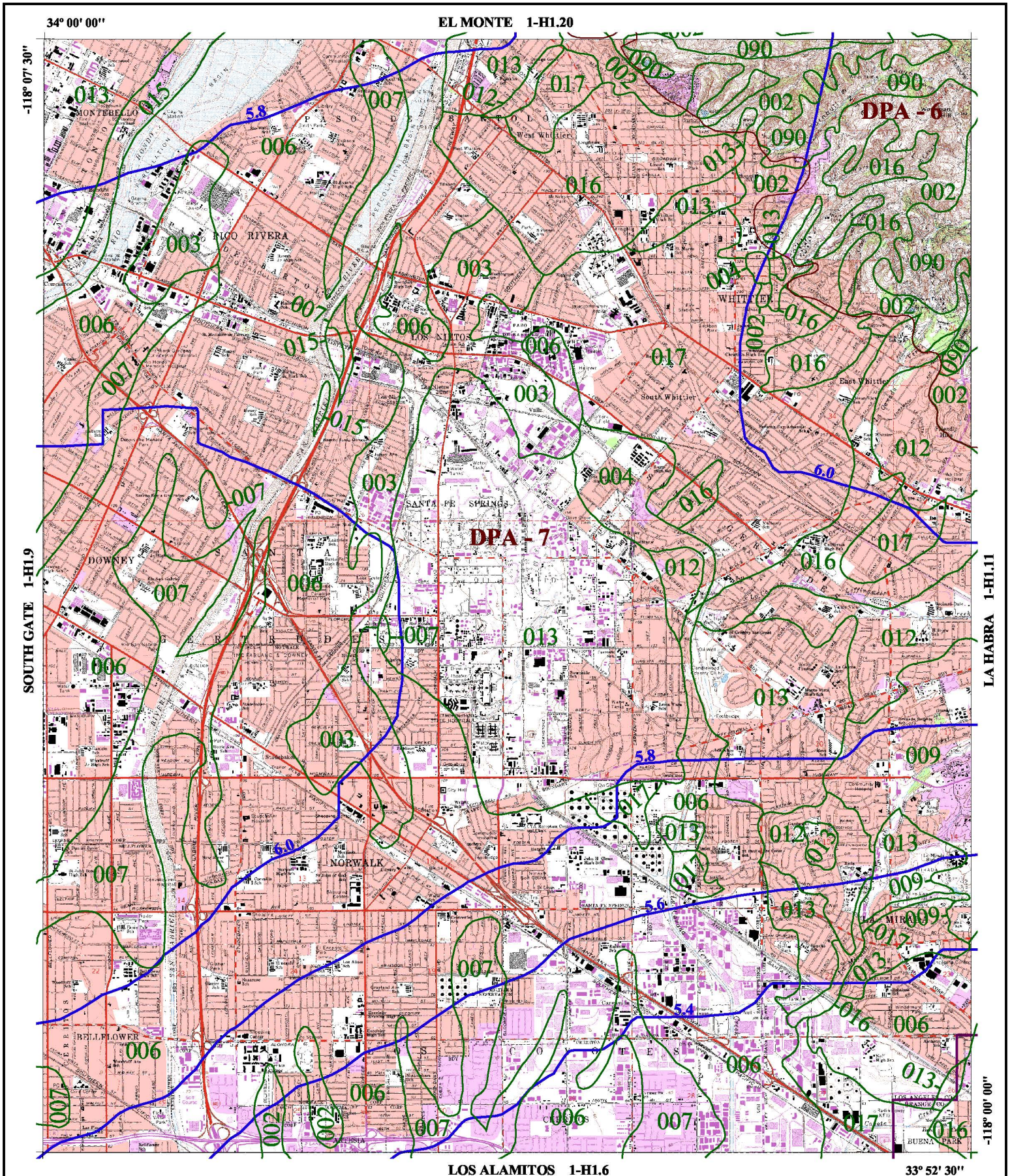

016 SOIL CLASSIFICATION AREA

7.2 INCHES OF RAINFALL

DPA - 6 DEBRIS POTENTIAL AREA

N W E S

1 0 1 2 Miles

25-YEAR 24-HOUR ISOHYET REDUCTION FACTOR: 0.878
10-YEAR 24-HOUR ISOHYET REDUCTION FACTOR: 0.714

W H I T T I E R
50-YEAR 24-HOUR ISOHYET

1-H1.10

LOS ANGELES COUNTY PUBLIC WORKS Public Service That Works

Mayfair High School
Hydrology Study for Los Cerritos Drainage System
Palo Verde Lateral (PD 132)
Percent Impervious Calculation

Total Area (acres)	Subarea ID	Subarea (acres)	Landuse	IMPERV	Weighted IMPERV
33.2	01A	0.9	Modern Strip Development	96	88
33.2	01A	23.5	Low-Rise Apartments, Condominiums, and Townho	86	
33.2	01A	0.0	Retail Centers (Non-Strip With Contiguous Int	96	
33.2	01A	0.0	Trailer Parks and Mobile Home Courts, High-De	91	
33.2	01A	0.9	Commercial Storage	90	
33.2	01A	2.3	Modern Strip Development	96	
33.2	01A	3.4	Manufacturing, Assembly, and Industrial Servi	91	
33.2	01A	2.2	Maintenance Yards	91	
37.4	03A	0.1	Modern Strip Development	96	85
37.4	03A	30.5	Low-Rise Apartments, Condominiums, and Townho	86	
37.4	03A	0.1	Modern Strip Development	96	
37.4	03A	0.7	Modern Strip Development	96	
37.4	03A	1.0	Maintenance Yards	91	
37.4	03A	1.0	Manufacturing, Assembly, and Industrial Servi	91	
37.4	03A	2.0	Electrical Power Facilities	47	
37.4	03A	1.9	Manufacturing, Assembly, and Industrial Servi	91	
25.4	05A	16.6	Low-Rise Apartments, Condominiums, and Townho	86	85
25.4	05A	3.0	Modern Strip Development	96	
25.4	05A	0.2	Modern Strip Development	96	
25.4	05A	0.0	High-Density Single Family Residential	42	
25.4	05A	0.0	Elementary Schools	82	
25.4	05A	0.0	Electrical Power Facilities	47	
25.4	05A	0.0	Religious Facilities	82	
25.4	05A	1.8	Manufacturing, Assembly, and Industrial Servi	91	
25.4	05A	0.0	Modern Strip Development	96	
25.4	05A	1.2	Low-Density Single Family Residential	21	
25.4	05A	0.0	Low-Rise Apartments, Condominiums, and Townho	86	
25.4	05A	2.6	Maintenance Yards	91	
24.3	06A	0.1	Low-Rise Apartments, Condominiums, and Townho	86	62
24.3	06A	0.0	Modern Strip Development	96	
24.3	06A	3.2	Retail Centers (Non-Strip With Contiguous Int	96	
24.3	06A	0.3	Modern Strip Development	96	
24.3	06A	0.8	Low-Rise Apartments, Condominiums, and Townho	86	
24.3	06A	14.2	High-Density Single Family Residential	42	
24.3	06A	2.1	Elementary Schools	82	
24.3	06A	0.3	Religious Facilities	82	
24.3	06A	0.6	Modern Strip Development	96	
24.3	06A	2.7	Low-Rise Apartments, Condominiums, and Townho	86	
24	08A	23.3	High-Density Single Family Residential	42	43
24	08A	0.0	Elementary Schools	82	
24	08A	0.4	Religious Facilities	82	
24	08A	0.3	Modern Strip Development	96	
24	08A	0.0	Low-Rise Apartments, Condominiums, and Townho	86	
28.4	09A	28.4	High-Density Single Family Residential	42	42

Total Area (acres)	Subarea ID	Subarea (acres)	Landuse	IMPERV	Weighted IMPERV
29.6	11A	28.0	High-Density Single Family Residential	42	42
29.6	11A	1.1	High-Density Single Family Residential	42	
29.6	11A	0.5	Low-Density Single Family Residential	21	
30.3	13A	22.1	High-Density Single Family Residential	42	36
30.3	13A	0.0	Low-Density Single Family Residential	21	
30.3	13A	0.0	High-Density Single Family Residential	42	
30.3	13A	0.0	Low-Density Single Family Residential	21	
30.3	13A	1.1	High-Density Single Family Residential	42	
30.3	13A	0.0	Nurseries	15	
30.3	13A	0.6	Low-Density Single Family Residential	21	
30.3	13A	3.7	Low-Density Single Family Residential	21	
30.3	13A	2.8	Developed Local Parks and Recreation	10	
10.7	15A	0.0	Freeways and Major Roads	91	64
10.7	15A	5.2	High-Density Single Family Residential	42	
10.7	15A	0.9	Elementary Schools	82	
10.7	15A	0.2	Elementary Schools	82	
10.7	15A	0.2	High-Density Single Family Residential	42	
10.7	15A	3.2	Low-Rise Apartments, Condominiums, and Townho	86	
10.7	15A	0.5	Modern Strip Development	96	
10.7	15A	0.5	Low-Rise Apartments, Condominiums, and Townho	86	
10.7	15A	0.0	High-Density Single Family Residential	42	
10.7	15A	0.0	Elementary Schools	82	
32.7	17A	6.4	Low-Rise Apartments, Condominiums, and Townho	86	56
32.7	17A	2.3	Modern Strip Development	96	
32.7	17A	1.3	Low-Rise Apartments, Condominiums, and Townho	86	
32.7	17A	22.7	High-Density Single Family Residential	42	
41.7	19A	41.6	High-Density Single Family Residential	42	42
41.7	19A	0.1	Senior High Schools	82	
34.8	20B	0.1	Modern Strip Development	96	92
34.8	20B	0.1	Manufacturing, Assembly, and Industrial Servi	91	
34.8	20B	4.8	Older Strip Development	97	
34.8	20B	1.8	Non-Attended Public Parking Facilities	91	
34.8	20B	4.0	Government Offices	91	
34.8	20B	0.1	Maintenance Yards	91	
34.8	20B	0.1	Manufacturing, Assembly, and Industrial Servi	91	
34.8	20B	0.1	Electrical Power Facilities	47	
34.8	20B	4.1	Low-Rise Apartments, Condominiums, and Townho	86	
34.8	20B	4.3	Government Offices	91	
34.8	20B	0.1	Manufacturing, Assembly, and Industrial Servi	91	
34.8	20B	1.6	Government Offices	91	
34.8	20B	4.6	Government Offices	91	
34.8	20B	2.6	Older Strip Development	97	
34.8	20B	1.4	Government Offices	91	
34.8	20B	1.4	Government Offices	91	
34.8	20B	0.0	Maintenance Yards	91	
34.8	20B	2.3	Other Public Facilities	91	
34.8	20B	0.0	Low-Rise Apartments, Condominiums, and Townho	86	
34.8	20B	0.0	Non-Attended Public Parking Facilities	91	
34.8	20B	1.3	Low- and Medium-Rise Major Office Use	91	

Total Area (acres)	Subarea ID	Subarea (acres)	Landuse	IMPERV	Weighted IMPERV
20.9	22B	14.5	High-Density Single Family Residential	42	58
20.9	22B	2.4	Older Strip Development	97	
20.9	22B	2.1	Older Strip Development	97	
20.9	22B	0.0	Other Public Facilities	91	
20.9	22B	1.3	Non-Attended Public Parking Facilities	91	
20.9	22B	0.6	Low- and Medium-Rise Major Office Use	91	
20.9	22B	0.0	Religious Facilities	82	
25.1	24B	19.2	High-Density Single Family Residential	42	54
25.1	24B	4.3	Older Strip Development	97	
25.1	24B	1.7	Religious Facilities	82	
38	26B	31.2	High-Density Single Family Residential	42	50
38	26B	0.1	Maintenance Yards	91	
38	26B	3.5	Low-Rise Apartments, Condominiums, and Townho	86	
38	26B	0.8	Low- and Medium-Rise Major Office Use	91	
38	26B	0.0	Special Care Facilities	74	
38	26B	2.1	Religious Facilities	82	
38	26B	0.1	Special Care Facilities	74	
38	26B	0.1	Elementary Schools	82	
24.5	27B	19.3	High-Density Single Family Residential	42	45
24.5	27B	2.2	Special Care Facilities	74	
24.5	27B	1.0	Low-Density Single Family Residential	21	
24.5	27B	0.9	Special Care Facilities	74	
24.5	27B	0.7	High-Density Single Family Residential	42	
24.5	27B	0.4	Vacant Undifferentiated	1	
21.5	29B	0.1	Freeways and Major Roads	91	56
21.5	29B	14.5	High-Density Single Family Residential	42	
21.5	29B	1.4	Older Strip Development	97	
21.5	29B	1.0	Special Care Facilities	74	
21.5	29B	3.8	Elementary Schools	82	
21.5	29B	0.8	Religious Facilities	82	
17.6	31B	13.0	Freeways and Major Roads	91	82
17.6	31B	0.2	High-Density Single Family Residential	42	
17.6	31B	0.1	Older Strip Development	97	
17.6	31B	0.0	Special Care Facilities	74	
17.6	31B	0.0	Elementary Schools	82	
17.6	31B	0.0	Religious Facilities	82	
17.6	31B	0.0	Modern Strip Development	96	
17.6	31B	2.9	High-Density Single Family Residential	42	
17.6	31B	1.2	Manufacturing, Assembly, and Industrial Servi	91	
17.6	31B	0.1	Older Strip Development	97	
35.9	32B	12.1	Freeways and Major Roads	91	62
35.9	32B	15.8	High-Density Single Family Residential	42	
35.9	32B	0.1	Low-Density Single Family Residential	21	
35.9	32B	0.1	Developed Local Parks and Recreation	10	
35.9	32B	0.4	Special Care Facilities	74	
35.9	32B	0.8	Vacant Undifferentiated	1	
35.9	32B	0.3	High-Density Single Family Residential	42	
35.9	32B	3.9	High-Density Single Family Residential	42	
35.9	32B	0.9	Modern Strip Development	96	

Total Area (acres)	Subarea ID	Subarea (acres)	Landuse	IMPERV	Weighted IMPERV
35.9	32B	1.6	Modern Strip Development	96	
35.9	32B	0.0	High-Density Single Family Residential	42	
16	34B	4.8	High-Density Single Family Residential	42	64
16	34B	1.1	Modern Strip Development	96	
16	34B	2.3	Manufacturing, Assembly, and Industrial Servi	91	
16	34B	0.0	Elementary Schools	82	
16	34B	0.3	Older Strip Development	97	
16	34B	0.3	Older Strip Development	97	
16	34B	1.3	Manufacturing, Assembly, and Industrial Servi	91	
16	34B	1.3	Modern Strip Development	96	
16	34B	4.5	High-Density Single Family Residential	42	
16	34B	0.0	Elementary Schools	82	
16	34B	0.2	Mixed Commercial and Industrial	91	
16	34B	0.0	High-Density Single Family Residential	42	
16	34B	0.0	Elementary Schools	82	
16	34B	0.0	High-Density Single Family Residential	42	
29.4	36B	0.0	High-Density Single Family Residential	42	70
29.4	36B	2.7	Elementary Schools	82	
29.4	36B	3.3	Modern Strip Development	96	
29.4	36B	11.1	High-Density Single Family Residential	42	
29.4	36B	4.4	Elementary Schools	82	
29.4	36B	4.6	Low-Rise Apartments, Condominiums, and Townho	86	
29.4	36B	2.7	Older Strip Development	97	
29.4	36B	0.5	Major Medical Health Care Facilities	74	
29.4	36B	0.1	Modern Strip Development	96	
29.4	36B	0.0	High-Density Single Family Residential	42	
29.4	36B	0.0	Elementary Schools	82	
29.4	36B	0.0	High-Density Single Family Residential	42	
29.4	36B	0.0	Elementary Schools	82	
10.8	37C	1.1	Freeways and Major Roads	91	96
10.8	37C	6.4	Older Strip Development	97	
10.8	37C	2.2	Modern Strip Development	96	
10.8	37C	0.6	Modern Strip Development	96	
10.8	37C	0.5	Older Strip Development	97	
20	39C	4.6	Freeways and Major Roads	91	87
20	39C	2.2	Modern Strip Development	96	
20	39C	2.5	High-Density Single Family Residential	42	
20	39C	1.0	Older Strip Development	97	
20	39C	0.9	Modern Strip Development	96	
20	39C	2.4	Older Strip Development	97	
20	39C	1.2	Manufacturing, Assembly, and Industrial Servi	91	
20	39C	1.4	Modern Strip Development	96	
20	39C	0.0	Older Strip Development	97	
20	39C	3.9	Mixed Commercial and Industrial	91	
14.9	40C	7.8	Modern Strip Development	96	91
14.9	40C	0.1	Older Strip Development	97	
14.9	40C	0.1	Manufacturing, Assembly, and Industrial Servi	91	
14.9	40C	0.0	Modern Strip Development	96	
14.9	40C	0.1	Older Strip Development	97	

Total Area (acres)	Subarea ID	Subarea (acres)	Landuse	IMPERV	Weighted IMPERV
14.9	40C	0.1	Mixed Commercial and Industrial	91	
14.9	40C	6.7	Low-Rise Apartments, Condominiums, and Townho	86	
14.9	40C	0.0	Modern Strip Development	96	
23.1	42C	0.2	Modern Strip Development	96	90
23.1	42C	10.2	Modern Strip Development	96	
23.1	42C	0.0	Mixed Commercial and Industrial	91	
23.1	42C	8.1	Low-Rise Apartments, Condominiums, and Townho	86	
23.1	42C	1.0	Modern Strip Development	96	
23.1	42C	3.7	Religious Facilities	82	
22.8	44B	0.5	Modern Strip Development	96	83
22.8	44B	2.7	Major Medical Health Care Facilities	74	
22.8	44B	0.4	High-Density Single Family Residential	42	
22.8	44B	5.7	Low-Rise Apartments, Condominiums, and Townho	86	
22.8	44B	3.2	Low- and Medium-Rise Major Office Use	91	
22.8	44B	0.4	Religious Facilities	82	
22.8	44B	2.6	Special Care Facilities	74	
22.8	44B	2.8	Low-Rise Apartments, Condominiums, and Townho	86	
22.8	44B	0.0	Religious Facilities	82	
22.8	44B	4.4	Religious Facilities	82	
34.5	45D	0.6	Modern Strip Development	96	76
34.5	45D	15.0	Low-Rise Apartments, Condominiums, and Townho	86	
34.5	45D	1.2	Modern Strip Development	96	
34.5	45D	1.8	Religious Facilities	82	
34.5	45D	7.5	High-Density Single Family Residential	42	
34.5	45D	8.2	Elementary Schools	82	
34.5	45D	0.1	Religious Facilities	82	
27.2	47D	0.2	Modern Strip Development	96	43
27.2	47D	14.1	High-Density Single Family Residential	42	
27.2	47D	0.3	Low-Rise Apartments, Condominiums, and Townho	86	
27.2	47D	0.0	Elementary Schools	82	
27.2	47D	2.7	Religious Facilities	82	
27.2	47D	1.7	Low-Rise Apartments, Condominiums, and Townho	86	
27.2	47D	6.9	Nurseries	15	
27.2	47D	0.0	Religious Facilities	82	
27.2	47D	1.2	High-Density Single Family Residential	42	
24.9	49B	14.6	High-Density Single Family Residential	42	44
24.9	49B	4.5	Low-Rise Apartments, Condominiums, and Townho	86	
24.9	49B	5.6	Nurseries	15	
24.9	49B	0.1	Religious Facilities	82	
24.9	49B	0.1	High-Density Single Family Residential	42	
24.9	49B	0.0	Senior High Schools	82	
23.2	51B	16.6	High-Density Single Family Residential	42	53
23.2	51B	6.7	Senior High Schools	82	
34.7	52E	9.3	Low-Rise Apartments, Condominiums, and Townho	86	61
34.7	52E	1.8	Older Strip Development	97	
34.7	52E	3.1	Major Medical Health Care Facilities	74	
34.7	52E	19.1	High-Density Single Family Residential	42	
34.7	52E	1.5	Religious Facilities	82	
38.9	56A	1.5	High-Density Single Family Residential	42	80

Total Area (acres)	Subarea ID	Subarea (acres)	Landuse	IMPERV	Weighted IMPERV
38.9	56A	37.4	Senior High Schools	82	
22.1	57A	21.4	High-Density Single Family Residential	42	43

Peak Flow Hydrologic Analysis

File location: C:/working/Mayfair/Mayfair High School Report-10yr.pdf
Version: HydroCalc 0.3.1-beta

Input Parameters

Project Name	Mayfair High School
Subarea ID	01A
Area (ac)	33.2
Flow Path Length (ft)	1682.0
Flow Path Slope (vft/hft)	0.002
50-yr Rainfall Depth (in)	5.9
Percent Impervious	0.86
Soil Type	6
Design Storm Frequency	10-yr
Fire Factor	0
LID	False

Output Results

Modeled (10-yr) Rainfall Depth (in)	4.2126
Peak Intensity (in/hr)	1.1581
Undeveloped Runoff Coefficient (Cu)	0.6144
Developed Runoff Coefficient (Cd)	0.86
Time of Concentration (min)	26.0
Clear Peak Flow Rate (cfs)	33.0654
Burned Peak Flow Rate (cfs)	33.0654
24-Hr Clear Runoff Volume (ac-ft)	9.229
24-Hr Clear Runoff Volume (cu-ft)	402017.0048

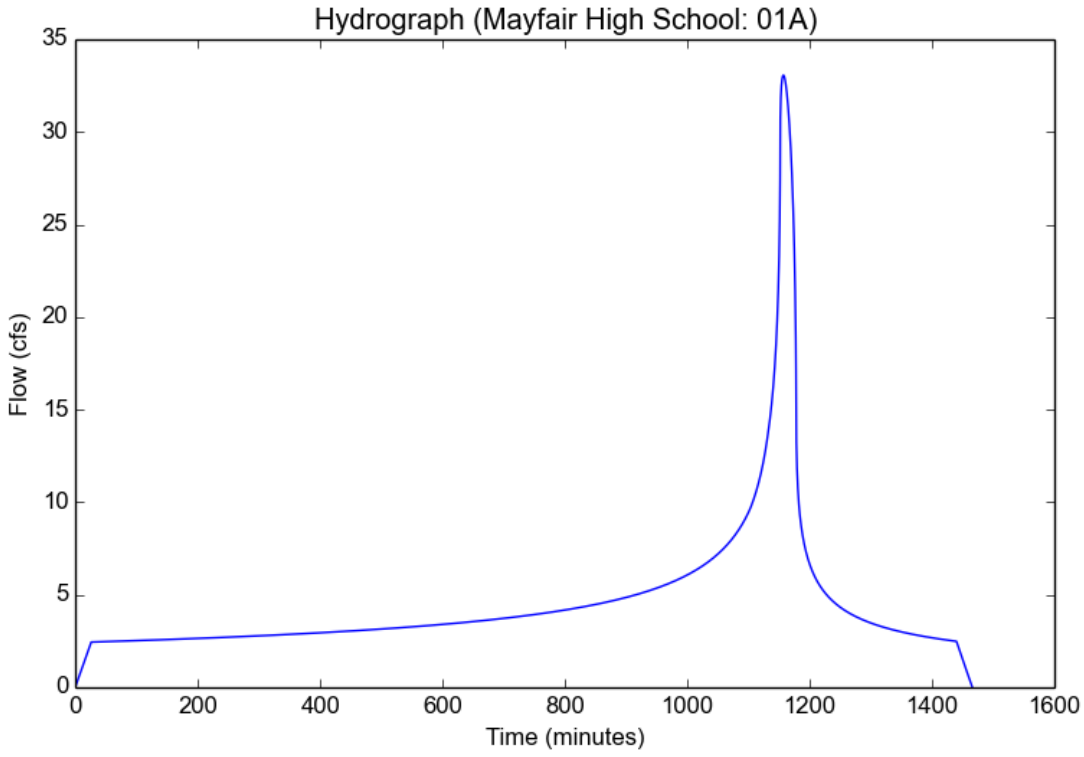

Peak Flow Hydrologic Analysis

File location: C:/working/Mayfair/Mayfair High School Report-10yr.pdf
Version: HydroCalc 0.3.1-beta

Input Parameters

Project Name	Mayfair High School
Subarea ID	03A
Area (ac)	37.4
Flow Path Length (ft)	2241.0
Flow Path Slope (vft/hft)	0.002
50-yr Rainfall Depth (in)	5.9
Percent Impervious	0.86
Soil Type	6
Design Storm Frequency	10-yr
Fire Factor	0
LID	False

Output Results

Modeled (10-yr) Rainfall Depth (in)	4.2126
Peak Intensity (in/hr)	1.0827
Undeveloped Runoff Coefficient (Cu)	0.6005
Developed Runoff Coefficient (Cd)	0.8581
Time of Concentration (min)	30.0
Clear Peak Flow Rate (cfs)	34.7467
Burned Peak Flow Rate (cfs)	34.7467
24-Hr Clear Runoff Volume (ac-ft)	10.3963
24-Hr Clear Runoff Volume (cu-ft)	452864.7676

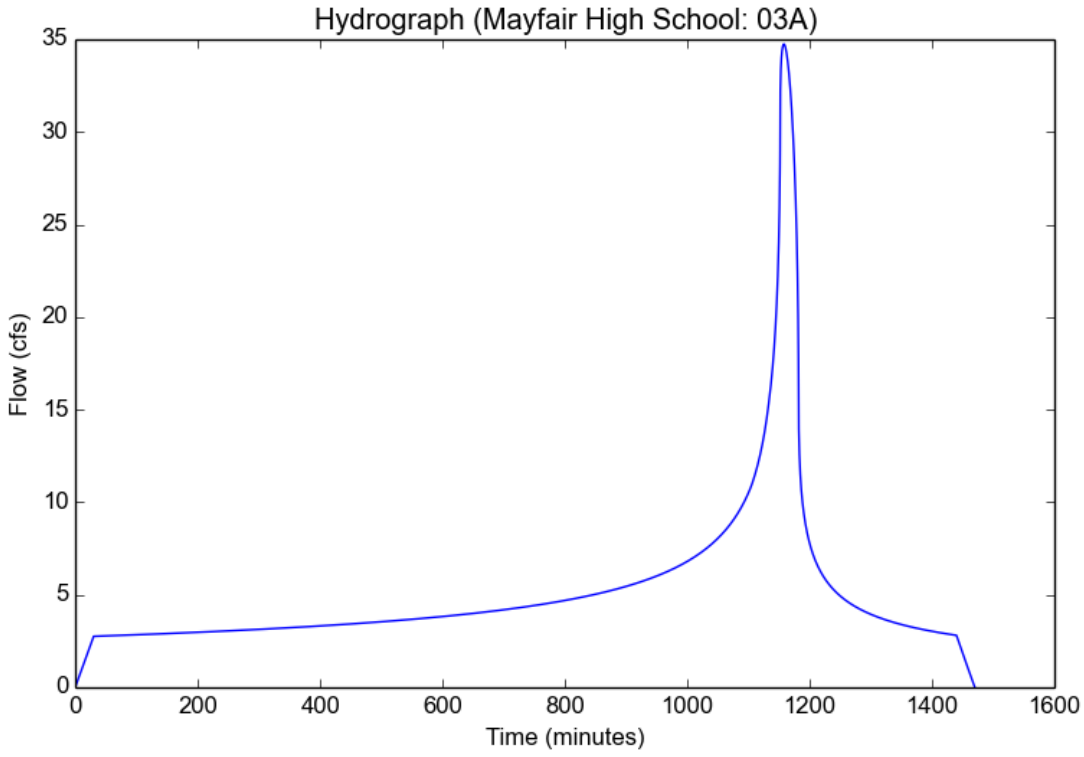

Peak Flow Hydrologic Analysis

File location: C:/working/Mayfair/Mayfair High School Report-10yr.pdf
Version: HydroCalc 0.3.1-beta

Input Parameters

Project Name	Mayfair High School
Subarea ID	05A
Area (ac)	25.4
Flow Path Length (ft)	2507.0
Flow Path Slope (vft/hft)	0.002
50-yr Rainfall Depth (in)	5.9
Percent Impervious	0.86
Soil Type	6
Design Storm Frequency	10-yr
Fire Factor	0
LID	False

Output Results

Modeled (10-yr) Rainfall Depth (in)	4.2126
Peak Intensity (in/hr)	1.0827
Undeveloped Runoff Coefficient (Cu)	0.6005
Developed Runoff Coefficient (Cd)	0.8581
Time of Concentration (min)	30.0
Clear Peak Flow Rate (cfs)	23.598
Burned Peak Flow Rate (cfs)	23.598
24-Hr Clear Runoff Volume (ac-ft)	7.0606
24-Hr Clear Runoff Volume (cu-ft)	307560.5641

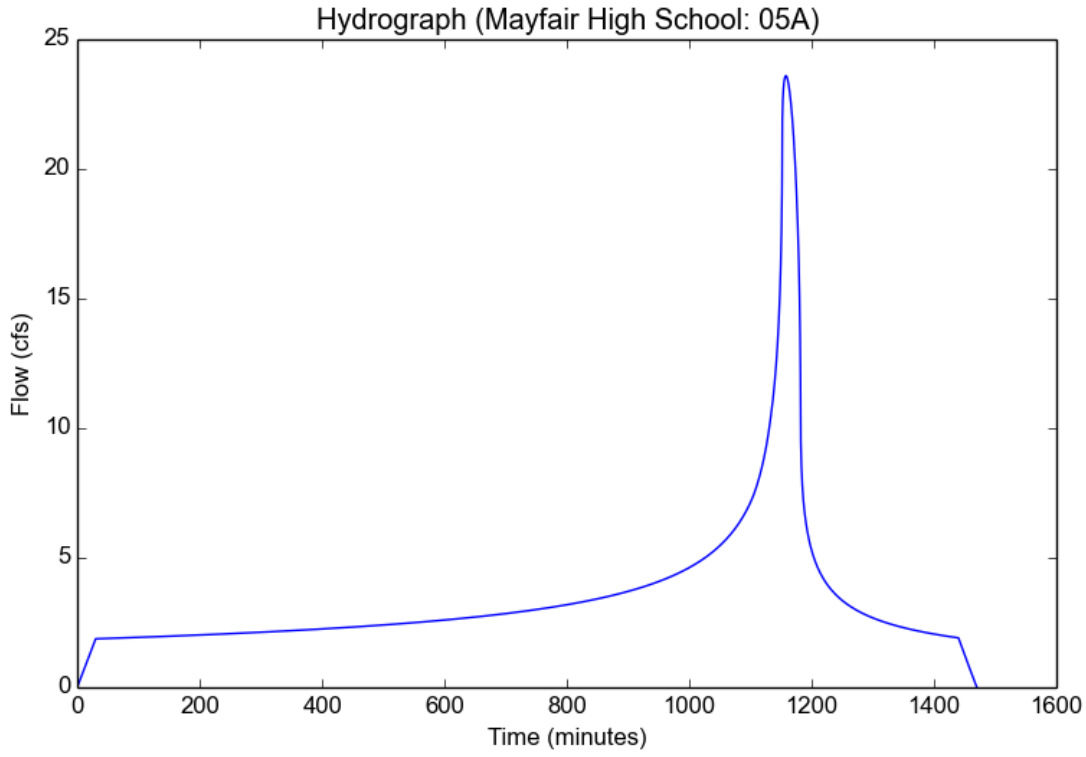

Peak Flow Hydrologic Analysis

File location: C:/working/Mayfair/Mayfair High School Report-10yr.pdf
Version: HydroCalc 0.3.1-beta

Input Parameters

Project Name	Mayfair High School
Subarea ID	06A
Area (ac)	24.3
Flow Path Length (ft)	2507.0
Flow Path Slope (vft/hft)	0.002
50-yr Rainfall Depth (in)	5.9
Percent Impervious	0.64
Soil Type	6
Design Storm Frequency	10-yr
Fire Factor	0
LID	False

Output Results

Modeled (10-yr) Rainfall Depth (in)	4.2126
Peak Intensity (in/hr)	1.0827
Undeveloped Runoff Coefficient (Cu)	0.6005
Developed Runoff Coefficient (Cd)	0.7922
Time of Concentration (min)	30.0
Clear Peak Flow Rate (cfs)	20.8423
Burned Peak Flow Rate (cfs)	20.8423
24-Hr Clear Runoff Volume (ac-ft)	5.4046
24-Hr Clear Runoff Volume (cu-ft)	235423.6679

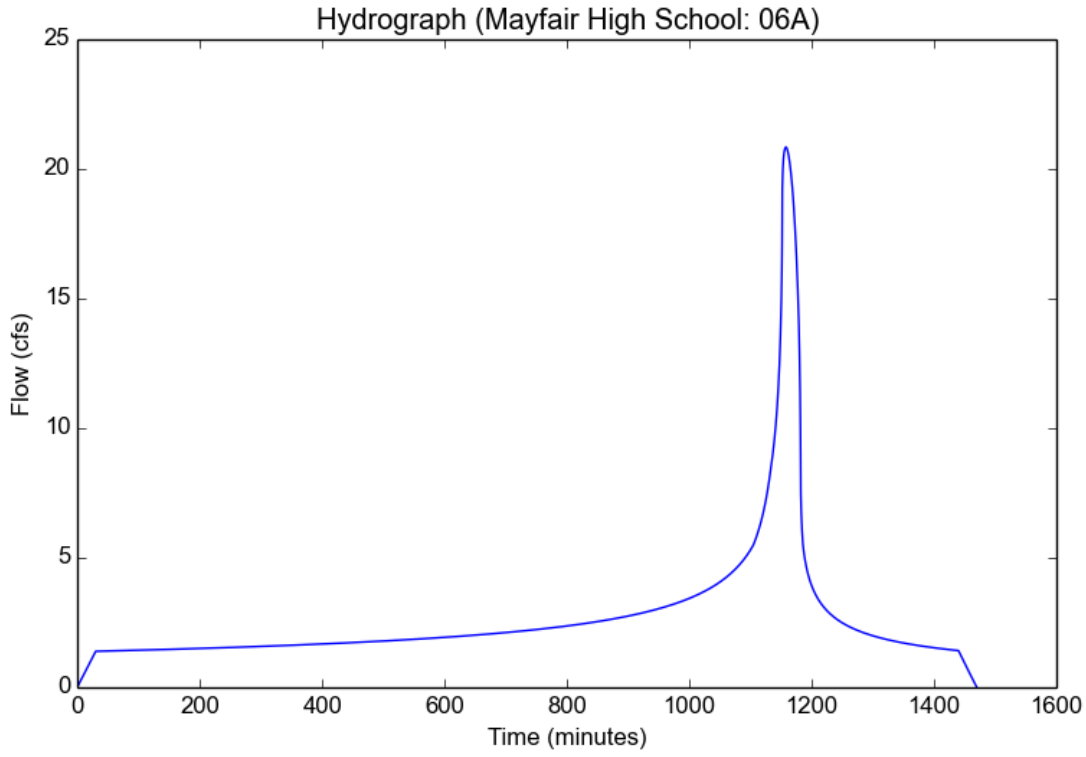

Peak Flow Hydrologic Analysis

File location: C:/working/Mayfair/Mayfair High School Report-10yr.pdf
Version: HydroCalc 0.3.1-beta

Input Parameters

Project Name	Mayfair High School
Subarea ID	08A
Area (ac)	24.0
Flow Path Length (ft)	2250.0
Flow Path Slope (vft/hft)	0.003
50-yr Rainfall Depth (in)	5.9
Percent Impervious	0.42
Soil Type	6
Design Storm Frequency	10-yr
Fire Factor	0
LID	False

Output Results

Modeled (10-yr) Rainfall Depth (in)	4.2126
Peak Intensity (in/hr)	1.0827
Undeveloped Runoff Coefficient (Cu)	0.6005
Developed Runoff Coefficient (Cd)	0.7263
Time of Concentration (min)	30.0
Clear Peak Flow Rate (cfs)	18.8725
Burned Peak Flow Rate (cfs)	18.8725
24-Hr Clear Runoff Volume (ac-ft)	4.0043
24-Hr Clear Runoff Volume (cu-ft)	174425.9987

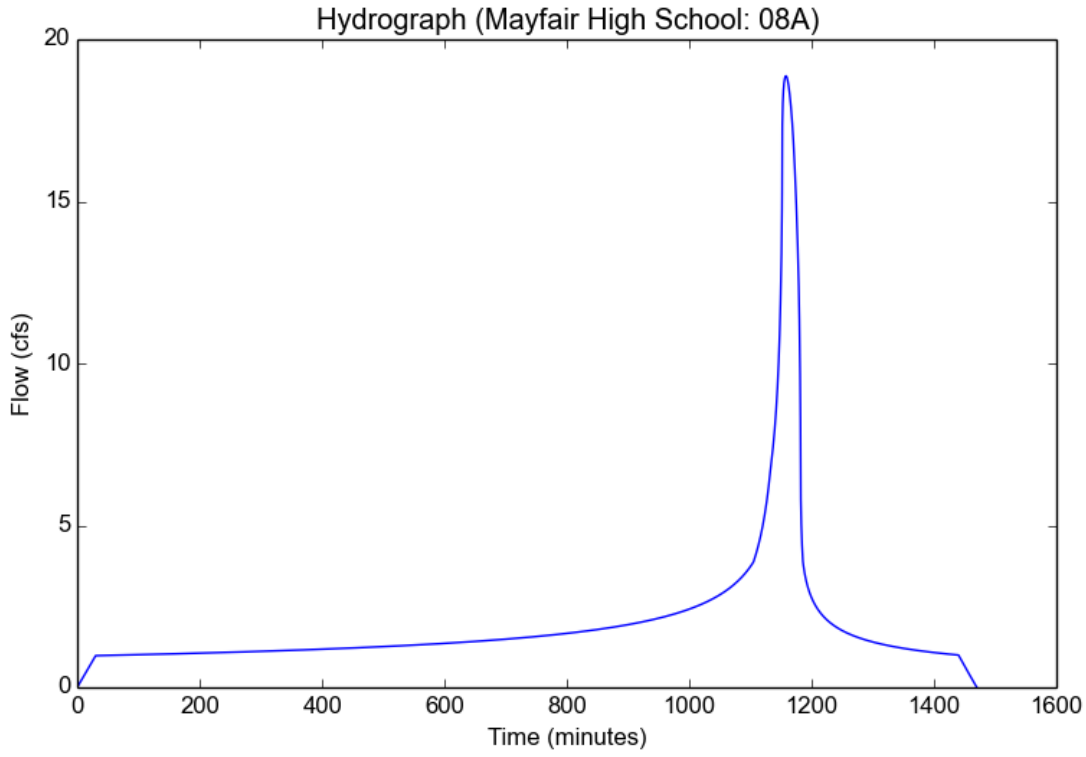

Peak Flow Hydrologic Analysis

File location: C:/working/Mayfair/Mayfair High School Report-10yr.pdf
Version: HydroCalc 0.3.1-beta

Input Parameters

Project Name	Mayfair High School
Subarea ID	09A
Area (ac)	28.4
Flow Path Length (ft)	2298.0
Flow Path Slope (vft/hft)	0.003
50-yr Rainfall Depth (in)	5.9
Percent Impervious	0.42
Soil Type	6
Design Storm Frequency	10-yr
Fire Factor	0
LID	False

Output Results

Modeled (10-yr) Rainfall Depth (in)	4.2126
Peak Intensity (in/hr)	1.0827
Undeveloped Runoff Coefficient (Cu)	0.6005
Developed Runoff Coefficient (Cd)	0.7263
Time of Concentration (min)	30.0
Clear Peak Flow Rate (cfs)	22.3325
Burned Peak Flow Rate (cfs)	22.3325
24-Hr Clear Runoff Volume (ac-ft)	4.7384
24-Hr Clear Runoff Volume (cu-ft)	206404.0984

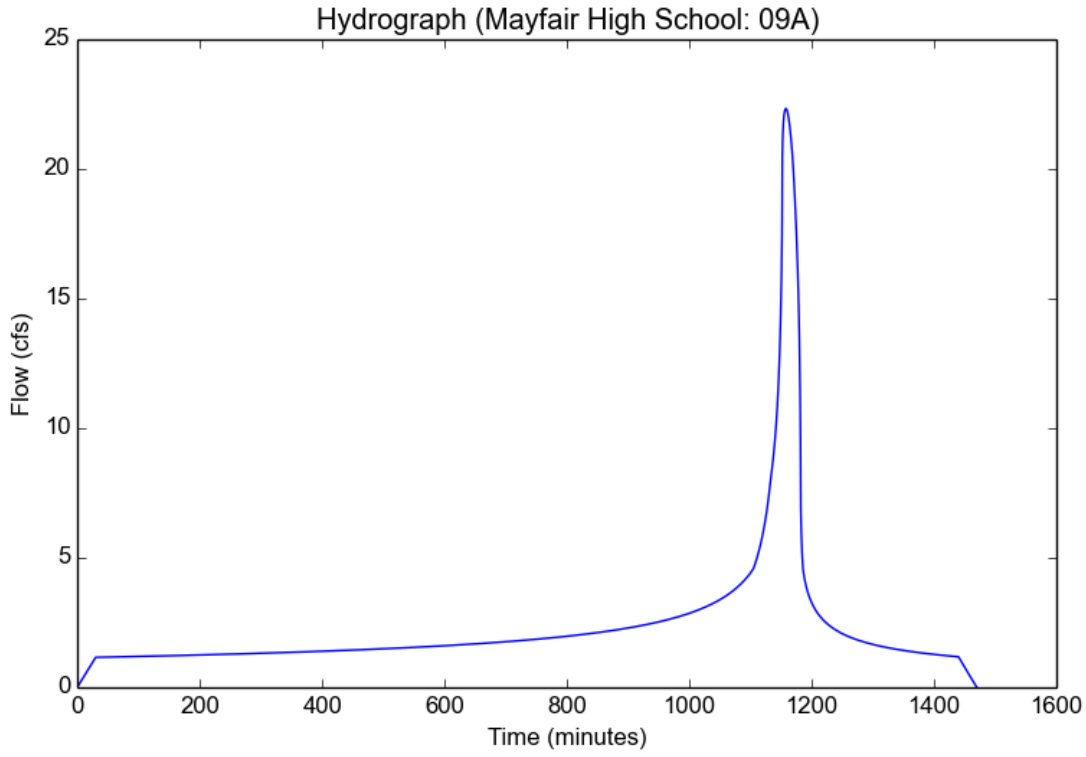

Peak Flow Hydrologic Analysis

File location: C:/working/Mayfair/Mayfair High School Report-10yr.pdf
Version: HydroCalc 0.3.1-beta

Input Parameters

Project Name	Mayfair High School
Subarea ID	11A
Area (ac)	29.6
Flow Path Length (ft)	2959.0
Flow Path Slope (vft/hft)	0.003
50-yr Rainfall Depth (in)	5.9
Percent Impervious	0.42
Soil Type	6
Design Storm Frequency	10-yr
Fire Factor	0
LID	False

Output Results

Modeled (10-yr) Rainfall Depth (in)	4.2126
Peak Intensity (in/hr)	1.0827
Undeveloped Runoff Coefficient (Cu)	0.6005
Developed Runoff Coefficient (Cd)	0.7263
Time of Concentration (min)	30.0
Clear Peak Flow Rate (cfs)	23.2761
Burned Peak Flow Rate (cfs)	23.2761
24-Hr Clear Runoff Volume (ac-ft)	4.9386
24-Hr Clear Runoff Volume (cu-ft)	215125.3983

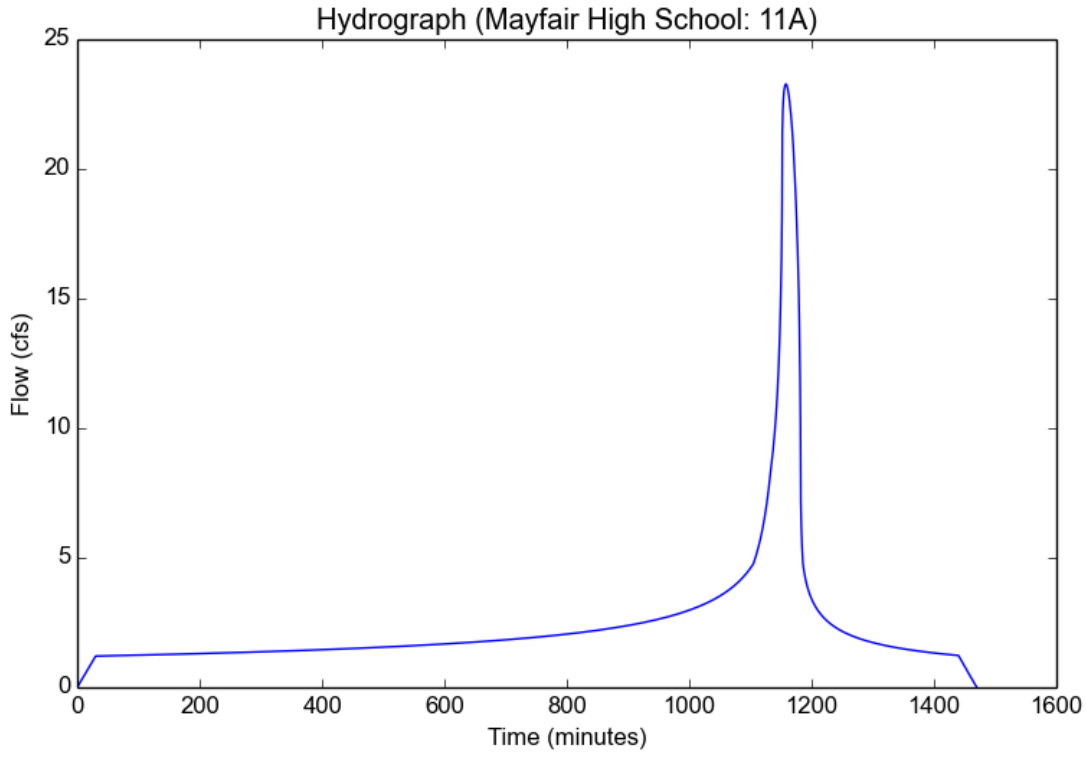

Peak Flow Hydrologic Analysis

File location: C:/working/Mayfair/Mayfair High School Report-10yr.pdf
Version: HydroCalc 0.3.1-beta

Input Parameters

Project Name	Mayfair High School
Subarea ID	13A
Area (ac)	30.3
Flow Path Length (ft)	3268.0
Flow Path Slope (vft/hft)	0.001
50-yr Rainfall Depth (in)	5.9
Percent Impervious	0.42
Soil Type	6
Design Storm Frequency	10-yr
Fire Factor	0
LID	False

Output Results

Modeled (10-yr) Rainfall Depth (in)	4.2126
Peak Intensity (in/hr)	1.0827
Undeveloped Runoff Coefficient (Cu)	0.6005
Developed Runoff Coefficient (Cd)	0.7263
Time of Concentration (min)	30.0
Clear Peak Flow Rate (cfs)	23.8266
Burned Peak Flow Rate (cfs)	23.8266
24-Hr Clear Runoff Volume (ac-ft)	5.0554
24-Hr Clear Runoff Volume (cu-ft)	220212.8233

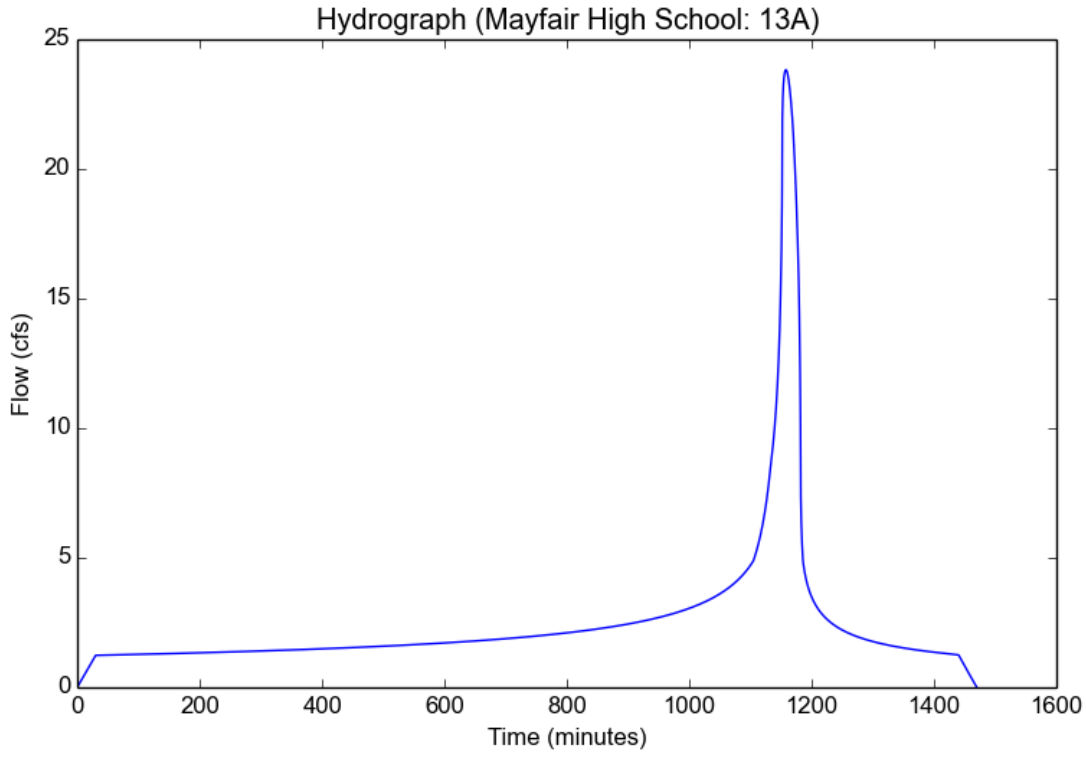

Peak Flow Hydrologic Analysis

File location: C:/working/Mayfair/Mayfair High School Report-10yr.pdf
Version: HydroCalc 0.3.1-beta

Input Parameters

Project Name	Mayfair High School
Subarea ID	15A
Area (ac)	10.7
Flow Path Length (ft)	785.0
Flow Path Slope (vft/hft)	0.002
50-yr Rainfall Depth (in)	5.9
Percent Impervious	0.42
Soil Type	6
Design Storm Frequency	10-yr
Fire Factor	0
LID	False

Output Results

Modeled (10-yr) Rainfall Depth (in)	4.2126
Peak Intensity (in/hr)	1.414
Undeveloped Runoff Coefficient (Cu)	0.6616
Developed Runoff Coefficient (Cd)	0.7617
Time of Concentration (min)	17.0
Clear Peak Flow Rate (cfs)	11.5247
Burned Peak Flow Rate (cfs)	11.5247
24-Hr Clear Runoff Volume (ac-ft)	1.7869
24-Hr Clear Runoff Volume (cu-ft)	77839.1639

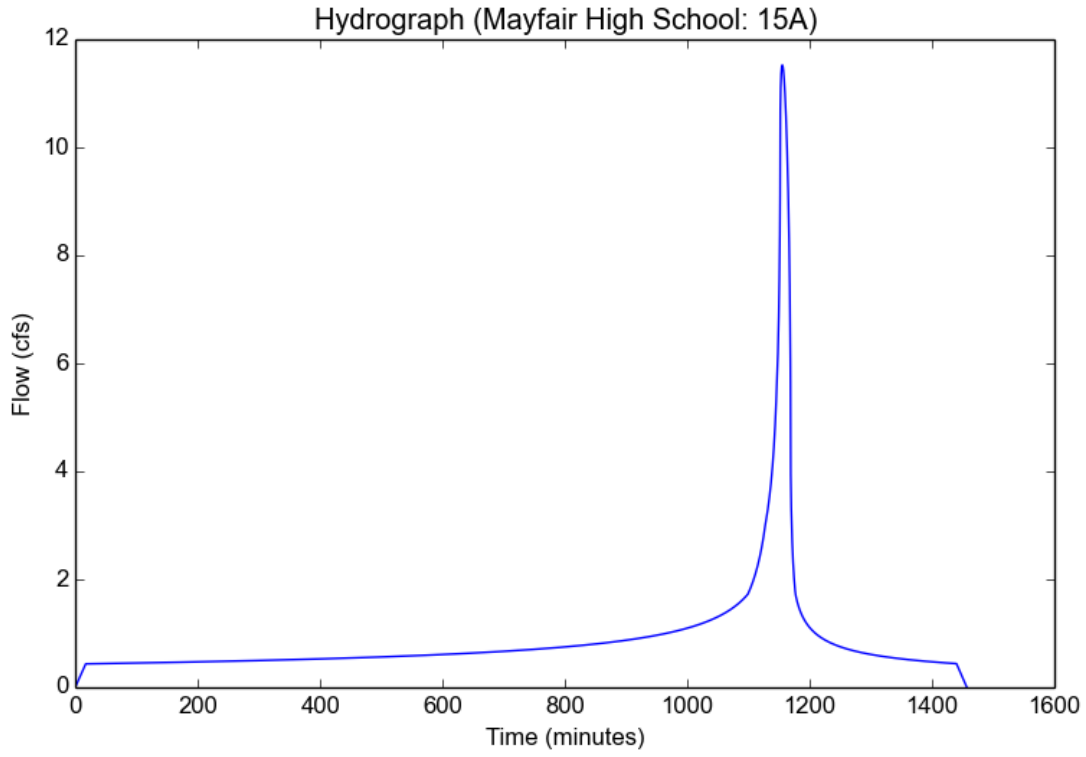

Peak Flow Hydrologic Analysis

File location: C:/working/Mayfair/Mayfair High School Report-10yr.pdf
Version: HydroCalc 0.3.1-beta

Input Parameters

Project Name	Mayfair High School
Subarea ID	17A
Area (ac)	32.7
Flow Path Length (ft)	1477.0
Flow Path Slope (vft/hft)	0.002
50-yr Rainfall Depth (in)	5.9
Percent Impervious	0.57
Soil Type	6
Design Storm Frequency	10-yr
Fire Factor	0
LID	False

Output Results

Modeled (10-yr) Rainfall Depth (in)	4.2126
Peak Intensity (in/hr)	1.1581
Undeveloped Runoff Coefficient (Cu)	0.6144
Developed Runoff Coefficient (Cd)	0.7772
Time of Concentration (min)	26.0
Clear Peak Flow Rate (cfs)	29.4304
Burned Peak Flow Rate (cfs)	29.4304
24-Hr Clear Runoff Volume (ac-ft)	6.6954
24-Hr Clear Runoff Volume (cu-ft)	291649.8388

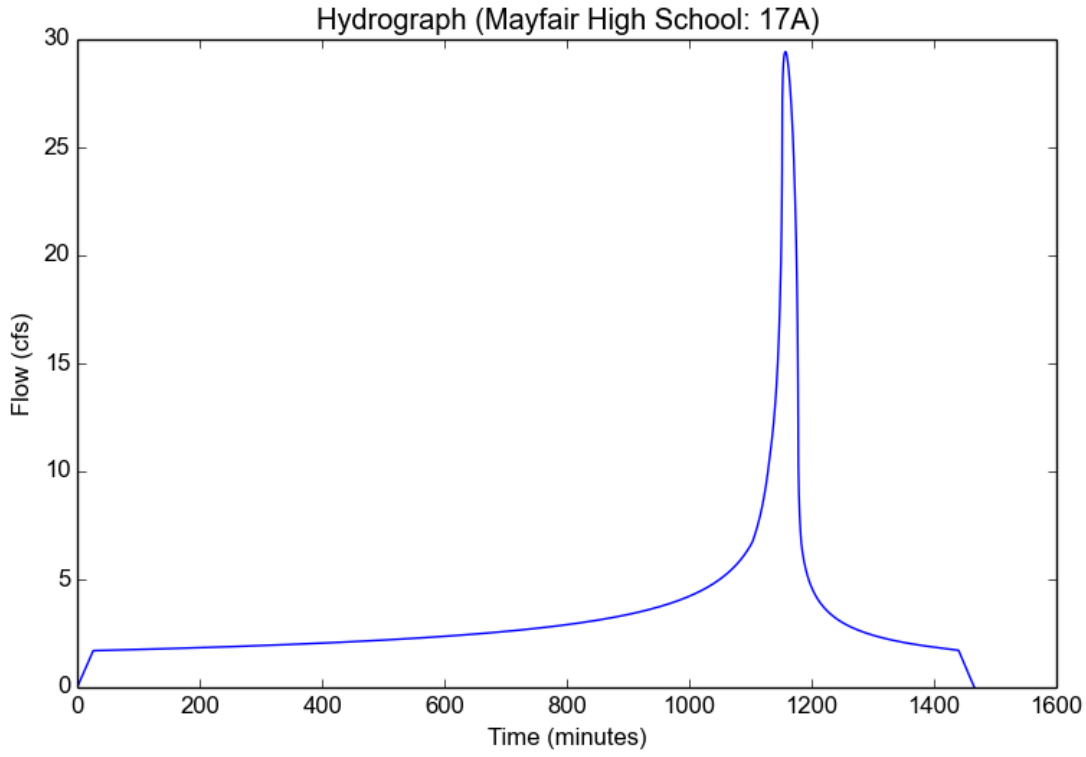

Peak Flow Hydrologic Analysis

File location: C:/working/Mayfair/Mayfair High School Report-10yr.pdf
Version: HydroCalc 0.3.1-beta

Input Parameters

Project Name	Mayfair High School
Subarea ID	19A
Area (ac)	41.7
Flow Path Length (ft)	1320.0
Flow Path Slope (vft/hft)	0.002
50-yr Rainfall Depth (in)	5.9
Percent Impervious	0.42
Soil Type	6
Design Storm Frequency	10-yr
Fire Factor	0
LID	False

Output Results

Modeled (10-yr) Rainfall Depth (in)	4.2126
Peak Intensity (in/hr)	1.1796
Undeveloped Runoff Coefficient (Cu)	0.6183
Developed Runoff Coefficient (Cd)	0.7366
Time of Concentration (min)	25.0
Clear Peak Flow Rate (cfs)	36.2345
Burned Peak Flow Rate (cfs)	36.2345
24-Hr Clear Runoff Volume (ac-ft)	6.9589
24-Hr Clear Runoff Volume (cu-ft)	303130.2812

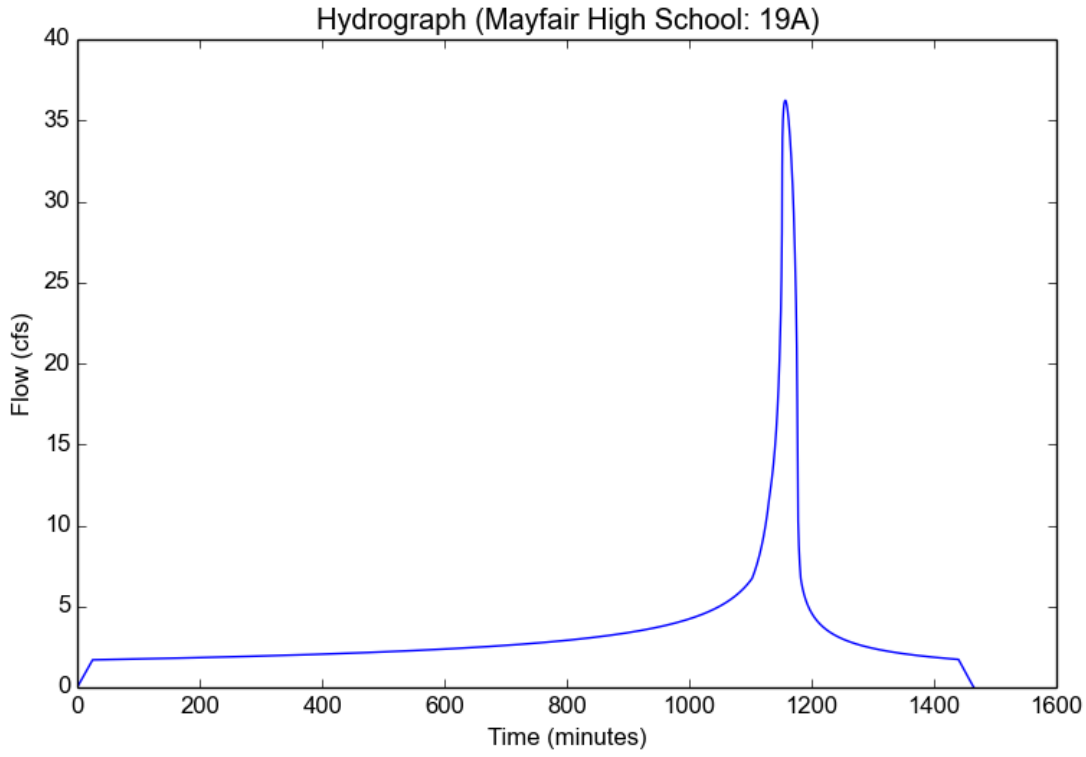

Peak Flow Hydrologic Analysis

File location: C:/working/Mayfair/Mayfair High School Report-10yr.pdf
Version: HydroCalc 0.3.1-beta

Input Parameters

Project Name	Mayfair High School
Subarea ID	20B
Area (ac)	34.8
Flow Path Length (ft)	2708.0
Flow Path Slope (vft/hft)	0.001
50-yr Rainfall Depth (in)	5.9
Percent Impervious	0.93
Soil Type	7
Design Storm Frequency	10-yr
Fire Factor	0
LID	False

Output Results

Modeled (10-yr) Rainfall Depth (in)	4.2126
Peak Intensity (in/hr)	1.0827
Undeveloped Runoff Coefficient (Cu)	0.2951
Developed Runoff Coefficient (Cd)	0.8577
Time of Concentration (min)	30.0
Clear Peak Flow Rate (cfs)	32.3159
Burned Peak Flow Rate (cfs)	32.3159
24-Hr Clear Runoff Volume (ac-ft)	10.2408
24-Hr Clear Runoff Volume (cu-ft)	446088.3086

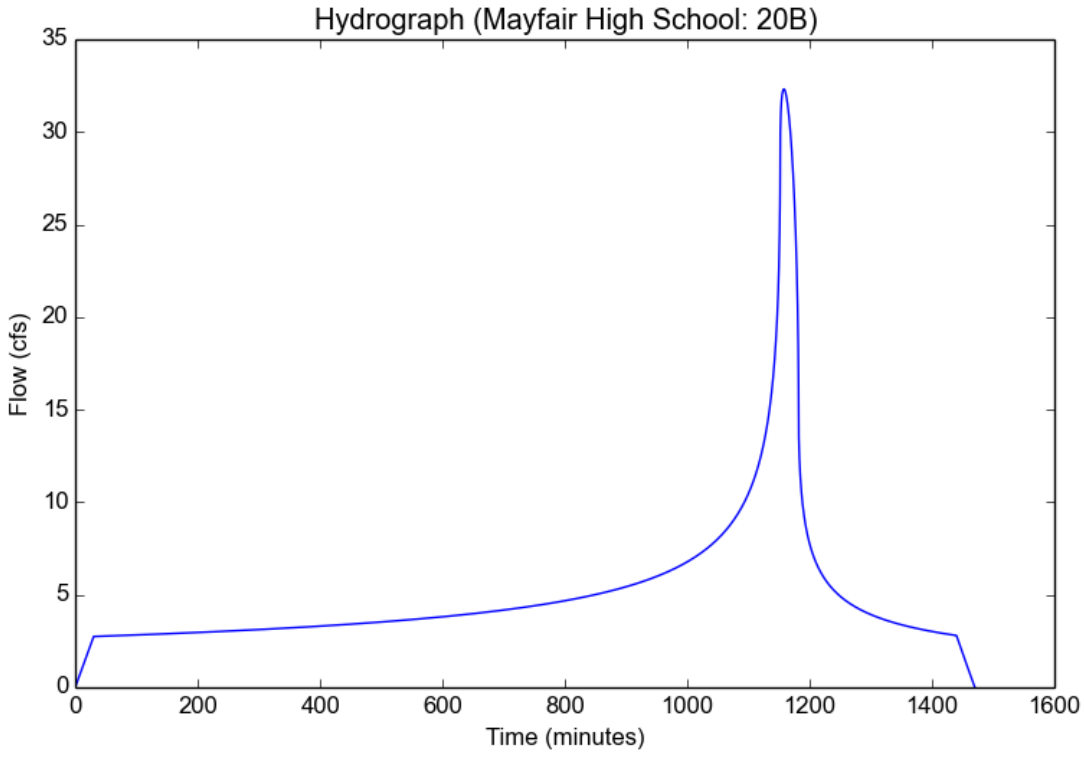

Peak Flow Hydrologic Analysis

File location: C:/working/Mayfair/Mayfair High School Report-10yr.pdf
Version: HydroCalc 0.3.1-beta

Input Parameters

Project Name	Mayfair High School
Subarea ID	22B
Area (ac)	20.9
Flow Path Length (ft)	1395.0
Flow Path Slope (vft/hft)	0.002
50-yr Rainfall Depth (in)	5.9
Percent Impervious	0.5
Soil Type	7
Design Storm Frequency	10-yr
Fire Factor	0
LID	False

Output Results

Modeled (10-yr) Rainfall Depth (in)	4.2126
Peak Intensity (in/hr)	1.0827
Undeveloped Runoff Coefficient (Cu)	0.2951
Developed Runoff Coefficient (Cd)	0.5976
Time of Concentration (min)	30.0
Clear Peak Flow Rate (cfs)	13.5226
Burned Peak Flow Rate (cfs)	13.5226
24-Hr Clear Runoff Volume (ac-ft)	3.703
24-Hr Clear Runoff Volume (cu-ft)	161304.1321

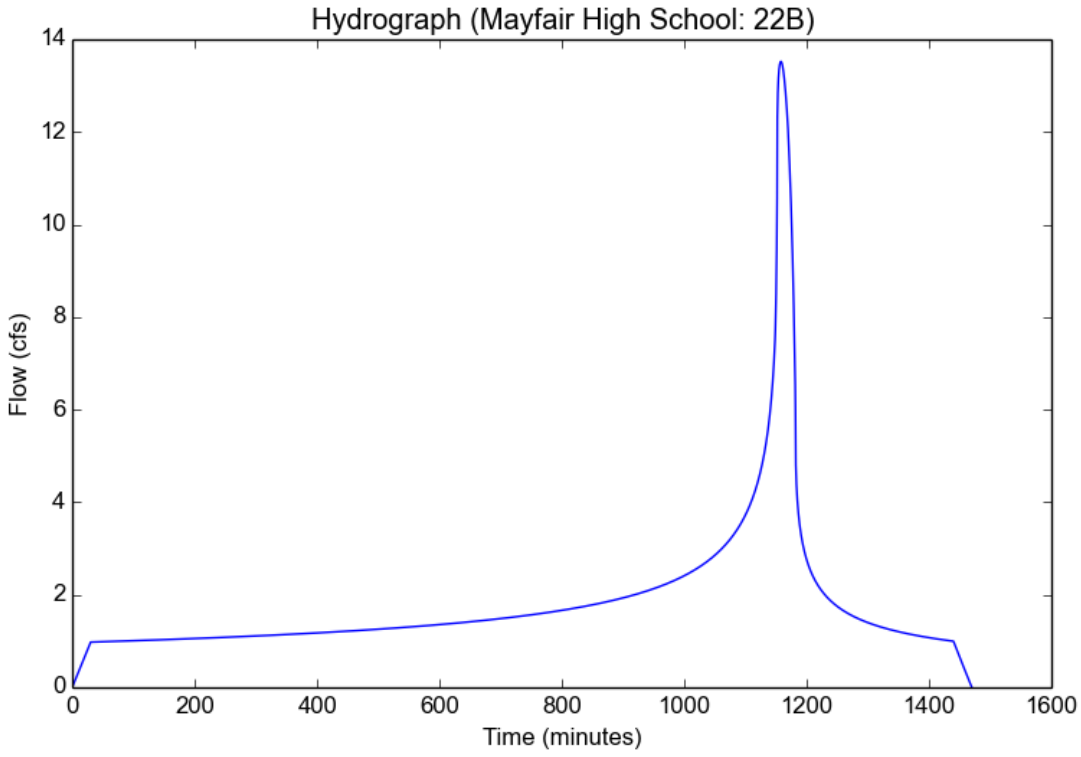

Peak Flow Hydrologic Analysis

File location: C:/working/Mayfair/Mayfair High School Report-10yr.pdf
Version: HydroCalc 0.3.1-beta

Input Parameters

Project Name	Mayfair High School
Subarea ID	24B
Area (ac)	25.1
Flow Path Length (ft)	1374.0
Flow Path Slope (vft/hft)	0.003
50-yr Rainfall Depth (in)	5.9
Percent Impervious	0.5
Soil Type	7
Design Storm Frequency	10-yr
Fire Factor	0
LID	False

Output Results

Modeled (10-yr) Rainfall Depth (in)	4.2126
Peak Intensity (in/hr)	1.1377
Undeveloped Runoff Coefficient (Cu)	0.3139
Developed Runoff Coefficient (Cd)	0.607
Time of Concentration (min)	27.0
Clear Peak Flow Rate (cfs)	17.3324
Burned Peak Flow Rate (cfs)	17.3324
24-Hr Clear Runoff Volume (ac-ft)	4.4538
24-Hr Clear Runoff Volume (cu-ft)	194005.4482

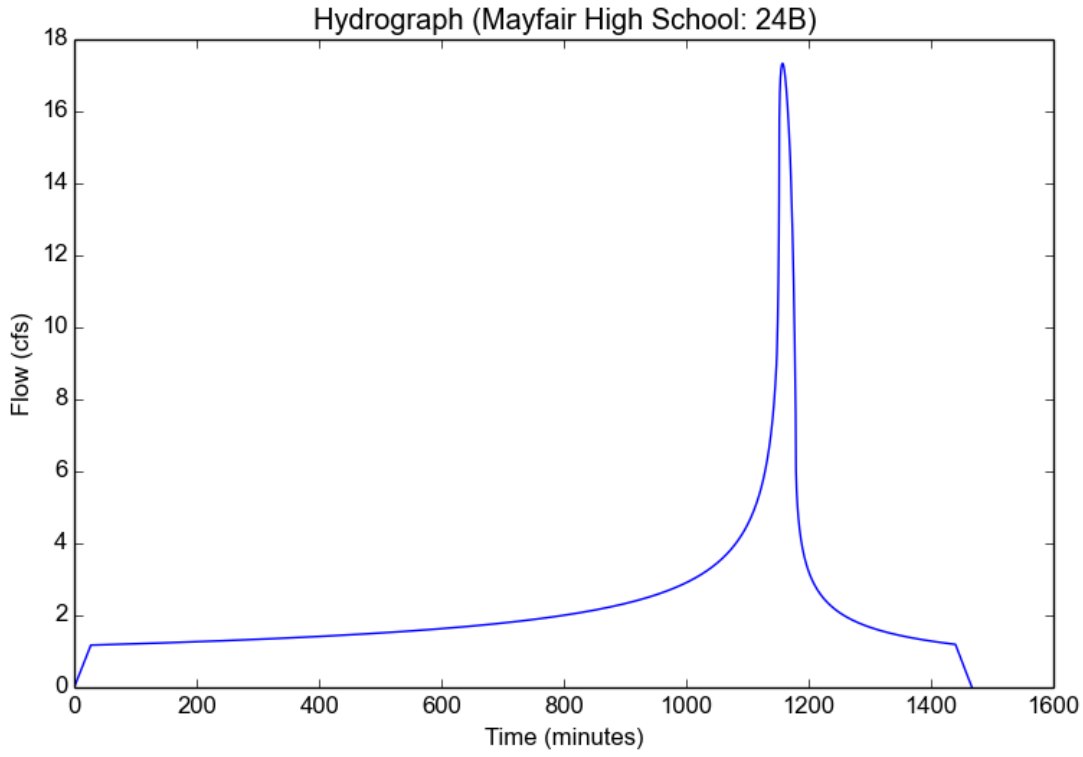

Peak Flow Hydrologic Analysis

File location: C:/working/Mayfair/Mayfair High School Report-10yr.pdf
Version: HydroCalc 0.3.1-beta

Input Parameters

Project Name	Mayfair High School
Subarea ID	26B
Area (ac)	38.0
Flow Path Length (ft)	2041.0
Flow Path Slope (vft/hft)	0.002
50-yr Rainfall Depth (in)	5.9
Percent Impervious	0.5
Soil Type	6
Design Storm Frequency	10-yr
Fire Factor	0
LID	False

Output Results

Modeled (10-yr) Rainfall Depth (in)	4.2126
Peak Intensity (in/hr)	1.0827
Undeveloped Runoff Coefficient (Cu)	0.6005
Developed Runoff Coefficient (Cd)	0.7502
Time of Concentration (min)	30.0
Clear Peak Flow Rate (cfs)	30.8675
Burned Peak Flow Rate (cfs)	30.8675
24-Hr Clear Runoff Volume (ac-ft)	7.1079
24-Hr Clear Runoff Volume (cu-ft)	309620.9488

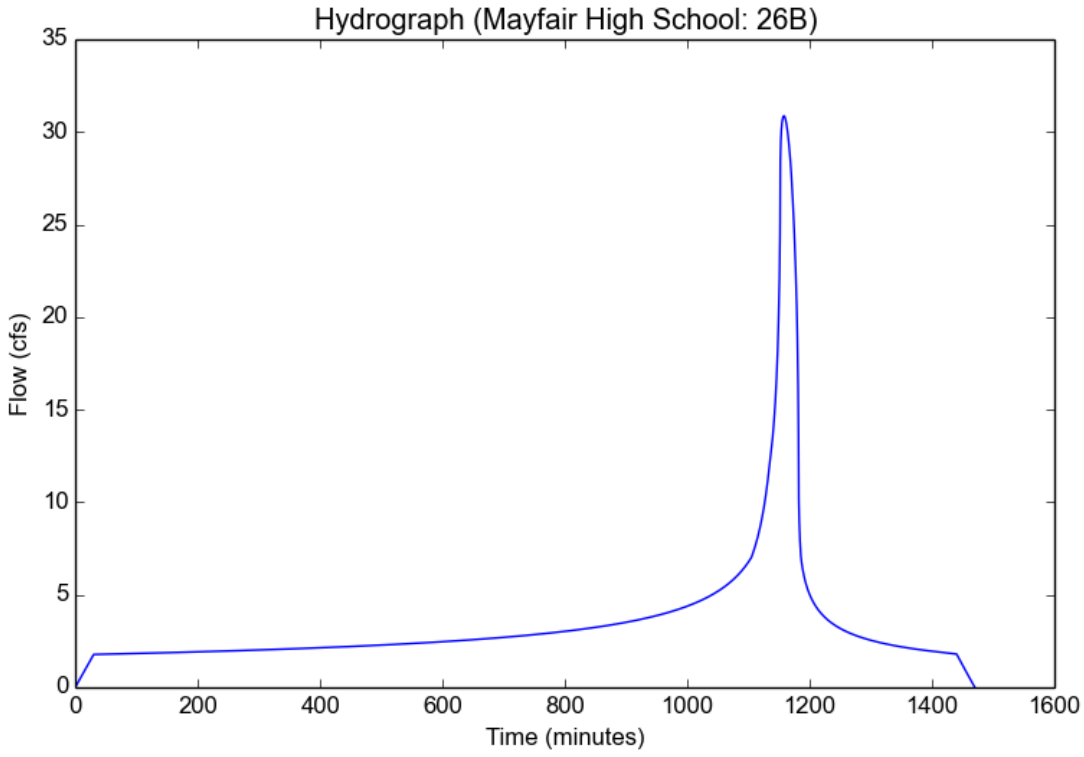

Peak Flow Hydrologic Analysis

File location: C:/working/Mayfair/Mayfair High School Report-10yr.pdf
Version: HydroCalc 0.3.1-beta

Input Parameters

Project Name	Mayfair High School
Subarea ID	27B
Area (ac)	24.5
Flow Path Length (ft)	1278.0
Flow Path Slope (vft/hft)	0.001
50-yr Rainfall Depth (in)	5.9
Percent Impervious	0.45
Soil Type	6
Design Storm Frequency	10-yr
Fire Factor	0
LID	False

Output Results

Modeled (10-yr) Rainfall Depth (in)	4.2126
Peak Intensity (in/hr)	1.1377
Undeveloped Runoff Coefficient (Cu)	0.6106
Developed Runoff Coefficient (Cd)	0.7408
Time of Concentration (min)	27.0
Clear Peak Flow Rate (cfs)	20.6496
Burned Peak Flow Rate (cfs)	20.6496
24-Hr Clear Runoff Volume (ac-ft)	4.2738
24-Hr Clear Runoff Volume (cu-ft)	186167.1152

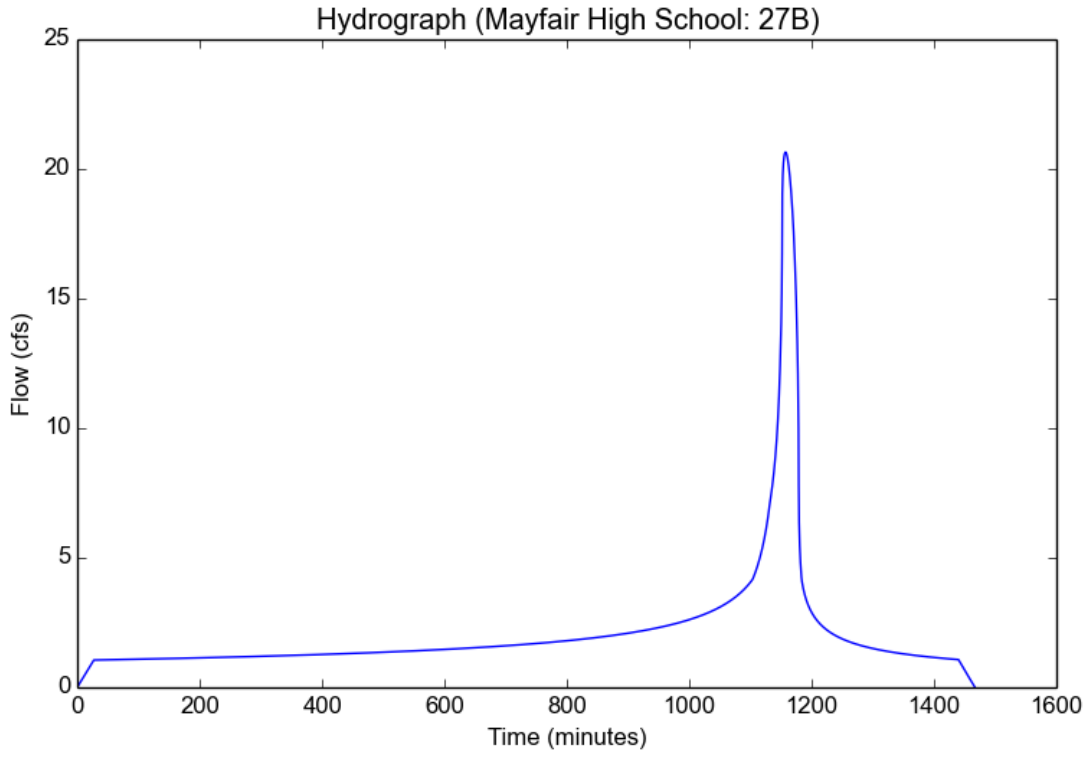

Peak Flow Hydrologic Analysis

File location: C:/working/Mayfair/Mayfair High School Report-10yr.pdf
Version: HydroCalc 0.3.1-beta

Input Parameters

Project Name	Mayfair High School
Subarea ID	29B
Area (ac)	21.5
Flow Path Length (ft)	2018.0
Flow Path Slope (vft/hft)	0.002
50-yr Rainfall Depth (in)	5.7
Percent Impervious	0.45
Soil Type	6
Design Storm Frequency	10-yr
Fire Factor	0
LID	False

Output Results

Modeled (10-yr) Rainfall Depth (in)	4.0698
Peak Intensity (in/hr)	1.046
Undeveloped Runoff Coefficient (Cu)	0.5937
Developed Runoff Coefficient (Cd)	0.7315
Time of Concentration (min)	30.0
Clear Peak Flow Rate (cfs)	16.4519
Burned Peak Flow Rate (cfs)	16.4519
24-Hr Clear Runoff Volume (ac-ft)	3.6113
24-Hr Clear Runoff Volume (cu-ft)	157306.9463

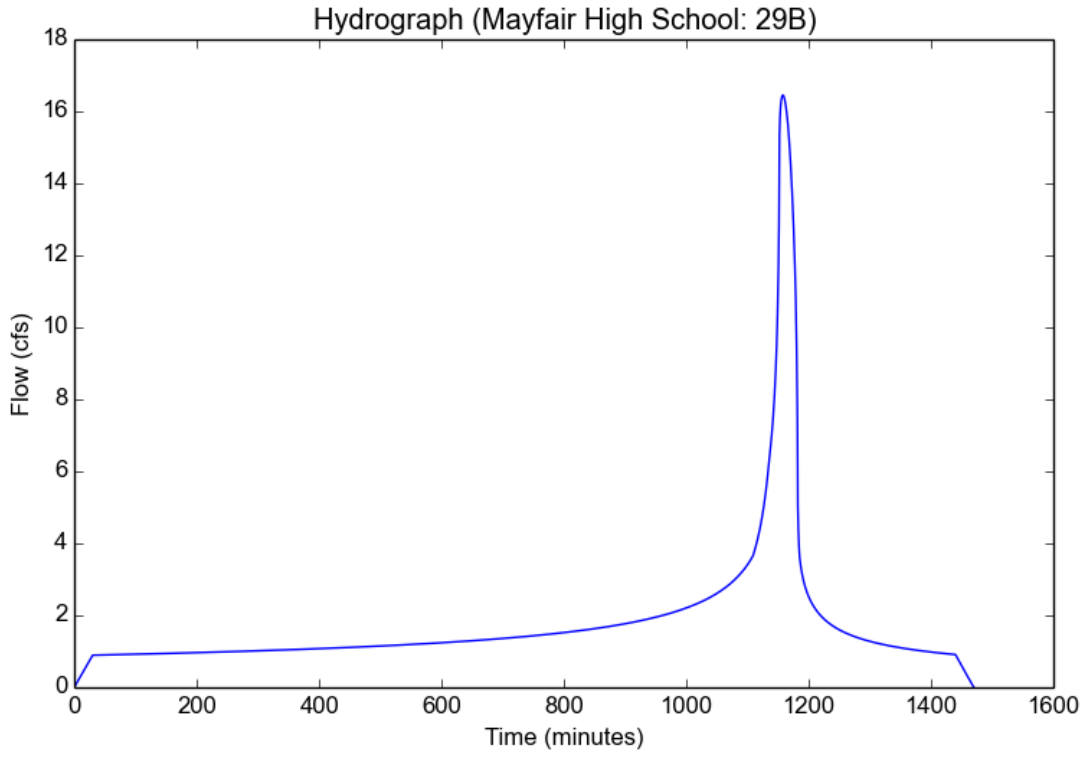

Peak Flow Hydrologic Analysis

File location: C:/working/Mayfair/Mayfair High School Report-10yr.pdf
Version: HydroCalc 0.3.1-beta

Input Parameters

Project Name	Mayfair High School
Subarea ID	31B
Area (ac)	17.6
Flow Path Length (ft)	2373.0
Flow Path Slope (vft/hft)	0.002
50-yr Rainfall Depth (in)	5.7
Percent Impervious	0.9
Soil Type	6
Design Storm Frequency	10-yr
Fire Factor	0
LID	False

Output Results

Modeled (10-yr) Rainfall Depth (in)	4.0698
Peak Intensity (in/hr)	1.046
Undeveloped Runoff Coefficient (Cu)	0.5937
Developed Runoff Coefficient (Cd)	0.8694
Time of Concentration (min)	30.0
Clear Peak Flow Rate (cfs)	16.0052
Burned Peak Flow Rate (cfs)	16.0052
24-Hr Clear Runoff Volume (ac-ft)	4.8966
24-Hr Clear Runoff Volume (cu-ft)	213295.8958

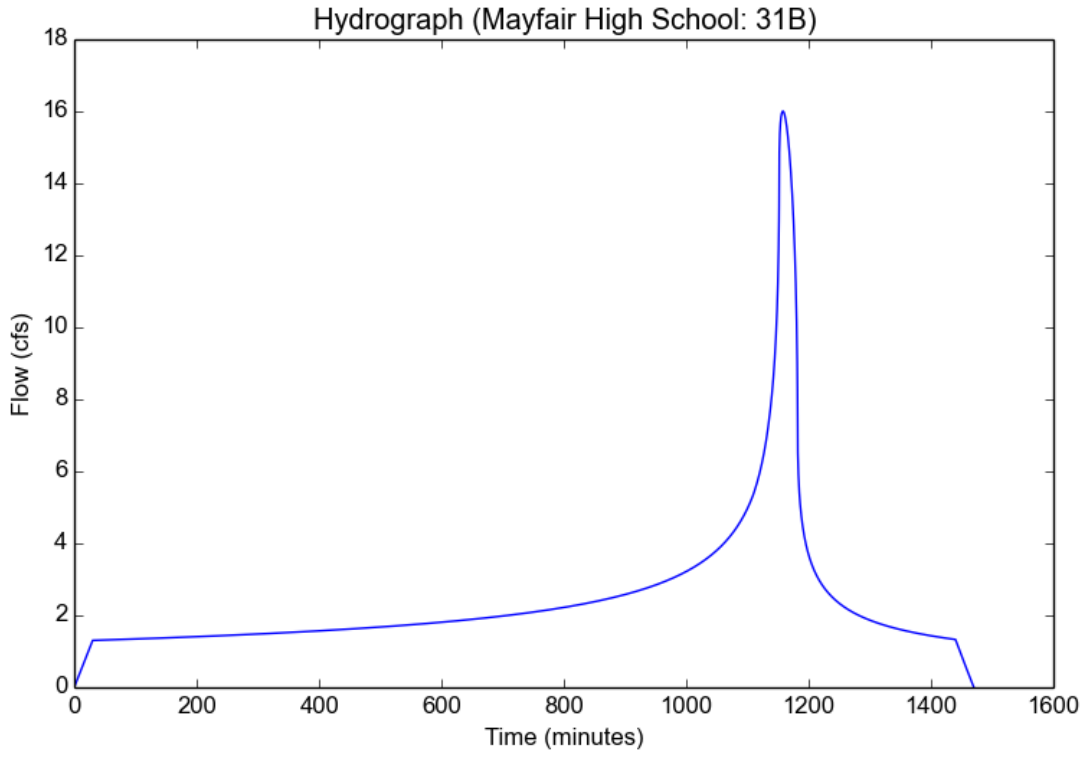

Peak Flow Hydrologic Analysis

File location: C:/working/Mayfair/Mayfair High School Report-10yr.pdf
Version: HydroCalc 0.3.1-beta

Input Parameters

Project Name	Mayfair High School
Subarea ID	32B
Area (ac)	35.9
Flow Path Length (ft)	2441.0
Flow Path Slope (vft/hft)	0.001
50-yr Rainfall Depth (in)	5.7
Percent Impervious	0.85
Soil Type	6
Design Storm Frequency	10-yr
Fire Factor	0
LID	False

Output Results

Modeled (10-yr) Rainfall Depth (in)	4.0698
Peak Intensity (in/hr)	1.046
Undeveloped Runoff Coefficient (Cu)	0.5937
Developed Runoff Coefficient (Cd)	0.8541
Time of Concentration (min)	30.0
Clear Peak Flow Rate (cfs)	32.0719
Burned Peak Flow Rate (cfs)	32.0719
24-Hr Clear Runoff Volume (ac-ft)	9.5482
24-Hr Clear Runoff Volume (cu-ft)	415918.5807

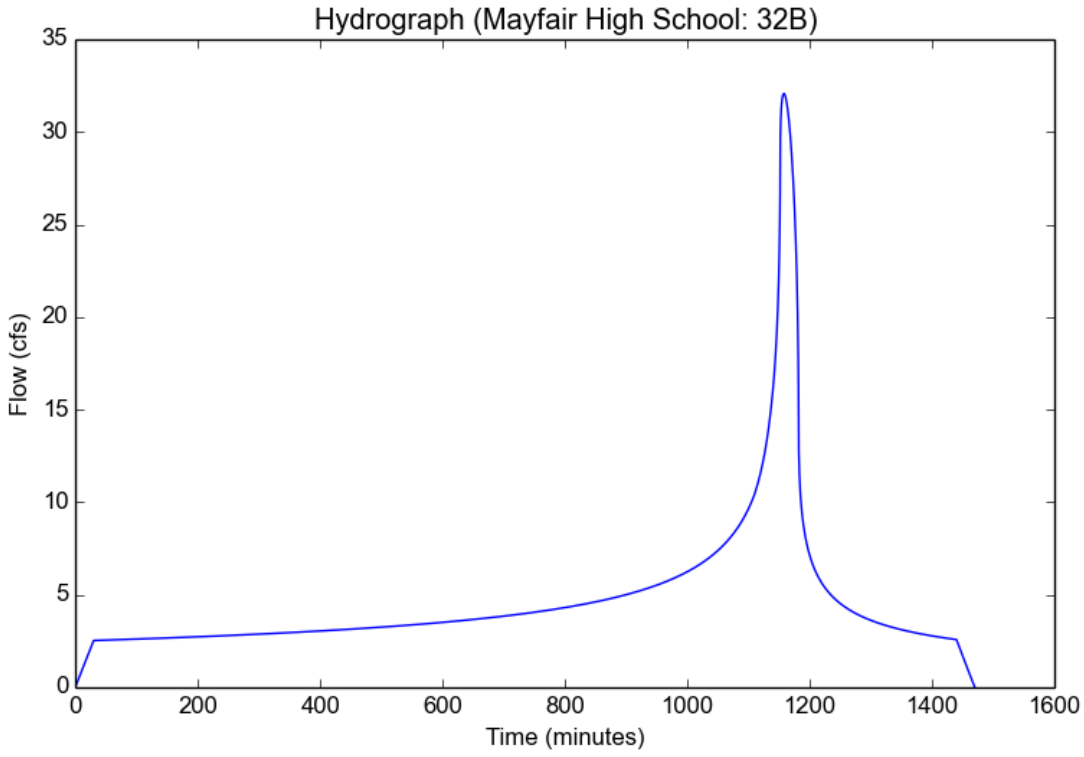

Peak Flow Hydrologic Analysis

File location: C:/working/Mayfair/Mayfair High School Report-10yr.pdf
Version: HydroCalc 0.3.1-beta

Input Parameters

Project Name	Mayfair High School
Subarea ID	34B
Area (ac)	16.0
Flow Path Length (ft)	1226.0
Flow Path Slope (vft/hft)	0.003
50-yr Rainfall Depth (in)	5.7
Percent Impervious	0.74
Soil Type	6
Design Storm Frequency	10-yr
Fire Factor	0
LID	False

Output Results

Modeled (10-yr) Rainfall Depth (in)	4.0698
Peak Intensity (in/hr)	1.2369
Undeveloped Runoff Coefficient (Cu)	0.6289
Developed Runoff Coefficient (Cd)	0.8295
Time of Concentration (min)	21.0
Clear Peak Flow Rate (cfs)	16.417
Burned Peak Flow Rate (cfs)	16.417
24-Hr Clear Runoff Volume (ac-ft)	3.8248
24-Hr Clear Runoff Volume (cu-ft)	166606.7902

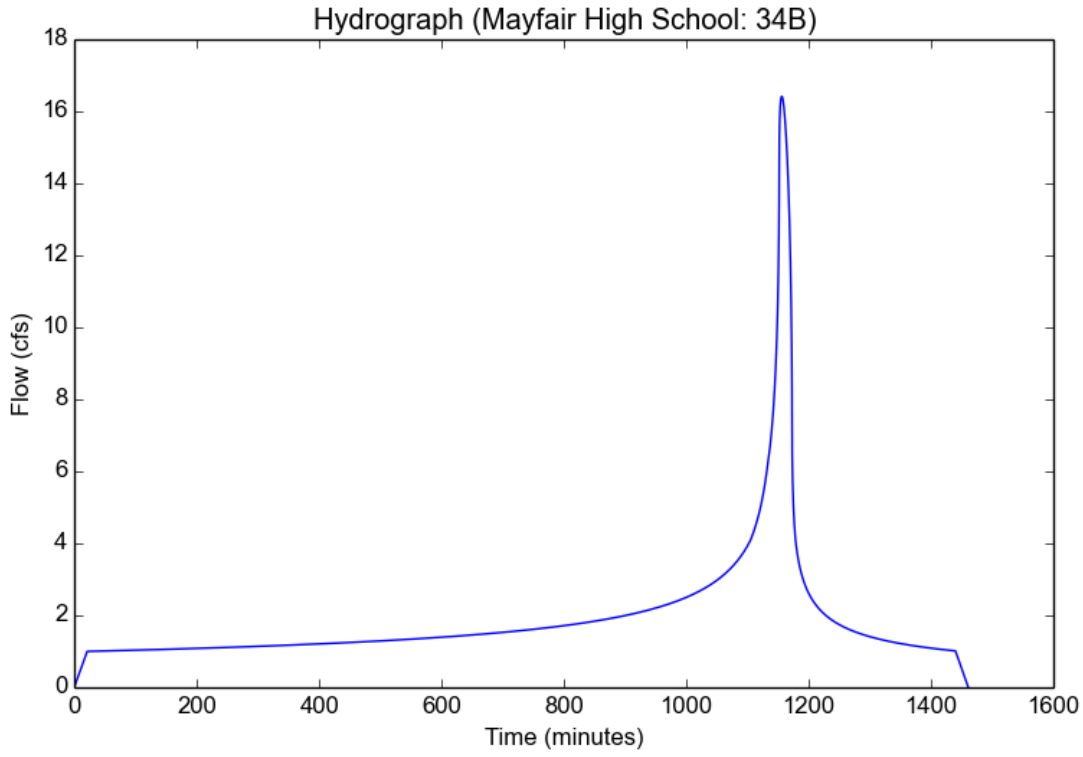

Peak Flow Hydrologic Analysis

File location: C:/working/Mayfair/Mayfair High School Report-10yr.pdf
Version: HydroCalc 0.3.1-beta

Input Parameters

Project Name	Mayfair High School
Subarea ID	36B
Area (ac)	29.4
Flow Path Length (ft)	1756.0
Flow Path Slope (vft/hft)	0.001
50-yr Rainfall Depth (in)	5.7
Percent Impervious	0.68
Soil Type	6
Design Storm Frequency	10-yr
Fire Factor	0
LID	False

Output Results

Modeled (10-yr) Rainfall Depth (in)	4.0698
Peak Intensity (in/hr)	1.046
Undeveloped Runoff Coefficient (Cu)	0.5937
Developed Runoff Coefficient (Cd)	0.802
Time of Concentration (min)	30.0
Clear Peak Flow Rate (cfs)	24.6636
Burned Peak Flow Rate (cfs)	24.6636
24-Hr Clear Runoff Volume (ac-ft)	6.5949
24-Hr Clear Runoff Volume (cu-ft)	287273.4121

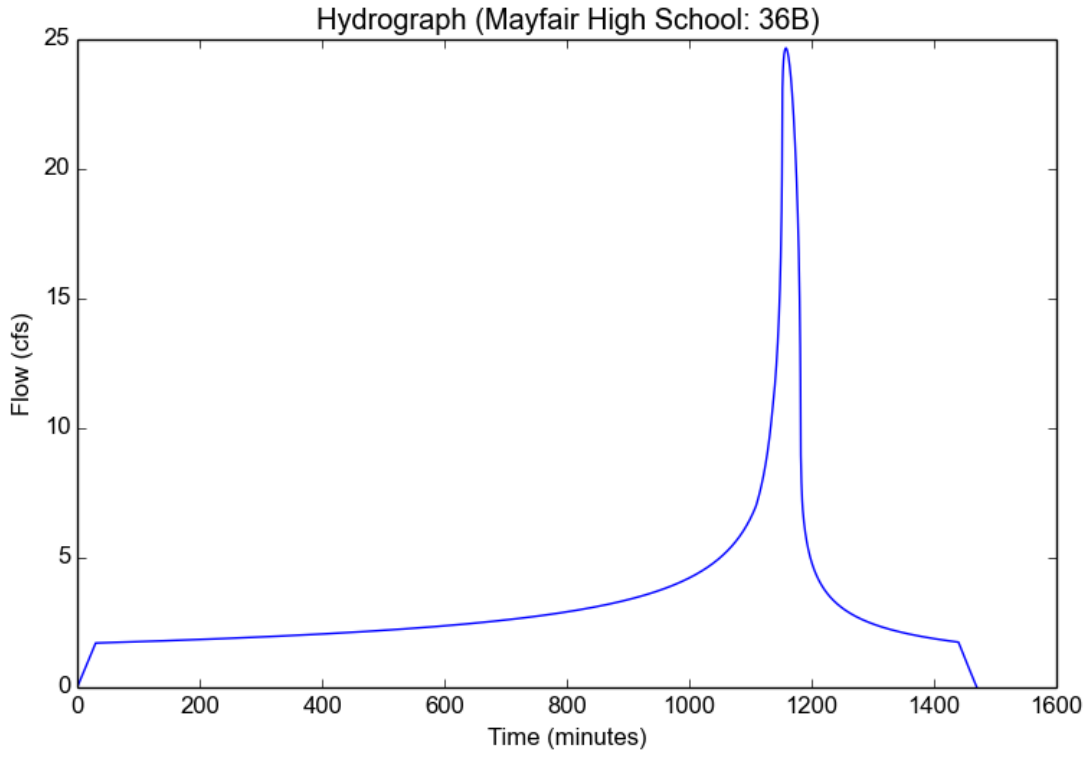

Peak Flow Hydrologic Analysis

File location: C:/working/Mayfair/Mayfair High School Report-10yr.pdf
Version: HydroCalc 0.3.1-beta

Input Parameters

Project Name	Mayfair High School
Subarea ID	37C
Area (ac)	10.8
Flow Path Length (ft)	2954.0
Flow Path Slope (vft/hft)	0.002
50-yr Rainfall Depth (in)	5.7
Percent Impervious	0.97
Soil Type	6
Design Storm Frequency	10-yr
Fire Factor	0
LID	False

Output Results

Modeled (10-yr) Rainfall Depth (in)	4.0698
Peak Intensity (in/hr)	1.046
Undeveloped Runoff Coefficient (Cu)	0.5937
Developed Runoff Coefficient (Cd)	0.8908
Time of Concentration (min)	30.0
Clear Peak Flow Rate (cfs)	10.0636
Burned Peak Flow Rate (cfs)	10.0636
24-Hr Clear Runoff Volume (ac-ft)	3.19
24-Hr Clear Runoff Volume (cu-ft)	138954.289

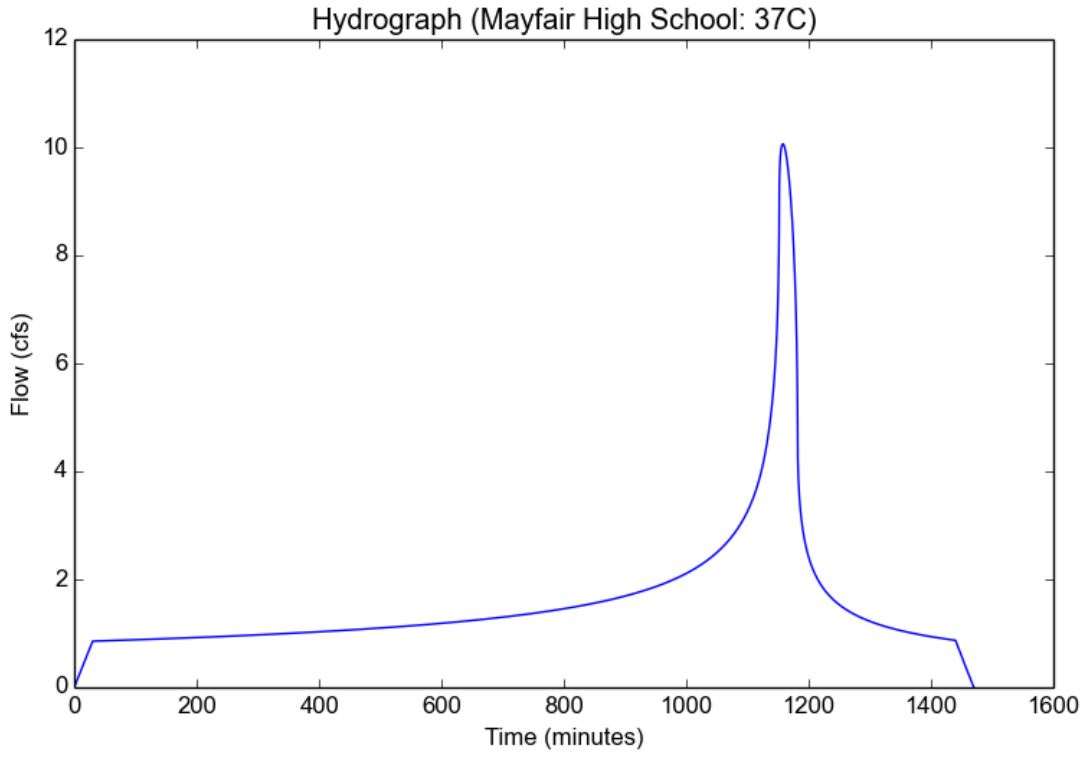

Peak Flow Hydrologic Analysis

File location: C:/working/Mayfair/Mayfair High School Report-10yr.pdf
Version: HydroCalc 0.3.1-beta

Input Parameters

Project Name	Mayfair High School
Subarea ID	39C
Area (ac)	20.0
Flow Path Length (ft)	2044.0
Flow Path Slope (vft/hft)	0.002
50-yr Rainfall Depth (in)	5.7
Percent Impervious	0.85
Soil Type	6
Design Storm Frequency	10-yr
Fire Factor	0
LID	False

Output Results

Modeled (10-yr) Rainfall Depth (in)	4.0698
Peak Intensity (in/hr)	1.046
Undeveloped Runoff Coefficient (Cu)	0.5937
Developed Runoff Coefficient (Cd)	0.8541
Time of Concentration (min)	30.0
Clear Peak Flow Rate (cfs)	17.8674
Burned Peak Flow Rate (cfs)	17.8674
24-Hr Clear Runoff Volume (ac-ft)	5.3193
24-Hr Clear Runoff Volume (cu-ft)	231709.5157

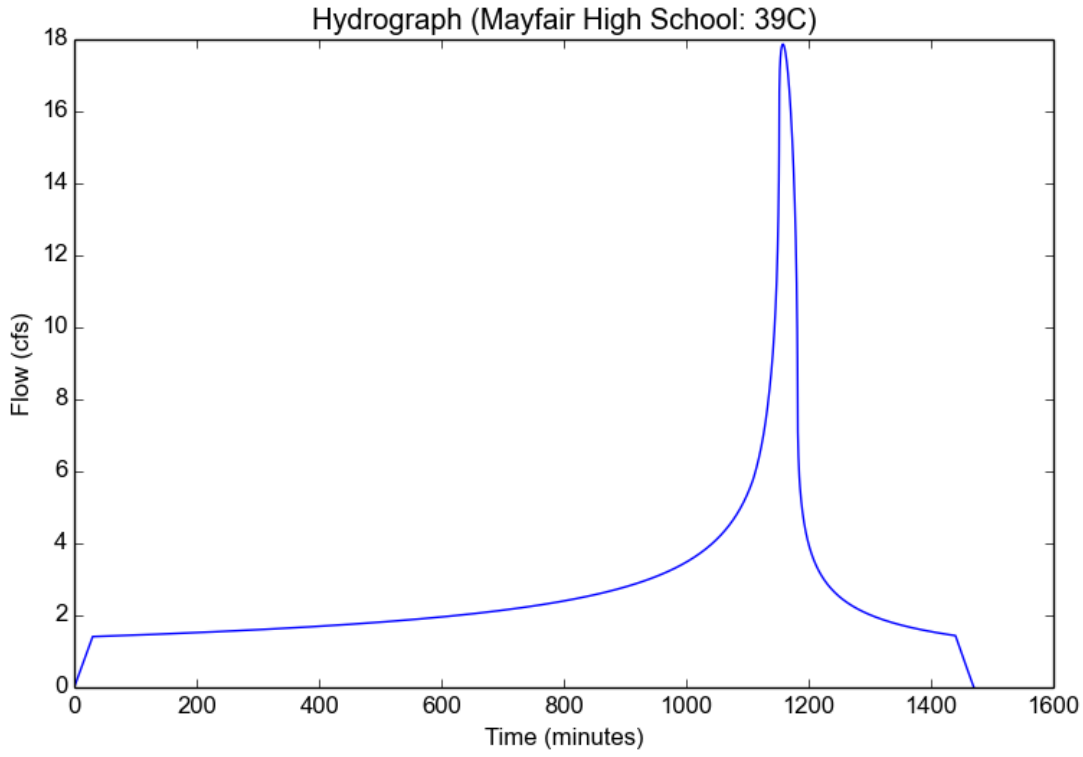

Peak Flow Hydrologic Analysis

File location: C:/working/Mayfair/Mayfair High School Report-10yr.pdf
Version: HydroCalc 0.3.1-beta

Input Parameters

Project Name	Mayfair High School
Subarea ID	40C
Area (ac)	14.9
Flow Path Length (ft)	1345.0
Flow Path Slope (vft/hft)	0.002
50-yr Rainfall Depth (in)	5.7
Percent Impervious	0.91
Soil Type	6
Design Storm Frequency	10-yr
Fire Factor	0
LID	False

Output Results

Modeled (10-yr) Rainfall Depth (in)	4.0698
Peak Intensity (in/hr)	1.1852
Undeveloped Runoff Coefficient (Cu)	0.6194
Developed Runoff Coefficient (Cd)	0.8747
Time of Concentration (min)	23.0
Clear Peak Flow Rate (cfs)	15.4471
Burned Peak Flow Rate (cfs)	15.4471
24-Hr Clear Runoff Volume (ac-ft)	4.182
24-Hr Clear Runoff Volume (cu-ft)	182169.0921

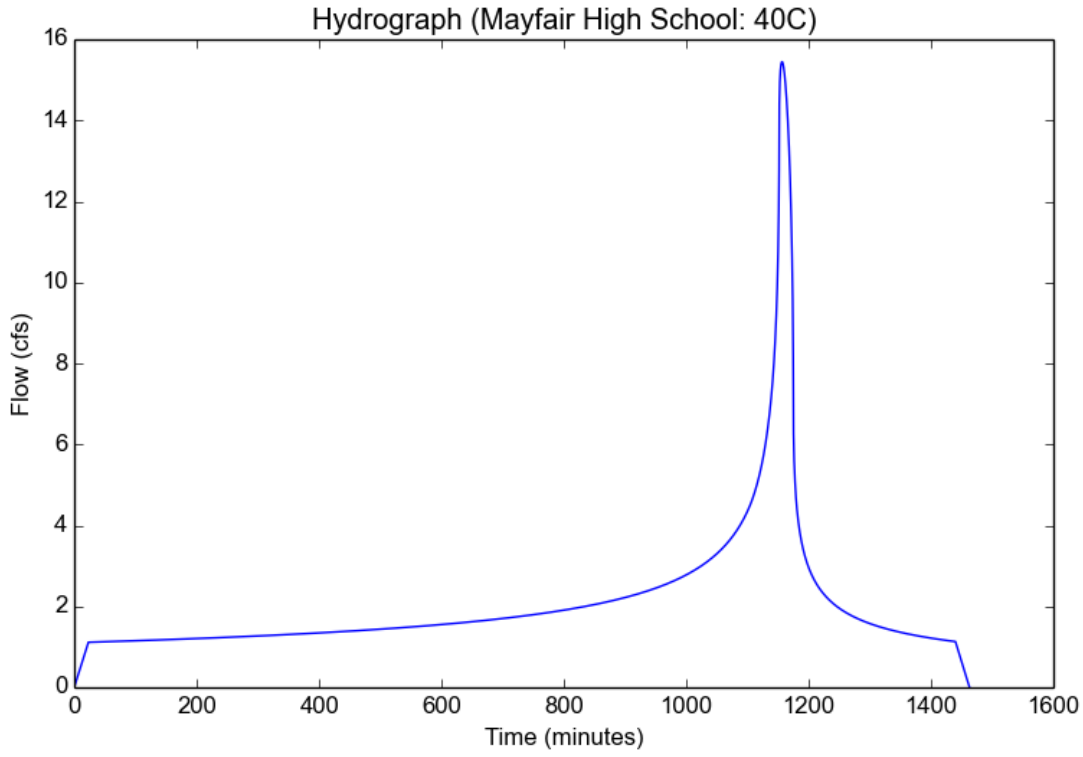

Peak Flow Hydrologic Analysis

File location: C:/working/Mayfair/Mayfair High School Report-10yr.pdf
Version: HydroCalc 0.3.1-beta

Input Parameters

Project Name	Mayfair High School
Subarea ID	42C
Area (ac)	23.1
Flow Path Length (ft)	2310.0
Flow Path Slope (vft/hft)	0.001
50-yr Rainfall Depth (in)	5.7
Percent Impervious	0.85
Soil Type	6
Design Storm Frequency	10-yr
Fire Factor	0
LID	False

Output Results

Modeled (10-yr) Rainfall Depth (in)	4.0698
Peak Intensity (in/hr)	1.046
Undeveloped Runoff Coefficient (Cu)	0.5937
Developed Runoff Coefficient (Cd)	0.8541
Time of Concentration (min)	30.0
Clear Peak Flow Rate (cfs)	20.6368
Burned Peak Flow Rate (cfs)	20.6368
24-Hr Clear Runoff Volume (ac-ft)	6.1438
24-Hr Clear Runoff Volume (cu-ft)	267624.4906

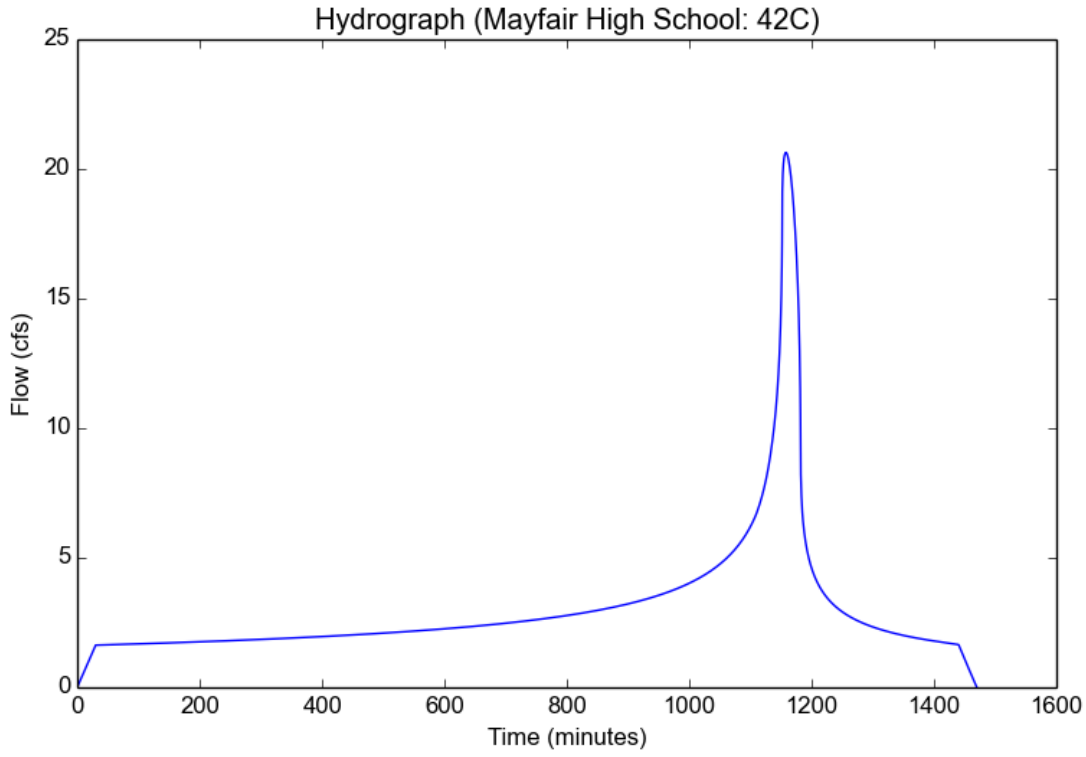

Peak Flow Hydrologic Analysis

File location: C:/working/Mayfair/Mayfair High School Report-10yr.pdf
Version: HydroCalc 0.3.1-beta

Input Parameters

Project Name	Mayfair High School
Subarea ID	44B
Area (ac)	22.8
Flow Path Length (ft)	1479.0
Flow Path Slope (vft/hft)	0.002
50-yr Rainfall Depth (in)	5.7
Percent Impervious	0.86
Soil Type	6
Design Storm Frequency	10-yr
Fire Factor	0
LID	False

Output Results

Modeled (10-yr) Rainfall Depth (in)	4.0698
Peak Intensity (in/hr)	1.1396
Undeveloped Runoff Coefficient (Cu)	0.611
Developed Runoff Coefficient (Cd)	0.8595
Time of Concentration (min)	25.0
Clear Peak Flow Rate (cfs)	22.3336
Burned Peak Flow Rate (cfs)	22.3336
24-Hr Clear Runoff Volume (ac-ft)	6.1201
24-Hr Clear Runoff Volume (cu-ft)	266590.3076

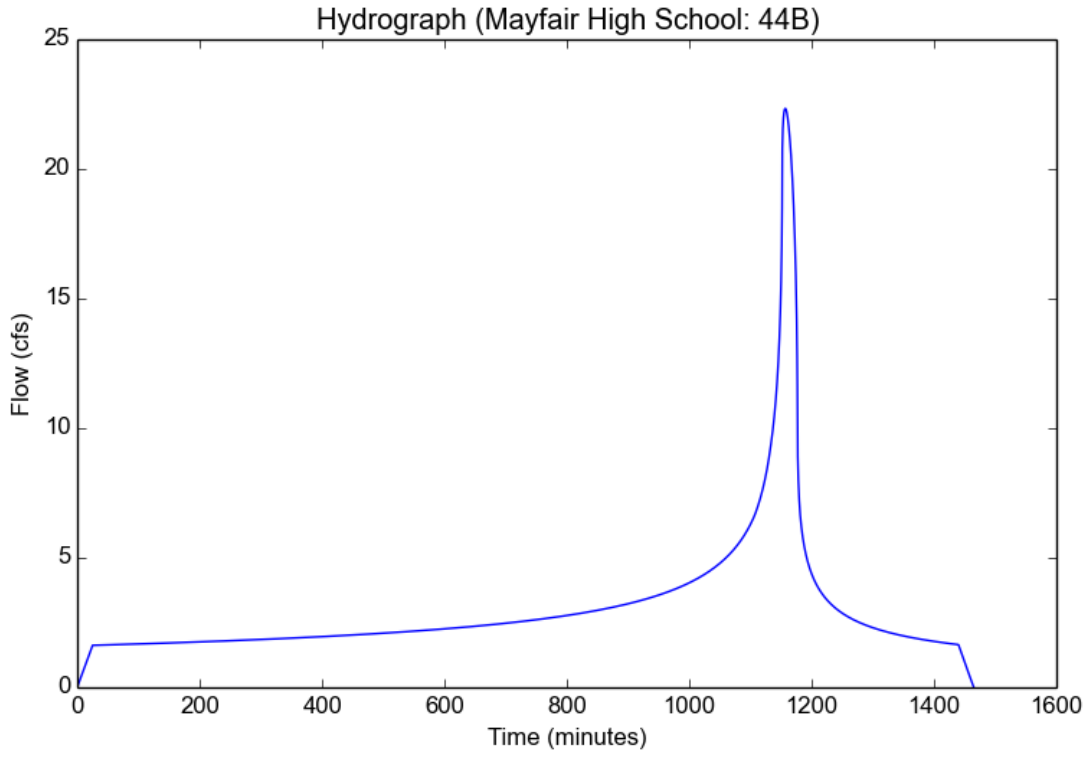

Peak Flow Hydrologic Analysis

File location: C:/working/Mayfair/Mayfair High School Report-10yr.pdf
Version: HydroCalc 0.3.1-beta

Input Parameters

Project Name	Mayfair High School
Subarea ID	45D
Area (ac)	34.5
Flow Path Length (ft)	2386.0
Flow Path Slope (vft/hft)	0.001
50-yr Rainfall Depth (in)	5.7
Percent Impervious	0.8
Soil Type	6
Design Storm Frequency	10-yr
Fire Factor	0
LID	False

Output Results

Modeled (10-yr) Rainfall Depth (in)	4.0698
Peak Intensity (in/hr)	1.046
Undeveloped Runoff Coefficient (Cu)	0.5937
Developed Runoff Coefficient (Cd)	0.8387
Time of Concentration (min)	30.0
Clear Peak Flow Rate (cfs)	30.2685
Burned Peak Flow Rate (cfs)	30.2685
24-Hr Clear Runoff Volume (ac-ft)	8.7532
24-Hr Clear Runoff Volume (cu-ft)	381289.397

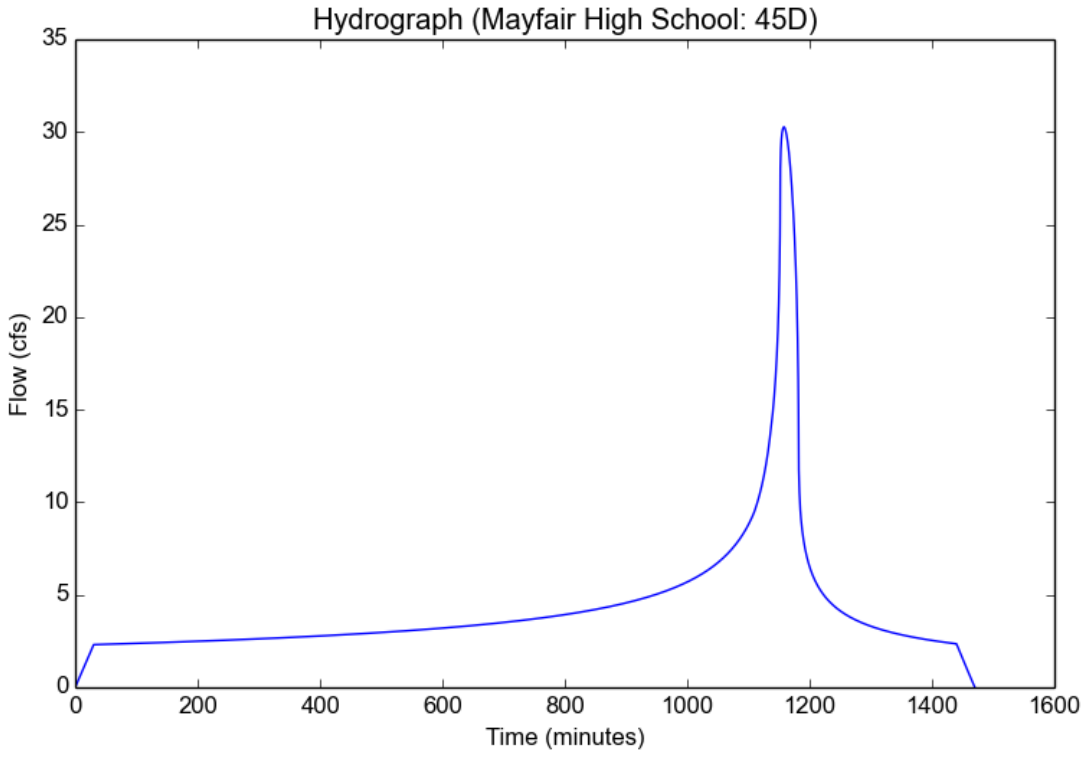

Peak Flow Hydrologic Analysis

File location: C:/working/Mayfair/Mayfair High School Report-10yr.pdf
Version: HydroCalc 0.3.1-beta

Input Parameters

Project Name	Mayfair High School
Subarea ID	47D
Area (ac)	27.2
Flow Path Length (ft)	2385.0
Flow Path Slope (vft/hft)	0.001
50-yr Rainfall Depth (in)	5.7
Percent Impervious	0.42
Soil Type	6
Design Storm Frequency	10-yr
Fire Factor	0
LID	False

Output Results

Modeled (10-yr) Rainfall Depth (in)	4.0698
Peak Intensity (in/hr)	1.046
Undeveloped Runoff Coefficient (Cu)	0.5937
Developed Runoff Coefficient (Cd)	0.7223
Time of Concentration (min)	30.0
Clear Peak Flow Rate (cfs)	20.5521
Burned Peak Flow Rate (cfs)	20.5521
24-Hr Clear Runoff Volume (ac-ft)	4.3688
24-Hr Clear Runoff Volume (cu-ft)	190303.0764

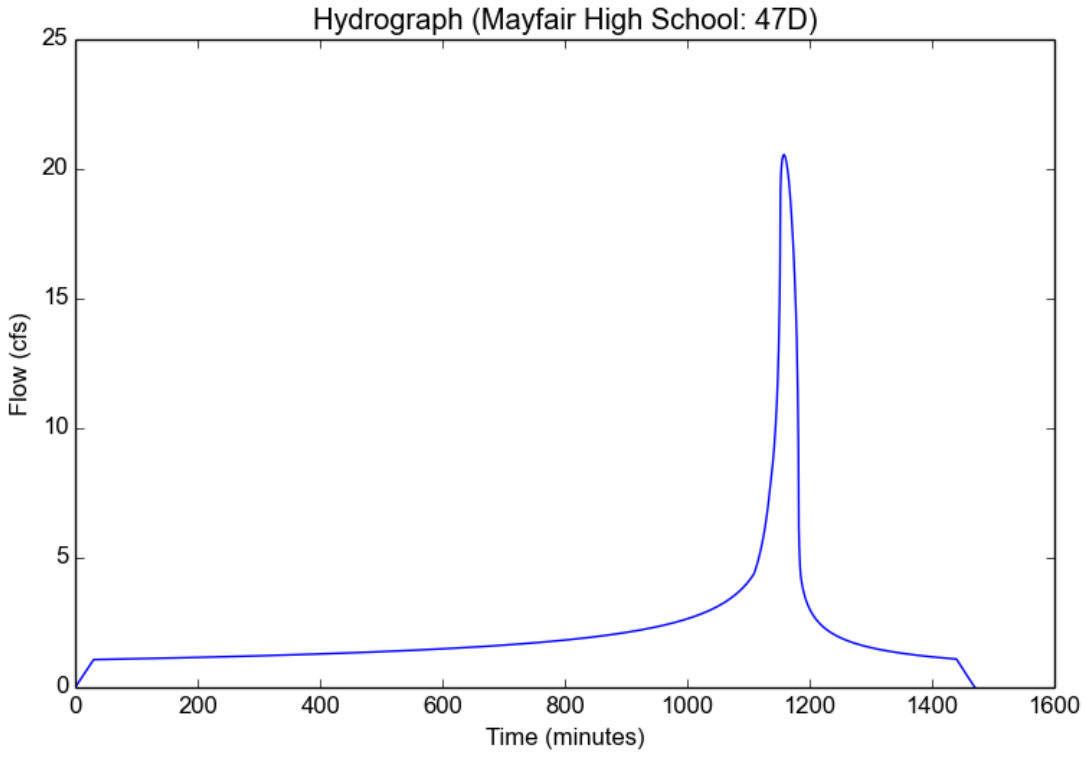

Peak Flow Hydrologic Analysis

File location: C:/working/Mayfair/Mayfair High School Report-10yr.pdf
Version: HydroCalc 0.3.1-beta

Input Parameters

Project Name	Mayfair High School
Subarea ID	49B
Area (ac)	24.9
Flow Path Length (ft)	1247.0
Flow Path Slope (vft/hft)	0.001
50-yr Rainfall Depth (in)	5.7
Percent Impervious	0.42
Soil Type	6
Design Storm Frequency	10-yr
Fire Factor	0
LID	False

Output Results

Modeled (10-yr) Rainfall Depth (in)	4.0698
Peak Intensity (in/hr)	1.0805
Undeveloped Runoff Coefficient (Cu)	0.6001
Developed Runoff Coefficient (Cd)	0.726
Time of Concentration (min)	28.0
Clear Peak Flow Rate (cfs)	19.5336
Burned Peak Flow Rate (cfs)	19.5336
24-Hr Clear Runoff Volume (ac-ft)	3.9998
24-Hr Clear Runoff Volume (cu-ft)	174229.8206

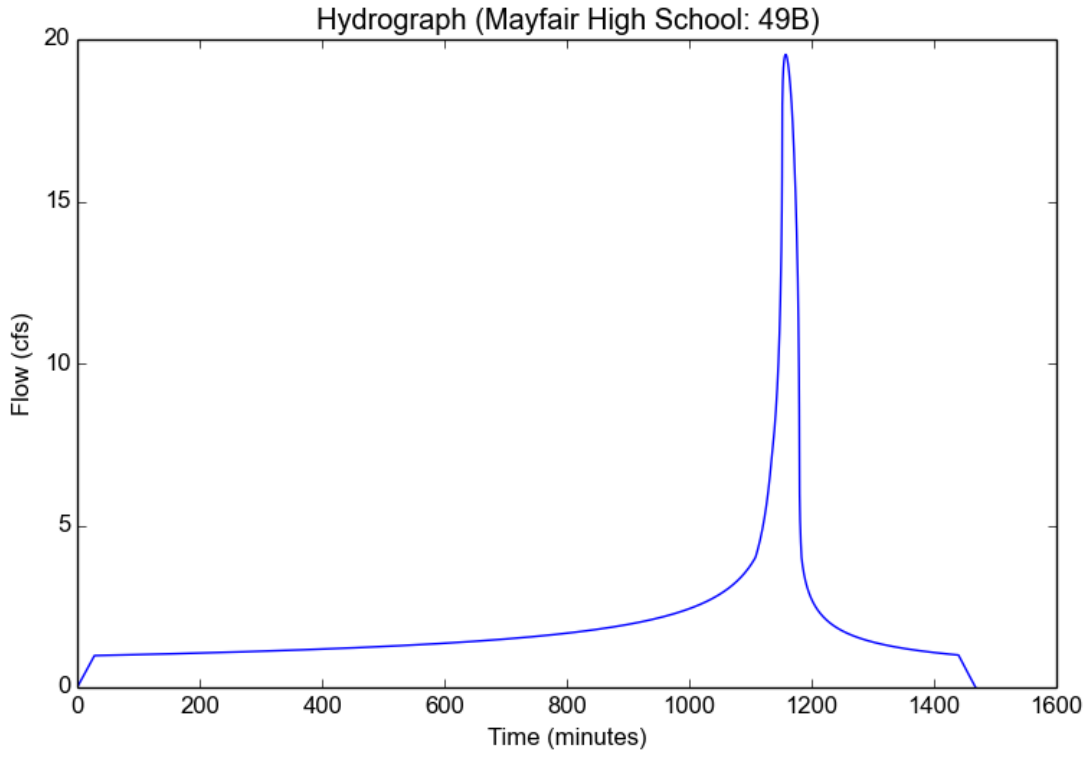

Peak Flow Hydrologic Analysis

File location: C:/working/Mayfair/Mayfair High School Report-10yr.pdf
Version: HydroCalc 0.3.1-beta

Input Parameters

Project Name	Mayfair High School
Subarea ID	51B
Area (ac)	23.2
Flow Path Length (ft)	1793.0
Flow Path Slope (vft/hft)	0.002
50-yr Rainfall Depth (in)	5.7
Percent Impervious	0.42
Soil Type	6
Design Storm Frequency	10-yr
Fire Factor	0
LID	False

Output Results

Modeled (10-yr) Rainfall Depth (in)	4.0698
Peak Intensity (in/hr)	1.046
Undeveloped Runoff Coefficient (Cu)	0.5937
Developed Runoff Coefficient (Cd)	0.7223
Time of Concentration (min)	30.0
Clear Peak Flow Rate (cfs)	17.5298
Burned Peak Flow Rate (cfs)	17.5298
24-Hr Clear Runoff Volume (ac-ft)	3.7263
24-Hr Clear Runoff Volume (cu-ft)	162317.3299

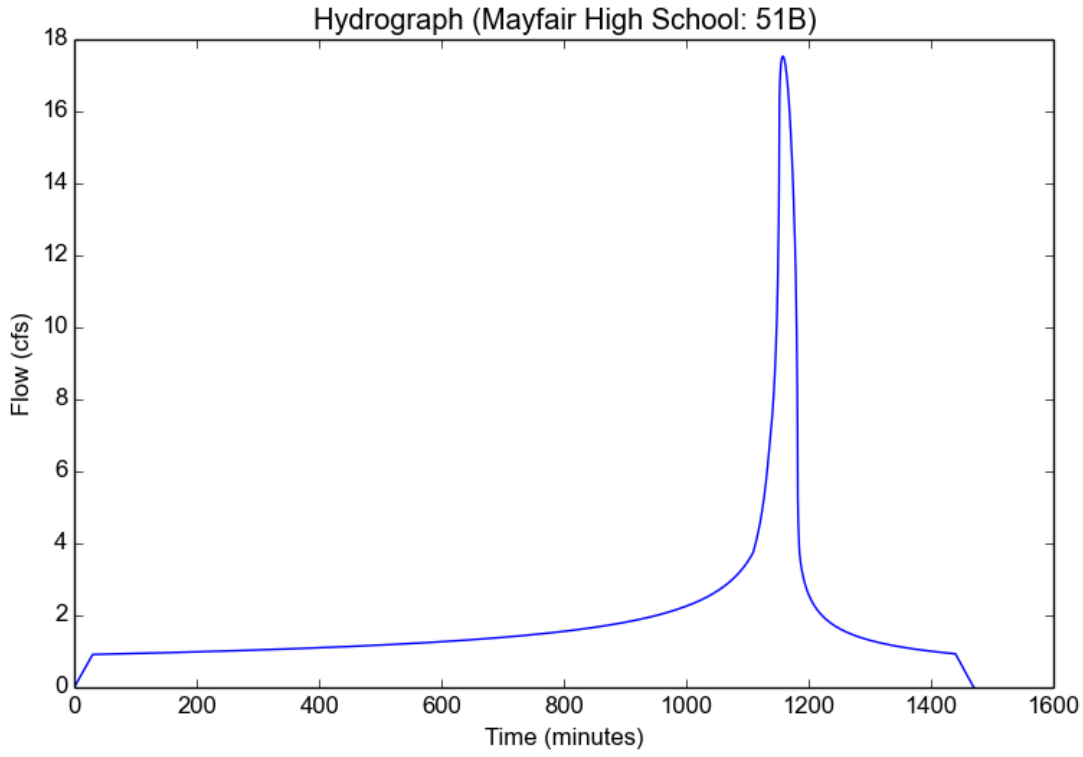

Peak Flow Hydrologic Analysis

File location: C:/working/Mayfair/Mayfair High School Report-10yr.pdf
Version: HydroCalc 0.3.1-beta

Input Parameters

Project Name	Mayfair High School
Subarea ID	52E
Area (ac)	34.7
Flow Path Length (ft)	1424.0
Flow Path Slope (vft/hft)	0.002
50-yr Rainfall Depth (in)	5.7
Percent Impervious	0.42
Soil Type	6
Design Storm Frequency	10-yr
Fire Factor	0
LID	False

Output Results

Modeled (10-yr) Rainfall Depth (in)	4.0698
Peak Intensity (in/hr)	1.0991
Undeveloped Runoff Coefficient (Cu)	0.6035
Developed Runoff Coefficient (Cd)	0.728
Time of Concentration (min)	27.0
Clear Peak Flow Rate (cfs)	27.7668
Burned Peak Flow Rate (cfs)	27.7668
24-Hr Clear Runoff Volume (ac-ft)	5.5742
24-Hr Clear Runoff Volume (cu-ft)	242812.5436

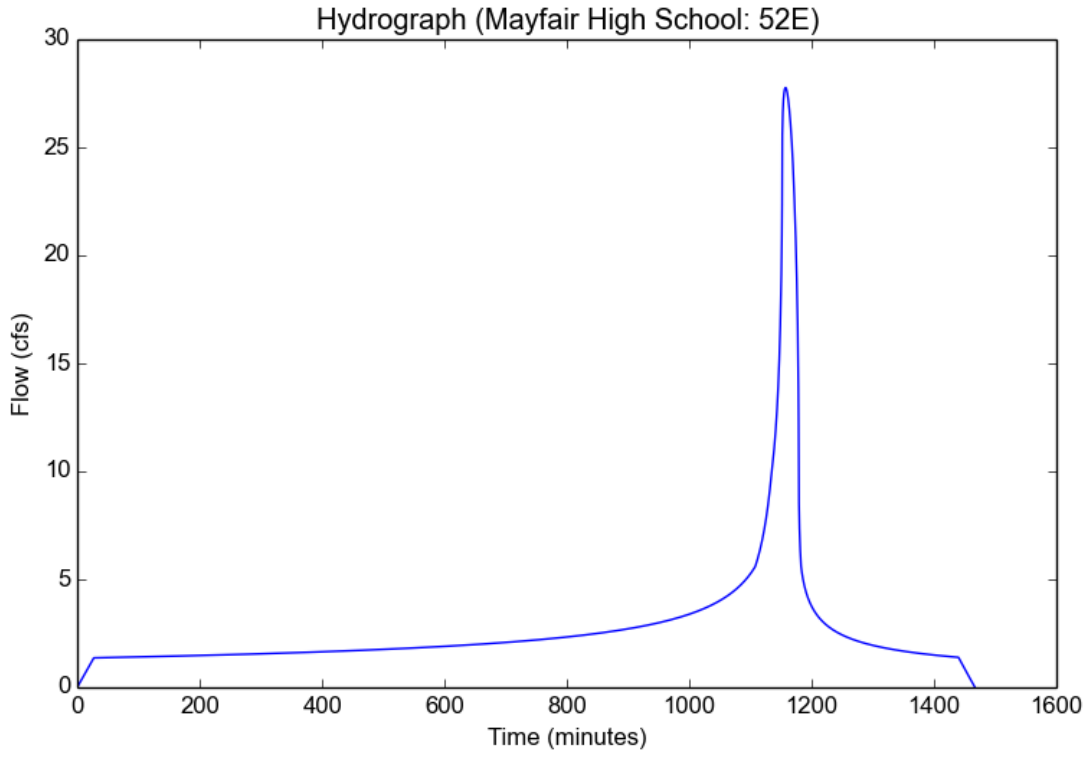

Peak Flow Hydrologic Analysis

File location: C:/working/Mayfair/Mayfair High School Report-10yr.pdf
Version: HydroCalc 0.3.1-beta

Input Parameters

Project Name	Mayfair High School
Subarea ID	56A
Area (ac)	38.9
Flow Path Length (ft)	1503.0
Flow Path Slope (vft/hft)	0.003
50-yr Rainfall Depth (in)	5.7
Percent Impervious	0.5
Soil Type	6
Design Storm Frequency	10-yr
Fire Factor	0
LID	False

Output Results

Modeled (10-yr) Rainfall Depth (in)	4.0698
Peak Intensity (in/hr)	1.1396
Undeveloped Runoff Coefficient (Cu)	0.611
Developed Runoff Coefficient (Cd)	0.7555
Time of Concentration (min)	25.0
Clear Peak Flow Rate (cfs)	33.4912
Burned Peak Flow Rate (cfs)	33.4912
24-Hr Clear Runoff Volume (ac-ft)	7.0117
24-Hr Clear Runoff Volume (cu-ft)	305427.8596

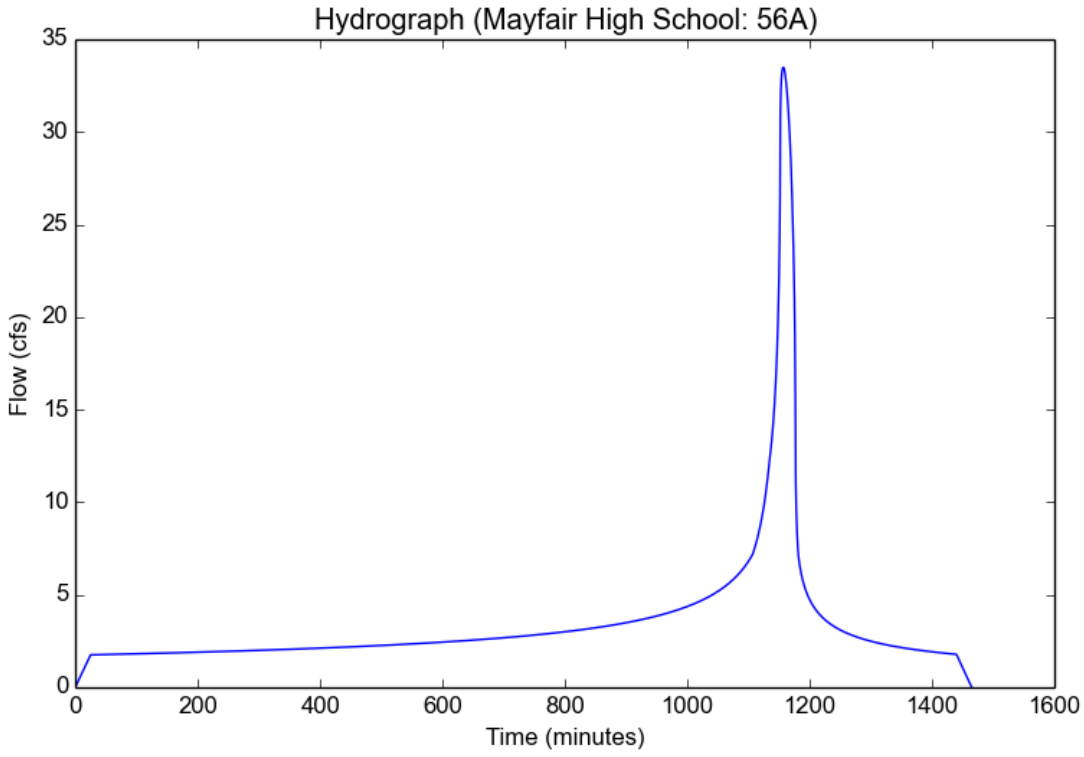

Peak Flow Hydrologic Analysis

File location: C:/working/Mayfair/Mayfair High School Report-10yr.pdf
Version: HydroCalc 0.3.1-beta

Input Parameters

Project Name	Mayfair High School
Subarea ID	57A
Area (ac)	22.1
Flow Path Length (ft)	1621.0
Flow Path Slope (vft/hft)	0.002
50-yr Rainfall Depth (in)	5.7
Percent Impervious	0.42
Soil Type	6
Design Storm Frequency	10-yr
Fire Factor	0
LID	False

Output Results

Modeled (10-yr) Rainfall Depth (in)	4.0698
Peak Intensity (in/hr)	1.0628
Undeveloped Runoff Coefficient (Cu)	0.5968
Developed Runoff Coefficient (Cd)	0.7241
Time of Concentration (min)	29.0
Clear Peak Flow Rate (cfs)	17.009
Burned Peak Flow Rate (cfs)	17.009
24-Hr Clear Runoff Volume (ac-ft)	3.5498
24-Hr Clear Runoff Volume (cu-ft)	154630.4752

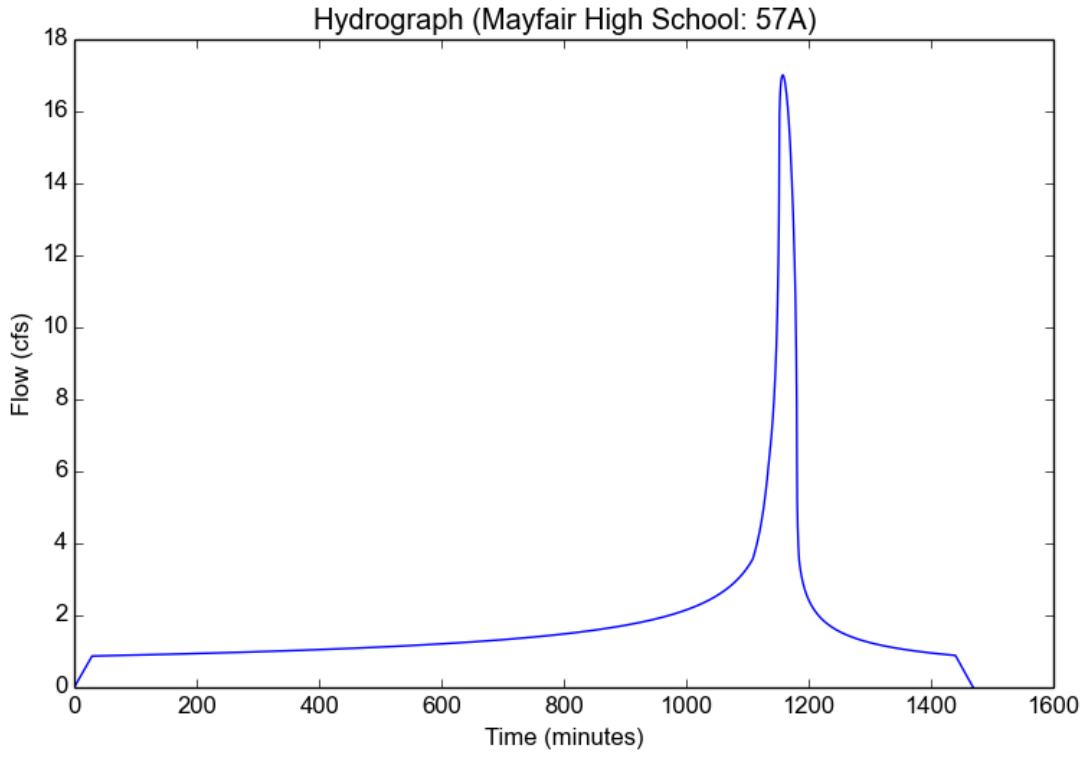

Peak Flow Hydrologic Analysis

File location: C:/working/Mayfair/Mayfair High School Report-50yr.pdf
Version: HydroCalc 0.3.1-beta

Input Parameters

Project Name	Mayfair High School
Subarea ID	01A
Area (ac)	33.2
Flow Path Length (ft)	1682.0
Flow Path Slope (vft/hft)	0.002
50-yr Rainfall Depth (in)	5.9
Percent Impervious	0.86
Soil Type	6
Design Storm Frequency	50-yr
Fire Factor	0
LID	False

Output Results

Modeled (50-yr) Rainfall Depth (in)	5.9
Peak Intensity (in/hr)	1.8348
Undeveloped Runoff Coefficient (Cu)	0.7142
Developed Runoff Coefficient (Cd)	0.874
Time of Concentration (min)	20.0
Clear Peak Flow Rate (cfs)	53.2387
Burned Peak Flow Rate (cfs)	53.2387
24-Hr Clear Runoff Volume (ac-ft)	13.0088
24-Hr Clear Runoff Volume (cu-ft)	566661.3928

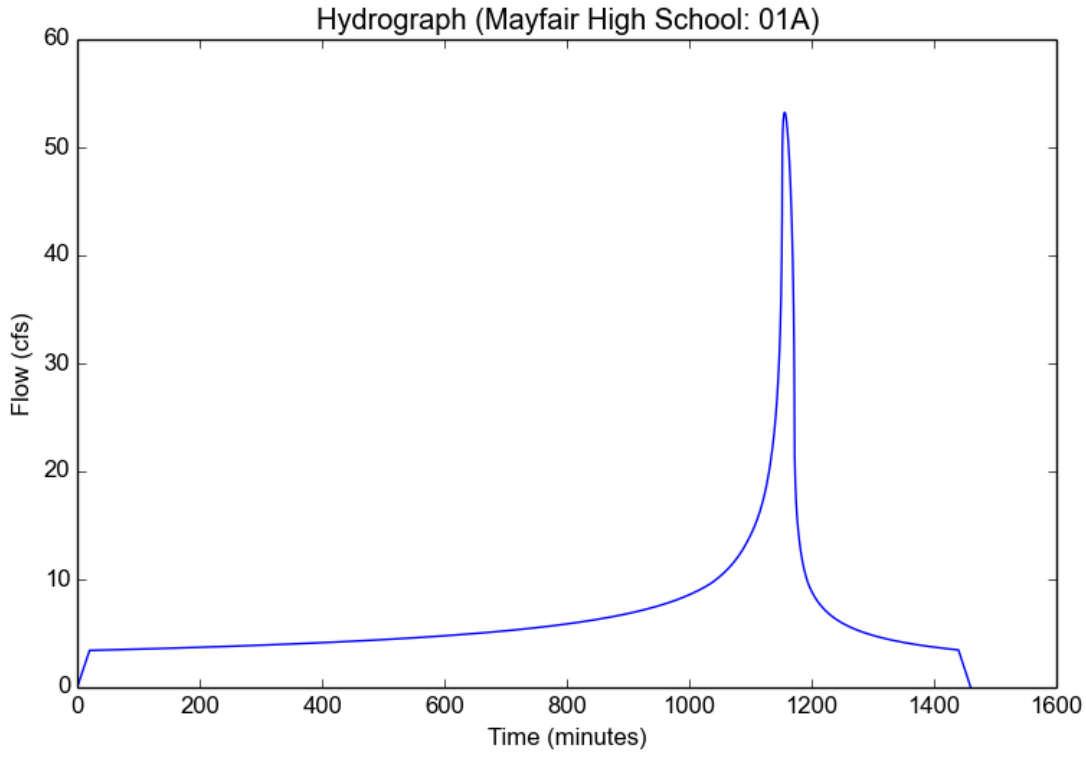

Peak Flow Hydrologic Analysis

File location: C:/working/Mayfair/Mayfair High School Report-50yr.pdf
Version: HydroCalc 0.3.1-beta

Input Parameters

Project Name	Mayfair High School
Subarea ID	03A
Area (ac)	37.4
Flow Path Length (ft)	2241.0
Flow Path Slope (vft/hft)	0.002
50-yr Rainfall Depth (in)	5.9
Percent Impervious	0.86
Soil Type	6
Design Storm Frequency	50-yr
Fire Factor	0
LID	False

Output Results

Modeled (50-yr) Rainfall Depth (in)	5.9
Peak Intensity (in/hr)	1.6521
Undeveloped Runoff Coefficient (Cu)	0.6941
Developed Runoff Coefficient (Cd)	0.8712
Time of Concentration (min)	25.0
Clear Peak Flow Rate (cfs)	53.829
Burned Peak Flow Rate (cfs)	53.829
24-Hr Clear Runoff Volume (ac-ft)	14.6536
24-Hr Clear Runoff Volume (cu-ft)	638311.7889

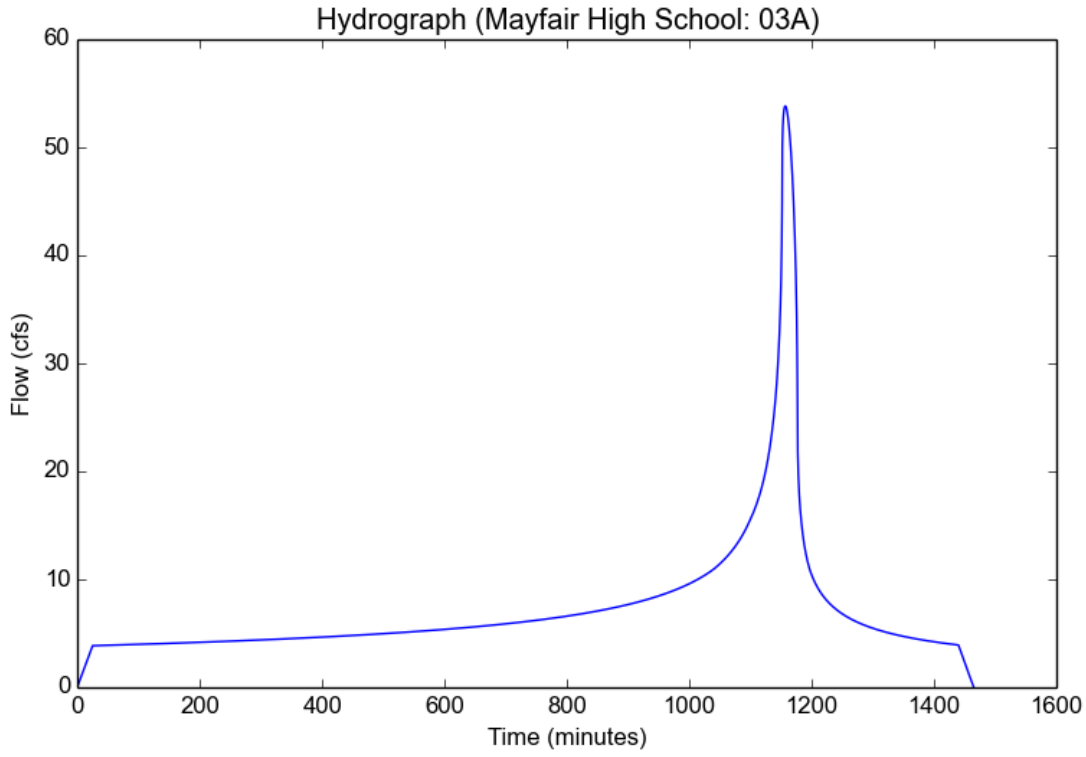

Peak Flow Hydrologic Analysis

File location: C:/working/Mayfair/Mayfair High School Report-50yr.pdf
Version: HydroCalc 0.3.1-beta

Input Parameters

Project Name	Mayfair High School
Subarea ID	05A
Area (ac)	25.4
Flow Path Length (ft)	2507.0
Flow Path Slope (vft/hft)	0.002
50-yr Rainfall Depth (in)	5.9
Percent Impervious	0.86
Soil Type	6
Design Storm Frequency	50-yr
Fire Factor	0
LID	False

Output Results

Modeled (50-yr) Rainfall Depth (in)	5.9
Peak Intensity (in/hr)	1.6219
Undeveloped Runoff Coefficient (Cu)	0.6908
Developed Runoff Coefficient (Cd)	0.8707
Time of Concentration (min)	26.0
Clear Peak Flow Rate (cfs)	35.8708
Burned Peak Flow Rate (cfs)	35.8708
24-Hr Clear Runoff Volume (ac-ft)	9.9518
24-Hr Clear Runoff Volume (cu-ft)	433502.2748

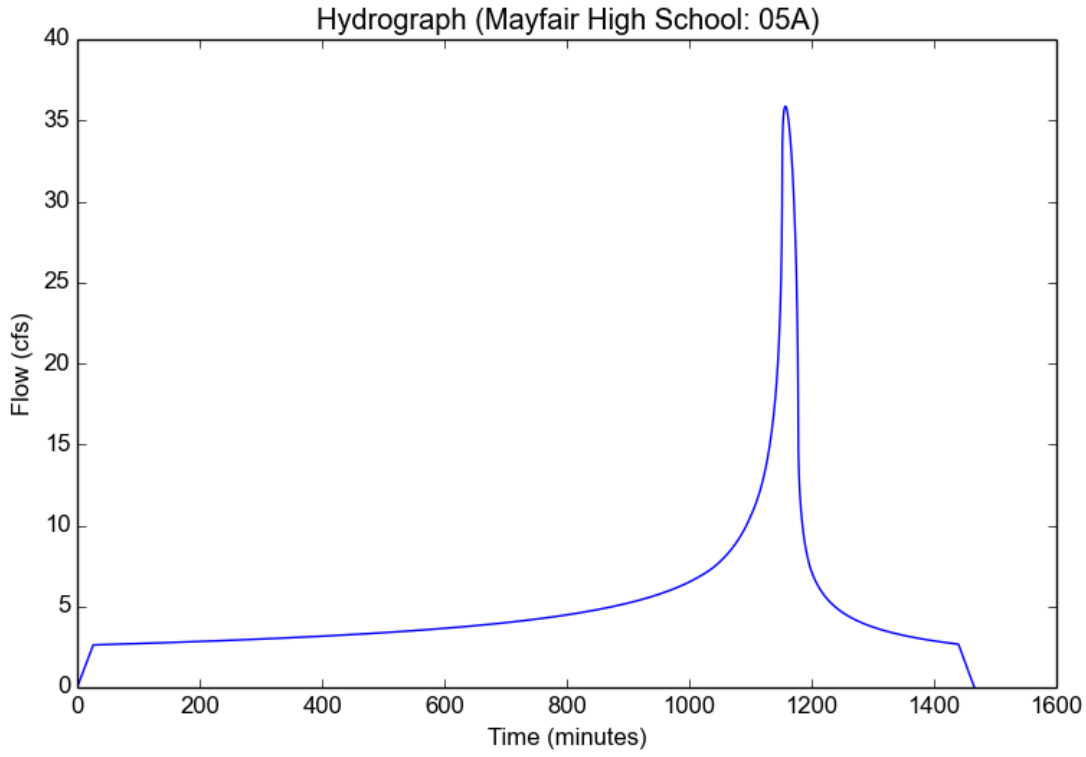

Peak Flow Hydrologic Analysis

File location: C:/working/Mayfair/Mayfair High School Report-50yr.pdf
Version: HydroCalc 0.3.1-beta

Input Parameters

Project Name	Mayfair High School
Subarea ID	06A
Area (ac)	24.3
Flow Path Length (ft)	2507.0
Flow Path Slope (vft/hft)	0.002
50-yr Rainfall Depth (in)	5.9
Percent Impervious	0.64
Soil Type	6
Design Storm Frequency	50-yr
Fire Factor	0
LID	False

Output Results

Modeled (50-yr) Rainfall Depth (in)	5.9
Peak Intensity (in/hr)	1.5934
Undeveloped Runoff Coefficient (Cu)	0.6877
Developed Runoff Coefficient (Cd)	0.8236
Time of Concentration (min)	27.0
Clear Peak Flow Rate (cfs)	31.8883
Burned Peak Flow Rate (cfs)	31.8883
24-Hr Clear Runoff Volume (ac-ft)	7.7243
24-Hr Clear Runoff Volume (cu-ft)	336471.3223

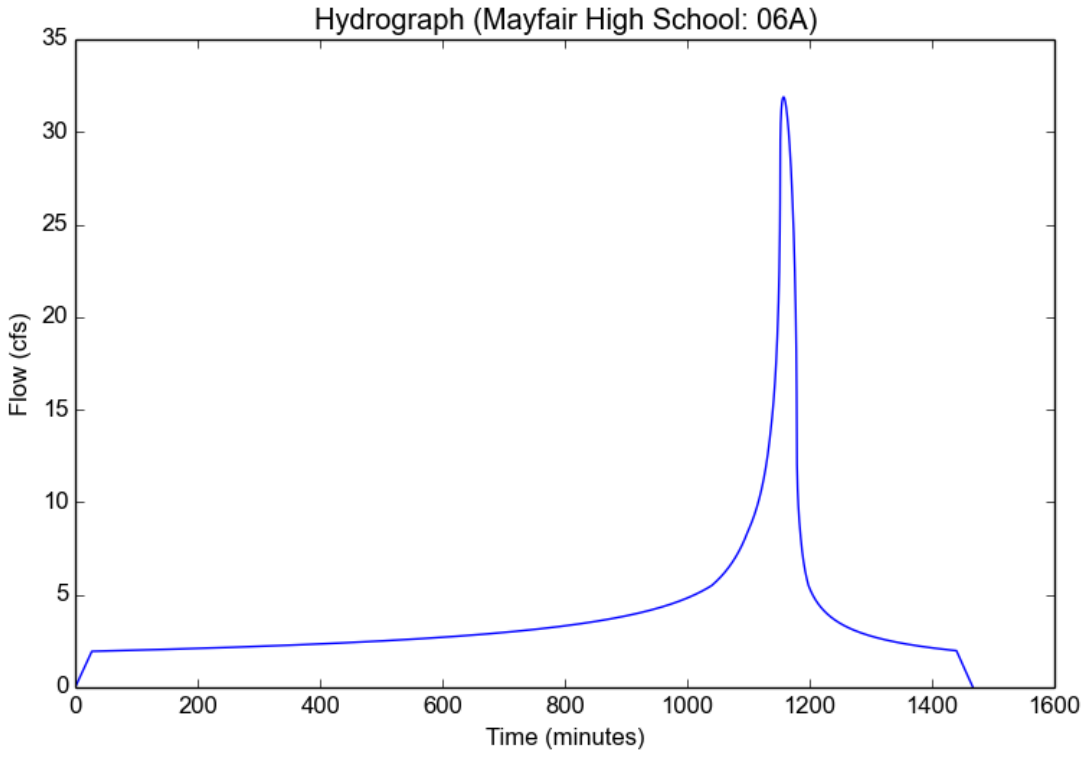

Peak Flow Hydrologic Analysis

File location: C:/working/Mayfair/Mayfair High School Report-50yr.pdf
Version: HydroCalc 0.3.1-beta

Input Parameters

Project Name	Mayfair High School
Subarea ID	08A
Area (ac)	24.0
Flow Path Length (ft)	2250.0
Flow Path Slope (vft/hft)	0.003
50-yr Rainfall Depth (in)	5.9
Percent Impervious	0.42
Soil Type	6
Design Storm Frequency	50-yr
Fire Factor	0
LID	False

Output Results

Modeled (50-yr) Rainfall Depth (in)	5.9
Peak Intensity (in/hr)	1.6521
Undeveloped Runoff Coefficient (Cu)	0.6941
Developed Runoff Coefficient (Cd)	0.7806
Time of Concentration (min)	25.0
Clear Peak Flow Rate (cfs)	30.9506
Burned Peak Flow Rate (cfs)	30.9506
24-Hr Clear Runoff Volume (ac-ft)	5.8554
24-Hr Clear Runoff Volume (cu-ft)	255059.3197

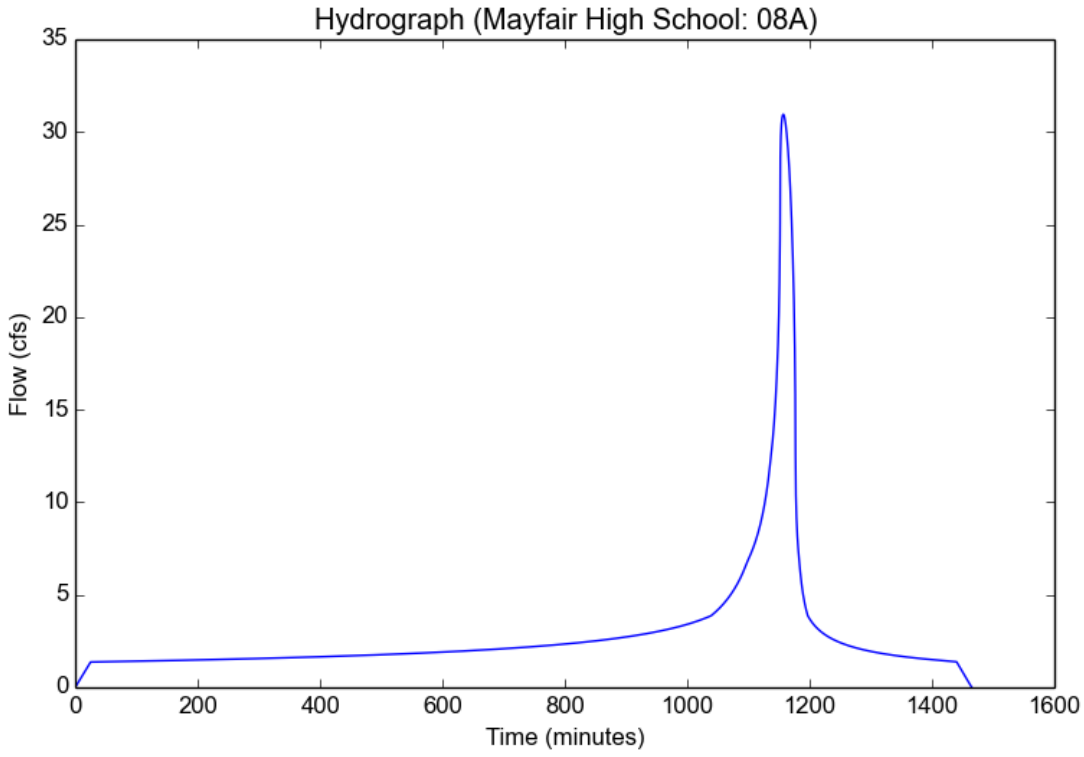

Peak Flow Hydrologic Analysis

File location: C:/working/Mayfair/Mayfair High School Report-50yr.pdf
Version: HydroCalc 0.3.1-beta

Input Parameters

Project Name	Mayfair High School
Subarea ID	09A
Area (ac)	28.4
Flow Path Length (ft)	2298.0
Flow Path Slope (vft/hft)	0.003
50-yr Rainfall Depth (in)	5.9
Percent Impervious	0.42
Soil Type	6
Design Storm Frequency	50-yr
Fire Factor	0
LID	False

Output Results

Modeled (50-yr) Rainfall Depth (in)	5.9
Peak Intensity (in/hr)	1.6521
Undeveloped Runoff Coefficient (Cu)	0.6941
Developed Runoff Coefficient (Cd)	0.7806
Time of Concentration (min)	25.0
Clear Peak Flow Rate (cfs)	36.6249
Burned Peak Flow Rate (cfs)	36.6249
24-Hr Clear Runoff Volume (ac-ft)	6.9288
24-Hr Clear Runoff Volume (cu-ft)	301820.195

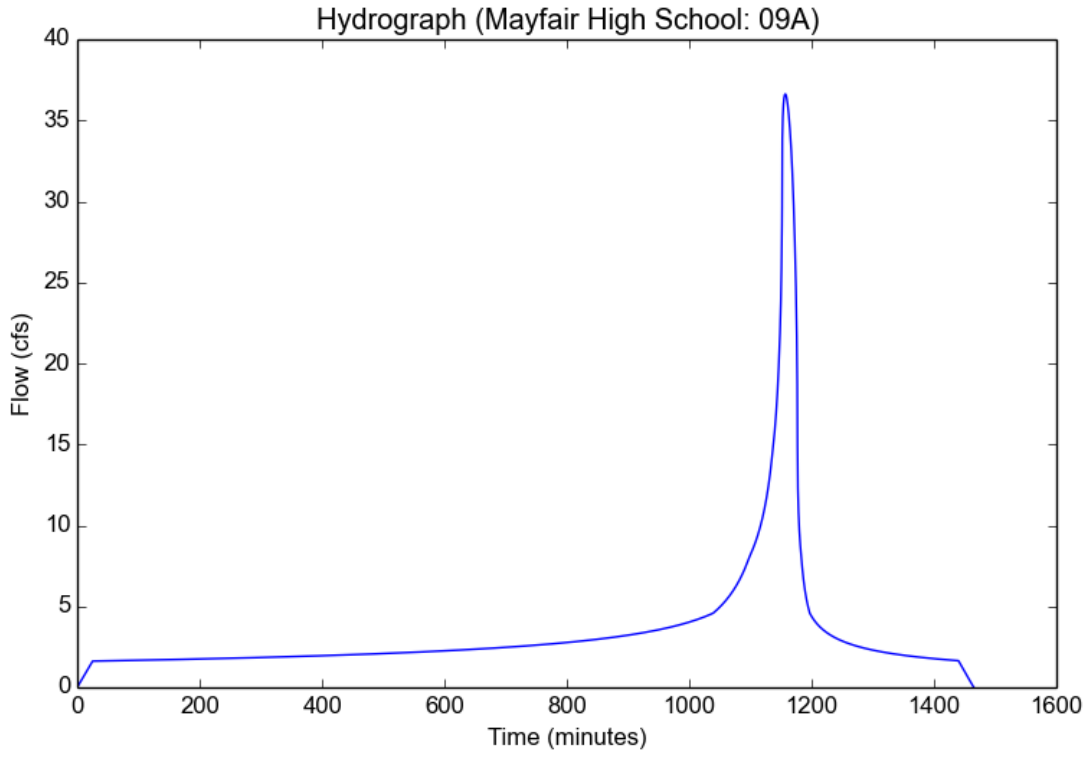

Peak Flow Hydrologic Analysis

File location: C:/working/Mayfair/Mayfair High School Report-50yr.pdf
Version: HydroCalc 0.3.1-beta

Input Parameters

Project Name	Mayfair High School
Subarea ID	11A
Area (ac)	29.6
Flow Path Length (ft)	2959.0
Flow Path Slope (vft/hft)	0.003
50-yr Rainfall Depth (in)	5.9
Percent Impervious	0.42
Soil Type	6
Design Storm Frequency	50-yr
Fire Factor	0
LID	False

Output Results

Modeled (50-yr) Rainfall Depth (in)	5.9
Peak Intensity (in/hr)	1.5164
Undeveloped Runoff Coefficient (Cu)	0.6792
Developed Runoff Coefficient (Cd)	0.7719
Time of Concentration (min)	30.0
Clear Peak Flow Rate (cfs)	34.6499
Burned Peak Flow Rate (cfs)	34.6499
24-Hr Clear Runoff Volume (ac-ft)	7.2192
24-Hr Clear Runoff Volume (cu-ft)	314468.9063

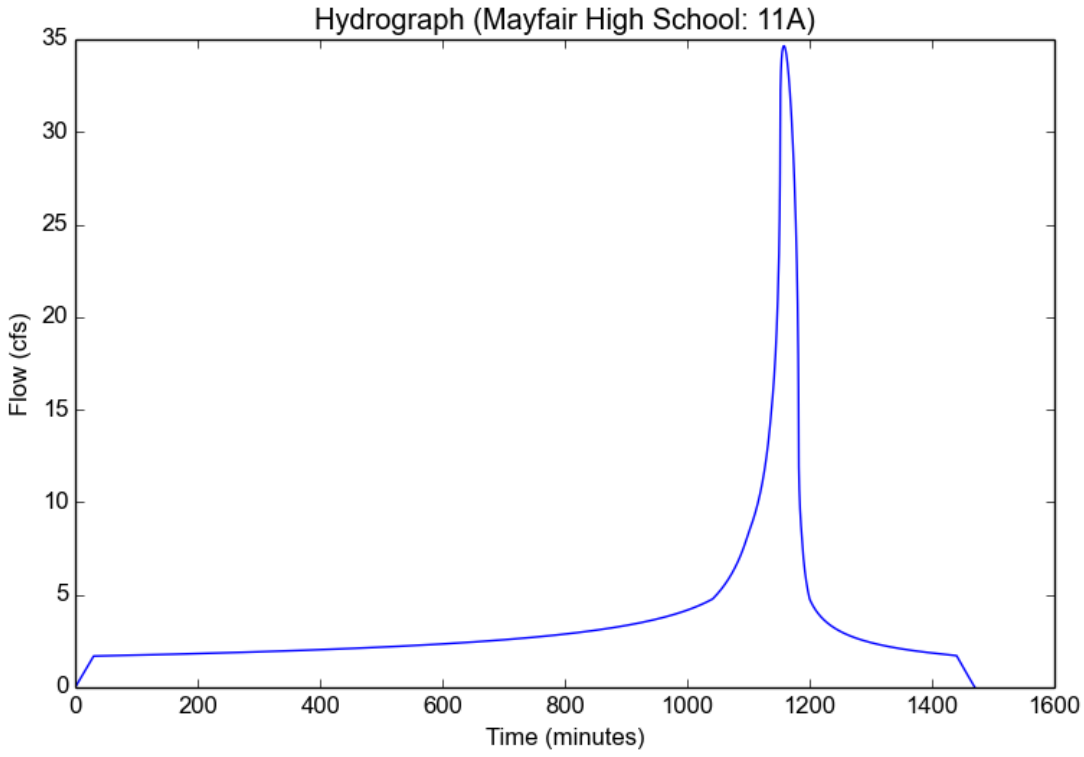

Peak Flow Hydrologic Analysis

File location: C:/working/Mayfair/Mayfair High School Report-50yr.pdf
Version: HydroCalc 0.3.1-beta

Input Parameters

Project Name	Mayfair High School
Subarea ID	13A
Area (ac)	30.3
Flow Path Length (ft)	3268.0
Flow Path Slope (vft/hft)	0.001
50-yr Rainfall Depth (in)	5.9
Percent Impervious	0.42
Soil Type	6
Design Storm Frequency	50-yr
Fire Factor	0
LID	False

Output Results

Modeled (50-yr) Rainfall Depth (in)	5.9
Peak Intensity (in/hr)	1.5164
Undeveloped Runoff Coefficient (Cu)	0.6792
Developed Runoff Coefficient (Cd)	0.7719
Time of Concentration (min)	30.0
Clear Peak Flow Rate (cfs)	35.4694
Burned Peak Flow Rate (cfs)	35.4694
24-Hr Clear Runoff Volume (ac-ft)	7.3899
24-Hr Clear Runoff Volume (cu-ft)	321905.671

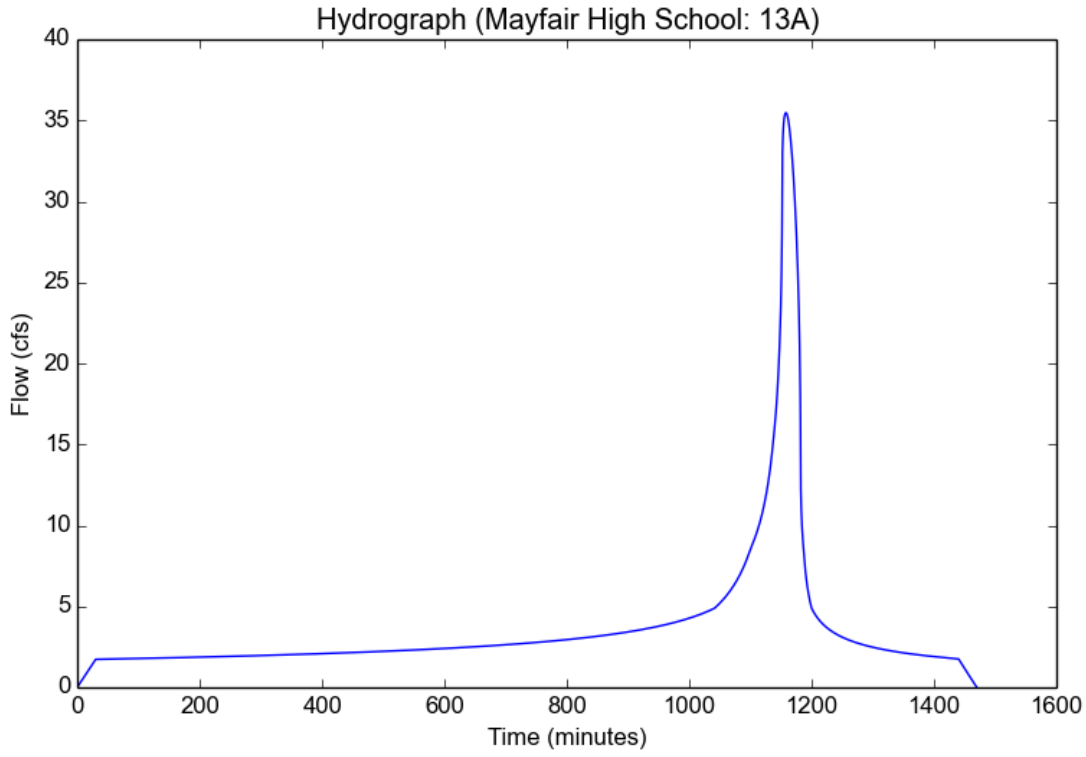

Peak Flow Hydrologic Analysis

File location: C:/working/Mayfair/Mayfair High School Report-50yr.pdf
Version: HydroCalc 0.3.1-beta

Input Parameters

Project Name	Mayfair High School
Subarea ID	15A
Area (ac)	10.7
Flow Path Length (ft)	785.0
Flow Path Slope (vft/hft)	0.002
50-yr Rainfall Depth (in)	5.9
Percent Impervious	0.42
Soil Type	6
Design Storm Frequency	50-yr
Fire Factor	0
LID	False

Output Results

Modeled (50-yr) Rainfall Depth (in)	5.9
Peak Intensity (in/hr)	2.2466
Undeveloped Runoff Coefficient (Cu)	0.7594
Developed Runoff Coefficient (Cd)	0.8184
Time of Concentration (min)	13.0
Clear Peak Flow Rate (cfs)	19.6735
Burned Peak Flow Rate (cfs)	19.6735
24-Hr Clear Runoff Volume (ac-ft)	2.6146
24-Hr Clear Runoff Volume (cu-ft)	113890.194

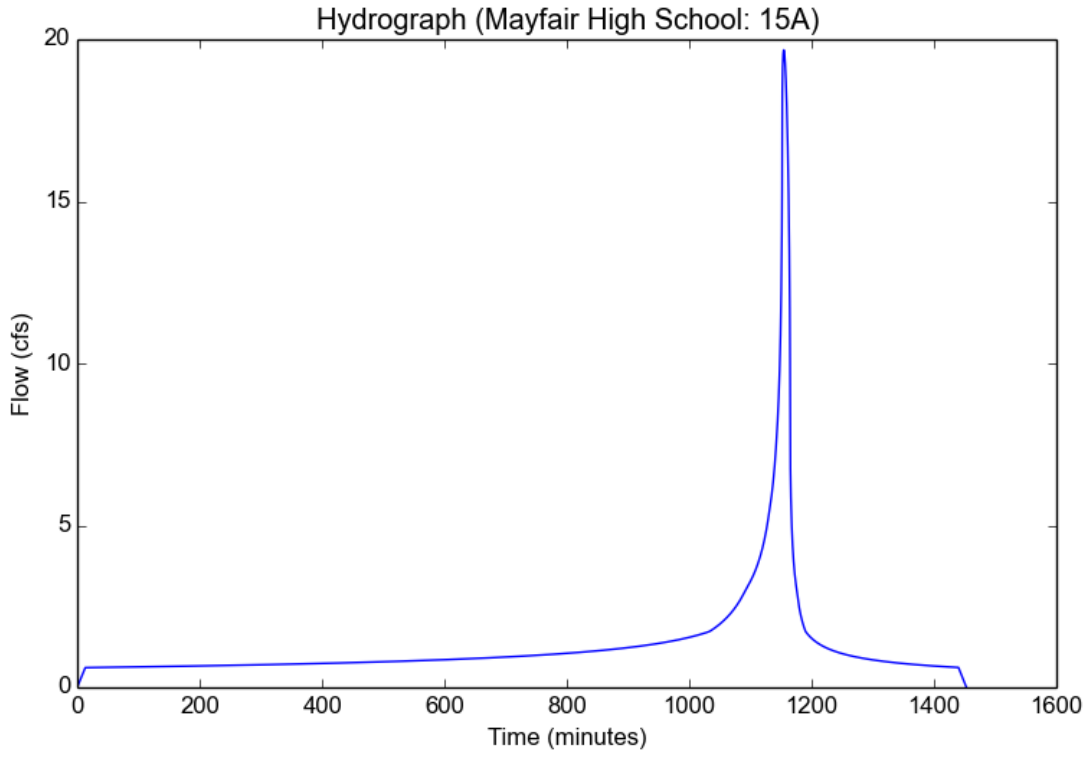

Peak Flow Hydrologic Analysis

File location: C:/working/Mayfair/Mayfair High School Report-50yr.pdf
Version: HydroCalc 0.3.1-beta

Input Parameters

Project Name	Mayfair High School
Subarea ID	17A
Area (ac)	32.7
Flow Path Length (ft)	1477.0
Flow Path Slope (vft/hft)	0.002
50-yr Rainfall Depth (in)	5.9
Percent Impervious	0.57
Soil Type	6
Design Storm Frequency	50-yr
Fire Factor	0
LID	False

Output Results

Modeled (50-yr) Rainfall Depth (in)	5.9
Peak Intensity (in/hr)	1.8348
Undeveloped Runoff Coefficient (Cu)	0.7142
Developed Runoff Coefficient (Cd)	0.8201
Time of Concentration (min)	20.0
Clear Peak Flow Rate (cfs)	49.2034
Burned Peak Flow Rate (cfs)	49.2034
24-Hr Clear Runoff Volume (ac-ft)	9.6282
24-Hr Clear Runoff Volume (cu-ft)	419405.7668

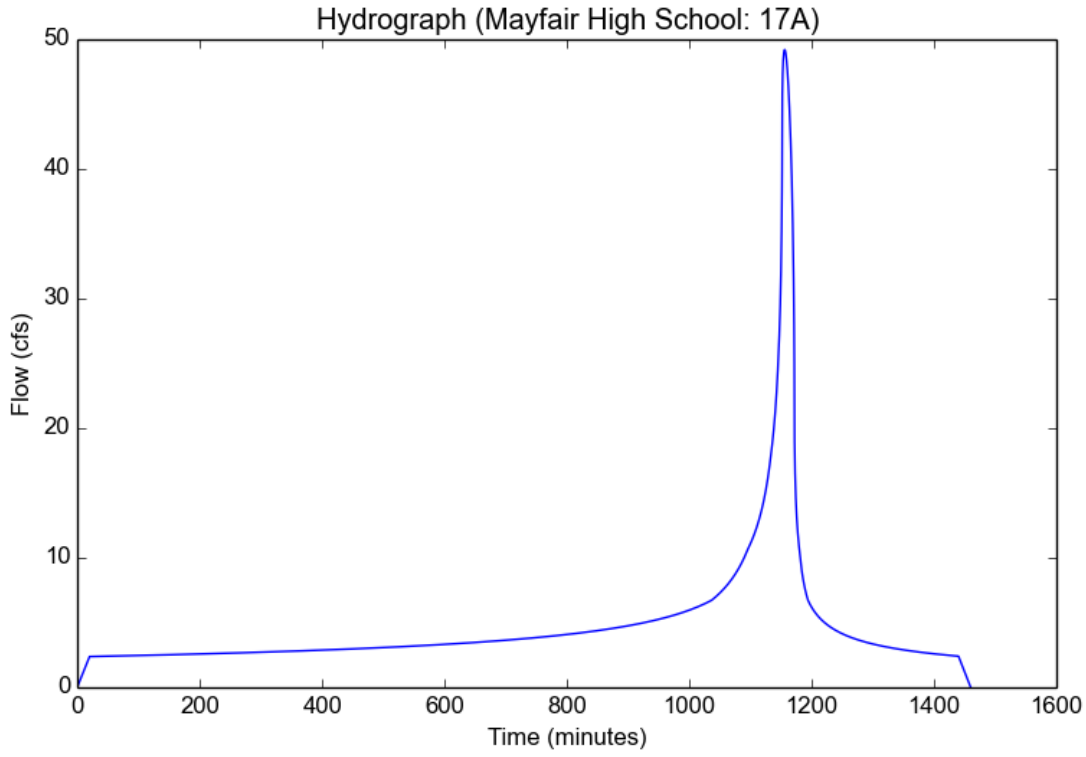

Peak Flow Hydrologic Analysis

File location: C:/working/Mayfair/Mayfair High School Report-50yr.pdf
Version: HydroCalc 0.3.1-beta

Input Parameters

Project Name	Mayfair High School
Subarea ID	19A
Area (ac)	41.7
Flow Path Length (ft)	1320.0
Flow Path Slope (vft/hft)	0.002
50-yr Rainfall Depth (in)	5.9
Percent Impervious	0.42
Soil Type	6
Design Storm Frequency	50-yr
Fire Factor	0
LID	False

Output Results

Modeled (50-yr) Rainfall Depth (in)	5.9
Peak Intensity (in/hr)	1.8796
Undeveloped Runoff Coefficient (Cu)	0.7191
Developed Runoff Coefficient (Cd)	0.7951
Time of Concentration (min)	19.0
Clear Peak Flow Rate (cfs)	62.3152
Burned Peak Flow Rate (cfs)	62.3152
24-Hr Clear Runoff Volume (ac-ft)	10.1787
24-Hr Clear Runoff Volume (cu-ft)	443385.3366

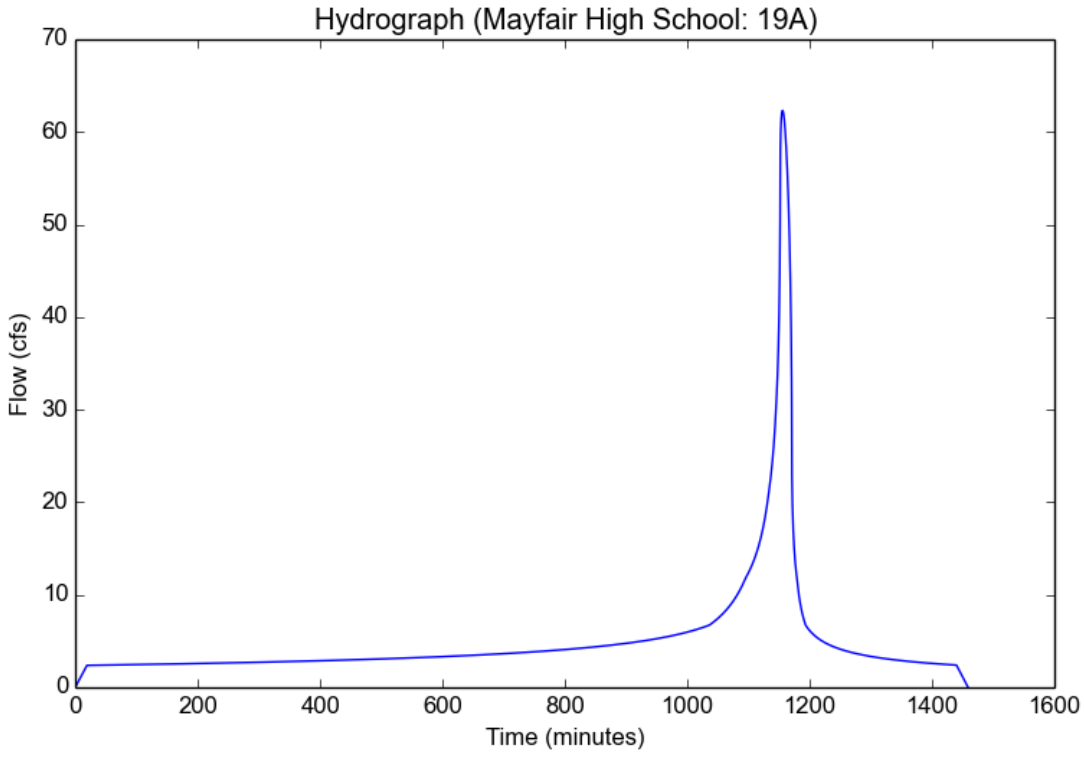

Peak Flow Hydrologic Analysis

File location: C:/working/Mayfair/Mayfair High School Report-50yr.pdf
Version: HydroCalc 0.3.1-beta

Input Parameters

Project Name	Mayfair High School
Subarea ID	20B
Area (ac)	34.8
Flow Path Length (ft)	2708.0
Flow Path Slope (vft/hft)	0.001
50-yr Rainfall Depth (in)	5.9
Percent Impervious	0.93
Soil Type	7
Design Storm Frequency	50-yr
Fire Factor	0
LID	False

Output Results

Modeled (50-yr) Rainfall Depth (in)	5.9
Peak Intensity (in/hr)	1.5164
Undeveloped Runoff Coefficient (Cu)	0.4409
Developed Runoff Coefficient (Cd)	0.8679
Time of Concentration (min)	30.0
Clear Peak Flow Rate (cfs)	45.7987
Burned Peak Flow Rate (cfs)	45.7987
24-Hr Clear Runoff Volume (ac-ft)	14.3675
24-Hr Clear Runoff Volume (cu-ft)	625847.5549

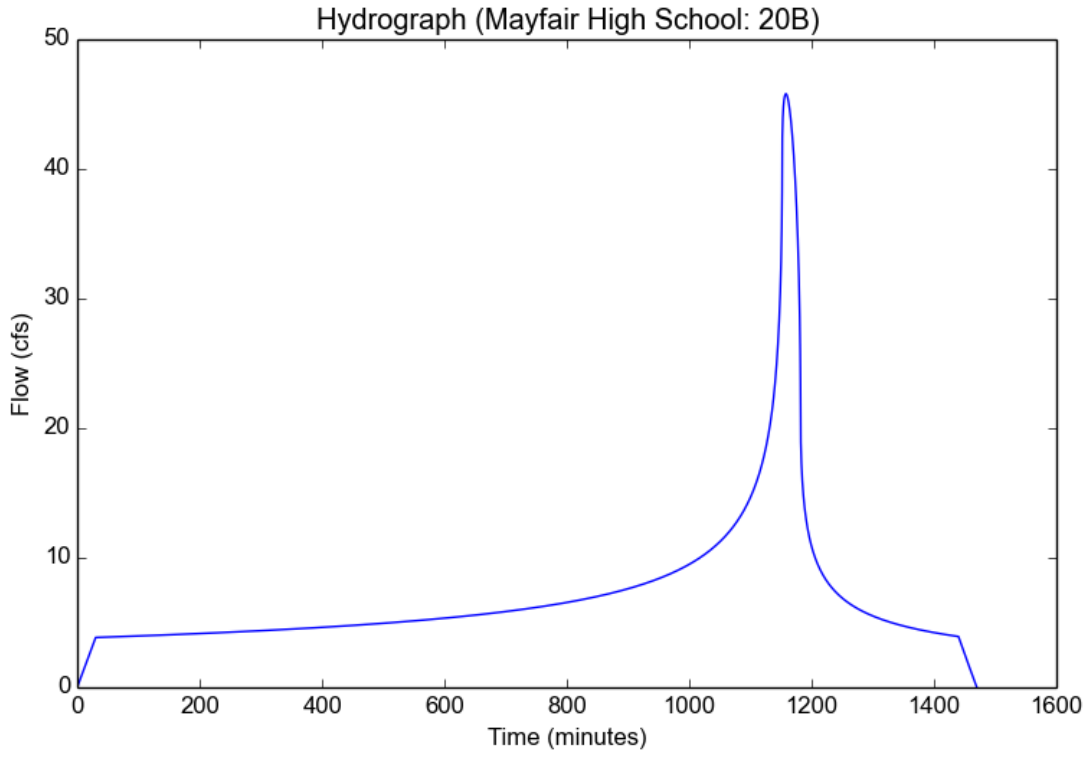

Peak Flow Hydrologic Analysis

File location: C:/working/Mayfair/Mayfair High School Report-50yr.pdf
Version: HydroCalc 0.3.1-beta

Input Parameters

Project Name	Mayfair High School
Subarea ID	22B
Area (ac)	20.9
Flow Path Length (ft)	1395.0
Flow Path Slope (vft/hft)	0.002
50-yr Rainfall Depth (in)	5.9
Percent Impervious	0.5
Soil Type	7
Design Storm Frequency	50-yr
Fire Factor	0
LID	False

Output Results

Modeled (50-yr) Rainfall Depth (in)	5.9
Peak Intensity (in/hr)	1.7932
Undeveloped Runoff Coefficient (Cu)	0.4955
Developed Runoff Coefficient (Cd)	0.6977
Time of Concentration (min)	21.0
Clear Peak Flow Rate (cfs)	26.1493
Burned Peak Flow Rate (cfs)	26.1493
24-Hr Clear Runoff Volume (ac-ft)	5.3065
24-Hr Clear Runoff Volume (cu-ft)	231152.4074

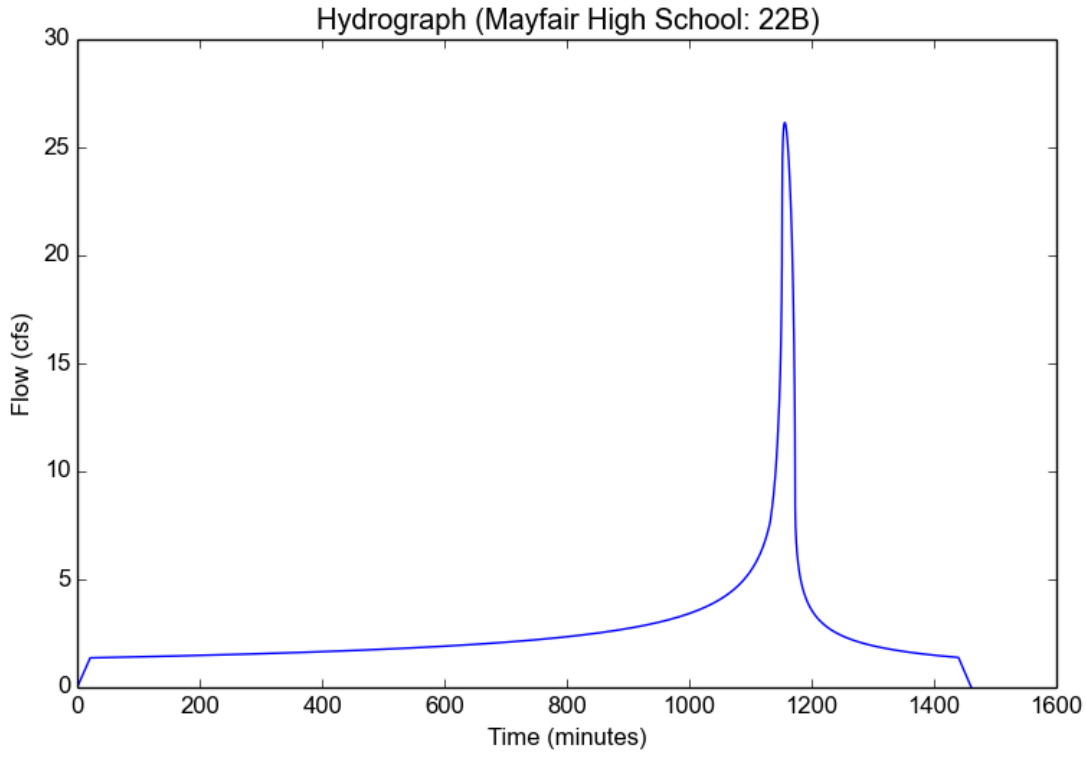

Peak Flow Hydrologic Analysis

File location: C:/working/Mayfair/Mayfair High School Report-50yr.pdf
Version: HydroCalc 0.3.1-beta

Input Parameters

Project Name	Mayfair High School
Subarea ID	24B
Area (ac)	25.1
Flow Path Length (ft)	1374.0
Flow Path Slope (vft/hft)	0.003
50-yr Rainfall Depth (in)	5.9
Percent Impervious	0.5
Soil Type	7
Design Storm Frequency	50-yr
Fire Factor	0
LID	False

Output Results

Modeled (50-yr) Rainfall Depth (in)	5.9
Peak Intensity (in/hr)	1.8796
Undeveloped Runoff Coefficient (Cu)	0.5125
Developed Runoff Coefficient (Cd)	0.7062
Time of Concentration (min)	19.0
Clear Peak Flow Rate (cfs)	33.3186
Burned Peak Flow Rate (cfs)	33.3186
24-Hr Clear Runoff Volume (ac-ft)	6.3768
24-Hr Clear Runoff Volume (cu-ft)	277772.4654

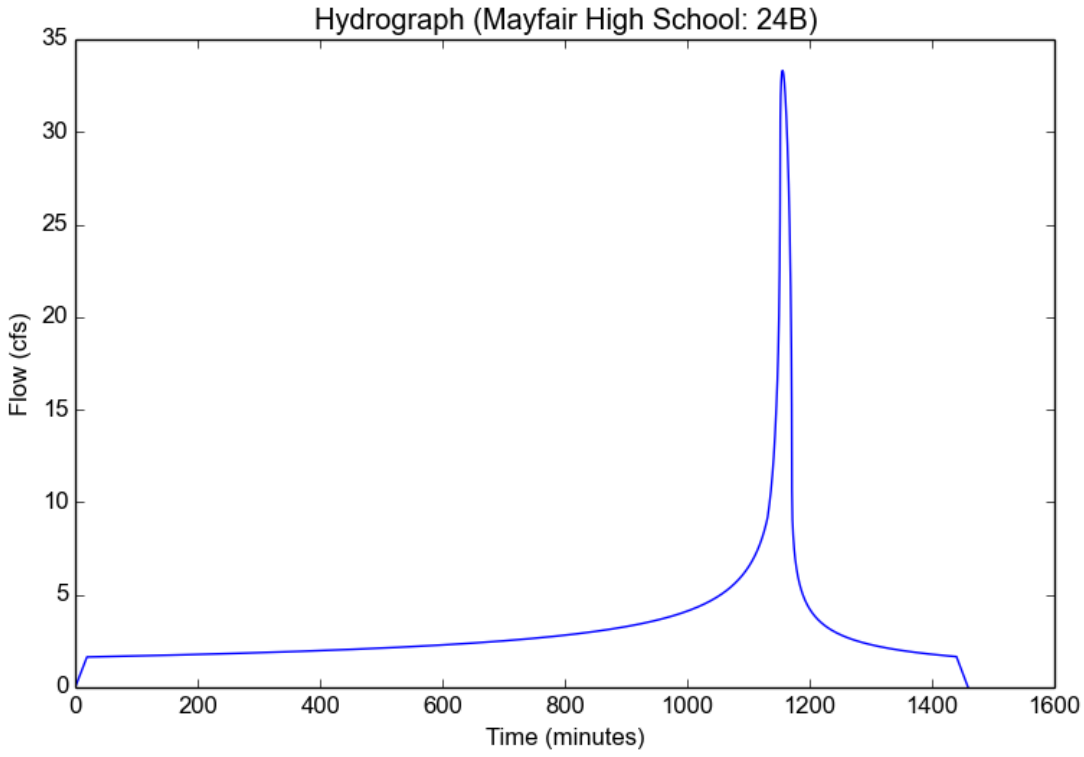

Peak Flow Hydrologic Analysis

File location: C:/working/Mayfair/Mayfair High School Report-50yr.pdf
Version: HydroCalc 0.3.1-beta

Input Parameters

Project Name	Mayfair High School
Subarea ID	26B
Area (ac)	38.0
Flow Path Length (ft)	2041.0
Flow Path Slope (vft/hft)	0.002
50-yr Rainfall Depth (in)	5.9
Percent Impervious	0.5
Soil Type	6
Design Storm Frequency	50-yr
Fire Factor	0
LID	False

Output Results

Modeled (50-yr) Rainfall Depth (in)	5.9
Peak Intensity (in/hr)	1.6521
Undeveloped Runoff Coefficient (Cu)	0.6941
Developed Runoff Coefficient (Cd)	0.7971
Time of Concentration (min)	25.0
Clear Peak Flow Rate (cfs)	50.0392
Burned Peak Flow Rate (cfs)	50.0392
24-Hr Clear Runoff Volume (ac-ft)	10.2924
24-Hr Clear Runoff Volume (cu-ft)	448336.3159

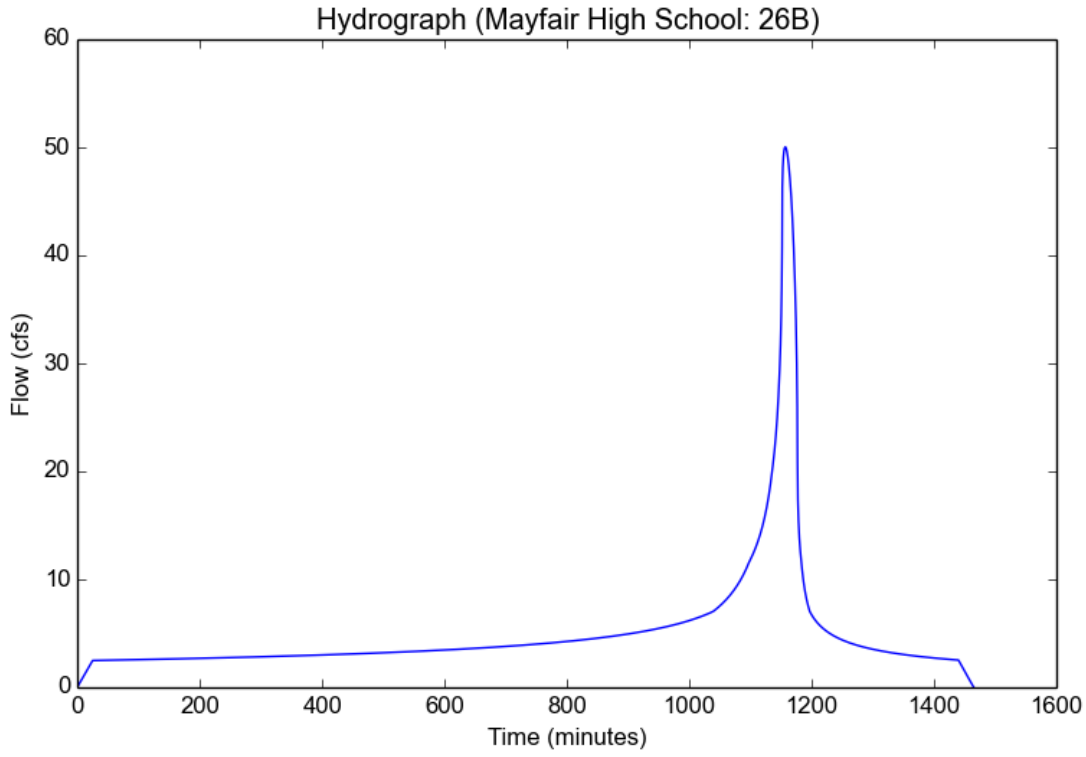

Peak Flow Hydrologic Analysis

File location: C:/working/Mayfair/Mayfair High School Report-50yr.pdf
Version: HydroCalc 0.3.1-beta

Input Parameters

Project Name	Mayfair High School
Subarea ID	27B
Area (ac)	24.5
Flow Path Length (ft)	1278.0
Flow Path Slope (vft/hft)	0.001
50-yr Rainfall Depth (in)	5.9
Percent Impervious	0.45
Soil Type	6
Design Storm Frequency	50-yr
Fire Factor	0
LID	False

Output Results

Modeled (50-yr) Rainfall Depth (in)	5.9
Peak Intensity (in/hr)	1.7932
Undeveloped Runoff Coefficient (Cu)	0.7096
Developed Runoff Coefficient (Cd)	0.7953
Time of Concentration (min)	21.0
Clear Peak Flow Rate (cfs)	34.9391
Burned Peak Flow Rate (cfs)	34.9391
24-Hr Clear Runoff Volume (ac-ft)	6.2259
24-Hr Clear Runoff Volume (cu-ft)	271202.2782

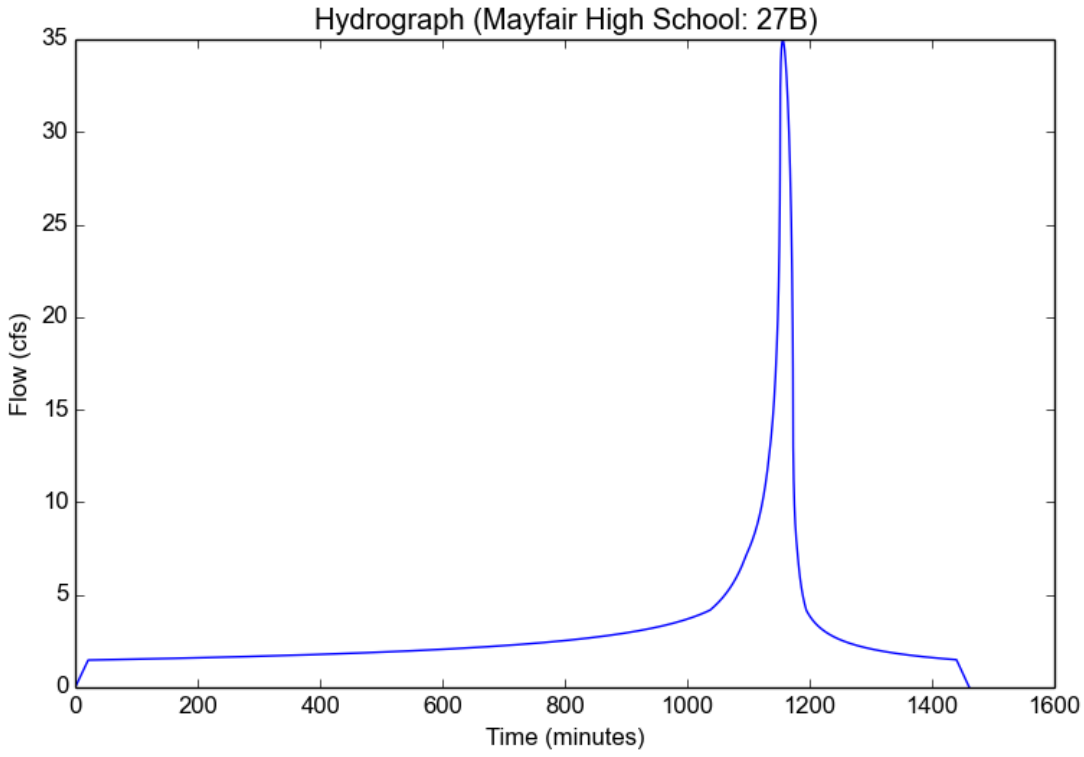

Peak Flow Hydrologic Analysis

File location: C:/working/Mayfair/Mayfair High School Report-50yr.pdf
Version: HydroCalc 0.3.1-beta

Input Parameters

Project Name	Mayfair High School
Subarea ID	29B
Area (ac)	21.5
Flow Path Length (ft)	2018.0
Flow Path Slope (vft/hft)	0.002
50-yr Rainfall Depth (in)	5.7
Percent Impervious	0.45
Soil Type	6
Design Storm Frequency	50-yr
Fire Factor	0
LID	False

Output Results

Modeled (50-yr) Rainfall Depth (in)	5.7
Peak Intensity (in/hr)	1.5961
Undeveloped Runoff Coefficient (Cu)	0.688
Developed Runoff Coefficient (Cd)	0.7834
Time of Concentration (min)	25.0
Clear Peak Flow Rate (cfs)	26.8827
Burned Peak Flow Rate (cfs)	26.8827
24-Hr Clear Runoff Volume (ac-ft)	5.2529
24-Hr Clear Runoff Volume (cu-ft)	228815.9138

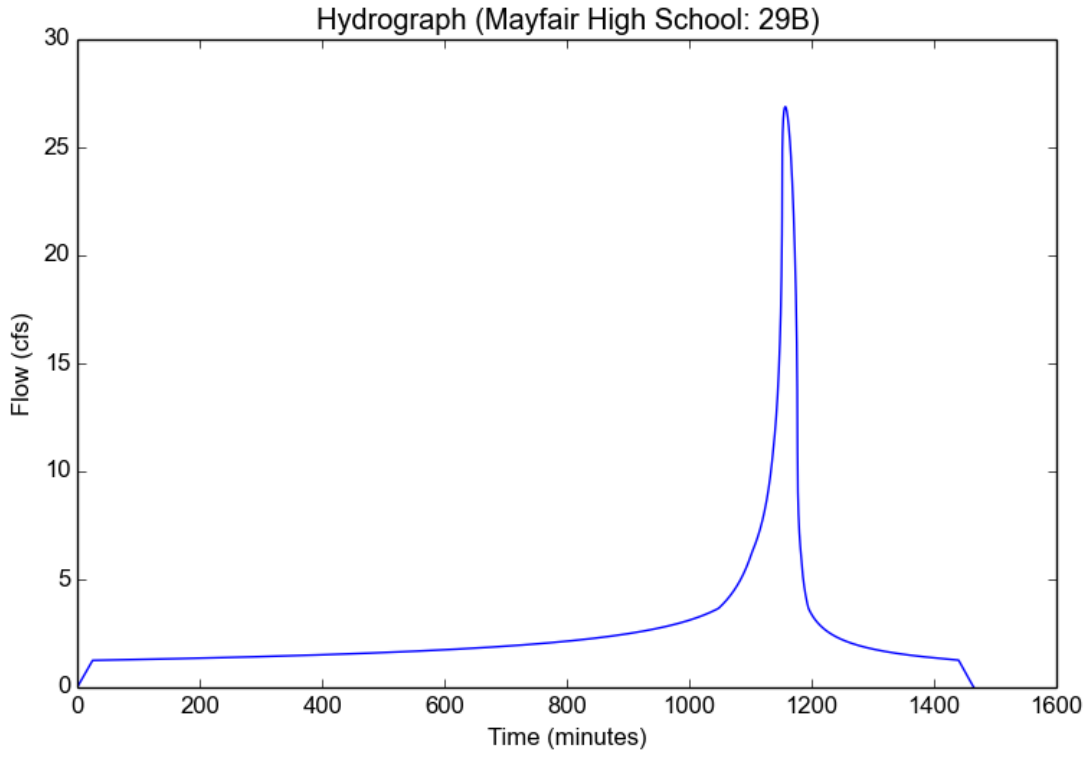

Peak Flow Hydrologic Analysis

File location: C:/working/Mayfair/Mayfair High School Report-50yr.pdf
Version: HydroCalc 0.3.1-beta

Input Parameters

Project Name	Mayfair High School
Subarea ID	31B
Area (ac)	17.6
Flow Path Length (ft)	2373.0
Flow Path Slope (vft/hft)	0.002
50-yr Rainfall Depth (in)	5.7
Percent Impervious	0.9
Soil Type	6
Design Storm Frequency	50-yr
Fire Factor	0
LID	False

Output Results

Modeled (50-yr) Rainfall Depth (in)	5.7
Peak Intensity (in/hr)	1.567
Undeveloped Runoff Coefficient (Cu)	0.6848
Developed Runoff Coefficient (Cd)	0.8785
Time of Concentration (min)	26.0
Clear Peak Flow Rate (cfs)	24.227
Burned Peak Flow Rate (cfs)	24.227
24-Hr Clear Runoff Volume (ac-ft)	6.887
24-Hr Clear Runoff Volume (cu-ft)	299995.8147

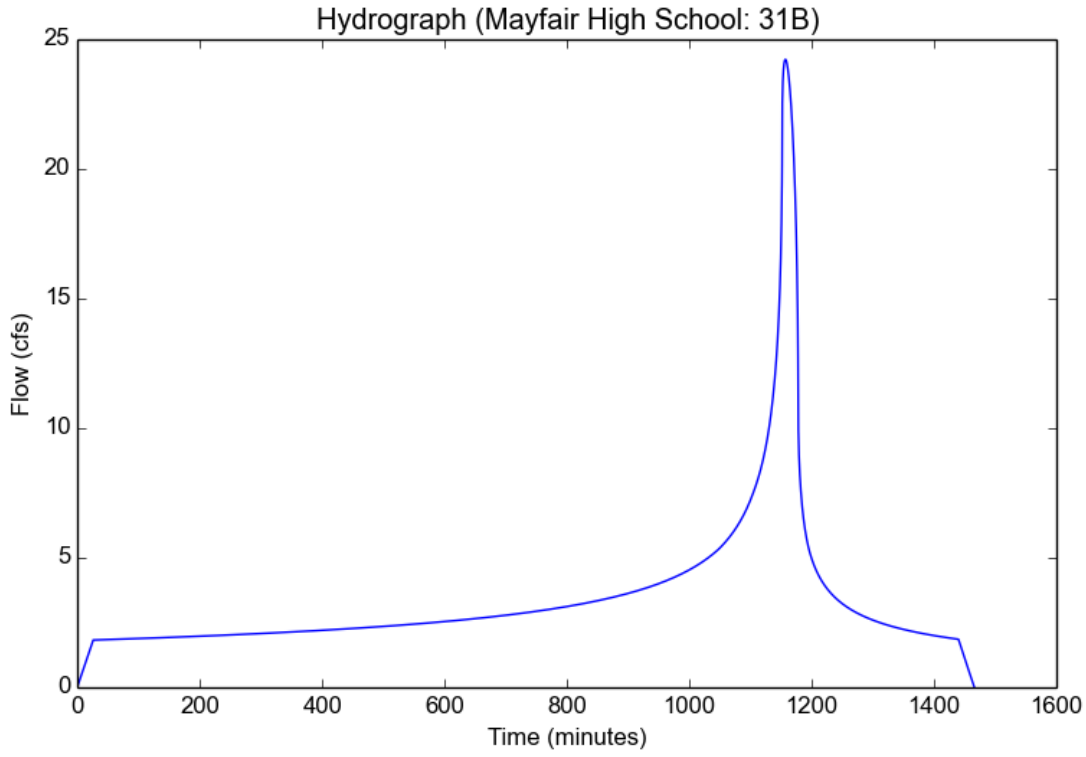

Peak Flow Hydrologic Analysis

File location: C:/working/Mayfair/Mayfair High School Report-50yr.pdf
Version: HydroCalc 0.3.1-beta

Input Parameters

Project Name	Mayfair High School
Subarea ID	32B
Area (ac)	35.9
Flow Path Length (ft)	2441.0
Flow Path Slope (vft/hft)	0.001
50-yr Rainfall Depth (in)	5.7
Percent Impervious	0.85
Soil Type	6
Design Storm Frequency	50-yr
Fire Factor	0
LID	False

Output Results

Modeled (50-yr) Rainfall Depth (in)	5.7
Peak Intensity (in/hr)	1.465
Undeveloped Runoff Coefficient (Cu)	0.671
Developed Runoff Coefficient (Cd)	0.8656
Time of Concentration (min)	30.0
Clear Peak Flow Rate (cfs)	45.5283
Burned Peak Flow Rate (cfs)	45.5283
24-Hr Clear Runoff Volume (ac-ft)	13.4605
24-Hr Clear Runoff Volume (cu-ft)	586341.3807

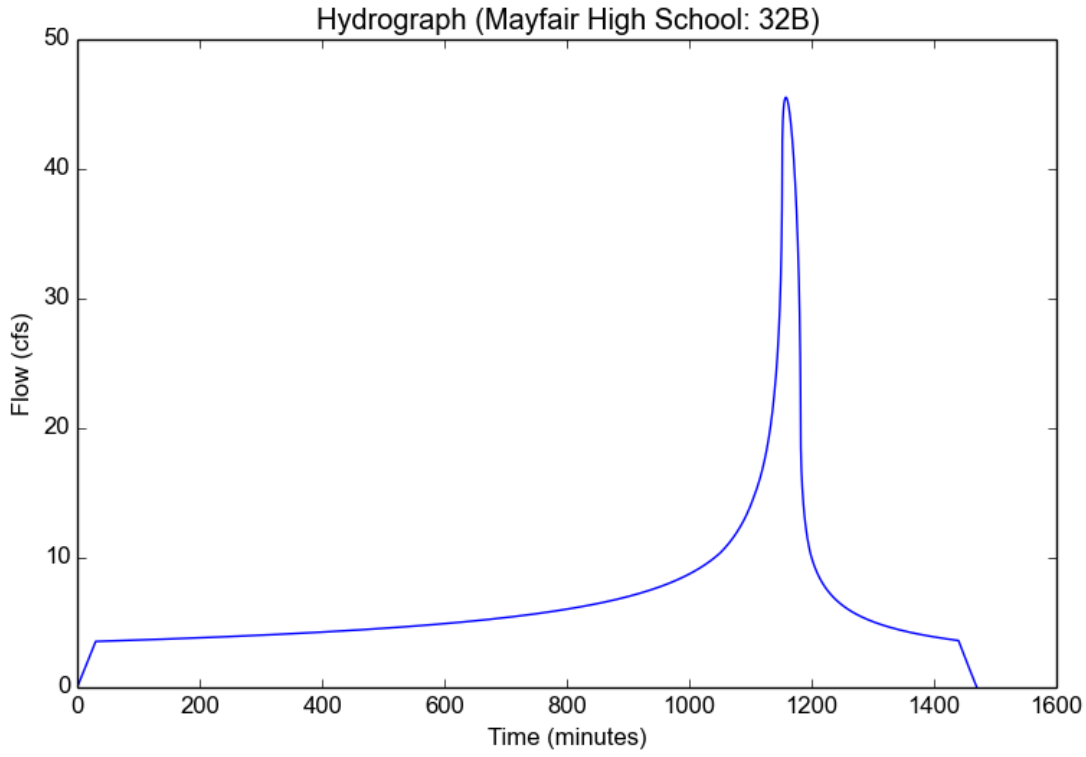

Peak Flow Hydrologic Analysis

File location: C:/working/Mayfair/Mayfair High School Report-50yr.pdf
Version: HydroCalc 0.3.1-beta

Input Parameters

Project Name	Mayfair High School
Subarea ID	34B
Area (ac)	16.0
Flow Path Length (ft)	1226.0
Flow Path Slope (vft/hft)	0.003
50-yr Rainfall Depth (in)	5.7
Percent Impervious	0.74
Soil Type	6
Design Storm Frequency	50-yr
Fire Factor	0
LID	False

Output Results

Modeled (50-yr) Rainfall Depth (in)	5.7
Peak Intensity (in/hr)	1.9686
Undeveloped Runoff Coefficient (Cu)	0.7288
Developed Runoff Coefficient (Cd)	0.8555
Time of Concentration (min)	16.0
Clear Peak Flow Rate (cfs)	26.9462
Burned Peak Flow Rate (cfs)	26.9462
24-Hr Clear Runoff Volume (ac-ft)	5.4261
24-Hr Clear Runoff Volume (cu-ft)	236359.3421

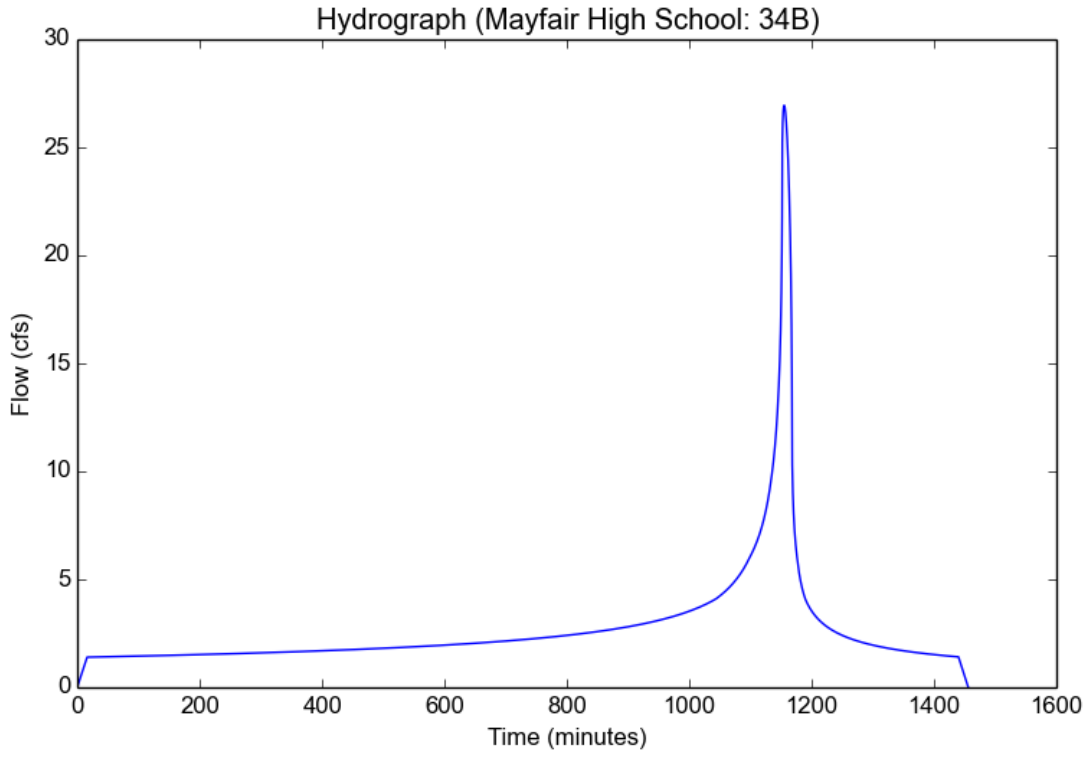

Peak Flow Hydrologic Analysis

File location: C:/working/Mayfair/Mayfair High School Report-50yr.pdf
Version: HydroCalc 0.3.1-beta

Input Parameters

Project Name	Mayfair High School
Subarea ID	36B
Area (ac)	29.4
Flow Path Length (ft)	1756.0
Flow Path Slope (vft/hft)	0.001
50-yr Rainfall Depth (in)	5.7
Percent Impervious	0.68
Soil Type	6
Design Storm Frequency	50-yr
Fire Factor	0
LID	False

Output Results

Modeled (50-yr) Rainfall Depth (in)	5.7
Peak Intensity (in/hr)	1.5961
Undeveloped Runoff Coefficient (Cu)	0.688
Developed Runoff Coefficient (Cd)	0.8321
Time of Concentration (min)	25.0
Clear Peak Flow Rate (cfs)	39.049
Burned Peak Flow Rate (cfs)	39.049
24-Hr Clear Runoff Volume (ac-ft)	9.3917
24-Hr Clear Runoff Volume (cu-ft)	409103.9915

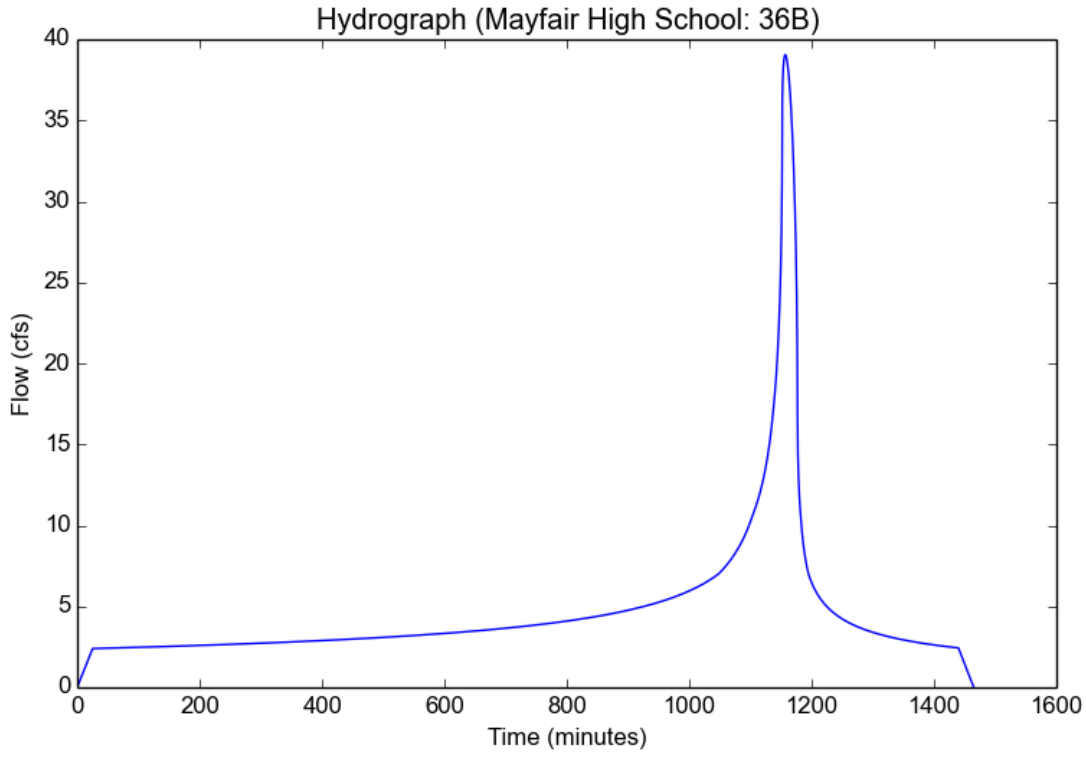

Peak Flow Hydrologic Analysis

File location: C:/working/Mayfair/Mayfair High School Report-50yr.pdf
Version: HydroCalc 0.3.1-beta

Input Parameters

Project Name	Mayfair High School
Subarea ID	37C
Area (ac)	10.8
Flow Path Length (ft)	2954.0
Flow Path Slope (vft/hft)	0.002
50-yr Rainfall Depth (in)	5.7
Percent Impervious	0.97
Soil Type	6
Design Storm Frequency	50-yr
Fire Factor	0
LID	False

Output Results

Modeled (50-yr) Rainfall Depth (in)	5.7
Peak Intensity (in/hr)	1.4886
Undeveloped Runoff Coefficient (Cu)	0.6753
Developed Runoff Coefficient (Cd)	0.8933
Time of Concentration (min)	29.0
Clear Peak Flow Rate (cfs)	14.3605
Burned Peak Flow Rate (cfs)	14.3605
24-Hr Clear Runoff Volume (ac-ft)	4.473
24-Hr Clear Runoff Volume (cu-ft)	194844.4971

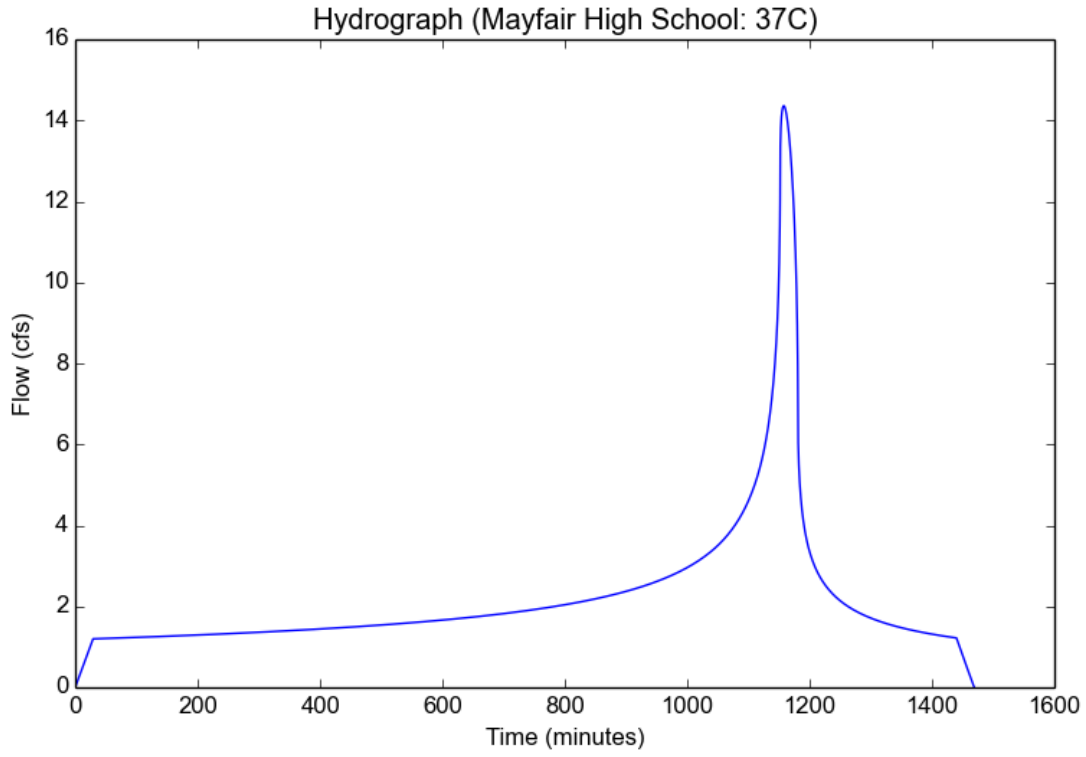

Peak Flow Hydrologic Analysis

File location: C:/working/Mayfair/Mayfair High School Report-50yr.pdf
Version: HydroCalc 0.3.1-beta

Input Parameters

Project Name	Mayfair High School
Subarea ID	39C
Area (ac)	20.0
Flow Path Length (ft)	2044.0
Flow Path Slope (vft/hft)	0.002
50-yr Rainfall Depth (in)	5.7
Percent Impervious	0.85
Soil Type	6
Design Storm Frequency	50-yr
Fire Factor	0
LID	False

Output Results

Modeled (50-yr) Rainfall Depth (in)	5.7
Peak Intensity (in/hr)	1.627
Undeveloped Runoff Coefficient (Cu)	0.6914
Developed Runoff Coefficient (Cd)	0.8687
Time of Concentration (min)	24.0
Clear Peak Flow Rate (cfs)	28.2681
Burned Peak Flow Rate (cfs)	28.2681
24-Hr Clear Runoff Volume (ac-ft)	7.4996
24-Hr Clear Runoff Volume (cu-ft)	326681.1257

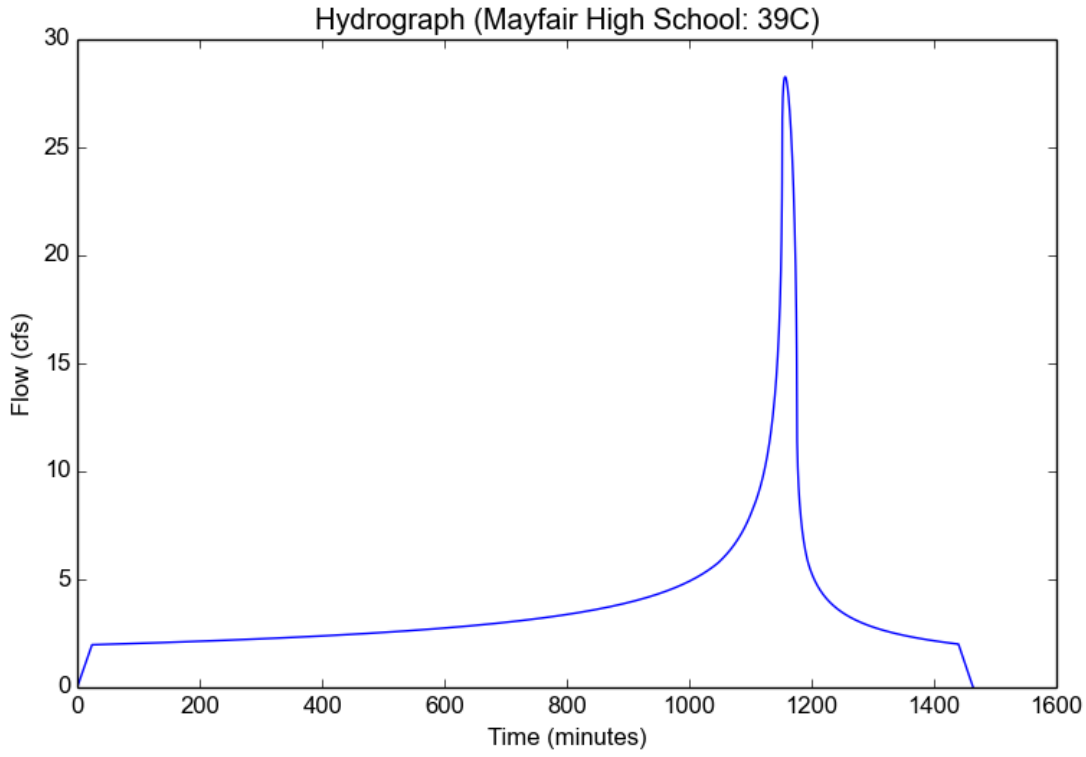

Peak Flow Hydrologic Analysis

File location: C:/working/Mayfair/Mayfair High School Report-50yr.pdf
Version: HydroCalc 0.3.1-beta

Input Parameters

Project Name	Mayfair High School
Subarea ID	40C
Area (ac)	14.9
Flow Path Length (ft)	1345.0
Flow Path Slope (vft/hft)	0.002
50-yr Rainfall Depth (in)	5.7
Percent Impervious	0.91
Soil Type	6
Design Storm Frequency	50-yr
Fire Factor	0
LID	False

Output Results

Modeled (50-yr) Rainfall Depth (in)	5.7
Peak Intensity (in/hr)	1.8626
Undeveloped Runoff Coefficient (Cu)	0.7172
Developed Runoff Coefficient (Cd)	0.8835
Time of Concentration (min)	18.0
Clear Peak Flow Rate (cfs)	24.5207
Burned Peak Flow Rate (cfs)	24.5207
24-Hr Clear Runoff Volume (ac-ft)	5.8794
24-Hr Clear Runoff Volume (cu-ft)	256107.2904

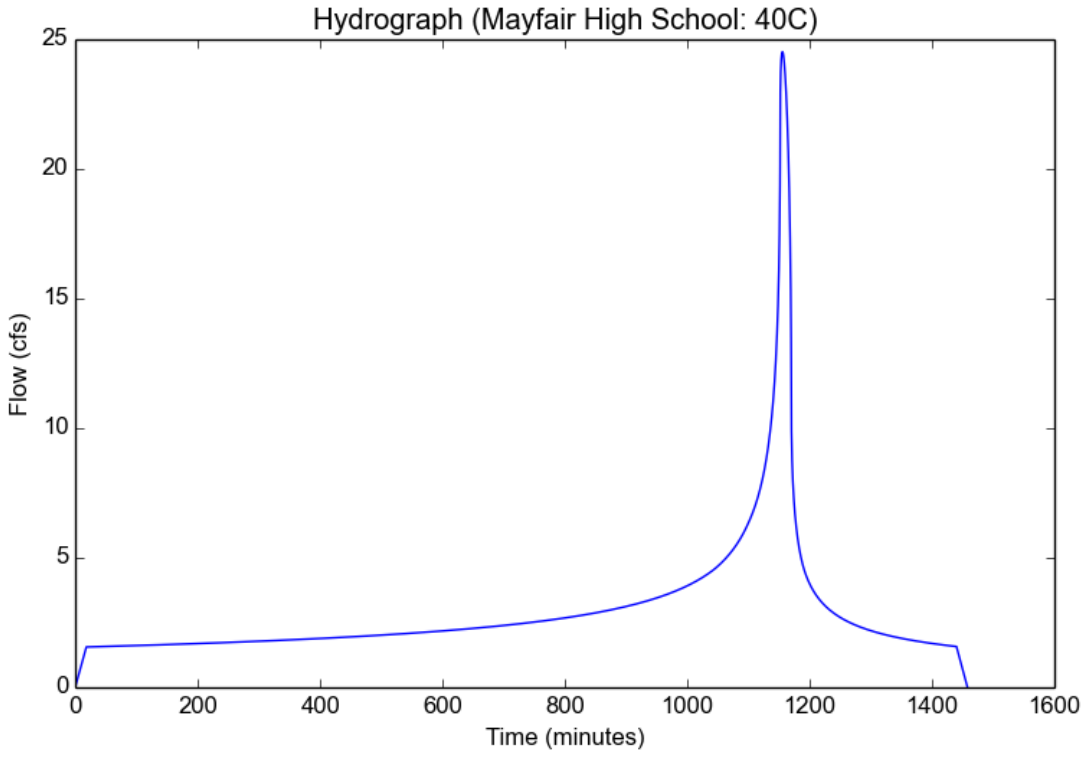

Peak Flow Hydrologic Analysis

File location: C:/working/Mayfair/Mayfair High School Report-50yr.pdf
Version: HydroCalc 0.3.1-beta

Input Parameters

Project Name	Mayfair High School
Subarea ID	42C
Area (ac)	23.1
Flow Path Length (ft)	2310.0
Flow Path Slope (vft/hft)	0.001
50-yr Rainfall Depth (in)	5.7
Percent Impervious	0.85
Soil Type	6
Design Storm Frequency	50-yr
Fire Factor	0
LID	False

Output Results

Modeled (50-yr) Rainfall Depth (in)	5.7
Peak Intensity (in/hr)	1.4886
Undeveloped Runoff Coefficient (Cu)	0.6753
Developed Runoff Coefficient (Cd)	0.8663
Time of Concentration (min)	29.0
Clear Peak Flow Rate (cfs)	29.7882
Burned Peak Flow Rate (cfs)	29.7882
24-Hr Clear Runoff Volume (ac-ft)	8.6614
24-Hr Clear Runoff Volume (cu-ft)	377292.1539

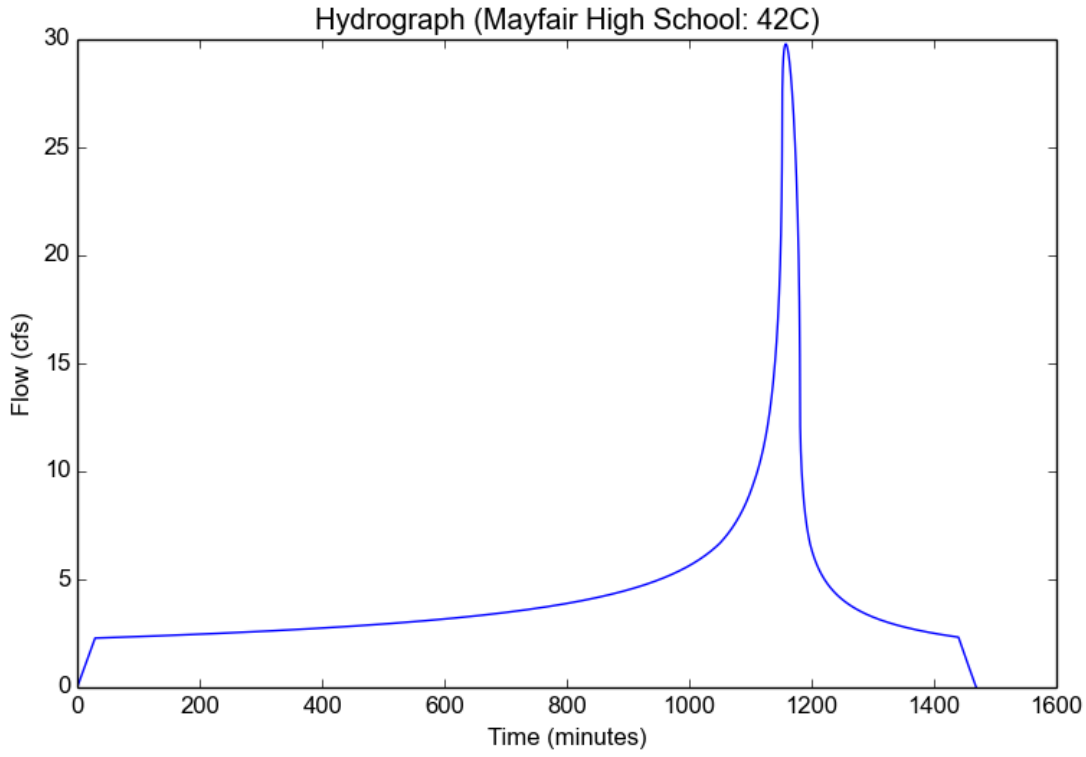

Peak Flow Hydrologic Analysis

File location: C:/working/Mayfair/Mayfair High School Report-50yr.pdf
Version: HydroCalc 0.3.1-beta

Input Parameters

Project Name	Mayfair High School
Subarea ID	44B
Area (ac)	22.8
Flow Path Length (ft)	1479.0
Flow Path Slope (vft/hft)	0.002
50-yr Rainfall Depth (in)	5.7
Percent Impervious	0.86
Soil Type	6
Design Storm Frequency	50-yr
Fire Factor	0
LID	False

Output Results

Modeled (50-yr) Rainfall Depth (in)	5.7
Peak Intensity (in/hr)	1.8158
Undeveloped Runoff Coefficient (Cu)	0.7121
Developed Runoff Coefficient (Cd)	0.8737
Time of Concentration (min)	19.0
Clear Peak Flow Rate (cfs)	36.172
Burned Peak Flow Rate (cfs)	36.172
24-Hr Clear Runoff Volume (ac-ft)	8.6244
24-Hr Clear Runoff Volume (cu-ft)	375680.7922

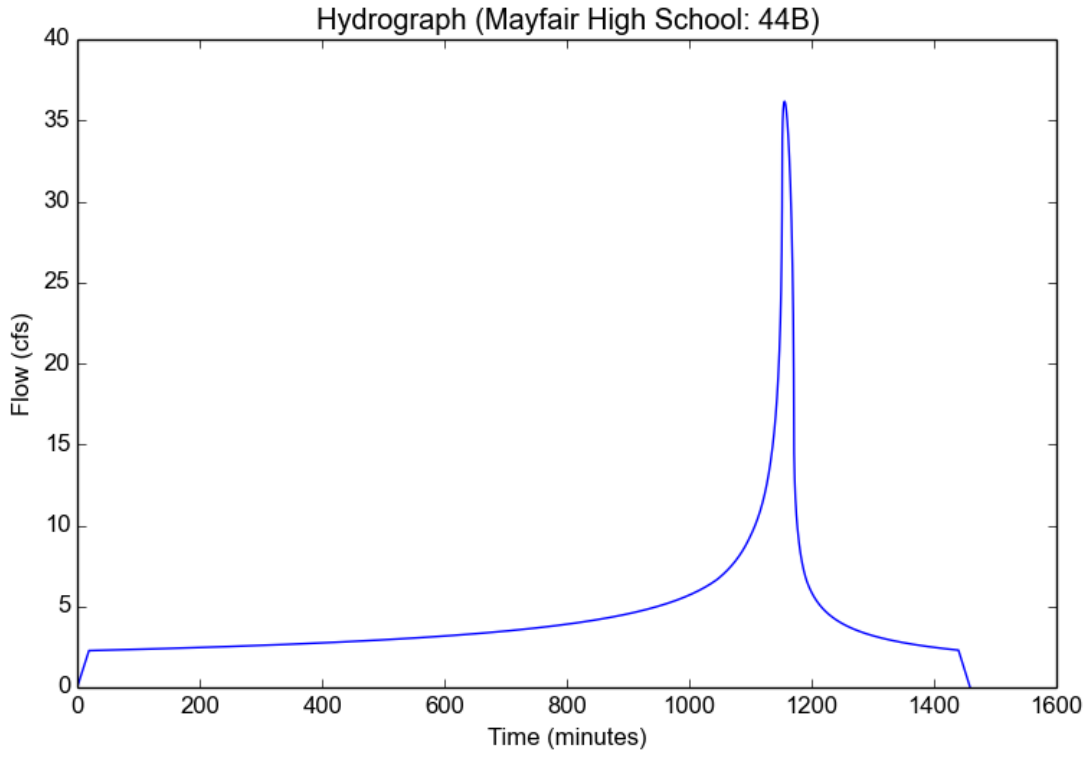

Peak Flow Hydrologic Analysis

File location: C:/working/Mayfair/Mayfair High School Report-50yr.pdf
Version: HydroCalc 0.3.1-beta

Input Parameters

Project Name	Mayfair High School
Subarea ID	45D
Area (ac)	34.5
Flow Path Length (ft)	2386.0
Flow Path Slope (vft/hft)	0.001
50-yr Rainfall Depth (in)	5.7
Percent Impervious	0.8
Soil Type	6
Design Storm Frequency	50-yr
Fire Factor	0
LID	False

Output Results

Modeled (50-yr) Rainfall Depth (in)	5.7
Peak Intensity (in/hr)	1.465
Undeveloped Runoff Coefficient (Cu)	0.671
Developed Runoff Coefficient (Cd)	0.8542
Time of Concentration (min)	30.0
Clear Peak Flow Rate (cfs)	43.174
Burned Peak Flow Rate (cfs)	43.174
24-Hr Clear Runoff Volume (ac-ft)	12.3718
24-Hr Clear Runoff Volume (cu-ft)	538916.495

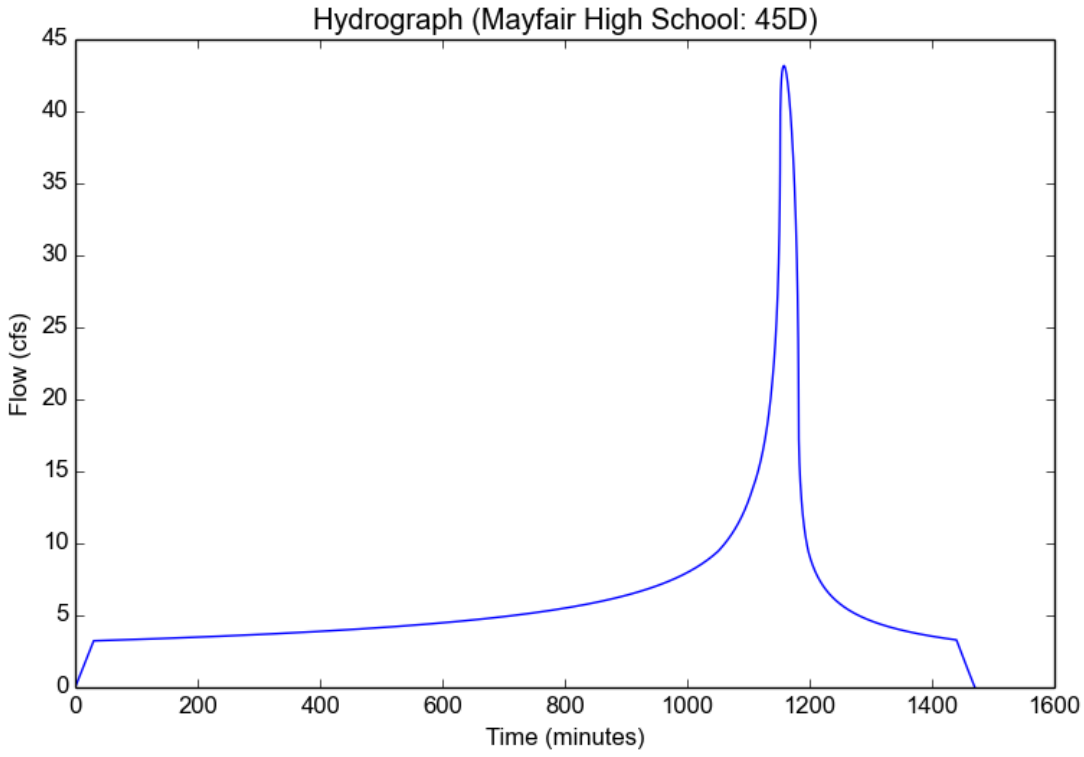

Peak Flow Hydrologic Analysis

File location: C:/working/Mayfair/Mayfair High School Report-50yr.pdf
Version: HydroCalc 0.3.1-beta

Input Parameters

Project Name	Mayfair High School
Subarea ID	47D
Area (ac)	27.2
Flow Path Length (ft)	2385.0
Flow Path Slope (vft/hft)	0.001
50-yr Rainfall Depth (in)	5.7
Percent Impervious	0.42
Soil Type	6
Design Storm Frequency	50-yr
Fire Factor	0
LID	False

Output Results

Modeled (50-yr) Rainfall Depth (in)	5.7
Peak Intensity (in/hr)	1.465
Undeveloped Runoff Coefficient (Cu)	0.671
Developed Runoff Coefficient (Cd)	0.7672
Time of Concentration (min)	30.0
Clear Peak Flow Rate (cfs)	30.5704
Burned Peak Flow Rate (cfs)	30.5704
24-Hr Clear Runoff Volume (ac-ft)	6.3758
24-Hr Clear Runoff Volume (cu-ft)	277728.9795

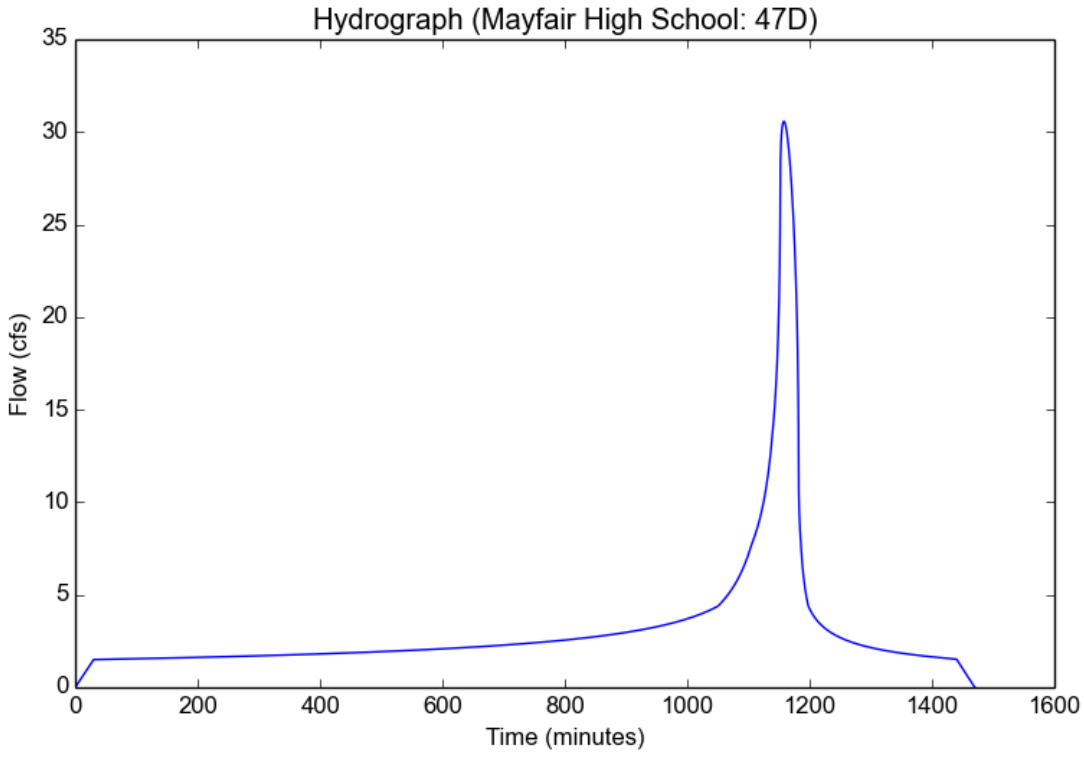

Peak Flow Hydrologic Analysis

File location: C:/working/Mayfair/Mayfair High School Report-50yr.pdf
Version: HydroCalc 0.3.1-beta

Input Parameters

Project Name	Mayfair High School
Subarea ID	49B
Area (ac)	24.9
Flow Path Length (ft)	1247.0
Flow Path Slope (vft/hft)	0.001
50-yr Rainfall Depth (in)	5.7
Percent Impervious	0.42
Soil Type	6
Design Storm Frequency	50-yr
Fire Factor	0
LID	False

Output Results

Modeled (50-yr) Rainfall Depth (in)	5.7
Peak Intensity (in/hr)	1.7324
Undeveloped Runoff Coefficient (Cu)	0.7029
Developed Runoff Coefficient (Cd)	0.7857
Time of Concentration (min)	21.0
Clear Peak Flow Rate (cfs)	33.8925
Burned Peak Flow Rate (cfs)	33.8925
24-Hr Clear Runoff Volume (ac-ft)	5.8411
24-Hr Clear Runoff Volume (cu-ft)	254439.0119

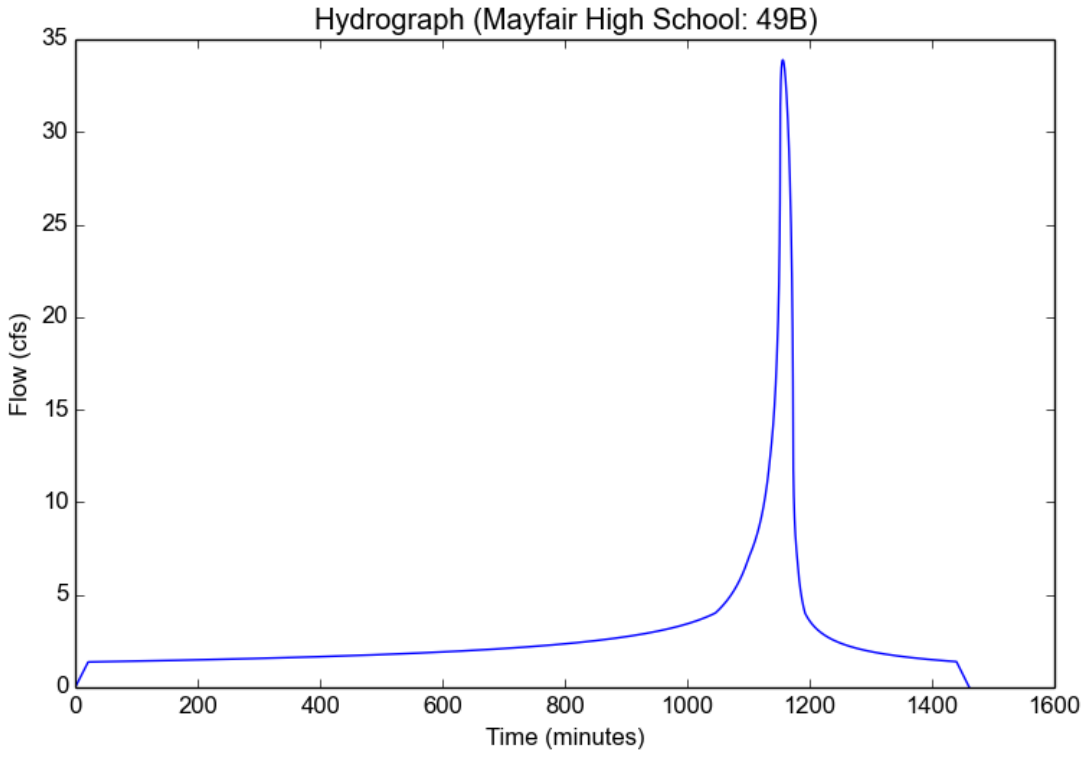

Peak Flow Hydrologic Analysis

File location: C:/working/Mayfair/Mayfair High School Report-50yr.pdf
Version: HydroCalc 0.3.1-beta

Input Parameters

Project Name	Mayfair High School
Subarea ID	51B
Area (ac)	23.2
Flow Path Length (ft)	1793.0
Flow Path Slope (vft/hft)	0.002
50-yr Rainfall Depth (in)	5.7
Percent Impervious	0.42
Soil Type	6
Design Storm Frequency	50-yr
Fire Factor	0
LID	False

Output Results

Modeled (50-yr) Rainfall Depth (in)	5.7
Peak Intensity (in/hr)	1.627
Undeveloped Runoff Coefficient (Cu)	0.6914
Developed Runoff Coefficient (Cd)	0.779
Time of Concentration (min)	24.0
Clear Peak Flow Rate (cfs)	29.4044
Burned Peak Flow Rate (cfs)	29.4044
24-Hr Clear Runoff Volume (ac-ft)	5.4412
24-Hr Clear Runoff Volume (cu-ft)	237019.6326

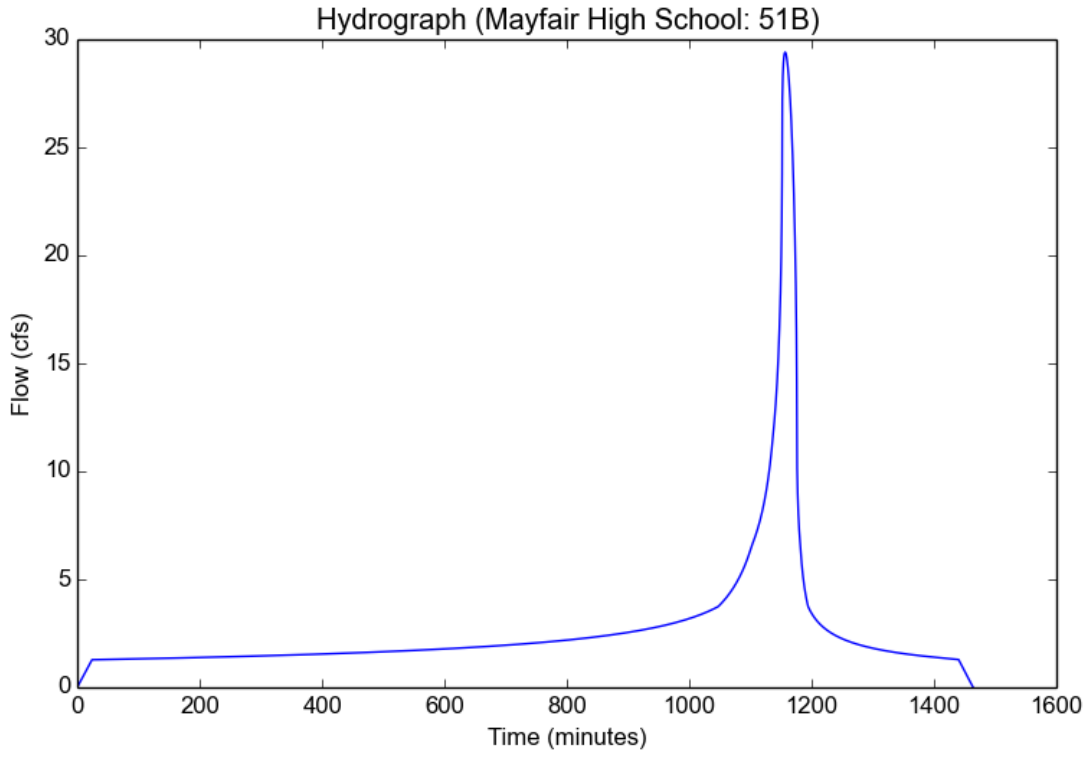

Peak Flow Hydrologic Analysis

File location: C:/working/Mayfair/Mayfair High School Report-50yr.pdf
Version: HydroCalc 0.3.1-beta

Input Parameters

Project Name	Mayfair High School
Subarea ID	52E
Area (ac)	34.7
Flow Path Length (ft)	1424.0
Flow Path Slope (vft/hft)	0.002
50-yr Rainfall Depth (in)	5.7
Percent Impervious	0.42
Soil Type	6
Design Storm Frequency	50-yr
Fire Factor	0
LID	False

Output Results

Modeled (50-yr) Rainfall Depth (in)	5.7
Peak Intensity (in/hr)	1.7726
Undeveloped Runoff Coefficient (Cu)	0.7073
Developed Runoff Coefficient (Cd)	0.7883
Time of Concentration (min)	20.0
Clear Peak Flow Rate (cfs)	48.4847
Burned Peak Flow Rate (cfs)	48.4847
24-Hr Clear Runoff Volume (ac-ft)	8.1407
24-Hr Clear Runoff Volume (cu-ft)	354608.7001

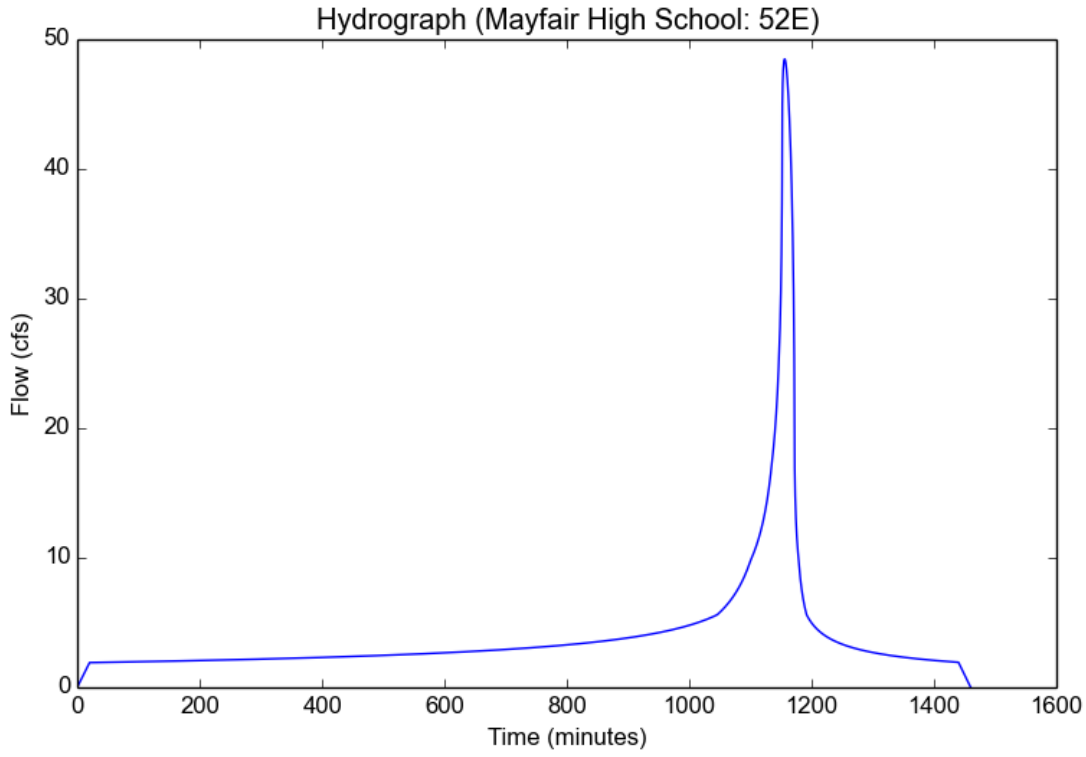

Peak Flow Hydrologic Analysis

File location: C:/working/Mayfair/Mayfair High School Report-50yr.pdf
Version: HydroCalc 0.3.1-beta

Input Parameters

Project Name	Mayfair High School
Subarea ID	56A
Area (ac)	38.9
Flow Path Length (ft)	1503.0
Flow Path Slope (vft/hft)	0.003
50-yr Rainfall Depth (in)	5.7
Percent Impervious	0.5
Soil Type	6
Design Storm Frequency	50-yr
Fire Factor	0
LID	False

Output Results

Modeled (50-yr) Rainfall Depth (in)	5.7
Peak Intensity (in/hr)	1.8158
Undeveloped Runoff Coefficient (Cu)	0.7121
Developed Runoff Coefficient (Cd)	0.806
Time of Concentration (min)	19.0
Clear Peak Flow Rate (cfs)	56.9359
Burned Peak Flow Rate (cfs)	56.9359
24-Hr Clear Runoff Volume (ac-ft)	10.1428
24-Hr Clear Runoff Volume (cu-ft)	441821.606

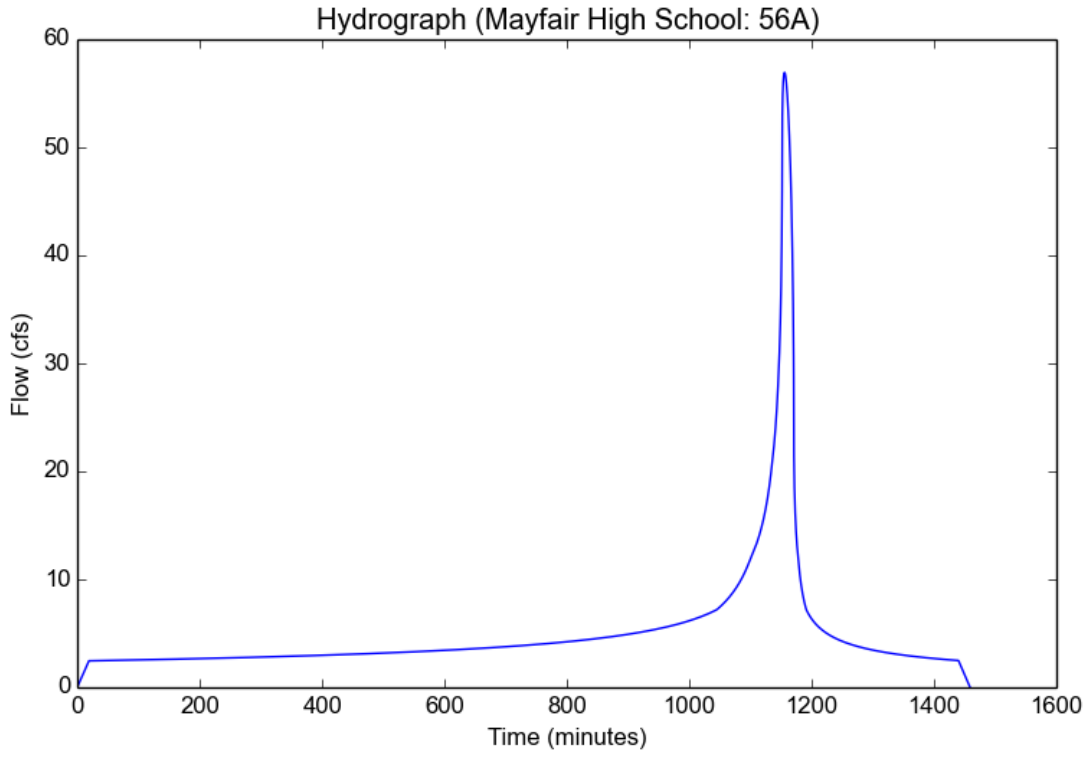

Peak Flow Hydrologic Analysis

File location: C:/working/Mayfair/Mayfair High School Report-50yr.pdf
Version: HydroCalc 0.3.1-beta

Input Parameters

Project Name	Mayfair High School
Subarea ID	57A
Area (ac)	22.1
Flow Path Length (ft)	1621.0
Flow Path Slope (vft/hft)	0.002
50-yr Rainfall Depth (in)	5.7
Percent Impervious	0.42
Soil Type	6
Design Storm Frequency	50-yr
Fire Factor	0
LID	False

Output Results

Modeled (50-yr) Rainfall Depth (in)	5.7
Peak Intensity (in/hr)	1.6949
Undeveloped Runoff Coefficient (Cu)	0.6988
Developed Runoff Coefficient (Cd)	0.7833
Time of Concentration (min)	22.0
Clear Peak Flow Rate (cfs)	29.3414
Burned Peak Flow Rate (cfs)	29.3414
24-Hr Clear Runoff Volume (ac-ft)	5.1839
24-Hr Clear Runoff Volume (cu-ft)	225810.576

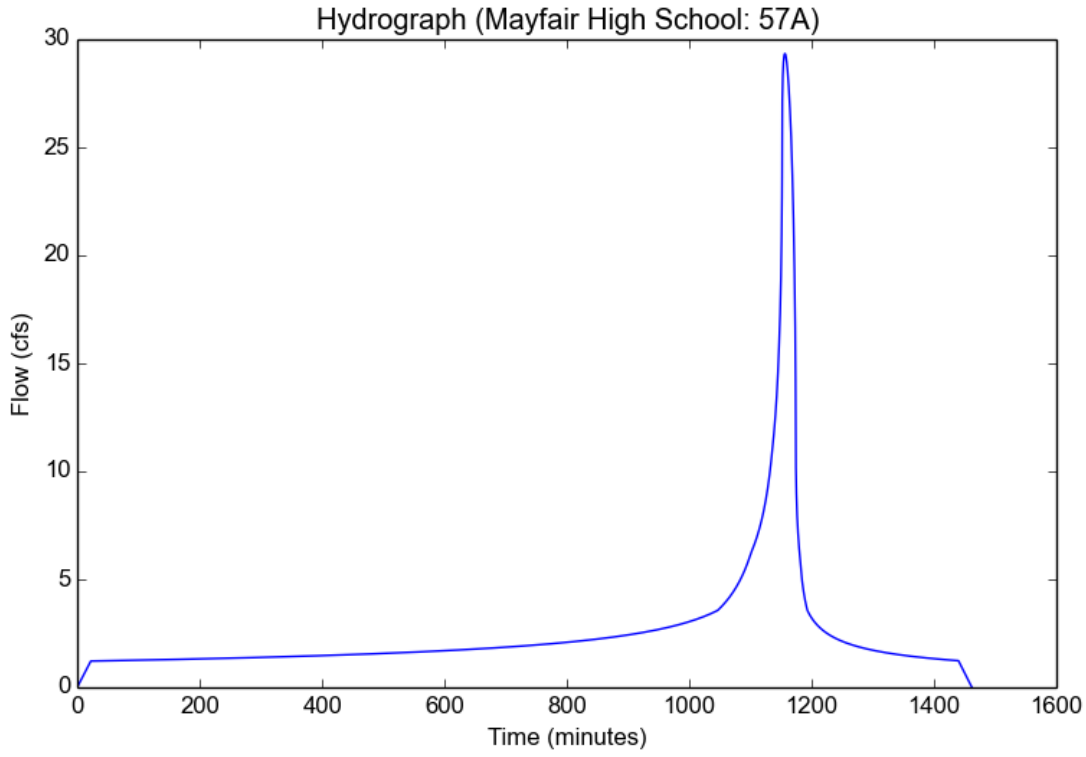

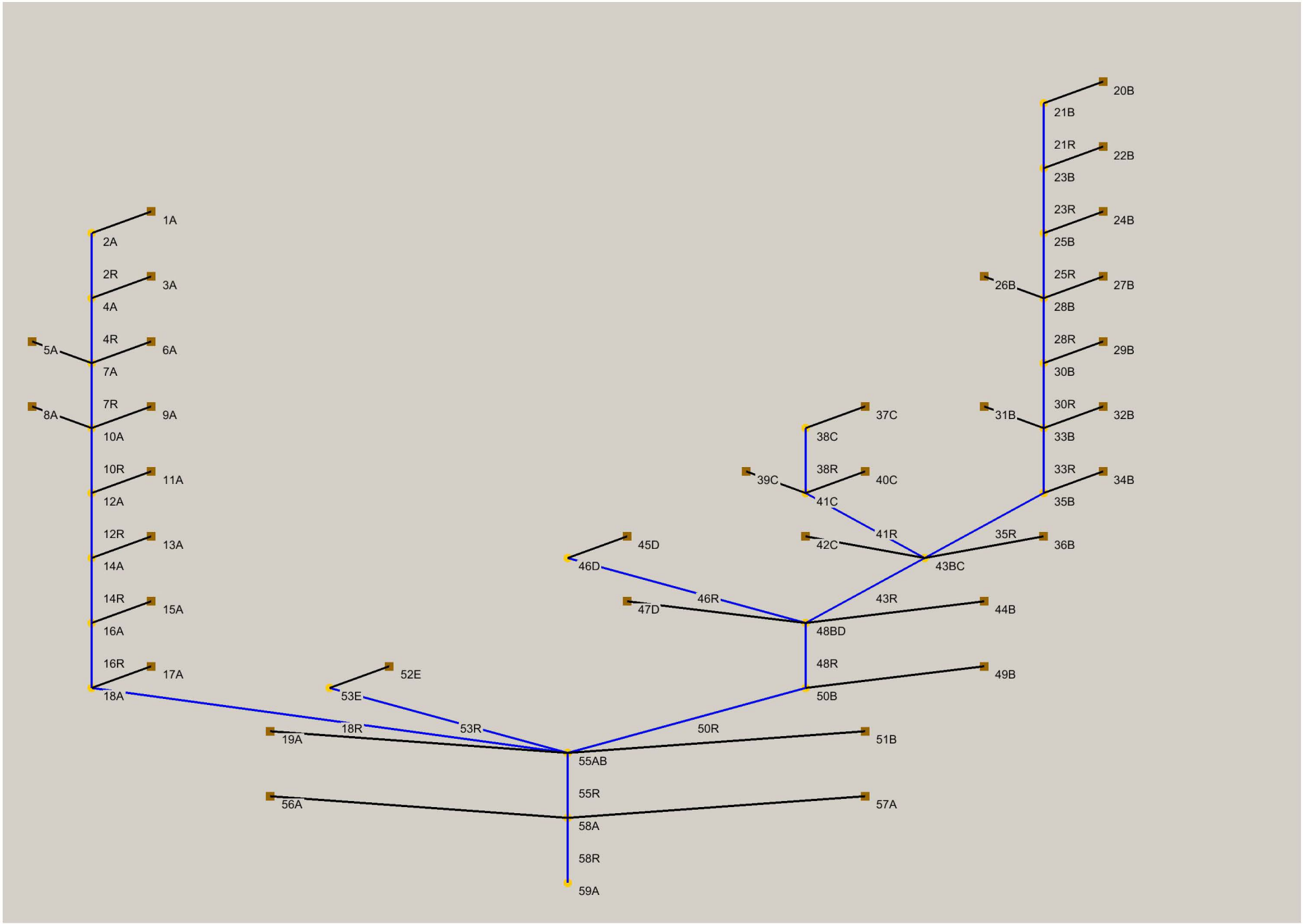
1A
2A
2R
3A
4A
4R
5A
6A
7A
7R
8A
9A
10A
10R
11A
12A
12R
13A
14A
14R
15A
16A
16R
17A
18A
18R
19A
20B
21B
21R
22B
23B
23R
24B
25B
25R
26B
27B
28B
28R
29B
30B
30R
31B
32B
33B
33R
34B
35B
35R
36B
37C
38C
38R
39C
40C
41C
41R
42C
43BC
43R
44B
45D
46D
46R
47D
48BD
48R
49B
50B
50R
51B
52E
53E
53R
55AB
55R
56A
57A
58A
58R
59A

File name: Mayfair.lac Run date: Wed Feb 15 11:16:55 2017

Los Angeles County Flood Control District
Modified Rational Method Hydrology

Storm Day 4 Storm Frequency 10

LOCATION	SUBAREA AREA	SUBAREA Q	TOTAL AREA	TOTAL Q	TOTAL VOLUME	CONV TYPE	CONV LNGTH	CONV SLOPE	CONV SIZE	CONV Z	CONTROL Q	SOIL NAME	TC	RAIN	PCT IMPV
1 1A	33.2	33.04	33.2	33.04	9.181	0	0	0.00000	0.00	0.00	0	6	26	4.21	0.86
1 2A	0.0	0.00	33.2	33.04	9.181	0	873	0.00200	0.00	0.00	0	6	0	4.21	0.00
1 3A	37.4	34.72	70.6	67.74	19.516	0	0	0.00000	0.00	0.00	0	6	30	4.21	0.86
1 4A	0.0	0.00	70.6	67.74	19.516	0	804	0.00200	0.00	0.00	0	6	0	4.21	0.00
1 5A	25.4	23.58	96.0	91.32	26.535	0	0	0.00000	0.00	0.00	0	6	30	4.21	0.86
1 6A	24.3	20.83	120.3	112.15	31.908	0	0	0.00000	0.00	0.00	0	6	30	4.21	0.64
1 7A	0.0	0.00	120.3	112.15	31.908	0	650	0.00300	0.00	0.00	0	6	0	4.21	0.00
1 8A	24.0	18.86	144.3	131.00	35.890	0	0	0.00000	0.00	0.00	0	6	30	4.21	0.42
1 9A	28.4	22.31	172.7	153.32	40.602	0	0	0.00000	0.00	0.00	0	6	30	4.21	0.42
1 10A	0.0	0.00	172.7	153.32	40.602	0	335	0.00300	0.00	0.00	0	6	0	4.21	0.00
1 11A	29.6	23.25	202.3	176.57	45.513	0	0	0.00000	0.00	0.00	0	6	30	4.21	0.42
1 12A	0.0	0.00	202.3	176.57	45.513	0	864	0.00100	0.00	0.00	0	6	0	4.21	0.00
1 13A	30.3	23.80	232.6	200.38	50.540	0	0	0.00000	0.00	0.00	0	6	30	4.21	0.42
1 14A	0.0	0.00	232.6	200.38	50.540	0	974	0.00200	0.00	0.00	0	6	0	4.21	0.00
1 15A	10.7	11.51	243.3	211.68	52.321	0	0	0.00000	0.00	0.00	0	6	17	4.21	0.42
1 16A	0.0	0.00	243.3	211.68	52.321	0	2370	0.00200	0.00	0.00	0	6	0	4.21	0.00
1 17A	32.7	29.40	276.0	241.07	58.982	0	0	0.00000	0.00	0.00	0	6	26	4.21	0.57
1 18A	0.0	0.00	276.0	241.07	58.982	0	1493	0.00200	0.00	0.00	0	6	0	4.21	0.00
1 19A	41.7	36.20	317.7	277.25	65.908	0	0	0.00000	0.00	0.00	0	6	25	4.21	0.42
1 20B	34.8	32.30	34.8	32.30	10.180	0	0	0.00000	0.00	0.00	0	7	30	4.21	0.93
1 21B	0.0	0.00	34.8	32.30	10.180	0	622	0.00200	0.00	0.00	0	7	0	4.21	0.00
1 22B	20.9	13.51	55.7	45.81	13.861	0	0	0.00000	0.00	0.00	0	7	30	4.21	0.50
1 23B	0.0	0.00	55.7	45.81	13.861	0	662	0.00200	0.00	0.00	0	7	0	4.21	0.00
1 24B	25.1	17.32	80.8	63.12	18.291	0	0	0.00000	0.00	0.00	0	7	27	4.21	0.50
1 25B	0.0	0.00	80.8	63.12	18.291	0	1003	0.00300	0.00	0.00	0	7	0	4.21	0.00
1 26B	38.0	30.84	118.8	93.96	25.359	0	0	0.00000	0.00	0.00	0	6	30	4.21	0.50
1 27B	24.5	20.63	143.3	114.58	29.611	0	0	0.00000	0.00	0.00	0	6	27	4.21	0.45
1 28B	0.0	0.00	143.3	114.58	29.611	0	600	0.00200	0.00	0.00	0	6	0	4.21	0.00
1 29B	21.5	16.45	164.8	131.03	33.204	0	0	0.00000	0.00	0.00	0	6	30	4.07	0.45
1 30B	0.0	0.00	164.8	131.03	33.204	0	330	0.00200	0.00	0.00	0	6	0	4.07	0.00
1 31B	17.6	16.01	182.4	147.04	38.075	0	0	0.00000	0.00	0.00	0	6	30	4.07	0.90
1 32B	35.9	32.07	218.3	179.11	47.573	0	0	0.00000	0.00	0.00	0	6	30	4.07	0.85
1 33B	0.0	0.00	218.3	179.11	47.573	0	309	0.00300	0.00	0.00	0	6	0	4.07	0.00
1 34B	16.0	16.42	234.3	195.44	51.384	0	0	0.00000	0.00	0.00	0	6	21	4.07	0.74
1 35B	0.0	0.00	234.3	195.44	51.384	0	671	0.00100	0.00	0.00	0	6	0	4.07	0.00
1 36B	29.4	24.66	263.7	220.10	57.945	0	0	0.00000	0.00	0.00	0	6	30	4.07	0.68
1 37C	10.8	10.06	10.8	10.06	3.173	0	0	0.00000	0.00	0.00	0	6	30	4.07	0.97
1 38C	0.0	0.00	10.8	10.06	3.173	0	1491	0.00200	0.00	0.00	0	6	0	4.07	0.00
1 39C	20.0	17.87	30.8	27.93	8.464	0	0	0.00000	0.00	0.00	0	6	30	4.07	0.85
1 40C	14.9	15.44	45.7	43.35	12.630	0	0	0.00000	0.00	0.00	0	6	23	4.07	0.91
1 41C	0.0	0.00	45.7	43.35	12.630	0	663	0.00100	0.00	0.00	0	6	0	4.07	0.00
1 42C	23.1	20.64	68.8	63.97	18.741	0	0	0.00000	0.00	0.00	0	6	30	4.07	0.85
1 43BC	68.8	63.97	332.5	284.07	76.686	0	1710	0.00200	0.00	0.00	0	6	0	4.07	0.00
1 44B	22.8	22.33	355.3	306.38	82.780	0	0	0.00000	0.00	0.00	0	6	25	4.07	0.86
1 45D	34.5	30.27	34.5	30.27	8.708	0	0	0.00000	0.00	0.00	0	6	30	4.07	0.80
1 46D	0.0	0.00	34.5	30.27	8.708	0	1067	0.00100	0.00	0.00	0	6	0	4.07	0.00
1 47D	27.2	20.55	61.7	50.82	13.055	0	0	0.00000	0.00	0.00	0	6	30	4.07	0.42
1 48BD	61.7	50.82	417.0	357.20	95.835	0	859	0.00100	0.00	0.00	0	6	0	4.07	0.00
1 49B	24.9	19.53	441.9	376.73	99.817	0	0	0.00000	0.00	0.00	0	6	28	4.07	0.42
1 50B	0.0	0.00	441.9	376.73	99.817	0	1601	0.00200	0.00	0.00	0	6	0	4.07	0.00
1 51B	23.2	17.53	465.1	394.25	103.525	0	0	0.00000	0.00	0.00	0	6	30	4.07	0.42
1 52E	34.7	27.76	34.7	27.76	5.550	0	0	0.00000	0.00	0.00	0	6	27	4.07	0.42
1 53E	0.0	0.00	34.7	27.76	5.550	0	1793	0.00200	0.00	0.00	0	6	0	4.07	0.00

1	54AB	465.1	394.25	782.8	671.47	169.433	0	0	0.00000	0.00	0.00	0	6	0	4.07	0.00
1	55AE	34.7	27.76	817.5	699.22	174.983	0	821	0.00200	0.00	0.00	0	6	0	4.07	0.00
1	56A	38.9	33.49	856.4	732.66	181.965	0	0	0.00000	0.00	0.00	0	6	25	4.07	0.50
1	57A	22.1	17.01	878.5	749.67	185.499	0	0	0.00000	0.00	0.00	0	6	29	4.07	0.42
1	58A	0.0	0.00	878.5	749.67	185.499	0	520	0.00200	0.00	0.00	0	6	0	4.07	0.00
1	59A	0.0	0.00	878.5	749.67	185.499	0	520	0.00200	0.00	0.00	0	6	0	4.07	0.00

Normal End of MODRAT

File name: Mayfair50.lac Run date: Wed Feb 15 16:06:45 2017

Los Angeles County Flood Control District
Modified Rational Method Hydrology

Storm Day 4 Storm Frequency 50

LOCATION		SUBAREA AREA	SUBAREA Q	TOTAL AREA	TOTAL Q	TOTAL VOLUME	CONV TYPE	CONV LNGTH	CONV SLOPE	CONV SIZE	CONV Z	CONTROL Q	SOIL NAME	TC	RAIN	PCT IMPV
1	1A	33.2	53.24	33.2	53.24	12.964	0	0	0.00000	0.00	0.00	0	6	20	5.90	0.86
1	2A	0.0	0.00	33.2	53.24	12.964	0	873	0.00200	0.00	0.00	0	6	0	5.90	0.00
1	3A	37.4	53.82	70.6	106.98	27.553	0	0	0.00000	0.00	0.00	0	6	25	5.90	0.86
1	4A	0.0	0.00	70.6	106.98	27.553	0	804	0.00200	0.00	0.00	0	6	0	5.90	0.00
1	5A	25.4	35.86	96.0	142.82	37.460	0	0	0.00000	0.00	0.00	0	6	26	5.90	0.86
1	6A	24.3	31.88	120.3	174.70	45.149	0	0	0.00000	0.00	0.00	0	6	27	5.90	0.64
1	7A	0.0	0.00	120.3	174.70	45.149	0	650	0.00300	0.00	0.00	0	6	0	5.90	0.00
1	8A	24.0	30.94	144.3	205.64	50.982	0	0	0.00000	0.00	0.00	0	6	25	5.90	0.42
1	9A	28.4	36.61	172.7	242.25	57.883	0	0	0.00000	0.00	0.00	0	6	25	5.90	0.42
1	10A	0.0	0.00	172.7	242.25	57.883	0	335	0.00300	0.00	0.00	0	6	0	5.90	0.00
1	11A	29.6	34.64	202.3	276.86	65.068	0	0	0.00000	0.00	0.00	0	6	30	5.90	0.42
1	12A	0.0	0.00	202.3	276.86	65.068	0	864	0.00100	0.00	0.00	0	6	0	5.90	0.00
1	13A	30.3	35.46	232.6	312.28	72.423	0	0	0.00000	0.00	0.00	0	6	30	5.90	0.42
1	14A	0.0	0.00	232.6	312.28	72.423	0	974	0.00200	0.00	0.00	0	6	0	5.90	0.00
1	15A	10.7	19.65	243.3	331.46	75.032	0	0	0.00000	0.00	0.00	0	6	13	5.90	0.42
1	16A	0.0	0.00	243.3	331.46	75.032	0	2370	0.00200	0.00	0.00	0	6	0	5.90	0.00
1	17A	32.7	49.19	276.0	380.55	84.629	0	0	0.00000	0.00	0.00	0	6	20	5.90	0.57
1	18A	0.0	0.00	276.0	380.55	84.629	0	1493	0.00200	0.00	0.00	0	6	0	5.90	0.00
1	19A	41.7	62.29	317.7	442.79	94.777	0	0	0.00000	0.00	0.00	0	6	19	5.90	0.42
1	20B	34.8	45.80	34.8	45.80	14.291	0	0	0.00000	0.00	0.00	0	7	30	5.90	0.93
1	21B	0.0	0.00	34.8	45.80	14.291	0	622	0.00200	0.00	0.00	0	7	0	5.90	0.00
1	22B	20.9	26.15	55.7	71.87	19.578	0	0	0.00000	0.00	0.00	0	7	21	5.90	0.50
1	23B	0.0	0.00	55.7	71.87	19.578	0	662	0.00200	0.00	0.00	0	7	0	5.90	0.00
1	24B	25.1	33.31	80.8	105.07	25.935	0	0	0.00000	0.00	0.00	0	7	19	5.90	0.50
1	25B	0.0	0.00	80.8	105.07	25.935	0	1003	0.00300	0.00	0.00	0	7	0	5.90	0.00
1	26B	38.0	50.03	118.8	155.09	36.186	0	0	0.00000	0.00	0.00	0	6	25	5.90	0.50
1	27B	24.5	34.93	143.3	189.98	42.391	0	0	0.00000	0.00	0.00	0	6	21	5.90	0.45
1	28B	0.0	0.00	143.3	189.98	42.391	0	600	0.00200	0.00	0.00	0	6	0	5.90	0.00
1	29B	21.5	26.87	164.8	216.85	47.623	0	0	0.00000	0.00	0.00	0	6	25	5.70	0.45
1	30B	0.0	0.00	164.8	216.85	47.623	0	330	0.00200	0.00	0.00	0	6	0	5.70	0.00
1	31B	17.6	24.22	182.4	241.07	54.478	0	0	0.00000	0.00	0.00	0	6	26	5.70	0.90
1	32B	35.9	45.52	218.3	286.55	67.868	0	0	0.00000	0.00	0.00	0	6	30	5.70	0.85
1	33B	0.0	0.00	218.3	286.55	67.868	0	309	0.00300	0.00	0.00	0	6	0	5.70	0.00
1	34B	16.0	26.94	234.3	313.26	73.279	0	0	0.00000	0.00	0.00	0	6	16	5.70	0.74
1	35B	0.0	0.00	234.3	313.26	73.279	0	671	0.00100	0.00	0.00	0	6	0	5.70	0.00
1	36B	29.4	39.04	263.7	352.30	82.631	0	0	0.00000	0.00	0.00	0	6	25	5.70	0.68
1	37C	10.8	14.36	10.8	14.36	4.450	0	0	0.00000	0.00	0.00	0	6	29	5.70	0.97
1	38C	0.0	0.00	10.8	14.36	4.450	0	1491	0.00200	0.00	0.00	0	6	0	5.70	0.00
1	39C	20.0	28.26	30.8	42.62	11.918	0	0	0.00000	0.00	0.00	0	6	24	5.70	0.85
1	40C	14.9	24.51	45.7	67.06	17.779	0	0	0.00000	0.00	0.00	0	6	18	5.70	0.91
1	41C	0.0	0.00	45.7	67.06	17.779	0	663	0.00100	0.00	0.00	0	6	0	5.70	0.00
1	42C	23.1	29.79	68.8	96.80	26.397	0	0	0.00000	0.00	0.00	0	6	29	5.70	0.85
1	43BC	68.8	96.80	332.5	449.09	109.028	0	1710	0.00200	0.00	0.00	0	6	0	5.70	0.00
1	44B	22.8	36.17	355.3	485.16	117.624	0	0	0.00000	0.00	0.00	0	6	19	5.70	0.86
1	45D	34.5	43.17	34.5	43.17	12.307	0	0	0.00000	0.00	0.00	0	6	30	5.70	0.80
1	46D	0.0	0.00	34.5	43.17	12.307	0	1067	0.00100	0.00	0.00	0	6	0	5.70	0.00
1	47D	27.2	30.56	61.7	73.73	18.652	0	0	0.00000	0.00	0.00	0	6	30	5.70	0.42
1	48BD	61.7	73.73	417.0	558.81	136.276	0	859	0.00100	0.00	0.00	0	6	0	5.70	0.00
1	49B	24.9	33.88	441.9	592.65	142.098	0	0	0.00000	0.00	0.00	0	6	21	5.70	0.42
1	50B	0.0	0.00	441.9	592.65	142.098	0	1601	0.00200	0.00	0.00	0	6	0	5.70	0.00
1	51B	23.2	29.39	465.1	622.04	147.518	0	0	0.00000	0.00	0.00	0	6	24	5.70	0.42
1	52E	34.7	48.47	34.7	48.47	8.115	0	0	0.00000	0.00	0.00	0	6	20	5.70	0.42
1	53E	0.0	0.00	34.7	48.47	8.115	0	1793	0.00200	0.00	0.00	0	6	0	5.70	0.00

1	54AB	465.1	622.04	782.8	1064.69	242.296	0	0	0.00000	0.00	0.00	0	6	0	5.70	0.00
1	55AE	34.7	48.47	817.5	1113.06	250.411	0	821	0.00200	0.00	0.00	0	6	0	5.70	0.00
1	56A	38.9	56.92	856.4	1169.90	260.522	0	0	0.00000	0.00	0.00	0	6	19	5.70	0.50
1	57A	22.1	29.32	878.5	1199.22	265.688	0	0	0.00000	0.00	0.00	0	6	22	5.70	0.42
1	58A	0.0	0.00	878.5	1199.22	265.688	0	520	0.00200	0.00	0.00	0	6	0	5.70	0.00
1	59A	0.0	0.00	878.5	1199.22	265.688	0	520	0.00200	0.00	0.00	0	6	0	5.70	0.00

Normal End of MODRAT

APPENDIX C: HYDRAULIC ANALYSIS



```
T1 Mayfair High School                                                  0
T2 Palo Verde Channel
T3 Existing Conditions -  2011 County 50-year

SO   6200.000  44.690  1                            44.690
R    6330.000  45.090  1      .015                                .000
JX   6340.000  45.210  1      .015
R    6974.990  45.780  1      .015                                .000
TS   6999.990  45.890  2      .015                                .000
EQ      5.500
R     193.500  48.030  2      .015                                .000
R     270.500  48.350  2      .015                              46.000
TS    293.000  48.380  3      .015                                .000
R     382.000  48.500  3      .015                                .000
EQ    332.690
TS    352.690  48.540  2      .015                                .000
R     504.690  48.750  2      .015                                .000
R     561.170  48.820  2      .015                             -38.000
R     604.870  48.970  2      .015                                .000
R     670.800  49.100  2      .015                              37.750
R    1605.800  50.410  2      .015                                .000
R    1635.800  50.860  2      .015                                .000
SH   1635.800  50.860  2                            50.580
CD   1  2   0    .000   7.000   10.000  .000  .000   .00
CD   2  1   0    .000   6.500    5.000 1.500 1.500   .00
CD   3  3   1    .500   6.000   15.500  .000  .000   .00
Q           856.610   .0
```

Program Package Serial Number: 1911

WATER SURFACE PROFILE LISTING Date: 2- 7-2017 Time:11:27:49

Mayfair High School
Palo Verde Channel
Existing Conditions - 2011 County 50-year

Station / L/Elem	Invert Elev / Ch Slope	Depth (FT)	Water Elev	Q (CFS)	Vel (FPS)	Vel Head / SF Ave	Energy Grd.El. / HF	Super Elev / SE Dpth	Critical Depth / Froude N	Flow Top Width / Norm Dp	Height/ Dia.-FT / "N"	Base Wt or I.D. / X-Fall	ZL / ZR	No Wth Prs/Pip / Type Ch
6200.000	44.690	6.108	50.798	856.61	14.02	3.05	53.85	.00	6.11	10.00	7.000	10.000	.00	0 .0
11.229	.0031					.0049	.06	6.11	1.00	7.50	.015	.00	.00	RECTANG
6211.229	44.725	6.406	51.131	856.61	13.37	2.78	53.91	.00	6.11	10.00	7.000	10.000	.00	0 .0
47.993	.0031					.0043	.21	6.41	.93	7.50	.015	.00	.00	RECTANG
6259.223	44.872	6.719	51.591	856.61	12.75	2.52	54.12	.00	6.11	10.00	7.000	10.000	.00	0 .0
70.778	.0031					.0039	.28	6.72	.87	7.50	.015	.00	.00	RECTANG
6330.000	45.090	6.928	52.018	856.61	12.36	2.37	54.39	.00	6.11	10.00	7.000	10.000	.00	0 .0
JUNCT STR	.0120					.0040	.04	6.93	.83		.015	.00	.00	RECTANG
6340.000	45.210	6.630	51.840	856.61	12.92	2.59	54.43	.00	6.11	10.00	7.000	10.000	.00	0 .0
28.635	.0009					.0040	.11	6.63	.88	12.38	.015	.00	.00	RECTANG
6368.635	45.236	6.953	52.189	856.61	12.32	2.36	54.55	.00	6.11	10.00	7.000	10.000	.00	0 .0
47.859	.0009					.0035	.17	6.95	.82	12.38	.015	.00	.00	RECTANG
6416.495	45.279	7.292	52.571	856.61	11.75	2.14	54.71	.00	6.11	10.00	7.000	10.000	.00	0 .0
72.809	.0009					.0031	.23	7.29	.77	12.38	.015	.00	.00	RECTANG
6489.303	45.344	7.648	52.992	856.61	11.20	1.95	54.94	.00	6.11	10.00	7.000	10.000	.00	0 .0
105.481	.0009					.0028	.29	7.65	.71	12.38	.015	.00	.00	RECTANG
6594.785	45.439	8.022	53.460	856.61	10.68	1.77	55.23	.00	6.11	10.00	7.000	10.000	.00	0 .0
148.824	.0009					.0024	.36	8.02	.66	12.38	.015	.00	.00	RECTANG

Program Package Serial Number: 1911

WATER SURFACE PROFILE LISTING Date: 2- 7-2017 Time:11:27:49

Mayfair High School
Palo Verde Channel
Existing Conditions

Station / L/Elem	Invert Elev / Ch Slope	Depth (FT)	Water Elev	Q (CFS)	Vel (FPS)	Vel Head / SF Ave	Energy Grd.El. / HF	Super Elev / SE Dpth	Critical Depth / Froude N	Flow Top Width / Norm Dp	Height/ Dia.-FT / "N"	Base Wt or I.D. / X-Fall	ZL / ZR	No Wth Prs/Pip / Type Ch
6743.609	45.572	8.413	53.986	856.61	10.18	1.61	55.60	.00	6.11	10.00	7.000	10.000	.00	0 .0
207.354	.0009					.0022	.45	8.41	.62	12.38	.015	.00	.00	RECTANG
6950.963	45.758	8.824	54.582	856.61	9.71	1.46	56.05	.00	6.11	10.00	7.000	10.000	.00	0 .0
24.027	.0009					.0020	.05	8.82	.58	12.38	.015	.00	.00	RECTANG
6974.990	45.780	8.865	54.645	856.61	9.66	1.45	56.09	.00	6.11	10.00	7.000	10.000	.00	0 .0

```
TRANS STR   .0044                                          .0011     .03    8.86     .57            .015       .00   .00  RECTANG
 ****CHANGE IN STATIONING   STATION =   6999.990 = NEW STATION     5.500****
     |       |       |       |       |       |       |       |       |       |       |       |       |       |       |
   5.500   45.890  10.073   55.963  856.61    4.23     .28    56.24     .00    5.82   35.22    6.500   5.000  1.50   0   .0
  -|-     -|-     -|-     -|-     -|-     -|-     -|-     -|-     -|-     -|-     -|-     -|-     -|-     -|-     -|-     -|-
  21.796    .0114                                    .0002     .01   10.07     .31    4.13    .015       .00  1.50  TRAP
     |       |       |       |       |       |       |       |       |       |       |       |       |       |       |
 193.500   48.030   7.538   55.568  856.61    6.97     .75    56.32     .56    5.82   27.62    6.500   5.000  1.50   0   .0
  -|-     -|-     -|-     -|-     -|-     -|-     -|-     -|-     -|-     -|-     -|-     -|-     -|-     -|-     -|-     -|-
  41.013    .0042                                    .0009     .04    8.10     .58    5.23    .015       .00  1.50  TRAP
     |       |       |       |       |       |       |       |       |       |       |       |       |       |       |
 234.513   48.200   7.329   55.529  856.61    7.31     .83    56.36     .61    5.82   26.99    6.500   5.000  1.50   0   .0
  -|-     -|-     -|-     -|-     -|-     -|-     -|-     -|-     -|-     -|-     -|-     -|-     -|-     -|-     -|-     -|-
  35.987    .0042                                    .0010     .04    7.94     .62    5.23    .015       .00  1.50  TRAP
     |       |       |       |       |       |       |       |       |       |       |       |       |       |       |
 270.500   48.350   7.138   55.488  856.61    7.64     .91    56.39     .00    5.82   26.42    6.500   5.000  1.50   0   .0
  -|-     -|-     -|-     -|-     -|-     -|-     -|-     -|-     -|-     -|-     -|-     -|-     -|-     -|-     -|-     -|-
TRANS STR   .0013                                      .0011     .02    7.14     .65            .015       .00  1.50  TRAP
     |       |       |       |       |       |       |       |       |       |       |       |       |       |       |
 293.000   48.380   6.923   55.303  856.61    9.52    1.41    56.71     .00    4.66   15.50    6.000  15.500   .00   1   .5
  -|-     -|-     -|-     -|-     -|-     -|-     -|-     -|-     -|-     -|-     -|-     -|-     -|-     -|-     -|-     -|-
  89.000    .0013                                    .0047     .42    6.92     .70    6.00    .015       .00   .00  BOX
 ****CHANGE IN STATIONING   STATION =    382.000 = NEW STATION   332.690****
     |       |       |       |       |       |       |       |       |       |       |       |       |       |       |
 332.690   48.500   7.218   55.718  856.61    9.52    1.41    57.13     .00    4.66   15.50    6.000  15.500   .00   1   .5
  -|-     -|-     -|-     -|-     -|-     -|-     -|-     -|-     -|-     -|-     -|-     -|-     -|-     -|-     -|-     -|-
TRANS STR   .0020                                      .0026     .05    7.22     .70            .015       .00   .00  BOX
```


Program Package Serial Number: 1911

WATER SURFACE PROFILE LISTING Date: 2- 7-2017 Time:11:27:49

Mayfair High School
Palo Verde Channel
Existing Conditions

Station	Invert Elev	Depth (FT)	Water Elev	Q (CFS)	Vel (FPS)	Vel Head	Energy Grd.El.	Super Elev	Critical Depth	Flow Top Width	Height/ Dia.-FT	Base Wt or I.D.	ZL	No Wth Prs/Pip
L/Elem	Ch Slope					SF Ave	HF	SE Dpth	Froude N	Norm Dp	"N"	X-Fall	ZR	Type Ch
352.690	48.540	8.314	56.854	856.61	5.90	.54	57.39	.00	5.82	29.94	6.500	5.000	1.50	0 .0
152.000	.0014					.0006	.08	8.31	.47	6.73	.015	.00	1.50	TRAP
504.690	48.750	8.151	56.901	856.61	6.10	.58	57.48	.23	5.82	29.45	6.500	5.000	1.50	0 .0
56.480	.0012					.0006	.03	8.38	.49	6.89	.015	.00	1.50	TRAP
561.170	48.820	8.102	56.922	856.61	6.16	.59	57.51	.00	5.82	29.31	6.500	5.000	1.50	0 .0
43.700	.0034					.0006	.03	8.10	.50	5.47	.015	.00	1.50	TRAP
604.870	48.970	7.936	56.906	856.61	6.38	.63	57.54	.21	5.82	28.81	6.500	5.000	1.50	0 .0
65.930	.0020					.0007	.04	8.15	.52	6.21	.015	.00	1.50	TRAP
670.800	49.100	7.818	56.918	856.61	6.55	.67	57.58	.00	5.82	28.45	6.500	5.000	1.50	0 .0
229.998	.0014					.0008	.17	7.82	.54	6.71	.015	.00	1.50	TRAP
900.798	49.422	7.602	57.024	856.61	6.87	.73	57.76	.00	5.82	27.81	6.500	5.000	1.50	0 .0
250.883	.0014					.0009	.21	7.60	.57	6.71	.015	.00	1.50	TRAP
1151.681	49.774	7.391	57.164	856.61	7.21	.81	57.97	.00	5.82	27.17	6.500	5.000	1.50	0 .0
288.960	.0014					.0010	.28	7.39	.61	6.71	.015	.00	1.50	TRAP
1440.641	50.179	7.185	57.363	856.61	7.56	.89	58.25	.00	5.82	26.55	6.500	5.000	1.50	0 .0
165.159	.0014					.0011	.18	7.18	.64	6.71	.015	.00	1.50	TRAP

1605.800	50.410	7.087	57.497	856.61	7.73	.93	58.43	.00	5.82	26.26	6.500	5.000	1.50	0 .0
7.641	.0150					.0012	.01	7.09	.66	3.86	.015	.00	1.50	TRAP

Program Package Serial Number: 1911

WATER SURFACE PROFILE LISTING Date: 2- 7-2017 Time:11:27:49

Mayfair High School
Palo Verde Channel
Existing Conditions

Station	Invert Elev	Depth (FT)	Water Elev	Q (CFS)	Vel (FPS)	Vel Head	Energy Grd.El.	Super Elev	Critical Depth	Flow Top Width	Height/ Dia.-FT	Base Wt or I.D.	ZL	No Wth Prs/Pip
L/Elem	Ch Slope					SF Ave	HF	SE Dpth	Froude N	Norm Dp	"N"	X-Fall	ZR	Type Ch
1613.441	50.525	6.888	57.413	856.61	8.11	1.02	58.43	.00	5.82	25.66	6.500	5.000	1.50	0 .0
6.696	.0150					.0013	.01	6.89	.70	3.86	.015	.00	1.50	TRAP
1620.137	50.625	6.695	57.320	856.61	8.51	1.12	58.44	.00	5.82	25.08	6.500	5.000	1.50	0 .0
5.677	.0150					.0015	.01	6.69	.75	3.86	.015	.00	1.50	TRAP
1625.814	50.710	6.506	57.216	856.61	8.92	1.24	58.45	.00	5.82	24.52	6.500	5.000	1.50	0 .0
4.570	.0150					.0017	.01	6.51	.79	3.86	.015	.00	1.50	TRAP
1630.384	50.779	6.321	57.100	856.61	9.36	1.36	58.46	.00	5.82	23.96	6.500	5.000	1.50	0 .0
3.358	.0150					.0019	.01	6.32	.84	3.86	.015	.00	1.50	TRAP
1633.742	50.829	6.142	56.971	856.61	9.81	1.50	58.47	.00	5.82	23.42	6.500	5.000	1.50	0 .0
2.019	.0150					.0022	.00	6.14	.90	3.86	.015	.00	1.50	TRAP
1635.761	50.859	5.966	56.826	856.61	10.29	1.65	58.47	.00	5.82	22.90	6.500	5.000	1.50	0 .0
.039	.0150					.0024	.00	5.97	.95	3.86	.015	.00	1.50	TRAP
1635.800	50.860	5.961	56.821	856.61	10.31	1.65	58.47	.00	5.82	22.88	6.500	5.000	1.50	0 .0

```
T1 Mayfair High School                                                  0
T2 Palo Verde Channel
T3 Existing Conditions - Mapleleaf Culvert Capacity

SO   6200.000  44.690  1                            44.690
R    6330.000  45.090  1      .015                                .000
JX   6340.000  45.210  1      .015
R    6974.990  45.780  1      .015                                .000
TS   6999.990  45.890  2      .015                                .000
EQ      5.500
R     193.500  48.030  2      .015                                .000
R     270.500  48.350  2      .015                              46.000
TS    293.000  48.380  3      .015                                .000
R     382.000  48.500  3      .015                                .000
EQ    332.690
TS    352.690  48.540  2      .015                                .000
R     504.690  48.750  2      .015                                .000
R     561.170  48.820  2      .015                             -38.000
R     604.870  48.970  2      .015                                .000
R     670.800  49.100  2      .015                              37.750
R    1605.800  50.410  2      .015                                .000
R    1635.800  50.860  2      .015                                .000
SH   1635.800  50.860  2                            50.580
CD   1  2   0    .000   7.000   10.000  .000  .000   .00
CD   2  1   0    .000   6.500    5.000 1.500 1.500   .00
CD   3  3   1    .500   6.000   15.500  .000  .000   .00
Q           600.000   .0
```

Program Package Serial Number: 1911

WATER SURFACE PROFILE LISTING Date: 2- 7-2017 Time: 2:12: 5

Mayfair High School
Palo Verde Channel
Existing Conditions - Mapleleaf Culvert Capacity

Station / L/Elem	Invert Elev / Ch Slope	Depth (FT)	Water Elev	Q (CFS)	Vel (FPS)	Vel Head / SF Ave	Energy Grd.El. / HF	Super Elev / SE Dpth	Critical Depth / Froude N	Flow Top Width / Norm Dp	Height/ Dia.-FT / "N"	Base Wt or I.D. / X-Fall	ZL / ZR	No Wth Prs/Pip / Type Ch
6200.000	44.690	4.818	49.508	600.00	12.45	2.41	51.92	.00	4.82	10.00	7.000	10.000	.00	0 .0
11.437	.0031					.0045	.05	4.82	1.00	5.69	.015	.00	.00	RECTANG
6211.437	44.725	5.053	49.778	600.00	11.87	2.19	51.97	.00	4.82	10.00	7.000	10.000	.00	0 .0
54.134	.0031					.0040	.21	5.05	.93	5.69	.015	.00	.00	RECTANG
6265.571	44.892	5.299	50.191	600.00	11.32	1.99	52.18	.00	4.82	10.00	7.000	10.000	.00	0 .0
64.429	.0031					.0036	.23	5.30	.87	5.69	.015	.00	.00	RECTANG
6330.000	45.090	5.422	50.512	600.00	11.07	1.90	52.41	.00	4.82	10.00	7.000	10.000	.00	0 .0
JUNCT STR	.0120					.0038	.04	5.42	.84		.015	.00	.00	RECTANG
6340.000	45.210	5.052	50.262	600.00	11.88	2.19	52.45	.00	4.82	10.00	7.000	10.000	.00	0 .0
15.513	.0009					.0040	.06	5.05	.93	9.23	.015	.00	.00	RECTANG
6355.513	45.224	5.298	50.522	600.00	11.32	1.99	52.51	.00	4.82	10.00	7.000	10.000	.00	0 .0
29.957	.0009					.0035	.10	5.30	.87	9.23	.015	.00	.00	RECTANG
6385.470	45.251	5.557	50.808	600.00	10.80	1.81	52.62	.00	4.82	10.00	7.000	10.000	.00	0 .0
48.954	.0009					.0031	.15	5.56	.81	9.23	.015	.00	.00	RECTANG
6434.424	45.295	5.828	51.123	600.00	10.29	1.65	52.77	.00	4.82	10.00	7.000	10.000	.00	0 .0
74.170	.0009					.0027	.20	5.83	.75	9.23	.015	.00	.00	RECTANG
6508.594	45.361	6.113	51.474	600.00	9.82	1.50	52.97	.00	4.82	10.00	7.000	10.000	.00	0 .0
108.105	.0009					.0024	.26	6.11	.70	9.23	.015	.00	.00	RECTANG

Program Package Serial Number: 1911

WATER SURFACE PROFILE LISTING Date: 2- 7-2017 Time: 2:12: 5

Mayfair High School
Palo Verde Channel
Existing Conditions

Station / L/Elem	Invert Elev / Ch Slope	Depth (FT)	Water Elev	Q (CFS)	Vel (FPS)	Vel Head / SF Ave	Energy Grd.El. / HF	Super Elev / SE Dpth	Critical Depth / Froude N	Flow Top Width / Norm Dp	Height/ Dia.-FT / "N"	Base Wt or I.D. / X-Fall	ZL / ZR	No Wth Prs/Pip / Type Ch
6616.699	45.458	6.411	51.870	600.00	9.36	1.36	53.23	.00	4.82	10.00	7.000	10.000	.00	0 .0
154.672	.0009					.0021	.33	6.41	.65	9.23	.015	.00	.00	RECTANG
6771.371	45.597	6.724	52.321	600.00	8.92	1.24	53.56	.00	4.82	10.00	7.000	10.000	.00	0 .0
203.619	.0009					.0019	.38	6.72	.61	9.23	.015	.00	.00	RECTANG
6974.990	45.780	7.030	52.810	600.00	8.53	1.13	53.94	.00	4.82	10.00	7.000	10.000	.00	0 .0

```
TRANS STR   .0044                                          .0011     .03    7.03     .57            .015       .00   .00  RECTANG
 ****CHANGE IN STATIONING   STATION =   6999.990 = NEW STATION    5.500****
     |       |       |       |       |       |       |       |       |       |       |       |       |       |       |
   5.500   45.890   7.834   53.724   600.00    4.57     .32    54.05     .00    4.89    28.50    6.500   5.000  1.50   0   .0
    -|-     -|-     -|-     -|-     -|-     -|-     -|-     -|-     -|-     -|-     -|-     -|-     -|-     -|-     -|-
  16.724    .0114                                        .0004     .01    7.83     .38    3.47     .015       .00  1.50  TRAP
     |       |       |       |       |       |       |       |       |       |       |       |       |       |       |
 193.500   48.030   4.544   52.574   600.00   11.18    1.94    54.51     .98    4.89    18.63    6.500   5.000  1.50   0   .0
    -|-     -|-     -|-     -|-     -|-     -|-     -|-     -|-     -|-     -|-     -|-     -|-     -|-     -|-     -|-
  36.669    .0042                                        .0036     .13    5.52    1.16    4.43     .015       .00  1.50  TRAP
     |       |       |       |       |       |       |       |       |       |       |       |       |       |       |
 230.169   48.182   4.607   52.789   600.00   10.93    1.86    54.65     .95    4.89    18.82    6.500   5.000  1.50   0   .0
    -|-     -|-     -|-     -|-     -|-     -|-     -|-     -|-     -|-     -|-     -|-     -|-     -|-     -|-     -|-
  33.032    .0042                                        .0033     .11    5.55    1.13    4.43     .015       .00  1.50  TRAP
     |       |       |       |       |       |       |       |       |       |       |       |       |       |       |
 263.201   48.320   4.748   53.067   600.00   10.43    1.69    54.76     .88    4.89    19.24    6.500   5.000  1.50   0   .0
    -|-     -|-     -|-     -|-     -|-     -|-     -|-     -|-     -|-     -|-     -|-     -|-     -|-     -|-     -|-
   7.299    .0042                                        .0029     .02    5.63    1.06    4.43     .015       .00  1.50  TRAP
     |       |       |       |       |       |       |       |       |       |       |       |       |       |       |
 270.500   48.350   4.893   53.243   600.00    9.94    1.53    54.78     .00    4.89    19.68    6.500   5.000  1.50   0   .0
    -|-     -|-     -|-     -|-     -|-     -|-     -|-     -|-     -|-     -|-     -|-     -|-     -|-     -|-     -|-
TRANS STR   .0013                                          .0015     .03    4.89    1.00            .015       .00  1.50  TRAP
     |       |       |       |       |       |       |       |       |       |       |       |       |       |       |
 293.000   48.380   5.951   54.331   600.00    6.72     .70    55.03     .00    3.68    15.50    6.000  15.500   .00   1   .5
    -|-     -|-     -|-     -|-     -|-     -|-     -|-     -|-     -|-     -|-     -|-     -|-     -|-     -|-     -|-
  89.000    .0013                                        .0015     .13    5.95     .49    6.00     .015       .00   .00  BOX
                    -------------------- WARNING - Flow depth near top of box conduit --------------------
```


Program Package Serial Number: 1911

WATER SURFACE PROFILE LISTING Date: 2- 7-2017 Time: 2:12: 5

Mayfair High School
Palo Verde Channel
Existing Conditions

```
********************************************************************************************************************************** ********
         | Invert  |  Depth  |  Water  |    Q    |  Vel     Vel  |  Energy | Super |Critical|Flow Top|Height/|Base Wt|       |No Wth
 Station |  Elev   |  (FT)   |  Elev   |  (CFS)  | (FPS)    Head |  Grd.El.|  Elev | Depth  | Width  |Dia.-FT|or I.D.|  ZL   |Prs/Pip
      -|-      -|-      -|-      -|-      -|-     -|-     -|-      -|-     -|-      -|-      -|-     -|-     -|-     -|-   -|
 L/Elem  |Ch Slope |         |         |         |SF Ave|    HF   |SE Dpth|Froude N|Norm Dp |  "N"  | X-Fall|  ZR   |Type Ch
*********|*********|*********|*********|*********|******|*********|*******|********|********|*******|*******|*******|*******
 ****CHANGE IN STATIONING   STATION =    382.000 = NEW STATION   332.690****
     |       |       |       |       |       |       |       |       |       |       |       |       |       |       |
 332.690   48.500   5.951   54.451   600.00    6.72     .70    55.15     .00    3.68    15.50    6.000  15.500   .00   1   .5
    -|-     -|-     -|-     -|-     -|-     -|-     -|-     -|-     -|-     -|-     -|-     -|-     -|-     -|-     -|-
TRANS STR   .0020                                          .0014     .03    5.95     .49            .015       .00   .00  BOX
                    -------------------- WARNING - Flow depth near top of box conduit --------------------
     |       |       |       |       |       |       |       |       |       |       |       |       |       |       |
 352.690   48.540   5.863   54.403   600.00    7.42     .85    55.26     .00    4.89    22.59    6.500   5.000  1.50   0   .0
    -|-     -|-     -|-     -|-     -|-     -|-     -|-     -|-     -|-     -|-     -|-     -|-     -|-     -|-     -|-
 152.000    .0014                                        .0013     .19    5.86     .69    5.72     .015       .00  1.50  TRAP
     |       |       |       |       |       |       |       |       |       |       |       |       |       |       |
 504.690   48.750   5.828   54.578   600.00    7.49     .87    55.45     .26    4.89    22.48    6.500   5.000  1.50   0   .0
    -|-     -|-     -|-     -|-     -|-     -|-     -|-     -|-     -|-     -|-     -|-     -|-     -|-     -|-     -|-
  56.480    .0012                                        .0013     .07    6.09     .70    5.87     .015       .00  1.50  TRAP
     |       |       |       |       |       |       |       |       |       |       |       |       |       |       |
 561.170   48.820   5.832   54.652   600.00    7.48     .87    55.52     .00    4.89    22.49    6.500   5.000  1.50   0   .0
    -|-     -|-     -|-     -|-     -|-     -|-     -|-     -|-     -|-     -|-     -|-     -|-     -|-     -|-     -|-
  38.963    .0034                                        .0014     .05    5.83     .70    4.63     .015       .00  1.50  TRAP
     |       |       |       |       |       |       |       |       |       |       |       |       |       |       |
 600.133   48.954   5.664   54.618   600.00    7.85     .96    55.57     .00    4.89    21.99    6.500   5.000  1.50   0   .0
    -|-     -|-     -|-     -|-     -|-     -|-     -|-     -|-     -|-     -|-     -|-     -|-     -|-     -|-     -|-
   4.737    .0034                                        .0015     .01    5.66     .74    4.63     .015       .00  1.50  TRAP
     |       |       |       |       |       |       |       |       |       |       |       |       |       |       |
 604.870   48.970   5.643   54.613   600.00    7.90     .97    55.58     .24    4.89    21.93    6.500   5.000  1.50   0   .0
    -|-     -|-     -|-     -|-     -|-     -|-     -|-     -|-     -|-     -|-     -|-     -|-     -|-     -|-     -|-
  65.930    .0020                                        .0015     .10    5.89     .75    5.27     .015       .00  1.50  TRAP
     |       |       |       |       |       |       |       |       |       |       |       |       |       |       |
 670.800   49.100   5.572   54.672   600.00    8.06    1.01    55.68     .00    4.89    21.72    6.500   5.000  1.50   0   .0
    -|-     -|-     -|-     -|-     -|-     -|-     -|-     -|-     -|-     -|-     -|-     -|-     -|-     -|-     -|-
 783.418    .0014                                        .0015    1.16    5.57     .77    5.71     .015       .00  1.50  TRAP
```


Program Package Serial Number: 1911

WATER SURFACE PROFILE LISTING Date: 2- 7-2017 Time: 2:12: 5

Mayfair High School
Palo Verde Channel
Existing Conditions

Station / L/Elem	Invert Elev / Ch Slope	Depth (FT)	Water Elev	Q (CFS)	Vel (FPS)	Vel Head / SF Ave	Energy Grd.El. / HF	Super Elev / SE Dpth	Critical Depth / Froude N	Flow Top Width / Norm Dp	Height/ Dia.-FT / "N"	Base Wt or I.D. / X-Fall	ZL / ZR	No Wth Prs/Pip / Type Ch
1454.218	50.198	5.706	55.903	600.00	7.76	.93	56.84	.00	4.89	22.12	6.500	5.000	1.50	0 .0
147.766	.0014					.0014	.21	5.71	.73	5.71	.015	.00	1.50	TRAP
1601.984	50.405	5.706	56.110	600.00	7.76	.93	57.04	.00	4.89	22.12	6.500	5.000	1.50	0 .0
HYDRAULIC JUMP														
1601.984	50.405	4.150	54.555	600.00	12.88	2.58	57.13	.00	4.89	17.45	6.500	5.000	1.50	0 .0
3.816	.0014					.0055	.02	4.15	1.39	5.71	.015	.00	1.50	TRAP
1605.800	50.410	4.135	54.545	600.00	12.95	2.61	57.15	.00	4.89	17.40	6.500	5.000	1.50	0 .0
6.663	.0150					.0054	.04	4.13	1.40	3.25	.015	.00	1.50	TRAP
1612.463	50.510	4.206	54.716	600.00	12.62	2.47	57.19	.00	4.89	17.62	6.500	5.000	1.50	0 .0
9.298	.0150					.0049	.05	4.21	1.35	3.25	.015	.00	1.50	TRAP
1621.761	50.649	4.336	54.985	600.00	12.03	2.25	57.23	.00	4.89	18.01	6.500	5.000	1.50	0 .0
6.573	.0150					.0043	.03	4.34	1.27	3.25	.015	.00	1.50	TRAP
1628.334	50.748	4.470	55.218	600.00	11.47	2.04	57.26	.00	4.89	18.41	6.500	5.000	1.50	0 .0
4.313	.0150					.0038	.02	4.47	1.20	3.25	.015	.00	1.50	TRAP
1632.647	50.813	4.607	55.420	600.00	10.93	1.86	57.28	.00	4.89	18.82	6.500	5.000	1.50	0 .0
2.400	.0150					.0033	.01	4.61	1.13	3.25	.015	.00	1.50	TRAP
1635.047	50.849	4.748	55.596	600.00	10.43	1.69	57.28	.00	4.89	19.24	6.500	5.000	1.50	0 .0
.753	.0150					.0029	.00	4.75	1.06	3.25	.015	.00	1.50	TRAP

♀ FILE: mayfair-exCAP.WSW W S P G W - CIVILDESIGN Version 14.06 PAGE 5

Program Package Serial Number: 1911

WATER SURFACE PROFILE LISTING Date: 2- 7-2017 Time: 2:12: 5

Mayfair High School
Palo Verde Channel
Existing Conditions

Station / L/Elem	Invert Elev / Ch Slope	Depth (FT)	Water Elev	Q (CFS)	Vel (FPS)	Vel Head / SF Ave	Energy Grd.El. / HF	Super Elev / SE Dpth	Critical Depth / Froude N	Flow Top Width / Norm Dp	Height/ Dia.-FT / "N"	Base Wt or I.D. / X-Fall	ZL / ZR	No Wth Prs/Pip / Type Ch
1635.800	50.860	4.893	55.753	600.00	9.94	1.53	57.29	.00	4.89	19.68	6.500	5.000	1.50	0 .0

♀

```
T1 Mayfair High School                                                  0
T2 Palo Verde Channel
T3 Exist PD 131 - 72-inch RCP
SO   1614.300  49.000  1                          49.500
R    1703.860  49.140  1      .013                              -57.013
R    1793.420  49.290  1      .013                               57.013
EQ   1765.250
R    1898.750  49.500  1      .013                                  .000    .000
JX   1904.250  49.510  1  2   .013    5.000           49.510        -90.0         .000
R    2299.250  50.140  1      .013                                  .000    .000
JX   2304.750  50.150  1      .013
R    2698.250  50.780  1      .013                                  .000    .000
JX   2703.750  50.790  1      .013
R    2869.850  51.050  1      .013                                  .000    .000
SH   2869.850  51.050  1                          50.580
CD   1  4   0    .000   6.000    0.000 0.000 0.000   .00
CD   2  4   0    .000   3.000    0.000 0.000 0.000   .00
Q           277.250   .0
```

Mayfair High School
Palo Verde Channel
Exist PD 131 - 72-inch RCP

Station / L/Elem	Invert Elev / Ch Slope	Depth (FT)	Water Elev	Q (CFS)	Vel (FPS)	Vel Head / SF Ave	Energy Grd.El. / HF	Super Elev / SE Dpth	Critical Depth / Froude N	Flow Top Width / Norm Dp	Height/Dia.-FT "N"	Base Wt or I.D. / X-Fall	ZL / ZR	No Wth Prs/Pip / Type Ch
1614.300	49.000	4.597	53.597	282.25	12.14	2.29	55.89	.13	4.60	5.08	6.000	.000	.00	0 .0
6.793	.0016					.0048	.03	4.73	1.00	6.00	.013	.00	.00	PIPE
1621.093	49.011	4.828	53.838	282.25	11.58	2.08	55.92	.11	4.60	4.76	6.000	.000	.00	0 .0
25.731	.0016					.0044	.11	4.94	.90	6.00	.013	.00	.00	PIPE
1646.823	49.051	5.090	54.140	282.25	11.04	1.89	56.03	.09	4.60	4.31	6.000	.000	.00	0 .0
57.036	.0016					.0041	.23	5.18	.80	6.00	.013	.00	.00	PIPE
1703.860	49.140	5.404	54.544	282.25	10.53	1.72	56.26	.07	4.60	3.59	6.000	.000	.00	0 .0
89.560	.0017					.0039	.35	5.47	.68	6.00	.013	.00	.00	PIPE
****CHANGE IN STATIONING STATION = 1793.420 = NEW STATION 1765.250****														
1765.250	49.290	5.721	55.011	282.25	10.15	1.60	56.61	.00	4.60	2.53	6.000	.000	.00	0 .0
90.393	.0016					.0041	.37	5.72	.54	6.00	.013	.00	.00	PIPE
1898.750	49.500	6.124	55.624	282.25	9.98	1.55	57.17	.00	4.60	.00	6.000	.000	.00	0 .0
JUNCT STR	.0018					.0044	.02	6.12	.00		.013	.00	.00	PIPE
1904.250	49.510	6.246	55.756	277.25	9.81	1.49	57.25	.00	4.56	.00	6.000	.000	.00	0 .0
395.000	.0016					.0043	1.69	6.25	.00	6.00	.013	.00	.00	PIPE
2299.250	50.140	7.309	57.449	277.25	9.81	1.49	58.94	.00	4.56	.00	6.000	.000	.00	0 .0
JUNCT STR	.0018					.0043	.02	7.31	.00		.013	.00	.00	PIPE
2304.750	50.150	7.323	57.473	277.25	9.81	1.49	58.97	.00	4.56	.00	6.000	.000	.00	0 .0
393.500	.0016					.0043	1.69	7.32	.00	6.00	.013	.00	.00	PIPE

Mayfair High School
Palo Verde Channel
Exist PD 131 - 72-inch RCP

Station / L/Elem	Invert Elev / Ch Slope	Depth (FT)	Water Elev	Q (CFS)	Vel (FPS)	Vel Head / SF Ave	Energy Grd.El. / HF	Super Elev / SE Dpth	Critical Depth / Froude N	Flow Top Width / Norm Dp	Height/Dia.-FT "N"	Base Wt or I.D. / X-Fall	ZL / ZR	No Wth Prs/Pip / Type Ch
2698.250	50.780	8.379	59.159	277.25	9.81	1.49	60.65	.00	4.56	.00	6.000	.000	.00	0 .0
JUNCT STR	.0018					.0043	.02	8.38	.00		.013	.00	.00	PIPE
2703.750	50.790	8.393	59.183	277.25	9.81	1.49	60.68	.00	4.56	.00	6.000	.000	.00	0 .0
166.100	.0016					.0043	.71	8.39	.00	6.00	.013	.00	.00	PIPE
2869.850	51.050	8.845	59.895	277.25	9.81	1.49	61.39	.00	4.56	.00	6.000	.000	.00	0 .0

-|- -|- -|- -|- -|- -|- -|- -|- -|- -|- -|- -|- -|- |-

♀

```
T1 Mayfair High School                                                  0
T2 Palo Verde Channel
T3 Project Conditions- Three 72-inch SD
SO   6200.000  44.690  1                          44.690
R    6330.000  45.090  1      .015                                .000
JX   6340.000  45.210  1      .015
R    6974.990  45.780  1      .015                                .000
TS   6999.990  45.890  2      .015                                .000
EQ       5.500
R     193.500  48.030  2      .015                                .000
R     270.500  48.350  2      .015                              46.000
TS    293.000  48.380  3      .015                                .000
R     382.000  48.500  3      .015                                .000
EQ    332.690
TS    352.690  48.540  2      .015                                .000
R     504.690  48.750  2      .015                                .000
R     561.170  48.820  2      .015                             -38.000
R     604.870  48.970  2      .015                                .000
R     670.800  49.100  2      .015                              37.750
WX    670.800    .000  2
R    1605.800  50.410  4      .015                                .000
TS   1635.800  50.860  5      .015                                .000
SH   1635.800  50.860  5                          50.580
CD   1  2   0    .000   7.000   10.000  .000  .000   .00
CD   2  1   0    .000   6.500    5.000 1.500 1.500   .00
CD   3  3   1    .500   6.000   15.500  .000  .000   .00
CD   4  4   3    .000   6.000     .000  .000  .000   .00
CD   5  2   0    .000   7.500   24.000  .000  .000   .00
Q           600.000   .0
```

Program Package Serial Number: 1911

WATER SURFACE PROFILE LISTING Date: 2-17-2017 Time:12:48:23

Mayfair High School
Palo Verde Channel
Project Conditions- Three 72-inch SD

Station / L/Elem	Invert Elev / Ch Slope	Depth (FT)	Water Elev	Q (CFS)	Vel (FPS)	Vel Head / SF Ave	Energy Grd.El. / HF	Super Elev / SE Dpth	Critical Depth / Froude N	Flow Top Width / Norm Dp	Height/ Dia.-FT / "N"	Base Wt or I.D. / X-Fall	ZL / ZR	No Wth Prs/Pip / Type Ch
6200.000	44.690	4.818	49.508	600.00	12.45	2.41	51.92	.00	4.82	10.00	7.000	10.000	.00	0 .0
11.437	.0031					.0045	.05	4.82	1.00	5.69	.015	.00	.00	RECTANG
6211.437	44.725	5.053	49.778	600.00	11.87	2.19	51.97	.00	4.82	10.00	7.000	10.000	.00	0 .0
54.134	.0031					.0040	.21	5.05	.93	5.69	.015	.00	.00	RECTANG
6265.571	44.892	5.299	50.191	600.00	11.32	1.99	52.18	.00	4.82	10.00	7.000	10.000	.00	0 .0
64.429	.0031					.0036	.23	5.30	.87	5.69	.015	.00	.00	RECTANG
6330.000	45.090	5.422	50.512	600.00	11.07	1.90	52.41	.00	4.82	10.00	7.000	10.000	.00	0 .0
JUNCT STR	.0120					.0038	.04	5.42	.84		.015	.00	.00	RECTANG
6340.000	45.210	5.052	50.262	600.00	11.88	2.19	52.45	.00	4.82	10.00	7.000	10.000	.00	0 .0
15.513	.0009					.0040	.06	5.05	.93	9.23	.015	.00	.00	RECTANG
6355.513	45.224	5.298	50.522	600.00	11.32	1.99	52.51	.00	4.82	10.00	7.000	10.000	.00	0 .0
29.957	.0009					.0035	.10	5.30	.87	9.23	.015	.00	.00	RECTANG
6385.470	45.251	5.557	50.808	600.00	10.80	1.81	52.62	.00	4.82	10.00	7.000	10.000	.00	0 .0
48.954	.0009					.0031	.15	5.56	.81	9.23	.015	.00	.00	RECTANG
6434.424	45.295	5.828	51.123	600.00	10.29	1.65	52.77	.00	4.82	10.00	7.000	10.000	.00	0 .0
74.170	.0009					.0027	.20	5.83	.75	9.23	.015	.00	.00	RECTANG
6508.594	45.361	6.113	51.474	600.00	9.82	1.50	52.97	.00	4.82	10.00	7.000	10.000	.00	0 .0
108.105	.0009					.0024	.26	6.11	.70	9.23	.015	.00	.00	RECTANG

Program Package Serial Number: 1911

WATER SURFACE PROFILE LISTING Date: 2-17-2017 Time:12:48:23

Mayfair High School
Palo Verde Channel
Project Conditions- Three 72-inch SD

Station / L/Elem	Invert Elev / Ch Slope	Depth (FT)	Water Elev	Q (CFS)	Vel (FPS)	Vel Head / SF Ave	Energy Grd.El. / HF	Super Elev / SE Dpth	Critical Depth / Froude N	Flow Top Width / Norm Dp	Height/ Dia.-FT / "N"	Base Wt or I.D. / X-Fall	ZL / ZR	No Wth Prs/Pip / Type Ch
6616.699	45.458	6.411	51.870	600.00	9.36	1.36	53.23	.00	4.82	10.00	7.000	10.000	.00	0 .0
154.672	.0009					.0021	.33	6.41	.65	9.23	.015	.00	.00	RECTANG
6771.371	45.597	6.724	52.321	600.00	8.92	1.24	53.56	.00	4.82	10.00	7.000	10.000	.00	0 .0
203.619	.0009					.0019	.38	6.72	.61	9.23	.015	.00	.00	RECTANG
6974.990	45.780	7.030	52.810	600.00	8.53	1.13	53.94	.00	4.82	10.00	7.000	10.000	.00	0 .0

TRANS STR	.0044					.0011	.03	7.03	.57		.015	.00	.00	RECTANG	
****CHANGE IN STATIONING	STATION =	6999.990	= NEW STATION	5.500****											
5.500	45.890	7.834	53.724	600.00	4.57	.32	54.05	.00	4.89	28.50	6.500	5.000	1.50	0	.0
16.724	.0114					.0004	.01	7.83	.38	3.47	.015	.00	1.50	TRAP	
193.500	48.030	4.544	52.574	600.00	11.18	1.94	54.51	.98	4.89	18.63	6.500	5.000	1.50	0	.0
36.669	.0042					.0036	.13	5.52	1.16	4.43	.015	.00	1.50	TRAP	
230.169	48.182	4.607	52.789	600.00	10.93	1.86	54.65	.95	4.89	18.82	6.500	5.000	1.50	0	.0
33.032	.0042					.0033	.11	5.55	1.13	4.43	.015	.00	1.50	TRAP	
263.201	48.320	4.748	53.067	600.00	10.43	1.69	54.76	.88	4.89	19.24	6.500	5.000	1.50	0	.0
7.299	.0042					.0029	.02	5.63	1.06	4.43	.015	.00	1.50	TRAP	
270.500	48.350	4.893	53.243	600.00	9.94	1.53	54.78	.00	4.89	19.68	6.500	5.000	1.50	0	.0
TRANS STR	.0013					.0015	.03	4.89	1.00		.015	.00	1.50	TRAP	
293.000	48.380	5.951	54.331	600.00	6.72	.70	55.03	.00	3.68	15.50	6.000	15.500	.00	1	.5
89.000	.0013					.0015	.13	5.95	.49	6.00	.015	.00	.00	BOX	

---------- WARNING - Flow depth near top of box conduit ----------

Station	Invert Elev	Depth (FT)	Water Elev	Q (CFS)	Vel (FPS)	Vel Head	Energy Grd.El.	Super Elev	Critical Depth	Flow Top Width	Height/ Dia.-FT	Base Wt or I.D.	ZL	No Wth Prs/Pip
L/Elem	Ch Slope					SF Ave	HF	SE Dpth	Froude N	Norm Dp	"N"	X-Fall	ZR	Type Ch
****CHANGE IN STATIONING	STATION =	382.000	= NEW STATION	332.690****										
332.690	48.500	5.951	54.451	600.00	6.72	.70	55.15	.00	3.68	15.50	6.000	15.500	.00	1	.5
TRANS STR	.0020					.0014	.03	5.95	.49		.015	.00	.00	BOX	

---------- WARNING - Flow depth near top of box conduit ----------

352.690	48.540	5.863	54.403	600.00	7.42	.85	55.26	.00	4.89	22.59	6.500	5.000	1.50	0	.0
152.000	.0014					.0013	.19	5.86	.69	5.72	.015	.00	1.50	TRAP	
504.690	48.750	5.828	54.578	600.00	7.49	.87	55.45	.26	4.89	22.48	6.500	5.000	1.50	0	.0
56.480	.0012					.0013	.07	6.09	.70	5.87	.015	.00	1.50	TRAP	
561.170	48.820	5.832	54.652	600.00	7.48	.87	55.52	.00	4.89	22.49	6.500	5.000	1.50	0	.0
38.963	.0034					.0014	.05	5.83	.70	4.63	.015	.00	1.50	TRAP	
600.133	48.954	5.664	54.618	600.00	7.85	.96	55.57	.00	4.89	21.99	6.500	5.000	1.50	0	.0
4.737	.0034					.0015	.01	5.66	.74	4.63	.015	.00	1.50	TRAP	
604.870	48.970	5.643	54.613	600.00	7.90	.97	55.58	.24	4.89	21.93	6.500	5.000	1.50	0	.0
65.930	.0020					.0015	.10	5.89	.75	5.27	.015	.00	1.50	TRAP	
670.800	49.100	5.572	54.672	600.00	8.06	1.01	55.68	.00	4.89	21.72	6.500	5.000	1.50	0	.0
WALL	EXIT														

WATER SURFACE PROFILE LISTING Date: 2-17-2017 Time:12:48:23

Mayfair High School
Palo Verde Channel
Project Conditions- Three 72-inch SD

Station	Invert Elev	Depth (FT)	Water Elev	Q (CFS)	Vel (FPS)	Vel Head	Energy Grd.El.	Super Elev	Critical Depth	Flow Top Width	Height/ Dia.-FT	Base Wt or I.D.	ZL	No Wth Prs/Pip
L/Elem	Ch Slope					SF Ave	HF	SE Dpth	Froude N	Norm Dp	"N"	X-Fall	ZR	Type Ch
670.800	49.100	5.573	54.673	600.00	7.30	.83	55.50	.00	3.87	3.09	6.000	.000	.00	3 .0
285.212	.0014					.0027	.78	5.57	.25	6.00	.015	.00	.00	PIPE
956.012	49.500	6.000	55.500	600.00	7.07	.78	56.28	.00	3.87	.00	6.000	.000	.00	3 .0
649.788	.0014					.0029	1.90	6.00	.00	6.00	.015	.00	.00	PIPE
1605.800	50.410	7.019	57.429	600.00	7.07	.78	58.21	.00	3.87	.00	6.000	.000	.00	3 .0
TRANS STR	.0150					.0016	.05	7.02	.00		.015	.00	.00	PIPE
1635.800	50.860	7.364	58.224	600.00	3.40	.18	58.40	.00	2.69	24.00	7.500	24.000	.00	0 .0

```
T1 Mayfair High School                                                    0
T2 Palo Verde Channel
T3 Project PD 131 - 72-inch RCP
SO   1614.300  49.000  1                          58.200
R    1703.860  49.140  1      .013                          -57.013
R    1793.420  49.290  1      .013                           57.013
EQ   1765.250
R    1898.750  49.500  1      .013                              .000    .000
JX   1904.250  49.510  1  2   .013    5.000           49.510    -90.0          .000
R    2299.250  50.140  1      .013                              .000    .000
JX   2304.750  50.150  1      .013
R    2698.250  50.780  1      .013                              .000    .000
JX   2703.750  50.790  1      .013
R    2869.850  51.050  1      .013                              .000    .000
SH   2869.850  51.050  1                          50.580
CD   1  4   0    .000   6.000    0.000 0.000 0.000   .00
CD   2  4   0    .000   3.000    0.000 0.000 0.000   .00
Q           160.000   .0
```

Program Package Serial Number: 1911

WATER SURFACE PROFILE LISTING Date: 2-17-2017 Time:12:50:11

Mayfair High School
Palo Verde Channel
Project PD 131 - 72-inch RCP

Station	Invert Elev	Depth (FT)	Water Elev	Q (CFS)	Vel (FPS)	Vel Head	Energy Grd.El.	Super Elev	Critical Depth	Flow Top Width	Height/ Dia.-FT	Base Wt or I.D.	ZL	No Wth Prs/Pip
L/Elem	Ch Slope					SF Ave	HF	SE Dpth	Froude N	Norm Dp	"N"	X-Fall	ZR	Type Ch
1614.300	49.000	9.200	58.200	165.00	5.84	.53	58.73	.00	3.50	.00	6.000	.000	.00	0 .0
89.560	.0016					.0015	.14	.00	.00	4.84	.013	.00	.00	PIPE
1703.860	49.140	9.280	58.420	165.00	5.84	.53	58.95	.00	3.50	.00	6.000	.000	.00	0 .0
89.560	.0017					.0015	.14	.00	.00	4.68	.013	.00	.00	PIPE
****CHANGE IN STATIONING STATION = 1793.420 = NEW STATION 1765.250****														
1765.250	49.290	9.350	58.640	165.00	5.84	.53	59.17	.00	3.50	.00	6.000	.000	.00	0 .0
133.500	.0016					.0015	.20	9.35	.00	4.82	.013	.00	.00	PIPE
1898.750	49.500	9.343	58.843	165.00	5.84	.53	59.37	.00	3.50	.00	6.000	.000	.00	0 .0
JUNCT STR	.0018					.0015	.01	9.34	.00		.013	.00	.00	PIPE
1904.250	49.510	9.404	58.914	160.00	5.66	.50	59.41	.00	3.44	.00	6.000	.000	.00	0 .0
395.000	.0016					.0014	.56	9.40	.00	4.65	.013	.00	.00	PIPE
2299.250	50.140	9.338	59.478	160.00	5.66	.50	59.98	.00	3.44	.00	6.000	.000	.00	0 .0
JUNCT STR	.0018					.0014	.01	9.34	.00		.013	.00	.00	PIPE
2304.750	50.150	9.336	59.486	160.00	5.66	.50	59.98	.00	3.44	.00	6.000	.000	.00	0 .0
393.500	.0016					.0014	.56	9.34	.00	4.64	.013	.00	.00	PIPE
2698.250	50.780	9.267	60.047	160.00	5.66	.50	60.54	.00	3.44	.00	6.000	.000	.00	0 .0
JUNCT STR	.0018					.0014	.01	9.27	.00		.013	.00	.00	PIPE
2703.750	50.790	9.265	60.055	160.00	5.66	.50	60.55	.00	3.44	.00	6.000	.000	.00	0 .0
166.100	.0016					.0014	.24	9.27	.00	4.69	.013	.00	.00	PIPE

Program Package Serial Number: 1911

WATER SURFACE PROFILE LISTING Date: 2-17-2017 Time:12:50:11

Mayfair High School
Palo Verde Channel
Project PD 131 - 72-inch RCP

Station	Invert Elev	Depth (FT)	Water Elev	Q (CFS)	Vel (FPS)	Vel Head	Energy Grd.El.	Super Elev	Critical Depth	Flow Top Width	Height/ Dia.-FT	Base Wt or I.D.	ZL	No Wth Prs/Pip
L/Elem	Ch Slope					SF Ave	HF	SE Dpth	Froude N	Norm Dp	"N"	X-Fall	ZR	Type Ch
2869.850	51.050	9.242	60.292	160.00	5.66	.50	60.79	.00	3.44	.00	6.000	.000	.00	0 .0

-|- -|- -|- -|- -|- -|- -|- -|- -|- -|- -|- -|- -|- -|- |-

♀

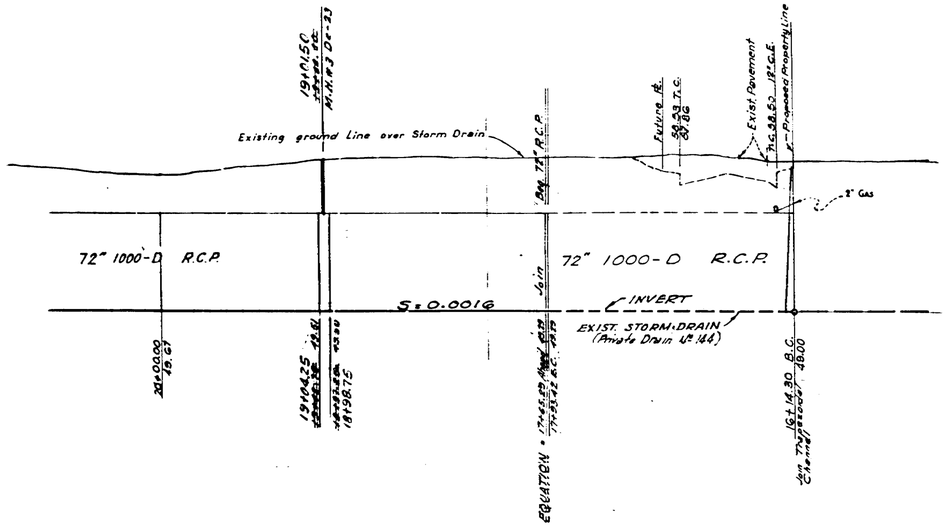

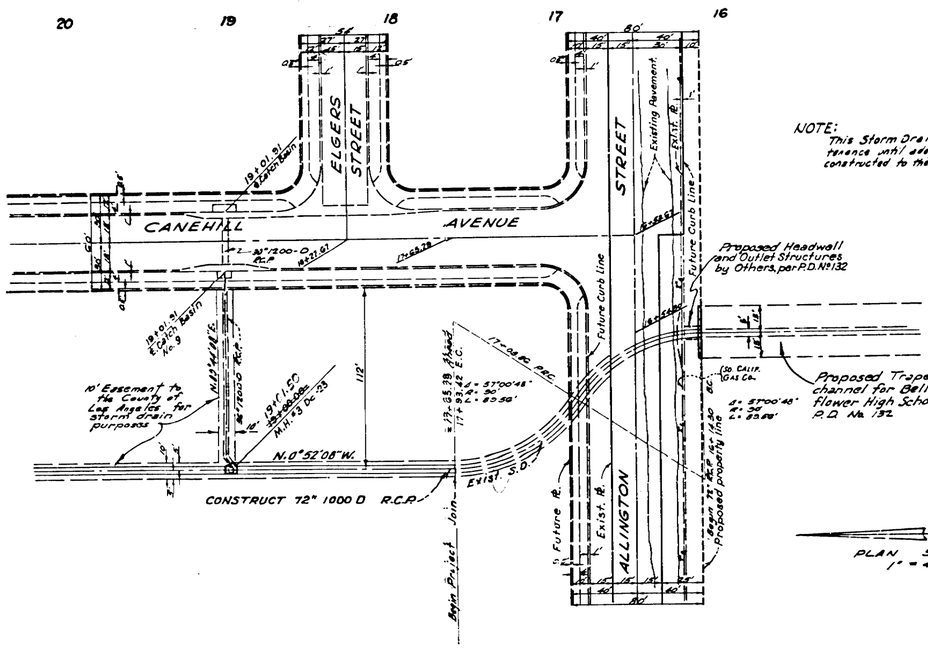

NOTE:
This Storm Drain cannot be accepted for maintenance until adequate outlet facilities have been constructed to the satisfaction of the County Engineer.

PLAN SCALE 1" = 40'

PROFILE SCALES
HORIZ. 1" = 40'
VERT. 1" = 4'

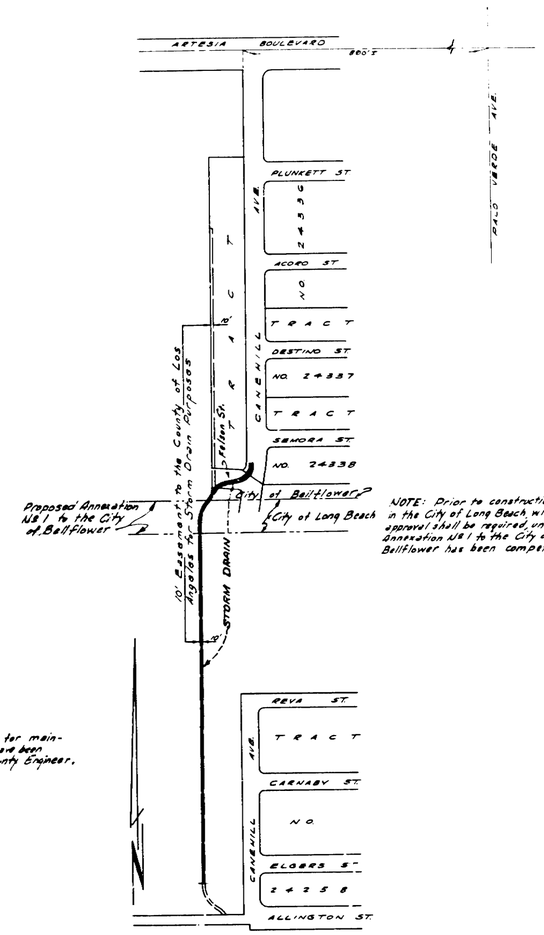

INDEX MAP
SCALE 1" = 200'

NOTE: Prior to construction within the City of Long Beach, written approval shall be required unless annexation #1 to the City of Bellflower has been completed.

HYDRAULIC ELEMENTS 10 YEAR STORM				
Sta. to Sta.	Q'c. f.s.	Size		Slope
16+14 - 30+93	158	72" conc.	5.6 ft/sec.	0.0016
30+93 - 31+67	153	60" conc.	7.8 ft/sec.	0.0025

LOS ANGELES COUNTY FLOOD CONTROL DISTRICT
LOS CERRITOS DRAINAGE SYSTEM
PALO VERDE LATERAL
TRANSFERED 9-1-59
MAP NO. 143-F 308.1

PLAN AND PROFILE OF
PALO VERDE LATERAL
FROM ALLINGTON STREET
AN EXTENSION OF THE
LOS CERRITOS DRAINAGE SYSTEM
PRIVATE DRAIN
NO. 131

"PF513583"

CONSISTING OF TWO SHEETS
SHEET 1 OF 2 SHEETS

Prepared in the Offices of:
BARCLAY ENGINEERING CO., INC.,
343 HAWTHORNE WAY,
HAWTHORNE, CALIFORNIA.

BY: Edward L. Barclay DATE: .....
REG. CIVIL ENGINEER No. 9783

BENCH MARK
Left West end of Conc. Head Wall 2' 30' North and 2 45' West of centerline of Artesia Blvd. and Palo Verde Ave. SY 1432 Co. Sur. Precise Elev. = 22.076' Bellflower Quad. 1935 Adj.

NOTE:
Elevations are in feet above U.S.G.S. mean sea level datum.
All work shall be in accordance with the standards and specifications for storm drain construction of the County Engineer and shall be prosecuted only in the presence of the County Engineer. Approval of this plan by the County of Los Angeles does not constitute a representation as to the accuracy of the location of or the existence or non-existence of any underground utility, pipe, or structure within the limits of this project. This note applies to all sheets.

1. All Concrete to be 3000 psi. Portland Cement Concrete.
2. Chamfer all exposed edges with ¾" Chamfer.
3. All Steel to have 2" cover unless otherwise specified.
4. All pipe shall be bedded in accordance with Dc-54 Case A, unless otherwise specified.

NOTE: The Contractor shall notify the Construction and Storm Drain Division by Telephone, Madison 9-4747, Ext. 362 at least 24 hours before starting any work.

COUNTY OF LOS ANGELES, CALIFORNIA
JOHN A. LAMBIE COUNTY ENGINEER
CONSTRUCTION AND STORM DRAIN DIVISION
Approved By: C. H. Green Division Engineer Date: 8-22-58

Checked By: Richard J. Reid Date: 8-22-58
Office of the County Engineer - Reg. C.E. No. 8479

CITY OF BELLFLOWER
JOHN A. LAMBIE CITY ENGINEER
CONSTRUCTION & STORM DRAIN DIVISION
Approved By: C. H. Green Division Engineer Date: 8-22-58

P.D. 131 SHT 1

Existing Ground Line Over Storm Drain

61.

50

Ex. 15" S. Pacific Pipe Line's Fuel Line to be relocated by others

30" 1000-D R.C.P.

72" 1000-D R.C.P.

72" 1000 R.C.P.

S = 0.0016

INVERT

PROFILE SCALES
HORIZ 1" = 40'
VERT 1" = 4'

32 31 30 29 28 27 26 25 24 23 22 21 20

SEMORA STREET

FELSON STREET

ASHWORTH STREET

PEVA STREET

CARNABY STREET

CANEHILL AVENUE

Sod and with 6" Brickwood Ends at Consult.

4' Catch Basin

Existing 15" So. Pacific Pipe Line's Fuel Line To be relocated by others. Remove 10' of exist. Sewer and replace with C.I.P.

Constr. 60" 1000 D R.C.P.

CONSTR. 36" 1000 D R.C.P.

Break out Bottom of Ex. C.B. and Reinstall Channel, Brick up Outlet on West.

10' Easement to the County of Los Angeles for Storm Drain purposes

N0°38'25"W.

Δ = 25°39'56"
R = 90'
L = 40.33'

Δ = 51°41'48"
R = 50'
L = 45.13'

Δ = 84°26'05"
R = 45'
L = 66.31'

Δ = 41°09'07"
R = 90.00'
L = 64.64'

City of Bell Hawthorne Boundary

City of Lynwood

Lane Boundary

2710100 M.H. #3 Dc-23

2310200 M.H. #3 Dc-23

2310400

10' Easement To the County of Los Angeles for Storm Drain Purposes

N.0°52'08"W.

Constr. 72" 1000 D R.C.P.

PLAN SCALE
1" = 40'

LOS ANGELES COUNTY FLOOD CONTROL DISTRICT

LOS CERRITOS DRAINAGE SYSTEM
PALO VERDE LATERAL

TRANSFERED 9-1-59

MAP NO. 143-F308.2

COUNTY OF LOS ANGELES, CALIFORNIA
JOHN A. LAMBIE COUNTY ENGINEER
CONSTRUCTION AND STORM DRAIN DIVISION
Approved By: C. H. Greene Division Engineer Date: 8-22-58

Checked By: Robert Reid Date: 8-22-58
Office of the County Engineer Reg. C.E. No. 5772

SHEET 2 OF 2 SHEETS

"PF513584"

PD 1131 SHT 2

PLAN AND PROFILE OF

PALO VERDE LATERAL

FROM EXIST. DRAIN NORTH OF LOT 137 TRACT Nº 19981
TO ALLINGTON STREET

AN EXTENSION OF THE

LOS CERRITOS DRAINAGE SYSTEM

IN

NEW BELLFLOWER HIGH SCHOOL SITE
PRIVATE DRAIN Nº 132

CONSISTING OF TWO SHEETS

PREPARED IN THE OFFICE
KISTNER, WRIGHT & WRIGHT
ARCHITECTS AND ENGINEERS
LOS ANGELES CALIFORNIA

BY: H.C. Vanden Brink, REG. CIVIL ENGINEER Nº 6617 DATE: February 1958

BENCH MARK: (S.Y. 3480)
L.F.T. on Loading Dock of Dairy Barn N.E. Cor. 30ft. So. of E. Allington St. 452' W. of House Nº 6308 on Allington St.
ELEVATION = 54.85

PROFILE SCALE: HORIZ. 1" = 40'
VERT. 1" = 4'

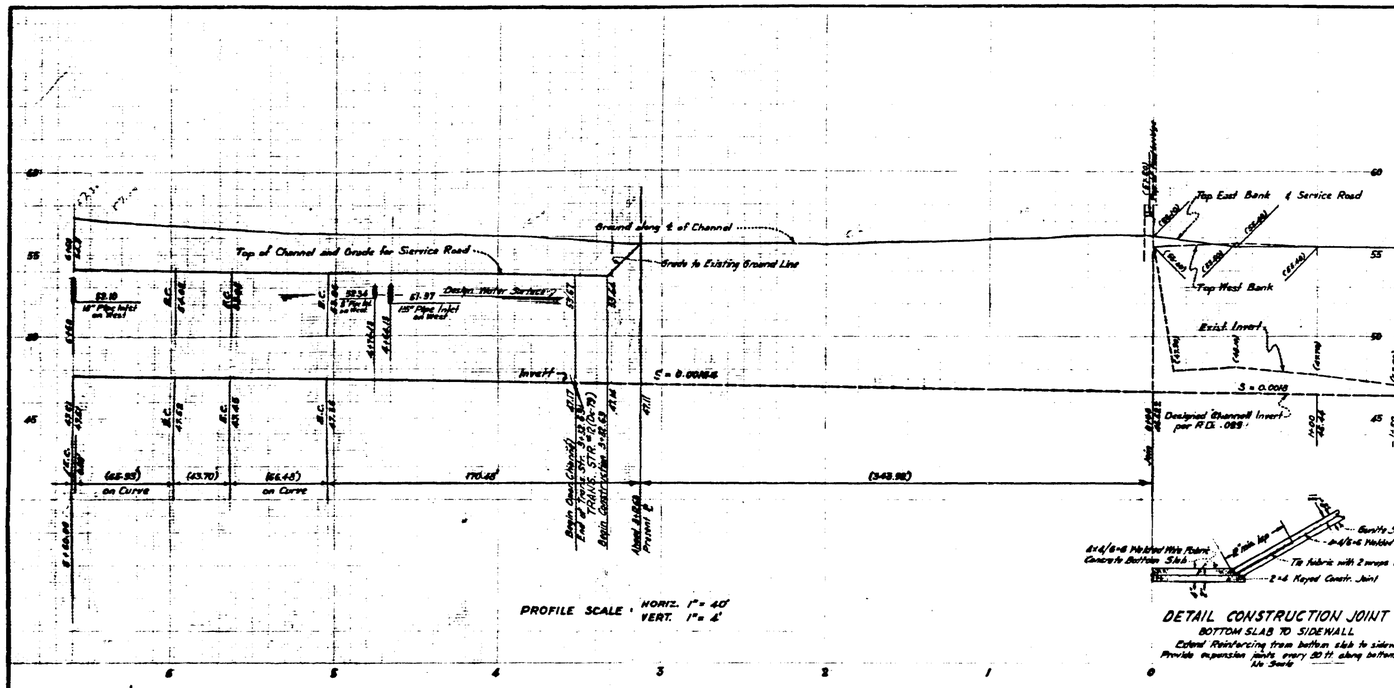

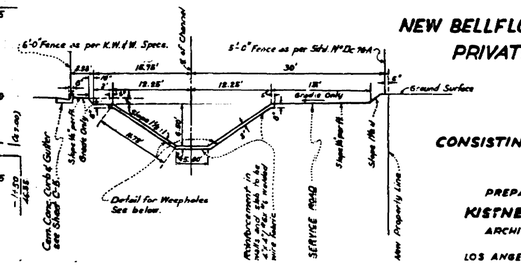

TYPICAL SECTION
Sta 3+12.63 to 16+22.65
SCALE: 1" = 10'

DETAIL CONSTRUCTION JOINT
BOTTOM SLAB TO SIDEWALL
Extend Reinforcing from bottom slab to sidewall.
Provide expansion joints every 30 ft. along bottom slab
Mfr Seals

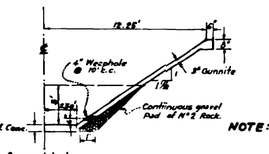

SCALE: 1" = 5'

NOTE:
All concrete shall be 3000 P.S.I. Portland Cement Concrete.

NOTE:
Elevations are in feet above U.S.G.S. mean sea level datum.
All work shall be in accordance with the standards and specifications for storm drain construction of the County Engineer and shall be prosecuted only in the presence of the County Engineer. Approval of this plan by the County of Los Angeles does not constitute a representation as to the accuracy of the location of or the existence or non-existence of any underground utility pipe or structure within the limits of this project. This note applies to all sheets.

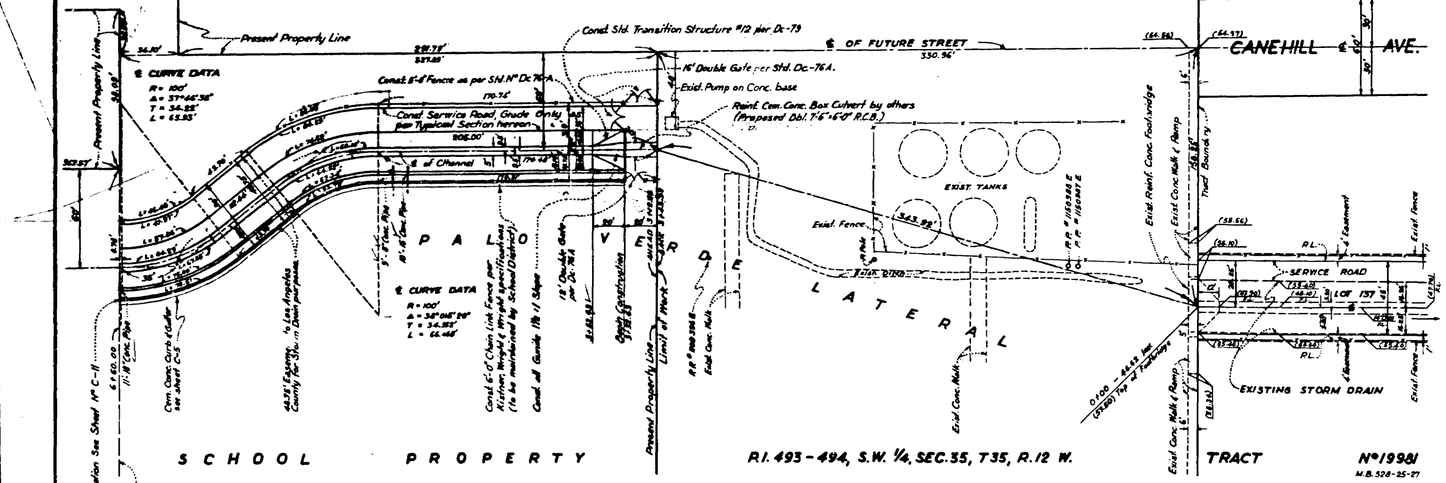
Present Property Line
℄ CURVE DATA
R = 100'
Δ = 37°46'36"
T = 34.55'
L = 65.95'
Const. 5'-6" Fence as per Std. Nº Dc-76A
Const. Service Road, Grade Only per Typical Section hereon
905.00'
℄ of Channel
Const. 6'-0" Chain Link Fence per Kistner, Wright & Wright specifications (to be maintained by School District)
Const. all Grade 1% or 1 Slope
15' Double Gate per Std. Dc-76A
Const. Std. Transition Structure #12 per Dc-79
℄ OF FUTURE STREET
350.96'
15' Double Gate per Std. Dc-76A.
Exist. Pump on Conc. base
Reinf. Conc. Box Culvert by others (Proposed Dbl. 7'6"x6'0" R.C.B.)
EXIST. TANKS
Exist. Fence
Exist. Reinf. Conc. Footings
Exist. Conc. Walk & Ramp
Exist. Conc. Walk
Exist. Fence
CANEHILL ℄ AVE.
SERVICE ROAD
EXISTING STORM DRAIN
P A L O V E R D E L A T E R A L
SCHOOL PROPERTY
For Continuation See Sheet Nº C-11
Match Line
Conc. Curb, Gutter & Cross Gutter see Sheet C-5
48.75' Existing 16" Sta. in blank per plans
Present Property Line
Limit of Work
Const. 6'-0" Fence per Std. Dc-76A
Exist. Conc. Walk
Exist. Conc. Walk & Ramp
Exist. Reinf. Conc. Footings
Exist. Fence
Exist. Conc. Walk & Ramp
Exist. Fence
Exist. Conc. Walk & Ramp
Exist. Conc. Walk

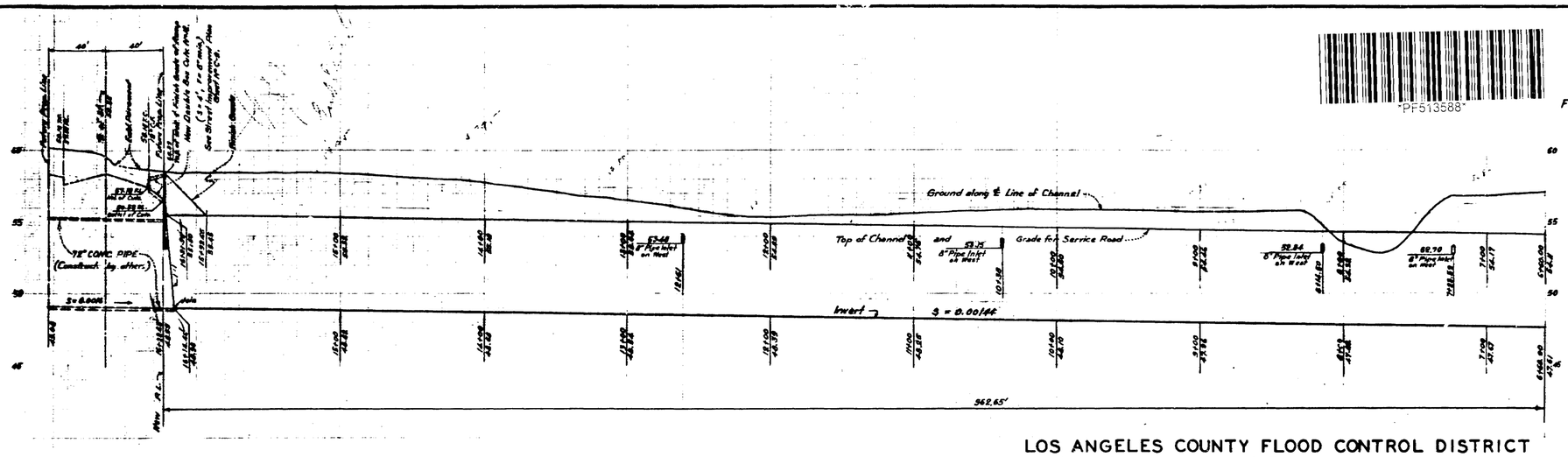

"PF513588"

PLAN AND PROFILE OF

PALO VERDE LATERAL

FROM EXIST. DRAIN NORTH OF LOT 137 TRACT N° 1998
TO ALLINGTON STREET

AN EXTENSION OF THE

LOS CERRITOS DRAINAGE SYSTEM

IN

NEW BELLFLOWER HIGH SCHOOL SITE
PRIVATE DRAIN N° 132

CONSISTING OF TWO SHEETS

PREPARED IN THE OFFICE
KISTNER, WRIGHT & WRIGHT
ARCHITECTS AND ENGINEERS
LOS ANGELES CALIFORNIA

BY: H. G. Vanden Brink DATE: Feb. 1958
REG. CIVIL ENGINEER N° 6617

LOS ANGELES COUNTY FLOOD CONTROL DISTRICT
LOS CERRITOS DRAINAGE SYSTEM
PALO VERDE LATERAL
TRANSFERRED 10-4-60
MAP NO. 143-F325.2
SH. 2 OF 2 SHTS.

PROFILE SCALE: HORIZ. 1" = 40'
VERT. 1" = 4'

REVISIONS		
MARK	DATE	DESCRIPTION
1	6-5-58	Permit 63525-Dwg 143-F370

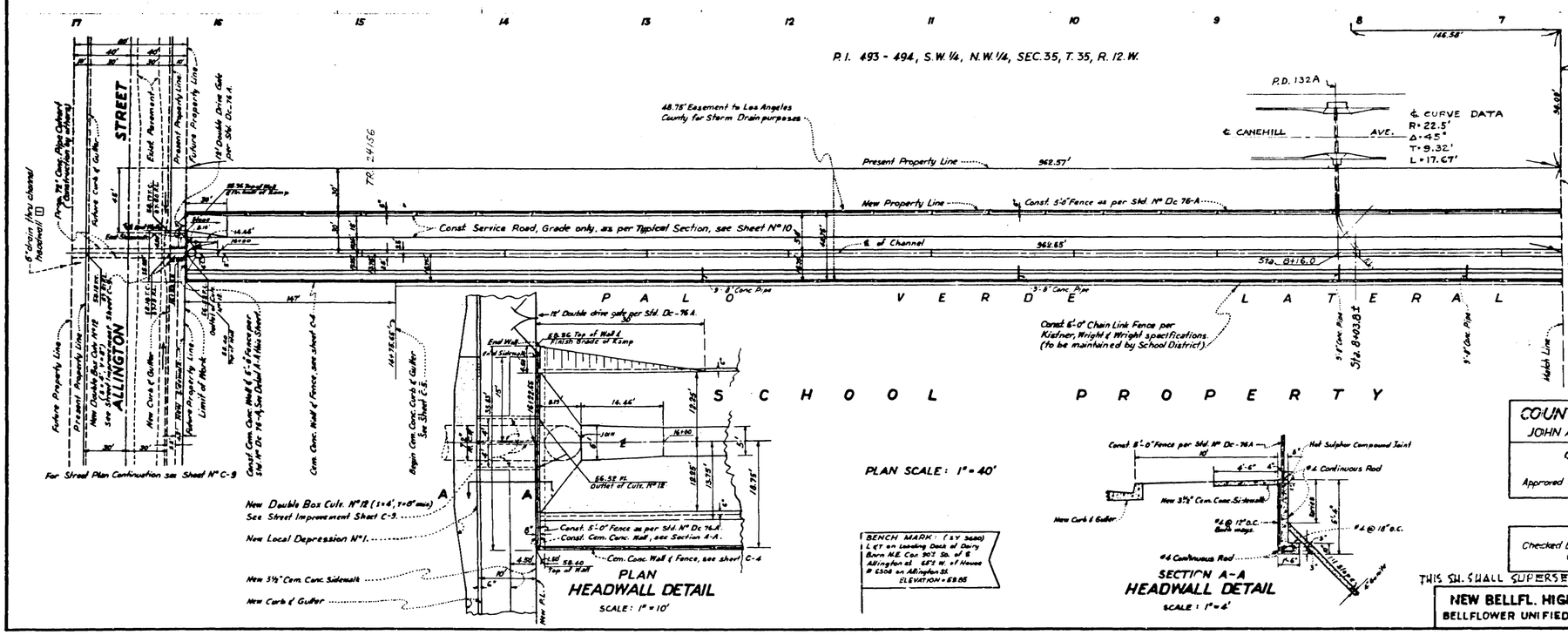

NOTE:
This Private Drain will not be accepted for maintenance by the County until adequate outlet facilities have been constructed to the satisfaction of the County Engineer.

COUNTY OF LOS ANGELES, CALIFORNIA
JOHN A. LAMBIE COUNTY ENGINEER
CONSTRUCTION AND STORM DRAIN DIVISION
Approved By: C. H. Green Division Engineer Date: 8-26-58

Checked By: Carroll D. Smith Date: 8-26-58
Office of the County Engineer - Reg. C.E. N° 10729

THIS SH. SHALL SUPERSEDE ORIGINAL SH. C-11 ADDENDUM SHEET N° 4

NEW BELLFL. HIGH SCHOOL SITE BELLFLOWER UNIFIED SCHOOL DISTRICT	SHEET NO. C-11 OF SHEETS	Drawn: M.K.
		Traced:
		Checked: R.E.B.

JOB N° 54-22

PD 132 SHT 2

P.D. N° 132

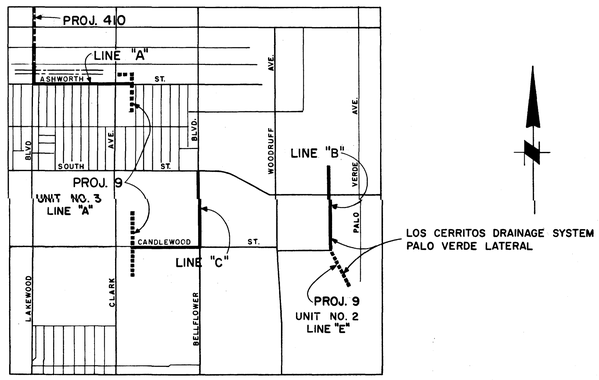

VICINITY MAP

2000 1000 0 2000
GRAPHIC SCALE

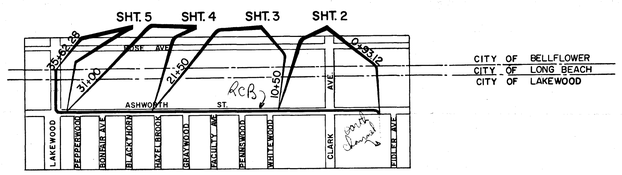

LINE A

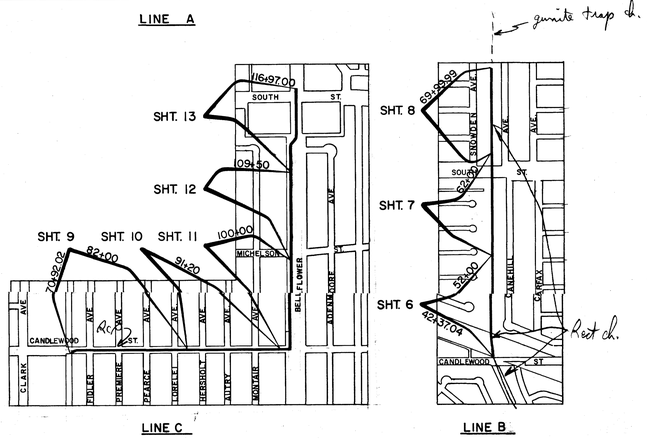

LINE C LINE B

LOCATION PLANS

500 0 500 1000 2000
GRAPHIC SCALE

GENERAL NOTES

1. NUMBERS IN CIRCLES INDICATE ITEMS UNDER WHICH PAYMENT WILL BE MADE.
2. ELEVATIONS SHOWN ARE BASED ON MEAN SEA LEVEL DATUM. (REF. L.A. CO. RD. DEPT., 1955)
3. STATIONS SHOWN ON PROFILES ARE ALONG CENTERLINE OF CONDUIT OR ON A LINE NORMAL TO CENTER LINE OF CONDUIT.
4. STATIONS AND INVERT ELEVATIONS OF PIPE INLETS, SHOWN ON THE PROFILES, ARE AT THE INSIDE FACE OF THE CONDUIT WALL UNLESS OTHERWISE SHOWN.
5. ALL STORM DRAIN PIPE IN OPEN TRENCH SHALL BE BEDDED ACCORDING TO STANDARD DRAWING 2-D177, CASE III.
6. PIPE CONNECTIONS TO MAIN LINE STORM DRAIN SHALL CONFORM TO STANDARD DRAWINGS 2-D191 AND 2-D193 UNLESS OTHERWISE SHOWN.
7. EXISTING UTILITIES SHALL BE MAINTAINED IN PLACE BY CONTRACTOR UNLESS OTHERWISE SHOWN.
8. ALL SIDE INLET CATCH BASIN OPENINGS AND TOP SLABS SHALL BE MODIFIED EITHER PER STANDARD DRAWING 2-D215 OR 2-D232 AT THE CONTRACTOR'S OPTION. C.F. EQUALS EXISTING C.F. +4" FOR L.D. NO.2 UNLESS OTHERWISE SHOWN ON THE DRAWINGS.
9. MONOLITHIC CONCRETE CATCH BASIN CONNECTIONS SHALL BE CONSTRUCTED WHERE NECESSARY PER STANDARD DRAWING 2-D224.
10. "V_i" IS THE DEPTH OF INLET OF CATCH BASINS IN SERIES MEASURED FROM TOP OF CURB TO INVERT OF CONNECTOR PIPE.
11. THE DEPTH AT THE UPSTREAM END OF ALL CATCH BASINS TEN FEET OR MORE IN LENGTH SHALL BE THE CURB FACE PLUS 12 INCHES, UNLESS OTHERWISE SHOWN.
12. CONNECTOR PIPES SHALL BE CONSTRUCTED PER DETAILS AND NOTES, SHT. 5.
13. THE SOILS TEST BORINGS FOR THIS PROJECT WERE MADE IN DECEMBER 1958.
14. UTILITIES MARKED "•" ARE TO BE ABANDONED IN PLACE, SEE SECTION 2-53 OF SPECIFICATIONS.
15. SUBDRAINAGE SYSTEM SHALL BE CONSTRUCTED PER DETAILS AND NOTES SHOWN ON SHEET 24.
16. ALL EXISTING SANITARY SEWERS ARE CITY OF LAKEWOOD SEWERS, UNLESS OTHERWISE SHOWN.
17. ALL EXISTING TRAFFIC SIGNAL CONDUITS ARE CITY OF LAKEWOOD, UNLESS OTHERWISE SHOWN.
18. ORNAMENTAL LIGHTING IS WITHIN DISTRICT NO. 1550

GENERAL NOTES (CONT'D.)

19. CONCRETE BACKFILL AS CALLED FOR ON STANDARD DRAWING 2-D213.1 FOR PIPE 36-INCHES IN DIAMETER OR LESS SHALL BE USED AROUND REINFORCED CONCRETE PIPE IN ROADWAY AREAS ONLY.

LOS ANGELES COUNTY FLOOD CONTROL DISTRICT STANDARD DRAWINGS

DWG. NO.	TITLE
2-D88	LOCAL DEPRESSION NO. 2
2-D96	STANDARD DROP STEP
2-D101	CATCH BASIN NO. 4
2-D104	MANHOLE NO. 3
2-D107	CONCRETE RINGS, REDUCER AND PIPE
2-D112	JUNCTION STRUCTURE NO. 2
2-D113	MANHOLE NO. 4
2-D156	MANHOLE FRAME AND COVER FOR CATCH BASINS
2-D157	CATCH BASIN REINFORCEMENT FOR ROUND MANHOLES
2-D158	DETAIL OF BOLT SUPPORT FOR CATCH BASINS
2-D160	CATCH BASIN NO. 1
2-D162	CATCH BASIN NO. 2
2-D163	CATCH BASIN NO. 3
2-D171	STANDARD A305 REINFORCING BARS
2-D172	CATCH BASIN REINFORCEMENT
2-D173.1, 2 & 3	PIPE SUPPORTS ACROSS TRENCHES
2-D175	REMOVABLE PROTECTION BAR FOR CATCH BASINS
2-D177	PIPE BEDDING IN TRENCHES
2-D181	STANDARD NON-ROCKING MANHOLE FRAME & COVER.
2-D184	MANHOLE NO. 2
2-D187	PAVEMENT REMOVAL, EXCAVATION, BACKFILL AND RESURFACING IN STATE HIGHWAYS
2-D189	JUNCTION STRUCTURE NO. 1
2-D191	JUNCTION STRUCTURE NO. 3
2-D193	JUNCTION STRUCTURE NO. 4
2-D198	TRANSITION STRUCTURE NO. 4
2-D205	WINDOW DETAILS FOR MULTIPLE BOX SECTIONS
2-D213.1 & 2	LOAD TABLE FOR DESIGN OF REINFORCED CONCRETE PIPE
2-D215	DETAIL OF CATCH BASIN OPENING
2-D224	CONNECTION TO CATCH BASINS FOR PIPES 12 INCHES THROUGH 72 INCHES
2-D227	FRAME AND GRATING FOR CATCH BASINS
2-D232	DETAIL OF CATCH BASIN OPENING
2-D248	LOCAL DEPRESSION NO. 3
2-D250	REMODELING OF SANITARY SEWER HOUSE CONNECTIONS
2-D251	PROTECTION FOR MAIN LINE AND HOUSE CONNECTION SEWERS
2-D178	FENCE AND GATE DETAILS FOR CHANNEL RIGHTS-OF-WAYS
2-D180	FENCE, GATE, AND HEADWALL DETAILS FOR CHANNEL WALLS

LOS ANGELES COUNTY ENGINEER'S STANDARD PLANS

S-a-64	LEGEND FOR SANITARY SEWER PLANS & PROFILES AND DISTRICT MAPS
S-a-104	STANDARD PLAN BRICK SEWER STRUCTURES
S-a-117	STANDARD MANHOLE FRAME & COVER
S-a-150	STANDARD SIPHON MANHOLE
S-a-162	STANDARD MANHOLE STEP
S-a-179	STANDARD BEDDING FOR SEWER PIPE.

LOS ANGELES COUNTY ROAD DEPARTMENT STANDARD PLANS

DRIVEWAYS	10-15-59
CURB & GUTTER	5-28-1951
CROSS GUTTERS TYPE "B"	MAR. 3, 1945
CROSS GUTTERS TYPE "B-1"	FEB. 18, 1948

INDEX TO DRAWINGS

SHEET NO.	TITLE
1	VICINITY MAP, LOCATION PLANS, GENERAL NOTES, STANDARD DRAWINGS, INDEX TO DRAWINGS, ABBREVIATIONS, & LEGEND
2	LINE A, PLAN, PROFILE, & SECTION STA. 0+93.12 TO STA. 10+50
3	LINE A, PLAN, PROFILE, & SECTION STA. 10+50 TO STA. 21+50
4	LINE A, PLAN, PROFILE, & SECTION STA. 21+50 TO STA. 31+00
5	LINE A, PLAN, PROFILE, & SECTION STA. 31+00 TO STA. 35+62.28
6	LINE B, PLAN, PROFILE, & SECTION STA. 42+37.04 TO STA. 52+00
7	LINE B, PLAN, PROFILE, & SECTION STA. 52+00 TO STA. 62+00
8	LINE B, PLAN, PROFILE, & SECTION STA. 62+00 TO STA. 69+99.99
9	LINE C, PLAN, PROFILE, & SECTION STA. 70+92.02 TO STA. 82+00
10	LINE C, PLAN, PROFILE, & SECTION STA. 72+00 TO STA. 91+20
11	LINE C, PLAN, PROFILE, & SECTION STA. 91+20 TO STA. 100+00
12	LINE C, PLAN, PROFILE, & SECTION STA. 100+00 TO STA. 109+50
13	LINE C, PLAN, PROFILE, & SECTION STA. 109+50 TO STA. 116+97
14	RESURFACING PLAN & SANITARY SEWER RECONSTRUCTION
15	STRUCTURAL DETAILS, GENERAL STRUCTURAL NOTES AND SINGLE & DOUBLE R.C. BOX
16	STRUCTURAL DETAILS, RECTANGULAR R.C. CHANNEL
17	STRUCTURAL DETAILS, R.C. CHANNEL TRANSITIONS
18	LINE B, CROSS SECTIONS STA. 4+67.04 TO STA. 56+00
19	LINE B, CROSS SECTIONS STA. 57+00 TO STA. 69+99.99
20	LINE A, LOG OF BORINGS
21	LINE B, LOG OF BORINGS
22	LINE C, LOG OF BORINGS
23	LINE C, LAKEWOOD BLVD. DETOUR PLAN & DETAILS
24	LINES B & C, SUBDRAINAGE SYSTEM DETAILS, & TIMBER BULKHEAD

ABBREVIATIONS

T.S.C.	TRAFFIC SIGNAL CONDUIT	O.L.C.	ORNAMENTAL LIGHTING CONDUIT
T.S.	TRANSITION STRUCTURE	J.S.	JUNCTION STRUCTURE
M.H.	MANHOLE	C.B.	CATCH BASIN
L.D.	LOCAL DEPRESSION	T.B.M.	TEMPORARY BENCH MARK
C.M.P.	CORRUGATED METAL PIPE	S.C.G.	SOUTHERN CALIFORNIA GAS
R.C.P.	REINFORCED CONCRETE PIPE	GEN. TEL.	GENERAL TELEPHONE CO.
L.W.&P.	LAKEWOOD WATER AND POWER	IDEAL PET. W.	IDEAL PETROLEUM WATER
W.M.	WATER METER		

LEGEND

POWER, TELEPHONE OR GUY POLE
TREE
SIDE INLET CATCH BASIN
GRATING TYPE CATCH BASIN
PROPERTY LINE
EXISTING UTILITY TO BE RELOCATED BY OTHERS
GUTTER
TRAFFIC SIGNAL
DRIVEWAY
LIMIT OF CONCRETE SURFACE
CURB
WALK
REMOVE AND RELOCATE TREE
CHAIN LINK FENCE

△ As Built Pwg's

1958 STORM DRAIN BOND ISSUE

CITY OF LAKEWOOD

SUBMITTED February 2 1959
KOEBIG & KOEBIG
CONSULTING ENGINEERING - ARCHITECTURE
LOS ANGELES, CALIFORNIA
A.H. KOEBIG JR. R.C.E. NO. 225

APPROVED July 30 1959
Donald R. Singer
DONALD R. SINGER, ADMINISTRATIVE ASSISTANT

REVISIONS		
MARK	DATE	DESCRIPTION

LOS ANGELES COUNTY FLOOD CONTROL DISTRICT

PROJECT NO. 446
NORTH LAKEWOOD
LINES A, B & C
VICINITY MAP, LOCATION PLANS, GENERAL NOTES, STANDARD DRAWINGS, INDEX TO DRAWINGS, ABBREVIATIONS, & LEGEND

DRAWN BY LAKEWOOD | DESIGNED BY LAKEWOOD
TRACED BY LAKEWOOD
CHECKED BY | SUBMITTED BY R.B.R.
RECOMMENDED BY W.W. Rutland, DIVISION ENGINEER (Acting)

APPROVED BY H.E. Eichelberg, CHIEF ENGINEER

SCALE	DATE	NO. 275-446-D1.1
AS SHOWN	FEB. '59	SHEET 1 OF 24

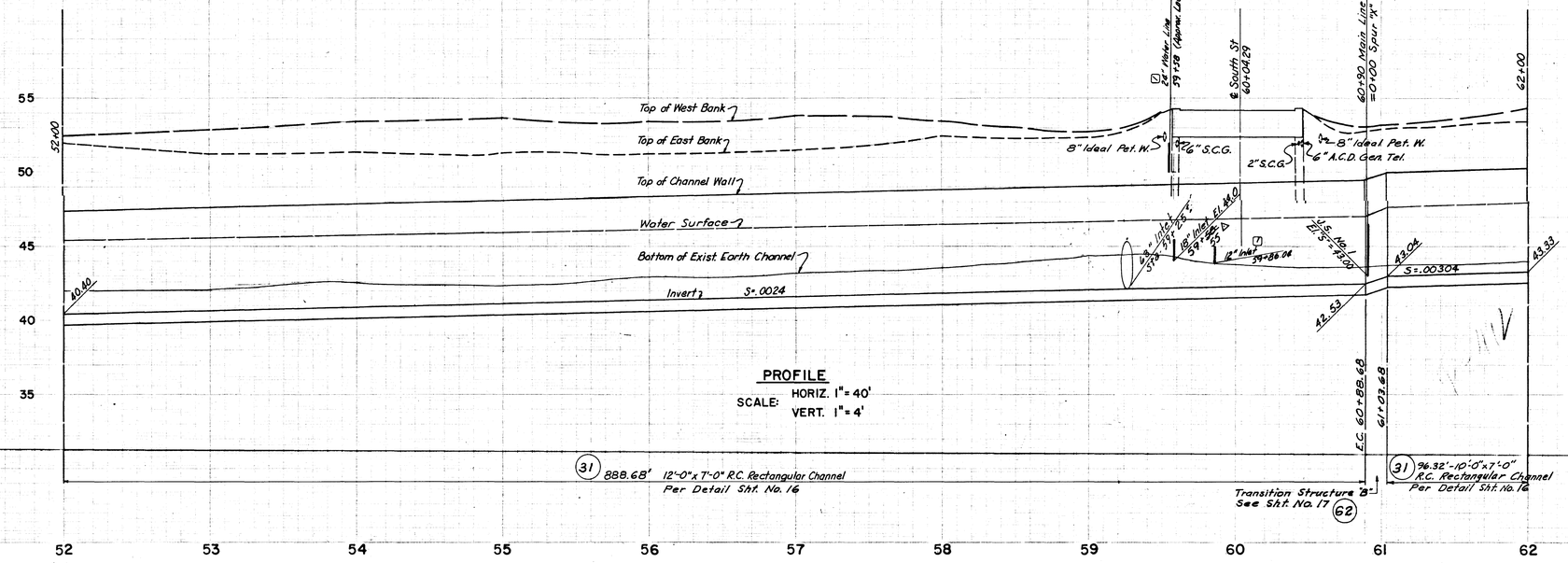

PROFILE

SCALE: HORIZ. 1"= 40'
VERT. 1"= 4'

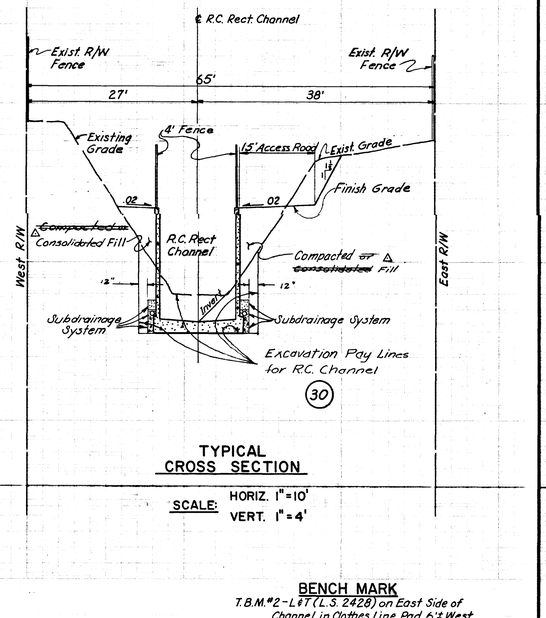

TYPICAL CROSS SECTION

SCALE: HORIZ. 1"= 10'
VERT. 1"= 4'

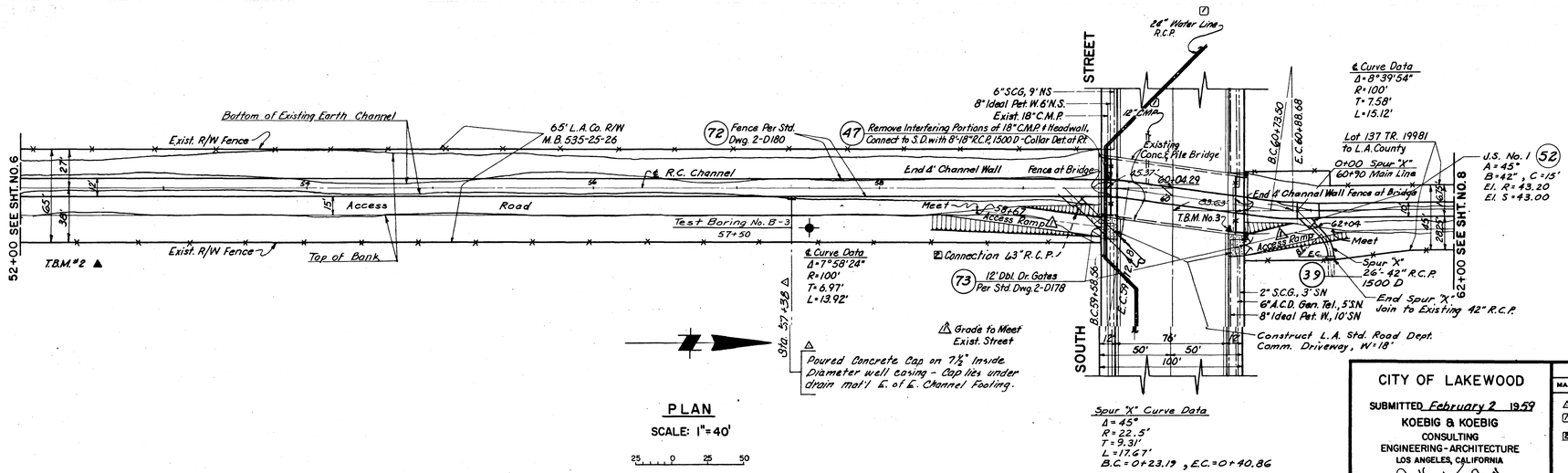

PLAN

SCALE: 1"=40'

25 0 25 50

BENCH MARK

T.B.M. #2 - L&T (L.S. 2428) on East Side of Channel in Clothes Line Pad, 6'± West of Garage 5'± North of Conc. Blk. Fence 750' South of South St.
Ref. K&K Field Book, Pg. 16. Elev. 52.82'

T.B.M. #3 - L&T (L.S. 2428) in North curb of South St. ±4' West of East end Bridge, W of Canehill Ave.
Ref. K&K Field Book, Pg. 15. Elev. 54.30'

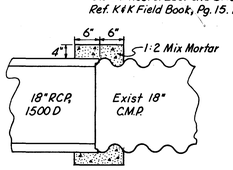

TYPICAL COLLAR DETAIL

NO. SCALE

P0028655

1958 STORM DRAIN BOND ISSUE

CITY OF LAKEWOOD

SUBMITTED February 2 1959
KOEBIG & KOEBIG
CONSULTING ENGINEERING - ARCHITECTURE
LOS ANGELES, CALIFORNIA
A.M. KOEBIG JR. No. 225

APPROVED July 30 1959
Donald R. Singer
DONALD R. SINGER, ADMINISTRATIVE ASSISTANT

REVISIONS		
MARK	DATE	DESCRIPTION
△	6-28-61	As Built
☑	9-18-68	Permit 65661 Dwg 275-446-F9 1 & 2
E	2-28-84	Permit 63988 Dwg 275-446-F8

DRAWN BY LAKEWOOD | DESIGNED BY LAKEWOOD
TRACED BY LAKEWOOD | SUBMITTED BY R.B.R.
CHECKED BY
RECOMMENDED BY Geo. Sutherland, DIVISION ENGINEER (Design)

LOS ANGELES COUNTY FLOOD CONTROL DISTRICT

PROJECT NO. 446
NORTH LAKEWOOD
LINE "B"
CONCRETE CONDUIT
STA. 52+00 TO STA. 62+00
PLAN, PROFILE & SECTION

APPROVED H.E. Hollenbeck, CHIEF ENGINEER

SCALE	DATE	NO. 275-446-DI.7
AS SHOWN	FEB. 59	SHEET 7 OF 24

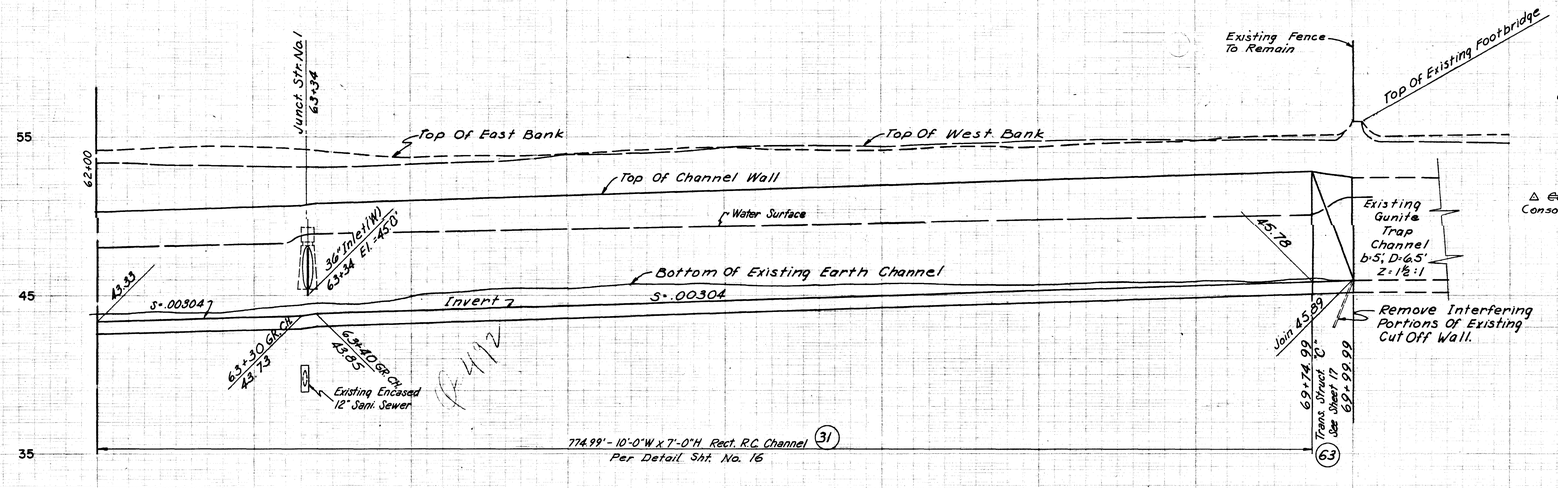

PROFILE
SCALE: HORIZ.: 1" = 40'
VERT.: 1" = 4'

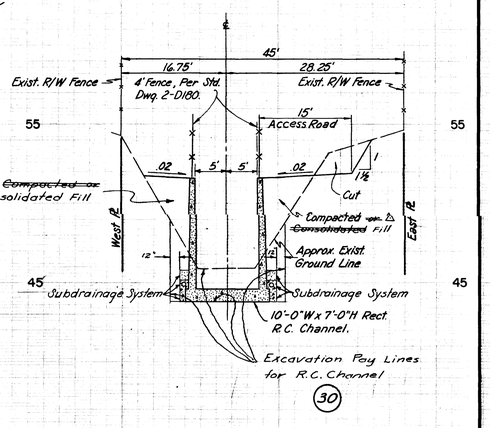

CROSS SECTION
STA. 66+00
SCALE: HORIZ. 1" = 10'
VERT. 1" = 4'

BENCH MARK

T.B.M. #6 - S&T (L.S. 2428) In Top Of Concrete Headwall On West Side Of Flood Control Channel 400 ± North Of South Street. Ref. Rk Field Book Page 16A Elev. 49.25

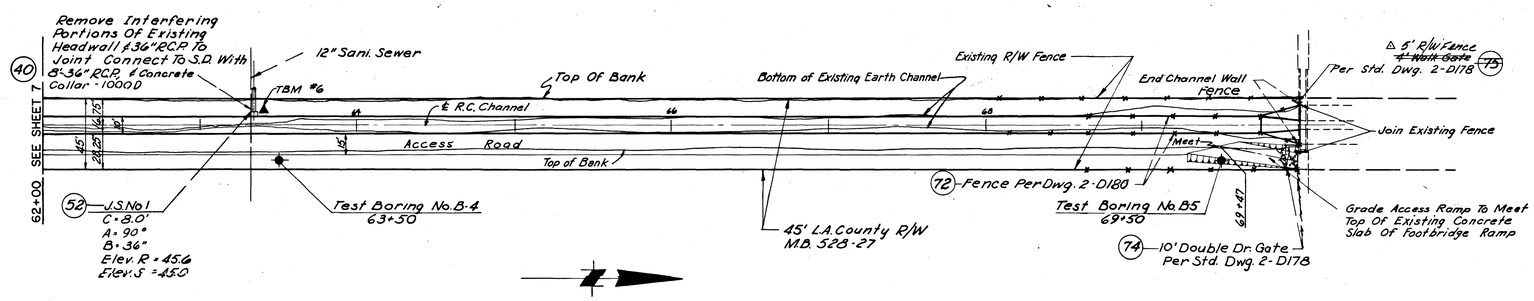

PLAN
SCALE: 1" = 40'

"PD028666"

1958 STORM DRAIN BOND ISSUE

CITY OF LAKEWOOD

SUBMITTED February 2 1959
KOEBIG & KOEBIG
CONSULTING ENGINEERING - ARCHITECTURE
LOS ANGELES, CALIFORNIA
A.H. KOEBIG JR. REG. NO. 2225

APPROVED July 30 1959
DONALD R. SINGER, ADMINISTRATIVE ASSISTANT

REVISIONS		
MARK	DATE	DESCRIPTION
△	6-28-61	As Built

DRAWN BY: LAKEWOOD
DESIGNED BY: LAKEWOOD
TRACED BY: LAKEWOOD
CHECKED BY:
SUBMITTED BY: R.B.R.
RECOMMENDED BY:
DIVISION ENGINEER (Access)

LOS ANGELES COUNTY FLOOD CONTROL DISTRICT

PROJECT NO. 446
NORTH LAKEWOOD LINE "B"
CONCRETE CONDUIT
STA. 62+00 TO STA. 69+99.99
PLAN PROFILE & SECTION

APPROVED BY:
CHIEF ENGINEER

SCALE	DATE	NO. 275-446-D1.8
AS SHOWN	FEB. '59	SHEET 8 OF 24

"PF513613"

PLAN AND PROFILE OF
PALO VERDE LATERAL

FROM EXIST. DRAIN NORTH OF LOT 137, TRACT Nº 19981
TO PRIVATE DRAIN Nº 132

AN EXTENSION OF THE

LOS CERRITOS DRAINAGE SYSTEM

IN

ESTHER LINDSTROM PRIMARY SCHOOL SITE
PRIVATE DRAIN Nº 154

CONSISTING OF ONE SHEET

PREPARED IN THE OFFICE
KISTNER, WRIGHT & WRIGHT
ARCHITECTS AND ENGINEERS
LOS ANGELES CALIFORNIA

BY: H.C. Vandenbergh DATE: 12-2-58
REG. CIVIL ENGINEER Nº 6617

CITY OF LAKEWOOD
JOHN A. LAMBIE CITY ENGINEER
Approved By: C.W. Green Date: 12-9-58
Construction and Storm Drain Division Engineer

BENCH MARK (S.Y. 3480)
L.E.T. on leaning face of Dairy Barn N.E. Cor. 167' So. of ℄ Allington St. 65'± W. of House Nº 6304 on Allington St.
ELEVATION = 59.85

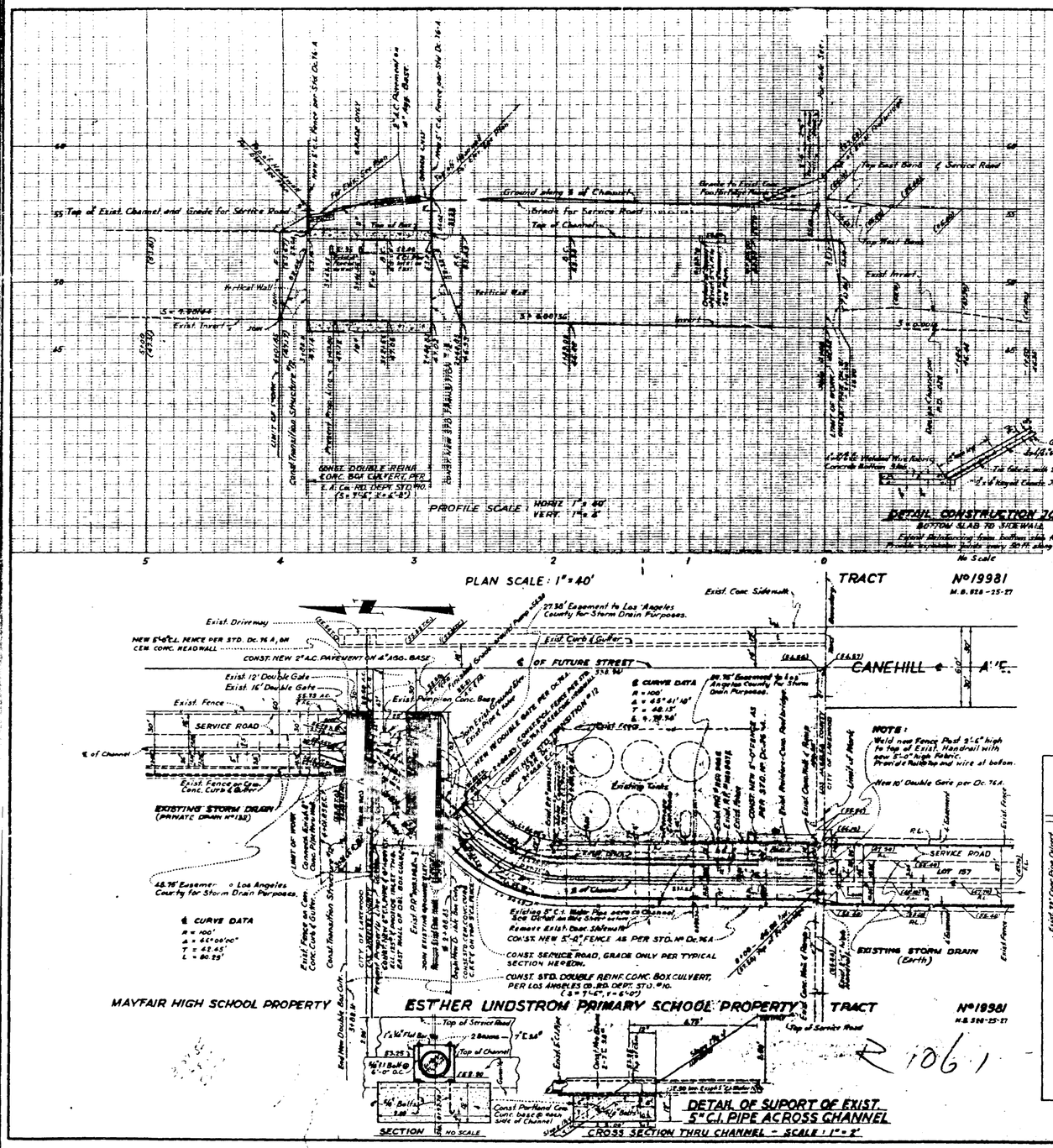

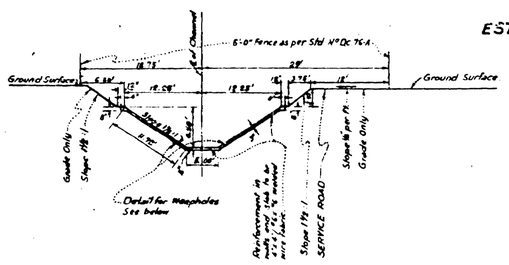

TYPICAL SECTION
STA 0+00 to 2+66.83
SCALE: 1" = 10'

DETAIL CONSTRUCTION JOINT
BOTTOM SLAB TO SIDEWALL
No Scale

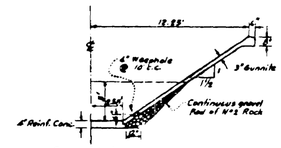

SCALE: 1" = 5'

NOTE:
All concrete shall be 3000 P.S.I. Portland Cement Concrete
All steel to have 2" inches of cover unless otherwise specified.
Chamfer all exposed edges with ¾ inch chamfer.

NOTE:
Elevations are in feet above U.S.G.S. mean sea level datum.
All work shall be in accordance with the standards and specifications for storm drain construction of the County Engineer and shall be prosecuted only in the presence of the County Engineer. Approval of this plan by the County of Los Angeles does not constitute a representation as to the accuracy of the location of or the existance or non-existance of any underground utility, pipe, or structure within the limits of this project. This note applies to all sheets.

This Storm Drain will not be accepted for maintenance by the County until approved easements have been accepted by the County Engineer.

Hydraulic Data		25 Yr. Storm			
Sta. to Sta.	Q	V	Yn	S	n
0+00 to 2+66.83	429 c.f.s.	22.4 ft./sec.	1.82 ft.	0.0136	

LENGTH OF DRAIN 401.85'

NOTE: Power Poles shall be relocated by Serving Utility Company.

COUNTY OF LOS ANGELES, CALIFORNIA
JOHN A. LAMBIE COUNTY ENGINEER
CONSTRUCTION AND STORM DRAIN DIVISION
Approved By: C.W. Green Date: 12-3-58
Division Engineer

Checked By: Carroll D. Smith Date: 12-3-58
Office of the County Engineer - Reg. C.E. Nº 6072
LOS ANGELES COUNTY FLOOD CONTROL DISTRICT

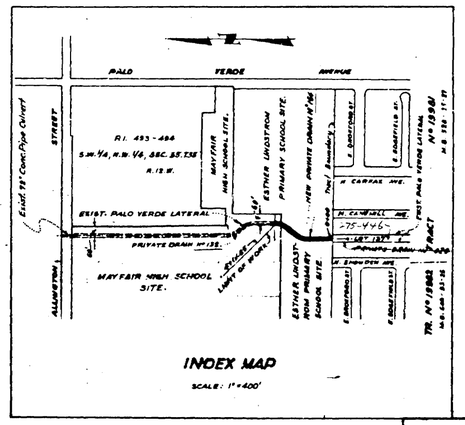

Checked By: [illegible] Date: 12-3-58
Office of the County Engineer

DWG. No. 143-F 312

FILE COPY

ESTHER LINDSTROM PRIMARY SCHOOL SITE			
SHEET C-1 OF 1 SHEET	Traced:	H.K.	
	Checked:	R.E.S.	

SUPERVISOR UNIFIED SCHOOL DISTRICT

PD 154

APPENDIX G

AMBIENT NOISE MEASUREMENT DATA

UltraSystems
environmental | management | planning

16431 Scientific Way
Irvine, CA 92618
949.788.4900

Noise Measurement Report Form – Part A

Date: 2/23/17 Day of Week: Thurs Time: 937 Project Number: 6016
on Alhington St behind
Monitoring Segment / Area: 091 Monitoring Site Address: 10326 Bellflower, ca
Amber St.
Measurement Taken By: S. Seferyn of UltraSystems Environmental

Approximate Wind Speed: 15 mph [km/hr] Approximate Wind Direction: From the N

Approximate distance of sound level meter from receptor location: 40 FT

Approximate distance of sound level meter from construction site: —
(Leave Blank for Baseline Ambient)

Receptor Land Use (Check One): ☑ Residential ☐ Institutional ☐ Comm./Ind. ☐ Recreational

Sound Level Meter: Make and Model: Quest SoundPro DL-1-1/3 Serial Number: BLH080004

Meter Setting: ☑ A-Weighted Sound Level (SLOW) ☐ A-Weighted Sound Level (FAST)

Measurement Start Time: 937 Measurement End Time: 952

Total Measurement Time: 15 mins Session File Name (e.g., S012): S089

Check the measurement purpose:

☑ Baseline condition ☐ Ongoing construction ☐ Major change ☐ Complaint response

Measurement Results

Measurement Type	Measured Levels (dB)
Calibration	Pre: 113.9 Post: 113.9
$L_{eq\ (h)}$	Slow: 65.3 Fast:
L_{max}	Slow: 81.4 Fast:
L_{90}	Slow: 48.5 Fast:

Field Notes:

1. Photos: 01
2. Busy road
3.

Noise Monitor's Signature: Date: 2/23/17

UltraSystems
environmental | management | planning

16431 Scientific Way
Irvine, CA 92618
949.788.4900

Noise Measurement Report Form – Part B

Date: 2/23/17 Day of Week: Thurs. Time: 937 Project Number: 6016

Monitoring Segment / Area: 001 Monitoring Site Address: on allington st behind 10326 Amber St. Bellflower, CA

Site Map

Plan View

North Arrow (fill-in)

(Indicate site location, receptor location, meter location, distance in feet to landmarks, roadways, travel lane directions, geographical objects: trees, water, buildings, signs, store names, hydrants, power & telephone lines, manholes, etc.)

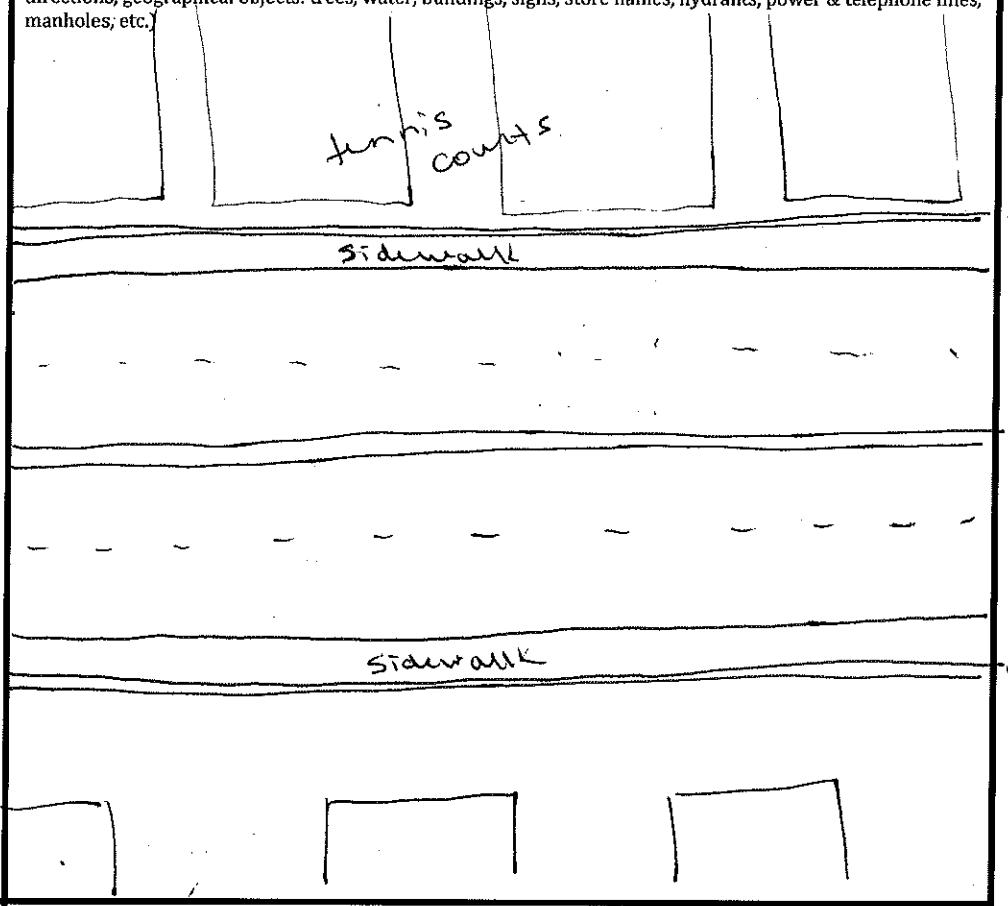

Elevation View

(Indicate terrain, roadway, height and location of receptor, meter, walls, barriers, buildings, etc.)



Latitude: 33.86561	Longitude: 118.11315	Elevation: 116

Noise Monitor's Signature: _____ Date: 2/23/17

Session Report

2/27/2017

Information Panel

Name	S089_BLH080004_27022017_080517
Start Time	2/23/2017 9:38:03 AM
Stop Time	2/23/2017 9:53:03 AM
Device Name	BLH080004
Model Type	SoundPro DL
Device Firmware Rev	R.13H
Comments	

Summary Data Panel

Description	Meter	Value	Description	Meter	Value
Leq	1	65.3 dB			
Exchange Rate	1	3 dB	Weighting	1	A
Response	1	SLOW	Bandwidth	1	OFF
Exchange Rate	2	3 dB	Weighting	2	A
Response	2	FAST			

Statistics Chart

S089_BLH080004_27022017_080517: Statistics Chart

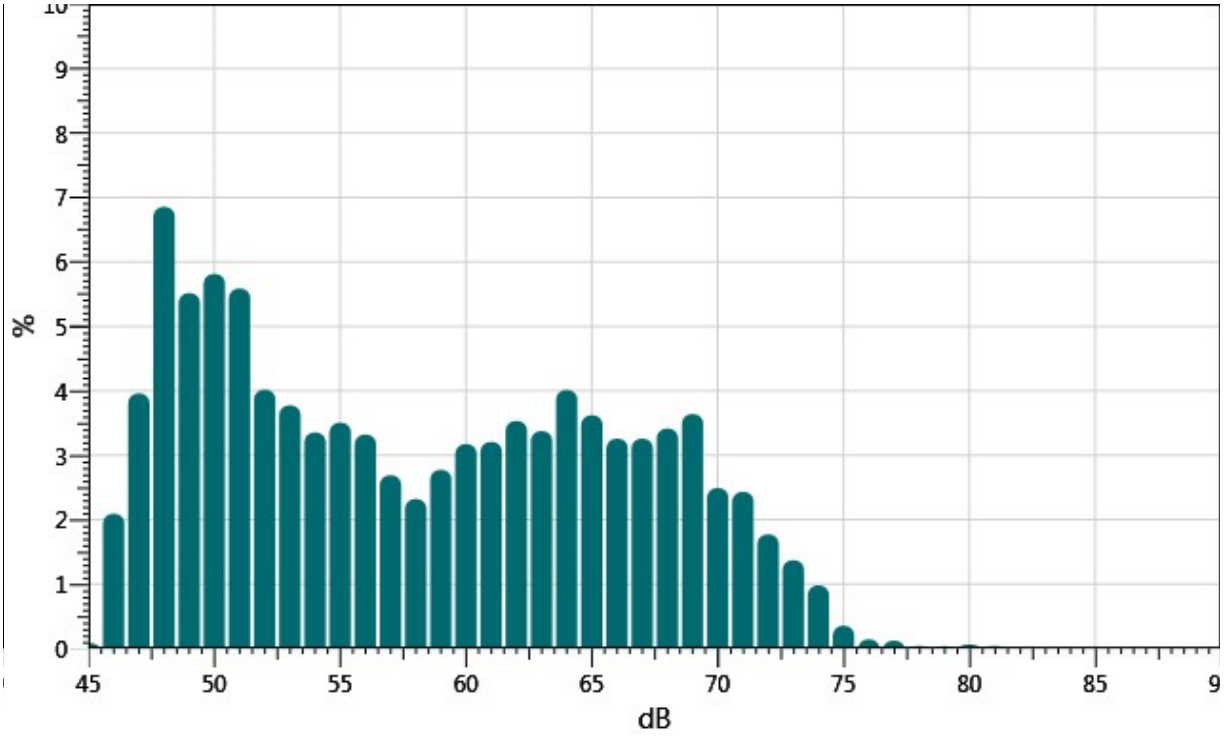

Exceedance Chart

S089_BLH080004_27022017_080517: Exceedance Chart

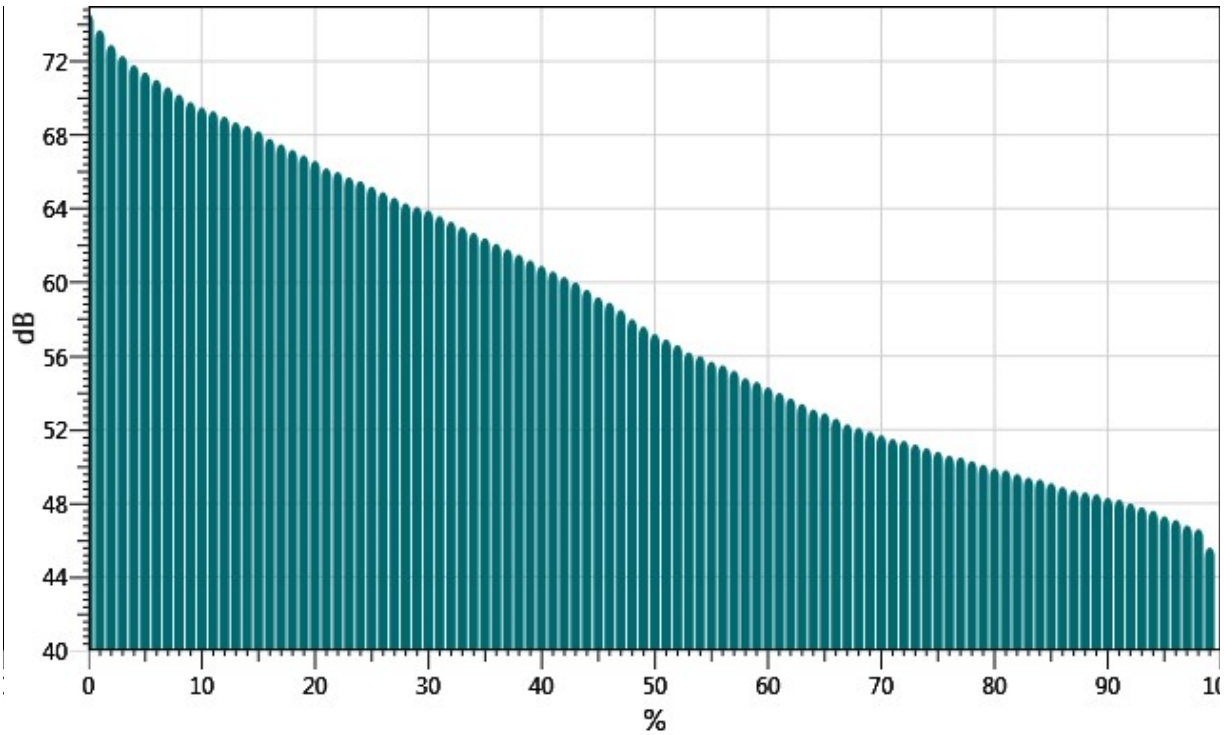

Statistics Table

dB:	0.0	0.1	0.2	0.3	0.4	0.5	0.6	0.7	0.8	0.9	%
45:	0.00	0.00	0.00	0.00	0.00	0.00	0.00	0.02	0.04	0.04	0.09
46:	0.02	0.07	0.08	0.16	0.18	0.19	0.14	0.23	0.38	0.64	2.09
47:	0.48	0.34	0.26	0.42	0.43	0.46	0.43	0.42	0.39	0.34	3.96
48:	0.63	0.65	0.46	0.68	0.54	0.57	0.85	1.03	0.89	0.54	6.85
49:	0.46	0.49	0.49	0.46	0.64	0.60	0.55	0.60	0.61	0.63	5.52
50:	0.57	0.50	0.49	0.64	0.53	0.55	0.63	0.62	0.62	0.65	5.81
51:	0.58	0.55	0.37	0.51	0.58	0.61	0.64	0.71	0.52	0.51	5.59
52:	0.63	0.44	0.44	0.43	0.38	0.35	0.33	0.38	0.32	0.34	4.02
53:	0.46	0.37	0.33	0.37	0.36	0.38	0.30	0.43	0.39	0.37	3.77
54:	0.30	0.29	0.18	0.29	0.29	0.35	0.33	0.41	0.51	0.40	3.35
55:	0.28	0.27	0.26	0.25	0.36	0.41	0.44	0.35	0.45	0.44	3.51
56:	0.39	0.38	0.35	0.33	0.38	0.28	0.31	0.27	0.33	0.30	3.32
57:	0.32	0.38	0.21	0.30	0.30	0.27	0.25	0.23	0.23	0.22	2.69
58:	0.23	0.24	0.21	0.27	0.23	0.22	0.23	0.23	0.23	0.23	2.32
59:	0.23	0.27	0.34	0.29	0.28	0.26	0.26	0.24	0.32	0.30	2.77
60:	0.33	0.31	0.27	0.34	0.33	0.35	0.28	0.33	0.35	0.30	3.17
61:	0.33	0.32	0.31	0.32	0.35	0.33	0.34	0.29	0.32	0.30	3.21
62:	0.37	0.33	0.30	0.32	0.34	0.35	0.35	0.38	0.42	0.38	3.53
63:	0.38	0.40	0.27	0.31	0.35	0.35	0.32	0.32	0.32	0.35	3.38
64:	0.39	0.34	0.47	0.46	0.40	0.44	0.42	0.47	0.36	0.27	4.01
65:	0.27	0.27	0.32	0.29	0.32	0.34	0.38	0.40	0.57	0.47	3.62
66:	0.42	0.42	0.28	0.36	0.29	0.30	0.30	0.31	0.30	0.29	3.26
67:	0.32	0.32	0.29	0.30	0.33	0.34	0.34	0.33	0.36	0.33	3.26
68:	0.29	0.26	0.26	0.33	0.32	0.38	0.34	0.40	0.42	0.42	3.41
69:	0.40	0.36	0.30	0.39	0.36	0.35	0.40	0.37	0.38	0.32	3.64
70:	0.26	0.28	0.22	0.22	0.23	0.27	0.26	0.25	0.25	0.27	2.49
71:	0.28	0.27	0.30	0.22	0.26	0.21	0.20	0.22	0.20	0.27	2.43
72:	0.26	0.26	0.16	0.09	0.15	0.16	0.17	0.17	0.18	0.16	1.77
73:	0.18	0.15	0.16	0.15	0.13	0.13	0.15	0.11	0.12	0.10	1.37
74:	0.09	0.11	0.13	0.16	0.10	0.10	0.09	0.10	0.05	0.06	0.98
75:	0.07	0.03	0.04	0.02	0.03	0.03	0.03	0.03	0.03	0.05	0.35
76:	0.06	0.01	0.01	0.01	0.01	0.01	0.01	0.01	0.01	0.01	0.14
77:	0.01	0.01	0.01	0.01	0.01	0.02	0.03	0.02	0.01	0.00	0.12
78:	0.01	0.01	0.01	0.00	0.00	0.01	0.00	0.00	0.00	0.00	0.04
79:	0.01	0.00	0.00	0.01	0.00	0.01	0.00	0.00	0.00	0.00	0.04

80:	0.00	0.01	0.00	0.00	0.01	0.00	0.00	0.01	0.02	0.01	0.06
81:	0.01	0.01	0.01	0.01	0.01	0.00	0.00	0.00	0.00	0.00	0.04

Exceedance Table

.	0%	1%	2%	3%	4%	5%	6%	%7	%8	%9
0%:		74.6	73.7	72.9	72.3	71.8	71.4	71.0	70.6	70.2
10%:	69.8	69.5	69.3	69.0	68.7	68.5	68.2	67.8	67.5	67.2
20%:	66.9	66.6	66.2	66.0	65.7	65.5	65.2	64.9	64.6	64.3
30%:	64.1	63.9	63.6	63.3	63.0	62.7	62.4	62.1	61.8	61.5
40%:	61.2	60.9	60.6	60.3	60.0	59.6	59.2	58.9	58.5	58.0
50%:	57.6	57.2	56.9	56.6	56.2	56.0	55.7	55.5	55.2	54.8
60%:	54.6	54.3	54.0	53.7	53.4	53.1	52.9	52.6	52.3	52.1
70%:	51.9	51.7	51.5	51.4	51.2	51.0	50.8	50.6	50.5	50.3
80%:	50.1	49.9	49.8	49.6	49.4	49.3	49.1	48.9	48.7	48.6
90%:	48.5	48.3	48.2	48.0	47.8	47.6	47.3	47.1	46.8	46.6
100%:	45.6									

Logged Data Chart

S089_BLH080004_27022017_080517: Logged Data Chart

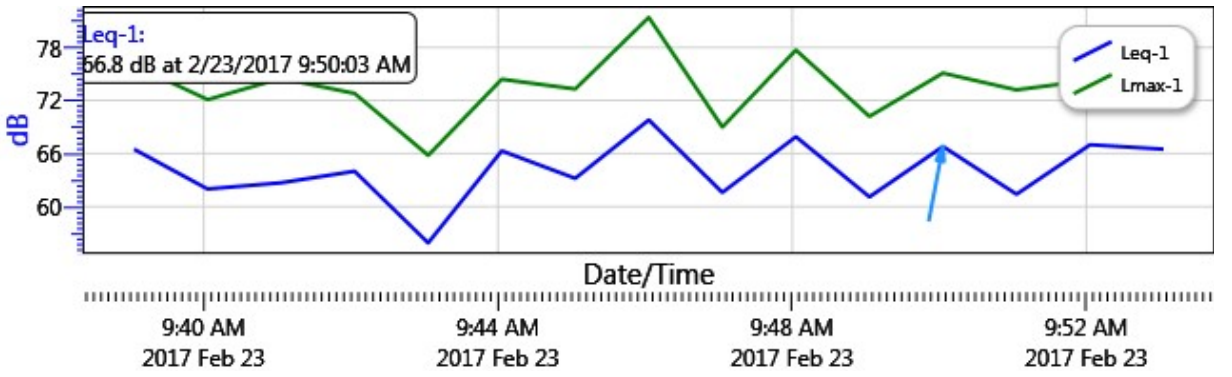

UltraSystems
environmental | management | planning

16431 Scientific Way
Irvine, CA 92618
949.788.4900

Noise Measurement Report Form – Part A

Date: 2/23/17 Day of Week: Thurs. Time: 956 Project Number: 6016

Monitoring Segment / Area: 002 Monitoring Site Address: on Allington St. behind 10426 Ambuc St

Measurement Taken By: S. Seferyn of UltraSystems Environmental

Approximate Wind Speed: 2.0 mph [km/hr] Approximate Wind Direction: From the NW/W

Approximate distance of sound level meter from receptor location: 45 FT

Approximate distance of sound level meter from construction site: —
(Leave Blank for Baseline Ambient)

Receptor Land Use (Check One): ☑ Residential ☐ Institutional ☐ Comm./Ind. ☐ Recreational

Sound Level Meter: Make and Model: Quest SoundPro DL-1-1/3 Serial Number: BLH080004

Meter Setting: ☑ A-Weighted Sound Level (SLOW) ☐ A-Weighted Sound Level (FAST)

Measurement Start Time: 956 Measurement End Time: 1011

Total Measurement Time: 15 mins Session File Name (e.g., S012): S090

Check the measurement purpose:

☑ Baseline condition ☐ Ongoing construction ☐ Major change ☐ Complaint response

Measurement Results

Measurement Type	Measured Levels (dB)
Calibration	Pre: 113.9 Post: 113.9
L_{eq} (h)	Slow: 64.2 Fast:
L_{max}	Slow: 76.5 Fast:
L_{90}	Slow: 50.3 Fast:

Field Notes:

1. Photos: 002
2. Busy road
3.

Noise Monitor's Signature: S. Seferyn Date: 2/23/17

UltraSystems
environmental | management | planning

16431 Scientific Way
Irvine, CA 92618
949.788.4900

Noise Measurement Report Form – Part B

Date: 2/23/17 Day of Week: Thurs. Time: 956 Project Number: 6016

Monitoring Segment / Area: 002 Monitoring Site Address: On alley to St behind 10426 Amber St

Site Map

Plan View

North Arrow (fill-in)

(Indicate site location, receptor location, meter location, distance in feet to landmarks, roadways, travel lane directions, geographical objects: trees, water, buildings, signs, store names, hydrants, power & telephone lines, manholes, etc.)

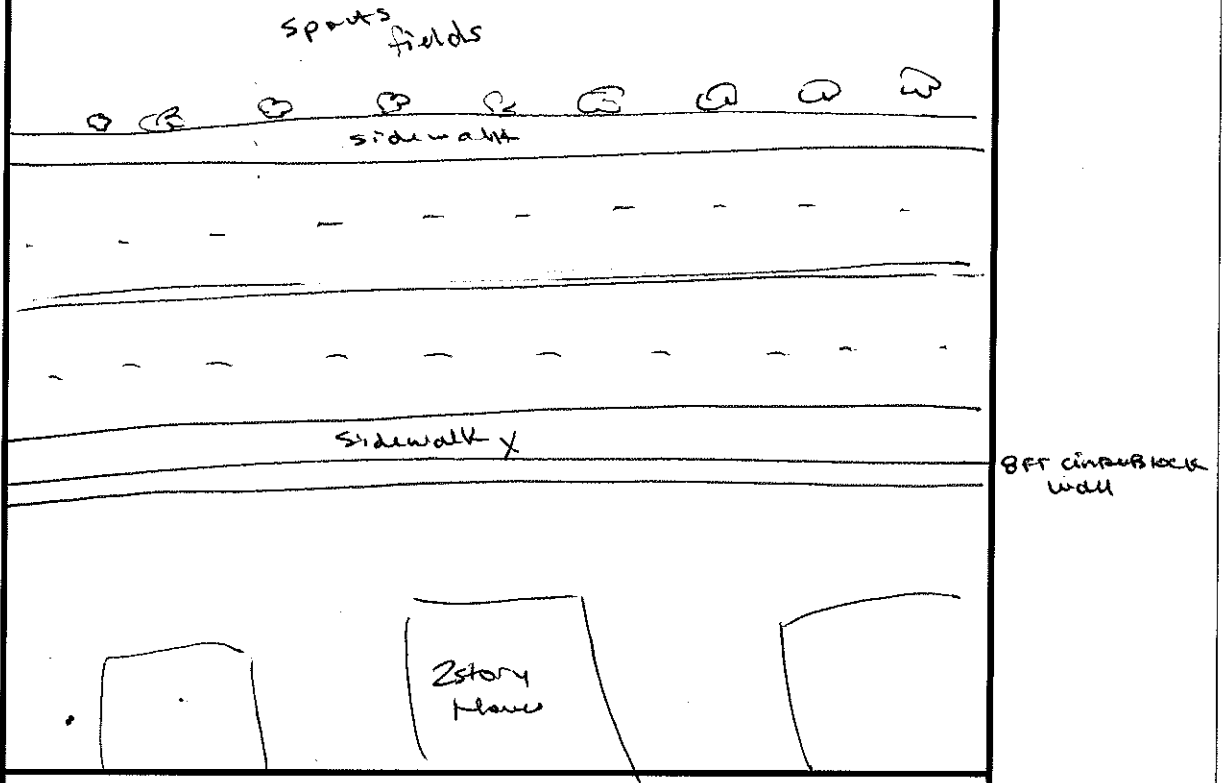

Elevation View

(Indicate terrain, roadway, height and location of receptor, meter, walls, barriers, buildings, etc.)

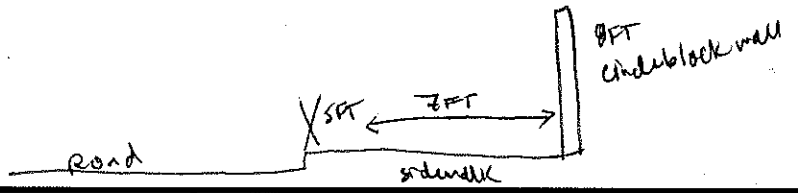

Latitude: 33.86566	Longitude: 118.11215	Elevation: 83

Noise Monitor's Signature: [signature] Date: 2/23/17

Session Report

2/27/2017

Information Panel

Name	S090_BLH080004_27022017_080510
Start Time	2/23/2017 9:57:44 AM
Stop Time	2/23/2017 10:12:44 AM
Device Name	BLH080004
Model Type	SoundPro DL
Device Firmware Rev	R.13H
Comments	

Summary Data Panel

Description	Meter	Value	Description	Meter	Value
Leq	1	64.2 dB			
Exchange Rate	1	3 dB	Weighting	1	A
Response	1	SLOW	Bandwidth	1	OFF
Exchange Rate	2	3 dB	Weighting	2	A
Response	2	FAST			

Statistics Chart

S090_BLH080004_27022017_080510: Statistics Chart

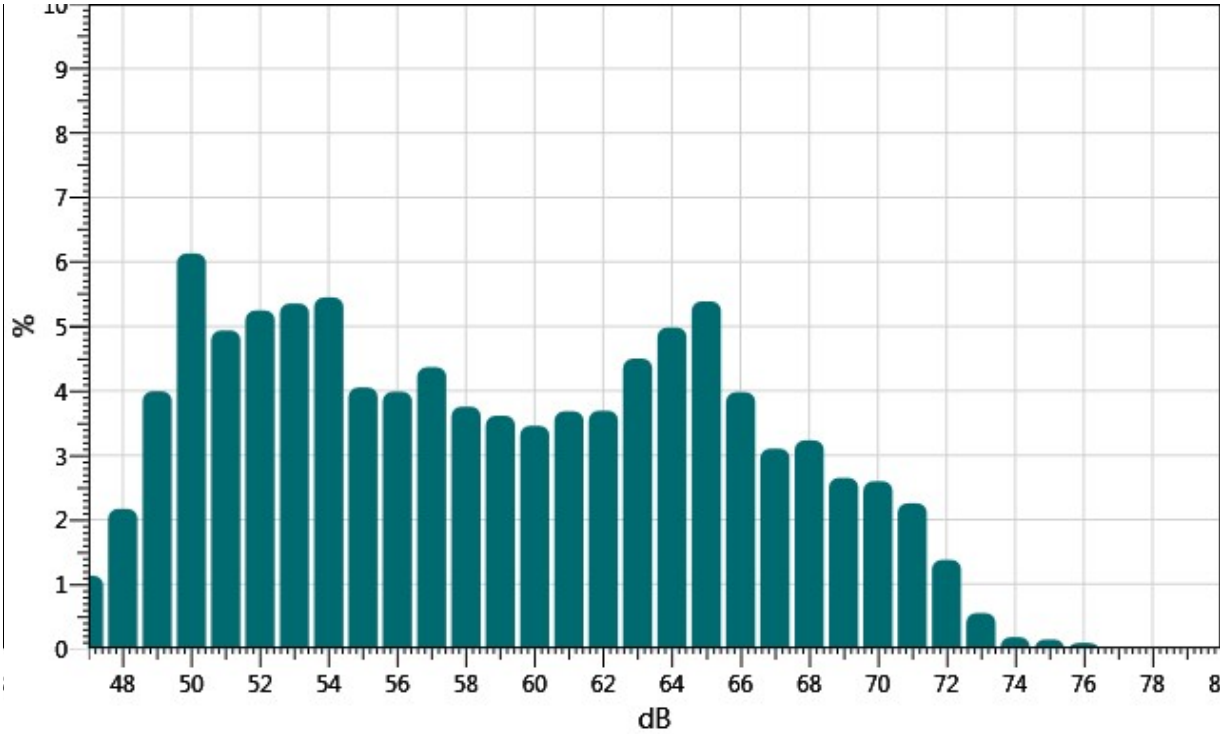

Exceedance Chart

S090_BLH080004_27022017_080510: Exceedance Chart

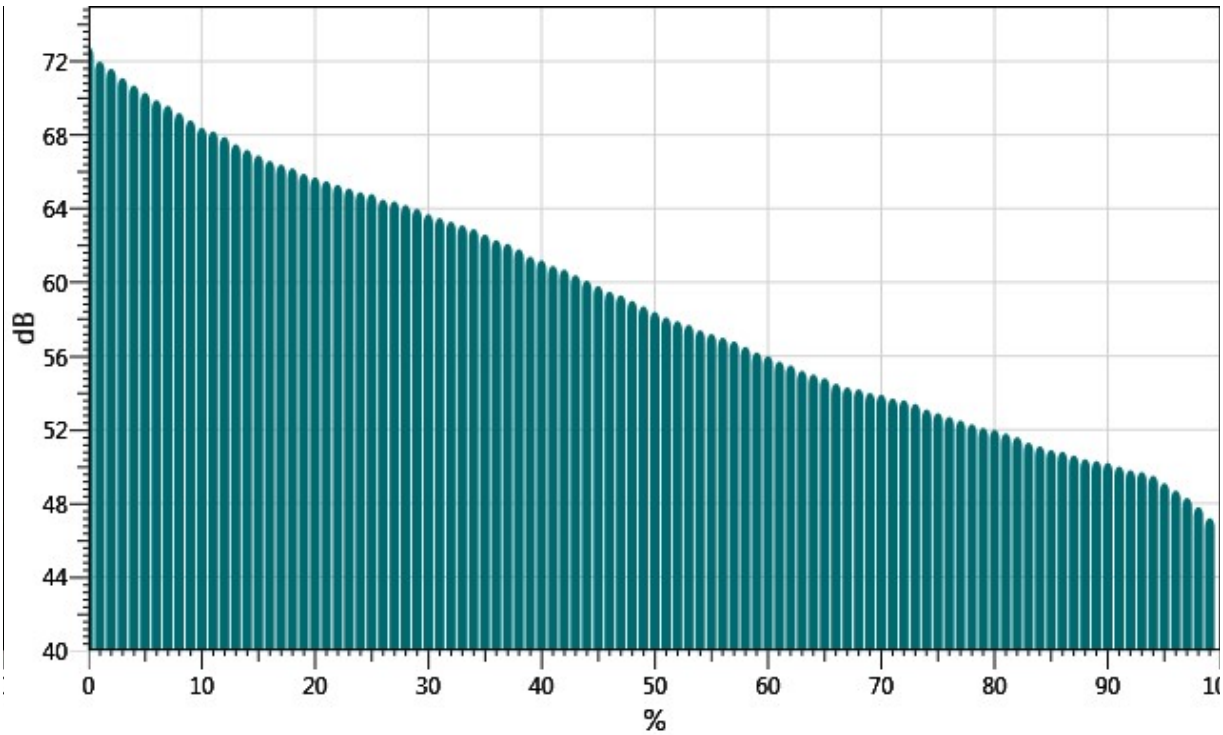

Statistics Table

dB:	0.0	0.1	0.2	0.3	0.4	0.5	0.6	0.7	0.8	0.9	%
47:	0.00	0.00	0.00	0.09	0.17	0.18	0.12	0.13	0.23	0.21	1.13
48:	0.23	0.18	0.21	0.23	0.27	0.16	0.18	0.22	0.22	0.26	2.17
49:	0.30	0.24	0.22	0.23	0.38	0.25	0.52	0.51	0.61	0.73	3.99
50:	0.62	0.54	0.45	0.70	0.67	0.75	0.50	0.66	0.57	0.67	6.13
51:	0.67	0.64	0.35	0.44	0.54	0.47	0.33	0.44	0.56	0.49	4.94
52:	0.53	0.60	0.61	0.48	0.57	0.53	0.55	0.40	0.43	0.55	5.24
53:	0.53	0.47	0.44	0.43	0.43	0.52	0.55	0.61	0.69	0.67	5.35
54:	0.77	0.63	0.51	0.65	0.58	0.54	0.48	0.45	0.44	0.40	5.45
55:	0.36	0.40	0.48	0.46	0.37	0.34	0.34	0.43	0.45	0.41	4.05
56:	0.40	0.38	0.39	0.38	0.38	0.37	0.38	0.38	0.46	0.46	3.98
57:	0.48	0.53	0.35	0.50	0.39	0.45	0.36	0.43	0.47	0.41	4.36
58:	0.36	0.42	0.42	0.42	0.40	0.34	0.34	0.35	0.31	0.38	3.75
59:	0.32	0.34	0.34	0.37	0.39	0.34	0.38	0.36	0.38	0.38	3.61
60:	0.38	0.38	0.24	0.36	0.34	0.34	0.30	0.31	0.35	0.45	3.46
61:	0.45	0.46	0.40	0.40	0.33	0.33	0.34	0.34	0.31	0.32	3.68
62:	0.32	0.34	0.36	0.37	0.34	0.39	0.40	0.37	0.39	0.42	3.69
63:	0.43	0.46	0.30	0.45	0.53	0.46	0.44	0.45	0.52	0.47	4.50
64:	0.47	0.50	0.53	0.48	0.50	0.55	0.49	0.40	0.48	0.59	4.98
65:	0.60	0.58	0.62	0.53	0.48	0.54	0.57	0.60	0.44	0.43	5.39
66:	0.41	0.42	0.28	0.43	0.40	0.40	0.50	0.40	0.38	0.36	3.98
67:	0.35	0.41	0.36	0.35	0.28	0.28	0.28	0.29	0.25	0.25	3.10
68:	0.28	0.34	0.32	0.36	0.41	0.43	0.34	0.25	0.27	0.23	3.23
69:	0.26	0.26	0.19	0.24	0.27	0.29	0.28	0.27	0.29	0.29	2.65
70:	0.28	0.28	0.26	0.27	0.27	0.25	0.23	0.26	0.25	0.26	2.60
71:	0.24	0.18	0.22	0.23	0.22	0.19	0.22	0.22	0.28	0.26	2.25
72:	0.27	0.19	0.12	0.07	0.13	0.14	0.14	0.12	0.12	0.08	1.38
73:	0.07	0.07	0.09	0.08	0.08	0.05	0.05	0.02	0.02	0.03	0.55
74:	0.02	0.03	0.03	0.01	0.01	0.01	0.01	0.01	0.02	0.02	0.18
75:	0.01	0.02	0.03	0.02	0.03	0.01	0.01	0.01	0.01	0.01	0.14
76:	0.01	0.01	0.01	0.01	0.03	0.03	0.00	0.00	0.00	0.00	0.09

Exceedance Table

.	0%	1%	2%	3%	4%	5%	6%	%7	%8	%9
0%:		72.8	72.0	71.6	71.1	70.7	70.3	69.9	69.6	69.2

10%:	68.8	68.4	68.2	67.9	67.5	67.2	66.9	66.6	66.4	66.2
20%:	65.9	65.7	65.5	65.3	65.1	64.9	64.8	64.5	64.4	64.2
30%:	64.0	63.7	63.5	63.3	63.1	62.9	62.6	62.3	62.1	61.8
40%:	61.4	61.2	60.9	60.7	60.4	60.1	59.8	59.5	59.3	59.0
50%:	58.7	58.4	58.1	57.9	57.7	57.4	57.2	57.0	56.8	56.5
60%:	56.2	56.0	55.7	55.5	55.2	55.0	54.8	54.5	54.3	54.2
70%:	54.0	53.9	53.7	53.6	53.4	53.1	52.9	52.7	52.5	52.3
80%:	52.1	52.0	51.8	51.6	51.3	51.1	50.9	50.8	50.6	50.4
90%:	50.3	50.2	50.0	49.8	49.7	49.5	49.1	48.7	48.3	47.8
100%:	47.2									

Logged Data Chart

S090_BLH080004_27022017_080510: Logged Data Chart

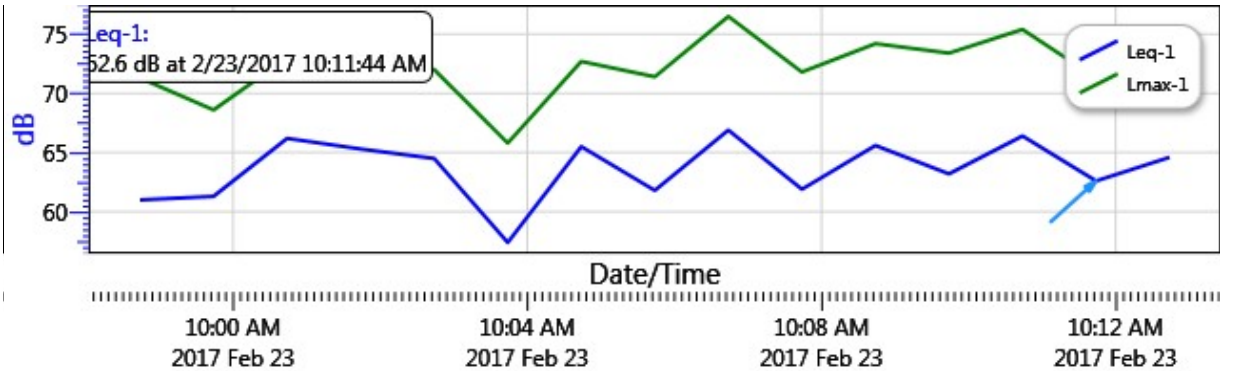

UltraSystems
environmental | management | planning

16431 Scientific Way
Irvine, CA 92618
949.788.4900

Noise Measurement Report Form – Part A

Date: 2/23/17 Day of Week: Thurs Time: 1020 Project Number: 6016

Monitoring Segment / Area: 003 Monitoring Site Address: 6054 Conehill

Measurement Taken By: S. Seferyn of UltraSystems Environmental

Approximate Wind Speed: 6.8 mph [km/hr] Approximate Wind Direction: From the NW

Approximate distance of sound level meter from receptor location: 12 FT

Approximate distance of sound level meter from construction site: —
(Leave Blank for Baseline Ambient)

Receptor Land Use (Check One): ☑ Residential ☐ Institutional ☐ Comm./Ind. ☐ Recreational

Sound Level Meter: Make and Model: Quest SoundPro DL-1-1/3 Serial Number: BLH080004

Meter Setting: ☑ A-Weighted Sound Level (SLOW) ☐ A-Weighted Sound Level (FAST)

Measurement Start Time: 1020 Measurement End Time: 1035

Total Measurement Time: 15 mins Session File Name (e.g., S012): S091

Check the measurement purpose:

☑ Baseline condition ☐ Ongoing construction ☐ Major change ☐ Complaint response

Measurement Results

Measurement Type	Measured Levels (dB)
Calibration	Pre: 113.9 Post: 113.9
$L_{eq\ (h)}$	Slow: 58.2 Fast:
L_{max}	Slow: 69.6 Fast:
L_{90}	Slow: 51.3 Fast:

Field Notes:

1. Photos: 003
2. moderate Traffic
3.

Noise Monitor's Signature: S. Seferyn Date: 2/23/17

UltraSystems
environmental | management | planning

16431 Scientific Way
Irvine, CA 92618
949.788.4900

Noise Measurement Report Form – Part B

Date: 2/23/17 Day of Week: Thurs Time: 1026 Project Number: 6016

Monitoring Segment / Area: 003 Monitoring Site Address: 6054 Camhill Ave.

Site Map

Plan View

North Arrow (fill-in)

(Indicate site location, receptor location, meter location, distance in feet to landmarks, roadways, travel lane directions, geographical objects: trees, water, buildings, signs, store names, hydrants, power & telephone lines, manholes, etc.)

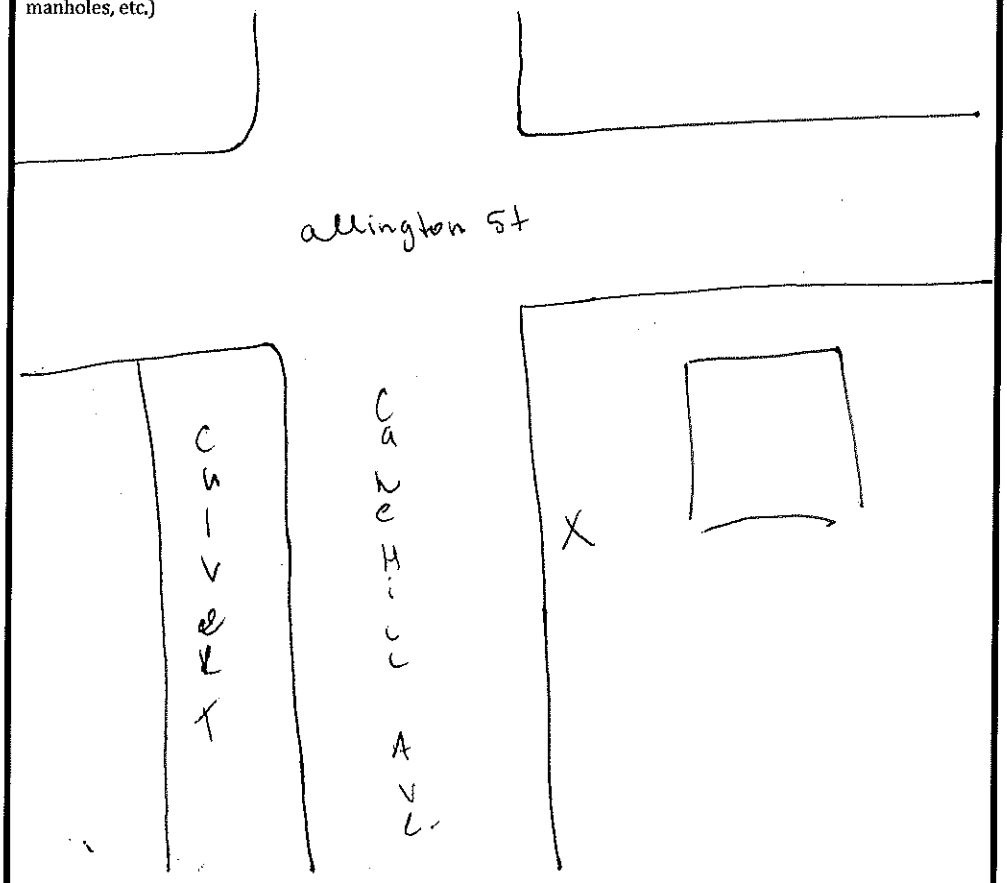

Elevation View

(Indicate terrain, roadway, height and location of receptor, meter, walls, barriers, buildings, etc.)

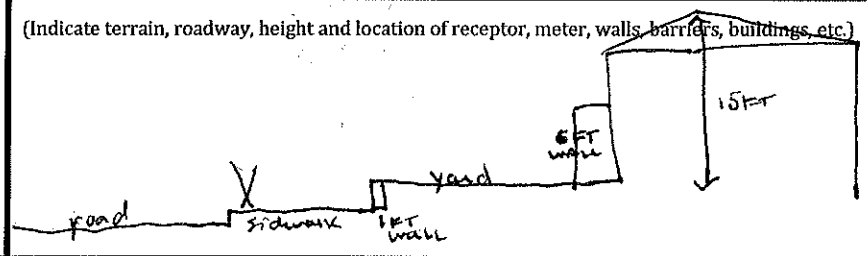

Latitude: 33.86530	Longitude: 118.11137	Elevation: 71

Noise Monitor's Signature: Date: 2/23/17

Session Report

2/27/2017

Information Panel

Name	S091_BLH080004_27022017_080512
Start Time	2/23/2017 10:21:01 AM
Stop Time	2/23/2017 10:36:01 AM
Device Name	BLH080004
Model Type	SoundPro DL
Device Firmware Rev	R.13H
Comments	

Summary Data Panel

Description	Meter	Value	Description	Meter	Value
Leq	1	58.2 dB			
Exchange Rate	1	3 dB	Weighting	1	A
Response	1	SLOW	Bandwidth	1	OFF
Exchange Rate	2	3 dB	Weighting	2	A
Response	2	FAST			

Statistics Chart

S091_BLH080004_27022017_080512: Statistics Chart

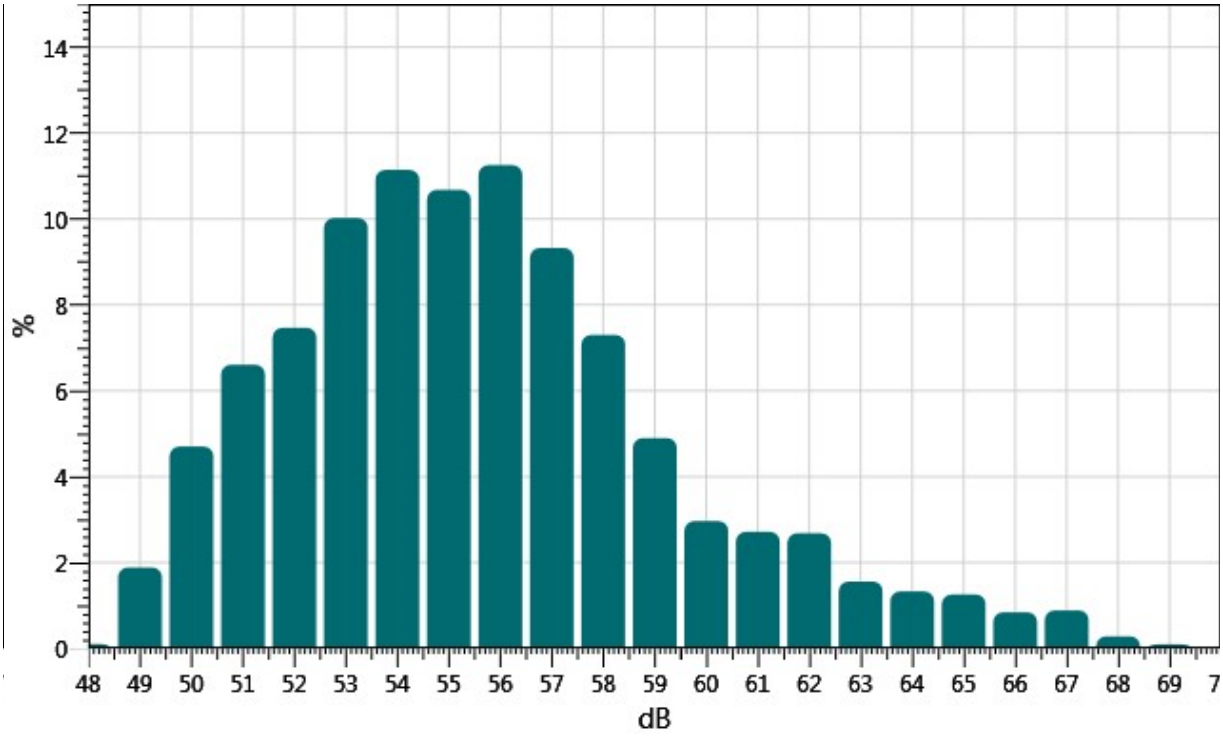

Exceedance Chart

S091_BLH080004_27022017_080512: Exceedance Chart

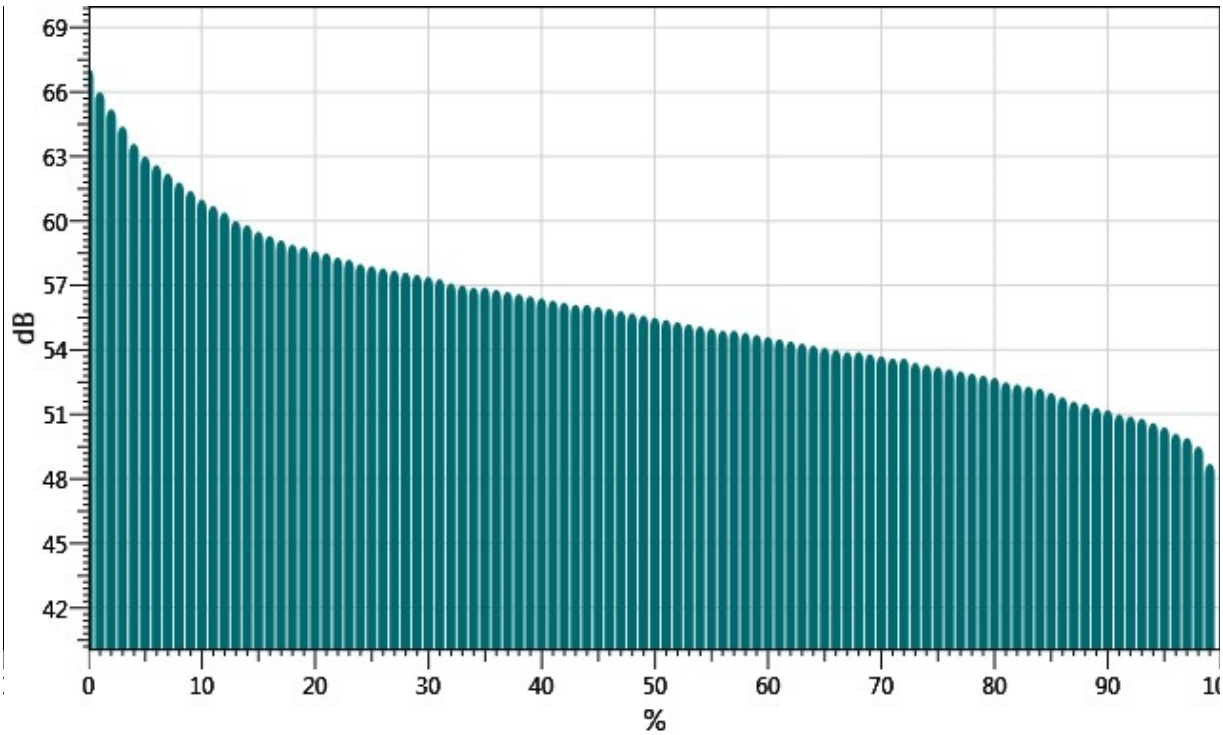

Statistics Table

dB:	0.0	0.1	0.2	0.3	0.4	0.5	0.6	0.7	0.8	0.9	%
48:	0.00	0.00	0.00	0.00	0.00	0.00	0.00	0.00	0.03	0.08	0.11
49:	0.12	0.06	0.13	0.15	0.18	0.22	0.29	0.27	0.18	0.27	1.89
50:	0.31	0.36	0.42	0.43	0.47	0.42	0.57	0.49	0.49	0.74	4.70
51:	0.79	0.82	0.44	0.85	0.73	0.67	0.69	0.63	0.49	0.50	6.61
52:	0.49	0.54	0.53	0.62	0.74	0.96	0.97	0.84	0.87	0.91	7.47
53:	0.86	0.97	0.94	0.86	0.77	0.85	0.97	1.10	1.19	1.51	10.02
54:	1.37	1.30	0.72	0.90	0.99	0.98	1.12	1.03	1.44	1.28	11.14
55:	1.17	1.32	1.04	1.01	1.10	1.06	0.88	1.15	1.04	0.91	10.68
56:	1.06	1.33	1.23	0.99	1.05	1.12	0.96	1.12	1.28	1.12	11.25
57:	1.30	1.20	0.67	0.86	0.88	0.66	0.92	0.84	0.98	1.01	9.32
58:	0.84	0.99	0.87	0.75	0.70	0.58	0.68	0.69	0.63	0.56	7.30
59:	0.56	0.51	0.57	0.56	0.48	0.55	0.40	0.40	0.41	0.46	4.90
60:	0.41	0.40	0.23	0.29	0.24	0.24	0.27	0.31	0.29	0.29	2.97
61:	0.36	0.32	0.29	0.28	0.31	0.26	0.21	0.20	0.22	0.27	2.72
62:	0.21	0.22	0.24	0.29	0.33	0.29	0.33	0.34	0.25	0.18	2.68
63:	0.22	0.22	0.14	0.15	0.14	0.13	0.13	0.16	0.14	0.13	1.56
64:	0.16	0.12	0.13	0.11	0.15	0.15	0.14	0.13	0.12	0.12	1.33
65:	0.12	0.13	0.12	0.16	0.14	0.18	0.16	0.09	0.10	0.08	1.26
66:	0.09	0.10	0.09	0.10	0.07	0.06	0.07	0.08	0.09	0.11	0.85
67:	0.11	0.14	0.09	0.08	0.06	0.07	0.09	0.10	0.07	0.08	0.89
68:	0.05	0.02	0.02	0.03	0.02	0.04	0.05	0.03	0.01	0.01	0.28
69:	0.01	0.01	0.01	0.01	0.02	0.03	0.02	0.00	0.00	0.00	0.10

Exceedance Table

.	0%	1%	2%	3%	4%	5%	6%	%7	%8	%9
0%:		67.1	66.0	65.2	64.4	63.6	63.0	62.6	62.2	61.8
10%:	61.4	61.0	60.7	60.4	60.0	59.8	59.5	59.3	59.1	58.9
20%:	58.8	58.6	58.5	58.3	58.2	58.0	57.9	57.8	57.7	57.6
30%:	57.5	57.4	57.3	57.1	57.0	56.9	56.9	56.8	56.7	56.6
40%:	56.5	56.4	56.3	56.2	56.1	56.1	56.0	55.9	55.8	55.7
50%:	55.6	55.5	55.4	55.3	55.2	55.1	55.0	54.9	54.9	54.8
60%:	54.7	54.6	54.5	54.4	54.3	54.2	54.1	54.0	53.9	53.9
70%:	53.8	53.7	53.6	53.6	53.4	53.3	53.2	53.1	53.0	52.9
80%:	52.8	52.7	52.5	52.4	52.3	52.2	52.0	51.8	51.6	51.5

90%:	51.3	51.2	51.0	50.9	50.8	50.6	50.4	50.1	49.9	49.5
100%:	48.7									

Logged Data Chart

S091_BLH080004_27022017_080512: Logged Data Chart

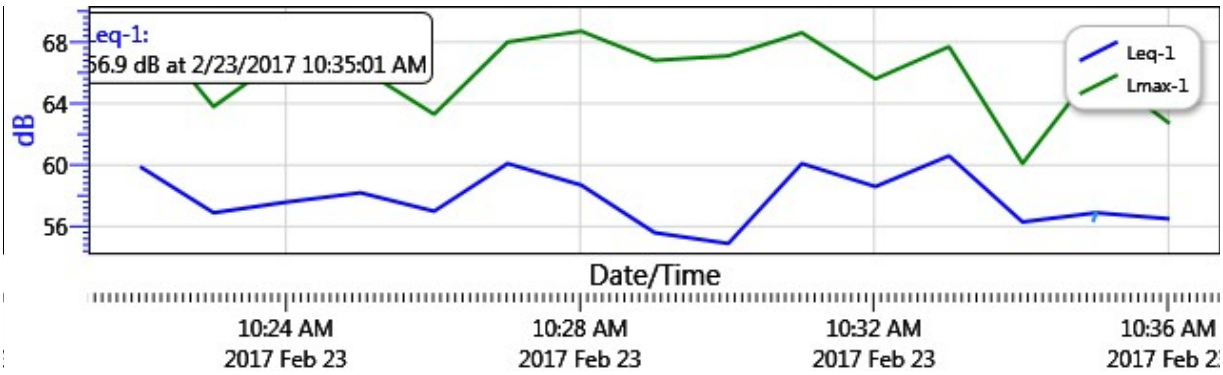

UltraSystems
environmental | management | planning

16431 Scientific Way
Irvine, CA 92618
949.788.4900

Noise Measurement Report Form – Part A

Date: 2/22/17 Day of Week: Thurs. Time: 1040 Project Number: 6016

Monitoring Segment / Area: 004 Monitoring Site Address: 6014 Camhill Ave.

Measurement Taken By: S. Sefryn of UltraSystems Environmental

Approximate Wind Speed: 0-8 mph [km/hr] Approximate Wind Direction: From the W

Approximate distance of sound level meter from receptor location: 100'

Approximate distance of sound level meter from construction site: _____
(Leave Blank for Baseline Ambient)

Receptor Land Use (Check One): ☑ Residential ☐ Institutional ☐ Comm./Ind. ☐ Recreational

Sound Level Meter: Make and Model: Quest SoundPro DL-1-1/3 Serial Number: BLH080004

Meter Setting: ☑ A-Weighted Sound Level (SLOW) ☐ A-Weighted Sound Level (FAST)

Measurement Start Time: 1040 Measurement End Time: 1055

Total Measurement Time: 15 mins Session File Name (e.g., S012): S092

Check the measurement purpose:

☑ Baseline condition ☐ Ongoing construction ☐ Major change ☐ Complaint response

Measurement Results

Measurement Type	Measured Levels (dB)
Calibration	Pre: 113.9 Post: 113.9
$L_{eq\ (h)}$	Slow: 56.1 Fast:
L_{max}	Slow: 70.7 Fast:
L_{90}	Slow: 48.9 Fast:

Field Notes:

1. Photo 004
2. _____
3. _____

Noise Monitor's Signature: S Sefryn Date: 2/23/17

UltraSystems
environmental | management | planning

16431 Scientific Way
Irvine, CA 92618
949.788.4900

Noise Measurement Report Form – Part B

Date: 2/23/17 Day of Week: Thurs Time: 1040 Project Number: 6016

Monitoring Segment / Area: 604 Monitoring Site Address: 6014 Canehill Ave

Site Map

Plan View

North Arrow (fill-in)

(Indicate site location, receptor location, meter location, distance in feet to landmarks, roadways, travel lane directions, geographical objects: trees, water, buildings, signs, store names, hydrants, power & telephone lines, manholes, etc.)

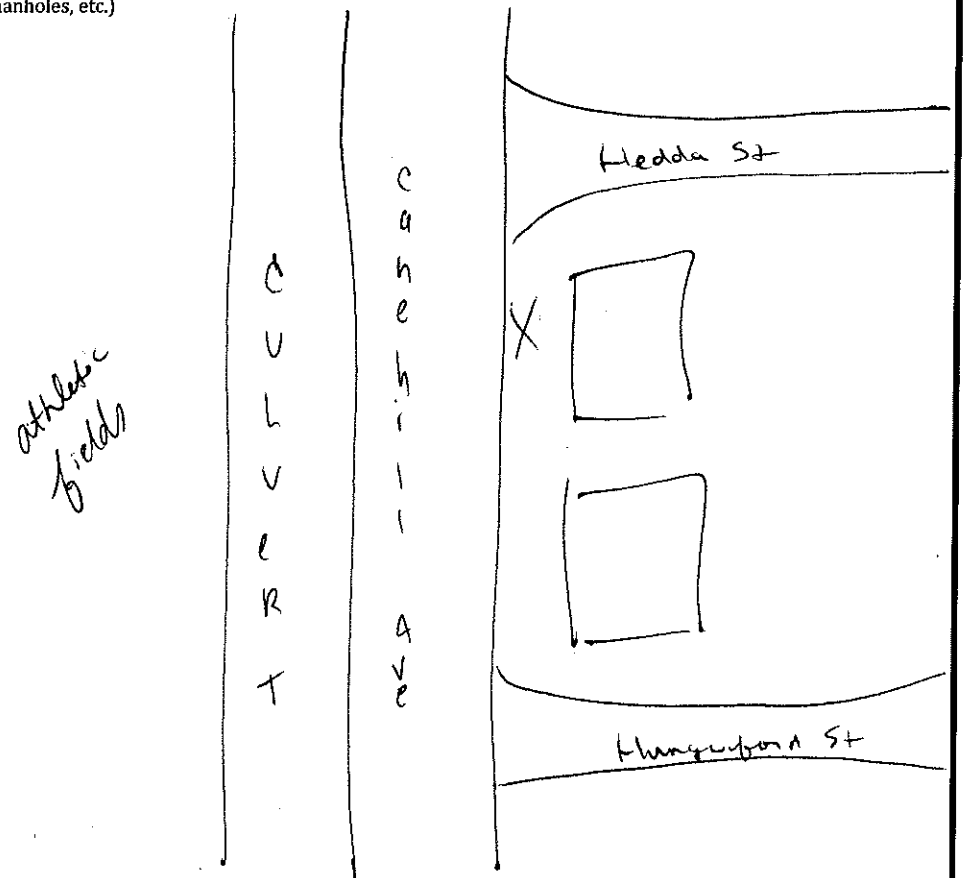

Elevation View

(Indicate terrain, roadway, height and location of receptor, meter, walls, barriers, buildings, etc.)

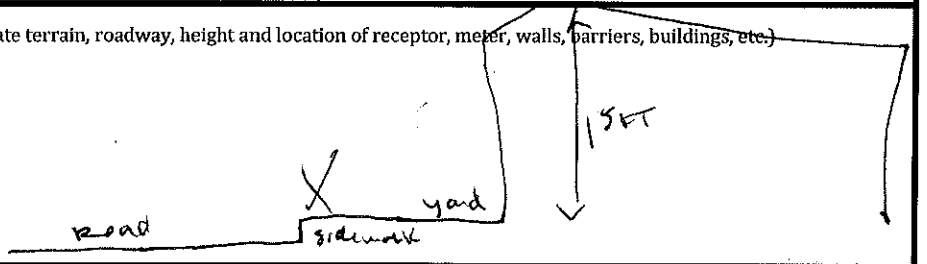

Latitude: 33.86430	Longitude: 118.11137	Elevation: 60

Noise Monitor's Signature: Sloan Sef Date: 2/23/17

Session Report

2/27/2017

Information Panel

Name	S092_BLH080004_27022017_080513
Start Time	2/23/2017 10:41:10 AM
Stop Time	2/23/2017 10:56:10 AM
Device Name	BLH080004
Model Type	SoundPro DL
Device Firmware Rev	R.13H
Comments	

Summary Data Panel

Description	Meter	Value	Description	Meter	Value
Leq	1	56.1 dB			
Exchange Rate	1	3 dB	Weighting	1	A
Response	1	SLOW	Bandwidth	1	OFF
Exchange Rate	2	3 dB	Weighting	2	A
Response	2	FAST			

Statistics Chart

S092_BLH080004_27022017_080513: Statistics Chart

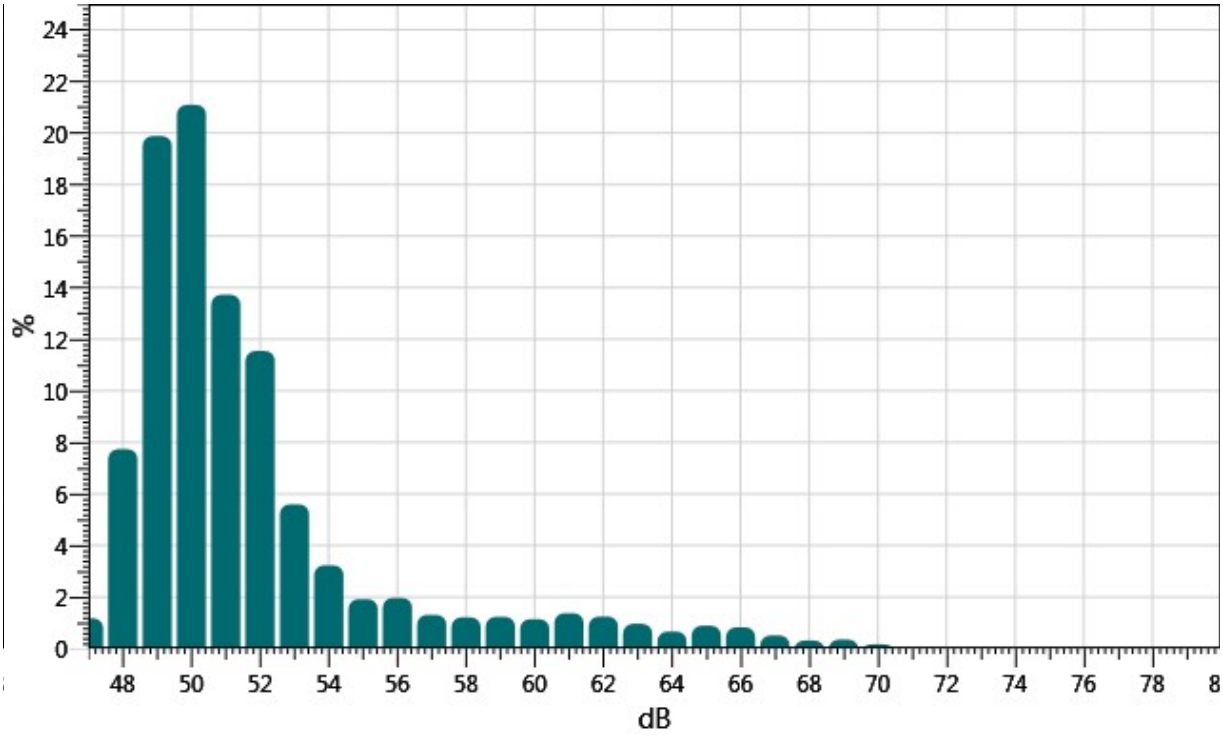

Exceedance Chart

S092_BLH080004_27022017_080513: Exceedance Chart

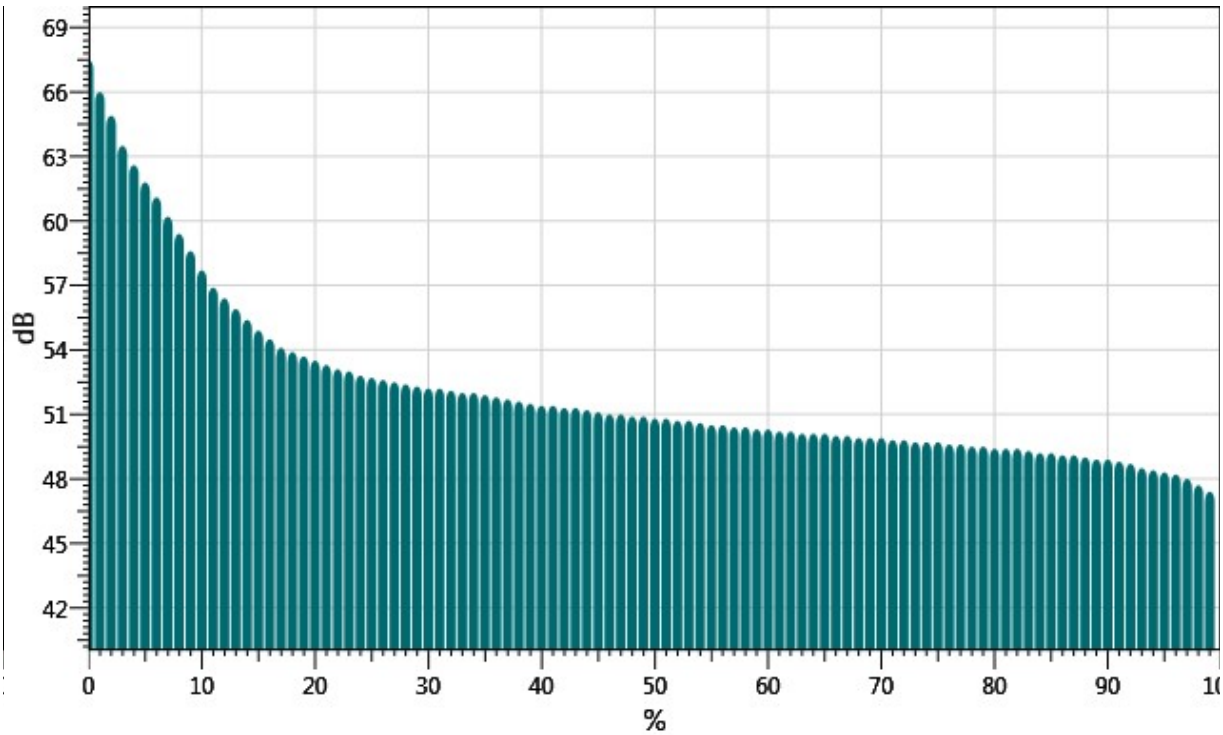

Statistics Table

dB:	0.0	0.1	0.2	0.3	0.4	0.5	0.6	0.7	0.8	0.9	%
47:	0.00	0.00	0.00	0.00	0.00	0.06	0.23	0.43	0.29	0.16	1.17
48:	0.33	0.74	0.48	0.66	0.80	0.96	0.90	0.93	0.84	1.09	7.73
49:	1.26	1.51	1.68	1.72	1.89	2.24	2.39	2.29	2.44	2.47	19.88
50:	2.63	2.46	2.59	2.44	1.80	1.86	1.80	1.53	1.85	2.14	21.09
51:	1.98	1.76	0.93	1.43	1.51	1.55	1.34	1.08	1.09	1.05	13.72
52:	1.13	1.85	1.41	1.20	1.25	1.23	0.93	0.93	0.83	0.79	11.54
53:	0.67	0.67	0.61	0.54	0.57	0.62	0.48	0.47	0.47	0.49	5.60
54:	0.51	0.52	0.24	0.28	0.33	0.27	0.29	0.28	0.29	0.22	3.23
55:	0.15	0.20	0.21	0.23	0.20	0.16	0.18	0.21	0.19	0.19	1.91
56:	0.18	0.20	0.23	0.18	0.19	0.20	0.19	0.24	0.18	0.19	1.96
57:	0.17	0.18	0.11	0.14	0.14	0.11	0.13	0.12	0.11	0.10	1.31
58:	0.12	0.10	0.10	0.11	0.11	0.11	0.10	0.13	0.15	0.18	1.21
59:	0.15	0.12	0.11	0.10	0.12	0.13	0.11	0.12	0.13	0.13	1.23
60:	0.13	0.12	0.07	0.12	0.12	0.11	0.12	0.12	0.11	0.11	1.14
61:	0.11	0.14	0.15	0.16	0.16	0.13	0.14	0.12	0.12	0.13	1.37
62:	0.13	0.12	0.11	0.12	0.18	0.12	0.11	0.11	0.12	0.11	1.24
63:	0.11	0.15	0.07	0.08	0.10	0.12	0.12	0.09	0.06	0.06	0.96
64:	0.05	0.08	0.07	0.07	0.06	0.06	0.05	0.07	0.07	0.08	0.66
65:	0.10	0.09	0.08	0.07	0.07	0.09	0.09	0.10	0.12	0.08	0.89
66:	0.07	0.10	0.07	0.09	0.09	0.10	0.08	0.08	0.09	0.05	0.82
67:	0.05	0.05	0.05	0.05	0.04	0.09	0.05	0.03	0.04	0.05	0.51
68:	0.06	0.05	0.02	0.02	0.03	0.03	0.02	0.02	0.03	0.03	0.31
69:	0.04	0.05	0.06	0.02	0.04	0.03	0.04	0.03	0.03	0.02	0.35
70:	0.01	0.01	0.02	0.03	0.02	0.02	0.05	0.01	0.00	0.00	0.17

Exceedance Table

.	0%	1%	2%	3%	4%	5%	6%	%7	%8	%9
0%:		67.5	66.0	64.9	63.5	62.6	61.8	61.1	60.2	59.4
10%:	58.6	57.7	56.9	56.4	55.9	55.4	54.9	54.5	54.1	53.9
20%:	53.7	53.5	53.3	53.1	53.0	52.8	52.7	52.6	52.5	52.4
30%:	52.3	52.2	52.2	52.1	52.0	52.0	51.9	51.8	51.7	51.6
40%:	51.5	51.4	51.4	51.3	51.3	51.2	51.1	51.0	51.0	50.9
50%:	50.9	50.8	50.8	50.7	50.7	50.6	50.5	50.5	50.4	50.4
60%:	50.3	50.3	50.2	50.2	50.1	50.1	50.1	50.0	50.0	49.9

70%:	49.9	49.9	49.8	49.8	49.7	49.7	49.7	49.6	49.6	49.5
80%:	49.5	49.4	49.4	49.4	49.3	49.2	49.2	49.1	49.1	49.0
90%:	48.9	48.9	48.8	48.7	48.5	48.4	48.3	48.2	48.0	47.7
100%:	47.4									

Logged Data Chart

S092_BLH080004_27022017_080513: Logged Data Chart

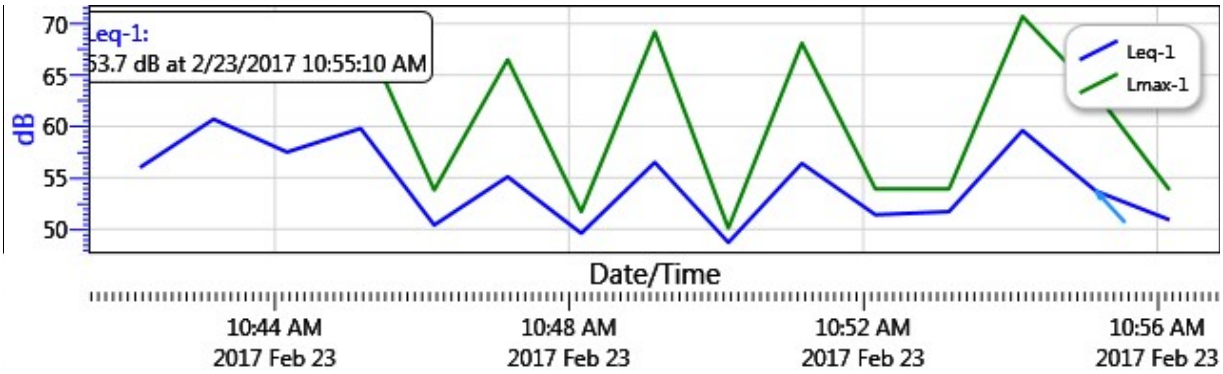

UltraSystems
environmental | management | planning

16431 Scientific Way
Irvine, CA 92618
949.788.4900

Noise Measurement Report Form – Part A

Date: 2/23/17 Day of Week: Thurs Time: 1058 Project Number: 6016

Monitoring Segment / Area: 005 Monitoring Site Address: 5922 Canehill Ave.

Measurement Taken By: S. Seferyn of UltraSystems Environmental

Approximate Wind Speed: 1.5 mph [km/hr] Approximate Wind Direction: From the NW

Approximate distance of sound level meter from receptor location: 60ft

Approximate distance of sound level meter from construction site: —
(Leave Blank for Baseline Ambient)

Receptor Land Use (Check One): ☑ Residential ☐ Institutional ☐ Comm./Ind. ☐ Recreational

Sound Level Meter: Make and Model: Quest SoundPro DL-1-1/3 Serial Number: BLH080004

Meter Setting: ☑ A-Weighted Sound Level (SLOW) ☐ A-Weighted Sound Level (FAST)

Measurement Start Time: 1068 Measurement End Time: 1113

Total Measurement Time: 15 mins Session File Name (e.g., S012): S093

Check the measurement purpose:

☑ Baseline condition ☐ Ongoing construction ☐ Major change ☐ Complaint response

Measurement Results

Measurement Type	Measured Levels (dB)
Calibration	Pre: 114.0 Post: 114.0
$L_{eq\ (h)}$	Slow: 58.7 Fast:
L_{max}	Slow: 72.7 Fast:
L_{90}	Slow: 48.8 Fast:

Field Notes:

1. Photo 005
2.
3.

Noise Monitor's Signature: S. Seferyn Date: 2/23/17

UltraSystems
environmental | management | planning

16431 Scientific Way
Irvine, CA 92618
949.788.4900

Noise Measurement Report Form – Part B

Date: 2/23/17 Day of Week: Thurs Time: 1058 Project Number: 6016

Monitoring Segment / Area: 005 Monitoring Site Address: 5922 Canehill Ave.

Site Map

Plan View

North Arrow (fill-in)

(Indicate site location, receptor location, meter location, distance in feet to landmarks, roadways, travel lane directions, geographical objects: trees, water, buildings, signs, store names, hydrants, power & telephone lines, manholes, etc.)

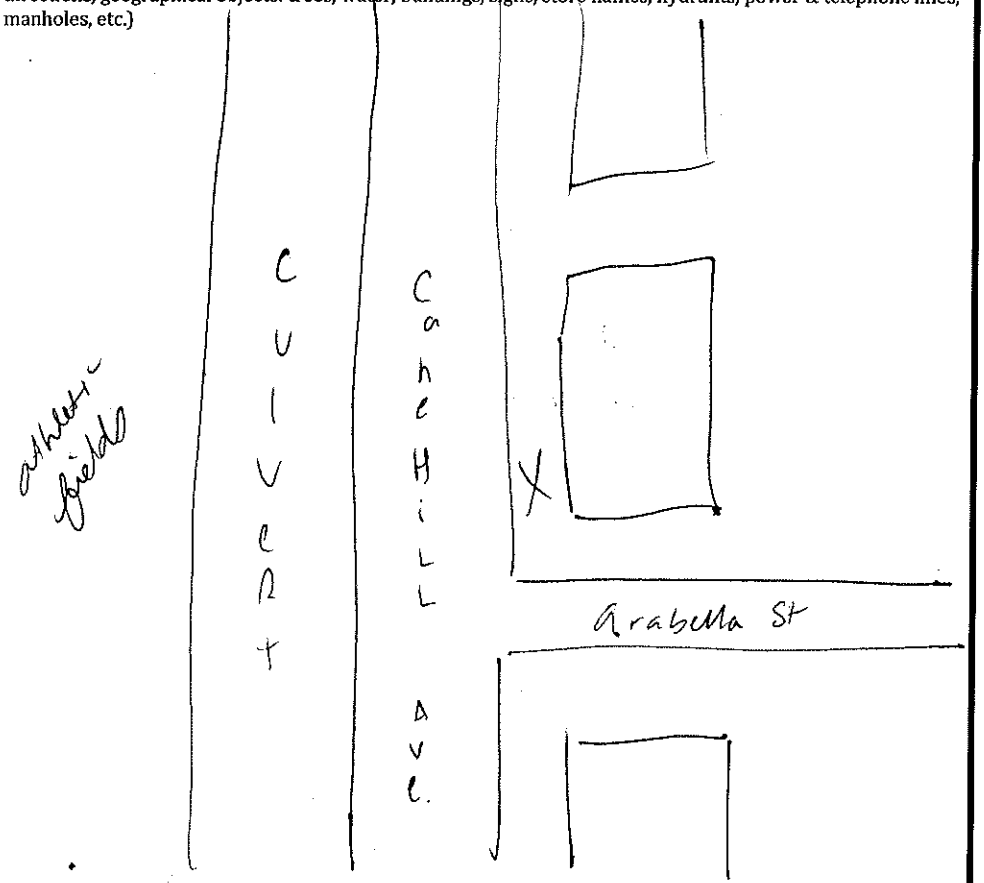

Elevation View

(Indicate terrain, roadway, height and location of receptor, meter, walls, barriers, buildings, etc.)

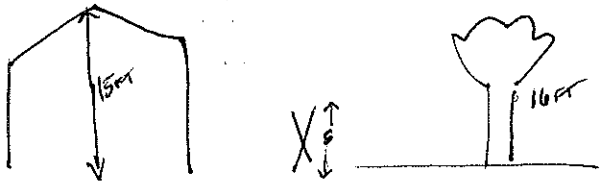

Latitude: 33.86331	Longitude: 118.11134	Elevation: 62

Noise Monitor's Signature: _____ Date: 2/23/17

Session Report

2/27/2017

Information Panel

Name	S093_BLH080004_27022017_080514
Start Time	2/23/2017 10:59:50 AM
Stop Time	2/23/2017 11:14:50 AM
Device Name	BLH080004
Model Type	SoundPro DL
Device Firmware Rev	R.13H
Comments	

Summary Data Panel

Description	Meter	Value	Description	Meter	Value
Leq	1	58.7 dB			
Exchange Rate	1	3 dB	Weighting	1	A
Response	1	SLOW	Bandwidth	1	OFF
Exchange Rate	2	3 dB	Weighting	2	A
Response	2	FAST			

Statistics Chart

S093_BLH080004_27022017_080514: Statistics Chart

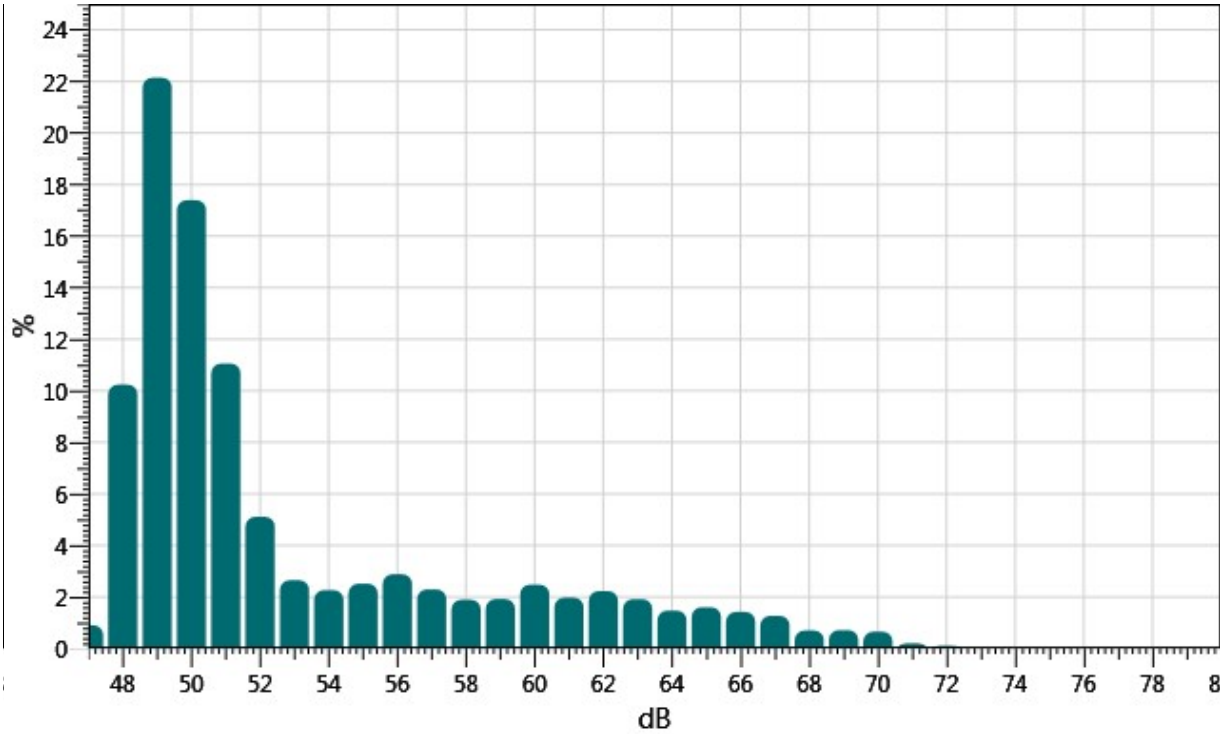

Exceedance Chart

S093_BLH080004_27022017_080514: Exceedance Chart

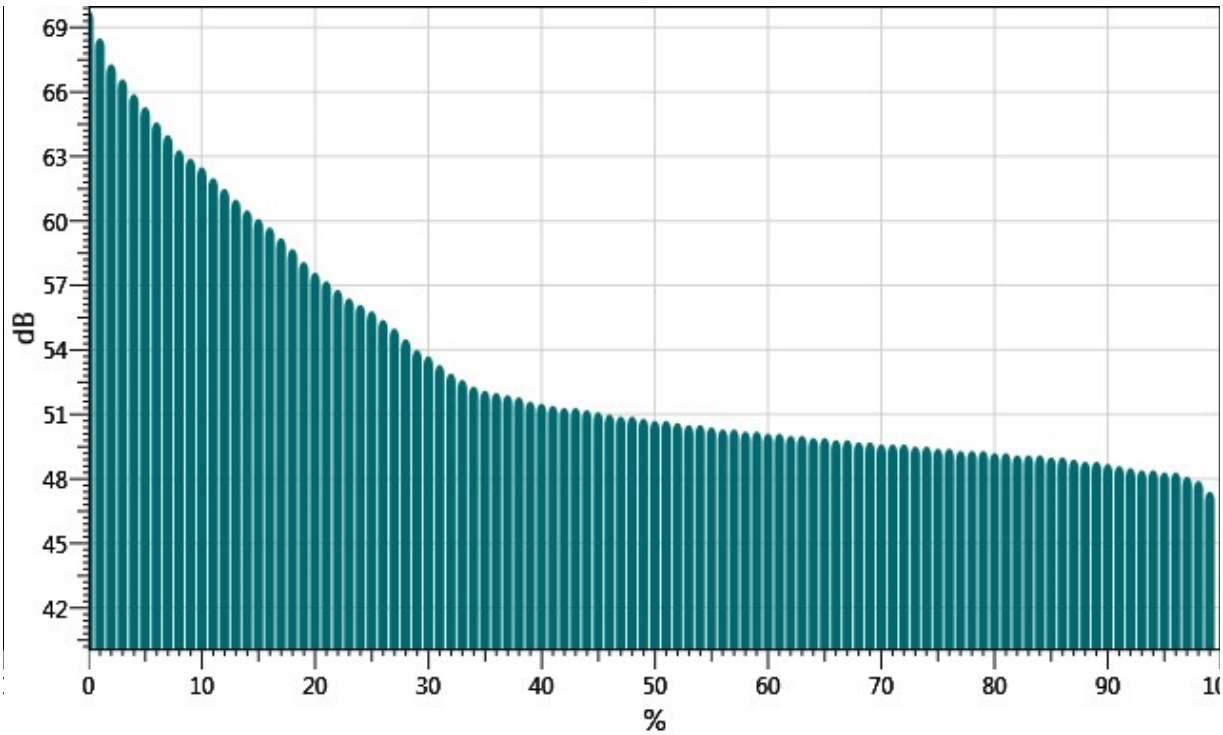

Statistics Table

dB:	0.0	0.1	0.2	0.3	0.4	0.5	0.6	0.7	0.8	0.9	%
47:	0.00	0.00	0.00	0.00	0.00	0.02	0.05	0.05	0.41	0.38	0.90
48:	0.34	0.59	0.30	0.77	1.45	1.76	1.31	1.03	1.03	1.66	10.24
49:	1.76	2.03	2.47	2.30	2.54	2.40	2.23	2.18	2.05	2.17	22.14
50:	2.45	2.23	1.73	1.87	1.66	1.49	1.54	1.37	1.43	1.62	17.39
51:	1.80	1.45	0.80	1.03	1.29	1.10	1.15	0.79	0.81	0.83	11.06
52:	0.73	0.82	0.76	0.60	0.45	0.45	0.38	0.30	0.29	0.32	5.11
53:	0.32	0.29	0.23	0.20	0.21	0.23	0.32	0.31	0.22	0.31	2.65
54:	0.25	0.28	0.18	0.23	0.19	0.22	0.22	0.20	0.23	0.26	2.27
55:	0.20	0.22	0.20	0.24	0.21	0.20	0.22	0.37	0.33	0.32	2.51
56:	0.32	0.29	0.39	0.30	0.24	0.24	0.29	0.27	0.27	0.26	2.88
57:	0.24	0.28	0.20	0.30	0.24	0.26	0.20	0.23	0.18	0.16	2.29
58:	0.21	0.23	0.17	0.18	0.18	0.17	0.18	0.18	0.18	0.21	1.89
59:	0.22	0.20	0.23	0.15	0.16	0.17	0.23	0.18	0.18	0.20	1.92
60:	0.28	0.39	0.21	0.22	0.23	0.25	0.24	0.23	0.22	0.21	2.48
61:	0.21	0.20	0.21	0.17	0.16	0.19	0.18	0.20	0.18	0.28	1.98
62:	0.17	0.21	0.24	0.21	0.21	0.18	0.20	0.20	0.27	0.33	2.23
63:	0.25	0.24	0.18	0.23	0.20	0.17	0.16	0.16	0.16	0.16	1.92
64:	0.14	0.16	0.12	0.14	0.16	0.16	0.15	0.17	0.13	0.14	1.47
65:	0.14	0.13	0.14	0.17	0.19	0.16	0.20	0.14	0.14	0.18	1.60
66:	0.15	0.17	0.12	0.18	0.21	0.14	0.11	0.09	0.16	0.10	1.42
67:	0.10	0.15	0.12	0.13	0.15	0.17	0.13	0.15	0.08	0.09	1.27
68:	0.09	0.07	0.05	0.05	0.04	0.05	0.06	0.07	0.12	0.10	0.70
69:	0.12	0.07	0.05	0.06	0.05	0.06	0.10	0.07	0.06	0.07	0.71
70:	0.07	0.06	0.09	0.11	0.06	0.12	0.03	0.05	0.03	0.02	0.65
71:	0.03	0.04	0.02	0.04	0.02	0.02	0.01	0.01	0.01	0.01	0.21
72:	0.01	0.01	0.01	0.01	0.01	0.02	0.02	0.02	0.00	0.00	0.11

Exceedance Table

.	0%	1%	2%	3%	4%	5%	6%	%7	%8	%9
0%:		69.8	68.5	67.3	66.6	65.9	65.3	64.6	64.0	63.3
10%:	62.9	62.5	62.0	61.5	61.0	60.5	60.1	59.7	59.2	58.7
20%:	58.1	57.6	57.2	56.8	56.4	56.1	55.8	55.4	55.0	54.5
30%:	54.0	53.7	53.3	52.9	52.6	52.3	52.1	52.0	51.9	51.8
40%:	51.6	51.5	51.4	51.3	51.3	51.2	51.1	51.0	50.9	50.9

50%:	50.8	50.7	50.7	50.6	50.5	50.5	50.4	50.3	50.3	50.2
60%:	50.2	50.1	50.1	50.0	50.0	49.9	49.9	49.8	49.8	49.7
70%:	49.7	49.6	49.6	49.6	49.5	49.5	49.4	49.4	49.3	49.3
80%:	49.3	49.2	49.2	49.1	49.1	49.1	49.0	49.0	48.9	48.8
90%:	48.8	48.7	48.6	48.5	48.4	48.4	48.3	48.3	48.1	47.9
100%:	47.4									

Logged Data Chart

S093_BLH080004_27022017_080514: Logged Data Chart

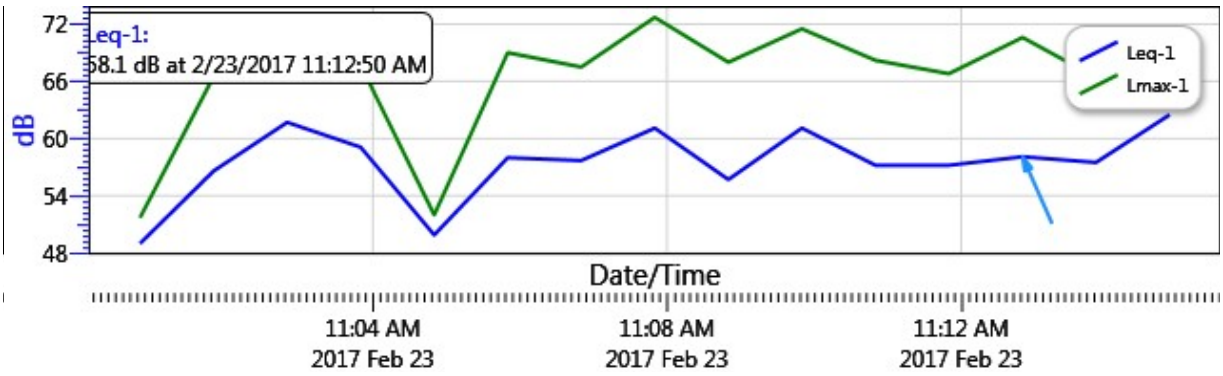

UltraSystems
environmental | management | planning

16431 Scientific Way
Irvine, CA 92618
949.788.4900

Noise Measurement Report Form – Part A

Date: 2/23/17 Day of Week: Thurs Time: 1118 Project Number: 6016

Monitoring Segment / Area: 006 Monitoring Site Address: 5960 Carlwil Ave. ESTHER LINDSTROM SCHOOL

Measurement Taken By: S. Seferyr of UltraSystems Environmental

Approximate Wind Speed: 1.5 mph [km/hr] Approximate Wind Direction: From the N

Approximate distance of sound level meter from receptor location: 45 FT

Approximate distance of sound level meter from construction site: —
(Leave Blank for Baseline Ambient)

Receptor Land Use (Check One): ☐ Residential ☑ Institutional ☐ Comm./Ind. ☐ Recreational

Sound Level Meter: Make and Model: Quest SoundPro DL-1-1/3 Serial Number: BLH080004

Meter Setting: ☑ A-Weighted Sound Level (SLOW) ☐ A-Weighted Sound Level (FAST)

Measurement Start Time: 1118 Measurement End Time: 1133

Total Measurement Time: 15 mins Session File Name (e.g., S012): S094

Check the measurement purpose:

☑ Baseline condition ☐ Ongoing construction ☐ Major change ☐ Complaint response

Measurement Results

Measurement Type	Measured Levels (dB)
Calibration	Pre: 113.9 Post: none – tech Problem
$L_{eq\ (h)}$	Slow: 54.5 Fast:
L_{max}	Slow: 70.0 Fast:
L_{90}	Slow: 48.5 Fast:

Field Notes:

1. Photo 006
2.
3.

Noise Monitor's Signature: S. Seferyr Date: 2/23/17

UltraSystems
environmental | management | planning

16431 Scientific Way
Irvine, CA 92618
949.788.4900

Noise Measurement Report Form – Part B

Date: 2/23/17 Day of Week: Thurs Time: 1118 Project Number: 6016

Monitoring Segment / Area: 006 Monitoring Site Address: 5900 Cornhill Esther Lindstrom School

Site Map

Plan View

North Arrow (fill-in)

(Indicate site location, receptor location, meter location, distance in feet to landmarks, roadways, travel lane directions, geographical objects: trees, water, buildings, signs, store names, hydrants, power & telephone lines, manholes, etc.)

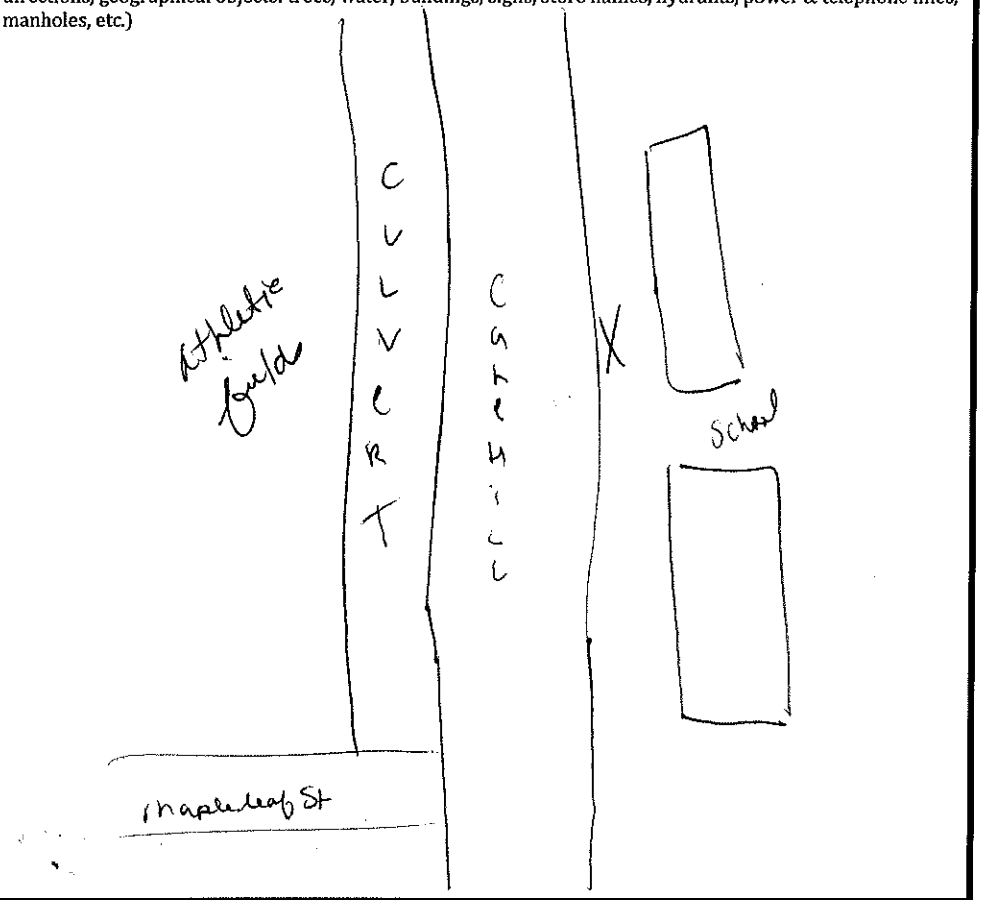

Elevation View

(Indicate terrain, roadway, height and location of receptor, meter, walls, barriers, buildings, etc.)

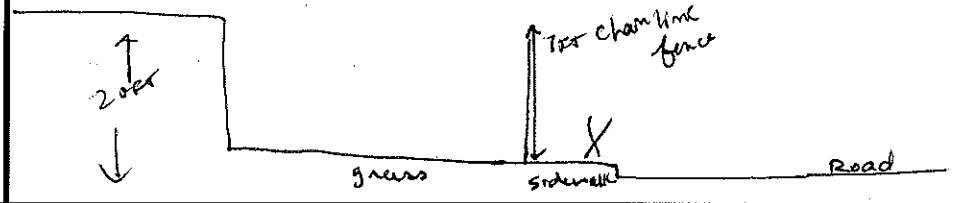

Latitude: 33.86238	Longitude: 118.11105	Elevation: 67

Noise Monitor's Signature: _____ Date: 2/23/17

Session Report

2/27/2017

Information Panel

Name	S094_BLH080004_27022017_080515
Start Time	2/23/2017 11:19:19 AM
Stop Time	2/23/2017 11:34:19 AM
Device Name	BLH080004
Model Type	SoundPro DL
Device Firmware Rev	R.13H
Comments	

Summary Data Panel

Description	Meter	Value	Description	Meter	Value
Leq	1	54.5 dB			
Exchange Rate	1	3 dB	Weighting	1	A
Response	1	SLOW	Bandwidth	1	OFF
Exchange Rate	2	3 dB	Weighting	2	A
Response	2	FAST			

Statistics Chart

S094_BLH080004_27022017_080515: Statistics Chart

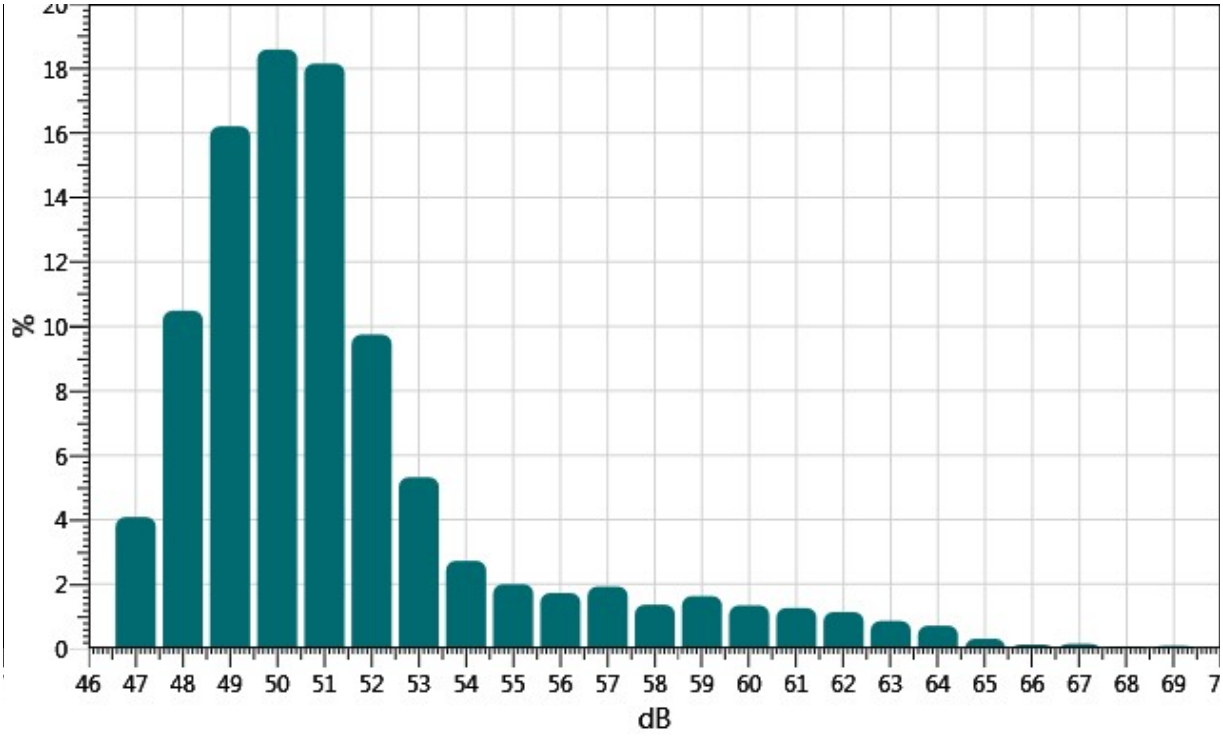

Exceedance Chart

S094_BLH080004_27022017_080515: Exceedance Chart

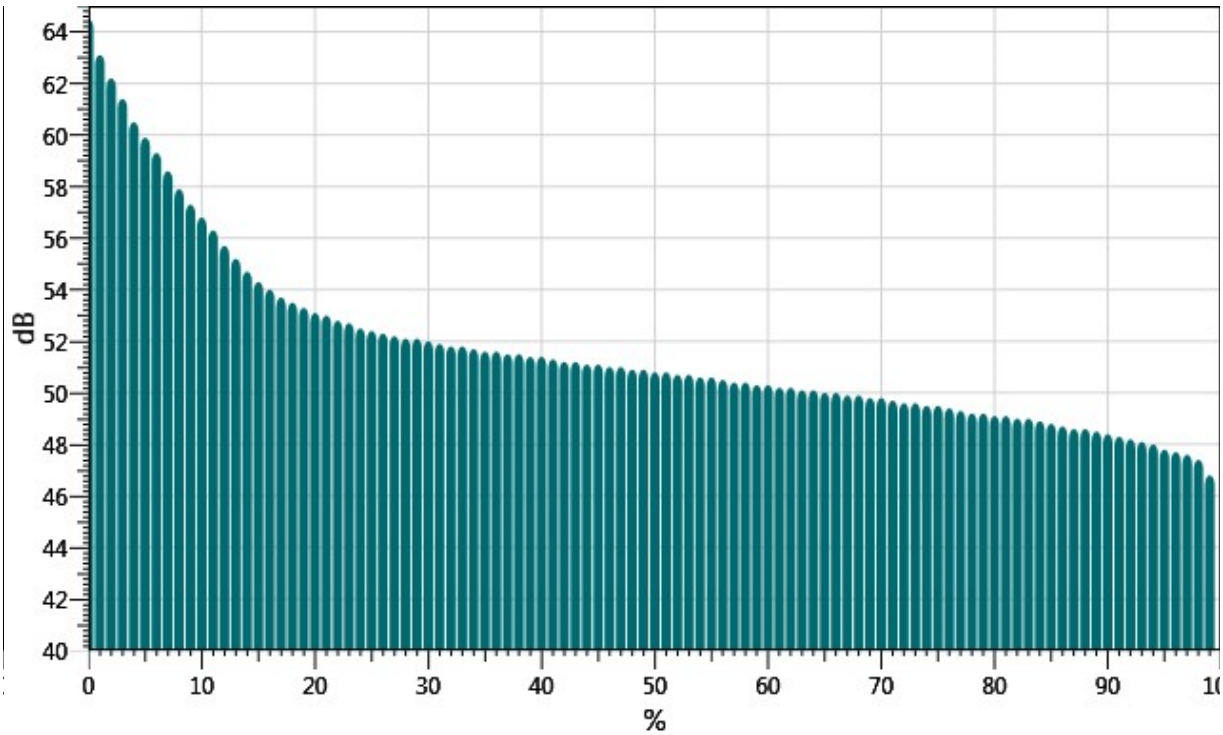

Statistics Table

dB:	0.0	0.1	0.2	0.3	0.4	0.5	0.6	0.7	0.8	0.9	%
46:	0.00	0.00	0.00	0.00	0.00	0.00	0.00	0.00	0.00	0.03	0.03
47:	0.10	0.09	0.20	0.20	0.26	0.50	0.53	0.64	0.64	0.92	4.08
48:	0.88	0.90	0.64	1.07	0.85	1.13	1.03	1.39	1.35	1.22	10.48
49:	1.21	1.77	1.80	1.75	1.52	1.34	1.56	1.62	1.80	1.82	16.20
50:	2.04	1.74	1.89	1.83	1.81	2.00	1.74	1.71	1.75	2.07	18.59
51:	2.03	2.33	1.63	1.75	1.68	1.87	2.01	1.68	1.60	1.58	18.15
52:	1.28	1.10	1.30	1.21	1.06	0.90	0.77	0.71	0.64	0.77	9.74
53:	0.69	0.60	0.54	0.54	0.56	0.54	0.56	0.47	0.43	0.37	5.31
54:	0.35	0.36	0.23	0.28	0.28	0.27	0.27	0.27	0.22	0.19	2.72
55:	0.19	0.21	0.24	0.20	0.20	0.20	0.22	0.20	0.16	0.16	2.00
56:	0.14	0.15	0.14	0.17	0.18	0.23	0.16	0.20	0.20	0.16	1.73
57:	0.20	0.20	0.17	0.19	0.22	0.20	0.20	0.21	0.18	0.14	1.92
58:	0.15	0.13	0.15	0.11	0.14	0.15	0.14	0.15	0.12	0.11	1.36
59:	0.13	0.13	0.13	0.14	0.15	0.11	0.13	0.16	0.25	0.30	1.63
60:	0.28	0.28	0.11	0.10	0.10	0.10	0.10	0.10	0.09	0.09	1.34
61:	0.09	0.12	0.16	0.14	0.09	0.14	0.14	0.14	0.12	0.13	1.26
62:	0.12	0.14	0.13	0.11	0.09	0.12	0.08	0.09	0.12	0.13	1.13
63:	0.09	0.15	0.08	0.11	0.13	0.05	0.06	0.07	0.06	0.06	0.85
64:	0.09	0.07	0.07	0.09	0.07	0.07	0.08	0.05	0.07	0.05	0.71
65:	0.03	0.04	0.05	0.06	0.06	0.01	0.01	0.01	0.01	0.01	0.30
66:	0.01	0.01	0.01	0.01	0.01	0.01	0.01	0.02	0.01	0.01	0.13
67:	0.01	0.02	0.02	0.02	0.04	0.01	0.01	0.01	0.01	0.01	0.15
68:	0.01	0.01	0.00	0.01	0.01	0.01	0.01	0.01	0.01	0.01	0.06
69:	0.01	0.01	0.01	0.01	0.01	0.01	0.01	0.01	0.01	0.02	0.09
70:	0.02	0.00	0.00	0.00	0.00	0.00	0.00	0.00	0.00	0.00	0.02

Exceedance Table

.	0%	1%	2%	3%	4%	5%	6%	%7	%8	%9
0%:		64.5	63.1	62.2	61.4	60.5	59.9	59.3	58.6	57.9
10%:	57.3	56.8	56.3	55.7	55.2	54.7	54.3	54.0	53.7	53.5
20%:	53.3	53.1	53.0	52.8	52.7	52.5	52.4	52.3	52.2	52.1
30%:	52.1	52.0	51.9	51.8	51.8	51.7	51.6	51.6	51.5	51.5
40%:	51.4	51.4	51.3	51.2	51.2	51.1	51.1	51.0	51.0	50.9
50%:	50.9	50.8	50.8	50.7	50.7	50.6	50.6	50.5	50.4	50.4

60%:	50.3	50.3	50.2	50.2	50.1	50.1	50.0	50.0	49.9	49.9
70%:	49.8	49.8	49.7	49.6	49.6	49.5	49.5	49.4	49.3	49.2
80%:	49.2	49.1	49.1	49.0	49.0	48.9	48.8	48.7	48.6	48.6
90%:	48.5	48.4	48.3	48.2	48.1	48.0	47.8	47.7	47.6	47.4
100%:	46.8									

Logged Data Chart

S094_BLH080004_27022017_080515: Logged Data Chart

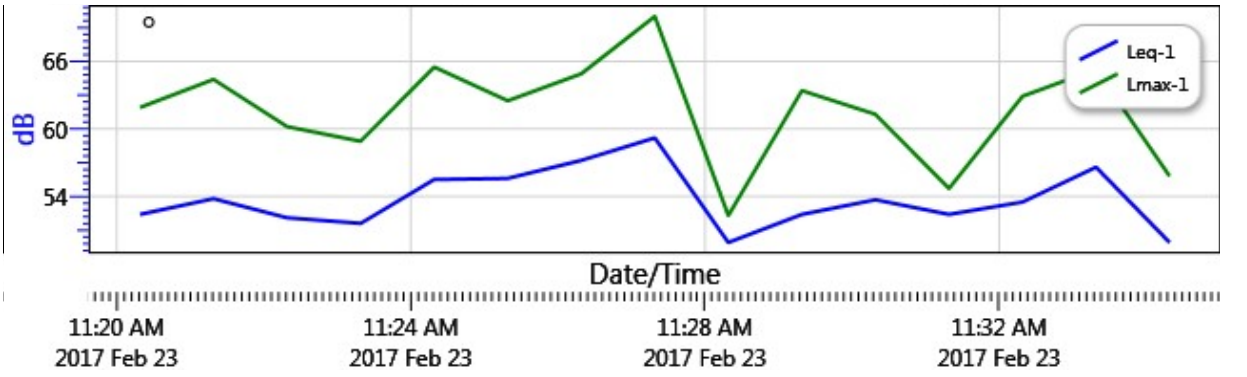

UltraSystems
environmental | management | planning

16431 Scientific Way
Irvine, CA 92618
949.788.4900

Noise Measurement Report Form – Part A

Date: 2/23/17 Day of Week: Thurs Time: 1140 Project Number: 6016

Monitoring Segment / Area: Ø07 Monitoring Site Address: 5815 Snowden Ave.

Measurement Taken By: S. Seferyn of UltraSystems Environmental

Approximate Wind Speed: 6.0 mph [km/hr] Approximate Wind Direction: From the N

Approximate distance of sound level meter from receptor location: 14ft

Approximate distance of sound level meter from construction site: —
(Leave Blank for Baseline Ambient)

Receptor Land Use (Check One): ☑ Residential ☐ Institutional ☐ Comm./Ind. ☐ Recreational

Sound Level Meter: Make and Model: Quest SoundPro DL-1-1/3 Serial Number: BLH080004

Meter Setting: ☑ A-Weighted Sound Level (SLOW) ☐ A-Weighted Sound Level (FAST)

Measurement Start Time: 1140 Measurement End Time: 1155

Total Measurement Time: 15mins Session File Name (e.g., S012): S095

Check the measurement purpose:

☑ Baseline condition ☐ Ongoing construction ☐ Major change ☐ Complaint response

Measurement Results

Measurement Type	Measured Levels (dB)
Calibration	Pre: 113.9 Post: 113.9
$L_{eq\ (h)}$	Slow: 64.4 Fast:
L_{max}	Slow: 64.5 Fast:
L_{90}	Slow: 49.8 Fast:

Field Notes:

1. Photo Ø07
2.
3.

Noise Monitor's Signature: S. Seferyn Date: 2/23/17

UltraSystems
environmental | management | planning

16431 Scientific Way
Irvine, CA 92618
949.788.4900

Noise Measurement Report Form – Part B

Date: 2/23/17 Day of Week: Thurs Time: 1146 Project Number: 6016

Monitoring Segment / Area: 007 Monitoring Site Address: 5815 Snowden Ave.

Site Map

Plan View

North Arrow (fill-in)

(Indicate site location, receptor location, meter location, distance in feet to landmarks, roadways, travel lane directions, geographical objects: trees, water, buildings, signs, store names, hydrants, power & telephone lines, manholes, etc.)

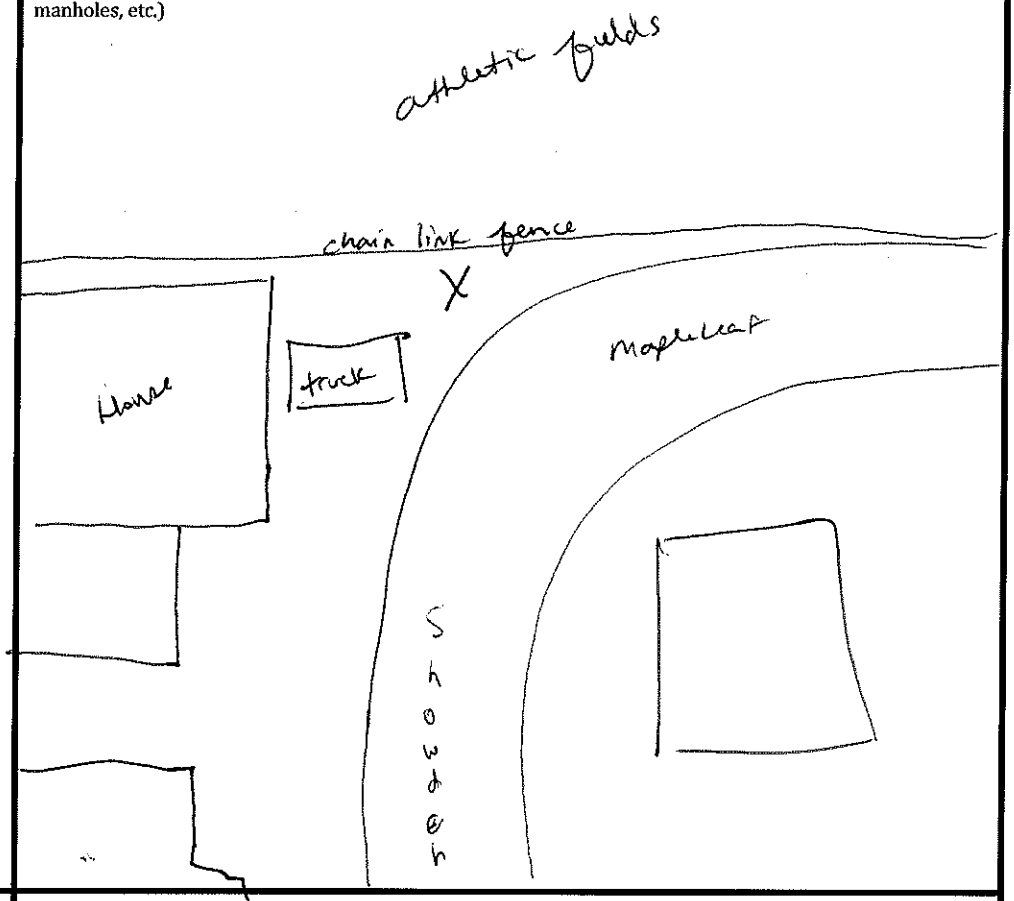

Elevation View

(Indicate terrain, roadway, height and location of receptor, meter, walls, barriers, buildings, etc.)

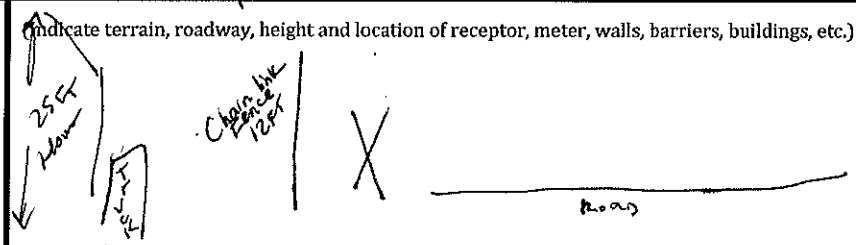

Latitude: 33.86192	Longitude: 118.11219	Elevation: 70

Noise Monitor's Signature: _____ Date: 2/23/17

Session Report

2/27/2017

Information Panel

Name	S095_BLH080004_27022017_080515
Start Time	2/23/2017 11:41:31 AM
Stop Time	2/23/2017 11:56:31 AM
Device Name	BLH080004
Model Type	SoundPro DL
Device Firmware Rev	R.13H
Comments	

Summary Data Panel

Description	Meter	Value	Description	Meter	Value
Leq	1	54.3 dB			
Exchange Rate	1	3 dB	Weighting	1	A
Response	1	SLOW	Bandwidth	1	OFF
Exchange Rate	2	3 dB	Weighting	2	A
Response	2	FAST			

Statistics Chart

S095_BLH080004_27022017_080515: Statistics Chart

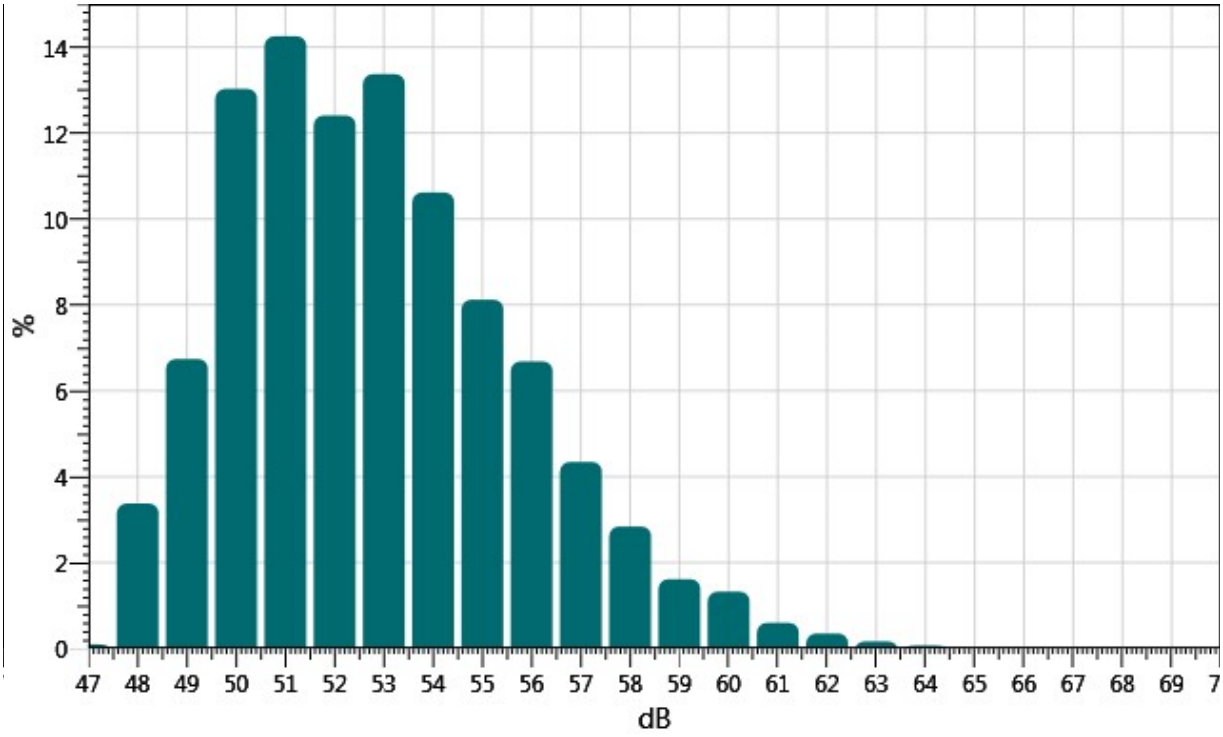

Exceedance Chart

S095_BLH080004_27022017_080515: Exceedance Chart

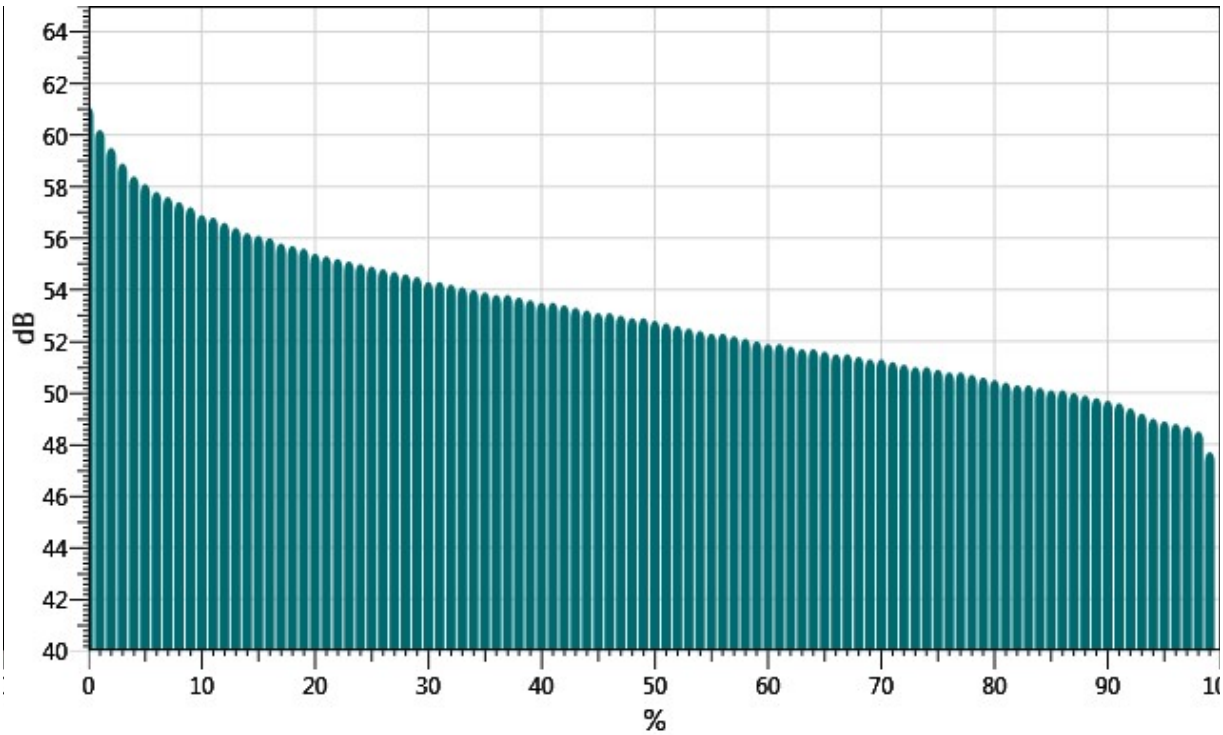

Statistics Table

dB:	0.0	0.1	0.2	0.3	0.4	0.5	0.6	0.7	0.8	0.9	%
47:	0.00	0.00	0.00	0.00	0.00	0.00	0.00	0.00	0.02	0.08	0.10
48:	0.03	0.08	0.11	0.14	0.21	0.13	0.24	0.54	0.87	1.02	3.38
49:	0.94	0.65	0.47	0.54	0.51	0.64	0.68	0.64	0.69	0.98	6.74
50:	1.22	1.30	1.50	1.44	1.57	1.10	1.24	1.18	1.12	1.36	13.03
51:	1.49	1.81	0.86	1.25	1.47	1.52	1.37	1.35	1.70	1.43	14.25
52:	1.59	1.36	1.20	1.22	1.30	1.37	1.11	1.02	0.99	1.23	12.41
53:	1.45	1.49	1.24	1.47	1.31	1.11	1.26	1.46	1.27	1.31	13.37
54:	1.40	1.29	0.77	1.20	1.11	0.91	0.87	0.95	1.11	1.01	10.62
55:	1.07	0.93	0.91	0.79	0.81	0.79	0.72	0.67	0.74	0.69	8.12
56:	0.92	0.72	0.73	0.69	0.66	0.62	0.52	0.56	0.57	0.70	6.68
57:	0.45	0.41	0.30	0.47	0.46	0.58	0.46	0.45	0.36	0.40	4.34
58:	0.35	0.37	0.33	0.31	0.31	0.29	0.26	0.26	0.20	0.15	2.84
59:	0.16	0.14	0.21	0.18	0.19	0.14	0.18	0.14	0.13	0.15	1.61
60:	0.17	0.18	0.12	0.21	0.13	0.10	0.11	0.12	0.10	0.08	1.32
61:	0.09	0.07	0.08	0.10	0.06	0.06	0.04	0.03	0.03	0.03	0.60
62:	0.05	0.04	0.04	0.03	0.03	0.03	0.06	0.02	0.03	0.03	0.35
63:	0.02	0.03	0.01	0.02	0.02	0.02	0.02	0.01	0.01	0.01	0.17
64:	0.01	0.01	0.01	0.01	0.01	0.01	0.00	0.00	0.00	0.00	0.07

Exceedance Table

.	0%	1%	2%	3%	4%	5%	6%	%7	%8	%9
0%:		61.1	60.2	59.5	58.9	58.4	58.1	57.8	57.6	57.4
10%:	57.2	56.9	56.8	56.6	56.4	56.2	56.1	56.0	55.8	55.7
20%:	55.6	55.4	55.3	55.2	55.1	55.0	54.9	54.8	54.7	54.6
30%:	54.5	54.3	54.3	54.2	54.1	54.0	53.9	53.8	53.8	53.7
40%:	53.6	53.5	53.5	53.4	53.3	53.2	53.1	53.1	53.0	52.9
50%:	52.9	52.8	52.7	52.6	52.5	52.4	52.3	52.3	52.2	52.1
60%:	52.0	51.9	51.9	51.8	51.7	51.7	51.6	51.5	51.5	51.4
70%:	51.3	51.3	51.2	51.1	51.0	51.0	50.9	50.8	50.8	50.7
80%:	50.6	50.5	50.4	50.3	50.3	50.2	50.1	50.1	50.0	49.9
90%:	49.8	49.7	49.6	49.4	49.2	49.0	48.9	48.8	48.7	48.5
100%:	47.7									

Logged Data Chart

S095_BLH080004_27022017_080515: Logged Data Chart

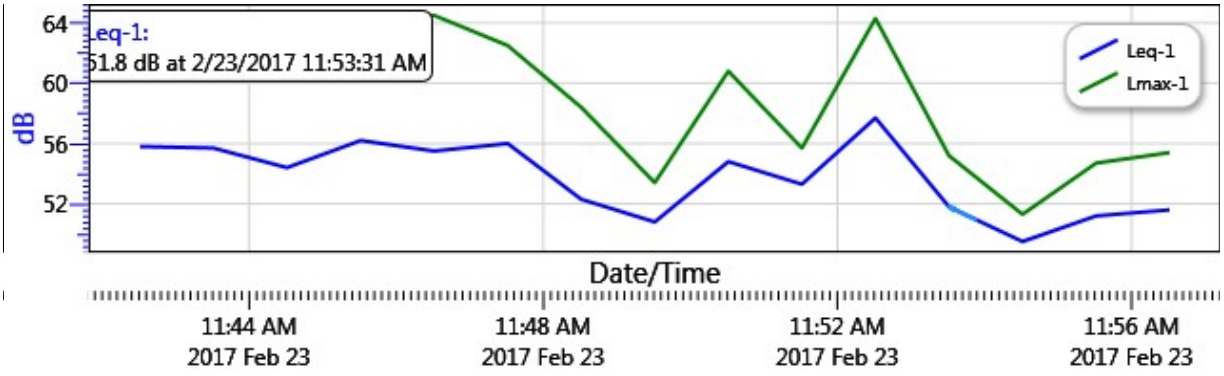

UltraSystems
environmental | management | planning

16431 Scientific Way
Irvine, CA 92618
949.788.4900

Noise Measurement Report Form – Part A

Date: 2/23/17 Day of Week: Thurs Time: 1200 Project Number: 6016

Monitoring Segment / Area: 008 Monitoring Site Address: 6037 Arabella St

Measurement Taken By: S. Sefryn of UltraSystems Environmental

Approximate Wind Speed: 2.7 mph [km/hr] Approximate Wind Direction: From the W

Approximate distance of sound level meter from receptor location: 15 FT

Approximate distance of sound level meter from construction site: —
(Leave Blank for Baseline Ambient)

Receptor Land Use (Check One): ☑ Residential ☐ Institutional ☐ Comm./Ind. ☐ Recreational

Sound Level Meter: Make and Model: Quest SoundPro DL-1-1/3 Serial Number: BLH080004

Meter Setting: ☑ A-Weighted Sound Level (SLOW) ☐ A-Weighted Sound Level (FAST)

Measurement Start Time: 1203 Measurement End Time: 1218

Total Measurement Time: 15 mins Session File Name (e.g., S012): S096

Check the measurement purpose:

☑ Baseline condition ☐ Ongoing construction ☐ Major change ☐ Complaint response

Measurement Results

Measurement Type	Measured Levels (dB)
Calibration	Pre: 113.9 Post: 113.9
$L_{eq\ (h)}$	Slow: 56.1 Fast:
L_{max}	Slow: 73.5 Fast:
L_{90}	Slow: 48.7 Fast:

Field Notes:

1. Photo 008
2. no traffic - dead end street
3. no kids on football/track fields during survey

Noise Monitor's Signature: S. Sefryn Date: 2/23/17

UltraSystems
environmental | management | planning

16431 Scientific Way
Irvine, CA 92618
949.788.4900

Noise Measurement Report Form – Part B

Date: 2/23/17 Day of Week: Thurs Time: 1200 Project Number: 6016

Monitoring Segment / Area: 008 Monitoring Site Address: 6037 Arabella St

Site Map

Plan View

North Arrow (fill-in)

(Indicate site location, receptor location, meter location, distance in feet to landmarks, roadways, travel lane directions, geographical objects: trees, water, buildings, signs, store names, hydrants, power & telephone lines, manholes, etc.)

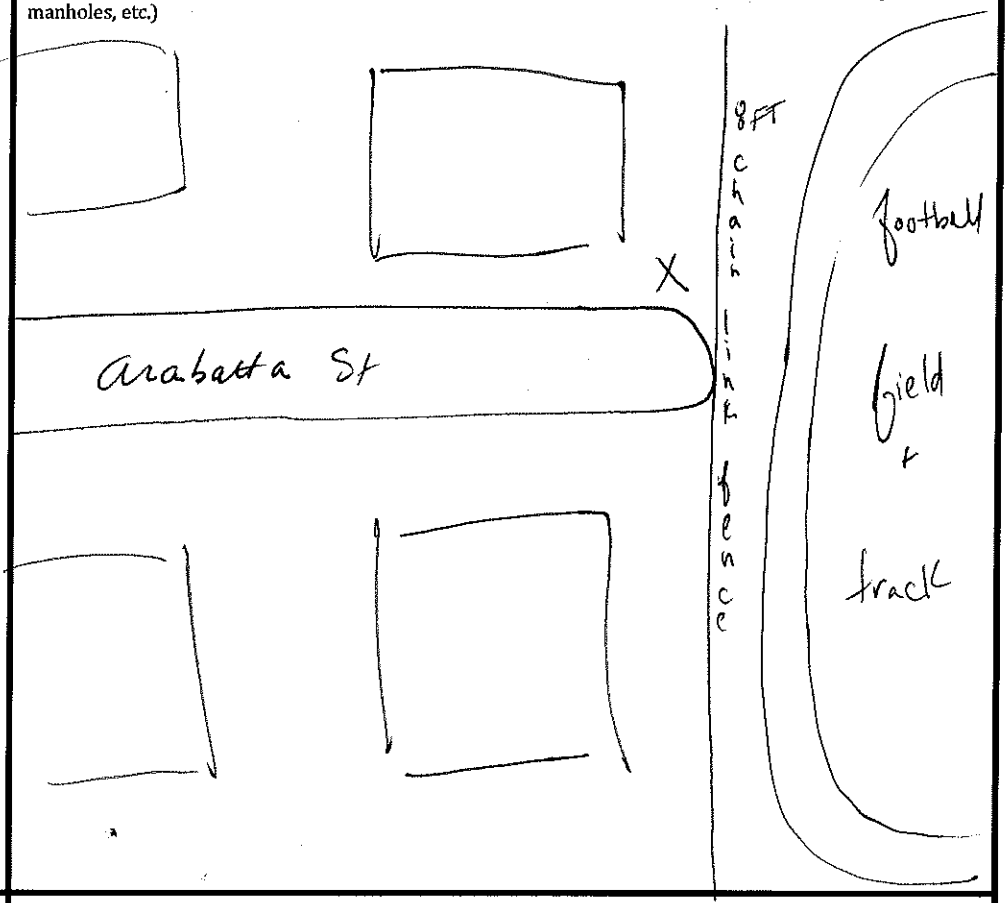

Elevation View

(Indicate terrain, roadway, height and location of receptor, meter, walls, barriers, buildings, etc.)

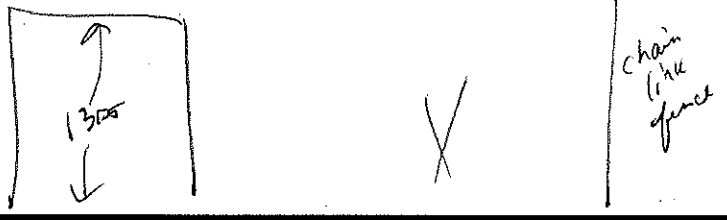

Latitude: 33.86270	Longitude: 118.11389	Elevation: 93

Noise Monitor's Signature: _____ Date: 2/23/17

Session Report

2/27/2017

Information Panel

Name	S096_BLH080004_27022017_080516
Start Time	2/23/2017 12:04:15 PM
Stop Time	2/23/2017 12:19:15 PM
Device Name	BLH080004
Model Type	SoundPro DL
Device Firmware Rev	R.13H
Comments	

Summary Data Panel

Description	Meter	Value	Description	Meter	Value
Leq	1	56.1 dB			
Exchange Rate	1	3 dB	Weighting	1	A
Response	1	SLOW	Bandwidth	1	OFF
Exchange Rate	2	3 dB	Weighting	2	A
Response	2	FAST			

Statistics Chart

S096_BLH080004_27022017_080516: Statistics Chart

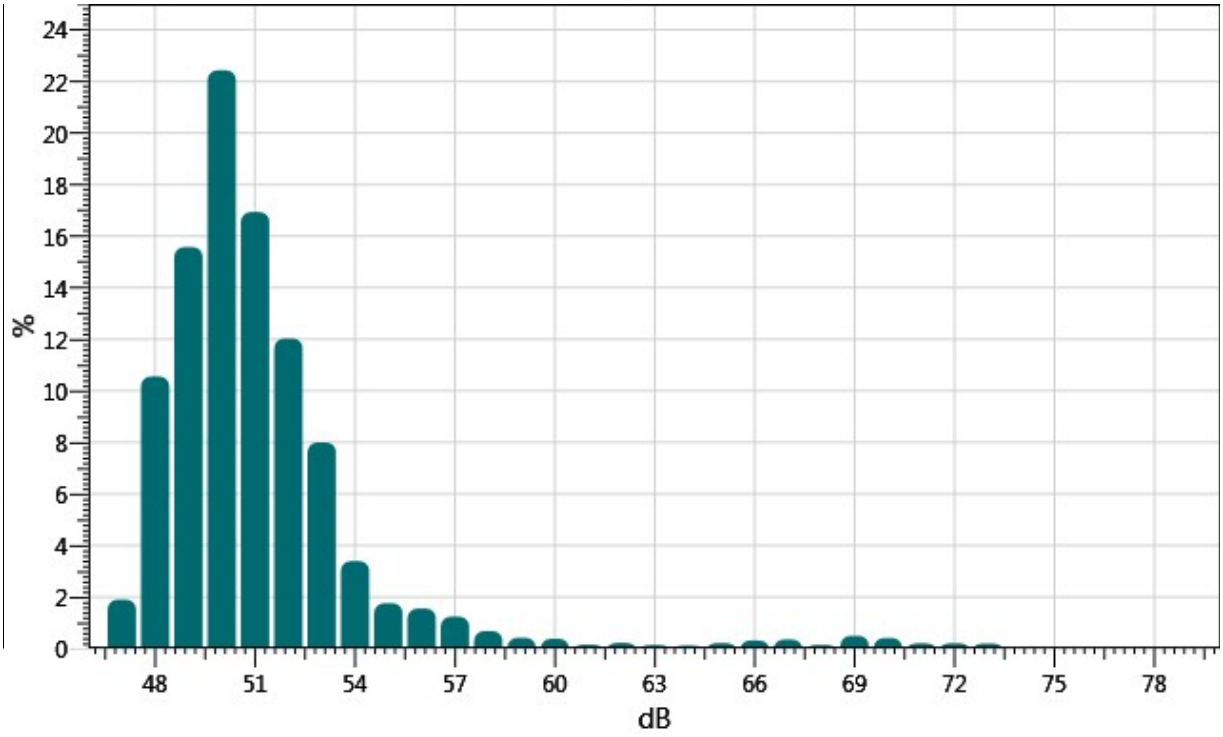

Exceedance Chart

S096_BLH080004_27022017_080516: Exceedance Chart

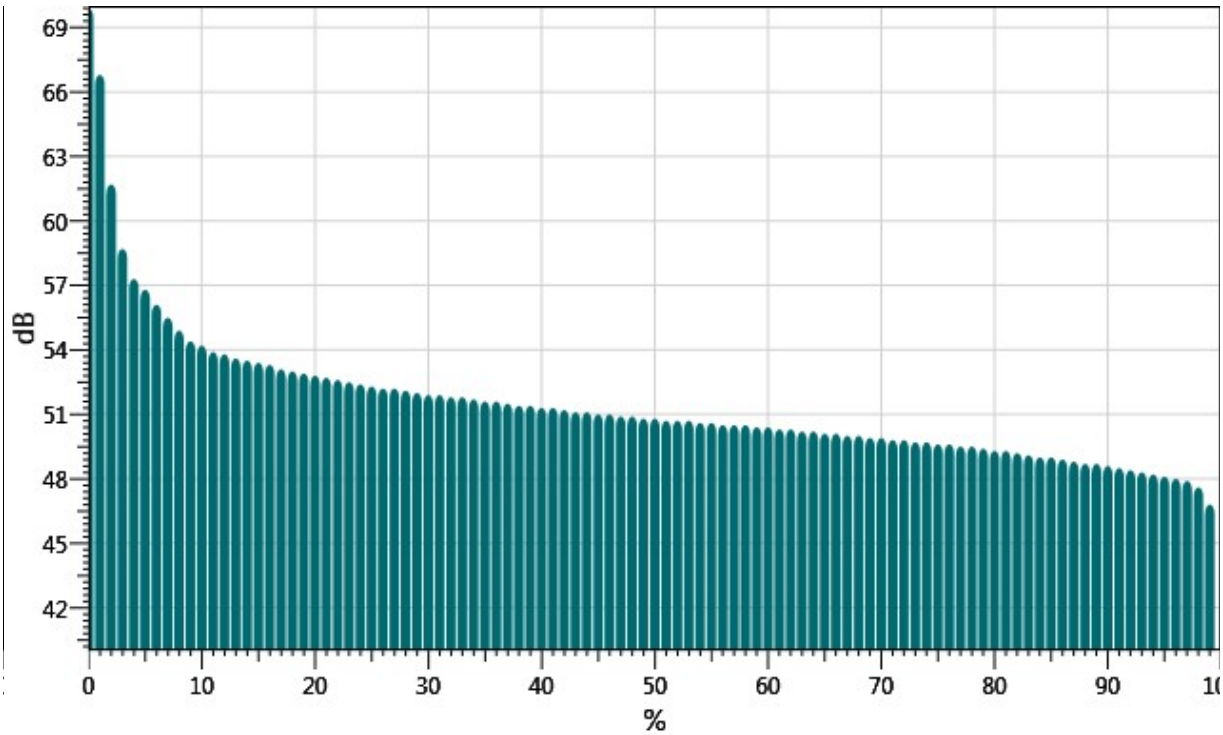

Statistics Table

dB:	0.0	0.1	0.2	0.3	0.4	0.5	0.6	0.7	0.8	0.9	%
46:	0.00	0.00	0.00	0.00	0.00	0.00	0.00	0.00	0.00	0.06	0.06
47:	0.06	0.02	0.01	0.06	0.15	0.18	0.29	0.27	0.30	0.57	1.90
48:	0.75	0.96	0.57	0.93	1.11	1.28	1.22	1.12	1.15	1.46	10.55
49:	1.48	1.24	1.35	1.27	1.52	1.55	1.66	1.81	1.88	1.82	15.57
50:	2.10	2.05	2.10	1.97	2.24	2.29	2.51	2.41	2.48	2.27	22.43
51:	2.25	2.22	1.21	1.74	1.78	1.72	1.54	1.47	1.41	1.59	16.93
52:	1.56	1.57	1.30	1.24	1.19	1.10	0.98	1.04	1.04	1.01	12.03
53:	0.93	0.82	0.89	0.89	0.84	0.80	0.65	0.77	0.70	0.70	8.00
54:	0.60	0.50	0.30	0.41	0.44	0.32	0.23	0.20	0.18	0.19	3.39
55:	0.24	0.20	0.20	0.14	0.15	0.15	0.14	0.19	0.16	0.18	1.76
56:	0.13	0.13	0.14	0.09	0.14	0.18	0.15	0.16	0.18	0.26	1.55
57:	0.22	0.20	0.16	0.19	0.15	0.08	0.05	0.06	0.08	0.06	1.24
58:	0.08	0.08	0.07	0.05	0.06	0.05	0.06	0.08	0.08	0.06	0.68
59:	0.05	0.04	0.02	0.02	0.04	0.03	0.03	0.03	0.06	0.09	0.42
60:	0.06	0.03	0.02	0.06	0.03	0.04	0.04	0.04	0.03	0.02	0.38
61:	0.02	0.02	0.01	0.02	0.02	0.01	0.01	0.01	0.01	0.01	0.15
62:	0.02	0.02	0.01	0.01	0.02	0.02	0.01	0.02	0.01	0.09	0.22
63:	0.02	0.01	0.01	0.02	0.02	0.02	0.01	0.01	0.01	0.01	0.14
64:	0.02	0.01	0.02	0.01	0.01	0.01	0.01	0.01	0.01	0.01	0.12
65:	0.01	0.01	0.01	0.01	0.01	0.01	0.03	0.03	0.06	0.04	0.22
66:	0.04	0.03	0.02	0.02	0.02	0.04	0.05	0.02	0.03	0.05	0.31
67:	0.02	0.03	0.03	0.04	0.03	0.07	0.08	0.03	0.02	0.01	0.35
68:	0.02	0.01	0.01	0.01	0.01	0.01	0.01	0.01	0.02	0.03	0.14
69:	0.04	0.05	0.04	0.06	0.07	0.08	0.05	0.04	0.03	0.03	0.49
70:	0.03	0.05	0.04	0.03	0.03	0.03	0.03	0.03	0.05	0.07	0.40
71:	0.03	0.03	0.04	0.02	0.02	0.02	0.02	0.01	0.01	0.01	0.20
72:	0.01	0.01	0.02	0.01	0.01	0.02	0.01	0.01	0.04	0.06	0.20
73:	0.05	0.02	0.03	0.03	0.03	0.03	0.00	0.00	0.00	0.00	0.20

Exceedance Table

.	0%	1%	2%	3%	4%	5%	6%	%7	%8	%9
0%:		69.9	66.8	61.7	58.7	57.3	56.8	56.1	55.5	54.9
10%:	54.4	54.2	53.9	53.8	53.6	53.5	53.4	53.3	53.1	53.0
20%:	52.9	52.8	52.7	52.6	52.5	52.4	52.3	52.2	52.2	52.1

30%:	52.0	51.9	51.9	51.8	51.8	51.7	51.6	51.6	51.5	51.4
40%:	51.4	51.3	51.3	51.2	51.1	51.1	51.0	51.0	50.9	50.9
50%:	50.8	50.8	50.7	50.7	50.7	50.6	50.6	50.5	50.5	50.5
60%:	50.4	50.4	50.3	50.3	50.2	50.2	50.1	50.1	50.0	50.0
70%:	49.9	49.9	49.8	49.8	49.7	49.7	49.6	49.6	49.5	49.5
80%:	49.4	49.3	49.3	49.2	49.1	49.0	49.0	48.9	48.8	48.7
90%:	48.7	48.6	48.5	48.4	48.3	48.2	48.1	48.0	47.9	47.6
100%:	46.8									

Logged Data Chart

S096_BLH080004_27022017_080516: Logged Data Chart

