RUHNAU
CLARKE
ARCHITECTS

July 8th, 2025

ADDENDUM NO. 01

TO THE CONTRACT DOCUMENTS

FOR

COLTON MIDDLE SCHOOL – INTERIM HOUSING

FOR THE
COLTON JOINT UNIFIED SCHOOL DISTRICT
777 W. VALLEY BLVD
COLTON CA. 92324

DSA #04-124403 RCA Project No. 1-15-118

NOTICE TO BIDDERS
This Addendum forms a part of the Contract and modifies the original documents of DSA Approved on April 3, 2025. It is intended that all work affected by the following modifications shall conform with related provisions and general conditions of the contract of the original drawings and specifications. Modify the following items wherever appearing in any drawing or sections of the specifications. Acknowledge receipt of Addendum No. 01 in the space provided on the Bid Form. Failure to do so may subject bidder to disqualification.

CHANGES TO SPECIFICATIONS

Item No. 1.1 Reference Section – 00 01 10 – TABLE OF CONTENTS
1.1.1 Added section 01 50 00 – Temporary Facilities and Controls.

Item No. 1.2 Reference Section – 01 50 00 – TEMPORARY FACILITIES AND CONTROLS
1.2.1 Section added to specifications.

CHANGES TO THE DRAWINGS

Item No 1.3 Reference Sheet G-1 – Title Sheet & Sheet Index
1.3.1 Added sheets F1.02 and F1.21 to Modtech drawings.
1.3.2 Removed sheet F3.01 and F3.11 from to Modtech drawings.
1.3.3 Revised Scope of Work narrative to show portable units N and P as OFOI.

Item No 1.4 Reference Sheet C2.00 – Grading & Site Wet Utility Plan
1.4.1 Revised keynote 4 for T-stand fencing.
1.4.2 Revised plan to show T-stand fencing at indicated locations.

Item No 1.5 Reference Sheet AS-1.0 – Fire Access Site Plan
1.5.1 Revised restroom at Portable P to match Silvercreek Modular drawings
1.5.2 Revised Site Legend to add T-stand fencing.

Item No. 1.6 Reference Sheet AS-1.1 – Overall Site Plan & Code Analysis.

1.6.1. Revise per clouded areas of attached sheet and items listed below.
    a) Revised detail callout for gate G1 to correct location.
    b) Revised hardware group No. 2 to include 1 pair of drop rods.

1.6.2 Revised restroom at Portable P to match Silvercreek Modular drawings

1.6.3 Revised Site Legend to add T-stand fencing.

Item No. 1.7 Reference Sheet AS-1.3 – Enlarged Site Plan at Parking Lot Mod.

1.7.1 Revise per clouded areas of attached sheet and items listed below.
    a) Revised site detail callouts to correct details on civil drawings.

1.7.3 Revised restroom at Portable P to match Silvercreek Modular drawings

1.7.4 Revised keynote 32.33.16.1 ramp to OFOI.

1.7.5 Removed asphalt paving at bottom of ramp from Portable P

1.7.6 Removed keynote 32.12.16 no longer used.

1.7.7 Added temporary chain link fencing detail reference to sheet legend.

1.7.8 Revised chain link north of Portable N, and east of Portable P to be temporary chain link fencing.

1.7.9 Revised location of gate G1 to be offset from center of opening.

1.7.10 Revised gate from 4'-0" tall gate, to 6'-0" gate, added wind screen requirement.

1.7.11 Updated keynotes 32 31 13.8, 9, and 10 to clarify height of fencing.

1.7.12 Updated Legend to clarify new chain link fence and new t-stand chain link fence.

Item No. 1.8 Reference Sheet AS-1.4 – Enlarged Site Plan, Restroom Plan, and Elev.

1.8.1 Revise per clouded areas of attached sheet and items listed below.
    a) Revised detail 1 to show new striping in scope of work.
    b) Added Detail 25 – Sign Placement.
    c) Revised Detail 22 to correct room numbers for (e) Boys and Girls restrooms.

1.8.2 Added detail 20 for T-stand fencing elevation.

Item No. 1.9 Reference Sheet ASD-1.0 – Site & Signage Details

1.9.1 Revise per clouded areas of attached sheet and items listed below.
    a) Revised Detail 2 to reference 9/AS-1.3 for fence heights
    b) Revised Detail 4 to show mounting plate (graphics only).
    c) Revised Detail 5 to reference gate schedule for height.
    d) Revised Detail 7 to show mounting plate (graphics only).
    e) Revised Detail 10 to clarify asphalt paving detail over concrete base.
    f) Revised Detail 13 to show correct reference location for drop rods at gate.
    g) Revised Detail 13 to reference gate schedule for height.
    h) Revised Detail 24 to callout reference of added sign placement detail.

Item No. 1.10 Reference Sheet E-0.1 – Electrical Cover Sheet

1.10.1 Revise per clouded areas of attached sheet and items listed below
    a) Added floor box and duplex receptacle to electrical symbols legend.

Item No. 1.11 Reference Sheet E-0.2 – Electrical Schedules

1.11.1 Revise per clouded areas of attached sheet and items listed below
    a) Revised wire size and quantity for panel feeders to Portable N and P buildings.

Item No. 1.12 Reference Sheet ES-1.1 – Electrical – Enlarged Site Parking Lot

1.12.1 Revise per clouded areas of attached sheet and items listed below
    a) Added floor box for power/data at island workstation in Portable N building.
    b) Added electrical Panel A information.
    c) Added keynotes 6 and 7.

Item No. 1.13 Reference Sheet E-4.0 – Electrical Details

1.13.1 Revise per clouded areas of attached sheet and items listed below
    a) Revised detail 2 to include attachment of riser/weather head to structure.

Item No. 1.14 Reference Sheet T-0.1 – Technology Cover Sheet

1.14.1 Revise per clouded areas of attached sheet and items listed below
    a) Added data outlets (floor and wall) to data symbols legend.

b) Added security symbols to legend.
c) Added Keynote 7.
d) Added security devices (door contacts, motion sensors, control panel) to floor plan.
e) Added analog phone line and outlet for PA phone.

Item No. 1.15 Reference Sheet TS-1.1– Technology Details
1.15.1 Revise per clouded areas of attached sheet and items listed below
a) Revised data outlet layout to match workstation layout at Portables N and P.
b) Added floor data outlet for island workstation at Portable N.

Item No. 1.16 Reference Sheet T-4.0 – Technology Details
1.16.1 Revise per clouded areas of attached sheet and items listed below
a) Updated network riser diagram to include added floor box and wall outlets.
b) Added detail 7, security riser diagram.

Item No. 1.17 Reference Sheet P-1.01N – Plumbing Details and Schedule
1.17.1 Revise per clouded areas of attached sheet and items listed below
(a) Detail #2, relocate the Point of connection for water supply, and added a dimension to it. Added a dimension to the POC waste line.
(b) Detail #3, Clarify isometric plumbing lines.

Item No. 1.18 Reference Sheet M-1.01N – Project Specific Mechanical Plan
1.18.1 Revise per clouded areas of attached sheet and items listed below
(a) Rotated the toilet room to match floor plan.

Item No. 1.19 Reference Sheet E-1.01N – Project Specific Electrical Plan
1.19.1 Revise per clouded areas of attached sheet and items listed below
(a) Rotated the toilet room to match floor plan.
(b) Added additional electrical & data outlets to match potential desk arrangement. Its electrical panel is updated as well.

Item No 1.20 Reference Sheet F1.02 – Foundation Plan
1.20.1 Added sheet to set for wood foundation option.

Item No. 1.21 Reference Sheet F1.21 – Foundation Details
1.21.1 Added sheet to set for wood foundation detail option.

ATTACHMENTS

Specifications: **00 01 10, 01 50 00**

Sketches: **N/A**

Sheets: G-1, C2.00,AS-1.0,AS-1.1, AS-1.3, AS-1.4, ASD-1.0, E-.01, E-0.2, ES-1.1, E-4.0, T-O.1, TS-1.1 T-4.0, P-1.01N, M-1.01N, E-1.01N

END OF ADDENDUM NO. 01

_____
Roger Clarke, Principal
C-21340

LICENSED ARCHITECT
ROGER CLARKE
No. C-21340
Exp.10-31-25
STATE OF CALIFORNIA

SECTION 00 01 10
TABLE OF CONTENTS

LICENSED ARCHITECT
ROGER CLARKE
No. C-21340
Exp.10-31-25
STATE OF CALIFORNIA

PROCUREMENT AND CONTRACTING REQUIREMENTS

DIVISION 00 -- PROCUREMENT AND CONTRACTING REQUIREMENTS

00 01 01 - Project Title Page

00 01 02 - Project Information

00 01 07 - Seals Page

00 01 10 - Table of Contents

00 40 25 - Request for Information (PreBid)

00 43 25 - Substitution Request Form - During Procurement

00 63 25 - Substitution Request Form - During Construction

SPECIFICATIONS

DIVISION 01 -- GENERAL REQUIREMENTS

01 10 00 - Summary

01 20 00 - Price and Payment Procedures

01 25 00 - Substitution Procedures

01 30 00 - Administrative Requirements

01 30 00.01 - Request for Interpretation

01 30 00.02 - Submittal Transmittal

01 35 50 - Requests for Electronic Files

01 35 53 - Security Procedures

01 40 00 - Quality Requirements

01 41 00 - Regulatory Requirements

01 45 33 - Code-Required Special Inspections

01 50 00 - Temporary Facilities and Controls **Addendum 1**

01 60 00 - Product Requirements

01 61 16 - Volatile Organic Compound (VOC) Content Restrictions

01 61 16.01 - Accessory Material VOC Content Certification Form

01 74 19 - Construction Waste Management and Disposal

01 76 10 - Temporary Protective Coverings

01 78 00 - Closeout Submittals

01 78 00.01 - Warranty Form Letter

01 78 39 - Project Record Documents

01 79 00 - Demonstration and Training

DIVISION 02 -- EXISTING CONDITIONS

02 41 00 - Demolition

DIVISION 05 -- METALS

05 50 00 - Metal Fabrications

05 52 13 - Pipe and Tube Railings

DIVISION 06 -- WOOD, PLASTICS, AND COMPOSITES

06 10 53 - Miscellaneous Rough Carpentry

DIVISION 07 -- THERMAL AND MOISTURE PROTECTION

07 92 00 - Joint Sealants

DIVISION 10 -- SPECIALTIES

10 11 00 - Visual Display Units

10 14 23 - Panel Signage

10 44 00 - Fire Protection Specialties

DIVISION 26 -- ELECTRICAL

26 05 00 - Electrical General Requirements

26 05 19 26 05 19 - Voltage Electrical Power Conductors and Cables

26 05 26 - Grounding and Bonding for Electrical Systems

26 05 29 - Hangers and Supports for Electrical Systems

26 05 33.13 - Conduit for Electrical Systems

26 05 33.16 - Boxes for Electrical Systems

26 05 53 - Identification for Electrical Systems

26 27 26 - Wiring Devices

26 28 16.16 - Enclosed Switches

DIVISION 27 -- COMMUNICATIONS

27 05 00 - Technology General Requirements

27 10 00 - Structured Cabling

27 51 16 - Public Address Systems

DIVISION 28 -- ELECTRONIC SAFETY AND SECURITY

28 05 00 - Fire Alarm General Requirements

28 46 00 - Fire Detection and Alarm

DIVISION 31 -- EARTHWORK

31 10 00 - Site Clearing

31 23 16.13 - Trenching

DIVISION 32 -- EXTERIOR IMPROVEMENTS

32 12 16 - Asphalt Paving

32 13 13 - Site Concrete

32 14 13 - Precast Concrete Unit Paving

32 17 13 - Concrete Wheel Stops

32 17 23 - Pavement Markings

32 17 26 - Tactile Warning Surfacing

32 31 13 - Chain Link Fences and Gates

DIVISION 33 -- UTILITIES

33 14 16 - Site Water Utility Distribution Piping

END OF SECTION

SECTION 01 50 00
TEMPORARY FACILITIES AND CONTROLS

PART 1 GENERAL

1.01 SECTION INCLUDES

A. Temporary telecommunications services.

B. Temporary sanitary facilities.

C. Temporary Controls: Barriers and fencing.

D. Security requirements.

E. Waste removal facilities and services.

1.02 RELATED REQUIREMENTS

A. Section 01 35 53 - Security Procedures

1.03 REFERENCE STANDARDS

A. ASTM E84 - Standard Test Method for Surface Burning Characteristics of Building Materials.

B. ASTM E90 - Standard Test Method for Laboratory Measurement of Airborne Sound Transmission Loss of Building Partitions and Elements.

1.04 TEMPORARY UTILITIES

A. Provide and pay for all electrical power, lighting, water, heating and cooling, and ventilation required for construction purposes.

B. Provide waste storage tank. See Drawings for location.

1. Basis of Design Product: HT-01-0300 300 Gallon Holding Tank as manufactured by PolyJohn, www.polyjohn.com, or approved equal.

~~B.~~**C.** Use trigger-operated nozzles for water hoses, to avoid waste of water.

1.05 TELECOMMUNICATIONS SERVICES

A. Provide, maintain, and pay for telecommunications services to field office at time of project mobilization and duration of the project.

B. Telecommunications services shall include:

1. Windows-based personal computer dedicated to project telecommunications, with necessary software and laser printer.

   a. Provide color copier with scanning capabilities and 8.5 x 11 and 11x17 format; including copier paper for both formats.

2. Telephone Land Lines: Multiple lines, minimum; one handset per line.

3. Internet Connections: Minimum of one for each desk; Cable modem (2GB) or faster.

   a. Provide hi-speed INTERNET service in the District Construction Manager and Inspector field office for FOUR personnel; including copier/scanner.

4. Facsimile Service: Minimum of one dedicated fax machine/printer, with dedicated phone line.

1.06 TEMPORARY SANITARY FACILITIES

A. Provide and maintain required facilities and enclosures. Provide at time of project mobilization.

1. Provide temporary toilet facilities if maximum number of personnel on project is greater than 10.
2. Submit proposed location of temporary toilet(s) to Construction Manager for approval.
   a. Place on-site portable toilets away from building air intakes and entryway.

B. Maintain daily in clean and sanitary condition.

1.07 BARRIERS

A. Provide barriers to prevent unauthorized entry to construction areas, to prevent access to areas that could be hazardous to workers or the public, to allow for owner's use of site and to protect existing facilities and adjacent properties from damage from construction operations and demolition.

B. Provide barricades and covered walkways required by governing authorities for public rights-of-way and for public access to existing building.

C. Protect non-owned vehicular traffic, stored materials, site, and structures from damage.

1.08 FENCING

A. Construction: Commercial grade chain link fence. Include windscreen with galvanized steel schedule 40 post and top rail.

B. Provide 6 foot high fence around construction site; equip with vehicular and pedestrian gates with locks.

1. STC rating of 35 in accordance with ASTM E90.
2. Maximum flame spread rating of 75 in accordance with ASTM E84.

C. Paint surfaces exposed to view from District-occupied areas.

1.09 SECURITY

A. Provide security and facilities to protect Work, existing facilities, and District's operations from unauthorized entry, vandalism, or theft.

B. Coordinate with District's security program.

1. Include construction surveillance camera system per the District.

1.10 CAFETERIA AND FOOD

A. Construction personnel shall police their own areas. All cups, cans, paper, wrappers, and discarded food must be placed in trash receptacles at end of each break.

B. Contractor(s) shall submit to Construction Manager proposed location of any break areas and eating areas for approval.

1.11 SMOKING AND TOBACCO

A. Smoking and vaping is not permitted on property.

B. No chewing tobacco or spitting of tobacco is permitted.

1.12 VEHICULAR ACCESS AND PARKING

A. Comply with regulations relating to use of streets and sidewalks, access to emergency facilities, and access for emergency vehicles.

B. Coordinate access and haul routes with governing authorities and District.

C. Provide and maintain access to fire hydrants, free of obstructions.

D. Provide means of removing mud from vehicle wheels before entering streets.

E. Provide temporary parking areas to accommodate construction personnel. When site space is not adequate, provide additional off-site parking.

1.13 WASTE REMOVAL

A. See Section 01 74 19 - Construction Waste Management and Disposal, for additional requirements.

B. Provide waste removal facilities and services as required to maintain the site in clean and orderly condition.

C. Provide containers with lids. Remove trash from site periodically.

D. If materials to be recycled or re-used on the project must be stored on-site, provide suitable non-combustible containers; locate containers holding flammable material outside the structure unless otherwise approved by the authorities having jurisdiction.

E. Open free-fall chutes are not permitted. Terminate closed chutes into appropriate containers with lids.

1.14 REMOVAL OF UTILITIES, FACILITIES, AND CONTROLS

A. Remove temporary utilities, equipment, facilities, materials, prior to Final Application for Payment inspection.

B. Remove underground installations to a minimum depth of 2 feet. Grade site as indicated.

C. Clean and repair damage caused by installation or use of temporary work.

D. Restore existing facilities used during construction to original condition.

E. Restore new permanent facilities used during construction to specified condition.

PART 2 PRODUCTS - NOT USED

PART 3 EXECUTION - NOT USED

END OF SECTION

COLTON MS INTERIM HOUSING

670 W. LAUREL ST, COLTON, CA 92324

COLTON JOINT UNIFIED SCHOOL DISTRICT

RUHNAU CLARKE ARCHITECTS

3775 TENTH STREET, RIVERSIDE CALIFORNIA 92501 (951) 684 4664 / 5751 PALMER WAY, SUITE C, CARLSBAD CALIFORNIA 92010 (760) 438 5899

REGIONAL MAP

NORTH

SITE MAP

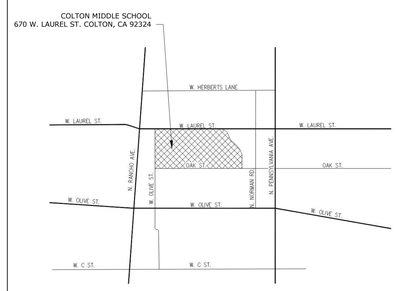

STAMPS

AGENCY APPROVAL
File No: ######.01/04-124403

CONSULTANT BRANDING

RUHNAU
CLARKE
ARCHITECTS

CONTACT LIST

Owner
Colton Joint Unified School District
1212 Valencia Drive
Colton, CA 92324
Phone: *909-580-5000*
Contact: *Owen Chang*
owen_chang@cjusd.net

Architect
Ruhnau Clarke Architects
3775 Tenth St.
Riverside, CA 92501
Phone:951.684.4664
Contact: *Roger Clarke, President*
rclarke@ruhnauclarke.com
Konni Wong, A. Principal
kwong@ruhnauclarke.com

Electrical
Astral Engineers
PO Box 190
Rancho Cucamonga, CA 91729
Phone: *951-542-1123*
Contact: *James Lessard*
james.lessard@astraleng.com

Civil
FPL and Associates, Inc.
30 Corporate Park, Suite 401
Irvine, CA 92606
Phone: *949-252-1688 ext. 203*
Contact: *Ron Canedy*
ron.canedy@fplandassociates.com

Specifications
Spec Studio LLC
9783 Maplewood Avenue
Englewood, CP 80111
Phone: *909-374-2011*
Contact: *Richard Gonser*
specstudio@iCloud.com

Door Hardware
Allegion
21688 Gateway Center Dr
Diamond Bar, CA 91765
Phone: *909-610-2539*
Contact: *Tony Troncore*
tony.troncore@allegion.com

TYPICAL ABBREVIATIONS

&	AND
<	ANGLE
@	AT
Ø	DIAMETER / ZERO
±	PLUS-MINUS
#	POUND / NUMBER
AB	ANCHOR BOLT
AC	ASPHALTIC CONCRETE
ACC	ACCESSIBLE
ACP	ACOUSTIC PANEL
ACT	ACOUSTIC TILE
AFF	ABOVE FINISHED FLOOR
AFG	ABOVE FINISHED GRADE
AL	ALUMINUM
ALUM	ALUMINUM
AWP	ACOUSTIC WALL PANEL
BD	BOARD
BLDG	BUILDING
BLKG	BLOCKING
BM	BEAM
BOS	BOTTOM OF STRUCTURE
BOTT.	BOTTOM
BUR	BUILT-UP ROOF
CAB	CABINET
CEM	CEMENT
CF	CUBIC FEET
CIP	CAST IN PLACE
CJ	CONTROL JOINT
CL	CENTERLINE
CLF	CHAIN LINK FENCE
CLG	CEILING
CLR	CLEAR
CMF	COLORS, MATERIALS & FINISHES
CMU	CONCRETE MASONRY UNIT
COL	COLUMN
CONC	CONCRETE
CONST	CONSTRUCTION
CONT	CONTINUOUS
CPL	CEMENT PLASTER
CPT	CARPET
CSWK	CASEWORK
CT	CERAMIC TILE
DBL	DOUBLE
DEMO	DEMOLITION
DET	DETAIL
DF	DRINKING FOUNTAIN
DG	DECOMPOSED GRANITE
DIA	DIAMETER
DIM	DIMENSION
DL	DOOR LOUVER
DN	DOWN
DR	DOOR
DRF	DOOR FRAME
DS	DOWN SPOUT
DSA	DIVISION OF STATE ARCHITECT
DWG	DRAWINGS
(E)	EXISTING
E	EAST
EA	EACH
EJ	EXPANSION JOINT
ELEC	ELECTRIC
ELEV	ELEVATION
ENCL	ENCLOSURE
EP	EPOXY
EQ	EQUAL
EQUIP	EQUIPMENT
EW	EACH WAY
EWC	ELECTRIC WATER COOLER
EXIST	EXISTING
EXP	EXPANSION/EXPOSED
EXT	EXTERIOR
FA	FIRE ALARM
FD	FLOOR DRAIN
FDC	FIRE DEPARTMENT CONNECTION
FE	FIRE EXTINGUISHER
FEC	FIRE EXTINGUISER CABINET
FF	FINISHED FLOOR / FACTORY FINISH
FFE	FURNITURE, FIXTURES & EQUIPMENT
FG	FINISHED GRADE
FH	FIRE HYDRANT
FHC	FIRE HOSE CABINET
FIN	FINISH
FIXT	FIXTURE
FLR	FLOOR
FN	FOUNDATION
FND	FOUNDATION
FO	FACE OF
FOF	FACE OF FINISH
FOM	FACE OF MASONRY
FOS	FACE OF STUD
FP	FLOOR PLAN
FRP	FIBERGLASS REINFORCED PANEL
FRPF	FIREPROOF/FIREPROOFING
FS	FINISHED SURFACE
FT	FEET
FTG	FOOTING
FURN	FURNISH/FURNITURE

GA	GAUGE
GALV	GALVANIZED
GB	GRAB BAR
GC	GENERAL CONTRACTOR
GL	GLASS
GLAM	GLUE LAMINATED
GPL	GYPSUM PLASTER
GWB	GYPSUM WALLBOARD
GWWB	WATER RESISTANT GWB
H	HIGH
HB	HOSE BIBB
HC	HOLLOW CORE
HDR	HEADER
HDW	HARDWARE
HM	HOLLOW METAL
HORIZ	HORIZONTAL
HP	HIGH POINT
HR	HOUR
HSS	HOLLOW STRUCTURAL STEEL
HT	HEIGHT
HVAC	HEATING, VENTILATION-AIR CONDITIONING
ID	INSIDE DIAMETER
IN	INCH
INSUL	INSULATION
INT	INTERIOR
JST	JOIST
JT	JOINT
KIT	KITCHEN
L	LENGTH
LAB	LABATORY
LAM	LAMINATE
LAV	LAVATORY
LF	LINEAR FEET
LP	LOW POINT
LS	LUNCH SHELTER
LT	LIGHT
LVR	LOUVER
LVT	LUXURY VINYL TILE
MACH	MACHINE
MANUF	MANFACTURER
MAT'L	MATERIAL
MAX	MAXIMUM
MCP	METAL COMPOSITE PANEL
MECH	MECHANICAL
MFR	MANUFACTURER
MH	MANHOLE
MIN	MINIMUM
MISC	MISCELLANEOUS
MO	MASONRY OPENING
MOD	MODERNIZATION
MTD	MOUNTED
MTL	METAL
(N)	NEW
N	NORTH
NIC	NOT IN CONTRACT
NO	NUMBER
NTS	NOT TO SCALE
O	ROUND
O/	OVER
OC	ON CENTER
OD	OUTSIDE DIAMETER
OFCI	OWNER FURNISHED/ CONTRACTOR INSTALLED
OFOI	OWNER FURNISHED/ OWNER INSTALLED
OH	OPPOSITE HAND/ OVERHANG / OVERHEAD
OPNG	OPENING
OPP	OPPOSITE
P	PAINT
PA	PLANTING AREA
PCC	PRE-CAST CONCRETE
PFIN	PRE FINISHED
PH	PANIC HARDWARE
PIV	POST-INDICATOR VALVE
PL	PLATE / PROPERTY LINE
PLAM	PLASTIC LAMINATE
PLUMB	PLUMBING
PLWD	PLYWOOD
POT	PATH OF TRAVEL
PR	PAIR
PRF	PERFORATED
PSG	PAINT SEMI-GLOSS
PT	PRESSURE TREATED
PTD	PAINTED
PVC	POLYVINYL CHLORIDE
QT	QUARRY TILE
QTY	QUANTITY

R	RADIUS / RISER
RAD	RADIUS
RB	RUBBER BASE
RCP	REFLECTIVE CEILING PLAN
RD	ROOF DRAIN
REF	REFERENCE
REINF	REINFORCED
REQ'D	REQUIRED
RES	RESINOUS FLOORING
REV	REVISION
RM	ROOM
RO	ROUGH OPENING
ROR	RIDGE ON ROOF
RP	ROOF PLAN
RQMT	REQUIREMENT
RR	RESTROOM
S	SOUTH
SB	SPLASH BLOCK
SC	SOLID CORE
SCHED	SCHEDULE
SD	STORM DRAIN
SECT	SECTION
SG	SEMI-GLOSS
SHT	SHEET
SHTG	SHEATHING
SIM	SIMILAR
SM	SHEET METAL
SPEC	SPECIFICATIONS
SQ	SQUARE
SS	STAINLESS STEEL / SHADE STRUCTURE / SERVICE SINK
STC	SOUND TRANSMISSION COEFFICIENT
STD	STANDARD
STL	STEEL
STN	STAIN
STR	STRUCTURAL/STRUCTURE
STRUCT	STRUCTURAL/STRUCTURE
SUSP	SUSPENDED
SV	SHEET VINYL FLOORING
SYS	SYSTEM
T	TILE / TEMPERED GLASS
TB	TACK BOARD
TC	TOP OF CONCRETE CURB
T&G	TONGUE & GROOVE
TEMP	TEMPERATURE
THK	THICK
TJ	TOOLED JOINT
TO	TOP OF
TOC	TOP OF CANOPY
TOD	TOP OF DRAIN
TOP	TOP OF PARAPET
TOS	TOP OF SHEATHING/ STRUCTURE
TOW	TOP OF WALL
TWP	TACKABLE WALL PANEL
TYP	TYPICAL
UC	UNDER CUT/ UNDER COUNTER
UNO	UNLESS NOTED OTHERWISE
UOS	UNDERSIDE OF STRUCTURE
VC	VINYL COATED
VCT	VINYL COMPOSITION TILE
VERT	VERTICAL
VIF	VERIFIED IN FIELD
VP	VISION PANEL
VWC	VINYL WALL COVERING
W	WEST / WIDTH
W/	WITH
WC	WATERCLOSET
WD	WOOD
WH	WATER HEATER
WI	WOODWORK INSTITUTE
WIN	WINDOW
W/O	WITHOUT
WT	WEIGHT
WWF	WELD WIRE FABRIC

GENERAL NOTES

1. THE CONTRACTOR IS SOLELY RESPONSIBLE FOR MEANS, METHODS, SEQUENCE, TECHNIQUES OR PROCEDURES NECESSARY FOR PERFORMING, SUPERINTENDING OR COORDINATING ALL PORTIONS OF THE WORK OF CONSTRUCTION IN ACCORDANCE WITH THE CONTRACT DOCUMENTS AND ANY HEALTH OR SAFETY PRECAUTIONS REQUIRED BY ANY REGULATORY AGENCIES.
2. ALL CONSTRUCTION AND DEMOLITION SHALL BE IN ACCORDANCE WITH CHAPTER 33 OF THE CBC AND CFC, AND THE WRITTEN SAFETY . REFER TO DSA PUBLICATION BU 24-05 FOR FUTHER INFORMATION.
3. CONTRACTOR WILL BE REQUIRED TO PROVIDE AND INSTALL ALL EQUIPMENT AND RELATED ITEMS AS SHOWN IN THESE DOCUMENTS AND AS SPECIFIED. IT SHALL BE THE CONTRACTOR'S RESPONSIBILITY TO VERIFY ALL EXISTING CONDITIONS IN THE FIELD PRIOR TO BID AND TO DETERMINE THE WORK NECESSARY TO COMPLETE THE PROJECT.
4. ALL WORK SHALL CONFORM TO **2022** TITLE 24, CALIFORNIA CODE OF REGULATIONS (C.C.R.) AND SECTION 4-333.
5. A "DSA CERTIFIED" PROJECT INSPECTOR EMPLOYED BY THE DISTRICT (OWNER) AND APPROVED BY THE DSA SHALL PROVIDE CONTINUOUS INSPECTION OF THE WORK. THE DUTIES OF THE INSPECTOR ARE DEFINED IN SECTION 4-342, PART 1, TITLE 24, CCR. THE INSPECTOR OF RECORD SHALL BE ESPECIALLY QUALIFIED IN ELECTRICAL WORK AND SHALL BE DSA APPROVED AND CONFORM TO **CLASS 3** CLASSIFICATION CRITERIA AS PROVIDED IN THE INTERPRETATION OF REGULATIONS (IR) A-7, DATED **02-28-25**
6. THE ARCHITECT OF RECORD SHALL HAVE THE RIGHT TO MAKE FINAL JUDGMENTS RELATIVE TO SUBMITTAL DRAWING REVISIONS IN ORDER TO ENSURE COMPLIANCE WITH ENGINEERING STANDARDS, APPLICABLE CODES, AND ARCHITECTURAL INTENT.
7. CONTRACTOR SHALL VERIFY ALL DIMENSIONS AND LOCATIONS OF EXISTING CONDITIONS ON THE JOB SITE PRIOR TO THE START OF ANY WORK. NOTIFY THE ARCHITECT IMMEDIATELY OF ANY DISCREPANCIES BETWEEN ACTUAL FIELD CONDITIONS AND CONSTRUCTION DOCUMENTS. EXISTING CONDITIONS ARE INDICATED AS A RESULT OF INFORMATION SHOWN ON AVAILABLE DOCUMENTS. ANY DAMAGE TO EXISTING CONDITIONS IS THE SOLE RESPONSIBILITY OF THE CONTRACTOR.
8. THE EXISTENCE OR LOCATION OF ANY UNDERGROUND UTILITIES, PIPES, OR STRUCTURE SHOWN ON THESE PLANS WERE OBTAINED BY A SEARCH OF AVAILABLE RECORDS. TO THE BEST OF OUR KNOWLEDGE, EXISTING UTILITIES ARE AS SHOWN ON THESE PLANS. THE CONTRACTOR SHALL ASCERTAIN THE TRUE VERTICAL AND HORIZONTAL LOCATION AND SIZE OF ALL UNDERGROUND UTILITIES AND SHALL BE RESPONSIBLE FOR DAMAGE TO ANY PUBLIC OR PRIVATE UTILITIES SHOWN OR NOT SHOWN HEREON.
9. THE CONTRACTOR SHALL BE SOLELY RESPONSIBLE FOR ADEQUACY AND SAFETY OF THE DESIGN/ERECTION OF BRACING, SHORING, TEMPORARY SUPPORTS AND SCAFFOLDING.
10. UNDER NO CIRCUMSTANCE SHALL WORKING DIMENSIONS BE SCALED FROM PLANS, SECTIONS, OR DETAILS ON THE DRAWINGS.
11. ALL STANDARDS, MATERIALS AND WORKMANSHIP SHALL COMPLY WITH THE STATE BUILDING CODES, ORDINANCES, REGULATIONS, AND LAWS.
12. WHERE ANY CONFLICT OCCURS BETWEEN THE REQUIREMENTS OF FEDERAL, STATE AND LOCAL LAWS, CODES, ORDINANCES, RULES AND REGULATIONS, THE MOST STRINGENT SHALL GOVERN.
13. ITEMS MARKED "TYP" OR "TYPICAL" SHALL APPLY IN ALL CASES UNLESS SPECIFICALLY INDICATED OTHERWISE.
14. THE CONTRACTOR SHALL BE RESPONSIBLE FOR COORDINATION OF REQUIREMENTS BETWEEN THE DISCIPLINES (CIVIL, ARCHITECTURAL, STRUCTURAL, PLUMBING, MECHANICAL, AND ELECTRICAL, ETC.) AND BETWEEN DRAWING AND SPECIFICATION IN ORDER TO ENSURE THAT ALL ITEMS SHOWN IN RELATIONSHIP TO ONE ANOTHER OR SHOWN IN MULTIPLE LOCATIONS ARE IN AGREEMENT. THE CONTRACTOR SHALL IMMEDIATELY NOTIFY THE ARCHITECT REGARDING ANY DISCREPANCIES, ERRORS, OMISSIONS OR INCONSISTENCIES AND SHALL NOT PROCEED WITH THE WORK UNTIL CLARIFICATION HAS BEEN ISSUED BY THE ARCHITECT.
15. GRADING PLANS DRAINAGE IMPROVEMENTS, ROAD & ACCESS REQUIREMENTS AND ENVIRONMENTAL HEALTH CONSIDERATIONS SHALL COMPLY WITH ALL LOCAL ORDINANCES.
16. A WRITTEN SITE SAFETY PLAN IN COMPLIANCE WITH CFC 3303.1.1 MUST BE PREPARED AND AVAILABLE ON SITE PRIOR TO COMMENCEMENT OF ANY MOBILIZATION, DEMOLITION AND/OR CONSTRUCTION.
17. SUBSTITUTIONS AFFECTING ITEMS REGULATED BY THE DIVISION OF THE STATE ARCHITECT (DSA) REQUIRE DSA APPROVAL AS AN ADDENDUM OR A CONSTRUCTION CHANGE DOCUMENT (CCD). DSA APPROVAL SHALL BE OBTAINED PRIOR TO FABRICATION AND/ OR INSTALLATION PER SECTION 4-338, PART1, TITLE 24, CCR.
18. A DSA ACCEPTED TESTING LABORATORY DIRECTLY EMPLOYED BY THE DISTRICT (OWNER) SHALL CONDUCT ALL THE REQUIRED TESTS AND INSPECTIONS FOR THE PROJECT.
19. THE INTENT OF THESE DRAWINGS AND SPECIFICATIONS IS THAT THE WORK OF THE ALTERATION, REHABILITATION OR RECONSTRUCTION IS TO BE IN ACCORDANCE WITH TITLE 24, CCR. SHOULD ANY EXISTING CONDITIONS SUCH AS DETERIORATION OR NON-COMPLYING CONSTRUCTION BE DISCOVERED WHICH IS NOT COVERED BY THE CONTRACT DOCUMENTS WHEREIN THE FINISHED WORK WILL NOT COMPLY WITH TITLE 24, CCR, A CONSTRUCTION CHANGE DOCUMENT (CCD), OR A SEPARATE SET OF PLANS AND SPECIFICATIONS, DETAILING AND SPECIFYING THE REQUIRED WORK SHALL BE SUBMITTED TO AND APPROVED BY DSA BEFORE PROCEEDING WITH THE WORK. (SECTION 4-317(C), PART 1, TITLE 24, CCR).
20. THE CALIFORNIA ENERGY CODE SECTION 10-103 REQUIRES ACCEPTANCE TESTING ON ALL NEWLY INSTALLED LIGHTING CONTROLS, ENVELOPES, AND PROCESS EQUIPMENT AFTER INSTALLATION AND BEFORE PROJECT COMPLETION. AN ACCEPTANCE TEST IS A FUNCTIONAL PERFORMANCE TEST TO HELP ENSURE THAT NEWLY INSTALLED EQUIPMENT IS OPERATING AND IN COMPLIANCE WITH THE ENERGY CODE.

    LIGHTING CONTROLS ACCEPTANCE TESTS MUST BE PERFORMED BY A CERTIFIED LIGHTING CONTROLS ACCEPTANCE TEST TECHNICIAN (ATT).

    ENVELOPE AND PROCESS EQUIPMENT ACCEPTANCE TESTS SHALL BE PERFORMED BY THE INSTALLING CONTRACTOR, ENGINEER/ARCHITECT OF RECORD OR THE OWNER'S AGENT.

    A LISTING OF CERTIFIED ATT CAN BE FOUND AT:
    https://www.energy.ca.gov/PROGRAMS-AND-TOPICS/PROGRAMS/ACCEPTANCE-TEST-TECHNICIAN-CERTIFICATION-PROVIDER-PROGRAM/ACCEPTANCE

    THE ACCEPTANCE TESTING PROCEDURES MUST BE REPEATED, AND DEFICIENCIES MUST BE CORRECTED BY THE BUILDER OR INSTALLING CONTRACTOR UNTIL THE CONSTRUCTION/INSTALLATION OF THE SPECIFIED SYSTEMS CONFORM AND PASS THE REQUIRED ACCEPTANCE CRITERIA.

    PROJECT INSPECTORS WILL COLLECT THE FORMS TO CONFIRM THAT THE REQUIRED ACCEPTANCE TESTS HAVE BEEN COMPLETED.

APPLICABLE CODES

LIST OF APPLICABLE CODES AS OF JANUARY 1, 2023

2022 CALIFORNIA ADMINISTRATIVE CODE (CAC), PART 1, TITLE 24 CCR

2022 CALIFORNIA BUILDING CODE (CBC), PART 2, TITLE 24 CCR

2022 CALIFORNIA ELECTRICAL CODE (CEC), PART 3, TITLE 24 CCR

2022 CALIFORNIA MECHANICAL CODE (CMC) PART 4, TITLE 24 CCR

2022 CALIFORNIA PLUMBING CODE (CPC), PART 5, TITLE 24 CCR

2022 CALIFORNIA ENERGY CODE, PART 6, TITLE 24 CCR

2022 CALIFORNIA FIRE CODE (CFC), PART 9, TITLE 24 CCR

2022 CALIFORNIA EXISTING BUILDING CODE (CEBC), PART 10, TITLE 24 CCR

2022 CALIFORNIA GREEN BUILDING STANDARDS CODE (CALGreen), PART 11, TITLE 24 CCR

2022 CALIFORNIA REFERENCED STANDARDS, PART 12, TITLE 24 CCR

TITLE 19 CCR, PUBLIC SAFETY, STATE FIRE MARSHAL REGULATIONS

APPLICABLE STANDARDS

FOR A LIST OF APPLICABLE STANDARDS, INCLUDING CALIFORNIA AMENDMENTS TO THE NFPA STANDARDS, REFER TO **2022** CALIFORNIA BUILDING CODE (CBC) CHAPTER 35 & **2022** CALIFORNIA FIRE CODE (CFC) CHAPTER 80.

APPLICABLE AGENCIES

STATE OF CALIFORNIA

DEPARTMENT OF GENERAL SERVICES
DIVISION OF THE STATE ARCHITECT
10920 VIA FRONTERA ROAD, STE. 300
SAN DIEGO, CA 92127
TEL: (858) 674-5400

ARCHITECTURAL SYMBOLS

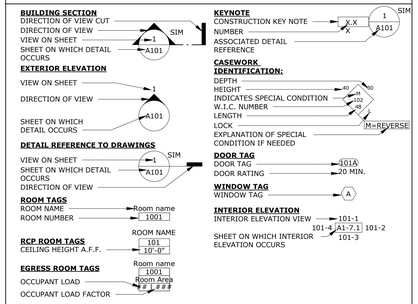

SHEET INDEX

GENERAL
G-1 TITLE SHEET & SHEET INDEX

CIVIL
C1.00 SITE DEMOLITION PLAN
C2.00 GRADING & SITE WET UTILITY PLAN
C3.00 DETAIL SHEET
C3.01 DETAIL SHEET

ARCHITECTURE - SITE
AS-1.0 FIRE ACCESS SITE PLAN
AS-1.1 OVERALL SITE PLAN & CODE ANALYSIS
AS-1.3 ENLARGED SITE PLAN AT PARKING LOT MOD
AS-1.4 ENLARGED SITE PLAN, RESTROOM PLAN, AND ELEV.
ASD-1.0 SITE & SIGNAGE DETAILS

ELECTRICAL
E-0.1 ELECTRICAL COVER SHEET
E-0.2 ELECTRICAL SCHEDULES
ES-1.0 ELECTRICAL - OVERALL SITE PLAN
ES-1.1 ELECTRICAL - ENLARGED SITE PARKING LOT
E-4.0 ELECTRICAL DETAILS
E-6.0 T-24 SHEETS

FIRE ALARM
FA-0.1 FIRE ALARM COVER SHEET
FA-0.2 FIRE ALARM SCHEDULES
FAS-1.0 FIRE ALARM - OVERALL SITE PLAN
FAS-1.1 FIRE ALARM - ENLARGED SITE PARKING LOT
FA-4.0 FIRE ALARM DETAILS

TECHNOLOGY
T-0.1 TECHNOLOGY COVER SHEET
TS-1.0 TECHNOLOGY - OVERALL SITE PLAN
TS-1.1 TECHNOLOGY - ENLARGED SITE PARKING LOT - REMODEL
T-4.0 TECHNOLOGY DETAILS (PC 04-122262)

TMP SERVICES
1A COVER SHEET (A)
2A ACCESSIBLE RAMP ELEVATIONS & DETAILS (A)
3A ACCESSIBLE RAMP DETAILS & NOTES (A)
4A DETAILS AND NOTES (A)
8A ACCESSIBLE RAMP ELEVATIONS & PLAN VIEWS (A)

SILVER CREEK INDUSTRIES (PC 04-121999)
A-0N COVER SHEET
A-1.01N PROJECT SPECIFIC FLOOR & REFLECTED CEILING PLANS 24X40
P-1.01N PLUMBING DETAILS AND SCHEDULE
M-1.01N PROJECT SPECIFIC MECHANICAL PLAN 24X40
E-1.01N PROJECT SPECIFIC ELECTRICAL PLAN 24X40

A-0 COVER SHEET
A-0A T & I FORMS
A-0.1 SYMBOLS LEGEND, ABBREVIATIONS & ADA SIGNAGE
A-0.2 SCHEDULES
A-0.3 TYPICAL KEY PLAN 24-120X40
A-0.53 DESIGN ENERGY VALUES WOOD FLOOR - WALL HVAC
A-0.54 PRF FORMS 24X40 ZONE 14 WORST CASE
A-0.55 PRF FORMS 24X40 ZONE 15 WORST CASE
A-0.56 PRF FORMS 24X40 ZONE 16 WORST CASE
A-0.6A CERTIFICATE OF COMPLIANCE FORMS
A-0.6B CERTIFICATE OF COMPLIANCE FORMS
A-0.6C CERTIFICATE OF COMPLIANCE FORMS
A-0.7 PV SYSTEM REQUIREMENTS, ENERGY MANDATORY MEASURES
A-1.01 FLOOR PLAN 24X40
A-2.01 REFLECTED CEILING PLAN 24X40
A-3.01 ROOF PLAN 24X40 - METAL DECK MONO OR DUAL SLOPE
A-3.50 ROOF DETAILS STANDING SEAM ROOF DECK
A-4.01 EXTERIOR ELEVATION 24X40 MONO / DUAL SLOPE
A-5.01 CROSS SECTION MONO SLOPE
A-5.05 CROSS SECTION
A-5.50 ARCHITECTURAL DETAILS WOOD STUD - SHTG
A-5.70 ARCHITECTURAL DETAILS FLOOR
A-5.80 ARCHITECTURAL DETAILS MISCELLANEOUS / OPTIONS
A-5.81 ARCHITECTURAL DETAILS MISCELLANEOUS / OPTIONS
A-6.01 INTERIOR ELEVATIONS 24X40
F-0.02 WOOD FOUNDATION PLAN 24X40 (50+15 PSF)
F-0.50 FOUNDATION DETAILS WOOD
S-0.1 STRUCTURAL SPECIFICATIONS
S-1.01 FLOOR FRAMING PLAN WOOD FLOOR
S-1.50 FLOOR FRAMING DETAILS WOOD FLOOR
S-2.01 ROOF FRAMING PLAN MONO SLOPE
S-2.50 ROOF FRAMING DETAILS MONO SLOPE
S-2.60 ROOF FRAMING DETAILS
S-2.90 ROOF FRAMING DETAILS TRUSS
S-3.01 BUILDING SECTIONS MONO SLOPE
S-5.00 WALL FRAMING ELEVATIONS WOOD STUDS
S-5.10 WALL FRAMING DETAILS WOOD STUDS
S-5.11 WALL FRAMING DETAILS WOOD STUDS
P-1.01 PLUMBING DETAILS AND SCHEDULE
M-0.1 MECHANICAL NOTES, SCHEDULES, & DETAILS
M-1.01 MECHANICAL PLAN WALL MOUNT 24X40
E-1.01 ELECTRICAL PLAN AND SCHEDULE 24X40

MODTECH (PC 04-102293)
A0.01 COVER SHEET
A1.01 SITE PLAN
F1.02 FOUNDATION PLAN 36'x40'/WOOD/50, 50+20, 100PSF
F1.21 FOUNDATION DETAILS WOOD/50, 50+20, 100PSF
S3.02 STRUCTURAL DRAWING
TOTAL SHEET COUNT: 82

SCOPE OF WORK

1. RELOCATION OF (1) 36x40 PORTABLE BLDG "N" FOR ADMIN INTERIM HOUSING FROM STOCKPILE (PC 04-102293) OFOI
2. CONSTRUCTION OF (1) 24X40 PORTABLE BLDG "P" FOR ADMIN INTERIM HOUSING (PC 04-121999) OFOI
3. ASSOCIATED SITE WORK ALONG PATH OF TRAVEL.

DEFERRED SUBMITTAL LIST

1. NONE.

COLTON MS INTERIM HOUSING: ADDENDUM 01 - 07/09/25

PROJECT No. :1-15-118
7/9/2025 8:01:05 AM

DRAWN BY: CHECKED BY:
DELTA # __1__ DATE __07/09/25__ ☐ ADD ☐ AFO ☐ CCD ☐ REV
DELTA # _____ DATE _____ ☐ ADD ☐ AFO ☐ CCD ☐ REV
DELTA # _____ DATE _____ ☐ ADD ☐ AFO ☐ CCD ☐ REV
DELTA # _____ DATE _____ ☐ ADD ☐ AFO ☐ CCD ☐ REV

HATCH LEGEND:

- = PROPOSED PORTABLE BUILDING
- = BUILDING MANUFACTURERS RAISED PLATFORM AND RAMP (7)
- = PROPOSED CONCRETE PAVEMENT (1)
- = PROPOSED ASPHALT PAVEMENT (2)
- = EXISTING CONCRETE PAVEMENT TO REMAIN
- = EXISTING BUILDING

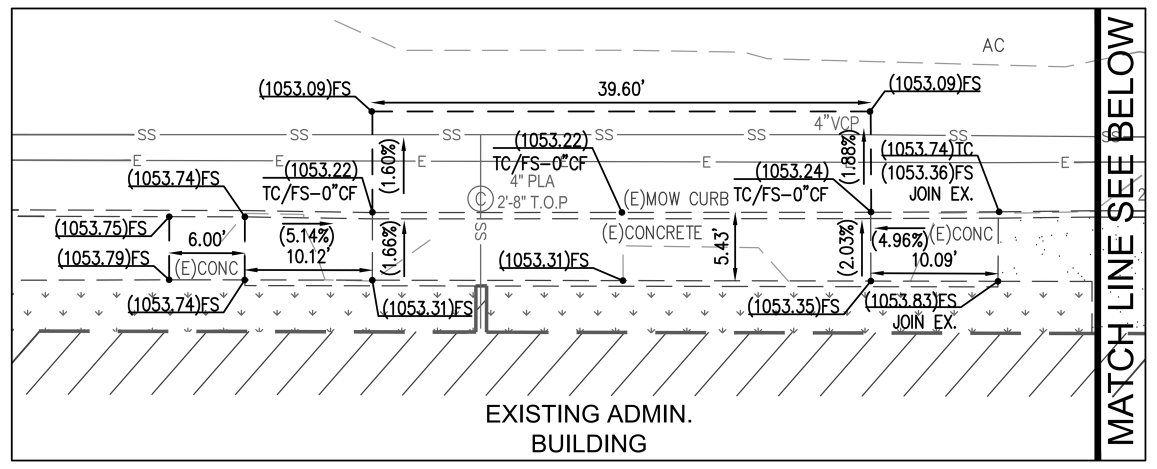

GENERAL NOTES FOR GRADING

1. A COPY OF THE DIVISION OF STATE ARCHITECT APPROVED GRADING PLANS MUST BE IN THE POSSESSION OF A RESPONSIBLE PERSON AND AVAILABLE AT THE JOB SITE AT ALL TIMES.
2. THROUGHOUT ALL PHASES OF CONSTRUCTION, INCLUDING SUSPENSION OF WORK, UNTIL FINAL ACCEPTANCE OF THE PROJECT, THE CONTRACTOR SHALL KEEP THE WORK SITE CLEAN AND FREE FROM RUBBISH AND DEBRIS. THE CONTRACTOR SHALL ALSO ABATE DUST NUISANCE BY CLEANING, SWEEPING AND SPRINKLING WITH WATER AND USING DUST FENCES OR OTHER METHODS AS DIRECTED BY THE CONSTRUCTION MANAGER OR FIELD INSPECTOR THROUGHOUT THE CONSTRUCTION OPERATION AND SHALL INCORPORATE IN BASE BID.
3. THE CONTRACTOR SHALL KEEP A STRICT RECORD OF ALL CHANGES THAT OCCUR DURING CONSTRUCTION PRACTICES AND SUBMIT THIS RECORD TO THE SCHOOL DISTRICT & DSA CERTIFIED AS "RECORD DRAWING" PLANS.
4. ALL DAMAGE CAUSED TO PUBLIC STREETS, INCLUDING HAUL ROUTES, ALLEYS, SIDEWALKS, CURBS OR STREET FURNISHINGS, OR TO PRIVATE PROPERTY SHALL BE REPAIRED AT THE SOLE EXPENSE OF THE CONTRACTOR TO THE ENGINEER'S SATISFACTION.
5. THE CONTRACTOR SHALL BE RESPONSIBLE FOR PROVIDING STORM DAMAGE PREVENTION MEASURES OR EROSION CONTROL DEVICES AND/OR TO PERFORM CERTAIN GRADING TO PREVENT SOIL OR EXCESS RUNOFF FROM FLOWING INTO PUBLIC STREETS OR ADJACENT PROPERTIES. IN THE EVENT OF SUCH AN OCCURRENCE, CLEANUP SHALL COMMENCE IMMEDIATELY. SHOULD CITY FORCES OR THE CITY CONTRACTOR PERFORM ANY CLEANUP RESULTING FROM THIS DEVELOPMENT, THE CONTRACTOR SHALL PAY THE COST INCURRED WITHIN TEN (10) WORKING DAYS UPON RECEIPT OF BILLING.
6. EITHER WATER OR DUST PALLIATIVE, OR BOTH, MUST BE APPLIED FOR THE ALLEVIATION OR PREVENTION OF EXCESSIVE DUST RESULTING FROM THE LOADING OR TRANSPORTATION OF EARTH FROM OR TO THE PROJECT SITE OR PRIVATE AND PUBLIC ROADWAYS.
7. NO PERSON SHALL, WHEN HAULING ANY EARTH, SAND, GRAVEL, ROCK, STONE OR OTHER EXCAVATED MATERIAL OR DEBRIS OVER ANY PUBLIC STREET, ALLEY OR OTHER PUBLIC PLACE, ALLOW SUCH MATERIAL TO BLOW OR SPILL OVER UPON SUCH STREET, ALLEY OR PUBLIC PLACE OR ADJACENT PRIVATE PROPERTY OR ANY WATER BODIES, CREEKS OR STREAMS. THE CONTRACTOR SHALL BE RESPONSIBLE FOR THE CLEANUP AND REMOVAL OF ANY CONSTRUCTION OR SOILS MATERIALS DEPOSITED ON THE PUBLIC RIGHT-OF-WAY, PUBLIC WATERS OR ADJACENT PRIVATE PROPERTY.
8. ALL CONSTRUCTION/DEMOLITION, GRADING, AND STORAGE OF BULK MATERIALS MUST COMPLY WITH THE LOCAL AQMD RULE 403 FOR FUGITIVE DUST. INFORMATION ON RULE 403 IS AVAILABLE AT AQMD'S WEBSITE HTTP://WWW.AVAQMD.COM.

REGISTERED PROFESSIONAL ENGINEER ALAN WING-CHI LEE No. C 34971 Exp. 09-30-25 CIVIL STATE OF CALIFORNIA

LICENSED ARCHITECT ROGER CLARKE No. C-21340 Exp.10-31-25 STATE OF CALIFORNIA

FPL and Associates, Inc.
Traffic • Transportation • Civil
30 Corporate Park, Suite 401
Irvine, CA 92606
PHONE: 949-252-1688

RUHNAU CLARKE ARCHITECTS

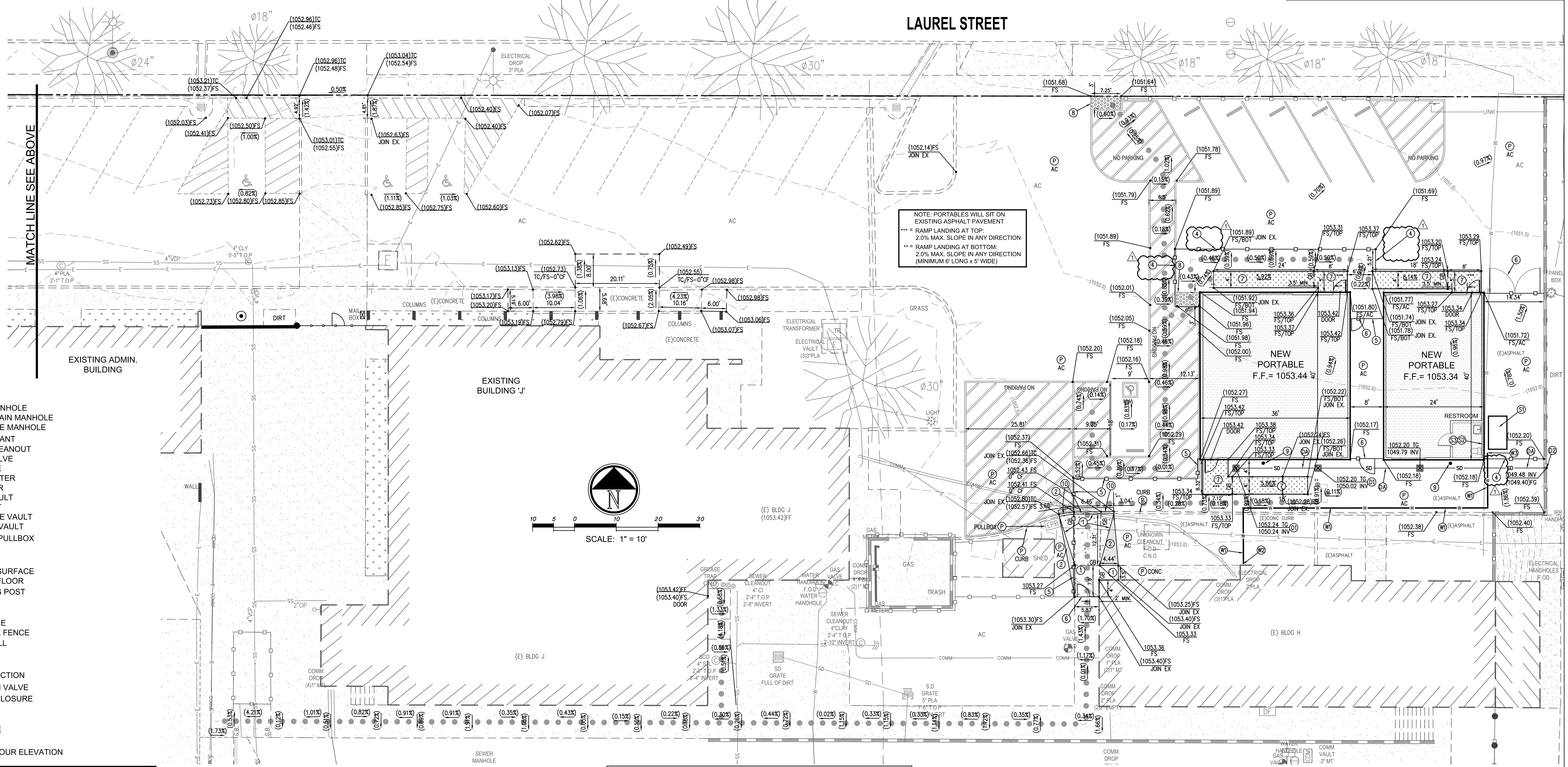

LEGEND

- SEWER MANHOLE
- STORM DRAIN MANHOLE
- TELEPHONE MANHOLE
- FIRE HYDRANT
- SEWER CLEANOUT
- WATER VALVE
- GAS VALVE
- WATER METER
- GAS METER
- WATER VAULT
- GAS VAULT
- TELEPHONE VAULT
- ELECTRIC VAULT
- EPB ELECTRIC PULLBOX
- GUY WIRE
- LIGHT
- FS FINISHED SURFACE
- FF FINISHED FLOOR
- OVERHANG POST
- SIGN POST
- MAIL BOX
- WIRE FENCE
- CHAIN LINK FENCE
- BLOCK WALL
- TREE
- FLOW DIRECTION
- ICV IRRIGATION VALVE
- T TRASH ENCLOSURE
- GRATE
- SLOPE
- CF CURB FACE
- INV INVERT
- --(1052.0)-- (E)CONTOUR ELEVATION

CONTRACTOR SHALL COMPLY WITH 2022 C.B.C. AND C.F.C. CHAPTER 33 - FIRE SAFETY DURING CONSTRUCTION AND DEMOLITION

GRADING PLANS, DRAINAGE IMPROVEMENTS, ROAD AND ACCESS REQUIREMENTS AND ENVIRONMENTAL HEALTH CONSIDERATIONS SHALL COMPLY WITH ALL LOCAL ORDINANCES.

EARTHWORK NOTICE TO CONTRACTOR: NO EARTHWORK ANALYSIS HAS BEEN COMPLETED WITH RESPECT TO VOLUMES OF SOILS TO BE EXCAVATED, PLACED, OR IMPORTED IN ORDER TO PROVIDE THE FINISHED GRADES SHOWN ON THE PLANS. THE CONTRACTOR IS SOLELY RESPONSIBLE FOR VERIFYING THE EARTHWORK QUANTITIES NECESSARY TO COMPLETE THE PROJECT.

CONSTRUCTION STORM WATER NOTE: GRADING WORK ASSOCIATED WITH THIS PROJECT WILL DISTURB LESS THAN 1 ACRE OF SOIL AND THUS SHALL NOT BE SUBJECT TO COMPLY WITH NPDES STORM WATER CONSTRUCTION GENERAL PERMIT 2022-0057-DWQ (AS ADOPTED SEPTEMBER 8, 2022)

NOTE TO CONTRACTOR: BEFORE DEMOLITION OR TRENCHING OF ANY KIND OCCURS, THE CONTRACTOR SHALL COMPLETE HIS OWN UNDERGROUND UTILITY MAPPING SURVEY OF THE PROJECT SITE TO DETERMINE WERE EXISTING UTILITIES ARE AND WHERE POSSIBLE UNDERGROUND CONFLICTS MAY OCCUR. PROVIDE SURVEY TO OWNER PRIOR TO STARTING WORK.

DOMESTIC WATER GENERAL NOTES:

1. WATER VALVE BOXES SHALL BE SET FLUSH WITH ULTIMATE FINISH SURFACE.
2. AFTER PROJECT INSPECTOR HAS INSPECTED INSTALLATION, PERFORM CONNECTIONS TO SERVICING WATER LINES. SCHEDULE SERVICE SHUTDOWN FOR CONNECTING NEW SYSTEM AT A TIME CAUSING MINIMUM DISRUPTION.
3. WHEN WATER PIPING HAS BEEN INSTALLED AND PRESSURE TESTED, STERILIZE SYSTEM BEFORE USE AND/OR SUBSTANTIAL COMPLETION.
4. INJECT SOLUTION OF LIQUID CHLORINE OR SODIUM HYPOCHLORITE AND WATER CONTAINING AT LEAST 50 PPM OF FREE CHLORINE INTO A SYSTEM IN A MANNER TO ENSURE THAT ENTIRE SYSTEM IS COMPLETELY FILLED WITH SOLUTION. DURING THIS PROCEDURE OPERATE VALVES AND TEST OUTLETS FOR RESIDUAL CHLORINE. CONTINUE INJECTION UNTIL OUTLETS INDICATE AT LEAST 59 PPM OF FREE CHLORINE.
5. AFTER INJECTION, ISOLATE SYSTEM AND HOLD SOLUTION IN RETENTION FOR A PERIOD OF AT LEAST 8 HOURS. PERFORM TESTS FOR RESIDUAL CHLORINE AFTER RETENTION. IF SUCH TESTS INDICATE LESS THAN 50 PPM OF RESIDUAL CHLORINE, REPEAT ENTIRE PROCEDURE. AFTER SATISFACTORY STERILIZATION HAS BEEN VERIFIED, FLUSH ENTIRE SYSTEM UNTIL TRACES OF CHLORINE HAVE BEEN REMOVED OR UNTIL CHLORINE CONTENT IS NO GREATER THAN IN EXISTING WATER SUPPLY.
6. PRESSURE TESTING: BEFORE PRESSURE TEST, FILL PORTION OF PIPING BEING TESTED WITH WATER FOR A MINIMUM OF 24 HOURS. PROVIDE HYDROSTATIC PRESSURE OF 50 PSI GREATER THAN THE MAXIMUM WORKING PRESSURE OF TESTED SYSTEM. PROVIDE AND MAINTAIN HYDROSTATIC TEST PRESSURE FOR AT LEAST 2 HOURS TO ENSURE NO LEAKAGE OF ANY PORTION OF PIPING OR APPURTENANCES UNDER PRESSURE TEST.

CONSTRUCTION NOTES:

- (P) PROTECT EXISTING IMPROVEMENT IN PLACE.
- (1) CONSTRUCT CONCRETE PAVEMENT PER DETAIL 1/C3.00.
- (2) CONSTRUCT ASPAHLT PAVEMENT PER DETAIL 2/C3.00.
- (4) CONSTRUCT T-STAND PANEL FENCING PER ARCHITECTURAL PLAN. (1)
- (5) CONSTRUCT CHAINLINK FENCE PER ARCHITECTURAL PLAN.
- (6) CONSTRUCT GATE PER ARCHITECTURAL PLAN.
- (7) CONSTRUCT RAMP & LANDING PER MANUFACTURER PLANS AND GRADES HEREON.
- (8) CONSTRUCT TRUNCATED DOMES PER ARCHITECTURAL PLANS.
- (9) CONSTRUCT CONDENSATE DRYWELL PER DETAIL 9/C3.01.
- (10) CONSTRUCT VARIABLE HEIGHT CONCRETE CURB PER ELEVATIONS HEREON TO MATCH EXISTING.

STORM DRAIN CONSTRUCTION NOTES:

- (P) PROTECT EXISTING IMPROVEMENT IN PLACE.
- (D1) CONSTRUCT 12" SQUARE CATCH BASIN, WITH ADA PARKWAY GRATE, PER DETAIL D1/C3.01.
- (D2) CORE DRILL INTO EXISTING WALL TO CONSTRUCT 3" SCHEDULE 80 P.V.C PIPE.
- (DA) CONSTRUCT 3-INCH SCHEDULE 80 P.V.C. PIPE & FITTINGS PER UTILITY TRENCHING DETAIL ON C3.00.

POTABLE WATER CONSTRUCTION NOTES:

- (W1) CONSTRUCT 3/4" COPPER TUBING, TYPE K HARD, BELOW GRADE PER UTILITY TRENCHING DETAIL ON C3.00. SOLDER AND FLUX SHALL BE LEAD-FREE.
- (W2) ISOLATE EXISTING COLD WATER BRANCH SERVING HOSE BIB. REPLACE HOSE BIB WITH NEW TEE, HOSE BIB AND ISOLATION VALVE. EXTEND 3/4" COLD WATER DOWN BELOW GRADE AS SHOWN ON PLAN.
- (W3) PROVIDE 3/4" COLD WATER RISER WITH ISOLATION VALVE AND HOSE BIBB SERVING NEW BUILDING.

SANITARY SEWER CONSTRUCTION NOTES:

- (S1) INSTALL 300 GALLON SEWER HOLDING TANK ON TOP OF EXISTING ASPHALT, SEE DETAIL S1/C3.01.
- (S2) CONSTRUCT ABOVE GRADE SANITARY WASTE 3-INCH SCHEDULE 40 ABS-DWV PIPE & FITTINGS. INSTALL SEWER CLEAN-OUT IN STACK ABOVE GRADE. CONNECT TO BUILDING SEWER AT APPROXIMATE LOCATION SHOWN.
- (S3) CONSTRUCT 3-INCH SCHEDULE 40 ABS-DWV PIPE & FITTINGS FROM BUILDING TO SEWER HOLDING TANK, ALL ABOVE GRADE. CONNECT 3-INCH PIPE TO HOLDING TANK AT CORNER OPENING OF HOLDING TANK WITH APPLICABLE COUPLING WITH STAINLESS STEEL BANDS.

EXISTING UNDERGROUND STRUCTURES

THE LOCATIONS OF THE EXISTING UNDERGROUND UTILITIES, AS SHOWN ON THIS PLAN, WERE OBTAINED FROM SOURCES OF VARYING RELIABILITY. NO REPRESENTATION IS MADE AS TO THE ACCURACY OR COMPLETENESS OF SAID UTILITY INFORMATION. THE CONTRACTOR IS CAUTIONED THAT ONLY ACTUAL EXCAVATION WILL REVEAL THE LOCATIONS OF SUCH UNDERGROUND UTILITIES. IT SHALL BE THE CONTRACTOR'S RESPONSIBILITY TO NOTIFY THE OWNERS OF THE UTILITIES OR STRUCTURES CONCERNED BEFORE STARTING WORK. CONTRACTOR SHALL VERIFY LOCATIONS OF EXISTING UTILITIES PRIOR TO ANY EXCAVATION OR IMPROVEMENT. THE CONTRACTOR SHALL TAKE PRECAUTIONARY MEASURES TO PROTECT THE UTILITY LINES SHOWN TO BE PROTECTED HEREON AND ANY OTHER LINES NOT OF RECORD OR NOT SHOWN HEREON.

PROJECT No. : 1-15-118

DRAWN BY:		CHECKED BY:RCA			
DELTA # 1	DATE 7/9/25	[X] ADD	AFO	CCD	REV
DELTA #	DATE	ADD	AFO	CCD	REV
DELTA #	DATE	ADD	AFO	CCD	REV
DELTA #	DATE	ADD	AFO	CCD	REV

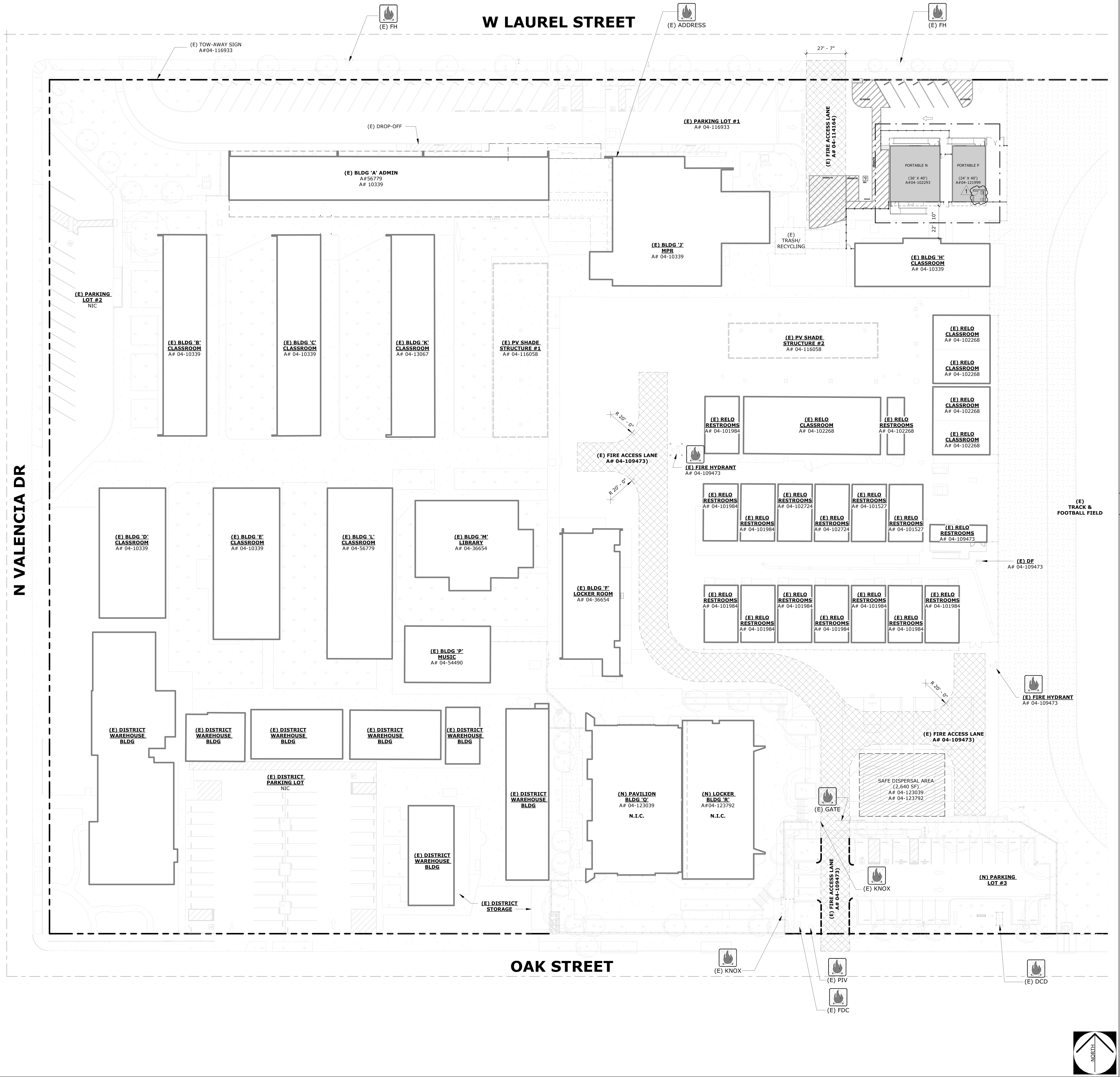

FIRE ACCESS SITE PLAN | SCALE: 1" = 30'-0" | 1

SITE LEGEND

EXISTING

- EXISTING BUILDING TO REMAIN (N.I.C.)
- EXISTING CONCRETE TO REMAIN
- EXISTING ASPHALT PAVING TO REMAIN
- EXISTING LANDSCAPE TO REMAIN
- EXISTING PLAYGROUND PROTECTIVE SURFACING TO REMAIN
- EXISTING DECOMPOSED GRANITE TO REMAIN
- EXISTING SAFE DISPERSAL AREA PER A# 04-123039

NEW

- PORTABLE BUILDING 'N' & 'P'
- NEW CONCRETE PAVING PER CIVIL DWGS
- NEW ASPHALT PER CIVIL DWGS

- SITE PROPERTY LINE
- ASSUMED PROPERTY LINE
- (E) CHAIN LINK FENCING AND GATE TO REMAIN, PROTECT IN PLACE
- (N) T-STAND CHAIN LINK FENCE, TYP UNO
- (N) CHAIN LINK FENCE, TYP UNO

1

STAMPS

AGENCY APPROVAL

RUHNAU CLARKE ARCHITECTS

CONSULTANT BRANDING

FIRE ACCESS LEGEND

EXISTING FIRE LANE — 20' - 0" MIN, TYP UNO — INDICATES **20'-0" MIN.** WIDE DRIVES, FIRE TRUCK ACCESS LANE WITH NOT LESS THAN 13'-6" VERTICAL CLEARANCE PER **CFC 2022** EDITION. CONTRACTOR TO PROVIDE ALL REQUIRED PAINTING OR CURBS AND PROVIDE ALL SIGNAGE PER LOCAL FIRE AUTHORITY REQUIREMENTS.

EXISTING FIRE LANE — R 20' - 0", R 40' - 0" — INDICATES MINIMUM TURNING RADIUS FOR FIRE TRUCK ACCESS

- EXISTING FIRE HYDRANT
- (E) FH — EXISTING FIRE HYDRANT
- (E) DCD — EXISTING DOUBLE CHECK DETECTOR ASSEMBLY, REFER TO CIVIL DWGS
- (E) ADDRESS — LOCATION OF MAIN SCHOOL ADDRESS (EXISTING SIGN AT ENTRANCE)
- (N) GATE — NEW EXISTING 20'-0" MIN WIDE FIRE TRUCK ACCESS GATES
- (N) KNOX — NEW KNOX PADLOCK FOR ENTRY KEY (MIN KNOX BOX 3200 SERIES MODEL)
- (N) PIV — NEW POST INDICATOR VALVE PER CIVIL DWGS
- (N) FDC — NEW FIRE DEPARTMENT CONNECTION PER CIVIL DWGS

NEW CONTINOUS CURB PAINTED OSHA SAFETY RED WITH 3" HIGH WHITE STENCIL PAINTED '**FIRE LANE - NO PARKING**' LETTERING

FIRE LANE CURB/PAVEMENT PAINT

TOP OF CURB

FIRE LANE - NO PARKING

FIRE LANE - NO PARKING

AT CURB

PAINT RED (TWO COATS) ENTIRE CURB

4" MIN. HEIGHT WHITE LETTER (TWO COATS) "FIRE LANE - NO PARKING" AT 25'-0" O.C.

NOTES:

- ENTIRE CURB SHALL BE PAINTED RED (TWO COATS)
- WHITE LETTERING- "FIRE LANE- NO STOPPING" (TWO COATS)
- LETTERING HEIGHT- MINIMUM OF 4 INCHES
- LETTERING TO BE ON TOP OF DESIGNATED CURBING
- SPACED AT MAXIMUM INTERVALS OF 25 FT. ON CENTER OR FRACTION THEREOF

FIRE LANE - NO PARKING

AT PAVING

8" MIN. RED STRIPE (TWO COATS)

AC OR CONCRETE PAVING

NOTES:

- MINIMUM WIDTH OF THIS RED STRIPS SHALL BE 8 INCHES (TWO COATS)
- WHITE LETTERING- "NO STOPPING- FIRE LANE" (TWO COATS)
- LETTERING HEIGHT- MINIMUM OF 6 INCHES
- SPACED AT MAXIMUM INTERVALS OF 25 FT. ON CENTER OR FRACTION THEREOF

DSA 810

FIRE & LIFE SAFETY SITE CONDITIONS SUBMITTAL

Division of the State Architect (DSA) documents referenced within this publication are available on the DSA Forms or DSA Publications webpages.

To facilitate the Division of the State Architect's (DSA) fire and life safety plan review of project site conditions, DSA requires the design professional to provide the following information at time of project submittal for projects consisting of construction of a new campus, construction of new building(s), additions to existing buildings, and for site alternate design means for fire department emergency vehicle access, and fire suppression water supply.

Information associated with compliance items 1 through 3 below is to be provided for all project types indicated above. Information associated with items 4 through 7 is to be completed when an alternate means is utilized. Acknowledgement by the school district and signature from the Local Fire Authority (LFA) is only required when an alternate design means is being requested.

The Project Information and Fire & Life Safety Information sections are to be completed for all projects and imaged onto the fire access site plan. When an alternate design/means is proposed, all sections on pages 1 and 2 are to be completed and imaged on the fire access site plan.

For additional information refer to the instructions at the end of this form and DSA Policy *PL 09-01: Fire Flow for Buildings.*

PROJECT INFORMATION
School District/Owner: COLTON JOINT UNIFIED SCHOOL DISTRICT
Project Name/School: COLTON MIDDLE SCHOOL INTERIM HOUSING
Project Address: 670 W. LAUREL ST. COLTON CA 92324

FIRE & LIFE SAFETY INFORMATION				
1.	Has a fire hydrant flow test been performed within the past 12 months? *(If yes, provide a copy of the test data.)*	Yes ☐		No ☑
2.	Was the fire hydrant water flow test performed as part of this LFA review?	Yes ☐		No ☑
3.	Is the project located within a designated fire hazard severity zone (FHSZ) as established by Cal-Fire? *(If yes, indicate FHSZ classification below.)*	Yes ☐		No ☑
	Refer to the following website for FHSZ locations: http://egis.fire.ca.gov/FHSZ/	Moderate ☐	High ☐	Very High ☐
	Wildland Interface Area (WIFA) *(If any designations are checked, project design must meet the requirements of CBC Chapter 7A.)*			WIFA ☐

DGS DSA 810 (revised 12/29/20) — Page 1 of 4
DIVISION OF THE STATE ARCHITECT — DEPARTMENT OF GENERAL SERVICES — STATE OF CALIFORNIA

PROJECT No. :1-15-118
7/9/2025 10:42:51 AM

DRAWN BY: — CHECKED BY:

DELTA # 1	DATE 07/09/25	☒ADD	☐AFO	☐CCD	☐REV
DELTA #	DATE	☐ADD	☐AFO	☐CCD	☐REV
DELTA #	DATE	☐ADD	☐AFO	☐CCD	☐REV
DELTA #	DATE	☐ADD	☐AFO	☐CCD	☐REV

RUHNAUCLARKE.COM

3775 TENTH STREET, RIVERSIDE CALIFORNIA 92501 (951) 684 4664 / 5751 PALMER WAY, SUITE C, CARLSBAD CALIFORNIA 92010 (760) 438 5899

COLTON MS INTERIM HOUSING

670 W. LAUREL ST, COLTON, CA 92324
COLTON JOINT UNIFIED SCHOOL DISTRICT

FIRE ACCESS SITE PLAN

AS-1.0

1-15-118

COLTON MS INTERIM HOUSING: ADDENDUM 01 - 07/09/25

CODE ANALYSIS

BLDG ID #	BUILDING NAME	BUILDING ANALYSIS: OCCUPANCY TYPE	CONSTRUCTION TYPE TABLE 601	STORY (ALLOW.) TABLE 504.4	STORY (ACTUAL)	BLDG. HT. (ALLOW.) TABLE 504.3	BLDG. HT. (ACTUAL)	BUILDING AREA (S.F.): ALLOWABLE BLDG. AREA (TABLE 506.2)	ACTUAL BLDG AREA (SQ. FT.)	TOTAL AREA (SQ. FT.)	BLDG AREA MODIFICATION PER SECTION 506 FRONTAGE INCREASE CBC 506.3	MIXED USE / OCCUPANCY AREA CALCULATION SECTION 508	EXT. WALL PROTECTION PER TABLE 601 & 705.5 2022 CBC: BEARING	NON-BEARING	OPENING PROTECTION TABLE 705.8	AUTOMATIC FIRE SPRINKLER	FIRE SEPARATION TABLE 508.4	NOTES:
-	PORTABLE BLDG N	B	V-B	1	1	40'-0"	12'-0"	9,500SF	1,440 SF	2,400 SF	NOT REQUIRED	Ø	Ø	Ø	UNPROTECTED, SPRINKLERED, NO LIMIT	NO	NO	
-	PORTABLE BLDG P								960 SF			Ø	Ø	Ø	UNPROTECTED, SPRINKLERED, NO LIMIT	NO	NO	

PARKING RATIO CALCULATIONS

PARKING LOT NAME	PARKING SPACE DESCRIPTION	MIN SPACES REQ'D	SPACES PROVIDED: VAN	STD	TOTAL SPACES PROVIDED
(E) PARKING LOT #1 PER A# 04-116933	STANDARD VEHICLE	N/A	N/A	37	41
	'ACCESSIBLE VEHICLE' INCLUDING VAN & STD PER CBC TABLE 11B-208.2 & 11B-208.2.4	2	2	2	
	SUBTOTAL NUMBER OF PARKING SPACES				**41**

ABBREVIATIONS:

EV ELECTRIC VEHICLE
EVCS ELECTRIC VEHICLE CHARGING STATION
N/A NOT APPLICABLE
STD STANDARD

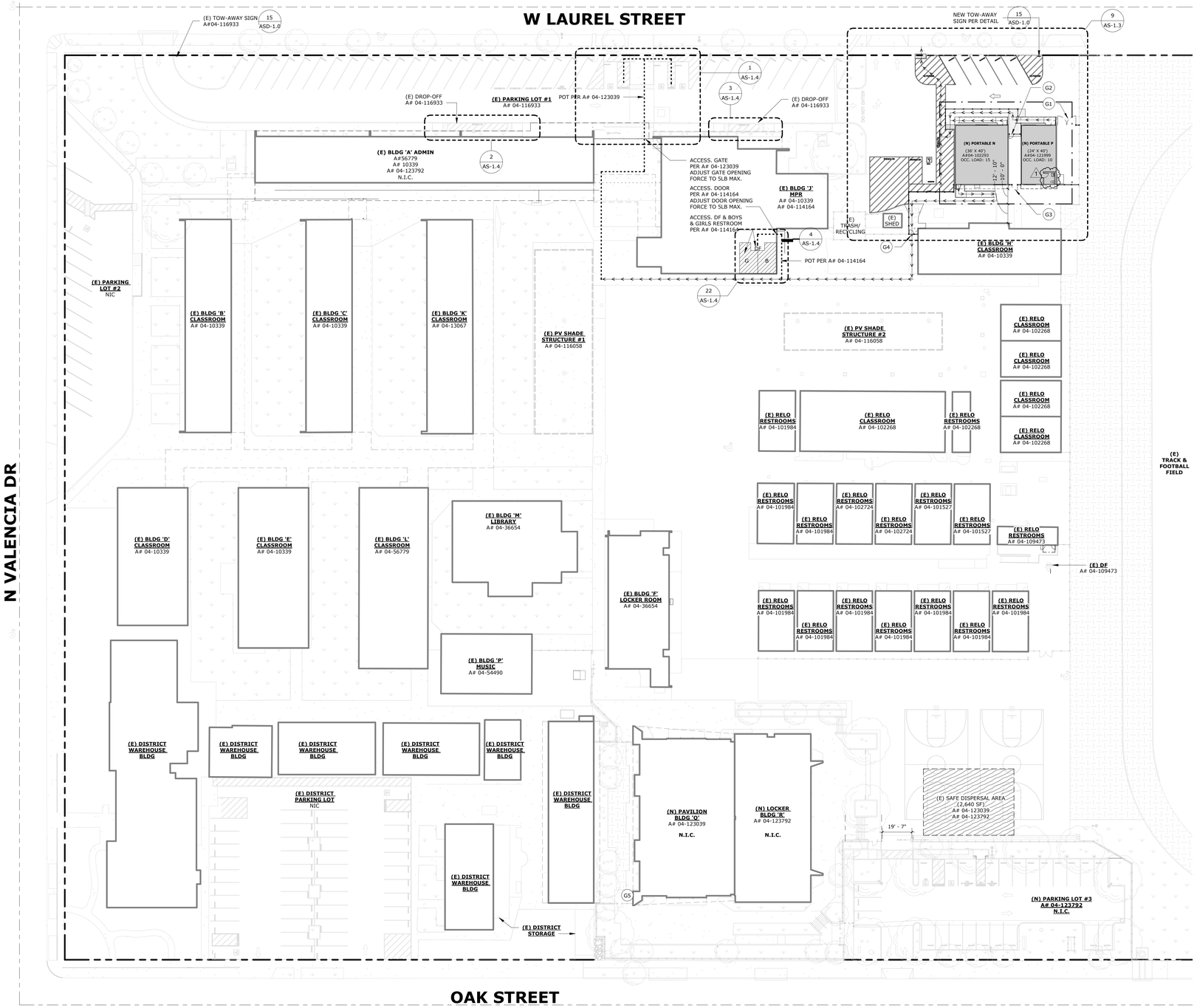

OVERALL SITE PLAN SCALE: 1" = 30'-0" 1

PATH OF TRAVEL LEGEND

(E) PATH OF TRAVEL PER A# 04-123039

(N) PATH OF TRAVEL (POT)

PATH OF TRAVEL, TECHNICAL REQUIREMENTS FOR ACCESSIBLE ROUTE:
ACCESSIBLE PATH OF TRAVEL (POT) AS INDICATED ON PLAN IS A BARRIER FREE ACCESS ROUTE WITHOUT ANY ABRUPT VERTICAL CHANGES EXCEEDING 1/2 INCH BEVELED AT 1-2 MAXIMUM SLOPE, EXCEPT THAT LEVEL CHANGES DO NOT EXCEED 1/4 INCH VERTICAL AND IS AT LEAST 48 INCHES WIDE.
SURFACE IS SLIP RESISTANT, STABLE, FIRM AND SMOOTH. CROSS-SLOPE DOES NOT EXCEED 2% AND SLOPE IN THE DIRECTION OF TRAVEL IS LESS THAN 5%.
ACCESSIBLE PATH OF TRAVEL SHALL BE MAINTAINED FREE OF OVERHANGING OBSTRUCTIONS TO 80 INCHES MINIMUM AND PROTRUDING OBJECTS GREATER THAN 4 INCHES PROJECTION FROM WALL AND ABOVE 27 INCHES AND LESS THAN 80 INCHES ABOVE THE FLOOR.
ARCHITECT TO VERIFY THAT ALL BARRIERS IN THE PATH OF TRAVEL HAVE BEEN REMOVED OR WILL BE REMOVED UNDER THIS PROJECT, AND PATH OF TRAVEL COMPLIES WITH **CBC 11B-303 & 11B-304**

DESIGN PROFESSIONAL IN GENERAL RESPONSIBLE CHARGE STATEMENT:
THE POT IDENTIFIED IN THESE CONSTRUCTION DOCUMENTS IS COMPLIANT WITH THE CURRENT APPLICABLE CALIFORNIA BUILDING CODE ACCESSIBILITY PROVISIONS FOR PATH OF TRAVEL REQUIREMENTS FOR ALTERATIONS, ADDITIONS AND STRUCTURAL REPAIRS. AS PART OF THE DESIGN OF THIS PROJECT, THE POT WAS EXAMINED AND ANY ELEMENTS, COMPONENTS OR PORTIONS OF THE P.O.T. THAT WERE DETERMINED TO BE NONCOMPLIANT 1.) HAVE BEEN IDENTIFIED AND 2.) THE CORRECTIVE WORK NECESSARY TO BRING THEM INTO COMPLIANCE HAS BEEN INCLUDED WITHIN THE SCOPE OF THIS PROJECT'S WORK THROUGH DETAILS, DRAWINGS AND SPECIFICATIONS INCORPORATED INTO THESE CONSTRUCTION DOCUMENTS. ANY NONCOMPLIANT ELEMENTS, COMPONENTS OR PORTIONS OF THE POT THAT WILL NOT BE CORRECTED BY THIS PROJECT BASED ON VALUATION THRESHOLD LIMITATIONS OR A FINDING OF UNREASONABLE HARDSHIP ARE SO INDICATED IN THESE CONSTRUCTION DOCUMENTS.

DURING CONSTRUCTION, IF POT ITEMS WITHIN THE SCOPE OF THE PROJECT REPRESENTED AS CODE COMPLIANT ARE FOUND TO BE NONCONFORMING BEYOND REASONABLE CONSTRUCTION TOLERANCES, THEY SHALL BE BROUGHT INTO COMPLIANCE WITH THE CBC AS A PART OF THIS PROJECT BY MEANS OF A CONSTRUCTION CHANGE DOCUMENT.

OPENINGS IN GRATINGS OR STRAINERS LOCATED IN PEDESTRIAN CIRCULATION PATHS OR IN POT SHALL NOT ALLOW PASSAGE OF A SPHERE MORE THAN 1/2" DIAMETER. ELONGATED OPENINGS SHALL BE PLACED SO THAT LONG DIMENSION IS PERPENDICULAR TO THE DOMINANT DIRECTION OF TRAVEL IN COMPLIANCE WITH SECTION **11B-302.3**

GATE SCHEDULE

NO.	GATE SIZE (W x H)	MAT'L	FIN	COLOR	PANIC HDW	HDW GROUP	SIGNAGE	DETAIL(S)	NOTES
G1	(N) 6'-0" x 4'-0" (PR)	CL	FF	GALV	-	2	-	1 / 13/ASD-1.0	1,2,7,9
G2	(N) 3'-0" x 4'-0"	CL	FF	GALV	-	2	-	S/ASD-1.0	1,2,7,9
G3	(N) 3'-8" x 6'-0"	CL	FF	GALV	-	2	-	S/ASD-1.0	1,2,7,9
G4	(N) 3'-0" x 6'-0"	CL	FF	GALV	PH	1	-	4/ASD-1.0	1,2,3,4,5,8

GENERAL NOTES:

1. GATE HEIGHT TO MATCH ADJACENT FENCING
2. ADJECENT FENCE TO MATCH GATE FINISH
3. CLOSING SPEED: 90 DEGRESS TO 12 DEGRESS IN 5 SECONDS
4. PROVIDE KICK PLATE
5. MANUAL CANE BOLTS, MANUALLY LOCKING HARDWARE OR CHAINS NOT ALLOWED ON GATES WITH PANIC HARDWARE
6. KNOX BOX PER LOCAL FIRE AUTHORITY REQUIREMENTS
7. PROVIDE PADLOCK AS PART OF HARDWARE SET
8. NO PADLOCKS ON EXIT GATES IN THE PATH OF EGRESS GATES SHALL HAVE 5 LBS MAX OPERATING PRESSURE
9. SERVICE GATE ONLY

GATE SCHEDULE ABBREVIATIONS:

CL GALVANIZED STEEL CHAIN LINK
FF FACTORY FINISH
FIN FINISH
HDW HARDWARE
GALV GLAVANIZED
MAT'L MATERIAL
MTL METAL
OSF ORNAMENTAL STEEL FENCE
PH PANIC HARDWARE
PR PAIR OF GATES
PTD PAINTED
VC VINYL COATED

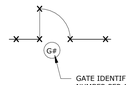

GATE IDENTIFICATION NUMBER PER GATE SCHEDULE

HARDWARE GROUP NO. 1

PROVIDE EACH SGL GATE WITH THE FOLLOWING:

1	SET	GATE HINGE/CLOSER	MAMMOTH-180	689	LOC
1	EA	PANIC HARDWARE	CD51-PA-AX-99-NL-WH	626	VON
1	EA C-R	MORTISE CYLINDER (DOGGING)	KEYWAY TO MATCH SCHOOL SITE		626
1	EA C-R	RIM CYLINDER	KEYWAY TO MATCH SCHOOL SITE		626
1	EA	WELD-IN LOCK BX	K-BXED-V990NL-2	600	KEE
1	EA	FLOOR STOP	FS18L	BLK	IVE
	SET	NOTE	REMAINDER OF HARDWARE BY GATE MANUFACTURER/SUPPLIER		B/O

HARDWARE GROUP NO. 2

PROVIDE EACH SERVICE GATE WITH THE FOLLOWING:

1	EA	PADLOCK	KEYWAY TO MATCH SCHOOL SITE	626	C-R
	SET	NOTE	REMAINDER OF HARDWARE BY GATE MANUFACTURER/SUPPLIER		B/O
1	PAIR	DROP RODS			

GENERAL NOTES

1. VERIFY ALL DIMENSIONS PRIOR TO CONSTRUCTION.
2. ALL EXISTING CONDITIONS TO REMAIN UNLESS NOTED OTHERWISE.
3. PATCH AND REPAIR ANY DAMAGE CAUSED BY DEMOLITION. REPAIR TO MATCH EXISTING.
4. THE CONTRACTOR SHALL ARRANGE FOR THE COORDINATES ANY UTILITY SHUT DOWNS. THE CONTRACTOR SHALL HIRE PRIVATE UTILITY LOCATION SERVICES IN LOCATIONS ONSITE.
5. NO DEMOLITION SHALL BEGIN UNTIL DRAWINGS, INCLUDING DEMOLITION WORK, HAVE BEEN APPROVED BY DSA.
6. ALL DIMENSIONS SHOWN ON THIS SHEET INDICATE FIXTURES AND ACCESSORIES MINIMUM REQUIREMENTS FOR ACCESSIBILITY. REFER TO BOTH PLANS AND ELEVATIONS FOR LOCATIONS AND INFORMATION.
7. A CLEAR FLOOR SPACE 30" BY 48" COMPLY WITH CBC 2022 11B-305.3 SHALL BE PROVIDED IN FRONT OF A LAVATORY TO ALLOW FORWARD APPROACH. SUCH CLEAR FLOOR SPACE SHALL ADJOIN OR OVERLAP AN ACCESSIBLE ROUTE. PER CBC 2022 11B-305
8. WATER CLOSET AND URINAL FLUSH VALVE CONTROLS, AND FAUCET AND OPERATING MECHANISM CONTROLS, SHALL BE OPERABLE WITH ONE HAND, SHALL NOT REQUIRE TIGHT GRASPING, PINCHING, OR TWISTING OF THE WRIST, AND SHALL BE MOUNTED NO MORE THAN 44" ABOVE THE FLOOR (PER CBC 2022 11B-308) AND REQUIRE A FORCE TO OPERATE TO BE NO GREATER THAN 5 LBF. MAX. (PER CBC 2022 11B-309.4). CONTRACTOR TO FIELD VERIFY EXISTING CONDITIONS AND CORRECT AS NECESSARY TO COMPLY WITH CODE.
9. DOORS TO DEMONSTRATE 5 LBS. OPENING FORCE MAX UNLATCHING AND 5 LBS. FORCE MAX OPERATING PRESSURE PER CBC 11B-404.2.9.
10. DOOR CLOSER SHALL BE ADJUSTED SO THAT FROM AN OPEN POSITION OF 90 DEGREES, THE TIME REQUIRED TO MOVE THE DOOR TO A POSITION OF 12 DEGREES FROM THE LATCH IS 5 SECONDS MINIMUM. CBC 11B-404.2.8.1. DOOR SPRING HINGES SHALL BE ADJUSTED SO THAT FROM THE OPEN POSITION OF 70 DEGREES, THE DOOR SHALL MOVE TO THE CLOSED POSITION IN 1.5 SECONDS MINIMUM PER CBC 11B-404.2.8.2.

KEYNOTES

SITE LEGEND

EXISTING

- EXISTING BUILDING TO REMAIN (N.I.C.)
- EXISTING CONCRETE TO REMAIN
- EXISTING ASPHALT PAVING TO REMAIN
- EXISTING LANDSCAPE TO REMAIN
- EXISTING PLAYGROUND PROTECTIVE SURFACING TO REMAIN
- EXISTING DECOMPOSED GRANITE TO REMAIN
- EXISTING SAFE DISPERSAL AREA PER A# 04-123039

NEW

- PORTABLE BUILDING 'N' & 'P'
- NEW CONCRETE PAVING PER CIVIL DWGS
- NEW ASPHALT PER CIVIL DWGS

- SITE PROPERTY LINE
- ASSUMED PROPERTY LINE
- (E) CHAIN LINK FENCING AND GATE TO REMAIN, PROTECT IN PLACE
- (N) T-STAND CHAIN LINK FENCE, TYP UNO
- (N) CHAIN LINK FENCE, TYP UNO

STAMPS

AGENCY APPROVAL
File No: ######.01/DA-124403

CONSULTANT BRANDING

RUHNAU CLARKE ARCHITECTS

COLTON MS INTERIM HOUSING: ADDENDUM 01 - 07/09/25

PROJECT No. :1-15-118
7/9/2025 10:42:54 AM

DRAWN BY: DELTA # 1 DATE 07/09/25; DELTA # DATE; DELTA # DATE; DELTA # DATE
CHECKED BY: ☒ ADO ☐ AFO ☐ CCD ☐ REV; ☐ ADO ☐ AFO ☐ CCD ☐ REV; ☐ ADO ☐ AFO ☐ CCD ☐ REV; ☐ ADO ☐ AFO ☐ CCD ☐ REV

RUHNAUCLARKE.COM
3775 TENTH STREET, RIVERSIDE CALIFORNIA 92501 (951) 684 4664 / 5751 PALMER WAY, SUITE C, CARLSBAD CALIFORNIA 92010 (760) 438 5899

COLTON MS INTERIM HOUSING
670 W. LAUREL ST, COLTON, CA 92324
COLTON JOINT UNIFIED SCHOOL DISTRICT

OVERALL SITE PLAN & CODE ANALYSIS

AS-1.1

1-15-118

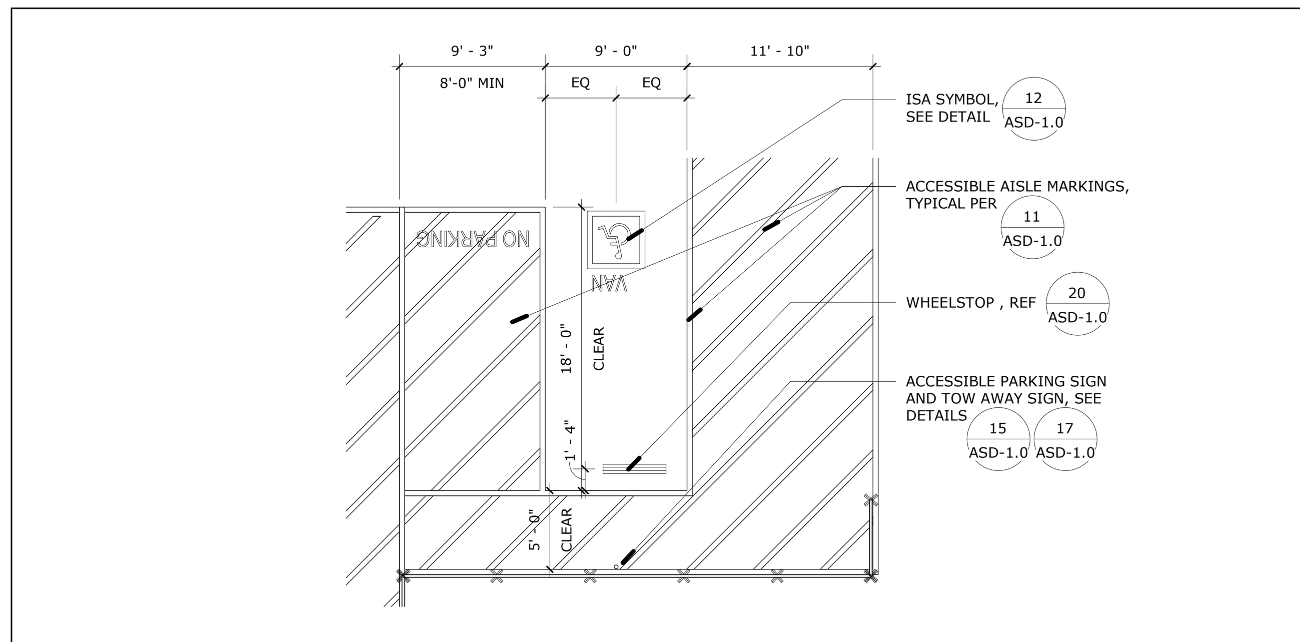

ACCESSIBLE VAN PARKING SCALE: 1/8" = 1'-0" 26

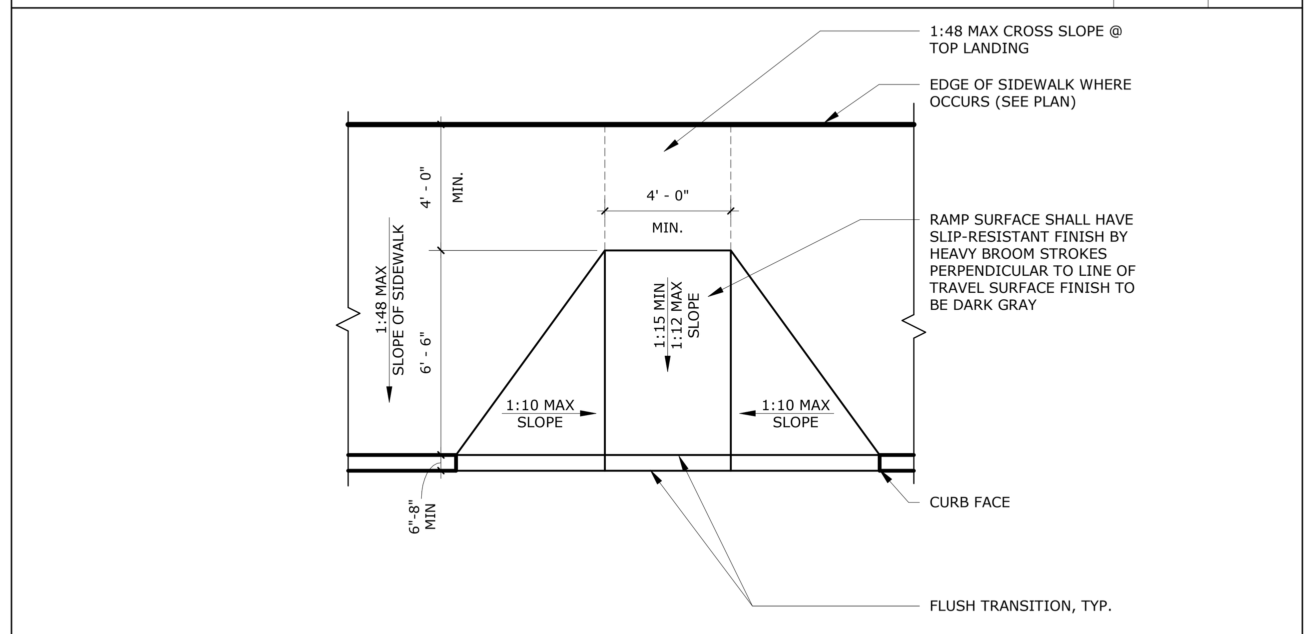

ACCESSIBLE CURB CUT RAMP SCALE: 1/4" = 1'-0" 27

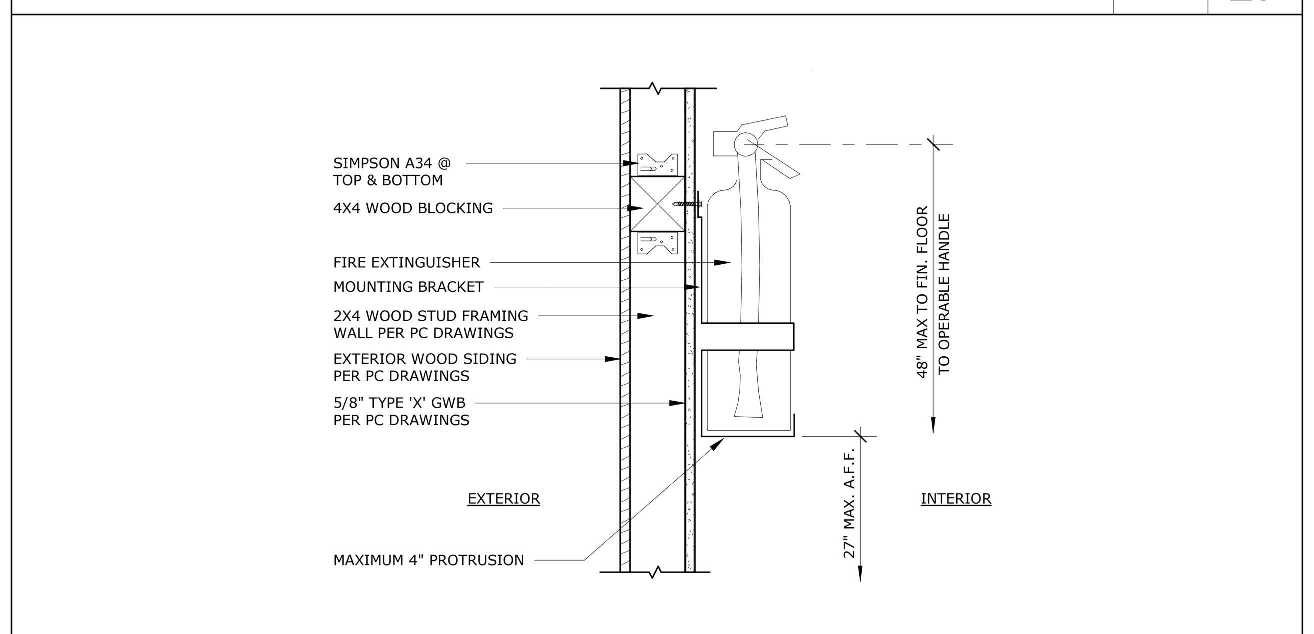

WALL MTD FIRE EXTINGUISHER SCALE: 1 1/2" = 1'-0" 28

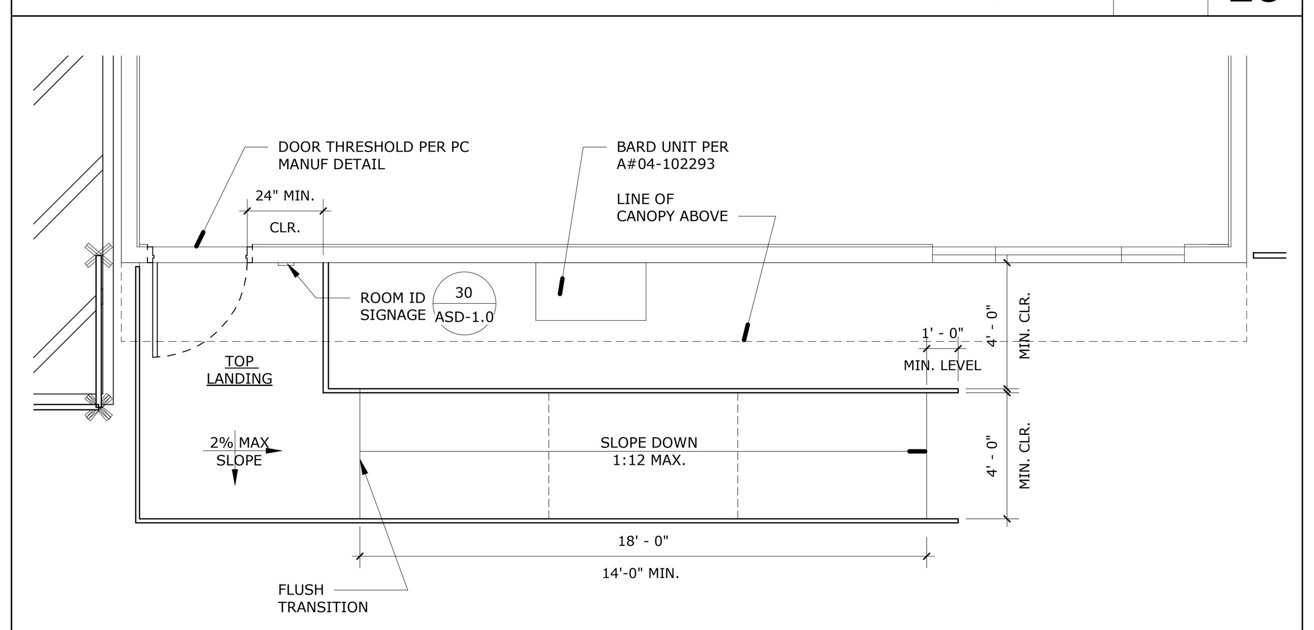

SOUTH RELOCATABLE RAMP @ N SCALE: 1/4" = 1'-0" 29

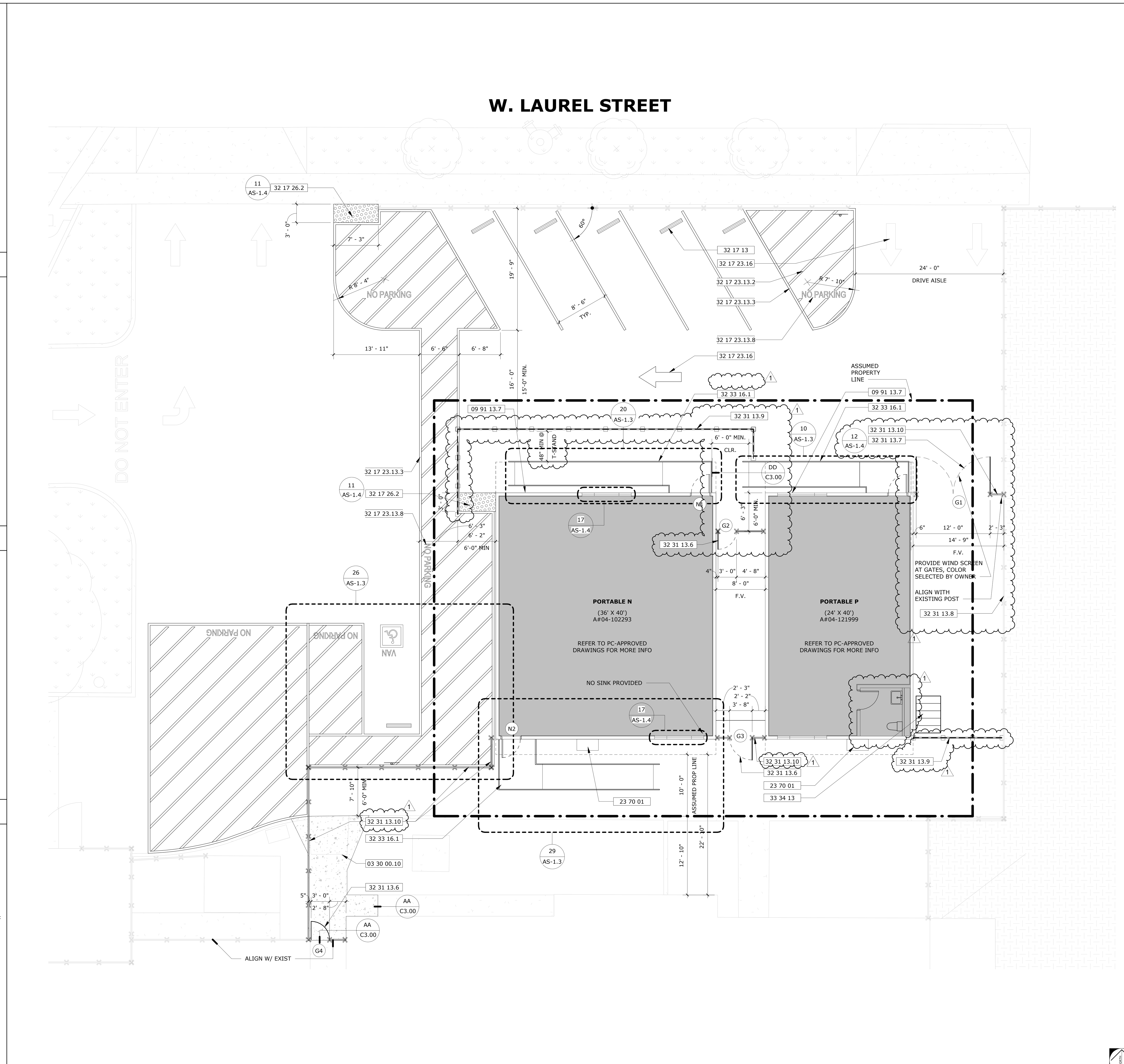

ENLARGED SITE PLAN - PARKING LOT MOD SCALE: 1/8" = 1'-0" 9

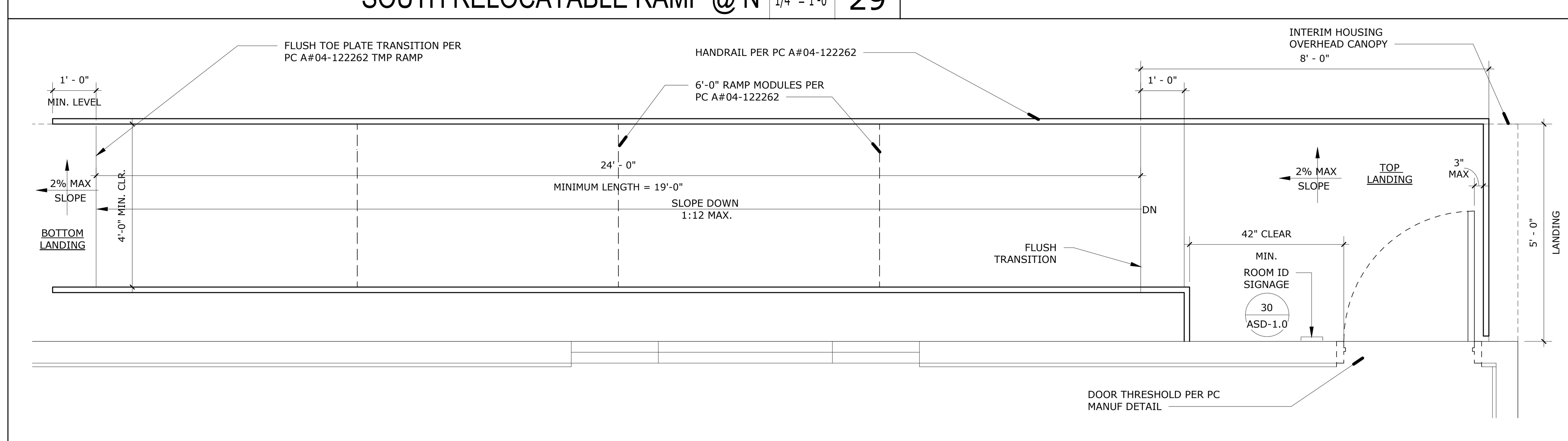

NORTH RELOCATABLE RAMP @ N SCALE: 1/2" = 1'-0" 20

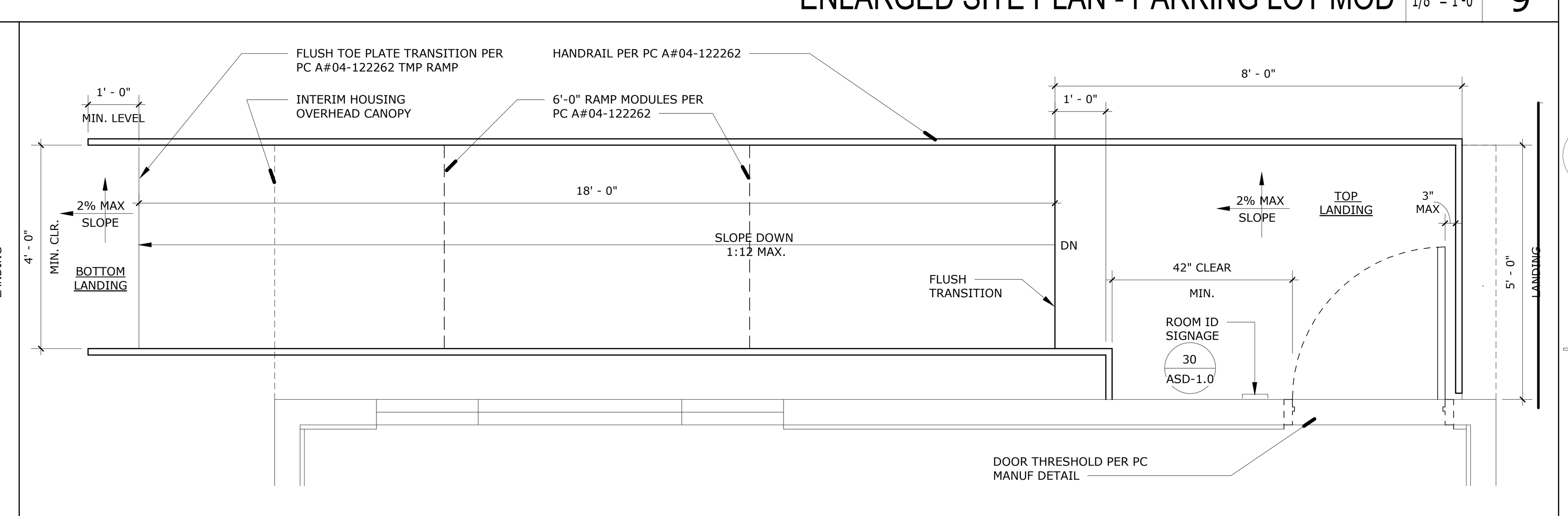

RELOCATABLE RAMP @ P SCALE: 1/2" = 1'-0" 10

STAMPS

AGENCY APPROVAL

CONSULTANT BRANDING

RUHNAU CLARKE ARCHITECTS

GENERAL NOTES

1. VERIFY ALL DIMENSIONS PRIOR TO CONSTRUCTION.
2. ALL EXISTING CONDITIONS TO REMAIN UNLESS NOTED OTHERWISE.
3. PATCH AND REPAIR ANY DAMAGE CAUSED BY DEMOLITION. REPAIR TO MATCH EXISTING.
4. THE CONTRACTOR SHALL ARRANGE FOR THE COORDINATES ANY UTILITY SHUT DOWNS. THE CONTRACTOR SHALL HIRE PRIVATE UTILITIY LOCATION SERVICES IN LOCATIONS ONSITE.
5. NO DEMOLITION SHALL BEGIN UNTIL DRAWINGS, INCLUDING DEMOLITION WORK, HAVE BEEN APPROVED BY DSA.
6. ALL DIMENSIONS SHOWN ON THIS SHEET INDICATE FIXTURES AND ACCESSORIES MINIMUM REQUIREMENTS FOR ACCESSIBILITY. REFER TO BOTH PLANS AND ELEVATIONS FOR LOCATIONS AND INFORMATION.
7. A CLEAR FLOOR SPACE 30" BY 48" COMPLY WITH CBC 2022 11B-305.3 SHALL BE PROVIDED IN FRONT OF A LAVATORY TO ALLOW FORWARD APPROACH. SUCH CLEAR FLOOR SPACE SHALL ADJOIN OR OVERLAP AN ACCESSIBLE ROUTE. PER CBC 2022 11B-305
8. WATER CLOSET AND URINAL FLUSH VALVE CONTROLS, AND FAUCET AND OPERATING MECHANISM CONTROLS, SHALL BE OPERABLE WITH ONE HAND, SHALL NOT REQUIRE TIGHT GRASPING, PINCHING, OR TWISTING OF THE WRIST, AND SHALL BE MOUNTED NO MORE THAN 44" ABOVE THE FLOOR (PER CBC 2022 11B-308) AND REQUIRE A FORCE TO OPERATE TO BE NO GREATER THAN 5 LBF. MAX. (PER CBC 2022 11B-309.4). CONTRACTOR TO FIELD VERIFY EXISTING CONDITIONS AND CORRECT AS NECESSARY TO COMPLY WITH CODE.
9. DOORS TO DEMONSTRATE 5 LBS. OPENING FORCE MAX UNLATCHING AND 5 LBS. FORCE MAX OPERATING PRESSURE PER CBC 11B-404.2.9.
10. DOOR CLOSER SHALL BE ADJUSTED SO THAT FROM AN OPEN POSITION OF 90 DEGREES, THE TIME REQUIRED TO MOVE THE DOOR TO A POSITION OF 12 DEGREES FROM THE LATCH IS 5 SECONDS MINIMUM. CBC 11B-404.2.8.1. DOOR SPRING HINGES SHALL BE ADJUSTED SO THAT FROM THE OPEN POSITION OF 70 DEGREES, THE DOOR SHALL MOVE TO THE CLOSED POSITION IN 1.5 SECONDS MINIMUM PER CBC 11B-404.2.8.2.

KEYNOTES

03 30 00.10	CONCRETE PAVING PER CIVIL DWGS
09 91 13.7	(N) EXTERIOR BUILDING SIGNAGE, PAINT TO CONTRAST ADJACENT WALL SURFACE, REF 12/AS1.4
23 70 01	HVAC EQUIPMENT PER PORTABLE DRAWINGS MANUFACTURER
32 17 13	(N) CONCRETE WHEEL STOP
32 17 23.13.2	(N) PAVEMENT MARKING, WHITE 4" WIDE DIAGONAL STRIPING
32 17 23.13.3	(N) PAVEMENT MARKING, WHITE 4" WIDE FULLY ENCLOSED BORDER
32 17 23.13.8	(N) 12" HIGH 'NO PARKING' WHITE LETTERING - NO STRIPING SHALL OVERLAP LETTERING
32 17 23.16	PAINTED WHITE PAVEMENT ARROWS
32 17 26.2	PLASTIC TACILE AND DETECTABLE WARNING TILES
32 31 13.6	SINGLE LEAF CHAIN LINK GATE
32 31 13.7	DOUBLE LEAF CHAIN LINK GATE
32 31 13.8	(E) 6'-0" H CHAIN LINK FENCE AND FOOTING TO REMAIN, PROTECT IN PLACE
32 31 13.9	(N) 4'-0" H CHAIN LINK FENCE, REF LEGEND FOR FENCING TYPE
32 31 13.10	(N) 6'-0" H CHAIN LINK FENCE, REF LEGEND FOR FENCING TYPE
32 33 16.1	RAMP PER PC#04-122262, OFOI
33 34 13	HOLDING TANK

DOOR HARDWARE

NO.	DOOR SIZE (W x H)	MAT'L	FIN	PANIC HDW	HDW GROUP	SIGNAGE	NOTES
N1	(N) 3'-0" x 7'-0"	KD	SCL	-	HW-1	-	-
N2	(N) 3'-0" x 7'-0"	KD	SCL	-	HW-1	-	-

ADMIN OFFICE		EXTERIOR DOOR HW-1	
LOCKSET	TAH LHV75-LFIC SAT	FINISH 626	OR EQ.
I/C CORE	SCHLAGE 23-030 C123	FINISH 626	OR EQ.
BUTTS	TAH BB179 4-1/2"x4-1/2" NRP	FINISH 626	OR EQ.
CLOSER	TAH DC851 DA	FINISH 689	OR EQ.
WEATHER STRIP	COLUMBIA 3340S 3684	FINISH ALUM	OR EQ.
THRESHOLD	COLUMBIA 4920 36"	FINISH ALUM	OR EQ.
DOOR BOTTOM	COLUMBIA 2590 36"	FINISH ALUM	OR EQ.

LEGEND

EXISTING

(E) CONCRETE TO REMAIN

(E) ASPHALT PAVING TO REMAIN

(E) LANDSCAPE TO REMAIN

(E) DECOMPOSED GRANITE TO REMAIN

(E) TREE TO REMAIN

NEW

FENCE PER PLAN

GATE IDENTIFICATION NUMBER. SEE GATE SCHEDULE ON **SHEET AS-1.1**

NEW

MODERNIZATION BLDG

NEW BUILDING

NEW CONCRETE PAVING PER CIVIL DWGS, REFER TO 1/C3.00

CONCRETE CONTROL JOINT, REFER TO BB/C3.00

CONCRETE EXPANSION JOINT, REFER TO DETAILS AA/C3.00 AND CC/C3.00

NEW CONCRETE ASPHALT PAVING PER CIVIL DWGS, REFER TO 2/C3.00

(E) CHAIN LINK FENCE TO REMAIN. PROTECT IN PLACE

NEW CHAINLINK FENCE PER DETAIL: 2 ASD-1.0

NEW T-STAND CHAINLINK FENCE PER DETAIL: 20 AS-1.4

COLTON MS INTERIM HOUSING: ADDENDUM 01 - 07/09/25

PROJECT No. :1-15-118
7/9/2025 10:42:57 AM

DRAWN BY: / CHECKED BY:
DELTA # 1 DATE 07/09/25 ☒ADD ☐AFO ☐CCD ☐REV
DELTA # ____ DATE ____ ☐ADD ☐AFO ☐CCD ☐REV
DELTA # ____ DATE ____ ☐ADD ☐AFO ☐CCD ☐REV
DELTA # ____ DATE ____ ☐ADD ☐AFO ☐CCD ☐REV

RUHNAUCLARKE.COM
3775 TENTH STREET, RIVERSIDE CALIFORNIA 92501 (951) 684 4664 / 5751 PALMER WAY, SUITE C, CARLSBAD CALIFORNIA 92010 (760) 438 5899

COLTON MS INTERIM HOUSING
670 W. LAUREL ST, COLTON, CA 92324
COLTON JOINT UNIFIED SCHOOL DISTRICT

ENLARGED SITE PLAN AT PARKING LOT MOD

AS-1.3

1-15-118

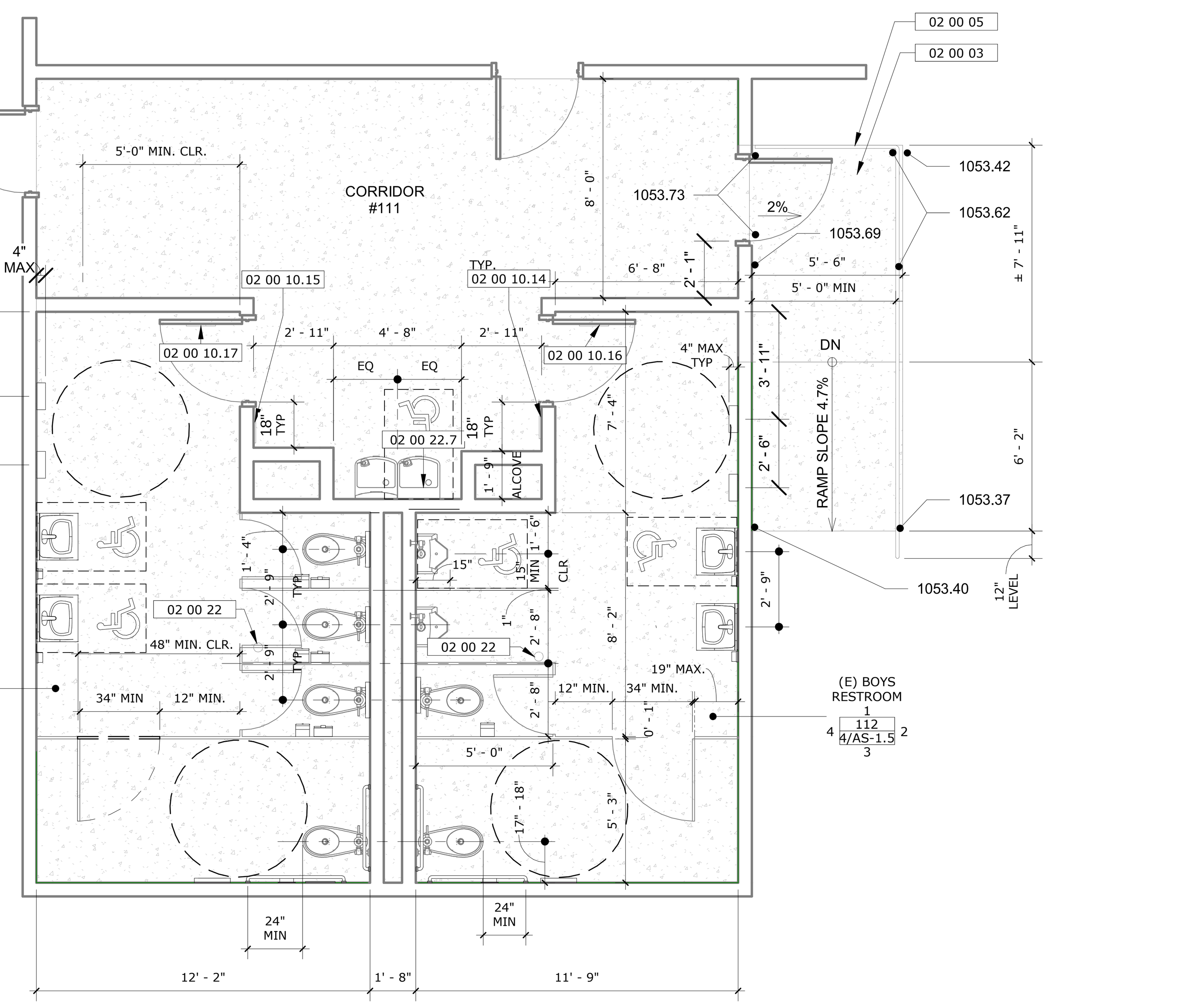

(E) BOYS & GIRLS RESTROOMS @ (E) MPR BLDG PER A# 04-114164

SCALE: 1/4" = 1'-0" 22

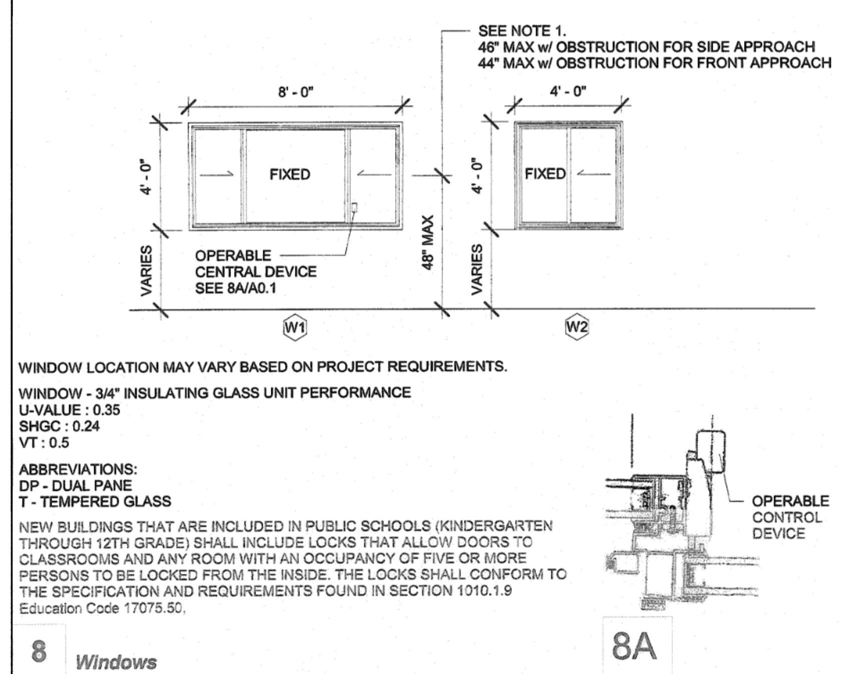

WINDOW OPERABLE CONTROL

SCALE: 12" = 1'-0" 17

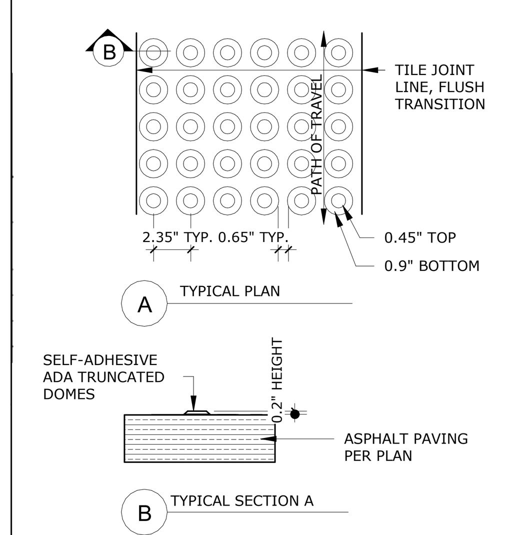

NOTES:
1. SELF-ADHESIVE DETECTABLE WARNING SURFACE SHALL CONTRAST VISUALLY WITH ADJOINING SURFACES.
2. DETECTABLE WARNING SURFACE SHALL FORM A CONTINUOUS SURFACE FROM CROSSWALK.
3. APPLY DIRECTLY ON ASPHALT AS REQUIRED TO INSTALL WARNING SURFACE.
4. TILE SHOULD BE YELLOW FEDERAL COLOR #33538 STANDARD NUMBER 595C

TRUNCATED DOMES

SCALE: 1 1/2" = 1'-0" 11

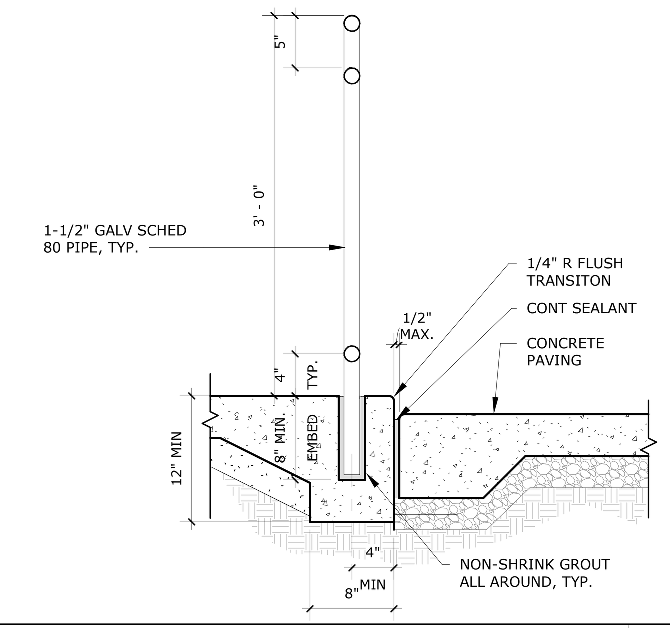

(E) RAIL

SCALE: 1" = 1'-0" 4

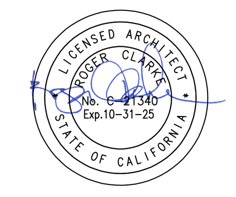
STAMPS

CONSULTANT BRANDING

AGENCY APPROVAL
File No: ######A#04-124403

RUHNAU CLARKE ARCHITECTS

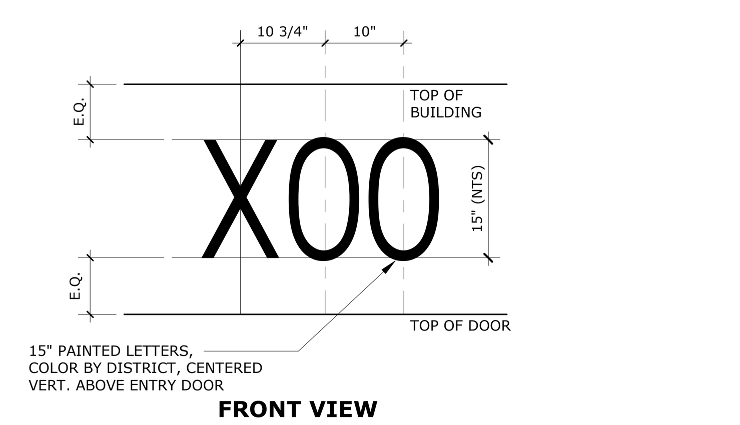

NOTES:
1. SIGNAGE FONT TO BE 'CENTURY GOTHIC'.
2. REFER TO ENLARGED SITE PLAN ON SHEEET AS1.3 FOR LOCATIONS.

BUILDING I.D. SIGN

SCALE: 3/4" = 1'-0" 12

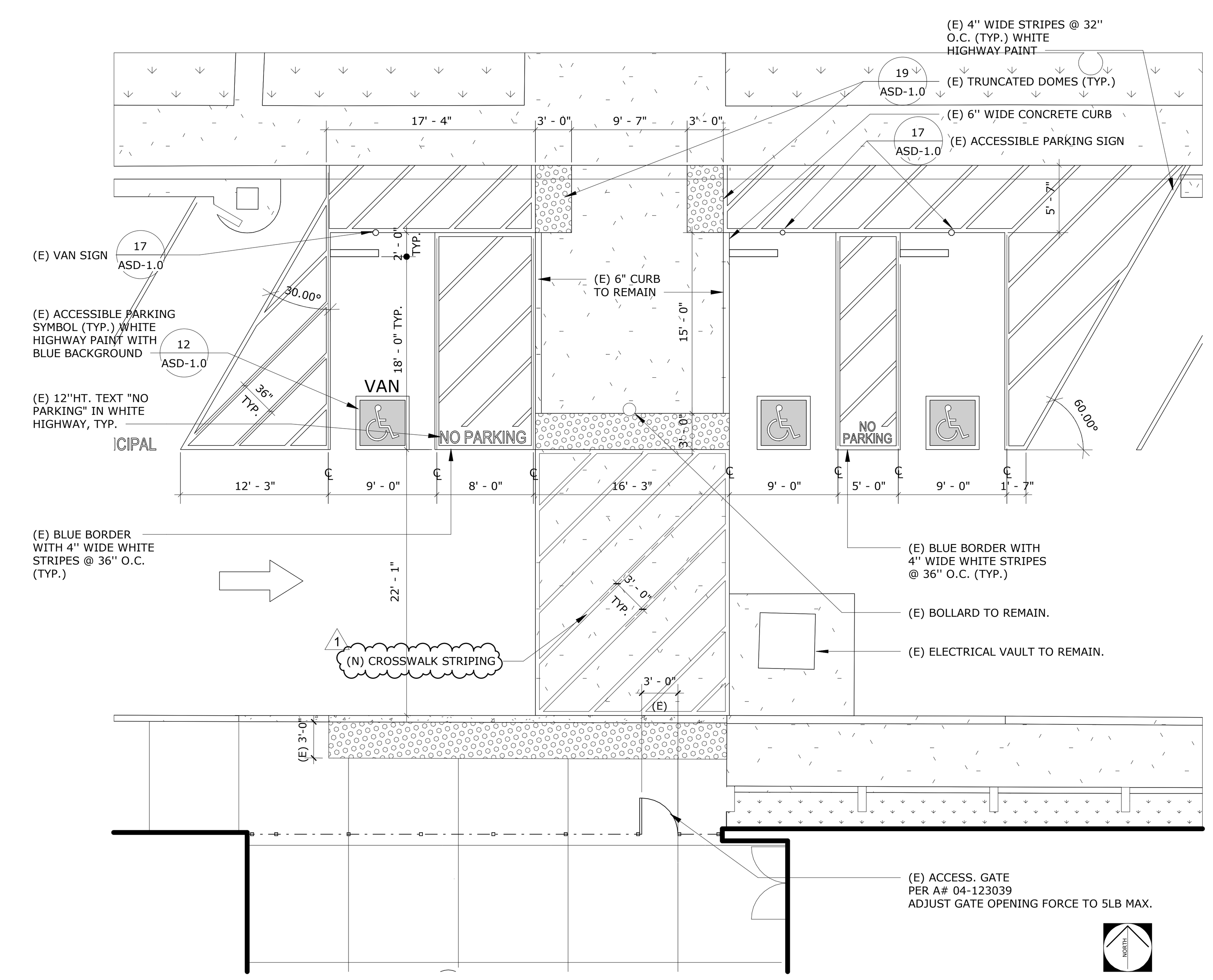

(E) ENLARGED SITE PLAN

SCALE: 1/8" = 1'-0" 1

02 00 03	(E) CONCRETE SLAB
02 00 05	(E) STEEL PIPE HANDRAIL & POST TYP, GLAV FINISH
02 00 09	(E) 4" HIGH TILE COVE BASE
02 00 09.1	(E) TILE WALL FINISH TO REMAIN
02 00 10.1	(E) URINAL SCREEN PER A# 04-114164 TO REMAIN, PROTECT IN PLACE
02 00 10.2	(E) TOILET PARTITION TO REMAIN, PROTECT IN PLACE. SEE NOTE 1
02 00 10.3	(E) ACCESSIBLE REAR GRAB BAR TO REMAIN, PROTECT IN PLACE
02 00 10.4	(E) ACCESSIBLE SIDE GRAB BAR TO REMAIN, PROTECT IN PLACE
02 00 10.5	(E) ACCESSIBLE TOILET SEAT COVER DIPENSER TO REMAIN, PROTECT IN PLACE
02 00 10.6	(E) ACCESSIBLE TOILET TISSUE DIPENSER TO REMAIN, PROTECT IN PLACE
02 00 10.7	(E) ACCESSIBLE MIRROR TO REMAIN, PROTECT IN PLACE
02 00 10.8	(E) ACCESSIBLE SOAP DISPENSER TO REMAIN, PROTECT IN PLACE
02 00 10.9	(E) ACCESSIBLE ELECTRIC HAND DRYER W/ 4" MAX PROJECTION TO REMAIN, PROTECT IN PLACE
02 00 10.10	(E) ACCESSIBLE SANITARY NAPKIN DISPENSER TO REMAIN, PROTECT IN PLACE
02 00 10.11	(E) SANITARY NAPKIN DISPENSER TO REMAIN, PROTECT IN PLACE
02 00 10.12	(E) TOILET SEAT COVER DIPENSER TO REMAIN, PROTECT IN PLACE
02 00 10.13	(E) TOILET TISSUE DIPENSER TO REMAIN, PROTECT IN PLACE
02 00 10.14	(E) BOYS RESTROOM WALL SIGNAGE PER A# 04-114164 TO REMAIN, PROTECT IN PLACE
02 00 10.15	(E) GIRLS RESTROOM WALL SIGNAGE PER A# 04-114164 TO REMAIN, PROTECT IN PLACE
02 00 10.16	(E) BOYS DOOR SIGNAGE PER A# 04-114164 TO REMAIN, PROTECT IN PLACE
02 00 10.17	(E) GIRLS DOOR SIGNAGE PER A# 04-114164 TO REMAIN, PROTECT IN PLACE
02 00 10.20	
02 00 22	(E) ACCESSIBLE FLOOR DRAIN PER A# 04-114164 TO REMAIN, PROTECT IN PLACE
02 00 22.1	(E) WATER CLOSET TO REMAIN, PROTECT IN PLACE
02 00 22.2	(E) URINAL TO REMAIN, PROTECT IN PLACE
02 00 22.3	(E) LAVATORY TO REMAIN, PROTECT IN PLACE. SEE NOTE 2
02 00 22.4	(E) ACCESSIBLE LAVATORY PER A# 04-114164 TO REMAIN, PROTECT IN PLACE
02 00 22.5	(E) ACCESSIBLE WATER CLOSET PER A# 04-114164 TO REMAIN, PROTECT IN PLACE
02 00 22.6	(E) ACCESSIBLE URINAL PER A# 04-114164 TO REMAIN, PROTECT IN PLACE
02 00 22.7	(E) ACCESSIBLE HI-LOW DRINKING FOUNTAIN PER A# 04-114164 TO REMAIN, PROTECT IN PLACE

RESTROOM KEYNOTES

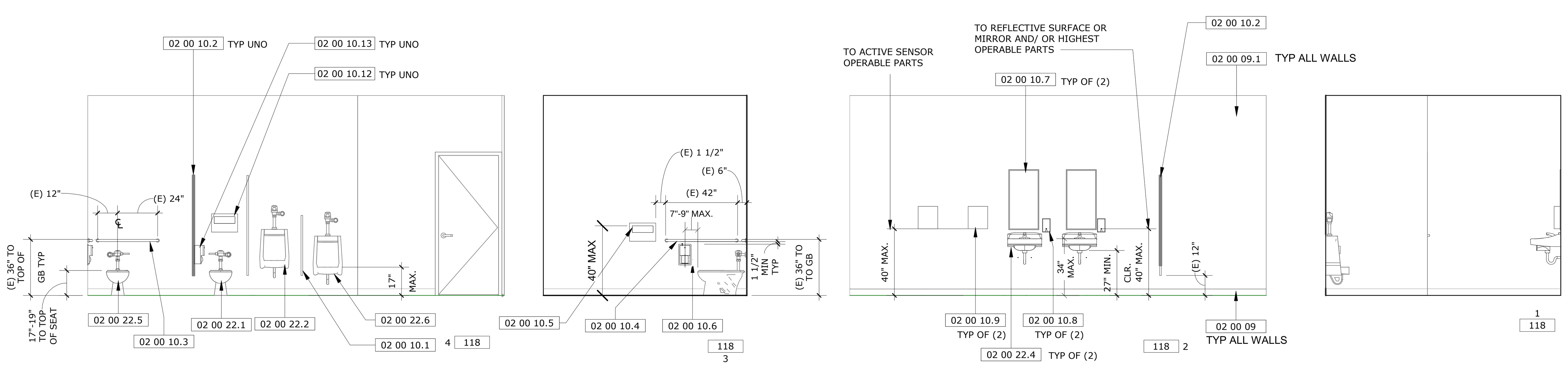

EXISTING BOYS RESTROOM ELEVATIONS - 118 (ADULT)

SCALE: 1/4" = 1'-0" 13

1. EXISTING TOILET PARTITION WITH DOOR WHERE OCCURS TO REMAIN, PROTECT IN PLACE. WITH NO SHARP EDGES OR ABRASIVE SURFACE AT BOTTOM OF PARTITION, TYP.
2. EXISTING LAVATORY TO REMAIN, PROTECT IN PLACE. W/ WRAPPED INSULATION DRAIN AND ALL WATER PIPING TO PREVENT CONTACT. THERE SHALL BE NO ABRASIVE SURFACES OR SHARP EDGES AT THE BOTTOM OF THE LAVATORIES PER CBC 11B-606.5
3. THE DOOR AT WHEELCHAIR ACCESSIBLE STALLS SHALL BE SELF-CLOSING. A DOOR PULL COMPLYING WITH SECTION 11B-404.2.7 SHALL BE PLACED ON BOTH SIDES OF THE DOOR NEAR THE LATCH. (CBC 11B-604.8.1.2 & 11B-604.8.2.2)
4. ALL THE PLUMBING FIXTURES AND TOILET ACCESSORIES ARE TO REMAIN, PROTECT IN PLACE PER A# 04-114164
5. ALL DIMENSIONS ARE EXISTING & TO THE FACE OF FINISH

RESTROOM GENERAL NOTES

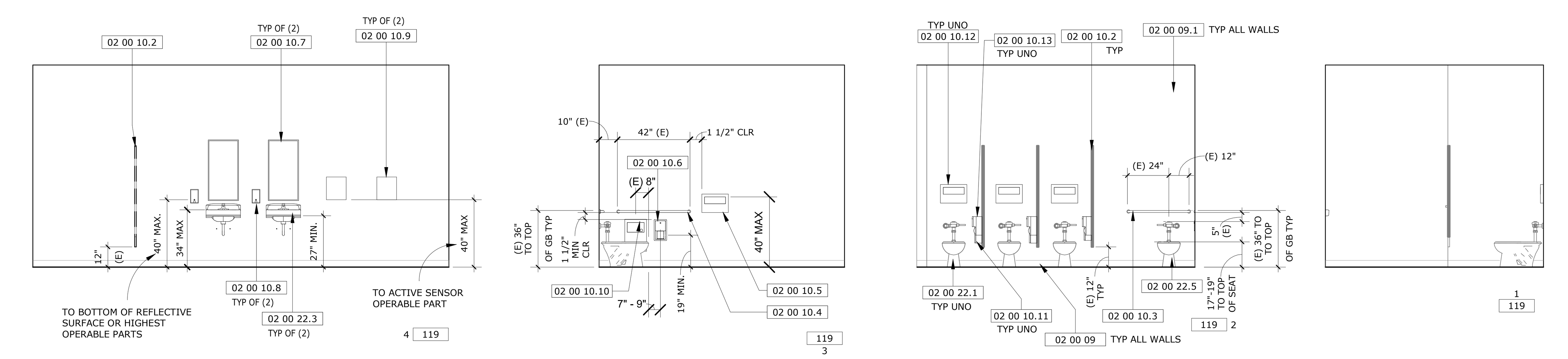

EXISTING GIRLS RESTROOM ELEVATIONS - 119 (ADULT)

SCALE: 1/4" = 1'-0" 14

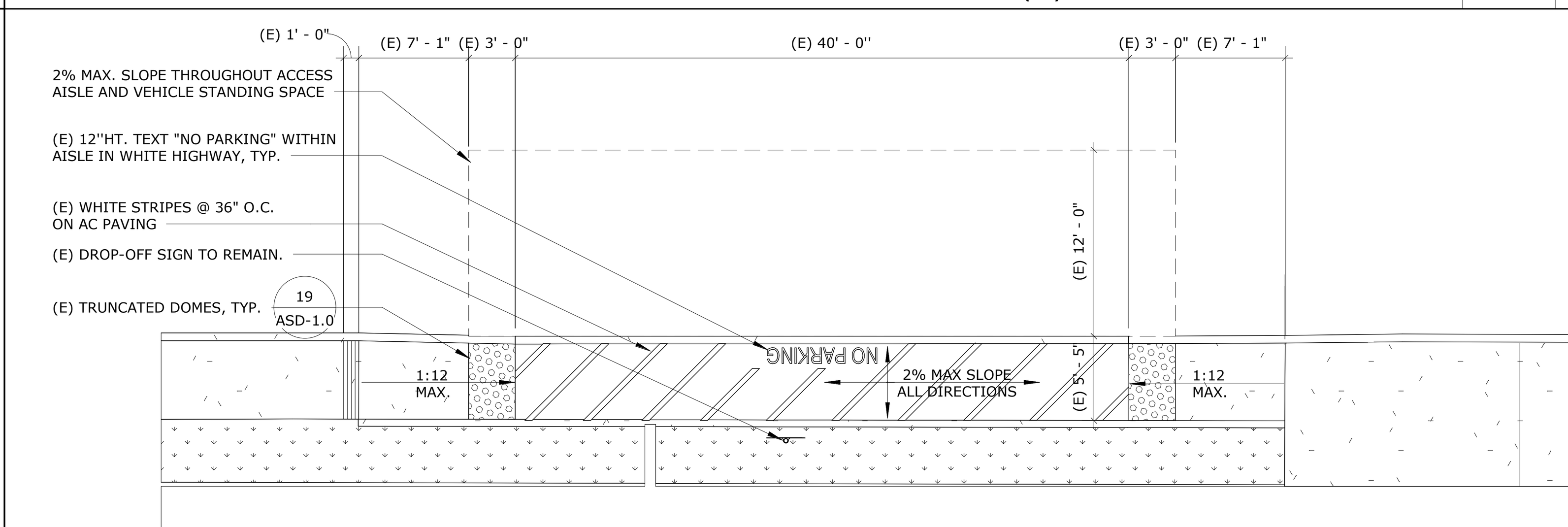

NOTE: REFER TO C2.0 FOR SPOT ELEVATIONS

(E) ENLARGED SITE PLAN - DROP-OFF 40'

SCALE: 1/8" = 1'-0" 2

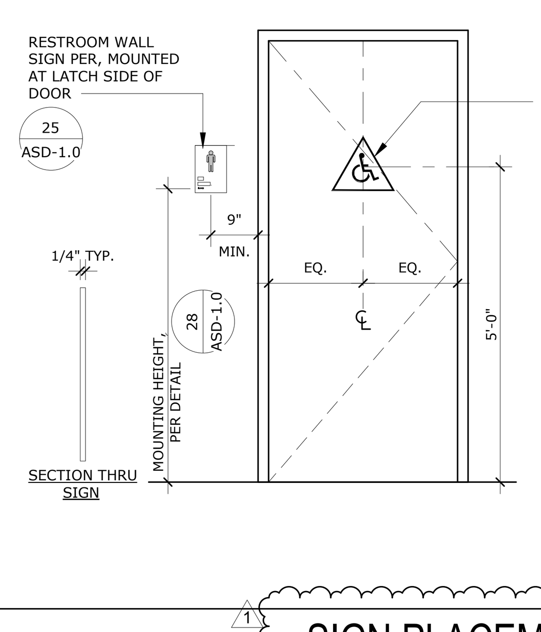

NOTES:
1. FOR ADDITIONAL INFORMATION, REFER TO DETAILS 28 ASD-1.0, 24 ASD-1.0

SIGN PLACEMENT

SCALE: 1/2" = 1'-0" 25

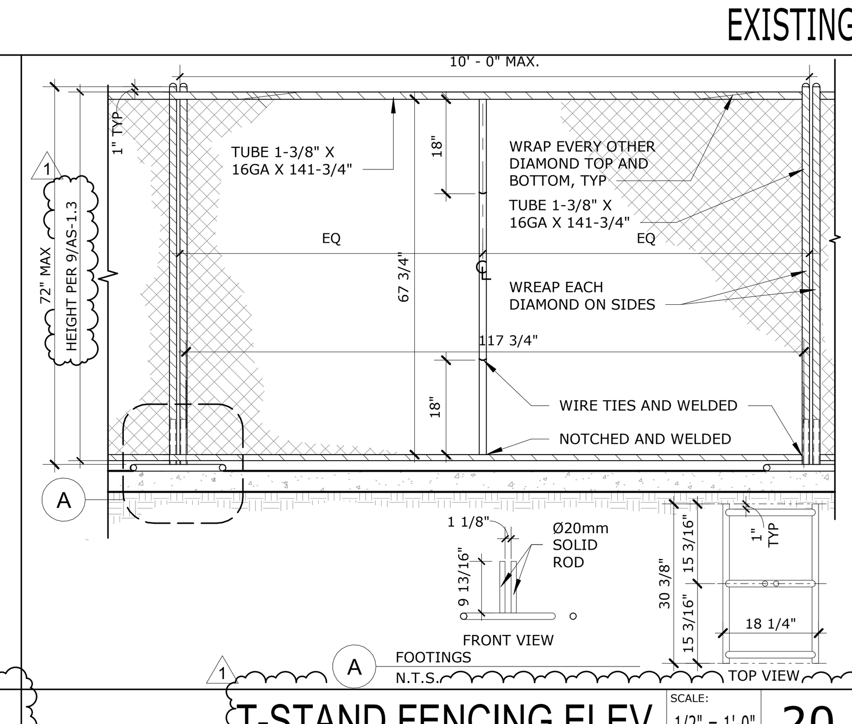

T-STAND FENCING ELEV

SCALE: 1/2" = 1'-0" 20

NOTE: REFER TO C2.0 FOR SPOT ELEVATIONS

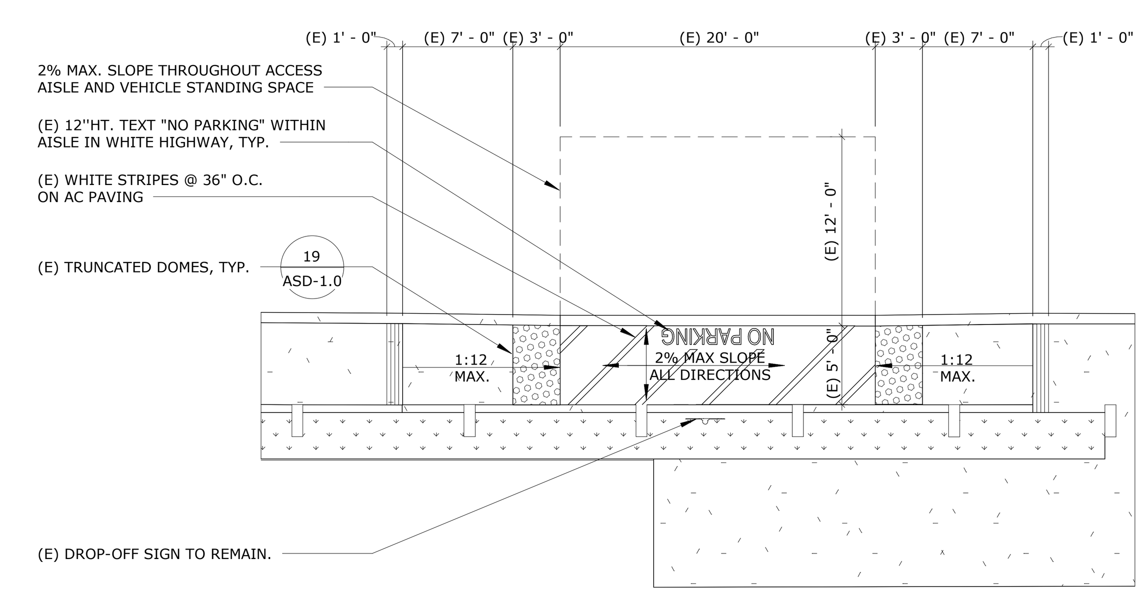

(E) ENLARGED SITE PLAN - DROP-OFF 20'

SCALE: 1/8" = 1'-0" 3

PROJECT No. :1-15-118
7/9/2025 10:42:57 AM

DRAWN BY: CHECKED BY:

DELTA # 1	DATE 07/09/25	☒ ADD	☐ AFO	☐ CCD	☐ REV
DELTA #	DATE	☐ ADD	☐ AFO	☐ CCD	☐ REV
DELTA #	DATE	☐ ADD	☐ AFO	☐ CCD	☐ REV
DELTA #	DATE	☐ ADD	☐ AFO	☐ CCD	☐ REV

RUHNAUCLARKE.COM

3775 TENTH STREET, RIVERSIDE CALIFORNIA 92501 (951) 684 4664 / 5751 PALMER WAY, SUITE C, CARLSBAD CALIFORNIA 92010 (760) 438 5899

COLTON MS INTERIM HOUSING

670 W. LAUREL ST, COLTON, CA 92324
COLTON JOINT UNIFIED SCHOOL DISTRICT

ENLARGED SITE PLAN, RESTROOM PLAN, AND ELEV.

AS-1.4

1-15-118

COLTON MS INTERIM HOUSING: ADDENDUM 01 - 07/09/25

BRAILLE:
11B-703.3 BRAILLE SHALL BE CONTRACTED (GRADE 2) AND SHALL COMPLY WITH SECTION 11B-703.3 AND 11B-703.4

11B-703.3.1 DIMENSION AND CAPITALIZATION. BRAILLE DOT SHALL HAVE A DOMED OR ROUNDED SHAPE AND SHALL COMPLY WITH TABLE 11B-703.3.1. THE INDICATOR OF AN UPPERCASE LETTER OR LETTERS SHALL ONLY BE USED BEFORE THE FIRST WORD OF SENTENCES, PROPER NOUNS AND NAMES, INDIVIDUAL LETTERS OF THE ALPHABET, NITIALS AND ACRONYMS.

11B-703.3.2 POSITION. BRAILLE SHALL BE POSITION BELOW THE CORRESPONDING TEXT IN HORIZONTAL FORMAT, FLUSH LEFT OR CENTERED. IF TEXT IS MULTI-LINED, BRAILLE SHALL BE PLACED BELOW THE ENTIRE TEXT. BRAILLE SHALL BE SEPERATED 3/8 INCH (9.5 MM) MINIMUM AND 1/2 INCH (12.7 MM) MAXIMUM FROM ANY OTHER TACTILE CHARACTERS AND 3/8 INCH (9.5 MM) MINIMUM FROM RAISED BORDERS AND DECORATIVE ELEMENTS.

MEASUREMENT RANGE	MINIMUM IN INCHES/MAXIMUM IN INCHES
DOT BASE DIAMETER	0.059 (1.5 MM) TO 0.063 (1.6 MM)
DISTANCE BETWEEN TWO DOTS IN THE SAME CELL [1]	0.100 (2.5 MM)
DISTANCE BETWEEN CORRESPONDING DOTS IN ADJACENT CELL[1]	0.300 (7.6 MM)
DOT HEIGHT	0.025 (0.6 MM) TO 0.037 (0.9 MM)
DISTANCE BETWEEN CORRESPONDING DOTS FROM ONE CELL DIRECTLY BELOW	0.395 (10 MM) TO 0.400 (10.2 MM)

1. MEASURED CENTER TO CENTER

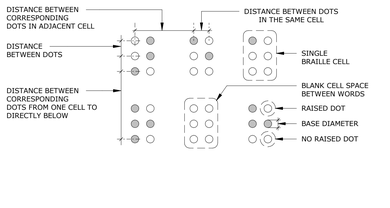

BRAILLE REQUIREMENTS — SCALE: 1" = 1'-0" — 27

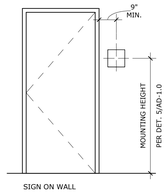

NOTES:
1. SIGNS TO BE LOCATED ADJACENT TO LATCH SIDE OF DOOR.

2. WHERE NO SPACE ON LATCH SIDE IS AVAILABLE, SIGNS TO BE LOCATED @ NEAREST ADJACENT WALL.

3. SIGNS TO BE LOCATED ON APPROACH SIDE OF DOOR AS ONE ENTERS ROOM OR SPACE.

4.SIGNS THAT IDENTIFY EXITS ARE TO BE LOCATED ON APPROACH SIDE OF DOOR AS ONE EXITS ROOM OR SPACE.

5. MOUNTING LOCATION SHALL BE DETERMINED SO THAT CLEAR FLOOR SPACE OF 18"X18" MIN., CENTERED ON THE TACTILE CHARACHTERS, IS PROVIEDED BEYOND THE ARC OF ANY DOOR SWING BETWEEN THE CLOSED POSITION AND 45° OPEN POSITION.

DOOR SIGN LOCATION — SCALE: 3/8" = 1'-0" — 21

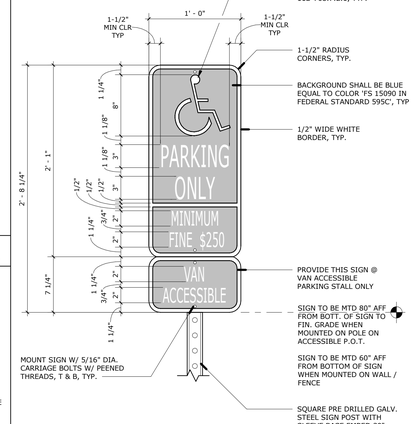

NOTES:
1. SIGN SHALL BE REFLECTORIZED. PROVIDE PORCELAIN ON STEEL.

2. ALL LETTERS & SYMBOLS SHALL BE WHITE

3. INCLUDE THE STATEMENT "VAN CCESSIBLE" AT VAN ACCESSIBLE PARKING STALL ONLY

SIGN - ACCESSIBLE PARKING — SCALE: 1 1/2" = 1'-0" — 17

NOTE:
FIRE LANE MARKINGS ARE TO BE PAINTED WITH NO LESS THAN TWO COATS OF APPROVED RED PAINT, TYP.

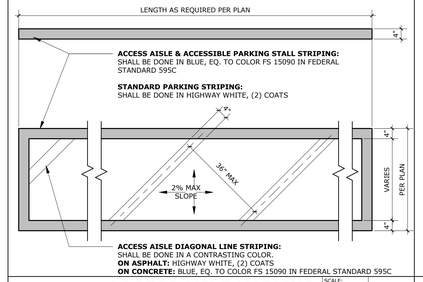

ACCESS AISLE MARKING — SCALE: 1/2" = 1'-0" — 11

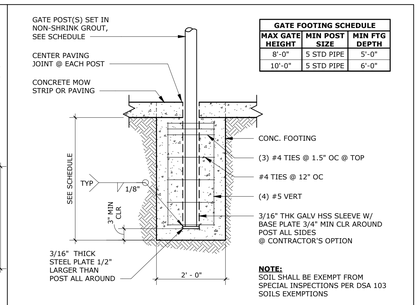

GATE FOOTING SCHEDULE		
MAX GATE HEIGHT	MIN POST SIZE	MIN FTG DEPTH
8'-0"	5 STD PIPE	5'-0"
10'-0"	5 STD PIPE	6'-0"

NOTE:
SOIL SHALL BE EXEMPT FROM SPECIAL INSPECTIONS PER DSA 103 SOILS EXEMPTIONS

GATE POST FTG — SCALE: 3/4" = 1'-0" — 6

STAMPS

AGENCY APPROVAL
File No: ######/DA-124403

RUHNAU CLARKE ARCHITECTS

CONSULTANT BRANDING

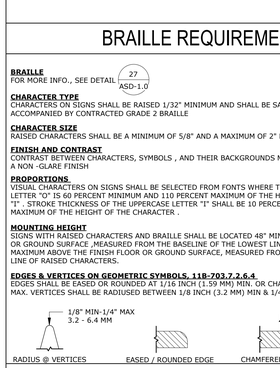

SIGNAGE REQUIREMENTS — SCALE: 1" = 1'-0" — 28

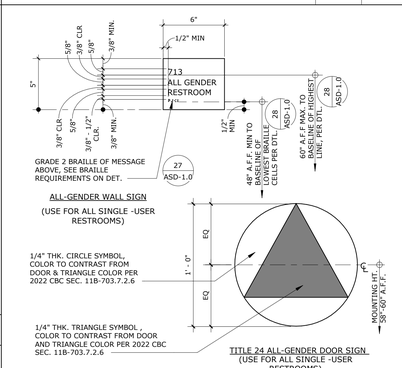

NOTE:
1. PLACE AT ALL FIRE EXIT DOORS .LOCATE SIGN TO WITHIN 9" MIN. O.C. OF DOOR LATCH. ATTACH WITH PERMANENT ADHESIVE LOCATED AT INTERIOR

2. FOR SIGNAGE REQUIREMENTS, SEE DETAIL 28

3. FOR LOCATION REQUIREMENTS, SEE FLOOR PLAN

EXIT SIGN — SCALE: 6" = 1'-0" — 22

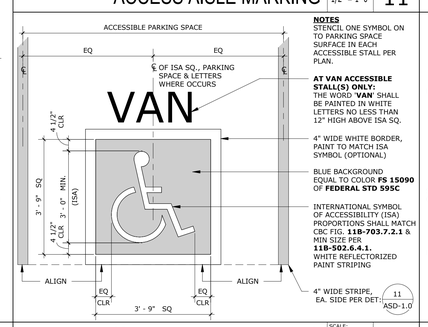

ISA PAVEMENT PARKING — SCALE: 1/2" = 1'-0" — 12

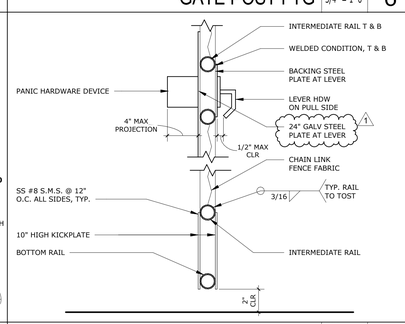

PH & KICKPLATE SECTION — SCALE: 1 1/2" = 1'-0" — 7

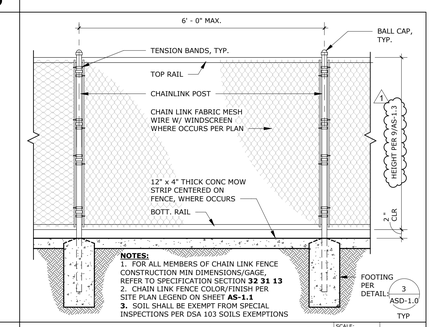

CHAINLINK FENCE ELEVATION — SCALE: 1/2" = 1'-0" — 2

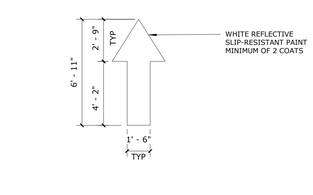

PAVEMENT ARROW MARKINGS — SCALE: 1/4" = 1'-0" — 29

NOTES
1. ALL TEXT /GRAPHICS TO BE WHITE ON CONTRASTING BACKGROUND,TYP.
2. BACKGROUND COLOR TO MATCH EXISTING, TYP
3. FOR MORE INFO. ON SIGN PLACEMENT, REFER TO DETAIL 25 AS-1.4
4. MOUNTING HEIGHTS & SIGNAGE REQUIREMENTS SHALL BE PER DETAIL 28 ASD-1.0
5. COLOR OF THE TRIANGLE SYMBOL SHALL CONTRAST WITH COLOR OF THE DOOR OR SURFACE ON WHICH THE TRIAGLE SYMBOL IS MOUNTED, EITHER LIGHT ON A DARK BACKGROUND OR DARK ON A LIGHT BACKGROUND.
6. THE COLOR OF THE CIRCLE SYMBOL SHALL CONTRAST WITH THE COLOR OF THE DOOR OR SURFACE ON WHICH THE CIRCLE SYMBOL IS MOUNTED, EITHER LIGHT ON A DARK BACKGROUND OR DARK ON LIGHT BACKGROUND.
7. THE VERTICES OF THE TRIANGLE SYMBOL SHALL BE LOCATED 1/4" (6.4 MM) MAX FROM THE EDGE OF THE CIRCLE SYMBOL WITH A VERTEX POINTED UPWARD.
8. THE COLOR OF THE TRIANGLE SYMBOL SHALL CONTRAST WITH THE COLOR OF THE CIRCLE SYMBOL, EITHER LIGHT ON A DARK BACKGROUND OR DARK ON A LIGHT BACKGROUND.
9. THE COLOR OF THE CIRCLE SYMBOL SHALL CONTRAST WITH THE COLOR OF THE DOOR OR SURFACE ON WHICH THE COMBINED CIRCLE AND TRIANGLE IS MOUNTED, EITHER LIGHT ON A DARK BACKGROUND OR DARK ON A LIGHT BACKGROUND.
10. WHERE USED, THE ISA (INTERNATIONAL SYMBOL OF ACCESSIBLITY) SHALL APPROXIMATE COLOR AND PROPORTIONS, PER 2022 CBC FIG. 11B-703.7.2.1

RESTROOM SIGN — SCALE: 2"=1'-0" — 24

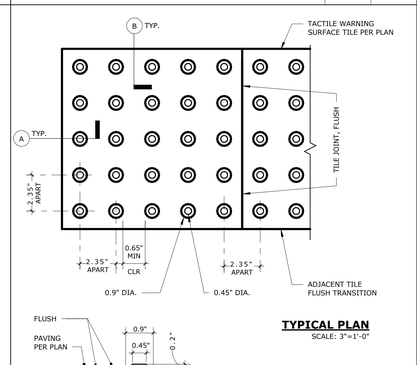

NOTES:
1. TACTILE WARNING SURFACING SHALL FORM CONTINUOUS SURFACE OF CROSSWALK

2. COLOR YELLOW TO MATCH FEDERAL COLOR NO. 33538, PER STANDARD **FS 33538 OF SAE AMS-STD-595A**

3. PROVIDE 5 YEAR PRODUCT WARRANTY PER DSA BULLETIN ISSUED 10/31/2002, REVISED 04/09/2008

(E) TACTILE WARNING SURFACE — SCALE: 3" = 1'-0" — 19

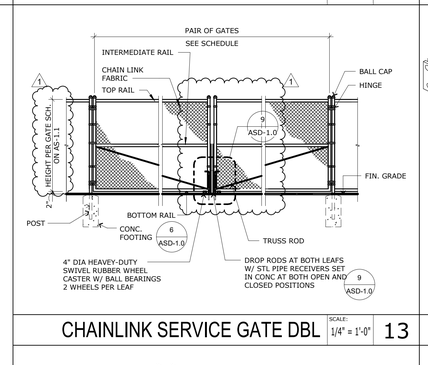

CHAINLINK SERVICE GATE DBL — SCALE: 1/4" = 1'-0" — 13

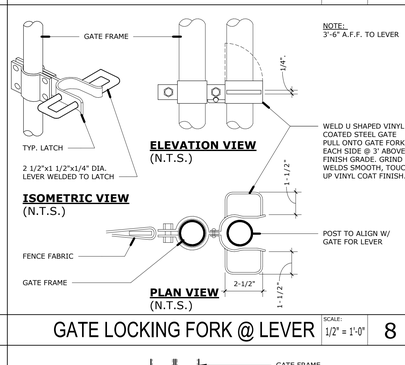

GATE LOCKING FORK @ LEVER — SCALE: 1/2" = 1'-0" — 8

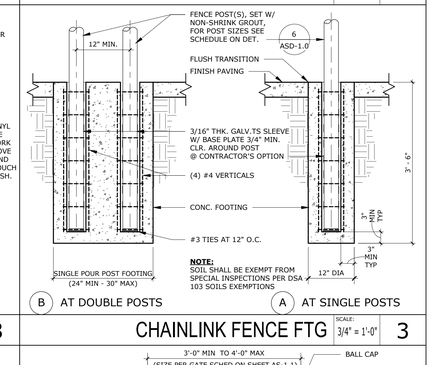

CHAINLINK FENCE FTG — SCALE: 3/4" = 1'-0" — 3

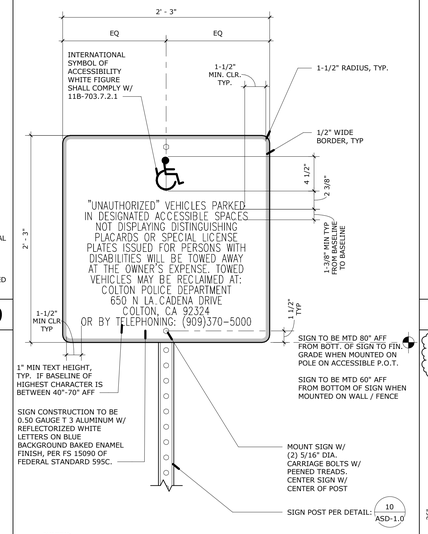

NOTES:
1. **SIGN NOT IN P.O.T**. OF ROUTE OR PEDESTRIAN CIRCULATION PATHS

2. LINE SPACING (11B-703.5.9): SPACING BETWEEN THE BASELINES OF SEPARATE LINES OF CHARACTERS WITHIN A MESSAGE SHALL BE 135 PERCENT MINIMUM & 170 PERCENT MAXIMUM OF THE CHARACTER HEIGHT.

3. ALL INFORMATION SHOWN TO BE PART OF PERMANENT FABRICATION OF SIGN

SIGN - TOW AWAY — SCALE: 1 1/2" = 1'-0" — 15

DROP RODS — SCALE: 1 1/2" = 1'-0" — 9

CHAINLINK GATE W/ PH — SCALE: 1/2" = 1'-0" — 4

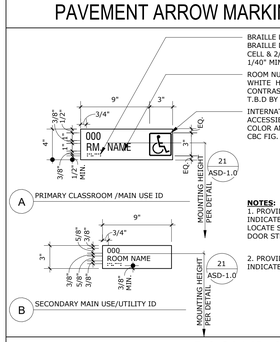

ROOM ID SIGN — SCALE: 1 1/2" = 1'-0" — 30

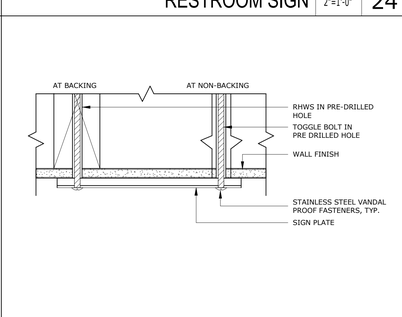

SIGN ATTACH @ DRY WALL — SCALE: 3" = 1'-0" — 25

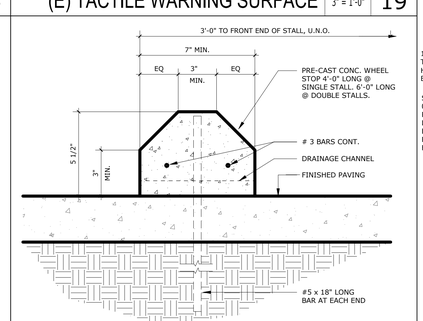

CONCRETE WHEEL STOP — SCALE: 3" = 1'-0" — 20

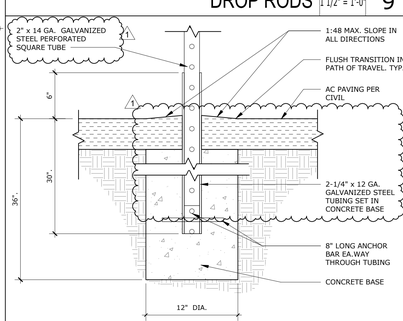

PRE-DRILLED SIGN POST — SCALE: 1 1/2" = 1'-0" — 10

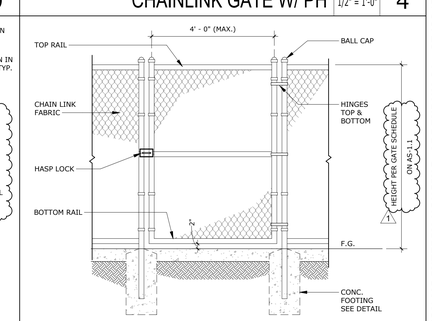

CHAINLINK SERVICE GATE - SINGLE — SCALE: 1/2" = 1'-0" — 5

COLTON MS INTERIM HOUSING: ADDENDUM 01 - 07/09/25

PROJECT No. :1-15-118
7/9/2025 10:42:58 AM

DRAWN BY: CHECKED BY:
DELTA # ____ DATE 07/09/25 ☒ ADD ☐ AFO ☐ CCD ☐ REV
DELTA # ____ DATE ____ ☐ ADD ☐ AFO ☐ CCD ☐ REV
DELTA # ____ DATE ____ ☐ ADD ☐ AFO ☐ CCD ☐ REV
DELTA # ____ DATE ____ ☐ ADD ☐ AFO ☐ CCD ☐ REV

RUHNAUCLARKE.COM
3775 TENTH STREET, RIVERSIDE CALIFORNIA 92501 (951) 684 4664 / 5751 PALMER WAY, SUITE C, CARLSBAD CALIFORNIA 92010 (760) 438 5899

COLTON MS INTERIM HOUSING
670 W. LAUREL ST, COLTON, CA 92324
COLTON JOINT UNIFIED SCHOOL DISTRICT

SITE & SIGNAGE DETAILS

ASD-1.0

1-15-118

ELECTRICAL SYMBOLS:

LINETYPE/SYMBOL	DESCRIPTION
	CONDUIT CONCEALED IN FINISHED AREAS OR EXPOSED IN UNFINISHED AREAS
	CONDUIT STUB - TERMINATE WITH CAP

ELECTRICAL SYMBOLS:

LINETYPE/SYMBOL	DESCRIPTION
#	DUPLEX CONVENIENCE RECEPTACLE 20A, 125V - "#" INDICATES CIRCUIT NUMBER
#	FLUSH MOUNTED FLOOR BOX - POWER AND DATA RECEPTACLES - "#" INDICATES CIRCUIT NUMBER
J	JUNCTION BOX - FLUSH WALL MOUNT
J	JUNCTION BOX - FLUSH CEILING MOUNT/IN CEILING SPACE
PB	PULL BOX - SIZE AS INDICATED OR REQUIRED BY CODE
	ELECTRICAL DISTRIBUTION BOARD
	ELECTRICAL SURFACE MOUNT BRANCH CIRCUIT PANELBOARD
xxA	DISCONNECT SWITCH - UNFUSED TYPE - SEE DRAWINGS FOR SIZE - (xxA) INDICATES AMPERAGE

NOTES:
1. NOT ALL SYMBOLS MAY APPLY.
2. SEE SPECS AND DRAWINGS FOR SPECIFIC COMPONENT REQUIREMENTS.
3. STANDARD RECEPTACLE SHALL BE 20A, 125V OTHERWISE NEMA CONFIGURATION SHALL BE NOTED ON EACH OUTLET & RECEPTACLE.
4. ALL OUTLETS & RECEPTACLES SHALL BE FLUSH MOUNT UNLESS OTHERWISE NOTED ON EACH RECEPTACLE. S=SURFACE MOUNT.
5. # = CIRCUIT NUMBER PLACED NEXT TO EACH RECEPTACLE. WP = WEATHER PROOF PLACED NEXT TO EACH RECEPTACLE ACCORDINGLY.

"x" #

"#" =CIRCUIT NUMBER DESIGNATION
"x" = TYPE OF RECEPTACLE BASED ON ACRONYM

ACRONYMS:
"C" = CONTROLLED VIA PLUG LOAD CONTROL TYPE
"GFCI" = GROUND FAULT CIRCUIT INTERRUPTER TYPE
"TP" = TAMPERPROOF TYPE
"EG" = ELECTRONIC GRADE TYPE
"AFCI" = ARC FAULT CIRCUIT INTERRUPTER TYPE

CONTRACTOR ABBREVIATIONS:

ABBREVIATION	DESCRIPTION
C.M.	CONSTRUCTION MANAGER
E.C.	ELECTRICAL CONTRACTOR
F.A.C.	FIRE ALARM CONTRACTOR
F.P.C.	FIRE PROTECTION CONTRACTOR
G.C.	GENERAL CONTRACTOR
M.C.	MECHANICAL CONTRACTOR
P.C.	PLUMBING CONTRACTOR
T.C.	TECHNOLOGY CONTRACTOR
T.C.C.	TEMPERATURE CONTROL CONTRACTOR

DSA ANCHORAGE NOTES:

MEP COMPONENT ANCHORAGE NOTE
ALL MECHANICAL, PLUMBING, AND ELECTRICAL COMPONENTS SHALL BE ANCHORED AND INSTALLED PER THE DETAILS ON THE DSA-APPROVED CONSTRUCTION DOCUMENTS.

THE FOLLOWING COMPONENTS SHALL BE ANCHORED OR BRACED TO MEET THE FORCE AND DISPLACEMENT REQUIREMENTS PRESCRIBED IN THE 2022 CBC SECTIONS 1617A.1.18 THROUGH 1617A.1.26 AND ASCE 7-16 CHAPTERS 13, 26, AND 30:
1. ALL PERMANENT EQUIPMENT AND COMPONENTS.
2. TEMPORARY, MOVABLE OR MOBILE EQUIPMENT THAT IS PERMANENTLY ATTACHED (E.G., HARD WIRED) TO THE BUILDING UTILITY SERVICES SUCH AS ELECTRICITY, GAS OR WATER. "PERMANENTLY ATTACHED" SHALL INCLUDE ALL ELECTRICAL CONNECTIONS EXCEPT PLUGS FOR 110/220 VOLT RECEPTACLES HAVING A FLEXIBLE CABLE.
3. TEMPORARY, MOVABLE OR MOBILE EQUIPMENT WHICH IS HEAVIER THAN 400 POUNDS OR HAS A CENTER OF MASS LOCATED 4 FEET OR MORE ABOVE THE ADJACENT FLOOR OR ROOF LEVEL THAT DIRECTLY SUPPORT THE COMPONENT IS REQUIRED TO BE RESTRAINED IN A MANNER APPROVED BY DSA.

THE FOLLOWING MECHANICAL AND ELECTRICAL COMPONENTS SHALL BE POSITIVELY ATTACHED TO THE STRUCTURE BUT NEED NOT DEMONSTRATE DESIGN COMPLIANCE WITH THE REFERENCES NOTED ABOVE. THESE COMPONENTS SHALL HAVE FLEXIBLE CONNECTIONS PROVIDED BETWEEN THE COMPONENT AND ASSOCIATED DUCTWORK, PIPING, AND CONDUIT. FLEXIBLE CONNECTIONS MUST ALLOW MOVEMENT IN BOTH TRANSVERSE AND LONGITUDINAL DIRECTIONS:
A. COMPONENTS WEIGHING LESS THAN 400 POUNDS AND HAVING A CENTER OF MASS LOCATED 4 FEET OR LESS ABOVE THE ADJACENT FLOOR OR ROOF LEVEL THAT DIRECTLY SUPPORT THE COMPONENT.
B. COMPONENTS WEIGHING LESS THAN 20 POUNDS, OR IN THE CASE OF DISTRIBUTED SYSTEMS, LESS THAN 5 POUNDS PER FOOT, WHICH ARE SUSPENDED FROM A ROOF OR FLOOR OR HUNG FROM A WALL.

THE ANCHORAGE OF ALL MECHANICAL, ELECTRICAL AND PLUMBING COMPONENTS SHALL BE SUBJECT TO THE APPROVAL OF THE DESIGN PROFESSIONAL IN GENERAL RESPONSIBLE CHARGE OR STRUCTURAL ENGINEER DELEGATED RESPONSIBILITY AND ACCEPTANCE BY DSA. THE PROJECT INSPECTOR WILL VERIFY THAT ALL COMPONENTS AND EQUIPMENT HAVE BEEN ANCHORED IN ACCORDANCE WITH THE ABOVE REQUIREMENTS.

PIPING, DUCTWORK, AND ELECTRICAL DISTRIBUTION SYSTEM BRACING NOTE
PIPING, DUCTWORK, AND ELECTRICAL DISTRIBUTION SYSTEMS SHALL BE BRACED TO COMPLY WITH THE FORCES AND DISPLACEMENTS PRESCRIBED IN ASCE 7-16 SECTION 13.3 AS DEFINED IN ASCE 7-16 SECTIONS 13.6.5, 13.6.6, 13.6.7, 13.6.8; AND 2022 CBC, SECTIONS 1617A.1.24, 1617A.1.25 AND 1617A.1.26.

THE METHOD OF SHOWING BRACING AND ATTACHMENTS TO THE STRUCTURE FOR THE IDENTIFIED DISTRIBUTION SYSTEM ARE AS NOTED BELOW. WHEN BRACING AND ATTACHMENTS ARE BASED ON A PREAPPROVED INSTALLATION GUIDE (E.G., HCAI OPM FOR 2013 CBC OR LATER), COPIES OF THE BRACING SYSTEM INSTALLATION GUIDE OR MANUAL SHALL BE AVAILABLE ON THE JOBSITE PRIOR TO THE START OF AND DURING THE HANGING AND BRACING OF THE DISTRIBUTION SYSTEMS. THE STRUCTURAL ENGINEER OF RECORD SHALL VERIFY THE ADEQUACY OF THE STRUCTURE TO SUPPORT THE HANGER AND BRACE LOADS.

MECHANICAL PIPING (MP), MECHANICAL DUCTS (MD), PLUMBING PIPING (PP), ELECTRICAL DISTRIBUTION SYSTEMS (E):

[ ]MP[ ]MD[ ]PP[X]E-OPTION 1: DETAILED ON THE APPROVED DRAWINGS WITH PROJECT SPECIFIC NOTES AND DETAILS.
[ ]MP[ ]MD[ ]PP[ ]E-OPTION 2: SHALL COMPLY WITH HCAI (OSHPD) PRE-APPROVAL (OPM#) #OPM-####-##, AS INCLUDED IN THESE DRAWINGS WITH PROJECT SPECIFIC NOTES AND DETAILS.

ELECTRICAL ABBREVIATIONS:

ABBREVIATION	DESCRIPTION
AFG	ABOVE FINISHED GRADE
CM	COUNTER MOUNTED
FBO	FURNISHED BY OTHERS
FF	FINISHED FLOOR
IG	ISOLATED GROUND
PED	PEDESTAL MOUNTED
UNO	UNLESS NOTED OTHERWISE
+XX	DIMENSIONED HEIGHT ABOVE FINISHED FLOOR
-XX	DIMENSIONED HEIGHT BELOW FINISHED FLOOR
1P	ONE POLE
1W	ONE WIRE
2P	TWO POLE
2W	TWO WIRE
3P	THREE POLE
3W	THREE WIRE
AC	ALTERNATING CURRENT
ADJ	ADJUSTABLE
AF	AMP FRAME
AFC	AVAILABLE FAULT CURRENT
AFCI	AVAILABLE FAULT CURRENT INTERRUPTER
AHU	AIR-HANDLING UNIT
AIC	AMPERES INTERRUPTING CAPACITY
AT	AMP TRIP
C.O.	CONDUIT ONLY
CB	CIRCUIT BREAKER
CKT	CIRCUIT
D	DEDICATED DEVICE ON INDIVIDUAL BRANCH CIRCUIT. CIRCUIT CAN BE COMBINED WITH OTHER CIRCUITS FOR HOMERUNNING TO PANEL.
DISC	DISCONNECT
DN	DOWN
EM	EQUIPMENT POWERED WITH EMERGENCY SOURCE-INTERNAL OR EXTERNAL, UNLESS NOTED OTHERWISE
FD	FIRE DAMPER
FLA	FULL LOAD AMPS
FSD	FIRE SMOKE DAMPER
FT, '	FOOT OR FEET
GFCI	GROUND FAULT CIRCUIT INTERRUPTER
IN., "	INCH OR INCHES
INV	EMERGENCY INVERTER
J-BOX	JUNCTION BOX
KCMIL	THOUSAND CIRCULAR MILLS
KVA	KILOVOLT AMPERE
KW	KILOWATT
LTG	LIGHTING
MAX	MAXIMUM
MCB	MAIN CIRCUIT BREAKER
MIN	MINIMUM
MLO	MAIN LUGS ONLY
N/A	NOT APPLICABLE
NIC	NOT IN CONTRACT
NO., #	NUMBER
NTS	NOT TO SCALE
RTU	ROOFTOP UNIT
SD	SMOKE DAMPER
SPEC	SPECIFICATION
TYP	TYPICAL
U.C.	UNDERGROUND CONDUIT
UTR	UP THRU ROOF
WP	WEATHERPROOF

NOTES:
1. NOT ALL ABBREVIATIONS MAY APPLY.
2. ELECTRICAL SCHEDULES CONTAIN EQUIPMENT TAG ABBREVIATIONS THAT ARE HEREBY INCORPORATED INTO THE ABBREVIATION LIST.
3. SEE OTHER DISCIPLINE DRAWINGS WITHIN THE CONSTRUCTION DOCUMENTS FOR ABBREVIATIONS NOT DEFINED ABOVE OR IN ELECTRICAL SCHEDULES.

GENERAL NOTES:

1. INSTALLATION SHALL COMPLY WITH ALL APPLICABLE CODES, STANDARDS, AND MANUFACTURER'S INSTALLATION REQUIREMENTS.
2. REVIEW ALL PROJECT DOCUMENTS INCLUDING SPECS AND DRAWINGS PERTAINING TO ALL DISCIPLINES PRIOR TO SUBMITTING A BID. SUBMIT PRE-BID REQUEST FOR INFORMATION FOR ITEMS IN QUESTION AND/OR CONFLICTS FOUND.
3. DRAWINGS SHOW THE DESIGN INTENT DIAGRAMMATICALLY. THEY DO NOT SHOW THE EXACT UTILITY ROUTING NOR EVERY ELBOW, OFFSET, ETC. WHERE REQUIRED, THE CONTRACTOR SHALL MAKE ADJUSTMENTS TO THEIR SYSTEMS TO AVOID CONFLICT WITH THE STRUCTURE AND OTHER DISCIPLINES. THE COST FOR SUCH ADJUSTMENTS SHALL BE INCLUDED IN THE BID.
4. OBTAIN AND PAY FOR ALL PERMITS REQUIRED FOR WORK PERFORMED.
5. OBTAIN UTILITY PURVEYOR REQUIREMENTS PRIOR TO PURCHASING EQUIPMENT OR PERFORMING WORK.
6. THE G.C. OR C.M. TEAM SHALL LEAD THE SUBCONTRACTORS IN PROVIDING A COORDINATED SET OF SHOP DRAWINGS. SEE GENERAL REQUIREMENTS SPEC FOR ADDITIONAL INFORMATION.
7. PROVIDE FIRESTOPPING FOR ALL UTILITY PENETRATIONS THRU FIRE-RATED ASSEMBLIES.
8. COORDINATE FRAMING REQUIREMENTS FOR ACCESS PANELS AND EQUIPMENT/PANEL SUPPORTS WITH G.C. OR C.M. PRIOR TO SUBMITTING BID.
9. THE CONTRACTOR IS RESPONSIBLE FOR VERIFYING THE CORRECTION OF CONSTRUCTION DEFICIENCIES LISTED ON THE JOB SITE OBSERVATION REPORT. RETURN THE JOB SITE OBSERVATION REPORT TO A/E WITH DEFICIENCIES SIGNED OFF. PROVIDE PHOTOGRAPHIC AND/OR VIDEO EVIDENCE OF CORRECTED DEFICIENCIES IF REQUESTED BY THE ENGINEER.
10. PROVIDE CLOSEOUT DOCUMENTATION UPON COMPLETION OF PROJECT. SEE GENERAL REQUIREMENTS SPEC FOR ADDITIONAL INFORMATION.

ELECTRICAL NOTES:

1. ELECTRICAL WORK SHALL BE CONSTRUCTED IN A PROFESSIONAL MANNER. COMPONENTS SHALL BE CLEANED PRIOR TO OWNER TURNOVER.
2. THE SCHEDULED EQUIPMENT SHALL BE USED AS THE BASIS OF DESIGN. MODEL NUMBERS ARE PROVIDED FOR REFERENCE ONLY. EQUIPMENT SHALL MEET SPECIFIED PERFORMANCE. THE CONTRACTOR SHALL IDENTIFY ALL SELECTED OPTIONS IN THE SUBMITTAL.
3. IF A CONTRACTOR PROVIDES EQUIPMENT OTHER THAN THE BASIS OF DESIGN, THAT CONTRACTOR SHALL BE RESPONSIBLE FOR ALL COSTS INCURRED AS A RESULT. THAT INCLUDES, BUT IS NOT LIMITED TO, AGENCY FEES FOR REVIEW OF CHANGES, STRUCTURAL MODIFICATIONS FOR INCREASED WEIGHT AND, ELECTRICAL EQUIPMENT, WIRING, CONDUIT, AND BREAKER CHANGES FOR DIFFERENT ELECTRICAL REQUIREMENTS.
4. SEE SPEC SECTIONS 26 05 33 AND FOR CONDUIT/RACEWAY SYSTEM INSTALLATION AND CLEANING REQUIREMENTS.
5. PROVIDE CONDUIT OR RACEWAY EXPANSION JOINT THAT ACCOMMODATES THE BUILDING MOVEMENT WHERE CONDUIT OR RACEWAY CROSSES BUILDING EXPANSION JOINT.
6. PAINT INTERIOR EXPOSED CONDUIT/RACEWAYS, PULL BOXES, AND ASSOCIATED HANGERS/SUPPORTS LOCATED IN OCCUPIED SPACES TO MATCH THE SURROUNDING ARCHITECTURAL COLOR SCHEME. PAINT EXTERIOR CONDUIT/RACEWAYS, PULL BOXES, AND ASSOCIATED HANGERS/SUPPORTS ADJACENT TO EXTERIOR WALL TO MATCH WALL COLOR. FINAL COLORS SHALL BE APPROVED BY THE ARCHITECT AND ENGINEER. SEE SPEC SECTION 26 0500 FOR ADDITIONAL REQUIREMENTS.
7. PROVIDE IDENTIFICATION FOR CONDUIT/RACEWAYS, PULL BOXES, AND EQUIPMENT PER SPEC SECTION 26 0553.
8. CONDUIT/RACEWAY SHALL NOT PASS THRU NOR UNDER DATA ROOMS, ELEVATOR MACHINE ROOMS, ELEVATOR HOISTWAYS, SKYLIGHTS, AND ROOF ACCESS HATCHES.
9. PULL BOXES SHALL BE ACCESSIBLE. PROVIDE KEYED ACCESS PANELS WHERE PULL BOXES HAVE BEEN LOCATED IN CONCEALED AREAS. ACCESS PANEL SIZE SHALL BE LARGE ENOUGH TO ACCESS EACH PULL BOX.
10. ELECTRICAL CONTRACTOR SHALL COORDINATE LOCATION OF LIGHTING FIXTURES AND LIGHTING DEVICES WITH MECHANICAL AND FIRE PROTECTION, AND FIRE ALARM DEVICES.
11. E.C. SHALL VERIFY U.L. LISTING AND PROCEED WITH FINAL CONNECTION.
12. ELECTRICAL OUTLETS INSTALLED ON OPPOSITE SIDES OF FIRE-RATED ASSEMBLIES SHALL BE SEPARATED BY 24". OPENINGS SHALL BE FIRESTOPPED WITH THE SPECIFIED MATERIAL.
13. ALL CONDUIT SERVING ROOF-MOUNTED HVAC EQUIPMENT AND MAINTENANCE RECEPTACLES SHALL BE ROUTED IN CEILING SPACE. CONDUIT SHALL PENETRATE ROOF AT EQUIPMENT LOCATIONS ONLY. NO CONDUIT SHALL BE INSTALLED HORIZONTALLY ACROSS ROOF SURFACE.
14. WHERE NEW CIRCUIT BREAKERS ARE TO BE ADDED TO EXISTING ELECTRICAL EQUIPMENT, THEY SHALL BE OF THE SAME MANUFACTURER AND DESIGN AS THE EXISTING BREAKERS AND SHALL BE OF THE SIZES INDICATED.

PROPOSED DIVISION OF RESPONSIBILITY:

1. CONTRACTOR SHALL FURNISH ALL SUPPORTING EQUIPMENT SUCH AS BACK-BOXES, CONDUIT, & SLEEVES AS REQUIRED FOR TECHNOLOGY EQUIPMENT. SEE TECHNOLOGY DRAWINGS AND SPECS FOR ADDITIONAL INFORMATION. CONTRACTOR IS RESPONSIBLE FOR PROVIDING COST OF TECHNOLOGY ROUGH-IN IN THEIR BID.
2. ALL CONDUIT FOR TECHNOLOGY SITE SERVICE SHALL BE PROVIDED BY E.C. INCLUDING, BUT IS NOT LIMITED TO, MANHOLES & HANDHOLES.
3. ALL SLEEVES REQUIRED FOR TECHNOLOGY EQUIPMENT SHALL BE INSTALLED BY ELECTRICAL CONTRACTOR.
4. ELECTRICAL CONTRACTOR SHALL COORDINATE WITH TECHNOLOGY CONTRACTOR FOR MATCHING TYPE & COLOR OF FACEPLATES. OBTAIN ARCHITECT AND OWNER APPROVAL ON TYPE AND COLOR PRIOR TO ORDERING FACEPLATES.

ELECTRICAL SHEET INDEX:

Sheet Number	Sheet Name
E-0.1	ELECTRICAL COVER SHEET
E-0.2	ELECTRICAL SCHEDULES
ES-1.0	ELECTRICAL - OVERALL SITE PLAN
ES-1.1	ELECTRICAL - ENLARGED SITE PARKING LOT
E-4.0	ELECTRICAL DETAILS
E-6.0	T24 SHEETS

CODES AND STANDARDS:

EDITION	REFERENCE CODE/STANDARD
2022	CALIFORNIA ADMINISTRATIVE CODE, (CCR, TITLE 24, PART 1)
2022	CALIFORNIA BUILDING CODE, (CCR, TITLE 24, PART 2)
2022	CALIFORNIA ELECTRICAL CODE, (CCR, TITLE 24, PART 3)
2022	CALIFORNIA MECHANICAL CODE, (CCR, TITLE 24, PART 4)
2022	CALIFORNIA PLUMBING CODE, (CCR, TITLE 24, PART 5)
2022	CALIFORNIA ENERGY CODE, (CCR, TITLE 24, PART 6)
2022	CALIFORNIA HISTORICAL BUILDING CODE, (CCR, TITLE 24, PART 8)
2022	CALIFORNIA FIRE CODE, (CCR, TITLE 24, PART 9)
2022	CALIFORNIA EXISTING BUILDING CODE, (CCR, TITLE 24, PART 10)
2022	CALIFORNIA GREEN BUILDING STANDARDS, (CCR, TITLE 24, PART 11)
2022	CALIFORNIA REFERENCED STANDARDS CODE, (CCR, TITLE 24, PART 12)
2022	STANDARD FOR INSTALLATION OF FIRE SPRINKLER SYSTEMS OF CALIFORNIA, (ADOPTS NFPA 13, 2016. WITH AMENDMENTS)
2021	NFPA 54-NATIONAL FUEL GAS CODE
2022	NFPA 72-NATIONAL FIRE ALARM AND SIGNALING CODE

CCR-CALIFORNIA CODE OF REGULATIONS
NFPA-NATIONAL FIRE PROTECTION AGENCY

GENERAL LEGEND:

SYMBOL	DESCRIPTION
## / ####	DETAIL CALL-OUT SYMBOL
###-#	EQUIPMENT TAG
#	KEYNOTE SYMBOL
	POINT OF CONNECTION OR DISCONNECTION
## / ####	SECTION CUT CALL-OUT SYMBOL
## / ####	ENLARGED PLAN CALL-OUT SYMBOL
LINETYPE	**DESCRIPTION**
	EXISTING TO REMAIN
	EXISTING TO BE REMOVED
	NEW CONSTRUCTION
(E)	EXISTING TO REMAIN
(X)	EXISTING TO BE REMOVED

STAMPS
SIGNED: 08/06/24

AGENCY APPROVAL
File No: A,P

ASTRAL ENGINEERS, PC
PO BOX 190
RANCHO CUCAMONGA, CA 91729
909.903.0015
www.astraleng.com
PROJECT #:250009.00

CONSULTANT BRANDING

RUHNAU CLARKE ARCHITECTS

COLTON MS INTERIM HOUSING: DSA BC SUBMITTAL -03/06/25

(E) DISTRIBUTION PANEL: DPJ

Location: BUILDING J ELEC ROOM
Supply From: DPJ1
Mounting: Surface
Enclosure: Type 1

Volts: 208Y/120V
Phases: 3
Wires: 4

A.I.C. Rating: 10kA
Mains Type: MCB
Mains Rating: 400 A
MCB Rating: 400 A

Notes:

CKT	Circuit Description	Trip	Poles	A		B		C		Poles	Trip	Circuit Description	CKT
1	(N) PORTABLE N	100 A	2	8632	6336					2	100 A	(N) PORTABLE P	2
3						8632	6336						4
5	SPACE	--	1					--	--	1	--	SPACE	6
7	(E) EXISTING LOAD	100 A	3	0	--					1	--	SPACE	8
9						0	--			1	--	SPACE	10
11								0	--	1	--	SPACE	12
13	(E) EXISTING LOAD	100 A	3	0	0					3	20 A	(E) EXIT LIGHTS	14
15						0	0						16
17								0	0				18
19	(E) EXISTING LOAD	175 A	3	0	0					1	20 A	(E) PARKING LOT	20
21						0	0			2	50 A	(E) KITCHEN	22
23								0	0				24
25	(E) PANEL H	175 A	3	0	0					3	175 A	(E) EXISTING LOAD	26
27						0	0						28
29								0	0				30
			Total Load:	14968 VA		14968 VA		0 VA					
			Total Amps:	144 A		144 A		0 A					

Legend:

Load Classification	Connected Load	Demand Factor	Estimated Demand	Panel Totals	
Power	29936 VA	100.00%	29936 VA		
				Total Conn. Load:	29936 VA
				Total Est. Demand:	29936 VA
				Total Conn. Current:	83 A
				Total Est. Demand Current:	83 A

Notes:

DISCONNECT SWITCH SCHEDULE

TAG NAME	FEED TO	DISCONNECT TYPE	VOLTAGE	NO OF POLES	DS SIZE	NEMA ENCLOSURE TYPE	MANUFACTURER	REMARKS
DS-PNL-N	PANEL 'N'	UNFUSED	208 V	2	100	NEMA 3R	ABB/GE	
DS-PNL-P	PANEL 'P'	UNFUSED	208 V	2	100	NEMA 3R	ABB/GE	

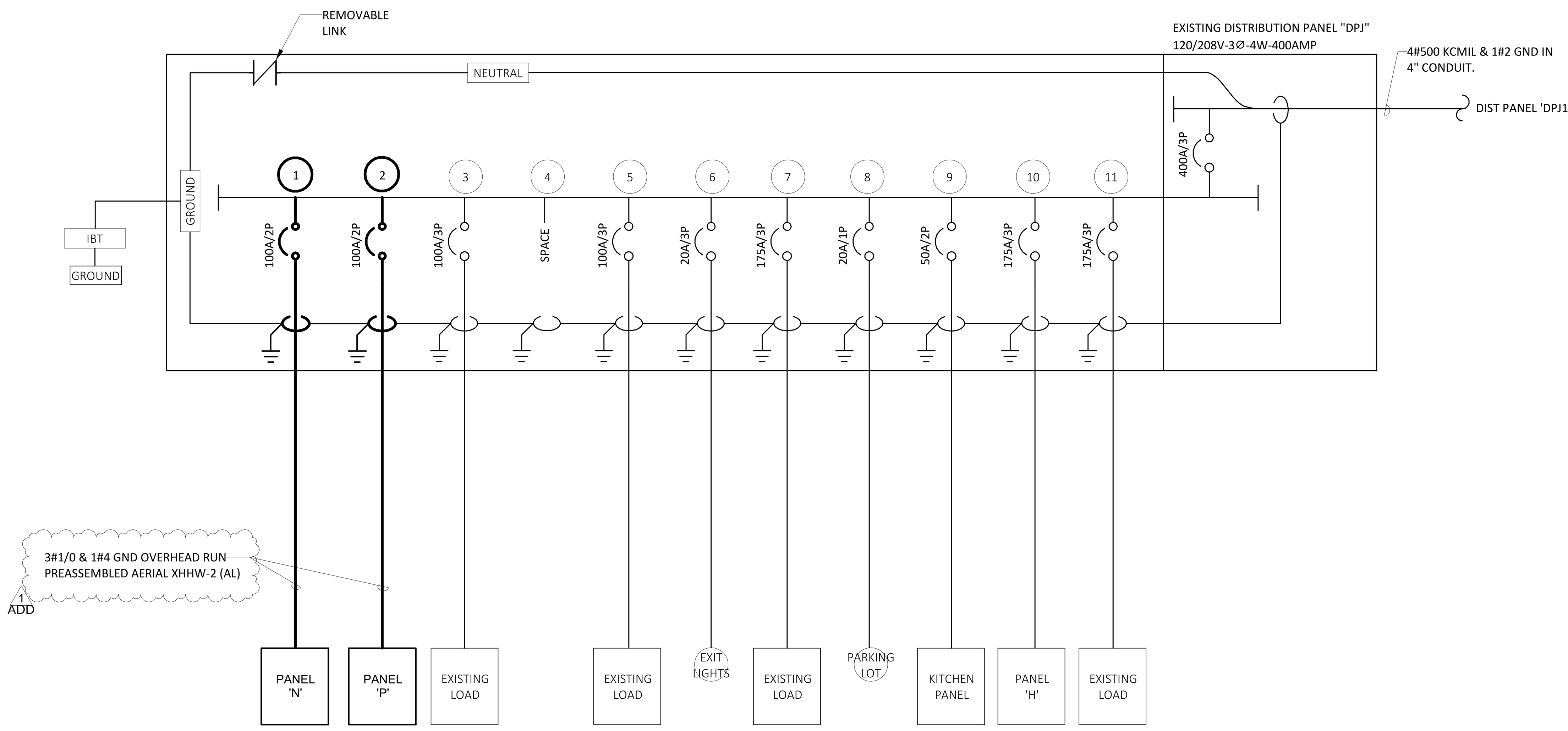

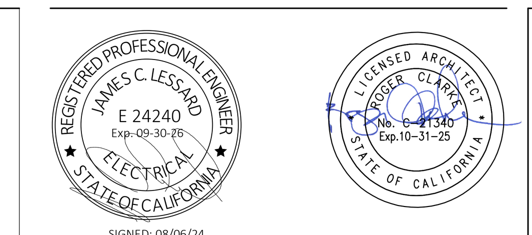

SIGNED: 08/06/24

STAMPS

AGENCY APPROVAL
File No: A#

ASTRAL ENGINEERS, PC
PO BOX 190
RANCHO CUCAMONGA, CA 91729
909.903.0015
www.astraleng.com
PROJECT #:250009.00

RUHNAU CLARKE ARCHITECTS

CONSULTANT BRANDING

KEYNOTES - E-0.2

NUMBER	TEXT
1	PROVIDE NEW BREAKERS TO FEED NEW PORTABLE BUILDINGS.

COLTON MS INTERIM HOUSING: DSA BC SUBMITTAL -03/06/25

PROJECT No. :1-15-118
5/29/2025 7:05:30 PM

DRAWN BY: ABH CHECKED BY: JCL

DELTA # 2	DATE 05/16/25	☒ ADD	☐ AFO	☐ CCD	☐ REV
DELTA #	DATE	☐ ADD	☐ AFO	☐ CCD	☐ REV
DELTA #	DATE	☐ ADD	☐ AFO	☐ CCD	☐ REV
DELTA #	DATE	☐ ADD	☐ AFO	☐ CCD	☐ REV

RUHNAUCLARKE.COM

3775 TENTH STREET, RIVERSIDE CALIFORNIA 92501 (951) 684 4664 / 5751 PALMER WAY, SUITE C, CARLSBAD CALIFORNIA 92010 (760) 438 5899

COLTON MS INTERIM HOUSING

670 W. LAUREL ST, COLTON, CA 92324
COLTON JOINT UNIFIED SCHOOL DISTRICT

ELECTRICAL SCHEDULES

E-0.2

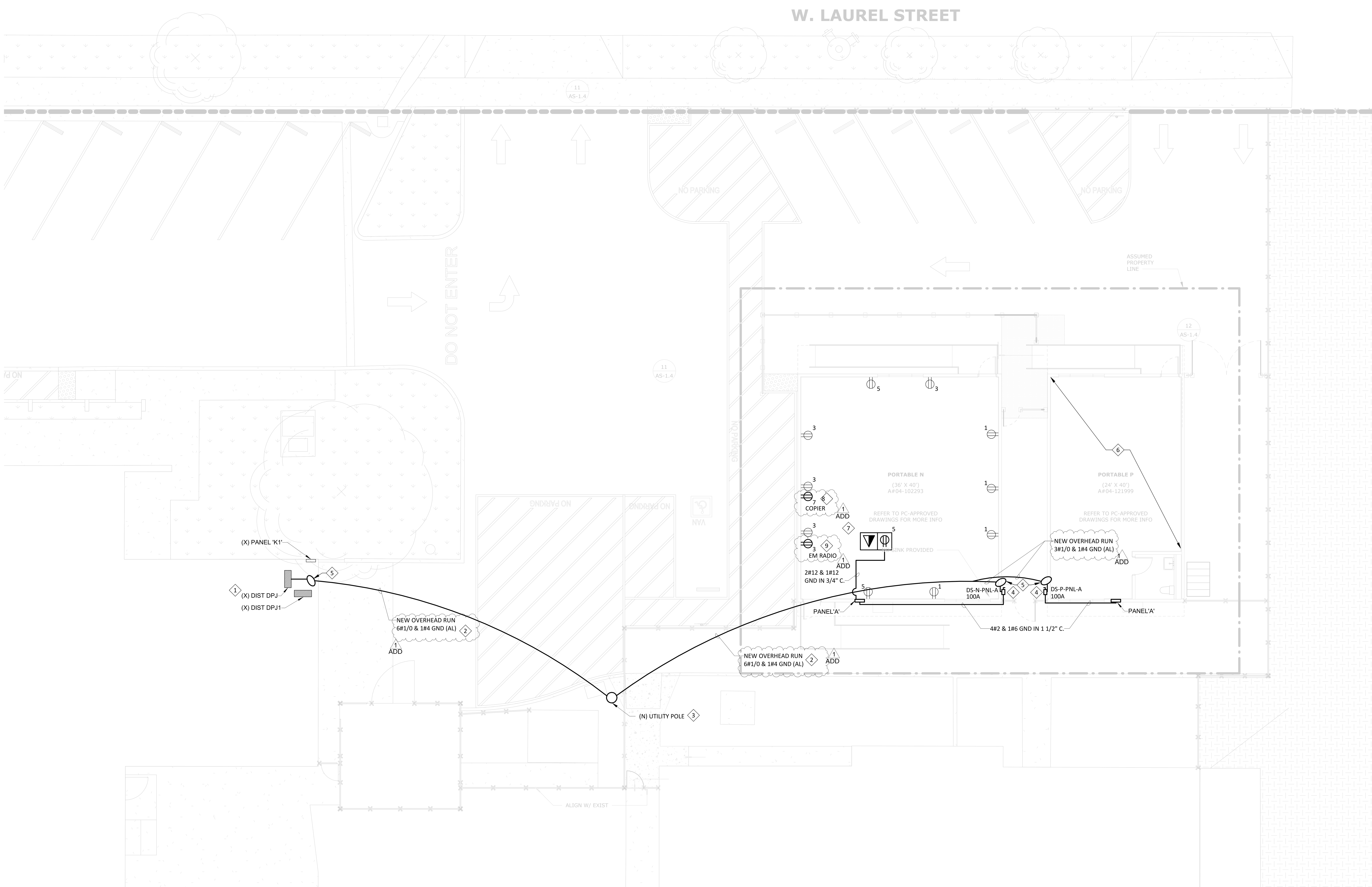

1 ELECTRICAL - ENLARGED SITE PARKING LOT

1/8" = 1'-0"

STAMPS

REGISTERED PROFESSIONAL ENGINEER JAMES C. LESSARD E 24240 Exp. 09-30-26 ELECTRICAL STATE OF CALIFORNIA

SIGNED: 08/06/24

LICENSED ARCHITECT ROGER CLARKE No. C-21340 Exp.10-31-25 STATE OF CALIFORNIA

AGENCY APPROVAL
File No: A#

ASTRAL ENGINEERS, PC
PO BOX 190
RANCHO CUCAMONGA, CA 91729
909.903.0015
www.astraleng.com
PROJECT #:250009.00

CONSULTANT BRANDING

RUHNAU CLARKE ARCHITECTS

GENERAL NOTES - ES-1.1

NUMBER	TEXT
1	ELECTRICAL CABLING TO BE PREASSEMBLED AERIAL XHHW-2 WITH INTEGRAL MESSENGER WIRE.

KEYNOTES - ES-1.1

NUMBER	TEXT
1	UTILIZE EXISTING DISTRIBUTION BOARD 'DPJ' TO FEED NEW MODULAR BUILDINGS.
2	PROVIDE OVERHEAD RUN TO UTILITY POLE. SEE 1/E-4.0 FOR CABLE RUN RESTRICTIONS.
3	PROVIDE NEW UTILITY POLE AND GUY WIRE. SEE 1/E-4.0 FOR POLE INSTALLATION. 2 ADD
4	PROVIDE POINT OF CONNECTION TO PORTABLE BUILDING. SEE 2/E-4.0 FOR DISCONNECT SWITCH INSTALLATION.
5	PROVIDE WEATHERHEAD AND RISER PIPE FOR ELECTRICAL FEEDER CONNECTION OF OVERHEAD RUN. PROVIDE SEPARATE WEATHERHEAD AND RISER PIPE FOR OVERHEAD RUN OF FIRE ALARM AND TECHNOLOGY CABLING.
6	PORTABLE 'P' ELECTRICAL DESIGN TO BE PROVIDED BY SILVER CREEK. SEE PORTABLE MANUFACTURER PLANS FOR LAYOUT.
7	PROVIDE FLUSH FLOOR BOX TO ISLAND DESK USING UNDERFLOOR CONDUIT. UTILZE BRANCH CIRUIT IN PANEL 'A' TO FEED RECEPTACLE. 2#12 & 1#12 GND IN 3/4" C.
8	PROVIDE NEW DUPLEX RECEPTACLE FOR COPIER ON DEDICATED CIRCUIT. UTILZE BRANCH CIRUIT IN PANEL 'A' TO FEED RECEPTACLE. 2#12 & 1#12 GND IN 3/4" C.
9	PROVIDE NEW DUPLEX RECEPTACLE FOR EM RADIO ON EXISTING RECEPTACLE CIRCUIT. UTILZE BRANCH CIRUIT IN PANEL 'A' TO FEED RECEPTACLE. 2#12 & 1#12 GND IN 3/4" C.

1 ADD

COLTON MS INTERIM HOUSING: DSA BC SUBMITTAL -03/06/25

PROJECT No. :1-15-118
5/29/2025 7:05:30 PM

DRAWN BY: ABH CHECKED BY: JCL
DELTA # 1 DATE 05/02/25 [x] ADD [ ] AFO [ ] CCD [ ] REV
DELTA # 2 DATE 05/16/25 [x] ADD [ ] AFO [ ] CCD [ ] REV
DELTA # ___ DATE ___ [ ] ADD [ ] AFO [ ] CCD [ ] REV
DELTA # ___ DATE ___ [ ] ADD [ ] AFO [ ] CCD [ ] REV

RUHNAUCLARKE.COM
3775 TENTH STREET, RIVERSIDE CALIFORNIA 92501 (951) 684 4664 / 5751 PALMER WAY, SUITE C, CARLSBAD CALIFORNIA 92010 (760) 438 5899

COLTON MS INTERIM HOUSING
670 W. LAUREL ST, COLTON, CA 92324
COLTON JOINT UNIFIED SCHOOL DISTRICT

ELECTRICAL - ENLARGED SITE PARKING LOT

ES-1.1

1-15-118

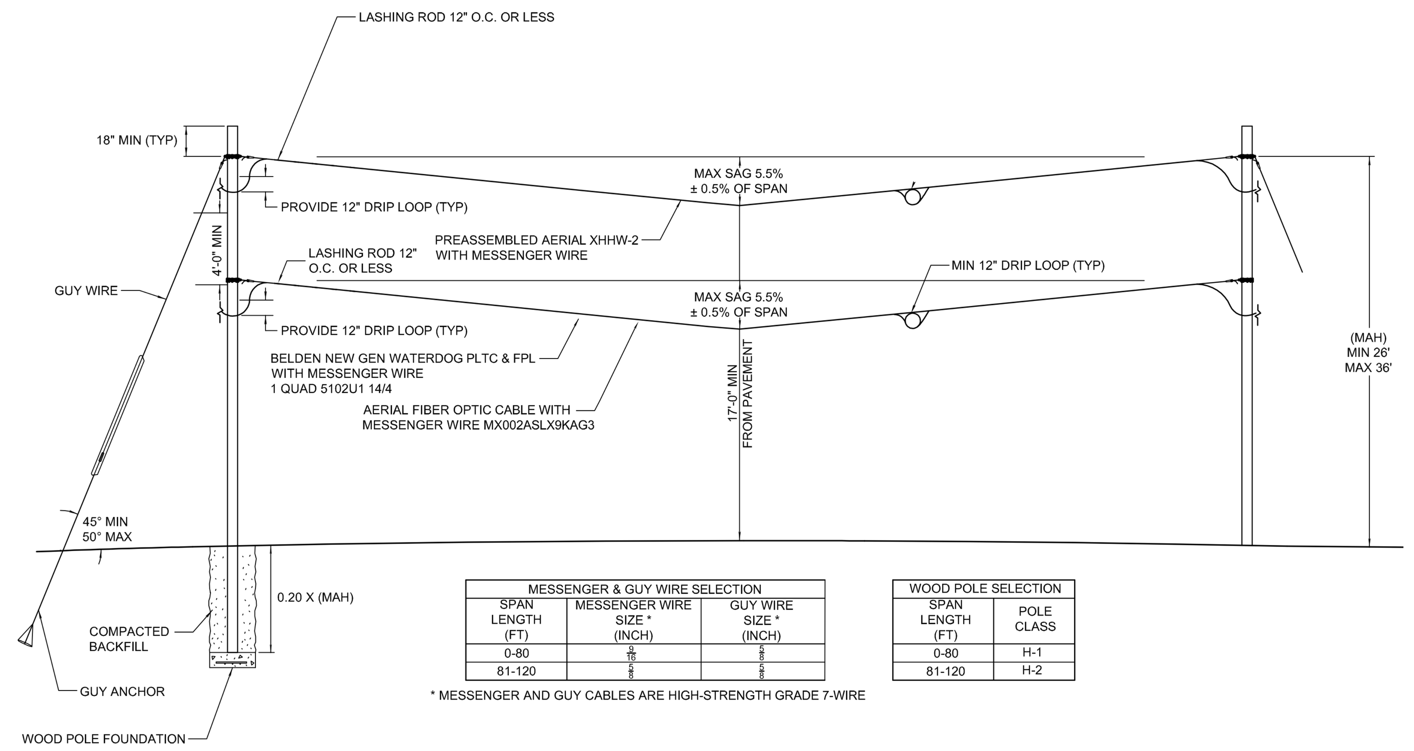

MESSENGER & GUY WIRE SELECTION		
SPAN LENGTH (FT)	MESSENGER WIRE SIZE * (INCH)	GUY WIRE SIZE * (INCH)
0-80	$\frac{9}{16}$	$\frac{5}{8}$
81-120	$\frac{5}{8}$	$\frac{5}{8}$

* MESSENGER AND GUY CABLES ARE HIGH-STRENGTH GRADE 7-WIRE

WOOD POLE SELECTION	
SPAN LENGTH (FT)	POLE CLASS
0-80	H-1
81-120	H-2

-	NTS	7
-	NTS	4
CABLING & POLE INSTALLATION	NTS	1

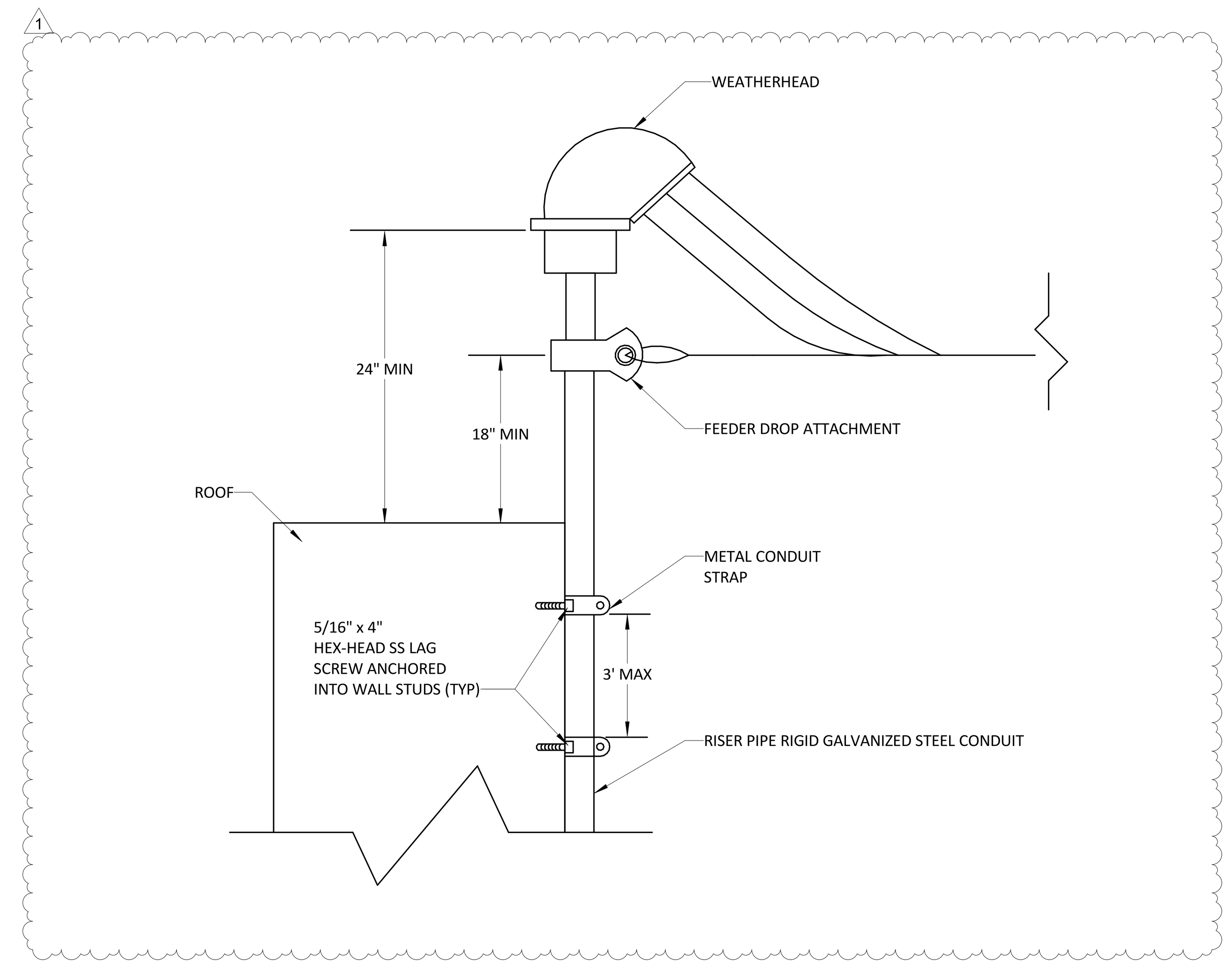

-	NTS	8
-	NTS	5
WEATHERHEAD AND RISER PIPE INSTALLATION	NTS	2

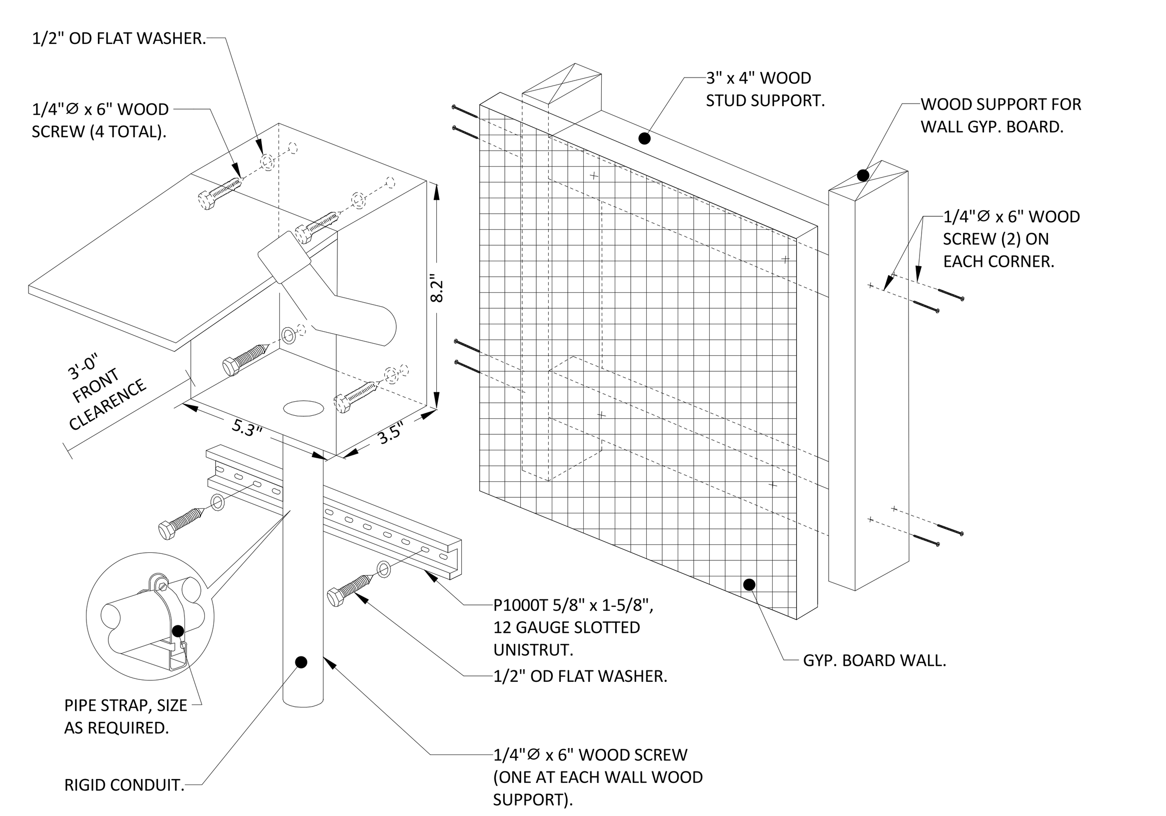

-	NTS	9
-	NTS	6
SURFACE MOUNTED FUSED DISCONNECT - WOOD FRAMING	NTS	3

REGISTERED PROFESSIONAL ENGINEER JAMES C. LESSARD E 24240 Exp. 09-30-26 ELECTRICAL STATE OF CALIFORNIA

LICENSED ARCHITECT ROGER CLARKE No. C-21340 Exp.10-31-25 STATE OF CALIFORNIA

SIGNED: 08/06/24

STAMPS

AGENCY APPROVAL
File No: A#

ASTRAL ENGINEERS, PC
PO BOX 190
RANCHO CUCAMONGA, CA 91729
909.903.0015
www.astraleng.com
PROJECT #:250009.00

CONSULTANT BRANDING

RUHNAU CLARKE ARCHITECTS

COLTON MS INTERIM HOUSING: DSA BC SUBMITTAL -03/06/25

PROJECT No. :1-15-118
5/2/2025 12:02:49 PM

DRAWN BY: Author CHECKED BY: Checker
DELTA # 1 DATE 05/02/25 ☐ADD ☐AFO ☐CCD ☐REV
DELTA # ___ DATE ___ ☐ADD ☐AFO ☐CCD ☐REV
DELTA # ___ DATE ___ ☐ADD ☐AFO ☐CCD ☐REV
DELTA # ___ DATE ___ ☐ADD ☐AFO ☐CCD ☐REV

RUHNAUCLARKE.COM
3775 TENTH STREET, RIVERSIDE CALIFORNIA 92501 (951) 684 4664 / 5751 PALMER WAY, SUITE C, CARLSBAD CALIFORNIA 92010 (760) 438 5899

COLTON MS INTERIM HOUSING
670 W. LAUREL ST, COLTON, CA 92324
COLTON JOINT UNIFIED SCHOOL DISTRICT

ELECTRICAL DETAILS

E-4.0

TECHNOLOGY DATA SYMBOLS:

LINETYPE/SYMBOL	DESCRIPTION
1	IDF CABINET - WALL MOUNTED
#	DATA OUTLET - WALL MOUNTED - # INDICATES NUMBER OF DATA JACKS
#	DATA OUTLET - FLUSH FLOOR MOUNTED - "#" INDICATES NUMBER OF DATA JACKS
WAP	WIRELESS ACCESS POINT - CEILING MOUNTED

NOTES:
1. NOT ALL SYMBOLS MAY APPLY.
2. SEE SPECS AND DRAWINGS FOR SPECIFIC COMPONENT REQUIREMENTS.

TECHNOLOGY SECURITY SYMBOLS:

LINETYPE/SYMBOL	DESCRIPTION
C	PATHWAY ROUGH-IN FOR CCTV CAMERA.
CR	ROUGH-IN FOR SECURITY CARD READER
S	SECURITY SYSTEM MOTION DETECTOR - WIDE COVERAGE - CEILING MOUNTED
DC	SECURITY DOOR CONTACT
SCP	SECURITY CONTROL PANEL

NOTES:
1. NOT ALL SYMBOLS MAY APPLY.
2. SEE SPECS AND DRAWINGS FOR SPECIFIC COMPONENT REQUIREMENTS.

1 CCD

TECHNOLOGY AUDIOVISUAL SYMBOLS:

LINETYPE/SYMBOL	DESCRIPTION
S	SPEAKER - CEILING MOUNTED
	CLOCK - WALL MOUNTED

NOTES:
1. NOT ALL SYMBOLS MAY APPLY.
2. SEE SPECS AND DRAWINGS FOR SPECIFIC COMPONENT REQUIREMENTS.

TECHNOLOGY WIRE SCHEDULE:

ABBREVIATION	DESCRIPTION
C5	CAT5 (DATA)
C6	CAT6 (DATA)
F	AERIAL FIBER OPTIV CABLE WITH MESSENGER WIRE
F2	2SM FIBER OPTIC CABLE
F24	24MM/12SM FIBER OPTIC CABLE
SEC	SECURITY INDOOR CABLE-WEST PENN 240
SEC-U	SECURITY OUTDOOR CABLE WEST PENN AQC 240
TC5	CAT5 (TELEPHONE)
TC6	CAT6 (TELEPHONE)
TV	CATV-RG-6
TV-U	CATV-RG-11

TECHNOLOGY-WIRE SYMBOLS:

LINETYPE/SYMBOL	DESCRIPTION
	CONDUIT CONCEALED IN FINISHED AREAS, EXPOSED IN UNFINISHED AREAS
	CONDUIT SLEEVE
	CONDUIT STUB - TERMINATE WITH CAP
	CONDUIT CONCEALED IN OR UNDER FLOOR SLAB
	CONDUIT TURNING UP
	CONDUIT TURNING DOWN
	FLEXIBLE CONNECTION TO EQUIPMENT
WM	WIRE MOLD RACEWAY - SEE SPECS FOR EXACT TYPE
TV	TELEVISION SYSTEM CONDUIT AND CABLE(S) - CABLE TYPE INDICATED ON FLOOR PLAN
SEC	SECURITY SYSTEM CONDUIT AND CABLE(S) - CABLE TYPE INDICATED ON FLOOR PLAN
TL	TELEPHONE SYSTEM CONDUIT AND CABLE(S) - CABLE TYPE INDICATED ON FLOOR PLAN
CL	CLOCK SYSTEM CONDUIT AND CABLE(S) - CABLE TYPE INDICATED ON FLOOR PLAN
C	COMPUTER AND DATA CONDUIT AND CABLE(S) - CABLE TYPE INDICATED ON FLOOR PLAN
CFO	COMPUTER AND DATA CONDUIT AND CABLE(S) - FIBER OPTIC CABLE TYPE INDICATED ON FLOOR PLAN

NOTES:
1. NOT ALL SYMBOLS MAY APPLY.
2. SEE SPECS AND DRAWINGS FOR SPECIFIC COMPONENT REQUIREMENTS.

DSA ANCHORAGE NOTES:

MEP COMPONENT ANCHORAGE NOTE
ALL MECHANICAL, PLUMBING, AND ELECTRICAL COMPONENTS SHALL BE ANCHORED AND INSTALLED PER THE DETAILS ON THE DSA-APPROVED CONSTRUCTION DOCUMENTS.

THE FOLLOWING COMPONENTS SHALL BE ANCHORED OR BRACED TO MEET THE FORCE AND DISPLACEMENT REQUIREMENTS PRESCRIBED IN THE 2022 CBC SECTIONS 1617A.1.18 THROUGH 1617A.1.26 AND ASCE 7-16 CHAPTERS 13, 26, AND 30:
1. ALL PERMANENT EQUIPMENT AND COMPONENTS.
2. TEMPORARY, MOVABLE OR MOBILE EQUIPMENT THAT IS PERMANENTLY ATTACHED (E.G., HARD WIRED) TO THE BUILDING UTILITY SERVICES SUCH AS ELECTRICITY, GAS OR WATER. "PERMANENTLY ATTACHED" SHALL INCLUDE ALL ELECTRICAL CONNECTIONS EXCEPT PLUGS FOR 110/220 VOLT RECEPTACLES HAVING A FLEXIBLE CABLE.
3. TEMPORARY, MOVABLE OR MOBILE EQUIPMENT WHICH IS HEAVIER THAN 400 POUNDS OR HAS A CENTER OF MASS LOCATED 4 FEET OR MORE ABOVE THE ADJACENT FLOOR OR ROOF LEVEL THAT DIRECTLY SUPPORT THE COMPONENT IS REQUIRED TO BE RESTRAINED IN A MANNER APPROVED BY DSA.

THE FOLLOWING MECHANICAL AND ELECTRICAL COMPONENTS SHALL BE POSITIVELY ATTACHED TO THE STRUCTURE BUT NEED NOT DEMONSTRATE DESIGN COMPLIANCE WITH THE REFERENCES NOTED ABOVE. THESE COMPONENTS SHALL HAVE FLEXIBLE CONNECTIONS PROVIDED BETWEEN THE COMPONENT AND ASSOCIATED DUCTWORK, PIPING, AND CONDUIT. FLEXIBLE CONNECTIONS MUST ALLOW MOVEMENT IN BOTH TRANSVERSE AND LONGITUDINAL DIRECTIONS:
A. COMPONENTS WEIGHING LESS THAN 400 POUNDS AND HAVING A CENTER OF MASS LOCATED 4 FEET OR LESS ABOVE THE ADJACENT FLOOR OR ROOF LEVEL THAT DIRECTLY SUPPORT THE COMPONENT.
B. COMPONENTS WEIGHING LESS THAN 20 POUNDS, OR IN THE CASE OF DISTRIBUTED SYSTEMS, LESS THAN 5 POUNDS PER FOOT, WHICH ARE SUSPENDED FROM A ROOF OR FLOOR OR HUNG FROM A WALL.

THE ANCHORAGE OF ALL MECHANICAL, ELECTRICAL AND PLUMBING COMPONENTS SHALL BE SUBJECT TO THE APPROVAL OF THE DESIGN PROFESSIONAL IN GENERAL RESPONSIBLE CHARGE OR STRUCTURAL ENGINEER DELEGATED RESPONSIBILITY AND ACCEPTANCE BY DSA. THE PROJECT INSPECTOR WILL VERIFY THAT ALL COMPONENTS AND EQUIPMENT HAVE BEEN ANCHORED IN ACCORDANCE WITH THE ABOVE REQUIREMENTS.

PIPING, DUCTWORK, AND ELECTRICAL DISTRIBUTION SYSTEM BRACING NOTE
PIPING, DUCTWORK, AND ELECTRICAL DISTRIBUTION SYSTEMS SHALL BE BRACED TO COMPLY WITH THE FORCES AND DISPLACEMENTS PRESCRIBED IN ASCE 7-16 SECTION 13.3 AS DEFINED IN ASCE 7-16 SECTIONS 13.6.5, 13.6.6, 13.6.7, 13.6.8; AND 2022 CBC, SECTIONS 1617A.1.24, 1617A.1.25 AND 1617A.1.26.

THE METHOD OF SHOWING BRACING AND ATTACHMENTS TO THE STRUCTURE FOR THE IDENTIFIED DISTRIBUTION SYSTEM ARE AS NOTED BELOW. WHEN BRACING AND ATTACHMENTS ARE BASED ON A PREAPPROVED INSTALLATION GUIDE (E.G., HCAI OPM FOR 2013 CBC OR LATER), COPIES OF THE BRACING SYSTEM INSTALLATION GUIDE OR MANUAL SHALL BE AVAILABLE ON THE JOBSITE PRIOR TO THE START OF AND DURING THE HANGING AND BRACING OF THE DISTRIBUTION SYSTEMS. THE STRUCTURAL ENGINEER OF RECORD SHALL VERIFY THE ADEQUACY OF THE STRUCTURE TO SUPPORT THE HANGER AND BRACE LOADS.

MECHANICAL PIPING (MP), MECHANICAL DUCTS (MD), PLUMBING PIPING (PP), ELECTRICAL DISTRIBUTION SYSTEMS (E):

[ ]MP[ ]MD[ ]PP[X]E-OPTION 1: DETAILED ON THE APPROVED DRAWINGS WITH PROJECT SPECIFIC NOTES AND DETAILS.
[ ]MP[ ]MD[ ]PP[ ]E-OPTION 2: SHALL COMPLY WITH HCAI (OSHPD) PRE-APPROVAL (OPM#) #OPM-####-##, AS INCLUDED IN THESE DRAWINGS WITH PROJECT SPECIFIC NOTES AND DETAILS.

CONTRACTOR ABBREVIATIONS:

ABBREVIATION	DESCRIPTION
C.M.	CONSTRUCTION MANAGER
E.C.	ELECTRICAL CONTRACTOR
F.A.C.	FIRE ALARM CONTRACTOR
F.P.C.	FIRE PROTECTION CONTRACTOR
G.C.	GENERAL CONTRACTOR
M.C.	MECHANICAL CONTRACTOR
P.C.	PLUMBING CONTRACTOR
T.C.	TECHNOLOGY CONTRACTOR
T.C.C.	TEMPERATURE CONTROL CONTRACTOR

TECHNOLOGY ABBREVIATIONS:

ABBREVIATION	DESCRIPTION
AFG	ABOVE FINISHED GRADE
CM	COUNTER MOUNTED
FBO	FURNISHED BY OTHERS
FF	FINISHED FLOOR
IG	ISOLATED GROUND
INV	EMERGENCY INVERTER
PED	PEDESTAL MOUNTED
UNO	UNLESS NOTED OTHERWISE
+XX	DIMENSIONED HEIGHT ABOVE FINISHED FLOOR
-XX	DIMENSIONED HEIGHT BELOW FINISHED FLOOR
1W	ONE WIRE
2W	TWO WIRE
3W	THREE WIRE
APA	AUTONOMOUS PUBLIC ADDRESS
C	CONDUIT
CAM	CAMERA
CATV	CABLE TELEVISION
C.O.	CONDUIT ONLY
EM	EQUIPMENT POWERED WITH EMERGENCY SOURCE INTERNAL OR EXTERNAL, UNLESS NOTED OTHERWISE
FT, '	FOOT OR FEET
IN., "	INCH OR INCHES
IC	INTERCOMMUNICATION
J-BOX	JUNCTION BOX
MAX	MAXIMUM
MIN	MINIMUM
N/A	NOT APPLICABLE
NIC	NOT IN CONTRACT
NO., #	NUMBER
NTS	NOT TO SCALE
SIG	SIGNAL
SPEC	SPECIFICATION
SPKR	SPEAKER
SR	DEVICE INSTALLED IN SURFACE RACEWAY BOXES
STP	SHIELDED TWISTED PAIR
TCI	TELECOMMUNICATIONS CABLING INSTALLER
TEL/DATA	TELEPHONE DATA
TERM	TERMINAL(S)
TV	TELEVISION
TYP	TYPICAL
UNO	UNLESS NOTED OTHERWISE
UPS	UNINTERRUPTIBLE POWER SOURCE
UTIL	UTILITY
UTP	UNSHIELDED TWISTED PAIR
UTR	UP THRU ROOF
U.C.	UNDERGROUND CONDUIT
W	WIRES
WP	WEATHERPROOF

NOTES:
1. NOT ALL ABBREVIATIONS MAY APPLY.
2. TECHNOLOGY SCHEDULES CONTAIN EQUIPMENT TAG ABBREVIATIONS THAT ARE HEREBY INCORPORATED INTO THE ABBREVIATION LIST.
3. SEE OTHER DISCIPLINE DRAWINGS WITHIN THE CONSTRUCTION DOCUMENTS FOR ABBREVIATIONS NOT DEFINED ABOVE OR IN TECHNOLOGY SCHEDULES.

GENERAL NOTES:

1. INSTALLATION SHALL COMPLY WITH ALL APPLICABLE CODES, STANDARDS, AND MANUFACTURER'S INSTALLATION REQUIREMENTS.
2. REVIEW ALL PROJECT DOCUMENTS INCLUDING SPECS AND DRAWINGS PERTAINING TO ALL DISCIPLINES PRIOR TO SUBMITTING A BID. SUBMIT PRE-BID REQUEST FOR INFORMATION FOR ITEMS IN QUESTION AND/OR CONFLICTS FOUND.
3. DRAWINGS SHOW THE DESIGN INTENT DIAGRAMMATICALLY. THEY DO NOT SHOW THE EXACT UTILITY ROUTING NOR EVERY ELBOW, OFFSET, ETC. WHERE REQUIRED, THE CONTRACTOR SHALL MAKE ADJUSTMENTS TO THEIR SYSTEMS TO AVOID CONFLICT WITH THE STRUCTURE AND OTHER DISCIPLINES. THE COST FOR SUCH ADJUSTMENTS SHALL BE INCLUDED IN THE BID.
4. OBTAIN AND PAY FOR ALL PERMITS REQUIRED FOR WORK PERFORMED.
5. OBTAIN UTILITY PURVEYOR REQUIREMENTS PRIOR TO PURCHASING EQUIPMENT OR PERFORMING WORK.
6. THE G.C. OR C.M. TEAM SHALL LEAD THE SUBCONTRACTORS IN PROVIDING A COORDINATED SET OF SHOP DRAWINGS. SEE GENERAL REQUIREMENTS SPEC FOR ADDITIONAL INFORMATION.
7. PROVIDE FIRESTOPPING FOR ALL UTILITY PENETRATIONS THRU FIRE-RATED ASSEMBLIES.
8. COORDINATE FRAMING REQUIREMENTS FOR ACCESS PANELS AND EQUIPMENT/PANEL SUPPORTS WITH G.C. OR C.M. PRIOR TO SUBMITTING BID.
9. THE CONTRACTOR IS RESPONSIBLE FOR VERIFYING THE CORRECTION OF CONSTRUCTION DEFICIENCIES LISTED ON THE JOB SITE OBSERVATION REPORT. RETURN THE JOB SITE OBSERVATION REPORT TO A/E WITH DEFICIENCIES SIGNED OFF. PROVIDE PHOTOGRAPHIC AND/OR VIDEO EVIDENCE OF CORRECTED DEFICIENCIES IF REQUESTED BY THE ENGINEER.
10. PROVIDE CLOSEOUT DOCUMENTATION UPON COMPLETION OF PROJECT. SEE GENERAL REQUIREMENTS SPEC FOR ADDITIONAL INFORMATION.

TECHNOLOGY NOTES:

1. TECHNOLOGY WORK SHALL BE CONSTRUCTED IN A PROFESSIONAL MANNER. COMPONENTS SHALL BE CLEANED PRIOR TO OWNER TURNOVER.
2. THE SCHEDULED EQUIPMENT SHALL BE USED AS THE BASIS OF DESIGN. MODEL NUMBERS ARE PROVIDED FOR REFERENCE ONLY. EQUIPMENT SHALL MEET SPECIFIED PERFORMANCE. THE CONTRACTOR SHALL IDENTIFY ALL SELECTED OPTIONS IN THE SUBMITTAL.
3. IF A CONTRACTOR PROVIDES EQUIPMENT OTHER THAN THE BASIS OF DESIGN, THAT CONTRACTOR SHALL BE RESPONSIBLE FOR ALL COSTS INCURRED AS A RESULT. THAT INCLUDES, BUT IS NOT LIMITED TO, AGENCY FEES FOR REVIEW OF CHANGES, STRUCTURAL MODIFICATIONS FOR INCREASED WEIGHT, AND DATA EQUIPMENT, WIRING, CONDUIT, AND BREAKER CHANGES FOR DIFFERENT ELECTRICAL REQUIREMENTS.
4. COORDINATE POWER REQUIREMENTS WITH THE E.C. PRIOR TO PROVIDING SUBMITTALS TO THE ENGINEER.
5. SEE SPEC SECTIONS 26 05 33 FOR CONDUIT/RACEWAY SYSTEM INSTALLATION AND CLEANING REQUIREMENTS.
6. PROVIDE CONDUIT OR RACEWAY EXPANSION JOINT THAT ACCOMMODATES THE BUILDING MOVEMENT WHERE CONDUIT OR RACEWAY CROSSES BUILDING EXPANSION JOINT.
7. PAINT INTERIOR EXPOSED CONDUIT/RACEWAY, PULL BOXES, AND ASSOCIATED HANGERS/SUPPORTS LOCATED IN OCCUPIED SPACES TO MATCH THE SURROUNDING ARCHITECTURAL COLOR SCHEME. PAINT EXTERIOR CONDUIT/RACEWAY, PULL BOXES, AND ASSOCIATED HANGERS/SUPPORTS ADJACENT TO EXTERIOR WALL TO MATCH WALL COLOR. FINAL COLORS SHALL BE APPROVED BY THE ARCHITECT AND ENGINEER. SEE SPEC SECTION 27 0500 FOR ADDITIONAL REQUIREMENTS.
8. PROVIDE IDENTIFICATION FOR CONDUIT, PULL BOXES, AND EQUIPMENT PER SPEC SECTION 26 0553.
9. CONDUIT/RACEWAY SHALL NOT PASS THRU NOR UNDER ELECTRICAL ROOMS, ELEVATOR MACHINE ROOMS, ELEVATOR HOISTWAYS, SKYLIGHTS, AND ROOF ACCESS HATCHES.
10. PULL BOXES SHALL BE ACCESSIBLE. PROVIDE KEYED ACCESS PANELS WHERE PULL BOXES HAVE BEEN LOCATED IN CONCEALED AREAS. ACCESS PANEL SIZE SHALL BE LARGE ENOUGH TO ACCESS EACH PULL BOX.
11. A COMPLETE TEST FOR EACH SYSTEM SHALL BE PERFORMED BEFORE PROJECT IS READY FOR FINAL PUNCH WALK. THIS SHALL BE DONE IN ORDER TO VERIFY FULL FUNCTIONALITY OF EACH TECHNOLOGY SYSTEM
12. INSTALL TERMINAL CABINET NO HIGHER THAN 6'-0" ABOVE FINISHED FLOOR TO TOP OF CABINET.
13. ALL SECURITY ROUGH-IN, IF REQUIRED, SHALL BE COORDINATED WITH SECURITY VENDOR PRIOR TO ROUGH-IN. PROGRAMMING AND TERMINATIONS SHALL BE PROVIDED BY THE SECURITY VENDOR, WHERE REQUIRED.
14. PROVIDE 200LB PULL STRING FOR EMPTY RACEWAYS.

TECHNOLOGY SHEET INDEX:

Sheet Number	Sheet Name
T-0.1	TECHNOLOGY COVER SHEET
TS-1.0	TECHNOLOGY - OVERALL SITE PLAN
TS-1.1	TECHNOLOGY - ENLARGED SITE PARKING LOT - REMODEL
T-4.0	TECHNOLOGY DETAILS

CODES AND STANDARDS:

EDITION	REFERENCE CODE/STANDARD
2022	CALIFORNIA ADMINISTRATIVE CODE, (CCR, TITLE 24, PART 1)
2022	CALIFORNIA BUILDING CODE, (CCR, TITLE 24, PART 2)
2022	CALIFORNIA ELECTRICAL CODE, (CCR, TITLE 24, PART 3)
2022	CALIFORNIA MECHANICAL CODE, (CCR, TITLE 24, PART 4)
2022	CALIFORNIA PLUMBING CODE, (CCR, TITLE 24, PART 5)
2022	CALIFORNIA ENERGY CODE, (CCR, TITLE 24, PART 6)
2022	CALIFORNIA HISTORICAL BUILDING CODE, (CCR, TITLE 24, PART 8)
2022	CALIFORNIA FIRE CODE, (CCR, TITLE 24, PART 9)
2022	CALIFORNIA EXISTING BUILDING CODE, (CCR, TITLE 24, PART 10)
2022	CALIFORNIA GREEN BUILDING STANDARDS, (CCR, TITLE 24, PART 11)
2022	CALIFORNIA REFERENCED STANDARDS CODE, (CCR, TITLE 24, PART 12)
2022	STANDARD FOR INSTALLATION OF FIRE SPRINKLER SYSTEMS OF CALIFORNIA, (ADOPTS NFPA 13, 2016. WITH AMENDMENTS)
2021	NFPA 54-NATIONAL FUEL GAS CODE
2022	NFPA 72-NATIONAL FIRE ALARM AND SIGNALING CODE

CCR-CALIFORNIA CODE OF REGULATIONS
NFPA-NATIONAL FIRE PROTECTION AGENCY

GENERAL LEGEND:

SYMBOL	DESCRIPTION
## / ####	DETAIL CALL-OUT SYMBOL
###-#	EQUIPMENT TAG
#	KEYNOTE SYMBOL
	POINT OF CONNECTION OR DISCONNECTION
## / ####	SECTION CUT CALL-OUT SYMBOL
## / ####	ENLARGED PLAN CALL-OUT SYMBOL

LINETYPE	DESCRIPTION
	EXISTING TO REMAIN
	EXISTING TO BE REMOVED
	NEW CONSTRUCTION
(E)	EXISTING TO REMAIN
(X)	EXISTING TO BE REMOVED

REGISTERED PROFESSIONAL ENGINEER JAMES C. LESSARD E 24240 Exp. 02-30-25 ELECTRICAL STATE OF CALIFORNIA
SIGNED: 08/06/24
STAMPS

LICENSED ARCHITECT ROGER CLARKE Exp. 10-31-25 STATE OF CALIFORNIA

AGENCY APPROVAL
File No.: A,P

ASTRAL ENGINEERS, PC
PO BOX 190
RANCHO CUCAMONGA, CA 91729
909.903.0015
www.astraleng.com
PROJECT #:250009.00

CONSULTANT BRANDING

RUHNAU CLARKE ARCHITECTS

COLTON MS INTERIM HOUSING: DSA BC SUBMITTAL -03/06/25

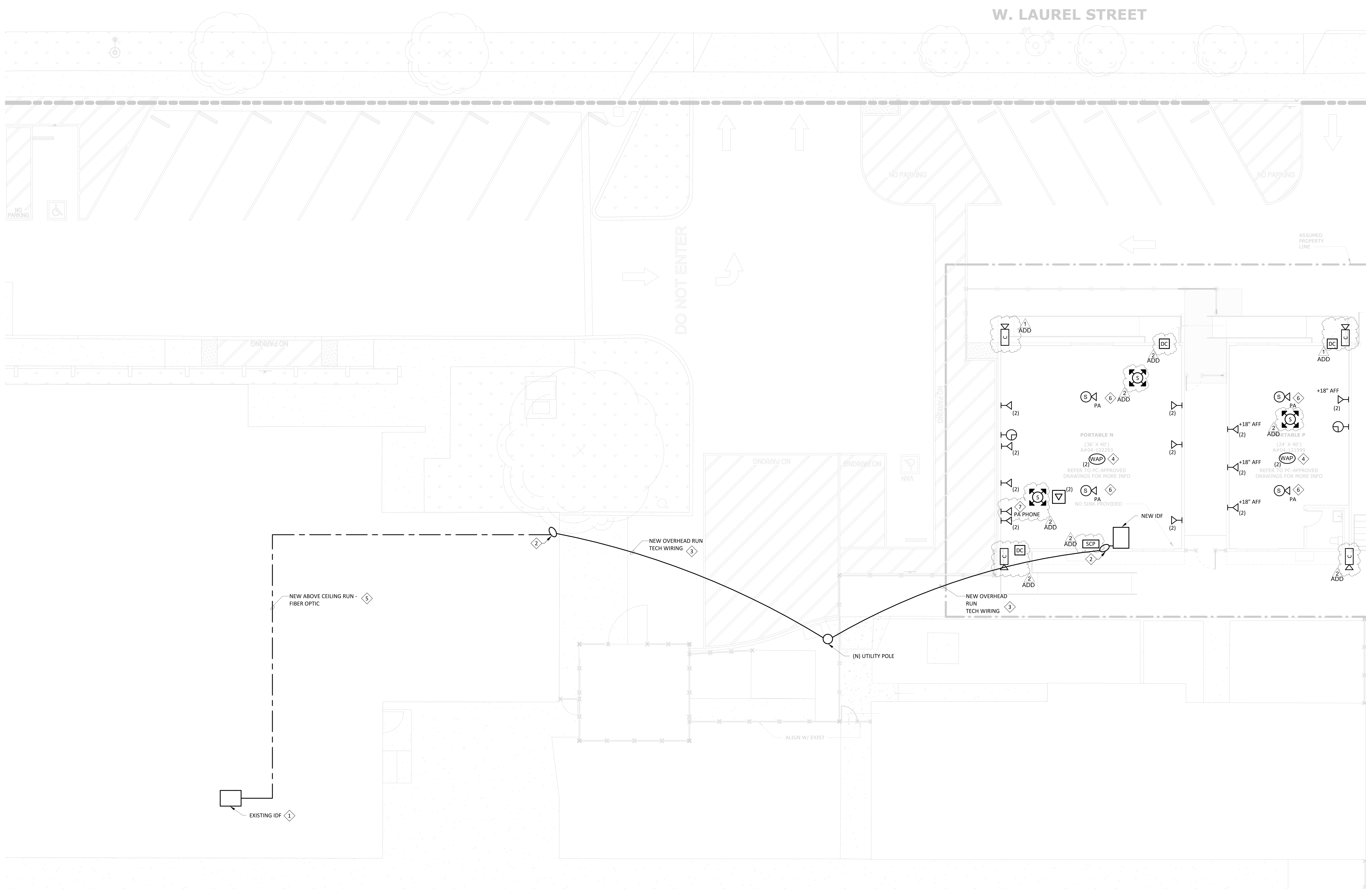

N

1 TECHNOLOGY - ENLARGED SITE PARKING LOT - REMODEL

1/8" = 1'-0"

	GENERAL NOTES - TS-1.1
NUMBER	TEXT
1	TECHNOLOGY CABLING TO BE AERIAL FIBER OPTIC CABLE WITH INTEGRAL MESSENGER WIRE.

#	KEYNOTES - TS-1.1
NUMBER	TEXT
1	UTILIZE EXSITING IDF ON STAGE TO RUN NEW FIBER OPTIC CABLE TO OVER HEAD RUN
2	PROVIDE WEATHER HEAD AND RISE PIPE FOR FIRE ALARM AND TECHNOLOGY CABLING. SEE DETAIL 1/E-4.0 FOR CABLE SPACING.
3	PROVIDE OVERHEAD RUN TO UTILITY POLE. SEE 1/E-4.0 FOR CABLE RUN RESTRICTIONS.
4	WIRELESS ACCESS POINTS (WAP) ARE TO BE DISTRICT FURNISHED AND CONTRACTOR INSTALLED.
5	SEE 5/T-4.0 FOR CABLING INSTALLATION WITH CABLE HANGERS.
6	SEE 6/T-4.0 FOR TYPICAL CEILING MOUNTED SPEAKER INSTALLATION.
7	PROVIDE ANALOG PHONE LINE AND RJ-11 PHONE OUTLET AT THIS LOCATION, CONNECTED TO ADMIN BUILDING PAGING SYSTEM HEADEND FOR ANNOUNCEMENTS AND BELL SCHEDULING. ROUTE ANALOG PHONE LINE AERIAL OVERHEAD VIA UTILITY POLE.

1 ADD

REGISTERED PROFESSIONAL ENGINEER JAMES C. LESSARD E 24240 Exp. 09-30-26 ELECTRICAL STATE OF CALIFORNIA

LICENSED ARCHITECT ROGER CLARKE No. C-21340 Exp.10-31-25 STATE OF CALIFORNIA

SIGNED: 08/06/24

STAMPS

AGENCY APPROVAL
File No: A#

ASTRAL ENGINEERS, PC
PO BOX 190
RANCHO CUCAMONGA, CA 91729
909.903.0015
www.astraleng.com
PROJECT #:250009.00

CONSULTANT BRANDING

RUHNAU CLARKE ARCHITECTS

COLTON MS INTERIM HOUSING: DSA BC SUBMITTAL -03/06/25

PROJECT No. :1-15-118
5/29/2025 7:08:46 PM

DRAWN BY: ABH CHECKED BY: JCL

DELTA # 1 DATE 05/02/25 ☐ADD ☐AFO ☐CCD ☐REV
DELTA # 2 DATE 05/16/25 ☒ADD ☐AFO ☐CCD ☐REV
DELTA # ____ DATE ____ ☐ADD ☐AFO ☐CCD ☐REV
DELTA # ____ DATE ____ ☐ADD ☐AFO ☐CCD ☐REV

RUHNAUCLARKE.COM

3775 TENTH STREET, RIVERSIDE CALIFORNIA 92501 (951) 684 4664 / 5751 PALMER WAY, SUITE C, CARLSBAD CALIFORNIA 92010 (760) 438 5899

COLTON MS INTERIM HOUSING

670 W. LAUREL ST, COLTON, CA 92324
COLTON JOINT UNIFIED SCHOOL DISTRICT

TECHNOLOGY - ENLARGED SITE PARKING LOT - REMODEL

TS-1.1

1-15-118

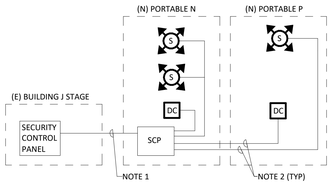

NOTES:
1. INTERCONNECTION CABLING BETWEEN (E) SECURITY PANEL AND (N) SCP TO BE AERIAL CABLE WITH MEESENGER WIRE.
2. MOTION SENSORS AND DOOR CONTACT SWITCHES REQUIRE A 2-CONDUCTOR, 18 AWG CABLE CONNECTION.
3. COORDINATE SPECIFIC MODEL MOTION SENSORS AND DOOR CONTACTS WITH DOOR INSTALLATION AND CAPABILITY WITH EXISTING CAMPUS SECURITY SYSTEM.

1
ADD

SECURITY RISER DIAGRAM — NTS — 7

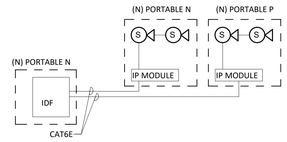

NOTE: PROVIDE BOGEN QUANTUM MULTICOM IP-BASED CEILING MOUNTED SPEAKERS

SPEAKER RISER DIAGRAM — NTS — 4

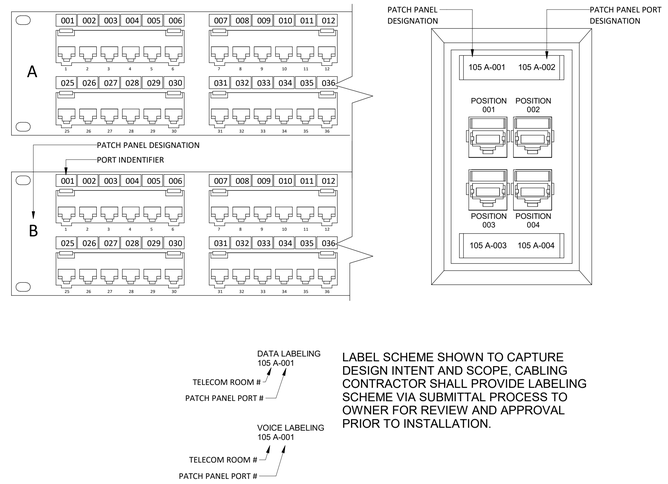

LABEL SCHEME SHOWN TO CAPTURE DESIGN INTENT AND SCOPE, CABLING CONTRACTOR SHALL PROVIDE LABELING SCHEME VIA SUBMITTAL PROCESS TO OWNER FOR REVIEW AND APPROVAL PRIOR TO INSTALLATION.

PATH PANEL AND OUTLET LABELING — NTS — 1

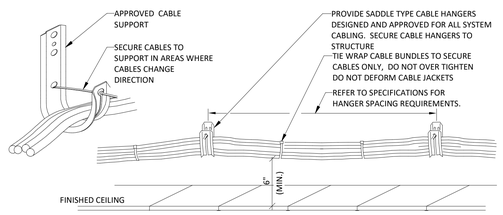

INSTALLATION NOTES:

1. LOCATE CABLE BUNDLES AMINIMUM OF 6" ABOVE REMOVABLE CEILINGS TO MAINTAIN CLEARANCE (ALONG WALLS WHERE POSSIBLE). LOCATE IN AREAS THAT ARE ACCESSIBLE.
2. USE 2 OR MORE CABLE HANGERS AT ALL TURNS TO MAINTAIN MANUFACTURER'S BEND RADIUS REQUIREMENTS.

LOW VOLTAGE CABLING INSTALLATION WITH CABLE HANGERS — NTS — 5

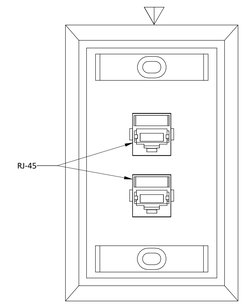

(2) CATEGORY 6, 4-PAIR CABLES AND (2) CATEGORY 6 RJ45 JACKS AND (1) 2-PORT FACEPLATE

DATA OUTLET FACE PLATE — NTS — 2

- — NTS — 8

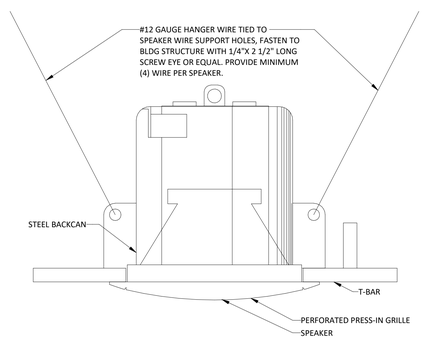

NOTES:
1. GRILLE FINISH REQUIREMENTS AS SPECIFIED BY ARCHITECT.

2. TOTAL WEIGHT OF SPEAKER BOX ASSEMBLY 12 LBS.

3. INSTALLATION FOR IP POE SPEAKER AND ANALOG 25V SPEAKERS.

TYPICAL CEILING MOUNTED SPEAKER — NTS — 6

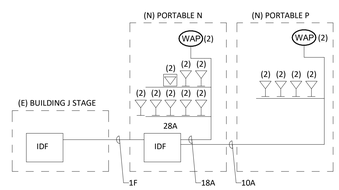

NOTE: INTERCONNECTION CABLING BETWEEN (E) IDF AND (N) IDF TO BE AERIAL FIBER OPTIC WITH MEESENGER WIRE.

NETWORK RISER DIAGRAM — NTS — 3

- — NTS — 9

REGISTERED PROFESSIONAL ENGINEER JAMES C. LESSARD E 24240 Exp. 12-31-25 ELECTRICAL STATE OF CALIFORNIA

SIGNED: 08/06/24

STAMPS

LICENSED ARCHITECT ROGER CLARKE Exp. 10-31-25 STATE OF CALIFORNIA

AGENCY APPROVAL
File No.: A,P

ASTRAL ENGINEERS, PC
PO BOX 190
RANCHO CUCAMONGA, CA 91729
909.903.0015
www.astraleng.com
PROJECT #:250009.00

CONSULTANT BRANDING

RUHNAU CLARKE ARCHITECTS

COLTON MS INTERIM HOUSING: DSA BC SUBMITTAL -03/06/25

PROJECT No. :1-15-118
5/29/2025 7:08:46 PM

DRAWN BY: ABH CHECKED BY: JCL

DELTA # 1	DATE 05/02/25	☐ ADD	☐ AFO	☐ CCD	☐ REV
DELTA # 2	DATE 05/16/25	☒ ADD	☐ AFO	☐ CCD	☐ REV
DELTA #	DATE	☐ ADD	☐ AFO	☐ CCD	☐ REV
DELTA #	DATE	☐ ADD	☐ AFO	☐ CCD	☐ REV

RUHNAUCLARKE.COM
3775 TENTH STREET, RIVERSIDE CALIFORNIA 92501 (951) 684 4664 / 5751 PALMER WAY, SUITE C, CARLSBAD CALIFORNIA 92010 (760) 438 5899

COLTON MS INTERIM HOUSING
670 W. LAUREL ST, COLTON, CA 92324
COLTON JOINT UNIFIED SCHOOL DISTRICT

TECHNOLOGY DETAILS

T-4.0

1-15-118

PLUMBING FIXTURE SCHEDULE

SYMBOL	FIXTURE	COLD WATER	HOT WATER	WASTE	VENT	FIXTURE DESCRIPTION (AS CALLED OUT OR APPROVED EQUAL)
WC 1	WATER CLOSET (ACCESSIBLE)	1/2"	-	3"	2"	AMERICAN STANDARD: GLENWALL VORMAX WALL-HUNG ELONGATED TWO-PIECE 1.28 GPF/4.8 LPF, MODEL # 2882107 WITH ENLONGATED PLASTIC SEAT (5901100)
LAV 1	LAVATORY (ACCESSIBLE)	1/2"	-	2"	1 1/2"	AMERICAN STANDARD 0355.012 LUCERNE 20X18" VITREOUS CHINA; JAY R SMITH #722 CONCEALED HANGER; OLYMPIA #L6161 SINGLE HANDLE FAUCET (0.5 GPM)

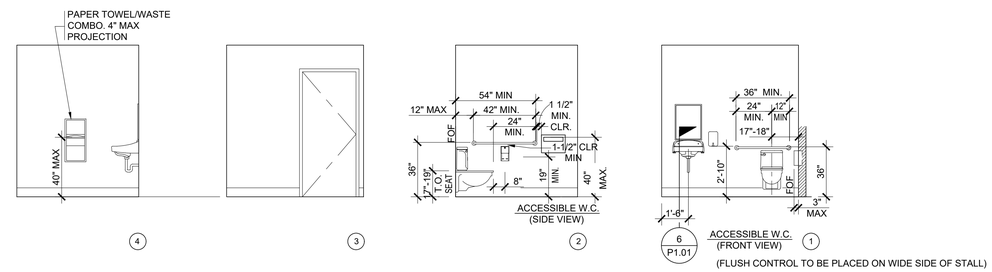

TOILET INTERIOR ELEVATIONS - ADULT 1

PLUMBING ACCESSORIES

- A — BOBRICK B-3888 TOILET PAPER HOLDER: MULTI ROLL RECESSED. PROVIDED BY SCM
- B — BOBRICK B-290 - 18"x24" MIRROR
- C — GRAB BAR: 48" BOBRICK B-5806 x 36" & 48"
- D — TOILET SEAT DISPENSER: SURFACE MOUNTED, BOBRICK B-221, 4" MAX PROJECTION
- E — PAPER TOWEL DISPENSER: SURFACE MOUNTED 4" MAX. PROJECTION-CANNOT ENCROACH INTO 30"x48" CLEAR SPACE OF FIXTURE. SEE 10/P-1.01 FOR MOUNTING HEIGHT

SCM SCOPE OF WORK: SEMI-RECESSED TOILET PAPER HOLDER, MIRROR, & GRAB BARS

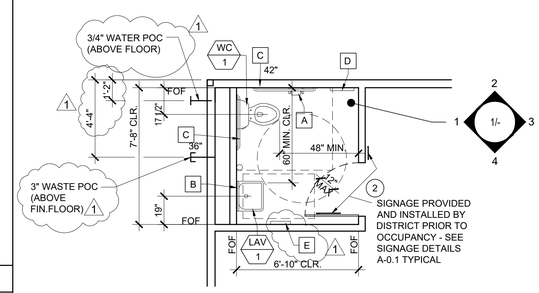

NOTE:
SEE PC P-1.01 FOR PLUMBING MOUNTING HEIGHTS TABLE

TOILET ROOM PLAN

SCALE: N.T.S. 2

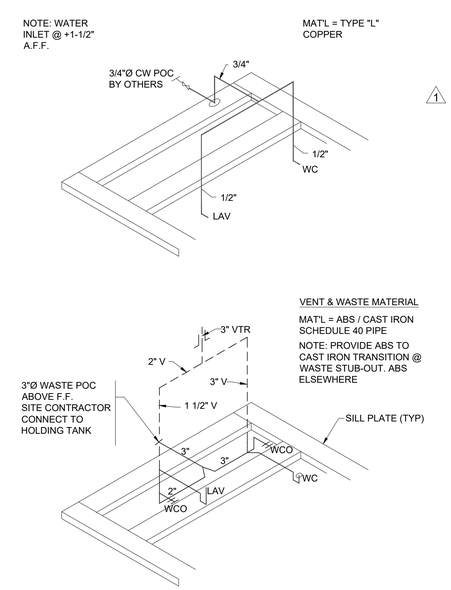

TOILET ROOM COLD WATER SUPPLY AND WASTE

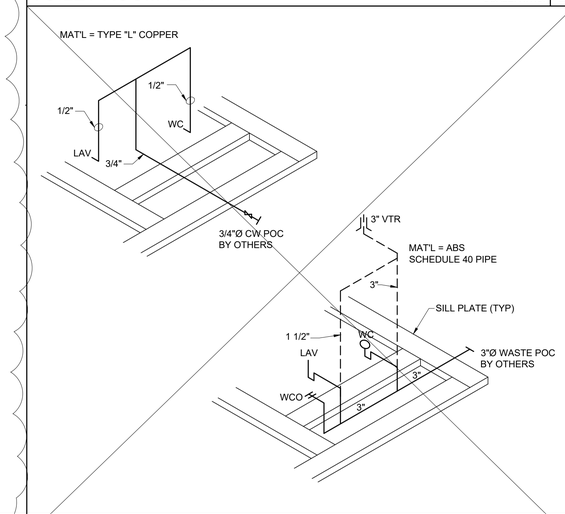

TOILET ROOM COLD WATER SUPPLY AND WASTE

SCALE: N.T.S. 3

PROJECT SPECIFIC STATE AGENCY APPROVAL

THESE DRAWINGS AND ALL MATERIAL CONTAINED HEREIN ARE THE PROPERTY OF SILVERCREEK MODULAR, INC (SCM Inc) AND SHALL NOT BE REPRODUCED, COPIED OR OTHERWISE DISPOSED OF DIRECTLY OR INDIRECTLY AND SHALL NOT BE USED IN WHOLE OR IN PART TO ASSIST IN THE MAKING OF OR FOR THE PURPOSE OF FURNISHING ANY INFORMATION FOR THE MAKING OF DRAWINGS, PRINTS, APPARATUS OR PARTS THEREOF WITHOUT THE FULL KNOWLEDGE AND WRITTEN CONSENT OF SCM Inc.
ALL PATENTABLE MATERIAL CONTAINED HEREIN AND ORIGINATING WITH SCM Inc SHALL BE THE PROPERTY OF SCM Inc.

PROJECT NAME:

COLTON USD
COLTON M.S.

SHEET TITLE:

PLUMBING DETAILS AND SCHEDULE

REVISIONS
1. ADDENDUM/CLARIFICATION 04/15/2025
2.
3.
4.
5.

Silver Creek
2830 BARRETT AVE PERRIS, CALIFORNIA 92571
PHONE: 951-943-5393 FAX: 951-943-2211

MODULAR BUILDING DESIGN PROFESSIONAL

REGISTERED PROFESSIONAL ENGINEER
JOHN W STARLIN
2475
Exp. 3-31-26
STATE OF CALIFORNIA

SILVER CREEK INDUSTRIES

PROJECT NO:	11606
DRAWN BY:	RL
SCALE:	AS NOTED
DATE:	03-12-2025

SHEET NUMBER

P-1.01N

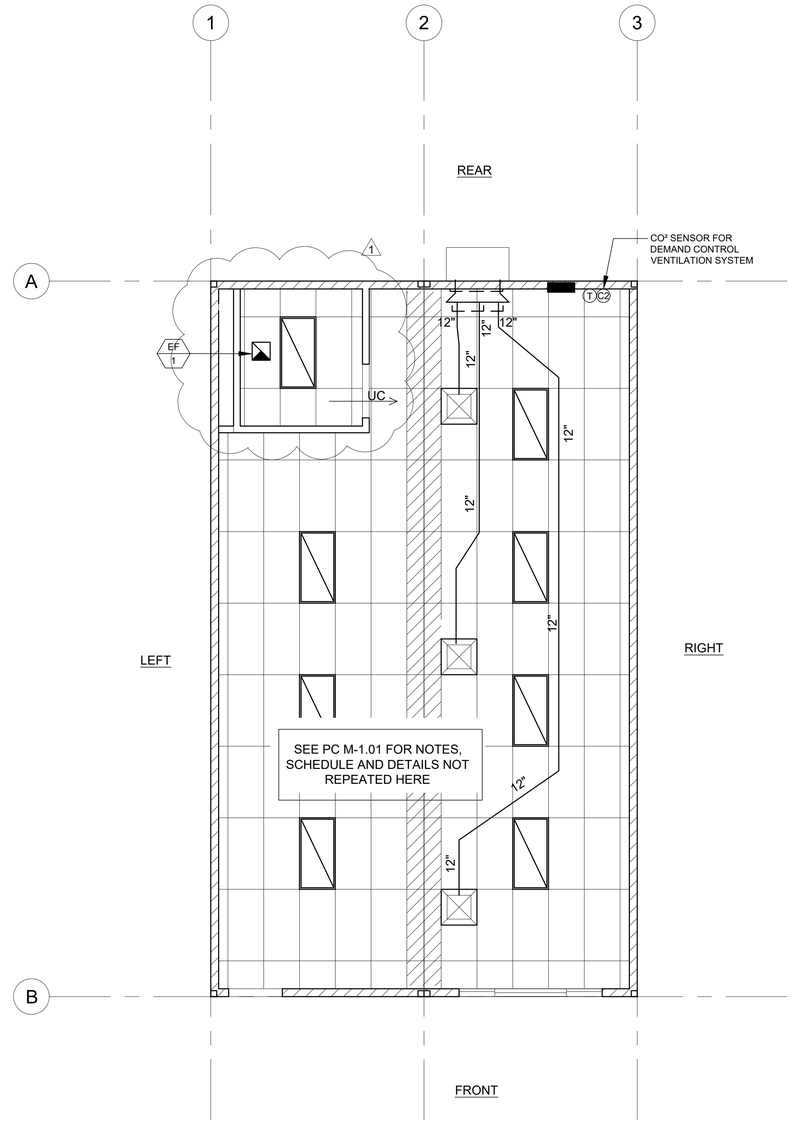

NOTE:
THE HVAC EQUIPMENT SERVING THIS BUILDING SHALL BE CAPABLE OF PROVIDING 432 CFM (MIN.) OF OUTSIDE AIR

NOTE:
SEE EQUIVALENT PC PLAN M-1.01 FOR SCHEDULES AND NOTES

MECHANICAL PLAN

SCALE: 1/4" = 1' - 0" | 1

PROJECT SPECIFIC STATE AGENCY APPROVAL

THESE DRAWINGS AND ALL MATERIAL CONTAINED HEREIN ARE THE PROPERTY OF SILVERCREEK MODULAR, INC (SCM Inc) AND SHALL NOT BE REPRODUCED, COPIED OR OTHERWISE DISPOSED OF DIRECTLY OR INDIRECTLY AND SHALL NOT BE USED IN WHOLE OR IN PART TO ASSIST IN THE MAKING OF OR FOR THE PURPOSE OF FURNISHING ANY INFORMATION FOR THE MAKING OF DRAWINGS, PRINTS, APPARATUS OR PARTS THEREOF WITHOUT THE FULL KNOWLEDGE AND WRITTEN CONSENT OF SCM Inc.
ALL PATENTABLE MATERIAL CONTAINED HEREIN AND ORIGINATING WITH SCM Inc SHALL BE THE PROPERTY OF SCM Inc

PROJECT NAME:

COLTON USD
COLTON M.S.

SHEET TITLE:

PROJECT SPECIFIC
MECHANICAL
PLAN
24' x 40'

REVISIONS
1 ADDENDUM/CLARIFICATION 04/15/2025
2
3
4
5

Silver Creek
2830 BARRETT AVE PERRIS, CALIFORNIA 92571
PHONE: 951-943-5393 FAX: 951-943-2211

MODULAR BUILDING DESIGN PROFESSIONAL

REGISTERED PROFESSIONAL ENGINEER
JOHN W STARLIN
2475
Exp. 3-31-26
STATE OF CALIFORNIA

SILVER CREEK INDUSTRIES

PROJECT NO:	11606
DRAWN BY:	RL
SCALE:	AS NOTED
DATE:	03-12-2025

SHEET NUMBER

M-1.01N

NOTE:
SEE EQUIVALENT PC PLAN
E-1.01 FOR LEGEND,
NOTES AND DETAILS

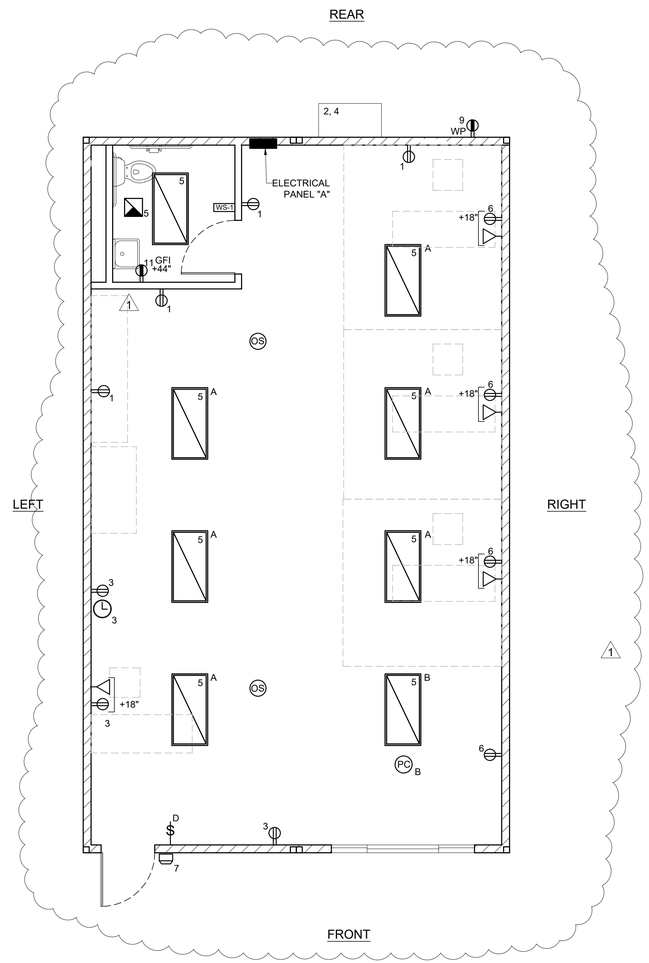

PANEL: A W/BATH	PHASE:			VOLTS:		BUSS:			MAIN:					LOCATION:		FEED:					MOUNTING:
S/N:	SINGLE			120/208		100 AMP			100A					INTERIOR		BOTTOM					RECESSED
OBJECT DESCRIPTION	WATT PER	NO. OF	LCL	WATTS A	WATTS B	BRK	POLE	WIRE SIZE	CKT NO	LEG A	LEG B	CKT NO	WIRE SIZE	POLE	BRK	WATTS A	WATTS B	LCL	NO OF	WATT PER	OBJECT DESCRIPTION
RECEPTACLES	180	4		720		20	1	#12	1	X		2	#8	2	60	4830			1	4830	5 TON A/C
RECEPTACLES	180	4			720	20	1	#12	3		X	4	#8	/	/		4830		/	4830	5 TON A/C
INTERIOR LIGHTS	65	10	x	650		20	1	#12	5	X		6	#12	1	20	720			4	180	RECEPTACLES
EXTERIOR LIGHTS	32	1	x		32	20	1	#12	7		X	8					0				
EXTERIOR RECPT	180	1		180		20	1	#12	9	X		10				0					
					0	20	1	#12	11		X	12	#12	1	20		180			180	FIRE ALARM**LOCK-ON**
	LEG TOTALS			1550	752											5550	5010	LEG TOTALS			
LCL=170.5+12862=13032.5																					
TOTAL WATTS=13032.5						LEG BALANCE = 10.4%										TOTAL AMPS: 62.66					

1

ELECTRICAL PLAN

SCALE: 1/4" = 1' - 0"

1

PROJECT SPECIFIC STATE AGENCY APPROVAL

THESE DRAWINGS AND ALL MATERIAL CONTAINED HEREIN ARE THE PROPERTY OF SILVERCREEK MODULAR, INC (SCM Inc) AND SHALL NOT BE REPRODUCED, COPIED OR OTHERWISE DISPOSED OF DIRECTLY OR INDIRECTLY AND SHALL NOT BE USED IN WHOLE OR IN PART TO ASSIST IN THE MAKING OF OR FOR THE PURPOSE OF FURNISHING ANY INFORMATION FOR THE MAKING OF DRAWINGS, PRINTS, APPARATUS OR PARTS THEREOF WITHOUT THE FULL KNOWLEDGE AND WRITTEN CONSENT OF SCM Inc.
ALL PATENTABLE MATERIAL CONTAINED HEREIN AND ORIGINATING WITH SCM Inc SHALL BE THE PROPERTY OF SCM Inc

PROJECT NAME:

COLTON USD
COLTON M.S.

SHEET TITLE:

PROJECT SPECIFIC
ELECTRICAL
PLAN
24' x 40'

REVISIONS

1	ADDENDUM 01	5/7/2025
2		
3		
4		
5		

Silver Creek
2830 BARRETT AVE PERRIS, CALIFORNIA 92571
PHONE: 951-943-5393 FAX: 951-943-2211

MODULAR BUILDING DESIGN PROFESSIONAL

STATE OF CALIFORNIA
REGISTERED PROFESSIONAL ENGINEER
JOHN W STARLIN
2475
Exp. 3-31-26

SILVER CREEK INDUSTRIES

PROJECT NO: 11606
DRAWN BY: RL
SCALE: AS NOTED
DATE: 03-12-2025

SHEET NUMBER

1

E-1.01N

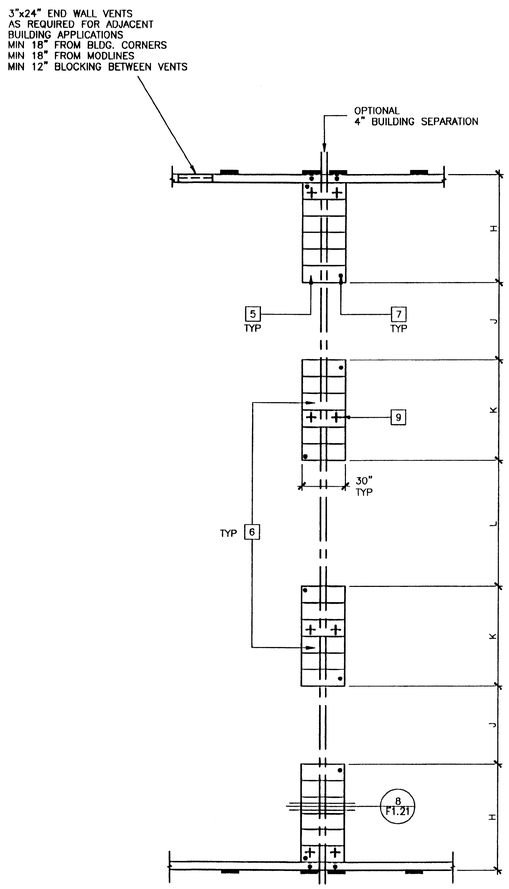

FOOTINGS AT ADJACENT BUILDING
(OPTIONAL 4" SEPARATION)

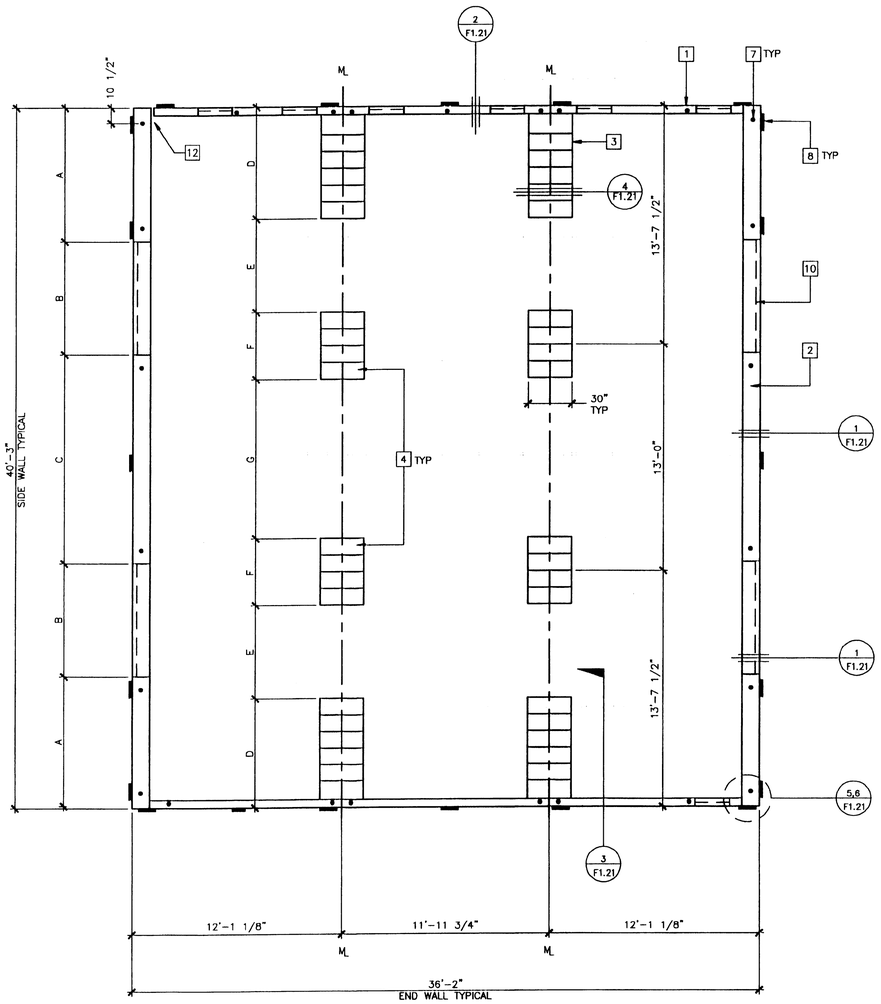

FOUNDATION PLAN

36'x40' WOOD SILL
SCALE: 1/4" = 1'-0"

FOUNDATION PLATE SCHEDULE

		50 PSF	50 + 20 PSF	100 PSF
END WALL	SILL	2"x6"	2"x6"	2"x12"
	BLOCKING	2"x4"	2"x4"	2"x8"
	TOP PLATE	2"x4"	2"x4"	2"x6"
SIDE WALL	SILL	2"x12"	2"x12"	2"x12"
	BLOCKING	2"x8"	2"x8"	2"x8"
	TOP PLATE	2"x6"	2"x6"	2"x6"
MODLINE PAD AT ENDWALL	SILL	(6)2"x12"x30"	(7)2"x12"x30"	(5)2"x12"x30"
	BLOCKING	2"x10"	2"x10"	2"x10"
	TOP PLATE	2"x8"	2"x8"	2"x8"
MODLINE PAD AT INTERIOR	SILL	(4)2"x12"x30"	(5)2"x12"x30"	(12)2"x10"x30"
	BLOCKING	2 x 10	2 x 10	2 x 10
	TOP PLATE	2 x 8	2 x 8	2 x 8
4" SEPARATION PAD AT END WALL	SILL	(6)2"x12"x30"	(6)2"x12"x30"	(6)2"x10"x30"
	BLOCKING	2"x12"	2"x12"	2"x12"
	TOP PLATE	2"x12"	2"x12"	2"x12"
4" SEPARATION PAD AT INTERIOR	SILL	(6)2"x12"x30"	(8)2"x12"x30"	(14)2"x10"x30"
	BLOCKING	2"x12"	2"x12"	2"x12"
	TOP PLATE	2"x12"	2"x12"	2"x12"

NOTE: • USE 2"x4" PLATES FOR ANY ADDITIONAL BLOCKING REQUIRED FOR LEVELING.

• ALL SILL (FOOTING) PLATES TO BE PRESSURE TREATED SEE NOTE #3 THIS SHEET.

• FOR FOUNDATION PLATE NAILING SEE F1.21

DIMENSION TABLE

	50 PSF	50 + 20 PSF	100 PSF	125 PSF
A	7'-7 1/2"	9'-1 1/2"	9'-1 1/2"	SEE SHEET F1.12
B	6'-6"	4'-0"	4'-0"	
C	12'-0"	14'-0"	14'-0"	
D	6'-1"	7'-1/4"	5'-7 1/2"	
E	5'-6"	4'-4"	3'-8"	
F	3'-9"	4'-8 1/4"	9'-3"	
G	9'-7"	8'-2"	3'-8"	
H	6'-1"	6'-1"	5'-6 1/4"	
J	4'-9"	3'-10"	2'-6"	
K	5'-7 1/2"	7'-6"	10'-9 1/2"	
L	7'-4"	5'-5"	2'-7 1/2"	

VENT CALCULATIONS

VENTING REQUIRED=36'x40'=1440/150=9.6 SF

VENT
S1=3"x78"=1.63 SF
S2=3"x48"=1.00 SF
E1=3"x24"=0.50 SF

50 PSF FLOOR LOAD
S1x4=6.50 SF
E1x7=3.50 SF
10.00 SF > 9.6

50+20 PSF FLOOR LOAD
S2x4=4.00 SF
E1x12=6.00 SF
10.00 SF > 9.6

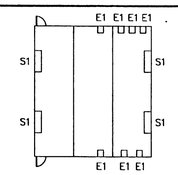

50 PSF FLOOR LOAD

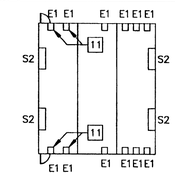

50+20 AND 100 PSF FLOOR LOADS

VENT LEGEND

S1=SIDE WALL VENT. 3"x6'-0"
S2=SIDE WALL VENT. 3"x4'-0"
E1=END WALL VENT. 3"x2'-0"

KEY NOTES

1. FOUNDATION AT END WALL – SEE FOUNDATION PLATE SCHEDULE
2. FOUNDATION AT SIDE WALL – SEE FOUNDATION PLATE SCHEDULE
3. FOUNDATION MODLINE PAD AT END WALL –SEE FOUNDATION PLATE SCHEDULE.
4. FOUNDATION MODLINE PAD AT INTERIOR – SEE FOUNDATION PLATE SCHEDULE.
5. FOUNDATION PAD AT 4" SEPARATION AT END WALL
6. FOUNDATION PAD AT 4" SEPARATION AT INTERIOR WALL
7. SILL RESTRAINT – SEE NOTE 1
8. TIE PLATE – 5/6/F1.21
   AT 70 MPH DESIGN WIND LOAD:
   MIN (4) AT EACH END WALL, (4) AT EACH SIDE WALL
   AT 80 MPH DESIGN WIND LOAD:
   MIN (5) AT EACH END WALL, (5) AT EACH SIDE WALL
9. 5/8" DIAx4" LAGS
10. FOUNDATION VENT
11. FOR VENTS THAT OCCUR UNDER LANDINGS PROVIDE EQUAL AREA SCREENED VENT IN LANDING SKIRT.
12. 2" CUTOUT OF SILL PLATE FOR DRAINAGE. FIELD TO LOCATE AT LOWEST CORNER OF FOUNDATION

NOTES

1. SILL RESTRAINT:
   ON ASPHALT CONCRETE PAVING OR ON SOIL OR ON PRE–DRILLED CONCRETE SLAB ON GRADE USE 1" OD GALVANIZED PIPE AT 10'–0" OC MAX 12" PENETRATION BELOW SURFACE VERTICALLY. DRILLED SILL HOLE TO BE 1 1/4" MAX. PIPE MAY BE DRIVEN MAX OF 45° ANGLE. TO VERTICAL 18–1/2" LONG PIPE REQUIRED FOR PENETRATION AT 45° ANGLE.

   ALTERNATE:
   ON CONCRETE PAVING HILTI DS 82–P10 THRU SILL PLATE, 8" OC AT END WALLS AND 16" OC AT SIDE WALLS.
   2
2. TO PREVENT WATER FROM PONDING BENEATH THE STRUCTURE VERIFY DRAINAGE WITH DISTRICT ARCHITECT SITE PLANS
3. A WOOD SILL (FOOTING) PLATE SHALL BE PRESSURE TREATED HEM FIR OR DOUG FIR AND MAY BEAR DIRECTLY ON SOIL OR PAVED SURFACE. GRASS OR TURF SHALL BE CLEARED TO BARE SOIL UNDER THE ENTIRE AREA OF THE BUILDING (BY DISTRICT). THE WOOD SILL (FOOTING) PLATE MAY SUPPORT WOOD CRIPPLE STUDS, POSTS OR CONTINUOUS BLOCKING AND SHEATHING (SKIRT) WHICH NEED NOT BE TREATED. FOUNDATION LUMBER TO BE PRECUT AT FACTORY, LUMBER AND PRESSURE TREATING TO BE VERIFIED BY THE IN–PLANT INSPECTOR.
4. FOUNDATION DESIGNED FOR 1000 PSF SOIL BEARING PRESSURE PER ORS IR 23–6.
5. THIS FOUNDATION PLAN HAS 1/4" ADDED AT EACH MODLINE AND AND 1/8" AT EACH SIDE WALL AND DOES NOT MATCH THE FLOOR PLAN, THIS IS REQUIRED FOR GROWTH THAT IS EXPERIENCED WHEN SETTING MULTIPLE MODULE BUILDINGS.
6. BUILDINGS OVER 2160 SQ. FT. MUST BE INSTALLED ON A PERMANENT CONCRETE FOUNDATION.
   1

FILE PATH: 2440–F1.02.DWG

PC
CBC 1998
REVISED JAN 4 2001

REVISIONS			
1	SP	MODTECH ENGINEERING CHANGE	9/7/00
2	SP	REVISED NOTE #1	01/03/00
3			
4			
5			

Electrical Engineer's Seal

Mechanical Engineer's Seal

Structural Engineer's Seal
LICENSE EXPIRES 6-30-2000

Architects Seal

IDENTIFICATION STAMP
DIV. OF THE STATE ARCHITECT
OFFICE OF REGULATION SERVICES
PC–04
101268
AC
DATE SEP 07 2000

SEP 08 2000

MODTECH INC.
2830 BARRETT AVENUE
PERRIS, CALIF. 92572
PH (909) 943–4014
FAX (909) 940–0427

PROJECT NUMBER:

© MODTECH, INC. 1999

DRAWN BY:
DATE:
CHECKED BY:
DATE:

MODTECH Index No.

FOUNDATION PLAN 36'x40'/WOOD/50, 50+20, 100 PSF

F1.02

PROJECT NO. PC–04–101268

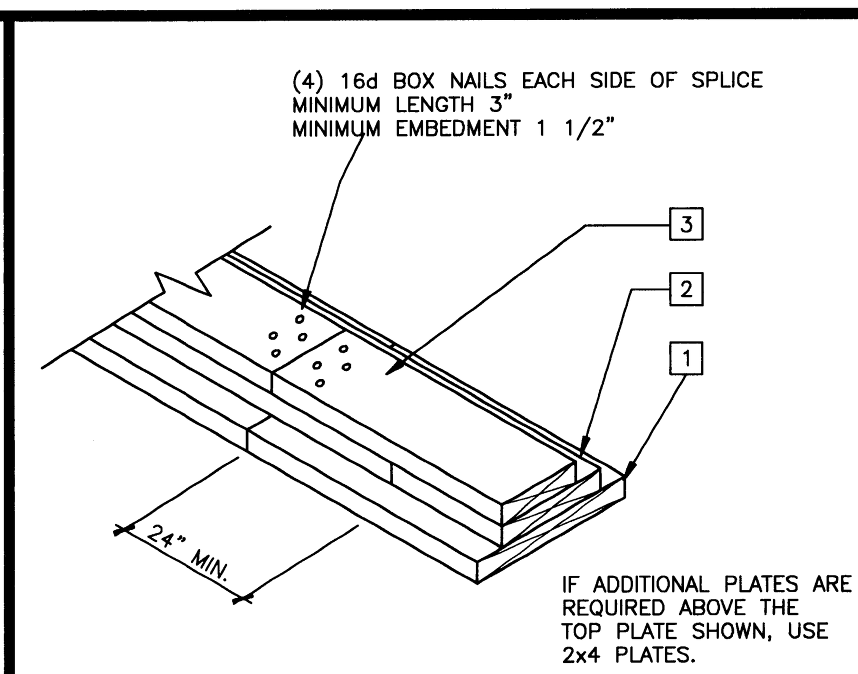

SCALE: NTS

FOUNDATION SPLICE 9

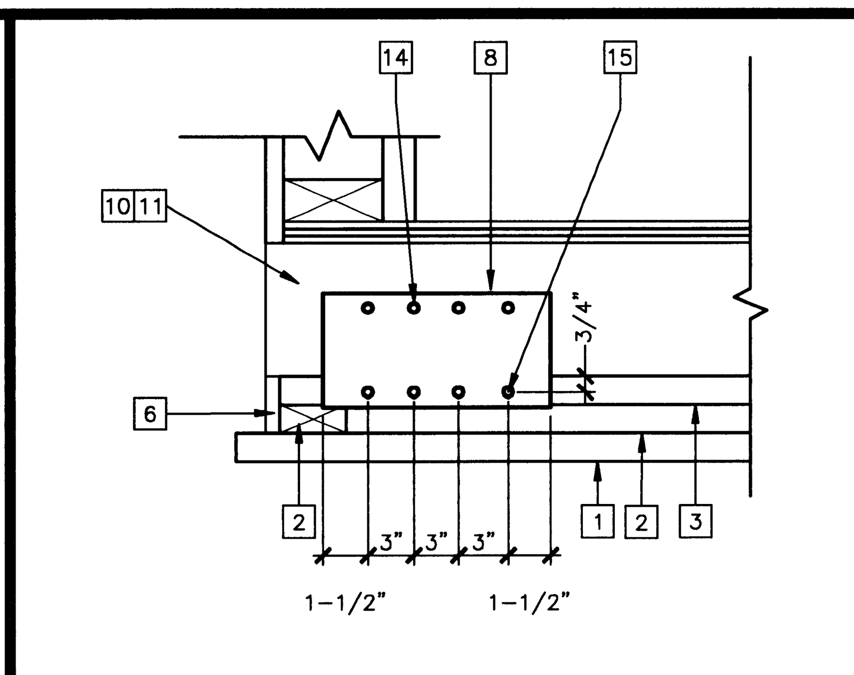

SCALE: 1 1/2"=1'-0" LAG BOLT TO FLOOR BEAM

TIE PLATE 5

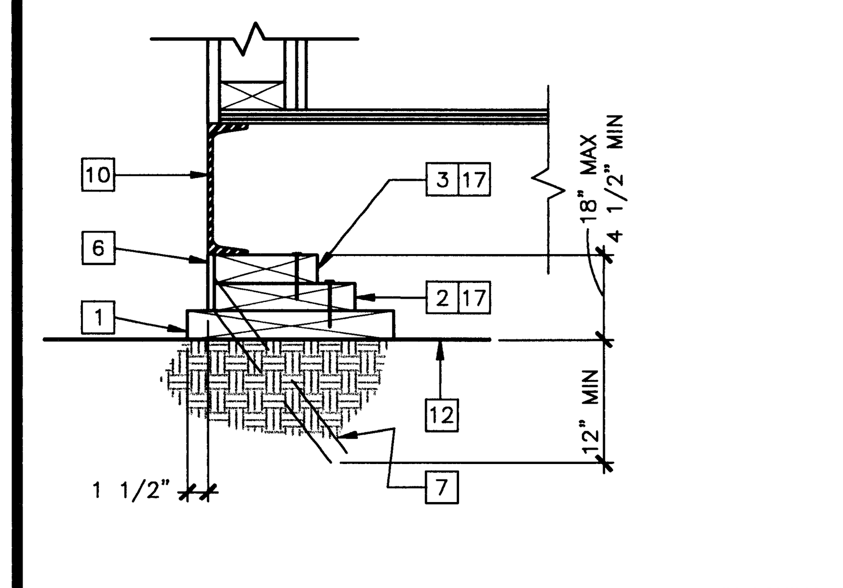

SCALE: 1 1/2"=1'-0"

NOTE: WHERE ADDITIONAL BLOCKING IS REQUIRED SEE DETAIL 7

FOUNDATION AT SIDE WALL 1

10

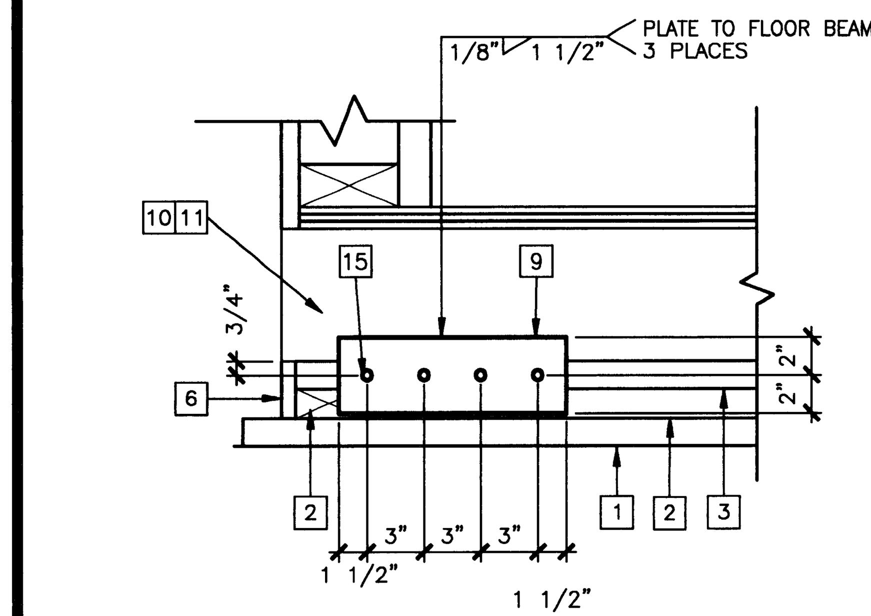

SCALE: 1 1/2"=1'-0" WELDED TO FLOOR BEAM

TIE PLATE (ALTERNATE) 6

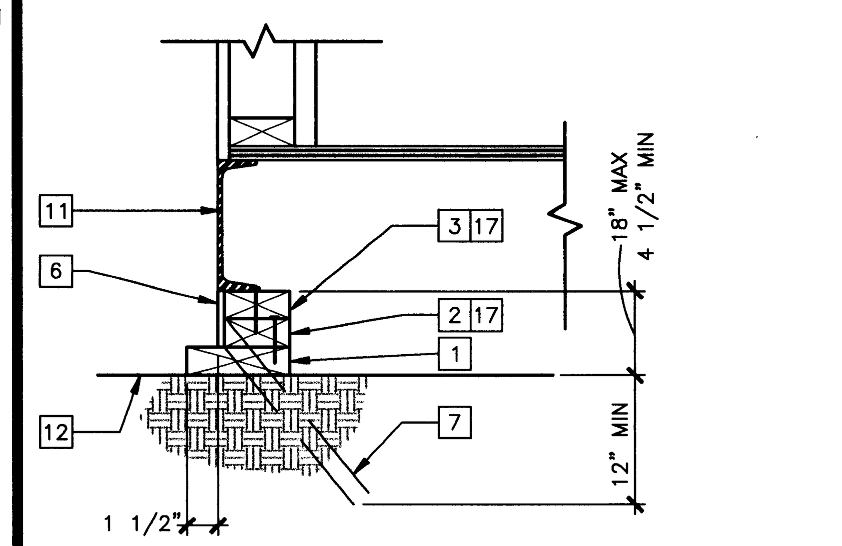

SCALE: 1 1/2"=1'-0"

FOUNDATION AT END WALL 2

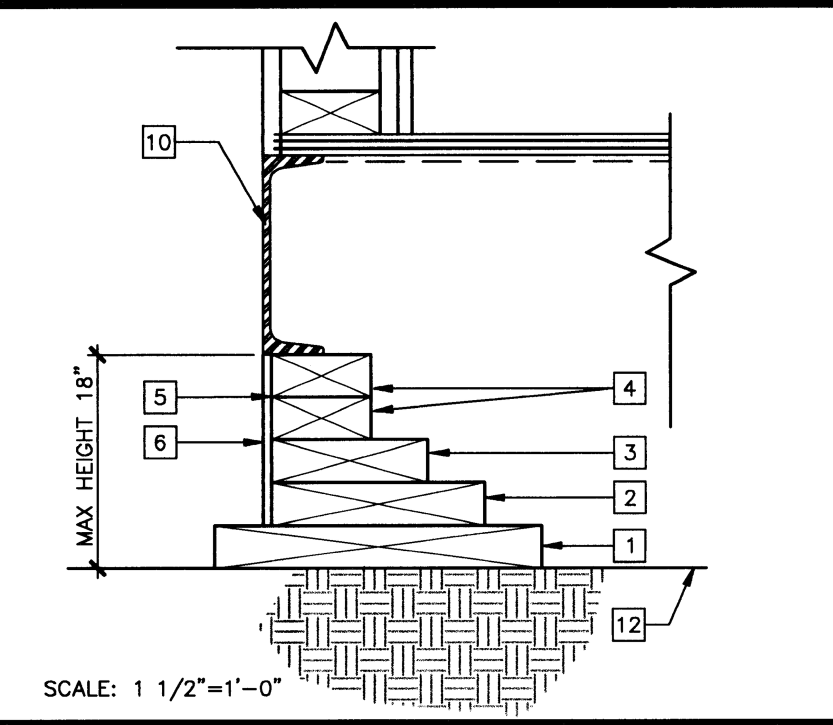

SCALE: 1 1/2"=1'-0"

ADDITIONAL BLOCKING 7

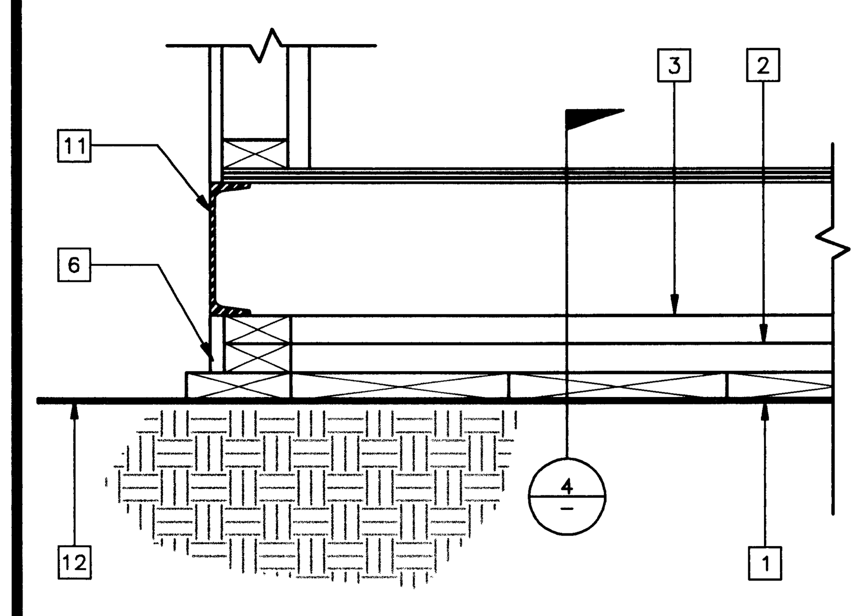

SCALE: 1 1/2"=1'-0"

FOUNDATION AT MODLINE 3

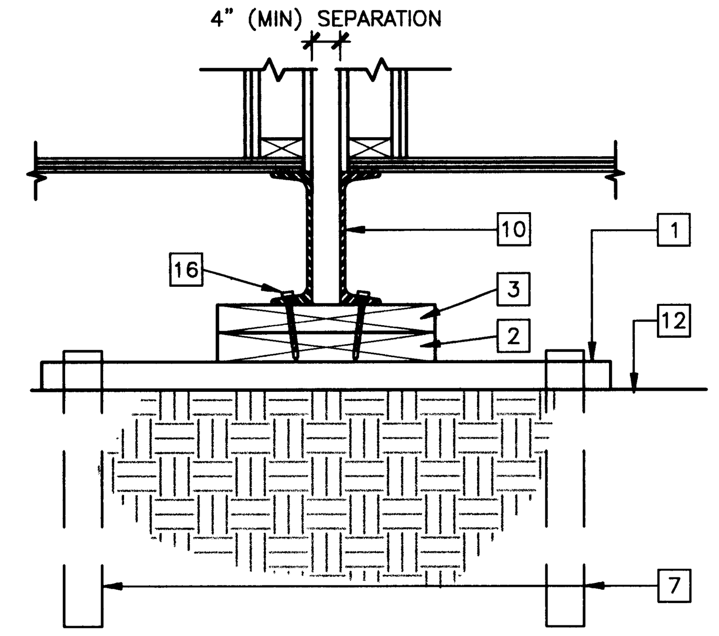

SCALE: 1 1/2"=1'-0"

FOUNDATION AT ADJACENT BUILDING 8

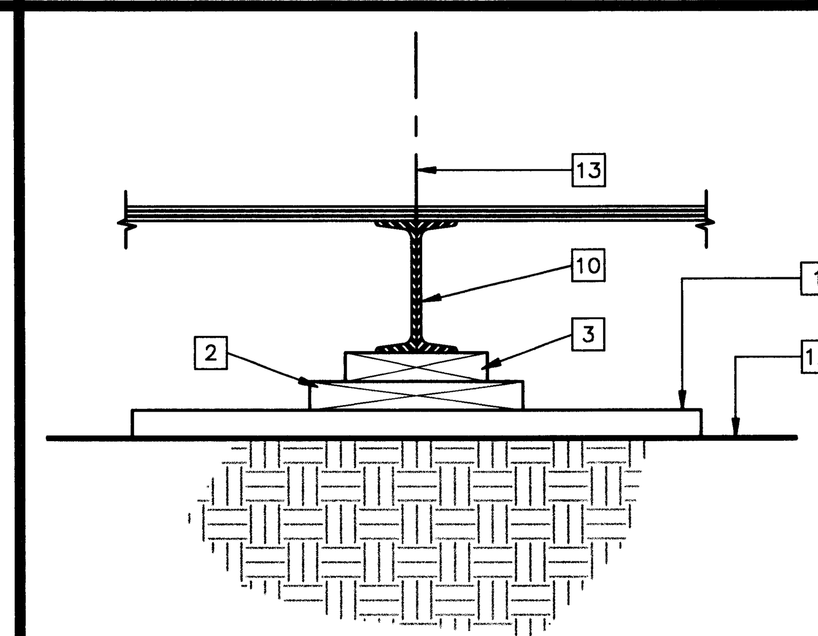

SCALE: 1 1/2"=1'-0"

FOUNDATION AT MODLINE 4

KEY NOTES

1. SILL PLATE – SEE FOUNDATION PLATE SCHEDULE.
2. BLOCKING PLATE – SEE FOUNDATION PLATE SCHEDULE, ATTACH TO SILL OR BLOCKING WITH 16d NAILS AT 12" OC
3. TOP PLATE – SEE FOUNDATION PLATE SCHEDULE, ATTACH TO BLOCKING WITH 16d NAILS AT 12" OC
4. ADDITIONAL 2"x4" BLOCKING AS NECESSARY FOR LEVELING
5. LOCATION OF SHIM PLATES WHERE REQUIRED FOR LEVELING USE 1/4", 1/2" OR 3/4" PLYWOOD AT SAME WIDTH AS TOP PLATE
6. SKIRTING–3/8" PLYWOOD, ATTACH WITH 10d NAILS, EDGE NAILING 4" OC AT END WALLS AND 6" OC AT SIDE WALLS, FIELD NAILING 12" OC
7. SILL RESTRAINT – SEE NOTE 1
8. TIE PLATE 6"x12"x10 GA
9. TIE PLATE 4"x12"x10 GA
10. FLOOR BEAM
11. FLOOR HEADER
12. FINISH GRADE
13. MODLINE
14. 1/4" DIA STS TYPICAL 4 PLACES
15. 1/4" DIAx3" LONG LAG SCREW TYPICAL 4 PLACES
16. 5/8" DIAx4" LAGS (FOR LOCATION SEE PLAN)
17. REMOVE AT VENT LOCATIONS

FILE PATH: 2440-F1.21.DWG

PC
CBC 1998

REVISIONS		
1		
2		
3		
4		
5		

Electrical Engineer's Seal | Mechanical Engineer's Seal | Structural Engineer's Seal | Architects Seal

LICENSE EXPIRES 6-30-2000

IDENTIFICATION STAMP
DIV. OF THE STATE ARCHITECT
OFFICE OF REGULATION SERVICES
PC-04
101268
AC FLS SS
DATE SEP 07 1999

MODTECH INC.
2830 BARRETT AVENUE
PERRIS, CALIF. 92572
PH (909) 943-4014
FAX (909) 940-0427

FOUNDATION DETAILS WOOD/50, 50+20, 100 PSF

MODTECH Index No.
F1.21

PROJECT NO. PC-04-101268