Pleasant Valley School District

Bid FB-25-12, New SCE Service Substation and Security Fencing Installation Project, Las Posas Elementary School

Project Spécifications

SECTION 05 80 10
TUBE STEEL FENCE

PART 1 GENERAL

1.01 SECTION INCLUDES

This section includes general requirements for the installation of the tube steel fencing.

1.02 RELATED WORK

Section 05 80 30 – Tube Steel Gates

1.03 QUALITY ASSURANCE

The Contractor shall provide laborers and supervisors who are thoroughly familiar with the type of construction involved and materials and techniques specified and shall hold a C-13 License with at least 5 years of tubular fencing installation experience.

1.04 REFERENCE STANDARDS

A. American Society for Testing and Materials (ASTM International).
   1. A36 – Standard Specification for Carbon Structural Steel
   2. A123 – Standard Specification for Zinc Coatings on Iron and Steel products
   3. A500 – Standard Specification for Cold-Formed Welded and Seamless Carbon Steel Structural Tubing in Rounds and Shapes
   4. A501 – Standard Specification for Hot-Formed Welded and Seamless Carbon Steel Structural Tubing
   5. F626 – Standard Specification for Fence Fittings
   6. F1083 – Standard Specification for Pipe, Steel, Hot-dipped Zinc Coated (Galvanized) Welded, for Fence Structures
   7. D2201 – Practice for Preparation of Zinc-Coated and Zinc-Alloy-Coated Steel Panels for testing Paint and Related Coating Products

1.05 SUBMITTALS

A. Submit shop drawings showing the fence elevation with dimensions and material size and gauge with all hardware and components required to complete the work.

B. Submit Manufacturer's product data and specification sheets for all products required to complete the work.

C. Submit paint color samples and fence samples to the District for approval.

1.06 PRODUCT HANDLING AND STORAGE

Upon receipt at the jobsite, all materials shall be checked to ensure that no damage occurred during shipping or handling. Materials shall be stored in such a manner to protect against damage, weather, vandalism, and theft.

PART 2 PRODUCTS

2.01 TUBE STEEL FENCE

A. Tube steel fence shall be Merchants Metals Fence, “Secure Weld”, Monroe Industrial or equal, powder coated black finish.

B. All fence products shall receive powder coating that incorporates a five-stage cleaning process to remove any impurities that could potentially mar the finish. This process is combined with a zinc rich, corrosion-resistant epoxy powder primer and polyester powder topcoat.

C. Fence post shall be as per Details.

D. Top, bottom, and mid rails shall be 2-inch square, 14 gauge.

E. Pickets shall be 1-inch square, 16 gauge.

F. Gate post shall be sized to sleeve over existing round galvanized fence post where indicated. New gate post in concrete footings shall be sized as per details.

2.02 ATTACHMENT BRACKETS

A. Rails shall be attached to post with 1-inch square painted steel sleeve brackets that insert in the rails. Attach brackets to the post with stainless steel sheet metal screws. Secure rails to brackets with stainless steel sheet metal screws.

B. Where rails meet post at an angle, fabricate brackets to accept rails as per details.

PART 3 EXECUTION

3.01 PREPARATION

All new installation shall be laid out by the Contractor in accordance with the construction plans, reviewed and approved by the District prior to concrete footing pour.

3.02 FENCE INSTALLATION

A. Space post as indicated on the Drawings, true and plumb. Posts shall be set in concrete footings as per Details or sleeved over existing round tube.

B. Fence panels shall be field measured for width and attached to post with sleeve brackets. Set panels with the top rails horizontal and level. Where fence occurs on a slope the rails shall be parallel to the slope and the pickets shall be vertical.

C. When field welding gate hinges to gate post, 1) remove all metal shavings from cut area; 2) apply zinc-rich primer to thoroughly cover welded area; and 3) apply two (2) coats of custom finish paint matching fence color.

3.03 CONCRETE FOOTINGS

Drill or dig holes for post footings in firm, undisturbed or compacted soil. Concrete for footings shall be hardrock with a minimum compressive strength at 28 days of f'c = 3,000 PSI conforming to ASTM C-94.

3.04 POST IN CONCRETE FOOTINGS

Set in concrete footings, plumb and vertical. Post depth as indicated on the Details and spacing as required for proper attachment of the fence panels. Trowel the top of footings and slope away from the post to direct water away from the post. In some areas the top of footing is below a concrete band.

3.05 FENCE PANELS ADJACENT TO GATES

The fence panels adjacent to gate post shall have rails attached to the gate post and the fence post with hex-headed bolts. Threads shall be tapped into post. Rails shall be bolted to the brackets and spot welded to the post. Touch up weld spots as per Item 3.2, Item C.

3.06 CLEANING

The Contractor shall clean the job site of excess materials. Remove from the site post-hole excavations unless the District provides direction for placement on site.

END OF SECTION 05 80 10

SECTION 05 80 30
TUBE STEEL GATES

PART 1 GENERAL

1.01 SECTION INCLUDES

This section includes general requirements for the installation of the tube steel gates.

1.02 RELATED SECTION

Section 05 80 10 – Tube Steel Fence

1.03 QUALITY ASSURANCE

Use only certified welders for all welding performed. Comply with AWS for procedures, appearance, and quality of weld.

1.04 SUBMITTALS

A. Submit Shop Drawings for all gates for approval by the District prior to fabrication. Shop drawings shall be an elevation drawn to scale and shall show all material sizes, shapes, and gauges.

B. Show all locations, markings, quantities, materials, sizes, and shapes and indicate all methods of connecting, anchoring, fastening, bracing, and attaching the Work.

C. Provide a detailed drawing of the perforated protection screen with all attachment holes for the stainless steel screws.

1.05 PRODUCT HANDLING

Use all means necessary to protect miscellaneous metal before, during, and after installation and to protect the installed work and materials from damage.

PART 2 PRODUCTS

2.01 STEEL TUBING

Shall conform to ASTM A-500, Grade B. Use mechanical welded tubing; clean and straight, that conforms to the dimensions and wall thickness shown on the drawings and details.

2.02 GATE POST

Shall be 3” x 3” x 3/16” square tubing.

2.03 ITEMS TO BE FABRICATED

The details specify certain items to be Contractor fabricated. These items are ancillary to the work. Submit shop drawings showing details of these items for approval.

2.04 HINGES

A. There are two (2) types of gate hinges as indicated on the details:
   1. Type 1 is a 6-inch by 1 ½ inch square body hinge with $^5/_8$ inch diameter stainless steel pin and chrome ball bearing with grease fitting. Hinge is rated for 600 pounds. The hinge gap is 2 inches. Jansen Ornamental Supply Company, Model number BHSQ6 or equal.
   2. Type 2 is solid cold rolled steel hinge, 6 ¼ inch high x 2 ¼ inch wide x 1 ½ inch depth. Hinge has a ¾ inch stainless steel floating pin with bronze bushing as $^5/_8$ inch ball bearing top and bottom. Rated 3,000 pounds per pair. "Elite" Power Hinge or equal.

2.05 GATE LATCH

A. Gate latch for a single leaf gate shall be DAC Industries "Walk Gate Strong Arm" latch for 2-inch gate frame and post size per details. Provide all brackets to weld latch to gate frame, powder coated black.

B. Gate latch for double leaf gate shall be DAC Industries "Strong Arm Gate" latch #4090 or 4690, powder coated black. Size as required for post.

2.06 GATE CATCH

Shall be Locinox (1-877-LOCINOX) Aluminum Gate-Hold Back Catch, UGC for 40 mm till 60 mm, or approved equal.

2.07 PANIC BAR

Shall be Von Duprin 9952 EO 48626, 36" long, with night latch lever, with matching strike plate. Provide rim cylinder and key to match District required key.

2.08 ASTRAGAL

Fabricate astragal and weld to the gate frame so that the gate latch is protected. Length of astragal shall be a minimum of 12 inches above and below the gate latch.

2.09 DROP RODS

Shall be a $^5/_8$" dia. solid bar drop cane with guides welded to the gate that keep the drop rod straight and in alignment with the pipe sleeve and a pin welded to the gate frame to hold the drop cane in the up position.

2.10 GATES

Gates shall be fully welded frames and pickets, and powder coated black.

2.11 OTHER MATERIALS

All other materials not specifically described, but required for a complete and proper installation, shall be new, free from rust, best quality of their respective kinds.

PART 3 EXECUTION

3.01 SURFACE CONDITIONS

A. Prior to work of this section, carefully inspect the installed work of all other trades and verify that all such work is complete to the point where fabrication and installation of work of this section may properly commence.

B. Make all required measurements in the field to ensure proper and adequate fit of gates. Verify the gates when swinging will clear finish surfaces by a minimum of 2 inches.

C. Verify that the metal frame may be fabricated and installed in strict accordance with the original design and the approved Shop Drawings.

D. Do not proceed with fabrication or installation in areas of discrepancy until all discrepancies have been fully resolved.

3.02 FABRICATION

A. Fabricate metal gates in strict accordance with the approved Shop Drawings.

B. Insofar as possible, shop prefabricate all items complete and ready for installation.

C. Unless otherwise indicated on the Drawings, weld and grind smooth all shop connections.

D. Make all joints and intersections of metal tightly fitting and securely fastened. Gate frames shall be mitered ant corners, fully welded, and welds ground smooth.

E. Make all work square, plumb, straight, and true.

F. Drill or punch all holes required for the attachment of work of other trades and for bolted connections.

G. Burned holes are not acceptable.

3.03 POWDER COATING

After all fabrication, gates shall be powder coated black.

3.04 HINGES

Hinges shall be fully welded to gate frame and gate post in true alignment to allow for a smooth swing without any binding.

3.05 DROP RODS

Fabricate and install drop rod cane bolt on all gates that will keep the gates locked in a fixed position and fixed in the open position. Install a galvanized pipe sleeve in the concrete surface to receive the drop cane bolt. All drop rods shall have guides to keep the drop rod straight and in alignment with the pipe sleeve and a pin to hold the bottom of the drop rod even with the bottom rail to allow for gate use.

3.06 GATE CATCH

Shall be installed in concrete footing and aligned with the gate for holding gate open and in a fixed position when pushed open.

3.07 GATE LATCH ON MAN GATES WITHOUT PANIC HARDWARE

Latch shall be welded to the gate frame at 36 inches above the finish surface elevation.

3.08 PANIC HARWARE

Panic hardware shall be attached to the 2” x 3” horizontal member so that it is in alignment with the gate latch.

3.09 GATE LATCH ON PANIC HARDWARE GATES

The strike plate shall be attached to the 2” x 4” frame section in alignment with the panic hardware push bar for double gates. Single gates – attach strike plate to 4 x 4 post.

3.10 GATE LATCH ON MAN GATES WITHOUT PANIC HARDWARE

Latch shall be welded to the gate frame at 36 inches above the finish surface elevation.

3.11 SPRAY PAINT

Spray paint match black colored paint with primer over all portions of fencing where powder coating has been compromised du to construction work.

END OF SECTION 05 80 30

SECTION 26 0000

GENERAL PROVISIONS

PART 1 - GENERAL

A. The general contract provisions apply to this section and take precedent over this section in case of conflict.

1.01 GENERAL PROVISIONS

A. This division supplements the applicable requirements of other divisions.

1.02 DEFINITIONS

A. For the purposes of Division 260000, the following definitions apply:

1. Provide: Furnish and install.

2. Indicated: As shown on the drawings or specified herein.

3. Circuit Designation: Panel designation and circuit number, i.e., LA-13.

4. Approved equal: Approved by the engineer of record as equal in his sole determination.

1.03 SCOPE OF WORK

A. The Specifications for Work of Division 260000 include, but are not limited to the following sections:

26 0000–General Provisions
26 0030–Tests and Identification
26 0060- Minor Electrical Demolition
26 0111–Conduits
26 0120–Conductors
26 0142–Nameplates and Warning Signs
26 2450–Grounding

B. Work Included: All labor, materials, appliances, tools, equipment, facilities, transportation and services necessary for and incidental to performing all operations in connection with furnishing, delivery and installation of the work of this division, complete, as shown on the drawings and/or specified herein. Work includes, but is not necessarily limited to the following:

1. Examine all divisions for related work required to be included as work under this division.

2. General provisions for electrical work.

3. Site observation including existing conditions.

C. Related Work Specified Elsewhere but included in the scope of work:

a) 1. Installation of owner provided electrical equipment

D. Work Not In Contract (N.I.C.):

1. Telephone instruments.

E. Coordination

2. The following supplements are additional General Requirements pertaining to work of this Division. Provisions of Division 1 - General Requirements shall remain in effect.

a) Coordinate work per General Conditions and owners schedule

1.04 REFERENCE STANDARDS

A. American National Standards Institute (ANSI).

B. Association of Edison Illuminating Companies (AEIC).

C. Electrical Testing Laboratories (ETL).

D. Illuminating Engineering Society (IES).

E. Institute of Electrical and Electronic Engineers (IEEE).

F. Insulated Cable Engineers Association (ICEA).

G. National Electrical Manufacturers Association (NEMA).

H. National Fire Protection Association (NFPA).

I. Underwriters Laboratories, Inc. (UL).

J. California State Fire Marshal (CSFM).

K. California Energy Commission (CEC) Title 24.

1.05 QUALITY ASSURANCE

A. Regulations: All the electrical equipment and materials, including their installations, shall conform to the following applicable latest codes and standards:

1. California Electric Code, Latest Adopted Edition (NEC), 2023 unless a more current version has been adopted.

2. Local and State Fire Marshal.

3. Occupational Safety and Health Act (OSHA).

4. Requirements of the Serving Utility Company.

5. Local Codes and Ordinances.

6. Requirements of the Office of the California State Architect (OSA).

7. California Administrative Code, Title 8, Chapter 4, Industrial Safety Orders.

8. California Administrative Code, Title 24.

9. County of Ventura Codes and Regulations.

B. Variances: In instances where two or more codes are at variance, the most restrictive requirement shall apply. In instances where plans and specifications are at variance or conflict the most restrictive requirement shall apply. Contractor shall be responsible for all his associated work and materials and also the work and materials of related or affected trades.

C. Contractor's Expense: Obtain and pay for all required bonds, insurance, licenses, and pay for all taxes, fees and utility charges required for the electrical work.

D. Testing and Adjustment:

1. Perform all necessary tests required to ascertain that the electrical system has been properly installed, that the power supply to each item of equipment is correct, and that the system is free of inadvertent grounds, ground faults, and open circuits, that all motors are rotating in the proper directions, and such other tests and adjustments as may be required for the proper completion and operation of the electrical system. Contractor shall provide a copy of all test reports to prove these tests have been performed.

1.06 SUBMITTALS

A. Procedure: In accord with the Submittal Section.

B. Shop drawings: Detailed shop drawings for the following equipment:

1. Pull boxes

2. SCE slab box

C. Product data: Detailed manufacturer’s data for:

1. Pull boxes

2. Conduit

3. Conductors

4. Mounting hardware

D. Test results for the following:

1. Grounding systems – test for earth resistance less than 10 ohms

2. Cables/conductors

E. Include sufficient information to indicate complete compliance with Contract Documents. Include illustrations, catalog cuts, installation instructions, drawings, and certifications. On each sheet show manufacturer's name or trademark.

1.07 OWNER'S PERSONNEL INSTRUCTIONS

A. Prior to completion of the contract, and at the Owner's convenience, instruct verbally and demonstrate to the Owner's personnel, the operation of the systems as listed under operating, maintenance, and instructional data and/or emergency generator, automatic transfer switch and fire alarm annunciator panel.

1.08 CLEANING

A. Clean exterior surfaces and interiors of equipment and remove all dirt, cement, plaster and other debris. Protect interior of equipment from dirt during construction and clean thoroughly before energizing.

B. Clean out cracks, corners and surfaces on equipment to be painted. Remove grease and oil spots so that paint may be applied without further preparation.

1.09 PROJECT RECORD DOCUMENTS - Prepare the following and submit to the engineer before final acceptance:

A. Mark Project Record Documents daily to indicate all changes made in the field.

1. In addition to general requirements of Project Record Drawings, indicate on drawings, changes of equipment locations and ratings, trip sizes, and settings on circuit breakers, alterations in raceway runs and sizes, changes in wire sizes, circuit designations, installation details, one-line diagrams, control diagrams and schedules.

B. Use green to indicate deletions and red to indicate additions.

1. Use the same symbols and follow the same drafting procedures used on the Contract Drawings.

C. Locate dimensionally off of contract drawings all underground conduit stubbed-out for future use, underground feeder conduits, and feeder pull box locations using building lines by indicating on the Project Record Drawings.

D. At the completion of underground conduit installation provide underground conduit record documents to owner's representative.

E. Two copies, in binder form, of all test results as required by these specifications - 260030.

F. Two copies of local and/or state code enforcing authorities final inspection certificates.

G. Two copies, in binder form, of electrical equipment cut sheets, manufacturer's installation instructions, warranty certificates, and product literature for all products utilized on project.

1.10 SERVICE INTERRUPTIONS AND UTILITY

A. Coordinate with the Owner the interruption of services necessary to accomplish the work.

B. Coordinate with the utility company and school district all work associated with power and communications distribution systems and service entrance equipment.

C. Electrical contractor shall supply temporary power for all trades.

1.11 MINIMUM SPECIFICATION REQUIREMENTS (ALL WORK OF DIVISION 260000)

A. As a minimum Specification requirement, all materials and methods shall comply with applicable governing codes.

1.12 PENETRATION SEALING

A. Seal penetration through exterior walls and fire rated walls, floors, ceilings, and roofs with 3M Firestopping materials of fire rating capacity rated per CBC and prevailing building code requirements.

1.13 PLACING EQUIPMENT IN SERVICE

A. Do not energize or place electrical equipment in service until all interested parties have been duly notified and are present or have waived their rights to be present. Where equipment to be placed in service involves service or connection from another contractor of the owner, notify the owner in writing when the equipment will be ready for final testing/connection and schedule to the owner's satisfaction of this service connection. Notify the owner two weeks in advance of the date the various items of equipment will be complete.

1.14 OWNER-FURNISHED ITEMS

A. Pick up Owner-furnished items and handle, deliver, install, and make all final connections.

1. Assume responsibility for the items when consigned at the storage facility or in the field in accord with requirements of the Contract Documents.

1.15 ELECTRIC ITEM LOCATION

A. Electrical drawings are generally diagrammatic. Verify equipment sizes with shop drawings and manufacturers' data and coordinate location layout with other trades. Notify owner and engineer of any changes of location requirements prior to installation and obtain engineer's written acceptance for all changes/revisions.

1.16 DEMOLITION

A. Scope: Provide and perform demolition, preparatory and miscellaneous work as indicated and specified, complete.

B. Principle Items of Work:

1. Demolition and removal of existing electrical conduit, wiring and equipment required to complete the project.

2. Preparation of the existing building to receive or connect the new work.

3. Miscellaneous demolition, cutting, alteration, and repair work in and around the existing building necessary for the completion of the entire project.

4. Disconnecting and reconnection of electrical equipment as required by the construction modifications.

C. Existing Conditions: Make a detailed survey of the existing conditions pertaining to the work. Check the locations of all existing structures, equipment and wiring (branch circuiting and controls). Provide at bid time any exclusions for existing conditions work.

D. Salvage and Disposal: All removed material other than items to be reused shall be returned to the owner or disposed of in accordance with instructions from the owner's representative. Disposal shall be done in accordance with EPA and governing body requirements and regulations. Contractor shall pay all fees and charges for disposal.

1.17 ELECTRICAL WORKMANSHIP REQUIREMENTS

A. It is required that all electrical construction of this Contract be performed by journeyman electricians. All journeyman electricians shall have a minimum of 4 years of apprenticeship training and hold a valid Certificate of Completion from an apprenticeship training course approved by the State of California Department of

Industrial Relations, Division of Apprenticeship Standards. This is intended to mean that a person who does not hold a valid Certificate of Completion from an apprenticeship training course approved by the State of California Department of Industrial Relations, Division of Apprenticeship Standards will not be permitted to do electrical work of any kind that involves new construction, nor make repairs, alterations, additions, or changes of any kind to any existing system of electrical wiring, apparatus, equipment, light, heat, or power.

B. Contractor may employ electrical helpers or apprentices on any job of electrical construction, new or existing, when the work of such helpers or apprentices is performed under direct and constant personal supervision of a journeyman electrician holding a valid Certificate of Completion from an apprenticeship training course approved by the State of California Department of Industrial Relations, Division of Apprenticeship Standards.

1. Each journeyman electrician will be permitted to be responsible for quality of workmanship for a maximum of eight helpers or apprentices during any same time period, provided the nature of work is such that good supervision can be maintained and quality of workmanship achieved is the best, as expected by Owner and as implied by the latest edition of the California Electrical Code (National Electrical Code with State of California amendments).

2. Before each journeyman electrician commences work, deliver to Owner at project site a photocopy of journeyman's valid Certificate of Completion from an apprenticeship training course approved by the State of California Department of Industrial Relations, Division of Apprenticeship Standards.

C. All electrical systems shall be installed in a neat and workmanlike manner per National Electrical Code requirements and ANSI approved NEIS National Electrical Installation Standards.

1.18 DESIGN CHANGES AFTER AWARD OF BID

A. When a change in the quantity or size of conductors is made, the conduit size will remain in accordance with that indicated in the original contract drawings rather than the drawing symbol conduit table. When code permits, provide conductor insulation 'THWN' where required to maintain conduit fill conformance with the National Electrical Code.

1.19 MATERIAL AND EQUIPMENT SUBSTITUTION

A. Where two or more trade names or manufacturers are mentioned, selection shall be made from the group listed for use in the base bid. The order in which names are listed is not intended to be any indication of preference.

B. Where a single manufacturer, product or trade name is stated, that manufacturer, product or trade name shall be used in the base bid. The use of other manufacturers, products or trade names will be considered by the engineer of record (unless that

product is indicated for no substitution) only if submitted as alternate items at the time of bidding, with evidence of equality and a statement of net price difference as compared to the specified item. After approval by the engineer of record, the architect and owner reserve the right to review such submittals and to determine the acceptability for use.

C. Equipment other than that specified will be accepted only when written approval is given by the engineer of record, in accordance with Division 1.

D. The contractor shall be held responsible for all physical changes in piping, equipment, etc. resulting from equipment substitution and likewise bear any increased cost of other trades in making said substitution. Approval by the architect of equipment other than that specified does not relieve this contractor of this responsibility.

1.20 REQUESTS FOR INFORMATION

A. The contractor shall submit all requests for information (RFI's) typewritten on the attached form.

PART 2 - PRODUCTS

Not Used.

PART 3 - EXECUTION

Not Used.

END OF SECTION

SECTION 26 0030

TESTS AND IDENTIFICATION

PART 1 - GENERAL

1.01 SECTION INCLUDES

A. Tests and identification.

1.02 SUBMITTALS

A. In accord with Section 260000.

B. All test values.

1.03 DEFINITION

A. Circuit designation: This term is construed to mean panel designation and circuit number; i.e., LA-13.

1.04 TESTS AND ADJUSTMENTS

A. Prior to energizing, test all systems. Test to ensure systems are:

1. Free from short circuits and grounds.

2. Free from mechanical and electrical defects.

B. Circuit breakers (main and feeder circuits that are adjustable only): Testing and adjustments of circuit breakers shall be made by Owner-approved independent testing firm. Testing firm shall meet the criteria for full membership of the International Electrical Testing Association (NETA).

1. Visual and mechanical inspection:

a) Compare nameplate data with Drawings and Specifications.

b) Inspect circuit breaker for correct mounting.

c) Operate circuit breakers to ensure smooth operation.

d) Inspect case for cracks or other defects.

e) Verify tightness of accessible bolted connections and/or cable connections by calibrated torque-wrench method in accord with manufacturer's published data.

f) Inspect mechanism contacts and arc chutes in unsealed units.

2. Electrical tests:

a) Perform a contact-resistance test.

b) Perform an insulation-resistance test at 1000 volts dc from pole-to-pole and from each pole-to-ground with breaker closed and across open contacts of each phase.

c) Perform adjustments for final settings in accord with coordination study supplied by Owner.

d) Perform long-time delay time-current characteristic tests by passing 300% rated current through each pole separately with ground fault functions defeated.

e) Determine short-time pickup and delay by primary current injection.

f) Determine ground-fault pickup and time delay by primary current injection. This test shall be done after short time and instantaneous testing are complete.

g) Determine instantaneous pickup current by primary injection using run-up or pulse method.

h) Verify correct operation of any auxiliary features such as trip and pickup indicators, zone interlocking, electrical close and trip operation, trip-free, and anti-pump function.

3. Test values:

a) Record all test values “as-found” and “as-left” conditions and provide certified copies to Owner.

b) Compare microhm or millivolt drop values to adjacent poles and similar breakers. Investigate deviations of more than 25%. Investigate any value exceeding manufacturer’s recommendations.

c) Insulation resistance shall not be less than 100 megohms.

d) Trip characteristic of breakers shall fall within manufacturer’s published time-current characteristic tolerance band, including adjustment factors. Circuit breakers not within tolerance band shall be tagged defective.

C. Adjust all installation and equipment for their intended use and rating as defined in manufacturer's specifications and test procedures.

1. Contractor recognizes and understands that the show and character lighting, electronic control equipment, special effects, etc., must have a minimum 4-week adjustment period, occurring after installation and verification of said equipment, for each area or facility. Contractor shall provide appropriate personnel (i.e., electricians, carpenters, laborers) as necessary to support Owner during this adjustment period. Adjustment is defined as orientation of adjustable lighting fixtures, installation of color filters to any lighting fixtures requiring same, location adjustment 6 ft., control system setting including programming of control functions, system debugging (i.e., cross-wiring). Contractor shall assume day and night activities during the adjustment period.

D. Adjust transformer taps under full load operating conditions, to provide nominal operating voltages at the loads.

E. Hi-Pot test procedures:

1. Test 25 pair, 10 pair, or 4 pair, multi-conductor cables installed in conduit, in the following manner and in presence of Owner:

a) Special Owner-furnished equipment: Hi-Pot Cable Tester & Adapters Model 500.

b) Perform visual inspection to verify:

1) Proper cable identification tags are installed.

2) Connector is installed properly and screws and clamps properly tightened.

3) Elco connector is keyed correctly.

c) Continuity and Hi-Pot:

1) Using the Hi-Pot cable tester and all necessary adapters:

(a) Set tester on 1500 VDC, S.C. (short continuity), 50 pos.

(b) Hook up cable to "Y" adapter if testing a cable in a conduit or tray.

(c) Attach turnaround Elco test plug to opposite end of cable to be tested.

(d) Attach ground lead of tester to center metal hold-down screw of Elco connector.

(e) Push reset button until tester dial points to zero. Release reset button.

(f) Press start button. Tester will step through all pairs and stop at bottom half of dial. This is because when using the turn-around plug, tester is checking 2-pair runs.

d) Error indication:

1) No-error dial will make 1/2 revolution and stop. Press reset button. Tester will step to top position.

2) Fault lights "short" or "open" dial will stop at a pin location indicated on face plate of dial. See chart on side of unit to give correct pin assignments. Press start buttons. Tester will step on through. If another "short" or "open" is found, tester will halt again.

e) Fault correction:

1) When a fault is indicated, remove both connector shells of cable under test and check indicated pins.

2) Repair fault using procedure steps as specified in Section 16121, paragraph "Repairing damaged pin-wire assembly."

f) Marking of accepted cable:

1) Record acceptance of all cables on inspection copy of cable schedule provided by Owner's representative, and submit in accord with Section 260010.

2) Place inspection stamp of Owner or dot sticker with initials on either white cable tag indicating cable assembly, or on connector shell.

F. Ground systems:

1. Visual and mechanical inspection: Verify ground system is in compliance with Drawings and Specifications.

2. Electrical tests:

a) Perform fall-of-potential test or alternative in accord with IEEE 81 on the main ground electrode or system.

b) Perform point-to-point tests to determine resistance between main ground system and all major electrical equipment frames, system neutral, and/or derived neutral points.

3. Test values:

a) Resistance between main ground electrode and ground shall be no greater than 10 ohms. Additional rods shall be installed and bonded to grounding system and driven to a depth of 50 ft. or refusal, whichever comes first.

b) Investigate point-to-point resistance values which exceed 0.5 ohm.

c) Record all test values and provide certified copies to Owner.

G. Cables:

1. Make insulation resistance tests on all power cables, using a self-contained instrument such as the direct-indicating ohmmeter of the generator type, or "megger" such as manufactured by J.G. Biddle Company, or Owner-approved equivalent. Insulation resistance values shall be at least 75% of shop test records.

a) Apply the following test voltages for 1 minute, except where specified otherwise herein, in accord with procedure recommended by manufacturer of test equipment and as specified herein.

Minimum Rated Circuit Voltage	Megger Voltage (DC)	Megger Reading
600 volts	500 volts	600 kilohms
1000 volts	500 volts	1 megohm
15,000 volts	1000 volts	15 megohms

2. Record all test values and provide certified copies to Owner.

3. Replace cables not meeting specified resistance values.

H. Miscellaneous tests:

1. Wiring: check all control circuits for continuity and conformance with wiring diagrams furnished by Owner and manufacturers.

2. Polarity tests: Make continuity and polarity tests on all current and potential transformers to determine whether polarity is as indicated on drawings, and the circuit is continuous.

3. Phasing tests: Identify phases of all switchgear and power cables by stenciling switchgear and tagging cables with approved tags, so that phases can be identified for connecting to proper phase sequence.

1.05 LABELING AND IDENTIFICATION

A. Provide engraved plastic nameplates on all electrical distribution equipment shown on single-line diagram, and on control panels, dimmer panels, terminal cabinets, and separately mounted circuit breakers, disconnects, and starters.

B. Provide equipment and circuit designation on nameplates with minimum letter and plate sizes as indicated.

C. Provide engraved plastic nameplates with 1/4 in. minimum height letters indicating:

1. Circuit designation at branch overcurrent devices in distribution panelboards, switchboards, and motor control centers.

2. Circuit designation of panel, equipment-controlled or device-controlled on disconnect switches and on circuit breakers, starters, and controls which are individually enclosed.

3. Voltage rating and circuit designation of all outlets larger than 120V, 20A rating and more than 2 poles.

4. Designation of control and terminal cabinets including CUTC, as indicated.

5. Designation of each contactor and relay in control cabinets.

6. Designate area controlled for each dimmer in dimmer cabinet or rack.

7. Circuit designation at all ground fault detectors and ground fault test receptacles.

8. Equipment designation on front of switchboards, distribution panelboards, branch circuit panelboards, and load centers.

D. Secure nameplates with at least two rivets. Cementing and adhesive installation is not acceptable.

E. Provide two copies of a typewritten directory for each branch circuit panelboard, showing each circuit and its use. Attach one copy to panelboard door and deliver the other copy to Owner.

F. Provide caution label on branch circuit panelboards with integral control compartments. Caution label shall be red with white letters reading "CAUTION, EXTERNAL CONTROL VOLTAGE CIRCUIT WITHIN THIS PANEL."

G. Conductor identification:

1. Feeders: Identify with the corresponding circuit designation at over-current device and load ends, at all splices, and in pull boxes.

2. Branch circuits: Identify with corresponding circuit designation at overcurrent device and at all splices.

3. Control wires: Identify with indicated number and or letter designation at all terminal points and connections, including manufacturer pre-wired control sections and cabinets.

4. Alarm and detection wires: Identify with indicated wire and mnemonics numbers at all connections, terminal points, and coiled conductors within cabinets for future termination by Owner.

5. For identification of conductors, use heat shrinkable white marking sleeves such as Brady Permasleeve with type written identification.

END OF SECTION

SECTION 26 0050

BASIC ELECTRICAL MATERIALS & METHODS

PART 1 - GENERAL

1.01 DESCRIPTION: Division 1 applies to this Section. This Section contains general requirements for the Sections in Division 26.

A. Related Work Not in Division 26: Refer to individual Division 26 Sections.

1.02 QUALITY ASSURANCE:

A. Codes: Entire installation shall comply with requirements of authorities having jurisdiction.

B. Permits: Contractor shall pay for all permits required by work under this Division.

C. Inspections: Contractor shall arrange for all inspections and correct non-complying installations.

1.03 SUBMITTALS: Refer to Division 1 for procedures.

A. Material and Equipment: Prior to start of work, 6 copies of a list of all materials and equipment covered by Division 26 shall be submitted for approval. Contractor shall allow ample time for checking and processing and shall assume responsibility for delays incurred due to rejected items. No installation of material concerned shall be made until such written approval has been obtained. Approval of materials and equipment shall in no way obviate compliance with the Contract Documents. Each item proposed shall be referenced to the applicable Section, Page, and Paragraph of Division 26. For each item proposed, give name of manufacturer, trade name, catalog data, and performance data.

B. Equipment Layout Drawings: Submit "Equipment Layout Drawings" for each equipment room or area containing equipment items furnished under this Division. Layout Drawings shall consist of plan view of room, to scale, showing projected outlines of all equipment, complete with dotted line indication of all required clearances including all those needed for removal or service. Location of all conduit and pull boxes shall be indicated.

C. Service Manuals: Refer to Submittal Section. Indexed Service Manuals shall be submitted which shall include test reports, service instructions, and renewal parts lists of all equipment.

1. Submission and Information: Service Manuals shall be submitted for approval at least 30 days before final inspection. The following

information together with any pertinent data, shall be included in Service Manual:

a. Renewal part numbers of all replaceable items.

b. Manufacturer's cuts and rating data.

c. Serial numbers of all principal pieces of equipment.

d. Supplier's name, address, and phone number.

e. Final settings for all breakers, relays, and control devices (See Section 26032).

2. Copies: Four (4) copies of approved Service Manual shall be delivered on or before date required.

D. Record Drawings: Prepare and submit in accordance with requirements. Contractor shall make notations, neat and legible, daily as the work proceeds. Drawings shall be available for inspection at all times and kept at the job site. All buried conduit and/or indicated future connections outside any building shall be located both by depth and by accurate measurement from a permanently established landmark such as a building or structure.

E. Seismic Calculation: Refer to Article 3.01 herein.

F. Special Tools: If any part of the equipment furnished under Division 26 requires a special tool for assembly, adjustment, resetting, or maintenance thereof and such tool is not readily available on the commercial tool market, it shall be furnished with the equipment as a standard accessory and delivered to the Owner.

G. Maintenance Paint: One (1) can of touch-up paint shall be delivered to Owner for each different color factory finish which is to be the final finished surfaces of the product.

1.04 DRAWINGS:

A. Diagrammatic Drawings: For purposes of clarity and legibility, drawings are essentially diagrammatic although size and location of equipment is drawn to scale wherever possible, Contractor shall make use of data in all the Contract Documents and verify information at building site.

B. Routing of Conduit and Piping: The drawings indicate required size and termination of conduits and raceways. It is not intent to indicate all necessary offsets and it shall be the responsibility under this Division to install conduit in such a manner as to conform to structure, avoid obstructions, preserve headroom, keep openings and passageways clear, and make all equipment requiring inspection, maintenance and repair accessible without extra cost to the Owner.

C. Coordination with Other Trades: Check with other Divisions of the Specifications so that no interference shall occur and in order that elevations may be established for the work. Installed work which interferes with the work of other trades shall be removed and rerouted at the discretion of the Architect.

1.05 DAMAGE AND REPAIRS:

A. Emergency Repairs: Owner reserves the right to make temporary repairs as necessary to keep equipment in operating condition without voiding Contractor's warranty or relieving Contractor of his responsibility during warranty period.

B. Responsibility for Damage: Contractor shall be responsible for damage to grounds, buildings, or equipment due to work furnished or installed under this Division 26.

1.06 PROTECTION, CARE, AND CLEANING:

A. Protection: Provide adequate protection for finished parts of materials and equipment against physical damage from any cause during progress of work and until final completion. Sensitive electrical equipment shall not be installed until major construction is completed.

B. Care: During entire construction, properly cap all lines and equipment to prevent entrance of sand and dirt. Protect equipment against moisture, plaster, cement, paint or work of other trades by covering with polyethylene sheets.

C. Cleaning: After installation is completed, clean all systems as follows in addition to requirements specified:

1. Field Painted Items: Clean exterior of conduits, raceways, piping and equipment exposed in completed structure; removing all rust, plaster, cement and dirt by wire brushing. Remove grease oil and similar materials by wiping with clean rags and suitable solvents.

2. Factory Finished Items: Remove grease and oil on all factory finished items such as cabinets and controllers, and leave surfaces clean and polished.

D. Connection: Prior to energizing, check all electrical connection hardware and torque where necessary.

PART 2 - PRODUCTS

2.01 PRODUCTS: Products and materials shall be as specified in the pertinent Sections of Division 26.

2.02 MATERIALS AND EQUIPMENT: Wherever possible, all materials and equipment used in installation of this work shall be of same manufacturer throughout for each class of material or equipment. Materials shall be new and bear UL label, wherever subject to such approval. Comply with ANSI, IEEE and NEMA standards, where applicable.

PART 3 - EXECUTION

3.01 SEISMIC REQUIREMENTS: Electrical equipment for emergency systems shall be braced to withstand the lateral forces that result from earthquakes. Under Work of Division 26, submit seismic calculations stamped and signed by a registered California structural engineer confirming size, number, and location of required anchoring hardware. Electrical equipment vendors shall furnish weights together with dimensions and the center of gravity location for all emergency electrical equipment for this purpose.

3.02 GENERAL LATERAL BRACING REQUIREMENTS: As shown on Drawings. Additional bracing requirements shall conform to specific requirements shown on Drawings or in other Sections of Division 26. Anchorages for equipment subject to thermal expansion and movement shall conform to manufacturer's recommendation and intent of general bracing requirements. When general and specific bracing requirements enumerated above are in conflict with referenced standards, the most stringent requirements shall govern.

3.03 EXCAVATION AND BACKFILL: Perform all excavation and back fill required to install Work of Division 26, both inside and outside. Perform all excavation and backfilling in accordance with Division 2.

A. Excavation: Bury conduits outside building to a depth of not less than 24" (or as required by Code) below finish grade, unless noted otherwise.

B. Backfilling: Do not backfill until after final inspection and approval of conduit installation by all legally constituted authorities and recording of the buried items on the Record Drawings.

3.04 CUTTING AND PATCHING:

A. Cutting of Existing Structural Work: Holes in existing slabs and concrete walls shall be cored to the minimum size required. The Contractor shall submit Drawings showing dimensioned sizes and locations for all such holes to Architect for approval before cutting. Where required for conduit installation, slabs on grade shall be saw-cut to minimum required width; submit cutting Drawings to the Architect for approval before cutting.

B. Patching: Holes or chases shall be patched to match adjacent surfaces.

3.05 CONCRETE WORK: Concrete construction required for the Work of Division 26 shall be provided under the Work of Division 26.

3.06 PAINTING: Finish painting of electrical equipment will be as specified in Division 9, unless equipment is herein specified to be furnished with factory applied finish coats. Equipment to be field painted shall be furnished with a factory applied prime coat.

A. Touch-Up: If factory finish on any equipment furnished under Division 26 is damaged in shipment or during construction of building, the equipment shall be refinished by Contractor to satisfaction of Architect.

B. Concealed Equipment: Uncoated cast-iron or steel that will be concealed, or will not be accessible when installations are completed, shall be given one heavy coat of black asphaltum before installation.

3.07 OPERATING INSTRUCTIONS: Contractor to provide services of an experienced Engineer to instruct Owner in operation of entire installation. Instructional period shall be during normal work day hours. This instruction period may be simultaneous with compliance tests.

3.08 COMPLIANCE TESTS: Conduct such tests of all portions of installation as may be necessary to ensure full compliance with the Drawings and Specifications. Tests shall be made in the presence of the Owner. Costs of test shall be borne by Contractor and Contractor shall provide all instruments, equipment, labor and materials to complete all the tests. Tests may be required on any item between installation of Work and the end of 1 year warranty period. Should these tests develop any defective materials, poor workmanship or variance with requirements of Specifications, Contractor shall make any changes necessary and remedy any defects at his expense.

A. All Feeders: Measure and record as follows:

1. 600 volt conductors shall be tested with 500 volt megger to ground on each phase. megger to be on test for one minute before any readings are taken. The minimum values on all feeders shall be 100,000 OHMS.

2. Copies of the certified test readings shall be transmitted to Owner.

3.09 SYSTEM ACCEPTANCE:

A. Final Review: The Contractor shall request a final review prior to system acceptance after:

1. Completion of installation of all systems required under the Contract Documents.

2. Submission and acceptance of operating and maintenance data.

3. Completion of identification program.

B. Acceptance: Is contingent on:

1. Completion of final review and correction of all deficiencies.

2. Satisfactory completion of acceptance tests demonstrating compliance with all performance and technical requirements of Contract Documents.

3. Satisfactory completion of training program and submission of manuals and Drawings required by Contract Documents.

3.10 PRELIMINARY OPERATION: The Owner reserves the right to operate portions of the electrical system on a preliminary basis without voiding the warranty or relieving the Contractor of his responsibilities.

3.11 CLEAN-UP: Conform to the Submittal Section. Upon completion and at other times during progress or Work, when required, remove all surplus materials, rubbish, and debris resulting from Work of Division 26.

END OF SECTION

SECTION 26 0060

MINOR ELECTRICAL DEMOLITION FOR REMODELING

PART 1 - GENERAL

1.01 SECTION INCLUDES

A. Electrical demolition.

PART 2 - PRODUCTS

2.01 MATERIALS AND EQUIPMENT

A. Materials and equipment for patching and extending work: As specified in individual Sections.

PART 3 - EXECUTION

3.01 EXAMINATION

A. Verify field measurements and circuiting arrangements are as shown on Drawings.

B. Verify that abandoned wiring and equipment serve only abandoned facilities.

C. Demolition Drawings are based on casual field observation and existing record documents. Report discrepancies to Owner and Architect/Engineer before disturbing existing installation.

D. Beginning of demolition means installer accepts existing conditions.

3.02 PREPARATION

A. Disconnect and make safe all electrical systems in walls, floors, and ceilings scheduled for removal.

B. Coordinate utility service outages with Utility Company and Owner's representative.

C. Provide temporary wiring and connections to maintain required existing systems in service during construction. When work must be performed on energized equipment or circuits, use personnel experienced in such operations.

D. Existing Electrical Service: Maintain existing system in service until new system is complete and ready for service. Disable system only to make switchovers and connections. Obtain permission from Owner at least 72 hours before partially or completely disabling system. Minimize outage duration. Make temporary connections to maintain service in areas adjacent to work area when outage affects business operation.

E. Existing Fire Alarm System: Maintain existing system in service until new system is accepted. Disable system only to make switchovers and connections. Notify Owner and local fire service at least 72 hours before partially or completely disabling system. Minimize outage duration. Make temporary connections to maintain service in areas adjacent to work area.

3.03 DEMOLITION AND EXTENSION OF EXISTING ELECTRICAL WORK

A. Demolish and extend existing electrical work under provisions of this Section.

B. Remove, relocate, and extend existing installations to accommodate new construction.

C. Remove abandoned wiring to source of supply and re-label devices as spares.

D. Remove exposed abandoned conduit, including abandoned conduit above accessible ceiling finishes. Cut conduit flush with walls and floors, and patch surfaces.

E. Disconnect abandoned outlets and remove devices. Remove abandoned outlets if conduit servicing them is abandoned and removed. Provide blank cover for abandoned outlets which are not removed.

F. Disconnect and remove abandoned panelboards and distribution equipment.

G. Disconnect and remove electrical devices and equipment serving utilization equipment that has been removed.

H. Disconnect and remove abandoned conduit.

I. Repair adjacent construction and finishes damaged during demolition and extension work.

J. Maintain access to existing electrical installations which remain active. Modify installation or provide access panel as appropriate.

K. Extend existing installations using materials and methods compatible with existing electrical installations, and in compliance with new project specifications.

L. Modify existing as-built drawings to note changes.

3.04 CLEANING AND REPAIR

A. Clean and repair existing materials and equipment which remain or are to be reused.

B. Panelboards: Clean exposed surfaces and check tightness of electrical connections. Replace damaged circuit breakers and provide closure plates for vacant positions. Provide typed circuit directory showing revised circuiting arrangement.

C. Luminaires: Remove existing luminaires for cleaning. Use mild detergent to clean all exterior and interior surfaces; rinse with clean water and wipe dry. Replace lamps, ballasts, and broken electrical parts.

3.05 INSTALLATION

A. Install relocated materials and as required by this section and Owner's representative.

END OF SECTION

SECTION 26 0111

CONDUITS

PART 1 - GENERAL

A. The general provisions apply to this section.

1.1 WORK INCLUDED

A. Conduits; including:

1. Rigid steel conduit.

2. Intermediate metal conduit (IMC).

3. Electrical metallic tubing (EMT).

4. Rigid aluminum conduit.

5. Polyvinyl chloride conduit (PVC).

6. Flexible metal conduit.

7. Liquid-tight flexible metal conduit.

1.2 DEFINITION

A. Conduit: This term shall be construed to mean conduit and conduit fittings; and tubing and tubing fittings.

1.3 RELATED WORK SPECIFIED ELSEWHERE

B. Support material: Section 260190.

PART 2 - PRODUCTS

2.1 MATERIAL AND FABRICATION - ALL MATERIALS SHALL BE MANUFACTURED IN THE USA.

A. Rigid Steel Conduit: Hot-dipped galvanized or sherardized including the threads, manufactured in accordance with ANSI C80.1 and UL6.

1. Threaded, hot-dipped galvanized or sherardized fittings manufactured in accordance with ANSI C80.4.

B. Intermediate Metal Conduit: Hot-dipped galvanized including the threads, manufactured in accordance with UL 1242.

C. Electrical Metallic Tubing: Manufactured in accordance with ANSI C80.3 and UL 797.

1. Provide compression fittings in walls, ceiling spaces or exposed construction areas.

2. Provide compression (water tight) fittings in damp areas or areas exposed to weather.

D. Rigid Aluminum Conduit: Manufactured in accordance with ANSI C80.5.

1. Threaded fittings, manufactured in accordance with ANSI C80.4.

E. Polyvinyl Chloride Conduit: Schedule 40 and schedule 80, manufactured in accordance with ANSI C33.91, UL 651, and Nema TC-2.

1. Cemented type fittings of the same manufacturer as the conduit.

F. Polyvinyl Chloride Conduit: Type EB, heavy wall, manufactured in accordance with ANSI C33.91, UL651, and Nema TC-8.

1. Cemented fittings of the same manufacturer as the conduit.

G. Flexible Metal Conduit: Hot-dipped galvanized steel, manufacturer in accordance with UL 1.

1. Squeeze type, malleable iron, cadmium plated, straight and angle connectors for all sizes and twist-in connectors for 1/2-inch and 3/4-inch flexible metal conduit.

H. Liquid-Tight Flexible Conduit: Hot-dipped galvanized with liquid-tight vinyl jacket.

1. Liquid-tight fittings.

PART 3 - EXECUTION

3.1 USE

A. EMT for all exposed and concealed work except as indicated in Paragraphs B, C, D, E, F, and G.

B. Rigid steel, IMC, or rigid aluminum conduit in areas where exposed conduit could be subject to physical damage or where conduit is exposed and conductor phase to ground voltage exceeds 300 volts.

C. Rigid aluminum conduit may be used for all feeder runs exposed or concealed in stud walls and spaces above suspended ceilings.

D. PVC Conduit:

1. Schedule 40 for runs below grade in direct contact with earth.

2. Schedule 40 in concrete floors, walls or roofs.

E. Flexible Conduit (steel only permitted):

1. For connection to equipment subject to vibration, maximum length 18 inches. In wet locations use liquid-tight flexible conduit.

2. For connection to lighting fixtures above suspended ceilings. Lengths limited to 72 inches.

3. Install ground conductors in all flexible conduits.

F. Where 3/4-inch conduit runs are concealed in walls or ceilings and these runs are through wood studs and wood joists, flexible steel conduit may be used up to a maximum length of 6'0".

G. All risers shall be PVC coated RGS with bushings where exposed to damage, PVC schedule 80 may be used in other areas if encased in concrete

H. In concrete or below grade use conduit not smaller than 1 inch. Maximum size in concrete slab: 1 inch. Run larger sizes under slab.

I. Use long sweep elbows with minimum radius 10 times nominal conduit diameter for all telephone and communication runs.

3.2 INSTALLATION

A. Provide conduit support and bracing in accordance with the latest published SMACNA guidelines.

B. Perform excavating, trenching, backfilling, and compacting as specified in Division 2.

C. Minimum cover for runs below finished grade outside buildings: 24 inches except where noted or required by the serving utility. Minimum cover for conduit in concrete floors, walls or roof: 1/3 thickness of slab. Minimum cover under building slabs is 12-inches.

D. Minimum separation from uninsulated hot water pipes, steam pipes, heater flues or vents: 6 inches. Avoid running conduit directly under water lines.

E. Protect inside of conduit from dirt and rubbish during construction by capping all openings with plastic caps intended for the purpose.

F. Provide conduit bodies for exposed conduit runs at junctions, bends or offsets where required. Do not use elbows or bends around outside corners of beams, walls or equipment. Make conduit body covers accessible.

G. Make conduit field cuts square with saw and ream out to full size. Shoulder conduits in couplings.

H. Run a minimum of one 3/4-inch empty conduit for every three single pole spare circuit breakers, spaces or fraction thereof and not less than two 3/4-inch conduits from every flush mounted panel to an accessible space above the ceiling and below the floor.

I. Make conduit projections from covered areas to areas exposed to the weather watertight by proper flashing. Extend flashing a minimum of 6 inches in all directions from conduit.

J. Where conduit is to remain empty, install polypropylene or nylon pull-line 3/16" minimum diameter from end to end with tag at each end designating opposite terminations.

K. Run conduit parallel and at right angle to building lines, when visible in finished construction.

L. Cap conduits indicated to be stubbed-out underground using glued-on PVC caps intended for this purpose.

M. Install a coupling flush with the floor on all conduits stubbed up through floors on grade.

N. Make no bends with a radius less than 12 times the diameter of the cable it contains nor more than 90 degrees. Make field bends with tools designed for conduit bending. Heating of metallic conduit to facilitate bending is not permitted.

O. Where conduit installed in concrete or masonry extends across building construction joints, provide expansion fittings as manufactured by O.Z.; Crouse-Hinds; Appleton; or equal, with approved ground straps and clamps.

P. Concrete Wall or Slab Penetrations: All core drilling, sleeves, blockouts or other penetrations must be approved by the Structural Engineer prior to installation.

1. Space sleeves and core drills to insure a minimum dimension of 3 times the nominal trade diameter of the largest adjacent conduit between sleeves or core drills.

2. Use blockouts for concentrations of conduits in a confined area.

Q. Do not penetrate walls with flexible conduit where subject to physical damage. Use recessed box with extension ring for transition from interior to exterior of wall.

R. All homeruns shown shall be run to the panel indicated independently of all other homeruns. Provide pull points so as not to exceed total bends of 360 degrees between them unless otherwise indicated.

S. At switchboards, manholes and floor standing distribution panelboards, provide insulated throat bushings or bell ends on all non-metallic conduit entries and bushings on all metallic conduit entries.

T. Provide bushings on all conduit terminations sized 1" and larger.

U. Provide weatherproof boxes and connectors for all exposed parking structure raceways and boxes.

V. Provide bell ends on all conduits into pullboxes and manholes, seal all conduits after conductors are pulled.

W. Cap all unused conduits with end cap. Do not tape.

X. All Fire Alarm Conduits shall be painted red.

END OF SECTION

SECTION 26 0130

ELECTRICAL BOXES

PART 1 - GENERAL

1.01 WORK INCLUDED

A. Boxes; including:

1. Outlet boxes.

2. Pull and junction boxes.

3. Cabinets.

1.02 RELATED WORK SPECIFIED ELSEWHERE

A. Submittals: Section 260000.

PART 2 - PRODUCTS

2.01 MATERIAL AND FABRICATION

A. Outlet Boxes:

1. Pressed Steel Boxes: Knockout type, hot-dipped or electro-plate galvanized.

2. Cast Iron Boxes: Hot-dipped or electro-plate galvanized with threaded hubs.

3. Cast Iron Conduit Bodies: Hot-dipped or electro-plate galvanized with threaded hubs.

4. Cast copper free aluminum conduit bodies with threaded hubs.

5. Covers for Pressed Steel Boxes: Hot dipped or electro-plate galvanized.

6. Outlet boxes manufactured in accordance with UL 514.

B. Pull and Junction Boxes:

1. Sheet steel, hot-dipped or electro-plate galvanized, or prime coated and a final coat of manufacturer's standard enamel or lacquer finish. Manufactured in accordance with UL 50.

a. Where exposed to weather, provide raintight hubs for conduits entering the boxes, top and sides only.

2. Floor Boxes:

a. Single gang, similar to Hubbell #B-2536.

b. Covers:

1) Combination, similar to Hubbell #S-2525.

2) Duplex receptacle, similar to Hubbell #S-3925.

c. Carpet flange, similar to Hubbell #S-3075 thru #S-3079.

d. Hubs: Provide hubs as required to suit the conduit arrangement.

3. Pre-Cast Concrete Pull Boxes: As manufactured by Jensen Pre-Cast or Utility Vault and shown on drawings.

4. High impact resistant PVC boxes: As manufactured by Carlon, Sedco, or R & G Sloan.

C. Cabinets: Sheet metal, prime coat and final coat of manufacturer's standard enamel or lacquer finish. Manufactured in accordance with UL 50.

1. Control Cabinet: NEMA 1 enclosure, door with butt hinges and flush handle latches.

a. Provide with removable steel back panel.

2. Terminal Cabinets: NEMA 1 enclosure, door with concealed hinges and spring catch type flush cylinder locks. Key locks alike, provide two keys with each lock.

3. Provide engraved plastic nameplates with 1/2" minimum height letters indicating designation of control and terminal cabinets as shown on the drawings.

a. Secure nameplates with at least two screws or rivets. Cementing and adhesive installation not acceptable.

PART 3 - EXECUTION

3.01 USE

A. Outlet Boxes:

1. Ceiling Outlet Boxes: Not less than 4" octagonal by 2" deep.

2. FDD cast iron or cast aluminum device boxes and conduit bodies with metal covers for exposed conduit installation. Provide gasket for covers in wet areas.

B. Pull and Junction Boxes:

1. Use sheet steel boxes NEMA Type 1 for indoor and NEMA Type 3R for outdoor installation, except as follows.

2. Use pre-cast concrete boxes for boxes flush in finish grade where requiring a nominal capacity greater than 144 cubic inches, where located in vehicular traffic areas, or where indicated.

3. Use polyvinyl chloride (PVC) boxes flush in finish grade when the nominal internal volume is less than or equal to 144 cubic inches or where indicated.

4. Use cast iron boxes for boxes flush in slab on grade.

3.02 INSTALLATION

A. Provide 3/8" fixture studs in wall bracket and ceiling boxes.

B. Provide covers suitable for the fixtures or devices used.

C. Make outlet box covers flush with finished surfaces.

D. Close unused open knockouts with knockout seals.

E. Provide 1" deep plaster rings on recessed outlet boxes installed in areas where concrete will be exposed after construction is complete.

F. Where boxes are concealed in exposed concrete unit masonry, use square cornered types or boxes fitted with rings of sufficient depth for the box to be recessed completely within cavity of block or tile. Install box to insure that ring fits an opening sawed out of the masonry, so that no mortar is required to fill between ring and construction.

G. Provide a 12" base of compacted crushed rock (3/4” max) under pre-cast concrete pull boxes.

H. Adjust floor boxes so they are level with top of finished floors/grade.

I. Provide pull boxes and junction boxes in all branch circuit and feeder runs as indicated. Do not provide pull boxes unless they are indicated or required by the Electrical Code.

3.03 IDENTIFICATION

A. Junction Boxes: Use permanent black marker, 2” high lettering, and on each cover plate indicate the power source and circuits contained within that junction box. Concrete box lids shall be bolted down covers with metal etched labeling on top of cover.

END OF SECTION

SECTION 26 0142

NAMEPLATES AND WARNING SIGNS

PART 1 - GENERAL

Not Used.

PART 2 - PRODUCTS

2.01 NAMEPLATES

A. Nameplate shall be plastic laminate with 3/4" high letters in white on black background screwed onto equipment designations shall clearly state:

1. Equipment Enclosure Nameplates.

a) Manufacturer's nameplate including equipment design rating of current, voltage, KVA, HP, bus bracing rating, or as applicable.

b) Equipment nameplate designating system usage and purpose, system nominal voltage, equipment rating for KVA, amperes, HP and RPM as applicable. Designation data per drawings or to be supplied with shop drawings approval.

2. Device nameplates: Device usage, purpose, or circuit number; manufacturer and electrical characteristic ratings including the following:

a) Circuit Breakers: Voltage, continuous current, maximum interrupting current and trip current.

b) Switches: Voltage, continuous current, horsepower or maximum current switching. If fused, include nameplate stating "Fuses must be replaced with current limiting type of identical characteristics."

c) Contactors: Voltage, continuous current, horsepower or interrupting current, and whether "mechanically-held" or "electrically-held".

d) Motors: Rated voltage, full load amperes, frequency, phases, speed, horsepower, code letter rating, time rating, type of winding, class and temperature.

e) Controllers: Voltage, current, horsepower and trip setting of motor running over current protection.

2.02 WARNING SIGNS

A. Warning signs shall be minimum 18 gauge steel, white porcelain enamel finish with red lettering. Lettering to read "DANGER - HIGH VOLTAGE" in 1" letters. Warning signs to be included on door or immediately above door of all electrical equipment rooms, vaults or closets containing equipment rooms, vaults or closets containing equipment energized above 150 volts to ground, except where such spaces are accessible from public areas.

2.03 WARNING SIGN DESIGNATION

A. Warning designation in 1" red letters shall be painted by stencil or pre-printed adhesive on each pull box, cabinet or 1-foot length of exposed conduit stating "DANGER" and giving voltage of enclosed conductors such as "DANGER - 480 VOLTS", for all systems over 150 volts to ground.

PART 3 - EXECUTION

3.01 INSTALLATION

A. Nameplates shall be mounted by self-tapping or threaded screws and bolts or by rivets.

B. Signs shall be permanently mounted with cadmium plated steel screws or nickel-plated brass bolts.

C. Nameplates shall be provided by the contractor for each owner provided switchgear and distribution panel and for each panel designation or load in the switchgear or distribution panel.

D. END OF SECTION

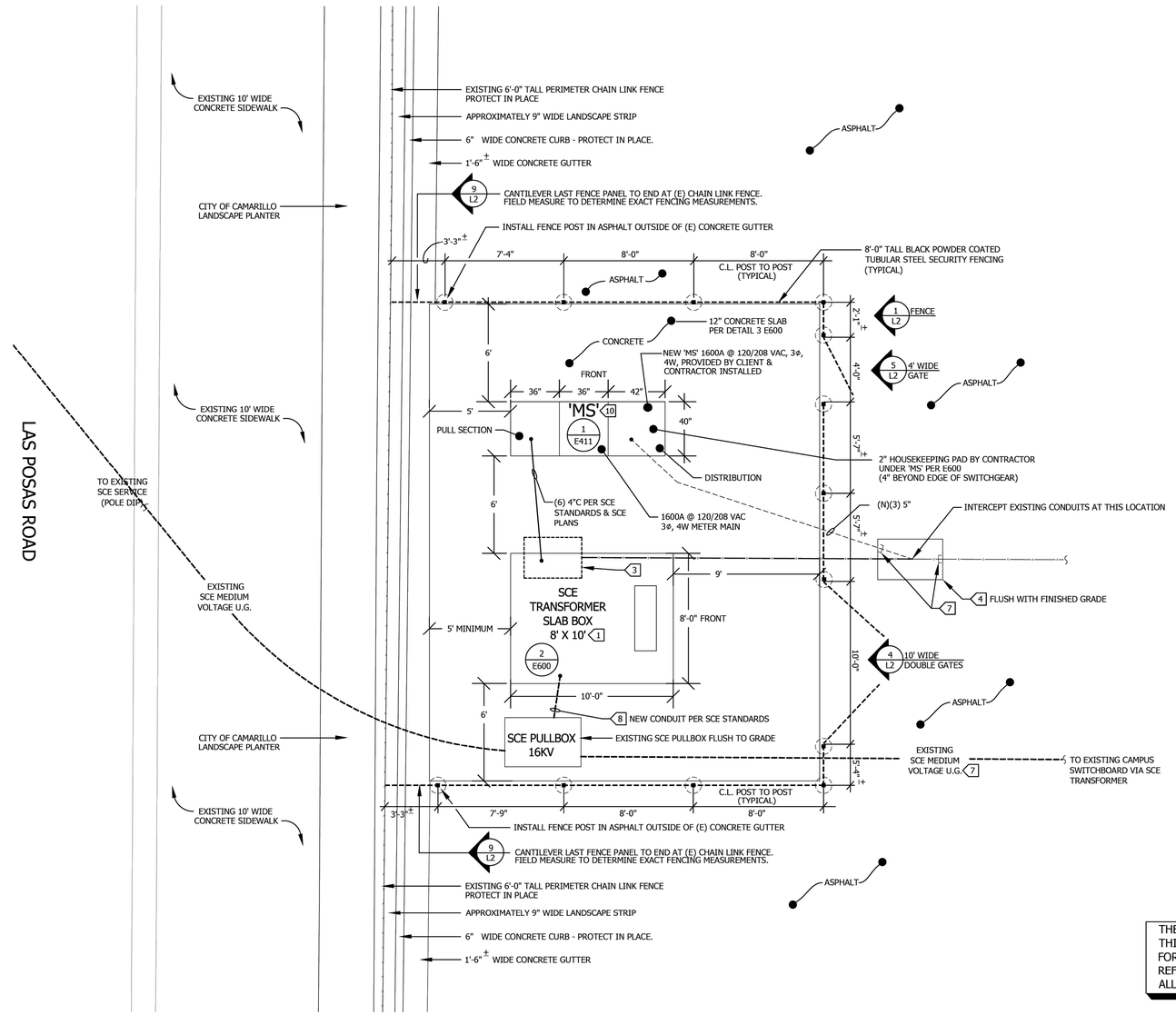

BOND METAL FENCE EVERY 12'-0" OR NON CONTINUOUS SECTION TO GROUND GRID WITH #6 AWG MINIMUM

THE ELECTRICAL INFORMATION IDENTIFIED ON THIS PLAN IS FOR REFERENCE PURPOSES ONLY FOR FENCE POST AND PANEL INSTALLATION. REFER TO ELECTRICAL ENGINEER'S PLANS FOR ALL ELECTRICAL INSTALLATION INFORMATION.

PROVIDE GROUND FOR SCE TRANSFORMER PER SCE STANDARDS

THIS EQUIPMENT IS BEING DESIGNED TO BE INSTALLED PRIOR TO PHASE 2 WORK TO ALLOW SCE POWER CONNECTION TO BE AVAILABLE WHEN PHASE 2 IS READY TO BE ENERGIZED.

1/2" - 1'-0"
0 1' 2' 4'

NEW SCE SERVICE SUBSTATION

1 E400 | E410

SCALE: 1/4"=1'-0"

N

SHEET NOTES:

1. CONTRACTOR SHALL FIELD VERIFY LOCATION & REQUIREMENTS OF ALL DEVICES REQUIRING ELECTRICAL CONNECTION PRIOR TO BID PROPOSAL, ROUGH-IN AND FINISH.
2. COORDINATE WORK WITH OTHER TRADES. OBTAIN ALL DRAWINGS THAT WILL REQUIRE COORDINATION AND PROVIDE ALL ELECTRICAL CONNECTIONS, DEVICES, AND WIRING REQUIRED WHETHER SHOWN ON ELECTRICAL DRAWINGS OR NOT.
3. CONTRACTOR SHALL FURNISH AND INSTALL PULL BOXES AS REQUIRED TO INSTALL CONDUCTORS PER CONDUCTOR MANUFACTURERS RECOMMENDATIONS, PER THE NATIONAL ELECTRICAL CODE AND PER LOCAL AUTHORITIES HAVING JURISDICTION.
4. 1" CONDUIT MINIMUM U.O.N.
5. PROVIDE CODE SIZE EQUIPMENT GROUNDING CONDUCTORS IN ALL OCCUPIED CONDUITS.
6. VERIFY THE EXACT ROUTING OF ALL EXPOSED CONDUIT WITH OWNER PRIOR TO INSTALLATION.

KEY NOTES:

1. CONTRACTOR PROVIDED & INSTALLED PER SCE STANDARDS & APPROVED PLANS.
2. EXISTING TO REMAIN.
3. REPLACE EXISTING 120/208 VAC PULLBOX WITH NEW TRAFFIC RATED PULLBOX PER DETAIL 4 E601 AT NEW LOCATION.
4. NEW 30" x 48" x 24" TRAFFIC RATED PULLBOX WITH STEEL BOLTED COVER 'ELECTRICAL'.
5. (3) 5"C - EXISTING CONDUIT.
6. (3) 5"C (24" COVER MINIMUM).
7. STUB INTO EAST/WEST END OF PULLBOX 4
8. MUST BE DONE BY SCE APPROVED CONTRACTOR AT EXPENSE OF PROJECT (COST BORNE BY GC)
9. EXISTING TO REMAIN, TO BE REMOVED AS A PORTION OF PHASE 2 WORK
10. PROVIDE #4/0 UFER GROUND & (2) 3/4" x 10-0" GROUND RODS (15'-0" MINIMUM DISTANCE) WITH 4/0 TO GROUND BUS & ALL CONNECTIONS EXOTHERMIC WELDED, SEE DETAILS 1 & 2 E601.

KEY MAP

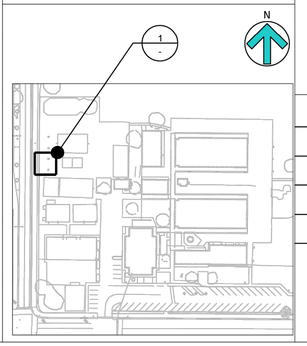

DSA STAMP

REV#	DESCRIPTION	DATE
	.	.
	.	.
	.	.
	.	.
	.	.
	.	.
	.	.

STAMP

REGISTERED LANDSCAPE ARCHITECT
JOHN JAMES BAIN ID #1193
SIGNATURE
04-26
RENEWAL DATE
04-16-25
DATE
STATE OF CALIFORNIA

JORDAN & BAIN
LANDSCAPE ARCHITECTS, INC.
459 NORTH VENTURA AVE., VENTURA CA 93001
(805) 642-3641 FAX (805) 653-7874

SHEET TITLE: NEW SCE SERVICE SUBSTATION SECURITY FENCE LAYOUT

PROJECT: LAS POSAS ELEMENTARY SCHOOL
75 EAST CALLE LA GUERRA
CAMARILLO, CA 93010
- CHANGE OUT SERVICE TRANSFORMER AND METER MAIN

PHASE 1

DRAWN: J. BAIN
CHECKED: J. BAIN
DATE: 4/16/2025
SCALE: AS NOTED
JOB NO. 21-404
SHEET: L1
OF: SHEETS:

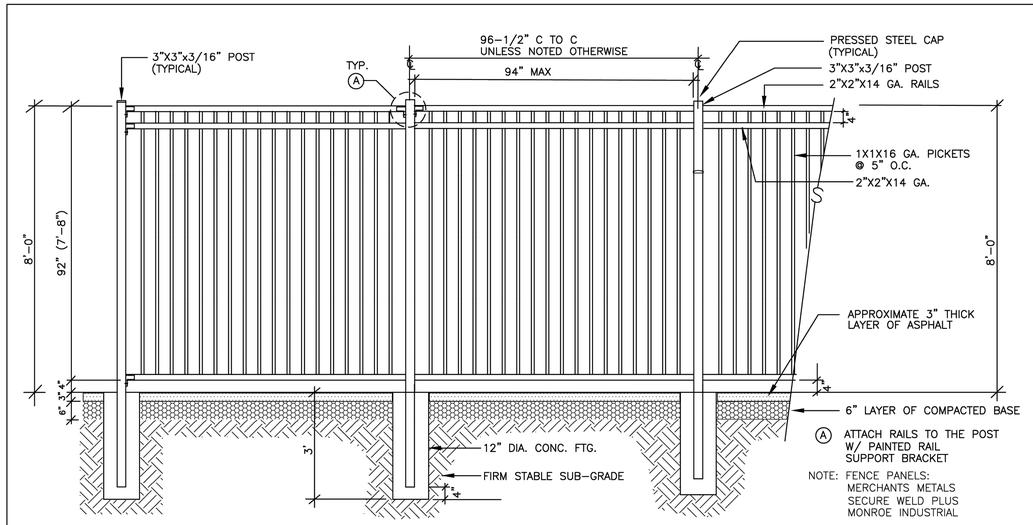

1 FENCE ELEVATION SCALE: 1/2" = 1'-0"

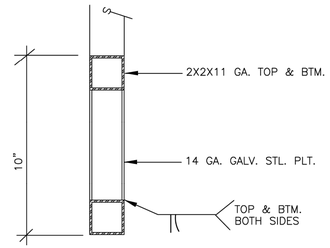

2 BOTTOM 10" RAIL (KICK PLATE) SCALE: 3" = 1'-0"

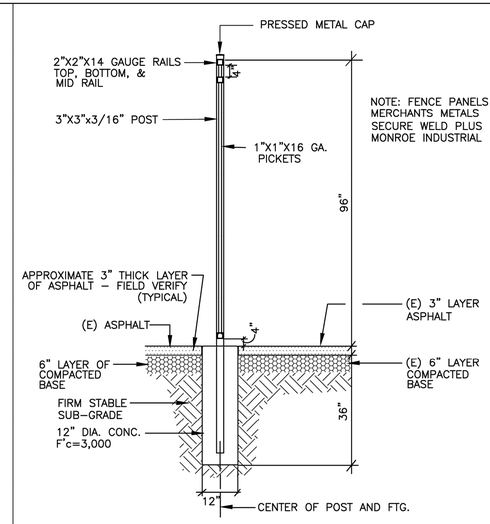

3 FENCE SECTION SCALE 1/2" = 1'-0"

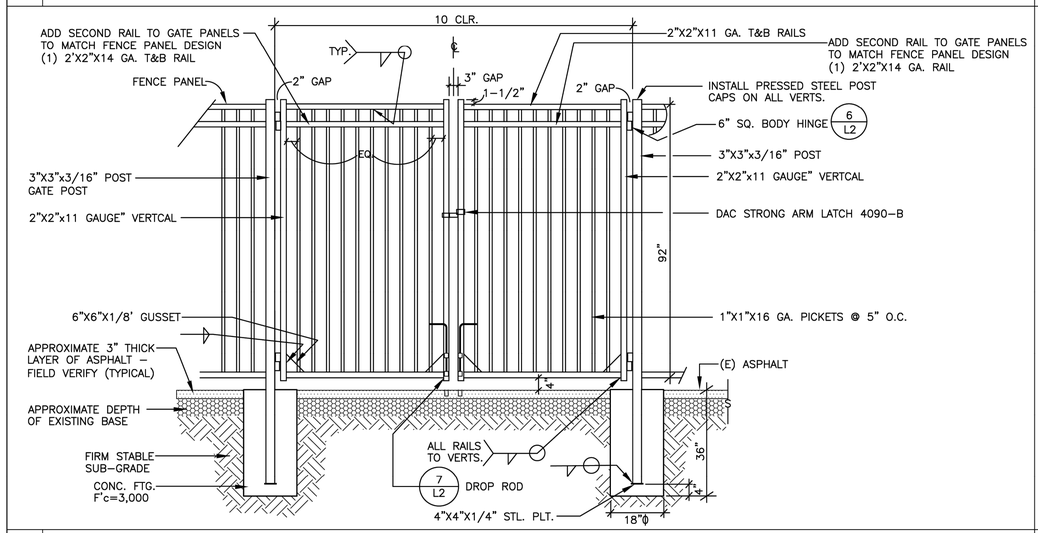

4 10'-0" WIDE DOUBLE GATE ELEVATION SCALE 1/2"=1'-0"

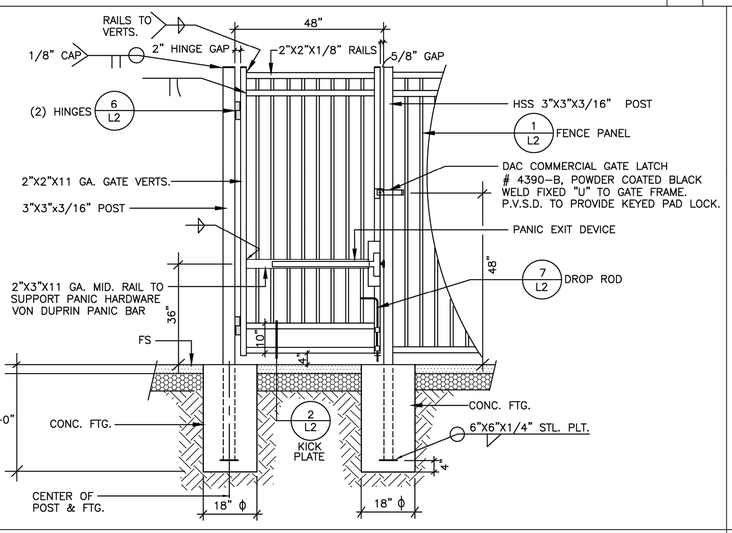

5 PEDESTRIAN GATE ELEVATION SCALE 1/2"=1'-0"

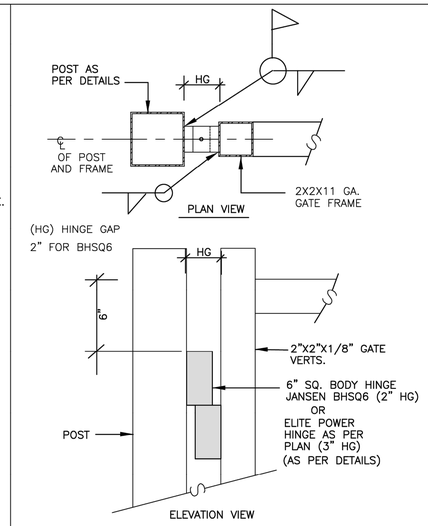

6 HINGE TO POST & FRAME SCALE 1/2"=1'-0"

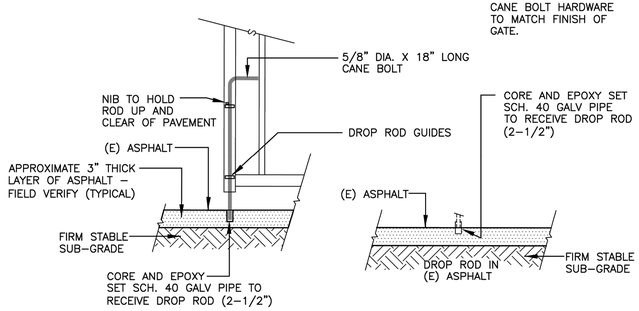

7 DROP ROD SCALE 1"=1'-0"

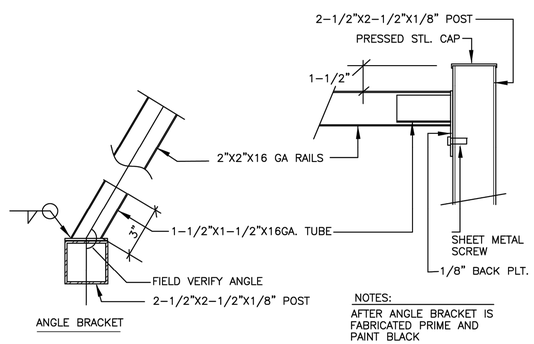

NOTES:
AFTER ANGLE BRACKET IS FABRICATED PRIME AND PAINT BLACK

FOR STRAIGHT CONNECTIONS USE MANUFACTURED BRACKETS "SLEEVE 2X11" JANSEN ORNAMENTAL SUPPLY OR EQ.

8 FENCE BRACKET CONNECTION SCALE 3"=1'-0"

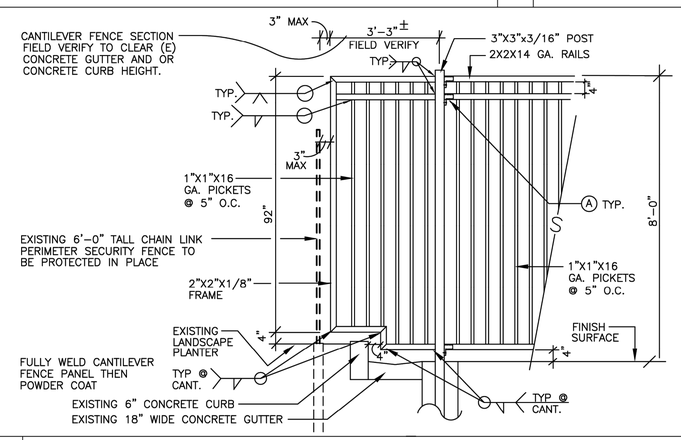

A ATTACH RAILS TO THE POST W/ PAINTED STEEL SLEEVE BRACKET

9 CANTILEVER FENCE PANEL SCALE 1/2" = 1'-0"

DSA STAMP

REV#	DESCRIPTION	DATE

STAMP

JORDAN & BAIN
LANDSCAPE ARCHITECTS, INC.
459 NORTH VENTURA AVE., VENTURA CA 93001
(805) 642-3641 FAX (805) 653-7874

REGISTERED LANDSCAPE ARCHITECT
JOHN JAMES BAIN III
SIGNATURE
04-26
RENEWAL DATE
04-16-25
DATE
STATE OF CALIFORNIA

SHEET TITLE: NEW SCE SERVICE SUBSTATION FENCING DETAILS

PROJECT: LAS POSAS ELEMENTARY SCHOOL
75 EAST CALLE LA GUERRA
CAMARILLO, CA 93010
- CHANGE OUT SERVICE TRANSFORMER AND METER MAIN
PHASE 1

DRAWN:	J.BAIN
CHECKED:	J. BAIN
DATE:	4/16/2025
SCALE:	AS NOTED
JOB NO.	21-404
SHEET:	L2

X OF: X SHEETS:

GENERAL NOTES

A. GENERAL

1. SCOPE
THE DRAWINGS AND THESE GENERAL NOTES DESCRIBE THE SCOPE OF WORK AND SYSTEMS. THE MATERIAL REQUIRED FOR THE WORK SHALL BE CONTRACTOR FURNISHED AND CONTRACTOR INSTALLED, UNLESS SPECIFICALLY NOTED OTHERWISE. THE WORK INCLUDES BUT IS NOT LIMITED TO THE FOLLOWING PRINCIPAL SYSTEMS AND EQUIPMENT.

2. PERMITS AND CHARGES
OBTAIN AND PAY FOR ALL NECESSARY CONSTRUCTION PERMITS, INSPECTION FEES, AND OTHER CHARGES BY AGENCIES HAVING JURISDICTION.

3. REGULATIONS AND CODES
PROVIDE AND INSTALL ALL MATERIALS IN CONFORMANCE WITH THE 2019 C.E.C., CALIFORNIA ADMINISTRATIVE CODE TITLE 8, AND OTHER CODES AND REGULATIONS HAVING JURISDICTION. INSTALL ALL EQUIPMENT IN ACCORDANCE WITH THE REQUIREMENTS OF THE INSPECTING AUTHORITY AND THE MANUFACTURERS RECOMMENDATIONS.

4. VERIFYING EXISTING CONDITIONS
BEFORE SUBMITTING BID, BECOME THOROUGHLY FAMILIAR WITH ACTUAL EXISTING CONDITIONS AT THE BUILDING. THE INTENT OF THE WORK IS SHOWN ON THE DRAWINGS AND DESCRIBED HEREINAFTER. BY THE ACT OF SUBMITTING A BID PROPOSAL FOR THE WORK, THE CONTRACTOR SHALL BE DEEMED TO HAVE MADE SUCH STUDY AND EXAMINATION AND TO ACCEPT ALL CONDITIONS PRESENT AT THE SITE. NO REQUEST FOR ADDITIONAL PAYMENT WILL BE CONSIDERED AS VALID, DUE TO FAILURE TO ALLOW FOR CONDITIONS WHICH MAY EXIST.

5. COORDINATION
COORDINATE ALL WORK WITH OTHER TRADES. OBTAIN ALL DRAWINGS THAT WILL REQUIRE COORDINATION AND PROVIDE ALL ELECTRICAL CONNECTION REQUIRED WHETHER SHOWN ON ELECTRICAL DRAWINGS OR NOT.

ELECTRICAL EQUIPMENT LOCATIONS INDICATED ARE SHOWN DIAGRAMMATICALLY, EXACT LOCATION SHALL BE VERIFIED.

SCALING OFF OF DRAWINGS SHALL BE DONE AT CONTRACTORS RISK. DO NOT SCALE DEVICES, LIGHTING FIXTURES OR ANY EQUIPMENT FROM PLANS.

LIGHTING FIXTURE QUANTITIES AND LENGTHS SHALL BE CONTRACTORS RESPONSIBILITY. FIXTURES ARE SHOWN FOR CIRCUITING ONLY. CONTRACTOR TO VERIFY SIZES & QUANTITIES PRIOR TO BID.

6. SERVICE CONTINUITY
UNINTERRUPTED EXISTING ELECTRICAL POWER SHALL BE MAINTAINED TO OTHER TRADES FOR TEMPORARY POWER AREAS OF THE SITE DURING CONSTRUCTION. PROVIDE ANY TEMPORARY SERVICES AS MAY BE REQUIRED. IDENTIFY AT BID TIME, ALL WORK TO BE DONE ON PREMIUM TIME AND THE TOTAL OVERTIME MAN-HOURS REQUIRED FOR COMPLETION.

7. AS BUILT
PROVIDE RECORD DRAWINGS IN ACAD TO THE OWNER WITH ALL CHANGES NOTED THEREON AT THE COMPLETION OF THE PROJECT. RECORD DRAWINGS SHALL BE SIGNED AND DATED BY CONTRACTOR PRIOR TO RELEASE OF FINAL RETENTION OF ALL MONIES.

8. GUARANTEE
CONTRACTOR SHALL UNCONDITIONALLY GUARANTEE ALL LABOR AND MATERIALS ON ALL WORK AGAINST DEFECTS IN WORKMANSHIP AND MATERIALS FOR A PERIOD OF ONE YEAR.

9. SHOP DRAWINGS
SUBMIT SHOP DRAWINGS AND MATERIAL LIST FOR REVIEW PRIOR TO COMMENCING ANY WORK. ALL EQUIPMENT TO BEAR U.L. LABEL OR THAT OF ANOTHER ACCEPTABLE TESTING LABORATORY. SHOP DRAWINGS MUST BE STAMPED BY THE CONTRACTOR FOR CONFORMANCE PRIOR TO SUBMITTAL.

SUBMIT THREE HARD COPY SETS OF SHOP DRAWINGS FOR REVIEW PRIOR TO PURCHASING ALL BREAKER MOUNTING HARDWARE, DISCONNECT SWITCHES, FUSES, CONTROLLERS, LIGHTING FIXTURES, LIGHT SWITCHES, RECEPTACLES, ETC.

10. CONTRACTOR BID
CONTRACTOR'S BID SHALL BE BASED ON ALL WORK SHOWN ON THE PLANS AND AS SPECIFIED. IF CONTRACTOR PROPOSES TO SUBSTITUTE FOR EQUIPMENT SPECIFIED, HE SHALL SUBMIT HIS REQUEST FOR CONSIDERATION OF THE OWNER AND ENGINEER PRIOR TO BID IN WRITING. ALL SUBSTITUTIONS MUST BE REVIEWED BY THE ENGINEER IN WRITING. SUCH REVIEW SHALL NOT RELIEVE THE CONTRACTOR COMPLYING WITH THE REQUIREMENTS OF THE DRAWINGS AND SPECIFICATIONS, AND THE CONTRACTOR SHALL BE RESPONSIBLE AT HIS OWN EXPENSE FOR ANY CHARGES RESULTING FROM HIS PROPOSED SUBSTITUTIONS WHICH AFFECT OTHER PARTS OF HIS OWN WORK, THE OWNER, ENGINEER OF RECORD OR THE WORK OF OTHER CONTRACTORS.

B. MATERIAL AND INSTALLATION

ALL WORK AND MATERIAL SHALL CONFORM TO THE LATEST RULES OF THE GOVERNING ELECTRICAL CODE AND INSTALLATION SHALL BE OF THE LATEST INDUSTRY STANDARDS OF WORKMANSHIP.

ALL MATERIALS SHALL BE NEW AND LISTED FOR THE APPLICATION BY UNDERWRITERS LABORATORY (U.L.).

1. CONDUITS
CONDUIT SHALL BE EMT, PVC, IMC, RIGID OR FLEXIBLE STEEL TYPE. CONDUIT SHALL BE MANUFACTURED IN ACCORDANCE WITH UL-1. A GROUND WIRE IS REQUIRED IN ALL FLEXIBLE CONDUIT AND UNDERGROUND CONDUIT. BUSHINGS SHALL BE INSTALLED ON ALL COMMUNICATION, TELEPHONE & SPEAKER CONDUITS. PROVIDE 3/16" NYLON PULL STRING IN ALL EMPTY CONDUITS. NO MC, BX OR AC90 SHALL BE PERMITTED. FLEXIBLE STEEL CONDUIT RUNS SHALL BE LIMITED TO A MAXIMUM LENGTH OF 6 FOOT.

2. SWITCHES AND RECEPTACLES
PROVIDE 20AMP NEMA RATED SWITCHES AND RECEPTACLES OF SPECIFICATION GRADE. ALL SWITCHES SHALL BE RATED FOR 120 AND/OR 277 VOLT AND RECEPTACLES SHALL BE NEMA 5-20R. IN ALL OFFICES AND OFFICE AREAS DEVICES SHALL BE DECORA SERIES TYPE WITH COLOR SELECTION BY CONTRACTOR/OWNERS REPRESENTATIVE.

3. FEEDERS AND BRANCH CIRCUITS IDENTIFICATION
IDENTIFY FEEDERS WITH THE CORRESPONDING CIRCUIT DESIGNATION AT THE OVER-CURRENT DEVICE, LOAD END, AND IN PULL BOXES WITH E-Z CODE OR OTHER APPROVED WIRE MARKER.

IDENTIFY BRANCH CIRCUITS WITH I.D. MARKERS, THE CORRESPONDING CIRCUIT DESIGNATION AT THE OVER-CURRENT DEVICE, AT ALL SPLICES, IN JUNCTION BOXES, AND IN OUTLETS. USE PLASTIC COATED SELF-STICKING MARKERS SUCH AS THOMAS & BETTS E-Z CODE FOR IDENTIFICATION OF CONDUCTORS.

IDENTIFY SIGNAL & COMMUNICATION CABLES AT TERMINAL AND OUTLET UNIQUELY WITH PERMANENT LABELING.

4. CONDUCTORS
DELIVER ALL CONDUCTORS TO THE JOB SITE IN ORIGINAL UNBROKEN CARTON OR REEL, PROPERLY TAGGED WITH U.L. LABEL, SIZE, TYPE, MANUFACTURER, TRADE NAME AND THE DATE OF MANUFACTURE. (MUST BE MANUFACTURED WITHIN 6 MONTHS)

PROVIDE COPPER CONDUCTORS #12 AWG MINIMUM UNLESS SPECIFICALLY NOTED OTHERWISE ON THE DRAWINGS. PROVIDE STRANDED COPPER CONDUCTORS FOR ALL WIRING. USE CONDUCTORS WITH 90°C THHN/THWN 600 VOLTS INSULATION, UNLESS OTHERWISE NOTED.

5. STRUCTURAL SUPPORT
EACH SECTION OF FLOOR MOUNTED SWITCHBOARD, DISTRIBUTION BOARD, MCC, ETC. SHALL BE BOLTED TO THE CONCRETE HOUSEKEEPING PAD USING (6) 3/4"-10 GRADE 2 BOLTS AND CONICAL WASHERS TORQUED TO 70LB-FT. PROVIDE MINIMUM 4000 PSI STRENGTH CONCRETE BELOW ALL FLOOR MOUNTED ELECTRICAL EQUIPMENT. TIE THE TOP OF ALL FLOOR MOUNTED ELECTRICAL EQUIPMENT TO THE BUILDING STRUCTURE IN A SEISMICALLY APPROVED MANNER.

6. ELECTRICAL CERTIFICATION
"ELECTRICIANS" PERFORMING WORK ON THIS PROJECT SHALL BE CURRENTLY CERTIFIED IN ACCORDANCE WITH THE STATE OF CALIFORNIA AB931 AND THE DIVISION OF APPRENTISHIP STANDARDS SECTION 3099.

C. DEMOLITION

1. NOTIFY THE OWNER IMMEDIATELY WHEREVER EXISTING EQUIPMENT IS ENCOUNTERED WHICH MUST BE RELOCATED DUE TO THE NEW CONSTRUCTION, AND WHICH IS NOT INDICATED ON THE PLANS.
2. ALL REMOVED MATERIALS AND EQUIPMENT WHICH ARE SALVAGEABLE SHALL REMAIN THE PROPERTY OF THE OWNER. DELIVER SUCH SALVAGED MATERIALS AND EQUIPMENT ON THE PREMISES AS DIRECTED BY OWNER, AND NEATLY PILE OR STORE THEM AND PROTECT FROM DAMAGE. REMOVE FROM PREMISES AND DISPOSE OF ALL MATERIALS CONSIDERED BY THE OWNER TO BE SCRAP.
3. ALL DEVICES, CIRCUITS CONDUCTORS, FEEDERS ETC., WHEN NOTED TO BE REMOVED, SHALL BE REMOVED TO THE LAST ACTIVE DEVICE. ALL OVER-CURRENT PROTECTION AND DISCONNECT DEVICES NO LONGER UTILIZED BUT REMAINING AS LAST ACTIVE DEVICE SHALL BE LABELED AS 'SPARE'. COORDINATE ALL OUTAGES WITH OWNERS REPRESENTATIVE.
4. DISCONNECT AND MAKE SAFE ALL ELECTRICAL SYSTEMS ON SITE AND IN WALL, FLOORS, AND CEILINGS SCHEDULED FOR REMOVAL.
5. REMOVE, RELOCATE, AND EXTEND EXISTING INSTALLATIONS TO ACCOMMODATE NEW CONSTRUCTION.
6. REMOVE ABANDONED WIRING TO SOURCE OF SUPPLY AND RE-LABEL DEVICES AS SPARES.
7. REMOVE ABANDONED CONDUIT, INCLUDING ABANDONED CONDUIT ABOVE ACCESSIBLE CEILING FINISHES. CUT CONDUIT FLUSH WITH WALLS AND FLOOR, AND PATCH SURFACES.
8. DISCONNECT ABANDONED OUTLETS AND REMOVE DEVICES. REMOVE ABANDONED OUTLETS IF CONDUIT SERVICING THEM IS ABANDONED AND REMOVE. PROVIDE BLANK COVER FOR ABANDONED OUTLETS WHICH ARE NOT REMOVED.
9. DISCONNECT AND REMOVE ABANDONED LUMINAIRES. REMOVE BRACKETS, STEMS, HANGERS, AND OTHER ACCESSORIES.
10. REPAIR ADJACENT CONSTRUCTION AND FINISHES DAMAGED DURING DEMOLITION AND EXTENSION WORK
11. MAINTAIN ACCESS TO EXISTING ELECTRICAL INSTALLATIONS WHICH REMAIN ACTIVE. MODIFY INSTALLATION OR PROVIDE ACCESS PANEL AS APPROPRIATE.
12. BEGINNING OF DEMOLITION MEANS CONTRACTOR ACCEPTS EXISTING CONDITIONS.

D. EXECUTION

1. CAREFULLY PROTECT ALL WALLS, TRIM, FLOORS, EQUIPMENT UTILITY LINES AND MATERIALS. WHEN WORKING ON FINISHED SURFACES, LIMIT DAMAGE TO THE CONFINES AS MUCH AS POSSIBLE AND RESTORE TO THE ORIGINAL CONDITION ALL SURFACES WHICH ARE DAMAGED BECAUSE OF THE INSTALLATION OF THIS WORK.
2. EQUIPMENT, MATERIALS AND SUPPLIES REMOVED FOR PROTECTION SHALL BE REPLACED IN ORIGINAL LOCATIONS. ANY MATERIALS DAMAGED SHALL BE REPLACED WITH NEW MATERIALS OF LIKE KIND AND QUALITY.
3. DO ALL DRILLING, CUTTING, CHANNELING AND PATCHING REQUIRED TO INSTALL ELECTRICAL WORK AS INDICATED OR HEREIN SPECIFIED. ALL HOLES, CURBS, ETC., IN FLOORS, CEILINGS AND WALLS SHALL BE PATCHED, UNLESS INDICATED OTHERWISE. PAINT ALL NEW ELECTRICAL RACEWAYS, CABINETS, ENCLOSURES AND FITTINGS PENETRATING INTO FIRE RATED ENVELOPES, SPACES, ETC.
4. ALL CONDUIT RUNS SHALL BE CONCEALED, UNLESS SHOWN OTHERWISE. PROVIDE A PULL WIRE IN ALL EMPTY CONDUITS.
5. EXISTING CONDITION SHOWN IS FROM AVAILABLE RECORD DRAWINGS AND VISUAL FIELD SURVEY AND SHOWN FOR REFERENCE ONLY. CONTRACTOR SHALL VERIFY ACTUAL EXISTING CONDITION AT SITE.
6. ALL WORK SHOWN IS NEW UNLESS SPECIALLY INDICATED AS EXISTING (X). ALL ELECTRICAL EQUIPMENT MOUNTING AND ANCHORAGE MUST CONFORM WITH LOCAL AND STATE SEISMIC CODES.

E. TELEPHONE SYSTEMS

PROVIDE RACEWAYS, AND ALL MATERIAL INCLUDING PULLING CABLE IN EACH RACEWAY AS REQUIRED FOR THE TELEPHONE SYSTEM PER THE TELEPHONE REQUIREMENTS.
ALL CAT 6 CABLES SHALL BE TESTED & MEET CURRENT BICSI STANDARDS, A TEST REPORT SIGNED BY A RCCD SHALL BE PROVIDED WITH THE DOCUMENTATION.

F. GROUNDING & BONDING

FURNISH AND INSTALL COMPLETE BONDING AND GROUNDING SYSTEM AS REQUIRED BY CODES. CONTINUITY OF GROUNDING SHALL BE MAINTAINED MECHANICALLY AND ELECTRICALLY THROUGHOUT THE SYSTEM. A GREEN GROUNDING CODE SIZED CONDUCTOR SHALL BE CARRIED IN ALL CONDUITS.

G. INSTALLATION

1. IT IS THE INTENT OF THESE PLANS AND SPECIFICATIONS THAT A COMPLETE AND WORKABLE ELECTRICAL INSTALLATION BE PROVIDED FOR ALL THE EQUIPMENT DESCRIBED OR SHOWN AS BEING IN THIS CONTRACT. TOWARD THIS END FURNISH ALL LABOR AND TOOLS NECESSARY AND FURNISH AND INSTALL ALL APPARATUS, MATERIALS AND EQUIPMENT IN A FASHION COMPLYING WITH ALL APPLICABLE CODES, INCLUDING ITEMS REQUIRED BUT NOT NORMALLY SHOWN, SUCH AS LAMPS, COUPLINGS, HANGERS, BRACKETS, CLAMPS, BOXES, CONNECTORS AND HARDWARE. REFER ALSO TO WRITTEN SPECIFICATIONS FOR GENERAL, MECHANICAL AND ELECTRICAL SECTIONS.
2. PROCURE ALL PERMITS FROM LEGALLY CONSTITUTED AUTHORITIES, ARRANGE FOR ALL INSPECTIONS AND PAY ALL COSTS FOR FEES AND TESTS IN CONNECTION THEREWITH. COMPLY WITH CODES: NOTHING IN THESE PLANS AUTHORIZES DEVIATION FROM APPLICABLE CODES.
3. DETERMINE EXACT ROUTING OF CONCEALED FEEDERS AND BRANCH HOMERUNS IN COOPERATION WITH OTHER TRADES TO SIMPLIFY INSTALLATION WHEREVER POSSIBLE BUT SUBJECT TO APPROVAL OF ARCHITECT FOR VISUAL AND STRUCTURAL REASONS.
4. PROVIDE A CODE APPROVED DISCONNECT SWITCH OR BREAKER WITHIN SIGHT OF EVERY MOTOR AND FEED MOTORS NOT EQUIPPED WITH "BUILT IN" PROTECTION THROUGH A MAGNETIC OR MANUAL STARTER WITH OVERLOAD HEATERS SIZED TO COMPLY WITH MOTOR MANUFACTURER'S RECOMMENDATIONS AND APPLICABLE CODES.
5. FOR CONNECTIONS TO EXHAUST FANS, PUMPS, COMPRESSORS, SPACE HEATERS, WATER HEATERS, AQUASTATS, SOLENOID VALVES AND OTHER MECHANICAL EQUIPMENT AND FOR CONDUITS AND WIRE REQUIRED BUT NOT NECESSARILY SHOWN ON THESE DRAWINGS REFER TO MECHANICAL PLANS AND DETERMINE EXACT LOCATIONS UNDER DIRECTION OF HEATING AND VENTILATING CONTRACTOR.
6. DO NOT RUN ANY CONDUIT IN SLAB IF ITS OUTSIDE DIAMETER EXCEEDS 1/3 THE THICKNESS OF THE SLAB. LOCATE CONDUITS WITHIN THE MIDDLE OF THE SLAB. WHERE CONDUITS ARE GROUPED IN PARALLEL RUNS, SPACE THEM 3" OR MORE APART. WHERE CONDUITS CROSS EACH OTHER, THICKEN SLAB PROPORTIONATELY OVER A HORIZONTAL AREA EQUAL TO TEN TIMES THE DIAMETER OF THE LARGEST CONDUIT. REFER ALSO TO DETAILS SHOWN.
7. SIZE OUTLET BOXES IN CONFORMITY WITH CODE FOR NUMBER AND GAUGE OF CONDUCTORS THEREIN, EXCEPT WHERE NOTED TO BE LARGER. MINIMUM BOX SIZE SHALL BE 4" SQUARE BY 1-1/2" DEEP.
8. EXAMINE PLANS TO DISCERN CEILINGS WITH A FIRE RATING OF ONE HOUR OR MORE, PROVIDE A ONE HOUR FIRE-RATED ENCLOSURE OVER EACH LIGHT FIXTURE RECESSED THEREIN.
9. ALL ELECTRICAL WORK SHALL BE INSTALLED SO AS TO BE READILY ACCESSIBLE FOR OPERATING, SERVICING, MAINTAINING AND REPAIRING. ALL CONDUIT SHALL BE CONCEALED WHERE POSSIBLE. EXPOSED CONDUIT SHALL BE IN STRAIGHT LINES PARALLEL WITH, OR AT RIGHT ANGLES TO, COLUMN LINES OR BEAMS AND SEPARATED BY AT LEAST THREE (3) INCHES FROM WATER LINES WHENEVER THEY RUN LONG SIDE OR ACROSS SUCH LINES. CONDUIT SHALL NOT BE RUN BELOW CABLE TRAYS OR LIGHT FIXTURES WITHOUT SPECIFIC APPROVAL OF THE OWNERS REPRESENTATIVE. HANGERS SHALL BE FASTENED TO STEEL, CONCRETE OR MASONRY, BUT NOT TO PIPING. HANGERS AND SUPPORT SYSTEMS ARE AN INTEGRAL PART OF THE VISUAL ENVIRONMENT. ALL HANGERS AND SUPPORTS EXPOSED TO PUBLIC VIEW MUST BE SHOWN IN DETAIL ON PLANS SUBMITTED TO ENGINEER FOR APPROVAL OF APPEARANCE. ALL HANGERS MUST BE UNIFORMLY SPACED AND NEATLY INSTALLED WITH NO EXCESS MATERIAL BEYOND WHAT IS REQUIRED FOR THE SUPPORT FUNCTION. CONTRACTOR SHALL SELECT ACCESSORIES AND HARDWARE WITH A SMOOTH, NEAT FINISHED APPEARANCE AND PAINT ALL EXPOSED CONDUIT HANGERS TO MATCH THE ADJACENT FINISHES.
10. ALL WALL SWITCHES AND RECEPTACLES SHALL BE MOUNTED BETWEEN 18" AND 48" PER ADA REQUIREMENTS UNLESS NOTED OTHERWISE.
11. ALL DISTRIBUTION BOARDS, SWITCHBOARDS AND TRANSFORMERS THAT ARE FLOOR MOUNTED SHALL BE MOUNTED ON 2" THICK HOUSEKEEPING PAD. TRANSFORMER SHALL BE ON VIBRATION ISOLATION PADS AND CONNECTED WITH FLEXIBLE CONDUIT.
12. CONTRACTOR SHALL EXAMINE PLANS AND VERIFY IN FIELD LOCATIONS OF ALL FIRE RATED WALLS, CEILINGS AND FLOORS. CONTRACTOR SHALL SEAL ALL ELECTRICAL SYSTEM PENETRATIONS THROUGH FIRE RATED WALLS, CEILINGS AND FLOORS WITH U.L. LISTED MATERIAL APPROVED BY THE AUTHORITY HAVING JURISDICTION.

COLOR CODE FOR CONDUCTORS

PROVIDE CONDUCTOR COLOR CODE AS FOLLOWS:
120/208VAC,3Ø,4W: BLUE,BLACK,RED FOR PHASE CONDUCTORS AND WHITE FOR NEUTRAL, GREEN FOR GROUND.

277/480VAC,3Ø,4W: ORANGE,BROWN,YELLOW FOR PHASE CONDUCTORS AND WHITE FOR NEUTRAL, GREEN FOR GROUND.

DERATING TABLE

NEC #310-8 ADJUSTMENT FACTORS

(a) MORE THAN THREE CURRENT-CARRYING CONDUCTORS IN A RACEWAY OR CABLE. WHERE THE NUMBER OF CURRENT-CARRYING CONDUCTORS IN A RACEWAY OR CABLE EXCEEDS THREE, THE ALLOWABLE AMPACITIES SHALL BE REDUCED AS SHOWN IN THE FOLLOWING TABLE:

NUMBER OF CURRENT-CARRYING CONDUCTORS	PERCENT OF VALUES IN TABLES AS ADJUSTED FOR AMBIENT TEMPERATURE IF NECESSARY
4 THROUGH 6	80
7 THROUGH 9	70
10 THROUGH 20	50
21 THROUGH 30	45
31 THROUGH 40	40
41 AND ABOVE	35

WHERE SINGLE CONDUCTORS OR MULTICONDUCTOR CABLES ARE STACKED OR BUNDLED LONGER THAN 24 INCHES (610 mm) WITHOUT MAINTAINING SPACING AND ARE NOT INSTALLED IN RACEWAYS, THE ALLOWABLE AMPACITY OF EACH CONDUCTOR SHALL BE REDUCED AS SHOWN IN THE ABOVE TABLE.

EXCEPTION NO. 1: WHERE CONDUCTORS OF DIFFERENT SYSTEMS, AS PROVIDED IN SECTION 300-3, ARE INSTALLED IN A COMMON RACEWAY OR CABLE, THE DERATING FACTORS SHOWN ABOVE SHALL APPLY TO THE NUMBER OF POWER AND LIGHTING (ARTICLES 210, 215, 220, AND 230) CONDUCTORS ONLY.

EXCEPTION NO. 2: FOR CONDUCTORS INSTALLED IN CABLE TRAYS, THE PROVISIONS OF SECTION 318-11 SHALL APPLY.

EXCEPTION NO. 3: DERATING FACTORS SHALL NOT APPLY TO CONDUCTORS IN NIPPLES HAVING A LENGTH NOT EXCEEDING 24 INCHES (610mm).

EXCEPTION NO. 4: DERATING FACTORS SHALL NOT APPLY TO UNDERGROUND CONDUCTORS ENTERING OR LEAVING AN OUTDOOR TRENCH IF THOSE CONDUCTORS HAVE PHYSICAL PROTECTION IN THE FORM OF RIGID METAL CONDUIT, INTERMEDIATE METAL CONDUIT, OR RIGID NONMETALLIC CONDUIT HAVING A LENGTH NOT EXCEEDING 10 FEET (3.05m) ABOVE GRADE AND THE NUMBER OF CONDUCTORS DOES NOT EXCEED FOUR.

EXCEPTION NO. 5: FOR OTHER LOADING CONDITIONS, ADJUSTMENT FACTORS AND AMPACITIES SHALL BE PERMITTED TO BE CALCULATED UNDER SECTION 310-15(b)

(FNC): SEE APPENDIX B, TABLE B-310-11 FOR ADJUSTMENT FACTORS FOR MORE THAN THREE CURRENT-CARRYING CONDUCTORS IN A RACEWAY OR CABLE WITH LOAD DIVERSITY.

(b) MORE THAN ONE CONDUIT, TUBE, OR RACEWAY. SPACING BETWEEN CONDUITS, TUBING, OR RACEWAYS SHALL BE MAINTAINED.

SYMBOLS

C	RELAY CONTROLLED RECEPTACLE AT 18" AFF TO BOTTOM OF DEVICE, PROVIDE WITHIN 6'-0" OF NON CONTROLLED RECEPTACLE. PROVIDE COVER PLATE WITH ENGRAVED "CONTROLLED".
	WP GFCI RECEPTACLE AT 18" AFF TO BOTTOM OF DEVICE
	GFCI RECEPTACLE AT 42" AFF TO BOTTOM OF DEVICE
	SINGLE RECEPTACLE, WALL MOUNTED @ +18" AFF TO BOTTOM OF DEVICE, NEMA 5-20R U.O.N.
	DUPLEX RECEPTACLE, WALL MOUNTED @ +18" AFF TO BOTTOM OF DEVICE, NEMA 5-20R U.O.N.
I.G.	ISOLATED (ORANGE) GROUND DUPLEX RECEPTACLE, WALL MTD.@18"AFF, NEMA 5-20R U.O.N.
	DOUBLE DUPLEX RECEPTACLE, NEMA 5-20R, WALL MOUNTED @ +18"AFF AT BOTTOM OF DEVICE
	DUPLEX RECEPTACLE, WALL MOUNTED @ +18" TO BOTTOM OF DEVICE NEMA 5-20R U.O.N. TOP RECEPTACLE SWITCHED
⊙	DUPLEX RECEPTACLE, FLOOR MOUNTED, NEMA 5-20R
	CEILING MOUNTED DUPLEX RECEPTACLE, 5-20R
	(2)DATA OUTLETS, 2 GANG 4SD BOX WITH DEVICES AND 4 CAT 6 CABLES FROM JACK TO IDF. PROVIDE 1-1/4"C MINIMUM TO CABLE TRAY OR IDF IF NO CABLE TRAY IS PRESENT.
	(2)DATA OUTLETS, 2 GANG FLOOR BOX WITH DEVICES AND 2 CAT 6 CABLES PER NOTES & SPECIFICATION. PROVIDE 1-1/4"C MINIMUM TO CABLE TRAY OR IDF.
	SPECIAL OUTLET, TYPE AS REQUIRED BY EQUIPMENT.
J	JUNCTION BOX (CEILING MTD.) SIZE PER TABLE AND NEC ARTICLE 370
J	JUNCTION BOX (WALL MTD.) SIZE PER TABLE AND NEC ARTICLE 370
T	THERMOSTAT - 36" TO 48" AFF, BOTTOM & TOP OF BOX RESPECTIVELY
T	TRANSFORMER
	BRANCH CIRCUIT PANELBOARD - 240/120V, 1Ø, 3W OR 3Ø, 3W, 240VAC OR 120/208VAC, 3Ø, 4W.
▨	BRANCH CIRCUIT PANELBOARD - 480/277V, 1Ø, 3W OR 3Ø, 3 OR 4W
	4'X8'X3/4" TELEPHONE BACKBOARD, MARINE PLYWOOD AND PAINTED WITH FIRE RESISTANT PAINT, PER OWNERS REPRESENTATIVE.
	CONDUIT RUN CONCEALED ABOVE CEILING OR IN WALLS,
	CONDUIT RUN CONCEALED BELOW FLOOR OR UNDERGROUND
— 0-10 —	LIGHTING CONTROL 0-10V (PURPLE GRAY)
— C5 —	LOW VOLTAGE CABLE & CONDUIT 3/4"C-1#CAT5 U.O.N. (PER nLIGHT REQUIREMENTS)
	FLEXIBLE CONDUIT (WITH GROUND CONDUCTOR, PROVIDE LIQUID TIGHT CONDUIT IN ALL EXPOSED AREAS)
#10	HASH MARKS INDICATE QUANTITY OF #12 CONDUCTORS. NO HASH MARKS INDICATE (2)#12AWG. (PROVIDE GROUND CONDUCTOR IN ALL CONDUITS.) WHERE NO NUMBER IS INDICATED, THE CONDUCTORS ARE #12AWG(MIN.) CONDUIT SIZE IS AS REQUIRED BY ELECTRICAL CODE. (3/4" CONDUIT MINIMUM).
2LA 1-3-5,7	INDICATES A HOMERUN TO PNL 2LA, CKTS 1-3-5 WITH SHARED NEUTRAL & CKT 7 WITH DEDICATED NEUTRAL.
	3/4"C-2#12 & 1#12 GND
	3/4"C-3#12 & 1#12 GND
	3/4"C-4#12 & 1#12 GND
	3/4"C-5#12 & 1#12 GND
#10	3/4"C-2#10 & 1#10 GND
#10	3/4"C-3#10 & 1#10 GND
#10	3/4"C-4#10 & 1#10 GND
#10	3/4"C-5#10 & 1#10 GND
1	SEE KEY NOTE #1 AS INDICATED ON DRAWING
$ P	SWITCH WITH PILOT LIGHT @ 42"AFF
$ 3ab	3-WAY SWITCH, a & b INDICATES LIGHT FIXTURE TO BE SWITCHED (EACH A 3-WAY) MOUNTED @ 42" AFF
$	SWITCH MOUNTED @ +42" AFF
$ M	MOTOR RATED SWITCH
$ a,b,c,d	CIRCUIT SWITCH LEGS WALL SWITCHES
60AS 35AF 3P	DISCONNECT SWITCH, 60AMP SWITCH, 35 AMP FUSE, 3 POLE W/ OVERCURRENT PROTECTION U.O.N.
M	100A UTILITY METER (OR AS NOTED)
3P 100AS 60AF	FUSED DISCONNECT SWITCH 100AMP SWITCH RATING WITH 60 AMP FUSES, 3 POLE
200AF 150AT 3P	MOLDED CASE CIRCUIT BREAKER 200 AMP FRAME, 150 AMP TRIP RATING, 3 POLE
J CAM	CCTV-VERIFY MOUNTING LOCATION AND REQUIREMENTS WITH CLIENT/OWNER.

The eight conduit entries from 3/4"C-2#12 & 1#12 GND to 3/4"C-5#10 & 1#10 GND: 1" CONDUIT MINIMUM IF UNDERGROUND (CONTRACTOR TO PROVIDE DEDICATED NEUTRALS FOR CIRCUITS WHICH DO NOT HAVE COMMON CIRCUIT HANDLE TIES ON BREAKERS FEEDING THE CIRCUITS)

ABBREVIATIONS

A	AMPERES		STATION	NC	NORMALLY CLOSED
AF	AMP FRAME/AMP FUSE	(F)	FRONT	OH	OVERHEAD
AFC	AVAILABLE FAULT CURRENT	FS	SHALLOW FLOOR BOX	P	POWER OR POLE
AFF	ABOVE FINISHED FLOOR	FT	FEET	PBO	PROVIDED BY OTHERS
AIC	AMP INTERRUPTING CURRENT	GC	GENERAL CONTRACTOR	PNL	PANEL
ARCH	ARCHITECT	GFI	GROUND FAULT INTERRUPTER	PV	PHOTO VOLTAIC
AS	AMP SWITCH	GND	GROUND	(R)	REMOVED
ASTM	AMERICAN SOCIETY OF TESTING MATERIAL(S)	HP	HORSEPOWER	RGS	RIGID GALVANIZED STEEL CONDUIT
		ID	IDENTIFICATION		
AT	AMP TRIP	IDF	INTERMEDIATE DISTRIBUTION FRAME	RM	ROOM
ATS	AUTOMATIC TRANSFER SWITCH			SN	SYSTEM NEUTRAL
		IG	ISOLATED GROUND	SPD	SURGE PROTECTION DEVICE
AWG	AMERICAN WIRE GAGE	JB	JUNCTION BOX	TC	TIME CLOCKS
BKBD	BACKBOARD	K	KILO	TTB	TELEPHONE TERMINAL BOARD
C	CONDUIT OR CEILING	KVA	KILO VOLT AMPS=1000VA	TTC	TELEPHONE TERMINAL CABINET
CB	CIRCUIT BREAKER	LC	LIGHTING CONTACTOR		
CONT	CONTINUATION	LCL	LONG CONTINUOUS LOAD	TR	TRANSFORMER
CKT	CIRCUIT	LV	LOW VOLTAGE	TVSS	TRANSIENT VOLTAGE SURGE SUPPRESSOR
CLG	CEILING	M	METER		
CO	CONDUIT ONLY	MC	METAL CLAD	TYP	TYPICAL
CTV	CABLE TELEVISION	MDF	MAIN DISTRIBUTION FRAME	UG	UNDERGROUND
(CU)	COPPER	MIN.	MINIMUM	UL	UNDERWRITERS LABORATORY
CW	COLD WATER PIPE	MTD	MOUNTED	UON	UNLESS OTHERWISE NOTED
DIS	DISCONNECT	MTB	MAIN TELEPHONE BACKBOARD	UNSW	UNSWITCHED
DS	DISCONNECT SWITCH	MTG	MOUNTING	V	VOLTS/VOLTAGE
DWG	DRAWING	MV	MEDIUM VOLTAGE	VA	VOLT AMPS
ECD	ELECTRICAL CONTRACTOR	MH	MAN HOLE	VD	VOLTAGE DROP
EM	EMERGENCY LIGHT/FEEDER	MFG	MANUFACTURER	W	WATTS/WATTAGE OR WIRE
EMT	ELECTRICAL METAL TUBING	NEC	NATIONAL ELECTRICAL CODE	WP	WEATHERPROOF
EOR	ENGINEER OF RECORD	(N)	NEW	W/	WITH
EPR	ETHYLENE PROPYLENE RUBBER	NIC	NOT IN CONTRACT	(X)	EXISTING
EVCS	ELECTRIC VEHICLE CHARGING	NL	NIGHT LIGHT	ϕ	PHASE
		NO	NORMALLY OPEN		

LIST OF DRAWINGS

SHEET	DESCRIPTION	SHEET	DESCRIPTION
E100	GENERAL NOTES, ABBREVIATIONS, SYMBOLS & DRAWING LIST	E414	'MS' MAIN SERVICE SWITCHGEAR
E140	SITE PLAN - EXISTING CONDITIONS	E450	ENLARGED SITE POWER PLAN
E141	SITE PLAN - NEW WORK	E451	ENLARGED POWER PLANS
E200	EXISTING ELECTRICAL SINGLE LINE DIAGRAM	E455	DB QED-2 SWITCHBOARD MANUFACTURER SHEETS
E201	NEW WORK - ELECTRICAL SINGLE LINE DIAGRAM	E460	NEW SCE SERVICE SUBSTATION
E203	EXISTING PANEL SCHEDULES	E600	ELECTRICAL DETAILS
E204	EXISTING PANEL SCHEDULES	E601	ELECTRICAL DETAILS
E205	NEW WORK - ELECTRICAL SINGLE LINE DIAGRAM	E605	ELECTRICAL DETAILS
E400	ENLARGED SITE POWER PLAN		
E410	NEW SCE SERVICE TO CAMPUS SUBSTATION	L1	NEW SCE SERVICE SUBSTATION SECURITY FENCE LAYOUT
E411	SCE MANUFACTURER SHEET	L2	NEW SCE SERVICE SUBSTATION FENCE DETAILS
E412	SCE MANUFACTURER SHEET		

SCOPE OF WORK

PROVIDE & INSTALL NEW OWNER PROVIDED 1200A NEMA 3R SWITCHBOARD (120/208VAC) & CONNECT TO NEW SCE SERVICE ENTRANCE SWITCH BOARD 1600A AT 277/480 VAC. PROVIDE RECONNECTION TO ALL EXISTING SITE POWER PANEL FEEDERS, DEMO EXISTING BLOCKHOUSE & ALL EXISTING BLOCKHOUSE ELECTRICAL EQUIPMENT WHICH IS NOT SCE EQUIPMENT & SCARIFY SITE. REMOVE BLOCKHOUSE, SLAB, SWITCHGEAR, & MECHANICAL EQUIPMENT. SCHEDULE ALL OUTAGES WITH OWNERS REPRESENTATIVE & RECONNCET ALL FEEDERS TO NEW 1200A SWITCHBOARD.

LIST OF APPLICABLE CODES

LIST OF APPLICABLE CODES

2022 CALIFORNIA ADMINISTRATIVE CODE (CAC), PART 1, TITLE 24 CCR

2022 CALIFORNIA BUILDING CODE (CBC), PART 2, TITLE 24 CCR

2022 CALIFORNIA ELECTRICAL CODE (CEC), PART 3, TITLE 24 CCR

2022 CALIFORNIA MECHANICAL CODE (CMC), PART 4, TITLE 24 CCR

2022 CALIFORNIA PLUMBING CODE (CPC), PART 5, TITLE 24 CCR

2022 CALIFORNIA ENERGY CODE, PART 6, TITLE 24 CCR

2022 CALIFORNIA FIRE CODE (CFC), PART 9, TITLE 24 CCR

2022 CALIFORNIA EXISTING BUILDING CODE (CEBC), PART 10, TITLE 24 CCR

2022 CALIFORNIA GREEN BUILDING STANDARDS CODE (CALGREEN), PART 11, TITLE 24 CCR

2022 CALIFORNIA REFERENCED STANDARDS CODE, PART 12, TITLE 24 CCR

TITLE 19 CCR, PUBLIC SAFETY, STATE FIRE MARSHAL REGULATIONS

APPLICABLE STANDARDS

FOR A LIST OF APPLICABLE STANDARDS, INCLUDING CALIFORNIA AMENDMENTS TO THE NFPA STANDARDS, REFER TO CBC CHAPTER 35 AND CFC CHAPTER 80.

MEP ANCHORAGE NOTES

MEP COMPONENT ANCHORAGE NOTE

ALL MECHANICAL, PLUMBING, AND ELECTRICAL COMPONENTS SHALL BE ANCHORED AND INSTALLED PER THE DETAILS ON THE DSA APPROVED CONSTRUCTION DOCUMENTS. THE FOLLOWING COMPONENTS SHALL BE ANCHORED OR BRACED TO MEET THE FORCE AND DISPLACEMENT REQUIREMENTS PRESCRIBED IN THE 2019 CBC SECTIONS 1617A.1.18 THROUGH 1617A.1.26 AND ASCE 7-16 CHAPTER 13, 26, AND 30.

1. ALL PERMANENT EQUIPMENT AND COMPONENTS.
2. TEMPORARY OR MOVEABLE EQUIPMENT THAT IS PERMANENTLY ATTACHED (E.G. HARD WIRED) TO THE BUILDING UTILITY SERVICES SUCH AS ELECTRICITY, GAS OR WATER. "PERMANENTLY ATTACHED" SHALL INCLUDE ALL ELECTRICAL CONNECTIONS EXCEPT PLUGS FOR 110/220 VOLT RECEPTACLES HAVING A FLEXIBLE CABLE.
3. TEMPORARY, MOVABLE OR MOBILE EQUIPMENT WHICH IS HEAVIER THAN 400 POUNDS OR HAS A CENTER OF MASS LOCATED 4 FEET OR MORE ABOVE THE ADJACENT FLOOR OR ROOF LEVEL THAT DIRECTLY SUPPORT THE COMPONENT IS REQUIRED TO BE RESTRAINED IN A MANNER APPROVED BY DSA.

THE FOLLOWING MECHANICAL AND ELECTRICAL COMPONENTS SHALL BE POSITIVELY ATTACHED TO THE STRUCTURE BUT NEED NOT DEMONSTRATE DESIGN COMPLIANCE WITH THE REFERENCES NOTED ABOVE. THESE COMPONENTS SHALL HAVE FLEXIBLE CONNECTIONS PROVIDED BETWEEN THE COMPONENT AND ASSOCIATED DUCTWORK, PIPING, AND CONDUIT. FLEXIBLE CONNECTIONS MUST ALLOW MOVEMENT IN BOTH TRANSVERSE AND LONGITUDINAL DIRECTIONS.

A. COMPONENTS WEIGHING LESS THAN 400 POUNDS AND HAVE A CENTER OF MASS LOCATED 4 FEET OR LESS ABOVE THE ADJACENT FLOOR OR ROOF LEVEL THAT DIRECTLY SUPPORT THE COMPONENT.
B. COMPONENTS WEIGHING LESS THAN 20 POUNDS, OR IN THE CASE OF DISTRIBUTED SYSTEMS, LESS THAN 5 POUNDS PER FOOT, WHICH ARE SUSPENDED FROM A ROOF OR FLOOR OR HUNG FROM A WALL.

THE ANCHORAGE OF ALL MECHANICAL, ELECTRICAL AND PLUMBING COMPONENTS SHALL BE SUBJECT TO THE APPROVAL OF THE DESIGN PROFESSIONAL IN GENERAL RESPONSIBLE CHARGE OR STRUCTURAL ENGINEER DELEGATED RESPONSIBILITY AND ACCEPTANCE BY DSA. THE PROJECT INSPECTOR WILL VERIFY THAT ALL COMPONENTS AND EQUIPMENT HAVE BEEN ANCHORED IN ACCORDANCE WITH THE ABOVE REQUIREMENTS.

PIPING, DUCTWORK, AND ELECTRICAL DISTRIBUTION SYSTEM BRACING NOTE

PIPING, DUCTWORK, AND ELECTRICAL DISTRIBUTION SYSTEMS SHALL BE BRACED TO COMPLY WITH THE FORCES AND DISPLACEMENTS PRESCRIBED IN ASCE 7-16 SECTION 13.6.5, 13.6.6, 13.6.7, 13.6.8; AND 2019 CBC, SECTIONS 1617A.1.24, 1617A.1.25 AND 1617A.1.26.

THE METHOD OF SHOWING BRACING AND ATTACHMENTS TO THE STRUCTURE FOR THE IDENTIFIED DISTRIBUTION SYSTEM ARE AS NOTED BELOW. WHEN BRACING AND ATTACHMENTS ARE BASED ON A PRE-APPROVED INSTALLATION GUIDE (E.G. OSHPD OPM FOR 2013 CBC OR LATER), COPIES OF THE BRACING SYSTEM INSTALLATION GUIDE OR MANUAL SHALL BE AVAILABLE ON THE JOBSITE PRIOR TO THE START OF AND DURING THE HANGING AND BRACING OF THE DISTRIBUTION SYSTEMS. THE STRUCTURAL ENGINEER OF RECORD SHALL VERIFY THE ADEQUACY OF THE STRUCTURE TO SUPPORT THE HANGER AND BRACE LOADS.

MECHANICAL PIPING (MP), MECHANICAL DUCTS (MD), PLUMBING PIPING (PP), ELECTRICAL DISTRIBUTION SYSTEMS (E)

MP☐ MD☐ PP☐ E☒ OPTION 1 DETAILED ON APPROVED DRAWINGS WITH PROJECT SPECIFIC NOTES AND DETAILS

MP☐ MD☐ PP☐ E☐ OPTION 2: SHALL COMPLY WITH THE APPLICABLE OSPHD PRE-APPROVAL (OPM#)

SITE/AREA MAP

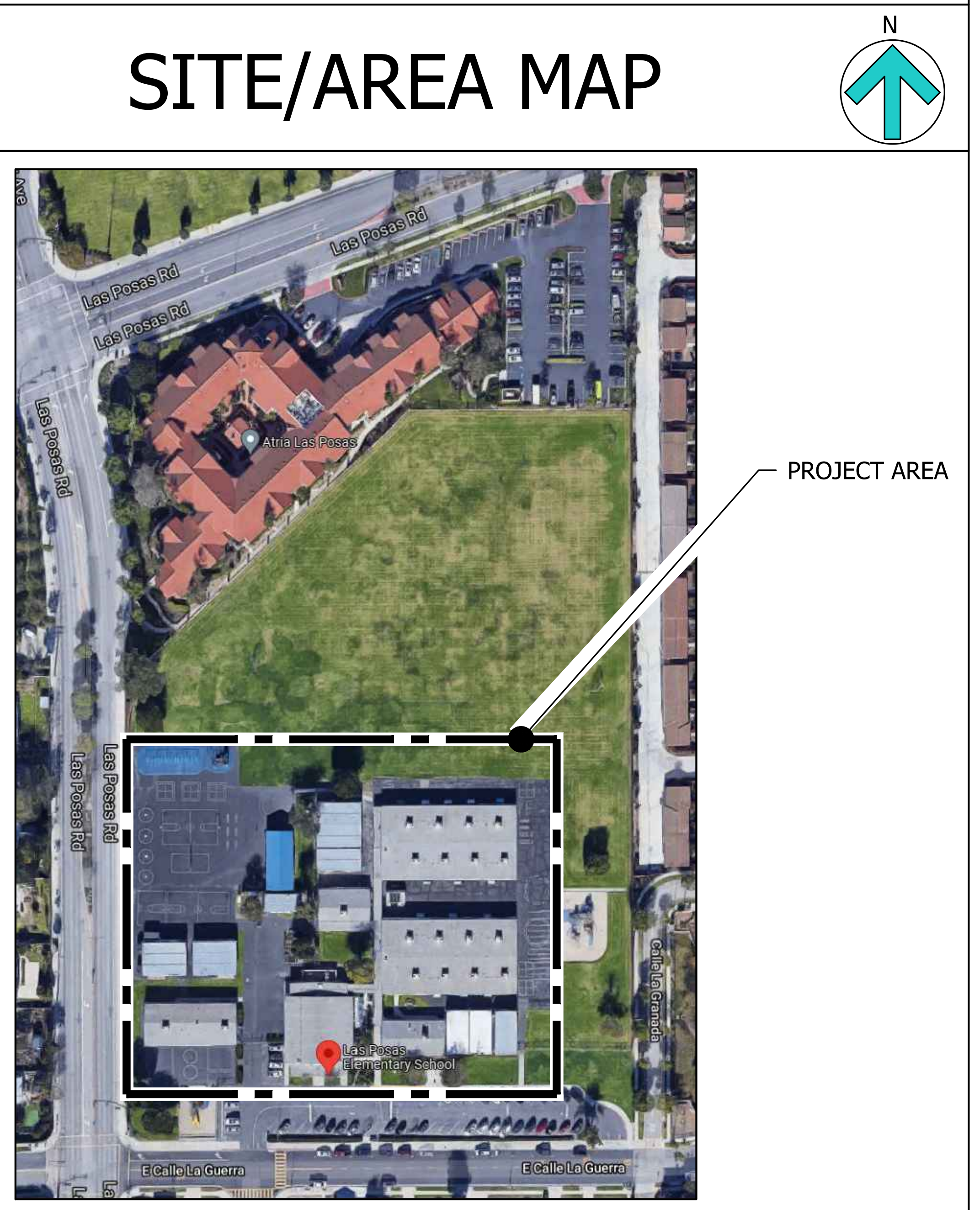

DSA STAMP

REV#	DESCRIPTION	DATE
	.	.
	.	.
	.	.
	.	.
	.	.
	.	.
	.	.

STAMP

REGISTERED PROFESSIONAL ENGINEER
KENNETH W. LUCCI
No. E 8340
Exp. 09/30/2026
ELECTRICAL
STATE OF CALIFORNIA

LUCCI & ASSOCIATES INC.
CONSULTING ELECTRICAL ENGINEERS
3251 CORTE MALPASO, #511
CAMARILLO, CA 93012-8094
PHONE (805) 389-6520 FAX (805) 389-6519

SHEET TITLE:
GENERAL NOTES, ABBREVIATIONS, SYMBOLS & DRAWING LIST

PROJECT:
LAS POSAS ELEMENTARY SCHOOL
75 EAST CALLE LA GUERRA
CAMARILLO, CA 93010
- CHANGE OUT SERVICE TRANSFORMER AND METER MAIN

DRAWN: L.K./D.S./I.T.
CHECKED: K. LUCCI
DATE: 04/08/2025
SCALE: AS NOTED
JOB NO. 21-404
SHEET: E100
OF: SHEETS:

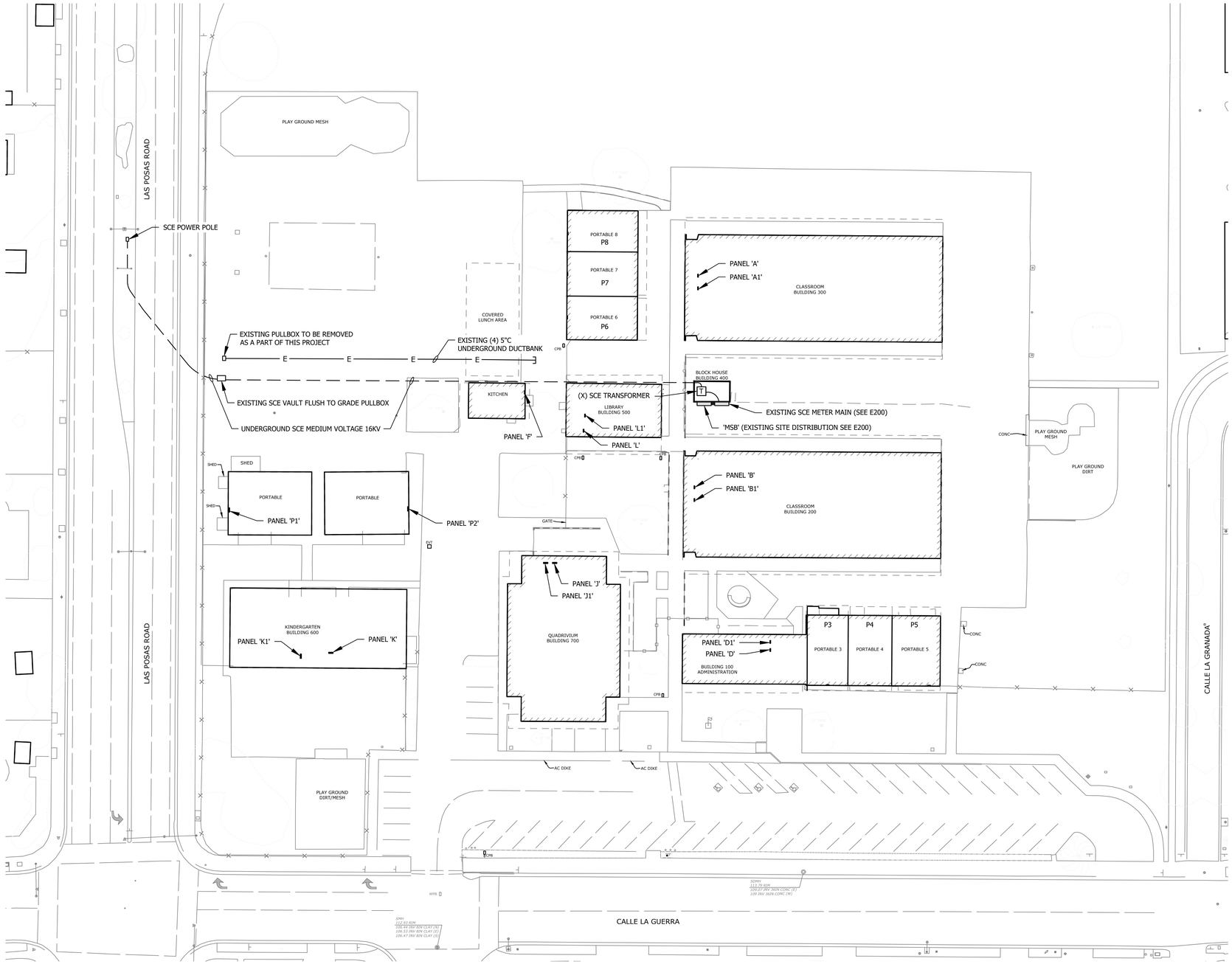

SCALE: 1"=30'
0 30 60

SITE PLAN - EXISTING CONDITIONS

SCALE: 1"=30'-0"

1 - E140 -

N

DSA STAMP

REV#	DESCRIPTION	DATE
	.	.
	.	.
	.	.
	.	.
	.	.
	.	.
	.	.

STAMP

REGISTERED PROFESSIONAL ENGINEER
KENNETH W. KUCCI
No. E 8340
Exp. 09/30/2026
ELECTRICAL
STATE OF CALIFORNIA

LUCCI & ASSOCIATES
CONSULTING ELECTRICAL ENGINEERS
325 CONTE PALMOSO, #511
CAMARILLO, CA 93010-6094
PHONE (805) 389-6520 FAX (805) 389-6519

SHEET TITLE: SITE PLAN - EXISTING CONDITIONS

PROJECT: LAS POSAS ELEMENTARY SCHOOL
75 EAST CALLE LA GUERRA
CAMARILLO, CA 93010
- CHANGE OUT SERVICE
TRANSFORMER AND METER MAIN

KEY MAP

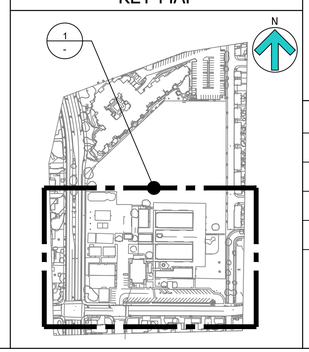

DRAWN: L.K./D.S./I.T.
CHECKED: K. LUCCI
DATE: 04/08/2025
SCALE: AS NOTED
JOB NO. 21-404
SHEET: E140
OF: SHEETS:

DATE: 26 April 2025 TIME: 4:03 pm
PLOT DATE: 4/26/2025 4:03:31 PM
PATHNAME: G:\21\404\EL\Sheets\COMBINED_P1-P2 PLOT BY: CM02
SAVE DATE: 4/4/2025 10:13:37 AM
DRAFTER: CM02 DRAWING FILENAME: 21-404 E140
DRAWING: G:\21\404\EL\Sheets\COMBINED_P1-P2\21-404 E140.dwg

Drafter:CM02 Paper Size: 13.3
Drawing: G:\21\404\EL\Sheets\COMBINED_P1-P2\21-404 E140.dwg
Plot Date: 4/26/2025 Plot By: CM02
Attached XREFS:
XREF:G:\21\404\EL\Xrefs\21-404-TB.dwg
XREF:G:\21\404\EL\Xrefs\BORDERS_LANDSCAPE.dwg
XREF:G:\21\404\EL\Xrefs\BORDERS_LANDSCAPE.dwg

Drafter: CM01: G:\21\404\EL\Sheets\COMBINED_P1-P2\21-404 E140.dwg: DATE: APR 04, 2025 TIME: 10:13 AM

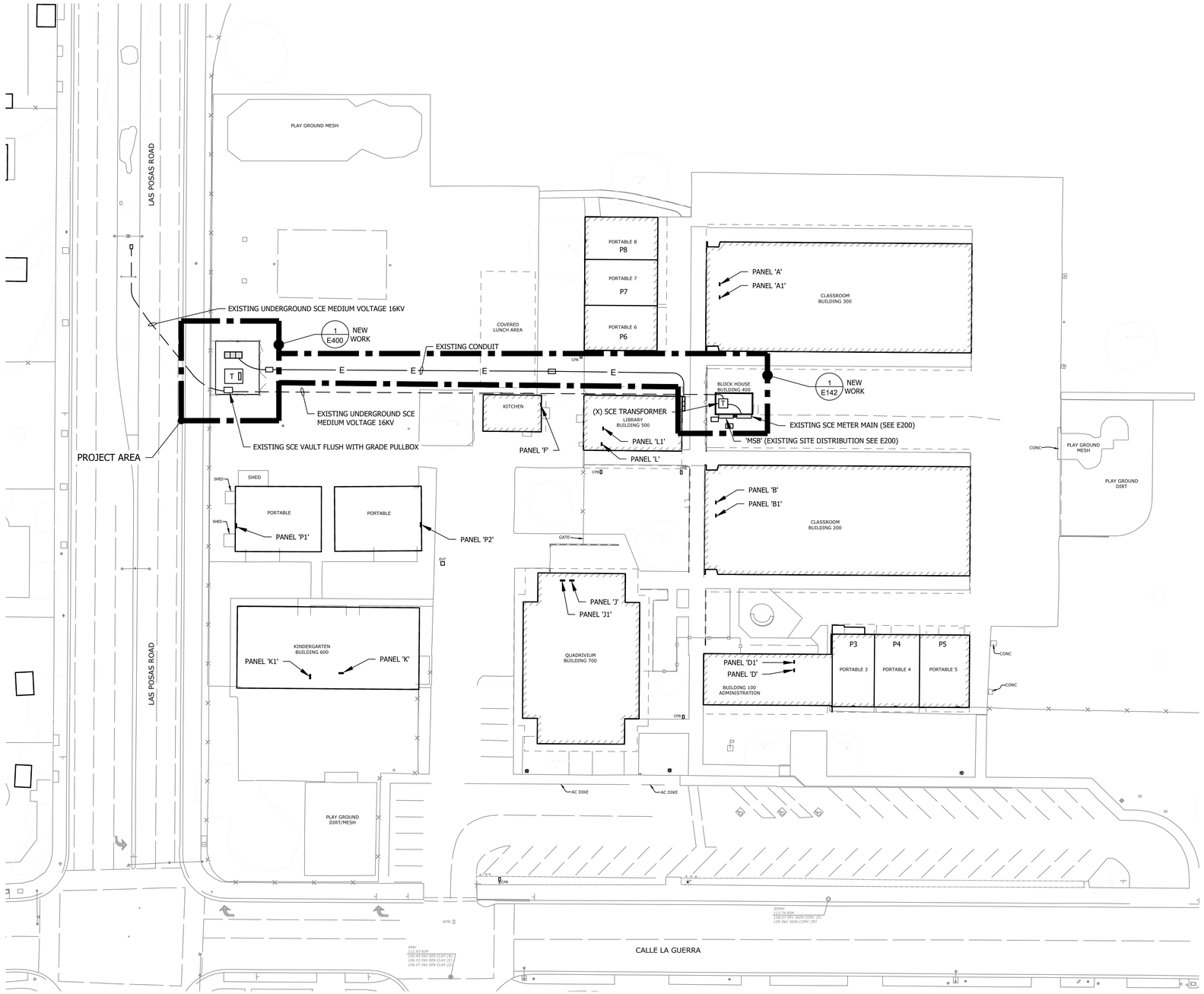

SCALE: 1"=30'
0 30 60

SITE PLAN - NEW WORK

1 - E141

SCALE: 1"=30'-0"

N

CONTRACTOR TO COORDINATE WORK TO ENSURE ONLY A MINIMAL OUTAGE FROM SCE/SITE POWER OCCURS. CONTRACTOR TO SCHEDULE SCE WORK WITH SCE & PVSD P.M. & HAVE THE TRANSITION OF POWER AVAILABLE WHEN THE NEW DB IS INSTALLED & READY TO CONNECT.

THEN THE FINAL TRANSITION CAN BE ACCOMPLISHED & THE EXISTING SCE STRUCTURE BUILDING & EQUIPMENT MAY BE REMOVED / DEMOED

DSA STAMP

REV#	DESCRIPTION	DATE
	.	.
	.	.
	.	.
	.	.
	.	.
	.	.
	.	.

STAMP

REGISTERED PROFESSIONAL ENGINEER
KENNETH W. KACZAN
No. E 8340
Exp. 09/30/2026
ELECTRICAL
STATE OF CALIFORNIA

LUCCI & ASSOCIATES
CONSULTING ELECTRICAL ENGINEERS
325 CONTE PALMASO, #511
CAMARILLO, CA 93010-0894
PHONE (805) 389-6520 FAX (805) 389-6519

SHEET TITLE: SITE PLAN - NEW WORK

PROJECT: LAS POSAS ELEMENTARY SCHOOL
75 EAST CALLE LA GUERRA
CAMARILLO, CA 93010
- CHANGE OUT SERVICE
TRANSFORMER AND METER MAIN

DRAWN: L.K./D.S./I.T.
CHECKED: K. LUCCI
DATE: 04/08/2025
SCALE: AS NOTED
JOB NO. 21-404
SHEET: E141
OF: SHEETS:

KEY MAP

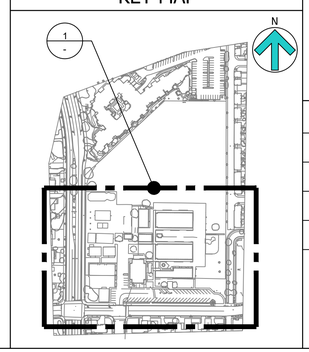

DRAFTER: CM02 DRAWING FILENAME: 21-404 E141 PATHNAME: G:\21\404\EL\Sheets\COMBINED_P1-P2\21-404 E141.dwg
DATE: 26 April 2025 TIME: 4:03 pm
PLOT BY: CM02 PLOT DATE: 4/26/2025 4:03:34 PM
DRAWING: G:\21\404\EL\Sheets\COMBINED_P1-P2 SAVE DATE: 4/7/2025 10:33:29 AM
Drafter:CM02 Paper Size: 12.0
Drawing:G:\21\404\EL\Sheets\COMBINED_P1-P2\21-404 E141.dwg
Date: 4/7/2025 Time: 10:33:29 AM
Xref(s): DEBTS:
XREF:G:\21\404\EL\Sheets\21-404 TB.dwg
XREF:G:\21\404\Arch\SITE\SITE PLAN_PHASE0010.dwg
XREF:G:\21\404\Arch\SITE\SITE PLAN_PHASE0020.dwg
Drafter: CM01: G:\21\404\EL\Sheets\PHASE-1\21-404 E140.dwg; DATE: APR 02, 2024 TIME: 10:46 AM

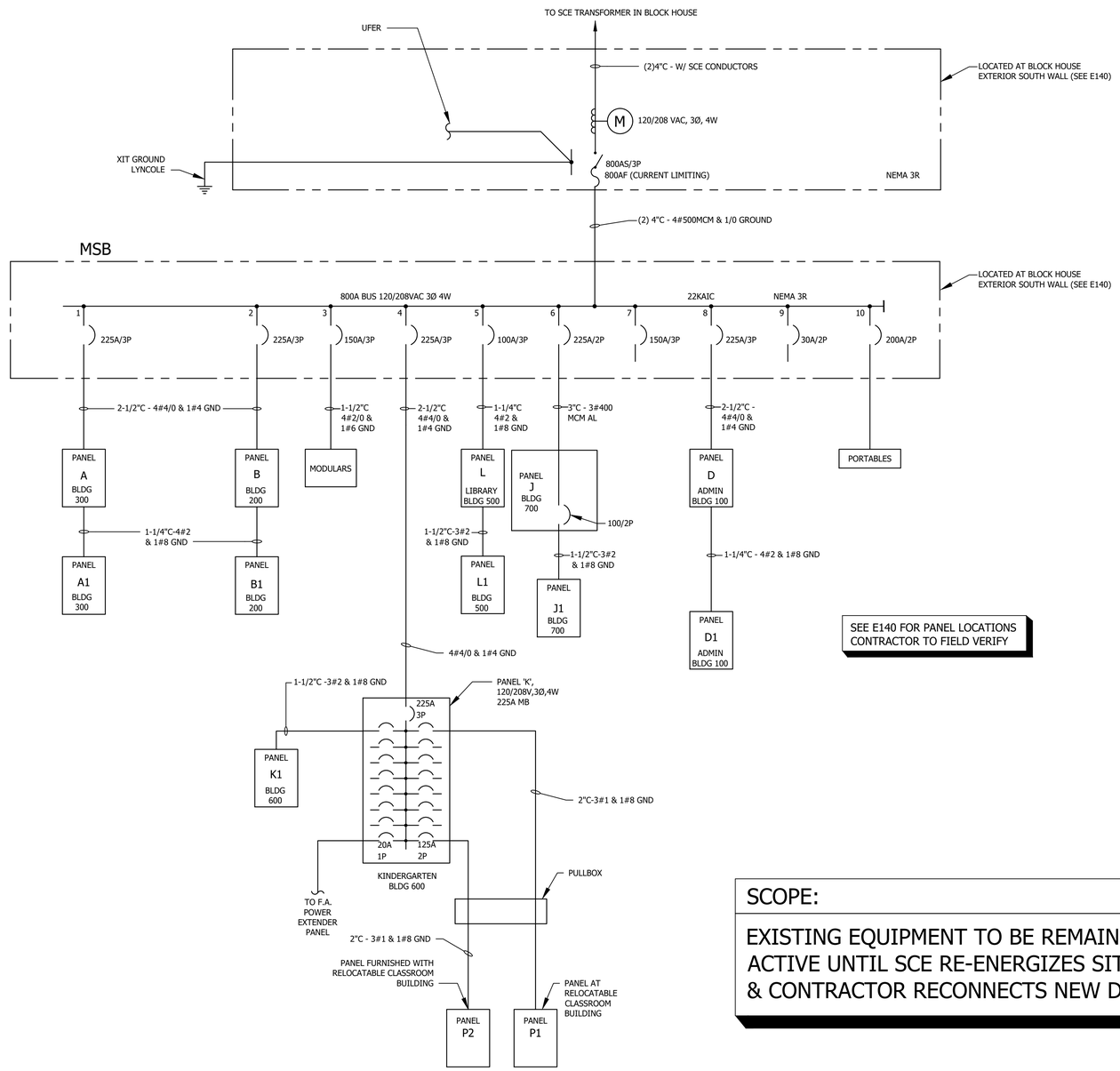

SEE E140 FOR PANEL LOCATIONS
CONTRACTOR TO FIELD VERIFY

REFERENCE ONLY -
NO NEW WORK

SCOPE:

EXISTING EQUIPMENT TO BE REMAIN ACTIVE UNTIL SCE RE-ENERGIZES SITE & CONTRACTOR RECONNECTS NEW DB

EXISTING ELECTRICAL SINGLE LINE DIAGRAM

1

SCALE: NONE

E200

DSA STAMP

REV#	DESCRIPTION	DATE
	.	.
	.	.
	.	.
	.	.
	.	.
	.	.
	.	.

STAMP

REGISTERED PROFESSIONAL ENGINEER
KENNETH W. LUCCI
No. E 8340
Exp. 09/30/2026
ELECTRICAL
STATE OF CALIFORNIA

LUCCI & ASSOCIATES
CONSULTING ELECTRICAL ENGINEERS
3251 CORTE MADRID, #511
CAMARILLO, CA 93012-8094
PHONE (805) 389-6520 FAX (805) 389-6519

SHEET TITLE:
EXISTING ELECTRICAL
SINGLE LINE DIAGRAM

PROJECT:
LAS POSAS ELEMENTARY SCHOOL
75 EAST CALLE LA GUERRA
CAMARILLO, CA 93010
- CHANGE OUT SERVICE
TRANSFORMER AND METER MAIN

DRAWN: L.K./D.S./I.T.
CHECKED: K. LUCCI
DATE: 04/08/2025
SCALE: AS NOTED
JOB NO. 21-404
SHEET: E200
OF: SHEETS:

DRAFTER: CM02 DRAWING FILENAME: 21-404 E200 PATHNAME: G:\21\404\EL\Sheets\COMBINED_P1-P2 DATE: 26 April 2025 TIME: 4:03 pm
DRAWING: G:\21\404\EL\Sheets\COMBINED_P1-P2\21-404 E200.dwg PLOT BY: CM02 SAVE DATE: 4/7/2025 11:02:38 AM PLOT DATE: 4/26/2025 4:03:37 PM

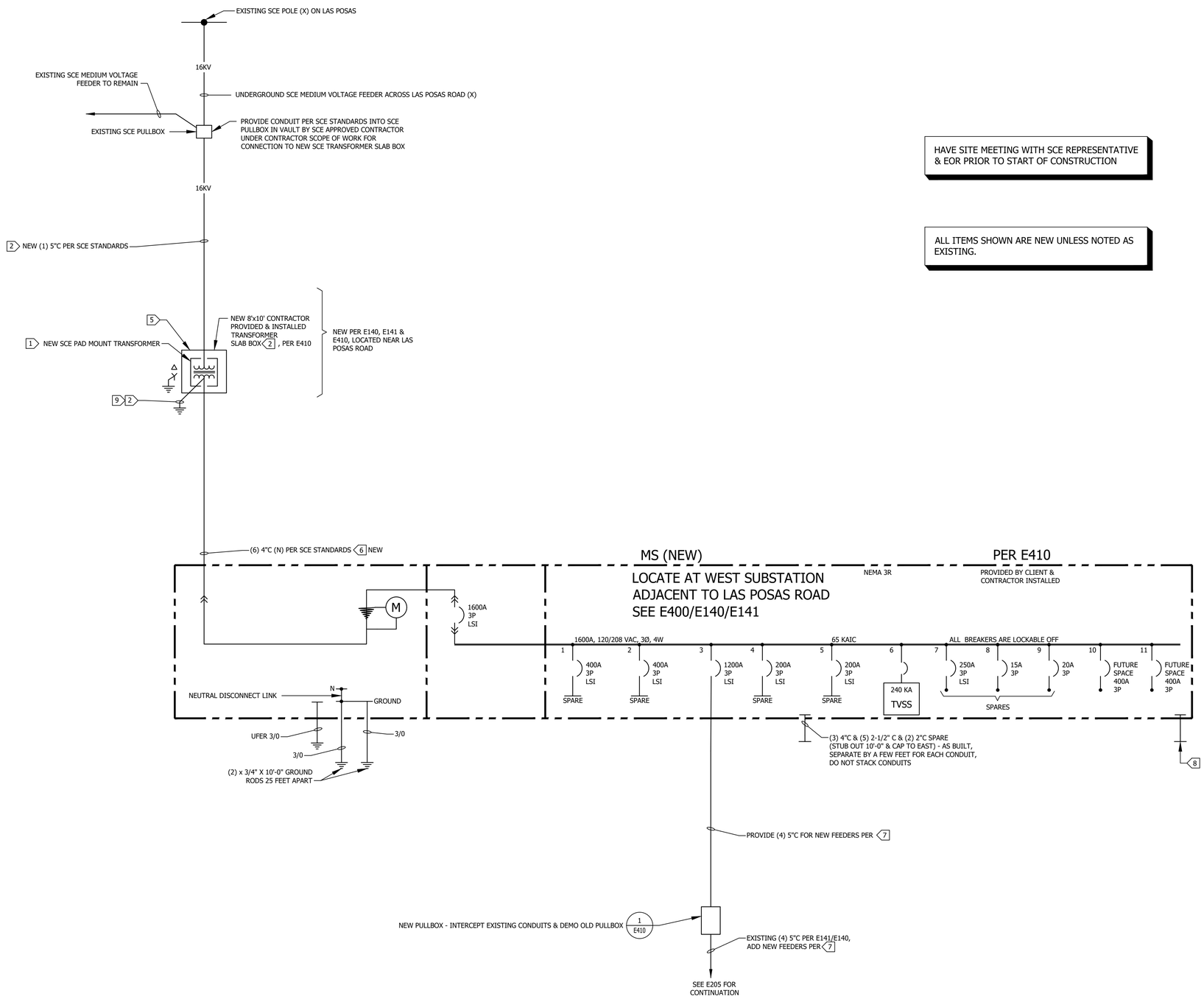

HAVE SITE MEETING WITH SCE REPRESENTATIVE & EOR PRIOR TO START OF CONSTRUCTION

ALL ITEMS SHOWN ARE NEW UNLESS NOTED AS EXISTING.

CONTRACTOR SHALL PROVIDE A SHORT CIRCUIT STUDY, ARC FLASH, & COORDINATION STUDY (AND SET BREAKERS VIA CURRENT INJECTION) FOR ALL NEW EQUIPMENT & AN ARC FLASH STUDY FOR 'MS' & 'DB'.

SWITCHBOARD SHALL BE FULLY RATED

NO NEW LOAD IS BEING ADDED

SCOPE:

EXISTING EQUIPMENT TO BE REMAIN ACTIVE UNTIL SCE RE-ENERGIZES SITE & CONTRACTOR RECONNECTS NEW DB

SHEET NOTES:

1. FIELD VERIFY LOCATION OF ALL BUILDINGS AND APPENDITURES.
2. CONTRACTOR SHALL FIELD VERIFY LOCATION & REQUIREMENTS OF ALL ELECTRICAL DEVICES PRIOR TO BID. ROUGH-IN & INSTALLATION.
3. FIELD VERIFY LOCATION OF ALL UNDERGROUND UTILITIES PRIOR TO TRENCHING. SCHEDULE AND COORDINATE ALL SITE WORK WITH OWNER PRIOR TO ANY TRENCHING.
4. ALL CONDUIT 90° CONDUIT BENDS AND RISERS SHALL BE SCHEDULE 80 PVC OR OCAL & PER SCE STANDARDS WHERE APPLICABLE.
5. CONTRACTOR SHALL COORDINATE AND PROVIDE ALL SITE ELECTRICAL SERVICE REQUIREMENTS WITH SERVING UTILITY.
6. ALL SERVICE ENTRANCE EQUIPMENT SHOP DRAWINGS SHALL BE SUBMITTED TO THE LOCAL UTILITY COMPANY FOR APPROVAL, WITH WRITTEN APPROVAL RECEIVED PRIOR TO SUBMISSION TO ELECTRICAL ENGINEER FOR APPROVAL.
7. MINIMUM CONDUIT BURIAL DEPTH IS 24", 36" MINIMUM BELOW STREETS & PARKING LOTS FOR 0-600 VOLT SYSTEMS, EXCEPT SCE FEEDERS PER SCE STANDARDS.
8. 1" CONDUIT MINIMUM UNDERGROUND.
9. COORDINATE WORK WITH OTHER TRADES. OBTAIN ALL DRAWINGS THAT WILL REQUIRE COORDINATION AND PROVIDE ALL ELECTRICAL CONNECTIONS, DEVICES, AND WIRING REQUIRED WHETHER SHOWN ON ELECTRICAL DRAWINGS OR NOT.
10. CONTRACTOR SHALL FURNISH AND INSTALL PULL BOXES AS REQUIRED TO INSTALL CONDUCTORS PER CONDUCTOR MANUFACTURERS RECOMMENDATIONS, PER THE NATIONAL ELECTRICAL CODE AND PER LOCAL AUTHORITIES HAVING JURISDICTION.

KEY NOTES:

1. SCE PROVIDED EQUIPMENT.
2. CONTRACTOR PROVIDED EQUIPMENT, INSTALLED TO SCE STANDARDS.
3. NOT USED.
4. NOT USED.
5. GROUNDING AT SLAB BOX PER SCE REQUIREMENTS.
6. CONDUCTORS BY SCE, VERIFY CONDUIT SIZE PER SCE.
7. NEW FEEDERS PER E205.
8. CONTRACTOR SHALL STUB OUT PER E140 FOR FUTURE PV:
   (QTY 2) 3"C.O.
   (QTY 3) 1"C.O.
9. PROVIDE GROUND RODS & GROUNDS PER SCE REQUIREMENTS

DSA STAMP

REV#	DESCRIPTION	DATE
	.	.
	.	.
	.	.
	.	.
	.	.
	.	.
	.	.

STAMP

REGISTERED PROFESSIONAL ENGINEER
KENNETH W. LUCCI
No. E 8340
Exp. 09/30/2026
ELECTRICAL
STATE OF CALIFORNIA

LUCCI & ASSOCIATES
CONSULTING ELECTRICAL ENGINEERS
3251 CORTE MADRID, #511
CHINO HILLS, CA 91709-5094
PHONE (909) 399-6520 FAX (909) 399-6519

SHEET TITLE: NEW WORK - ELECTRICAL SINGLE LINE DIAGRAM

PROJECT: LAS POSAS ELEMENTARY SCHOOL
75 EAST CALLE LA GUERRA
CAMARILLO, CA 93010
- CHANGE OUT SERVICE
TRANSFORMER AND METER MAIN

DRAWN: L.K./D.S./I.T.
CHECKED: K. LUCCI
DATE: 04/08/2025
SCALE: AS NOTED
JOB NO. 21-404
SHEET: E201
OF: SHEETS:

NEW WORK - ELECTRICAL SINGLE LINE DIAGRAM

1 - E201

SCALE: NONE AT SCE SERVICE

DRAFTER: CM02 DRAWING FILENAME: 21-404 E201 PATHNAME: G:\21\404\EL\Sheets\COMBINED_P1-P2 DATE: 26 April 2025 TIME: 4:03 pm
DRAWING: G:\21\404\EL\Sheets\COMBINED_P1-P2\21-404 E201.dwg PLOT BY: CM02 SAVE DATE: 4/7/2025 10:40:49 AM PLOT DATE: 4/26/2025 4:03:39 PM

PANEL NUMBER D1 VOLTAGE 120/208 PHASE 3 WIRE 4
SOURCE D A.I.C. 10,000
PANEL LOCATION ADJACENT TO PANEL D BUS AMPERE RATING 100

■ NEMA 1 ■ COPPER BUSS
■ MAIN LUGS ONLY
■ SURFACE MOUNTING

CIRCUIT DESCRIPTION	LOAD(VA) A	LOAD(VA) B	LOAD(VA) C	BRKR POLE	BRKR AMP	CKT	CKT	BRKR AMP	BRKR POLE	LOAD(VA) A	LOAD(VA) B	LOAD(VA) C	CIRCUIT DESCRIPTION
LOUNGE REFER	500			1	20	1	2	20	1	360			TEACHERS LOUNGE RECEP
LOUNGE REFER		500		1	20	3	4	20	1		360		PRINCIPAL RECEPTACLE
TEACHERS LOUNGE			360	1	20	5	6	20	1			360	PRINCIPAL RECEPTACLE
TEACHERS LOUNGE	360			1	20	7	8	20	1	360			PRINCIPAL RECEPTACLE
TEACHERS LOUNGE		360		1	20	9	10	20	1		360		PRINCIPAL RECEPTACLE
TEACHERS LOUNGE			360	1	20	11	12	20	1			360	BATHROOM RECEPTACLE
WORK ROOM	360			1	20	13	14	20	1	360			NURSE RECEPTACLE
WORK ROOM		360		1	20	15	16	20	1		360		NURSE RECEPTACLE
SPARE			–	1	20	17	18	20	1			360	NURSE RECEPTACLE
SPARE	–			1	20	19	20	20	1	360			NURSE RECEPTACLE
SPARE		–		1	20	21	22	20	1		360		NURSE RECEPTACLE
RECEPTION RECEPTACLE			360	1	20	23	24	20	1			360	SUPPLY RM RECEPTACLE
RECEPTION RECEPTACLE	360			1	20	25	26	20	1	360			SUPPLY RM RECEPTACLE
RECEPTION RECEPTACLE		360		1	20	27	28	20	1		360		SUPPLY RM RECEPTACLE
RECEPTION RECEPTACLE			360	1	20	29	30	20	1			425	LIGHTING
SPARE	–			1	20	31	32	20	1	–			SPARE
		–		1	20	33	34	20	1		–		
			–	1	20	35	36	20	1			–	
	–			1	20	37	38	20	1	–			
		–		1	20	39	40	20	1		–		
			–	1	20	41	42	20	1			–	
TOTALS	1580	1580	1440							1800	1800	1865	TOTALS

L.C.L. VOLT AMPS: . PHASE A . PHASE B . PHASE C .
TOTAL VOLT AMPS: 10065 PHASE A 3380 PHASE B 3380 PHASE C 3305
TOTAL AMPS: 27.9 PHASE A 28.2 PHASE B 28.2 PHASE C 27.5

PANEL "A"

SERVICE: 120/208V 3ø4W | MAIN BKR.: 150/3 | BUS: 225A | LOC.: SEE PLAN
20" WIDE PANELBOARD SERVICE ENTRANCE PANEL | MTG.: S/M

REMARKS	LOAD ΦA	LOAD ΦB	LOAD ΦC	REC	LTG	MISC	POLE	TRIP	CIRC	CIRC	TRIP	POLE	REC	LTG	MISC	LOAD ΦA	LOAD ΦB	LOAD ΦC	REMARKS
LIGHTS					9		1	20	1	2	20	1			1				WIREMOLD
					9				3	4					1				
					9				5	6					1				
					9				7	8					1				
					9				9	10					1				
					9				11	12					1				
					9				13	14					1				
					9				15	16					1				
STORAGE RESTROOM					10				17	18					1				
(E)LOAD							1	20	19	20					1				
									21	22					1				
									23	24					1				
									25	26					1				
									27	28					1				
									29	30					1				
									31	32					1				
									33	34									SPACE
									35	36									
SPACE									37	38									
									39	40									
									41	42									

TOTAL WATTS= Φ A= Φ B= Φ C=
AMPS= MINIMUM BKR A I.C. RATING= 10,000 AMPS SYM

PANEL "L"

SERVICE: 120/208V 3ø4W | MAIN BKR.: 100/3 | BUS: 225A | LOC.: SEE PLAN
MTG.:

REMARKS	LOAD ΦA	LOAD ΦB	LOAD ΦC	REC	LTG	MISC	POLE	TRIP	CIRC	CIRC	TRIP	POLE	REC	LTG	MISC	LOAD ΦA	LOAD ΦB	LOAD ΦC	REMARKS
DC-4						1	3	50	1	2	20	1							WIREMOLD
									3	4									"
									5	6									LIGHTING
EF2						1	1	15	7	8									"
(E) LOAD							1	20	9	10									(E) LOAD
									11	12									
									13	14									
									15	16									
									17	18									
SPACE									19	20									
									21	22									
									23	24									
									25	26									
									27	28									SPARE
									29	30									
									31	32									
									33	34									
									35	36									
									37	38									
									39	40									
									41	42									

TOTAL WATTS= Φ A= Φ B= Φ C=
AMPS= MINIMUM BKR A I.C. RATING= 10,000 AMPS SYM

PANEL NUMBER D VOLTAGE 120/208 PHASE 3 WIRE 4
SOURCE DB A.I.C. 10,000
PANEL LOCATION MECHANICAL ROOM BUS AMPERE RATING 225

■ NEMA 1 ■ COPPER BUSS
■ MAIN CIRCUIT BREAKER 225
■ FLUSH MOUNTING

CIRCUIT DESCRIPTION	LOAD(VA) A	LOAD(VA) B	LOAD(VA) C	BRKR POLE	BRKR AMP	CKT	CKT	BRKR AMP	BRKR POLE	LOAD(VA) A	LOAD(VA) B	LOAD(VA) C	CIRCUIT DESCRIPTION
AC	2000				50	1	2	20	1	1200			PLUG MOLD
AC		2000				3	4				500		SERVER
AC			2000	3		5	6					500	LIGHTS & COM
EXHAUST FAN	600			1	20	7	8			500			LIGHTS
PLUG MOLD		1200				9	10				100		FIRE ALARM
PLUG MOLD			1200			11	12					500	TELECENTER
TELECENTER	600					13	14			500			MARQUE
SOUTH WALL OF KITCHEN		600				15	16				250		OUTSIDE LIGHTS
SERVER			600			17	18					250	OUTSIDE LIGHTS
VENT / KILN / HOOD	300					19	20			–			SPARE
SPARE	–					21	22	100			–		FUTURE PORTABLE
SPARE		–			50	23	24		2			–	FUTURE PORTABLE
	–			2		25	26	100		4000			PORTABLES
SPACE						27	28		2		4000		PORTABLES
KILN		–			50	29	30	100				4000	PORTABLES
KILN	–					31	32		2	4000			PORTABLES
KILN		–		3		33	34	20	1		–		SPARE
SPARE			–	1	20	35	36	20	1			–	SPARE
PANEL D1	3380				100	37	38	20	1	–			SPARE
		3380				39	40	20	1		–		SPARE
			3305	3		41	42	20	1			–	LIGHTING
TOTALS	6880	7180	7105							10200	4850	5250	TOTALS

L.C.L. VOLT AMPS: PHASE A . PHASE B . PHASE C .
TOTAL VOLT AMPS: 41465 PHASE A 17080 PHASE B 12030 PHASE C 12355
TOTAL AMPS: 115.2 PHASE A 142.2 PHASE B 100.3 PHASE C 102.9

1 ADD BREAKER (MATCH PANEL TYPE & AIC RATING)
2 ADD LOCK ON DEVICE

PANEL "B"

SERVICE: 120/208V 3ø4W | MAIN BKR.: 150/3 | BUS: 225A | LOC.: SEE PLAN
20" WIDE PANELBOARD SERVICE ENTRANCE PANEL | MTG.: S/M

REMARKS	LOAD ΦA	LOAD ΦB	LOAD ΦC	REC	LTG	MISC	POLE	TRIP	CIRC	CIRC	TRIP	POLE	REC	LTG	MISC	LOAD ΦA	LOAD ΦB	LOAD ΦC	REMARKS
LIGHTS					9		1	20	1	2	20	1			1				WIREMOLD
					9				3	4					1				
					9				5	6					1				
					9				7	8					1				
					9				9	10					1				
					9				11	12					1				
					9				13	14					1				
					9				15	16					1				
STORAGE RESTROOM					10				17	18					1				
(E) LOAD							1	20	19	20					1				
									21	22					1				
									23	24					1				
									25	26					1				
									27	28					1				
									29	30					1				
									31	32					1				
									33	34									SPACE
									35	36									
SPACE									37	38									
									39	40									
									41	42									

TOTAL WATTS= Φ A= Φ B= Φ C=
AMPS= MINIMUM BKR A I.C. RATING= 10,000 AMPS SYM

PANEL - H

TYPE: INGOP | SERVICE: 120/240V. 1Φ, 3W. | LOC. KITCHEN #6
BUS: | MAIN: LUGS ONLY | MTG: FLUSH

LOCATION	LOAD A	LOAD B	BREAKER TRIP	BREAKER POLE			BREAKER TRIP	BREAKER POLE	LOAD A	LOAD B	LOCATION
RMS #5,6,W.HTG.RM.LTG	1300		20	1	1	2	20	1	775		CLASSRM #1 & EXIT LTG
" #6,7,8,9 "		640			3	4				1500	" " "
CLASSRM #5 & EXIT "	775				5	6			775		" " 2 & EXIT "
" " 3 "		1500			7	8				1500	" " 2 "
" " 4 & EXIT "	775				9	10			1450		RMS.10,11,12,13,14 "
" " 4 "		1500			11	12				1000	SPARE
RMS #15,16,17,18,19 "	650				13	14			1000		SPARE
※ EXTERIOR "		800			15	16				400	SNACK SERVICE #7 1760
" & CLASSRM 2,3,4 EXIT "	1350				17	18			800		CLASSRM #1,2,7,TOIL.3 "
TIME SWITCH		200			19	20				800	" #3,4 STORAGE #5 "
CLASSRM 1,2,3,4 EXIT LTS	175		1		21	22	1	1	800		" #4, RMS #9, FOYER #1, EXT. "
SPARE		1000		20	23	24	20			800	" #2, FOYER #4, STOR. #11 "
SPACE					25	26	15		1050		GIRLS & BOYS TOIL. EXH. FAN 1/6 HP, 1.6
"				1	27	28	20	1		1000	SPARE
"					29	30	1	1	1000		SPARE
					31	32					
					33	34					
					35	36					
					37	38					
					39	40					
					41	42					
TOTAL "A"	5025				12,675				7650		
TOTAL "B"		5640			12,640					7300	
TOTAL					25,315						

※ CIRCUIT TIME SWITCH CONTROLLED, PROVIDE LOCKOUT DEVICE ON BREAKER

PANEL "A1"

SERVICE: 120/208V3ø4W | MAIN BKR.: 225A-3P | BUS: 225A | LOC.: BLDG. 300
20" WIDE PANELBOARD | MTG.: S/M

REMARKS	LOAD ΦA	LOAD ΦB	LOAD ΦC	REC	LTG	MISC	POLE	TRIP	CIRC	CIRC	TRIP	POLE	REC	LTG	MISC	LOAD ΦA	LOAD ΦB	LOAD ΦC	REMARKS
AC-1						1	3	30	1	2	30	3			1				AC-1
									3	4									
									5	6									
AC-1						1	3	30	7	8	30	3			1				AC-1
									9	10									
									11	12									
AC-1						1	3	30	13	14	30	3			1				AC-1
									15	16									
									17	18									
AC-1						1	3	30	19	20	30	3			1				AC-1
									21	22									
									23	24									
SPACE									25	26	20	1			1				EF-4
									27	28									SPACE
									29	30									
									31	32									
									33	34									
									35	36									
									37	38									
									39	40									
									41	42									

TOTAL WATTS= Φ A= Φ B= Φ C=
AMPS= MINIMUM BKR A I.C. RATING= 10,000 AMPS SYM

PANEL "B1"

SERVICE: 120/208V3ø4W | MAIN BKR.: 225A-3P | BUS: 225A | LOC.: BLDG. 200
20" WIDE PANELBOARD | MTG.: S/M

REMARKS	LOAD ΦA	LOAD ΦB	LOAD ΦC	REC	LTG	MISC	POLE	TRIP	CIRC	CIRC	TRIP	POLE	REC	LTG	MISC	LOAD ΦA	LOAD ΦB	LOAD ΦC	REMARKS
AC-1						1	3	30	1	2	30	3			1				AC-1
									3	4									
									5	6									
AC-1						1	3	30	7	8	30	3			1				AC-1
									9	10									
									11	12									
AC-1						1	3	30	13	14	30	3			1				AC-1
									15	16									
									17	18									
AC-1						1	3	30	19	20	30	3			1				AC-1
									21	22									
									23	24									
SPACE									25	26	20	1			1				EF-4
									27	28									SPACE
									29	30									
									31	32									
									33	34									
									35	36									
									37	38									
									39	40									
									41	42									

TOTAL WATTS= Φ A= Φ B= Φ C=
AMPS= MINIMUM BKR A I.C. RATING= 10,000 AMPS SYM

PANEL "K"

BLDG. 600 KINDERGARTEN
SERVICE: 120/208V 3ø4W | MAIN BKR.: 100/3 | BUS: 225A | LOC.: SEE PLAN
MTG.: S/M

REMARKS	LOAD ΦA	LOAD ΦB	LOAD ΦC	REC	LTG	MISC	POLE	TRIP	CIRC	CIRC	TRIP	POLE	REC	LTG	MISC	LOAD ΦA	LOAD ΦB	LOAD ΦC	REMARKS
AC-2					1	3	40		1	2	20	1							WIREMOLD
									3	4									
									5	6									
AC-2					1	3	40		7	8									
									9	10									
									11	12									LIGHTING
EF-2							1	15	13	14									
(E) LOAD							1	20	15	16									(E) LOAD
									17	18									
									19	20									
									21	22									
									23	24									
SPARE									25	26									
									27	28									SPACE
									29	30									
									31	32									
									33	34									
									35	36									
									37	38									
									39	40									
									41	42									

TOTAL WATTS= Φ A= Φ B= Φ C=
AMPS= MINIMUM BKR A I.C. RATING= 10,000 AMPS SYM

D1	A	L
D	B	H
A1	B1	K

DSA STAMP

REV#	DESCRIPTION	DATE

STAMP

REGISTERED PROFESSIONAL ENGINEER
KENNETH W. LUCCI
No. E 8340
Exp. 09/30/2026
ELECTRICAL
STATE OF CALIFORNIA

LUCCI & ASSOCIATES
CONSULTING ELECTRICAL ENGINEERS
253 E. CORTE MADRID, #511
CAMARILLO, CA 93012-8094
PHONE (805) 389-6520 FAX (805) 389-6519

SHEET TITLE: EXISTING PANEL SCHEDULES

REFERENCE ONLY

PROJECT:
LAS POSAS ELEMENTARY SCHOOL
75 EAST CALLE LA GUERRA
CAMARILLO, CA 93010
- CHANGE OUT SERVICE
TRANSFORMER AND METER MAIN

DRAWN: L.K./D.S./I.T.
CHECKED: K. LUCCI
DATE: 04/08/2025
SCALE: AS NOTED
JOB NO. 21-404
SHEET: E203
OF: SHEETS:

DRAWING: G:\21\404\ELS\Sheets\COMBINED_P1-P2\21-404 E203.dwg DRAFTER: CM02 DRAWING FILENAME: 21-404 E203 PATHNAME: G:\21\404\ELS\Sheets\COMBINED_P1-P2 DATE: 26 April 2025 TIME: 4:04 pm
PLOT BY: CM02 PLOT DATE: 4/26/2025 4:04:01 PM SAVE DATE: 4/9/2025 10:35:59 AM
Drafter:CM02 Paper Size: 23.9
Drawing:G:\21\404\ELS\Sheets\COMBINED_P1-P2\21-404 E203.dwg
Plot Date:4/26/2025 Plot By:CM02
Attached XREFS:
XREF:G:\21\404\ELS\Xref\21-404 TB.dwg

PATHNAME: G:\21\404\EL\Sheets\COMBINED_P1-P2 DATE: 26 April 2025 TIME: 4:04 pm

SAVE DATE: 4/4/2025 10:36:46 AM PLOT BY: CM02 PLOT DATE: 4/26/2025 4:04:03 PM

DRAFTER: CM02 DRAWING FILENAME: 21-404 E204

DRAWING: G:\21\404\EL\Sheets\COMBINED_P1-P2\21-404 E204.dwg

Drafter:CM02 - Paper Size: 12.9
Drawing:G:\21\404\EL\Sheets\COMBINED_P1-P2\21-404 E204.dwg
Date & Time:4/26/2025 4:04:03 PM
Material: 000070
XREF:G:\21\404\EL\xrefs\21-040 TB.dwg

PANEL - "J"

TYPE: NQOP | SERVICE: 120/240V, 1Φ, 3W | LOC. KITCHEN #6

BUS: | MAIN: 225 A. 2-P NON-AUTO | MTG. FLUSH

LOCATION	LOAD A	LOAD B	BREAKER TRIP	BREAKER POLE	CIRCUIT	CIRCUIT	BREAKER TRIP	BREAKER POLE	LOAD A	LOAD B	LOCATION
KITCHEN #6, EXTG. HUNTR. DEC.	1000		20	1	1	2	20	1	1000		SPARE
" #6, CLASSRM. #5 "		1000			3	4				1000	SPARE
" #6, READING "	400				5	6	30	2	1150		MA. #15, FURNACE, 1½HP, 230V, 1Φ
H & V CONTROL		500			7	8				1150	
SPARE	1000				9	10	30	2	1150		MA. #10, FURNACE, 1½HP, 230V, 1Φ
SPARE		1000			11	12				1150	
SPARE	1000				13	14	20	1	300		FLY FAN (FUTURE)
SPARE		1000		20	15	16	100	2		12,675	PANEL - H
SPACE					17	18			12640		
"					19	20					SPACE
"					21	22					"
"					23	24					"
"					25	26					"
"					27	28					"
					29	30					"
					31	32					
					33	34					
					35	36					
					37	38					
					39	40					
					41	42					
TOTAL "A"	3400				19620				16280		
TOTAL "B"		3500			19475					15975	
TOTAL					39115						

REFERENCE ONLY

-	-	-
-	-	-
-	-	J

DSA STAMP

REV#	DESCRIPTION	DATE
	.	.
	.	.
	.	.
	.	.
	.	.
	.	.
	.	.

STAMP

REGISTERED PROFESSIONAL ENGINEER
KENNETH W. LUCCI
No. E 8340
Exp. 09/30/2026
ELECTRICAL
STATE OF CALIFORNIA

LUCCI & ASSOCIATES, INC.
CONSULTING ELECTRICAL ENGINEERS
2251 CORTE MADRID, #511
CAMARILLO, CA 93012-8094
PHONE (805) 389-6520 FAX (805) 389-6519

SHEET TITLE: EXISTING PANEL SCHEDULES

PROJECT: LAS POSAS ELEMENTARY SCHOOL
75 EAST CALLE LA GUERRA
CAMARILLO, CA 93010
- CHANGE OUT SERVICE
TRANSFORMER AND METER MAIN

DRAWN: L.K./D.S./I.T.

CHECKED: K. LUCCI

DATE: 04/08/2025

SCALE: AS NOTED

JOB NO. 21-404

SHEET: E204

OF: SHEETS:

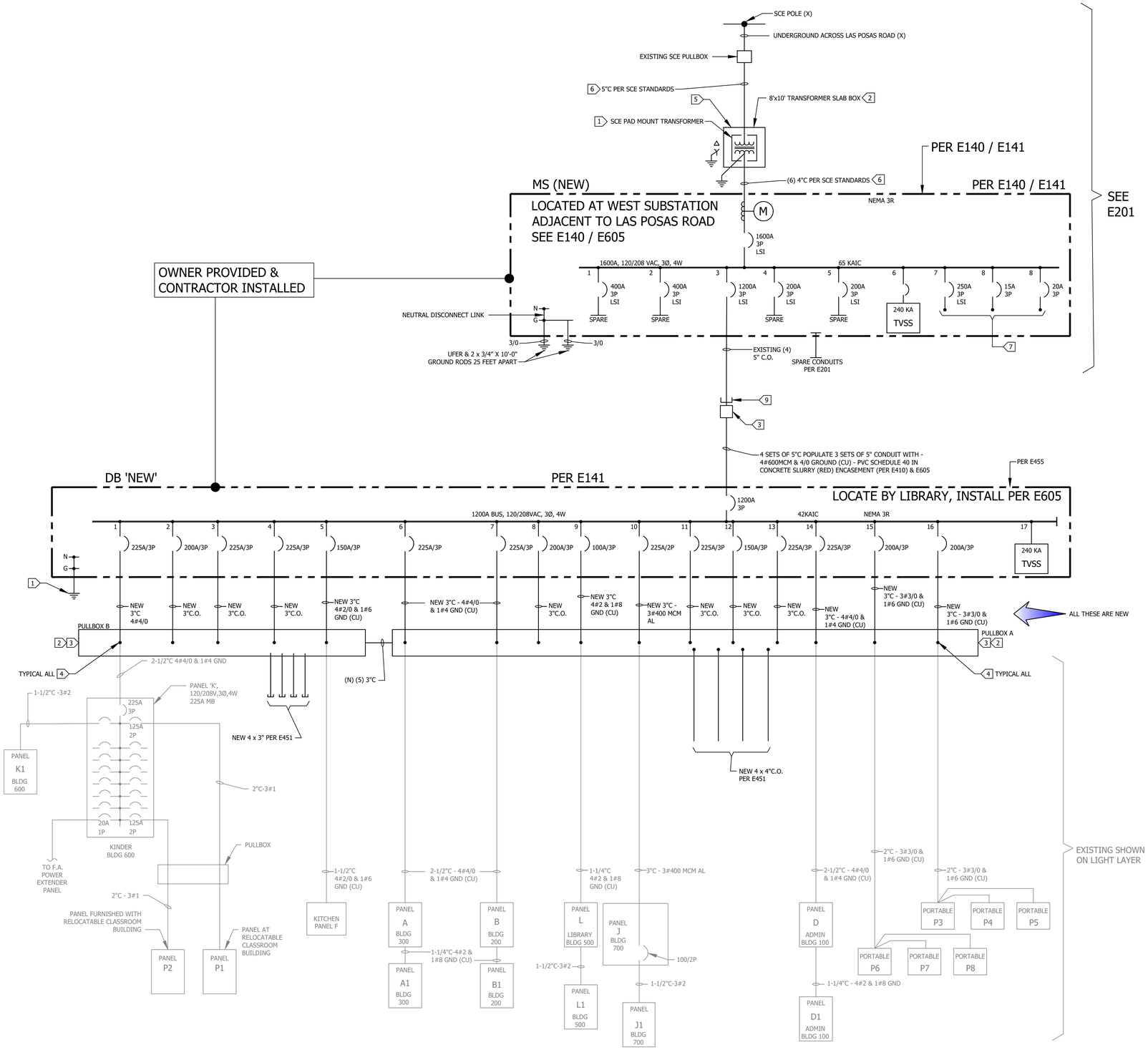

NEW WORK - ELECTRICAL SINGLE LINE DIAGRAM 1 - E205 -

SCALE: NONE

SHEET NOTES:

1. FIELD VERIFY LOCATION OF ALL BUILDINGS AND APPENDITURES & REFER TO CIVIL PLANS.
2. CONTRACTOR SHALL VERIFY LOCATION & REQUIREMENTS OF ALL ELECTRICAL DEVICES PRIOR TO BID. ROUGH-IN & INSTALLATION.
3. FIELD VERIFY LOCATION OF ALL UNDERGROUND UTILITIES PRIOR TO TRENCHING. SCHEDULE AND COORDINATE ALL SITE WORK WITH OWNER PRIOR TO ANY TRENCHING.
4. ALL CONDUIT 90° CONDUIT BENDS AND RISERS SHALL BE SCHEDULE 80 PVC OR OCAL.
5. CONTRACTOR SHALL COORDINATE AND PROVIDE ALL SITE ELECTRICAL SERVICE REQUIREMENTS WITH SERVING UTILITY.
6. ALL SERVICE ENTRANCE EQUIPMENT SHOP DRAWINGS SHALL BE SUBMITTED TO THE LOCAL UTILITY COMPANY FOR APPROVAL, WITH WRITTEN APPROVAL RECEIVED PRIOR TO SUBMISSION TO ELECTRICAL ENGINEER FOR APPROVAL.
7. MINIMUM CONDUIT BURIAL DEPTH IS 24", 36" MINIMUM BELOW STREETS & PARKING LOTS FOR 0-600 VOLT SYSTEMS, EXCEPT SCE FEEDERS PER SCE STANDARDS.
8. 1" CONDUIT MINIMUM UNDERGROUND.
9. COORDINATE WORK WITH OTHER TRADES. OBTAIN ALL DRAWINGS THAT WILL REQUIRE COORDINATION AND PROVIDE ALL ELECTRICAL CONNECTIONS, DEVICES, AND WIRING REQUIRED WHETHER SHOWN ON ELECTRICAL DRAWINGS OR NOT.
10. CONTRACTOR SHALL FURNISH AND INSTALL PULL BOXES AS REQUIRED TO INSTALL CONDUCTORS PER CONDUCTOR MANUFACTURERS RECOMMENDATIONS, PER THE NATIONAL ELECTRICAL CODE AND PER LOCAL AUTHORITIES HAVING JURISDICTION.

KEY NOTES:

1. SCE PROVIDED EQUIPMENT. (SEE E411 & E412).
2. CONTRACTOR PROVIDED & INSTALLED EQUIPMENT.
3. NEW PULL BOX PER DETAIL 4 E601, INTERCEPT EXISTING CONDUITS & FEEDERS FROM MSA TO PULL BOX WHERE 4 OCCURS.
4. NEW HYPRESS COMPRESSION SPLICE WITH UL LISTED 600VAC HEAT SHRINK TUBING.
5. GROUNDING AT SLAB BOX PER SCE REQUIREMENTS.
6. CONDUCTORS BY SCE.
7. USE BY OTHERS.
8. CONTRACTOR STUBBED OUT FOR FUTURE PV:
   (QTY 2) 3"C.O.
   (QTY 3) 1"C.O.
9. INTERCEPT CONDUIT (E140 & E141) AND EXTEND FEEDER (CONDUIT & CONDUCTORS) TO BD WITHOUT SPLICES.
10. CONTRACTOR TO INSTALL CONDUCTORS PER E201 & E202 BETWEEN MS & DB.

CONTRACTOR SHALL PROVIDE A SHORT CIRCUIT STUDY, ARC FLASH, & COORDINATION STUDY (AND SET BREAKERS VIA CURRENT INJECTION) FOR ALL NEW EQUIPMENT & AN ARC FLASH STUDY FOR 'MS' & 'DB'.

SWITCHBOARD SHALL BE FULLY RATED

NO NEW LOAD IS BEING ADDED

SEE E140 FOR PANEL LOCATIONS

ALL PANELS & SWITCHBOARD SHALL BE FULLY RATED

SCOPE:

EXISTING EQUIPMENT TO BE REMAIN ACTIVE UNTIL SCE RE-ENERGIZES SITE & CONTRACTOR RECONNECTS NEW DB

DSA STAMP

REV#	DESCRIPTION	DATE
	.	.
	.	.
	.	.
	.	.
	.	.
	.	.
	.	.

STAMP

REGISTERED PROFESSIONAL ENGINEER
KENNETH W. LUCCI
No. E 8340
Exp. 09/30/2026
ELECTRICAL
STATE OF CALIFORNIA

LUCCI & ASSOCIATES
CONSULTING ELECTRICAL ENGINEERS
3251 CORTE MADRID, #511
CAMARILLO, CA 93012-8094
PHONE (805) 389-6520 FAX (805) 389-6519

SHEET TITLE: NEW WORK - ELECTRICAL SINGLE LINE DIAGRAM

PROJECT: LAS POSAS ELEMENTARY SCHOOL
75 EAST CALLE LA GUERRA
CAMARILLO, CA 93010
- CHANGE OUT SERVICE
TRANSFORMER AND METER MAIN

DRAWN: L.K./D.S./I.T.
CHECKED: K. LUCCI
DATE: 04/08/2025
SCALE: AS NOTED
JOB NO. 21-404
SHEET: E205
OF: SHEETS:

DRAWING: G:\21\404\EL\Sheets\COMBINED_P1-P2\21-404 E205.dwg
DRAFTER: CM02 DRAWING FILENAME: 21-404 E205 PATHNAME: G:\21\404\EL\Sheets\COMBINED_P1-P2 DATE: 26 April 2025 TIME: 4:04 pm
PLOT BY: CM02 PLOT DATE: 4/26/2025 4:04:10 PM
SAVE DATE: 4/8/2025 9:48:17 AM
Drafter:CM02 Paper Size: 12.0
Drawing:G:\21\404\EL\Sheets\COMBINED_P1-P2\21-404 E205.dwg
Date & Time: 4/8/2025 9:48:17 AM
Attached XREFS:
XREF:G:\21\404\EL\Layouts\21-404 TB.dwg

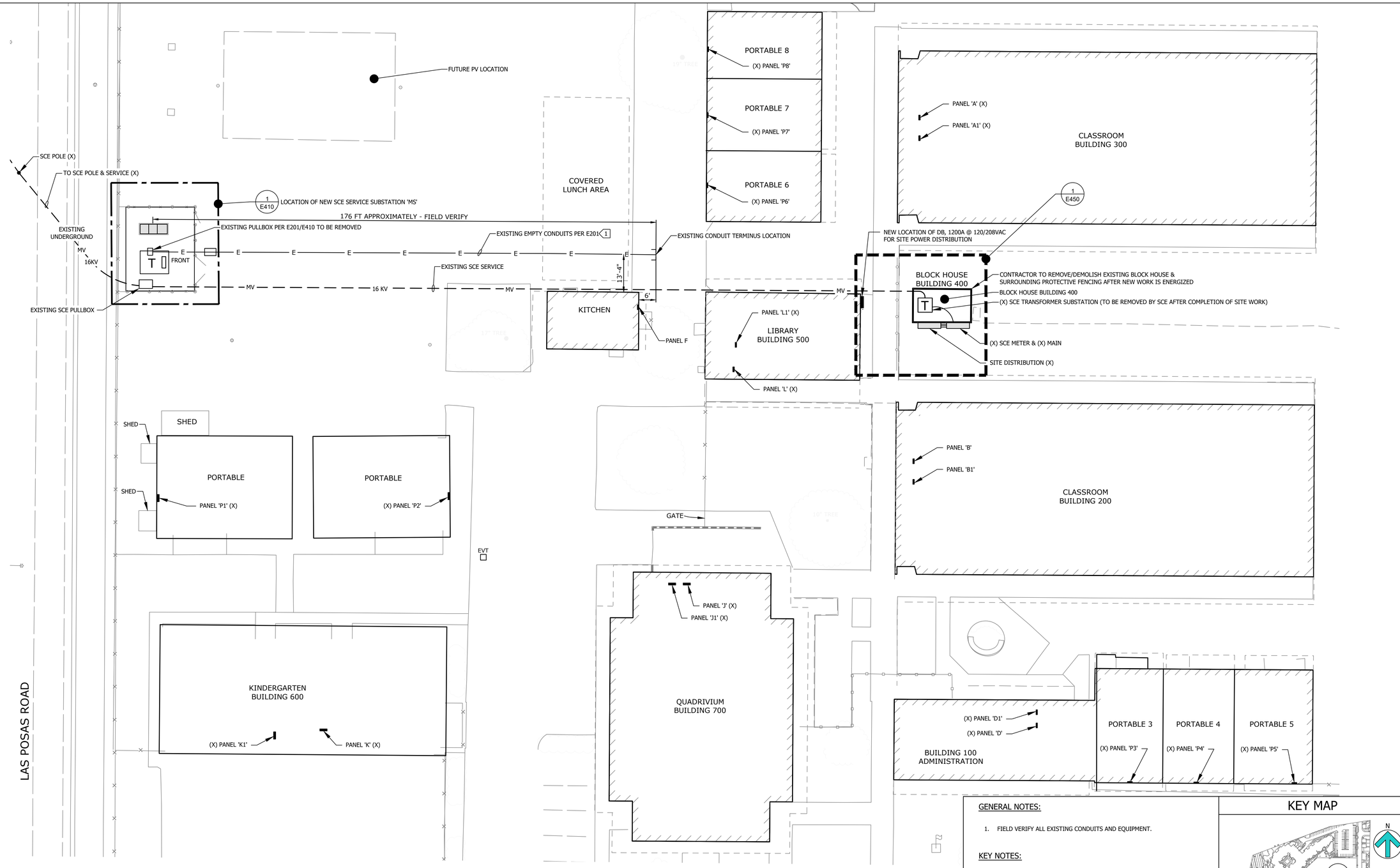

1/16" = 1'-0"
0' 8' 16' 32'

ENLARGED SITE POWER PLAN

1
E140 | E400

SCALE: 1/16"=1'-0"

N

GENERAL NOTES:

1. FIELD VERIFY ALL EXISTING CONDUITS AND EQUIPMENT.

KEY NOTES:

1 EXISTING CONDITIONS (FIELD VERIFY BOTH EXISTING TERMINUS POINTS).

KEY MAP

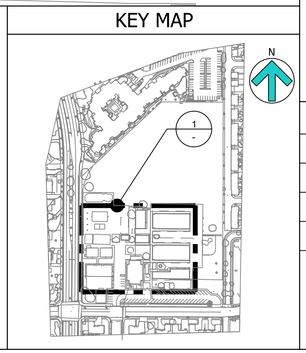

DSA STAMP

REV#	DESCRIPTION	DATE
	.	.
	.	.
	.	.
	.	.
	.	.
	.	.
	.	.

STAMP

REGISTERED PROFESSIONAL ENGINEER
KENNETH W. KUCCI
No. E 8340
Exp. 09/30/2026
ELECTRICAL
STATE OF CALIFORNIA

LUCCI & ASSOCIATES
CONSULTING ELECTRICAL ENGINEERS
325 E. COATE, MAD350, #511
CHANDLER, CA 92220-0094
PHONE (805) 389-6520 FAX (805) 389-6519

SHEET TITLE: ENLARGED SITE POWER PLAN

PROJECT: LAS POSAS ELEMENTARY SCHOOL
75 EAST CALLE LA GUERRA
CAMARILLO, CA 93010
- CHANGE OUT SERVICE
TRANSFORMER AND METER MAIN

DRAWN: L.K./D.S./I.T.
CHECKED: K. LUCCI
DATE: 04/08/2025
SCALE: AS NOTED
JOB NO. 21-404
SHEET: E400
OF: SHEETS:

DATE: 26 April 2025 TIME: 4:04 pm
PLOT DATE: 4/26/2025 4:04:13 PM
PLOT BY: CM02
DRAWING FILENAME: 21-404 E400
PATHNAME: G:\21\404\EL\Sheets\COMBINED_P1-P2
SAVE DATE: 4/7/2025 11:13:26 AM
DRAFTER: CM02
DRAWING: G:\21\404\EL\Sheets\COMBINED_P1-P2\21-404 E400.dwg

Drafter: CM01: G:\21\404\EL\Sheets\PHASE-1\21-404 E400.dwg; DATE: APR 02, 2024 TIME: 10:48 AM

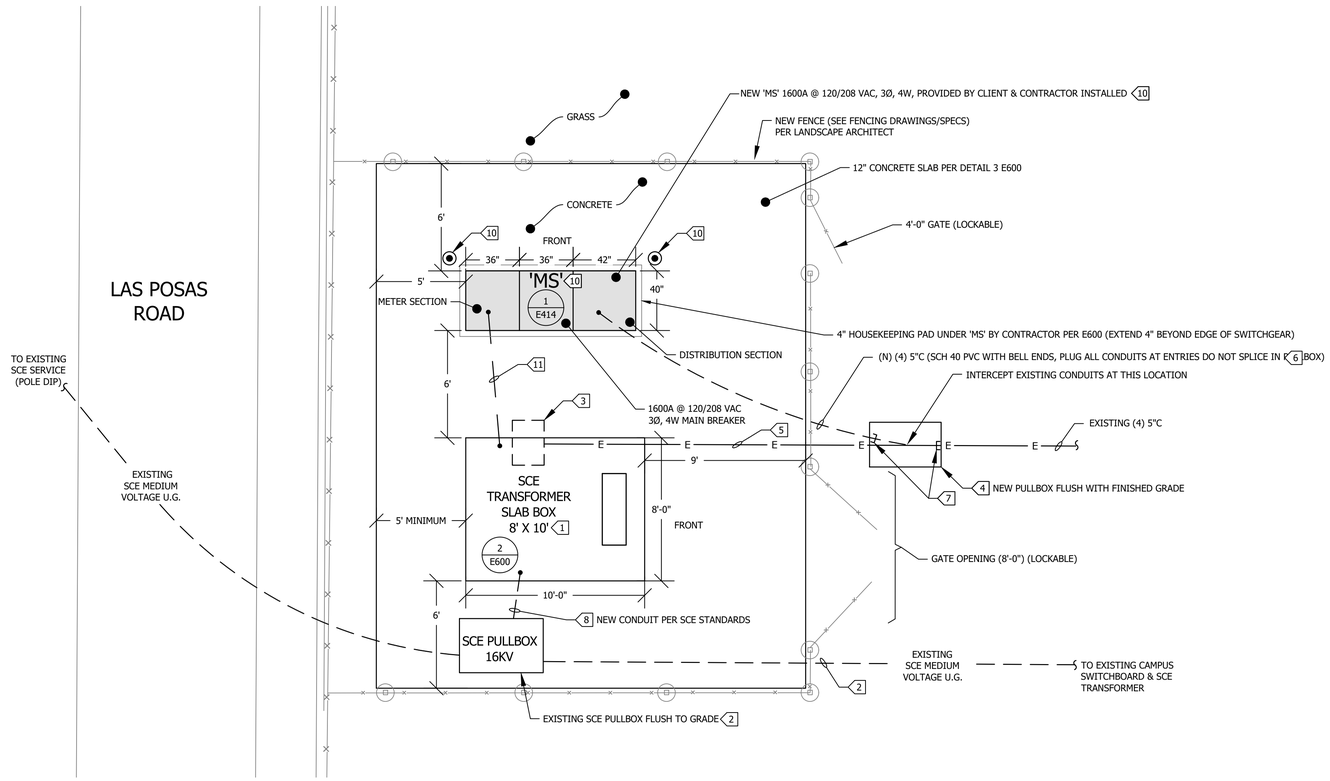

SEE LANDSCAPE PLANS L1 & L2 FOR ADDITIONAL INFORMATION & FENCE DETAILS

ALL WORK SHOWN IS NEW BY CONTRACTOR UNLESS OTHERWISE NOTED.

PROVIDE GROUNDS FOR SCE TRANSFORMER PER SCE STANDARDS.

THIS EQUIPMENT IS BEING DESIGNED TO BE INSTALLED PRIOR TO PHASE 2 WORK TO ALLOW SCE POWER CONNECTION TO BE AVAILABLE WHEN PHASE 2 IS READY TO BE ENERGIZED.

1/2" - 1'-0"
0 1' 2' 4'

NEW SCE SERVICE TO CAMPUS SUBSTATION

SCALE: 1/4"=1'-0"

1 / - E400 | E410

N

SHEET NOTES:

1. CONTRACTOR SHALL FIELD VERIFY LOCATION & REQUIREMENTS OF ALL DEVICES REQUIRING ELECTRICAL CONNECTION PRIOR TO BID PROPOSAL, ROUGH-IN AND FINISH.
2. COORDINATE WORK WITH OTHER TRADES. OBTAIN ALL DRAWINGS THAT WILL REQUIRE COORDINATION AND PROVIDE ALL ELECTRICAL CONNECTIONS, DEVICES, AND WIRING REQUIRED WHETHER SHOWN ON ELECTRICAL DRAWINGS OR NOT.
3. CONTRACTOR SHALL FURNISH AND INSTALL PULL BOXES AS REQUIRED TO INSTALL CONDUCTORS PER CONDUCTOR MANUFACTURERS RECOMMENDATIONS, PER THE NATIONAL ELECTRICAL CODE AND PER LOCAL AUTHORITIES HAVING JURISDICTION.
4. 1" CONDUIT MINIMUM U.O.N.
5. PROVIDE CODE SIZE EQUIPMENT GROUNDING CONDUCTORS IN ALL OCCUPIED CONDUITS.
6. VERIFY THE EXACT ROUTING OF ALL EXPOSED CONDUIT WITH OWNER PRIOR TO INSTALLATION.

BOND METAL FENCE TO MS GROUND BUS AT EVERY 12'-0" OR NON CONTINUOUS SECTION TO GROUND GRID WITH #6 AWG MINIMUM

KEY NOTES:

1. CONTRACTOR PROVIDED & INSTALLED PER SCE STANDARDS & APPROVED PLANS.
2. EXISTING TO REMAIN.
3. EXISTING PULLBOX & CONDUITS TO 4 TO BE REMOVED.
4. NEW 30" x 48" x 24" TRAFFIC RATED PULLBOX WITH STEEL BOLTED COVER 'ELECTRICAL' PER E601 DETAIL 4.
5. (4) 5"C - EXISTING CONDUIT.
6. (4) 5"C (24" COVER MINIMUM).
7. STUB INTO EAST/WEST END OF PULLBOX 4
8. MUST BE DONE BY SCE APPROVED CONTRACTOR RETAINED BY PROJECT CONTRACTOR (COST BORNE BY GC/EC).
9. EXISTING TO REMAIN, TO BE REMOVED AS A PORTION OF PHASE 2 WORK.
10. PROVIDE #4/0 UFER GROUND & (2) 3/4" x 10-0" GROUND RODS IN GROUND WELLS (15'-0" MINIMUM DISTANCE) WITH 4/0 TO GROUND BUS & ALL CONNECTIONS EXOTHERMIC WELDED, SEE DETAILS 1 & 2 E601. ADD ADDITIONAL GROUND RODS TO ACHIEVE LESS THAN 25 OHMS TO GROUND FOR EARTH RESISTANCE.
11. (6) 4"C PER SCE STANDARDS & SCE PLANS.

KEY MAP

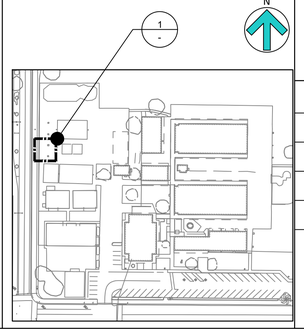

DSA STAMP

REV#	DESCRIPTION	DATE
	.	.
	.	.
	.	.
	.	.
	.	.
	.	.
	.	.

STAMP

REGISTERED PROFESSIONAL ENGINEER
KENNETH W. KACZA
No. E 8340
Exp. 09/30/2026
ELECTRICAL
STATE OF CALIFORNIA

LUCCI & ASSOCIATES
CONSULTING ELECTRICAL ENGINEERS
325 LOKE MAUASO, #511
CAMARILLO, CA 93010-6094
PHONE (805) 389-6520 FAX (805) 389-6519

SHEET TITLE: NEW SCE SERVICE TO CAMPUS SUBSTATION

PROJECT: LAS POSAS ELEMENTARY SCHOOL
75 EAST CALLE LA GUERRA
CAMARILLO, CA 93010
- CHANGE OUT SERVICE TRANSFORMER AND METER MAIN

DRAWN: L.K./D.S./I.T.
CHECKED: K. LUCCI
DATE: 04/08/2025
SCALE: AS NOTED
JOB NO. 21-404
SHEET: E410
OF: SHEETS:

PATHNAME: G:\21\404\EL\Sheets\COMBINED_P1-P2 DRAFTER: CM02 DRAWING FILENAME: 21-404 E410 DATE: 26 April 2025 TIME: 4:04 pm
SAVE DATE: 4/26/2025 3:55:38 PM PLOT BY: CM02 PLOT DATE: 4/26/2025 4:04:17 PM
Drafter:CM02 Paper Size: 12.9
Drawing:G:\21\404\EL\Sheets\COMBINED_P1-P2\21-404 E410.dwg
Date: Fri, Apr 25, 2025 - 3:55pm
Attached XREFS:
XREF:G:\21\404\EL\Xrefs\21-404 TB.dwg
XREF:G:\21\404\EL\Xrefs\SCE SUBSTATION_SKETCH.dwg
XREF:G:\21\404\EL\Xrefs\21-404 PLAN.dwg
Drafter:CM01: Paper Size: 12.9
Drawing:G:\21\404\EL\Sheets\PHASE-1\21-404 E410.dwg
Date: Wed, Apr 02, 2025 - 10:47am
Attached XREFS:
XREF:G:\21\404\EL\Xrefs\21-404 TB.dwg
XREF:G:\21\404\EL\Xrefs\SCE SUBSTATION_SKETCH.dwg
XREF:G:\21\404\EL\Xrefs\21-404 PLAN.dwg

Drafter:CM01: G:\21\404\EL\Sheets\PHASE-1\21-404 E410.dwg; DATE: APR 02, 2024 TIME: 10:47 AM

CONSTRUCTION NOTES:

Unless otherwise specified on the working drawing which forms a part of the specification, the Contractor/Developer shall furnish the following items at no cost to the Edison Company.

Southern California Edison Company has attempted to correctly show all existing utilities and substructures in the vicinity of the work, but does not guarantee there are no other substructures in the area. Failure of SCE to show all substructures in their correct location will not be a basis for a claim for extra work, and the contractor shall be responsible for all damages to substructures whether shown or not.

1. FOR GENERAL SPECIFICATIONS SEE UGS GI 001.

2. CONDUIT:
   a. Minimum cover in street or parkway is 30" below gutter grade, unless noted otherwise.
   b. Minimum cover on private property is 30" below finished grade, unless noted otherwise.
   c. Contractor is to furnish and install approved conduit to Edison specifications per UGS CD 100.1, 110 AND 120.
   d. For the type of conduit for this job, See UGS CD 110.1.
   e. Install all risers per UGS CD 160, 161, 162 and 170.
   f. Cap all mainline conduits per UGS CD 148 and service conduits per UGS CD 150.
   g. Install blank conduit plugs in all conduits terminating into Vaults, Manhole's, PMH's, SOE's & all cap locations, per UGS CD 180.1 & UGS CD 180.2
   h. Install pull rope in all conduit runs. Pull rope to be at least 3/8" polypropylene rope, braided or twisted. For specifications, approved makes, and suppliers, see UGS GI 040.
   i. All conduit must be mandreled with the approved mandrel UGS CD 197.

3. CONDUIT RADIUS REQUIREMENTS:
   a: The minimum radius for bends are:
      36" for conduits 3" in diameter or smaller
      48" for conduits 4" and 5" in diameter
      60" for 6" diameter conduit
   b: The minimum radius for all sweeps of all mainline conduits is 12'-6" (unless noted otherwise).

4. EXCAVATION AND BACKFILL:
   a. Work area shall be cleared and rough graded to within four inches of final grade prior to installation of Edison conduit or structures.
   b. All excavations shall be in accordance with the California State Construction Safety Orders (when applicable), Edison specifications, and all governing local ordinances.
   c. Each trench to be a uniform depth below final grade prior to installation of Edison conduit or structures.
   d. Backfill shall be provided by the Contractor for all excavations and shall include crushed rock, concrete, and/or imported backfill, when required.
   e. Backfill with a MINIMUM of one sack per yard sand cement slurry around and over vaults and manholes per UGS GI 030, section 6.4 and around PMH's within one foot of finished grade, per UGS SS 590.1.
   f. Backfill, per Edison specifications, shall immediately follow conduit or substructure installation. At no time shall conduit be left exposed over 24 hours.
   g. No rocks are allowed within 12 inches of direct-buried cables or any conduit without concrete encasement. Native backfill capable of passing through a one-half inch mesh screen shall be considered to be "rock free". If existing backfill does not pass through a 1/2" screen, place imported sand 3" below and 12" above Edison cables. After this point, no rocks larger than 12" diameter are permitted.
   h. All backfill shall be compacted to meet or exceed local ordinances or other requirements. It shall be placed in a manner that will not damage the conduit or substructure or allow future subsidence of the trench or structures.

5. PAVING:
   Repaving, where required, shall be placed in such a manner that interference with traffic, including pedestrian traffic, will be kept to a minimum. The Contractor shall establish a program of repaving acceptable to the Municipality, County, or other authority having jurisdiction and which is acceptable to Edison.

6. STRUCTURES:
   a. All substructures shall be constructed or installed to Edison specifications.
   b. Install protection barriers per UGS MS 830 when required in areas exposed to traffic, per Edison Inspector.
   c. All conduit lines and concrete floored substructures shall be water tight.
   d. All grounding materials shall be furnished and installed by the Contractor.

7. RETAINING WALLS:
   When required, retaining walls shall be provided by the Developer. Walls are required wherever grade rises more than 18 inches above the structure or 24" above the pad surface at a distance of 5 feet from the same, or in areas subject to erosion. Design and installation must comply with local building ordinances. Refer to Edison Inspector for typical space requirements.

8. PERMITS:
   All permits necessary for excavation shall be provided by the Contractor/Developer.

9. ACCESS:
   Heavy truck access shall be maintained to equipment locations. Structures must be clear of all appurtenances that would obstruct the loading or unloading of equipment.

10. SERVICES:
   a. Meters and services shall comply with Edison Electrical Services Requirements.
   b. Wiring must be in accordance with applicable local ordinances and approved by local Inspection Authorities.

11. LOCATION:
   a. The location of excavations and structures for Edison shall be as shown on the working drawing. No deviation from the planned locations will be permitted unless approved by the Edison Inspector. See UGS GI 001, section 2.2.
   b. Actual location of obstructions, storm drains, and/or other foreign utilities to be the responsibility of the Contractor. See UGS GI 001, section 2.3.

12. Contractor is to verify location and widths of all sidewalks and driveways prior to street light installation. See UGS CD 175.1, UGS CD 175.2 and UGS CD 175.3.

13. SURVEY:
   Surveying of street improvements, property corners, lot lines, finished grade, etc., necessary for the installation of underground facilities must be completed and markers or stakes placed prior to the start of the installation. In addition, Developer shall maintain the markers during the installation and inspection by Edison. Grade and property line stakes must show any offset measurements.

14. COORDINATION AND SUPERVISION:
   The Developer shall provide supervision over and coordination among the various contractors working within the development in order to prevent damage to Edison facilities. He is responsible for the cost of repairs, replacement, relocation, or other corrections to Edison facilities made necessary by his failure to provide supervision or to otherwise comply with these specifications.

15. TELEPHONE AND OTHER UTILITY REQUIREMENTS:
   The drawing prepared for this job may also cover the facilities to be installed for the telephone company and/or other utility. Any questions concerning details of their installation should be referred to the company concerned.

16. OWNERSHIP:
   Developer is to deed to the Edison Company all structures shown hereon except those shown as customer owned.

17. WARRANTY:
   Applicants expressly represent and warrant that all work performed and all material used in meeting Applicants' obligations herein are free from defects in workmanship and are in conformity with Southern California Edison Company's requirements. This warranty shall commence upon receipt by Applicants of Company's final acceptance and shall expire one year from that date. Applicants agree to promptly correct to the Company's satisfaction and that of any governmental agency having jurisdiction and at Applicant's expense any breach of this warranty which may become apparent through inspection or operation of underground electric system by Company during this warranty period.

18. INSPECTION:
   Inspection is required during the construction period. A 48 hour advance notice of intent to start construction is required from the contractor to the Southern California Edison Company. Standards of Edison construction requirements are available upon request.

Duct and Structure Inspector: BRENNEN RHODES Phone: 805-890-9245

Cabling Construction Coordinator: Phone:

D05: Rev. 07/21/16

CONDUIT RADIUS REQUIREMENTS:

A: The minimum radius for bends are:
36" for conduits 3" in diameter or smaller
48" for conduits 4" and 5" in diameter
60" for 6" diameter conduit

B: The minimum radius for sweeps are:
36" for conduits 3" in diameter or smaller
12'-6" for conduits 4" in diameter and larger, unless otherwise noted.

NOTE:
ALL ELECTRICAL DUCTS AND STRUCTURES WILL CONFORM TO GENERAL ORDER #128 (RULES FOR CONSTRUCTION OF UNDERGROUND ELECTRICAL SUPPLY AND COMMUNICATION PRESCRIBED BY THE PUBLIC UTILITIES COMMISSION OF THE STATE OF CALIFORNIA, JANUARY 2006).

WHERE CONDUITS ARE PICKED UP OR INTERCEPTED, CONDUIT SHALL BE MANDRELLED AND PULL ROPE INSTALLED FROM TERMINAL TO TERMINAL.

CONNECTING TO EXISTING SCE STRUCTURES

- Per SCE requirements, customers are not allowed to enter, intercept or tie-in to existing SCE facilities; e.g. structures, equipment, multi-conduit runs/banks, or conductors. These facilities may be energized and the work will only be performed by SCE. Contact the appropriate SCE inspector to schedule an appointment. Customers may connect to an existing conduit stub without a SCE inspector present.
- Multi-conduit runs/banks are runs of conduit in close proximity to each other and other SCE facilities. A conduit stub is a single empty conduit stub that is not in close proximity to other SCE owned facilities. Refer to the work order map for details.
- Per CPUC/SCE's Rule 15 B.1.A and Rule 16 D.1.A., the customer will provide all necessary excavations (with the exception of excavation under pads and primary splice boxes), material (including conduit and structures) and encasement, to be utilized in the intercept/tie-in process.
- The customer must adhere to all applicable Cal-OSHA, local, city, state and federal regulations, (including, but not limited to, all necessary shoring and traffic control in place to perform the intercept/tie-in work by SCE's underground civil contractor(s)).
- Intercept/tie-in work must be coordinated with SCE's civil contractors through the Division Inspector/P-Spec to limit exposure of excavation(s). Customer is responsible for securing excavation(s).

D08: 11/13/18

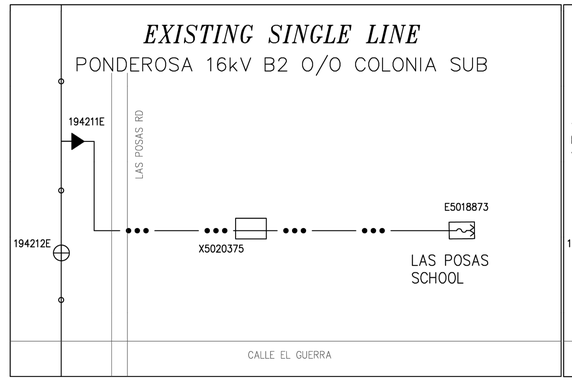

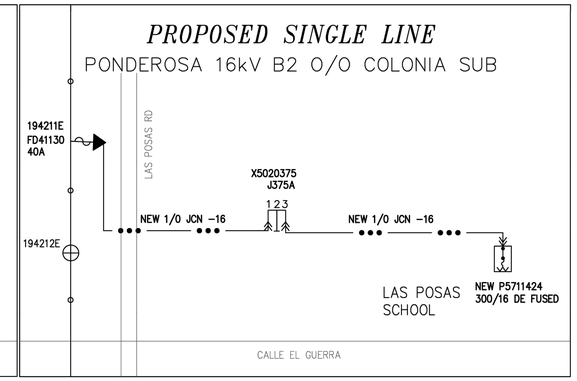

WARNING
THE EXCAVATOR MUST TAKE ALL STEPS NECESSARY TO AVOID CONTACT WITH UNDERGROUND FACILITIES WHICH MAY RESULT IN INJURY TO PERSONS OR DAMAGE TO FACILITIES IN THE AREA. THE INDICATED LOCATIONS OF EDISON UNDERGROUND FACILITIES, AS PROVIDED, ARE BELIEVED TO BE ACCURATE, HOWEVER, THE FINAL DETERMINATION OF EXACT LOCATIONS AND THE COST OF REPAIR TO DAMAGED FACILITIES IS THE RESPONSIBILITY OF THE EXCAVATOR.

UNDERGROUND SERVICE ALERT
Contact USA
Dial 811 or 800-422-4133
www.digalert.org/contact
For Underground Locating
Two Working Days Before You Dig

D16: Rev. 05/28/20

TIE-IN MADE THROUGH BOTTOM OF STRUCTURE
(Pad, Primary Splice Box)
The customer is responsible to trench and bring the conduit to within the last riser bend of the structure being entered (do not undermine structure being entered). The customer is to provide coupling and bend.

CUSTOMER-OWNED CONDUIT MATERIAL* AND CONCRETE ENCASEMENT ARE TO BE INSTALLED IN ACCORDANCE WITH EDISON ELECTRICAL SERVICE REQUIREMENTS.
*SUBJECT TO APPROVAL BY LOCAL INSPECTION AUTHORITIES

D14: Rev. 01/85

PANEL CLEARANCE
UNDERGROUND SERVICE CONNECTIONS 0-600 VOLTS
SEE ESR 3-16

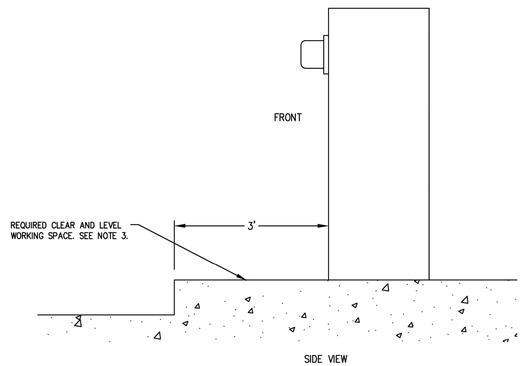

NOTES:
1. A MINIMUM OF THREE (3) FEET OF CLEAR, LEVEL WORK SPACE IS REQUIRED IN FRONT OF ALL TERMINATION, METERING, AND SERVICE EQUIPMENT.
2. SEE ESR-5 FOR METER-MOUNTING HEIGHT REQUIREMENTS. METER MOUNTING HEIGHT WILL BE MEASURED FROM THE STANDING AND WORKING SPACE TO THE CENTERLINE OF THE METER(S).
3. WHEN SERVICE EQUIPMENT IS INSTALLED ON AN ELEVATED PORTION OF THE FLOOR/GROUND, OR HOUSEKEEPING PAD, THE PAD SHALL BE FLUSH WITH AND EXTEND A MINIMUM OF THREE (3) FEET. THIS IS MEASURED FROM THE FRONT OF THE SERVICE EQUIPMENT OR THE OUTER DOOR(S) OF THE SWITCHBOARD NEMA 3R ENCLOSURE WHEN INSTALLED. IN NO CASE SHALL THE MAXIMUM METER HEIGHT OF SIX (6) FEET THREE (3) INCHES BE EXCEEDED.
4. TO MAINTAIN A SAFE, CLEAR, AND LEVEL WORKING AREA IN FRONT OF NEW OR EXISTING METER AND SERVICE EQUIPMENT, A CONCRETE SLAB OR OTHER SUITABLE PERMANENT HARD SURFACE, ACCEPTABLE TO THE COMPANY, MUST BE USED.
5. FOR SWITCHBOARDS ABOVE 600V, FIVE-FOOT MINIMUM OF CLEAR AND LEVEL STANDING AND WORKING SPACE IS REQUIRED IN THE FRONT, REAR, AND SIDE OF ANY SECTION WHERE SUCH PART SUPPORTS OR PROVIDES ACCESS TO METERING, TESTING EQUIPMENT, OR SERVICE CABLE TERMINATION SECTIONS.

16.12 PROTECTIVE BARRIERS FOR SERVICE EQUIPMENT
BARRIER POSTS ARE USED TO PROTECT THE METER AND SERVICE EQUIPMENT, AS WELL AS PERSONNEL, FROM VEHICULAR CONTACT, AND TO PROHIBIT ENCROACHMENT INTO THE WORKING SPACE. (FOR EXAMPLE: LOADING ZONES, DRIVEWAYS, CONGESTED AREAS, OFF STREET PARKING, AND SO ON). THE CUSTOMER SHALL PROVIDE AND INSTALL "NON-REMOVABLE" BARRIERS TO PROVIDE THE PROPER SAFE WORKING CLEARANCES WHERE THE WORKSPACE IS EXPOSED TO VEHICULAR OR OTHER HAZARDOUS CONDITIONS. METERS WILL NOT BE SET UNTIL THE BARRIERS HAVE BEEN INSTALLED.

D99: 10/26/20

8'x10' SLAB BOX
FOR 3Ø PAD-MOUNTED TRANSFORMER
(FOOTING REQUIRED)
SEE UGS SS 530

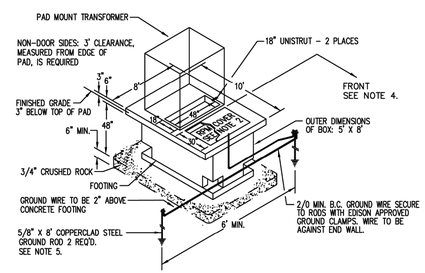

NOTES:
1. PAD OVERHANG TO REST ON UNDISTURBED EARTH OR WELL-COMPACTED BACKFILL TO PREVENT FUTURE SUBSIDENCE.
2. THE SLAB 30" x 48" CLEAR OPENING SHALL BE COVERED WITH A 2'-6" x 4' RPM COVER AS SHOWN ON UGS FC 618. 6⅝" STAINLESS STEEL BOLTS WITH STAINLESS STEEL CAPTIVE WASHERS WILL BE SUPPLIED FOR COVER BOLT DOWN.
3. SLAB RPM COVER RECESS SHALL BE CONCRETE (NONMETAL FRAMED), AND PROVIDED WITH 6⅝" THREADED INSERTS, EACH WITH CLEAN OUT HOLES.
4. AN 8' MINIMUM CLEARANCE IS REQUIRED ON DOOR SIDE OF CABINET FOR OPERATION. REFER TO FIGURE SS 530 (SHEET 3) AND FIGURE SS 530-4 (SHEET 3) FOR WORKING CLEARANCES.
5. GROUND RODS, CLAMPS, AND WIRE WILL BE FURNISHED AND INSTALLED BY THE CONTRACTOR. SEE UGS AC 703 FOR APPROVED GROUNDING MATERIALS. GROUND WIRE TO BE A MINIMUM OF 2/0 BARE COPPER.
6. MASTIC SEALANT IS REQUIRED AT JOINTS.
7. SEE UGS SS 530.2 FOR CONDUIT ENTRANCE GUIDELINES.
8. SEE UGS SS 500 FOR APPROVED MANUFACTURERS.

D46: Rev. 02/18/11

CONTRACTOR/DEVELOPER NOTES

- TEMPORARY BARRIERS TO BE PLACED AROUND ALL EDISON STRUCTURES DURING CONSTRUCTION
- CUSTOMER TO VERIFY EXACT LOCATION OF STREET LIGHTS PRIOR TO INSTALLATION.
- WHERE SLEEVES OR STUB OUTS ARE INSTALLED, CONTRACTOR TO MANDREL AND INSTALL PULL ROPE
- ANY SERVICES THAT ARE NOT INSTALLED IN CONJUNCTION WITH THE MAIN LINE SYSTEM WILL REQUIRE A MINIMUM OF 3" CUSTOMER OWNED SERVICE CONDUIT AT THE TIME OF CONSTRUCTION OF THE HOME.
- DEVELOPER IS RESPONSIBLE FOR LOCATING EXISTING DUCT, SLEEVES, AND STUB OUTS. LOCATIONS SHOWN ON MAP ARE NOT GUARANTEED. IF NOT EXISTING, THE DEVELOPER MUST PROVIDE THESE ITEMS.

D129: Rev. 11/10/20

TYPICAL CONDUIT BANK SECTION
SEE UGS CD 120

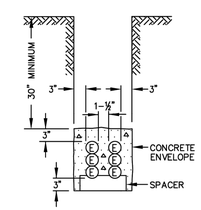

FULL ENCASEMENT
MORE THAN 4 CONDUITS
(BASE SPACER REQUIRED)

D72: Rev. 09/23/09

DISTRICT 39-VENTURA		PROJ. MGR. TREBELS, LEO PHONE 805-336-5083		PLANNER TREBELS, LEO PHONE 805-336-5083		DESIGNER GALVAN, ALEX
PROJECT NO. 2308402	SERVICE REQUEST 3200549	MSR NO. 200731955	PRODUCT-1 1922233-METER & SERVICE CHANGE			ASSOC DESGN
CIRCUIT / VOLTAGE PONDEROSA 16kV		GPS	PRODUCT-2			ASSOC DESGN
SUB / PG NO. COLONIA [B2]		CIRCUIT CODE 14312	PRODUCT-3			ASSOC DESGN
INVENTORY MAP 033-032C-4		J.P.A. NO.	PROPOSED CONSTRUCTION (LOCATION) METER AND SERVICE CHANGE 75 E CALLE LA GUERRA CAMARILLO CA 93010			
F	11/17/23	R.YANEZ	L.TREBELS	A.GALVAN	79301	
P	10/18/23		L.TREBELS	A.GALVAN	79301	
P	9/29/23		L.TREBELS	A.GALVAN	79301	
TYPE	DATE	APPROVED BY	CHECKED BY	DRAWN BY	PAX #	SHEET 1 OF 2 / DESIGN\DRWG NO. 1458577_0.01
Southern California Edison Company						

DSA STAMP

REV#	DESCRIPTION	DATE

STAMP
REGISTERED PROFESSIONAL ENGINEER
KENNETH W. KUCCI
No. E 8340
Exp. 09/30/2026
ELECTRICAL
STATE OF CALIFORNIA

LUCCI & ASSOCIATES
CONSULTING ELECTRICAL ENGINEERS
325 CONTE PALASO, #311
CAMARILLO, CA 93010-8094
PHONE (805) 389-6520 FAX (805) 389-6519

SHEET TITLE: SCE MANUFACTURER SHEET

PROJECT: LAS POSAS ELEMENTARY SCHOOL
75 EAST CALLE LA GUERRA
CAMARILLO, CA 93010
- CHANGE OUT SERVICE
TRANSFORMER AND METER MAIN

DRAWN: L.K./D.S./I.T.
CHECKED: K. LUCCI
DATE: 04/08/2025
SCALE: AS NOTED
JOB NO. 21-404
SHEET: E411
OF: SHEETS:

DRAFTER: CM02 DRAWING FILENAME: 21-404 E411 PATHNAME: G:\21\404\EL\Sheets\COMBINED_P1-P2\ DATE: 26 April 2025 TIME: 4:04 pm
DRAWING: G:\21\404\EL\Sheets\COMBINED_P1-P2\21-404 E411.dwg PLOT BY: CM02 SAVE DATE: 4/4/2025 11:52:18 AM PLOT DATE: 4/26/2025 4:04:25 PM
FILE NAME:1458577_0.01.DWG SAVE DATE:11/17/2023 1:17 PM SAVED BY:GALVAXA
Drafter:CM02 Paper Size: 12.0
Drawing:G:\21\404\EL\Sheets\COMBINED_P1-P2\21-404 E411.dwg
Layout: E411 Tab: Model
Attached XREFS:
XREF:G:\21\404\EL\Sheets\21-404 TB.dwg
Drafter: CM01: G:\21\404\EL\Sheets\PHASE-1\21-404 E411.dwg; DATE: MAR 15, 2024 TIME: 11:06 AM

PSPEC/CREW NOTES:

PSPEC/CREW NOTES:
- METER & SERVICE CHANGE
- PERMIT REQUIRED CITY OF CAMARILLO ENCROACHMENT/TRAFFIC
- PRIMARY JOB CONTACT KENNETH LUCI (805)432-9955

CUSTOMER/CONTRACTOR NOTES:
- CONTACT SCE/QCI INSPECTOR BRENNEN RHODES (805)890-9245 TO SCHEDULE A PRECONSTRUCTION MEETING
- 48 HOURS ADVANCE NOTICE IS STANDARD WHEN SCHEDULING PRE-CONSTRUCTION MEETING(SUBJECT TO CHANGE)
- ALL CONDUIT AND STRUCTURES TO BE INSPECTED BY QCI INSPECTOR PRIOR TO AND AFTER BACKFILL TRENCH.
- ALL BURIED CONDUIT WILL BE SCH 40 PVC
- ALL CONDUIT BEND/EXPOSED CONDUIT WILL BE SCH 80 PVC
- 1/4 PULL ROPE TO BE INSTALLED IN CONDUIT PRIOR TO FINAL INSPECTION
- QCI FINAL INSPECTION IS REQUIRED AND ALL PANELS WILL NEED TO HAVE PANEL CLEARANCE FROM AUTHORITY HAVING JURISDICTION PRIOR TO SCE SCHEDULING THE PROJECT.

FINAL DESIGN
APPROVED FOR CONSTRUCTION

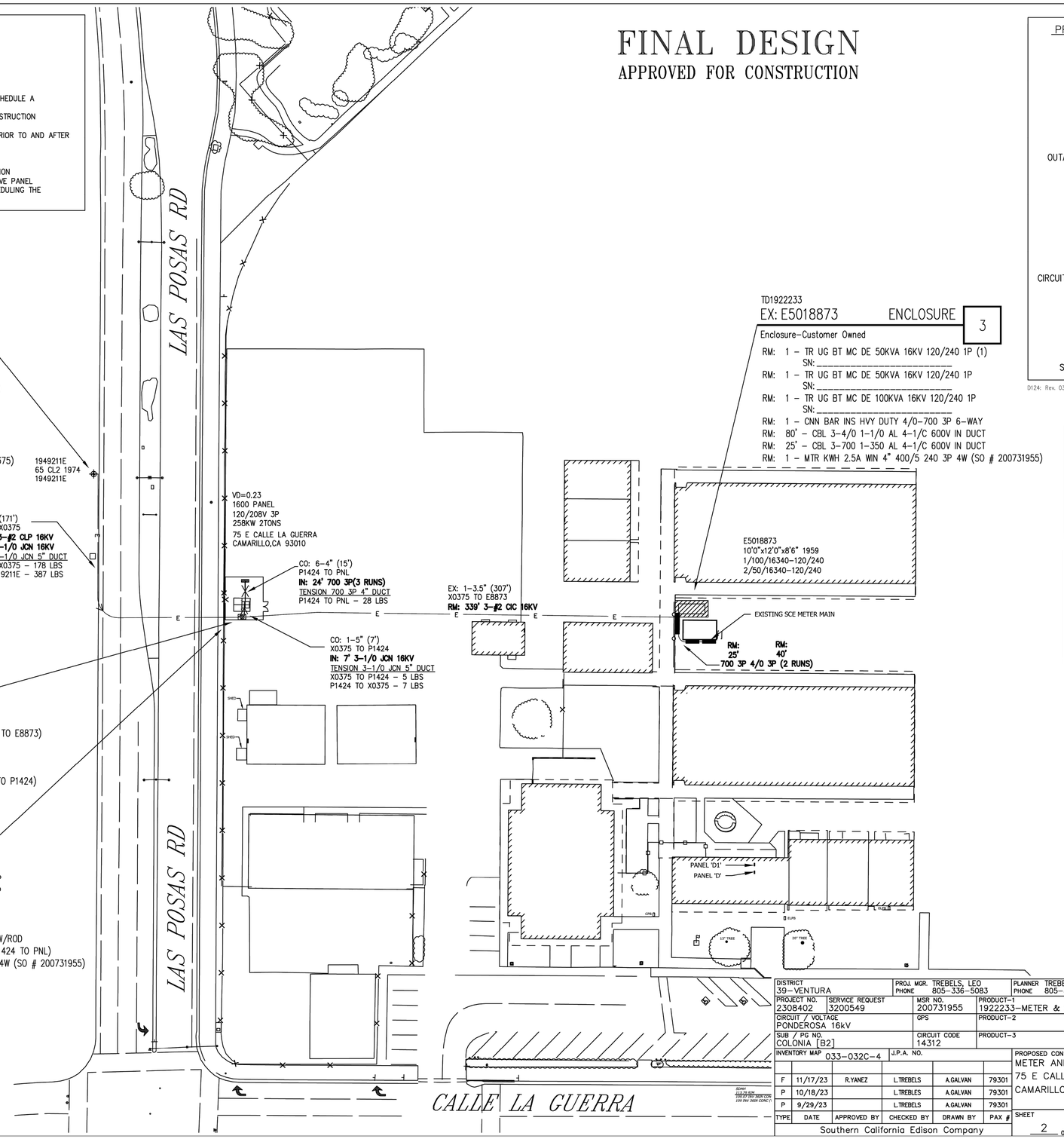

PROJECT REQUIREMENTS (Y/N)	
EDISON EASEMENT REQUIRED	N
PWRD 88 REQUIRED	Y
UG CIVIL ONLY WORK ORDER	N
PERMIT REQUIRED	Y
PERMIT TYPE: TRAFFIC	
OUTAGE REQUIRED	Y
OUTAGE DATE: _____ TIME: _____	
TRAFFIC CONTROL REQUIRED	Y
PED. TRAFFIC CONTROL REQ'D	Y
CONVEYANCE LETTER REQ'D	N
ENVIRONMENTAL REQUIREMENTS DOCUMENT (ERD) REQUIRED	Y
CSD 140 (TLM) REQ'D	Y
CIRCUIT MAP CHANGE REQ'D (TD 203)	Y
DIG ALERT APP	☐
VERIFIED ACTIVE AND CONFIRMED USA TICKETS	☐
UTILIQUEST NOTIFIED	☐
STANDARD ADHERENCE: 4THQ/2023 Y	

D124: Rev. 03/21/23

T.L.M. DATA: 5018873

	SIZE	KVA	CUST	% LOAD
EXIST.	200	141.2	1	71%
PROP.	—	—	—	—%

VOLTAGE DROP: –
FLICKER FACTOR: –
PRI. CIRCUIT: PONDEROSA 16kv

D27: REV. 12/10/21

T.L.M. DATA: 5711424

	SIZE	KVA	CUST	% LOAD
EXIST.	–	–	–	–%
PROP.	300	284	1	94.67%

VOLTAGE DROP: 0.23
FLICKER FACTOR: –
PRI. CIRCUIT: PONDEROSA 16kV

D27: REV. 12/10/21

DISTRICT 39–VENTURA		PROJ. MGR. TREBELS, LEO PHONE 805–336–5083		PLANNER TREBELS, LEO PHONE 805–336–5083	DESIGNER GALVAN, ALEX
PROJECT NO. 2308402	SERVICE REQUEST 3200549	MSR NO. 200731955	PRODUCT–1 1922233–METER & SERVICE CHANGE		ASSOC DESGN
CIRCUIT / VOLTAGE PONDEROSA 16kV		GPS	PRODUCT–2		ASSOC DESGN
SUB / PG NO. COLONIA [B2]		CIRCUIT CODE 14312	PRODUCT–3		ASSOC DESGN
INVENTORY MAP 033–032C–4		J.P.A. NO.	PROPOSED CONSTRUCTION (LOCATION) METER AND SERVICE CHANGE 75 E CALLE LA GUERRA CAMARILLO CA 93010		

TYPE	DATE	APPROVED BY	CHECKED BY	DRAWN BY	PAX #
F	11/17/23	R.YANEZ	L.TREBELS	A.GALVAN	79301
P	10/18/23		L.TREBLES	A.GALVAN	79301
P	9/29/23		L.TREBELS	A.GALVAN	79301

Southern California Edison Company

SHEET 2 OF 2
DESIGN\DRWG NO. 1458577_0.01

FILE NAME:1458577_0.01.DWG SAVE DATE:11/17/2023 1:51 PM SAVED BY:GALVANA

DSA STAMP

REV#	DESCRIPTION	DATE
	.	.
	.	.
	.	.
	.	.
	.	.
	.	.
	.	.

STAMP
REGISTERED PROFESSIONAL ENGINEER
KENNETH W. LUCCI
No. E 8340
Exp. 09/30/2026
ELECTRICAL
STATE OF CALIFORNIA

LUCCI & ASSOCIATES
CONSULTING ELECTRICAL ENGINEERS
3251 CORTE HALASO, #511
CAMARILLO, CA 93012-8094
PHONE (805) 389-6520 FAX (805) 389-6519

SHEET TITLE: SCE MANUFACTURER SHEET

PROJECT: LAS POSAS ELEMENTARY SCHOOL
75 EAST CALLE LA GUERRA
CAMARILLO, CA 93010
- CHANGE OUT SERVICE
TRANSFORMER AND METER MAIN

DRAWN: L.K./D.S./I.T.
CHECKED: K. LUCCI
DATE: 04/08/2025
SCALE: AS NOTED
JOB NO. 21-404
SHEET: E412
OF: SHEETS:

DATE: 26 April 2025 TIME: 4:04 pm
PLOT DATE: 4/26/2025 4:04:32 PM
PATHNAME: G:\21\404\EL\Sheets\COMBINED_P1-P2 SAVE DATE: 4/4/2025 11:52:04 AM PLOT BY: CM02
DRAWING FILENAME: 21-404 E412
DRAFTER: CM02
DRAWING: G:\21\404\EL\Sheets\COMBINED_P1-P2\21-404 E412.dwg
Drafter:CM02 Paper Size:12.9
Drawing:G:\21\404\EL\Sheets\COMBINED_P1-P2\21-404 E412.dwg
Plot Date:4/26/2025
Attached XREFS:
XREF:G:\COMMON\EL\XREF\21-404 TB.dwg
Drafter: CM01: G:\21\404\EL\Sheets\PHASE-1\21-404 E411.dwg: DATE: MAR 15, 2024 TIME: 11:06 AM

REV	DESCRIPTION	BY	DATE
–	----	--	--/--/--

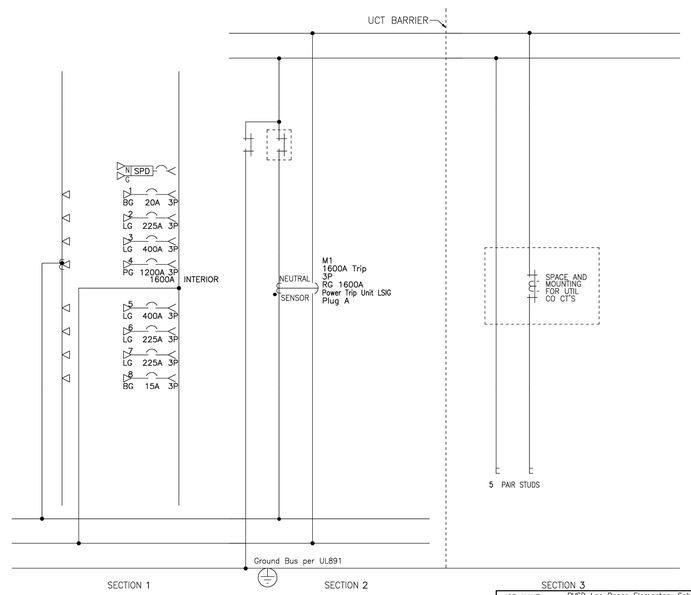

MS

JOB NAME: PVSD Las Posas Elementary School	EQUIPMENT DESIGNATION: 1600A
JOB LOCATION:	EQUIPMENT TYPE: QED–2 Switchboard
DRAWN BY: (Q2C)	DRAWING TYPE: ONE LINE
ENGR:	SQUARE D by Schneider Electric
DATE: February 16 2024	DWG# FQ–4765518–139732432–01 PG 1 OF 2 REV –
DRAWING STATUS: QUOTE	

REV	DESCRIPTION	BY	DATE
–	----	--	--/--/--

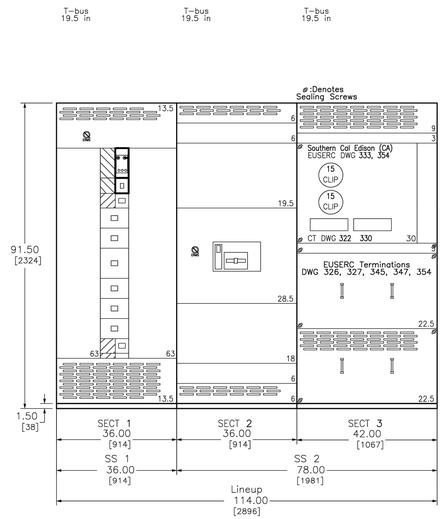

SWITCHBOARD GENERAL NOTES

PRODUCT DESCRIPTION & RATINGS

Power System Data
208Y/120V 3Ph 4W 60Hz / 3 Phase Wye
Solidly Grounded
System Short Circuit Current Rating: 65kA RMS
Incoming Section 3 Cable Through the Bottom Right of Lineup

Bus System Data
1600A Silver Plated Copper Main Bus
(2) .25x2.00 IN/6x51 mm Cu Bus Bar Per Phase
(1) .25x.875 IN/6x22 mm Cu Ground Bus

Enclosure Data
Type 3R Free Standing
Exterior Paint Color: ANSI 49
Front Accessibility Only Required
Handling: Rollers
Rodent barriers
1.5H Corrosion Resist Base Channels
Steel Bottom Closure Plate
Base channels cannot be removed from EUSERC switchboard line–ups
Utility sealing hardware installed for unmetered bus compartments
Carbon Footprint (kgtCO2e): 57426

Estimated Shipping Weight
Shipping Split 1 1040.00 lbs / 471.74 kgs
Shipping Split 2 1676.00 lbs / 760.23 kgs
Complete Lineup 2716.00 lbs / 1231.98 kgs

Code Standards
U.L. Deadfront and suitable for use as Service Entrance when not more than six (6) disconnecting means are provided.

Rating Nameplates
ST1– Deadfront – Section Bus 1600A
ST2– Service Entrance – Section Bus 1600A
ST3– Deadfront – Section Bus 1600A

PRODUCT INFORMATION

Wiring
All wiring to be Machine Tool Wire type

Instruction Bulletins
Reference 80043–055 For Handling, Installation, Anchoring, Inspection And Maintenance Information

Product Accessories/Options
Seismic Qualified
24V Trip Unit Display Power
Locally Mounted ERMS Switch

MS

DUAL DIMENSIONS: INCHES MILLIMETERS

JOB NAME: PVSD Las Posas Elementary School	EQUIPMENT DESIGNATION: 1600A
JOB LOCATION:	EQUIPMENT TYPE: QED–2 Switchboard
DRAWN BY: (Q2C)	DRAWING TYPE: GENERAL NOTES
ENGR:	SQUARE D by Schneider Electric
DATE: February 16 2024	DWG# FQ–4765518–139732432–01 PG 1 OF 2 REV –
DRAWING STATUS: QUOTE	

REV	DESCRIPTION	BY	DATE
–	----	--	--/--/--

POWER STYLE QED–2 SWITCHBOARD

SECT NO	CKT NO	IMD /GMD CONFIG	DEVICE/FRAME RATING	TRIP AMP	FUSE/ TRIP	#P	DESIGNATION	N/P	LUG/WIRE INFORMATION QTY	PHASE WIRE RANGE	QTY	NEUT WIRE RANGE	ACCESSORIES / NOTES
1	–	13.5 in	240kA SPD	–	–	–	–	–	–	–	–	–	SPD
1	1	4.5 in	BG	20A	–	3P		No	1	#14 – 1/0 AWG	1	#14 – 1/0 AWG	
1	2	6 in	LG 400A	225A	S–LSI	3P		No	2	3/0 – 250 kcmil	2	3/0 – 250 kcmil	
1	3	6 in	LG 400A	400A	S–LSI	3P		No	2	3/0 – 250 kcmil	2	3/0 – 250 kcmil	
1	4	9 in	PG 1200A Plug A	1200A	P–LSIG	3P		No	4	3/0 – 500 kcmil	4	3/0 – 500kcmil	GF ERMS,TU
1	5	6 in	LG 400A	400A	S–LSI	3P		No	2	3/0 – 250 kcmil	2	3/0 – 250 kcmil	
1	6	6 in	LG 400A	225A	S–LSI	3P		No	2	3/0 – 250 kcmil	2	3/0 – 250 kcmil	
1	7	6 in	LG 400A	225A	S–LSI	3P		No	2	3/0 – 250 kcmil	2	3/0 – 250 kcmil	
1	8	4.5 in	BG	15A	–	3P		No	1	#14 – 1/0 AWG	1	#14 – 1/0 AWG	
2	M1	FIX	RG 1600A Plug A	1600A	P–LSIG	3P		No	–	–	–	–	GF PLA,ERMS,TU
3	UCT	–	1600A	–	–	–	Southern Cal Edison (CA)	No	5	Pair Studs	5	Pair Studs	

LEGEND	
ERMS	Energy Reduction Maintenance SW
GF	Ground Fault
PLA	Padlock Attachment–Fixed
SPD	Surge Protection Device
TU	24V Trip Unit Display Power

MS

JOB NAME: PVSD Las Posas Elementary School	EQUIPMENT DESIGNATION: 1600A
JOB LOCATION:	EQUIPMENT TYPE: QED–2 Switchboard
DRAWN BY: (Q2C)	DRAWING TYPE: SCHEDULE
ENGR:	SQUARE D by Schneider Electric
DATE: February 16 2024	DWG# FQ–4765518–139732432–01 PG 2 OF 2 REV –
DRAWING STATUS: QUOTE	

REV	DESCRIPTION	BY	DATE
–	----	--	--/--/--

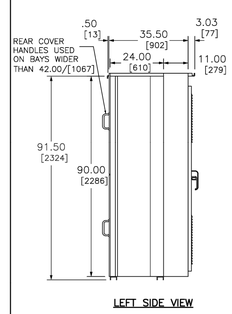

LEFT SIDE VIEW

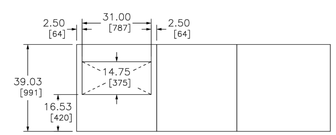

TOP VIEW – FRONT

MS

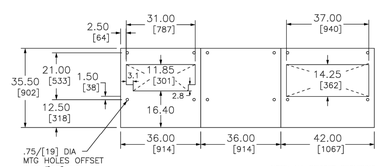

FLOOR PLAN – FRONT

NOTE:
A MINIMUM OF 2.00/[51] CLEARANCE BEHIND THE SWITCHBOARD IS REQUIRED FOR TOP COVER OVERHANG.

NOTE: ALL DEVICES REQUIRING DRILLING OR INSERTION IN MOUNTING PAD SUCH AS CONDUIT, ANCHORING STUDS, SLEEVE INSERTS, ETC. SHOULD BE INSTALLED BEFORE SETTING EQUIPMENT IN PLACE.

DUAL DIMENSIONS: INCHES MILLIMETERS

JOB NAME: PVSD Las Posas Elementary School	EQUIPMENT DESIGNATION: 1600A
JOB LOCATION:	EQUIPMENT TYPE: QED–2 Switchboard
DRAWN BY: (Q2C)	DRAWING TYPE: SIDE, TOP VIEW & FLOOR PLAN
ENGR:	SQUARE D by Schneider Electric
DATE: February 16 2024	DWG# FQ–4765518–139732432–01 PG 2 OF 2 REV –
DRAWING STATUS: QUOTE	

DSA STAMP

REV#	DESCRIPTION	DATE
	.	.
	.	.
	.	.
	.	.
	.	.
	.	.
	.	.

STAMP

REGISTERED PROFESSIONAL ENGINEER
KENNETH W. LUCCI
No. E 8340
Exp. 09/30/2026
ELECTRICAL
STATE OF CALIFORNIA

LUCCI & ASSOCIATES
CONSULTING ELECTRICAL ENGINEERS
325 E. COATE MA/SO, #511
CAMARILLO, CA 93010–6094
PHONE (805) 389-6520 FAX (805) 389-6519

SHEET TITLE: 'MS' MAIN SERVICE SWITCHGEAR

PROJECT:
LAS POSAS ELEMENTARY SCHOOL
75 EAST CALLE LA GUERRA
CAMARILLO, CA 93010
- CHANGE OUT SERVICE
TRANSFORMER AND METER MAIN

DRAWN:	L.K./D.S./I.T.
CHECKED:	K. LUCCI
DATE:	04/08/2025
SCALE:	AS NOTED
JOB NO.	21-404
SHEET:	E414
OF: SHEETS:	

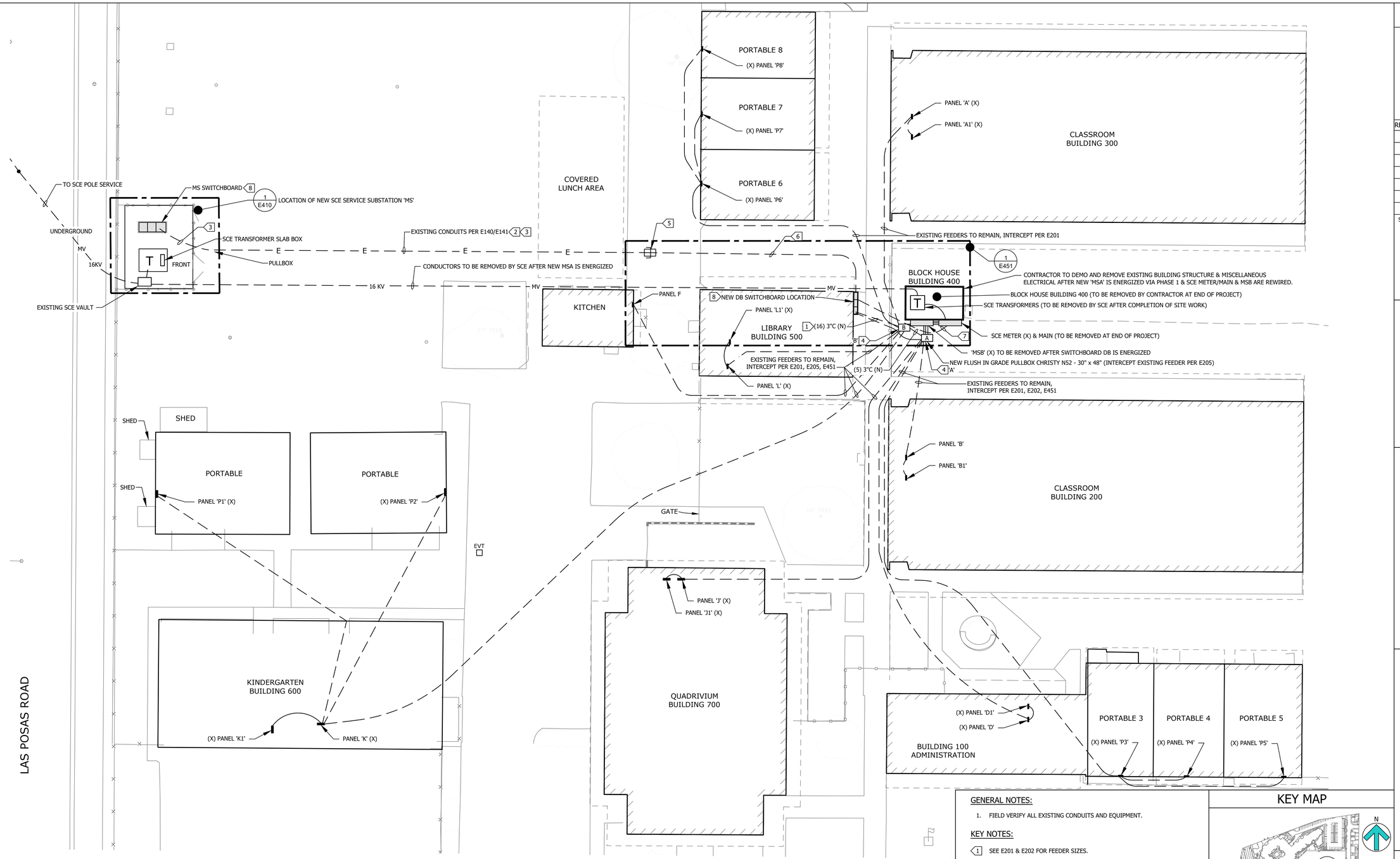

ALL WORK / EQUIPMENT IS SHOWN AS EXISTING SHALL BE NEW & CONTRACTOR PROVIDED & INSTALLED

1/16" = 1'-0"
0' 8' 16' 32'

ENLARGED SITE POWER PLAN

SCALE: 1/16"=1'-0"

1 E140 | E400

N

GENERAL NOTES:

1. FIELD VERIFY ALL EXISTING CONDUITS AND EQUIPMENT.

KEY NOTES:

1. SEE E201 & E202 FOR FEEDER SIZES.
2. EXISTING CONDUIT (FIELD VERIFY BOTH EXISTING BEGINNING OF TERMINUS POINTS).
3. NEW FEEDERS IN EXISTING CONDUITS PER E201 & E205.
4. NEW FLUSH IN GRADE PULLBOX CHRISTY N52 (DETAIL 4 E601) - 30" X 48" (INTERCEPT EXISTING FEEDERS PER E205)
5. NEW FLUSH IN GRADE TRAFFIC RATED PULLBOX CHRISTY N52-30"x48" PER E205 & DETAIL 4 E601
6. NEW FEEDER IN NEW CONDUITS PER E205 & E201.
7. PROVIDE 2 SETS OF 4"C - 4 #500MCM & 1 #1/0 GROUND FROM EXISTING SCE METER MAIN TO DB AS TEMP CONNECTION PRIOR TO FINAL CONNECTION TO MAINTAIN SITE POWER.
8. OWNER PROVIDED & CONTRACTOR INSTALLED.

KEY MAP

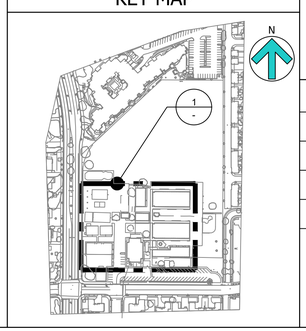

DSA STAMP

REV#	DESCRIPTION	DATE
	.	.
	.	.
	.	.
	.	.
	.	.
	.	.
	.	.

STAMP

REGISTERED PROFESSIONAL ENGINEER
KENNETH W. KUCCI
No. E 8340
Exp. 09/30/2026
ELECTRICAL
STATE OF CALIFORNIA

LUCCI & ASSOCIATES
CONSULTING ELECTRICAL ENGINEERS
325 E. COTE MALASO, #511
CAMARILLO, CA 93010-6094
PHONE (805) 389-6520 FAX (805) 389-6519

SHEET TITLE: ENLARGED SITE POWER PLAN

PROJECT: LAS POSAS ELEMENTARY SCHOOL
75 EAST CALLE LA GUERRA
CAMARILLO, CA 93010
- CHANGE OUT SERVICE
TRANSFORMER AND METER MAIN

DRAWN: L.K./D.S./I.T.
CHECKED: K. LUCCI
DATE: 04/08/2025
SCALE: AS NOTED
JOB NO. 21-404
SHEET: E450
OF: SHEETS:

L.A.I.# 21-404 PAPER SIZE 36"x24"

DATE: 26 April 2025 TIME: 4:04 pm
PLOT DATE: 4/26/2025 4:04:41 PM
DRAFTER: CM02 DRAWING FILENAME: 21-404 E450
PATHNAME: G:\21\404\EL\Sheets\COMBINED_P1-P2
SAVE DATE: 4/8/2025 9:50:24 AM PLOT BY: CM02

Drafter: CM01: G:\21\404\EL\Sheets\PHASE-2\21-404 E400.dwg: DATE: APR 02, 2024 TIME: 11:59 AM

DATE: 26 April 2025 TIME: 4:04 pm
PLOT DATE: 4/26/2025 4:04:45 PM
PATHNAME: G:\21\404\EL\Sheets\COMBINED_P1-P2 SAVE DATE: 4/8/2025 9:54:43 AM
PLOT BY: CM02
DRAWING FILENAME: 21-404 E451
DRAFTER: CM02
DRAWING: G:\21\404\EL\Sheets\COMBINED_P1-P2\21-404 E451.dwg

CONTRACTOR IS RESPONSIBLE FOR MS & DB PICKUP, DELIVERY TO SITE, & INSTALLATION

SHEET NOTES:

1. FIELD VERIFY THE EXACT ROUTING OF ALL CONDUIT WITH OWNER PRIOR TO INSTALLATION.

KEY NOTES:

1. TYPICAL FEEDERS PER SITE CONDITIONS & E201 & E205.
2. VERIFY TYPICAL COUNT & SIZE PER E205.
3. (4) 3" C.O. SPARES 10'-0" STUB OUT U.G. AT 24" AFF.
4. (4) 4" C.O. SPARES 10'-0" STUB OUT U.G. AT 24" AFF.
5. 6" THICK 2000 PSI CONCRETE ON 6" CONCRETE SLURRY FILL WITH #4 DOWELS EPOXIED INTO EXISTING CONCRETE ON 12" CENTERS. PROVIDE #3 BAR BW ON 12" CENTERS TOP & BOTTOM FOR REPLACEMENT CONCRETE. CUT CONCRETE ON JOINTS.
6. TEMP CONNECTION PER KEY NOTE 7 E450 FOR SITE POWER UNTIL MS POWER IS CONNECTED BY SCE & DB IS ENERGIZED BY SCE.

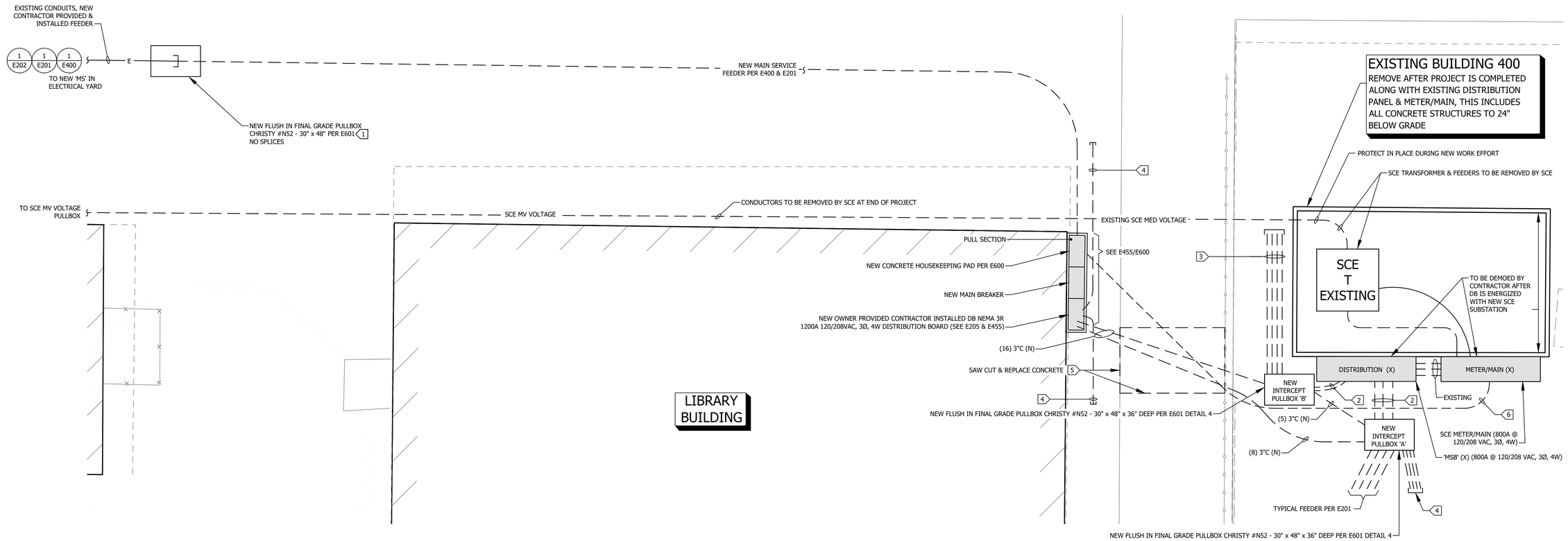

SEE E205 FOR NEW ELECTRICAL SINGLE LINE

KEY MAP

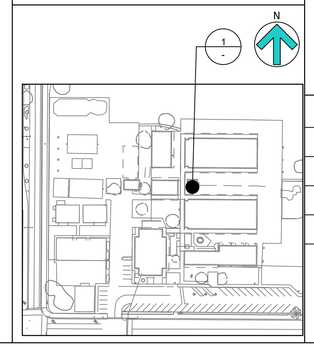

SCALE: 1/4"=1'-0"
0 2' 4' 8'

ENLARGED 'DB' & BUILDING 400 AREA
SCALE: 1/4"=1'-0"
1
E450 | E451

N

DSA STAMP

REV#	DESCRIPTION	DATE
	.	.
	.	.
	.	.
	.	.
	.	.
	.	.
	.	.

STAMP

REGISTERED PROFESSIONAL ENGINEER
KENNETH W. LUCCI
No. E 8340
Exp. 09/30/2026
ELECTRICAL
STATE OF CALIFORNIA

LUCCI & ASSOCIATES
CONSULTING ELECTRICAL ENGINEERS
3251 CORTE MALPASO, #511
CAMARILLO, CA 93012-8894
PHONE (805) 389-6520 FAX (805) 389-6519

SHEET TITLE: ENLARGED POWER PLANS

PROJECT: LAS POSAS ELEMENTARY SCHOOL
75 EAST CALLE LA GUERRA
CAMARILLO, CA 93010
- CHANGE OUT SERVICE
TRANSFORMER AND METER MAIN

DRAWN: L.K./D.S./I.T.
CHECKED: K. LUCCI
DATE: 04/08/2025
SCALE: AS NOTED
JOB NO. 21-404
SHEET: E451
OF: SHEETS:

Drafter:CM01: G:\21\404\EL\Sheets\PHASE-2\21-404 E411.dwg: DATE: APR 04, 2024 TIME: 12:19 PM

REV	DESCRIPTION	BY	DATE
--	----	--	--/--/--

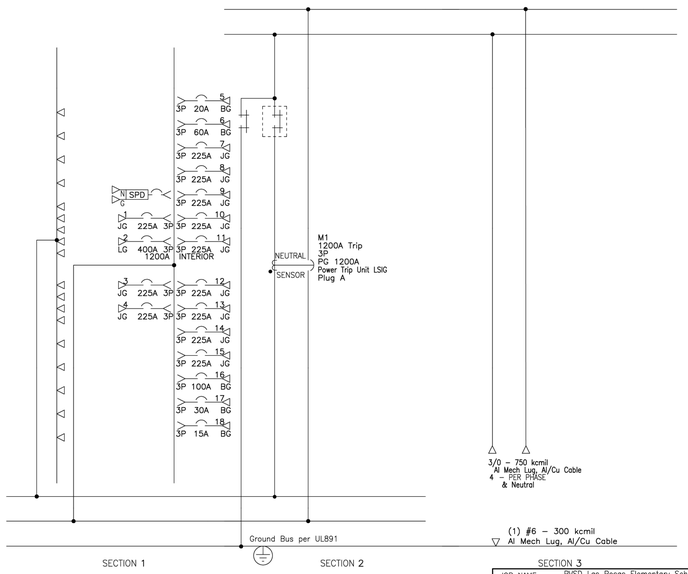

DB

JOB NAME: PVSD Las Posas Elementary School	EQUIPMENT DESIGNATION: 1200A
JOB LOCATION:	EQUIPMENT TYPE: QED–2 Switchboard
DRAWN BY: (Q2C)	DRAWING TYPE: ONE LINE
ENGR:	SQUARE D by Schneider Electric
DATE: February 16 2024	
DRAWING STATUS: QUOTE	DWG# DQ–4765518–139733073–01 PG 1 OF 2 REV –

REV	DESCRIPTION	BY	DATE
--	----	--	--/--/--

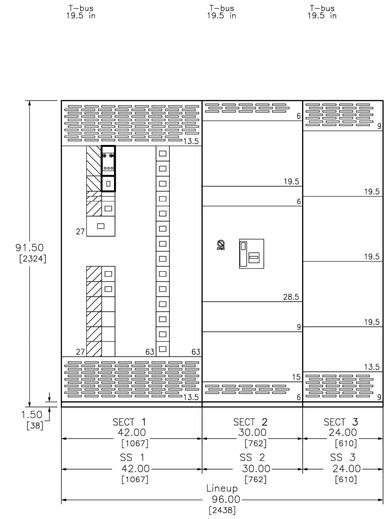

SWITCHBOARD GENERAL NOTES

PRODUCT DESCRIPTION & RATINGS

Power System Data

208Y/120V 3Ph 4W 60Hz / 3 Phase Wye
Solidly Grounded
System Short Circuit Current Rating: 42kA RMS
Incoming Section 3 Cable Through the Bottom Right of Lineup

Bus System Data

1200A Silver Plated Copper Main Bus
(2) .25x1.50 IN/6x38 mm Cu Bus Bar Per Phase/Neutral
(1) .25x.875 IN/6x22 mm Cu Ground Bus

Enclosure Data

Type 3R Free Standing
Exterior Paint Color: ANSI 49
Front Accessibility Only Required
Handling: Rollers
Rodent barriers
1.5H Corrosion Resist Base Channels
Steel Bottom Closure Plate

Estimated Shipping Weight

Shipping Split 1 1041.00 lbs / 472.20 kgs
Shipping Split 2 644.00 lbs / 292.12 kgs
Shipping Split 3 528.00 lbs / 239.50 kgs
Complete Lineup 2213.00 lbs / 1003.82 kgs

Code Standards

U.L. Deadfront and suitable for use as Service Entrance when not more than six (6) disconnecting means are provided.

Rating Nameplates

ST1– Deadfront – Section Bus 1200A
ST2– Service Entrance – Section Bus 1200A
ST3– Deadfront – Section Bus 1200A

PRODUCT INFORMATION

Wiring

All wiring to be Machine Tool Wire type

Instruction Bulletins

Reference 80043–055 For Handling, Installation, Anchoring, Inspection And Maintenance Information

Product Accessories/Options

24V Trip Unit Display Power
Locally Mounted ERMS Switch

DB

DUAL DIMENSIONS: INCHES MILLIMETERS

JOB NAME: PVSD Las Posas Elementary School	EQUIPMENT DESIGNATION: 1200A
JOB LOCATION:	EQUIPMENT TYPE: QED–2 Switchboard
DRAWN BY: (Q2C)	DRAWING TYPE: GENERAL NOTES
ENGR:	SQUARE D by Schneider Electric
DATE: February 16 2024	
DRAWING STATUS: QUOTE	DWG# FQ–4765518–139733073–01 PG 1 OF 2 REV –

REV	DESCRIPTION	BY	DATE
--	----	--	--/--/--

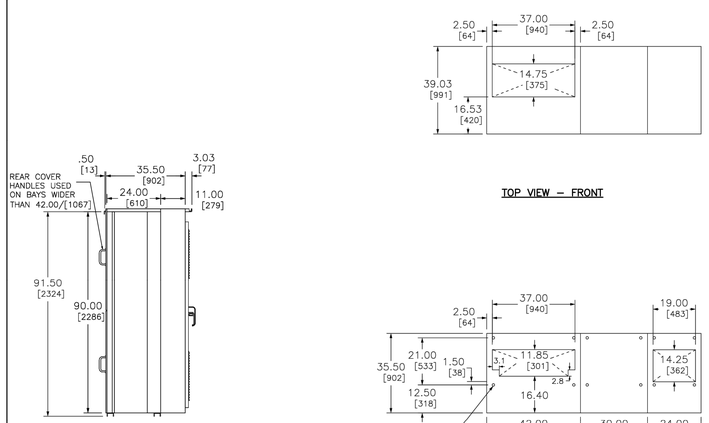

NOTE:
A MINIMUM OF 2.00/[51] CLEARANCE BEHIND THE SWITCHBOARD IS REQUIRED FOR TOP COVER OVERHANG.

NOTE: ALL DEVICES REQUIRING DRILLING OR INSERTION IN MOUNTING PAD SUCH AS CONDUIT, ANCHORING STUDS, SLEEVE INSERTS, ETC. SHOULD BE INSTALLED BEFORE SETTING EQUIPMENT IN PLACE.

DB

DUAL DIMENSIONS: INCHES MILLIMETERS

JOB NAME: PVSD Las Posas Elementary School	EQUIPMENT DESIGNATION: 1200A
JOB LOCATION:	EQUIPMENT TYPE: QED–2 Switchboard
DRAWN BY: (Q2C)	DRAWING TYPE: SIDE, TOP VIEW & FLOOR PLAN
ENGR:	SQUARE D by Schneider Electric
DATE: February 16 2024	
DRAWING STATUS: QUOTE	DWG# FQ–4765518–139733073–01 PG 2 OF 2 REV –

DSA STAMP

REV#	DESCRIPTION	DATE
	.	.
	.	.
	.	.
	.	.
	.	.
	.	.
	.	.

STAMP

REGISTERED PROFESSIONAL ENGINEER
KENNETH W. LUCCI
No. E 8340
Exp. 09/30/2026
ELECTRICAL
STATE OF CALIFORNIA

LUCCI & ASSOCIATES
CONSULTING ELECTRICAL ENGINEERS
3251 CORTE MALPASO, #511
CAMARILLO, CA 93012-8894
PHONE (805) 389-6520 FAX (805) 389-6519

SHEET TITLE:
'DB' QED-2
SWITCHBOARD
MANUFACTURER SHEETS

PROJECT:
LAS POSAS ELEMENTARY SCHOOL
75 EAST CALLE LA GUERRA
CAMARILLO, CA 93010
- CHANGE OUT SERVICE
TRANSFORMER AND METER MAIN

DRAWN: L.K./D.S./I.T.
CHECKED: K. LUCCI
DATE: 04/08/2025
SCALE: AS NOTED
JOB NO. 21-404
SHEET: E455
OF: SHEETS:

PATHNAME: G:\21\404\EL\Sheets\COMBINED_P1-P2 DATE: 26 April 2025 TIME: 4:04 pm
SAVE DATE: 4/4/2025 11:57:38 AM PLOT BY: CM02 PLOT DATE: 4/26/2025 4:04:50 PM
DRAFTER: CM02 DRAWING FILENAME: 21-404 E455
DRAWING: G:\21\404\EL\Sheets\COMBINED_P1-P2\21-404 E455.dwg
Drafter:CM02 - Paper Size: 12.0
Drawing:G:\21\404\EL\Sheets\COMBINED_P1-P2\21-404 E455.dwg
Plot Date:4/26/2025
Material: DWFPS
Plotted by:G:\21\404\EL\Sheets\21-404 TB.dwg

CONTRACTOR TO INSTALL OWNER PROVIDED SWITCHGEAR BUT PROVIDE & INSTALL
- ALL CONDUITS & INTERCEPTS.
- SLAB BOX.
- ALL NON-SCE CONNECTIONS.
- COORDINATE WITH SCE.
- GROUNDING.
- FENCING.
- SIGNAGE.
- COORDINATE WITH PVSD PROJECT MANAGER.

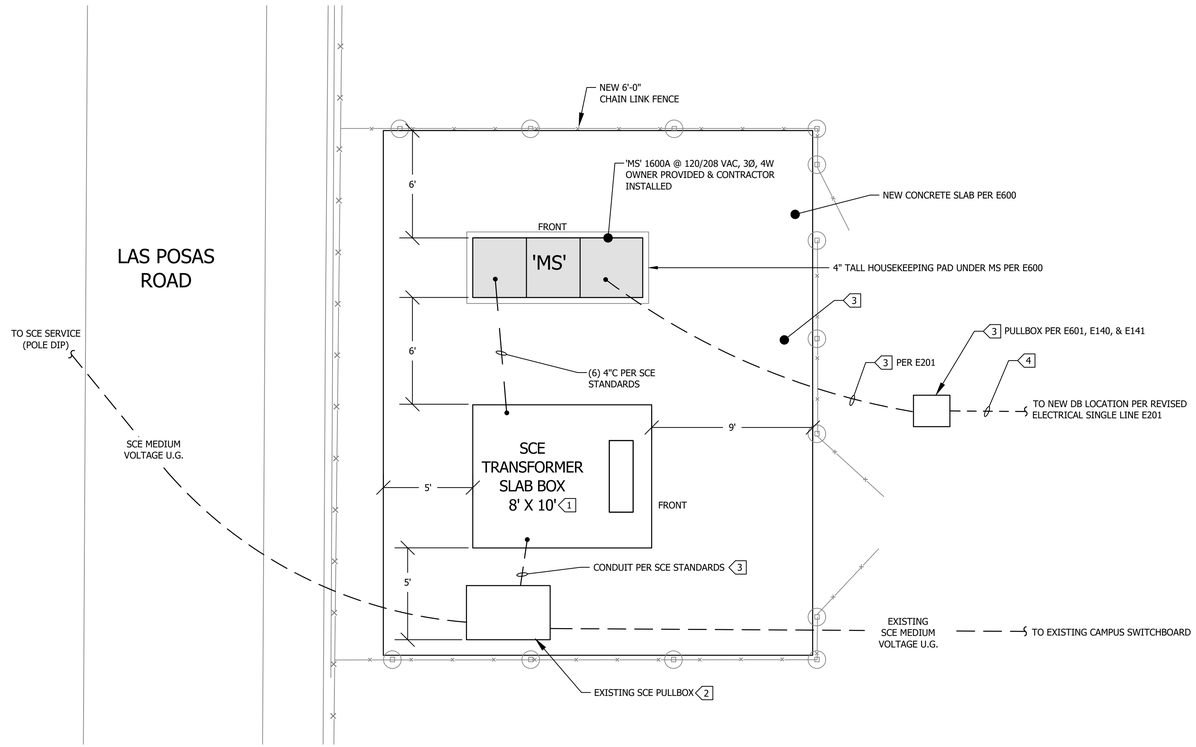

1/2" - 1'-0"
0 1' 2' 4'

NEW SCE SERVICE SUBSTATION

SCALE: 1/4"=1'-0"

1 - E460 -

N

SHEET NOTES:

1. CONTRACTOR SHALL FIELD VERIFY LOCATION & REQUIREMENTS OF ALL DEVICES REQUIRING ELECTRICAL CONNECTION PRIOR TO BID PROPOSAL, ROUGH-IN AND FINISH.
2. COORDINATE WORK WITH OTHER TRADES. OBTAIN ALL DRAWINGS THAT WILL REQUIRE COORDINATION AND PROVIDE ALL ELECTRICAL CONNECTIONS, DEVICES, AND WIRING REQUIRED WHETHER SHOWN ON ELECTRICAL DRAWINGS OR NOT.
3. CONTRACTOR SHALL FURNISH AND INSTALL PULL BOXES AS REQUIRED TO INSTALL CONDUCTORS PER CONDUCTOR MANUFACTURERS RECOMMENDATIONS, PER THE NATIONAL ELECTRICAL CODE AND PER LOCAL AUTHORITIES HAVING JURISDICTION.
4. 1" CONDUIT MINIMUM U.O.N.

KEY NOTES:

1. ALREADY CONTRACTOR PROVIDED & INSTALLED IN PHASE 1 PER SCE STANDARDS & APPROVED PLANS
2. AFTER NEW 120/208 VAC FEEDER & SERVICE/SWITCHBOARD WORK IS COMPLETED IN PHASE 2 SCE TO CONNECT 16 KV FEEDER TO NEW SCE TRANSFORMER & DISCONNECT EXISTING BLOCK HOUSE TRANSFORMER.
3. CONDUIT INSTALLED PER E201 WORK EFFORT.
4. EXISTING CONDUIT PER E201, E140 & E400, CONTRACTOR TO PROVIDE NEW FEEDER CONDUCTORS & NEW ADDITIONAL CONDUIT EXTENSION TO DB PER E140, E141, E201, E205, E400, E450 & E451.

KEY MAP

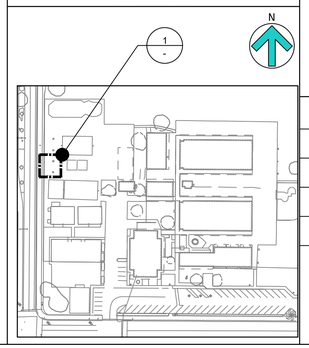

DSA STAMP

REV#	DESCRIPTION	DATE
	.	.
	.	.
	.	.
	.	.
	.	.
	.	.
	.	.

STAMP

REGISTERED PROFESSIONAL ENGINEER
KENNETH W. KACZA
No. E 8340
Exp. 09/30/2026
ELECTRICAL
STATE OF CALIFORNIA

LUCCI & ASSOCIATES
CONSULTING ELECTRICAL ENGINEERS
3251 CORTE MALPASO, #511
CAMARILLO, CA 93012-8894
PHONE (805) 389-6520 FAX (805) 389-6519

SHEET TITLE: NEW SCE SERVICE SUBSTATION

PROJECT: LAS POSAS ELEMENTARY SCHOOL
75 EAST CALLE LA GUERRA
CAMARILLO, CA 93010
- CHANGE OUT SERVICE TRANSFORMER AND METER MAIN

DRAWN: L.K./D.S./I.T.
CHECKED: K. LUCCI
DATE: 04/08/2025
SCALE: AS NOTED
JOB NO. 21-404
SHEET: E460
OF: SHEETS:

DRAFTER: CM02 DRAWING FILENAME: 21-404 E460 PATHNAME: G:\21\404\EL\Sheets\COMBINED_P1-P2 PLOT BY: CM02
DATE: 26 April 2025 TIME: 4:04 pm
PLOT DATE: 4/26/2025 4:04:53 PM
SAVE DATE: 4/7/2025 11:45:36 AM
DRAWING: G:\21\404\EL\Sheets\COMBINED_P1-P2\21-404 E460.dwg
Drafter:CM02 Paper Size: 12.0
Drawing:G:\21\404\EL\Sheets\COMBINED_P1-P2\21-404 E460.dwg
Date: 4/7/2025 Time: 11:45:36
Attached XREFS:
XREF:G:\21\404\EL\xrefs\21-404 TB.dwg
XREF:G:\21\404\EL\xrefs\21-404 E-Xrefs.dwg
XREF:G:\21\404\Arch\SITE\SITE PLAN\LAS POSAS ELEMENTARY SCHOOL.dwg
XREF:G:\21\404\Arch\SITE\SITE PLAN\LAS POSAS ELEMENTARY SCHOOL.dwg
Drafter:CM01: G:\21\404\EL\Sheets\PHASE-2\21-404 E410.dwg; DATE: APR 02, 2024 TIME: 11:59 AM

GENERAL NOTES

1. ALL WORK SHALL CONFORM WITH THE 2022 CALIFORNIA BUILDING CODE, AND ALL LOCAL ORDINANCES.
2. THE CONTRACTOR SHALL VERIFY ALL DIMENSIONS AND CONDITIONS PRIOR TO STARTING CONSTRUCTION AND BRING TO THE ATTENTION OF THE ENGINEER ANY DISCREPANCIES OR INCONSISTENCIES.
3. NO STRUCTURAL MEMBER SHALL BE CUT, NOTCHED, BORED OR OTHER-WISE WEAKENED EXCEPT AS ALLOWED BY THE CALIFORNIA BUILDING CODE OR APPROVED BY THE ENGINEER.
4. THE ENGINEER SHALL BE NOTIFIED OF ANY UNUSUAL OR UNFORSEEN CONDITION WHICH EFFECTS THE STRUCTURAL STABILITY OF THE BUILDING PRIOR TO CONTINUING WITH CONSTRUCTION. SHOULD ANY CONDITION ARISE WHERE THERE APPEARS TO BE AN ERROR ON THE DRAWINGS OR A DISCREPANCY BETWEEN THE DRAWINGS AND CONDITIONS IN THE FIELD, THE ENGINEER SHALL BE NOTIFIED PRIOR TO CONTINUING WITH THE WORK.
5. IN THE CASE WHERE TWO OR MORE DETAILS APPLYING TO THE SAME PART OF THE WORK ARE IN CONFLICT, THE MOST RESTRICTIVE SHALL GOVERN UNLESS CLARIFIED OR OTHERWISE APPROVED BY THE ENGINEER.
6. REVIEW OF SHOP DRAWINGS MEANS REVIEW OF GENERAL METHOD OF FABRICATION ONLY. DIMENSIONS AND QUANTITIES MAY NOT BE CHECKED, AND REVIEW OF THE SHOP DRAWINGS DOES NOT RELIEVE THE CONTRACTOR FROM COMPLIANCE WITH THE CONSTRUCTION DOCUMENTS UNLESS SPECIFICALLY SO INDICATED IN THE REVIEW.
7. THE ENGINEER HAS NOT BEEN RETAINED FOR SUPERVISION OR INSPECTION DURING CONSTRUCTION, BUT WILL RESOLVE STRUCTURAL ITEMS BROUGHT TO HIS ATTENTION DURING CONSTRUCTION.
8. THE CONTRACTOR SHALL BE RESPONSIBLE FOR ALL SHORING AND BRACING REQUIRED TO PROTECT PERSONNEL AND ADJACENT PROPERTY DURING CONSTRUCTION. THE CONTRACTOR SHALL ADEQUATELY BRACE ELEMENTS OF THE STRUCTURE DURING CONSTRUCTION TO INSURE THE SAFETY OF THE STRUCTURE.
9. (E) INDICATES EXISTING CONDITION OR MEMBER, (N) NEW.

FOUNDATION

1. THERE IS NO SOILS REPORT FOR THIS PROJECT AND AN ASSUMED SOIL BEARING VALUE OF 1,000 PSF, (NET), HAS BEEN USED IN THE DESIGN OF THE PAD.
2. THE NEW SWITCHBOARD PAD/MAT SHALL BEAR A MINIMUM OF 8" INTO FIRM, UNDISTURBED SOILS. THE CONTRACTOR SHALL RECOMPACT THE SOILS UNDERNEATH THE NEW PAD/MAT AS NECESSARY.

CONCRETE

1. ALL CONCRETE UNLESS OTHERWISE SHOWN ON THE PLANS SHALL BE HARDROCK CONFORMING TO ASTM C-94 WITH A MINIMUM COMPRESSIVE STRENGTH AT 28 DAYS OF F'c = 3,000 PSI.
2. AGGREGATE FOR THE CONCRETE SHALL CONFORM TO ASTM C-33, INCLUDING APPENDIX "X1".
3. THE CONTRACTOR SHALL TAKE ADEQUATE PRECAUTIONS FOR MIXING, PLACING, FINISHING, CURING, AND PROTECTING CONCRETE DURING UNFAVORABLE WEATHER CONDITIONS.
4. ALL REINFORCING STEEL SHALL BE NEW STOCK DEFORMED BAR CONFORMING TO ASTM A-615, GRADE 60 EXCEPT#3 BARS MAY BE GRADE 40.. ALL WELDED REINF. STEEL SHALL BE ASTM- A706. ALL BARS SHALL BE FREE OF RUST, GREASE, MILL SCALE OR ANY OTHER MATERIALS WHICH MIGHT AFFECT ITS BOND TO THE CONCRETE ALL BAR BENDS SHALL BE MADE COLD.
5. PROVIDE 3/4" CHAMFER ON ALL EXPOSED CORNERS.
6. BAR SPLICES SHALL BE LAP SPLICES w/ MIN. 40 BAR DIAM. LAP w/ AN 18" MINIMUM, (WHICHEVER IS GREATER). STAGGER LAP SPLICES OF MULTIPLE BARS, (i.e. IN CONT. FOOTING w/ 2 HORIZ. BARS TOP AND BOTTOM STAGGER TOP BAR LAP SPLICES AND STAGGER BOTTOM BAR LAP SPLICES- SPLICES DO NOT HAVE TO BE STAGGERED BETWEEN TOP AND BOTTOM BARS).
7. REINFORCING BARS SHALL HAVE THE FOLLOWING CONCRETE COVER, (UNLESS NOTED OTHERWISE IN DETAILS):
   CONCRETE POURED AGAINST EARTH.....3 INCHES
   CONCRETE BEAMS AND COLUMNS.....2 INCHES
   CONCRETE SLABS ABOVE GRADE.....1 INCH
8. DRYPACK SHALL BE MIXED IN THE PROPORTIONS OF 1 PART PORTLAND CEMENT TO 2-1/2 PARTS SAND WITH ENOUGH WATER TO PRODUCE A STIFF MIX. DRYPACK SHALL BE THOROUGHLY TAMPED INTO PLACE TO ENSURE A DENSE FINISH, FREE OF VOIDS.
9. THE SLUMP OF THE CONCRETE SHALL BE THE MINIMUM THAT IS PRACTICABLE. WHEN VIBRATORS ARE USED TO CONSOLIDATE THE CONCRETE, THE SLUMP SHALL NOT EXCEED 4 INCHES, OTHERWISE THE SLUMP SHALL NOT EXCEED 6 INCHES.
10. ALL CONCRETE SHALL BE ADEQUATELY CONSOLIDATED DURING PLACEMENT AND ALL REINFORCING STEEL AND EMBEDDED ITEMS SHALL BE SECURELY TIED IN PLACE TO PREVENT DISPLACEMENT DURING CONCRETE PLACEMENT.
11. EXCEPT WHERE INDICATED OTHERWISE, ALL REINFORCING STEEL SHALL BE BENT AND PLACED IN ACCORDANCE WITH THE "CODE OF STANDARD PRACTICE AND THE SPECIFICATIONS FOR PLACING REINFORCING STEEL" OF THE CONCRETE REINFORCING STEEL INSTITUTE.

SPECIAL INSPECTIONS

PROVIDE SPECIAL INSPECTION BY A LICENSED DEPUTY INSPECTOR APPROVED BY THE LOCAL BUILDING OFFICAL FOR THE FOLLOWING WORK IN ACCORDANCE WITH THE REQUIREMENTS OF CHAPTER 17 OF THE CALIFORNIA BUILDING CODE:

1. FOR ALL "POST INSTALLED" ANCHORS, (MECHANICAL EXPANSION BOLTS AND EPOXIED THREADED RODS ANCHOR).

SWITCHGEAR ANCHORAGE

THE SWITCHGEAR SHALL BE ANCHORED TO THE NEW 8" THICK CONCRETE MAT/SLAB WITH SIMPSON STRONG-BOLT 2 STAINLESS STEEL WEDGE ANCHORS PLACED IN THE EXISTING HOLES AT THE BASE OF THE EQUIPMENT PER THE TABLES BELOW:

SIMPSON STAINLESS STEEL STRONG-BOLT 2

PRE-DRILLED HOLE SIZE IN EQUIP. BASE	ANCHOR SIZE	MIN. HOLE DEPTH	NOMINAL EMBED. DEPTH	TORQUE (FT. LB.)
0.69" DIAM.	5/8" DIAM.	5"	4-3/8 "	80

ALL ANCHORS SHALL BE STANLESS STEEL SIMPSON STRONG-BOLT 2 EXPANSION ANCHORS INSTALLED PER ICC-ESR - 3037 w/ SPECIAL INSPECTION REQUIRED BY A LICENSED DEPUTY INSPECTOR

THE CONTRACTOR SHALL LOCATE ALL EXISTING SLAB HORIZONTAL REINFORCING STEEL PRIOR TO DRILLING FOR EXPANSION ANCHORS TO AVOID DAMAGING SLAB REINF. STEEL.

UNDERGROUND SERVICE ALERT
CALL BEFORE YOU DIG
CALL :TOLL FREE 1-800-227-2600
TWO WORKING DAYS BEFORE YOU DIG

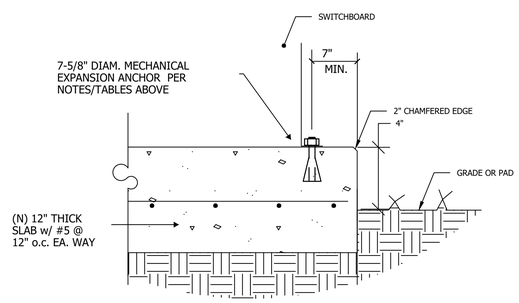

SWITCHBOARD MS FOUNDATION & INSTALLATION 3

SCALE: NTS — E600

DETAIL NOTES:

1. PAD OVERHANG TO REST ON UNDISTURBED EARTH OR WELL COMPACTED BACKFILL TO PREVENT FUTURE SUBSIDENCE.
2. THE SLAB 30"x48" CLEAR OPENING SHALL BE COVERED WITH A 2-1/2'x4' RPM COVER AS SHOWN ON UGS 618. (6) 1/2" STAINLESS STEEL BOLTS WITH STAINLESS STEEL CAPTIVE WASHERS SHALL BE SUPPLIED FOR COVER BOLT DOWN.
3. SLAB RPM COVER RECESS SHALL BE CONCRETE (NONMETAL FRAMED), AND PROVIDE WITH (6) 1/2" THREADED INSERTS, EACH WITH CLEAN OUT HOLES.
4. AN 8' MINIMUM CLEARANCE IS REQUIRED DIRECTLY IN FRONT OF TRANSFORMER FOR OPERATION.
5. SLAB BOX, GROUND RODS, CLAMPS, AND WIRE SHALL BE FURNISHED AND INSTALLED BY THE CONTRACTOR. SEE UGS 703 FOR APPROVED GROUNDING MATERIALS. GROUND WIRE TO BE A MINIMUM OF 2/0 BARE COPPER.
6. MASTIC SEALANT IS REQUIRED AT ALL JOINTS.
7. SEE UGS 530.2 FOR CONDUIT ENTRANCE GUIDELINES.
8. SEE UGS 500 FOR APPROVED MANUFACTURERS.
9. SIDE OR BACK OF PAD TO BE MINIMUM 3' FROM ADJACENT BUILDING SURFACE.
10. CONTRACTOR SHALL PROVIDE PROTECTIVE BARRIERS PER CLU REQUIREMENTS.

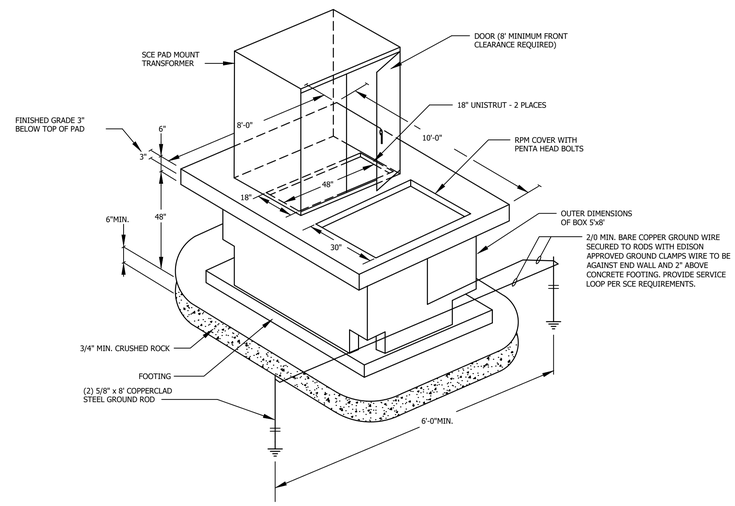

SERVICE TRANSFORMER SLAB BOX DETAIL 2

SCALE: NTS VERIFY WITH SCE — E600

DETAIL NOTES:

1. TRENCH DEPTH SHALL BE 43" MIN. BELOW ELEVATION OF FINISHED GRADE.

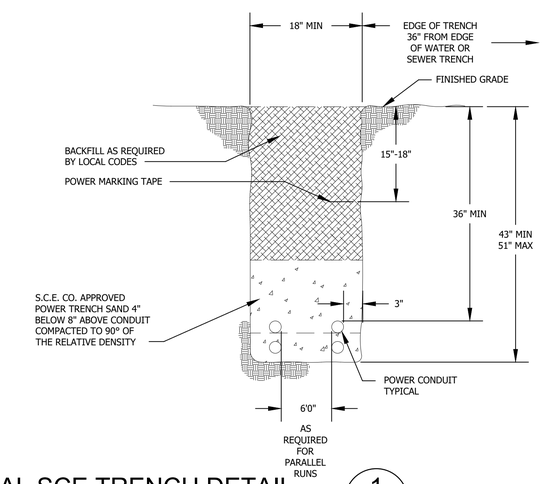

TYPICAL SCE TRENCH DETAIL 1

SCALE: NTS VERIFY WITH SCE — E600

DSA STAMP

REV#	DESCRIPTION	DATE
	.	.
	.	.
	.	.
	.	.
	.	.
	.	.
	.	.

STAMP

REGISTERED PROFESSIONAL ENGINEER — KENNETH W. LUCCI — No. E 8340 — Exp. 09/30/2026 — ELECTRICAL — STATE OF CALIFORNIA

LUCCI & ASSOCIATES
CONSULTING ELECTRICAL ENGINEERS
3251 CORTE MADRID, #511
CHANDLER, CA 92026-6094
PHONE (805) 389-6520 FAX (805) 389-6519

SHEET TITLE: ELECTRICAL DETAILS

PROJECT: LAS POSAS ELEMENTARY SCHOOL
75 EAST CALLE LA GUERRA
CAMARILLO, CA 93010
- CHANGE OUT SERVICE TRANSFORMER AND METER MAIN

DRAWN: L.K./D.S./I.T.
CHECKED: K. LUCCI
DATE: 04/08/2025
SCALE: AS NOTED
JOB NO. 21-404
SHEET: E600
OF: SHEETS:

PATHNAME: G:\21\404\EL\Sheets\COMBINED_P1-P2 DATE: 26 April 2025 TIME: 4:04 pm
SAVE DATE: 4/7/2025 11:53:37 AM PLOT BY: CM02 PLOT DATE: 4/26/2025 4:04:56 PM
DRAFTER: CM02 DRAWING FILENAME: 21-404 E600
DRAWING: G:\21\404\EL\Sheets\COMBINED_P1-P2\21-404 E600.dwg
Drafter:CM02 Paper Size: 12.0
Drawing:G:\21\404\EL\Sheets\COMBINED_P1-P2\21-404 E600.dwg
Layout: E600 Date: 4/7/2025
Attached XREFS:
XREF:G:\21\404\EL\Sheets\21-404 TB.dwg

TRAFFIC RATED PULLBOX (4 / E601)

SCALE: NONE

INSTALL ON 24" OF COMPACTED CRUSH ROCK 3/4" MAXIMUM. TOP COVER TO BE FLUSH WITH FINISHED GRADE, NO SPLICES IN PULLBOX.

DETAIL NOTES:

1. CONCRETE-ENCASED ELECTRODE: AN ELECTRODE ENCASED BY AT LEAST 2 INCHES (50.8MM) OF CONCRETE. LOCATED WITHIN AND NEAR THE BOTTOM OF A CONCRETE FOUNDATION OR FOOTING THAT IS IN DIRECT CONTACT WITH THE EARTH, CONSISTING OF AT LEAST 20 FEET (6.1 M) OF ONE OR MORE BARE OR ZINC GALVANIZED OR OTHER ELECTRICALLY CONDUCTIVE COATED STEEL REINFORCING BARS OR RODS OF NOT LESS THAN 1/2 INCH (12.7 MM) DIAMETER, OR CONSISTING OF AT LEAST 20 FEET (6.1 M) OF BARE COPPER CONDUCTOR NOT SMALLER THAN NO. 4, SEE PLANS FOR SIZE OF CONDUCTOR IF GREATER THAN #4.

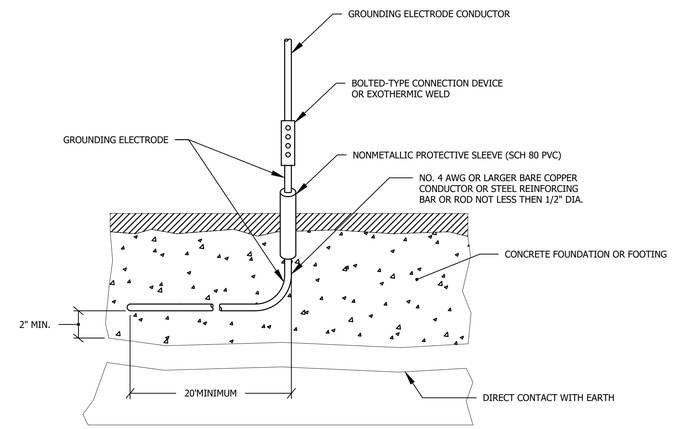

UFER GROUND DETAIL (2 / E601)

SCALE: NONE

DETAIL NOTES:

1. TRENCH DEPTH SHALL BE 43" MIN. BELOW ELEVATION OF FINISHED GRADE.

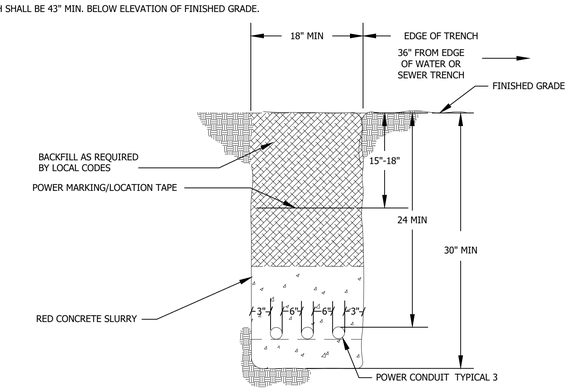

TYPICAL TRENCH DETAIL (5 / E601)

SCALE: NTS VERIFY WITH SCE

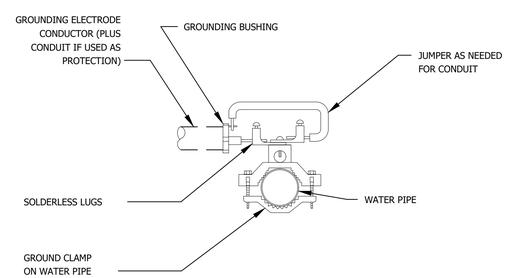

COLD WATER GROUND DETAIL (3 / E601)

SCALE: NONE

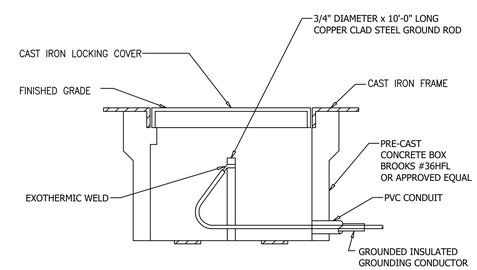

GROUND ROD AND PRE-CAST CONCRETE BOX DETAIL (1 / E601)

SCALE: NTS

DSA STAMP

REV#	DESCRIPTION	DATE
	.	.
	.	.
	.	.
	.	.
	.	.
	.	.
	.	.

STAMP

REGISTERED PROFESSIONAL ENGINEER
KENNETH W. LUCCI
No. E 8340
Exp. 09/30/2026
ELECTRICAL
STATE OF CALIFORNIA

LUCCI & ASSOCIATES
CONSULTING ELECTRICAL ENGINEERS
3251 CORTE MALPASO, #511
CAMARILLO, CA 93012-8894
PHONE (805) 389-6520 FAX (805) 389-6519

SHEET TITLE: ELECTRICAL DETAILS

PROJECT: LAS POSAS ELEMENTARY SCHOOL
75 EAST CALLE LA GUERRA
CAMARILLO, CA 93010
- CHANGE OUT SERVICE
TRANSFORMER AND METER MAIN

DRAWN: L.K./D.S./I.T.
CHECKED: K. LUCCI
DATE: 04/08/2025
SCALE: AS NOTED
JOB NO. 21-404
SHEET: E601
OF: SHEETS:

PATHNAME: G:\21\404\EL\Sheets\COMBINED_P1-P2 SAVE DATE: 4/4/2025 1:10:16 PM PLOT BY: CM02
DRAWING FILENAME: 21-404 E601 DRAFTER: CM02 DATE: 26 April 2025 PLOT DATE: 4/26/2025 4:04:59 PM TIME: 4:04 pm
DRAWING: G:\21\404\EL\Sheets\COMBINED_P1-P2\21-404 E601.dwg
Drafter:CM02 Paper Size: 12.0
Drawing:G:\21\404\EL\Sheets\COMBINED_P1-P2\21-404 E601.dwg
Page Setup: Layout: E601
Attached XREFS:
XREF:G:\21\404\EL\Layouts\21-404 TB.dwg
Drafter: CM01: G:\21\404\EL\Sheets\PHASE-1\21-404 E601.dwg; DATE: MAR 23, 2024 TIME: 12:44 PM

DATE: 26 April 2025 TIME: 4:05 pm
PLOT DATE: 4/26/2025 4:05:04 PM
PATHNAME: G:\21\404\EL\Sheets\COMBINED_P1-P2
SAVE DATE: 4/7/2025 11:52:48 AM
PLOT BY: CM02
DRAFTER: CM02
DRAWING FILENAME: 21-404 E605
DRAWING: G:\21\404\EL\Sheets\COMBINED_P1-P2\21-404 E605.dwg

GENERAL NOTES

1. ALL WORK SHALL CONFORM WITH THE 2022 CALIFORNIA BUILDING CODE, AND ALL LOCAL ORDINANCES.
2. THE CONTRACTOR SHALL VERIFY ALL DIMENSIONS AND CONDITIONS PRIOR TO STARTING CONSTRUCTION AND BRING TO THE ATTENTION OF THE ENGINEER ANY DISCREPANCIES OR INCONSISTENCIES.
3. NO STRUCTURAL MEMBER SHALL BE CUT, NOTCHED, BORED OR OTHER-WISE WEAKENED EXCEPT AS ALLOWED BY THE CALIFORNIA BUILDING CODE OR APPROVED BY THE ENGINEER.
4. THE ENGINEER SHALL BE NOTIFIED OF ANY UNUSUAL OR UNFORSEEN CONDITION WHICH EFFECTS THE STRUCTURAL STABILITY OF THE BUILDING PRIOR TO CONTINUING WITH CONSTRUCTION. SHOULD ANY CONDITION ARISE WHERE THERE APPEARS TO BE AN ERROR ON THE DRAWINGS OR A DISCREPANCY BETWEEN THE DRAWINGS AND CONDITIONS IN THE FIELD, THE ENGINEER SHALL BE NOTIFIED PRIOR TO CONTINUING WITH THE WORK.
5. IN THE CASE WHERE TWO OR MORE DETAILS APPLYING TO THE SAME PART OF THE WORK ARE IN CONFLICT, THE MOST RESTRICTIVE SHALL GOVERN UNLESS CLARIFIED OR OTHERWISE APPROVED BY THE ENGINEER.
6. REVIEW OF SHOP DRAWINGS MEANS REVIEW OF GENERAL METHOD OF FABRICATION ONLY. DIMENSIONS AND QUANTITIES MAY NOT BE CHECKED, AND REVIEW OF THE SHOP DRAWINGS DOES NOT RELIEVE THE CONTRACTOR FROM COMPLIANCE WITH THE CONSTRUCTION DOCUMENTS UNLESS SPECIFICALLY SO INDICATED IN THE REVIEW.
7. THE ENGINEER HAS NOT BEEN RETAINED FOR SUPERVISION OR INSPECTION DURING CONSTRUCTION, BUT WILL RESOLVE STRUCTURAL ITEMS BROUGHT TO HIS ATTENTION DURING CONSTRUCTION.
8. THE CONTRACTOR SHALL BE RESPONSIBLE FOR ALL SHORING AND BRACING REQUIRED TO PROTECT PERSONNEL AND ADJACENT PROPERTY DURING CONSTRUCTION. THE CONTRACTOR SHALL ADEQUATELY BRACE ELEMENTS OF THE STRUCTURE DURING CONSTRUCTION TO INSURE THE SAFETY OF THE STRUCTURE.
9. (E) INDICATES EXISTING CONDITION OR MEMBER, (N) NEW.

FOUNDATION

1. THERE IS NO SILS REPORT FOR THIS PROJECT AND AN ASSUMED SOIL BEARING VALUE OF 1,000 PSF, (NET), HAS BEEN USED IN THE DESIGN OF THE A/C PAD.
2. THE NEW GENERATOR PAD/MAT SHALL BEAR A MINIMUM OF 8" INTO FIRM, UNDISTURBED SOILS. THE CONTRACTOR SHALL RECOMPACT THE SOILS UNDERNEATH THE NEW PAD/MAT AS NECESSARY.

CONCRETE

1. ALL CONCRETE UNLESS OTHERWISE SHOWN ON THE PLANS SHALL BE HARDROCK CONFORMING TO ASTM C-94 WITH A MINIMUM COMPRESSIVE STRENGTH AT 28 DAYS OF F'c = 3,000 PSI.
2. AGGREGATE FOR THE CONCRETE SHALL CONFORM TO ASTM C-33, INCLUDING APPENDIX "X1".
3. THE CONTRACTOR SHALL TAKE ADEQUATE PRECAUTIONS FOR MIXING, PLACING, FINISHING, CURING, AND PROTECTING CONCRETE DURING UNFAVORABLE WEATHER CONDITIONS.
4. ALL REINFORCING STEEL SHALL BE NEW STOCK DEFORMED BAR CONFORMING TO ASTM A-615, GRADE 60 EXCEPT#3 BARS MAY BE GRADE 40.. ALL WELDED REINF. STEEL SHALL BE ASTM- A706. ALL BARS SHALL BE FREE OF RUST, GREASE, MILL SCALE OR ANY OTHER MATERIALS WHICH MIGHT AFFECT ITS BOND TO THE CONCRETE ALL BAR BENDS SHALL BE MADE COLD.
5. PROVIDE 3/4" CHAMFER ON ALL EXPOSED CORNERS.
6. BAR SPLICES SHALL BE LAP SPLICES w/ MIN. 40 BAR DIAM. LAP w/ AN 18" MINIMUM, (WHICHEVER IS GREATER). STAGGER LAP SPLICES OF MULTIPLE BARS, (i.e. IN CONT. FOOTING w/ 2 HORIZ. BARS TOP AND BOTTOM STAGGER TOP BAR LAP SPLICES AND STAGGER BOTTOM BAR LAP SPLICES- SPLICES DO NOT HAVE TO BE STAGGERED BETWEEN TOP AND BOTTOM BARS).
7. REINFORCING BARS SHALL HAVE THE FOLLOWING CONCRETE COVER, (UNLESS NOTED OTHERWISE IN DETAILS):
   CONCRETE POURED AGAINST EARTH.....3 INCHES
   CONCRETE BEAMS AND COLUMNS.....2 INCHES
   CONCRETE SLABS ABOVE GRADE.....1 INCH
8. DRYPACK SHALL BE MIXED IN THE PROPORTIONS OF 1 PART PORTLAND CEMENT TO 2-1/2 PARTS SAND WITH ENOUGH WATER TO PRODUCE A STIFF MIX. DRYPACK SHALL BE THOROUGHLY TAMPED INTO PLACE TO ENSURE A DENSE FINISH, FREE OF VOIDS.
9. THE SLUMP OF THE CONCRETE SHALL BE THE MINIMUM THAT IS PRACTICABLE. WHEN VIBRATORS ARE USED TO CONSOLIDATE THE CONCRETE, THE SLUMP SHALL NOT EXCEED 4 INCHES, OTHERWISE THE SLUMP SHALL NOT EXCEED 6 INCHES.
10. ALL CONCRETE SHALL BE ADEQUATELY CONSOLIDATED DURING PLACEMENT AND ALL REINFORCING STEEL AND EMBEDDED ITEMS SHALL BE SECURELY TIED IN PLACE TO PREVENT DISPLACEMENT DURING CONCRETE PLACEMENT.
11. EXCEPT WHERE INDICATED OTHERWISE, ALL REINFORCING STEEL SHALL BE BENT AND PLACED IN ACCORDANCE WITH THE "CODE OF STANDARD PRACTICE AND THE SPECIFICATIONS FOR PLACING REINFORCING STEEL" OF THE CONCRETE REINFORCING STEEL INSTITUTE.

DETAIL NOTES:

1. ALL EMPTY CONDUITS TO BE PROVIDED WITH METERED PULLWIRES THEIR ENTIRE LENGTH.
2. ALL CONDUITS BENDS SHALL BE FACTORY BENDS WITH MINIMUM 12 TIMES DIAMETER FOR BEND RADIUS.

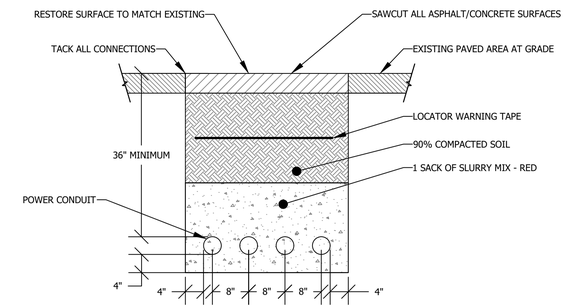

DUCTBANK SECTION 1 - E605
SCALE: NONE TO DB

SPECIAL INSPECTIONS

PROVIDE SPECIAL INSPECTION BY A LICENSED DEPUTY INSPECTOR APPROVED BY THE LOCAL BUILDING OFFICAL FOR THE FOLLOWING WORK IN ACCORDANCE WITH THE REQUIREMENTS OF CHAPTER 17 OF THE CALIFORNIA BUILDING CODE:

1. FOR ALL "POST INSTALLED" ANCHORS, (MECHANICAL EXPANSION BOLTS AND EPOXIED THREADED RODS ANCHOR).

SWITCHGEAR ANCHORAGE

THE SWITCHGEAR SHALL BE ANCHORED TO THE NEW 8" THICK CONCRETE MAT/SLAB WITH SIMPSON STRONG-BOLT 2 STAINLESS STEEL WEDGE ANCHORS PLACED IN THE EXISTING HOLES AT THE BASE OF THE EQUIPMENT PER THE TABLES BELOW:

SIMPSON STAINLESS STEEL STRONG-BOLT 2

PRE-DRILLED HOLE SIZE IN EQUIP. BASE	ANCHOR SIZE	MIN. HOLE DEPTH	NOMINAL EMBED. DEPTH	TORQUE (FT. LB.)
0.69" DIAM.	5/8" DIAM.	5"	4-3/8 "	80

ALL ANCHORS SHALL BE STANLESS STEEL SIMPSON STRONG-BOLT
2 EXPANSION ANCHORS INSTALLED PER ICC-ESR - 3037 w/
SPECIAL INSPECTION REQUIRED BY A LICENSED DEPUTY INSPECTOR

THE CONTRACTOR SHALL LOCATE ALL EXISTING SLAB HORIZONTAL REINFORCING STEEL PRIOR TO DRILLING FOR EXPANSION ANCHORS TO AVOID DAMAGING SLAB REINF. STEEL.

UNDERGROUND SERVICE ALERT
CALL BEFORE YOU DIG
CALL :TOLL FREE
1-800-227-2600
TWO WORKING DAYS BEFORE YOU DIG

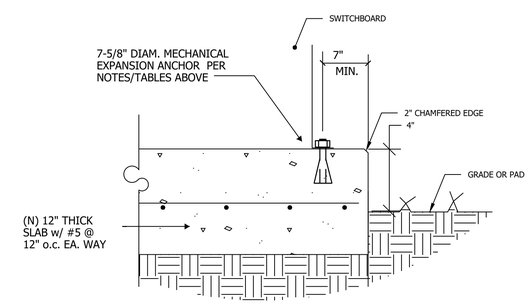

SWITCHBOARD DB FOUNDATION & INSTALLATION 2 - E605
SCALE: NTS

DSA STAMP

REV#	DESCRIPTION	DATE
	.	.
	.	.
	.	.
	.	.
	.	.
	.	.
	.	.

STAMP
REGISTERED PROFESSIONAL ENGINEER
KENNETH W. LUCCI
No. E 8340
Exp. 09/30/2026
ELECTRICAL
STATE OF CALIFORNIA

LUCCI & ASSOCIATES
CONSULTING ELECTRICAL ENGINEERS
3251 CORTE MADRID, #511
CAMARILLO, CA 93012-8094
PHONE (805) 389-6520 FAX (805) 389-6519

SHEET TITLE: ELECTRICAL DETAILS

PROJECT: LAS POSAS ELEMENTARY SCHOOL
75 EAST CALLE LA GUERRA
CAMARILLO, CA 93010
- CHANGE OUT SERVICE
TRANSFORMER AND METER MAIN

DRAWN: L.K./D.S./I.T.
CHECKED: K. LUCCI
DATE: 04/08/2025
SCALE: AS NOTED
JOB NO. 21-404
SHEET: E605
OF: SHEETS: