MIRROR LAKE ELEMENTARY SCHOOL
FIELD RENOVATION

A PORTION OF THE NE 1/4 OF THE SW 1/4 OF SEC. 08, TWN. 21 N., RGE. 04 E. W.M.
CITY OF FEDERAL WAY, KING COUNTY, WASHINGTON.

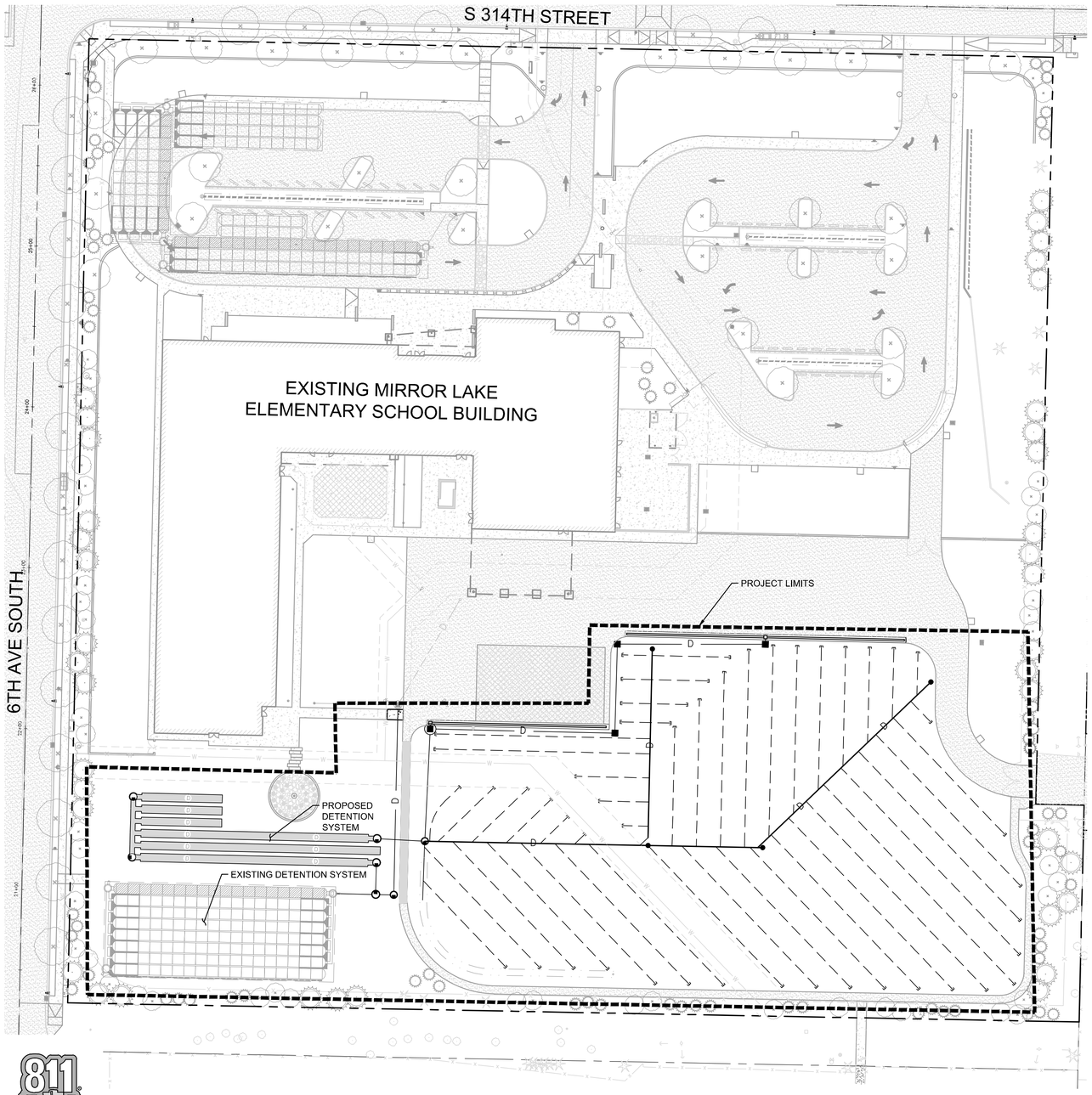

N

GRAPHIC SCALE

0 20 40 80

1" = 40 FEET

OWNER/APPLICANT
FEDERAL WAY PUBLIC SCHOOLS
33330 8TH AVENUE SOUTH
FEDERAL WAY, WA 98003
PHONE: 253-945-5990
CONTACT: STEPHEN NUTT
EMAIL: SNUTT@FWPS.ORG

LANDSCAPE ARCHITECT
AHBL INC.
1200 6TH AVE, SUITE 1620
SEATTLE, WA 98101
PHONE: 206-267-2425
CONTACT: CRAIG SKIPTON
EMAIL: CSKIPTON@AHBL.COM

CIVIL ENGINEER
AHBL INC.
2215 NORTH 30TH STREET, SUITE 300
TACOMA, WA 98403
PHONE: 253-383-2422
CONTACT: DAVID NASON
EMAIL: DNASON@AHBL.COM

VERTICAL DATUM
NGVD 29
FEDERAL WAY VERTICAL BENCHMARK 2200-01
MONUMENT IN CASE AT INTERSECTION OF 1ST AVE S & S 312TH ST.
PUBLISHED ELEVATION: 357.20'

BASIS OF BEARING
NAD 89/91
WASHINGTON STATE PLANE COORDINATE SYSTEM, NORTH ZONE
CITY OF FEDERAL WAY HORIZONTAL CONTROL
HOLDING COUNTY MONUMENT NUMBERS 101 AND 114

POINT NO. 101
N=118843.73
E=1270807.93
AT THE INTERSECTION OF SW 320TH ST W / 8TH AVE S

POINT NO. 114
N=121233.37
E=1268065.08
AT THE INTERSECTION OF 1ST AVE SW / S 312TH ST.

HELD A LINE BETWEEN FOUND MONUMENTS AT THE INTERSECTIONS OF 1ST AVE S WITH S 312TH ST AND 1ST AVE S AND S 320TH ST. SAID LINE BEARS NORTH 01°04'42" EAST.

LEGAL DESCRIPTION
PER CHICAGO TITLE INSURANCE COMPANY TITLE
ORDER NO. 0119604-TC DATE MARCH 15, 2018

THE SOUTHEAST QUARTER OF THE NORTHEAST QUARTER OF THE SOUTHWEST QUARTER OF SECTION 8, TOWNSHIP 21 NORTH, RANGE 4 EAST,
W.M., IN KING COUNTY, WASHINGTON; EXCEPT PORTION THEREOF FOR COUNTY ROAD KNOWN AS 8TH AVE S. EXCEPT THE WEST 30 FEET; EXCEPT THE NORTH 30 FEET; EXCEPT THE SOUTH 30 FEET.

AUTOCAD FILE
AN AUTOCAD DRAWING FILE IS AVAILABLE TO ASSIST WITH SITE LAYOUT. PLEASE NOTE THAT ELECTRONIC FILES ARE PROVIDED FOR CONTRACTOR'S CONVENIENCE AND SHALL NOT REPLACE NOR BE USED TO SUBSTITUTE THE CONTRACT DOCUMENTS. THE CONTRACTOR IS RESPONSIBLE FOR PROJECT LAYOUT ACCORDING TO CONTRACT DOCUMENTS AND COST FOR ELECTRONIC AUTOCAD FILES.
PHONE: (253) 383-2422
FAX: (253) 383-2572
CONTACT: JASON HEIN

AS-BUILT NOTE
CONTRACTOR SHALL FURNISH AS-BUILT RIM ELEVATIONS, PIPE INVERT ELEVATIONS, AND STRUCTURE LOCATIONS (COORDINATES) TO THE NEAREST 0.01 FOOT FOR ALL STORM DRAINAGE AND UTILITY STRUCTURES, AND AS-BUILT SLOPE MEASUREMENTS TO THE NEAREST 0.01% FOR ALL CURB RAMP AND LANDING PANEL JOINTS. CONTRACTOR SHALL ENGAGE WITH A PROFESSIONAL LAND SURVEYOR LICENSED IN THE STATE OF WASHINGTON TO FURNISH AS-BUILT INFORMATION.

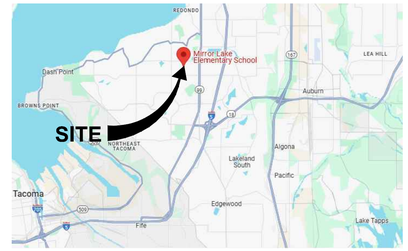

VICINITY MAP
NOT TO SCALE

N

PARCEL NUMBER
0821049035

SITE ADDRESS
625 S 314TH ST
FEDERAL WAY, WA 98003

TOPOGRAPHIC NOTE
THE EXISTING CULTURAL AND TOPOGRAPHIC DATA SHOWN ON THESE DRAWINGS HAS BEEN PREPARED, IN PART, BASED UPON INFORMATION FURNISHED BY OTHERS. WHILE THIS INFORMATION IS BELIEVED TO BE RELIABLE, AHBL CANNOT ENSURE ACCURACY AND THUS IS NOT RESPONSIBLE FOR THE ACCURACY OF THAT INFORMATION OR FOR ANY ERRORS OR OMISSIONS WHICH MAY HAVE BEEN INCORPORATED INTO THESE DRAWINGS AS A RESULT.

TRENCH NOTE
IF WORKERS ENTER ANY TRENCH OR OTHER EXCAVATION FOUR OR MORE FEET IN DEPTH THAT DOES NOT MEET THE OPEN PIT REQUIREMENTS OF WSDOT SECTION 2-09.3(3)B, IT SHALL BE SHORED AND CRIBBED. THE CONTRACTOR ALONE SHALL BE RESPONSIBLE FOR WORKER SAFETY AND AHBL ASSUMES NO RESPONSIBILITY. ALL TRENCH SAFETY SYSTEMS SHALL MEET THE REQUIREMENTS OF THE WASHINGTON INDUSTRIAL SAFETY AND HEALTH ACT, CHAPTER 49.17 RCW.

UTILITY NOTE
THE LOCATIONS OF EXISTING UNDERGROUND UTILITIES ARE APPROXIMATE ONLY AND HAVE NOT BEEN INDEPENDENTLY VERIFIED BY THE OWNER OR ITS REPRESENTATIVE. THE CONTRACTOR SHALL DETERMINE THE EXACT LOCATION OF ALL EXISTING UTILITIES BEFORE COMMENCING WORK AND AGREES TO BE FULLY RESPONSIBLE FOR ANY AND ALL DAMAGES THAT INCUR DUE TO THE CONTRACTOR'S FAILURE TO LOCATE EXACTLY AND PRESERVE ANY AND ALL UNDERGROUND UTILITIES. AHBL ASSUMES NO LIABILITY FOR THE LOCATION OF UNDERGROUND UTILITIES.

CIVIL SHEET INDEX

Sheet No.	Sheet Title
C0.0	COVER
C1.0	TESC AND DEMOLITION
C2.0	STORM DRAINAGE PLAN
C3.0	DETAILS
C3.1	DETAILS
C3.2	DETAILS
C3.3	DETAILS
L1.0	MATERIAL PLAN
L1.1	MATERIAL DETAILS
L2.0	PLANTING & SOILS PLAN
L2.1	PLANTING & SOILS DETAILS
L3.0	IRRIGATION PLAN
L3.1	IRRIGATION DETAILS

NOTE:
THIS APPROVAL IS VOID 1 (ONE) YEAR AFTER APPROVAL DATE. THE CITY WILL NOT BE RESPONSIBLE FOR ERRORS AND/OR OMISSIONS ON THESE PLANS.
FIELD CONDITIONS MAY DICTATE CHANGES TO THESE PLANS AS DETERMINED BY THE CITY ENGINEER.

PERMIT NO. 24-104059-PC

APPROVED

DATE

811 Know what's below. Call before you dig.

FILL SPECIFICATION
FILL MATERIAL SHALL NOT CONTAIN PETROLEUM PRODUCTS, OR SUBSTANCES WHICH ARE HAZARDOUS, DANGEROUS, TOXIC, OR WHICH OTHERWISE VIOLATE ANY STATE, FEDERAL, OR LOCAL LAW, ORDINANCE, CODE, REGULATION, RULE, ORDER, OR STANDARD.

AHBL
TACOMA · SEATTLE · SPOKANE · TRI-CITIES
2215 North 30th Street, Suite 300 Tacoma, WA 98403
253.383.2422 TEL 253.383.2572 FAX www.ahbl.com WEB

Project Title:

MIRROR LAKE ELEMENTARY SCHOOL FIELD RENOVATION

Client:

FEDERAL WAY PUBLIC SCHOOL
33330 8TH AVENUE SOUTH
FEDERAL WA, WA 98003

Project No.

2240123.10

Issue Set & Date:

BID SET

APRIL 11, 2025

DAVID CHRISTOPHER NASON
STATE OF WASHINGTON
39383
REGISTERED
PROFESSIONAL ENGINEER

4/11/2025

NOTICE
ALTERATION OF THIS DOCUMENT SHALL INVALIDATE THE PROFESSIONAL SEAL AND SIGNATURE. PUBLICATION OF THIS DOCUMENT DOES NOT DEROGATE FROM RESERVED OWNERSHIP RIGHTS IN IT. THIS DOCUMENT IS FOR USE ONLY FOR THE PROJECT IDENTIFIED IN THE TITLE BLOCK AND IS NOT TO BE USED FOR REPAIR, REMODEL OR ADDITION TO THAT PROJECT OR FOR ANY OTHER PROJECT.

Revisions:

Sheet Title:

COVER

Designed by:	Drawn by:	Checked by:
JDH	JDH	DCN

Sheet No.

C0.0

1 of 13 Sheets

MIRROR LAKE ELEMENTARY SCHOOL
FIELD RENOVATION

A PORTION OF THE NE 1/4 OF THE SW 1/4 OF SEC. 08, TWN. 21 N., RGE. 04 E. W.M.
CITY OF FEDERAL WAY, KING COUNTY, WASHINGTON.

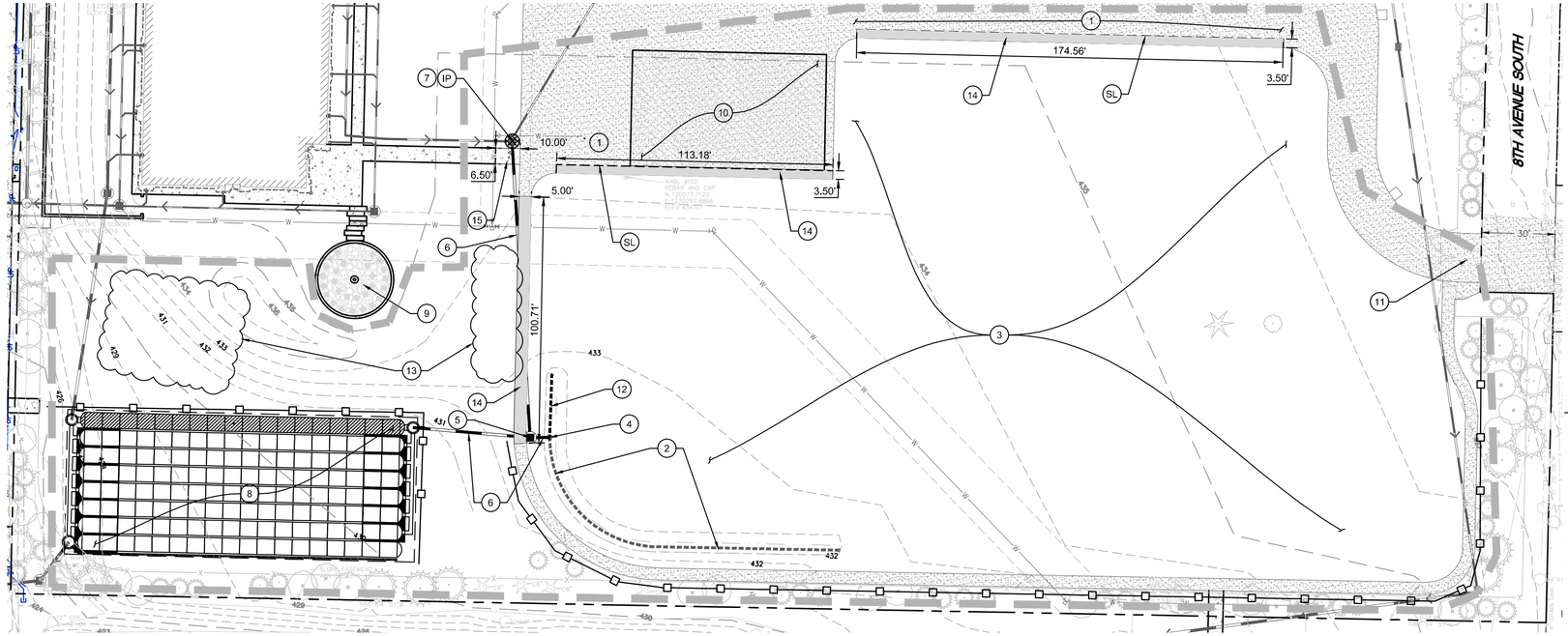

LEGEND

- CL — CLEARING / PROJECT LIMITS
- IP — INLET PROTECTION (2 / C1.0)
- SILT FENCE (1 / C1.0)
- SAWCUT LINE
- REMOVE EXISTING ASPHALT
- EXISTING TREE TO REMAIN
- XXX — EXISTING MAJOR CONTOURS
- XXX — EXISTING MINOR CONTOURS

KEYNOTES

1. PROTECT EXISTING ASPHALT TO REMAIN
2. PROTECT EXISTING FILTER DRAIN, 12" PERFORATED PIPE, AND MEDIA FILTER DRAIN MATERIAL.
3. REMOVE 8" DEPTH OF EXISTING TOPSOIL FROM FIELD. DEMOLISH EXISTING IRRIGATION COMPONENTS UNLESS OTHERWISE NOTED.
4. DEMOLISH AND REMOVE EXISTING YARD DRAIN. SEE KEYNOTE 12
5. DEMOLISH AND REMOVE EXISTING STORM MANHOLE.
6. DEMOLISH AND REMOVE EXISTING 12" STORM LINES.
7. PROVIDE INLET PROTECTION.
8. PROTECT EXISTING UNDERGROUND STORMWATER CHAMBERS, TO REMAIN. DO NOT DRIVE CONSTRUCTION EQUIPMENT, STOCK PILE SOIL OR RE-GRADE OVERTOP OF STORMWATER CHAMBERS.
9. PROTECT EXISTING PLAZA, TO REMAIN.
10. PROTECT EXISTING PLAYGROUND EQUIPMENT AND PAD, TO REMAIN.
11. ENSURE EMERGENCY VEHICLE ACCESS TO THE BACK OF THE SCHOOL IS LEFT ACCESSIBLE DURING CONSTRUCTION.
12. REMOVE 21 LF 12" PERFORATED PIPE. REFER TO SHEET C2.0 FOR IMPROVEMENTS TO THIS AREA.
13. SALVAGE EXISTING IRRIGATION REMOTE CONTROL VALVES AND VALVE BOXES FOR REINSTALLATION.
14. DEMOLISH EXISTING ASPHALT.
15. DEMOLISH EXISTING CONCRETE SIDEWALK.

GRAPHIC SCALE
0 15 30 60
1" = 30 FEET

N

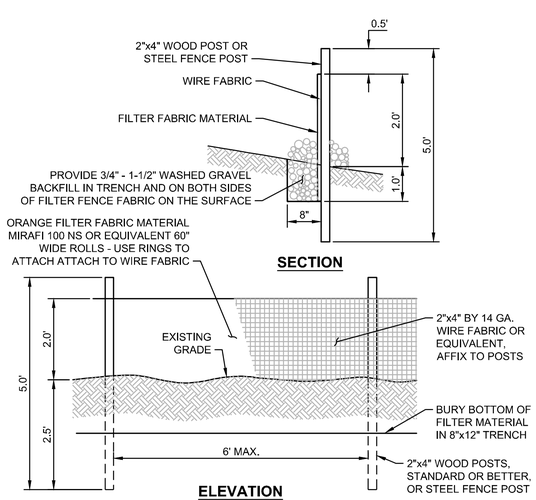

SILT FENCE NOTES:

1. THE FILTER FABRIC SHALL BE PURCHASED IN A CONTINUOUS ROLL CUT TO THE LENGTH OF THE BARRIER TO AVOID USE OF JOINTS. WHEN JOINTS ARE NECESSARY, FILTER CLOTH SHALL BE SPLICED TOGETHER ONLY AT A SUPPORT POST WITH A MINIMUM SIX-INCH OVERLAP, AND BOTH ENDS SECURELY FASTENED TO THE POST.
2. THE FILTER FABRIC FENCE SHALL BE INSTALLED TO FOLLOW THE CONTOURS (WHERE FEASIBLE). THE FENCE POSTS SHALL BE SPACED A MAXIMUM OF SIX FEET APART AND DRIVEN SECURELY INTO THE GROUND (MINIMUM OF 30").
3. A TRENCH SHALL BE EXCAVATED, ROUGHLY EIGHT INCHES WIDE AND TWELVE INCHES DEEP, UPSLOPE AND ADJACENT TO THE WOOD POST TO ALLOW THE FILTER FABRIC TO BE BURIED.
4. WHEN STANDARD STRENGTH FILTER FABRIC IS USED, A WIRE MESH SUPPORT FENCE SHALL BE FASTENED SECURELY TO THE UPSLOPE SIDE OF THE POSTS USING HEAVY-DUTY WIRE STAPLES AT LEAST ONE INCH LONG, TIE WIRES, OR HOG RINGS. THE WIRE SHALL EXTEND INTO THE TRENCH A MINIMUM OF FOUR INCHES AND SHALL NOT EXTEND MORE THAN THIRTY SIX INCHES ABOVE THE ORIGINAL GROUND SURFACE.
5. THE STANDARD STRENGTH FILTER FABRIC SHALL BE STAPLED OR WIRED TO THE FENCE, AND TWENTY INCHES OF THE FABRIC SHALL BE EXTENDED INTO THE TRENCH. THE FABRIC SHALL NOT EXTEND MORE THAN THIRTY SIX INCHES ABOVE THE ORIGINAL GROUND SURFACE. FILTER FABRIC SHALL NOT BE STAPLED TO EXISTING TREES.
6. WHEN EXTRA-STRENGTH FILTER FABRIC AND CLOSER POST SPACING ARE USED, THE WIRE MESH SUPPORT FENCE MAY BE ELIMINATED. IN SUCH A CASE, THE FILTER FABRIC IS STAPLED OR WIRED DIRECTLY TO THE POSTS WITH ALL OTHER PROVISIONS OF STANDARD NOTE (S) APPLYING.
7. THE TRENCH SHALL BE BACKFILL WITH 3/4 INCH MINIMUM DIAMETER WASHED GRAVEL.
8. FILTER FABRIC FENCES SHALL BE REMOVED WHEN THEY HAVE SERVED THEIR USEFUL PURPOSE. BUT NOT BEFORE THE UPSLOPE AREA HAS BEEN PERMANENTLY STABILIZED.
9. FILTER FABRIC FENCES SHALL BE INSPECTED IMMEDIATELY AFTER EACH RAINFALL AND AT LEAST DAILY DURING PROLONGED RAINFALL. ANY REQUIRED REPAIRS SHALL BE MADE IMMEDIATELY.
10. DO NOT INSTALL BELOW AN OUTLET PIPE OR WEIR.
11. DO NOT DRIVE OVER OR FILL OVER FILTER FABRIC FENCE.

Know what's **below.** **Call** before you dig.

1 SILT FENCE
NOT TO SCALE

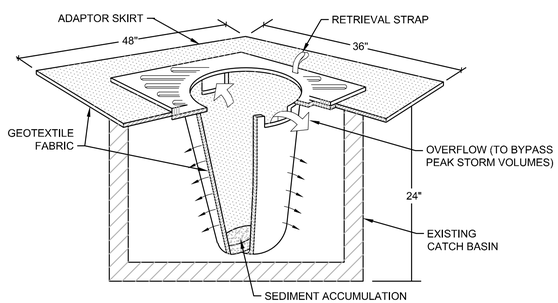

NOTES:
1. FILTERS SHALL BE INSPECTED AFTER EACH STORM EVENT AND CLEANED OR REPLACED WHEN 1/3 FULL.
2. INSTALL INLET PROTECTION IN ALL NEW STORM STRUCTURES THAT WILL COLLECT STORMWATER AS THEY ARE INSTALLED.

2 INLET PROTECTION
NOT TO SCALE

CLEARING LIMITS NOTE

THE CLEARING LIMITS SHOWN MAY NEED TO BE ADJUSTED TO PERFORM THE WORK. CONTRACTOR IS RESPONSIBLE FOR REVIEWING LIMITS AND CONFIRMING SILT FENCE LOCATION PRIOR TO WORK. ANY ADJUSTMENTS SHALL BE AT THE COST OF THE CONTRACTOR.

CONTRACTOR SHALL FURNISH, INSTALL, ADJUST, AND MAINTAIN TEMPORARY 6 FOOT CHAINLINK SECURITY FENCE AT SITE PERIMETER FOR ENTIRE DURATION OF PROJECT. SECURITY FENCE SHALL INCLUDE, BUT IS NOT NECESSARILY LIMITED TO, CHAINLINK FABRIC, RAILS, POSTS, GATES, LOCKS, AND BRACES.

NOTE:
THIS APPROVAL IS VOID 1 (ONE) YEAR AFTER APPROVAL DATE. THE CITY WILL NOT BE RESPONSIBLE FOR ERRORS AND/OR OMISSIONS ON THESE PLANS.
FIELD CONDITIONS MAY DICTATE CHANGES TO THESE PLANS AS DETERMINED BY THE CITY ENGINEER.

PERMIT NO. 24-104059-PC

APPROVED

DATE

AHBL
TACOMA • SEATTLE • SPOKANE • TRI-CITIES
2215 North 30th Street, Suite 300 Tacoma, WA 98403
253.383.2422 TEL 253.383.2572 FAX www.ahbl.com WEB

Project Title:

MIRROR LAKE ELEMENTARY SCHOOL FIELD RENOVATION

Client:

FEDERAL WAY PUBLIC SCHOOL
33330 8TH AVENUE SOUTH
FEDERAL WA, WA 98003

Project No.

2240123.10

Issue Set & Date:

BID SET

APRIL 11, 2025

JD CHRISTOPHER MASON
STATE OF WASHINGTON
39383
REGISTERED
PROFESSIONAL ENGINEER
4/11/2025

NOTICE
ALTERATION OF THIS DOCUMENT SHALL INVALIDATE THE PROFESSIONAL SEAL AND SIGNATURE. PUBLICATION OF THIS DOCUMENT DOES NOT DEROGATE FROM RESERVED OWNERSHIP RIGHTS IN IT. THIS DOCUMENT IS FOR USE ONLY FOR THE PROJECT IDENTIFIED IN THE TITLE BLOCK AND IS NOT TO BE USED FOR REPAIR, REMODEL OR ADDITION TO THAT PROJECT OR FOR ANY OTHER PROJECT.

4 ____
3 ____
2 ____
1 ____

Revisions:

Sheet Title:

TESC AND DEMOLITION

Designed by:	Drawn by:	Checked by:
JDH	JDH	DCN

Sheet No.

C1.0

2 of 13 Sheets

MIRROR LAKE ELEMENTARY SCHOOL
FIELD RENOVATION

A PORTION OF THE NE 1/4 OF THE SW 1/4 OF SEC. 08, TWN. 21 N., RGE. 04 E. W.M.
CITY OF FEDERAL WAY, KING COUNTY, WASHINGTON.

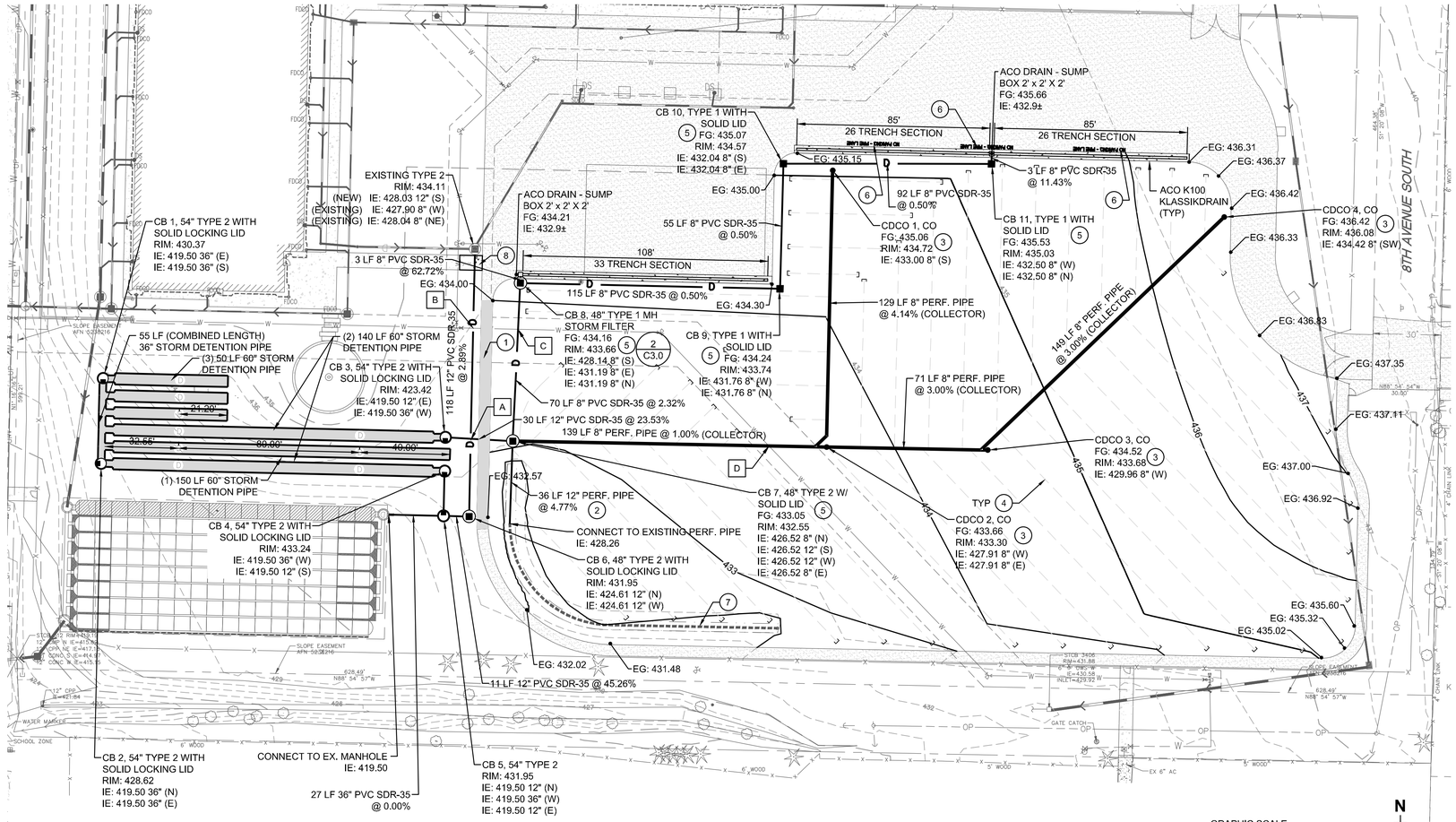

LEGEND

- CATCH BASIN TYPE 1 (4 / C3.0)
- COLLECTOR DRAIN CLEANOUT (REFER TO LANDSCAPE PLANS FOR DETAILS)
- ACO DRAIN - SUMP BOX (2 / C3.3)
- ACO K100 KLASSIKDRAIN (1 / C3.3)
- 8" PERFORATED COLLECTOR (REFER TO LANDSCAPE PLANS FOR DETAILS)
- 4" PERFORATED LATERAL (REFER TO LANDSCAPE PLANS FOR DETAILS)
- ASPHALT PAVEMENT (3 / C2.0)
- CONCRETE PAVEMENT (1 / C2.0)
- EXISTING MINOR CONTOURS
- EXISTING MAJOR CONTOURS
- PROPOSED MINOR CONTOUR
- PROPOSED MAJOR CONTOUR
- EG: 123.45 EXISTING GROUND (MATCH EXISTING)
- FG: 123.45 FINISHED GRADE

KEY NOTES

1. INSTALL ASPHALT PER DETAIL.
2. CONNECT TO EXISTING 12" PERFORATED PIPE AND CONNECT MEDIA FILTER DRAIN PIPE TO CB 7. REPAIR MEDIA FILTER DRAIN TO MATCH EXISTING. (2 / C2.0)
3. COLLECTOR DRAIN CLEANOUT TO BE INSTALLED 4" BELOW FINISHED GRADE. REFER TO DETAIL 4 ON SHEET L1.1.
4. FIELD UNDERDRAIN, SEE LANDSCAPE PLANS.
5. CATCH BASIN INSTALLED WITHIN PLAY FIELD TO BE INSTALLED 6" BELOW FINISHED GRADE.
6. PAINT "NO PARKING - FIRE LANE" WITH YELLOW PAINT TO MATCH EXISTING.
7. PROTECT EXISTING MEDIA FILTER DRAIN.
8. INSTALL CONCRETE WALK PER DETAIL.

PIPE CROSSING TABLE

X	FG ELEV	UPPER PIPE BOTTOM ELEV	LOWER PIPE TOP ELEV	VERTICAL SEPARATION
A	433.31	12" SD IE 425.66	12" SD TOP 423.79	1.87'
B	433.95	8" WTR IE 430.13	12" SD TOP 428.09	2.04'
C	433.81	8" WTR IE 430.14	8" SD TOP 428.40	1.74'
D	433.46	8" WTR IE 430.17	8" SD TOP 428.30	1.87'

STORM DRAINAGE NOTES

1. BARE GALVANIZED METAL SHALL NOT BE USED FOR MATERIALS THAT CONVEY STORMWATER, SUCH AS ROOFS, CANOPIES, SIDING, GUTTERS, DOWNSPOUTS, ROOF DRAINS AND PIPES. ANY GALVANIZED MATERIALS SHALL HAVE AN INERT, NON-LEACHALBE FINISH, SUCH AS BAKED ENAMEL, FLUOROCARBON PAINT (SUCH AS KYNAR OR HYLAR), FACTORY-APPLIED EPOXY, PURE ALUMINUM, OR ASPHALT COATING. ACRYLIC PAINT, POLYESTER PAINT, FIELD-APPLIED, AND PART ZINC (SUCH AS GALVALUME) COATINGS ARE NOT ACCEPTABLE.
2. BURIED UTILITIES ARE SHOWN IN THEIR APPROXIMATE LOCATION. PRIOR TO INSTALLATION OF ANY PROJECT IMPROVEMENTS, CONTRACTOR SHALL VERIFY LOCATION AND ELEVATION OF EXISTING UTILITIES. IN THE EVEN T OF ANY DISCREPANCY FROM THE INFORMATION PRESENTED ON THESE PLANS, CONTRACTOR SHALL NOTIFY THE DESIGN ENGINEER.
3. CONSTRUCT ALL UTILITIES IN CONFORMANCE WITH THE STORM DRAIN TRENCH SECTION DETAIL UNLESS NOTED OTHERWISE.
4. ALL STORM PIPES CONNECTING TO CONCRETE STRUCTURES SHALL BE GROUTED TO ASSURE CONNECTION AT STRUCTURE IS WATERTIGHT.

NOTE:
THIS APPROVAL IS VOID 1 (ONE) YEAR AFTER APPROVAL DATE. THE CITY WILL NOT BE RESPONSIBLE FOR ERRORS AND/OR OMISSIONS ON THESE PLANS. FIELD CONDITIONS MAY DICTATE CHANGES TO THESE PLANS AS DETERMINED BY THE CITY ENGINEER.

PERMIT NO. 24-104059-PC

APPROVED

DATE

GRAPHIC SCALE
0 15 30 60
1" = 30 FEET

N

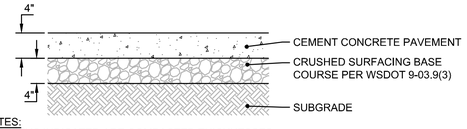

NOTES:
1. DEPTHS INDICATED ARE COMPACTED THICKNESSES.
2. CEMENT CONCRETE PAVEMENT SHALL CONSIST OF PORTLAND CEMENT CONCRETE WITH A MINIMUM COMPRESSIVE STRENGTH OF 4000 PSI AND A MINIMUM RUPTURE MODULUS OF 580 PSI.
3. ALL BASE MATERIAL SHALL BE COMPACTED TO A MINIMUM DENSITY OF 95% BASED ON THE MODIFIED PROCTOR MAXIMUM DRY DENSITY PER ASTM D-1557.
4. SUBGRADE SHALL BE COMPACTED TO A FIRM AND UNYIELDING CONDITION PRIOR TO PLACEMENT OF ANY PAVEMENT LAYERS. ANY LOCALIZED ZONES OF SOFT, ORGANIC-RICH, OR DEBRIS-LADEN SOILS SHOULD BE OVEREXCAVATED AND REPLACED WITH STRUCTURAL FILL MATERIAL.

1 CONCRETE PAVEMENT
NOT TO SCALE

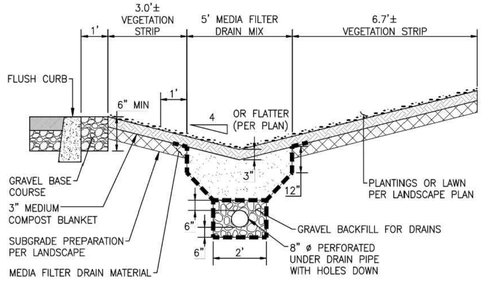

2 MEDIA FILTER DRAIN
NOT TO SCALE

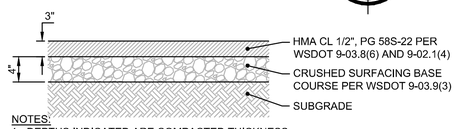

NOTES:
1. DEPTHS INDICATED ARE COMPACTED THICKNESS.
2. HMA SHALL BE COMPACTED TO A TARGET AVERAGE DENSITY OF 92% BASED ON THE RICE THEORETICAL MAXIMUM DENSITY PER ASTM D-2041. INDIVIDUAL LOCATIONS SHALL BE COMPACTED NOT LESS THAN 90% NOR MORE THAN 96%.
3. ALL ASPHALT BASE MATERIAL SHALL BE COMPACTED TO A MINIMUM DENSITY OF 95% BASED ON THE MODIFIED PROCTOR MAXIMUM DRY DENSITY PER ASTM D-1557.
4. SUBGRADE SHALL BE COMPACTED TO A FIRM AND UNYIELDING CONDITION PRIOR TO PLACEMENT OF ANY PAVEMENT LAYERS. ANY LOCALIZED ZONES OF SOFT, ORGANIC-RICH, OR DEBRIS-LADEN SOILS SHOULD BE OVEREXCAVATED AND REPLACED WITH STRUCTURAL FILL MATERIAL.
5. SEAL JOINTS WITH EMULSIFIED ASPHALT PER PROJECT SPECIFICATIONS.

3 ASPHALT PAVEMENT
NOT TO SCALE

Know what's below. Call before you dig.

AHBL
TACOMA • SEATTLE • SPOKANE • TRI-CITIES
2215 North 30th Street, Suite 300 Tacoma, WA 98403
253.383.2422 TEL 253.383.2572 FAX www.ahbl.com WEB

Project Title:

MIRROR LAKE ELEMENTARY SCHOOL FIELD RENOVATION

Client:

FEDERAL WAY PUBLIC SCHOOL
33330 8TH AVENUE SOUTH
FEDERAL WA, WA 98003

Project No.

2240123.10

Issue Set & Date:

BID SET

APRIL 11, 2025

JD CHRISTOPHER MASON — STATE OF WASHINGTON — 39383 — REGISTERED PROFESSIONAL ENGINEER

4/11/2025

NOTICE
ALTERATION OF THIS DOCUMENT SHALL INVALIDATE THE PROFESSIONAL SEAL AND SIGNATURE. PUBLICATION OF THIS DOCUMENT DOES NOT DEROGATE FROM RESERVED OWNERSHIP RIGHTS IN IT. THIS DOCUMENT IS FOR USE ONLY FOR THE PROJECT IDENTIFIED IN THE TITLE BLOCK AND IS NOT TO BE USED FOR REPAIR, REMODEL OR ADDITION TO THAT PROJECT OR FOR ANY OTHER PROJECT.

Revisions:

Sheet Title:

STORM DRAINAGE PLAN

Designed by:	Drawn by:	Checked by:
JDH	JDH	DCN

Sheet No.

C2.0

3 of 13 Sheets

MIRROR LAKE ELEMENTARY SCHOOL
FIELD RENOVATION

A PORTION OF THE NE 1/4 OF THE SW 1/4 OF SEC. 08, TWN. 21 N., RGE. 04 E. W.M.
CITY OF FEDERAL WAY, KING COUNTY, WASHINGTON.

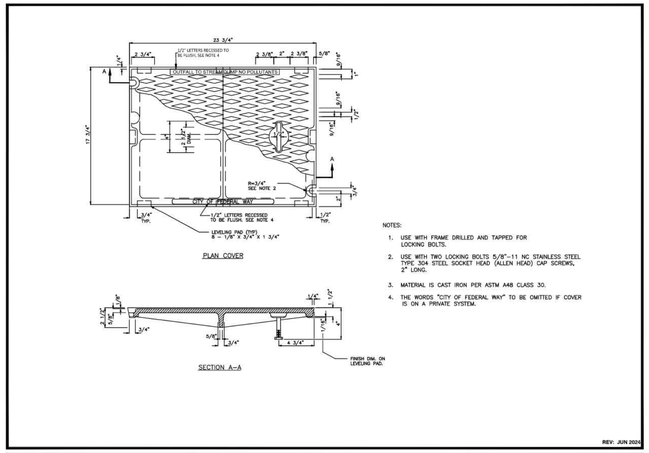

NOTES:
1. USE WITH FRAME DRILLED AND TAPPED FOR LOCKING BOLTS.
2. USE WITH TWO LOCKING BOLTS 5/8"-11 NC STAINLESS STEEL TYPE 304 STEEL SOCKET HEAD (ALLEN HEAD) CAP SCREWS, 2" LONG.
3. MATERIAL IS CAST IRON PER ASTM A48 CLASS 30.
4. THE WORDS "CITY OF FEDERAL WAY" TO BE OMITTED IF COVER IS ON A PRIVATE SYSTEM.

REV: JUN 2024

CITY OF Federal Way PUBLIC WORKS	SOLID RECTANGULAR COVER	STD. DETAIL FW.B30.20

1 SOLID LID - TYPE 1 CB
NOT TO SCALE

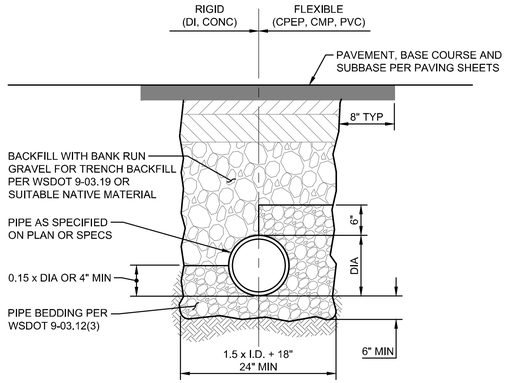

NOTES:
1. BACKFILL MATERIAL SHALL NOT HAVE ROCKS OR PARTICLES LARGER THAN 1" WITHIN 12" OF THE PIPE. BACKFILL MATERIAL SHALL BE PLACED IN 8" MAXIMUM LOOSE LIFTS AND COMPACTED TO 95% MAXIMUM DRY DENSITY PER MODIFIED PROCTOR TEST (ASTM D-1557).
2. CONSTRUCT ALL STORM AND ROOF DRAINS IN CONFORMANCE WITH THIS DETAIL UNLESS NOTED OTHERWISE ON THE PLANS.
3. ALL TRENCH EXCAVATIONS SHALL BE SLOPED, SHORED, SHEETED, BRACED, OR OTHERWISE SUPPORTED IN COMPLIANCE WITH OSHA REGULATIONS AND LOCAL ORDINANCES.
4. IF ORGANIC MATERIAL IS ENCOUNTERED DURING UTILITY EXCAVATION, OVEREXCAVATE TRENCH TO INCREASE PIPE BEDDING DEPTH TO 18" OR MORE AS REQUIRED TO COMPACT BEDDING TO FIRM AND UNYIELDING CONDITION.

3 PIPE BEDDING AND BACKFILL
NOT TO SCALE

811 Know what's below. Call before you dig.

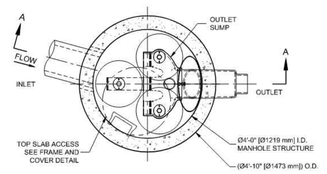

PLAN VIEW
STANDARD OUTLET RISER
FLOWKIT: 40A

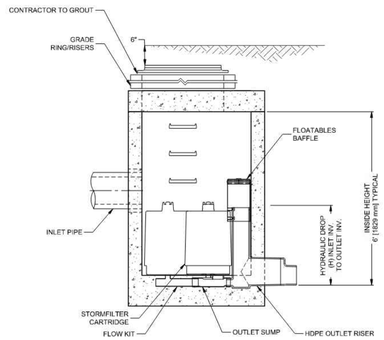

SECTION A-A

The Stormwater Management StormFilter®
"THIS PRODUCT MAY BE PROTECTED BY ONE OR MORE OF THE FOLLOWING U.S. PATENTS: 5,322,629; 5,707,527; 5,759,415; 6,027,639; 6,350,382; 6,649,048; 6,810,610; AND OTHER FOREIGN PATENTS OR PENDING."

STORMFILTER DESIGN NOTES

STORMFILTER TREATMENT CAPACITY IS A FUNCTION OF THE CARTRIDGE SELECTION AND THE NUMBER OF CARTRIDGES. THE STANDARD MANHOLE STYLE IS SHOWN WITH THE MAXIMUM NUMBER OF CARTRIDGES (3). VOLUME SYSTEM IS ALSO AVAILABLE WITH MAXIMUM 3 CARTRIDGES.
Ø4 [1219 mm] MANHOLE STORMFILTER PEAK HYDRAULIC CAPACITY IS 1.0 CFS [28.3 L/s]. IF THE SITE CONDITIONS EXCEED 1.0 CFS [28.3 L/s] AN UPSTREAM BYPASS STRUCTURE IS REQUIRED.

CARTRIDGE SELECTION

CARTRIDGE HEIGHT	27" [686 mm]			18" [458 mm]			LOW DROP		
RECOMMENDED HYDRAULIC DROP (H)	3.05' [930 mm]			2.3' [700 mm]			1.8' [550 mm]		
SPECIFIC FLOW RATE (gpm/sf) [L/s/m²]	2 [1.30]	1.67* [1.08]	1 [0.65]	2 [1.30]	1.67* [1.08]	1 [0.65]	2 [1.30]	1.67* [1.08]	1 [0.65]
CARTRIDGE FLOW RATE (gpm) [L/s]	22.5 [1.42]	18.79 [1.19]	11.25 [0.71]	15 [0.95]	12.53 [0.79]	7.5 [0.44]	10 [0.63]	8.35 [0.54]	5 [0.32]

* 1.67 gpm/sf [1.08 L/s/m²] SPECIFIC FLOW RATE IS APPROVED WITH PHOSPHOSORB® (PSORB) MEDIA ONLY

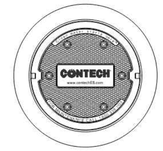

FRAME AND COVER
(DIAMETER VARIES)
N.T.S.

SITE SPECIFIC DATA REQUIREMENTS

STRUCTURE ID	CB 8
WATER QUALITY FLOW RATE (cfs) [L/s]	0.075
PEAK FLOW RATE (cfs) [L/s]	0.57
RETURN PERIOD OF PEAK FLOW (yrs)	100
CARTRIDGE HEIGHT (SEE TABLE ABOVE)	27"
NUMBER OF CARTRIDGES REQUIRED	3
CARTRIDGE FLOW RATE	11.25
MEDIA TYPE (PERLITE, ZPG, PSORB)	ZPG

PIPE DATA:	I.E.	MATERIAL	DIAMETER
INLET PIPE #1	431.19	PVC SDR 35	8"
INLET PIPE #2	431.19	PVC SDR 35	8"
OUTLET PIPE	428.14	PVC SDR 35	8"
RIM ELEVATION			433.16

ANTI-FLOTATION BALLAST	WIDTH	HEIGHT
	*	*

NOTES/SPECIAL REQUIREMENTS: STORMFILTER RIM TO BE SET 6" BELOW FINISHED GRADE. REFER TO SHEET C2.0 FOR FINISHED GRADE ELEVATION.
* PER ENGINEER OF RECORD

GENERAL NOTES
1. CONTECH TO PROVIDE ALL MATERIALS UNLESS NOTED OTHERWISE.
2. DIMENSIONS MARKED WITH [ ] ARE REFERENCE DIMENSIONS. ACTUAL DIMENSIONS MAY VARY.
3. FOR SITE SPECIFIC DRAWINGS WITH DETAILED VAULT DIMENSIONS AND WEIGHTS, PLEASE CONTACT YOUR CONTECH ENGINEERED SOLUTIONS LLC REPRESENTATIVE. www.ContechES.com
4. STORMFILTER WATER QUALITY STRUCTURE SHALL BE IN ACCORDANCE WITH ALL DESIGN DATA AND INFORMATION CONTAINED IN THIS DRAWING.
5. STRUCTURE SHALL MEET AASHTO HS-20 LOAD RATING, ASSUMING EARTH COVER OF 0' - 5' [1524 mm] AND GROUNDWATER ELEVATION AT, OR BELOW, THE OUTLET PIPE INVERT ELEVATION. ENGINEER OF RECORD TO CONFIRM ACTUAL GROUNDWATER ELEVATION. CASTINGS SHALL MEET AASHTO M306 AND BE CAST WITH THE CONTECH LOGO.
6. FILTER CARTRIDGES SHALL BE MEDIA-FILLED, PASSIVE, SIPHON ACTUATED, RADIAL FLOW, AND SELF CLEANING. RADIAL MEDIA DEPTH SHALL BE 7-INCHES [178 mm]. FILTER MEDIA CONTACT TIME SHALL BE AT LEAST 36 SECONDS.
7. SPECIFIC FLOW RATE IS EQUAL TO THE FILTER TREATMENT CAPACITY (gpm) [L/s] DIVIDED BY THE FILTER CONTACT SURFACE AREA (sq ft)[m²].
8. STORMFILTER STRUCTURE SHALL BE PRECAST CONCRETE CONFORMING TO ASTM C-478 AND AASHTO LOAD FACTOR DESIGN METHOD.

INSTALLATION NOTES
A. ANY SUB-BASE, BACKFILL DEPTH, AND/OR ANTI-FLOTATION PROVISIONS ARE SITE-SPECIFIC DESIGN CONSIDERATIONS AND SHALL BE SPECIFIED BY ENGINEER OF RECORD.
B. CONTRACTOR TO PROVIDE EQUIPMENT WITH SUFFICIENT LIFTING AND REACH CAPACITY TO LIFT AND SET THE STORMFILTER STRUCTURE.
C. CONTRACTOR TO INSTALL JOINT SEALANT BETWEEN ALL STRUCTURE SECTIONS AND ASSEMBLE STRUCTURE.
D. CONTRACTOR TO PROVIDE, INSTALL, AND GROUT INLET PIPE(S).
E. CONTRACTOR TO PROVIDE AND INSTALL CONNECTOR TO THE OUTLET RISER STUB. STORMFILTER EQUIPPED WITH A DUAL DIAMETER HDPE OUTLET STUB AND SAND COLLAR. IF OUTLET PIPE IS LARGER THAN 8 INCHES [200 mm], CONTRACTOR TO REMOVE THE 8 INCH [200 mm] OUTLET STUB AT MOLDED-IN CUT LINE. COUPLING BY FERNCO OR EQUAL AND PROVIDED BY CONTRACTOR.
F. CONTRACTOR TO TAKE APPROPRIATE MEASURES TO PROTECT CARTRIDGES FROM CONSTRUCTION-RELATED EROSION RUNOFF.

CONTECH ENGINEERED SOLUTIONS LLC
www.contechES.com
9025 Centre Pointe Dr. Suite 400 West Chester, OH 45069
800-338-1122 513-645-7000 513-645-7993 FAX

SFMH48
STORMFILTER
STANDARD DETAIL

PIPE ALLOWANCES

PIPE MATERIAL	MAXIMUM INSIDE DIAMETER
REINFORCED OR PLAIN CONCRETE	12"
ALL METAL PIPE	15"
*CPSSP (STD. SPEC. 9-05.20)	12"
SOLID WALL PVC (STD. SPEC. 9-05.12(1))	15"
PROFILE WALL PVC (STD. SPEC. 9-05.12(2))	15"

*CORRUGATED POLYETHYLENE STORM SEWER PIPE

2 CONTECH 48 IN STORM FILTER
NOT TO SCALE

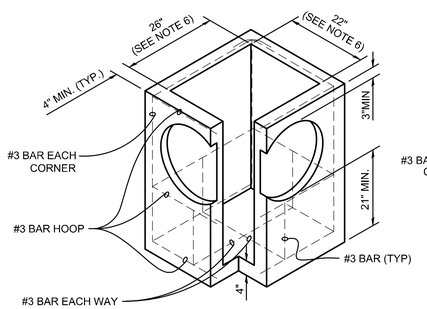

PRECAST BASE SECTION

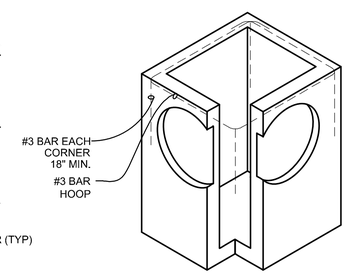

(SEE NOTE 1)

ALTERNATIVE PRECAST BASE SECTION

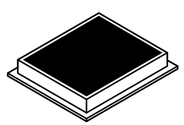

FRAME AND SOLID LID

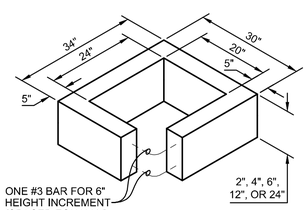

RECTANGULAR ADJUSTMENT SECTION

NOTE:
1. AS ACCEPTABLE ALTERNATIVES TO THE REBAR SHOWN IN THE PRECAST BASE SECTION, FIBERS (PLACED ACCORDING TO THE STANDARD SPECIFICATIONS), OR WIRE MESH HAVING A MINIMUM AREA OF 0.12 SQUARE INCHES PER FOOT SHALL BE USED WITH THE MINIMUM REQUIRED REBAR SHOWN IN THE ALTERNATIVE PRECAST BASE SECTION. WIRE MESH SHALL NOT BE PLACED IN THE KNOCKOUTS.
2. THE KNOCKOUT DIAMETER SHALL NOT BE GREATER THAN 20". KNOCKOUTS SHALL HAVE A WALL THICKNESS OF 2" MINIMUM TO 2.5" MAXIMUM. PROVIDE A 1.5" MINIMUM GAP BETWEEN THE KNOCKOUT WALL AND THE OUTSIDE OF THE PIPE. AFTER THE PIPE IS INSTALLED, FILL THE GAP WITH JOINT MORTAR IN ACCORDANCE WITH STANDARD SPECIFICATION 9-04.3.
3. THE MAXIMUM DEPTH FROM THE FINISHED GRADE TO THE LOWEST PIPE INVERT SHALL BE 5'.
4. THE FRAME AND GRATE MAY BE INSTALLED WITH THE FLANGE DOWN, OR INTEGRALLY CAST INTO THE ADJUSTMENT SECTION WITH FLANGE UP.
5. THE PRECAST BASE SECTION MAY HAVE A ROUNDED FLOOR, AND THE WALLS MAY BE SLOPED AT A RATE OF 1:24 OR STEEPER.
6. THE OPENING SHALL BE MEASURED AT THE TOP OF THE PRECAST BASE SECTION.
7. ALL PICKUP HOLES SHALL BE GROUTED FULL AFTER THE BASIN HAS BEEN PLACED.

4 CATCH BASIN - TYPE 1
NOT TO SCALE

NOTE:
THIS APPROVAL IS VOID 1 (ONE) YEAR AFTER APPROVAL DATE. THE CITY WILL NOT BE RESPONSIBLE FOR ERRORS AND/OR OMISSIONS ON THESE PLANS.
FIELD CONDITIONS MAY DICTATE CHANGES TO THESE PLANS AS DETERMINED BY THE CITY ENGINEER.

PERMIT NO. 24-104059-PC

APPROVED

DATE

AHBL
TACOMA • SEATTLE • SPOKANE • TRI-CITIES
2215 North 30th Street, Suite 300 Tacoma, WA 98403
253.383.2422 TEL 253.383.2572 FAX www.ahbl.com WEB

Project Title:
MIRROR LAKE ELEMENTARY SCHOOL FIELD RENOVATION

Client:
FEDERAL WAY PUBLIC SCHOOL
33330 8TH AVENUE SOUTH
FEDERAL WA, WA 98003

Project No.
2240123.10

Issue Set & Date:
BID SET
APRIL 11, 2025

CHRISTOPHER MASON — STATE OF WASHINGTON — 39383 — REGISTERED PROFESSIONAL ENGINEER
4/11/2025

NOTICE:
ALTERATION OF THIS DOCUMENT SHALL INVALIDATE THE PROFESSIONAL SEAL AND SIGNATURE. PUBLICATION OF THIS DOCUMENT DOES NOT CONSTITUTE FROM RESERVED OWNERSHIP RIGHTS IN IT. THIS DOCUMENT IS FOR USE ONLY FOR THE PROJECT IDENTIFIED IN THE TITLE BLOCK AND IS NOT TO BE USED FOR REPAIR, REMODEL OR ADDITION TO THAT PROJECT OR FOR ANY OTHER PROJECT.

4
3
2
1
Revisions:

Sheet Title:
DETAILS

Designed by:	Drawn by:	Checked by:
JDH	JDH	DCN

Sheet No.
C3.0
4 of 13 Sheets

D:\2024\2240123\01_CIVIL\04_SHP\MIRROR LAKE ES ENHANCE STORMFILTER-AB IN.DWG 4/10/2025 11:12 AM

MIRROR LAKE ELEMENTARY SCHOOL
FIELD RENOVATION

A PORTION OF THE NE 1/4 OF THE SW 1/4 OF SEC. 08, TWN. 21 N., RGE. 04 E. W.M.
CITY OF FEDERAL WAY, KING COUNTY, WASHINGTON.

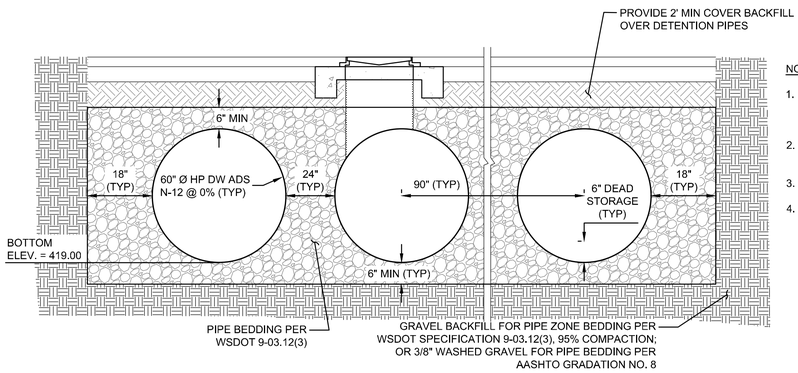

NOTES:

1. SOIL-TIGHT DETENTION TANK JOINTS SHALL CONFORM TO AASHTO M36 AND ASTM A760. MINIMUM SPACING SHALL BE 10'.
2. ACCESS RISERS ARE SAME MATERIAL AS TANK, WELDED OR FUSED TO TANK.
3. ACCESS RISER SPACING IS 100' MAXIMUM.
4. ACCESS OPENING SHALL BE CLEARLY MARKED WITH CONFINED SPACE WARNING IN ACCORDANCE WITH OSHA AND L&I REQUIREMENTS.

1 DETENTION PIPE SECTION
NOT TO SCALE

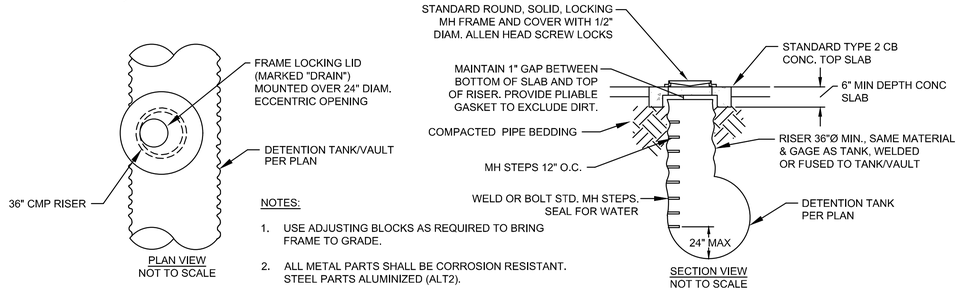

NOTES:

1. USE ADJUSTING BLOCKS AS REQUIRED TO BRING FRAME TO GRADE.
2. ALL METAL PARTS SHALL BE CORROSION RESISTANT. STEEL PARTS ALUMINIZED (ALT2).
3. MUST BE CONVENIENTLY LOCATED FOR MAINTENANCE VEHICLE ACCESS.

2 DETENTION PIPE ACCESS RISER
NOT TO SCALE

FIGURE 5.1.2.A TYPICAL DETENTION TANK

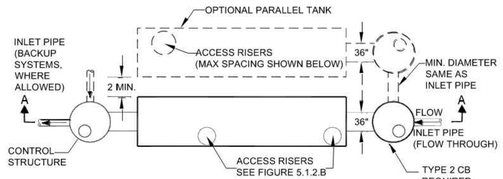

NOTES:
ALL METAL PARTS CORROSION RESISTANT. STEEL PARTS STAINLESS STEEL OR ALUMINIZED STEEL, EXCEPT TANK MAY BE GALVANIZED AND ASPHALT COATED (TREATMENT 1 OR BETTER).

3 TYPICAL DETENTION TANK
NOT TO SCALE

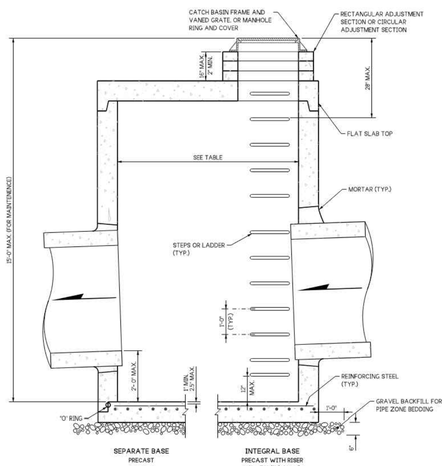

CATCH BASIN DIMENSIONS				
CATCH BASIN DIAMETER	MIN. WALL THICKNESS	MIN. BASE THICKNESS	MAXIMUM KNOCKOUT SIZE	MINIMUM DISTANCE BETWEEN KNOCKOUTS
48"	4"	6"	36"	8"
54"	4.5"	8"	42"	8"
60"	5"	8"	48"	8"
72"	6"	8"	60"	12"
84"	8"	12"	72"	12"
96"	8"	12"	84"	12"
120"	10"	12"	96"	12"
144"	12"	12"	108"	12"

PIPE ALLOWANCES					
CATCH BASIN DIAMETER	PIPE MATERIAL WITH MAXIMUM INSIDE DIAMETER				
	CONCRETE	ALL METAL	CPSSP ① PP ④	SOLID WALL PVC ②	PROFILE WALL PVC ③
48"	24"	30"	24"	30"	30"
54"	30"	36"	30"	36"	36"
60"	36"	42"	36"	42"	42"
72"	42"	54"	42"	48"	48"
84"	54"	60"	54"	48"	48"
96"	60"	72"	60"	48"	48"
120"	66"	84"	60"	48"	48"
144"	78"	96"	60"	48"	48"

① Corrugated Polyethylene Storm Sewer Pipe (See Standard Specification Section 9-05.20)
② (See Standard Specification Section 9-05.12(1))
③ (See Standard Specification Section 9-05.12(2))
④ Polypropolyne Pipe (See Standard Specification Section 9-05.24)

NOTES:

1. No steps are required when height is 4' or less.
2. The bottom of the precast catch basin may be sloped to facilitate cleaning.
3. The rectangular frame and grate may be installed with the flange up or down. The frame may be cast into the adjustment section.
4. Knockouts shall have a wall thickness of 2" (in) minimum to 2.5" (in) maximum. Provide a 1.5" (in) minimum gap between the knockout wall and the outside of the pipe. After the pipe is installed, fill the gap with joint mortar in accordance with **Standard Specification Section 9-04.3.**
5. Pipe allowances will vary depending on the pipe material used. Contact the Region Hydraulics Engineer for assistance.

4 CATCH BASIN - TYPE 2
NOT TO SCALE

BLUE HERMAN — STATE OF WASHINGTON — 41819 — REGISTERED PROFESSIONAL ENGINEER

Aug 23, 2023

CATCH BASIN TYPE 2

STANDARD PLAN B-10.20-03

SHEET 1 OF 1 SHEET

APPROVED FOR PUBLICATION
Aug 23, 2023
STATE DESIGN ENGINEER
Washington State Department of Transportation

NOTE:
THIS APPROVAL IS VOID 1 (ONE) YEAR AFTER APPROVAL DATE. THE CITY WILL NOT BE RESPONSIBLE FOR ERRORS AND/OR OMISSIONS ON THESE PLANS.
FIELD CONDITIONS MAY DICTATE CHANGES TO THESE PLANS AS DETERMINED BY THE CITY ENGINEER.

PERMIT NO. 24-104059-PC

APPROVED

DATE

811 Know what's **below.** **Call** before you dig.

AHBL
TACOMA • SEATTLE • SPOKANE • TRI-CITIES
2215 North 30th Street, Suite 300 Tacoma, WA 98403
253.383.2422 TEL 253.383.2572 FAX www.ahbl.com WEB

Project Title:

MIRROR LAKE ELEMENTARY SCHOOL FIELD RENOVATION

Client:

FEDERAL WAY PUBLIC SCHOOL
33330 8TH AVENUE SOUTH
FEDERAL WA, WA 98003

Project No.

2240123.10

Issue Set & Date:

BID SET

APRIL 11, 2025

JD CHRISTOPHER MASON — STATE OF WASHINGTON — 39383 — REGISTERED PROFESSIONAL ENGINEER

4/11/2025

NOTICE
ALTERATION OF THIS DOCUMENT SHALL INVALIDATE THE PROFESSIONAL SEAL AND SIGNATURE. PUBLICATION OF THIS DOCUMENT DOES NOT CONSTITUTE FROM RESERVED OWNERSHIP RIGHTS IN IT. THIS DOCUMENT IS FOR USE ONLY FOR THE PROJECT IDENTIFIED IN THE TITLE BLOCK AND IS NOT TO BE USED FOR REPAIR, REMODEL OR ADDITION TO THAT PROJECT OR FOR ANY OTHER PROJECT.

1
2
3
4

Revisions:

Sheet Title:

DETAILS

Designed by: JDH | Drawn by: JDH | Checked by: DCN

Sheet No.

C3.1

5 of 13 Sheets

MIRROR LAKE ELEMENTARY SCHOOL
FIELD RENOVATION

A PORTION OF THE NE 1/4 OF THE SW 1/4 OF SEC. 08, TWN. 21 N., RGE. 04 E. W.M.
CITY OF FEDERAL WAY, KING COUNTY, WASHINGTON.

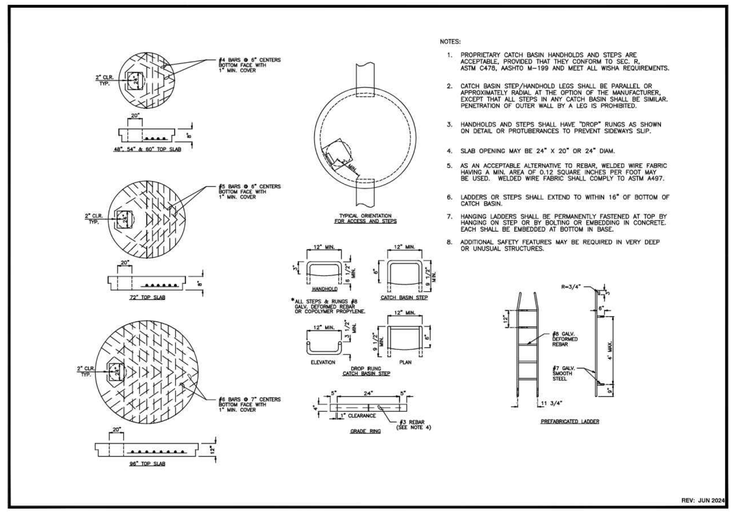

CITY OF Federal Way PUBLIC WORKS	MISC. TYPE 2 CATCH BASIN DETAILS	STD. DETAIL FW.B30.90-A

1 MISC. TYPE 2 CATCH BASIN DETAILS
NOT TO SCALE

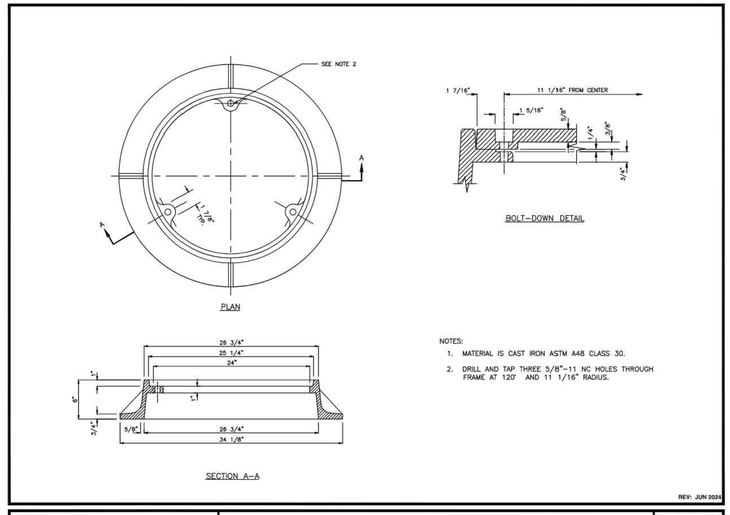

CITY OF Federal Way PUBLIC WORKS	FRAME FOR ROUND LOCKING COVER	STD. DETAIL FW.B30.72

2 FRAME FOR ROUND LOCKING COVER
NOT TO SCALE

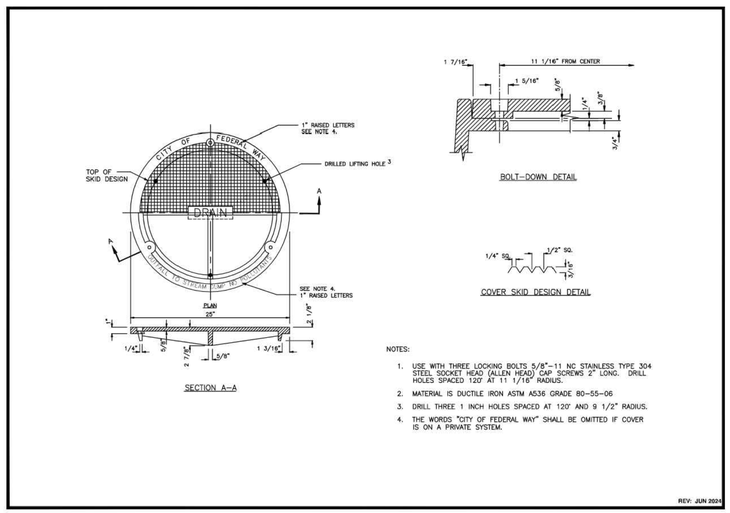

CITY OF Federal Way PUBLIC WORKS	ROUND LOCKING COVER	STD. DETAIL FW.B30.70

3 ROUND LOCKING COVER
NOT TO SCALE

Know what's below. Call before you dig.

NOTE:
THIS APPROVAL IS VOID 1 (ONE) YEAR AFTER APPROVAL DATE. THE CITY WILL NOT BE RESPONSIBLE FOR ERRORS AND/OR OMISSIONS ON THESE PLANS. FIELD CONDITIONS MAY DICTATE CHANGES TO THESE PLANS AS DETERMINED BY THE CITY ENGINEER.

PERMIT NO. 24-104059-PC

APPROVED

DATE

AHBL
TACOMA • SEATTLE • SPOKANE • TRI-CITIES
2215 North 30th Street, Suite 300 Tacoma, WA 98403
253.383.2422 TEL 253.383.2572 FAX www.ahbl.com WEB

Project Title:

MIRROR LAKE ELEMENTARY SCHOOL FIELD RENOVATION

Client:

FEDERAL WAY PUBLIC SCHOOL
33330 8TH AVENUE SOUTH
FEDERAL WA, WA 98003

Project No.

2240123.10

Issue Set & Date:

BID SET

APRIL 11, 2025

CHRISTOPHER MASON 39383 REGISTERED PROFESSIONAL ENGINEER STATE OF WASHINGTON
4/11/2025

NOTICE
ALTERATION OF THIS DOCUMENT SHALL INVALIDATE THE PROFESSIONAL SEAL AND SIGNATURE. PUBLICATION OF THIS DOCUMENT DOES NOT CONSTITUTE ANY RELEASE OF OWNERSHIP RIGHTS IN IT. THIS DOCUMENT IS FOR USE ONLY FOR THE PROJECT IDENTIFIED IN THE TITLE BLOCK AND IS NOT TO BE USED FOR REPAIR, REMODEL OR ADDITION TO THAT PROJECT OR FOR ANY OTHER PROJECT.

Revisions:

Sheet Title:

DETAILS

Designed by:	Drawn by:	Checked by:
JDH	JDH	DCN

Sheet No.

C3.2

6 of 13 Sheets

MIRROR LAKE ELEMENTARY SCHOOL
FIELD RENOVATION

A PORTION OF THE NE 1/4 OF THE SW 1/4 OF SEC. 08, TWN. 21 N., RGE. 04 E. W.M.
CITY OF FEDERAL WAY, KING COUNTY, WASHINGTON.

ACO DRAIN

KlassikDrain - K100 Galvanized steel edge rail channel system

One meter channel

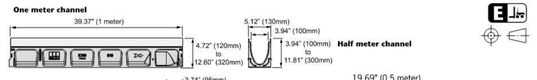

Knock-outs included on every 5th channel

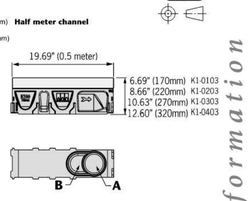

Type K901G In-line catch basin

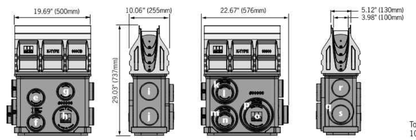

Total capacity = 10.49 gallons

Outlet flow rates

Outlet	Product	Outlet size (Sch. 40)	Invert Depth	GPM	CFS
a	Bottom outlet - K00	4" round	3.94"	108	0.24
a	Bottom outlet - K40	4" round	11.81"	187	0.42
b	Bottom outlet - K00	6" oval	3.94"	177	0.39
b	Bottom outlet - K40	6" oval	11.81"	306	0.68
c	End outlet - K20	4" round	7.87"	132	0.29
c	End outlet - K40	4" round	11.81"	171	0.38
d	K1-308-6' outlet cap	6" oval	9.84"	233	0.52
d	K1-408-6' outlet cap	6" oval	11.81"	264	0.59
e	Type K1-901G	4" round	20.68"	235	0.52
f	Type K1-901G	4" round	27.17"	226	0.50
g	Type K1-901G	4" round	18.99"	265	0.59
h	Type K1-901G	6" round	27.17"	263	0.59
i	Type K1-901G	4" round	19.30"	222	0.49
j	Type K1-901G	4" round	25.67"	586	1.30
k	Type K1-901G	6" round	19.99"	269	0.60
l	Type K1-901G	4" round	19.36"	227	0.51
m	Type K1-901G	6" round	27.30"	604	1.35
n	Type K1-901G	4" round	26.43"	505	1.12
o	Type K1-901G	6" round	26.43"	593	1.32
p	Type K1-901G	8" round	27.30"	1051	2.34
q	Type K1-901G	6" round	25.85"	273	0.61
r	Type K1-901G	4" round	18.56"	235	0.52
s	Type K1-901G	4" round	25.30"	224	0.50

Note: These are the pipe flow rates at the specified outlet, **NOT** channel flow rates. Catch basin flow rates are without trash bucket - using trash bucket reduces flow.

End Cap

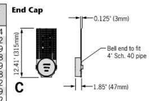

6" Oval inlet cap

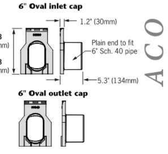

6" Oval outlet cap



February 2019

www.acousa.com

ACO Specification Information

1 ACO DRAIN - K100 TRECH DRAIN
NOT TO SCALE

ACO Drain February 2022

Sump Box - 2'x2'x2' w/ Gray Iron Frame & Slotted Grate

Top

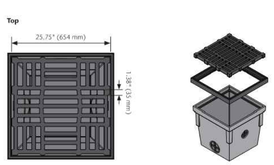

Side

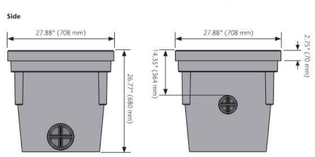

Specifications

General
The sump box shall be ACO Drain as manufactured by ACO, Inc. or similar approved.

Materials
Products shall be manufactured from polymer concrete and have minimum properties as follows:

- Compressive strength:13,053 psi
- Flexural strength: 3,191 psi
- Water absorption rate:<0.1% by weight
- Overall width: 27.88" (708 mm)
- Overall length: 27.88" (708 mm)
- Overall depth: 26.77" (680 mm)
- Invert depth: 25.98" (660 mm)

Pre-cast units shall be manufactured with drill-outs for channel and pipe connections and have a wall thickness of at least 0.75" (19 mm).

Grates
Frame and grate material is slotted gray iron. After grate removal there shall be uninterrupted access to the sump box to aid maintenance.

Installation
The sump box and grates shall be installed in accordance with the manufacturer's installation instructions and recommendations.

Product Features

- Grate provides 48% open area (318 in²).

*AASHTO M306 requires that castings bear a minimum of 40,000 lbs on a 9" x 9" area. This represents a 2.5 safety factor over the 16,000 lb requirement of H20 and H520. This load designation is appropriate for general traffic applications. Loading criteria is 40,000–100,000 lbs.

Parts	Part No.	Invert Depth in (mm)	Volume gal	Weight lbs
2'x2'x2' Sump Box	05719	25.98 (660)	45.1	168.0
Gray Iron Frame & Slotted Grate	05720	-	-	265.0

Heavy Duty Application

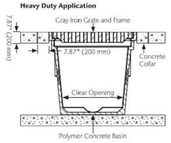

ACO, Inc.

West Sales Office
825 W. Beechcraft Street
Casa Grande, AZ 85122
Tel: (520) 421-9988
Toll-Free: (888) 490-9552
Fax: (520) 421-9899

Northeast Sales Office
9470 Pinecone Drive
Mentor, OH 44060
Tel: (440) 639-7230
Toll-Free: (800) 543-4764
Fax: (440) 639-7235

Southeast Sales Office
4211 Pleasant Road
Fort Mill, SC 29708
Toll-Free: (800) 543-4764
Fax: (803) 802-1063

info@acousa.com
www.acousa.com

© February 2022 ACO, Inc.
All reasonable care has been taken in compiling the information in this document. All recommendations and suggestions on the use of ACO products are made without guarantee since the conditions of use are beyond the control of the company. It is the customer's responsibility to ensure that each product is fit for its intended purpose and that the actual conditions of use are suitable. ACO, Inc. reserves the right to change products and specifications without notice.

ACO. creating the future of drainage

ACO Specification Information

2 ACO DRAIN - SUMP BOX
NOT TO SCALE

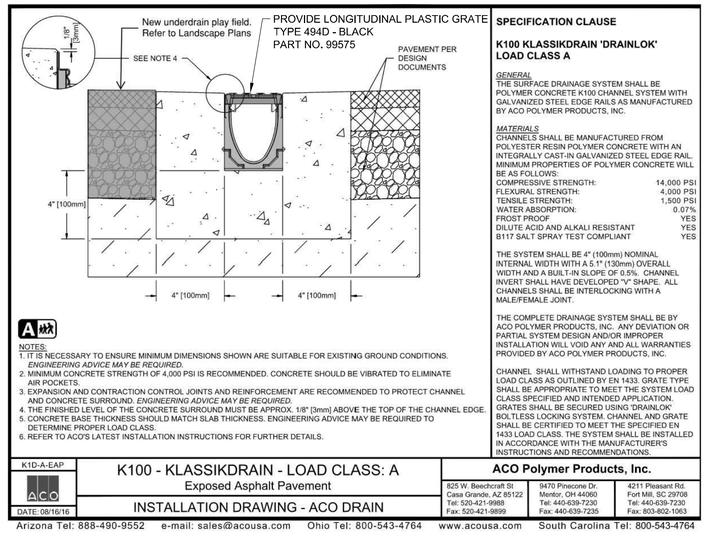

NOTES:
1. IT IS NECESSARY TO ENSURE MINIMUM DIMENSIONS SHOWN ARE SUITABLE FOR EXISTING GROUND CONDITIONS. *ENGINEERING ADVICE MAY BE REQUIRED.*
2. MINIMUM CONCRETE STRENGTH OF 4,000 PSI IS RECOMMENDED. CONCRETE SHOULD BE VIBRATED TO ELIMINATE AIR POCKETS.
3. EXPANSION AND CONTRACTION CONTROL JOINTS AND REINFORCEMENT ARE RECOMMENDED TO PROTECT CHANNEL AND CONCRETE SURROUND. *ENGINEERING ADVICE MAY BE REQUIRED.*
4. THE FINISHED LEVEL OF THE CONCRETE SURROUND MUST BE APPROX. 1/8" [3mm] ABOVE THE TOP OF THE CHANNEL EDGE.
5. CONCRETE BASE THICKNESS SHOULD MATCH SLAB THICKNESS. ENGINEERING ADVICE MAY BE REQUIRED TO DETERMINE PROPER LOAD CLASS.
6. REFER TO ACO'S LATEST INSTALLATION INSTRUCTIONS FOR FURTHER DETAILS.

SPECIFICATION CLAUSE

K100 KLASSIKDRAIN 'DRAINLOK' LOAD CLASS A

GENERAL
THE SURFACE DRAINAGE SYSTEM SHALL BE POLYMER CONCRETE K100 CHANNEL SYSTEM WITH GALVANIZED STEEL EDGE RAILS AS MANUFACTURED BY ACO POLYMER PRODUCTS, INC.

MATERIALS
CHANNELS SHALL BE MANUFACTURED FROM POLYESTER RESIN POLYMER CONCRETE WITH AN INTEGRALLY CAST-IN GALVANIZED STEEL EDGE RAIL. MINIMUM PROPERTIES OF POLYMER CONCRETE WILL BE AS FOLLOWS:

COMPRESSIVE STRENGTH:	14,000 PSI
FLEXURAL STRENGTH:	4,000 PSI
TENSILE STRENGTH:	1,500 PSI
WATER ABSORPTION:	0.07%
FROST PROOF	YES
DILUTE ACID AND ALKALI RESISTANT	YES
B117 SALT SPRAY TEST COMPLIANT	YES

THE SYSTEM SHALL BE 4" (100mm) NOMINAL INTERNAL WIDTH WITH A 5.1" (130mm) OVERALL WIDTH AND A BUILT-IN SLOPE OF 0.5%. CHANNEL INVERT SHALL HAVE DEVELOPED "V" SHAPE. ALL CHANNELS SHALL BE INTERLOCKING WITH A MALE/FEMALE JOINT.

THE COMPLETE DRAINAGE SYSTEM SHALL BE BY ACO POLYMER PRODUCTS, INC. ANY DEVIATION OR PARTIAL SYSTEM DESIGN AND/OR IMPROPER INSTALLATION WILL VOID ANY AND ALL WARRANTIES PROVIDED BY ACO POLYMER PRODUCTS, INC.

CHANNEL SHALL WITHSTAND LOADING TO PROPER LOAD CLASS AS OUTLINED BY EN 1433. GRATE TYPE SHALL BE APPROPRIATE TO MEET THE SYSTEM LOAD CLASS SPECIFIED AND INTENDED APPLICATION. GRATES SHALL BE SECURED USING DRAINLOK' BOLTLESS LOCKING SYSTEM. CHANNEL AND GRATE SHALL BE CERTIFIED TO MEET THE SPECIFIED EN 1433 LOAD CLASS. THE SYSTEM SHALL BE INSTALLED IN ACCORDANCE WITH THE MANUFACTURER'S INSTRUCTIONS AND RECOMMENDATIONS.

K1D-A-EAP	K100 - KLASSIKDRAIN - LOAD CLASS: A Exposed Asphalt Pavement	ACO Polymer Products, Inc.		
DATE: 08/16/16	INSTALLATION DRAWING - ACO DRAIN	825 W. Beechcraft St Casa Grande, AZ 85122 Tel: 520-421-9988 Fax: 520-421-9899	9470 Pinecone Dr. Mentor, OH 44060 Tel: 440-639-7230 Fax: 440-639-7235	4211 Pleasant Rd. Fort Mill, SC 29708 Tel: 440-639-7230 Fax: 803-802-1063

Arizona Tel: 888-490-9552 e-mail: sales@acousa.com Ohio Tel: 800-543-4764 www.acousa.com South Carolina Tel: 800-543-4764

3 ACO DRAIN - K100 TRENCH SECTION
NOT TO SCALE

NOTE:
THIS APPROVAL IS VOID 1 (ONE) YEAR AFTER APPROVAL DATE. THE CITY WILL NOT BE RESPONSIBLE FOR ERRORS AND/OR OMISSIONS ON THESE PLANS.
FIELD CONDITIONS MAY DICTATE CHANGES TO THESE PLANS AS DETERMINED BY THE CITY ENGINEER.

PERMIT NO. 24-104059-PC

APPROVED

DATE

Know what's **below.** **Call** before you dig.

AHBL
TACOMA • SEATTLE • SPOKANE • TRI-CITIES
2215 North 30th Street, Suite 300 Tacoma, WA 98403
253.383.2422 TEL 253.383.2572 FAX www.ahbl.com WEB

Project Title:

MIRROR LAKE ELEMENTARY SCHOOL FIELD RENOVATION

Client:

FEDERAL WAY PUBLIC SCHOOL
33330 8TH AVENUE SOUTH
FEDERAL WA, WA 98003

Project No.

2240123.10

Issue Set & Date:

BID SET

APRIL 11, 2025



4/11/2025

NOTICE
ALTERATION OF THIS DOCUMENT SHALL INVALIDATE THE PROFESSIONAL SEAL AND SIGNATURE. PUBLICATION OF THIS DOCUMENT DOES NOT CONSTITUTE FROM RESERVED OWNERSHIP RIGHTS IN IT. THIS DOCUMENT IS FOR USE ONLY FOR THE PROJECT IDENTIFIED IN THE TITLE BLOCK AND IS NOT TO BE USED FOR REPAIR, REMODEL OR ADDITION TO THAT PROJECT OR FOR ANY OTHER PROJECT.

4
3
2
1

Revisions:

Sheet Title:

DETAILS

Designed by:	Drawn by:	Checked by:
JDH	JDH	DCN

Sheet No.

C3.3

7 of 13 Sheets

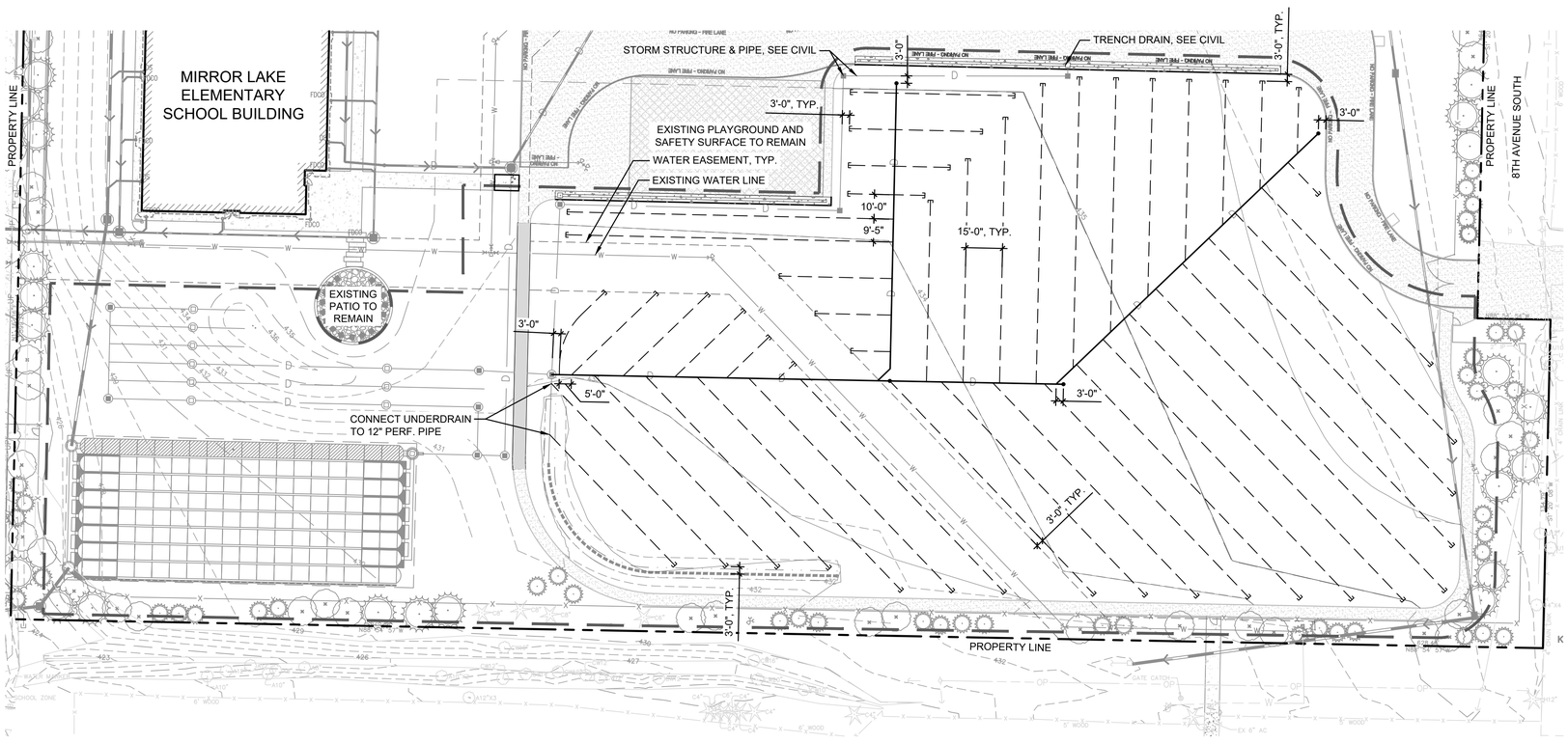

1 MATERIALS PLAN

GRAPHIC SCALE

0 15 30 60 FEET

1" = 30 FEET

LEGEND

- PROPERTY LINE
- EXISTING FENCE TO REMAIN
- EXISTING DRAIN PIPE TO REMAIN
- EXISTING TREES TO REMAIN
- EXISTING PAVEMENT TO REMAIN
- LIMIT OF WORK, SEE CIVIL
- UNDERDRAIN (1 / L1.1)
- UNDERDRAIN CAP
- COLLECTOR DRAIN (2 / L1.1)
- COLLECTOR DRAIN CLEANOUT (3 / L1.1)

NOTES

1. SEE SHEET L2.0 FOR PLANTING AND SOIL PLACEMENT PLAN.
2. SEE SHEET L2.0 FOR SOIL PLACEMENT PLAN.
3. SEE SHEET L3.0 FOR IRRIGATION PLAN.
4. SEE SHEET C1.0 FOR TESC AND DEMO PLANS.
5. SEE SHEET C2.0 FOR FIELD GRADING AND DRAINAGE INVERT ELEVATIONS.

Know what's below.
Call before you dig.

AHBL
TACOMA · SEATTLE · SPOKANE · TRI-CITIES
2215 North 30th Street, Suite 300 Tacoma, WA 98403
253.383.2422 TEL 253.383.2572 FAX www.ahbl.com WEB

Project Title:

MIRROR LAKE ELEMENTARY SCHOOL FIELD RENOVATION

Client:

FEDERAL WAY PUBLIC SCHOOL
33330 8TH AVENUE SOUTH
FEDERAL WA, WA 98003

Project No.

2240123.40

Issue Set & Date:

BID SET

APRIL 11, 2025

STATE OF WASHINGTON
CRAIG R. SKIPTON
NO. 1831 EXP. 03/05/2027
LANDSCAPE ARCHITECT
04/11/2025

NOTICE
ALTERATION OF THIS DOCUMENT SHALL INVALIDATE THE PROFESSIONAL SEAL AND SIGNATURE. PUBLICATION OF THIS DOCUMENT DOES NOT DEROGATE FROM RESERVED OWNERSHIP RIGHTS IN IT. THIS DOCUMENT IS FOR USE ONLY FOR THE PROJECT IDENTIFIED IN THE TITLE BLOCK AND IS NOT TO BE USED FOR REPAIR, REMODEL OR ADDITION TO THAT PROJECT OR FOR ANY OTHER PROJECT.

4

3

2

1

Revisions:

Sheet Title:

MATERIAL PLAN

Designed by:	Drawn by:	Checked by:
DR	DR	CS

Sheet No.

L1.0

8 of 13 Sheets

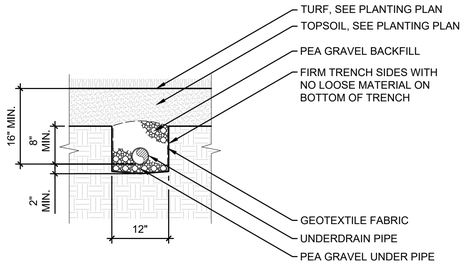

1 UNDERDRAIN

3/4" = 1'-0" P-2024-MRL-102

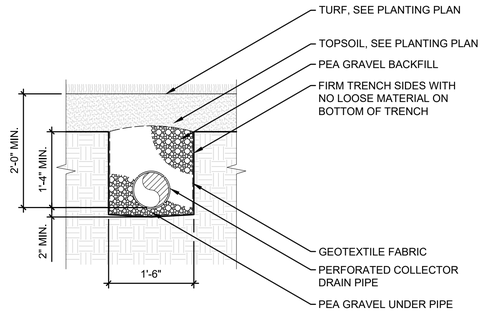

2 COLLECTOR DRAIN

3/4" = 1'-0" P-2024-WLW-80

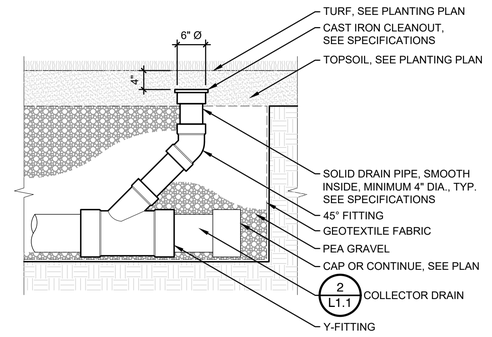

3 COLLECTOR DRAIN CLEANOUT

3/4" = 1'-0" P-2024-WLW-83

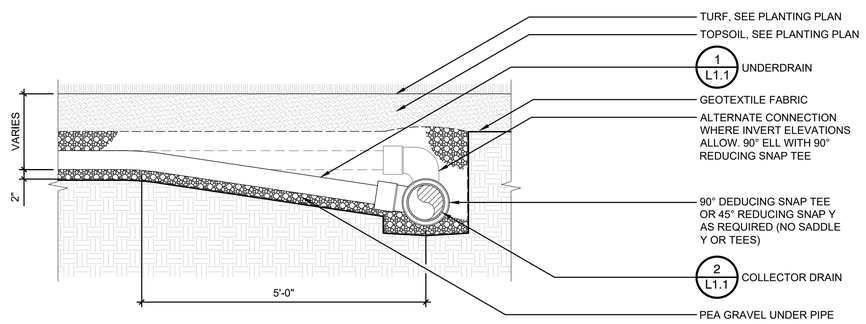

4 UNDERDRAIN CONNECTION TO COLLECTOR DRAIN

3/4" = 1'-0" P-2024-WLW-84

Know what's **below.** **Call** before you dig.

AHBL
TACOMA · SEATTLE · SPOKANE · TRI-CITIES
2215 North 30th Street, Suite 300 Tacoma, WA 98403
253.383.2422 TEL 253.383.2572 FAX www.ahbl.com WEB

Project Title:

MIRROR LAKE ELEMENTARY SCHOOL FIELD RENOVATION

Client:

FEDERAL WAY PUBLIC SCHOOL
33330 8TH AVENUE SOUTH
FEDERAL WA, WA 98003

Project No.

2240123.40

Issue Set & Date:

BID SET

APRIL 11, 2025

STATE OF WASHINGTON · CRAIG R. SKIPTON · NO. 21871 · EXP. 03/05/2027 · LANDSCAPE ARCHITECT

04/11/2025

NOTICE
ALTERATION OF THIS DOCUMENT SHALL INVALIDATE THE PROFESSIONAL SEAL AND MONOGRAM. PUBLICATION OF THIS DOCUMENT DOES NOT DEROGATE FROM RESERVED COMMONLAW RIGHTS IN IT. THIS DOCUMENT IS FOR USE ONLY FOR THE PROJECT IDENTIFIED IN THE TITLE BLOCK AND IS NOT TO BE USED FOR REPAIR, REMODEL OR ADDITION TO THAT PROJECT OR FOR ANY OTHER PROJECT.

Revisions:

Sheet Title:

MATERIAL DETAILS

Designed by:	Drawn by:	Checked by:
DR	DR	CS

Sheet No.

L1.1

9 of 13 Sheets

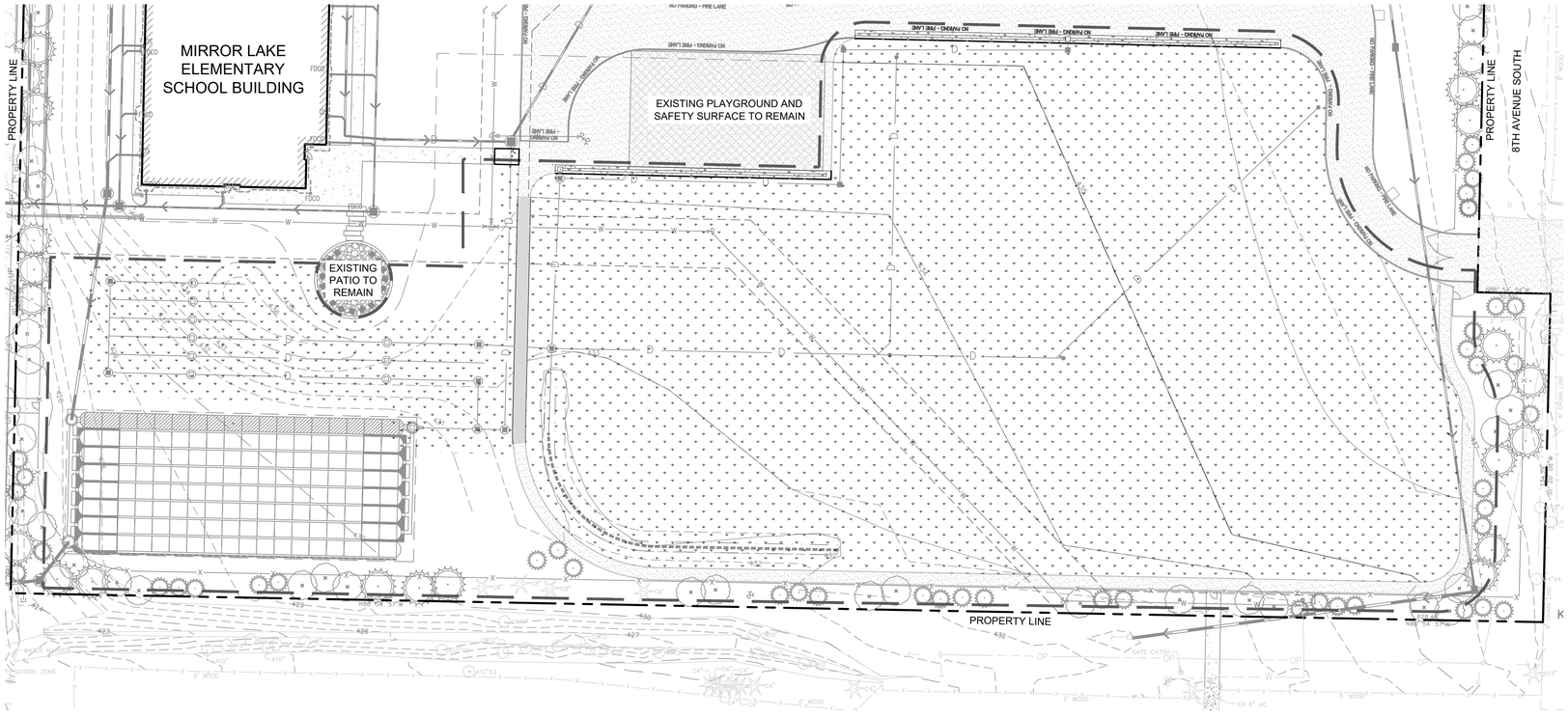

1 PLANTING AND SOILS PLAN

GRAPHIC SCALE
0 15 30 60 FEET
1" = 30 FEET

LEGEND

- PROPERTY LINE
- EXISTING FENCE TO REMAIN
- EXISTING DRAIN PIPE TO REMAIN
- EXISTING TREES TO REMAIN
- EXISTING PAVEMENT TO REMAIN
- LIMIT OF WORK, SEE CIVIL

NOTES

1. RESTORE ALL AREAS IMPACTED BY CONSTRUCTION ACTIVITIES WITH SOIL AND SOD.
2. SEE SHEET L1.0 FOR MATERIAL PLAN.
3. SEE SHEET L2.1 FOR SOIL PREPARATION DETAIL.
4. SEE SHEET L3.0 FOR IRRIGATION PLAN.

GENERAL LANDSCAPE NOTES

1. SEE SPECIFICATIONS FOR PLANT MATERIAL, TOPSOIL AND PLANTING MIX TYPES AND DEPTH, MULCHING, SOIL AMENDMENTS, FERTILIZERS AND WARRANTEES.
2. PLANTING SHALL CONFORM TO ALL FEDERAL WAY CODE REQUIREMENTS, INCLUDING PRESERVATION OF ADEQUATE INTERSECTION SIGHT DISTANCE LINES/ TRIANGULAR AREAS.
3. CONTRACTOR SHALL VERIFY ON-SITE CONDITIONS PRIOR TO BIDDING AND CONSTRUCTION.
4. INSTALL AUTOMATIC UNDERGROUND IRRIGATION SYSTEM AS SPECIFIED IN ALL NEW AND RENOVATED LANDSCAPE AREAS.
5. THE CONTRACTOR AND OWNER ARE RESPONSIBLE FOR READING THE PLANS, SPECIFICATIONS AND NOTES.
6. THE CONTRACTOR SHALL VERIFY ALL PLANT MATERIAL QUANTITIES PRIOR TO INSTALLATION. ANY PLANT MATERIAL QUANTITIES LISTED ARE FOR THE CONVENIENCE OF THE CONTRACTOR. ACTUAL NUMBER OF SYMBOLS SHALL HAVE PRIORITY OVER QUANTITY DESIGNATED. THE CONTRACTOR SHALL BE RESPONSIBLE FOR COUNTING THE TOTAL NUMBER OF PLANTS INDICATED ON THE PLANS AND ESTIMATING GROUNDCOVER QUANTITIES.
7. THE CONTRACTOR SHALL FURNISH AND PAY FOR ALL CONTAINER OR FIELD GROWN TREES, SHRUBS AND GROUNDCOVERS, INCLUDING SEEDED AND SODDED TURF, HYDROMULCHES AND FLATTED GROUNDCOVERS. THE CONTRACTOR SHALL ALSO BE RESPONSIBLE AND PAY FOR: PLANTING OF ALL PLANT MATERIALS; THE SPECIFIED GUARANTEE OF ALL PLANT MATERIALS; THE STAKING AND GUYING OF TREES AND THE CONTINUOUS PROTECTION OF ALL PLANT MATERIALS UPON THEIR ARRIVAL AT THE SITE.

PLANT SCHEDULE

SYMBOL	BOTANICAL NAME	COMMON NAME	PLANTING SIZE	QTY
LAWN				
	SOD FIELD TURF	PERENNIAL RYEGRASS BLEND	SOD	81,289 SF

SOIL PLACEMENT SCHEDULE

2-WAY TOPSOIL - 8" DEPTH

811 Know what's below. Call before you dig.

AHBL
TACOMA · SEATTLE · SPOKANE · TRI-CITIES
2215 North 30th Street, Suite 300 Tacoma, WA 98403
253.383.2422 TEL 253.383.2572 FAX www.ahbl.com WEB

Project Title:

MIRROR LAKE ELEMENTARY SCHOOL FIELD RENOVATION

Client:

FEDERAL WAY PUBLIC SCHOOL
33330 8TH AVENUE SOUTH
FEDERAL WA, WA 98003

Project No.
2240123.40

Issue Set & Date:

BID SET

APRIL 11, 2025

STATE OF WASHINGTON
CRAIG R. SKIPTON
NO. 1831 EXP. 03/05/2027
LANDSCAPE ARCHITECT
04/11/2025

NOTICE
ALTERATION OF THIS DOCUMENT SHALL INVALIDATE THE PROFESSIONAL SEAL AND SIGNATURE. PUBLICATION OF THIS DOCUMENT DOES NOT DEROGATE FROM RESERVED OWNERSHIP RIGHTS IN IT. THIS DOCUMENT IS FOR USE ONLY FOR THE PROJECT IDENTIFIED IN THE TITLE BLOCK AND IS NOT TO BE USED FOR REPAIR, REMODEL OR ADDITION TO THAT PROJECT OR FOR ANY OTHER PROJECT.

4
3
2
1

Revisions:

Sheet Title:

PLANTING & SOILS PLAN

Designed by:	Drawn by:	Checked by:
DR	DR	CS

Sheet No.

L2.0

10 of 13 Sheets

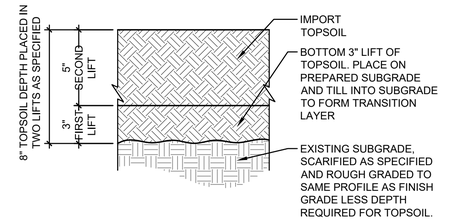

1 SOIL PREPARATION

1" = 1'-0" P-2024-MRL-95

Know what's **below.** **Call** before you dig.

AHBL
TACOMA · SEATTLE · SPOKANE · TRI-CITIES
2215 North 30th Street, Suite 300 Tacoma, WA 98403
253.383.2422 TEL 253.383.2572 FAX www.ahbl.com WEB

Project Title:

MIRROR LAKE ELEMENTARY SCHOOL FIELD RENOVATION

Client:

FEDERAL WAY PUBLIC SCHOOL
33330 8TH AVENUE SOUTH
FEDERAL WA, WA 98003

Project No.

2240123.40

Issue Set & Date:

BID SET

APRIL 11, 2025



04/11/2025

NOTICE
ALTERATION OF THIS DOCUMENT SHALL INVALIDATE THE PROFESSIONAL SEAL AND SIGNATURE. PUBLICATION OF THIS DOCUMENT DOES NOT DEROGATE FROM RESERVED COMMONLAW RIGHTS IN IT. THIS DOCUMENT IS FOR USE ONLY FOR THE PROJECT IDENTIFIED IN THE TITLE BLOCK AND IS NOT TO BE USED FOR REPAIR, REMODEL OR ADDITION TO THAT PROJECT OR FOR ANY OTHER PROJECT.

4
3
2
1
Revisions:

Sheet Title:

PLANTING & SOILS DETAILS

Designed by:	Drawn by:	Checked by:
DR	DR	CS

Sheet No.

L2.1

11 of 13 Sheets

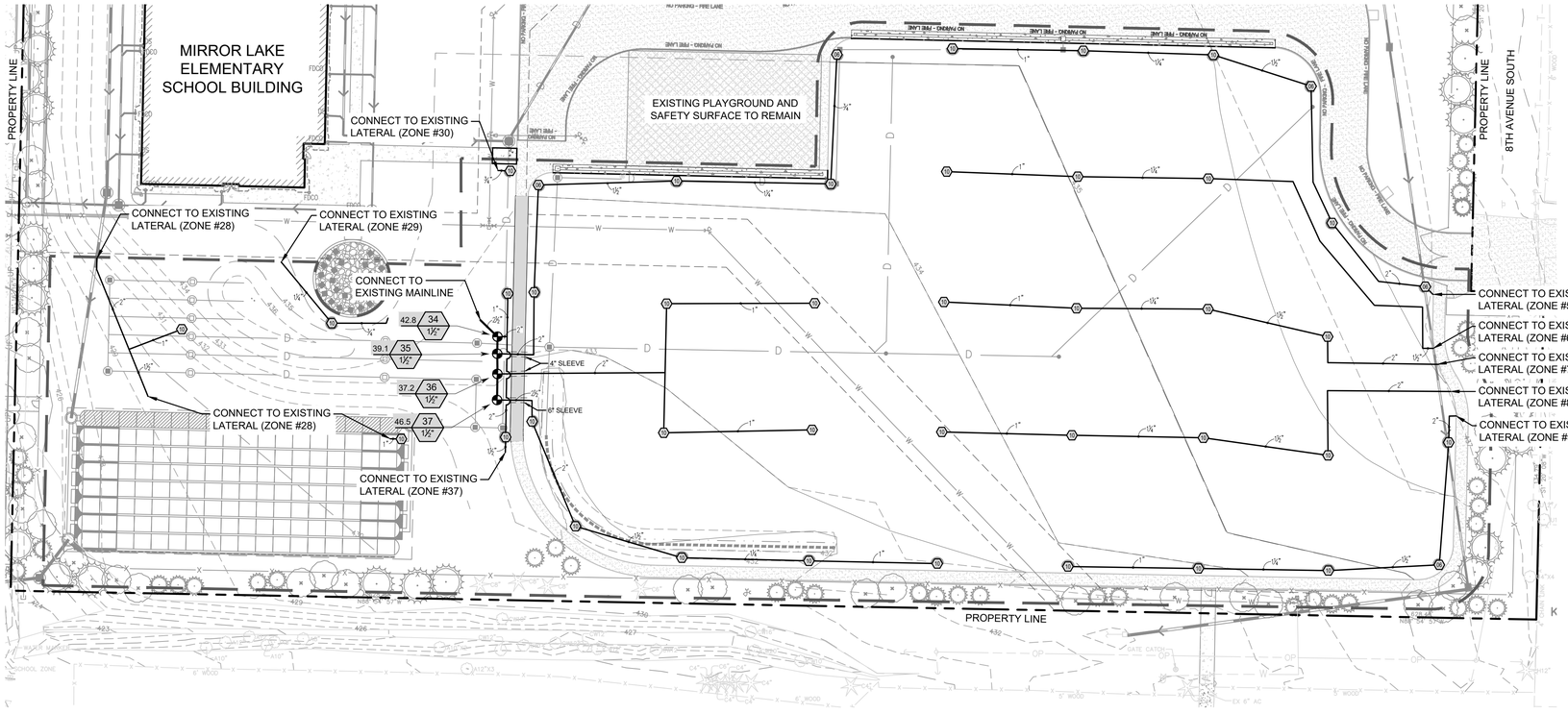

1 IRRIGATION PLAN

GRAPHIC SCALE
0 15 30 60 FEET
1" = 30 FEET

LEGEND

- PROPERTY LINE
- EXISTING FENCE TO REMAIN
- EXISTING DRAIN PIPE TO REMAIN
- EXISTING TREES TO REMAIN
- EXISTING PAVEMENT TO REMAIN
- LIMIT OF WORK, SEE CIVIL

NOTES

1. SEE SHEET L1.0 FOR MATERIAL PLAN.
2. SEE SHEET L2.0 FOR PLANTING AND SOIL PLACEMENT PLAN.
3. SEE SHEET L3.1 FOR IRRIGATION DETAILS.
4. EXISTING IRRIGATION AS-BUILT DRAWINGS ARE AVAILABLE UPON REQUEST.

GENERAL IRRIGATION NOTES

1. NO SUBSTITUTIONS OF EQUIPMENT OR DESIGN CHANGES SHALL BE PERMITTED UNLESS APPROVED BY THE LANDSCAPE ARCHITECT.
2. IRRIGATION LINES AND VALVES MAY BE SHOWN IN HARD SURFACE AREAS OR OUTSIDE LANDSCAPE AREAS FOR GRAPHIC CLARITY. LOCATE ALL IRRIGATION LINES IN LANDSCAPE AREAS OR IN SLEEVES UNDER PAVEMENT.
3. IRRIGATION CONTRACTOR SHALL COORDINATE INSTALLATION OF IRRIGATION CONDUIT AND SLEEVES UNDER HARD SURFACES WITH RESPECTIVE CONTRACTORS.
4. CONTRACTOR SHALL BE RESPONSIBLE FOR OBTAINING ALL PERMITS, TESTS, AND INSPECTIONS REQUIRED FOR THE IRRIGATION SYSTEM.
5. CALL FOR LOCATES PRIOR TO DIGGING AT 811. CONTRACTOR IS RESPONSIBLE TO VERIFY UTILITY LOCATIONS. IF UTILITIES ARE DAMAGED IN THE COURSE OF WORK, CONTRACTOR SHALL INFORM THE OWNER AND MAKE ANY REPAIRS REQUIRED, AT NO COST TO THE OWNER.
6. ALL SLEEVING SHALL BE MARKED, SEALED AND STAKED. ALL SLEEVES SHALL BE TWICE THE SIZE OF OF THE LINE OR COMBINED LINES. MINIMUM SLEEVE SIZE SHALL BE 4-INCHES IF LOCATED UNDER ROADWAY OR DRIVE AISLE.
7. COORDINATE SLEEVING LOCATIONS WITH ELECTRICAL CONDUIT.
8. SPLICE CONTROL WIRES WITHIN VALVE BOXES ONLY, USING 3M-DBY, OR APPROVED SPLICE KITS, AND PROVIDE A 24" EXPANSION LOOP FOR ALL CONTROL WIRES WITHIN EACH VALVE BOX. KEEP WIRE SPLICES TO A MINIMUM. PROVIDE CLEAN WIRE CUTS WITH NEW SPLICE KITS AT ALL SPLICES INCLUDING ANY SPLICE THAT IS DISCONNECTED AND RECONNECTED FOR ANY REASON OR PERIOD OF TIME.
9. VALVE BOXES SHALL BE COMMERCIAL-GRADE POLYETHYLENE OR HDPE AND SUITABLE FOR LIGHT DUTY APPLICATIONS.
10. INSTALLER SHALL BE RESPONSIBLE FOR KEEPING EXACT ACCURATE NOTES AND "AS-BUILTS" FOR THE CREATION OF THE "RECORD DRAWINGS" OF THE INSTALLED SYSTEM.
11. CONTRACTOR SHALL PROVIDE IRRIGATION MAINTENANCE THROUGH THE PLANT ESTABLISHMENT PERIOD INCLUDING WINTERIZATION(S) AND SPRING START-UP(S).

IRRIGATION SCHEDULE

SYMBOL	MANUFACTURER/MODEL/DESCRIPTION	PSI	GPM	RADIUS
	RAIN BIRD 8005 06 TURF ROTOR, 5.0IN. POP-UP, PLASTIC RISER, STANDARD NOZZLE, WITH SEAL-A-MATIC CHECK VALVE, ADJUSTABLE 50-330 ARC, AND 360 NON-REVERSING FULL-CIRCLE. 1IN. (26/34) NPT FEMALE THREADED INLET. EXTENDED RADIUS IS IDEAL FOR LARGE TURF APPLICATIONS.	50	5.6	45'
	RAIN BIRD 8005 10 TURF ROTOR, 5.0IN. POP-UP, PLASTIC RISER, STANDARD NOZZLE, WITH SEAL-A-MATIC CHECK VALVE, ADJUSTABLE 50-330 ARC, AND 360 NON-REVERSING FULL-CIRCLE. 1IN. (26/34) NPT FEMALE THREADED INLET. EXTENDED RADIUS IS IDEAL FOR LARGE TURF APPLICATIONS.	50	9.3	53'

SYMBOL	MANUFACTURER/MODEL/DESCRIPTION
	EXISTING RAIN BIRD PEB-PRS-D PLASTIC INDUSTRIAL REMOTE CONTROL VALVE WITH PRESSURE REGULATOR MODULE.
	IRRIGATION LATERAL LINE: PVC SCHEDULE 40
	IRRIGATION MAINLINE: PVC SCHEDULE 40
	PIPE SLEEVE: PVC SCHEDULE 40

Valve Callout
Valve Number
Valve Flow
#" Valve Size

Know what's below. Call before you dig.

AHBL
TACOMA · SEATTLE · SPOKANE · TRI-CITIES
2215 North 30th Street, Suite 300 Tacoma, WA 98403
253.383.2422 TEL 253.383.2572 FAX www.ahbl.com WEB

Project Title:

MIRROR LAKE ELEMENTARY SCHOOL FIELD RENOVATION

Client:

FEDERAL WAY PUBLIC SCHOOL
33330 8TH AVENUE SOUTH
FEDERAL WA, WA 98003

Project No.
2240123.40

Issue Set & Date:

BID SET

APRIL 11, 2025

STATE OF WASHINGTON · CRAIG R. SKIPTON · NO. 24911 · EXP. 03/05/2027 · LANDSCAPE ARCHITECT
04/11/2025

NOTICE
ALTERATION OF THIS DOCUMENT SHALL INVALIDATE THE PROFESSIONAL SEAL AND ACKNOWLEDGE PUBLICATION OF THIS DOCUMENT DOES NOT DEROGATE FROM RESERVED COPYRIGHT RIGHTS IN IT. THIS DOCUMENT IS FOR USE ONLY FOR THE PROJECT IDENTIFIED IN THE TITLE BLOCK AND IS NOT TO BE USED FOR REPAIR, REMODEL, OR ADDITION TO THAT PROJECT OR FOR ANY OTHER PROJECT.

4
3
2
1
Revisions:

Sheet Title:

IRRIGATION PLAN

Designed by:	Drawn by:	Checked by:
DR	DR	CS

Sheet No.

L3.0

12 of 13 Sheets

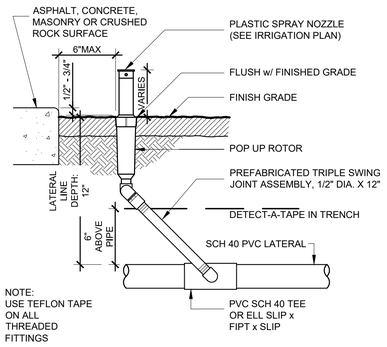

1 POP-UP ROTOR HEAD SWING JOINT

1/8" = 1'-0" P-2024-MRL-100

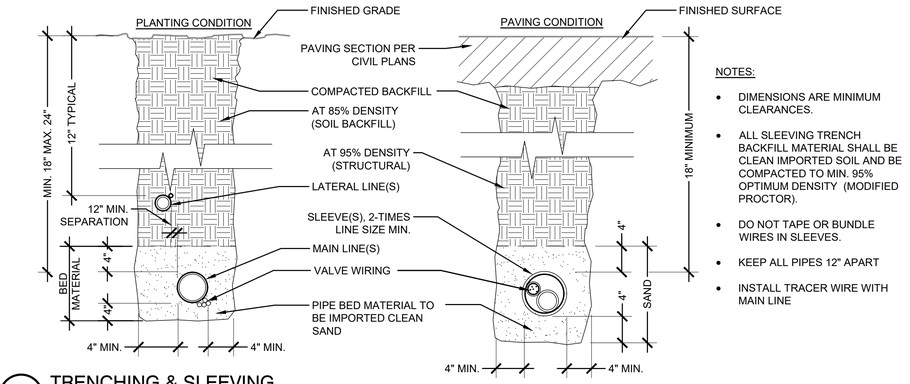

2 TRENCHING & SLEEVING

NTS P-2024-MRL-103

NOTES:

- DIMENSIONS ARE MINIMUM CLEARANCES.
- ALL SLEEVING TRENCH BACKFILL MATERIAL SHALL BE CLEAN IMPORTED SOIL AND BE COMPACTED TO MIN. 95% OPTIMUM DENSITY (MODIFIED PROCTOR).
- DO NOT TAPE OR BUNDLE WIRES IN SLEEVES.
- KEEP ALL PIPES 12" APART
- INSTALL TRACER WIRE WITH MAIN LINE

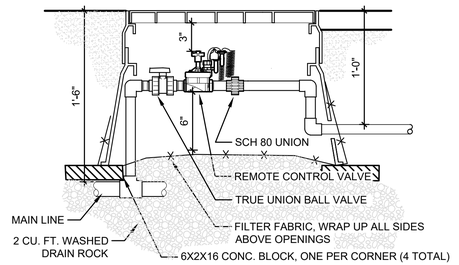

NOTES:

1. USE VALVE BOX W EXTENSIONS. SET 2" ABOVE GRADE IN SHRUBS, FLUSH IN TURF
2. USE TEFLON TAPE FOR ALL THREADED FITTINGS, NO PIPE DOPE
3. KEEP MIN. 3" CLEARANCE AROUND VALVE ON ALL SIDES.
4. LEAVE EXTRA 30" CONTROL WIRE COILED INSIDE VALVE BOX
5. USE DBR WATERPROOF CONNECTORS

3 REMOTE CONTROL VALVE

1 1/2" = 1'-0"

811 Know what's below. Call before you dig.

AHBL
TACOMA · SEATTLE · SPOKANE · TRI-CITIES
2215 North 30th Street, Suite 300 Tacoma, WA 98403
253.383.2422 TEL 253.383.2572 FAX www.ahbl.com WEB

Project Title:

MIRROR LAKE ELEMENTARY SCHOOL FIELD RENOVATION

Client:

FEDERAL WAY PUBLIC SCHOOL
33330 8TH AVENUE SOUTH
FEDERAL WA, WA 98003

Project No.

2240123.40

Issue Set & Date:

BID SET

APRIL 11, 2025

STATE OF WASHINGTON · CRAIG R. SKIPTON · NO. 21871 · EXP. 03/05/2027 · LANDSCAPE ARCHITECT

04/11/2025

NOTICE
ALTERATION OF THIS DOCUMENT SHALL INVALIDATE THE PROFESSIONAL SEAL AND SIGNATURE. PUBLICATION OF THIS DOCUMENT DOES NOT DEGRADE FROM RESERVED COPYRIGHT RIGHTS IN IT. THIS DOCUMENT IS FOR USE ONLY FOR THE PROJECT IDENTIFIED IN THE TITLE BLOCK AND IS NOT TO BE USED FOR REPAIR, REMODEL OR ADDITION TO THAT PROJECT OR FOR ANY OTHER PROJECT.

4
3
2
1

Revisions:

Sheet Title:

IRRIGATION DETAILS

Designed by:	Drawn by:	Checked by:
DR	DR	CS

Sheet No.

L3.1

13 of 13 Sheets