FEDERAL WAY
PUBLIC SCHOOLS

FEDERAL WAY PUBLIC SCHOOLS
BID DOCUMENTS

Mirror Lake Field Renovation
Project No. 2025-03-DF

Project Manual

Federal Way Public Schools
Federal Way, WA
April 15, 2025

SECTION 000107 – DIRECTORY

OWNER

Company: Federal Way Public Schools
Address: 1211 S. 332nd Street
Federal Way, WA 98003
Contact: Stephen Nutt, Project Manager
Email: snutt@fwps.org
Phone #: (253)261-5506

ENGINEER

Company: AHBL, Inc.
Address: 2215 North 30th Street, Suite 300
Tacoma, WA 98403-3350
Contact: Tom Dargan, Project Manager
Email: tdargan@AHBL.com
Phone #: (253) 383-2422

END OF DIRECTORY SECTION

SECTION 000110 – TABLE OF CONTENTS

DIVISION 00 – PROCUREMENT AND CONTRACTING REQUIREMENTS

SECTION 000107 DIRECTORY
SECTION 000110 TABLE OF CONTENTS
SECTION 001113 BID SOLICITATION
SECTION 002113 INSTRUCTIONS TO BIDDERS
SECTION 004250 BIDDERS CHECKLIST

DIVISION 01 – GENERAL REQUIREMENTS

SECTION 011100 SUMMARY OF WORK

DIVISION 31 – EARTHWORK

SECTION 310000 SITE CLEARING AND SITE DEMOLITION
SECTION 312000 EARTH MOVING
SECTION 312216 FIELD SUBGRADE
SECTION 312513 EROSION CONTROL

DIVISION 32 – EXTERIOR IMPROVEMENTS

SECTION 321216 ASPHALT PAVING
SECTION 328400 IRRIGATION
SECTION 329115 SOIL PREPARATION
SECTION 329200 TURF AND GRASSES

DIVISION 33 – SITE UTILITIES

SECTION 334100 STORM UTILITY DRAINAGE PIPING
SECTION 334616 FIELD DRAINAGE SYSTEM

ATTACHMENTS:

CONTRACTOR CERTIFICATION
PROJECT PLANS
E-BUILDER BIDDING INSTRUCTIONS
CONTRACT EXAMPLE
CERTIFICATE OF INSURANCE EXAMPLE

END OF TABLE OF CONTENTS SECTION

SECTION 001113 – BID SOLICITATION

Name of Project: **Mirror Lake Field Renovation**
Project No. 2025-03-DF
625 S. 314th St
Federal Way, WA 98003

Owner: **Federal Way Public Schools**
1211 S. 332nd St.
Federal Way, WA 98003
Contact: Stephen Nutt, Project Manager
Email: snutt@fwps.org
Phone: (253)261-5506

Engineer: **AHBL, Inc.**
2215 North 30th Street, Suite 300
Tacoma, WA 98403-3350
Contact: Tom Dargan, Project Manager
Email: tdargan@AHBL.com
Phone #: (253) 383-2422

Description of Work: Work may be generally described as:

The Mirror Lake ES Field Renovation project consists of converting the existing natural turf playfield with a new sand-based field with underdrains. The project area is approximately 1.5 acres on the south portion of the existing school. The new field underdrains will connect to the existing storm detention system. The detention system will be expanded to allow for the increased runoff.

Please Note: Work start and completion dates will be determined after receipt of the Building Permit. Contractors should be aware this may take several months and should plan accordingly.

Estimated Cost: Between **$450,000 - $500,000**

Pre-Bid Conference: A pre-bid conference will be held on **Thursday, May 15, 2025 at 8:00 am.** at the project site. All companies intending to bid are encouraged to have an employee of the company attend and identify themselves and the company on the sign-in sheet. Please sign in at the school main office upon arrival.

Bid Submittal: Bids must be in a sealed envelope sent to the address below and marked on the outside with:

"**Mirror Lake Field Renovation – Project No. 2025-03-DF**":

Sealed Bids will be received up to **2:00 pm, Wednesday, May 28, 2025** at:

Federal Way Public Schools
Maintenance and Operations
1211 S. 332nd Street
Federal Way, WA 98003.

Bids received after the date and time stated above will not receive consideration.

Bid Opening: Bids will be publicly opened and read aloud immediately following the date and time indicated above for the receipt of bids.

Apprenticeship The project estimate indicates that the project cost is below $1,000,000 so Apprenticeship participation is not required in accordance with RCW 39.04.320.

Prevailing Wage: The State of Washington prevailing wage rates are applicable for this public works project located in King County. Bidders are responsible to verify and use the most recent prevailing wage rates. The "Effective Date" for this project is the bid due date above. The applicable prevailing wage rates may be found on the Department of Labor and Industries website located at: https://secure.lni.wa.gov/wagelookup/.

Bid Bond: Accompany each Bid with a certified check, cashier's check, or surety company bid bond in an amount not less than five (5) percent of the Base Bid. Make payable to Federal Way Public Schools.

Bid Documents: Bid Documents for the project may be obtained, on or about Friday, April 25, 2025.

Electronic copies of the Bidding Documents may be obtained via download on:

1. Federal Way Public Schools https://fwps.org/departments/maintenance-operations/public-works Under the Bid Opportunities tab.

2. Builders Exchange of Washington. Access to project bid documents (plans, specifications, addenda, and Bidders List) is provided to Prime Bidders, Subcontractors, and Vendors by going to www.bxwa.com and clicking on "Posted Projects", "Public Works", and "Federal Way Public Schools". This online plan room provides Bidders with fully usable online documents with the

ability to: download, view, print, order full/partial plan sets from numerous reprographic sources, and a free online digitizer/take-off tool. It is recommended that Bidders "Register" in order to receive automatic e-mail notification of future addenda and to place themselves on the "Self-Registered Bidders List". Bidders that do not register will not be automatically notified of addenda and will need to periodically check the on-line plan room for addenda issued on this project. Contact Builders Exchange of Washington at (425) 258-1303 should you require assistance with access or registration.

Right to Reject: The Owner reserves the right to reject any and all bids, to waive informalities and irregularities in the bidding, and to accept bids which are considered to be in the best interests of the Owner.

Withdrawal of Bid: Bidders may not withdraw bids after time set for the Bid Opening, unless Award of Contract is delayed for a period of exceeding 45 days.

Published: **Friday, April 25th, 2025 and Friday, May 2nd, 2025**

END OF BID SOLICITATION SECTION

SECTION 002113 – INSTRUCTIONS TO BIDDERS

ARTICLE 1 - DEFINITIONS

All definitions set forth in the General Conditions of the Contract for Construction or in other Contract Documents are applicable to the Bidding Documents.

1.1 "Addenda" are written or graphic instruments issued by the Architect or Federal Way Public Schools prior to the execution of the Contract which modify or interpret the Bidding Documents by additions, deletions, clarifications or corrections. The contents of Addenda are issued in no particular order and therefore should be carefully and completely reviewed. Addenda relating to administrative matters, such as, for example, the date or time of meetings or Bid receipt, may be issued in writing, by fax, mail or other delivery.

1.2 An "Alternate Bid" (or "Alternate") is an amount stated in the Bid to be added to or deducted from the amount of the Base Bid if the corresponding change in the Work, as described in the Bidding Documents, is accepted by Federal Way Public Schools.

1.3 "Award" means the formal decision by Federal Way Public Schools notifying a Bidder with the lowest Responsive Bid of Federal Way Public Schools' acceptance of the Bid and intent to enter into a contract with the Bidder. A contract is only formed upon execution of the contract by both parties and also the delivery of the purchase order from Federal Way Public Schools to the Bidder, and not simply by Award.

1.4 The "Award Requirements" include the statutory requirements outlined in RCW 39.04.350 as a condition precedent to Award. This includes, but is not limited to, the following criteria:

1.4.1 At the time of bid submittal, have a certificate of registration in compliance with chapter 18.27 RCW;

1.4.2 Have a current state unified business identifier number;

1.4.3 If applicable, have industrial insurance coverage for the bidder's employees working in Washington as required in Title 51 RCW; an employment security department number as required in Title 50 RCW; and a state excise tax registration number as required in Title 82 RCW;

1.4.4 Not be disqualified from bidding on any public works contract under RCW 39.06.010 or 39.12.065(3);

1.4.5 If bidding on a public works project subject to the apprenticeship utilization requirements in RCW 39.04.320, not have been found out of compliance by the Washington state apprenticeship and training council for working apprentices out of ratio, without appropriate supervision, or outside their approved work processes as outlined in their standards of apprenticeship under chapter 49.04 RCW for the one-year period immediately preceding the date of the bid solicitation;

1.4.6 Have received training on the requirements related to public works and prevailing wage under this chapter and chapter 39.12 RCW. The bidder

must designate a person or persons to be trained on these requirements. The training must be provided by the department of labor and industries or by a training provider whose curriculum is approved by the department. The department, in consultation with the prevailing wage advisory committee, must determine the length of the training. Bidders that have completed three or more public works projects and have had a valid business license in Washington for three or more years are exempt from this subsection. The department of labor and industries must keep records of entities that have satisfied the training requirement or are exempt and make the records available on its website. Responsible parties may rely on the records made available by the department regarding satisfaction of the training requirement or exemption;

1.4.7 Before award of a public works contract, a bidder shall submit to the contracting agency a signed statement in accordance with chapter RCW 5.50 verifying under penalty of perjury that the bidder is in compliance with the responsible bidder criteria requirement of subsection (1)(g) of RCW 39.04.350. A contracting agency may award a contract in reasonable reliance upon such a sworn statement.

1.4.8 Within the three-year period immediately preceding the date of the bid solicitation, not have been determined by a final and binding citation and notice of assessment issued by the department of labor and industries or through a civil judgment entered by a court of limited or general jurisdiction to have willfully violated, as defined in RCW 49.48.082, any provision of chapter 49.46, 49.48, or 49.52 RCW; and

1.4.9 If the Bidder has a history of receiving monetary penalties for not achieving the apprentice utilization requirements pursuant to RCW 39.04.320, or is habitual in utilizing the good faith effort exception process, the bidder must submit an apprenticeship utilization plan within ten business days immediately following Federal Way Public Schools' notice to proceed.

1.5 The "Base Bid" is the sum stated in the Bid for which the Bidder offers to perform the Work described in the Bidding Documents as the base to which work may be added to or from which work may be deleted for sums stated in Alternate Bids.

1.6 A "Bid" is a complete and properly signed proposal to do the Work or designated portion thereof, submitted in accordance with the Bidding Documents, for the sums therein stipulated and supported by any data called for by the Bidding Documents.

1.7 A "Bidder" is a person or entity who submits a Bid for a prime contract with Federal Way Public Schools for the Work described in the Contract Documents.

1.8 The "Bidding Documents" include the Advertisement or Invitation to Bid, Instructions to Bidders, the Bid form, any other sample Bidding and contract forms, the Bid Bond (if required), and the Contract Documents, including any Addenda issued prior to receipt of Bids.

1.9 The "Contract Documents" for the Work consist of the Agreement Between Owner and Contractor, the General Conditions of the Contract (as well as any Supplemental, Special or other Conditions included in the Project Manual), the Drawings, the Specifications, and all Addenda issued prior to and all modifications issued after execution of the Contract.

1.10 The "Owner" is Federal Way Public Schools No. 210.

1.11 To be considered "Responsible" or meet "Responsibility" requirements, a Bidder must meet those requirements outlined in clause 1.4 as well as the following supplemental criteria applicable to this Project to the satisfaction of the Architect and Federal Way Public Schools:

1.11.1 The ability, capacity, and skill to perform the Contract;

1.11.2 The character, integrity, reputation, judgment, experience, and efficiency of the Bidder;

1.11.3 Whether the Bidder can perform the Contract within the time specified;

1.11.4 The previous and existing compliance by the Bidder with laws relating to the Contract;

1.11.5 The quality of performance of previous contracts, including demonstration of successful completion of similar projects of equal or greater size, scope and value in the last three (3) years;

1.11.6 The designated Project Manager shall have a minimum of three (3) years of successful experience in project management and scheduling of projects of similar scope and complexity;

1.11.7 The designated Superintendent shall have a minimum of five (5) years of successful supervision of projects of similar scope and complexity;

1.11.8 Any other qualifications required by the Contract Documents or Bidding Documents; and

1.11.9 Such other information as may be secured having a bearing on the decision to award the contract.

1.12 A "Sub-bidder" is a person or entity who submits a bid to a Bidder for materials, equipment or labor for a portion of the Work.

1.13 A "Unit Price" is an amount stated in the Bid as a price per unit of measurement for materials, equipment or services as described in the Bidding Documents or in the Contract Documents. Federal Way Public Schools reserves the right to reject at any time, without impairing the balance of the proposal, any or all such predetermined unit prices.

ARTICLE 2 - BIDDER'S REPRESENTATIONS

By making its Bid, each Bidder represents that:

2.1 *Bidding Documents.* The Bidder has read and understands the Bidding Documents, and its Bid is made in accordance with them.

2.2 *Pre-Bid Meeting*. The Bidder has attended any pre-bid meeting(s) required by the Bidding Documents.

2.3 *Possible Self-Performed Work Requirement*. The Bidder will perform *with its own forces* at least that percentage (if any) of the Work required by the Bidding Documents or the Contract Documents.

2.4 *Basis*. Its Bid is based upon the materials, systems, services, and equipment required by the Bidding Documents, without exception.

2.5 *Examination*. The Bidder has carefully examined and understands the Bidding Documents, the Contract Documents (including without limitation any liquidated damages and insurance provisions), and the Project site, including any existing buildings, it has familiarized itself with the local conditions under which the Work is to be performed and has correlated its observations with the requirements of the Contract Documents and it has satisfied itself as to the nature, location, character, quality and quantity of the Work, the labor, materials, equipment, goods, supplies, work, services and other items to be furnished, and all other requirements of the Contract Documents. The Bidder has also satisfied itself as to the conditions and other matters that may be encountered at the Project site or affect performance of the Work or the cost or difficulty thereof, including but not limited to those conditions and matters affecting: transportation, access, disposal, handling and storage of materials, equipment and other items; availability and quality of labor, water, electric power and utilities; availability and condition of roads; climatic conditions and seasons; physical conditions at the Project site and the surrounding locality; topography and ground surface conditions; and equipment and facilities needed preliminary to and at all times during the performance of the Work. The failure of the Bidder fully to acquaint itself with any applicable condition or matter shall not in any way relieve the Bidder from the responsibility for performing the Work in accordance with, and for the Contract Sum and within the Contract Time provided for in, the Contract Documents.

2.6 *Project Manual*. When a Project Manual is available, the Bidder has checked its copies of the Project Manual with the Table of Contents bound therein to ensure the Project Manual is complete.

2.7 *Separate Work*. The Bidder has examined and coordinated all Drawings, Contract Documents, and Specifications for any other contracts to be awarded separately from, but in connection with, the Work being bid upon, so that the Bidder is fully informed as to conditions affecting the Work under the contract being bid upon.

2.8 *License Requirements*. Bidders and their proposed Subcontractors shall be registered and shall hold such licenses as may be required by the laws of Washington for the performance of the Work specified in the Contract Documents. At the time of Bid submittal, Bidders shall have a certificate of registration in compliance with RCW 18.27.

2.9 *No Exceptions*. Bids must be based upon the materials, systems and equipment described and required by the Bidding Documents, and terms and conditions in the Contract Documents, without exception.

ARTICLE 3 - BIDDING DOCUMENTS

3.1 *Copies*

3.1.1 **Deposit**. Except when Bidding Documents are only made available electronically, Bidders may obtain complete sets of the Bidding Documents

from the issuing office and other locations designated in the Advertisement or Invitation to Bid in the number and for the deposit amount, if any, stated. The deposit (if any) will be refunded to Bidders who submit a bona fide Bid and return the Bidding Documents in good condition within ten (10) days after receipt of Bids. The cost of replacement of any missing or damaged documents will be deducted from the deposit. A Bidder awarded a Contract may retain the Bidding Documents, and its deposit will be refunded.

3.1.2 **Sub-bidders**. Bidding Documents will not be issued directly to Sub-bidders or others unless specifically offered in the Advertisement or Invitation to Bid.

3.1.3 **Complete Sets**. Bidders shall use complete sets of Bidding Documents in preparing Bids and are solely responsible for utilizing established plan holder identification processes to obtain updated bid information; neither Federal Way Public Schools nor the Architect assumes any responsibility for errors or misinterpretations resulting from the use of incomplete and/or superseded sets of Bidding Documents. Printed copies (when made available) of plans take precedence over any on-line images.

3.1.4 **Conditions**. Federal Way Public Schools and/or the Architect make copies of the Bidding Documents available on the above terms only for the purpose of obtaining Bids on the Work and do not confer a license or grant permission for any other use.

3.1.5 **Legible Documents**. To the extent any drawings, specifications, or other Bidding documents are not legible, it is the Bidder's responsibility to notify Federal Way Public Schools and the Architect and to obtain legible documents from the plan center.

3.2 *Interpretation or Correction of Bidding Documents*

3.2.1 **Format**. The Contract Documents may be divided into parts, divisions, and sections for convenient organization and reference. Generally, there has been no attempt to divide the Specification sections into Work performed by the various building trades, any Work by separate contractors, or any Work required for separate facilities in or phases of the Project.

3.2.2 **Notify Owner and Architect**. Bidders and Sub-bidders shall promptly notify Federal Way Public Schools and the Architect in writing of any ambiguity, inconsistency, or error which they may discover upon examination of the Bidding Documents or of the site and local conditions. All Bidders and Sub-bidders shall thoroughly familiarize themselves with specified products and installation procedures and submit to Federal Way Public Schools and the Architect any objections (in writing) no later than seven (7) calendar days prior to the Bid Date. The submittal of the Bid constitutes acceptance of products and procedures specified as sufficient, adequate, and satisfactory for completion of the Contract.

3.2.3 **Written Request**. Bidders and Sub-bidders requiring clarification or interpretation of the Bidding Documents shall make a written request

which shall reach the Owner at least seven (7) calendar days prior to the date for receipt of Bids. All inquiries shall be addressed to:

Stephen Nutt, Project Coordinator
Federal Way Public Schools
Maintenance and Operations
1211 S. 332nd St.
Federal Way, Washington 98003
snutt@fwps.org

3.2.4 **Addenda**. Any interpretation, correction or change of the Bidding Documents will be made by written Addendum. Interpretations, corrections or changes of the Bidding Documents made in any other manner will not be binding, and Bidders shall not rely upon such interpretations, corrections and changes.

3.2.5 **Singular References**. Reference in the singular to an article, device, or piece of equipment shall include as many of such articles, devices, or pieces as are indicated in the Contract Documents or as are required to complete the installation.

3.2.6 **Utilities and Runs**. The Bidder should assume that the exact locations of any underground or hidden utilities, underground fuel tanks, and any plumbing and electrical runs may be somewhat different from any location indicated in the surveys or Contract Documents.

3.3 *Substitutions*

3.3.1 **Standard**. The materials, products, procedures and equipment described in the Bidding Documents establish a standard of required function, dimension, appearance, and quality that must be met by any proposed substitution.

3.3.2 **Substitution Procedure**. No substitution will be considered prior to receipt of Bids unless the Federal Way Public Schools and/or Architect receives a written request for approval on Federal Way Public Schools' substitution request form, with all data requested on the form completed, at least nine (9) days prior to the date for receipt of Bids. Each such request shall include the name of the material or equipment proposed to be replaced and a complete description of the proposed substitute, including drawings, cuts, performance and test data, warranty information, and any other information necessary for an evaluation. A statement setting forth any changes in other materials, equipment or other Work that incorporation of the substitute would require shall be included. The proposer has the burden to prove the merit of the proposed substitute; by proposing the substitution, the Bidder represents that it has personally investigated the proposed material or product and determined that it is equal or better in all respects to that specified, that the same or better warranty will be provided for the substitution, that complete cost data, including all direct and indirect costs of any kind, has been presented, that the Contract Time will not be increased, and that it will coordinate the installation of the substitute if accepted and make all associated changes in the Work. Federal Way Public Schools and/or the Architect's decision to approve or disapprove a proposed substitution shall be final. Written

requests for approval shall constitute a guarantee by the Bidder that the articles or materials are in all respects, including warranty and installation, equal or superior to those specified, unless otherwise noted. To the extent the proposed substitution will require additional services by the Architect or its consultants after Bid award, the Bidder, if successful, will be required to pay the Architect or its consultants for these services at their customary hourly rates.

3.3.3 **Addendum**. If the Federal Way Public School and/or Architect approves a proposed substitution prior to receipt of Bids, the approval will be set forth in a written Addendum. Bidders shall not rely upon approvals made in any other manner. Substitution request forms returned by the Architect are a courtesy only, and Bidders/Sub-bidders shall rely solely on substitution approvals listed in an Addenda.

3.3.4 **Post-Bid Substitutions**. After the Contract has been executed, Federal Way Public Schools and the Architect may consider a written request for the substitution of material or products in place of those specified in the Contract Documents only under the circumstances as specified therein.

3.4 *Addenda*

3.4.1 **Written**. All Addenda will be either emailed or posted electronically with notice to those bidders who have registered with the designated reprographics company for this project or, on small works projects, to the Bidders from which Bids are being requested.

3.4.2 **Copies**. Copies of Addenda will be made available for inspection wherever Bidding Documents are on file for that purpose.

3.4.3 **Verification and Acknowledgment of Receipt**. Prior to bidding, each Bidder shall ascertain that it has received all Addenda issued. Each Bidder shall acknowledge its receipt of all Addenda in its Bid.

ARTICLE 4 - BIDDING PROCEDURE

4.1 *Form and Style of Bids*

4.1.1 **Form**. Bids (including any required attachments) shall be submitted on forms identical to the form included with the Bidding Documents. Bids on different forms may be rejected. No oral, email or telephonic responses or modifications will be considered to be Bids.

4.1.2 **Entries on the Bid Form**. All blanks on the Bid form shall be filled in by typewriter, electronically or manually in ink.

4.1.3 **Words and Figures**. Where so indicated by the makeup of the Bid form, sums shall be expressed in both words and figures; in case of discrepancy between the two and regardless of any statement to the contrary on the Bid form, *the amount written in figures shall govern, and the words shall be used to determine any ambiguities in the figures*. Portions of the Bid form may require the addition of component bids to a total or the identification of component amounts within a total. In case of discrepancy

between component amounts listed and their sum(s), the component amounts listed shall govern.

4.1.4 **Initial Changes**. Any interlineation, alteration or erasure must be initialed by an authorized representative of the Bidder.

4.1.5 **Alternates and Unit Prices**. All requested Alternates and unit prices should be bid. Federal Way Public Schools reserves the right, but is not obligated, to reject any Bid on which all requested Alternates or unit prices are not bid. If no change in the Base Bid is required for an Alternate, enter "*No Change.*" If there is no entry, it will be presumed that the Bidder has made no offer to accomplish this Alternate. If it is not otherwise clear from the Bid or nature of the Alternate, it will be presumed that the amount listed for an Alternate is an add rather than a deduct.

4.1.6 **No Conditions**. The Bidder shall make no conditions or stipulations on the Bid form nor qualify its Bid in any other manner.

4.1.7 **Identity of Bidder**. The Bidder shall include in the specified location on the Bid form the legal name of the Bidder and, if requested, a description of the Bidder as a sole proprietor, a partnership, a joint venture, a corporation (including the state of incorporation), or another described form of legal entity. The Bid shall be signed by the person or persons legally authorized to bind the Bidder to a contract. A Bid submitted by an agent shall have a current power of attorney attached certifying the agent's authority to bind the Bidder, and provide other information requested.

4.1.8 **Bid Amounts do Not Include Sales Tax**. The Bid shall include in the sum stated all taxes imposed by law, EXCEPT state and local sales tax on the contract sum.

4.1.9 **Bid Breakdown**. The Bid form may contain, for Federal Way Public Schools' accounting purposes only, a breakdown of some or all of the components included in the Base Bid.

4.2 *Potential Listing of Subcontractors*

4.2.1 **Procedure**. On certain projects of Federal Way Public Schools, the Bid form includes a requirement that certain Subcontractors be listed, and the list must be submitted to Federal Way Public Schools as described in the bidding documents. In these circumstances, the Bidder shall name the Subcontractor with whom the Bidder, if awarded the Contract, will subcontract *directly* (i.e., not lower-tier Subcontractors) for performance of the work of:

(a) HVAC (heating, ventilation and air conditioning),

(b) plumbing as described in RCW 18.106,

(c) electrical work as described in RCW 19.28,

(d) structural steel installation,

(e) rebar installation, and

(f) any other categories of Work listed on the Subcontractor listing form(s).

In accordance with RCW 39.30.060, failure of a Bidder to submit the names of such proposed heating, ventilation and air conditioning, plumbing, electrical, structural steel installation, and rebar installation Subcontractors or to name itself to perform such Work or the naming of two or more Subcontractors to perform the same Work in the time periods described above shall render the Bidder's Bid nonresponsive and, therefore, void. The Bidder, if awarded the Contract, will subcontract with the listed Subcontractor for performance of the portion of the Work designated on the Form of Proposal, subject to the provisions of the Contract for Construction and RCW 39.30.060.

4.2.2 **Timing**: The listing of HVAC, plumbing, and electrical subcontractors shall occur within one hour of the published bid submittal time. The listing of structural steel installation and rebar installation subcontractors shall occur within forty-eight hours of the published bid submittal time. The listing of any other categories of Work listed on the Subcontractor listing form(s) shall occur as indicated on such forms or as otherwise described in the bidding documents.

4.2.3 **Self-Performance**: If the Bidder intends to self-perform any of these categories of Work, it must name itself for each such category of Work.

4.2.4 **If no Subcontractors**: If there is no work to be performed by a HVAC, plumbing, electrical, structural steel installation, rebar installation, or other subcontractor category identified on the Bid form(s), the Bidder should insert "None" or "N/A" on the Bid form. If a category is left blank, that shall indicate that the Bidder believes that there is no Work to be performed by that trade.

4.2.5 **Multiple Entries**: The Bidder shall not list more than one (1) entity for a particular category of Work identified, unless a Subcontractor varies with an Alternate Bid, in which case the Bidder shall identify the Subcontractor to be used for the Alternate and the affected portion of the Work and otherwise make its Bid clear as to which subcontractor shall be utilized depending upon the selection of alternates.

4.2.6 **Multiple Submittal Times**. In the event the Bidding Documents call for a second submittal time for receipt of alternate bids, and no additional Subcontractors are listed with such alternate bids, Federal Way Public Schools will consider that there is no change in the Subcontractors from those listed with regard to the base Bid.

4.2.7 **Replacement**. If a listed Subcontractor is unable to comply with any bondability, qualification or other requirements of the Contract or Bidding Documents (including without limitation a finding of Subcontractor non-Responsibility), Federal Way Public Schools may require the Bidder to replace the Subcontractor with a Subcontractor acceptable to Federal Way Public Schools at no change in the Contract Sum or Contract Time.

4.2.8 **Subcontractor Standards**. Subcontractors shall meet contractual and technical qualifications standards, and provide specialized certification, licensing, and payment and performance bonding where specified.

4.3 *Bid Security*

4.3.1 **Purpose and Procedure**. Each Bid exceeding the sum of Three Hundred Fifty-Thousand Dollars ($350,000.00) shall be accompanied by a bid security payable to Federal Way Public Schools in the form required in the Bidding Documents and equal to five percent (5%) of the Base Bid. The bid security constitutes a pledge that the Bidder will enter into the Contract with Federal Way Public Schools in the form provided, in a timely manner, and on the terms stated in its Bid and will furnish in a timely manner the payment and performance bonds, certificates of insurance, Contractor's Construction Schedule, and all other documents required in the Contract Documents. Should the Bidder fail or refuse to enter into the Contract or fail to furnish such documents, the amount of the bid security shall be forfeited to Federal Way Public Schools as liquidated damages, not as a penalty. By submitting its Bid and bid security, the Bidder agrees that any forfeiture is a reasonable prediction at the time of Bid submittal of future damages to Federal Way Public Schools.

4.3.2 **Form**. The bid security shall be in the form of a certified or bank cashier's check payable to Federal Way Public Schools or a bid bond executed by a bonding company acceptable to Federal Way Public Schools and licensed in the State of Washington on the form included with the Bidding Documents or equivalent form acceptable to Federal Way Public Schools. The Attorney-in-Fact who executes the bond on behalf of the surety shall be licensed to do business in the State of Washington and shall affix to the bond a certified and current copy of that person's Power of Attorney.

4.3.3 **Retaining Bid Security**. Federal Way Public Schools will have the right to retain the Bid Security of Bidders to whom an award is being considered until the earliest of either (a) the Contract has been executed, and payment and performance bonds have been furnished, or (b) the specified time has elapsed so that Bids may be withdrawn, or (c) all Bids have been rejected.

4.3.4 **Return of Bid Security**. Within forty-five (45) days after the Bid Date, Federal Way Public Schools will release or return Bid Securities to Bidders whose Bids are not to be further considered in awarding the Contract. Bid securities of the three apparent low Bidders will be held until the Contract has been finally executed, after which all unforfeited Bid securities will be returned.

4.4 *Submission of Bids*

4.4.1 **Procedure**. The Bid, the Bid security, and any other documents required to be submitted with the Bid shall be enclosed in a sealed opaque envelope identified with the Project name, Project number, the Bidder's name and address and, if applicable, the designated portion of the Work for which the Bid is submitted. If the Bid is sent by mail the sealed envelope shall be enclosed in a separate mailing envelope with the notation "*SEALED BID ENCLOSED*" on the face thereof.

4.4.2 **Deposit**. Bids shall be deposited at the designated location prior to the time and date for receipt of Bids indicated in the Advertisement or Invitation to Bid, or any extension thereof made by Addendum. Bids received after the time and date for receipt of Bids may be opened, retained unopened, or returned (open or unopened), all at the discretion of Federal Way Public Schools.

4.4.3 **Responsibility**. The Bidder assumes full responsibility for timely delivery at the location designated for receipt of Bids.

4.4.4 **Form**. Oral, telephonic, email, fax or telegraphic Bids are invalid and will not receive consideration unless this Project is bid under small works and is explicitly allowed by the invitation to bid or other bidding documents.

4.5 *Modification or Withdrawal of Bid*

4.5.1 **After Receipt Time**. A Bid may not be modified, withdrawn or canceled by the Bidder during the 45-day period following the time and date designated for the receipt of Bids, and each Bidder so agrees by virtue of submitting its Bid.

4.5.2 **Before Receipt Time**. Prior to the time and date designated for receipt of Bids, any Bid submitted may be modified or withdrawn only by notice to the party receiving Bids at the place designated for receipt of Bids. Such notice shall be in writing over the signature of the Bidder or by fax; if by fax, written confirmation over the signature of the Bidder shall be mailed and postmarked on or before the date and time set for receipt of Bids. The notice shall be worded so as not to reveal the amount of the original Bid. Email notice will not be considered. It shall be the Bidder's sole responsibility to verify that the notice has been received by Federal Way Public Schools in time to be withdrawn before the Bid opening.

4.5.3 **Resubmittal**. Withdrawn Bids may be resubmitted up to the time designated for the receipt of Bids provided that they are then fully in conformance with these Instructions to Bidders.

4.5.4 **Bid Security With Resubmission**. Bid security shall be in an amount sufficient for the Bid as modified or resubmitted.

4.6 *Notice*

4.6.1 Notice or a request from a Bidder under these Instructions to Bidders must be in writing over the signature of the Bidder and delivered in person or by mail, email, express delivery, or fax. If the notice is by email or fax, written confirmation over the signature of the Bidder must be mailed and postmarked on or before the date and time set for the notice.

ARTICLE 5 - CONSIDERATION OF BIDS

5.1 *Opening of Bids*: Unless stated otherwise in the Advertisement or Invitation to Bid or an Addendum, the properly identified Bids received on time will be opened publicly and will be read aloud. An abstract of the Base Bids and Alternate Bids, if any, will be made available to Bidders and other interested parties.

5.2 *Rejection of Bids*: Federal Way Public Schools shall have the right but not the obligation to reject any or all Bids for any reason or for no reason, to reject a Bid not accompanied by required Bid security or by other material or data required by the Bidding Documents, or to reject a Bid which is in any way incomplete or irregular.

5.3 *Acceptance of Bid (Award)*

5.3.1 **Owner**. Federal Way Public Schools intends (but is not bound) to award a Contract to the lowest Responsible and Responsive Bidder, provided the Bid has been submitted in accordance with the requirements of the Bidding Documents and does not exceed the funds available. Federal Way Public Schools has the right to waive any informality or irregularity in any Bid(s) received and to accept the Bid which, in its judgment, is in its own best interests.

5.3.2 **Alternates**. Federal Way Public Schools shall have the right to accept Alternates in any order or combination, unless otherwise specifically provided in the Contract Documents or Bidding Documents, and to determine the low Bidder on the basis of the sum of the Base Bid and the Alternates (if any) accepted. Federal Way Public Schools retains the right to accept Alternate Bid items at the price bid within 60 days after the Agreement is executed.

5.3.3 **Requirements for Award**. Before the Award, the lowest Responsive Bidder shall meet the Award Requirements.

5.4 *Bid Protest Procedures*

5.4.1 **Procedure**. A Bidder protesting for any reason the Bidding Documents, a bidding procedure, Federal Way Public Schools' objection to the Bidder or a person or entity proposed by the Bidder, including but not limited to a finding of non-Responsibility, the rejection of a Bid; the award of the Contract or of any other aspect arising from or relating in any way to the bidding or award or lack thereof, shall cause a written (or email) protest to be filed with Federal Way Public Schools within two (2) business days of the event giving rise to the protest and, in any event, no later than two (2) business days after the date upon which Bids are opened. (Intermediate Saturdays, Sundays, and legal holidays are not counted.) The written protest shall include the name of the protesting Bidder, a detailed description of the specific factual and legal grounds for the protest, copies of all supporting documents, and the specific relief requested. The written protest shall be delivered to:

Christina Reagle, Contracts Manager
Maintenance and Operations
Federal Way Public Schools
1211 S. 332nd Street
Federal Way, Washington 98003
creagle@fwps.org
And shall be labeled: "Protest"

5.4.2 **Consideration**. Upon receipt of the written protest, Federal Way Public Schools will consider the protest. Federal Way Public Schools may, within three (3) business days of Federal Way Public Schools' receipt of the

protest, provide any other affected Bidder(s) the opportunity to respond in writing to the protest. If the protest is not resolved by mutual agreement of the protesting Bidder and Federal Way Public Schools, the Superintendent of Federal Way Public Schools or the Superintendent's designee will review the issues and promptly furnish a final and binding written decision to the protesting Bidder and any other affected Bidder(s) within six (6) business days of Federal Way Public Schools' receipt of the protest. (If more than one protest is filed, Federal Way Public Schools' decision will be provided within six (6) business days of Federal Way Public Schools' receipt of the last protest.) If no reply is received from Federal Way Public Schools during the six-business-day period, the protest shall be deemed rejected.

5.4.3 **Waiver**. Failure to comply with these protest procedures will render a protest waived.

5.4.4 **Condition Precedent**. Timely and proper compliance with and exhaustion of these protest procedures shall be a condition precedent to any otherwise permissible judicial consideration of a protest.

ARTICLE 6 - POST BID INFORMATION

6.1 *Information From Apparent Low Bidder*

6.1.1 **Submittal**. Within twenty-four (24) hours of Federal Way Public Schools' request, the apparent low Bidder and any other Bidders so requested shall submit the following to the Architect and Federal Way Public Schools, which list may be modified by Federal Way Public Schools:

(a) a properly executed Contractor's Qualification Statement on the form provided (unless otherwise required to be submitted at the time of the Bid);

(b) a letter or form from the Bidder's insurance company stating that the insurance required by the Contract Documents will become effective upon execution of the Contract;

(c) a letter or form from the Bidder's surety stating that the bond(s) required by the Contract Documents will become effective upon execution of the Contract;

(d) if requested by Federal Way Public Schools, a detailed breakdown of the Bid in a form acceptable to Federal Way Public Schools;

(e) the names of the persons or entities (including a designation of the Work to be performed with the Contractor's own forces, and the names of those who are to furnish materials or equipment fabricated to a special design) proposed for each of the principal portions of the Work;

(f) the proprietary names and the suppliers of the principal items or systems of materials and equipment proposed for the Work; and

(g) a State Board of Education Form D-9, if requested.

Failure to provide any of the above information in a timely manner may constitute an event of breach permitting forfeiture of the Bid security.

6.1.2 **Responsibility.** The Bidder will be required to establish to the satisfaction of the Architect and Federal Way Public Schools the reliability and Responsiblity of the persons or entities proposed to furnish and perform the Work described in the Bidding Documents as well as qualifications set forth in the Sections of the Project Manual pertaining to such proposed Subcontractor's respective trades. The Responsibility of the Bidder may be judged in part by the Responsibility of these proposed entities.

(a) *Consideration*. In considering a Bidder's Responsibility, a Bidder shall be deemed to be unqualified to perform the Contract if, after review and verification of the representations included upon the Contractor's Qualification Statement submitted by the Bidder, conditions such as, but not limited to, the following appear:

- The Bidder does not have sufficient prior experience (or an acceptable substitute thereof, as described below) with projects of a similar nature in technical, managerial, and financial requirements to that in the present Contract being bid. In addition to such established contractors, a newly established contractor may be considered qualified if it has shown on the Contractor's Qualification Statement that it is staffed with sufficient technical, managerial, and financial personnel with prior experience in the nature of construction for which the Bids are invited.

- The Bidder does not have sufficient capability to undertake the obligations of the Contract. A determination will be made when Federal Way Public Schools' review of the probable cash flow needs of the Bidder for this Project (including payroll, cost of material and supplies, equipment rental costs, and any other direct or incidental costs of the Contract), concludes that the Bidder does not have sufficient financial resources to enable it to satisfy its financial obligations under the Contract.

- The Bidder has submitted unrealistic unit prices as determined by other bidders' unit prices for this Project.

- The Bidder does not have sufficient staff, equipment, or plant available to perform the Contract. Federal Way Public Schools' determination in this matter will be based upon that represented by Bidder in the Contractor's Qualification Statement.

- The Bidder has a history of unsatisfactory performance of contracts of this or similar nature, regardless of whether such contracts existed between Federal Way Public Schools and the Bidder, or other parties.

  1) A determination of this nature will be made if Federal Way Public Schools, after review of the Bidder previous work experience, determines that the Bidder's unsatisfactory

performance has resulted predominantly from the Bidder's failure rather than a failure to perform by another party. Federal Way Public Schools will give the Contractor an opportunity to explain such nonperformance's before any final determination is reached.

2) A determination of failure to perform will be made if Federal Way Public Schools is satisfied after review of the Bidder's prior experience, that the Bidder has failed to satisfy its obligations under past contracts and Federal Way Public Schools cannot safely assume satisfactory performance of the Contract by the Bidder.

3) In reaching its determination, Federal Way Public Schools may consider statements of other parties to the prior unperformed contracts, as well as the representations of the Bidder on its Contractor's Qualification Statement.

6.1.3 **Subcontractors**. The Responsibility of the Bidder may be judged in part by the Responsibility of its Subcontractors. Bidders must verify Responsibility criteria for each first-tier Subcontractor. A Subcontractor of any tier that hires other Subcontractors must verify Responsibility criteria for each of its next lower-tier Subcontractors. Verification shall include that each Subcontractor, at the time of subcontract execution, is Responsible and possesses an electrical contractor license, if required by RCW 19.28, or an elevator contractor license, if required by RCW 70.87, and can obtain any payment and performance bonds required by the Bidding documents or the Contract Documents.

6.1.4 **Request to Modify Criteria**. No later than ten (10) days prior to the Bid Date, a potential Bidder may request in writing that Federal Way Public Schools modify the Responsibility criteria listed in clause 6.1.2 above or elsewhere in the Contract Documents or Bidding Documents. Federal Way Public Schools will evaluate the information submitted by the potential Bidder and respond before the Bid Date. If the evaluation results in a change of the criteria, Federal Way Public Schools will issue an Addendum identifying the new criteria.

6.1.5 **Objection**. Prior to the Award of the Contract, Federal Way Public Schools will notify the Bidder in writing if either Federal Way Public Schools or the Architect, after due investigation, has reasonable objection to the Bidder or a person or entity proposed by the Bidder, and Federal Way Public Schools will provide the reasons for the determination. The Bidder may appeal the determination within two (2) business days of its receipt of the objection by presenting additional information to Federal Way Public Schools, and Federal Way Public Schools will consider the additional information before issuing its final determination. The Bidder may, after Federal Way Public Schools' objection or determination, and at Bidder's option, (1) withdraw the Bid, (2) submit an acceptable substitute person or entity with no change in the Contract Time and no adjustment in the Base Bid or any Alternate Bid, even if there is a cost to the Bidder occasioned by the substitution, or (3) appeal by filing a protest in

accordance with paragraph 5.4. In the event of withdrawal under these circumstances, Bid security will not be forfeited.

6.1.6 **Change**. Persons and entities proposed by the Bidder and to whom Federal Way Public Schools or the Architect have made no reasonable objection must be used on the Work for which they were proposed and shall not be changed except with the written consent of Federal Way Public Schools and the Architect.

6.1.7 **Right to Terminate**. The Bidder's representations concerning its qualifications will be construed as a covenant under the Contract. Should it appear that the Bidder has made a material misrepresentation on its Contractor's Qualification Statement, Federal Way Public Schools shall have the right to terminate the Contract for cause for the Contractor's breach, and Federal Way Public Schools may then pursue such remedies as exist elsewhere under this Contract, or as otherwise are provided at law or equity.

6.2 *Information From Other Bidders*: All other Bidders designated by the Architect as under consideration for award of a Contract shall also provide a properly executed Contractor's Qualification Statement, if so requested by Federal Way Public Schools.

6.3 *Bidding Mistakes*: Federal Way Public Schools will not be obligated to consider notice of claimed bidding mistakes received more than three (3) business days after the Bid opening. In accordance with Washington law, a low Bidder that claims error and fails to enter into the Contract is prohibited from bidding on the Project if a subsequent call for Bids is made for the Project.

ARTICLE 7 - PERFORMANCE BOND AND LABOR AND MATERIAL PAYMENT BOND

7.1 *Bond and Bondability Requirements*: Within seven (7) days after the issuance of Federal Way Public Schools' notice of intent to award the Contract, and prior to the date of execution of the Contract, the Bidder shall furnish evidence satisfactory to Federal Way Public Schools of its ability to obtain statutory bonds pursuant to RCW 39.08 covering the faithful performance of the Contract and the payment of all obligations arising thereunder in the form and amount prescribed in the Contract Documents. The cost of such bonds shall be included in the Base Bid. Such bonds for projects under $150,000 may be waived by Federal Way Public Schools; see RCW 39.08.010(3).

7.2 *Time of Delivery and Form of Bonds*: The Bidder shall deliver the required bonds to Federal Way Public Schools within seven (7) days after the date of execution of the Contract and prior to commencing operations at the site. The bonds shall be written on current AIA payment and performance bond forms (A312) and shall be in the amount of the Contract Sum plus sales tax.

ARTICLE 8 - FORM OF AGREEMENT BETWEEN OWNER AND CONTRACTOR

8.1 *Form to Be Used*: The Agreement for the Work will be written on the form(s) contained in or referenced by the Bidding Documents, including any General, Supplemental or Special Conditions, and the other Contract Documents included with the Project Manual. In the event no form is enclosed or referenced, an AIA Document A101-2017, "Standard Form of Agreement Between Owner and Contractor, where the basis of payment is a Stipulated Sum," along with AIA

Document A201-2017, "General Conditions of the Contract for Construction" as both are revised, modified and supplemented by Federal Way Public Schools, will be used. All references in these Instructions to Bidders to the A101 or the A201 refer to the documents as revised by Federal Way Public Schools.

8.2 *Conflicts*: In case of conflict between the provisions of these Instructions and any other Bidding Document, these Instructions shall govern. In case of conflict between the provisions of the Bidding Documents and the Contract Documents, the Contract Documents shall govern.

ARTICLE 9 - CONTRACT DOCUMENTS

This paragraph contains descriptions of some but not all of the provisions of the Contract Documents.

9.1 *Retainage*: The Contract Documents specify the statutory retainage requirements of RCW 60.28 for this Project.

9.2 *Contract Time*: The Contract Documents specify the Contract Time. Timely completion of this Project is essential to Federal Way Public Schools.

9.3 *Prevailing Wages*: The Contract Documents contain requirements regarding the payment of prevailing wages pursuant to RCW 39.12.

9.4 *Written Claims and Notice*: The Contract Documents contain a number of provisions that require the Contractor to provide notice of Claims and to make and support Claims in writing within a specified time in order to maintain the Claim.

9.5 *Changes in Contract Sum*: The Contract Documents contain provisions specifying requirements for and pricing of changes in the Contract Sum.

9.6 *Dispute Resolution*: The Contract Documents contain alternative dispute resolution procedure which, among other things, requires non-binding mediation of all disputes.

9.7 *Contractor Registration*: Pursuant to RCW 39.06, the Bidder shall be registered or licensed as required by the laws of the State of Washington, including but not limited to RCW 18.27.

9.8 *Taxes*. The Contractor shall include in its Bid and pay for all applicable taxes except Washington State Sales Tax and Local Sales Tax on the Contract Sum, which shall be excluded in the preparation of its Bid. Such State and Local Sales Taxes shall be added to the Contract Sum, paid by Federal Way Public Schools to the Contractor, and then paid by the Contractor over the course of the Project. Refer to general, supplementary or other conditions regarding further information.

9.9 *Other Provisions*: The above paragraphs contain descriptions of some but not all of the provisions of the Contract Documents. Bidders should review in detail the Contract Documents themselves and not rely upon the above paragraphs in this article as complete or inclusive.

ARTICLE 10 - POSSIBLE TRENCH EXCAVATION SAFETY PROVISIONS

10.1.1 To ensure that the Bidder agrees to comply with relevant trenching safety requirements of RCW 39.04.180 and RCW 49.17, the Base Bid may include the cost of any required trenching. The Bidder shall enter in the blank provided (if any) on the Bid form the dollar amount the Bidder has included in its Base Bid for any work requiring trenching that will exceed a depth of four feet. If trench excavation safety provisions do not pertain to the Project, the Bidder should enter "N.A." or "Not Applicable" in the blank (if any) on the bid form.

END OF INSTRUCTIONS TO BIDDERS SECTION

TO: Federal Way Public Schools

PROJECT: Mirror Lake Field Renovation

PROJECT #: 2025-03-DF

DATE: _____

SUBMITED BY: _____

(Full Name and Address) _____

_____

_____

1. BID AMOUNTS

A. BASE BID

Having examined the Scope of Work, and all matters referred to in the Instructions to Bidders and the Contract Documents for the above-mentioned project, I/we, the undersigned, hereby offer to enter into a Contract to perform the Work for the Bid Amount of:

Words: _____

Figures: $ _____

Do not include Sales Tax

B. ACCOUNTING COST ITEMS

The undersigned has estimated the probable cost of the items listed below. These costs are included in the Bid amount. It is understood that these prices are not Alternate Bids and may not be separately deleted from the contract using the prices below. These prices are for the Owner's special accounting purposes and will not be part of the Owner's review and evaluation for award of the contract.

The following prices are my estimate of probable cost for the Accounting Cost Items listed below:

In accordance with Chapter 39.04 RCW and WAC 296-155-650

Trench Safety System $ _____

Do not include Sales Tax

2. ALTERNATE BID AMOUNTS

A. **N/A**

Having examined the Scope of Work, and all matters referred to in the Instructions to Bidders and the Contract Documents for the above-mentioned project, I/we, the undersigned, hereby offer to enter into a Contract to perform the Alternate Bid No. 1 for the Amount of:

Words: _____

Figures: $ _____

Do not include Sales Tax

3. TIME FOR COMPLETION

A. The Contractor shall achieve Substantial Completion of the Work no later than as indicated in the Project Schedule specification section of the Project Manual, and Final Completion of the work within 30 calendar days after Substantial Completion of all of the Work.

Please Note: Work start and completion dates will be determined after receipt of the Building Permit. Contractors should be aware this may take several months and should plan accordingly.

4. PREVAILING WAGES

A. It is the contractor's responsibility to go on line to the LNI web page https://secure.lni.wa.gov/wagelookup/ the day of bid and verify the prevailing wages for King County.

5. APPRENTICESHIP REQUIREMENTS

A. A. The anticipated cost of this project is less than $1,000,000. Apprenticeship participation is not required.

6. SUBCONTRACTOR LISTING

A. The anticipated cost of this project is less than $1,000,000. Submittal of Subcontractor Listing is not required.

7. ADDENDA

A. The following Addenda have been received. The modifications to the Bid Documents noted below have been considered and all costs are included in the Bid.

Addendum #: _____ Date: _____

Addendum #: _____ Date: _____

Addendum #: _____ Date: _____

Addendum #: _____ Date: _____

8. BIDDER IDENTIFICATION

Name of Firm: _____

Authorized Signature: _____

Title: _____

Bidder Address: _____

_____

_____

Phone No.: _____

Email Address: _____

Washington State
Contractors License No: _____

Note:

If Bidder is a Corporation, signature above must be that of a duly authorized officer of the Corporation.

If Bidder is a Partnership, all Partners must sign or Bidder may attach a notarized letter authorizing one Partner to sign for both (all).

9. ATTACHMENTS

A. Include the following attachments with your Bid:
   a. Contractor's Bid Bond.
   b. Contractor's Qualifications Statement.

END OF BID FORM SECTION

SECTION 004250 – BIDDER'S CHECKLIST

This list is only partial and is prepared for the Contractor's convenience. This list shall not be construed to alleviate the Contractor of formalities and requirements of the bidding documents.

REVIEW

1. Bid documents.
2. Existing site conditions.
3. Addenda.

SUBMIT

1. Bid Form
2. Contractor's Bid Bond
3. Contractor Certification

END OF BIDDER CHECK LIST

SECTION 011100 – SUMMARY OF WORK

PART 1 - GENERAL

1.01 *SUMMARY*

A. Section Includes

1. Project Information
2. Work covered by Contract Documents
3. Owner-furnished, Contractor-installed (OFCI) products
4. Contractor's use of site and premises
5. Coordination with occupants
6. Work restrictions
7. Specifications and Drawing conventions

1.02 *PROJECT INFORMATION*

A. Project: Mirror Lake Field Renovation

1. 625 S. 314th St
2. Federal Way, WA 98003

B. Owner: Federal Way Public Schools

1. 1211 S. 332nd St.
2. Federal way, WA 98003

C. Engineer: AHBL, Inc.

1. 2215 North 30th Street, Suite 300
2. Tacoma, WA 98403-3350

1.03 *WORK COVERED BY CONTRACT DOCUMENTS*

A. The Mirror Lake ES Field Renovation project consists of converting the existing natural turf playfield with a new sand-based field with underdrains. The project area is approximately 1.5 acres on the south portion of the existing school. The new field underdrains will connect to the existing storm detention system. The detention system will be expanded to allow for the increased runoff.

Please Note: Work start and completion dates will be determined after receipt of the Building Permit. Contractors should be aware this may take

several months and should plan accordingly.

B. Type of Contract:

1. Project will be constructed under a single prime contract.

1.04 *OWNER-FURNISHED, CONTRACTOR-ISNTALLED (OFCI) PRODUCTS*

A. Not in Use

1.05 *CONTRACTOR'S USE OF SITE AND PREMISES*

A. Condition of Existing Building: Maintain portions of existing building affected by construction operations in a weathertight condition throughout construction period. Repair damage caused by construction operations.

B. Condition of Existing Grounds: Maintain portions of existing grounds, landscaping, and hardscaping affected by construction operations throughout construction period. Repair damage caused by construction operations.

1.06 *COORDINATION WITH OCCUPANTS*

A. Partial Owner Occupancy: Owner will occupy premises during entire construction period, with exception of areas under construction. Cooperate with Owner during construction operations to minimize conflicts and facilitate Owner usage. Perform Work so as not to interfere with Owner's operations. Maintain existing exits unless otherwise indicated.

1. Maintain access to existing walkways, corridors, and other adjacent occupied or used facilities. Do not close or obstruct walkways, corridors, or other occupied or used facilities without written permission from Owner and authorities having jurisdiction.
2. Provide not less than 72 hours' notice to Owner of activities that will affect Owner's operations.

1.07 *WORK RESTRICTIONS*

A. Comply with restrictions on construction operations.

1. Comply with limitations on use of public streets and with other requirements of authorities having jurisdiction.

B. Comply with limitations on use of public streets and with other requirements of authorities having jurisdiction.

1. Weekend Hours: 9:00 a.m. to 7:00 p.m.
2. Early Morning Hours: High Impact Equipment restricted to 8:00 a.m. to 5:00 p.m.

C. Existing Utility Interruptions: Do not interrupt utilities serving facilities occupied by Owner or others unless permitted under the following conditions and then only after providing temporary utility services according to requirements indicated:

1. Notify Owner not less than 2 days in advance of proposed utility interruptions.
2. Obtain Owner's written permission before proceeding with utility interruptions.

D. Noise, Vibration, and Odors: Coordinate operations that may result in high levels of noise and vibration, odors, or other disruption to Owner occupancy with Owner.

1. Notify Owner not less than 2 days in advance of proposed disruptive operations.
2. Obtain Owner's written permission before proceeding with disruptive operations.

E. Smoking and Controlled Substance Restrictions: Use of tobacco products, alcoholic beverages, and other controlled substances on Project site or within existing building is not permitted.

F. Employee Identification: Provide identification tags for Contractor personnel working on Project site. Require personnel to use identification tags at all times.

G. Employee Screening: Comply with Owner's requirements for drug and background screening of Contractor personnel working on Project site.

1. Maintain list of approved screened personnel with Owner's representative.

1.08 *SPECIFICATION AND DRAWING CONVENTIONS*

A. Specification Content: Specifications use certain conventions for style of language and intended meaning of certain terms, words, and phrases when used in particular situations. These conventions are as follows:

1. Imperative mood and streamlined language are generally used in Specifications. The words "shall," "shall be," or "shall comply with,"

depending on context, are implied where a colon (:) is used within a sentence or phrase.

2. Specification requirements shall be performed by Contractor unless specifically stated otherwise.

B. Division 01 General Requirements: Requirements of Sections in Division 01 apply to Work of all Sections in Specifications.

C. Drawing Coordination: Requirements for materials and products identified on Drawings are described in detail in Specifications. One or more of the following are used on Drawings to identify materials and products:

1. **Terminology**: Materials and products are identified by typical generic terms used in individual Specifications Sections.
2. **Abbreviations**: Materials and products are identified by abbreviations scheduled on Drawings.
3. **Keynoting**: Materials and products are identified by reference keynotes referencing Specification Section numbers found in this Project Manual.

PART 2 - PRODUCTS (NOT USED)

PART 3 - EXECUTION (NOT USED)

END OF SECTION 01 11 00

31 00 00 – SITE CLEARING AND SITE DEMOLITION

PART 1 GENERAL

1.1 RELATED DOCUMENTS

A. Drawings and general provisions of the Contract, including General and Supplementary Conditions and Division 01 Specification Sections, apply to this Section.

1.2 SUMMARY

A. In general, work of this section includes, but is not limited to the following:

1. Clearing and grubbing within project limits.

2. Stripping and stockpiling topsoil.

3. Potholing existing utilities at points of connection identified on plans.

4. Protect existing utilities to remain.

B. Related Sections:

1. Division 31 Section 312000 “Earth Moving” for soil materials, excavation, backfilling, and site grading.

2. Division 31 Section 312513 “Erosion Control” for temporary erosion control measures and requirements.

1.3 DEFINITIONS

A. Subsoil: All soil beneath the topsoil layer of the soil profile and typified by the lack of organic matter and soil organisms.

B. Surface Soil: Soil that is present at the top layer of the existing soil profile at the Project site. In undisturbed areas, the surface soil is typically topsoil; but in disturbed areas such as urban environments, the surface soil can be subsoil.

C. Utilities: Underground pipes, vaults, conduits, ducts, and cables, as well as underground services within buildings.

1.4 MATERIAL OWNERSHIP

A. Except for materials indicated to be stockpiled or otherwise remain Owner’s property, cleared materials shall become Contractor’s property and shall be removed from Project site.

1.5 SUBMITTALS

A. Submit under provisions of the Contract.

B. Existing Conditions: Documentation of existing trees and plantings, adjoining construction, and site improvements that establishes preconstruction conditions that might be misconstrued as damage caused by site clearing.

1. Use sufficiently detailed photographs or video.

2. Include plans and notations to indicate specific wounds and damage conditions of each tree or other plants designated to remain.

C. Record Drawings: Identifying and accurately showing locations of capped utilities and other subsurface structural, electrical, and mechanical conditions.

1.6 QUALITY ASSURANCE

A. Maintain at least one copy of the WSDOT Standard Specifications for Road, Bridge, and Municipal Construction, most recent edition, and project plans and specifications onsite.

B. Field inspection and testing will be performed under provisions of the Contract.

C. Field inspection of Erosion Sediment Control measures will be performed by the Contractor, as required by City of Federal Way and Department of Ecology.

D. Tests and analysis of aggregate material will be performed in accordance with ANSI/ASTM D1557, ASTM D2922, ASTM D3017, ASTM D4318, and ASTM C136, as applicable.

E. If tests indicate materials do not meet specified requirements, change material and retest or obtain written approval of the Engineer. Costs associated with the retesting of materials will be the responsibility of the Contractor.

1.7 PROJECT CONDITIONS

A. Traffic: Minimize interference with adjoining roads, streets, walks, and other adjacent occupied or used facilities during site-clearing operations.

1. Do not close or obstruct streets, walks, or other adjacent occupied or used facilities without permission from Owner and authorities having jurisdiction.

2. Provide alternate routes around closed or obstructed traffic ways if required by Owner or authorities having jurisdiction.

3. Maintain emergency vehicle access to existing building throughout entire duration of construction, as noted on the Drawings.

B. Utility Locator Service: Contractor shall utilize a utility locate service and shall notify affected utility companies before starting work. Contractor shall comply with all of said utility companies' requirements.

C. The locations of existing underground utilities are approximate only and have not been independently verified by the Owner or the Owner's Representative. The Contractor shall determine the exact locations of all existing utilities before commencing work. All damages that happen due to the Contractor's failure to locate exactly and preserve all underground utilities that are designated to remain shall be repaired at Contractor's own expense.

D. Onsite soils are susceptible to erosion and therefore cause colloidal suspension in stormwater. See Division 31 Section 312513 "Erosion Control" for additional information.

1.8 REGULATORY REQUIREMENTS

A. Conform to applicable agency code for dust control, runoff control, and disposal of the demolished material.

B. Obtain, post, and pay for required permits from authorities according to provisions of the Contract, including General and Supplemental Conditions and Division 01 Specification Sections.

C. Notify affected utility companies before starting work and comply with their requirements.

D. Do not close or obstruct roadways, sidewalks, or hydrants without appropriate permits or written authorization. Maintain emergency access as required by the local jurisdiction.

E. Conform to OSHA (Occupational Safety and Health Act) requirements.

F. Conform to WISHA (Washington State Industrial Safety and Health Act) requirements.

G. Conform to applicable regulatory procedures when discovering hazardous or contaminated materials, or when uncovering buried tanks.

H. Pay all related disposal fees and charges and conform to all regulations for materials disposed offsite, including asbestos-lined cement water main, asbestos-containing building materials, storage tanks, tires, appliances, and any environmentally hazardous substances.

I. Conform to Department of Ecology (DOE) and Environmental Protection Agency (EPA) requirements for removal and disposal of all hazardous substances, including asbestos-lined water pipe, asbestos-containing building materials, storage tanks, tires, arsenic, and any environmentally hazardous substances.

1.9 COORDINATION

A. Coordinate work under provisions of the Contract.

1.10 INTENT

A. It is the intent of this Specification that the Contractor provide the Work defined herein complete in every respect, and in accordance with good practices involved in the clearing and demolition of site improvements above and below surface grade, and the requirements of this Specification, regardless of whether or not full details of such completeness, workmanship, or practices are contained herein.

B. It is the intent of the Work under this contract to conduct all clearing and demolition necessary to complete all of the Work of this project.

PART 2 PRODUCTS (NOT USED)

PART 3 EXECUTION

3.1 PREPARATION

A. Protect and maintain benchmarks and survey control points from disturbance during construction.

B. Verify that clearing limits are identified and consistent with proposed improvements. Notify Engineer if they are not consistent.

C. Mark location of utilities to be removed or relocated.

D. Locate and clearly identify trees, shrubs, and other vegetation to remain or to be relocated.

E. Protect existing site improvements to remain from damage during construction.

1. Restore damaged improvements to their original condition, as acceptable to Owner.

F. Schedule and conduct pre-construction conference with Owner, Engineer, and City of Federal Way.

G. Protect existing site improvements to remain from damage during construction.

H. Restore damaged improvements to their original condition, as acceptable to Owner.

I. Provide, erect, relocate, and maintain temporary barriers and security devices as required by the Contract. Facilities shall conform to Manual of Uniform Traffic Control Devices (MUTCD) and WSDOT.

J. Restrict site access to the designated construction entrance and as authorized by Owner.

K. Pothole and locate utilities, including invert elevations, at all locations where a proposed utility will cross or connect to an existing utility. Verify clearances and tie-in elevations prior to commencing work. Notify Civil Engineer immediately where conflicts occur. Backfill potholes with Aggregate for Gravel Base, WSDOT Specification 9-03.10.

3.2 TEMPORARY EROSION AND SEDIMENTATION CONTROL

A. Provide temporary erosion and sedimentation control measures according to requirements in Division 31 Section 312513 “Erosion Control” to prevent soil erosion and discharge of soil-bearing water runoff or airborne dust to adjacent properties and walkways, according to Drawings and requirements of authorities having jurisdiction.

B. Verify that flows of water redirected from construction areas or generated by construction activity do not enter or cross protection zones.

C. Inspect, maintain, and repair erosion and sedimentation control measures during construction until permanent vegetation has been established.

D. Remove erosion and sedimentation controls and restore and stabilize areas disturbed during removal.

3.3 TEMPORARY TREE AND PLANT PROTECTION

A. General: Protect trees and plants remaining onsite according to requirements in Division 01.

B. Repair or replace trees, shrubs, and other vegetation indicated to remain or to be relocated that are damaged by construction operations, in a manner approved by the Engineer and Landscape Architect.

3.4 EXISTING UTILITIES

A. Execution: Verify that the limits of clearing and demolition are defined. Mark location of utilities. Clearly and separately identify the location of utilities near the demolition area that are not to be demolished. Conduct demolition activities to avoid interrupting services to utilities that remain.

B. Contractor shall arrange for disconnecting and sealing indicated utilities that serve existing structures before site clearing.

1. Verify that utilities have been disconnected and capped before proceeding with site clearing.

2. Coordinate and pay for any utility provider fees associated with disconnecting services.

C. Locate, identify, disconnect, and seal or cap utilities indicated to be removed or abandoned in place. Demolished materials shall be removed and disposed of offsite by the Contractor at an approved disposal area.

D. The utility removal trenches and any depressions below planned final grades caused by demolition activities shall be backfilled with structural fill as required under Division 31 Section 312000 “Earth Moving.”

E. Locate, identify, and disconnect utilities indicated to be abandoned in place.

F. Interrupting Existing Utilities: Do not interrupt utilities serving facilities occupied by Owner or others unless permitted under the following conditions and then only after arranging to provide temporary utility services according to requirements indicated:

1. Notify Owner not less than 2 days in advance of proposed utility interruptions.

2. Do not proceed with utility interruptions without Engineer and Owner written permission.

G. Contractor shall provide coordination with all serving utility agencies.

H. Contractor shall not damage existing utilities to remain and shall include in the Base Bid all costs to clean and repair any disturbed utility to remain.

I. If workers enter any trench or other excavation 4 feet or more in depth that does not meet the open pit requirements of WSDOT Specification 2-09.3(3)b, it shall be shored and cribbed. All trench safety systems shall meet the requirements of the Washington Industrial Safety and Health Act, Chapter 49.17 RCW.

J. Excavate for and remove underground utilities indicated to be removed.

3.5 CLEARING AND GRUBBING

A. Remove obstructions, trees, shrubs, and other vegetation to permit installation of new construction. Removal includes digging out stumps and obstructions, and grubbing roots.

1. Do not remove trees, shrubs, and other vegetation indicated to remain or to be relocated. Refer to Landscape Drawings for tree protection requirements and refer to plans for trees to remain and be protected.

2. Completely remove stumps, roots over 1-inch in diameter, obstructions, and debris to a depth of 24 inches below exposed subgrade.

B. Fill depressions caused by clearing and grubbing operations with appropriate fill material unless further excavation or earthwork is indicated.

C. Remove debris, rock, and extracted plant life from site and haul to an approved offsite disposal location. Do not burn or bury materials onsite.

3.6 TOPSOIL STRIPPING

A. Remove sod and grass before stripping topsoil, and dispose of sod, grass, and roots offsite at an approved location.

B. Strip topsoil to whatever depths are encountered in a manner to prevent intermingling with underlying non-organic subsoil.

1. Strip surface soil of unsuitable topsoil including trash, debris, weeds, roots, and other waste materials and remove from project site.

2. Dispose topsoil offsite at an approved location.

3.7 SITE IMPROVEMENTS

A. Remove existing above- and below-grade improvements as indicated and necessary to facilitate new construction.

3.8 DEMOLITION REQUIREMENTS

A. Conduct demolition to minimize interference with adjacent improvements.

B. Conduct operations with minimum interference to public or private accesses. Maintain protected egress and access at all times.

C. Obtain written permission from adjacent property owners when demolition equipment will traverse, infringe upon, or limit access to their property.

D. Sprinkle work with water to minimize dust. Provide hoses, hydrant meters, backflow prevention, and water connections for this purpose per requirements of the jurisdiction.

E. Remove demolished plant materials and miscellaneous demolition debris from site and haul to an approved disposal location.

F. Burial or burning of material to be removed is not permitted onsite. Maintain site in clean condition.

G. Blasting is not allowed.

H. Pay all related disposal fees and charges for materials disposed of offsite, including asbestos-containing materials if applicable, appliances, and misc. debris.

3.9 DISPOSAL OF SURPLUS AND WASTE MATERIALS

A. Remove surplus soil material, unsuitable topsoil, obstructions, demolished materials, and waste materials including trash and debris, and legally dispose of them off Owner's property.

B. Separate recyclable materials produced during site clearing from other nonrecyclable materials. Store or stockpile without intermixing with other materials and transport them to recycling facilities. Do not interfere with other Project work.

C. Conform to requirements of the Contract.

END OF SECTION

31 20 00 – EARTH MOVING

PART 1 GENERAL

1.1 RELATED DOCUMENTS

A. Drawings and general provisions of the Contract, including General and Supplementary Conditions and Division 01 Specification Sections, apply to this Section.

1.2 SUMMARY

A. Section Includes:

1. Preparing subrades.

2. Importing required soil materials and exporting surplus soil materials.

3. Excavation and reuse of native soil to meet requirements of Onsite Structural Fill.

4. Rough and final grading the site.

B. Related Sections:

1. Contract and other general requirements in connection with temporary controls, utilities, and support facilities.

2. Division 31 Section 311000 “Site Clearing and Site Demolition” for site stripping, grubbing, stripping topsoil, and removal of above- and below-grade improvements and utilities.

3. Division 31 Section 312513 “Erosion Control” for temporary erosion control.

4. Division 33 Section 334616 “Field Subsurface Drainage” for play field drainage.

5. Division 33 Section 334623 “Field Permeable Aggregate” for play field aggregate.

1.3 DEFINITIONS

A. Backfill: Soil material or controlled low-strength concrete used to fill a trench or other excavation.

1. Initial Backfill: Backfill placed beside and over pipe in a trench, including haunches to support sides of pipe.

2. Final Backfill: Backfill placed over initial backfill to fill a trench.

B. Bedding Course: Aggregate material placed under, beside, and over a pipe in a trench, including haunches, to support all sides of the pipe.

C. Excavation: Removal of material encountered above final subgrade elevations and to lines and dimensions indicated.

1. Authorized Additional Excavation: Excavation below final subgrade elevations or beyond indicated lines and dimensions as directed by Engineer. Authorized additional excavation

and replacement material will be paid for according to Contract provisions for changes in the Work.

2. Unauthorized Excavation: Excavation below final subgrade elevations or beyond indicated lines and dimensions without direction by Engineer. Unauthorized excavation, as well as remedial work directed by Engineer, shall be without additional compensation.

D. Existing Fill: Onsite non-native or reworked native materials typically consisting of loose to medium dense sands with varying amounts of silt, organics, and debris.

1.4 REFERENCE STANDARDS

A. WSDOT Specification: Standard Specifications for Road, Bridge and Municipal Construction, prepared jointly by the Washington State Department of Transportation, and the American Public Works Association, Washington State Chapter, most recent edition. All references to measurement and payment shall be deleted from consideration; and the terms agreed to in the contract substituted therefore.

B. WSDOT Standard Plan: Standard Plans for Road and Bridge Construction prepared by the Washington State Department of Transportation, current issue in effect at the bid date.

1.5 SUBMITTALS

A. Submit under provisions of the Contract and other general requirements and as further provided.

B. Approval of Fill Material: All material which is proposed to be used as fill and backfill shall be tested for moisture content and compaction. Gradation, samples, and test results shall be submitted for review and approval prior to placement.

C. Material Test Reports: From a qualified testing agency indicating and interpreting test results for compliance of the following with requirements indicated:

1. Classification according to ASTM D 2487 of each onsite or imported soil material proposed for fill and backfill.

2. Laboratory compaction curve according to ASTM D1557 for each onsite or imported soil material proposed for fill and backfill.

D. Pre excavation Photographs or Video: Show existing conditions of adjoining construction and site improvements, including finish surfaces, which might be misconstrued as damage caused by earth moving operations. Submit before earth moving begins.

E. Record drawings according to Contract provisions and for other general requirements.

1.6 QUALITY ASSURANCE

A. Field inspection and testing will be performed under Contract provisions. General requirements for Geotechnical Testing Agency Qualifications: Qualified according to ASTM E 329 and ASTM D 3740 for testing indicated.

1.7 PROJECT CONDITIONS

A. Traffic: Minimize interference with adjoining roads, streets, walks, and other adjacent occupied or used facilities during earth moving operations.

1. Do not close or obstruct streets, walks, or other adjacent occupied or used facilities without permission from Owner and authorities having jurisdiction.

2. Provide alternate routes around closed or obstructed traffic ways if required by Owner or authorities having jurisdiction.

3. Contractor shall provide truck hauling route plan and traffic control plans to City of Federal Way for review and approval, if required.

B. Utility Locator Service: Notify utility locator service for area where Project is located at least 48 hours before beginning earth-moving operations.

C. Do not commence earth-moving operations until temporary erosion- and sedimentation-control measures, specified in Division 31 Section 312513 “Erosion Control,” and shown on the Drawings are in place.

1.8 REGULATORY REQUIREMENTS

A. Secure site development (clearing and grading) permits and conform to permit requirements.

B. Conform to agency codes for dust control, runoff control, and disposal of demolished and cleared materials.

C. Notify affected utility companies before starting work and comply with their requirements.

D. If any materials that appear to be hazardous are encountered during excavation, discontinue work and immediately notify both Owner and Engineer.

E. Contractor shall pay all applicable fees for permits not already acquired by Owner.

PART 2 PRODUCTS

2.1 SOIL MATERIALS

A. Gravel Backfill: “Bank Run Gravel for Trench Backfill” conforming to WSDOT Specification 9-03.19.

Sieve Size	Percent Passing
2-1/2”	100
2”	75-100
No. 4	22-100
No. 200	0-10
Dust Ratio:	2/3 max.
Sand Equivalent	30 min.

All percentages are by weight. Gravel base material retained on a No. 4 sieve shall contain no more than 0.20 percent by weight of wood waste.

B. Pipe Bedding: “Gravel Backfill for Pipe Zone Bedding” conforming to WSDOT Specification 9-03.12(3).

Gravel backfill for pipe zone bedding shall consist of crushed, processed, or naturally occurring granular material. It shall be free from various types of wood waste or other extraneous or

objectionable materials. It shall have such characteristics of size and shape that it will compact and shall meet the following Specifications for grading and quality:

Sieve Size	Percent Passing
1-1/2”	99-100
1”	75-100
5/8”	50-100
No. 4	20-80
No. 40	3-24
No. 200	10.0 max.
Sand Equivalent	35 min.

All percentages are by weight. If, in the opinion of the Engineer, the native granular material is free from wood waste, organic material, and other extraneous or objectionable materials, but otherwise does not conform to the Specifications for grading and Sand Equivalent, it may be used for pipe bedding for rigid pipes, provided the native granular material has a maximum dimension of 1½ inches.

2.2 APPROVAL OF FILL MATERIAL

A. Approvals of fill material: All material that is proposed to be used as fill and backfill shall be graded and tested for moisture content. Gradation and test results shall be submitted for review and approved by the Engineer and Landscape Architect prior to placement. Reuse of the native soils (excluding stripped material) for structural fill and gravel backfill might be feasible provided the soils are free of organic matter and the moisture content is adjusted to achieve proper compaction levels.

B. It is the contractor’s responsibility to review existing conditions, soils report, soil types, and the construction schedule prior to bidding to determine suitability of existing Soils for reuse as fill. The contractor may, at his own expense, conduct their own test pits and laboratory test to review the onsite material. The contractor shall account for the construction schedule, the time of year when earthwork will be occurring, and variable weather conditions during this contract when determining the suitability of the onsite material. The use of onsite material may require significant additional effort as compared to import structural fill material in terms of screening, proper moisture conditioning, and compactive effort necessary including but not limited to scarifying, aeration, or watering, to obtain the required density.

C. It is the sole responsibility of the Contractor to protect existing ground, prepared subgrade, and any stockpiled material from inclement weather, surface runoff, construction traffic and other conditions that may preclude the reuse of the material.

D. If the onsite material is not suitable for fill or backfill, the Contractor shall import an acceptable fill material conforming to these specifications at no additional cost to the owner.

2.3 GEOTEXTILES

1. Geotextile: Non-woven, Mirafi #140 N or approved equal, unless otherwise noted on plans.

2.4 ACCESSORIES

A. Detectable Warning Tape:

1. Acid- and alkali-resistant, polyethylene film warning tape manufactured for marking and identifying underground utilities, a minimum of 6 inches wide and 4 mils thick, continuously inscribed with a description of the utility, with metallic core encased in a protective jacket

for corrosion protection, detectable by metal detector when tap is buried up to 30 inches deep; colored as follows:
a. Red: Electric.
b. Yellow: Gas, oil, steam, and dangerous material.
c. Orange: Telephone and other communications.
d. Blue: Water systems.
e. Green: Storm and sanitary sewer systems.

PART 3 EXECUTION

3.1 PREPARATION

A. Protect utilities and other facilities from damage caused by settlement, lateral movement, undermining, washout, and other hazards created by earth moving operations.

B. Protect and maintain erosion and sedimentation controls during earth moving operations.

C. Protect subgrades and foundation soils from freezing temperatures and frost. Remove temporary protection before placing subsequent materials.

D. Verify survey control elevations and protect survey controls and benchmarks.

3.2 TEMPORARY DRAINAGE AND DEWATERING

A. Prevent surface water and ground water from entering excavations, from ponding on prepared subgrades, and from flooding Project site and surrounding area.

B. Protect subgrades from softening, undermining, washout, and damage by rain or water accumulation.

C. Reroute surface water runoff away from excavated areas. Do not allow water to accumulate in excavations. Do not use excavated trenches as temporary drainage ditches.

D. Install a temporary drainage or dewatering system to keep subgrades dry and convey ground water away from excavations. Maintain until dewatering is no longer required.

E. Zones of seepage may be encountered. Contractor shall construct a temporary drainage or dewatering system to drain perched groundwater.

F. Include temporary storm drainage and dewatering systems in the Base Bid.

3.3 EXPLOSIVES

A. Explosives: Do not use explosives.

3.4 EXCAVATION, GENERAL

A. Contractor shall include in the base bid the cost of achieving the final grades shown on the Contract Documents beginning with the existing conditions as represented in the site survey and Geotechnical Report. All excavation, export and placement and compaction of structural fill required to achieve the final grades and completed structures shall be included in the base bid. The contractor shall include in their base bid all excavation, backfill, and compaction costs for the anticipated excavation depths as shown.

1. Sub Grade: For the purpose of the Contractor Bid, the following shall define the sub-grade elevations:
   a. Utility Trenches: The elevation of the bottom of the pipe bedding.
   b. Field Areas: The elevation below the underdrain system and turf section.

B. Excavate to subgrade elevations shown on the Drawings, regardless of the character of surface and subsurface conditions encountered. Excavated materials may include rock, soil materials, and obstructions. No changes in the Contract Sum or the Contract Time will be authorized for rock excavation or removal of obstructions.

1. If excavated materials intended for fill and backfill include unsuitable soil materials and rock, replace with suitable soil materials.

C. Fill and backfill materials may be stockpiled in areas onsite that do not interfere with other portions of the work. Contractor shall protect stockpiled soils from weather, wind, or erosion by covering with plastic sheeting and securing, or other effective methods. Remove soil not being reused from site.

D. Direct surface water away from excavation and stockpile site to prevent erosion or deterioration of materials.

E. Remove soil stockpiles; leave area in a clean and neat condition. Grade site surface to prevent standing surface water.

3.5 EXCAVATION FOR UTILITY TRENCHES

A. Excavate trenches to indicated gradients, lines, depths, and elevations.

1. Beyond building perimeter, excavate trenches to allow installation of top of pipe below frost line.

B. Excavate trenches to uniform widths to provide a clearance of 9 inches on each side of pipe or conduit, unless otherwise indicated. Excavate trench walls vertically from trench bottom to 12 inches higher than top of pipe or conduit, unless otherwise indicated.

C. Trench Bottoms: Excavate and shape trench bottoms to provide uniform bearing and support of pipes and conduit. Shape subgrade to provide continuous support for bells, joints, and barrels of pipes and for joints, fittings, and bodies of conduits. Remove projecting stones and sharp objects along trench subgrade.

1. For pipes and conduit 6 inches or larger in nominal diameter, shape bottom of trench to support bottom 90 degrees of pipe or conduit circumference. Fill depressions with tamped sand backfill.

2. Excavate trenches 6 inches deeper than elevation required to allow for bedding course.

3.6 SUBGRADE INSPECTION

A. Notify Engineer and Landscape Architect when excavations have reached required subgrade.

B. If Contractor’s Geotechnical Engineer determines that unsuitable soil is present, continue excavation and replace with imported Structural Fill material as directed.

C. Proof-roll subgrade below the field with heavy, pneumatic-tired equipment, such as a fully loaded dump truck weighing not less than 15 tons, to identify soft pockets and areas of excess yielding. Do not proof-roll wet or saturated subgrades.

1. Proof-roll shall be observed by Owner's Geotechnical Engineer.

2. Excavate soft spots, unsuitable soils, and areas of excessive pumping or rutting, as determined by Contractor's Geotechnical Engineer, and replace with imported Structural Fill as directed.

D. Authorized additional excavation and replacement material will be paid for according to Contract provisions for changes in the Work.

E. Reconstruct subgrades damaged by freezing temperatures, frost, rain, accumulated water, or construction activities, as directed by Engineer, without additional compensation.

3.7 STORAGE OF SOIL MATERIALS

A. Stockpile borrow soil materials and excavated satisfactory soil materials without intermixing. Place, grade, and shape stockpiles to drain surface water. Cover to prevent windblown dust.

1. Stockpile soil materials away from edge of excavations. Do not store within drip line of remaining trees.

2. Stockpiled soil materials shall be protected from rain by covering with plastic sheeting in accordance with WSDOT Specification 8-01.3(5).

3.8 BACKFILL

A. Place and compact backfill in excavations promptly, but not before completing the following:

1. Surveying locations of underground utilities for Record Documents.

2. Testing and inspecting underground utilities.

3. Removing trash and debris.

4. Subgrade shall be inspected and approved by Owner's Engineer.

B. Place backfill on subgrades free of mud, frost, snow, or ice.

3.9 UTILITY TRENCH BACKFILL

A. Place bedding and backfill over trench subgrades free of mud, frost, snow, or ice.

B. Place and compact bedding course on trench bottoms and where indicated. Shape bedding course to provide continuous support for bells, joints, and barrels of pipes and for joints, fittings, and bodies of conduits.

C. Backfill voids with gravel backfill soil while removing shoring and bracing.

D. Place and compact bedding of specified material, free of particles larger than 1 inch in any dimension.

1. Carefully compact bedding under pipe haunches and compact evenly up on both sides and along the full length of piping or conduit to avoid damage or displacement of piping or conduit. Coordinate backfilling with utilities testing.

2. Trench backfill shall be compacted to at least 95 percent of maximum dry density based on ASTM D1557.

E. Cobbles and boulders shall not be used for trench backfill.

F. Coordinate backfilling with utilities testing.

G. Install warning tape directly above utilities, 12 inches below finished grade. Utilities requiring warning tape shall include electrical, gas, side sewer, under drains, roof drains, water service, water main and fire main, telephone, and communications.

3.10 SOIL FILL

A. Fill areas to contours and elevations indicated with unfrozen materials conforming to the requirement for type of fill material specified.

B. Where fill is placed on existing slopes 3H:1V or steeper, key and bench the new fill into suitable existing materials. The key trench should be a minimum of 6 feet wide and two feet deep, benches should be horizontal with vertical steps no more than 3 feet between benches.

C. Contractor shall make their own determination regarding the import of fill materials or the hauling offsite of excess materials as necessary to attain the indicated elevations. Import of fill material and the hauling offsite of excess material shall be included in the Base Bid. Removal of all excavated soil from utility trench and footing excavations shall be included in the base bid.

3.11 SOIL MOISTURE CONTROL

A. Uniformly moisten or aerate subgrade and each subsequent fill or backfill soil layer to within 2 percent of optimum moisture content before attempting compaction.

1. Do not place backfill or fill soil material on surfaces that are muddy, frozen, or contain frost or ice.

2. Remove and replace, or scarify and air dry, otherwise satisfactory soil material that exceeds optimum moisture content by 2 percent or is too wet to compact to specified dry unit weight.

3. Limit the areas that are stripped of topsoil and exposed during wet weather. The Contractor is responsible for over-excavating of material beneath subgrade that becomes unsuitable because it is left exposed, saturated, damaged, or adversely affected by the Contractor’s work.

3.12 COMPACTION OF SOIL BACKFILLS AND FILLS

A. Place backfill and fill soil materials in uniform, horizontal layers not more than 12 inches in loose depth.

1. Refer to landscape specifications for compaction requirements within the field.

3.13 GRADING

A. General: Uniformly grade areas to a smooth surface, free of irregular surface changes. Comply with compaction requirements and grade to cross sections, lines, and elevations indicated.

1. Provide a smooth transition between adjacent existing grades and new grades.

2. Cut out soft spots, fill low spots, and trim high spots to comply with required surface tolerances.

B. Make grade changes gradual. Blend slopes into level areas.

C. Any work that is determined not to conform shall be reworked by the Contractor to bring into conformance at the Contractor's expense.

D. Grade site to prevent standing or ponding of surface water.

E. Onsite soils are moisture sensitive. Slope the ground surface within and surrounding the construction area to promote runoff away from work areas and to prevent ponding of water.

F. Work areas should be covered with plastic to protect from rainfall. Measures such as sloping, ditching, dewatering, and installation sumps shall be employed.

G. Un-protected In-place soil or fill soil that becomes unsuitable for compaction shall be removed and replaced with imported Structural Fill at no additional cost to the Owner.

H. Grading and earthwork shall not be performed during periods of heavy, continuous rainfall.

3.14 FIELD QUALITY CONTROL

A. Testing Agency: Owner will engage a qualified geotechnical engineering testing agency to perform tests and inspections as follows:

1. Determine prior to placement of fill that site has been prepared in compliance with requirements.

2. Determine that fill material and maximum lift thickness comply with requirements.

3. Determine, at the required frequency, that in-place density of compacted fill complies with requirements.

B. Allow testing agency to inspect and test subgrades and each fill or backfill layer. Proceed with subsequent earth moving only after test results for previously completed work comply with requirements.

C. Testing agency will test compaction of soils in place according to ASTM D 1557, ASTM D 2167, ASTM D 2922, and ASTM D 2937, as applicable. Tests will be performed at the following locations and frequencies:

1. Trench Backfill: At each compacted initial and final backfill layer, at least one test for every 150 feet or less of trench length, but no fewer than two tests.

D. When testing agency reports that subgrades, fills, or backfills have not achieved degree of compaction specified, scarify and moisten or aerate, or remove and replace soil materials to depth required; recompact and retest until specified compaction is obtained.

E. Contractor shall provide as-built drawings of the completed work.

1. If grades do not conform to the plan, it is the Contractor's responsibility to bring site into conformance.

3.15 PROTECTION

A. Protecting Graded Areas: Protect newly graded areas from traffic, freezing, and erosion. Keep free of trash and debris.

B. Repair and reestablish grades to specified tolerances where completed or partially completed surfaces become eroded, rutted, settled, or where they lose compaction due to subsequent construction operations or weather conditions.

C. Where settling occurs before Project correction period elapses, remove finished surfacing, backfill with additional soil material, compact, and reconstruct surfacing.

1. Restore appearance, quality, and condition of finished surfacing to match adjacent work, and eliminate evidence of restoration to greatest extent possible.

3.16 DISPOSAL OF SURPLUS AND WASTE MATERIALS

A. Remove surplus satisfactory soil and waste materials, including unsatisfactory soil, trash, and debris, and legally dispose of them off Owner’s property.

END OF SECTION

31 22 16 – FIELD SUBGRADE

PART 1 - GENERAL

1.1 SCOPE OF WORK

A. Furnish all labor, material, and equipment for the earthwork related to establishment of a finished subgrade for all play field surfaces. Work includes but is not limited to the following:

1. Layout and engineering.
2. Management of the construction sequencing and scheduling relative to soil moisture content and the use of onsite material as fill.
3. Excavation, filling, back filling, and compacting.
4. Subgrade scarification, drying, and re-compaction as required.
5. Compaction, compaction testing, and establishment of subgrade.
6. Verification of compliance with the specified planarity tolerances.

1.2 EXISTING SITE CONDITIONS

A. Refer to drawings for topographical and existing condition information and the geotechnical report for site soil conditions.

B. Carefully maintain benchmarks, monuments and other reference points. If disturbed or destroyed, replace as directed. It is the responsibility of the Contractor to familiarize themselves with all records of existing utilities in area of site work.

C. The Contractor shall contact the appropriate utility agencies for identification of underground utility location.

1.3 TEMPORARY EROSION AND SILTATION CONTROL

A. All work shall conform to the erosion and sedimentation control requirements of the local jurisdiction including installation of siltation control such as filter fabric fences, check dams, sedimentation basins, etc.

1.4 EXISTING UTILITIES

A. The Contractor shall coordinate all existing utilities prior to proceeding with demolition and earthwork activity. Protect any active pipes encountered.

1.5 DUST CONTROL

A. Protect persons and property from damage and discomfort caused by dust. Water as necessary to quell dust.

1.6 ROADWAY PROTECTION

A. Provide wheel-cleaning stations to clean wheels and undercarriage of trucks before leaving site, as necessary to prevent dirt from being carried onto public streets. If streets are fouled, they must be cleaned immediately in conformance with the requirements of the local jurisdiction as applicable. This requirement applies to all vehicle movements for the entire period of construction.

1.7 TRAFFIC REGULATION

A. Conduct operations in such a manner to avoid unnecessary interference to existing traffic. Minimize heavy vehicle traffic to and from site during peak traffic hours. Do not park vehicles in traffic lanes. Provide flagmen as required. Conform to traffic control requirements of the local jurisdiction.

B. Contractor shall be responsible for all traffic control and emergency call outs resulting from Contractor operations.

C. Maintain fire lanes, roadways, and alleys to existing buildings continuously, as required by the fire department having jurisdiction.

D. Existing walkways and roadways leading past the construction shall remain clear and safe at all times. Provide barriers, flashing lights, walkways, guardrails, and night lighting as required for safety and control.

1.8 RELATED WORK IN OTHER SECTIONS

A. 312000 Earth Moving for general site grading requirements.

B. 332513 Erosion Control.

C. 334616 Field Subsurface Drainage.

D. 334623 Field Permeable Aggregate.

PART 2 - PRODUCTS

Not Applicable

PART 3 - EXECUTION

3.1 FIELD LAYOUT AND ENGINEERING

A. The General Contractor shall be responsible for the vertical and horizontal layout of all work and control points required to construct all work in accordance with the drawings and specifications.

3.2 SEQUENCING AND SCHEDULING

A. All new cut and fill areas shall be seal rolled at the end of each day to minimize moisture penetration.

3.3 EXCAVATED MATERIALS

A. Suitable excavated material may be utilized as fill. Any excess material is to be disposed of offsite.

3.4 FIELD SUBGRADE AREAS

A. All areas are to be compacted to 95 percent of maximum density by mechanical means. The Contractor shall be responsible for maintaining appropriate soil moisture prior to and during compaction activities, the cost of which is to be included in the contract price.

B. Care must be exercised during grading of the subgrade so as to achieve a uniform, true surface relative to finish grade.

C. Fill must be select material free of organic matter, clay, concrete and other extraneous material, compactable to a minimum of 95 percent density. Fill shall be placed and compacted in lifts of 12-inch maximum loose depth.

D. Finish subgrade for all play field areas shall be compacted to a 95 percent maximum density. Subgrade shall be established to within the tolerance of +0.00 foot or -0.10 foot of the design subgrade elevation for these areas.

E. Upon completion of the subgrade establishment and Contractor confirmation for conformance with the tolerance, the Contractor shall notify the Engineer and Landscape Architect and schedule an inspection for approval. The Contractor shall have a laser plane system with slope control available to the Engineer and Landscape Architect for the inspections. The Contractor shall not be authorized to install the subsurface drainage system until the subgrade has been inspected and approved by the Engineer and Landscape Architect.

END OF SECTION

31 25 13 – EROSION CONTROL

PART 1 GENERAL

1.1 RELATED DOCUMENTS

A. Drawings and general provisions of the Contract, including General and Supplementary Conditions and Division 01 Specification Sections, apply to this Section.

1.2 SUMMARY

A. In general, work of this Section includes, but is not limited to, the following:

1. Provide Certified Erosion and Sediment Control Lead (CESCL).

2. Provide and maintain temporary erosion control measures as indicated on the Drawings and as required by Washington State Department of Ecology (DOE) and the City of Federal Way.

3. Provide and maintain additional temporary erosion control measures, at no additional cost to the Owner, as may become necessary due to weather or environmental conditions.

4. Prevent pollution or excess turbidity in State waters.

5. Removal of temporary erosion control measures after completion of project.

B. Related Sections

1. Division 31 Section 311000 “Site Clearing and Site Demolition.”

2. Division 31 Section 312000 “Earth Moving” for soil materials, excavating, backfilling, and site grading.

1.3 DEFINITIONS

A. CESCL: Certified Erosion and Sediment Control Lead.

B. Structures: Buildings, footings, foundations, retaining walls, slabs, tanks, curbs, mechanical and electrical appurtenances, or other man-made stationary features constructed above or below the ground surface.

C. Utilities: On-site and off-site underground pipes, conduits, ducts, and cables, as well as underground services within buildings.

D. Wet Weather: Between dates of October 1 and April 30.

E. TESC: Temporary Erosion and Sediment Control.

1.4 REFERENCE STANDARDS

A. WSDOT Specification: Standard Specifications for Road, Bridge and Municipal Construction, prepared jointly by the Washington State Department of Transportation, and the American

Public Works Association, Washington State Chapter, most recent edition. All references to measurement and payment shall be deleted from consideration, and terms agreed to in the contract substituted therefore.

B. Conform to OSHA (Occupational Safety and Health Act) requirements.

C. Conform to WISHA (Washington State Industrial Safety and Health Act) for trench safety.

1.5 MATERIALS OWNERSHIP

A. Except for materials indicated to be stockpiled or to remain Owner's property, cleared materials shall become Contractor's property and shall be removed from the site.

1.6 SUBMITTALS

A. Submit under provisions of the Contract.

B. Submit proof of certification for the CESCL.

C. Certification

1. Provide a letter, signed by the supplier and reviewed and also signed by an officer of the General Contractor's company, certifying that the following products to be incorporated into the work meet the requirements specified.

2. Products
   a. Silt Fence.
   b. Catch Basin Inlet Protection.

1.7 PROJECT CONDITIONS

A. Traffic: Minimize interference with adjoining roads, streets, walks, and other adjacent occupied or used facilities during site clearing and construction operations.

1. Do not close or obstruct streets, walks, or other adjacent occupied or used facilities without permission from Owner and authorities having jurisdiction.

2. Provide alternate routes around closed or obstructed traffic ways if required by authorities having jurisdiction.

B. The Contractor shall utilize a utility locate service and shall notify affected utility companies before starting work and comply with all their requirements. The Contractor shall conform to applicable regulatory procedures when discovering hazardous or contaminated materials.

C. The locations of existing underground utilities are approximate only and have not been independently verified by the Owner or its representative. The Contractor shall determine the exact location of all existing utilities before commencing work and shall be fully responsible for any and all damages that happen due to the Contractor's failure to locate exactly and preserve all underground utilities that are designated to remain.

D. The contractor shall include in bid the maintenance and addition of erosion control measures as needed to comply with City of Federal Way requirements and changing site conditions as construction progresses.

1.8 QUALITY ASSURANCE

A. Maintain at least one copy of the WSDOT Standard Specifications for Road, Bridge and Municipal Construction, most recent edition, and project plans and specifications on-site.

B. Field inspection and testing will be performed under provisions of the Contract.

C. Tests and analysis of aggregate material will be performed in accordance with ANSI/ASTM D1557, ASTM D2922, ASTM D3017, ASTM D4318, and ASTM C136, as applicable.

D. If tests indicate materials do not meet specified requirements, change material and retest or obtain written approval of the Engineer. Costs associated with the retesting of materials will be the responsibility of the Contractor.

E. The Contractor shall provide and designate a Certified Erosion and Sedimentation Control Lead (CESCL) who shall be responsible for monitoring the installation, performance, maintenance, and review of ESC measures, and for compliance with all permit conditions. The CESCL shall be designated prior to commencement of work on the site.

1. CESCL shall have completed the training and certification requirements of BMP C160 of the Washington State DOE Stormwater Management Manual for Western Washington.

2. CESCL shall maintain a site logbook.

F. CESCL responsibilities include:

1. Be onsite or available on-call during the project duration.

2. Implement the TESC measures.

3. Oversee maintenance practices identified on the plans for the erosion control measures.

4. Conduct or provide for inspection and monitoring activities.

5. Identify other potential pollution sources and make sure they are mitigated.

6. Identify deficiencies in the TESC measures and make sure they are corrected.

1.9 REGULATORY REQUIREMENTS

A. Conform to all requirements of the City of Federal Way and the Washington State Department of Ecology (DOE). Contractor is responsible for agency fees/penalties associated with non-compliance. Contractor and their CESCL shall be responsible for maintaining all required records in regard to the following:

1. Construction activities.

2. Inspections.

3. Stabilization measures.

4. Maintenance.

B. Contractor is responsible for complying with permit and responsible for fees/penalties associated with non-compliance.

C. Conform to applicable agency code for dust control and runoff control.

D. Obtain, post, and pay for required permits from authorities according to provisions of the Contract, including General and Supplemental Conditions and Division 01 Specification Sections.

E. Proposed erosion control facilities are minimum requirements for anticipated site conditions. During the construction period, the erosion control facilities shall be maintained and/or modified as needed and at no cost to the Owner to comply with City of Federal Way erosion control policies, and as directed by Owner.

1.10 COORDINATION

A. Coordinate work under provisions of the Contract.

B. Erosion control measures shall be maintained, coordinated, adjusted, and added to address changes in site conditions and construction phases at no additional cost to the Owner.

1.11 INTENT

A. It is the intent of this Specification that the Contractor provide the Work defined herein complete in every respect, and in accordance with the good practices involved in the installation of erosion control facilities, including modifying facilities as needed for storm events and changing site conditions, and the requirements of this Specification, regardless of whether or not full details of such completeness, workmanship, or practices are contained herein.

PART 2 PRODUCTS

2.1 EROSION AND SEDIMENT CONTROL MATERIALS

A. Silt Fence: Geotextile fabric shall meet the following standards:

Polymeric Mesh AOS (ASTM D4751)	0.60 mm maximum for slit film wovens (#30 sieve). 0.30 mm maximum for all other geotextile types (#50 sieve). 0.15 mm minimum for all fabric types (#100 sieve).
Water Permittivity (ASTM D4491)	0.02 sec^{-1} minimum
Grab Tensile Strength (ASTM D4632)	100 lbs minimum for standard strength fabric.
Grab Tensile Strength (ASTM D4632	30% maximum
Ultraviolet Resistance (ASTM D4355)	70% minimum

B. Catch Basin Inlet Protection: Conform to detail on Drawings.

PART 3 EXECUTION

3.1 EXAMINATION

A. Verify that site conditions are satisfactory to receive the work of this Section. Do not begin the work of this Section until unsatisfactory conditions are corrected. Beginning the work of this Section constitutes the Contractor's acceptance of site conditions as satisfactory.

B. CESCL shall be responsible for ESC measures. The CESCL shall be designated prior to commencement of work on-site.

3.2 INSTALLATION AND CONDUCT OF WORK

A. Install erosion control measures to minimize impacts to the existing site conditions and to allow proper performance.

B. Erosion and sediment control measures shall be in place and functional as identified in the Contract Documents and as necessary to prevent stormwater pollution at all times.

C. Provide and maintain additional temporary erosion control measures at no additional cost to the Owner as necessary due to weather or environmental conditions and to comply with governing agency and permitting requirements.

D. Contractor shall, prior to any work being performed on the site, post a weatherproof sign at the site perimeter that provides the CESCL name, phone and fax numbers, and address information. Sign and text must be of sufficient size that the information can be easily read from a distance of 10 feet, as determined by the Owner. Sign placement location shall be approved by the Owner.

3.3 MAINTENANCE AND INSPECTION

A. Temporary erosion control measures shall be maintained as required to achieve proper performance, as indicated in the Contract Documents, and required by the Owner's Representative, permit agency, and as required by the DOE.

B. Use care during maintenance of erosion control facilities so as not to discharge collected sediment into the protected area.

C. The Contractor shall provide and designate a Certified Erosion and Sedimentation Control Lead (CESCL) who shall be responsible for monitoring the installation, performance, maintenance, and review of ESC measures, and for compliance with all permit conditions. The CESCL shall be designated prior to commencement of work on the site.

D. CESCL shall maintain a site logbook.

E. CESCL shall inspect erosion control measures at least once every calendar week and within 24 hours of any discharge from the site. Inspections shall commence when clearing work begins and continue until site work is substantially complete and permitting jurisdiction has accepted project as complete.

F. Contractor shall provide a contact phone number, fax number, and address where the CESCL can be contacted.

G. CESCL responsibilities include:

1. Be on-site or available on-call during the project duration.

2. Implement the erosion control measures.

3. Oversee maintenance practices identified on the plans for the erosion control measures.

4. Conduct or provide for inspection and monitoring activities.

5. Identify other potential pollution sources and make sure they are mitigated.

6. Identify deficiencies in the TESC measures and make sure they are corrected.

3.4 REMOVAL

A. When approved by the City of Federal Way Inspector and the Owner, remove temporary facilities when the need for the facilities no longer exists.

B. Clean sediment and/or pollutants from facilities that are to remain.

3.5 CLEAN-UP

A. Upon completion of the work of this Section, remove all rubbish, trash, and debris resulting from operations.

B. Remove materials, equipment, and tools; leave the site in a neat and orderly condition acceptable to the Owner's Representative.

C. At the completion of the site improvements and after the work area has been stabilized with final surfacing and landscaping or seeding, the contractor shall remove all temporary erosion control mechanisms and facilities.

END OF SECTION

32 12 16 - ASPHALT PAVING

PART 1 - GENERAL

1.01 SUMMARY

A. Section Includes:

1. Hot-Mix Asphalt “HMA” Patching
2. Hot-Mix Asphalt “HMA” Paving
3. Pavement-Marking Paint

B. Related Sections:

1. Division 31 Section 311000 “Site Clearing and Site Demolition” for demolition, removal, and recycling of existing asphalt pavements.
2. Division 31 Section 312000 "Earth Moving" for aggregate subbase and base courses and for aggregate pavement shoulders.

1.02 DEFINITION

A. Hot-Mix Asphalt Paving Terminology: Refer to ASTM D 8 for definitions of terms.

1.03 REFERENCE STANDARDS

A. Washington State Department of Transportation (WSDOT) Specification: Standard Specifications for Road, Bridge and Municipal Construction, prepared jointly by the Washington State Department of Transportation, and the American public Works Association, Washington State Chapter, 2018 edition. All references to measurement and payment shall be deleted from consideration; and terms agreed to in the contract substituted therefore.

B. WSDOT Standard Plan Standard Plans for Road and Bridge Construction, prepared by Washington State Department of Transportation, current issue in effect at bid date.

1.04 SUBMITTALS

A. First four paragraphs below are defined in Division 01 Section 013000 “Administrative Requirements."

B. Certification: Provide a letter, signed by the supplier and reviewed and also signed by an officer of the General Contractor's company, certifying that all products to be incorporated into the work meet the requirements specified.

1. Hot-Mix Asphalt “HMA” Class 1/2 Inch
2. Joint Sealer Paving Asphalt

C. Shop Drawings: Indicate pavement marking colors, lane separations, and defined parking spaces. Indicate, with international symbol of accessibility, spaces allocated for people with disabilities.

D. Material Certificates: For each paving material, from manufacturer.

E. Material Test Reports: For each paving material.

1.05 QUALITY ASSURANCE

A. Manufacturer Qualifications: A paving-mix manufacturer registered with and approved by WSDOT.

B. Installer Qualifications:

1. Imprinted-asphalt manufacturer's authorized installer who is trained and approved for installation of imprinted asphalt required for this Project.

C. Testing Agency Qualifications: Qualified according to ASTM D 3666 for testing indicated.

D. Regulatory Requirements:

1. Comply with materials, workmanship, and other applicable requirements of WSDOT for asphalt paving work.
   a. Measurement and payment provisions and safety program submittals included in standard specifications do not apply to this Section.

E. Preinstallation Conference: Conduct conference at the Project site.

1. Review methods and procedures related to hot-mix asphalt paving including, but not limited to, the following:
   a. Review proposed sources of paving materials, including capabilities and location of plant that will manufacture hot-mix asphalt.
   b. Review condition of subgrade and preparatory work.
   c. Review requirements for protecting paving work, including restriction of traffic during installation period and for remainder of construction period.
   d. Review and finalize construction schedule and verify availability of materials, Installer's personnel, equipment, and facilities needed to make progress and avoid delays.

1.06 DELIVERY, STORAGE, AND HANDLING

A. Deliver pavement-marking materials to Project site in original packages with seals unbroken and bearing manufacturer's labels containing brand name and type of material, date of manufacture, and directions for storage.

B. Store pavement-marking materials in a clean, dry, protected location within temperature range required by manufacturer. Protect stored materials from direct sunlight.

1.07 PROJECT CONDITIONS

A. Environmental Limitations: Do not apply asphalt materials if subgrade is wet or excessively damp, if rain is imminent or expected before time required for adequate cure, or if the following conditions are not met:

1. Asphalt Base Course: Minimum surface temperature at time of placement shall comply with WSDOT Specification 5-04.3(16).
2. Asphalt Surface Course: Minimum surface temperature at time of placement shall comply with WSDOT Specification 5-04.3(16).

B. Pavement-Marking Paint: Proceed with pavement marking only on clean, dry surfaces and at a minimum ambient or surface temperature of 40 deg F, and not exceeding 95 deg F.

C. Existing Paving and Surfacing: Contractor shall take care in protecting pavement and walks intended to remain. The contractor shall replace any existing asphalt pavement sidewalks or concrete curbs and pavement markings that are damaged at their own expense.

PART 2 - PRODUCTS

2.01 AGGREGATES

A. General: Use materials and gradations that have performed satisfactorily in previous installations.

B. Sand Equivalent: 35 Min.

C. Coarse Aggregate: ASTM D 692, sound angular crushed stone, crushed gravel, or cured, crushed blast-furnace slag. Conform to WSDOT Specification 9-03.8.

D. Fine Aggregate: ASTM D 1073, sharp edge natural sand or sand prepared from stone, gravel, cured blast –furnace slag, or combination thereof. Conform to WSDOT Specification 9-08.8.

1. For hot-mix asphalt, limit natural sand to a maximum of 20 percent by weight of the total aggregate mass.

E. Mineral Filler: AASHTO M 17, rock or slag dust, hydraulic cement, or other inert material.

2.02 MATERIALS

A. Hot-Mix Asphalt “HMA” Materials: Conform to WSDOT Specification 5-04.2.

B. Sand: ASTM D 173, Grade Nos. 2 or 3.

C. Water: Potable

D. Joint Sealer: Shall be paving asphalt viscosity grade AR-4000 W or CSS-1.

E. Pavement Marking: Paint materials conform to WSDOT 9-34.2. White, yellow, red, and blue colors to be used.

PART 3 - EXECUTION

3.01 EXAMINATION

A. Verify that subgrade is dry and in suitable condition to begin paving.

B. Proof-roll subgrade below pavements with heavy pneumatic-tired equipment to identify soft pockets and areas of excess yielding. Do not proof-roll wet or saturated subgrades.

1. Completely proof-roll subgrade in one direction, repeating proof-rolling in direction perpendicular to first direction. Limit vehicle speed to 3 mph.
2. Proof roll with a loaded 10-wheel, tandem-axle dump truck weighing not less than 15 tons.
3. Excavate soft spots, unsatisfactory soils, and areas of excessive pumping or rutting, as determined by the Geotechnical Engineer, and replace with compacted backfill or fill as directed.

C. Proceed with paving only after unsatisfactory conditions have been corrected by the Contractor, and verified by the Geotechnical Engineer.

D. Verify that utilities, traffic loop detectors, and other items requiring a cut and installation beneath the asphalt surface have been completed and that asphalt surface has been repaired flush with adjacent asphalt prior to beginning installation of imprinted asphalt.

3.02 PATCHING

A. Hot-Mix Asphalt Pavement: Saw cut perimeter of patch and excavate existing pavement section to sound base. Excavate rectangular or trapezoidal patches, extending 12 inches into adjacent sound pavement, unless otherwise indicated. Cut excavation faces vertically. Remove excavated material. Recompact existing unbound-aggregate base course to form new subgrade.

B. Tack Coat: Apply uniformly to vertical surfaces abutting or projecting into new, hot-mix asphalt paving at a rate of 0.05 to 0.15 gal./sq. yd.

1. Allow tack coat to cure undisturbed before applying hot-mix asphalt paving.
2. Avoid smearing or staining adjoining surfaces, appurtenances, and surroundings. Remove spillages and clean affected surfaces.

C. Patching: Fill excavated pavements with hot-mix asphalt base mix for full thickness of patch and, while still hot, compact flush with adjacent surface.

3.03 REPAIRS

A. Leveling Course: Install and compact leveling course consisting of hot-mix asphalt surface course to level sags and fill depressions deeper than 1 inch in existing pavements.

1. Install leveling wedges in compacted lifts not exceeding 3 inches thick.

B. Crack and Joint Filling: Remove existing joint filler material from cracks or joints to a depth of 1/4 inch.

1. Clean cracks and joints in existing hot-mix asphalt pavement.
2. Use emulsified-asphalt slurry to seal cracks and joints less than 1/4 inch wide. Fill flush with surface of existing pavement and remove excess.

3.04 SURFACE PREPARATION

A. General: Immediately before placing asphalt materials, remove loose and deleterious material from substrate surfaces. Ensure that prepared subgrade is ready to receive paving.

B. Prime Coat: Apply uniformly over surface of compacted unbound-aggregate base course at a rate of 0.15 to 0.50 gal./sq. yd. Apply enough material to penetrate and seal but not flood surface. Allow prime coat to cure.

1. If prime coat is not entirely absorbed within 24 hours after application, spread sand over surface to blot excess asphalt. Use enough sand to prevent pickup under traffic. Remove loose sand by sweeping before pavement is placed and after volatiles have evaporated.
2. Protect primed substrate from damage until ready to receive paving.

C. Tack Coat: Apply uniformly to surfaces of existing pavement at a rate of 0.05 to 0.15 gal./sq. yd.

1. Allow tack coat to cure undisturbed before applying hot-mix asphalt paving.
2. Avoid smearing or staining adjoining surfaces, appurtenances, and surroundings. Remove spillages and clean affected surfaces.

3.05 HOT-MIX ASPHALT PLACING

A. Machine place hot-mix asphalt on prepared surface, spread uniformly, and strike off. Place asphalt mix by hand to areas inaccessible to equipment in a manner that prevents segregation of mix. Place each course to required grade, cross section, and thickness when compacted.

B. Conform to construction requirements, WSDOT Specification 5-04.3.

C. Place paving in consecutive strips not less than 10 feet wide unless infill edge strips of a lesser width are required.

1. After first strip has been placed and rolled, place succeeding strips and extend rolling to overlap previous strips. Complete a section of asphalt base course before placing asphalt surface course.

D. Promptly correct surface irregularities in paving course behind paver. Use suitable hand tools to remove excess material forming high spots. Fill depressions with hot-mix asphalt to prevent segregation of mix; use suitable hand tools to smooth surface.

E. Conform to construction requirements in WSDOT Specification 5-04.3.

3.06 JOINTS

A. Construct joints to ensure a continuous bond between adjoining paving sections. Construct joints free of depressions, with same texture and smoothness as other sections of hot-mix asphalt course.

1. Clean contact surfaces and apply tack coat to joints.
2. Offset longitudinal joints, in successive courses, a minimum of 6 inches.
3. Offset transverse joints, in successive courses, a minimum of 24 inches.
4. Compact joints as soon as hot-mix asphalt will bear roller weight without excessive displacement.
5. Compact asphalt at joints to a density within 2 percent of specified course density.

3.07 COMPACTION

A. General: Begin compaction as soon as placed hot-mix paving will bear roller weight without excessive displacement. Compact hot-mix paving with hot, hand tampers or with vibratory-plate compactors in areas inaccessible to rollers.

1. Complete compaction before mix temperature cools to 185 deg F.

B. Breakdown Rolling: Complete breakdown or initial rolling immediately after rolling joints and outside edge. Examine surface immediately after breakdown rolling for indicated crown, grade, and smoothness. Correct laydown and rolling operations to comply with requirements.

C. Intermediate Rolling: Begin intermediate rolling immediately after breakdown rolling while hot-mix asphalt is still hot enough to achieve specified density. Continue rolling until hot-mix asphalt course has been uniformly compacted to the following density:

1. Average Density: 92 percent of reference laboratory density according to AASHTO T 209, but not less than 90 percent nor greater than 96 percent.

D. Finish Rolling: Finish roll paved surfaces to remove roller marks while hot-mix asphalt is still warm.

E. Edge Shaping: While surface is being compacted and finished, trim edges of pavement to proper alignment. Bevel edges while asphalt is still hot; compact thoroughly.

F. Repairs: Remove paved areas that are defective or contaminated with foreign materials and replace with fresh, hot-mix asphalt. Compact by rolling to specified density and surface smoothness.

G. Protection: After final rolling, do not permit vehicular traffic on pavement until it has cooled and hardened.

H. Erect barricades to protect paving from traffic until mixture has cooled enough not to become marked.

I. Conform to construction requirements of WSDOT Specification 5-04.3.

3.08 PATCHING AND REPAIRS

A. Patching: Neatly saw cut perimeter of patch and excavate existing pavement section to sound base. Recompact new subgrade. Excavate rectangular or trapezoidal patches, extending 12 inches into adjacent sound pavement, unless otherwise indicated. Cut excavation faces vertically.

1. Tack coat faces of excavation and allow to cure before paving.
2. Fill excavation with HMA and, while still hot, compact flush with adjacent surface.

B. Leveling Course: Install and compact leveling course consisting of dense-graded, HMA surface course to level sags and fill depressions deeper than 1 inch in existing pavements.

1. Install leveling wedges in compacted lifts not exceeding 3 inches thick.

C. Crack and Joint Filling: Remove existing filler material from cracks or joints to a depth of 0.25 inch. Refill with asphalt joint-filling material to restore watertight condition. Remove excess filler that has accumulated near cracks or joints.

D. Tack Coat: Apply uniformly over and on edges of previously constructed asphalt or Portland cement concrete paving and to surfaces abutting or projecting into new, HMA pavement. Apply at a uniform rate of 0.05 to 0.10 gal./sq. yd. of surface.

1. Allow tack coat to cure undisturbed before paving.
2. Avoid smearing or staining adjoining surfaces, appurtenances, and surroundings. Remove spillages and clean affected surfaces.

3.09 INSTALLATION TOLERANCES

A. Pavement Thickness: Compact each course to produce the thickness indicated within the following tolerances:

1. Base Course: Plus or minus 1/2 inch.
2. Surface Course: Plus 1/4 inch, no minus.

B. Pavement Surface Smoothness: Compact each course to produce a surface smoothness within the following tolerances as determined by using a 10-foot straightedge applied transversely or longitudinally to paved areas:

1. Base Course: 1/4 inch.
2. Surface Course: 1/8 inch.
3. Crowned Surfaces: Test with crowned template centered and at right angle to crown. Maximum allowable variance from template is 1/4 inch.

C. Asphalt surface shall not allow ponding of water to exceed 1/8 inch depth or encompass a surface area greater than 10 square feet.

D. Conform to WSDOT Specification 5-04.3(13).

3.10 PAVEMENT MARKING

A. Do not apply pavement-marking paint onsite until layout, colors, and placement have been verified with the Engineer and Owner.

B. Marking-paint manufacturers caution that paint will bleed or tear surface of new asphalt unless asphalt is aged before painting. This aging period may vary from 30 to 90 days. If pavement marking must proceed immediately, consider revising to a phased application of a thin first coat followed by a thicker second coat once asphalt has aged. Verify that two-coat application is recommended by pavement-marking manufacturer.

C. Allow paving to age for 30 days before starting pavement marking.

D. Sweep and clean surface to eliminate loose material and dust.

E. Apply paint with mechanical equipment to produce pavement markings, of dimensions indicated, with uniform, straight edges. Apply at manufacturer's recommended rates to provide a minimum wet film thickness of 15 mils.

F. Conform to WSDOT Specification 8-22.

3.11 PROTECTION

A. Protect unfinished Work from any disturbance.

B. Protect pipe and aggregate cover from damage or displacement until backfilling operation is in progress.

C. Protect existing benchmarks and survey monuments from damage during construction.

3.12 ADJUST UTILITIES

A. Adjust manhole ring and cover, and other utilities to maintain finish grade of new pavement. Catch basin, frame, and grate are to be depressed 0.1 feet below rim elevations on plans to enhance drainage.

3.13 FIELD QUALITY CONTROL

A. Testing Agency: Owner will engage a qualified testing agency to perform tests and inspections.

B. Thickness: In-place compacted thickness of hot-mix asphalt courses will be determined according to ASTM D 3549.

C. Surface Smoothness: Finished surface of each hot-mix asphalt course will be tested for compliance with smoothness tolerances.

D. In-Place Density: Testing agency will take samples of uncompacted paving mixtures and compacted pavement according to ASTM D 979.

1. Reference maximum theoretical density will be determined by averaging results from four samples of hot-mix asphalt-paving mixture delivered daily to site, prepared according to ASTM D 2041, and compacted according to job-mix specifications.
2. In-place density of compacted pavement will be determined by testing core samples according to ASTM D 1188 or ASTM D 2726.
    a. One core sample will be taken for every 1000 sq. yd. or less of installed pavement, with no fewer than 3 cores taken.
    b. Field density of in-place compacted pavement may also be determined by nuclear method according to ASTM D 2950 and correlated with ASTM D 1188 or ASTM D 2726.

E. Replace and compact hot-mix asphalt where core tests were taken.

F. Remove and replace or install additional hot-mix asphalt where test results or measurements indicate that it does not comply with specified requirements.

G. Sweep and clean pavement surface to eliminate loose material and dust.

3.14 DISPOSAL

A. Except for material indicated to be recycled, remove excavated materials from Project site and legally dispose of them in an approved landfill.

1. Do not allow milled materials to accumulate on-site.

END OF SECTION 321216

32 84 00 - IRRIGATION

PART 1 GENERAL

1.1 SUMMARY

A. Section Includes:

1. Piping.

2. Sprinklers.

B. Related Sections:

1. Drawings and general provisions of the Contract, including General and Supplementary Conditions and Division 01 Specification Sections, apply to this Section.

2. Section 312000, “Earth Moving. For excavating, trenching, and backfilling.

1.2 PERFORMANCE REQUIREMENTS

A. General: Furnish and install a completely automatic irrigation system to provide adequate irrigation of all new and restored planting shown on the plans and described in specifications, complete and ready for operation. The work shall consist of providing and installing all material necessary for a complete system, including pipe, valves, fittings, automatic central control equipment, and all appurtenances related thereto. Included shall be all labor for trenching, plumbing, backfill, electrical connections and adjustments, mechanical connections, and other labor necessary for installation of satisfactorily operating systems. Whether mentioned or not, the intent is that the Contractor furnish a complete and operable system as indicated on the drawings.

B. Location of Sprinklers and Specialties: Design location is approximate. Make minor adjustments necessary to avoid plantings and obstructions such as signs and light standards. Maintain 100 percent irrigation coverage of areas indicated.

1.3 SUBMITTALS

A. Product Data: Submit product data in accordance with Section 013300 a minimum of 30 working days before beginning work, unless otherwise approved. Include data for all products to be installed in these systems. Include material showing manufacturer's name, catalog numbers, catalog cuts, technical data, and manufacturers' installation, operation, and maintenance instructions for each product.

B. Zoning Chart: Show each irrigation zone and its control valve.

C. Controller Timing Schedule: Indicate timing settings for each automatic controller zone.

D. Point of Connection Water Pressure Test: Test water pressure at the irrigation system point of connection prior to beginning work. Submit results of test to Owner's Representative.

E. Site Inspection Report: Submit statement confirming a site inspection has been conducted, noting discrepancies between ground measures and plans, hazards or site conditions which will interfere with installation or operation of the system prior to beginning of work.

F. Operation and maintenance data.

1. Submit the name and address of permanent service organizations maintained or trained by the manufacturers that will render service within eight hours of receipt of notification of service request.

2. Zone Map: Submit an irrigation plan for the site indicating, by varying colors, the area of coverage for each control valve. Indicate the number and location of the valve. The number is to correspond to that on the controller for that zone.

3. Submit controller timing schedule indicating on a weekly basis the day, time, and duration of watering for each control valve.

4. Provide the zone map and controller timing schedule for each system, folded into a plastic envelope, of a size capable of being installed in the door of the controller.

5. Submit operating and maintenance guides for the entire system and for each piece of equipment in the system. Instructions for system winterization are to be included.

G. Record Drawings:

1. Maintain a complete set of record drawings, corrected daily, to show design and specification changes, and location of system components. Submit copies as requested.

2. At completion, submit reproducible Mylar plan at the same scale as the construction plans, indicating the elevations of mainlines, valves, backflow preventers, zone outlines, and other system elements, indicate locations with dimensions from building, curb lines, or other fixed site features.

1.4 QUALITY ASSURANCE

A. Electrical Components, Devices, and Accessories: Listed and labeled as defined in NFPA 70, by a qualified testing agency, and marked for intended location and application.

1.5 PROJECT CONDITIONS

A. Environmental Requirements: Perform work under environmental conditions suitable for the tasks being undertaken.

B. Ordinances, Codes, and Regulations: All local, municipal, and state laws, rules, and regulations governing or relating to any of this work are hereby incorporated into and made part of these specifications and their provisions shall be carried out by the Contractor. Anything contained in these specifications shall not be construed to conflict with above mentioned rules, regulations, or requirements. Where conflict may occur, rules, regulations, or requirements of the governing code shall be adhered to. However, when these specifications and/or drawings call for or describe materials, workmanship or construction of a better quality, higher standard or larger size, these specifications and/or drawings shall take precedence over the requirements of said rules, regulations, and codes.

C. Existing Conditions:

1. Visit the site and note conditions which affect work under this Section.

2. Locate all utilities, lines, and piping in the work area. Provide adequate protection during all phases of work.

3. Repair utilities, lines, and piping damaged by this work to the satisfaction of the Owner of the line, at no change in Contract Price.

4. Notify Owner's Representative of unsatisfactory conditions. Proceed with work only after conditions have been corrected.

5. Field Measurements: Take field measurements of irrigated areas to determine if differences occur between plans and ground dimensions. Notify Owner's Representative of differences before proceeding with work.

6. Irrigation work is not permitted during the following conditions:
   a. When the temperature is less than 35 degrees F or greater than 90 degrees F.
   b. When the planting area's soil is saturated, frozen, or dry.
   c. When wind velocities are greater than 30 mph.

1.6 MATERIALS AND WORKMANSHIP

A. General: Whenever any material is specified by name/number, such specifications are for the purpose of facilitating a description of materials and establishing quality, and shall be deemed and construed to be followed by the words "or approved equal." No substitutions will be permitted which have not been submitted for prior approval to Owner's Representative. All materials shall be new, without flaws or defects and shall be the best of their class and kind. Furnish sufficient descriptive literature and/or samples for any material submitted as "equal" substitutes.

B. Workmanship: All materials and equipment shall be installed in a neat and professional manner. The Owner or Owner's representative reserves the right to direct removal and replacement of any items, which in their opinion do not present an orderly and neat or professional appearance. Such removal and replacement shall be done, when directed in writing, at Contractor's expense without additional cost to Owner.

1.7 SEQUENCING AND SCHEDULING

A. Thirty days prior to beginning work, submit a work schedule to include dates, location, and type of work to be performed.

B. Complete irrigation system installation and make fully operational before landscape seeding and sodding takes place.

1.8 WARRANTY

A. Refer to the General and Supplementary General Conditions.

B. Additional Requirements:

1. Repair settling of trenches. Include complete restoration of plantings, mulch, grades, pavements, or other improvements.

2. Correct irrigation system problems or damage within five working days of notice until final acceptance of the irrigation system.

PART 2 PRODUCTS

2.1 PIPES, TUBES, AND FITTINGS

A. Comply with requirements in piping schedule for applications of pipe, tube, and fitting materials, and for joining methods for specific services, service locations, and pipe sizes.

B. PVC Pipe: ASTM D 1785, PVC 1120 compound, Schedules 40 and 80.

1. PVC Socket Fittings: ASTM D 2466 Schedules 40 and 80.

2. PVC Threaded Fittings: ASTM D 2464, Schedule 80.

3. PVC Socket Unions: Construction similar to MSS SP-107, except both headpiece and tailpiece shall be PVC with socket ends.

C. PVC Sleeves: 6” or 8” class 200 PVC as indicated on the plans.

2.2 PIPING JOINING MATERIALS

A. Solvent Cements for Joining PVC Piping: ASTM D 2564 type 711 gray. No Wet 'n Dry or 725 type cements. Include primer according to ASTM F 656.

B. Plastic, Pipe-Flange Gasket, Bolts, and Nuts: Not permitted.

2.3 SPRINKLER HEADS

A. General: As described on the Equipment Legend.

2.4 OTHER MATERIALS

A. Drain Rock: Cleaned gravel or round stone, graded from 3/4 inch minimum to 1-1/2 inches maximum, no fines.

B. Trench Backfill: Masons sand.

C. "Air Compressor" Valve: Size to fit quick coupling valve keys.

D. Valve Markers: Christy’s Identification Tags manufactured from polyurethane Behr Desopan, incorporating an integral attachment neck and reinforced attachment hole and will be capable of withstanding 180 lbs. Pull force. Tag shall be approximately 2.25” x 2.75” in size. All lettering will be hot stamped in black and capable of withstanding outdoor usage. The standard alphanumeric designations shall incorporate lettering 1 1/8” in height. Tag color will be yellow. Marking tag will be double side stamped with zone valve number.

E. All other materials, not specifically described but required for a complete and proper irrigation system installation, shall be new, first quality of their respective kinds, and subject to approval of Owner or his representative:

PART 3 EXECUTION

3.1 PIPING INSTALLATION

A. Protection: The Contractor shall exercise care in handling, loading, unloading, and storing to avoid damage. The pipe and fittings shall be stored under cover and shall be transported in a

vehicle with a bed long enough to allow the length of pipe to lay flat, so as not to be subject to undue bending or concentrated external load at any point. Any pipe that has been dented or damaged shall be discarded until such damage has been cut out and the pipe is rejoined with a coupling.

B. Installation: No piping shall occur unless the Point of Connection is installed and water is available for flushing.

C. All pipe within buildings to be installed by Mechanical.

D. All pipe over 2-1/2” diameter shall be installed with thrust blocks.

E. Trench Depth: Excavate straight trenches to a depth of 3" below invert of pipe, unless otherwise indicated. Unless otherwise specified, trenches shall be deep enough to allow 12" cover over lateral lines and 18" cover over supply main lines. 24" maximum cover. All trenches must be straight and not have abrupt changes in grade. Excavate straight and true with bottom uniformly sloped to low points. Trench bottoms with uniform slope, free of rocks or sharp-edged objects. Install pipe with label facing up.

F. Tracer Wire: install tracer wire with the main line over the entire length. Only splice wire in a valve box using 3M DBY or DBR splice kits. Ground the tracer wire by the POC. Provide access to tracer wire at isolation valve boxes.

G. Route irrigation lines around roots of existing trees. Care shall be exercised by the Contractor when excavating trenches near existing trees. Trenches having exposed tree roots shall be backfield within 24 hours unless adequately protected by moist burlap or canvas directed by the Owner’s Representative. Pipe shall lay side by side in trench. No stacking of pipe permitted.

H. Paved Areas: Sleeve all pipe under paved areas.

I. Backfill: Backfilling shall be done when pipe is not in an expanded condition due to heat or pressure. Cooling of the pipe can be accomplished by operating system for a short time before backfilling, or by backfilling in the early part of the morning before heat of the day. Backfill shall contain no lumps or rocks larger than 1 inch.

J. Compaction: Use hand-operated plate type vibratory or other suitable hand tampers in areas not suitable for larger rollers or compactors. Compact initial backfill material surrounding pipes and conduit to 90 percent maximum density. For pipes, conduits and sleeves under roads and slabs, compact backfill as specified herein for other utilities under roads and slabs. General: Install in a manner so as to provide for expansion and contraction as recommended by manufacturer. Cut plastic pipe to ensure a square cut. Remove burrs at cut ends prior to installation. Install piping free of sags and bends. Solvent-weld or slip seal all plastic joints. Only solvent recommended by pipe manufacturer shall be used. Install all plastic pipe and fittings as shown and instructed by pipe manufacturer. Install with label facing up. Contractor shall assume full responsibility for correct installation.

K. Install groups of pipes parallel to each other, spaced minimum 6” apart to permit servicing.

L. Install PVC piping in dry weather when temperature is above 40 deg F. Allow joints to cure at least 24 hours at temperatures above 40 deg F before testing.

3.2 JOINT CONSTRUCTION

A. Remove scale, slag, dirt, and debris from inside and outside of pipe and fittings before assembly.

B. Joints: All plastic to metal joints shall be made with plastic Schedule 80 male adapters. Care should be taken at solvent joints not to use an excess amount of solvent. Allow PVC joints to set at least 24 hours before pressure is applied to system. Use pre-primer at joints.

C. PVC Piping Solvent-Cemented Joints: Clean and dry joining surfaces. Join pipe and fittings according to the following:

1. Comply with ASTM F 402 for safe-handling practice of cleaners, primers, and solvent cements.

2. PVC Pressure Piping: Join schedule number, ASTM D 1785, PVC pipe and PVC socket fittings according to ASTM D 2672. Join other-than-schedule-number PVC pipe and socket fittings according to ASTM D 2855. Use purple primer and type 705 gray or 721 blue glue. No Wet 'n Dry or type 725 or 738 glue.

3. PVC Non-pressure Piping: Join according to ASTM D 2855.

3.3 IRRIGATION HEADS

A. General: Install all heads as detailed on drawings, adjusting location as necessary to achieve maximum coverage as intended. Heads adjacent to walks, walls or curbs and other paved areas shall be set 4-inches from edge of paving. Balance and adjust all nozzles after entire system is operable. Set heads perpendicular to finish grade unless otherwise indicated.

B. Adjustment: All nozzles on stationary sprinklers or spray heads shall be tightened after installation. All sprinklers having an adjusting screw, adjusting stem or adjusting friction collars shall be adjusted on a lateral line of circuit as required for proper arc, coverage, radius, diameter, and/or gallonage discharge.

3.4 FIELD QUALITY CONTROL

A. Tests and Inspections:

1. As-Builts: Draft and up to date as-built drawings are required on site for all testing and inspections.

2. Schedule: Provide 4 days’ notice for test requests.

3. Leak Test: After installation, charge system and test for leaks. Repair leaks and retest until no leaks exist. Request no tests until confident work will pass.

4. Operational Test: After electrical circuitry has been energized, operate controllers and automatic control valves to confirm proper system operation.

5. Test and adjust controls and safeties. Replace damaged and malfunctioning controls and equipment.

6. Perform a water coverage test in presence of Owner's Representative to determine whether water coverage and operation of system is adequate for planting. If system is determined by Owner's Representative to be inadequate due to poor workmanship or materials, replace or repair and test repeated until accepted. Dry spots will not be acceptable.

B. Irrigation products will be considered defective if they do not pass tests and inspections.

C. Prepare test and inspection reports.

3.5 ADJUSTING

A. Adjust settings of controllers.

B. Adjust automatic control valves to provide flow rate at rated operating pressure required for each sprinkler circuit.

C. Adjust sprinklers and devices, except those intended to be mounted aboveground, so they will be flush with, or not more than 1/2 inch above, finish grade.

3.6 PROTECTION

A. Deactivate and drain system prior to onset of freezing season and reactivate at onset of spring season. Accomplish each at least once during warranty period. If construction is completed when system is not in use, winterize after testing. Certify by letter dates of winterization / activation. Repair damage from failure to comply.

B. When using compressed air to winterize the system, do so in short cycles at no more than 40 psi air pressure. Do not allow pipe close to the compressor to get hot to the touch.

END OF SECTION

32 91 15 – SOIL PREPARATION

PART 1 GENERAL

1.1 SUMMARY

A. Section Includes:

1. Planting soils.
2. Soil amendments.
3. Fertilizers.

B. Related Sections:

1. Drawings and general provisions of the Contract, including General and Supplementary Conditions and Division 01 Specification Sections, apply to this Section.
2. Section 311000 "Site Clearing" for topsoil stripping and stockpiling.
3. Section 329200 "Turf and Grasses" for placing planting soil for turf and grasses.

1.2 DEFINITIONS

A. Backfill: The earth used to replace or the act of replacing earth in an excavation. This can be amended or unamended soil, as indicated.

B. CEC: Cation exchange capacity.

C. Compost: The product resulting from the controlled biological decomposition of organic material that has been sanitized through the generation of heat and stabilized to the point that it is beneficial to plant growth.

D. Duff Layer: A surface layer of soil, typical of forested areas, that is composed of mostly decayed leaves, twigs, and detritus.

E. Imported Soil: Soil that is transported to Project site for use.

F. NAPT: North American Proficiency Testing Program. An SSSA program to assist soil-, plant-, and water-testing laboratories through interlaboratory sample exchanges and statistical evaluation of analytical data.

G. Organic Matter: The total of organic materials in soil exclusive of undecayed plant and animal tissues, their partial decomposition products, and the soil biomass; also called "humus" or "soil organic matter."

H. Planting Soil: Existing, on-site soil; imported soil; or manufactured soil that has been modified as specified with soil amendments and perhaps fertilizers to produce a soil mixture best for plant growth.

I. RCRA Metals: Hazardous metals identified by the EPA under the Resource Conservation and Recovery Act.

J. SSSA: Soil Science Society of America.

K. Subgrade: Surface or elevation of subsoil remaining after excavation is complete, or the top surface of a fill or backfill before planting soil is placed.

L. Subsoil: Soil beneath the level of subgrade; soil beneath the topsoil layers of a naturally occurring soil profile, typified by less than 1 percent organic matter and few soil organisms.

M. Surface Soil: Soil that is present at the top layer of the existing soil profile. In undisturbed areas, surface soil is typically called "topsoil"; but in disturbed areas such as urban environments, the surface soil can be subsoil.

N. USCC: U.S. Composting Council.

1.3 PREINSTALLATION MEETINGS

A. Preinstallation Conference: Conduct conference at Project site.

1.4 SUBMITTALS

A. Product Data: For each type of product.

1. Include test data substantiating that products comply with requirements.

2. Include sieve analyses for aggregate materials.

B. Samples: For each bulk-supplied material, 1-gal. volume of each in sealed containers labeled with content, source, and date obtained. Each Sample shall be typical of the lot of material to be furnished; provide an accurate representation of composition, color, and texture.

C. Qualification Data: For each testing agency.

1. Testing Agency Qualifications: An independent, state-operated, or university-operated laboratory; experienced in soil science, soil testing, and plant nutrition; with the experience and capability to conduct the testing indicated; and that specializes in types of tests to be performed.

D. Compaction Testing Reports.

E. Field quality-control reports.

1.5 DELIVERY, STORAGE, AND HANDLING

A. Packaged Materials: Deliver packaged materials in original, unopened containers showing weight, certified analysis, name and address of manufacturer, and compliance with state and Federal laws if applicable.

B. Bulk Materials:

1. Do not dump or store bulk materials near structures, utilities, walkways, and pavements, or on existing turf areas or plants.

2. Provide erosion-control measures to prevent erosion or displacement of bulk materials, discharge of soil-bearing water runoff, and airborne dust reaching adjacent properties, water conveyance systems, or walkways.

3. Do not move or handle materials when they are wet or frozen.

4. Accompany each delivery of bulk fertilizers and soil amendments with appropriate certificates.

PART 2 PRODUCTS

2.1 PLANTING SOILS

A. Planting Soil, Type A (Turf Areas): Manufactured soil consisting of 60% sand and 40% compost blended in a manufacturing facility with stabilized organic soil amendments and other materials to produce viable planting soil.

1. Additional Properties of Manufacturer's Basic Soil before Amending:
   a. Organic matter content between 5 and 10 percent by weight (Loss on Ignition method).
   b. pH between 6 to 7.5.
   c. Soluble salt contents less than 3.0 hos/cm.
   d. Friable and with sufficient structure to give good tilth and aeration.
   e. Sand particle size shall meet to the following:
      1) 100% passing 3/8-inch sieve.
      2) 50-80% passing #10 sieve.
      3) 10-30% passing #40 sieve.
      4) 0-5% passing #200 sieve.
   f. Compost shall meet requirements of Article 2.3.A.
   g. Unacceptable Properties: Manufactured soil shall not contain the following:
      1) Unacceptable Materials: Concrete slurry, concrete layers or chunks, cement, plaster, building debris, oils, gasoline, diesel fuel, paint thinner, turpentine, tar, roofing compound, acid, and other extraneous materials that are harmful to plant growth.
      2) Unsuitable Materials: Stones, roots, plants, sod, clay lumps, and pockets of coarse sand that exceed a combined maximum of 5 percent by dry weight of the manufactured soil.
      3) Large Materials: Stones, clods, roots, clay lumps, and pockets of coarse sand exceeding 2 inches in any dimension.

2. Approved products include Cedar Grove's “60/40 Lawn Mix.”

2.2 INORGANIC SOIL AMENDMENTS

A. Lime: ASTM C602, agricultural liming material containing a minimum of 80 percent calcium carbonate equivalent and as follows:

1. Class: T, with a minimum of 99 percent passing through a No. 8 sieve and a minimum of 75 percent passing through a No. 60 sieve.

2. Class: O, with a minimum of 95 percent passing through No. 8 sieve and a minimum of 55 percent passing through a No. 60 sieve.

3. Form: Provide lime in form of ground dolomitic limestone or calcitic limestone.

B. Sulfur: Granular, biodegradable, and containing a minimum of 90 percent elemental sulfur, with a minimum of 99 percent passing through a No. 6 sieve and a maximum of 10 percent passing through a No. 40 sieve.

C. Iron Sulfate: Granulated ferrous sulfate containing a minimum of 20 percent iron and 10 percent sulfur.

D. Agricultural Gypsum: Minimum 90 percent calcium sulfate, finely ground with 90 percent passing through a No. 50 sieve.

E. Sand: Clean, washed, natural or manufactured, free of toxic materials, and according to ASTM C33/C33M.

2.3 ORGANIC SOIL AMENDMENTS

A. Compost: Well-composted, stable, and weed-free organic matter produced by composting feedstock, and bearing USCC's "Seal of Testing Assurance," and as follows:

1. Feedstock may include sewage sludge.

2. Organic Matter Content between 40 to 60 percent percent by weight (Loss on Ignition method).

3. Compost particle size shall meet to the following:
   a. 100% passing 2-inch sieve.
   b. 99% passing 1-inch sieve.
   c. 90-100% passing 5/8-inch sieve.
   d. 90-100% passing 1/4-inch sieve.

B. Wood Derivatives: Shredded and composted, nitrogen-treated sawdust, ground bark, or wood waste; of uniform texture and free of chips, stones, sticks, soil, or toxic materials.

1. Partially Decomposed Wood Derivatives: In lieu of shredded and composted wood derivatives, mix shredded and partially decomposed wood derivatives with ammonium nitrate at a minimum rate of 0.15 lb/cu. ft. of loose sawdust or ground bark, or with ammonium sulfate at a minimum rate of 0.25 lb/cu. ft. of loose sawdust or ground bark.

2.4 FERTILIZERS

A. Commercial Fertilizer: Commercial-grade complete fertilizer of neutral character, consisting of fast- and slow-release nitrogen, 50 percent derived from natural organic sources of urea formaldehyde, phosphorous, and potassium in the following composition:

1. Composition: 1 lb/1000 sq. ft. of actual nitrogen, 4 percent phosphorous, and 2 percent potassium, by weight.

2. Composition: Nitrogen, phosphorous, and potassium in amounts recommended in soil reports from a qualified testing agency.

B. Slow-Release Fertilizer: Granular or pelleted fertilizer consisting of 50 percent water-insoluble nitrogen, phosphorus, and potassium in the following composition:

1. Composition: 20 percent nitrogen, 10 percent phosphorous, and 10 percent potassium, by weight.

2. Composition: Nitrogen, phosphorous, and potassium in amounts recommended in soil reports from a qualified testing agency.

C. Chelated Iron: Commercial-grade FeEDDHA for dicots and woody plants, and commercial-grade FeDTPA for ornamental grasses and monocots.

PART 3 EXECUTION

3.1 GENERAL

A. Place planting soil and fertilizers according to requirements in other Specification Sections.

B. Verify that no foreign or deleterious material or liquid such as paint, paint washout, concrete slurry, concrete layers or chunks, cement, plaster, oils, gasoline, diesel fuel, paint thinner, turpentine, tar, roofing compound, or acid has been deposited in planting soil.

C. Proceed with placement only after unsatisfactory conditions have been corrected.

3.2 SUBGRADE PREPARATION

A. Completely remove and dispose of all structural fill, gravel, quarry spall, construction debris, and other obstructions in the area to receive planting, including areas where native soils have been removed and replaced with structural materials adjacent to buildings and paved areas. Remove debris and rocks over 4 inches in size to a depth of at least 12 inches in all areas to receive planting.

B. If native soil in areas to receive planting is free from structural fill, gravel, quarry spall, construction debris, and other deleterious materials, establish subgrade lines and grades appropriate to provide for specified depth of prepared planting soil.

C. If subgrades need to be raised to establish lines and grades appropriate to provide for specified depth of prepared planting soil, use accepted Engineered Fill as defined in Section 31 20 00, Earthwork.

D. After subgrade lines and grades are established, scarify exposed soils in two directions to a depth of at least 12 inches. Entire surface shall be disturbed by scarification. Moisture control if necessary. Do not scarify within drip line of existing trees to remain. Tilling with a backhoe bucket is not an acceptable method. Remove stones larger than 1 inch in any dimension and sticks, roots, rubbish, and other extraneous matter and legally dispose of them off Owner's property.

E. Obstructions Below Grade: In the event that roots, rocks, underground construction work, utilities, or obstructions are encountered during scarification operations under this Contract, continue work by hand with shovel or fork.

F. Finish subgrades will be reviewed by Owner’s Representative before placing soil amendments or manufactured planting soil.

3.3 PLACING MANUFACTURED PLANTING SOIL OVER EXPOSED SUBGRADE

A. Generally retain this article if manufactured planting soil is applied to areas that have been stripped of existing soils or that have poor existing soils regarded as subgrade.

B. General: Apply manufactured soil on-site in its final, blended condition. Do not apply materials or till if existing soil or subgrade is frozen, muddy, or excessively wet.

C. Application:

D. Apply approximately half the thickness of planting soil over prepared, loosened subgrade. Mix thoroughly into top 4 inches of subgrade.

E. Spread planting soil to total depth indicated on Drawings, but not less than required to meet finish grades after natural settlement. Do not spread if soil or subgrade is frozen, muddy, or excessively wet.

1. Lifts: Apply planting soil in lifts not exceeding 8 inches in loose depth for material compacted by compaction equipment, and not more than 4 inches in loose depth for material compacted by hand-operated tampers.

F. Compaction: Compact each lift of planting soil to 85 percent of maximum Standard Proctor density according to ASTM D698.

3.4 FINISH GRADING

A. After natural settlement and light rolling, complete work to conform strictly to the lines, grades, and elevations indicated. Elevations and landform configuration is critical to project design intent. Supply additional soil as needed to give the specified depths and grade.

B. Grades in planting areas not otherwise indicated shall have uniform levels or slopes between points established by pavements, curbs, catch basins, or other utility lids. Finish grade shall be smooth, even, and on a uniform plane with no abrupt change in surface and have no erosion scars.

C. Slope all planting areas to drain. If drainage conditions are questionable, request review and direction from the Owner's Representative. Adjustments to accommodate drainage concerns must be approved by the Owner's Representative. Drainage problems discovered after plant material is installed shall be corrected to the satisfaction of the Owner's Representative as part of the Contract.

D. Ensure finish grading accounts for depth of mulch in relation to adjacent grade conditions.

E. Protect all planting areas against compaction by construction equipment.

3.5 FIELD QUALITY CONTROL

A. Testing Agency: Engage a qualified testing agency to perform tests and inspections.

B. Perform the following tests:

1. Compaction: Test planting-soil compaction after placing each lift and at completion using a densitometer or soil-compaction meter calibrated to a reference test value based on laboratory testing according to ASTM D698. Space tests at no less than one for each 2,000 sq. ft. of in-place soil or part thereof.

2. Performance Testing: For each amended planting-soil type, demonstrating compliance with specified performance requirements. Perform testing according to "Soil-Sampling Requirements" and "Testing Requirements" articles.

C. Soil will be considered defective if it does not pass tests.

D. Prepare test reports.

E. Label each sample and test report with the date, location keyed to a site plan or other location system, visible conditions when and where sample was taken, and sampling depth.

3.6 PROTECTION

A. Protect areas of in-place soil from additional compaction, disturbance, and contamination. Prohibit the following practices within these areas except as required to perform planting operations:

1. Storage of construction materials, debris, or excavated material.

2. Parking vehicles or equipment.

3. Vehicle traffic.

4. Foot traffic.

5. Erection of sheds or structures.

6. Impoundment of water.

7. Excavation or other digging unless otherwise indicated.

B. If planting soil or subgrade is over compacted, disturbed, or contaminated by foreign or deleterious materials or liquids, remove the planting soil and contamination; restore the subgrade as directed by Architect and replace contaminated planting soil with new planting soil.

3.7 CLEANING

A. Protect areas adjacent to planting-soil preparation and placement areas from contamination. Keep adjacent paving and construction clean and work area in an orderly condition.

B. Remove surplus soil and waste material including excess subsoil, unsuitable materials, trash, and debris and legally dispose of them off Owner's property unless otherwise indicated.

1. Dispose of excess subsoil and unsuitable materials on-site where directed by Owner.

END OF SECTION

32 92 00 – TURF AND GRASSES

PART 1 GENERAL

1.1 SUMMARY

A. Section Includes:

1. Sodding.

B. Related Sections:

1. Drawings and general provisions of the Contract, including General and Supplementary Conditions and Division 01 Specification Sections, apply to this Section.

2. Section 328400 “Irrigation” for turf grass area irrigation.

3. Section 321913 “Soil Preparation” for turf grass soil mix, amendments, and placement requirements.

1.2 DEFINITIONS

A. Finish Grade: Elevation of finished surface of planting soil, prior to seeding. For sod placement, finished grade is the elevation of the top of sod soil. See details for exceptions adjacent to paving for drainage.

B. Pesticide: A substance or mixture intended for preventing, destroying, repelling, or mitigating a pest. Pesticides include insecticides, miticides, herbicides, fungicides, rodenticides, and molluscicides. They also include substances or mixtures intended for use as a plant regulator, defoliant, or desiccant.

C. Pests: Living organisms that occur where they are not desired or that cause damage to plants, animals, or people. Pests include insects, mites, grubs, mollusks (snails and slugs), rodents (gophers, moles, and mice), unwanted plants (weeds), fungi, bacteria, and viruses.

D. Planting Soil: Existing, on-site soil; imported soil; or manufactured soil that has been modified with soil amendments and perhaps fertilizers to produce a soil mixture best for plant growth. See Section 329113 "Soil Preparation" and drawing designations for planting soils.

E. Subgrade: The surface or elevation of subsoil remaining after excavation is complete, or the top surface of a fill or backfill before planting soil is placed.

F. Planting Substantial Completion: Seeded and sodded areas have been reviewed and approved by Landscape Architect and found to meet requirements.

1.3 PREINSTALLATION MEETINGS

A. Preinstallation Conference: Conduct conference at Project site.

B. Agenda Items:

1. Review of soil elevation, fine grading, and preparation.

2. Irrigation installation completion and coverage.

3. Weather conditions.

4. Sod storage.

1.4 SUBMITTALS

A. Qualification Data: For landscape Installer indicating the information required in the Quality Assurance section.

B. Product Data Submittals: For each product, seed mix, or sod type indicated prior to ordering.

1. Include quantities, sizes, quality, and verified sources of materials.

2. Include seed species and ratios.

3. Substitutions shall be made in accordance with Division 01 specifications.

C. Certification of Grass Seed: From seed vendor for each grass-seed monostand or mixture, stating the botanical and common name, percentage by weight of each species and variety, and percentage of purity, germination, and weed seed. Include the year of production and date of packaging.

1. Certification of each seed mixture for turfgrass sod. Include identification of source and name and telephone number of supplier.

D. Product Certificates: For fertilizers, from manufacturer.

E. Pesticides and Herbicides: Product label and manufacturer's application instructions specific to Project.

1.5 CLOSEOUT SUBMITTALS

A. Owner Maintenance Schedule: Recommended procedures to be established by Owner for maintenance of turf during a calendar year. Submit before expiration of required maintenance periods.

1. Include product data sheets in manual, along with maintenance instructions and parts lists for those products.

B. Contractor Maintenance Schedule: Provide dates and tasks to be performed, per specification requirements. Schedule to be provided when maintenance begins.

C. Maintenance Report: Confirmation that scheduled maintenance visits were performed, with notes on challenges encountered. Reports to be provided to Landscape Architect and owner’s representative every month of maintenance period.

1.6 QUALITY ASSURANCE

A. Installer Qualifications: A qualified landscape installer whose work has resulted in successful turf establishment.

1. Professional Membership: Installer shall be a member in good standing of either the National Association of Landscape Professionals, AmericanHort, American Nursery and Landscape Association, or the Washington Association of Landscape Professionals.

2. Experience: Five years' experience in turf installation in addition to requirements in Section 014000 "Quality Requirements."

3. Installer's Field Supervision: Require Installer to maintain an experienced full-time supervisor on Project site when work is in progress.

4. Pesticide Applicator: State licensed, commercial, and familiar with EPA standards.

1.7 DELIVERY, STORAGE, AND HANDLING

A. Seed and Other Packaged Materials: Deliver packaged materials in original, unopened containers showing weight, certified analysis, name and address of manufacturer, and indication of compliance with state and Federal laws, as applicable. Damaged packages will not be accepted.

1. Seed shall be stored under cool and dry conditions so that endophytic seed in the mixture is capable of maintaining a high level of endophytes.

B. Sod: Harvest, deliver, store, and handle sod according to requirements in "Specifications for Turfgrass Sod Materials" and "Specifications for Turfgrass Sod Transplanting and Installation" sections in TPI's "Guideline Specifications to Turfgrass Sodding." Deliver sod within 24 hours of harvesting and in time for planting promptly. Protect sod from breakage and drying.

C. Bulk Materials:

1. Do not dump or store bulk materials near structures, utilities, walkways, and pavements, or on existing turf areas or plants.

2. Provide erosion-control measures to prevent erosion or displacement of bulk materials; discharge of soil-bearing water runoff; and airborne dust reaching adjacent properties, water conveyance systems, or walkways.

3. Accompany each delivery of bulk materials with appropriate certificates.

D. Deliver fertilizer in sealed waterproof bags, printed with manufacturer's name, weight, and guaranteed analysis.

1.8 FIELD CONDITIONS

A. Planting Restrictions: Plant during the following period. Coordinate planting periods with initial maintenance periods to provide required maintenance from date of planting completion.

1. From March 15 to October 15 or as approved by Landscape Architect. All planting must be complete prior to project substantial completion date.

2. Sodding may only be done after the irrigation system is installed and operational.

B. Weather Limitations: Proceed with planting only when existing and forecasted weather conditions permit planting to be performed when beneficial and optimum results may be obtained, unless approved by owner’s representative. Apply products during favorable weather conditions according to manufacturer's written instructions. Do not plant during the following conditions unless approved.

1. Cold weather: when ambient temperature is below 40 degrees F.
   a. For grass seed: when soil temperature is less than 50 degrees F.

2. Hot weather: when temperature exceeds 90 degrees F.

3. Windy weather: for seed when wind velocity exceeds 30 mph.

4. Observe any additional limitations noted by manufacturer.

C. Soil Conditions- Proceed with planting only when existing soil conditions permit planting to be performed when beneficial and optimum results may be obtained, unless approved by Landscape Architect. Do not plant during the following conditions unless approved.

1. When soil is saturated.

2. When soil is frozen.

3. For grass seed: when soil temperature is above 65 degrees F.

PART 2 PRODUCTS

2.1 TURFGRASS SOD

A. Turfgrass Sod: Approved, complying with "Specifications for Turfgrass Sod Materials" in TPI's "Guideline Specifications to Turfgrass Sodding." Furnish viable sod of uniform density, color, and texture that is strongly rooted and capable of vigorous growth and development when planted.

1. Sun and Partial Shade: Proportioned by weight as follows:
   a. 100 percent perennial ryegrass (Blended varieties).

2. Size: Big roll sod.

2.2 FERTILIZERS

A. Slow-Release Fertilizer: Granular or pelleted fertilizer consisting of 50 percent water-insoluble nitrogen, phosphorus, and potassium in the following composition:

1. Composition:
   a. 20 percent nitrogen, 10 percent phosphorous, and 10 percent potassium, by weight.
   b. Apply nitrogen at 6.5 lbs per 1,000 sq. ft.

2.3 PESTICIDES

A. General: Pesticide, registered and approved by the EPA, acceptable to authorities having jurisdiction, and of type recommended by manufacturer for each specific problem and as required for Project conditions and application. Do not use restricted pesticides unless authorized in writing by authorities having jurisdiction.

1. Pre-Emergent Herbicide (Selective and Nonselective): Effective for controlling the germination or growth of weeds within planted areas at the soil level directly below the mulch layer.

2. Post-Emergent Herbicide (Selective and Nonselective): Effective for controlling weed growth that has already germinated.

B. Pesticide treatment plan to be developed based on observed weeds and County Weed Board BMPs, by an individual with a current pesticide applicator license.

PART 3 EXECUTION

3.1 EXAMINATION

A. Examine areas to be planted for compliance with requirements and other conditions affecting installation and performance of the Work.

1. Verify that no foreign or deleterious material or liquid such as paint, paint washout, concrete slurry, concrete layers or chunks, cement, plaster, oils, gasoline, diesel fuel, paint thinner, turpentine, tar, roofing compound, or acid has been deposited in soil within a planting area.

2. Suspend planting operations during periods of excessive soil moisture until the moisture content reaches acceptable levels to attain the required results.

3. Uniformly moisten excessively dry soil that is not workable or that is dusty.

B. Proceed with installation only after unsatisfactory conditions have been corrected.

C. If contamination by foreign or deleterious material or liquid is present in soil within a planting area, remove the soil and contamination as directed by Landscape Architect and replace with new planting soil.

3.2 PREPARATION

A. Protect structures; utilities; sidewalks; pavements; and other facilities, trees, shrubs, and plantings from damage caused by planting operations.

1. Protect adjacent and adjoining areas from hydroseeding and hydromulching overspray.

2. Protect grade stakes set by others until directed to remove them.

B. Install erosion-control measures to prevent erosion or displacement of soils and discharge of soil-bearing water runoff or airborne dust to adjacent properties and walkways.

3.3 TURF AREA PREPARATION

A. General: Prepare planting area for soil placement and mix planting soil according to Section 329113 "Soil Preparation.”

B. Placing Manufactured Planting Soil:

1. Prepare subgrade according to Section 329113 "Soil Preparation.”

2. Apply approximately half the thickness of planting soil over prepared, loosened subgrade. Mix thoroughly into top 4 inches of subgrade.

3. Spread planting soil to total depth indicated on Drawings, but not less than required to meet finish grades after natural settlement. Do not spread if soil or subgrade is frozen, muddy, or excessively wet.

4. Compact planting soil to 85 percent of maximum Standard Proctor density according to ASTM D698.

3.4 SODDING

A. Lay sod within 24 hours of harvesting. Do not lay sod if ground is frozen or muddy.

B. Lay sod to form a solid mass with tightly fitted joints. Butt ends and sides of sod; do not stretch or overlap. Stagger sod strips or pads to offset joints in adjacent courses. Avoid damage to soil or sod during installation. Tamp and roll lightly to ensure contact with soil, eliminate air pockets, and form a smooth surface. Work sifted soil or fine sand into minor cracks between pieces of sod; remove excess to avoid smothering sod and adjacent grass.

1. Lay sod across slopes exceeding 1:3.

C. Saturate sod with fine water spray within two hours of planting. During first week after planting, water daily or more frequently as necessary to maintain moist soil to a minimum depth of 1-1/2 inches below sod.

3.5 TURF MAINTENANCE

A. General: Maintain and establish turf by watering, fertilizing, weeding, mowing, trimming, replanting, and performing other operations as required to establish healthy, viable turf. Roll, regrade, and replant bare or eroded areas and remulch to produce a uniformly smooth turf. Provide materials and installation the same as those used in the original installation.

1. Fill in as necessary soil subsidence that may occur because of settling or other processes. Replace materials and turf damaged or lost in areas of subsidence.

2. In areas where mulch has been disturbed by wind or maintenance operations, add new mulch and anchor as required to prevent displacement.

3. Apply treatments as required to keep turf and soil free of pests and pathogens or disease. Use integrated pest management practices whenever possible to minimize the use of pesticides and reduce hazards.

B. Watering: Install and maintain irrigation system to keep turf uniformly moist to a depth of 4 inches.

1. Schedule watering to prevent wilting, puddling, erosion, and displacement of seed or mulch.

2. Water turf at a minimum rate of 2 inches per week unless rainfall precipitation is adequate.

C. Mow turf as soon as top growth is tall enough to cut. Repeat mowing to maintain specified height without cutting more than one-third of grass height. Remove no more than one-third of grass-leaf growth in initial or subsequent mowings. Do not delay mowing until grass blades bend over and become matted. Do not mow when grass is wet. Schedule initial and subsequent mowings to maintain the following grass height:

1. Mow to a uniform height between 3 and 4 inches.

D. Turf Postfertilization: Apply slow-release fertilizer after initial mowing and when grass is dry.

1. Use fertilizer that provides actual nitrogen of at least 1 lb/1,000 sq. ft. or as recommended by fertilizer manufacturer, whichever is greater to turf area.

3.6 SATISFACTORY TURF

A. Turf installations shall meet the following criteria as determined by Landscape Architect:

1. Satisfactory Seeded Turf: At end of maintenance period, a healthy, uniform, close stand of grass has been established, free of weeds and surface irregularities, with coverage exceeding 90 percent over any 10 sq. ft. and bare spots not exceeding 5 by 5 inches.

2. Satisfactory Sodded Turf: At end of maintenance period, a healthy, well-rooted, even-colored, viable turf has been established, free of weeds, open joints, bare areas, and surface irregularities.

B. Use specified materials to reestablish turf that does not comply with requirements and continue maintenance until turf is satisfactory.

3.7 PESTICIDE APPLICATION

A. Apply pesticides and other chemical products and biological control agents according to requirements of authorities having jurisdiction and manufacturer's written recommendations. Coordinate applications with Owner's operations and others in proximity to the Work. Notify Owner before each application is performed.

B. Post-Emergent Herbicides (Selective and Nonselective): Apply only as necessary to treat already-germinated weeds and according to manufacturer's written recommendations.

3.8 CLEANUP

A. Promptly remove soil and debris created by turf work from paved areas. Clean wheels of vehicles before leaving site to avoid tracking soil onto roads, walks, or other paved areas.

B. Remove surplus soil and waste material, including excess subsoil, unsuitable soil, trash, and debris, and legally dispose of them off Owner's property.

3.9 MAINTENANCE SERVICE

A. Turf Maintenance Service: Provide full maintenance by skilled employees of landscape Installer. Maintain as required in "Turf Maintenance" Article. Schedule maintenance hand off and site review walk with facility maintenance staff for end of maintenance period. Begin maintenance immediately after each area is planted and continue until acceptable turf is established, but for not less than the following periods:

1. Seeded Turf: one full growing season after seed has germinated, reached 2” height and is ready to be mown.
   a. When initial maintenance period has not elapsed before end of growing season, or if turf is not fully established, continue maintenance during next planting season.

2. Sodded Turf: one full growing season after installation.

END OF SECTION

33 41 00 – STORM UTILITY DRAINAGE PIPING

PART 1 GENERAL

1.1 RELATED DOCUMENTS

A. Drawings and general provisions of the Contract, including General and Supplementary Conditions and Division 01 Specification Sections, apply to this Section.

1.2 SUMMARY

A. Section Includes:

1. Pipe and Fittings.
2. Nonpressure Transition Couplings.
3. Cleanouts.
4. Catch Basins.
5. Trench Drains.
6. Stormwater Detention Pipe.
7. StormFilter Manhole.
8. All temporary and permanent storm drainage piping, fittings, and accessories.
9. Cleaning and flushing storm system at completion of project.

B. Related Sections:

1. Division 31 Section 312000 “Earth Moving” for trenching, bedding, backfilling, and bioretention soil mix.
2. Division 31 Section 312513 “Erosion Control” for temporary erosion control measures.

1.3 DEFINITIONS

A. CMP: Corrugated metal pipe.

B. CPEP: Corrugated polyethylene pipe.

C. PVC: Polyvinyl chloride pipe.

1.4 REFERENCE STANDARDS

A. WSDOT Specification: Standard Specifications for Road, Bridge and Municipal Construction, prepared jointly by the Washington State Department of Transportation, and the American Public Works Association, Washington State Chapter, most recent edition. All references to

measurement and payment shall be deleted from consideration, and terms agreed to in the contract substituted therefore.

B. WSDOT Standard Plans: Standard Plans for Road and Bridge Construction, prepared by Washington State Department of Transportation, current issue in effect at bid date.

1.5 SUBMITTALS

A. Submit under provisions of the Contract.

B. Certification: Provide a letter, signed by the supplier and reviewed and also signed by an officer of the Contractor's company, certifying that the following products to be incorporated into the work meet the requirements specified.

1. Catch Basins, Grates, and Frames.

2. Pipe.

3. Cleanouts.

4. Trench Drains.

5. StormFilter Manhole.

C. Record Drawings according to provisions of the Contract.

1. Record information shall be prepared by a professional land surveyor licensed in the State of Washington and shall include all rim and invert elevations and as-built location (coordinates) to the nearest 0.01 foot.

2. Record information shall be submitted within 30 days of substantial completion.

1.6 DELIVERY, STORAGE, AND HANDLING

A. Do not store plastic structures, pipe, and fittings in direct sunlight.

B. Protect pipe, pipe fittings, and seals from dirt and damage.

C. Handle catch basins and other drainage structures according to manufacturer's written rigging instructions.

1.7 PROJECT CONDITIONS

A. Site Information: Perform site survey, research public utility records, and verify existing utility locations. Field verify all connection points of existing facilities and contact Architect if proposed improvement cannot be provided.

B. Locate existing structures and piping to be closed and abandoned.

PART 2 PRODUCTS

2.1 CPEP PIPE AND FITTINGS

A. Corrugated PE Drainage Pipe and Fittings NPS 3 to NPS 10: AASHTO M 252M, Type S, with smooth waterway for coupling joints. Conform to WSDOT Specification 9-05.20.

1. Soiltight Couplings: AASHTO M 252M, corrugated, matching tube and fittings.

B. Corrugated PE Pipe and Fittings NPS 12 to NPS 60: AASHTO M 294M, Type S, with smooth waterway for coupling joints. Conform to WSDOT Specification 9-05.20.

1. Soiltight Couplings: AASHTO M 294M, corrugated, matching pipe and fittings.

2.2 PVC PIPE AND FITTINGS

A. PVC Gravity Storm Piping:

1. Pipe: ASTM D 3034, SDR 35, PVC sewer pipe with bell-and-spigot ends for gasketed joints. Conform to WSDOT Specification 9-05.12(1).

2. Fittings: ASTM D 3034, PVC with bell ends.

3. Gaskets: ASTM F 477, elastomeric seals.

2.3 CMP PIPE AND FITTINGS

A. CMP Detention Piping:

1. Pipe: 60-inch HP ADS N-12 or approved equal. ASTM F2881.

2. Fittings: ASTM F2881 and ASTM D3212.

3. Gaskets: ASTM F477.

2.4 NONPRESSURE TRANSITION COUPLINGS

A. Comply with ASTM C 1173, elastomeric, sleeve-type, reducing or transition coupling, for joining underground nonpressure piping. Include ends of same sizes as piping to be joined, and corrosion-resistant-metal tension band and tightening mechanism on each end.

B. Sleeve Materials:

1. For Plastic Pipes: ASTM F 477, elastomeric seal or ASTM D 5926, PVC.

2. For Dissimilar Pipes: ASTM D 5926, PVC or other material compatible with pipe materials being joined.

2.5 CLEANOUTS

A. Cleanouts:

1. Conform to detail on Drawings.

2.6 CATCH BASINS

A. Precast Concrete Catch Basins: Conform to WSDOT Standard Plan B Series for catch basin type indicated on plans.

B. Frames and Grates: Cast or ductile iron designed for heavy-duty service, conforming to WSDOT Standard Plan B-30.10-03 for grate type indicated. All structure grates and lids shall be locking unless noted otherwise, and shall conform to the following unless noted otherwise:

1. Solid: WSDOT Standard Plans B-30.20-02 and B-30.70-03.

2. Vaned: WSDOT Standard Plan B-30.30-01.

3. Herringbone: WSDOT Standard Plan B-30.50-01.

4. ADA: WSDOT Standard Plan B-30.15-00 Alternative 3, Olympic Foundry TWS style, or approved equivalent.

2.7 TRENCH DRAINS

A. Conform to details on drawings.

1. ACO K100 KlassikDrain or approved equivalent.

2. Grate: Type 494D-Black Part No. 99575 or approved equivalent.

2.8 STORMFILTER TREATMENT MANHOLE

A. Conform to details on drawings.

1. 48-inch StormFilter Manhole (SFMH48) or approved equivalent.

PART 3 EXECUTION

3.1 EARTHWORK

A. Excavation, trenching, and backfilling are specified in Division 31 Section 312000 “Earth Moving.”

3.2 PIPING INSTALLATION

A. General Locations and Arrangements: Drawing plans and details indicate general location and arrangement of underground storm drainage piping. Location and arrangement of piping layout take into account design considerations. Install piping as indicated, to extent practical. Where specific installation is not indicated, follow piping manufacturer’s written instructions.

B. Install piping beginning at low point, true to grades and alignment indicated with unbroken continuity of invert. Place bell ends of piping facing upstream. Install gaskets, seals, sleeves, and couplings according to manufacturer’s written instructions for use of lubricants, cements, and other installation requirements.

C. Install proper size increasers, reducers, and couplings where different sizes or materials of pipes and fittings are connected. Reducing size of piping in direction of flow is prohibited.

D. Install gravity-flow, nonpressure drainage piping according to the following:

1. Install piping pitched down in direction of flow.

2. Install PE corrugated sewer piping according to ASTM D 2321.

3. Install PVC sewer piping according to ASTM D 2321 and ASTM F 1668.

3.3 PIPE JOINT CONSTRUCTION

1. Join corrugated PE piping according to ASTM D 3212 for push-on joints.

2. Join PVC sewer piping according to ASTM D 2321 and ASTM D 3034 for elastomeric-seal joints or ASTM D 3034 for elastomeric-gasketed joints.

3. Join dissimilar pipe materials with nonpressure-type flexible couplings.

3.4 CLEANOUT INSTALLATION

A. Install cleanouts at grade.

1. Conform to detail on Drawings.

3.5 CATCH BASIN INSTALLATION

A. Installation shall conform to WSDOT Specification Division 7.

B. Construct catch basins to sizes and shapes indicated.

C. Set frames and grates to elevations indicated.

3.6 CONNECTIONS

A. Make connections to existing piping and storm drain catch basins.

1. Conform to City of Federal Way requirements.

2. Protect existing piping, manholes, and structures to prevent concrete or debris from entering while making tap connections. Remove debris or other extraneous material that may accumulate.

B. Pipe couplings, expansion joints, and deflection fittings with pressure ratings at least equal to piping rating may be used in applications below unless otherwise indicated.

1. Use nonpressure-type flexible couplings where required to join gravity-flow, nonpressure storm piping unless otherwise indicated.

3.7 TRENCH DRAIN INSTALLATION.

A. Installation to confirm with manufacturer’s recommendations.

3.8 STORMFILTER TREATMENT MANHOLE INSTALLATION

A. Installation to confirm with manufacturer’s recommendations.

3.9 CLOSING ABANDONED STORM DRAINAGE SYSTEMS

A. Abandoned Piping: Close open ends of abandoned underground piping indicated to remain in place. Include closures strong enough to withstand hydrostatic and earth pressures that may result after ends of abandoned piping have been closed.

1. Close open ends of piping with threaded metal caps, plastic plugs, or other acceptable methods suitable for size and type of material being closed. Do not use wood plugs.

B. Backfill to grade according to Division 31 Section 312000 “Earth Moving.”

3.10 FIELD QUALITY CONTROL

A. Clear interior of piping and structures of dirt and superfluous material as work progresses. Maintain swab or drag in piping and pull past each joint as it is completed.

1. Place plug in end of incomplete piping at end of day and when work stops.

2. Flush piping between catch basins and other structures to remove collected debris, if required by authorities having jurisdiction.

B. Inspect interior of piping to determine whether line displacement or other damage has occurred. Inspect after approximately 24 inches of backfill is in place, and again at completion of Project.

1. Submit separate reports for each system inspection.

2. Defects requiring correction include the following:
   a. Alignment: Less than full diameter of inside of pipe is visible between structures.
   b. Deflection: Flexible piping with deflection that prevents passage of ball or cylinder of size not less than 92.5 percent of piping diameter.
   c. Damage: Crushed, broken, cracked, or otherwise damaged piping.
   d. Infiltration: Water leakage into piping.
   e. Exfiltration: Water leakage from or around piping.

3. Replace defective piping using new materials, and repeat inspections until defects are within allowances specified.

4. Reinspect and repeat procedure until results are satisfactory.

C. Test new piping systems, and parts of existing systems that have been altered, extended, or repaired, for leaks and defects.

1. Do not enclose, cover, or put into service before inspection and approval.

2. Perform low pressure air test for completed piping systems according to WSDOT Specification 7-04.3(1)E.

3. Schedule tests and inspections by authorities having jurisdiction with at least 24 hours’ advance notice.

4. Submit separate report for each test.

D. Leaks and loss in test pressure constitute defects that must be repaired.

E. Replace leaking piping using new materials, and repeat testing until leakage is within allowances specified.

3.11 CLEANING

A. Clean interior of piping of dirt and superfluous materials. Flush with water.

END OF SECTION

33 46 16 – FIELD DRAINAGE SYSTEM

PART 1 GENERAL

1.1 SUMMARY

A. Section Includes:

1. Piping.
2. Filter fabric.
3. Backfill.

B. Related Sections:

1. Drawings and general provisions of the Contract, including General and Supplementary Conditions and Division 01 Specification Sections, apply to this Section.
2. Section 312000, “Earth Moving.”
3. Section 321123, “Permeable Crushed Rock Base.”
4. Section 329200, “Turf and Grasses.”

1.2 REFERENCE STANDARDS

A. Conform to OSHA (Occupational Safety and Health Act) requirements.

B. Conform to WISHA (Washington State Industrial Safety and Health Act) for trench safety.

1.3 SUBMITTALS

A. Submit under provisions of Division 01, Section “Submittals,” and as further provided.

B. Certification: Provide a letter, signed by the supplier and reviewed and also signed by an officer of the general contractor's company, certifying that the following products to be incorporated into the work to meet the requirements specified.

C. Products:

1. Filter Fabric
2. Collector Drain Pipe
3. Perforated Drain Pipe

1.4 PROJECT CONDITIONS

A. The Contractor shall utilize a utility locate service and shall notify affected utility companies before starting work and comply with all their requirements. The Contractor shall conform to applicable regulatory procedures when discovering hazardous or contaminated materials.

B. The locations of existing underground utilities are approximate only and have not been independently verified by the Owner or its representative. The Contractor shall determine the exact location of all existing utilities before commencing work and agrees to be fully responsible for any and all damages that happen due to the Contractor's failure to locate exactly and preserve all underground utilizes that are designated to remain.

1.5 QUALITY ASSURANCE

A. Tests and analysis of aggregate material shall be performed in accordance with ANSI/ASTM D1557, ASTM D2922, ASTM D3017, ASTM D4318, and ASTM C136, as applicable.

PART 2 PRODUCTS

2.1 MATERIALS

A. Perforated Collector Drain Pipe: Field perforated collector drain pipe shall be 8 inch ADS N-12 ST IB, Perforated, Class 2, smooth wall interior CPEP - N12 tubing in conformance with ASTM F405 size as shown on Drawings as manufactured by Advance Drainage Systems (ADS) or approved equal.

B. Underdrain Pipe: Field perforated underdrain pipe shall be 4 inch ADS N-12 ST IB, Perforated, Class 2, smooth wall interior CPEP - N12 tubing in conformance with ASTM F405 size as shown on Drawings as manufactured by Advance Drainage Systems (ADS) or approved equal.

C. Collector Drain Pipe: Install in areas not directly under fields, where field drainage system connects with civil drainage system. Field collector drainpipe shall be 8 inch ADS N-12 ST IB Solid, smooth wall interior pipe as manufactured by Advance Drainage Systems (ADS) or approved equal.

D. Filter Fabric for Subgrade: Filter fabric shall be placed on the final subgrade for the fields prior to installing the underdrains. Filter fabric shall be non-woven geotextile fabric Mirafi 140N or approved equal.

E. Pea Gravel for Underdrains: Pea gravel shall be 1/8 inch to 3/8 inch washed aggregate.

F. Backfill Material: Furnish additional backfill materials as specified under Section 321123.00, “Permeable Crushed Rock Base.”

PART 3 EXECUTION

3.1 EXCAVATIONS

A. Field Underdrain:

1. Trenches shall be excavated to the lines and grades indicated on the Drawings, exercising care to maintain clean edges and sides in trench.

2. The bottom of the trench shall be re-compacted to at least 95 percent of maximum density to provide a firm and solid base.

3. Native material removed from trench excavation shall be removed in its entirety from the field area so as to maintain required positive drainage patterns across the subgrade to the drain trenches. After drain trench installation is completed, subgrade between trenches

shall be re-graded as necessary and re-compacted to 95 percent of maximum density to provide a firm, dense surface for placement of topsoil.

4. Contractor shall exercise extreme care to prevent contamination of drain trench tubing and caving in or other damage to the edges of the drain trenches. Any damage or contamination that occurs shall be repaired at the Contractor's expense, to the satisfaction of the Landscape Architect.

5. Prior to installing drain lines, place the required depth of pea gravel as shown on the Drawings. Set drain lines to true and accurate grades and fill trench with pea gravel as detailed.

6. All drain line connections to catch basins and storm drain system shall be per drawings.

7. Remove all debris and unused material from project site.

3.2 INSTALLATION OF PIPING MATERIALS

A. General

1. After grading is completed and accepted and trenches are true to line and clean, the contractor shall install the filter fabric over the entire turf field area and associated perimeter trenches.

2. All pipe shall be installed in strict accordance with manufacturer's recommendations, drawing, and/or specifications and in the best commercial trade practice.

3. The Contractor shall perform all work of cutting pipe and fittings or special castings necessary to the proper and accurate assembly, erection, and completion of the work all pipe shall be cut to fit accurately with smooth edges and faces.

4. Any special tools required for laying jointing, cutting, etc., shall be supplied, and properly used.

5. All pipe shall be thoroughly cleaned before laying and shall be kept clean until accepted in the completed work and when laid, shall conform accurately to the lines and grades indicated.

6. At all times during pipe laying operations, the trench shall be kept free of water, including temporary bulkheads to prevent water and debris from entering new pipe laid.

7. All piping systems shall be constructed from the materials shown, specified, and to the lines, grades and dimensions indicated.

8. Piping shall be laid and fitted together so that, when complete, the pipe shall have a smooth and uniform invert.

9. Each length of pipe shall be thoroughly swabbed to remove all foreign material before the next length is laid; each pipe shall be inspected for defects before being lowered into the trench.

10. Perforations of the perforated pipe shall be kept unclogged prior to and during installation.

B. Installation of Perforated Collector Drain Pipe and Collector Drain Pipe

1. Bedding shall be fine graded and prepared such that the pipe can be initially placed with a variation from true line or grade, measured at each joint, of not more than 1/32 inch per inch or 1/2 inch maximum, provided that:

2. A resulting level or back-sloping length of pipe does not occur.

3. No more than one-half of the permissible variation shall be accumulated between successive joints.

4. Pipe laid within these tolerances shall not be subjected to any further adjustment. Measurement for grade shall be taken at the pipe invert, NOT TOP OF PIPE. Eccentricity of pipe barrels, with respect to jointing surfaces, shall not produce grade interruption adverse to flow or more than 1/4 inch maximum.

5. The trenches shall be free of depressions, high spots, and irregularities and shall not deviate from designated finished grade within a range of 1/4 inch and +0.00 inch. All trenches shall be level by raking to remove high spots and to fill depressions. Repeat operations until surface is stabilized within specified tolerances of finish grade for the trench.

6. Contractor shall NOT drive over the drainage trenches without first covering them with a plywood or steel sheet.

7. The Contractor shall have a laser plane system available to the Landscape Architect for the review of all trenches prior to underdrains being placed and backfilled. No trench shall be backfilled without first being observed by the landscape architect. The contractor shall have a minimum of 10 trenches complete and ready for review for each area minimum. Contractor shall notify the Landscape Architect one week in advance of when trenches are ready for review. Extreme accuracy is required to ensure proper drainage.

8. If trenches are backfilled prior to being observed, the contractor will be required to remove installed materials until the trenches can be observed.

9. All joints, caps and connections to tight lines shall be made in accordance with manufacturer's recommendations, in such manner as to prevent bedding material from entering the pipe.

10. Catch basin elevations are critical. All grading shall taper smoothly with the existing adjoining grades to the approval of the Landscape Architect.

11. Prior to installing drain lines, place the required depth of pea gravel as shown on the Drawings for perforated collector drains and field underdrains. Set drain lines to true and accurate grades and fill trench with pea gravel as detailed for field areas.

12. Perforated corrugated drainpipe shall be placed in lined trenches in accordance with the drawings. The pipe shall be laid at a minimum slope of 0.5 percent unless otherwise specified on the drawings. Lengths of pipe shall be joined by fittings fabricated by the pipe manufacturer. The subdrain pipe shall be covered with pea gravel as per drawings.

13. The perforated corrugated drainpipe shall connect to the collection pipe for the drainage system.

14. Lengths of corrugated pipe shall be connected using external split couplings with retaining pins manufactured by the panel manufacturer. Side outlet tees, outlet adaptors, and end caps shall be produced and supplied by the pipe manufacturer. Fittings and joining

methods may not decrease the flow capacity, intrude into the flow area, or damage the panel in any way.

15. All drain line connections to catch basins and storm drain system shall be per drawings.

C. Installation of Field Underdrains

1. Bedding shall be fine graded and prepared such that the pipe can be initially placed with a variation from true line or grade, measured at each joint, of not more than 1/32 inch per inch or 1/4 inch maximum, provided that:
   a. A resulting level or back-sloping length of pipe does not occur.
   b. No more than one-half of the permissible variation shall be accumulated between successive joints.

2. Pipe laid within these tolerances shall not be subjected to any further adjustment. Measurement for grade shall be taken at the pipe invert, NOT TOP OF PIPE. Eccentricity of pipe barrels, with respect to jointing surfaces, shall not produce grade interruption adverse to flow or more than 1/4 inch maximum.

3. All joints, caps and connections to tight lines shall be made in accordance with manufacturer's recommendations, in such manner as to prevent bedding material from entering the pipe.

4. All grading shall taper smoothly to the interior perimeter concrete curb.

5. Prior to installing drain lines, place specified non-woven geotextile fabric over the subgrade.

6. The pipe shall be laid at a minimum slope of 0.5 percent unless otherwise specified on the drawings. Lengths of pipe shall be joined by fittings fabricated by the pipe manufacturer.

7. Drains shall be placed "points down" so the grid backing is at the top, to protect the drain during the initial placement and compaction of the clean rock or clean free flowing backfill.

8. Until the backfill is placed on the drain, all wheeled traffic shall be kept off the drain lines.

9. After base stone and top stone are placed, wheeled equipment can be driven over the drain locations as long as loading requirements are within the manufacturer’s acceptable range.

10. All necessary splices are to be made with connections furnished by the manufacturer or approved by the Landscape Architect in accordance with the project specifications.

11. The geocomposite drain and connectors shall be inspected prior to backfill being placed. If the drain is found to be out of alignment or damaged, it shall be removed and replaced as directed by the Landscape Architect. The subdrain pipe shall be covered with base stone and top stone as per drawings.

12. The perforated drainpipe shall drain to the existing collection pipe drainage system.

13. All drain line connections to catch basins and storm drain system shall be per drawings.

3.3 CONNECTION TO STORM LINE

A. Route drains to suitable outlet. Connect to nearest storm line or catch basin as shown on the drawings.

END OF SECTION

CONTRACTOR CERTIFICATION
WAGE THEFT PREVENTION – RESPONSIBLE BIDDER CRITERIA
WASHINGTON STATE PUBLIC WORKS CONTRACTS

Return this signed "Contractor Certification" with your signed Bid Form.

Prior to awarding a public works contract, Federal Way Public Schools is required to determine that a bidder meets the responsibility criteria to be considered a 'responsible bidder' and is qualified to be awarded a public works project. See RCW 39.04.350(1)(g) & (2). Pursuant to legislative enactment in 2017, the responsibility criteria include a contractor certification that the contractor has not willfully violated Washington's wage laws. See Chap. 258, 2017 Laws (enacting SSB 5301).

Project Number: _____

Project Name: _____

Procurement Solicitation Date: _____

I hereby certify, on behalf of the firm identified below, as follows (check one):

☐ **NO WAGE VIOLATIONS.** This firm has NOT been determined by a final and binding citation and notice of assessment issued by the Washington Department of Labor and Industries or through a civil judgment entered by a court of limited or general jurisdiction to have willfully violated, as defined in RCW 49.48.082, any provision of RCW chapters 49.46, 49.48, or 49.52 within three (3) years prior to the date of the above-referenced procurement solicitation date.

OR

☐ **VIOLATIONS OF WAGE LAWS.** This firm has been determined by a final and binding citation and notice of assessment issued by the Washington Department of Labor and Industries or through a civil judgment entered by a court of limited or general jurisdiction to have willfully violated, as defined in RCW 49.48.082, a provision of RCW chapters 49.46, 49.48, or 49.52 within three (3) years prior to the date of the above-referenced procurement solicitation date.

I hereby certify, under penalty of perjury under the laws of the State of Washington, that the certifications herein are true and correct and that I am authorized to make these certifications on behalf of the firm listed herein.

FIRM NAME: _____
Name of Contractor/Bidder – Print full legal entity name of firm

By: _____ _____
Signature of authorized person | Print name of person making certifications for firm

Title: _____ Place: _____
Title of person signing certificate | Print city and state where signed

Date: _____

MIRROR LAKE ELEMENTARY SCHOOL
FIELD RENOVATION

A PORTION OF THE NE 1/4 OF THE SW 1/4 OF SEC. 08, TWN. 21 N., RGE. 04 E. W.M.
CITY OF FEDERAL WAY, KING COUNTY, WASHINGTON.

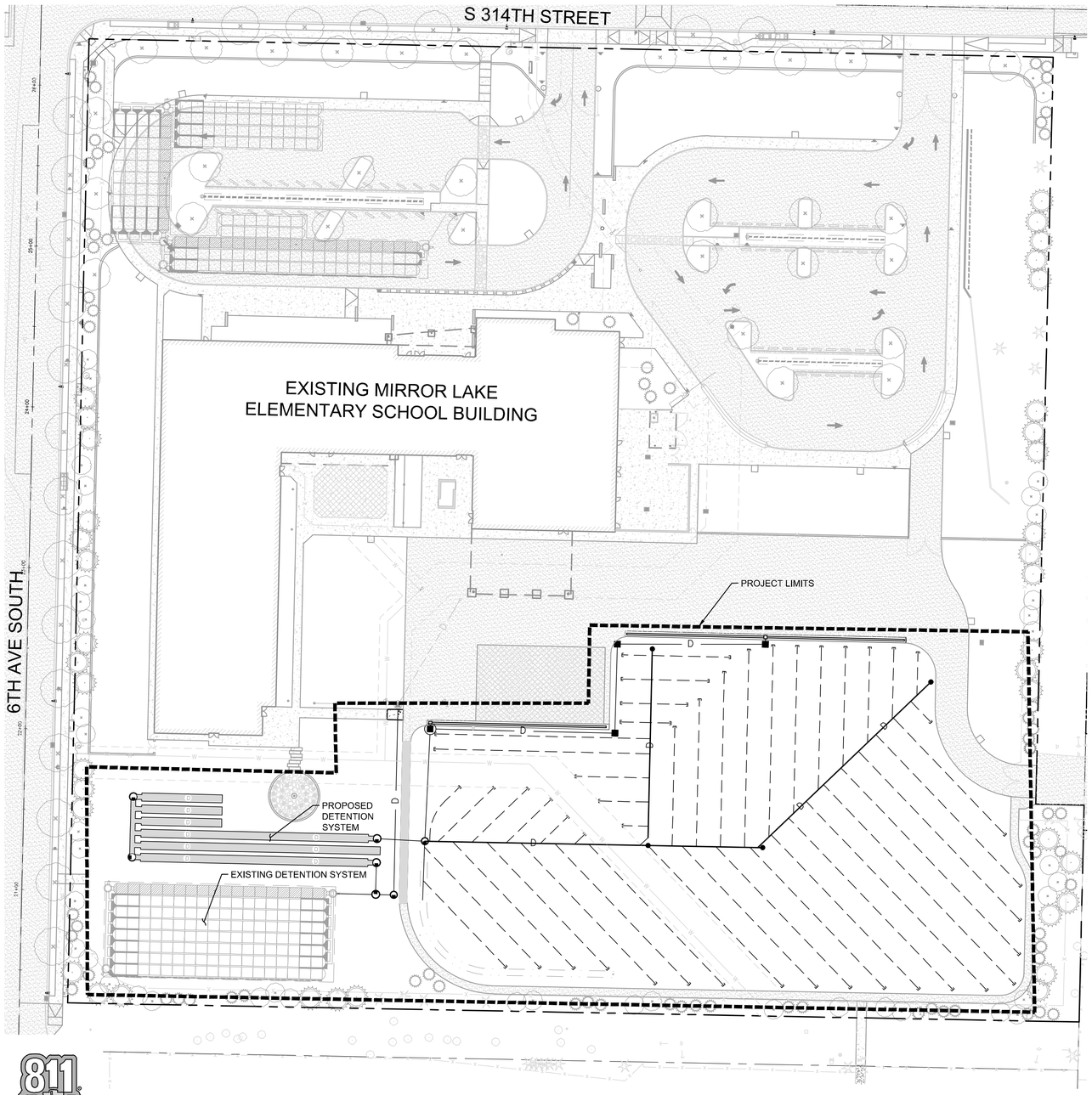

N

GRAPHIC SCALE

0 20 40 80

1" = 40 FEET

OWNER/APPLICANT
FEDERAL WAY PUBLIC SCHOOLS
33330 8TH AVENUE SOUTH
FEDERAL WAY, WA 98003
PHONE: 253-945-5990
CONTACT: STEPHEN NUTT
EMAIL: SNUTT@FWPS.ORG

LANDSCAPE ARCHITECT
AHBL INC.
1200 6TH AVE, SUITE 1620
SEATTLE, WA 98101
PHONE: 206-267-2425
CONTACT: CRAIG SKIPTON
EMAIL: CSKIPTON@AHBL.COM

CIVIL ENGINEER
AHBL INC.
2215 NORTH 30TH STREET, SUITE 300
TACOMA, WA 98403
PHONE: 253-383-2422
CONTACT: DAVID NASON
EMAIL: DNASON@AHBL.COM

VERTICAL DATUM
NGVD 29
FEDERAL WAY VERTICAL BENCHMARK 2200-01
MONUMENT IN CASE AT INTERSECTION OF 1ST AVE S & S 312TH ST.
PUBLISHED ELEVATION: 357.20'

BASIS OF BEARING
NAD 89/91
WASHINGTON STATE PLANE COORDINATE SYSTEM, NORTH ZONE
CITY OF FEDERAL WAY HORIZONTAL CONTROL
HOLDING COUNTY MONUMENT NUMBERS 101 AND 114

POINT NO. 101
N=118843.73
E=1270807.93
AT THE INTERSECTION OF SW 320TH ST W / 8TH AVE S

POINT NO. 114
N=121233.37
E=1268065.08
AT THE INTERSECTION OF 1ST AVE SW / S 312TH ST.

HELD A LINE BETWEEN FOUND MONUMENTS AT THE INTERSECTIONS OF 1ST AVE S WITH S 312TH ST AND 1ST AVE S AND S 320TH ST. SAID LINE BEARS NORTH 01°04'42" EAST.

LEGAL DESCRIPTION
PER CHICAGO TITLE INSURANCE COMPANY TITLE
ORDER NO. 0119604-TC DATE MARCH 15, 2018

THE SOUTHEAST QUARTER OF THE NORTHEAST QUARTER OF THE SOUTHWEST QUARTER OF SECTION 8, TOWNSHIP 21 NORTH, RANGE 4 EAST,
W.M., IN KING COUNTY, WASHINGTON; EXCEPT PORTION THEREOF FOR COUNTY ROAD KNOWN AS 8TH AVE S. EXCEPT THE WEST 30 FEET; EXCEPT THE NORTH 30 FEET; EXCEPT THE SOUTH 30 FEET.

AUTOCAD FILE
AN AUTOCAD DRAWING FILE IS AVAILABLE TO ASSIST WITH SITE LAYOUT. PLEASE NOTE THAT ELECTRONIC FILES ARE PROVIDED FOR CONTRACTOR'S CONVENIENCE AND SHALL NOT REPLACE NOR BE USED TO SUBSTITUTE THE CONTRACT DOCUMENTS. THE CONTRACTOR IS RESPONSIBLE FOR PROJECT LAYOUT ACCORDING TO CONTRACT DOCUMENTS AND COST FOR ELECTRONIC AUTOCAD FILES.
PHONE: (253) 383-2422
FAX: (253) 383-2572
CONTACT: JASON HEIN

AS-BUILT NOTE
CONTRACTOR SHALL FURNISH AS-BUILT RIM ELEVATIONS, PIPE INVERT ELEVATIONS, AND STRUCTURE LOCATIONS (COORDINATES) TO THE NEAREST 0.01 FOOT FOR ALL STORM DRAINAGE AND UTILITY STRUCTURES, AND AS-BUILT SLOPE MEASUREMENTS TO THE NEAREST 0.01% FOR ALL CURB RAMP AND LANDING PANEL JOINTS. CONTRACTOR SHALL ENGAGE WITH A PROFESSIONAL LAND SURVEYOR LICENSED IN THE STATE OF WASHINGTON TO FURNISH AS-BUILT INFORMATION.

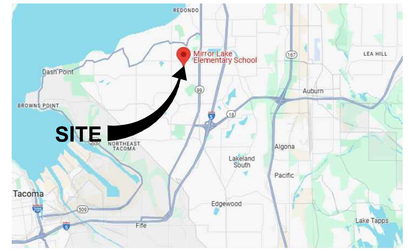

VICINITY MAP
NOT TO SCALE

N

PARCEL NUMBER
0821049035

SITE ADDRESS
625 S 314TH ST
FEDERAL WAY, WA 98003

TOPOGRAPHIC NOTE
THE EXISTING CULTURAL AND TOPOGRAPHIC DATA SHOWN ON THESE DRAWINGS HAS BEEN PREPARED, IN PART, BASED UPON INFORMATION FURNISHED BY OTHERS. WHILE THIS INFORMATION IS BELIEVED TO BE RELIABLE, AHBL CANNOT ENSURE ACCURACY AND THUS IS NOT RESPONSIBLE FOR THE ACCURACY OF THAT INFORMATION OR FOR ANY ERRORS OR OMISSIONS WHICH MAY HAVE BEEN INCORPORATED INTO THESE DRAWINGS AS A RESULT.

TRENCH NOTE
IF WORKERS ENTER ANY TRENCH OR OTHER EXCAVATION FOUR OR MORE FEET IN DEPTH THAT DOES NOT MEET THE OPEN PIT REQUIREMENTS OF WSDOT SECTION 2-09.3(3)B, IT SHALL BE SHORED AND CRIBBED. THE CONTRACTOR ALONE SHALL BE RESPONSIBLE FOR WORKER SAFETY AND AHBL ASSUMES NO RESPONSIBILITY. ALL TRENCH SAFETY SYSTEMS SHALL MEET THE REQUIREMENTS OF THE WASHINGTON INDUSTRIAL SAFETY AND HEALTH ACT, CHAPTER 49.17 RCW.

UTILITY NOTE
THE LOCATIONS OF EXISTING UNDERGROUND UTILITIES ARE APPROXIMATE ONLY AND HAVE NOT BEEN INDEPENDENTLY VERIFIED BY THE OWNER OR ITS REPRESENTATIVE. THE CONTRACTOR SHALL DETERMINE THE EXACT LOCATION OF ALL EXISTING UTILITIES BEFORE COMMENCING WORK AND AGREES TO BE FULLY RESPONSIBLE FOR ANY AND ALL DAMAGES THAT INCUR DUE TO THE CONTRACTOR'S FAILURE TO LOCATE EXACTLY AND PRESERVE ANY AND ALL UNDERGROUND UTILITIES. AHBL ASSUMES NO LIABILITY FOR THE LOCATION OF UNDERGROUND UTILITIES.

CIVIL SHEET INDEX

Sheet No.	Sheet Title
C0.0	COVER
C1.0	TESC AND DEMOLITION
C2.0	STORM DRAINAGE PLAN
C3.0	DETAILS
C3.1	DETAILS
C3.2	DETAILS
C3.3	DETAILS
L1.0	MATERIAL PLAN
L1.1	MATERIAL DETAILS
L2.0	PLANTING & SOILS PLAN
L2.1	PLANTING & SOILS DETAILS
L3.0	IRRIGATION PLAN
L3.1	IRRIGATION DETAILS

NOTE:
THIS APPROVAL IS VOID 1 (ONE) YEAR AFTER APPROVAL DATE. THE CITY WILL NOT BE RESPONSIBLE FOR ERRORS AND/OR OMISSIONS ON THESE PLANS.
FIELD CONDITIONS MAY DICTATE CHANGES TO THESE PLANS AS DETERMINED BY THE CITY ENGINEER.

PERMIT NO. 24-104059-PC

APPROVED

DATE

811 Know what's below. Call before you dig.

FILL SPECIFICATION
FILL MATERIAL SHALL NOT CONTAIN PETROLEUM PRODUCTS, OR SUBSTANCES WHICH ARE HAZARDOUS, DANGEROUS, TOXIC, OR WHICH OTHERWISE VIOLATE ANY STATE, FEDERAL, OR LOCAL LAW, ORDINANCE, CODE, REGULATION, RULE, ORDER, OR STANDARD.

AHBL
TACOMA · SEATTLE · SPOKANE · TRI-CITIES
2215 North 30th Street, Suite 300 Tacoma, WA 98403
253.383.2422 TEL 253.383.2572 FAX www.ahbl.com WEB

Project Title:

MIRROR LAKE ELEMENTARY SCHOOL FIELD RENOVATION

Client:

FEDERAL WAY PUBLIC SCHOOL
33330 8TH AVENUE SOUTH
FEDERAL WA, WA 98003

Project No.

2240123.10

Issue Set & Date:

BID SET

APRIL 11, 2025

DAVID CHRISTOPHER NASON
STATE OF WASHINGTON
39383
REGISTERED
PROFESSIONAL ENGINEER

4/11/2025

NOTICE
ALTERATION OF THIS DOCUMENT SHALL INVALIDATE THE PROFESSIONAL SEAL AND SIGNATURE. PUBLICATION OF THIS DOCUMENT DOES NOT DEROGATE FROM RESERVED OWNERSHIP RIGHTS IN IT. THIS DOCUMENT IS FOR USE ONLY FOR THE PROJECT IDENTIFIED IN THE TITLE BLOCK AND IS NOT TO BE USED FOR REPAIR, REMODEL OR ADDITION TO THAT PROJECT OR FOR ANY OTHER PROJECT.

Revisions:

Sheet Title:

COVER

Designed by:	Drawn by:	Checked by:
JDH	JDH	DCN

Sheet No.

C0.0

1 of 13 Sheets

MIRROR LAKE ELEMENTARY SCHOOL
FIELD RENOVATION

A PORTION OF THE NE 1/4 OF THE SW 1/4 OF SEC. 08, TWN. 21 N., RGE. 04 E. W.M.
CITY OF FEDERAL WAY, KING COUNTY, WASHINGTON.

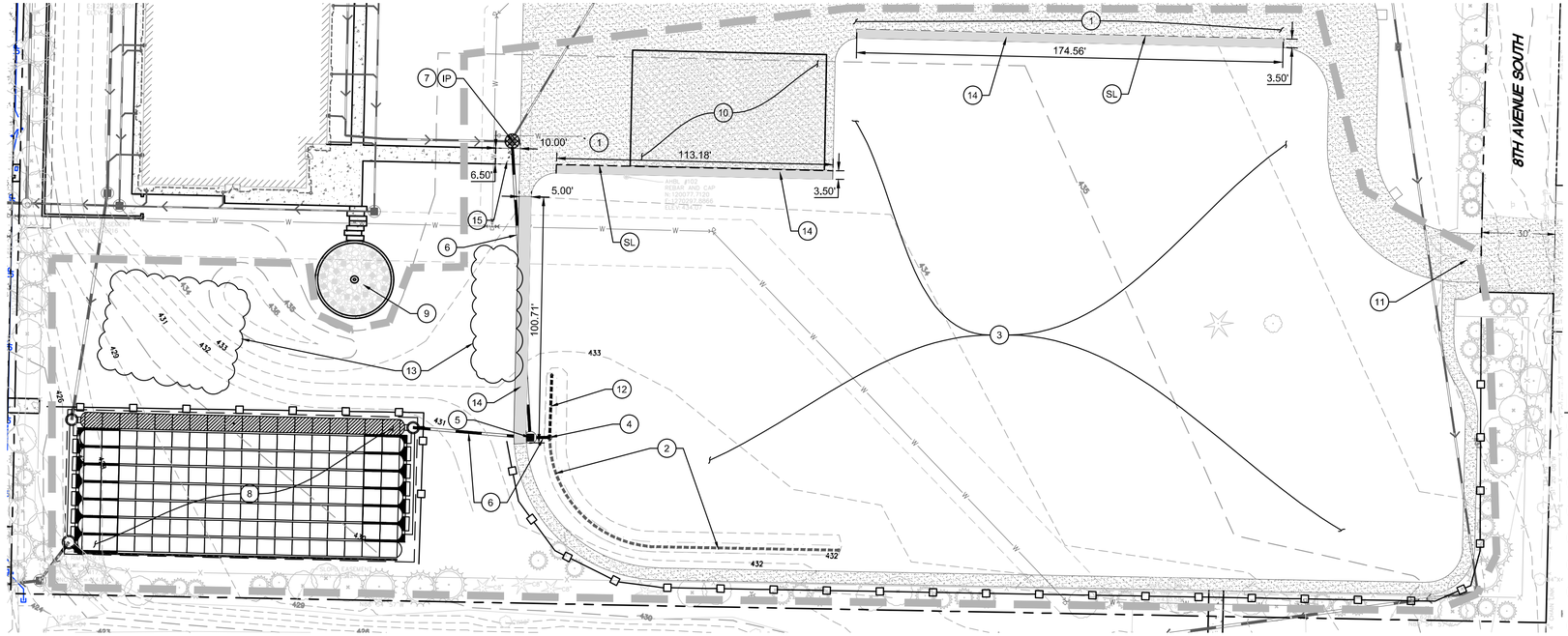

LEGEND

- CL — CLEARING / PROJECT LIMITS
- IP — INLET PROTECTION (2 / C1.0)
- SILT FENCE (1 / C1.0)
- SAWCUT LINE
- REMOVE EXISTING ASPHALT
- EXISTING TREE TO REMAIN
- XXX — EXISTING MAJOR CONTOURS
- XXX — EXISTING MINOR CONTOURS

KEYNOTES

1. PROTECT EXISTING ASPHALT TO REMAIN
2. PROTECT EXISTING FILTER DRAIN, 12" PERFORATED PIPE, AND MEDIA FILTER DRAIN MATERIAL.
3. REMOVE 8" DEPTH OF EXISTING TOPSOIL FROM FIELD. DEMOLISH EXISTING IRRIGATION COMPONENTS UNLESS OTHERWISE NOTED.
4. DEMOLISH AND REMOVE EXISTING YARD DRAIN. SEE KEYNOTE 12
5. DEMOLISH AND REMOVE EXISTING STORM MANHOLE.
6. DEMOLISH AND REMOVE EXISTING 12" STORM LINES.
7. PROVIDE INLET PROTECTION.
8. PROTECT EXISTING UNDERGROUND STORMWATER CHAMBERS, TO REMAIN. DO NOT DRIVE CONSTRUCTION EQUIPMENT, STOCK PILE SOIL OR RE-GRADE OVERTOP OF STORMWATER CHAMBERS.
9. PROTECT EXISTING PLAZA, TO REMAIN.
10. PROTECT EXISTING PLAYGROUND EQUIPMENT AND PAD, TO REMAIN.
11. ENSURE EMERGENCY VEHICLE ACCESS TO THE BACK OF THE SCHOOL IS LEFT ACCESSIBLE DURING CONSTRUCTION.
12. REMOVE 21 LF 12" PERFORATED PIPE. REFER TO SHEET C2.0 FOR IMPROVEMENTS TO THIS AREA.
13. SALVAGE EXISTING IRRIGATION REMOTE CONTROL VALVES AND VALVE BOXES FOR REINSTALLATION.
14. DEMOLISH EXISTING ASPHALT.
15. DEMOLISH EXISTING CONCRETE SIDEWALK.

GRAPHIC SCALE
0 15 30 60
1" = 30 FEET

N

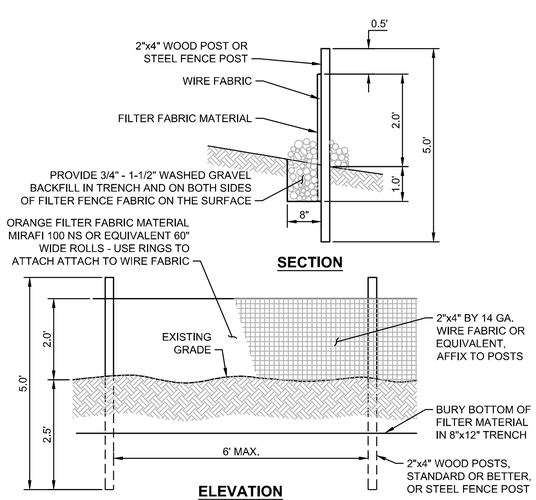

SILT FENCE NOTES:

1. THE FILTER FABRIC SHALL BE PURCHASED IN A CONTINUOUS ROLL CUT TO THE LENGTH OF THE BARRIER TO AVOID USE OF JOINTS. WHEN JOINTS ARE NECESSARY, FILTER CLOTH SHALL BE SPLICED TOGETHER ONLY AT A SUPPORT POST WITH A MINIMUM SIX-INCH OVERLAP, AND BOTH ENDS SECURELY FASTENED TO THE POST.
2. THE FILTER FABRIC FENCE SHALL BE INSTALLED TO FOLLOW THE CONTOURS (WHERE FEASIBLE). THE FENCE POSTS SHALL BE SPACED A MAXIMUM OF SIX FEET APART AND DRIVEN SECURELY INTO THE GROUND (MINIMUM OF 30").
3. A TRENCH SHALL BE EXCAVATED, ROUGHLY EIGHT INCHES WIDE AND TWELVE INCHES DEEP, UPSLOPE AND ADJACENT TO THE WOOD POST TO ALLOW THE FILTER FABRIC TO BE BURIED.
4. WHEN STANDARD STRENGTH FILTER FABRIC IS USED, A WIRE MESH SUPPORT FENCE SHALL BE FASTENED SECURELY TO THE UPSLOPE SIDE OF THE POSTS USING HEAVY-DUTY WIRE STAPLES AT LEAST ONE INCH LONG, TIE WIRES, OR HOG RINGS. THE WIRE SHALL EXTEND INTO THE TRENCH A MINIMUM OF FOUR INCHES AND SHALL NOT EXTEND MORE THAN THIRTY SIX INCHES ABOVE THE ORIGINAL GROUND SURFACE.
5. THE STANDARD STRENGTH FILTER FABRIC SHALL BE STAPLED OR WIRED TO THE FENCE, AND TWENTY INCHES OF THE FABRIC SHALL BE EXTENDED INTO THE TRENCH. THE FABRIC SHALL NOT EXTEND MORE THAN THIRTY SIX INCHES ABOVE THE ORIGINAL GROUND SURFACE. FILTER FABRIC SHALL NOT BE STAPLED TO EXISTING TREES.
6. WHEN EXTRA-STRENGTH FILTER FABRIC AND CLOSER POST SPACING ARE USED, THE WIRE MESH SUPPORT FENCE MAY BE ELIMINATED. IN SUCH A CASE, THE FILTER FABRIC IS STAPLED OR WIRED DIRECTLY TO THE POSTS WITH ALL OTHER PROVISIONS OF STANDARD NOTE (S) APPLYING.
7. THE TRENCH SHALL BE BACKFILL WITH 3/4 INCH MINIMUM DIAMETER WASHED GRAVEL.
8. FILTER FABRIC FENCES SHALL BE REMOVED WHEN THEY HAVE SERVED THEIR USEFUL PURPOSE. BUT NOT BEFORE THE UPSLOPE AREA HAS BEEN PERMANENTLY STABILIZED.
9. FILTER FABRIC FENCES SHALL BE INSPECTED IMMEDIATELY AFTER EACH RAINFALL AND AT LEAST DAILY DURING PROLONGED RAINFALL. ANY REQUIRED REPAIRS SHALL BE MADE IMMEDIATELY.
10. DO NOT INSTALL BELOW AN OUTLET PIPE OR WEIR.
11. DO NOT DRIVE OVER OR FILL OVER FILTER FABRIC FENCE.

Know what's **below.** **Call** before you dig.

1 SILT FENCE
NOT TO SCALE

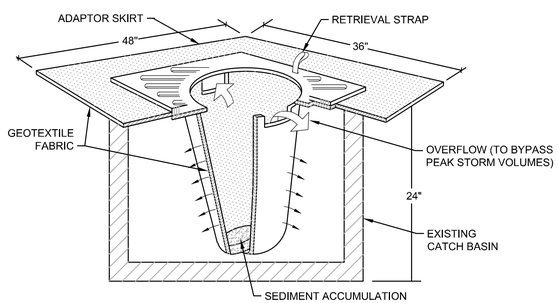

NOTES:
1. FILTERS SHALL BE INSPECTED AFTER EACH STORM EVENT AND CLEANED OR REPLACED WHEN 1/3 FULL.
2. INSTALL INLET PROTECTION IN ALL NEW STORM STRUCTURES THAT WILL COLLECT STORMWATER AS THEY ARE INSTALLED.

2 INLET PROTECTION
NOT TO SCALE

CLEARING LIMITS NOTE

THE CLEARING LIMITS SHOWN MAY NEED TO BE ADJUSTED TO PERFORM THE WORK. CONTRACTOR IS RESPONSIBLE FOR REVIEWING LIMITS AND CONFIRMING SILT FENCE LOCATION PRIOR TO WORK. ANY ADJUSTMENTS SHALL BE AT THE COST OF THE CONTRACTOR.

CONTRACTOR SHALL FURNISH, INSTALL, ADJUST, AND MAINTAIN TEMPORARY 6 FOOT CHAINLINK SECURITY FENCE AT SITE PERIMETER FOR ENTIRE DURATION OF PROJECT. SECURITY FENCE SHALL INCLUDE, BUT IS NOT NECESSARILY LIMITED TO, CHAINLINK FABRIC, RAILS, POSTS, GATES, LOCKS, AND BRACES.

NOTE:
THIS APPROVAL IS VOID 1 (ONE) YEAR AFTER APPROVAL DATE. THE CITY WILL NOT BE RESPONSIBLE FOR ERRORS AND/OR OMISSIONS ON THESE PLANS.
FIELD CONDITIONS MAY DICTATE CHANGES TO THESE PLANS AS DETERMINED BY THE CITY ENGINEER.

PERMIT NO. 24-104059-PC

APPROVED

DATE

AHBL
TACOMA • SEATTLE • SPOKANE • TRI-CITIES
2215 North 30th Street, Suite 300 Tacoma, WA 98403
253.383.2422 TEL 253.383.2572 FAX www.ahbl.com WEB

Project Title:

MIRROR LAKE ELEMENTARY SCHOOL FIELD RENOVATION

Client:

FEDERAL WAY PUBLIC SCHOOL
33330 8TH AVENUE SOUTH
FEDERAL WA, WA 98003

Project No.

2240123.10

Issue Set & Date:

BID SET

APRIL 11, 2025

JD CHRISTOPHER MASON
STATE OF WASHINGTON
39383
REGISTERED
PROFESSIONAL ENGINEER
4/11/2025

NOTICE
ALTERATION OF THIS DOCUMENT SHALL INVALIDATE THE PROFESSIONAL SEAL AND SIGNATURE. PUBLICATION OF THIS DOCUMENT DOES NOT DEROGATE FROM RESERVED OWNERSHIP RIGHTS IN IT. THIS DOCUMENT IS FOR USE ONLY FOR THE PROJECT IDENTIFIED IN THE TITLE BLOCK AND IS NOT TO BE USED FOR REPAIR, REMODEL OR ADDITION TO THAT PROJECT OR FOR ANY OTHER PROJECT.

4 ____
3 ____
2 ____
1 ____

Revisions:

Sheet Title:

TESC AND DEMOLITION

Designed by:	Drawn by:	Checked by:
JDH	JDH	DCN

Sheet No.

C1.0

2 of 13 Sheets

MIRROR LAKE ELEMENTARY SCHOOL
FIELD RENOVATION

A PORTION OF THE NE 1/4 OF THE SW 1/4 OF SEC. 08, TWN. 21 N., RGE. 04 E. W.M.
CITY OF FEDERAL WAY, KING COUNTY, WASHINGTON.

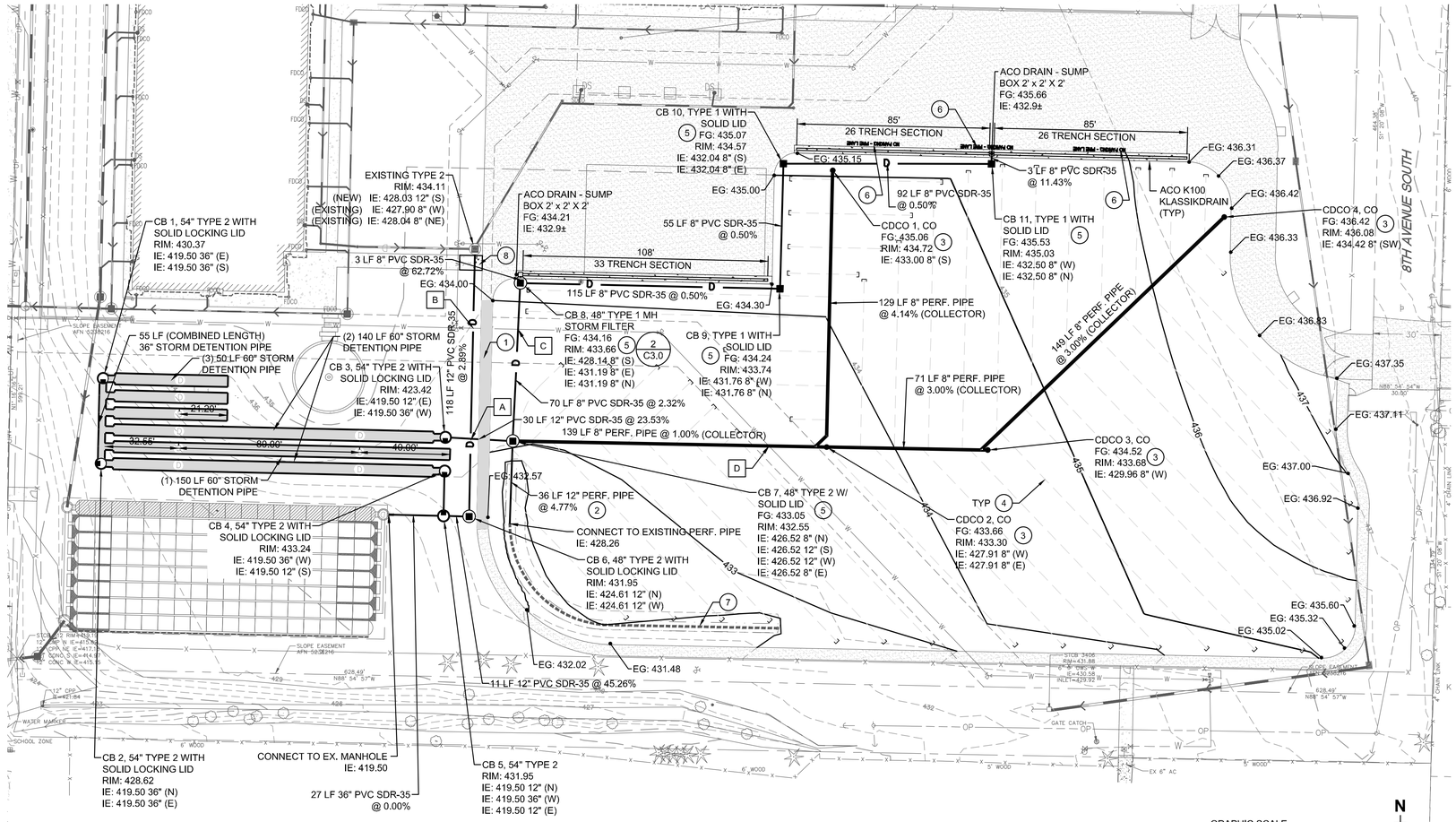

LEGEND

- CATCH BASIN TYPE 1 (4 / C3.0)
- COLLECTOR DRAIN CLEANOUT (REFER TO LANDSCAPE PLANS FOR DETAILS)
- ACO DRAIN - SUMP BOX (2 / C3.3)
- ACO K100 KLASSIKDRAIN (1 / C3.3)
- 8" PERFORATED COLLECTOR (REFER TO LANDSCAPE PLANS FOR DETAILS)
- 4" PERFORATED LATERAL (REFER TO LANDSCAPE PLANS FOR DETAILS)
- ASPHALT PAVEMENT (3 / C2.0)
- CONCRETE PAVEMENT (1 / C2.0)
- EXISTING MINOR CONTOURS
- EXISTING MAJOR CONTOURS
- PROPOSED MINOR CONTOUR
- PROPOSED MAJOR CONTOUR
- EG: 123.45 EXISTING GROUND (MATCH EXISTING)
- FG: 123.45 FINISHED GRADE

KEY NOTES

1. INSTALL ASPHALT PER DETAIL.
2. CONNECT TO EXISTING 12" PERFORATED PIPE AND CONNECT MEDIA FILTER DRAIN PIPE TO CB 7. REPAIR MEDIA FILTER DRAIN TO MATCH EXISTING. (2 / C2.0)
3. COLLECTOR DRAIN CLEANOUT TO BE INSTALLED 4" BELOW FINISHED GRADE. REFER TO DETAIL 4 ON SHEET L1.1.
4. FIELD UNDERDRAIN, SEE LANDSCAPE PLANS.
5. CATCH BASIN INSTALLED WITHIN PLAY FIELD TO BE INSTALLED 6" BELOW FINISHED GRADE.
6. PAINT "NO PARKING - FIRE LANE" WITH YELLOW PAINT TO MATCH EXISTING.
7. PROTECT EXISTING MEDIA FILTER DRAIN.
8. INSTALL CONCRETE WALK PER DETAIL.

PIPE CROSSING TABLE

X	FG ELEV	UPPER PIPE BOTTOM ELEV	LOWER PIPE TOP ELEV	VERTICAL SEPARATION
A	433.31	12" SD IE 425.66	12" SD TOP 423.79	1.87'
B	433.95	8" WTR IE 430.13	12" SD TOP 428.09	2.04'
C	433.81	8" WTR IE 430.14	8" SD TOP 428.40	1.74'
D	433.46	8" WTR IE 430.17	8" SD TOP 428.30	1.87'

STORM DRAINAGE NOTES

1. BARE GALVANIZED METAL SHALL NOT BE USED FOR MATERIALS THAT CONVEY STORMWATER, SUCH AS ROOFS, CANOPIES, SIDING, GUTTERS, DOWNSPOUTS, ROOF DRAINS AND PIPES. ANY GALVANIZED MATERIALS SHALL HAVE AN INERT, NON-LEACHALBE FINISH, SUCH AS BAKED ENAMEL, FLUOROCARBON PAINT (SUCH AS KYNAR OR HYLAR), FACTORY-APPLIED EPOXY, PURE ALUMINUM, OR ASPHALT COATING. ACRYLIC PAINT, POLYESTER PAINT, FIELD-APPLIED, AND PART ZINC (SUCH AS GALVALUME) COATINGS ARE NOT ACCEPTABLE.
2. BURIED UTILITIES ARE SHOWN IN THEIR APPROXIMATE LOCATION. PRIOR TO INSTALLATION OF ANY PROJECT IMPROVEMENTS, CONTRACTOR SHALL VERIFY LOCATION AND ELEVATION OF EXISTING UTILITIES. IN THE EVEN T OF ANY DISCREPANCY FROM THE INFORMATION PRESENTED ON THESE PLANS, CONTRACTOR SHALL NOTIFY THE DESIGN ENGINEER.
3. CONSTRUCT ALL UTILITIES IN CONFORMANCE WITH THE STORM DRAIN TRENCH SECTION DETAIL UNLESS NOTED OTHERWISE.
4. ALL STORM PIPES CONNECTING TO CONCRETE STRUCTURES SHALL BE GROUTED TO ASSURE CONNECTION AT STRUCTURE IS WATERTIGHT.

NOTE:
THIS APPROVAL IS VOID 1 (ONE) YEAR AFTER APPROVAL DATE. THE CITY WILL NOT BE RESPONSIBLE FOR ERRORS AND/OR OMISSIONS ON THESE PLANS. FIELD CONDITIONS MAY DICTATE CHANGES TO THESE PLANS AS DETERMINED BY THE CITY ENGINEER.

PERMIT NO. 24-104059-PC

APPROVED

DATE

GRAPHIC SCALE
0 15 30 60
1" = 30 FEET

N

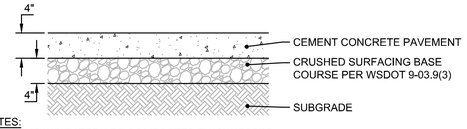

NOTES:
1. DEPTHS INDICATED ARE COMPACTED THICKNESSES.
2. CEMENT CONCRETE PAVEMENT SHALL CONSIST OF PORTLAND CEMENT CONCRETE WITH A MINIMUM COMPRESSIVE STRENGTH OF 4000 PSI AND A MINIMUM RUPTURE MODULUS OF 580 PSI.
3. ALL BASE MATERIAL SHALL BE COMPACTED TO A MINIMUM DENSITY OF 95% BASED ON THE MODIFIED PROCTOR MAXIMUM DRY DENSITY PER ASTM D-1557.
4. SUBGRADE SHALL BE COMPACTED TO A FIRM AND UNYIELDING CONDITION PRIOR TO PLACEMENT OF ANY PAVEMENT LAYERS. ANY LOCALIZED ZONES OF SOFT, ORGANIC-RICH, OR DEBRIS-LADEN SOILS SHOULD BE OVEREXCAVATED AND REPLACED WITH STRUCTURAL FILL MATERIAL.

1 CONCRETE PAVEMENT
NOT TO SCALE

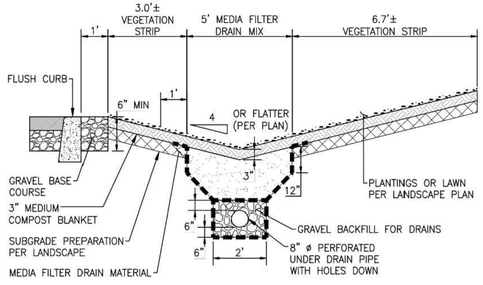

2 MEDIA FILTER DRAIN
NOT TO SCALE

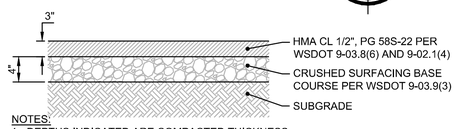

NOTES:
1. DEPTHS INDICATED ARE COMPACTED THICKNESS.
2. HMA SHALL BE COMPACTED TO A TARGET AVERAGE DENSITY OF 92% BASED ON THE RICE THEORETICAL MAXIMUM DENSITY PER ASTM D-2041. INDIVIDUAL LOCATIONS SHALL BE COMPACTED NOT LESS THAN 90% NOR MORE THAN 96%.
3. ALL ASPHALT BASE MATERIAL SHALL BE COMPACTED TO A MINIMUM DENSITY OF 95% BASED ON THE MODIFIED PROCTOR MAXIMUM DRY DENSITY PER ASTM D-1557.
4. SUBGRADE SHALL BE COMPACTED TO A FIRM AND UNYIELDING CONDITION PRIOR TO PLACEMENT OF ANY PAVEMENT LAYERS. ANY LOCALIZED ZONES OF SOFT, ORGANIC-RICH, OR DEBRIS-LADEN SOILS SHOULD BE OVEREXCAVATED AND REPLACED WITH STRUCTURAL FILL MATERIAL.
5. SEAL JOINTS WITH EMULSIFIED ASPHALT PER PROJECT SPECIFICATIONS.

3 ASPHALT PAVEMENT
NOT TO SCALE

Know what's below. Call before you dig.

AHBL
TACOMA • SEATTLE • SPOKANE • TRI-CITIES
2215 North 30th Street, Suite 300 Tacoma, WA 98403
253.383.2422 TEL 253.383.2572 FAX www.ahbl.com WEB

Project Title:

MIRROR LAKE ELEMENTARY SCHOOL FIELD RENOVATION

Client:

FEDERAL WAY PUBLIC SCHOOL
33330 8TH AVENUE SOUTH
FEDERAL WA, WA 98003

Project No.

2240123.10

Issue Set & Date:

BID SET

APRIL 11, 2025

JD CHRISTOPHER MASON — STATE OF WASHINGTON — 39383 — REGISTERED PROFESSIONAL ENGINEER

4/11/2025

NOTICE
ALTERATION OF THIS DOCUMENT SHALL INVALIDATE THE PROFESSIONAL SEAL AND SIGNATURE. PUBLICATION OF THIS DOCUMENT DOES NOT DEROGATE FROM RESERVED OWNERSHIP RIGHTS IN IT. THIS DOCUMENT IS FOR USE ONLY FOR THE PROJECT IDENTIFIED IN THE TITLE BLOCK AND IS NOT TO BE USED FOR REPAIR, REMODEL OR ADDITION TO THAT PROJECT OR FOR ANY OTHER PROJECT.

Revisions:

Sheet Title:

STORM DRAINAGE PLAN

Designed by:	Drawn by:	Checked by:
JDH	JDH	DCN

Sheet No.

C2.0

3 of 13 Sheets

MIRROR LAKE ELEMENTARY SCHOOL
FIELD RENOVATION

A PORTION OF THE NE 1/4 OF THE SW 1/4 OF SEC. 08, TWN. 21 N., RGE. 04 E. W.M.
CITY OF FEDERAL WAY, KING COUNTY, WASHINGTON.

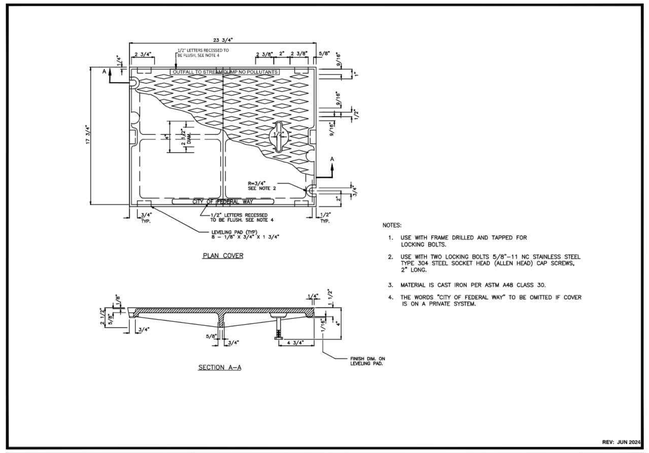

NOTES:
1. USE WITH FRAME DRILLED AND TAPPED FOR LOCKING BOLTS.
2. USE WITH TWO LOCKING BOLTS 5/8"-11 NC STAINLESS STEEL TYPE 304 STEEL SOCKET HEAD (ALLEN HEAD) CAP SCREWS, 2" LONG.
3. MATERIAL IS CAST IRON PER ASTM A48 CLASS 30.
4. THE WORDS "CITY OF FEDERAL WAY" TO BE OMITTED IF COVER IS ON A PRIVATE SYSTEM.

REV: JUN 2024

CITY OF Federal Way PUBLIC WORKS	SOLID RECTANGULAR COVER	STD. DETAIL FW.B30.20

1 SOLID LID - TYPE 1 CB
NOT TO SCALE

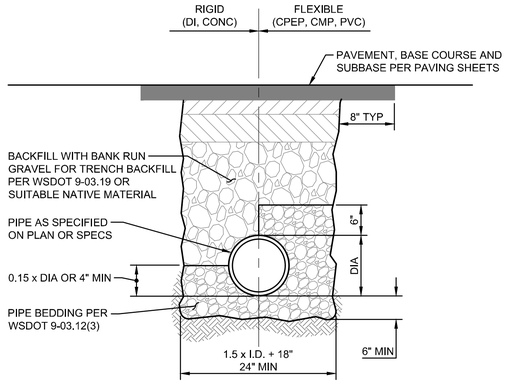

NOTES:
1. BACKFILL MATERIAL SHALL NOT HAVE ROCKS OR PARTICLES LARGER THAN 1" WITHIN 12" OF THE PIPE. BACKFILL MATERIAL SHALL BE PLACED IN 8" MAXIMUM LOOSE LIFTS AND COMPACTED TO 95% MAXIMUM DRY DENSITY PER MODIFIED PROCTOR TEST (ASTM D-1557).
2. CONSTRUCT ALL STORM AND ROOF DRAINS IN CONFORMANCE WITH THIS DETAIL UNLESS NOTED OTHERWISE ON THE PLANS.
3. ALL TRENCH EXCAVATIONS SHALL BE SLOPED, SHORED, SHEETED, BRACED, OR OTHERWISE SUPPORTED IN COMPLIANCE WITH OSHA REGULATIONS AND LOCAL ORDINANCES.
4. IF ORGANIC MATERIAL IS ENCOUNTERED DURING UTILITY EXCAVATION, OVEREXCAVATE TRENCH TO INCREASE PIPE BEDDING DEPTH TO 18" OR MORE AS REQUIRED TO COMPACT BEDDING TO FIRM AND UNYIELDING CONDITION.

3 PIPE BEDDING AND BACKFILL
NOT TO SCALE

811 Know what's below. Call before you dig.

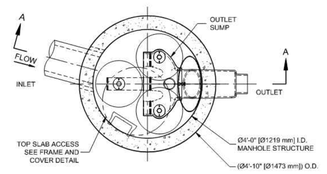

PLAN VIEW
STANDARD OUTLET RISER
FLOWKIT: 40A

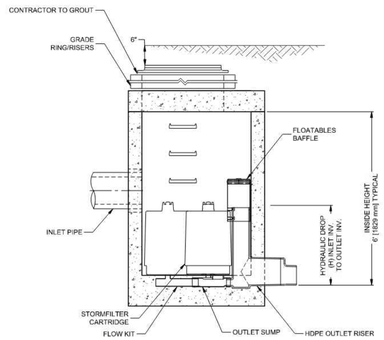

SECTION A-A

The Stormwater Management StormFilter®
"THIS PRODUCT MAY BE PROTECTED BY ONE OR MORE OF THE FOLLOWING U.S. PATENTS: 5,322,629; 5,707,527; 5,759,415; 6,027,639; 6,350,382; 6,649,048; 6,810,610; AND OTHER FOREIGN PATENTS OR PENDING."

STORMFILTER DESIGN NOTES

STORMFILTER TREATMENT CAPACITY IS A FUNCTION OF THE CARTRIDGE SELECTION AND THE NUMBER OF CARTRIDGES. THE STANDARD MANHOLE STYLE IS SHOWN WITH THE MAXIMUM NUMBER OF CARTRIDGES (3). VOLUME SYSTEM IS ALSO AVAILABLE WITH MAXIMUM 3 CARTRIDGES.
Ø4 [1219 mm] MANHOLE STORMFILTER PEAK HYDRAULIC CAPACITY IS 1.0 CFS [28.3 L/s]. IF THE SITE CONDITIONS EXCEED 1.0 CFS [28.3 L/s] AN UPSTREAM BYPASS STRUCTURE IS REQUIRED.

CARTRIDGE SELECTION

CARTRIDGE HEIGHT	27" [686 mm]			18" [458 mm]			LOW DROP		
RECOMMENDED HYDRAULIC DROP (H)	3.05' [930 mm]			2.3' [700 mm]			1.8' [550 mm]		
SPECIFIC FLOW RATE (gpm/sf) [L/s/m²]	2 [1.30]	1.67* [1.08]	1 [0.65]	2 [1.30]	1.67* [1.08]	1 [0.65]	2 [1.30]	1.67* [1.08]	1 [0.65]
CARTRIDGE FLOW RATE (gpm) [L/s]	22.5 [1.42]	18.79 [1.19]	11.25 [0.71]	15 [0.95]	12.53 [0.79]	7.5 [0.44]	10 [0.63]	8.35 [0.54]	5 [0.32]

* 1.67 gpm/sf [1.08 L/s/m²] SPECIFIC FLOW RATE IS APPROVED WITH PHOSPHOSORB® (PSORB) MEDIA ONLY

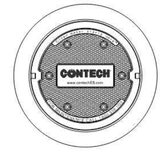

FRAME AND COVER
(DIAMETER VARIES)
N.T.S.

SITE SPECIFIC DATA REQUIREMENTS

STRUCTURE ID	CB 8
WATER QUALITY FLOW RATE (cfs) [L/s]	0.075
PEAK FLOW RATE (cfs) [L/s]	0.57
RETURN PERIOD OF PEAK FLOW (yrs)	100
CARTRIDGE HEIGHT (SEE TABLE ABOVE)	27"
NUMBER OF CARTRIDGES REQUIRED	3
CARTRIDGE FLOW RATE	11.25
MEDIA TYPE (PERLITE, ZPG, PSORB)	ZPG

PIPE DATA:	I.E.	MATERIAL	DIAMETER
INLET PIPE #1	431.19	PVC SDR 35	8"
INLET PIPE #2	431.19	PVC SDR 35	8"
OUTLET PIPE	428.14	PVC SDR 35	8"
RIM ELEVATION			433.16

ANTI-FLOTATION BALLAST	WIDTH	HEIGHT
	*	*

NOTES/SPECIAL REQUIREMENTS: STORMFILTER RIM TO BE SET 6" BELOW FINISHED GRADE. REFER TO SHEET C2.0 FOR FINISHED GRADE ELEVATION.
* PER ENGINEER OF RECORD

GENERAL NOTES
1. CONTECH TO PROVIDE ALL MATERIALS UNLESS NOTED OTHERWISE.
2. DIMENSIONS MARKED WITH [ ] ARE REFERENCE DIMENSIONS. ACTUAL DIMENSIONS MAY VARY.
3. FOR SITE SPECIFIC DRAWINGS WITH DETAILED VAULT DIMENSIONS AND WEIGHTS, PLEASE CONTACT YOUR CONTECH ENGINEERED SOLUTIONS LLC REPRESENTATIVE. www.ContechES.com
4. STORMFILTER WATER QUALITY STRUCTURE SHALL BE IN ACCORDANCE WITH ALL DESIGN DATA AND INFORMATION CONTAINED IN THIS DRAWING.
5. STRUCTURE SHALL MEET AASHTO HS-20 LOAD RATING, ASSUMING EARTH COVER OF 0' - 5' [1524 mm] AND GROUNDWATER ELEVATION AT, OR BELOW, THE OUTLET PIPE INVERT ELEVATION. ENGINEER OF RECORD TO CONFIRM ACTUAL GROUNDWATER ELEVATION. CASTINGS SHALL MEET AASHTO M306 AND BE CAST WITH THE CONTECH LOGO.
6. FILTER CARTRIDGES SHALL BE MEDIA-FILLED, PASSIVE, SIPHON ACTUATED, RADIAL FLOW, AND SELF CLEANING. RADIAL MEDIA DEPTH SHALL BE 7-INCHES [178 mm]. FILTER MEDIA CONTACT TIME SHALL BE AT LEAST 36 SECONDS.
7. SPECIFIC FLOW RATE IS EQUAL TO THE FILTER TREATMENT CAPACITY (gpm) [L/s] DIVIDED BY THE FILTER CONTACT SURFACE AREA (sq ft)[m²].
8. STORMFILTER STRUCTURE SHALL BE PRECAST CONCRETE CONFORMING TO ASTM C-478 AND AASHTO LOAD FACTOR DESIGN METHOD.

INSTALLATION NOTES
A. ANY SUB-BASE, BACKFILL DEPTH, AND/OR ANTI-FLOTATION PROVISIONS ARE SITE-SPECIFIC DESIGN CONSIDERATIONS AND SHALL BE SPECIFIED BY ENGINEER OF RECORD.
B. CONTRACTOR TO PROVIDE EQUIPMENT WITH SUFFICIENT LIFTING AND REACH CAPACITY TO LIFT AND SET THE STORMFILTER STRUCTURE.
C. CONTRACTOR TO INSTALL JOINT SEALANT BETWEEN ALL STRUCTURE SECTIONS AND ASSEMBLE STRUCTURE.
D. CONTRACTOR TO PROVIDE, INSTALL, AND GROUT INLET PIPE(S).
E. CONTRACTOR TO PROVIDE AND INSTALL CONNECTOR TO THE OUTLET RISER STUB. STORMFILTER EQUIPPED WITH A DUAL DIAMETER HDPE OUTLET STUB AND SAND COLLAR. IF OUTLET PIPE IS LARGER THAN 8 INCHES [200 mm], CONTRACTOR TO REMOVE THE 8 INCH [200 mm] OUTLET STUB AT MOLDED-IN CUT LINE. COUPLING BY FERNCO OR EQUAL AND PROVIDED BY CONTRACTOR.
F. CONTRACTOR TO TAKE APPROPRIATE MEASURES TO PROTECT CARTRIDGES FROM CONSTRUCTION-RELATED EROSION RUNOFF.

CONTECH ENGINEERED SOLUTIONS LLC
www.contechES.com
9025 Centre Pointe Dr. Suite 400 West Chester, OH 45069
800-338-1122 513-645-7000 513-645-7993 FAX

SFMH48
STORMFILTER
STANDARD DETAIL

PIPE ALLOWANCES

PIPE MATERIAL	MAXIMUM INSIDE DIAMETER
REINFORCED OR PLAIN CONCRETE	12"
ALL METAL PIPE	15"
*CPSSP (STD. SPEC. 9-05.20)	12"
SOLID WALL PVC (STD. SPEC. 9-05.12(1))	15"
PROFILE WALL PVC (STD. SPEC. 9-05.12(2))	15"

*CORRUGATED POLYETHYLENE STORM SEWER PIPE

2 CONTECH 48 IN STORM FILTER
NOT TO SCALE

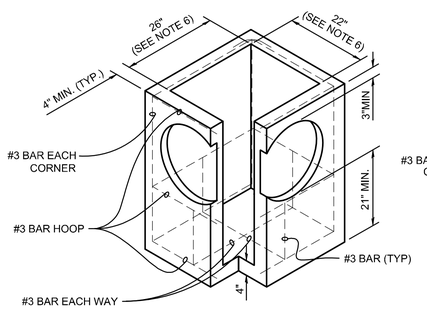

PRECAST BASE SECTION

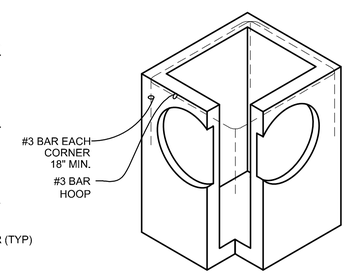

(SEE NOTE 1)

ALTERNATIVE PRECAST BASE SECTION

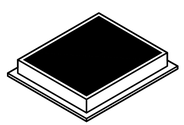

FRAME AND SOLID LID

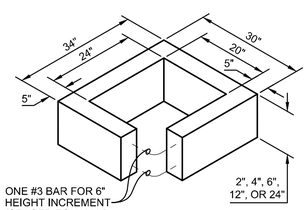

RECTANGULAR ADJUSTMENT SECTION

NOTE:
1. AS ACCEPTABLE ALTERNATIVES TO THE REBAR SHOWN IN THE PRECAST BASE SECTION, FIBERS (PLACED ACCORDING TO THE STANDARD SPECIFICATIONS), OR WIRE MESH HAVING A MINIMUM AREA OF 0.12 SQUARE INCHES PER FOOT SHALL BE USED WITH THE MINIMUM REQUIRED REBAR SHOWN IN THE ALTERNATIVE PRECAST BASE SECTION. WIRE MESH SHALL NOT BE PLACED IN THE KNOCKOUTS.
2. THE KNOCKOUT DIAMETER SHALL NOT BE GREATER THAN 20". KNOCKOUTS SHALL HAVE A WALL THICKNESS OF 2" MINIMUM TO 2.5" MAXIMUM. PROVIDE A 1.5" MINIMUM GAP BETWEEN THE KNOCKOUT WALL AND THE OUTSIDE OF THE PIPE. AFTER THE PIPE IS INSTALLED, FILL THE GAP WITH JOINT MORTAR IN ACCORDANCE WITH STANDARD SPECIFICATION 9-04.3.
3. THE MAXIMUM DEPTH FROM THE FINISHED GRADE TO THE LOWEST PIPE INVERT SHALL BE 5'.
4. THE FRAME AND GRATE MAY BE INSTALLED WITH THE FLANGE DOWN, OR INTEGRALLY CAST INTO THE ADJUSTMENT SECTION WITH FLANGE UP.
5. THE PRECAST BASE SECTION MAY HAVE A ROUNDED FLOOR, AND THE WALLS MAY BE SLOPED AT A RATE OF 1:24 OR STEEPER.
6. THE OPENING SHALL BE MEASURED AT THE TOP OF THE PRECAST BASE SECTION.
7. ALL PICKUP HOLES SHALL BE GROUTED FULL AFTER THE BASIN HAS BEEN PLACED.

4 CATCH BASIN - TYPE 1
NOT TO SCALE

NOTE:
THIS APPROVAL IS VOID 1 (ONE) YEAR AFTER APPROVAL DATE. THE CITY WILL NOT BE RESPONSIBLE FOR ERRORS AND/OR OMISSIONS ON THESE PLANS.
FIELD CONDITIONS MAY DICTATE CHANGES TO THESE PLANS AS DETERMINED BY THE CITY ENGINEER.

PERMIT NO. 24-104059-PC

APPROVED

DATE

AHBL
TACOMA • SEATTLE • SPOKANE • TRI-CITIES
2215 North 30th Street, Suite 300 Tacoma, WA 98403
253.383.2422 TEL 253.383.2572 FAX www.ahbl.com WEB

Project Title:
MIRROR LAKE ELEMENTARY SCHOOL FIELD RENOVATION

Client:
FEDERAL WAY PUBLIC SCHOOL
33330 8TH AVENUE SOUTH
FEDERAL WA, WA 98003

Project No.
2240123.10

Issue Set & Date:
BID SET
APRIL 11, 2025

CHRISTOPHER MASON — STATE OF WASHINGTON — 39383 — REGISTERED PROFESSIONAL ENGINEER
4/11/2025

NOTICE:
ALTERATION OF THIS DOCUMENT SHALL INVALIDATE THE PROFESSIONAL SEAL AND SIGNATURE. PUBLICATION OF THIS DOCUMENT DOES NOT CONSTITUTE FROM RESERVED OWNERSHIP RIGHTS IN IT. THIS DOCUMENT IS FOR USE ONLY FOR THE PROJECT IDENTIFIED IN THE TITLE BLOCK AND IS NOT TO BE USED FOR REPAIR, REMODEL OR ADDITION TO THAT PROJECT OR FOR ANY OTHER PROJECT.

4
3
2
1
Revisions:

Sheet Title:
DETAILS

Designed by:	Drawn by:	Checked by:
JDH	JDH	DCN

Sheet No.
C3.0
4 of 13 Sheets

D:\2024\2240123\01_CIVIL\04_SHP\MIRROR LAKE ES ENHANCE STORMFILTER-AB IN.DWG 4/10/2025 11:12 AM

MIRROR LAKE ELEMENTARY SCHOOL
FIELD RENOVATION

A PORTION OF THE NE 1/4 OF THE SW 1/4 OF SEC. 08, TWN. 21 N., RGE. 04 E. W.M.
CITY OF FEDERAL WAY, KING COUNTY, WASHINGTON.

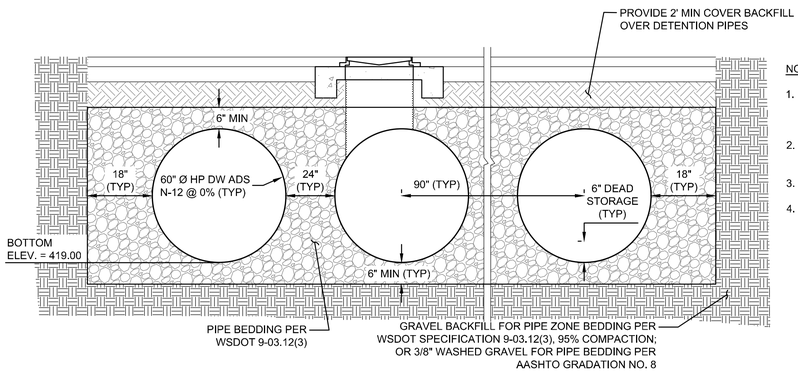

NOTES:

1. SOIL-TIGHT DETENTION TANK JOINTS SHALL CONFORM TO AASHTO M36 AND ASTM A760. MINIMUM SPACING SHALL BE 10'.
2. ACCESS RISERS ARE SAME MATERIAL AS TANK, WELDED OR FUSED TO TANK.
3. ACCESS RISER SPACING IS 100' MAXIMUM.
4. ACCESS OPENING SHALL BE CLEARLY MARKED WITH CONFINED SPACE WARNING IN ACCORDANCE WITH OSHA AND L&I REQUIREMENTS.

1 DETENTION PIPE SECTION
NOT TO SCALE

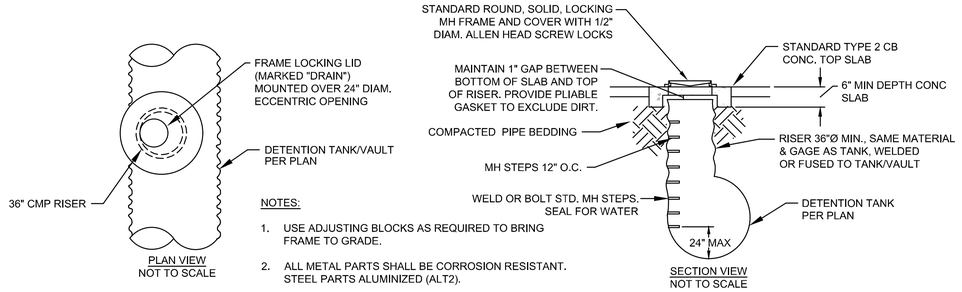

NOTES:

1. USE ADJUSTING BLOCKS AS REQUIRED TO BRING FRAME TO GRADE.
2. ALL METAL PARTS SHALL BE CORROSION RESISTANT. STEEL PARTS ALUMINIZED (ALT2).
3. MUST BE CONVENIENTLY LOCATED FOR MAINTENANCE VEHICLE ACCESS.

2 DETENTION PIPE ACCESS RISER
NOT TO SCALE

FIGURE 5.1.2.A TYPICAL DETENTION TANK

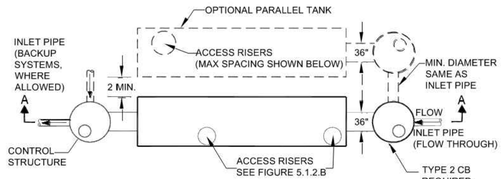

NOTES:
ALL METAL PARTS CORROSION RESISTANT. STEEL PARTS STAINLESS STEEL OR ALUMINIZED STEEL, EXCEPT TANK MAY BE GALVANIZED AND ASPHALT COATED (TREATMENT 1 OR BETTER).

3 TYPICAL DETENTION TANK
NOT TO SCALE

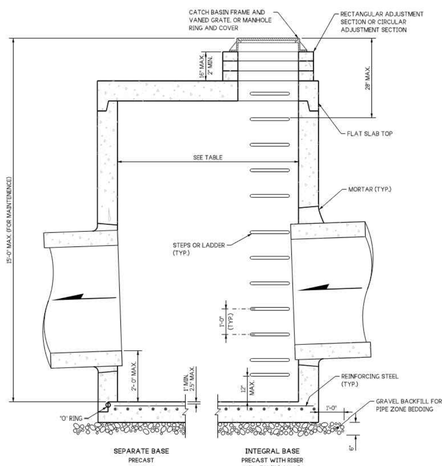

CATCH BASIN DIMENSIONS				
CATCH BASIN DIAMETER	MIN. WALL THICKNESS	MIN. BASE THICKNESS	MAXIMUM KNOCKOUT SIZE	MINIMUM DISTANCE BETWEEN KNOCKOUTS
48"	4"	6"	36"	8"
54"	4.5"	8"	42"	8"
60"	5"	8"	48"	8"
72"	6"	8"	60"	12"
84"	8"	12"	72"	12"
96"	8"	12"	84"	12"
120"	10"	12"	96"	12"
144"	12"	12"	108"	12"

PIPE ALLOWANCES					
CATCH BASIN DIAMETER	PIPE MATERIAL WITH MAXIMUM INSIDE DIAMETER				
	CONCRETE	ALL METAL	CPSSP ① PP ④	SOLID WALL PVC ②	PROFILE WALL PVC ③
48"	24"	30"	24"	30"	30"
54"	30"	36"	30"	36"	36"
60"	36"	42"	36"	42"	42"
72"	42"	54"	42"	48"	48"
84"	54"	60"	54"	48"	48"
96"	60"	72"	60"	48"	48"
120"	66"	84"	60"	48"	48"
144"	78"	96"	60"	48"	48"

① Corrugated Polyethylene Storm Sewer Pipe (See Standard Specification Section 9-05.20)
② (See Standard Specification Section 9-05.12(1))
③ (See Standard Specification Section 9-05.12(2))
④ Polypropolyne Pipe (See Standard Specification Section 9-05.24)

NOTES:

1. No steps are required when height is 4' or less.
2. The bottom of the precast catch basin may be sloped to facilitate cleaning.
3. The rectangular frame and grate may be installed with the flange up or down. The frame may be cast into the adjustment section.
4. Knockouts shall have a wall thickness of 2" (in) minimum to 2.5" (in) maximum. Provide a 1.5" (in) minimum gap between the knockout wall and the outside of the pipe. After the pipe is installed, fill the gap with joint mortar in accordance with **Standard Specification Section 9-04.3.**
5. Pipe allowances will vary depending on the pipe material used. Contact the Region Hydraulics Engineer for assistance.

4 CATCH BASIN - TYPE 2
NOT TO SCALE

BLUE HERMAN — STATE OF WASHINGTON — 41819 — REGISTERED PROFESSIONAL ENGINEER

Aug 23, 2023

CATCH BASIN TYPE 2

STANDARD PLAN B-10.20-03

SHEET 1 OF 1 SHEET

APPROVED FOR PUBLICATION
Aug 23, 2023
STATE DESIGN ENGINEER
Washington State Department of Transportation

NOTE:
THIS APPROVAL IS VOID 1 (ONE) YEAR AFTER APPROVAL DATE. THE CITY WILL NOT BE RESPONSIBLE FOR ERRORS AND/OR OMISSIONS ON THESE PLANS.
FIELD CONDITIONS MAY DICTATE CHANGES TO THESE PLANS AS DETERMINED BY THE CITY ENGINEER.

PERMIT NO. 24-104059-PC

APPROVED

DATE

811 Know what's **below.** **Call** before you dig.

AHBL
TACOMA • SEATTLE • SPOKANE • TRI-CITIES
2215 North 30th Street, Suite 300 Tacoma, WA 98403
253.383.2422 TEL 253.383.2572 FAX www.ahbl.com WEB

Project Title:

MIRROR LAKE ELEMENTARY SCHOOL FIELD RENOVATION

Client:

FEDERAL WAY PUBLIC SCHOOL
33330 8TH AVENUE SOUTH
FEDERAL WA, WA 98003

Project No.

2240123.10

Issue Set & Date:

BID SET

APRIL 11, 2025

JD CHRISTOPHER MASON — STATE OF WASHINGTON — 39383 — REGISTERED PROFESSIONAL ENGINEER

4/11/2025

NOTICE
ALTERATION OF THIS DOCUMENT SHALL INVALIDATE THE PROFESSIONAL SEAL AND SIGNATURE. PUBLICATION OF THIS DOCUMENT DOES NOT CONSTITUTE FROM RESERVED OWNERSHIP RIGHTS IN IT. THIS DOCUMENT IS FOR USE ONLY FOR THE PROJECT IDENTIFIED IN THE TITLE BLOCK AND IS NOT TO BE USED FOR REPAIR, REMODEL OR ADDITION TO THAT PROJECT OR FOR ANY OTHER PROJECT.

1
2
3
4

Revisions:

Sheet Title:

DETAILS

Designed by: JDH | Drawn by: JDH | Checked by: DCN

Sheet No.

C3.1

5 of 13 Sheets

MIRROR LAKE ELEMENTARY SCHOOL
FIELD RENOVATION

A PORTION OF THE NE 1/4 OF THE SW 1/4 OF SEC. 08, TWN. 21 N., RGE. 04 E. W.M.
CITY OF FEDERAL WAY, KING COUNTY, WASHINGTON.

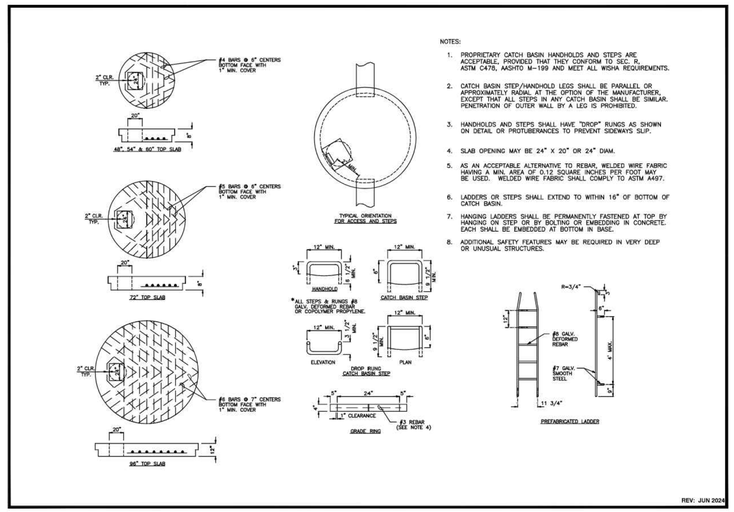

CITY OF Federal Way PUBLIC WORKS	MISC. TYPE 2 CATCH BASIN DETAILS	STD. DETAIL FW.B30.90-A

1 MISC. TYPE 2 CATCH BASIN DETAILS
NOT TO SCALE

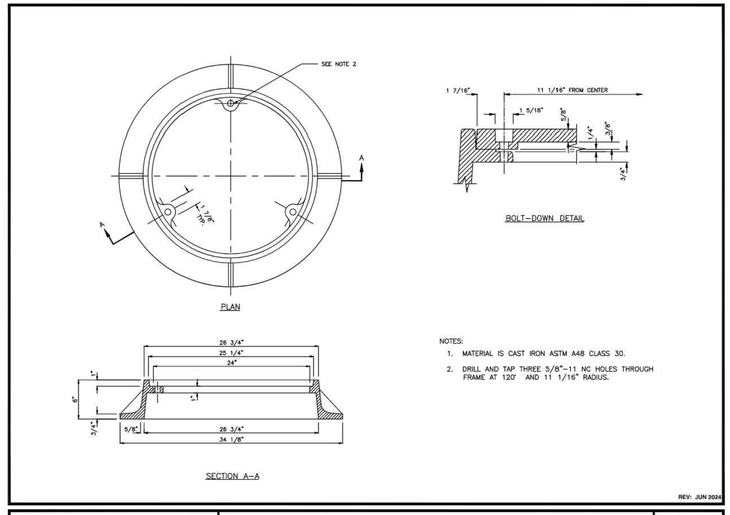

CITY OF Federal Way PUBLIC WORKS	FRAME FOR ROUND LOCKING COVER	STD. DETAIL FW.B30.72

2 FRAME FOR ROUND LOCKING COVER
NOT TO SCALE

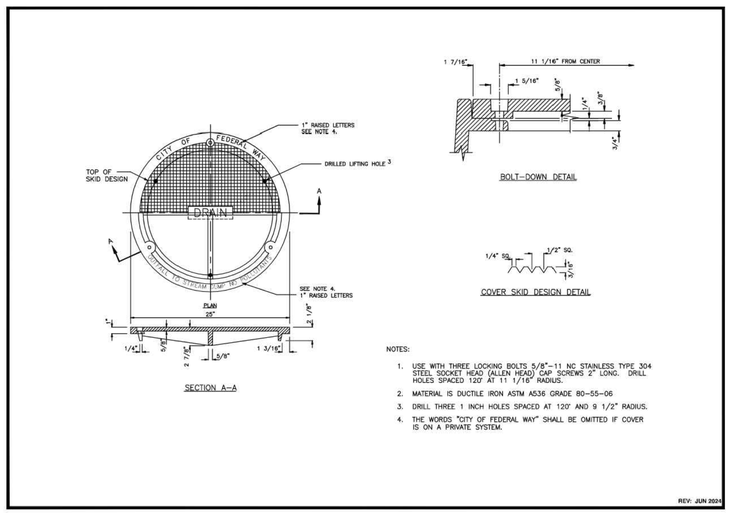

CITY OF Federal Way PUBLIC WORKS	ROUND LOCKING COVER	STD. DETAIL FW.B30.70

3 ROUND LOCKING COVER
NOT TO SCALE

Know what's below. Call before you dig.

NOTE:
THIS APPROVAL IS VOID 1 (ONE) YEAR AFTER APPROVAL DATE. THE CITY WILL NOT BE RESPONSIBLE FOR ERRORS AND/OR OMISSIONS ON THESE PLANS. FIELD CONDITIONS MAY DICTATE CHANGES TO THESE PLANS AS DETERMINED BY THE CITY ENGINEER.

PERMIT NO. 24-104059-PC

APPROVED

DATE

AHBL
TACOMA • SEATTLE • SPOKANE • TRI-CITIES
2215 North 30th Street, Suite 300 Tacoma, WA 98403
253.383.2422 TEL 253.383.2572 FAX www.ahbl.com WEB

Project Title:

MIRROR LAKE ELEMENTARY SCHOOL FIELD RENOVATION

Client:

FEDERAL WAY PUBLIC SCHOOL
33330 8TH AVENUE SOUTH
FEDERAL WA, WA 98003

Project No.

2240123.10

Issue Set & Date:

BID SET

APRIL 11, 2025

CHRISTOPHER MASON 39383 REGISTERED PROFESSIONAL ENGINEER STATE OF WASHINGTON
4/11/2025

NOTICE
ALTERATION OF THIS DOCUMENT SHALL INVALIDATE THE PROFESSIONAL SEAL AND SIGNATURE. PUBLICATION OF THIS DOCUMENT DOES NOT CONSTITUTE ANY RELEASE OF OWNERSHIP RIGHTS IN IT. THIS DOCUMENT IS FOR USE ONLY FOR THE PROJECT IDENTIFIED IN THE TITLE BLOCK AND IS NOT TO BE USED FOR REPAIR, REMODEL OR ADDITION TO THAT PROJECT OR FOR ANY OTHER PROJECT.

Revisions:

Sheet Title:

DETAILS

Designed by:	Drawn by:	Checked by:
JDH	JDH	DCN

Sheet No.

C3.2

6 of 13 Sheets

MIRROR LAKE ELEMENTARY SCHOOL
FIELD RENOVATION

A PORTION OF THE NE 1/4 OF THE SW 1/4 OF SEC. 08, TWN. 21 N., RGE. 04 E. W.M.
CITY OF FEDERAL WAY, KING COUNTY, WASHINGTON.

ACO DRAIN

KlassikDrain - K100 Galvanized steel edge rail channel system

One meter channel

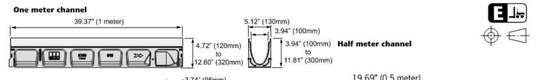

Knock-outs included on every 5th channel

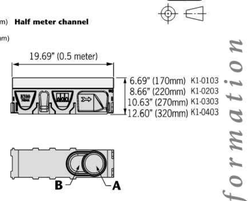

Type K901G In-line catch basin

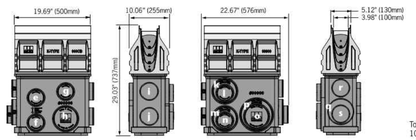

Total capacity = 10.49 gallons

Outlet flow rates

Outlet	Product	Outlet size (Sch. 40)	Invert Depth	GPM	CFS
a	Bottom outlet - K00	4" round	3.94"	108	0.24
a	Bottom outlet - K40	4" round	11.81"	187	0.42
b	Bottom outlet - K00	6" oval	3.94"	177	0.39
b	Bottom outlet - K40	6" oval	11.81"	306	0.68
c	End outlet - K20	4" round	7.87"	132	0.29
c	End outlet - K40	4" round	11.81"	171	0.38
d	K1-308-6' outlet cap	6" oval	9.84"	233	0.52
d	K1-408-6' outlet cap	6" oval	11.81"	264	0.59
e	Type K1-901G	4" round	20.68"	235	0.52
f	Type K1-901G	4" round	27.17"	226	0.50
g	Type K1-901G	4" round	18.99"	265	0.59
h	Type K1-901G	6" round	27.17"	263	0.59
i	Type K1-901G	4" round	19.30"	222	0.49
j	Type K1-901G	4" round	25.67"	586	1.30
k	Type K1-901G	6" round	19.99"	269	0.60
l	Type K1-901G	4" round	19.36"	227	0.51
m	Type K1-901G	6" round	27.30"	604	1.35
n	Type K1-901G	4" round	26.43"	505	1.12
o	Type K1-901G	6" round	26.43"	593	1.32
p	Type K1-901G	8" round	27.30"	1051	2.34
q	Type K1-901G	6" round	25.85"	273	0.61
r	Type K1-901G	4" round	18.56"	235	0.52
s	Type K1-901G	4" round	25.30"	224	0.50

Note: These are the pipe flow rates at the specified outlet, **NOT** channel flow rates. Catch basin flow rates are without trash bucket - using trash bucket reduces flow.

End Cap

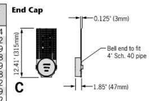

6" Oval inlet cap

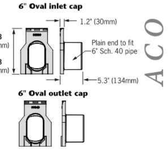

6" Oval outlet cap



February 2019

www.acousa.com

ACO Specification Information

1 ACO DRAIN - K100 TRECH DRAIN
NOT TO SCALE

ACO Drain February 2022

Sump Box - 2'x2'x2' w/ Gray Iron Frame & Slotted Grate

Top

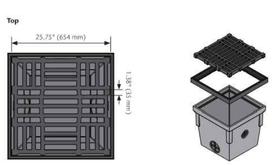

Side

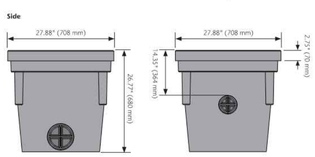

Specifications

General
The sump box shall be ACO Drain as manufactured by ACO, Inc. or similar approved.

Materials
Products shall be manufactured from polymer concrete and have minimum properties as follows:

- Compressive strength:13,053 psi
- Flexural strength: 3,191 psi
- Water absorption rate:<0.1% by weight
- Overall width: 27.88" (708 mm)
- Overall length: 27.88" (708 mm)
- Overall depth: 26.77" (680 mm)
- Invert depth: 25.98" (660 mm)

Pre-cast units shall be manufactured with drill-outs for channel and pipe connections and have a wall thickness of at least 0.75" (19 mm).

Grates
Frame and grate material is slotted gray iron. After grate removal there shall be uninterrupted access to the sump box to aid maintenance.

Installation
The sump box and grates shall be installed in accordance with the manufacturer's installation instructions and recommendations.

Product Features

- Grate provides 48% open area (318 in²).

*AASHTO M306 requires that castings bear a minimum of 40,000 lbs on a 9" x 9" area. This represents a 2.5 safety factor over the 16,000 lb requirement of H20 and H520. This load designation is appropriate for general traffic applications. Loading criteria is 40,000–100,000 lbs.

Parts	Part No.	Invert Depth in (mm)	Volume gal	Weight lbs
2'x2'x2' Sump Box	05719	25.98 (660)	45.1	168.0
Gray Iron Frame & Slotted Grate	05720	-	-	265.0

Heavy Duty Application

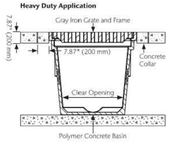

ACO, Inc.

West Sales Office
825 W. Beechcraft Street
Casa Grande, AZ 85122
Tel: (520) 421-9988
Toll-Free: (888) 490-9552
Fax: (520) 421-9899

Northeast Sales Office
9470 Pinecone Drive
Mentor, OH 44060
Tel: (440) 639-7230
Toll-Free: (800) 543-4764
Fax: (440) 639-7235

Southeast Sales Office
4211 Pleasant Road
Fort Mill, SC 29708
Toll-Free: (800) 543-4764
Fax: (803) 802-1063

info@acousa.com
www.acousa.com

© February 2022 ACO, Inc.
All reasonable care has been taken in compiling the information in this document. All recommendations and suggestions on the use of ACO products are made without guarantee since the conditions of use are beyond the control of the company. It is the customer's responsibility to ensure that each product is fit for its intended purpose and that the actual conditions of use are suitable. ACO, Inc. reserves the right to change products and specifications without notice.

ACO. creating the future of drainage

ACO Specification Information

2 ACO DRAIN - SUMP BOX
NOT TO SCALE

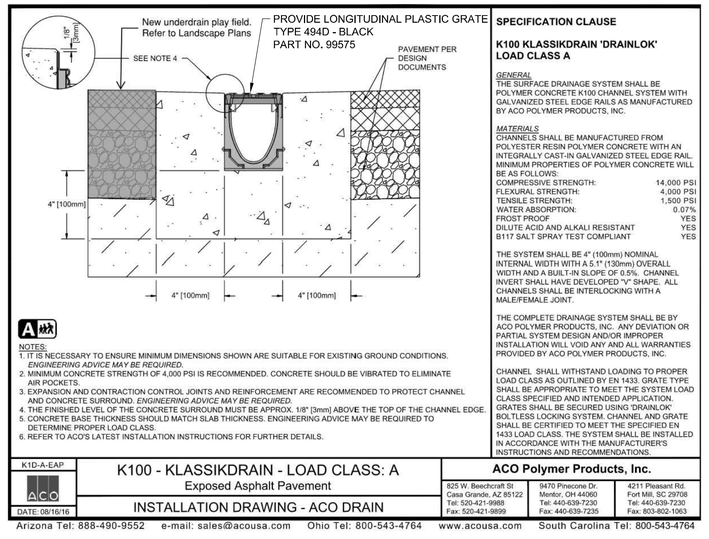

NOTES:
1. IT IS NECESSARY TO ENSURE MINIMUM DIMENSIONS SHOWN ARE SUITABLE FOR EXISTING GROUND CONDITIONS. *ENGINEERING ADVICE MAY BE REQUIRED.*
2. MINIMUM CONCRETE STRENGTH OF 4,000 PSI IS RECOMMENDED. CONCRETE SHOULD BE VIBRATED TO ELIMINATE AIR POCKETS.
3. EXPANSION AND CONTRACTION CONTROL JOINTS AND REINFORCEMENT ARE RECOMMENDED TO PROTECT CHANNEL AND CONCRETE SURROUND. *ENGINEERING ADVICE MAY BE REQUIRED.*
4. THE FINISHED LEVEL OF THE CONCRETE SURROUND MUST BE APPROX. 1/8" [3mm] ABOVE THE TOP OF THE CHANNEL EDGE.
5. CONCRETE BASE THICKNESS SHOULD MATCH SLAB THICKNESS. ENGINEERING ADVICE MAY BE REQUIRED TO DETERMINE PROPER LOAD CLASS.
6. REFER TO ACO'S LATEST INSTALLATION INSTRUCTIONS FOR FURTHER DETAILS.

SPECIFICATION CLAUSE

K100 KLASSIKDRAIN 'DRAINLOK' LOAD CLASS A

GENERAL
THE SURFACE DRAINAGE SYSTEM SHALL BE POLYMER CONCRETE K100 CHANNEL SYSTEM WITH GALVANIZED STEEL EDGE RAILS AS MANUFACTURED BY ACO POLYMER PRODUCTS, INC.

MATERIALS
CHANNELS SHALL BE MANUFACTURED FROM POLYESTER RESIN POLYMER CONCRETE WITH AN INTEGRALLY CAST-IN GALVANIZED STEEL EDGE RAIL. MINIMUM PROPERTIES OF POLYMER CONCRETE WILL BE AS FOLLOWS:

COMPRESSIVE STRENGTH:	14,000 PSI
FLEXURAL STRENGTH:	4,000 PSI
TENSILE STRENGTH:	1,500 PSI
WATER ABSORPTION:	0.07%
FROST PROOF	YES
DILUTE ACID AND ALKALI RESISTANT	YES
B117 SALT SPRAY TEST COMPLIANT	YES

THE SYSTEM SHALL BE 4" (100mm) NOMINAL INTERNAL WIDTH WITH A 5.1" (130mm) OVERALL WIDTH AND A BUILT-IN SLOPE OF 0.5%. CHANNEL INVERT SHALL HAVE DEVELOPED "V" SHAPE. ALL CHANNELS SHALL BE INTERLOCKING WITH A MALE/FEMALE JOINT.

THE COMPLETE DRAINAGE SYSTEM SHALL BE BY ACO POLYMER PRODUCTS, INC. ANY DEVIATION OR PARTIAL SYSTEM DESIGN AND/OR IMPROPER INSTALLATION WILL VOID ANY AND ALL WARRANTIES PROVIDED BY ACO POLYMER PRODUCTS, INC.

CHANNEL SHALL WITHSTAND LOADING TO PROPER LOAD CLASS AS OUTLINED BY EN 1433. GRATE TYPE SHALL BE APPROPRIATE TO MEET THE SYSTEM LOAD CLASS SPECIFIED AND INTENDED APPLICATION. GRATES SHALL BE SECURED USING DRAINLOK' BOLTLESS LOCKING SYSTEM. CHANNEL AND GRATE SHALL BE CERTIFIED TO MEET THE SPECIFIED EN 1433 LOAD CLASS. THE SYSTEM SHALL BE INSTALLED IN ACCORDANCE WITH THE MANUFACTURER'S INSTRUCTIONS AND RECOMMENDATIONS.

K1D-A-EAP	K100 - KLASSIKDRAIN - LOAD CLASS: A Exposed Asphalt Pavement	ACO Polymer Products, Inc.		
DATE: 08/16/16	INSTALLATION DRAWING - ACO DRAIN	825 W. Beechcraft St Casa Grande, AZ 85122 Tel: 520-421-9988 Fax: 520-421-9899	9470 Pinecone Dr. Mentor, OH 44060 Tel: 440-639-7230 Fax: 440-639-7235	4211 Pleasant Rd. Fort Mill, SC 29708 Tel: 440-639-7230 Fax: 803-802-1063

Arizona Tel: 888-490-9552 e-mail: sales@acousa.com Ohio Tel: 800-543-4764 www.acousa.com South Carolina Tel: 800-543-4764

3 ACO DRAIN - K100 TRENCH SECTION
NOT TO SCALE

NOTE:
THIS APPROVAL IS VOID 1 (ONE) YEAR AFTER APPROVAL DATE. THE CITY WILL NOT BE RESPONSIBLE FOR ERRORS AND/OR OMISSIONS ON THESE PLANS.
FIELD CONDITIONS MAY DICTATE CHANGES TO THESE PLANS AS DETERMINED BY THE CITY ENGINEER.

PERMIT NO. 24-104059-PC

APPROVED

DATE

Know what's **below.** **Call** before you dig.

AHBL
TACOMA • SEATTLE • SPOKANE • TRI-CITIES
2215 North 30th Street, Suite 300 Tacoma, WA 98403
253.383.2422 TEL 253.383.2572 FAX www.ahbl.com WEB

Project Title:

MIRROR LAKE ELEMENTARY SCHOOL FIELD RENOVATION

Client:

FEDERAL WAY PUBLIC SCHOOL
33330 8TH AVENUE SOUTH
FEDERAL WA, WA 98003

Project No.

2240123.10

Issue Set & Date:

BID SET

APRIL 11, 2025



4/11/2025

NOTICE
ALTERATION OF THIS DOCUMENT SHALL INVALIDATE THE PROFESSIONAL SEAL AND SIGNATURE. PUBLICATION OF THIS DOCUMENT DOES NOT CONSTITUTE FROM RESERVED OWNERSHIP RIGHTS IN IT. THIS DOCUMENT IS FOR USE ONLY FOR THE PROJECT IDENTIFIED IN THE TITLE BLOCK AND IS NOT TO BE USED FOR REPAIR, REMODEL OR ADDITION TO THAT PROJECT OR FOR ANY OTHER PROJECT.

4
3
2
1

Revisions:

Sheet Title:

DETAILS

Designed by:	Drawn by:	Checked by:
JDH	JDH	DCN

Sheet No.

C3.3

7 of 13 Sheets

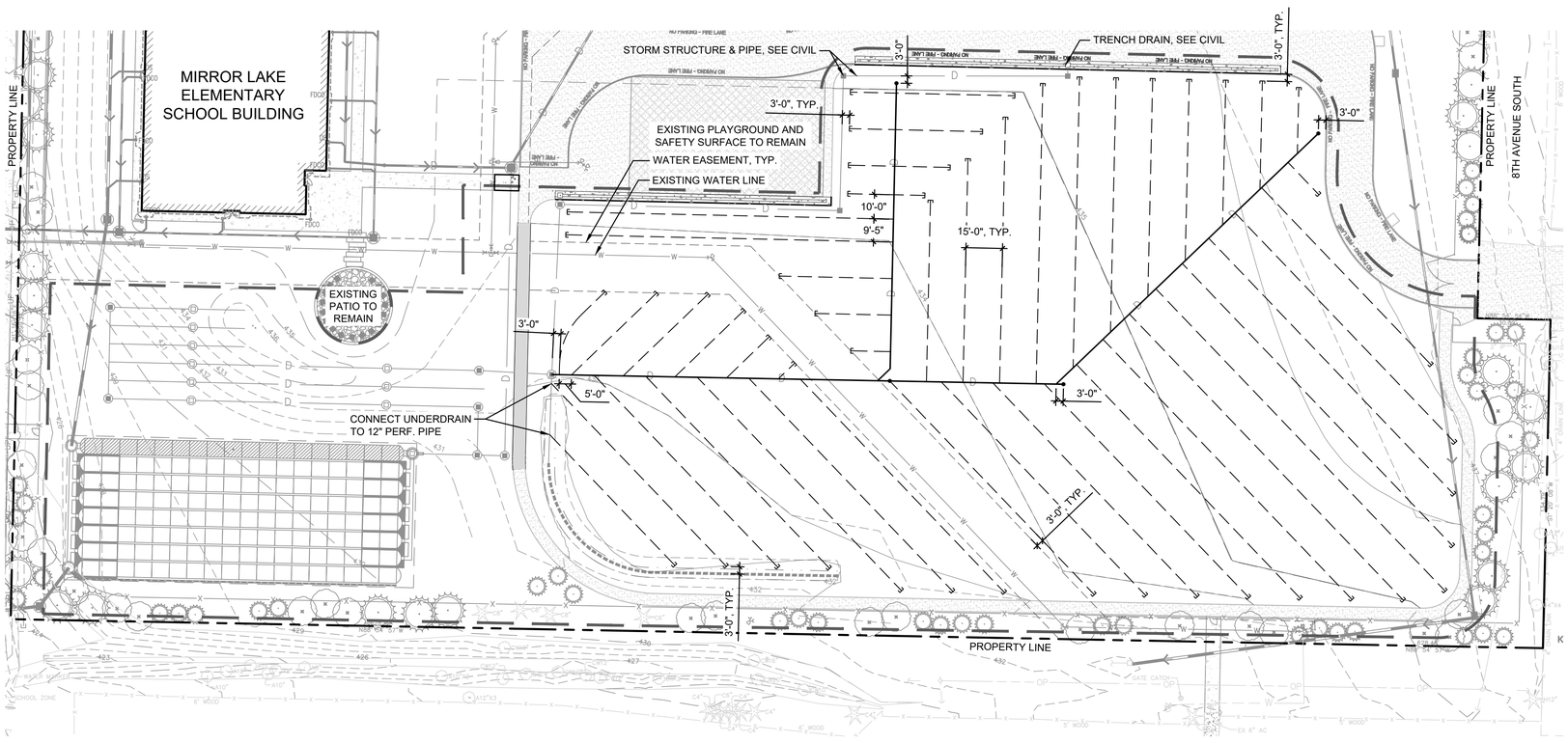

1 MATERIALS PLAN

GRAPHIC SCALE

0 15 30 60 FEET

1" = 30 FEET

LEGEND

- PROPERTY LINE
- EXISTING FENCE TO REMAIN
- EXISTING DRAIN PIPE TO REMAIN
- EXISTING TREES TO REMAIN
- EXISTING PAVEMENT TO REMAIN
- LIMIT OF WORK, SEE CIVIL
- UNDERDRAIN (1 / L1.1)
- UNDERDRAIN CAP
- COLLECTOR DRAIN (2 / L1.1)
- COLLECTOR DRAIN CLEANOUT (3 / L1.1)

NOTES

1. SEE SHEET L2.0 FOR PLANTING AND SOIL PLACEMENT PLAN.
2. SEE SHEET L2.0 FOR SOIL PLACEMENT PLAN.
3. SEE SHEET L3.0 FOR IRRIGATION PLAN.
4. SEE SHEET C1.0 FOR TESC AND DEMO PLANS.
5. SEE SHEET C2.0 FOR FIELD GRADING AND DRAINAGE INVERT ELEVATIONS.

Know what's below.
Call before you dig.

AHBL
TACOMA · SEATTLE · SPOKANE · TRI-CITIES
2215 North 30th Street, Suite 300 Tacoma, WA 98403
253.383.2422 TEL 253.383.2572 FAX www.ahbl.com WEB

Project Title:

MIRROR LAKE ELEMENTARY SCHOOL FIELD RENOVATION

Client:

FEDERAL WAY PUBLIC SCHOOL
33330 8TH AVENUE SOUTH
FEDERAL WA, WA 98003

Project No.

2240123.40

Issue Set & Date:

BID SET

APRIL 11, 2025

STATE OF WASHINGTON
CRAIG R. SKIPTON
NO. 1831 EXP. 03/05/2027
LANDSCAPE ARCHITECT
04/11/2025

NOTICE
ALTERATION OF THIS DOCUMENT SHALL INVALIDATE THE PROFESSIONAL SEAL AND SIGNATURE. PUBLICATION OF THIS DOCUMENT DOES NOT DEROGATE FROM RESERVED OWNERSHIP RIGHTS IN IT. THIS DOCUMENT IS FOR USE ONLY FOR THE PROJECT IDENTIFIED IN THE TITLE BLOCK AND IS NOT TO BE USED FOR REPAIR, REMODEL OR ADDITION TO THAT PROJECT OR FOR ANY OTHER PROJECT.

4

3

2

1

Revisions:

Sheet Title:

MATERIAL PLAN

Designed by:	Drawn by:	Checked by:
DR	DR	CS

Sheet No.

L1.0

8 of 13 Sheets

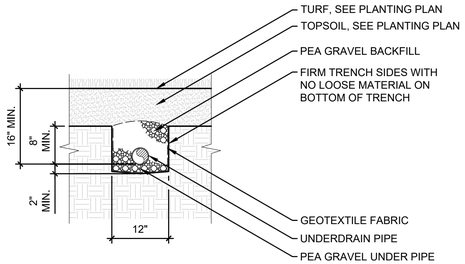

1 UNDERDRAIN

3/4" = 1'-0" P-2024-MRL-102

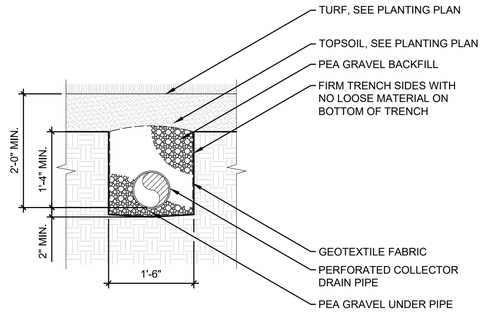

2 COLLECTOR DRAIN

3/4" = 1'-0" P-2024-WLW-80

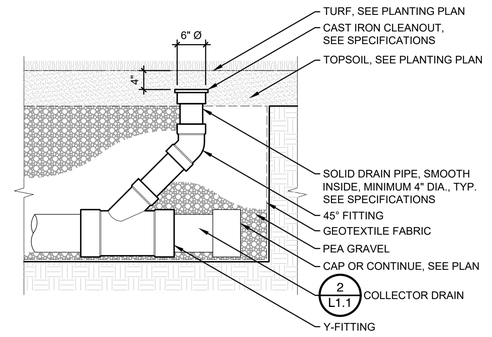

3 COLLECTOR DRAIN CLEANOUT

3/4" = 1'-0" P-2024-WLW-83

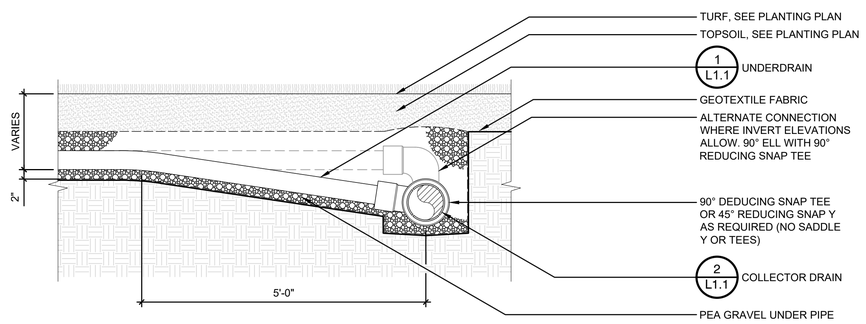

4 UNDERDRAIN CONNECTION TO COLLECTOR DRAIN

3/4" = 1'-0" P-2024-WLW-84

Know what's **below.** **Call** before you dig.

AHBL
TACOMA · SEATTLE · SPOKANE · TRI-CITIES
2215 North 30th Street, Suite 300 Tacoma, WA 98403
253.383.2422 TEL 253.383.2572 FAX www.ahbl.com WEB

Project Title:

MIRROR LAKE ELEMENTARY SCHOOL FIELD RENOVATION

Client:

FEDERAL WAY PUBLIC SCHOOL
33330 8TH AVENUE SOUTH
FEDERAL WA, WA 98003

Project No.

2240123.40

Issue Set & Date:

BID SET

APRIL 11, 2025

STATE OF WASHINGTON · CRAIG R. SKIPTON · NO. 21871 · EXP. 03/05/2027 · LANDSCAPE ARCHITECT

04/11/2025

NOTICE
ALTERATION OF THIS DOCUMENT SHALL INVALIDATE THE PROFESSIONAL SEAL AND MONOGRAM. PUBLICATION OF THIS DOCUMENT DOES NOT DEROGATE FROM RESERVED COMMONLAW RIGHTS IN IT. THIS DOCUMENT IS FOR USE ONLY FOR THE PROJECT IDENTIFIED IN THE TITLE BLOCK AND IS NOT TO BE USED FOR REPAIR, REMODEL OR ADDITION TO THAT PROJECT OR FOR ANY OTHER PROJECT.

Revisions:

Sheet Title:

MATERIAL DETAILS

Designed by:	Drawn by:	Checked by:
DR	DR	CS

Sheet No.

L1.1

9 of 13 Sheets

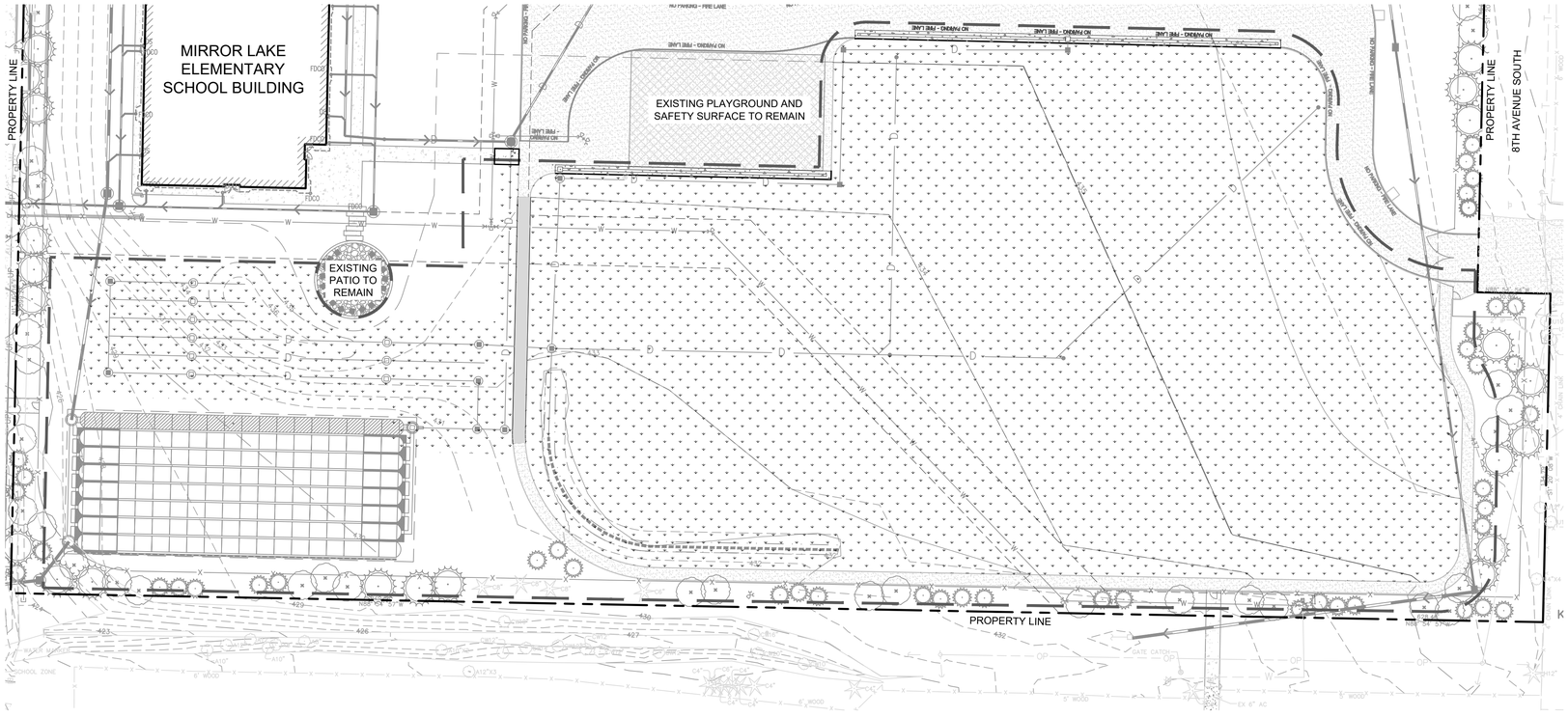

1 PLANTING AND SOILS PLAN

GRAPHIC SCALE
0 15 30 60 FEET
1" = 30 FEET

LEGEND

- PROPERTY LINE
- EXISTING FENCE TO REMAIN
- EXISTING DRAIN PIPE TO REMAIN
- EXISTING TREES TO REMAIN
- EXISTING PAVEMENT TO REMAIN
- LIMIT OF WORK, SEE CIVIL

NOTES

1. RESTORE ALL AREAS IMPACTED BY CONSTRUCTION ACTIVITIES WITH SOIL AND SOD.
2. SEE SHEET L1.0 FOR MATERIAL PLAN.
3. SEE SHEET L2.1 FOR SOIL PREPARATION DETAIL.
4. SEE SHEET L3.0 FOR IRRIGATION PLAN.

GENERAL LANDSCAPE NOTES

1. SEE SPECIFICATIONS FOR PLANT MATERIAL, TOPSOIL AND PLANTING MIX TYPES AND DEPTH, MULCHING, SOIL AMENDMENTS, FERTILIZERS AND WARRANTEES.
2. PLANTING SHALL CONFORM TO ALL FEDERAL WAY CODE REQUIREMENTS, INCLUDING PRESERVATION OF ADEQUATE INTERSECTION SIGHT DISTANCE LINES/ TRIANGULAR AREAS.
3. CONTRACTOR SHALL VERIFY ON-SITE CONDITIONS PRIOR TO BIDDING AND CONSTRUCTION.
4. INSTALL AUTOMATIC UNDERGROUND IRRIGATION SYSTEM AS SPECIFIED IN ALL NEW AND RENOVATED LANDSCAPE AREAS.
5. THE CONTRACTOR AND OWNER ARE RESPONSIBLE FOR READING THE PLANS, SPECIFICATIONS AND NOTES.
6. THE CONTRACTOR SHALL VERIFY ALL PLANT MATERIAL QUANTITIES PRIOR TO INSTALLATION. ANY PLANT MATERIAL QUANTITIES LISTED ARE FOR THE CONVENIENCE OF THE CONTRACTOR. ACTUAL NUMBER OF SYMBOLS SHALL HAVE PRIORITY OVER QUANTITY DESIGNATED. THE CONTRACTOR SHALL BE RESPONSIBLE FOR COUNTING THE TOTAL NUMBER OF PLANTS INDICATED ON THE PLANS AND ESTIMATING GROUNDCOVER QUANTITIES.
7. THE CONTRACTOR SHALL FURNISH AND PAY FOR ALL CONTAINER OR FIELD GROWN TREES, SHRUBS AND GROUNDCOVERS, INCLUDING SEEDED AND SODDED TURF, HYDROMULCHES AND FLATTED GROUNDCOVERS. THE CONTRACTOR SHALL ALSO BE RESPONSIBLE AND PAY FOR: PLANTING OF ALL PLANT MATERIALS; THE SPECIFIED GUARANTEE OF ALL PLANT MATERIALS; THE STAKING AND GUYING OF TREES AND THE CONTINUOUS PROTECTION OF ALL PLANT MATERIALS UPON THEIR ARRIVAL AT THE SITE.

PLANT SCHEDULE

SYMBOL	BOTANICAL NAME	COMMON NAME	PLANTING SIZE	QTY
LAWN				
	SOD FIELD TURF	PERENNIAL RYEGRASS BLEND	SOD	81,289 SF

SOIL PLACEMENT SCHEDULE

2-WAY TOPSOIL - 8" DEPTH

811 Know what's below. Call before you dig.

AHBL
TACOMA · SEATTLE · SPOKANE · TRI-CITIES
2215 North 30th Street, Suite 300 Tacoma, WA 98403
253.383.2422 TEL 253.383.2572 FAX www.ahbl.com WEB

Project Title:

MIRROR LAKE ELEMENTARY SCHOOL FIELD RENOVATION

Client:

FEDERAL WAY PUBLIC SCHOOL
33330 8TH AVENUE SOUTH
FEDERAL WA, WA 98003

Project No.
2240123.40

Issue Set & Date:

BID SET

APRIL 11, 2025

STATE OF WASHINGTON
CRAIG R. SKIPTON
NO. 1831 EXP. 03/05/2027
LANDSCAPE ARCHITECT
04/11/2025

NOTICE
ALTERATION OF THIS DOCUMENT SHALL INVALIDATE THE PROFESSIONAL SEAL AND SIGNATURE. PUBLICATION OF THIS DOCUMENT DOES NOT DEROGATE FROM RESERVED OWNERSHIP RIGHTS IN IT. THIS DOCUMENT IS FOR USE ONLY FOR THE PROJECT IDENTIFIED IN THE TITLE BLOCK AND IS NOT TO BE USED FOR REPAIR, REMODEL OR ADDITION TO THAT PROJECT OR FOR ANY OTHER PROJECT.

4
3
2
1

Revisions:

Sheet Title:

PLANTING & SOILS PLAN

Designed by:	Drawn by:	Checked by:
DR	DR	CS

Sheet No.

L2.0

10 of 13 Sheets

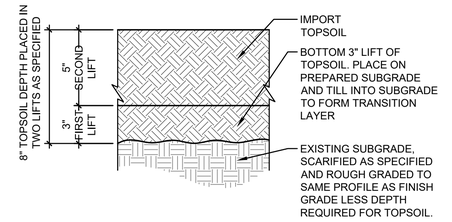

1 SOIL PREPARATION

1" = 1'-0" P-2024-MRL-95

Know what's **below.** **Call** before you dig.

AHBL
TACOMA · SEATTLE · SPOKANE · TRI-CITIES
2215 North 30th Street, Suite 300 Tacoma, WA 98403
253.383.2422 TEL 253.383.2572 FAX www.ahbl.com WEB

Project Title:

MIRROR LAKE ELEMENTARY SCHOOL FIELD RENOVATION

Client:

FEDERAL WAY PUBLIC SCHOOL
33330 8TH AVENUE SOUTH
FEDERAL WA, WA 98003

Project No.

2240123.40

Issue Set & Date:

BID SET

APRIL 11, 2025



04/11/2025

NOTICE
ALTERATION OF THIS DOCUMENT SHALL INVALIDATE THE PROFESSIONAL SEAL AND SIGNATURE. PUBLICATION OF THIS DOCUMENT DOES NOT DEROGATE FROM RESERVED COMMONLAW RIGHTS IN IT. THIS DOCUMENT IS FOR USE ONLY FOR THE PROJECT IDENTIFIED IN THE TITLE BLOCK AND IS NOT TO BE USED FOR REPAIR, REMODEL OR ADDITION TO THAT PROJECT OR FOR ANY OTHER PROJECT.

4
3
2
1
Revisions:

Sheet Title:

PLANTING & SOILS DETAILS

Designed by:	Drawn by:	Checked by:
DR	DR	CS

Sheet No.

L2.1

11 of 13 Sheets

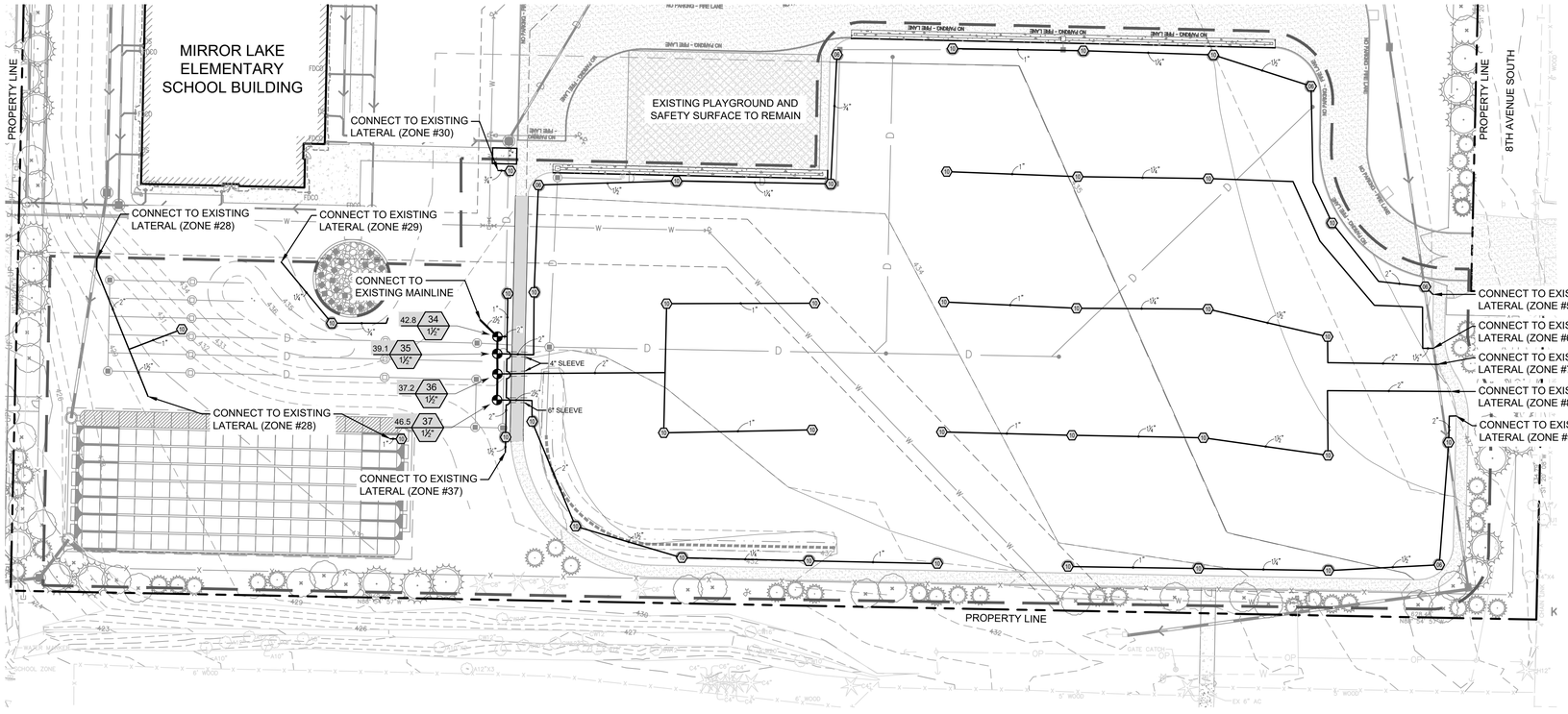

1 IRRIGATION PLAN

GRAPHIC SCALE
0 15 30 60 FEET
1" = 30 FEET

LEGEND

- PROPERTY LINE
- EXISTING FENCE TO REMAIN
- EXISTING DRAIN PIPE TO REMAIN
- EXISTING TREES TO REMAIN
- EXISTING PAVEMENT TO REMAIN
- LIMIT OF WORK, SEE CIVIL

NOTES

1. SEE SHEET L1.0 FOR MATERIAL PLAN.
2. SEE SHEET L2.0 FOR PLANTING AND SOIL PLACEMENT PLAN.
3. SEE SHEET L3.1 FOR IRRIGATION DETAILS.
4. EXISTING IRRIGATION AS-BUILT DRAWINGS ARE AVAILABLE UPON REQUEST.

GENERAL IRRIGATION NOTES

1. NO SUBSTITUTIONS OF EQUIPMENT OR DESIGN CHANGES SHALL BE PERMITTED UNLESS APPROVED BY THE LANDSCAPE ARCHITECT.
2. IRRIGATION LINES AND VALVES MAY BE SHOWN IN HARD SURFACE AREAS OR OUTSIDE LANDSCAPE AREAS FOR GRAPHIC CLARITY. LOCATE ALL IRRIGATION LINES IN LANDSCAPE AREAS OR IN SLEEVES UNDER PAVEMENT.
3. IRRIGATION CONTRACTOR SHALL COORDINATE INSTALLATION OF IRRIGATION CONDUIT AND SLEEVES UNDER HARD SURFACES WITH RESPECTIVE CONTRACTORS.
4. CONTRACTOR SHALL BE RESPONSIBLE FOR OBTAINING ALL PERMITS, TESTS, AND INSPECTIONS REQUIRED FOR THE IRRIGATION SYSTEM.
5. CALL FOR LOCATES PRIOR TO DIGGING AT 811. CONTRACTOR IS RESPONSIBLE TO VERIFY UTILITY LOCATIONS. IF UTILITIES ARE DAMAGED IN THE COURSE OF WORK, CONTRACTOR SHALL INFORM THE OWNER AND MAKE ANY REPAIRS REQUIRED, AT NO COST TO THE OWNER.
6. ALL SLEEVING SHALL BE MARKED, SEALED AND STAKED. ALL SLEEVES SHALL BE TWICE THE SIZE OF OF THE LINE OR COMBINED LINES. MINIMUM SLEEVE SIZE SHALL BE 4-INCHES IF LOCATED UNDER ROADWAY OR DRIVE AISLE.
7. COORDINATE SLEEVING LOCATIONS WITH ELECTRICAL CONDUIT.
8. SPLICE CONTROL WIRES WITHIN VALVE BOXES ONLY, USING 3M-DBY, OR APPROVED SPLICE KITS, AND PROVIDE A 24" EXPANSION LOOP FOR ALL CONTROL WIRES WITHIN EACH VALVE BOX. KEEP WIRE SPLICES TO A MINIMUM. PROVIDE CLEAN WIRE CUTS WITH NEW SPLICE KITS AT ALL SPLICES INCLUDING ANY SPLICE THAT IS DISCONNECTED AND RECONNECTED FOR ANY REASON OR PERIOD OF TIME.
9. VALVE BOXES SHALL BE COMMERCIAL-GRADE POLYETHYLENE OR HDPE AND SUITABLE FOR LIGHT DUTY APPLICATIONS.
10. INSTALLER SHALL BE RESPONSIBLE FOR KEEPING EXACT ACCURATE NOTES AND "AS-BUILTS" FOR THE CREATION OF THE "RECORD DRAWINGS" OF THE INSTALLED SYSTEM.
11. CONTRACTOR SHALL PROVIDE IRRIGATION MAINTENANCE THROUGH THE PLANT ESTABLISHMENT PERIOD INCLUDING WINTERIZATION(S) AND SPRING START-UP(S).

IRRIGATION SCHEDULE

SYMBOL	MANUFACTURER/MODEL/DESCRIPTION	PSI	GPM	RADIUS
	RAIN BIRD 8005 06 TURF ROTOR, 5.0IN. POP-UP, PLASTIC RISER, STANDARD NOZZLE, WITH SEAL-A-MATIC CHECK VALVE, ADJUSTABLE 50-330 ARC, AND 360 NON-REVERSING FULL-CIRCLE. 1IN. (26/34) NPT FEMALE THREADED INLET. EXTENDED RADIUS IS IDEAL FOR LARGE TURF APPLICATIONS.	50	5.6	45'
	RAIN BIRD 8005 10 TURF ROTOR, 5.0IN. POP-UP, PLASTIC RISER, STANDARD NOZZLE, WITH SEAL-A-MATIC CHECK VALVE, ADJUSTABLE 50-330 ARC, AND 360 NON-REVERSING FULL-CIRCLE. 1IN. (26/34) NPT FEMALE THREADED INLET. EXTENDED RADIUS IS IDEAL FOR LARGE TURF APPLICATIONS.	50	9.3	53'

SYMBOL	MANUFACTURER/MODEL/DESCRIPTION
	EXISTING RAIN BIRD PEB-PRS-D PLASTIC INDUSTRIAL REMOTE CONTROL VALVE WITH PRESSURE REGULATOR MODULE.
	IRRIGATION LATERAL LINE: PVC SCHEDULE 40
	IRRIGATION MAINLINE: PVC SCHEDULE 40
	PIPE SLEEVE: PVC SCHEDULE 40

Valve Callout
Valve Number
Valve Flow
#" Valve Size

Know what's below. Call before you dig.

AHBL
TACOMA · SEATTLE · SPOKANE · TRI-CITIES
2215 North 30th Street, Suite 300 Tacoma, WA 98403
253.383.2422 TEL 253.383.2572 FAX www.ahbl.com WEB

Project Title:

MIRROR LAKE ELEMENTARY SCHOOL FIELD RENOVATION

Client:

FEDERAL WAY PUBLIC SCHOOL
33330 8TH AVENUE SOUTH
FEDERAL WA, WA 98003

Project No.
2240123.40

Issue Set & Date:

BID SET

APRIL 11, 2025

STATE OF WASHINGTON · CRAIG R. SKIPTON · NO. 24911 · EXP. 03/05/2027 · LANDSCAPE ARCHITECT
04/11/2025

NOTICE
ALTERATION OF THIS DOCUMENT SHALL INVALIDATE THE PROFESSIONAL SEAL AND ACKNOWLEDGE PUBLICATION OF THIS DOCUMENT DOES NOT DEROGATE FROM RESERVED COPYRIGHT RIGHTS IN IT. THIS DOCUMENT IS FOR USE ONLY FOR THE PROJECT IDENTIFIED IN THE TITLE BLOCK AND IS NOT TO BE USED FOR REPAIR, REMODEL, OR ADDITION TO THAT PROJECT OR FOR ANY OTHER PROJECT.

4
3
2
1
Revisions:

Sheet Title:

IRRIGATION PLAN

Designed by:	Drawn by:	Checked by:
DR	DR	CS

Sheet No.

L3.0

12 of 13 Sheets

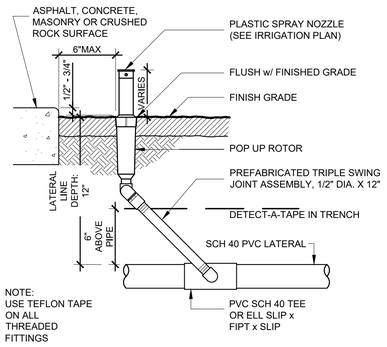

1 POP-UP ROTOR HEAD SWING JOINT

1/8" = 1'-0" P-2024-MRL-100

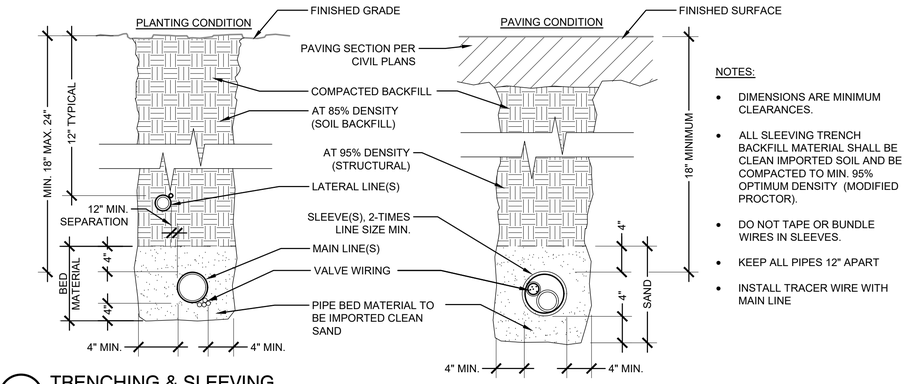

2 TRENCHING & SLEEVING

NTS P-2024-MRL-103

NOTES:

- DIMENSIONS ARE MINIMUM CLEARANCES.
- ALL SLEEVING TRENCH BACKFILL MATERIAL SHALL BE CLEAN IMPORTED SOIL AND BE COMPACTED TO MIN. 95% OPTIMUM DENSITY (MODIFIED PROCTOR).
- DO NOT TAPE OR BUNDLE WIRES IN SLEEVES.
- KEEP ALL PIPES 12" APART
- INSTALL TRACER WIRE WITH MAIN LINE

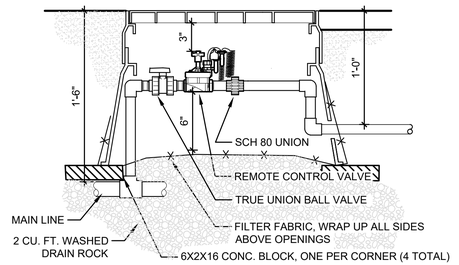

NOTES:

1. USE VALVE BOX W EXTENSIONS. SET 2" ABOVE GRADE IN SHRUBS, FLUSH IN TURF
2. USE TEFLON TAPE FOR ALL THREADED FITTINGS, NO PIPE DOPE
3. KEEP MIN. 3" CLEARANCE AROUND VALVE ON ALL SIDES.
4. LEAVE EXTRA 30" CONTROL WIRE COILED INSIDE VALVE BOX
5. USE DBR WATERPROOF CONNECTORS

3 REMOTE CONTROL VALVE

1 1/2" = 1'-0"

811 Know what's below. Call before you dig.

AHBL
TACOMA · SEATTLE · SPOKANE · TRI-CITIES
2215 North 30th Street, Suite 300 Tacoma, WA 98403
253.383.2422 TEL 253.383.2572 FAX www.ahbl.com WEB

Project Title:

MIRROR LAKE ELEMENTARY SCHOOL FIELD RENOVATION

Client:

FEDERAL WAY PUBLIC SCHOOL
33330 8TH AVENUE SOUTH
FEDERAL WA, WA 98003

Project No.

2240123.40

Issue Set & Date:

BID SET

APRIL 11, 2025

STATE OF WASHINGTON · CRAIG R. SKIPTON · NO. 21871 · EXP. 03/05/2027 · LANDSCAPE ARCHITECT

04/11/2025

NOTICE
ALTERATION OF THIS DOCUMENT SHALL INVALIDATE THE PROFESSIONAL SEAL AND SIGNATURE. PUBLICATION OF THIS DOCUMENT DOES NOT DEGRADE FROM RESERVED COPYRIGHT RIGHTS IN IT. THIS DOCUMENT IS FOR USE ONLY FOR THE PROJECT IDENTIFIED IN THE TITLE BLOCK AND IS NOT TO BE USED FOR REPAIR, REMODEL OR ADDITION TO THAT PROJECT OR FOR ANY OTHER PROJECT.

4
3
2
1

Revisions:

Sheet Title:

IRRIGATION DETAILS

Designed by:	Drawn by:	Checked by:
DR	DR	CS

Sheet No.

L3.1

13 of 13 Sheets

FEDERAL WAY
PUBLIC SCHOOLS
Each Scholar: A voice. A dream. A **BRIGHT** future.

AGREEMENT

BETWEEN
FEDERAL WAY PUBLIC SCHOOLS
AND CONTRACTOR

PUBLIC WORKS CONTRACT

This AGREEMENT is made as of September 1, 2024, by and between:

The "School District":	**Federal Way Public Schools No. 210** Maintenance and Operations 1211 S. 332nd Street Federal Way, Washington 98003 Attn: FWPS 253-945-5930
and the "Contractor":	Test Contractor 1234 ABC Road Federal Way, WA 98003
A general description of the Project is:	Sample Project Contract - <$350,000
Contract Sum for the Work:	$150,000.00 plus sales tax

Retainage:

Per RCW 60.28.011, the School District will retain 5% of the Contract Sum. Retainage will be released upon approval of the Department of Revenue, the Employment Security Department, Labor and Industries and as required by statute and this Agreement. Per RCW 39.08.010(3), the Contractor may choose to have 10% retainage withheld in lieu of providing Payment and Performance Bonds (only allowable for projects $150,000 and less).

Payment and Performance Bond:

Payment and Performance Bonds are required for this project. Per RCW 39.08.010(3), the Contractor may choose to have 10% retainage withheld in lieu of providing Payment and Performance Bonds (only allowable for projects $150,000 and less).

Date of Final Completion of the Work: August 31, 2025

Liquidated Damages, if any: $1.00 per calendar day

The School District and Contractor agree as set forth herein and below

ARTICLE 1 - THE WORK. The Contractor shall fully execute and complete the entire Work described in the Contract Documents.

ARTICLE 2 - COMMENCEMENT AND SUBSTANTIAL AND FINAL COMPLETION

2.1 The date of commencement of the Work (the date from which the Contract Time is measured) is the date of the School District's delivery of its Purchase Order to Contractor. Contractor shall not commence performance of any Work under this Agreement until Contractor's receipt of an executed Purchase Order from the School District. The School District's Purchase Order must be issued to the Contractor in order for the School District to be fully obligated to this Agreement.

SAMPLE

2.2 The Contractor shall achieve Final Completion of the entire Work as specified above, subject to adjustments of the Contract Time as provided in the Contract Documents.

ARTICLE 3 - THE CONTRACT SUM. The School District shall pay the Contractor for the Contractor's performance of the Contract the Contract Sum stated above, subject to additions and deductions as provided in the Contract Documents. Sales tax is not included in and shall be added to the Contract Sum.

ARTICLE 4 - PAYMENT. The School District will pay the Contractor within thirty days of receipt of approved monthly Applications for Payment in accordance with the Agreement. The School District will make final payment after Final Completion, within thirty days of receipt of a final Application for Payment, provided that an approved "Statement of Intent to Pay Prevailing Wages," an approved "Affidavit of Wages Paid," and all releases have been submitted. Retention shall be paid per statute. Contractor and each subcontractor shall electronically file a Statement of Intent to Pay Prevailing Wages with the Washington State Department of Labor and Industries complying with the requirements of RCW 39.12.040. Payments provided by authorities providing grant monies shall also be subject to those authorities' requirements.

ARTICLE 5 - ENUMERATION OF CONTRACT DOCUMENTS. The Contract Documents include this executed Agreement, including the attached General Conditions, any Supplementary and other Conditions of the Agreement, any Specifications, any Drawings, any Addenda, and the prevailing wage rates. In the event of a conflict or discrepancy among or in the Contract Documents, interpretation shall be governed in the following order of priority:

1. This Agreement
2. The School District's Purchase Order
3. Any Special or Supplemental Conditions
4. The attached General Conditions
5. Scope of Work
6. Specifications
7. Drawings
8. Any other documents forming part of the Contract Documents.

This Agreement entered into as of the day and year first written above.

FEDERAL WAY PUBLIC SCHOOLS No. 210 Test Contractor

By _____ By _____

(Signature) *(Signature)*

_____ _____

(Printed name and title)

SAMPLE

ARTICLE 6 - THE CONTRACT DOCUMENTS

6.1 The intent of the Contract Documents is to include all items necessary for the proper execution and completion of the Work by the Contractor. The Contractor's performance is required to the extent consistent with the Contract Documents and reasonably inferable from them as being necessary to produce the intended results.

6.2 "Work" means the construction and services required by the Contract Documents and includes all labor, materials, equipment and services to be provided by the Contractor to fulfill the Contractor's obligations.

ARTICLE 7 - ADMINISTRATION OF THE AGREEMENT

7.1 The School District and/or A/E will provide administration of the Agreement. Neither any Project Manager or A/E representatives are authorized to revoke, alter, relax or release any requirements of the Contract Documents, to issue instructions contrary to the Contract Documents, or to approve or accept any portion of the Work not executed in accordance with the Contract Documents. Any such changes may only be effective if in writing and by the School District's representative listed on the front page of this Agreement.

7.2 The School District or A/E may reject Work that, in its opinion, does not conform to the Contract Documents. The School District or A/E may visit the site at intervals it considers appropriate to the stage of the Work to become generally familiar with the progress and quality of the completed Work. However, neither the School District nor the A/E will be required to make exhaustive or continuous on-site inspections to check quality or quantity of the Work.

7.3 The A/E and School District will not have control over or charge of and will not be responsible for means, methods, techniques, sequences or procedures, or for safety precautions and programs in connection with the Work, since these are solely the Contractor's responsibility.

7.4 The A/E or School District will issue such written clarifications or interpretations as to matters of design interpretation (in the form of Drawings or otherwise) as the A/E or School District may determine necessary, which shall be consistent with or reasonably inferable from the overall intent of the Contract Documents.

7.5 The A/E or School District may authorize minor variations in the Work from the requirements of the Contract Documents which do not involve an adjustment in the Contract Sum or the Contract Time and are consistent with the overall intent of the Contract Documents. These will be accomplished by a Minor Change in the Work instrument and will be binding on the Contractor, who shall perform the Work involved promptly.

7.6 If the Contractor believes that a written clarification or interpretation, a Construction Change Directive or any interpretation justifies an increase in the Contract Sum or an extension of the Contract Time, and the parties are unable to agree to its amount or extent, the Contractor may make a Claim therefor as provided in this Agreement, as soon as possible and no later than fourteen days after receipt of the clarification, interpretation, or Construction Change Directive.

SAMPLE

7.7 The A/E and School District will also have authority to require special inspection or testing of the Work, whether or not the Work is fabricated, installed or completed.

7.8 Neither the A/E's or School District's authority to act under this Article 8 nor elsewhere in the Contract Documents, nor any decision made by the A/E or School District in good faith either to exercise or not exercise such authority shall give rise to any duty or responsibility of the A/E or the School District to the Contractor, any Subcontractor of any tier, or any other person or organization performing any of the Work, or to any surety for any of them.

ARTICLE 8 - THE CONTRACTOR

8.1 Using its best skill and attention, the Contractor shall perform, supervise and direct the Work. The Contractor shall provide and pay for all labor, materials, equipment, tools and machinery, transportation, and other facilities and services necessary for the proper execution and completion of the Work.

8.2 **Safety Precautions and Programs.** The Contractor shall be solely responsible for initiating, maintaining, and supervising all safety precautions and programs in connection with the performance of the Contract. The Contractor shall have the right to control and shall be solely and completely responsible for conditions of the Work site, including safety of all persons and property, during performance of the Work. The Contractor shall maintain the Work site and perform the Work in a manner that meets statutory and common-law requirements for the provision of a safe place to work. This requirement shall apply continuously and not be limited to working hours.

8.3 **Subcontractors.** A "Subcontractor" is a person or entity that has a direct contract with the Contractor to perform a portion of the Work at the Site or to supply materials or equipment. A "Subcontractor of any tier" includes Subcontractors and all lower level subcontractors and suppliers. As soon as practicable and no later than five days after award of the Agreement, the Contractor shall confirm in writing to the School District the names of the Subcontractors for each portion of the Work.

8.4 **Compliance with Law.** The Contractor, its employees, Subcontractors of any tier and representatives, shall comply with all applicable laws, ordinances, statutes, rules and regulations, federal and state, county and municipal, and particularly those relating to wages, hours, fair employment practices, non-discrimination, safety and working conditions.

8.4.1 Hours of Labor. The Contractor shall comply with all applicable provisions of RCW 49.28.

8.4.2 Workers' Right to Know. The Contractor shall comply with RCW 49.70 and WAC 296-62-054 regarding workplace surveys and material safety data sheets for "hazardous" chemicals at the Site.

8.5 **Nondiscrimination.**

8.5.1 Nondiscrimination Requirement. During the term of this Contract, Contractor, including any subcontractor, shall not discriminate on the bases enumerated at RCW 49.60.530(3). In addition, Contractor, including any subcontractor, shall give written notice of this nondiscrimination requirement to any labor organizations with which Contractor, or subcontractor, has a collective bargaining or other agreement.

SAMPLE

8.5.2 Obligation to Cooperate. Contractor, including any subcontractor, shall cooperate and comply with any Washington state agency investigation regarding any allegation that Contractor, including any subcontractor, has engaged in discrimination prohibited by this Contract pursuant to RCW 49.60.530(3).

8.5.3 Default. Notwithstanding any provision to the contrary, Agency may suspend Contractor, including any subcontractor, upon notice of a failure to participate and cooperate with any state agency investigation into alleged discrimination prohibited by this Contract, pursuant to RCW 49.60.530(3). Any such suspension will remain in place until Agency receives notification that Contractor, including any subcontractor, is cooperating with the investigating state agency. In the event Contractor, or subcontractor, is determined to have engaged in discrimination identified at RCW 49.60.530(3), Agency may terminate this Contract in whole or in part, and Contractor, subcontractor, or both, may be referred for debarment as provided in RCW 39.26.200. Contractor or subcontractor may be given a reasonable time in which to cure this noncompliance, including implementing conditions consistent with any court-ordered injunctive relief or settlement agreement.

8.5.4 Remedies for Breach. Notwithstanding any provision to the contrary, in the event of Contract termination or suspension for engaging in discrimination, Contractor, subcontractor, or both, shall be liable for contract damages as authorized by law including, but not limited to, any cost difference between the original contract and the replacement or cover contract and all administrative costs directly related to the replacement contract, which damages are distinct from any penalties imposed under Chapter 49.60, RCW. Agency shall have the right to deduct from any monies due to Contractor or subcontractor, or that thereafter become due, an amount for damages Contractor or subcontractor will owe Agency for default under this provision.

8.6 **Workers.** The Contractor shall enforce strict discipline and good order among the Contractor's employees and other persons carrying out the Work. The Contractor shall not permit employment of unfit persons or persons not skilled in tasks assigned to them. The Contractor shall be responsible to the School District for the acts and omissions of the Contractor's employees, Subcontractors of any tier and their agents and employees, and other persons performing portions of the Work under a contract with the Contractor.

8.6.1 Background Checks. In the event Contractor or any of their agents or employees will have regularly scheduled unsupervised access to children, the District will conduct a record check through the Washington State Patrol criminal investigation system under RCW 43.43.830-43.43.834, 10.97.030 and 10.97.050, and through the Federal Bureau of Investigation before allowing the individual onto the Project site. The record check shall include a fingerprint check using a complete Washington State criminal identification fingerprint card. This record check shall be valid for two (2) years. The Contractor shall pay for the requirements set forth in this paragraph.

SAMPLE

8.6.2 Crimes Against Children. In accordance with RCW 28A.400.330, contractor shall prohibit any employee of the Contractor from working at a public school who has or may have contact with children at a public school during the course of his or her employment and who has pled guilty to or been convicted of any felony crime involving the physical neglect of a child under chapter 9A.42 RCW, the physical injury or death of a child under chapter 9A.32 or 9A.36 RCW (except motor vehicle violations under chapter 46.61 RCW), sexual exploitation of a child under chapter 9.68A RCW, sexual offenses under chapter 9A.44 RCW where a minor is the victim, promoting prostitution of a minor under chapter 9A.88 RCW, the sale or purchase of a minor child under RCW 9A.64.030, or violation of similar laws of another jurisdiction. Any failure to comply with this section shall be grounds for the school district immediately terminating the contract for cause.

8.6.3 Subcontractor Compliance. Contractor shall require any of its Subcontractors to fully comply with the requirements of this section.

8.7 **Warranty.** The Contractor warrants to the Owner and Architect that materials and equipment furnished under the Contract will be of good quality and new unless the Contract Documents require or explicitly permit otherwise. The Contractor further warrants that the Work will be performed in a skillful and workmanlike manner, will conform to the requirements of the Contract Documents and will be free from defects, except for those inherent in the quality of the Work the Contract Documents require or explicitly permit. Work, materials, or equipment not conforming to these requirements, including substitutions not properly approved and authorized, is considered defective.

8.8 **Submittals.** The Contractor shall review, approve and submit to the School District with reasonable promptness Shop Drawings, Product Data, Samples and similar submittals required by the Contract Documents. The Work shall be in accordance with approved submittals.

8.9 **Progress Schedule.** Within five days of execution of this Agreement, the Contractor shall submit a schedule of the Work to the School District.

8.10 **Clean-Up.** The Contractor shall keep the premises and surrounding area free from accumulation of waste materials caused by operations under the Agreement.

8.11 **Indemnification.** Subject to the following conditions, the Contractor shall defend, indemnify, and hold harmless the School District, any listed A/E, and their respective agents, employees, consultants, successors and assigns ("Indemnified Parties") from and against all claims, damages, losses and expenses, direct and indirect, or consequential, including costs and attorneys' fees incurred on such claims and in proving the right to indemnification, arising out of or resulting from any act or omission of the Contractor, its agents, any of its Subcontractors of any tier, and anyone directly or indirectly employed by the Contractor or Subcontractors of any tier ("Indemnitor"). The Contractor will fully indemnify the Indemnified Parties for the sole negligence of the Indemnitor. The Contractor will indemnify the Indemnified Parties for the concurrent negligence of the Indemnitor to the extent of the Indemnitor's negligence. The Contractor has no duty to indemnify the Indemnified Parties for the sole negligence of the Indemnified Parties. The Contractor agrees to being added by the School District as a party to any arbitration or litigation with third parties in which the School District alleges indemnification or contribution from an Indemnitor. The Contractor agrees that all of its Subcontractors of any tier will, in the subcontracts, similarly stipulate; in the event any does not, the Contractor shall be liable in place of such Subcontractor(s). PROVIDED FURTHER that the Contractor agrees to waive its immunity under the Washington State Industrial Act (Title 51 RCW) as to the

SAMPLE

Indemnified Parties only. To the extent a court or arbitrator strikes any portion of this indemnification provision for any reason, all remaining provisions shall retain their vitality and effect.

8.12 **Records.** The Contractor shall maintain and preserve books, ledgers, records, estimates, correspondence, logs, schedules, electronic data and other documents relating or pertaining to the costs and/or performance of the Agreement ("records"). Within seven days of the School District's request, the Contractor shall make available at the Contractor's office all records for inspection, audit and reproduction (including electronic reproduction) by the School District's representatives. These requirements apply to each Subcontractor of any tier. The Contractor agrees, on behalf of itself and Subcontractors of any tier, that the invocation of any rights under RCW 42.56 shall initiate an equivalent right to disclosures from the Contractor and Subcontractors of any tier for the benefit of the School District.

ARTICLE 9 - CONSTRUCTION NOT BY THE CONTRACTOR

9.1 The School District may perform construction or operations related to the Project with its own forces and to award separate contracts in connection with other portions of the Project.

9.2 The Contractor shall afford the School District and separate contractors reasonable opportunity for the introduction and storage of their materials and equipment and performance of their activities, and shall connect and coordinate the Contractor's construction and operations as required by the Contract Documents.

ARTICLE 10 - CHANGES IN THE WORK

10.1 The School District, without invalidating the Agreement, may order changes in the Work consisting of additions, deletions or modifications ("Changes"), and the Contract Sum and Contract Time will be adjusted accordingly. Changes in the Work, the Contract Sum and/or the Contract Time shall be authorized only in writing, through a Change Order or a Construction Change Directive.

10.1.1 Change Orders. A Change Order is a written instrument signed by the School District and the Contractor stating their agreement upon a change in the Work, the itemized amount of any adjustment in the Contract Sum as defined in this Article, and the extent of any adjustment in the Contract Time.

10.1.2 Construction Change Directives. A Construction Change Directive is a written order prepared and signed by the School District that directs a change in the Work and states a proposed basis for any adjustment in the Contract Sum and/or Contract Time. It is used in the absence of total agreement on the terms of a Change Order. The Contractor shall promptly proceed with the change in the Work described in the Construction Change Directive. As soon as possible, and within seven days of receipt, the Contractor shall advise the School District in writing of the Contractor's agreement or disagreement with the cost or the method, if any, provided in the Construction Change Directive for determining the proposed adjustment in the Contract Sum or Contract Time.

10.2 If the parties cannot agree on the cost or credit to the School District from a Change in the Work, the Contractor shall keep and present an itemized accounting with supporting data. The total cost of any Change or Claim shall be limited to the reasonable value of the direct labor costs, material costs, construction equipment usage costs for the actual time equipment appropriate for the Work is used solely on the Change in the Work, the cost of any change in

SAMPLE

insurance. Subcontractor costs, and a Fee for all combined overhead and profit, including impact costs of any kind, limited to 12% of the cost for any materials or work performed by a Contractor's or Subcontractor's own forces, and 7% on amounts due to lower-tier Subcontractors

10.3 **Claims for Concealed or Unknown Conditions.** If conditions unknown to the Contractor are encountered at the site that are (1) concealed physical conditions that differ materially from those indicated in the Contract Documents or (2) unknown physical conditions of an unusual nature that differ materially from those ordinarily found and generally recognized as inherent in activities of the character provided for in the Contract Documents, then the Contractor shall give written notice to the School District promptly before conditions are disturbed and in no event later than seven days after the first observance on the conditions. Any Claim arising from such condition shall be made in accordance with the dispute resolution procedures of Article 19.

ARTICLE 11 - TIME

11.1 If, through no fault of the Contractor or a Subcontractor of any tier, the Work is delayed by changes ordered in the Work, unanticipated general labor disputes, fire, unforeseeable delay in deliveries, abnormal adverse weather conditions not reasonably anticipatable, unavoidable casualties or any other causes beyond the Contractor's control, then the Contract Time shall be extended by Change Order to the extent the critical path is affected. The Contractor is entitled to damages for delay only if the School District's actions or inactions were the actual, substantial cause of the delay and if the Contractor could not have reasonably avoided the delay by the exercise of due diligence. The Contractor is not entitled to an increase in the Contract Time or Contract Sum if a delay was caused by the Contractor, a Subcontractor of any tier, or anyone acting on behalf of any of them.

11.2 The timely completion of this Project is essential to the School District. The School District will incur serious and substantial damages if Substantial Completion of the Work does not occur within the Contract Time; however, it may be difficult if not impossible to determine the amount of such damages. Consequently, the Agreement may include provisions for liquidated damages, which are not affected by partial completion, occupancy, or beneficial occupancy. If this Agreement does not include liquidated damages, then the School District may pursue its actual damages resulting from delay.

ARTICLE 12 - PAYMENTS AND COMPLETION

12.1 **Payments.** Payment shall be made as provided in this Agreement. If progress payments are specified, they will be made as specified in the Specifications Section, Application for Payment, and, pursuant to RCW 60.28, the School District will reserve five percent (5%) from the moneys the Contractor earns on estimates during the progress of the Work, to be retained as a trust fund for the protection and payment of the claims of any person arising under the Agreement and the state with respect to taxes imposed pursuant to Title 82 RCW that may be due from the Contractor. The moneys reserved may, at the option of the Contractor, be (1) retained in a fund by the School District until forty-five days following Final Acceptance; or (2) deposited by the School District in an interest-bearing account in a bank, mutual savings bank, or savings and loan association, not subject to withdrawal until forty-five days following Final Acceptance, with interest to the Contractor; or (3) placed in escrow with a bank or trust company until forty-five days following the Final Acceptance, by the School District's joint check to the bank or trust company and the Contractor, to be converted into bonds and securities chosen by the Contractor, approved by the School District, and held in escrow, with interest on the bonds and securities paid to the Contractor as it accrues. If moneys are retained from the Contractor, it may retain payment of not more than five percent (5%) from the moneys earned by any Subcontractor, provided that the Contractor pays interest to

SAMPLE

the Subcontractor at the same interest rate it receives from its reserved funds. If the 10% retainage option is selected on the cover page of this Agreement, then 10% retainage instead of 5% retainage shall be withheld, and the requirements of RCW 39.08.010(3) must also be followed for the release of retainage.

12.2 **Prevailing Wages.** Pursuant to RCW 39.12, no worker, laborer, or mechanic employed in the performance of any part of this Agreement shall be paid less than the "prevailing rate of wage" (in effect as of the date that bids are due) as determined by the Industrial Statistician of the Department of Labor and Industries, ESAC Division, PO Box 44540, Olympia WA 98504-4540, Telephone (360) 902 5335. The schedule of the prevailing wage rates for the locality or localities where this Work will be performed is attached and made a part of this Agreement by reference as though fully set forth herein; if not attached, then the applicable prevailing wages are determined as of the Bid Date or as otherwise prescribed under WAC 296-127-011 for the county in which the Project is located and are available at http://www.lni.wa.gov/TradesLicensing/PrevWage/WageRates/default.asp. A copy is available for viewing at the School District's office, and a hard copy will be mailed upon request. To the extent that there is any discrepancy between the attached or provided schedule of prevailing wage rates and the published rates as are applicable under WAC 296-127-011, or if no schedule is attached, then the applicable published rates shall apply at no increase to the Contract Sum. The Contractor shall provide the respective Subcontractors with a schedule of the applicable prevailing wage rates. The Industrial Statistician will answer questions relating to prevailing wage data upon request.

12.3 **Withheld Payment.** Payment may be withheld on account of (1) defective Work not remedied, (2) claims filed by third parties, (3) failure of the Contractor to make payments properly for labor, materials or equipment, (4) damage to the School District or another contractor, (5) reasonable evidence that the unpaid balance would not be adequate to cover delay damages for which the Contractor is responsible, (6) failure to carry out the Work in accordance with the Contract Documents, or (7) liquidated damages.

12.4 **Substantial Completion.**

12.4.1 When the Contractor believes that the Work is Substantially Complete, it shall notify the School District in writing. When the School District agrees, it will issue a Certificate of Substantial Completion. Substantial Completion is the stage in the progress of the Work when the construction is sufficiently complete, in accordance with the Contract Documents, so the School District can fully utilize the Work (or a designated portion) for its intended use. All Work other than incidental corrective or punch list work and final cleaning shall have been completed. The Work is not Substantially Complete if all systems and parts affected by the Work are not usable. The fact that the School District may use or occupy the Work or designated portion thereof does not indicate that the Work is Substantially Complete, nor does such occupation toll or change any liquidated damages due the School District.

12.4.2 Immediately before any occupancy, the School District will schedule an inspection tour of the area to be occupied. Representatives of the School District and Contractor will jointly tour the area and record items still remaining to be finished or corrected. The Contractor shall supply and install any items missed by the inspection but required or necessary for Final Completion as a part of the Contract Sum.

12.5 **Final Payment.** Pursuant to RCW 60.28, completion of the contract Work shall occur and final payment shall become due after the Contractor has been notified that the Work has been concluded and submits the items listed below to the School

SAMPLE

District, any required occupancy permit has been issued and the School District's Board of Directors formally accepts the Project.

12.5.1 An affidavit that all payrolls, Subcontractors, bills for materials and equipment, and other indebtedness connected with the Work for which the School District might be responsible or encumbered, have been paid or otherwise satisfied.

12.5.2 A certificate evidencing that insurance required by the Contract Documents to remain in force after final payment is currently in effect and will not be canceled or allowed to expire until at least thirty days' prior written notice has been given to the School District.

12.5.3 Other data establishing payment or satisfaction of or protection (satisfactory to the School District) against all obligations, such as receipts, releases and waivers of liens arising out of the Agreement, satisfactorily demonstrating to the School District that the claims of Subcontractors and laborers who have filed claims have been paid.

12.5.4 Pursuant to RCW 39.12.040, required "Affidavits of Wages Paid."

12.5.5 Pursuant to RCW 50.24, a certificate from the Department of Employment Security. A certified statement that the Contractor has closed all necessary permits or otherwise met the requirements of all governing jurisdictions related to this Project.

12.5.6 All warranties, guarantees, certificates, spare parts, specified excess material, and other documents or items required by the Contract Documents.

12.5.7 A legible hard copy of the as-built drawings.

12.5.8 Original permits and permit documents.

If any Subcontractor of any tier refuses to furnish a release or waiver required by the School District, the School District may retain such amount as to defray the cost of foreclosing the liens of such claims and to pay attorneys' fees, the total of which shall be no less than 150% of the claimed amount. If any such lien remains unsatisfied after all payments are made, the Contractor shall refund to the School District all moneys that the School District may be compelled to pay in discharging such lien, including all costs and reasonable attorneys' fees.

12.6 **Waivers.**

12.6.1 Final Payment by School District. The making of final payment shall constitute a waiver of claims by the School District except those arising from (1) claims or encumbrances arising out of the Agreement and unsettled; (2) failure of the Work to comply with the requirements of the Contract Documents; or (3) terms of warranties required by the Contract Documents or law.

12.6.2 Final Payment to Contractor. Acceptance of final payment by the Contractor shall constitute a waiver of Claims except those previously made in writing and identified in writing as unsettled on the final Application for Payment.

12.6.3 Change Orders. The execution of a Change Order shall constitute a waiver of Claims by the Contractor arising out of the Work to be performed or deleted pursuant to the Change Order, except as specifically described in the Change Order. If the Contractor adds a reservation of rights that has not been initialed by the School District,

SAMPLE

any amounts previously agreed to shall be considered disputed and not payable.

12.7 **Warranty of Title**. The Contractor warrants and guarantees that title to Work, materials and equipment covered by payment, whether incorporated in the Project or not, will pass to the School District no later than the time of payment, free and clear of liens.

ARTICLE 13 - PROTECTION OF PERSONS AND PROPERTY

13.1 The Contractor shall have the right to control and shall be solely responsible, and the School District shall not have responsibility, for all aspects of safety. The Contractor shall take reasonable precautions for safety on site, and shall provide reasonable protection to prevent damage, injury or loss.

13.2 The Contractor shall not be required to perform Work relating to asbestos or polychlorinated biphenyl ("PCB"), unless identified as the Contractor's responsibility in the Contract Documents.

ARTICLE 14 - INSURANCE AND BONDS

14.1 **Contractor's Liability Insurance.** The Contractor shall purchase from and maintain during the life of this Agreement, at its own cost in a company or companies admitted to do business in the State of Washington, possessing a Best's policy holder's rating of A- or better and a financial rating of no less than VIII, and reasonably acceptable to the School District, an occurrence-based Commercial General Liability Insurance Policy which shall provide bodily injury and property damage liability on the Contractor's operations, including its Subcontractors of any tier; owned, non-owned and hired vehicles; and on work the Contractor may subcontract or sublet to others; and on the indemnity provisions of this Agreement. This insurance will name the School District, the A/E, and their employees as additional insureds per Additional Insured Owner's (Form B) for Work performed under this Agreement. The Contractor's policy shall be designated primary coverage for both defense and indemnity, and any School District policies excess. Such limits of liability insurance shall have per project general aggregate provisions and shall not be less than the following:

Commercial General Liability
Each Occurrence $1,000,000
Damage to Rented Premises $100,000
Medical Expenditures.....$5,000
Personal and Advertising Injury $1,000,000
General Aggregate.....$2,000,000
Products-Completed Operations Aggregate $2,000,000

Automobile Liability (Any Owned) $1,000,000

Excess/Umbrella Liability Coverage – Each Occurrence $2,000,000

Workers' Compensation.....Statutory

Employer's Liability
Each Accident $1,000,000
Disease – Each Employee $1,000,000
Disease – Policy Limit $1,000,000

14.1.1 The insurance described above shall include coverage for underground, collapse and explosion exposures.

SAMPLE

14.1.2 Before the School District executes the Agreement, the Contractor shall furnish the School District with Certificates of Insurance, in duplicate, as evidence of all insurance required by the Contract Documents. All policies and certificates must be signed copies. Coverages afforded under the policies shall not be materially altered, allowed to expire or canceled without the Contractor first giving 45 days written notice by certified mail to the School District. The Contractor shall furnish to the School District copies of any subsequently issued endorsements amending, modifying, altering, or restricting coverage of limits.

14.1.3 Coverage shall be maintained without interruption from the date of commencement of the Work until the date of Final Acceptance, except for any coverage required to be maintained after Final Acceptance. Completed operations coverage, including additional insured completed operations, shall remain in force for three years after Final Acceptance.

14.1.4 If the School District is damaged by the failure of the Contractor to maintain any of the above insurance or to so notify the School District, then the Contractor shall bear all costs properly attributable thereto. THE SCHOOL DISTRICT MAY WITHHOLD PAYMENT PENDING RECEIPT OF ALL CERTIFICATES OF INSURANCE. Failure to withhold payment shall not constitute a waiver.

14.1.5 The School District's specification or approval of the insurance in this Agreement or of its amount shall not relieve or decrease the liability of the Contractor under the Contract Documents or otherwise. Coverages are the minimum to be provided and are not limitations of liability under the Contract, indemnification, or applicable law provisions. The Contractor may, at its expense, purchase larger coverage amounts or additional insurance.

14.2 **Property Insurance.** The School District shall include this project in its existing property insurance coverage for loss or damage to the property in the course of construction. This may be a standard property policy and is not necessarily a builder's risk policy. The Contractor shall be responsible for securing property insurance for its own equipment. This property insurance shall be on an "all-risk" or equivalent policy form and shall include, but not be limited to, coverage for fire and extended coverage, theft, vandalism, malicious mischief, collapse and windstorm. Any deductible shall be the sole responsibility of the Contractor.

14.3 **Payment and Performance Bond.** If the Contractor is required to secure a payment and performance bond (see cover page), it shall be in the amount of the Contract Sum plus sales tax; it shall comply with RCW 39.08 in a form and with a surety approved by the School District; and it shall be submitted to the School District before the School District executes the Agreement.

ARTICLE 15 - CORRECTION OF WORK

15.1 If, within one year after the later of the date of Substantial Completion of the Work or designated portion thereof or after the date for commencement of warranties established under the Contract Documents, or by terms of any applicable special warranty required by the Contract Documents, any of the Work is found to be not in accordance with the requirements of the Contract Documents, the Contractor shall correct it according to the requirements of this Section with no increase to the reimbursable Cost of the Work (i.e. at no cost to the Owner) promptly after receipt of notice from the Owner to do so, unless the Owner has previously given the Contractor a written acceptance of such condition.

15.2 If the Owner prefers to accept Work that is not in accordance with the requirements of the Contract Documents, the Owner may do so instead of requiring its removal

SAMPLE

and correction, in which case the Contract Sum will be reduced by the greater of the (1) cost of correction or (2) diminution of value of the Work that is not in accordance with the requirements of the Contract Documents. Such adjustment shall be effected whether or not final payment has been made.

15.3 Nothing in this Article shall establish a period of limitation with respect to other obligations that the Contractor might have under the Contract Documents.

ARTICLE 16 - MISCELLANEOUS PROVISIONS

16.1 **Applicable Law and Venue.** The Agreement shall be governed by the laws of the State of Washington, without regard to its choice of law provisions. The exclusive venue for any litigation regarding this Agreement shall be in Superior Court in the county in which the Project is located.

16.2 The Contractor shall comply with and give notices required by applicable laws, statues, ordinances, codes, rules and regulations, and lawful orders of public authorities applicable to performance of the Work.

16.3 The Contractor must submit its Wage Prevention Certification prior to the School District executing this Agreement.

ARTICLE 17 - TERMINATION OF THE CONTRACT

17.1 **Termination for Cause by Contractor.** If the School District fails to make payment for a period of sixty days through no fault of the Contractor, the Contractor may, upon seven additional days' written notice, terminate the Agreement and recover from the School District payment for all Work executed, in accordance with the Agreement.

17.2 **Termination for Cause by School District.** The School District may, upon seven days' written notice to the Contractor, terminate without prejudice the whole or any portion of the Work for cause, including but not limited to the Contractor's material breach of this Agreement; the Contractor's failure to prosecute the Work or any portion thereof with sufficient diligence to ensure the Substantial Completion of the Work within the Contract Time; the Contractor's material disregard of laws, ordinances, rules, regulations or orders of any public authority having jurisdiction; the Contractor's being adjudged bankrupt, making a general assignment for the benefit of its creditors, a receiver being appointed on account of the Contractor's insolvency; or the Contractor's failure to comply with RCW 28A.400.330 (generally, a worker having contact with children who has been found guilty of a felony crime involving children).

17.3 **Termination for Convenience by School District.** The School District may, at any time upon ten days' written notice to the Contractor, terminate without prejudice the whole or any portion of the Work for the convenience of the School District. The School District shall be liable to Contractor only for (1) the amount due under this Agreement for the Work properly performed prior to the termination and (2) other pre-approved costs, consistent with Paragraph 11.2, necessary and reasonably incurred in connection with the termination.

17.4 **Effects of Termination.**

17.4.1 The total sum to be paid to the Contractor under this Article shall not exceed the Contract Sum as reduced by the amount of payments otherwise made.

17.4.2 Unless the School District directs otherwise, after receipt of a Notice of Termination by the School District, the Contractor shall: promptly stop Work as specified in the Notice of Termination; place no further orders or subcontracts, except as necessary for completion of non-terminated

SAMPLE

Work; procure cancellation of all orders and subcontracts to the extent related to the performance of terminated Work; assign to the School District all of its right, title and interest under all orders and subcontracts; with the School District's approval, settle outstanding liabilities and claims arising out of the termination of orders and subcontracts not assigned to the School District; transfer title and deliver to the entity or entities designated by the School District the fabricated or un-fabricated parts, Work in process or completed, partially completed supplies and equipment, materials, tools, dies, jigs and other fixtures, supplies and other material produced as part of, or acquired in connection with the performance of, the Work terminated, and the completed or partially completed plans, drawings, information and other property related to the Work; take such action as may be necessary or directed by the School District to preserve and protect the Work and property related to this Project in the possession of the Contractor in which the School District has an interest; and continue performance only to the extent not terminated.

17.4.3 The damages and relief from termination under this Paragraph 18.4 shall be the Contractor's sole entitlement in the event of termination.

ARTICLE 18 - DISPUTE RESOLUTION

18.1 All claims, disputes and other matters in question of the Contractor arising out of, or relating to, the Contract Documents or the breach thereof ("Claims") shall be decided exclusively by the following dispute resolution procedure. The Contractor shall diligently carry on the Work and maintain the progress schedule during the dispute resolution procedure, unless the parties mutually agree in writing otherwise.

18.2 **Notice of Claim.** The Contractor shall submit notice of all Claims to the School District in writing within seven days of the event giving rise to them.

18.3 **Claim Submission.** Within fifteen days of the Notice of Claim, the Contractor shall provide the School District with a written Claim that includes a clear description of the Claim, all changes sought in cost and in time, and data supporting the Claim. Failure to timely file either the Notice of Claim to the Claim itself shall constitute a waiver of the Contractor's right to pursue the Claim.

18.4 **Mediation.** The Contractor may bring no Claim against the School District unless the Claim is first subject to mediation under the Construction Mediation Rules of the American Arbitration Association ("AAA"). To initiate the mediation process, the Contractor shall submit a written mediation request to the School District. If the parties are unable to agree upon a mediator within thirty days after the School District's receipt of the written request for mediation, either party may submit a request for mediation to the AAA. Other parties in interest, such as Subcontractors, shall also attend the mediation session. All unresolved Claims in the Project shall be considered at a single mediation session that shall occur prior to Final Acceptance by the School District.

18.5 **Litigation.** The Contractor may not bring litigation on a Claim unless it has been properly addressed in the above dispute resolution procedure and the Contractor must also file its lawsuit within 120 days after the Date of Substantial Completion. The pendency of mediation shall toll these filing requirements.

End of Section

SAMPLE

ACORD®

CERTIFICATE OF LIABILITY INSURANCE

DATE (MM/DD/YYYY)

THIS CERTIFICATE IS ISSUED AS A MATTER OF INFORMATION ONLY AND CONFERS NO RIGHTS UPON THE CERTIFICATE HOLDER. THIS CERTIFICATE DOES NOT AFFIRMATIVELY OR NEGATIVELY AMEND, EXTEND OR ALTER THE COVERAGE AFFORDED BY THE POLICIES BELOW. THIS CERTIFICATE OF INSURANCE DOES NOT CONSTITUTE A CONTRACT BETWEEN THE ISSUING INSURER(S), AUTHORIZED REPRESENTATIVE OR PRODUCER, AND THE CERTIFICATE HOLDER.

IMPORTANT: If the certificate holder is an ADDITIONAL INSURED, the policy(ies) must be endorsed. If SUBROGATION IS WAIVED, subject to the terms and conditions of the policy, certain policies may require an endorsement. A statement on this certificate does not confer rights to the certificate holder in lieu of such endorsement(s).

PRODUCER	CONTACT NAME:	
Name/contact information of insurance agency/broker shall be indicated here.	PHONE (A/C, No, Ext):	FAX (A/C, No):
	E-MAIL ADDRESS:	
	INSURER(S) AFFORDING COVERAGE	NAIC #
	INSURER A :	
INSURED	INSURER B :	
Name/contact information of the vendor/ contractor shall be indicated here	INSURER C :	
	INSURER D :	
	INSURER E :	
	INSURER F :	

COVERAGES **CERTIFICATE NUMBER:** **REVISION NUMBER:**

THIS IS TO CERTIFY THAT THE POLICIES OF INSURANCE LISTED BELOW HAVE BEEN ISSUED TO THE INSURED NAMED ABOVE FOR THE POLICY PERIOD INDICATED. NOTWITHSTANDING ANY REQUIREMENT, TERM OR CONDITION OF ANY CONTRACT OR OTHER DOCUMENT WITH RESPECT TO WHICH THIS CERTIFICATE MAY BE ISSUED OR MAY PERTAIN, THE INSURANCE AFFORDED BY THE POLICIES DESCRIBED HEREIN IS SUBJECT TO ALL THE TERMS, EXCLUSIONS AND CONDITIONS OF SUCH POLICIES. LIMITS SHOWN MAY HAVE BEEN REDUCED BY PAID CLAIMS.

INSR LTR	TYPE OF INSURANCE	ADDL INSD	SUBR WVD	POLICY NUMBER	POLICY EFF (MM/DD/YYYY)	POLICY EXP (MM/DD/YYYY)	LIMITS	
A	X COMMERCIAL GENERAL LIABILITY CLAIMS-MADE [X] OCCUR GEN'L AGGREGATE LIMIT APPLIES PER: POLICY [X] PRO-JECT [ ] LOC OTHER:	X		Insurance Broker to complete this section			EACH OCCURRENCE DAMAGE TO RENTED PREMISES (Ea occurrence) MED EXP (Any one person) PERSONAL & ADV INJURY GENERAL AGGREGATE PRODUCTS - COMP/OP AGG $	$ 1,000,000.00 $ 100,000.00 $ 5,000.00 $ 1,000,000.00 $ 2,000,000.00 $ 2,000,000.00 $
A	AUTOMOBILE LIABILITY X ANY AUTO ALL OWNED AUTOS SCHEDULED AUTOS HIRED AUTOS NON-OWNED AUTOS	X		Insurance Broker to complete this section			COMBINED SINGLE LIMIT (Ea accident) BODILY INJURY (Per person) BODILY INJURY (Per accident) PROPERTY DAMAGE (Per accident) $	$ 1,000,000.00 $ $ $ $
A	X UMBRELLA LIAB [X] OCCUR X EXCESS LIAB [ ] CLAIMS-MADE DED [X] RETENTION $ 10,000	X		Insurance Broker to complete this section			EACH OCCURRENCE AGGREGATE $	$ 2,000,000.00 $ $
	WORKERS COMPENSATION AND EMPLOYERS' LIABILITY ANY PROPRIETOR/PARTNER/EXECUTIVE OFFICER/MEMBER EXCLUDED? Y / N [ ] **(Mandatory in NH)** If yes, describe under DESCRIPTION OF OPERATIONS below	N / A		Insurance Broker to complete this section			PER STATUTE [ ] OTH-ER E.L. EACH ACCIDENT E.L. DISEASE - EA EMPLOYEE E.L. DISEASE - POLICY LIMIT	$ 1,000,000.00 $ 1,000,000.00 $ 1,000,000.00
	Builder's Risk/Installation Floater	X		***Contractors:*** *For construction/remodeling projects over $35,000, please provide Builder's Risk coverage in an amount equal to project value*			Enter Contract Dollar Value Here	

DESCRIPTION OF OPERATIONS / LOCATIONS / VEHICLES (ACORD 101, Additional Remarks Schedule, may be attached if more space is required)

Shall be named here as additional insured on primary and non-contributory basis:
Federal Way Public Schools
33330 8th Avenue S
Federal Way, WA 98003

CERTIFICATE HOLDER

Shall be named here as:
Federal Way Public Schools
33330 8th Avenue S
Federal Way, WA 98003

CANCELLATION

SHOULD ANY OF THE ABOVE DESCRIBED POLICIES BE CANCELLED BEFORE THE EXPIRATION DATE THEREOF, NOTICE WILL BE DELIVERED IN ACCORDANCE WITH THE POLICY PROVISIONS.

AUTHORIZED REPRESENTATIVE

Sample

© 1988-2014 ACORD CORPORATION. All rights reserved.