THE LINE SHOWN ABOVE IS EXACTLY ONE INCH LONG AT THIS SHEETS ORIGINAL PAGE SIZE

TRACY UNIFIED SCHOOL DISTRICT

JACOBSON ES - TK CLASSROOM

1750 W KAVANAGH AVE.
TRACY, CA 95376

AGENCY APPROVAL:

IDENTIFICATION STAMP
DIV. OF THE STATE ARCHITECT
APP: 02-122976 INC:
REVIEWED FOR
SS ☑ FLS ☑ ACS ☑
DATE: 03/12/2025

GENERAL NOTES

1. CONSTRUCTION DOCUMENTS DESCRIBE THE PRODUCTS, SYSTEMS, QUANTITIES, CONFIGURATION, AND PERFORMANCE SPECIFICATIONS THAT DELIVER THE OVERALL DESIGN INTENT OF THE PROJECT.
2. THE CONSTRUCTION DOCUMENT DRAWINGS AND SPECIFICATIONS ARE COMPLEMENTARY, AND WHAT IS REQUIRED BY ONE SHALL BE AS BINDING AS IF REQUIRED BY BOTH.
3. PERFORMANCE BY THE CONSTRUCTION TEAM SHALL BE CONSISTENT WITH THE CONSTRUCTION DRAWINGS AND SPECIFICATIONS AS NECESSARY TO DELIVER THE INDICATED RESULTS OF THE DESIGN INTENT.
4. VERIFY ALL DIMENSIONS, LOCATIONS OF EXISTING UTILITIES, AND CONDITIONS ON THE JOB SITE PRIOR TO THE START OF WORK OR PORTIONS OF THE WORK. NOTIFY THE ARCHITECT IMMEDIATELY OF ANY DISCREPANCIES BETWEEN THE ACTUAL FIELD CONDITIONS AND THE CONSTRUCTION DOCUMENTS. EXISTING CONDITIONS ARE INDICATED AS A RESULT OF FIELD OBSERVATIONS, INFORMATION SHOWN ON AVAILABLE DOCUMENTS AND FIELD CONDITIONS AT THE TIME OF PREPARATION.
5. ALL MATERIALS AND WORKMANSHIP SHALL COMPLY WITH ALL GOVERNING CODES, ORDINANCES, REGULATIONS AND LAWS.
6. THE DESIGN ADEQUACY AND SAFETY OF ERECTION BRACING, SHORING, TEMPORARY SUPPORTS AND SCAFFOLDING IS THE SOLE RESPONSIBILITY OF THE CONTRACTOR.
7. WHERE ANY CONFLICT OCCURS BETWEEN THE REQUIREMENTS OF LAWS, CODES, ORDINANCES, RULES AND REGULATIONS, THE MOST STRINGENT SHALL GOVERN.
8. IN NO CASE SHALL WORKING DIMENSIONS BE SCALED FROM PLANS, SECTIONS OR DETAILS ON THE DRAWINGS.
9. DETAILS MARKED 'TYPICAL' SHALL APPLY IN ALL CASES UNLESS SPECIFICALLY NOTED OTHERWISE.
10. ENACT ALL MEASURES TO PROTECT AND SAFEGUARD ALL EXISTING ELEMENTS TO REMAIN FROM BEING DAMAGED. REPLACE OR REPAIR EXISTING ELEMENTS DAMAGED BY THE EXECUTION OF THIS CONTRACT TO EQUAL OR BETTER CONDITION.
11. PRIOR TO THE START OF WORK THE CONTRACTOR SHALL COORDINATE BETWEEN THE REQUIREMENTS OF ALL DISCIPLINES HEREIN AND BETWEEN THE REQUIREMENTS OF ALL DRAWINGS AND SPECIFICATIONS IN ORDER THAT ALL ITEMS SATISFACTORILY RELATE TO ONE ANOTHER. NOTIFY ARCHITECT IMMEDIATELY REGARDING ANY ITEMS THAT CANNOT BE COORDINATED.
12. CONTRACTOR SHALL EXCERCISE EXTREME CAUTION IN EXCAVATING AND TRENCHING ON THIS SITE TO AVOID EXISTING DUCTS, PIPING, CONDUIT, ETC. AND TO PREVENT HAZARD TO PERSONNEL AND/OR TO EXISTING UNDERGROUND UTILITIES OR STRUCTURES. THE CONTRACTOR SHALL IMMEDIATELY NOTIFY THE ARCHITECT SHOULD SUCH UNIDENTIFIED CONDITIONS BE DISCOVERED. THESE DRAWINGS AND SPECIFICATIONS DO NOT INCLUDE THE NECESSARY COMPONENTS FOR CONSTRUCTION SAFETY.
13. CUTTING, BORING, SAWCUTTING OR DRILLING THROUGH THE EXISTING OR NEW STRUCTURAL ELEMENTS SHALL NOT TO BE STARTED UNTIL THE DETAILS HAVE BEEN REVIEWED AND APPROVED BY THE ARCHITECT, AND STRUCTURAL ENGINEER OF RECORD.
14. ALL WORK SHALL CONFORM TO 2022 EDITION TITLE 24, CALIFORNIA CODE OF REGULATION (CCR)
15. THE LIMIT OF WORK LINE SHOWS THESE DRAWINGS IS AN APPROXIMATE LIMIT OF WORK ONLY. REFER TO CONSULTANT DRAWINGS FOR ADDITIONAL WORK, INCLUDING BUT NOT LIMITED TO INSTALLATION OF CONDUIT, MANHOLES, PULLBOXES, ETC WHICH ARE TO BE PART OF THIS WORK, ALTHOUGH OCCURING OUTSIDE OF SHOWN LIMIT OF WORK LINES.
16. FABRICATION AND INSTALLATION OF DEFERRED SUBMITTAL ITEMS SHALL NOT BE STARTED UNTIL CONTRACTOR'S DRAWINGS, SPECIFICATIONS, AND ENGINEERING CALCULATIONS FOR THE ACTUAL SYSTEMS TO BE INSTALLED HAVE BEEN ACCEPTED AND SIGNED BY THE ARCHITECT OR STRUCTURAL ENGINEER AND APPROVED BY THE DSA. LIST DEFERRED SUBMITTAL ITEMS FOR THIS PROJECT.
17. CHANGE TO THE APPROVED DRAWINGS AND SPECIFICATIONS SHALL BE MADE BY ADDENDA OR CONSTRUCTION CHANGE DOCUMENT (CCD) APPROVED BY DSA, AS REQUIRED BY SECTION 4-338, PART 1, TITLE 24 CCR.
18. A "DSA CERTIFIED CLASS 1 & RBIP PROJECT" (A) INSPECTOR EMPLOYED BY THE DISTRICT (OWNER) AND APPROVED BY DSA SHALL PROVIDE CONTINUOUS INSPECTION OF WORK. THE DUTIES OF THE INSPECTOR ARE DEFINED IN SECTION 4-342, PART 1, TITLE 24, CCR.
19. A DSA ACCEPTED TESTING LABORATORY DIRECTLY EMPLOYED BY THE DISTRICT (OWNER) SHALL CONDUCT ALL THE REQUIRED TESTS AND INSPECTIONS FOR THE PROJECT. THE REPORTS SHALL BE SUBMITTED TO ARCHITECT OF RECORD, STRUCTURAL ENGINEER OF RECORD, OWNER, INSPECTOR OR RECORD, AND THE DSA FIELD ENGINEER. THE REPORTS OF ANY FAILURES OF TESTS AND INSPECTIONS ARE TO BE SUBMITTED TO DSA DISTRICT STRUCTURAL ENGINEER.
20. GRADING PLANS, DRAINAGE IMPROVEMENTS, ROAD AND ACCESS REQUIREMENTS AND ENVIRONMENTAL HEALTH CONSIDERATIONS SHALL COMPLY WITH ALL LOCAL ORDINANCES.
21. ALL CONSTRUCTION AND DEMOLITION SHALL BE IN ACCORDANCE WITH CHAPTER 33 OF THE CBC AND CFC, AND THE WRITTEN SITE FIRE SAFETY PLAN.
22. THE INTENT OF THESE DRAWINGS AND SPECIFICATIONS IS THAT THE WORK OF THE ALTERATION, REHABILITATION, OR RECONSTRUCTION IS TO BE IN ACCORDANCE WITH TITLE 24, CCR. SHOULD ANY EXISTING CONDITIONS SUCH AS DETERIORATION OR NON-COMPLYING CONSTRUCTION BE DISCOVERED WHICH IS NOT COVERED BY THE DSA APPROVED CONTRACT DOCUMENTS WHEREIN THE FINISHED WORK WILL NOT COMPLY WITH TITLE 24, CCR,, A CONSTRUCTION CHANGE DOCUMENT (CCD), OR A SEPARATE SET OF PLANS AND SPECIFICATIONS DETAILING AND SPECIFYING THE REQUIRED WORK SHALL BE SUBMITTED TO AND APPROVED BY DSA BEFORE PROCEEDING WITH THE WORK. (SECTION 4-317(C), PART 1, TITLE 24, CCR)
23. CONTRACTOR IS TO REVIEW AND COMPLY WITH ALL REQUIREMENTS AND MITIGATION MEASURES SET FORTH IN BOTH THE ENVIRONMENTAL IMPACT REPORT (ADDENDUM TO THE ENVIRONMENTAL IMPACT REPORT | SCH NO. 2002071120) INCLUDING ATTACHED BIOLOGICAL RESOURCES TECHNICAL REPORT.
24. NO DUMPING OR PLACING OF ANY DIRT OR DEBRIS SHALL BE ALLOWED OUTSIDE OF THE CONTRACTORS LIMIT OF WORK AREA.
25. A CLASS 1 IN-PLANT INSPECTOR IS REQUIRED FOR THIS PROJECT

CODES

PARTIAL LIST OF APPLICABLE CODES

2022	CALIFORNIA ADMINISTRATIVE CODE, PART 1, TITLE 24 C.C.R.
2022	CALIFORNIA BUILDING CODE (CBC), PART 2, TITLE 24 C.C.R. (2021 INTERNATIONAL BUILDING CODE VOLUMES 1 & 2 AND 2022 CALIFORNIA AMENDMENTS)
2022	CALIFORNIA ELECTRICAL CODE (CEC), PART 3, TITLE 24 C.C.R. (2020 NATIONAL ELECTRICAL CODE AND 2022 CALIFORNIA AMENDMENTS)
2022	CALIFORNIA MECHANICAL CODE (CMC) PART 4, TITLE 24 C.C.R. (2021 UNIFORM MECHANICAL CODE AND 2022 CALIFORNIA AMENDMENTS)
2022	CALIFORNIA PLUMBING CODE (CPC), PART 5, TITLE 24 C.C.R. (2021 UNIFORM PLUMBING CODE AND 2022 CALIFORNIA AMENDMENTS)
2022	CALIFORNIA ENERGY CODE (CEC), PART 6, TITLE 24 C.C.R.
2022	CALIFORNIA HISTORICAL BUILDING CODE (CHBC), PART 8, TITLE 24 C.C.R.
2022	CALIFORNIA FIRE CODE, PART 9, TITLE 24 C.C.R. (2021 INTERNATIONAL FIRE CODE AND 2022 CALIFORNIA AMENDMENTS)
2022	CALIFORNIA EXISTING BUILDING CODE (CEBC), PART 10, TITLE 24 C.C.R. (2021 INTERNATIONAL EXISTING CODE AND 2022 CALIFORNIA AMENDMENTS)
2022	CALIFORNIA GREEN BUILDING STANDARDS CODE (CALGREEN), PART 11, TITLE 24 C.C.R.
2022	CALIFORNIA REFERENCED STANDARDS, PART 12,TITLE 24 C.C.R.
TITLE 19	C.C.R., PUBLIC SAFETY, STATE FIRE MARSHAL REGULATIONS.
2019	ASME A17.1/B44-19 SAFETY CODE FOR ELEVATORS AND ESCALATORS
2020	ASME 18.1 - SAFETY STANDARD FOR PLATFORM LIFTS AND STAIRWAY CHAIR LIFTS

FOR A COMPLETE LIST OF APPLICABLE NFPA STANDARDS REFER TO 2022 CBC (SFM) CHAPTER 35 AND CALIFORNIA FIRE CODE CHAPTER 80.
SEE CALIFORNIA BUILDING CODE, CHAPTER 35 FOR STATE OF CALIFORNIA AMENDMENTS TO NFPA STANDARDS.

PARTIAL LIST OF APPLICABLE STANDARDS

NFPA 13	STANDARD FOR AUTOMATIC FIRE SPRINKLER SYSTEMS (CA AMENDED)	2022 ED.
NFPA 14	STANDARD FOR STANDPIPE AND HOSE SYSTEMS (CA AMENDED)	2019 ED.
NFPA 17	STANDARD FOR DRY CHEMICAL EXTINGUISHING SYSTEMS	2021 ED.
NFPA 17A	STANDARD FOR WET CHEMICAL EXTINGUISHING SYSTEMS	2021 ED.
NFPA 20	STANDARD FOR STATIONARY PUMPS FOR FIRE PROTECTION	2019 ED.
NFPA 22	STANDARD FOR WATER TANKS FOR PRIVATE FIRE PROTECTION	2018 ED.
NFPA 24	STANDARD FOR THE INSTALLATION OF PRIVATE FIRE MAINS AND THEIR APPURTENANCES (CA AMENDED)	2022 ED.
NFPA 72	NATIONAL FIRE ALARM & SIGNALING CODE (CA AMENDED)	2022 ED.
NFPA 80	STANDARD FOR FIRE DOORS AND OTHER OPENING PROTECTIVES	2019 ED.
NFPA 2001	STANDARD ON CLEAN AGENT FIRE EXTINGUISHING SYSTEMS (CA AMENDED)	2018 ED.
UL 300	STANDARD FOR FIRE TESTING OF FIRE EXTINGUISHING SYSTEMS FOR PROTECTION OF COMMERCIAL COOKING EQUIPMENT	2005 (R2014)
UL 464	AUDIBLE SIGNAL APPLIANCES FOR FIRE ALARM AND SIGNALING SYSTEMS, INCLUDING ACCESSORIES	2003 ED.
UL 521	STANDARD FOR HEAT DETECTORS FOR FIRE PROTECTIVE SIGNALING SYSTEMS	1999 ED. (R2005)
UL 1971	STANDARD FOR SIGNALING DEVICES FOR THE HEARING IMPAIRED	2002 ED. (R2018)
ICC 300	STANDARD FOR BLEACHERS, FOLDING AND TELESCOPING SEATING AND GRANDSTANDS	2017 ED.

STATEMENT OF GENERAL CONFORMANCE

(X) THE DRAWINGS OR SHEETS LISTED ON THE INDEX SHEET
( ) THIS DRAWING PAGE OF SPECIFICATIONS/CALCULATIONS

HAVE BEEN PREPARED BY OTHER DESIGN PROFESSIONALS OR CONSULTANTS WHO ARE LICENSED AND/OR AUTHORIZED TO PREPARE SUCH DRAWINGS IN THIS STATE. IT HAS BEEN EXAMINED BY ME FOR:

1) DESIGN INTENT AND APPEARS TO MEET THE APPROPRIATE REQUIREMENTS OF TITLE 24, CALIFORNIA CODE OF REGULATIONS AND THE PROJECT SPECIFICATIONS PREPARED BY ME, AND
2) COORDINATION WITH MY PLANS AND SPECIFICATIONS AND IS ACCEPTABLE FOR INCORPORATION INTO THE CONSTRUCTION OF THIS PROJECT.

THE STATEMENT OF GENERAL CONFORMANCE "SHALL NOT BE CONSTRUED AS RELIEVING ME OF MY RIGHTS, DUTIES, AND RESPONSIBILITIES UNDER SECTIONS 17302 AND 81138 OF THE EDUCATION CODE AND SECTIONS 4-336, 4-341 AND 4-344" OF TITLE 24, PART 1. (TITLE 24, PART 1, SECTION 4-317 (B))

I CERTIFY THAT:

THE PC APPROVED MANUFACTURER DRAWINGS PC# 04-122050 LISTED ON THE INDEX SHEET ARE IN GENERAL CONFORMANCE WITH THE PROJECT DESIGN INTENT, AND THEY HAVE BEEN COORDINATED WITH THE PROJECT PLANS AND SPECIFICATIONS.

SIGNATURE — 03/03/25 DATE
ARCHITECT OR ENGINEER DESIGNATED TO BE IN GENERAL RESPONSIBLE CHARGE

JENNIFER HUANG
PRINT NAME

C-35691 — LICENSE NUMBER
05-31-25 — EXPIRATION DATE

THIS PROJECT WILL NOT BE CERTIFIED UNTIL DSA #02-120129 IS CERTIFIED

PROJECT DESCRIPTION

-Construction and installation of (2) new 36'x40' PC Portable TK Classroom buildings by AMS.
-Construction of concrete foundations for the portable classroom buildings.
-Construction of chain link fences and gates.
-Related civil site concrete and site utilities
-Related electrical site utilities, and building low voltage.
-Removal of an existing drinking fountain and replacement with a drinking fountain and bottle filler station.
All other items as shown on the drawings for a complete project

NOTE:
SUBSTITUTIONS AFFECTING ITEMS REGULATED BY THE DIVISION OF THE STATE ARECHITECT (DSA) REQUIRE DSA APPROVAL AS AN ADDENDUM OR A CONSTRUCTION CHANGE DOCUMENT (CCD). DSA APPROVAL SHALL BE OBTAINED PRIOR TO FABRICATION AND/OR INSTALLATION PER SECTION 4-338, PART 1, TITLE 24, CCR.

NOTE:
THE CALIFORNIA ENERGY CODE SECION 10-103 REQUIRES ACCEPTANCE TESTING ON ALL NEWLY INSTALLED LIGHTING CONTROLS, MECHANICAL SYSTEMS, ENVELOPES, AND PROCESS EQUIPMENT AFTER INSTALLATION AND BEFORE PROJECT COMPLETION. AN ACCEPTANCE TEST IS A FUNCTIONAL PERFORMANCE TEST TO HELP ENSURE THAT NEWLY INSTALLED EQUIPMENT IS OPERATING AND IN COMPLIANCE WITH ENERGY CODE.

LIGHTING CONTROLS ACCEPTANCE TESTS MUST BE PERFORMED BY A CERTIFIED LIGHT CONTROLS ACCEPTANCE TEST TECHNICIAN (ATT)

MECHANICAL SYSTEM ACCEPTANCE TESTS MUST BE PERFORMED BY A CERTIFIED MECHANICAL ATT FOR PROJECTS SUBMITTED ON OR AFTER OCTOBER 1,2021.

A LISTING OF CERTIFIED ATT CAN BE FOUND AT: https://www.energy.ca.gov/programs-and-topics/programs/acceptance-test-technician-certified-provider-program/acceptance.

THE ACCEPTANCE TESTING PROCEDURES MUST BE REPEATED, AND DEFICIENCIES MUST BE CORRECTED BY THE BUILDER OR INSTALLING CONTRACTOR UNTIL THE CONSTRUCTION/INSTALLATION OF THE SPECIFIED SYSTEMS CONFORM AND PASS THE REQUIRED ACCEPTANCE CRITERIA.

PROJECT INSPECTORS WILL COLLECT THE FORMS TO CONFIRM THAT THE REQUIRED ACCEPTANCE TESTS HAVE BEEN COMPLETED.

SHEET INDEX

GENERAL	
G0.10	COVER SHEET
G1.51	LOCAL FIRE AUTHORITY SITE PLAN
CIVIL	
C0.1	CIVIL GENERAL NOTES AND ABBREVIATIONS
C1.1	DEMOLITION PLAN
C2.1	GRADING AND PAVING PLAN
C3.1	UTILITY PLAN
ARCHITECTURAL	
A1.11	OVERALL SITE PLAN AND CODE INFORMATION
A7.11	ENLARGED SITE PLAN AND SITE DETAILS
A10.01	DETAILS
ELECTRICAL	
E0.1	ELECTRICAL SCHEDULES, ONE-LINES, & GENERAL NOTES
E1.0.	POWER & SIGNAL SITE PLAN
E1.1	SIGNAL, DATA, & INTRUSION ENLARGED PLAN - RELOCATABLE CLASSROOM
E2.0	POWER & SIGNAL DETAILS
E3.0	FIRE ALARM GENERAL NOTES, RISER DIAGRAM, & SCHEDULES
E3.1	FIRE ALARM SITE PLAN
E3.2	FIRE ALARM ENLARGED PLAN - RELOCATABLE CLASSROOM
AMS CLASSROOM DRAWINGS	
N3.0-N	TYPICAL SCHEDULES - DOORS, WINDOWS & FINISHES
A1.0-N	TYPICAL FLOOR PLAN
A1.2	RESTROOM FLOOR PLAN OPTIONS - AGE RANGE 3-4
A4.0-N	INTERIOR ELEVATIONS TYPICAL CLASSROOM
A4.1-N	INTERIOR ELEVATIONS RESTROOM OPTIONS
A5.4-N	TYPICAL EXTERIOR ELEVATIONS - LAP SIDING OPTION
M1.0-N	TYPICAL REFLECTED CEILING PLAN
M1.1-A	TYPICAL MECHANICAL PLAN
E1.0-N	TYPICAL ELECTRICAL PLAN
E1.2-N	ELECTRICAL NOTES & DETAILS
P1.0-N	RESTROOM OPTIONS PLUMBING PLAN & FIXTURE SCHEDULE
PC #04-122050	
TS	TITLE SHEET
TS-2	SHEET INDEX
D1	FORM DSA-103
D2	FORM DSA-103
N1.0	GENERAL NOTES & SPECIFICATIONS
N1.0A	BELOW GRADE CONCRETE MIX DESIGN REQUIREMENTS
N2.0	GENERAL NOTES & SPECIFICATIONS
N3.0	TYPICAL SCHEDULES - DOORS, WINDOWS & FINISHES
N4.0	ACCESSIBILITY STANDARDS AND DETAILS
EN.1A	ENERGY CALCULATIONS SUMMATION SHEET
EN.1B	ENERGY CALCULATIONS SUMMATION SHEET
EN.14	ENERGY CALCULATIONS 36'x40' BUILDING GROUP 'C'
EN.15	ENERGY CALCULATIONS 36'x40' BUILDING GROUP 'C'
EN.74	ENERGY CALCULATIONS SUPPLEMENTAL SHEET
EN.75	ENERGY CALCULATIONS SUPPLEMENTAL SHEET
EN.76	ENERGY CALCULATIONS SUPPLEMENTAL SHEET
A1.0	TYPICAL FLOOR PLAN
A1.5	RESTROOM FLOOR PLAN OPTIONS - AGE RANGE 3-4
A2.0	TYPICAL ROOF PLAN METAL STANDING SEAM (WITHOUT) PARAPETS
A2.2	TYPICAL ROOF DETAILS METAL STANDING SEAM
A4.0	INTERIOR ELEVATIONS TYPICAL CLASSROOM
A4.1	INTERIOR ELEVATIONS RESTROOM OPTIONS
A5.4	TYPICAL EXTERIOR ELEVATIONS - LAP SIDING OPTION
A5.5	TYP. ARCHITECTURAL DETAILS - LAP SIDING OPTION
A7.1	MISCELLANEOUS ARCHITECTURAL DETAILS
A7.3	TYPICAL LONGITUDINAL AND TRANSVERSE FRAME SECTIONS
S0.0	STEEL MEMBER PROPERTIES
S1.1	CONCRETE FOUNDATION PLAN (50PSF LIVE LOAD + 15PSF FLOOR PARTITION LOAD)
S1.4	CONCRETE FOUNDATION DETAILS
S1.5	CONCRETE FOUNDATION DETAILS
S1.6A	STANDARD ANCHORAGE FOUNDATION DETAILS
S1.6B	UPGRADED ANCHORAGE FOUNDATION DETAILS
S1.7	CONCRETE FOUNDATION OPTIONAL UTILITY OPENINGS IN FOOTINGS
S3.0	FLOOR FRAMING PLAN & DETAILS FOR PLYWOOD FLOOR
S4.0	ROOF FRAMING PLAN AND DETAILS CROSS BRACING OPTION
S4.2	ROOF FRAMING DETAILS CROSS BRACING OPTION
S5.0	MOMENT FRAME ELEVATIONS & DETAILS
S5.1	MOMENT FRAME CONNECTION DETAILS
S8.0	WALL FRAMING ELEVATIONS & SCHEDULES - WOOD STUDS
S8.1	WALL FRAMING DETAILS - WOOD STUDS
M1.0	TYPICAL REFLECTED CEILING PLAN
M1.1A	TYPICAL MECHANICAL PLAN OPTIONS
M1.4	MECHANICAL AND CEILING DETAILS
M1.5	MECHANICAL & CEILING DETAILS
M1.6	MECHANICAL ROOF DETAILS
M1.7	CEILING NOTES & SPECIFICATIONS
M1.7A	MECHANICAL NOTES & SCHEDULES
E1.0	TYPICAL ELECTRICAL PLAN
E1.2	ELECTRICAL NOTES & DETAILS
P1.0	RESTROOM OPTIONS PLUMBING PLAN & FIXTURE SCHEDULE
P2.0	PLUMBING DETAILS & ACCESSIBLE DETAILS
P3.0	PLUMBING ISOMETRICS DRAWINGS

TOTAL SHEET COUNT: 79

SYMBOL LEGEND

NORTH ARROW
TICK INDICATES PLAN NORTH
ARROW INDICATES TRUE NORTH

ELEVATION CALLOUT (TYPICAL FOR EXTERIOR)
1 / AX.XX
LOCATION ON SHEET
SHEET WHERE ELEVATION IS DRAWN

ELEVATION CALLOUT (TYPICAL FOR INTERIOR)
A1 / A2 / A3 / A4 / AX.XX
LOCATION ON SHEET
SHEET WHERE ELEVATION IS DRAWN

SECTION CALLOUT
SIM / 1 / AX.XX
INDICATES A SIMILAR CONDITION
LOCATION ON SHEET
SHEET WHERE SECTION IS DRAWN

DETAIL CALLOUT
SIM / 1 / AX.XX
INDICATES A SIMILAR CONDITION
LOCATION ON SHEET
SHEET WHERE SECTION IS DRAWN

CONTROL OR DATUM POINT
FIRST FLOOR — NAME OF ELEVATION (IF APPLICABLE)
+0' - 0" — ELEVATION ABOVE FINISHED FLOOR

DOOR CALLOUT
101A — DOOR NUMBER

INTERIOR FINISH CALLOUT
FA — MATERIAL FINISH TYPE (SEE FINISH SCHEDULE)

WINDOW CALLOUT
09-WF1 — WINDOW NUMBER (SEE WINDOW SCHEDULE)

KEYNOTE
? — KEYNOTE NUMBER (SEE LEGEND ON SHEET)

ABBREVIATIONS

(E)	EXISTING
AB	ANCHOR BOLT
AC PAVING	ASPHALTIC CONCRETE PAVING
ACC	ACCESS/ACCESSIBLE
ACP	ACOUSTICAL CEILING PANEL
ACT	ACOUSTICAL CEILING TILE
ADJ	ADJACENT/ADJUSTABLE
AFF	ABOVE FINISH FLOOR
AGG	AGGREGATE
AHU	AIR HANDLING UNIT
ARCH	ARCHITECTURAL
ATT	ATTENUATION
AUTO	AUTOMATIC
BD	BOARD
BLCG	BLOCKING
BUR	BUILT UP ROOFING
CABT	CABINET
CF	CUBIC FEET
CFCI	CONTRACTOR FURNISHED, CONTRACTOR INSTALLED
CFOI	CONTRACTOR FURNISHED, OWNER INSTALLED
CG	CORNER GUARD
CJ	CONTROL JOINT
CL	CENTER LINE
CLF	CHAIN LINK FENCE
CLR	CLEAR
CMU	CONCRETE MASONRY UNIT
CO	CLEANOUT
COL	COLUMN
COMP	COMPRESSION / COMPOSITE
CF	CUBIC FEET
COORD	COORDINATE
CORR	CORRUGATED
CT	CERAMIC TILE
CTSK	COUNTER SKUNK
CW	CURTAINWALL
DEPR	DEPRESSED / DEPRESSION
DF	DRINKING FOUNTAIN
DIM	DIMENSION
DISP	DISPENSER
DS	DOWNSPOUT
DTL	DETAIL
DW	DISHWASHER
E/W	EACH WAY
EIFS SYSTEM	EXTERIOR INSULATION FINISH
EJ	EXPANSION JOINT
ELEC	ELECTRICAL
ELEV	ELEVATION / ELEVATOR
ENCL	ENCLOSE / ENCLOSURE
EOS	EDGE OF SLAB
EP	ELECTRICAL PANEL
EQ	EQUAL
ESC	EXCUTCHEON
EWC	ELECTRIC WATER COOLER
EXP	EXPOSED
FA	FIRE ALARM
FD	FLOOR DRAIN
FDC	FIRE DEPARTMENT CONNECTION
FE	FIRE EXTINGUISHER
FEC	FIRE EXTINGUISHER W/ CABINET
FF	FINISH FLOOR
FG	FINISH GRADE
FH	FIRE HYDRANT
FHC	FIRE HOSE CABINET
FSH	FLAT HEAD SCREW
FIN	FINISH
FLR	FLOOR
FOC	FACE OF CONCRETE
FOF	FACE OF FINISH
FOM	FACE OF MASONRY
FOS	FACE OF STUD
FP	FIREPROOFING
FR	FIRE RATED
FRG	FIRE RATED GLASS
FRP	FIBERGLASS REINFORCED PLASTIC
FRT	FIRE RETARDANT TREATED
FS	FINISH SURFACE
FTG	FOOTING
GB	GRAB BAR
GFRC	GLASS FIBER REINFORCED CONCRETE
GL	GLASS TYPE
GLB	GLUE LAMINATED BEAM
GYP BD	GYPSUM BOARD
GYP PLAS	GYPSUM PLASTIC
HB	HOSE BIBB
HD	HEAVY DUTY
HDR	HEADER
HDWR	HARDWARE
HGT	HEIGHT
HM	HOLLOW METAL
HP	HIGH POINT
HSS	HOLLOW STEEL SECTION
ID	INSIDE DIAMTER
INT	INTERIOR
INV	INVERT
LANDS	LANDSCAPE
LAV	LAVATORY
LLH	LONG LEG HORIZONTAL
LLV	LONG LEG VERTICAL
LP	LOW POINT
LT WT	LIGHT WEIGHT
LVR	LOUVER
MACH	MACHINE
MB	MACHINE BOLT
MDF	MEDIUM DENSITY FIBERBOARD
MDO	MEDIUM DENSITY OVERLAY
MECH	MECHANICAL
MED	MEDIUM
MEMB	MEMBRANE
MFR	MANUFACTURER
MH	MANHOLE
MO	MASONRY OPENING
MTD	MOUNTED
MTL	METAL
NIC	NOT IN CONTRACT
NR	NON RATED
NRC	NOISE REDUCTION COEFFICIENT
NTS	NOT TO SCALE
O/	OVER
O/A	OVERALL
OC	ON CENTER
OD	OUTSIDE DIAMTER
OFCI	OWNER FURNISHED, CONTRACTOR INSTALLED
OFOI	OWNER FURNISHED, OWNER INSTALLED
OFVI	OWNER FURNISHED, VENDOR INSTALLED
OH	OPPOSITE HAND
OPER	OPERABLE
OPNG	OPENING
ORD	OVERFLOW ROOF DRAIN
P/L	PROPERTY LINE
PA	PUBLIC ADDRESS
PAF	POWDER ACTUATED FASTENER PAVING
PCC	PORTLAND CEMENT CONCRETE PAVING
PED	PEDESTRIAN
PERF	PERFORATED
PERIM	PERIMETER
PERP	PERPENDICULAR
PH	PANIC HARDWARE
PIV	POST INDICATOR VALVE
PL	PLATE
PLAM	PLASTIC LAMINATE
PLAS	PLASTER
PLUMB	PLUMBING
PNL	PANEL
PNT	PAINT / PAINTED
POC	POINT OF CONNECTION
POLY ISO	POLYISOCYANURATE
PREFIN	PREFINISHED
PREP	PREP / PREPARATION
PTC	POST TENSIONED CONCRETE
PTD	PAPER TOWEL DISPENSER
PTN	PARTITION
PTS	PNEUMATIC TUBE STATION / SYSTEM
PVC	POLYVINYL CHLORIDE
PVMT	PAVEMENT
QT	QUARRY TILE
R	RADIUS, RISER
RB	RESILIENT BASE
RD	ROOF DRAIN
RECEPT	ECEPTACLE
REF	REFERENCE
REFL	REFLECT(ED), (IVE)
REFL	REFLECT(ED), (IVE)
REFR	REFRIGERATOR
REINF	REINFORCE/REINFORCED/ REINFORCEMENT
REM	REMOVE
RH	ROUND HEAD
RHS	ROUND HEAD SCREW
RO	ROUGH OPENING
ROW	RIGHT OF WAY
SCH	SCHEDULE (FOR PIPE)
SCHED	SCHEDULE / SCHEDULING
SD	STORM DRAIN / SOAP DISPENSER
SECT	SECTION
SG	SAFETY GLASS
SHT	SHEET
SHTG	SHEATHING
SMS	SHEET METAL SCREW
SND	SANITARY NAPKIN DISPOSAL
SOV	SHUT OFF VALVE
SPEC	SPECIFICATIONS
SS	STAINLESS STEEL
STC	SOUND TRAMISSION CLASS
STL	STEEL
STSMS SCREW	SELF TAPPING SHEET METAL
SUSP	SUSPENDED
SV	SHEET VINYL
SYM	SYMMETRICAL
T	TREAD
T&B	TOP AND BOTTOM
TO	TOP OF
TOC	TOP OF CURB / CONCRETE
TOP	TOP OF PARAPET
TOS	TOP OF STEEL
TOW	TOP OF WALL
TPD	TOILET PAPER DISPENSER
TS	TACKABLE SURFACE
U/C	UNDER CABINET (OR COUNTER
UNO	UNLESS NOTED OTHERWISE
UR	URINAL
VAC	VACUUM
VB	VAPOR BARRIER
VCT	VINYL COMPOSITION TILE
VIF	VERIFY IN FIELD
VTR	VENT THROUGH ROOF
VWC	VINYL WALL COVERING
W/	WITH
W/O	WITHOUT
WB	WOOD BASE
WC	WATER CLOSET
WD	WOOD
WDW	WINDOW
WGT	WEIGHT
WH	WATER HEATER
WP	WATERPROOFING/WALL PROTECTION
WR	WATER RESISTANT
WRGB	WATER RESISTANT GYPSUM BOARD
WS	WOOD SCREW
WSCT	WAINSCOT
WWF	WELDED WIRE FABRIC

NOTE:
OTHER ABBREVIATIONS USED ON THESE DRAWINGS ARE CONSIDERED STANDARDS IN THE BUILDING INDUSTRY. CONTACT ARCHITECT FOR NECESSARY CLARIFICATION.

DEFERRED ITEMS

NONE

ALTERNATES

NONE

VICINITY MAP

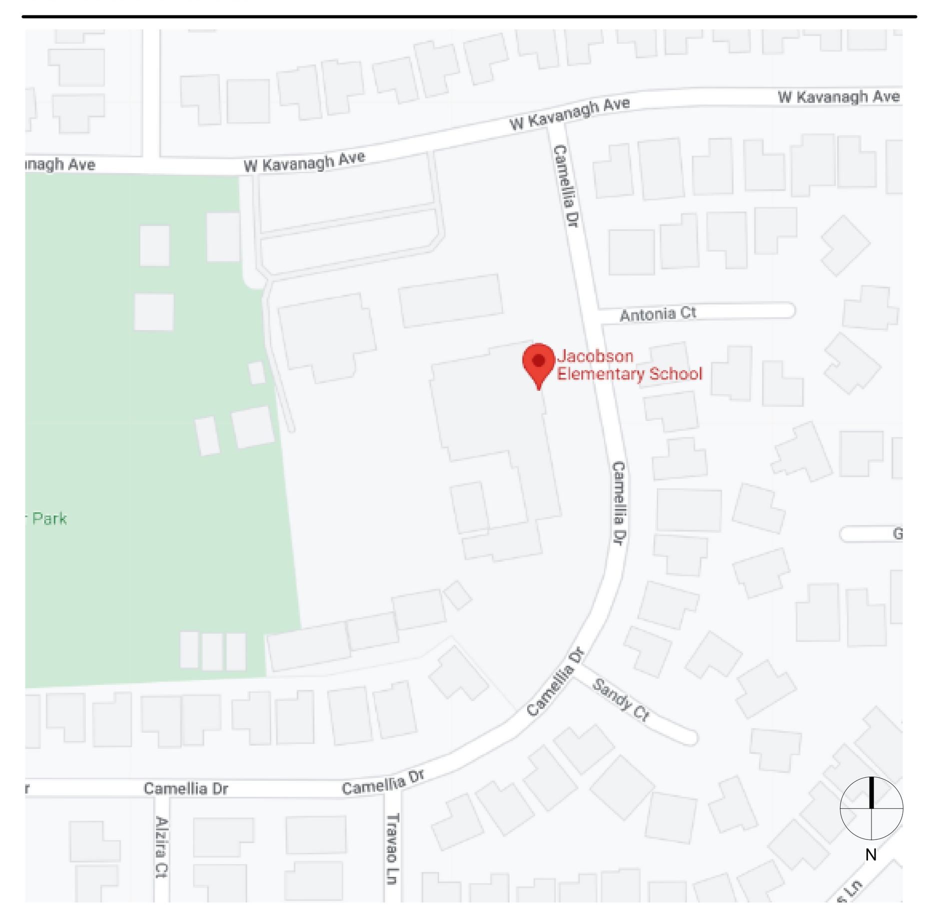

HMC Architects
3595005000
2101 CAPITOL AVENUE, SUITE 100
SACRAMENTO, CA 95816
(916) 368-7990 / WWW.HMCARCHITECTS.COM

LICENSED ARCHITECT — JENNIFER PEARSON HUANG — C-35691 — REN. 05/31/25 — STATE OF CALIFORNIA

PROJECT TEAM

OWNER
TRACY UNIFIED SCHOOL DISTRICT
1875 LOWELL AVE, TRACY, CA 95376
(209) 830-3245

ARCHITECT
HMC ARCHITECTS
2101 CAPITOL AVE, SUITE 100, SACRAMENTO, CA 95816
(916) 368-7990

CIVIL ENGINEER
WARREN CONSULTING ENGINEERS
1117 WINDFIELD WAY SUITE 110
EL DORADO HILLS, CA 95762
(916) 985-1870

ELECTRICAL ENGINEER
OPTIMIZED ENERGY AND FACILITIES CONSULTING
5734 LONETREE BLVD, ROCKLIN, CA 95765
(916) 626-5518

FACILITY:
JACOBSON ELEMENTARY SCHOOL
1750 W KAVANAGH AVE.
TRACY, CA 95376

PROJECT:
JACOBSON ES - TK CLASSROOM

SHEET NAME:
COVER SHEET

CONSTRUCTION DOCUMENTS

DATE: 02/23/24 — CLIENT PROJ NO: 3595005000

SHEET:
G0.10
ADDENDUM "A"

THE LINE SHOWN ABOVE IS EQUAL TO ONE INCH ON ANSI E SHEET OR ONE INCH ON ARCH E SHEET

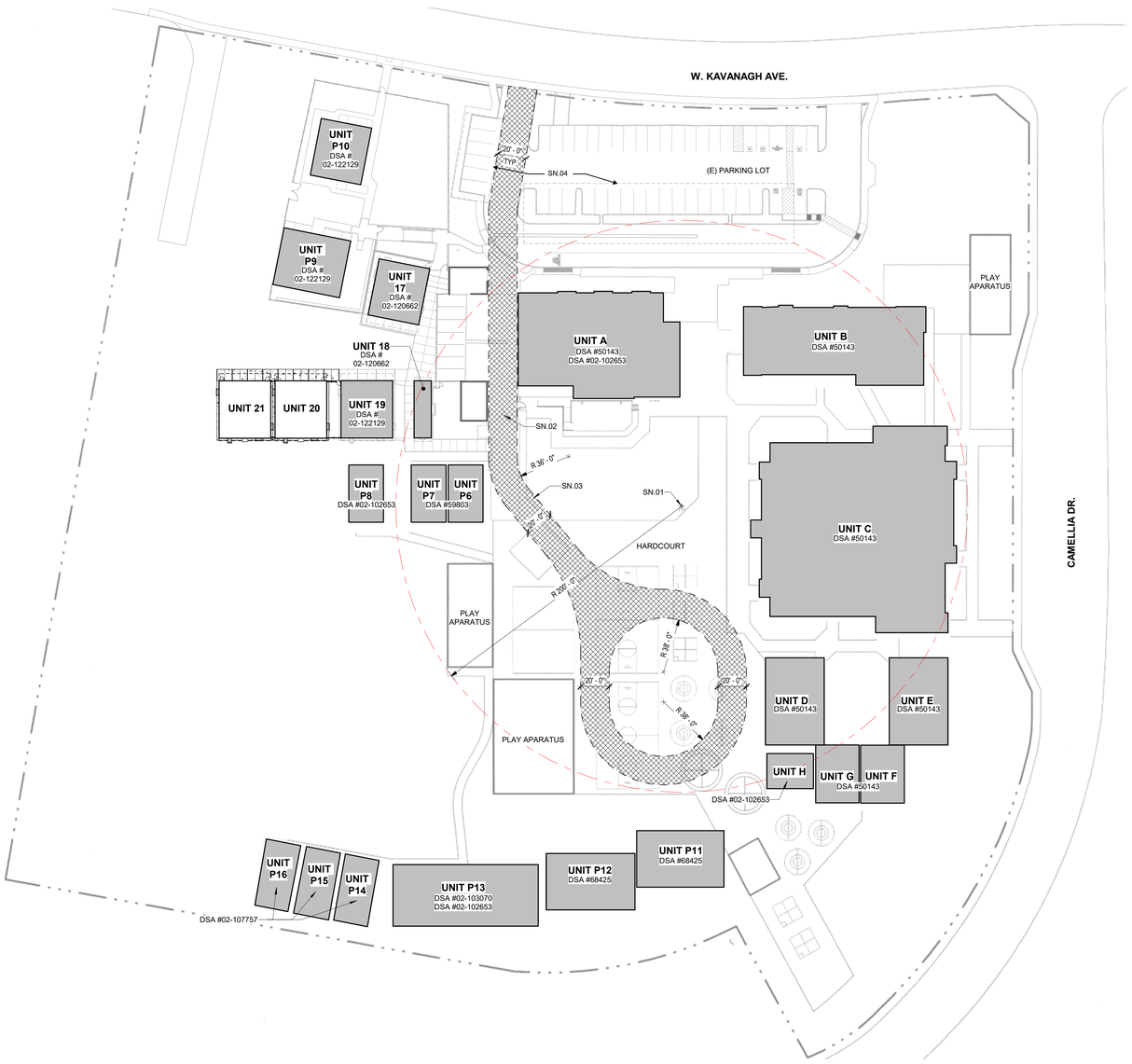

LEGEND

X	NEW BUILDINGS		PROPERTY LINE
X	EXISTING BUILDINGS		(E) CHAIN LINK FENCE
X	FUTURE BUILDINGS		(E) FIRE HYDRANT (NTS)
	CONCRETE WALK / PAVING		
	(E) FIRE LANE		
	(N) FIRE LANE		

LOCAL FIRE AUTHORITY REVIEW

DSA-810 FIRE & LIFE SAFETY SITE CONDITIONS SUBMITTAL

PROJECT INFORMAITION		
School District:	TRACY UNIFIED SCHOOL DISTRICT	
Project name / school:	JACOBSON ELEMENTARY SCHOOL - TK BUILDINGS	
Project address:	1750 W KAVANAGH AVE.	

FIRE & LIFE SAFTEY INFORMATION				ALTERNATE ACCEPTED
1.	Has a fire hydrant flow test been preformed within the past 12 months? ***(If yes, provide a copy of the test data)***		Yes ☒	No ☐
2.	Was the fire hydrant water flow test performed as part of this LFA review?		Yes ☐	No ☒
3.	Is the project located within a designated fire hazard serverity zone as established by Cal-Fire? ***(If yes, indicate fire hazard zone classification below)***		Yes ☐	No ☒
	Refer to the following for fire hazard zone locations: ***www.fire.ca.gov/fire_prevention/fire_prevention_wildland_zones_maps***	Moderate ☐	High ☐	Very High ☐
	Wildland Interface Area (WIFA) ***(If any designations are checked, project design must meet the requirements of CBC Chapter 7A)***			WIFA ☐

CONDITION MEANS AND METHODS RESOLUTION		ALTERNATE ACCEPTED			
		Yes	No	N/A	N/R
4.	Emergency vehicle access roadways do not meet CFC requirements			☒	
4a.	**Acceptable Alternative:** Emergency vehicle and personel access as proposed by the architect is acceptable for providing fire suppression and protection of life and property				
5.	**Fire Hydrants:** Number and spacing does not meet CFC requirements			☒	
5a.	**Acceptable Alternative:** Number of fire hydrants and spacing as proposed by the architect is acceptable for fire suppression and protection of life and property.				
6.	**Fire Hydrants:** Water flow and pressure are less than CFC minimum.			☒	
6a.	**Acceptable Alternative:** The available flow and pressure is acceptable for providing fire suppression and protection of life and property.				
7.	Location of fire department connection(s) serving fire sprinkler system or standpipe system does not meet CFC requirements.			☒	
7a.	**Acceptable Alternative:** The location of fire department connection serving the fire sprinkler system and/or standpipe system is acceptable for providing fire suppression and protection of life and property.				

School District Acceptance of Acceptable Design Alternates
By signing this form, the school district acknowledges and accepts the proposed design as an alternative to California Building Code (CBC) and California Fire Code (CFC) minimum requirements as indicated by one of more of the conditions indicated at items 4a, 5a, 6a, or 7a, for providing fire and life safety protection of life and property.

Accepted by:_____ Title:_____
Signature: _____ Date:_____

LOCAL FIRE AUTHORITY (LFA) INFORMATION	
LFA Agency Name:	
LFA Review Official:	
Title:	Work Phone:
Work Email:	
LFA Reviewer's Signature:_____	Date:_____

FIRE FLOW TEST

COSCO Fire Protection

HYDRANT FLOW REPORT (NFPA 291) Other Than BCPU & H2GO

Hydrant Test Applicant: Tracy Unified School District
Project Name: Jacobson Elementary
Location: 1750 W. Kavanagh Ave. Tracy CA. Date: 11-26-24
Test made by: Steve Eades Time: 1:00pm
Representative of: Cosco Fire Protection
Witness: Joseph Hurley
If pumps affect test, indicate pumps operating:

	A_1	A_2	A_3	A_4
Flow hydrant # (GIS Object ID):	1			
Size Nozzle:	2.5"			
Water main size:	8"			
GPM:	1265gpm			
Pitot Gage Pressure:	46psi			
Hydrant Elevation(top):	-23ft			
Total GPM	1265gpm			

Residual Hydrant B: Static: 72 psi Dynamic: 26psi Hydrant #: 1
Hydrant Elev (top):
Remarks: Flow Hydrant static 72psi residual 54psi, no service port on 8"
Check valve.

Pressures noted above are based on system conditions at the time of the test. System pressures will vary based on tank levels, system demand, and pump operation.
Location map: Show line sizes and distance to next cross-connected line. Show valves and hydrant branch size. Show flowing hydrants – Label A, A1, A2, A3, A4. Show location of static and residual – Label B. Pressure drop at residual hydrant should be at least 10 psi. Add additional flow hydrants until a 10 psi drop is reached.

Indicate B: Hydrant X **Sprinkler**_____ **Other (identify)** _____

3850 Atherton Road Rocklin, CA 95765 | PH 916-652-1306 | FAX 916-652-1307 | C-10/C-16 577621 | www.coscofire.com

SEE OTHER SHEETS FOR CONSTRUCTION

THIS PLAN INCLUDES INFORMATION FOR LOCAL FIRE AUTHORITY APPROVAL ONLY. REFER TO OTHER SHEETS FOR SITE CONSTRUCTION DETAILS.

EMERGENCY RESPONDER RADIO COVERAGE

NEW BUILDINGS SHALL PE PROVIDED WITH EMERGENCY RESPONDER RADIO COVERAGE IN ACCORANCE WITH CALIFORNIA FIRE CODE SECTION 510. THE PROJECT ARCHITECT (AOR) SHALL CONTACT THE LOCAL FIRE DEPARTMENT AND/OR EMERGENCY COMMUNICATIONS AUTHORITY TO OBTAIN DESIGN, EQUIPMENT SPECIFICATIONS, TESTING AND ACCEPTANCE CRITERIA. PLANS AND REQUEST DOCUMENTATION SHALL BE SUBMITTED TO THE LOCAL AUTHORITY HAVING JURISDICTION FOR REVIEW AND APPROVAL UPON COMPLETION, COPIES OF THE APPROVED PLANS, EQUIPMENT DATA SHEETS, TESTING AND ACCEPTANCE DOCUMENTATION SHALL BE PROVIDED TO THE SCHOOL DISTRICT.

FIRE AUTHORITY SITE PLAN **1** 1" = 40'-0"

AGENCY APPROVAL:

IDENTIFICATION STAMP
DIV. OF THE STATE ARCHITECT
APP: 02-122976 INC:
REVIEWED FOR
SS ☑ FLS ☑ ACS ☑
DATE: 03/12/2025

TRACY UNIFIED SCHOOL DISTRICT

HMC Architects
3595005000
2101 CAPITOL AVENUE, SUITE 100
SACRAMENTO, CA 95816
916 368 7990 / www.hmcarchitects.com

LICENSED ARCHITECT JENNIFER PEARSON HANG C-35691 REN. 05/31/25 STATE OF CALIFORNIA

ISSUE

Δ	DESCRIPTION	DATE
1	ADDENDUM "A"	3/20/25

KEYNOTES

GENERAL NOTES

SHEET NOTES

SN.01 (E) FIRE HYDRANT
SN.02 (E) 20'-0" GATE WITH KNOX BOX
SN.03 (E) FIRE LANE
SN.04 (E) SOLAR ARRAY STRUCTURES PER DSA #02-118910

FACILITY:
JACOBSON ELEMENTARY SCHOOL
1750 W KAVANAGH AVE.
TRACY, CA 95376

PROJECT:
JACOBSON ES - TK CLASSROOM

SHEET NAME:
LOCAL FIRE AUTHORITY SITE PLAN

CONSTRUCTION DOCUMENTS

DATE: **02/23/24** CLIENT PROJ NO: **3595005000**

SHEET:

G1.51

ADDENDUM "A"

PLEASE RECYCLE

Autodesk Docs://3595005000 TUSD TK CLASSROOMS 2025 R23/3595005000-A-TUSD-JACOBSON-SITE.rvt
1/31/2025 5:11:36 PM

CIVIL ABBREVIATIONS AND LEGEND

ABBREVIATIONS

NOTE: NOT ALL ABBREVIATIONS MAY BE USED ON THESE PLANS.

AB	AGGREGATE BASE
AC	ASPHALTIC CONCRETE
AD	AREA DRAIN
APN	ASSESSOR'S PARCEL NUMBER
ARV	AIR RELEASE VALVE
ASB	AGGREGATE SUB-BASE
BO	BLOW-OFF VALVE
BV	BUTTERFLY VALVE
BW	BACK OF WALK
C/L	CENTERLINE
CB	CATCH BASIN
CL	CLASS
CMP	CORRUGATED METAL PIPE
CATV	CABLE TELEVISION
CO	CLEANOUT
COMM	COMMUNICATION
CONC.	CONCRETE
CONST.	CONSTRUCT
CR	CURB RETURN
CS	CONCRETE SURFACE
DC	DOUBLE CHECK VALVE
DDC	DOUBLE DETECTOR CHECK VALVE
DG	DECOMPOSED GRANITE
DI	DROP INLET
DIA	DIAMETER
DIP	DUCTILE IRON PIPE
DWG	DRAWING
DS	DOWNSPOUT
E	ELECTRIC
EP	EDGE OF PAVEMENT
ESMT	EASEMENT
EX	EXISTING
FS	FIRE SERVICE LINE
FDC	FIRE DEPARTMENT CONNECTION
FL	FLOWLINE
FM	SANITARY SEWER FORCE MAIN
FF	FINISHED FLOOR ELEVATION
FH	FIRE HYDRANT
G	GAS
GR	GRATE ELEVATION
GRD	GRADE ELEVATION
GV	GATE VALVE
HB	HOSE BIBB
HBD	HEADER BOARD
HDPE	HIGH DENSITY POLYETHYLENE PIPE
HP	HIGH POINT
INV	PIPE INVERT ELEVATION
JP	JOINT UTILITY POLE
LF	LINEAL FEET
LIP	LIP OF GUTTER
LT	LEFT
MS	MOWSTRIP
NTS	NOT TO SCALE
OH	OVERHEAD
PCC	PORTLAND CEMENT CONCRETE
PD	PLANTER DRAIN
PIV	POST INDICATOR VALVE
P/L	PROPERTY LINE
PP	POWER POLE
PUE	PUBLIC UTILITY EASEMENT
PVC	POLYVINYL CHLORIDE
RCP	REINFORCED CONCRETE PIPE
R	RADIUS
RIM	MANHOLE RIM ELEVATION (SOLID COVER)
RP	REDUCED PRESSURE BACKFLOW PREVENTER
RW	RIGHT OF WAY
SCH	SCHEDULE
SD	STORM DRAIN
SDMH	STORM DRAIN MANHOLE
SG	SUBGRADE ELEVATION
SS	SANITARY SEWER
SSMH	SANITARY SEWER MANHOLE
STD	STANDARD
S/W	SIDEWALK
T	TELEPHONE
TC	TOP OF CURB
TD	TRENCH DRAIN
TDCB	TRENCH DRAIN CATCH BASIN
TP	TELEPHONE POLE
TR	TOP OF RAMP ELEVATION
TRW	TOP OF RETAINING WALL
TSW	TOP OF SEAT WALL
TW	TOP OF WALK ELEVATION
U	UTILITY
UG	UNDERGROUND
UON	UNLESS OTHERWISE NOTED
VCP	VITRIFIED CLAY PIPE
W	WATER
W/	WITH
W/O	WITHOUT
WV	WATER VALVE

LEGEND

NOTE: NOT ALL SYMBOLS MAY BE USED ON THESE PLANS.

PROPOSED GRADING & DRAINAGE SYMBOLS:

Symbol	Description
8" SD	STORM DRAIN LINE (SIZE AND FLOW SHOWN)
	STORM DRAIN MANHOLE (SDMH)
	CATCH BASIN (CB)
	DROP INLET (DI)
	AREA DRAIN (AD)
	PLANTER DRAIN (PD) OR FLOOR DRAIN (FD)
CO	STORM DRAIN CLEANOUT
99.99	ELEVATION
FF=100.00	FINISHED FLOOR ELEVATION
PAD=99.33	BUILDING PAD ELEVATION
	CONCRETE SIDEWALK
	GRADED DIRECTION FOR DRAINAGE FLOW
	SWALE
	SLOPE
	TREE TO BE REMOVED
	RETAINING WALL

PROPOSED SANITARY SEWER SYMBOLS:

Symbol	Description
6" SS	SANITARY SEWER LINE (SIZE AND FLOW SHOWN)
	SANITARY SEWER MANHOLE (SSMH)
CO	SEWER CLEANOUT FLUSHER BRANCH

PROPOSED WATER SYMBOLS:

Symbol	Description
8" W	WATER LINE & SIZE
8" FS	FIRE LINE & SIZE
8" DW	DOMESTIC WATER LINE & SIZE
8" RW	RECLAIMED WATER LINE & SIZE
8" IRR	IRRIGATION SERVICE LINE & SIZE
8" NP	NON POTABLE WATER LINE & SIZE
8" SP	FIRE SPRINKLER SERVICE LINE & SIZE
	GATE VALVE
M	WATER METER
FH	FIRE HYDRANT ASSEMBLY
FDC	FIRE DEPARTMENT CONNECTION
DC	DETECTOR CHECK VALVE
DDC	DOUBLE DETECTOR CHECK VALVE
RP	REDUCED PRESSURE BACKFLOW PREVENTER
	BUTTERFLY VALVE
1"	AIR RELEASE VALVE + SIZE
1"	BLOW-OFF VALVE + SIZE
PIV	POST INDICATOR VALVE

DEMOLITION GENERAL NOTES

1. REFER TO ARCHITECTURAL, LANDSCAPE, ELECTRICAL AND PLUMBING PLANS FOR ADDITIONAL DEMOLITION ITEMS.
2. IN THE EVENT THAT ANY UNUSUAL CONDITIONS NOT COVERED BY THE GEOTECHNICAL INVESTIGATION REPORT OR ARE ENCOUNTERED DURING GRADING OPERATIONS THE GEOTECHNICAL ENGINEER AND THE ARCHITECT SHALL BE IMMEDIATELY NOTIFIED FOR DIRECTIONS.
3. ADDITIONAL DEMOLITION INFORMATION MAY BE SHOWN ON THE GRADING, DRAINAGE, AND UTILITY PLANS, AND THOSE PLANS PREPARED BY OTHER DISCIPLINES FOR THIS PROJECT.
4. ALL DEMOLISHED ITEMS SHALL BE DISPOSED OF OFFSITE AT A SUITABLE, LEGAL, DUMP SITE OR OTHER FACILITY.
5. ALL DISPOSED OF MATERIALS SHALL BE RECYCLED IF POSSIBLE.
6. THE SCHOOL DISTRICT SHALL HAVE SALVAGE RIGHTS TO ANY DEMOLISHED ITEMS SHOWN HEREON. THE CONTRACTOR SHALL GIVE THE DISTRICT NOTICE 7 DAYS PRIOR TO THE START OF DEMOLITION. THE DISTRICT SHALL MOVE ANY RETAINED ITEMS OUT OF THE CONTRACTORS WORK AREA, UNLESS ANOTHER ARRANGEMENT IS MADE WITH THE CONTRACTOR. ANY REMAINING ITEMS BECOME THE PROPERTY OF THE CONTRACTOR AND SHALL BE REMOVED FROM THE SITE. ANY ITEMS NOT SHOWN FOR REMOVAL SHALL REMAIN AND SHALL BE PROTECTED FROM DAMAGE DURING CONSTRUCTION TO A REASONABLE EXTENT.
7. EXISTING UTILITY STRUCTURES IN AREAS OF NEW PAVING SHALL BE REMOVED AND REPLACED WITH NEW BOX/COVER AT NEW GRADE UNLESS SPECIFICALLY NOTED OTHERWISE.
8. ITEMS OUTSIDE THE LIMITS OF DEMOLITION SHALL REMAIN AND BE PROTECTED FROM DAMAGE DURING CONSTRUCTION.
9. EXISTING UTILITY STRUCTURES AND PIPING NOT SHOWN ON DEMOLITION PLAN TO BE REMOVED SHALL REMAIN AND BE PROTECTED.
10. SAWCUTS AND SUBSEQUENT PATCH BACK OF CONCRETE WALKS, SHALL BE TO THE EXISTING CONCRETE JOINT BEYOND THE NEAREST LOCATION OF DEMOLITION AS SHOWN. A REASONABLE EFFORT HAS BEEN MADE TO LOCATE, SHOW AND COORDINATE WITH EXISTING JOINTS, HOWEVER IF FIELD CONDITIONS ARE OTHERWISE, IT IS UNDERSTOOD TO REMOVE AND PATCH BACK TO THE NEAREST JOINTS BEYOND DEMOLITION.
11. PRIOR TO THE START OF CONSTRUCTION, VERIFY AND POTHOLE ALL UTILITY POINTS OF CONNECTION FOR LOCATION, DEPTH, AND SIZE. IF CONFLICT IS FOUND, CONTACT THE ENGINEER IMMEDIATELY FOR DIRECTION.
12. WITHIN LANDSCAPE AREAS TO BE DEMOLISHED THERE MAY BE EXISTING IRRIGATION LINES NOT SHOWN ON THIS PLAN. CONTRACTOR SHALL REMOVE LATERAL LINES AND HEADS ENCOUNTERED. MAIN LINES AND CONTROL WIRES MAY ONLY BE REMOVED PROVIDED THAT ROUTING IS KNOWN AND REMOVAL WILL NOT DEACTIVATE AN IRRIGATION SYSTEMS INTENDED TO REMAIN. IF CONFLICT IS FOUND, CONTACT THE ENGINEER FOR DIRECTION.
13. COORDINATE REMOVAL OF LANDSCAPE ITEMS WITH LANDSCAPE PLANS.

GENERAL NOTES

1. THE TYPES, LOCATIONS, SIZES, AND/OR DEPTHS OF EXISTING UNDERGROUND UTILITIES AS SHOWN ON THESE PLANS WERE OBTAINED FROM SOURCES OF VARYING RELIABILITY. THE CONTRACTOR IS CAUTIONED THAT ONLY ACTUAL EXCAVATION WILL REVEAL THE TYPES, EXTENT, SIZES, LOCATIONS AND DEPTHS OF SUCH UNDERGROUND UTILITIES. A REASONABLE EFFORT HAS BEEN MADE TO LOCATE AND DELINEATE ALL KNOWN UNDERGROUND UTILITIES. HOWEVER, WARREN CONSULTING ENGINEERS CAN ASSUME NO RESPONSIBILITY FOR THE COMPLETENESS OR ACCURACY OF ITS DELINEATION OF SUCH UNDERGROUND UTILITIES, NOR FOR THE EXISTENCE OF OTHER BURIED OBJECTS OR UTILITIES WHICH MAY BE ENCOUNTERED BUT WHICH ARE NOT SHOWN ON THESE PLANS. THE CONTRACTOR OR ANY SUBCONTRACTOR FOR THIS CONTRACT SHALL NOTIFY MEMBERS OF UNDERGROUND SERVICE ALERT (USA) TWO (2) WORKING DAYS IN ADVANCE OF PERFORMING ANY EXCAVATION WORK BY CALLING TOLL FREE 1-800-227-2600, OR 811.

811 Know what's **below.** **Call** before you dig.

2. WARREN CONSULTING ENGINEERS, INC. (WCE) ASSUMES NO RESPONSIBILITY FOR ERRORS IN PHYSICAL LOCATION OF IMPROVEMENTS, HORIZONTAL OR VERTICAL. IN ADDITION, ANY SUCH ERRORS IN PHYSICAL LOCATION MAY AFFECT THE INTENDED DESIGN OF SUCH IMPROVEMENTS AND WCE CANNOT BE HELD RESPONSIBLE FOR SUCH CONDITIONS WHICH ARE A RESULT OF ERRORS IN SURVEYING, OR IMPROPER CONSTRUCTION.
3. IF SUBSURFACE CULTURAL RESOURCES, REMAINS, AND/OR ARTIFACTS ARE UNCOVERED DURING PROJECT CONSTRUCTION, ALL WORK IN THE VICINITY SHALL BE STOPPED UNTIL SUCH ITEMS CAN BE ASSESSED BY AN APPROPRIATE MEMBER OF THE COUNTY ENVIRONMENTAL IMPACT SECTION STAFF.
4. CONTRACTOR AGREES THAT HE/SHE SHALL ASSUME SOLE AND COMPLETE RESPONSIBILITY FOR JOB SITE CONDITIONS DURING THE COURSE OF CONSTRUCTION OF THIS PROJECT, INCLUDING SAFETY OF ALL PERSONS AND PROPERTY: THAT THIS REQUIREMENT SHALL APPLY CONTINUOUSLY AND SHALL NOT BE LIMITED TO NORMAL WORKING HOURS: AND THAT THE CONTRACTOR SHALL DEFEND, INDEMNIFY AND HOLD THE OWNER AND ENGINEER HARMLESS FROM ANY AND ALL LIABILITY, REAL OR ALLEGED, IN CONNECTION WITH THE PERFORMANCE OF WORK ON THIS PROJECT, EXCEPTING FOR LIABILITY ARISING FROM THE SOLE NEGLIGENCE OF THE OWNER OR ENGINEER.
5. THE CONTRACTOR SHALL OBTAIN AN EXCAVATION PERMIT FROM THE STATE OF CALIFORNIA DEPARTMENT OF INDUSTRIAL SAFETY FOR ALL EXCAVATIONS OF 5 FEET OR MORE IN DEPTH.
6. IT SHALL BE THE CONTRACTOR'S RESPONSIBILITY TO MAKE NECESSARY PRE-CONSTRUCTION SITE REVIEWS TO DETERMINE NECESSARY MEANS AND METHODS TO COMPLETE THE IMPROVEMENTS SHOWN ON THESE PLANS.
7. WHERE IMPROVEMENTS LIE WITHIN AN EXISTING DEVELOPED AREA, CONTRACTOR SHALL USE CAUTION WHEN ACCESSING THE SITE THROUGH THESE EXISTING IMPROVEMENTS. IT IS THE CONTRACTORS RESPONSIBILITY TO PROTECT ANY SUCH EXISTING IMPROVEMENTS OUTSIDE THE PROJECT BOUNDARY, OR EXISTING IMPROVEMENTS WITHIN THE BOUNDARY WHICH ARE TO REMAIN. PROPER PRECAUTIONS SHALL BE PROVIDED AND MAINTAINED THROUGHOUT CONSTRUCTION. ANY DAMAGE SHALL BE REPAIRED OR REPLACED TO THE SATISFACTION OF THE OWNER.
8. IT IS THE RESPONSIBILITY OF THE CONTRACTOR TO KEEP DETAILED RECORDS OF MINOR CHANGES OR ADJUSTMENTS MADE DURING CONSTRUCTION (WHICH WERE NOT FORMALLY ISSUED). UPON PROJECT COMPLETION, THESE RECORDS AND/OR INFORMATION SHALL BE PROVIDED TO THE OWNER AND WARREN CONSULTING ENGINEERS, INC. UNLESS AN OFFICIAL "AS-BUILT" SET OF PLANS IS A REQUIREMENT OF THE CONTRACT. IF AS-BUILT PLANS ARE A REQUIREMENT OF THE CONTRACT, REFER TO SPECIFICATIONS FOR AS-BUILT DELIVERABLE REQUIREMENTS.
9. IN VEHICULAR PATHWAYS, EXISTING ASPHALTIC AND/OR CONCRETE SURFACES SHALL BE CUT TO A NEAT AND STRAIGHT LINE, PARALLEL OR PERPENDICULAR TO THE VEHICULAR TRAVELED PATH. THIS IS TYPICALLY THE ROADWAY CENTERLINE, BUT MAY VARY. THAT SAWCUT EDGE SHALL BE PROTECTED FROM DAMAGE DURING CONSTRUCTION SO A CLEAN EDGE REMAINS FOR PATCH BACK.. IF EDGE IS DAMAGED, A NEW SAW CUT WILL BE REQUIRED. THE EXPOSED EDGE SHALL BE "TACKED" WITH EMULSION PRIOR TO PAVING.
10. NO BURNING OR BLASTING SHALL BE ALLOWED ONSITE UNLESS SPECIFICALLY ADDRESSED ON PLANS, OR SPECIFICALLY APPROVED AND COORDINATED WITH THE ARCHITECT, ENGINEER, AND LOCAL AGENCY OR OTHER ADMINISTRATIVE AUTHORITY.
11. SUBGRADE AND RESULTING FINISHED GRADE SHALL BE CONSTRUCTED SMOOTH AND UNIFORM BETWEEN SPOT ELEVATIONS, CONTOURS OR OTHER STRUCTURE ELEVATIONS SHOWN ON GRADING OR OTHER PLANS. NO MOUNDS, RUTS, DEPRESSIONS OR OTHER GRADING DEFICIENCIES WILL BE ALLOWED UNLESS SPECIFICALLY SHOWN ON PLANS.
12. ON NEW WATER SYSTEMS, SERVICE LATERALS SHALL BE MADE USING APPROPRIATE "TEE" AND "WYE" FITTINGS. SADDLE TAPS WILL ONLY BE ALLOWED WHEN MAKING CONNECTIONS TO EXISTING WATER MAINS.
13. CURING COMPOUND SHALL BE APPLIED IN A CONTINUOUS SOLID WET FLOWING COAT. ANY "SPOTTY" APPLICATIONS SHALL BE RECOATED IMMEDIATELY. APPLICATION SHALL BE INSPECTED BY PROJECT INSPECTOR DURING APPLICATION.
14. EMBEDMENT OF FEATURES IN CONCRETE PAVING, CURBS, OR WALLS, SUCH AS SQUARE OR ROUND TUBING, POSTS, OR COLUMNS, STEEL BOLTED PLATES, OR OTHER STRUCTURES, SHALL REQUIRE ADDITIONAL SCORE OR EXPANSION JOINTS TO PREVENT UNCONTROLLED CRACKING. THOSE ADDITIONAL JOINTS MAY OR MAY NOT BE SPECIFICALLY SHOWN ON PLANS BUT SHALL BE PROVIDED BY THE CONTRACTOR.
15. EMBEDMENT OF FEATURES IN CONCRETE PAVING, CURBS, OR WALLS, SUCH AS SQUARE OR ROUND TUBING, POSTS, OR COLUMNS, STEEL BOLTED PLATES, OR OTHER STRUCTURES, SHALL REQUIRE A MINOR ADJUSTMENT OF REBAR WITHIN CONCRETE TO ALLOW FOR SUCH STRUCTURE. THAT REBAR ADJUSTMENT MAY NOT BE SPECIFICALLY SHOWN ON PLANS.
16. NO MORE THAN 1 GALLON OF WATER PER YARD OF CONCRETE CAN BE ADDED TO THE TRUCK AFTER ARRIVAL TO PROJECT SITE. THE ADDITION OF WATER CAN ONLY BE ADDED UNDER THE SUPERVISION OF THE CONCRETE INSPECTOR OR LABORATORY TECHNICIAN.
17. WHEN PUMPING CONCRETE FOR PLACEMENT, ABSOLUTELY NO WATER IS TO BE ADDED TO PUMP HOPPER. ANY WATER ADDED TO HOPPER WILL BE REASON FOR CONCRETE REJECTION AT THE CONTRACTORS EXPENSE.
18. ALL CONTRACTION/CONSTRUCTION JOINTS "CJ" SHALL BE 1/4 THE SLAB THICKNESS DEEP, BUT NO LESS THAN 1" FOR CONTROLLING OF CRACKING. CONTRACTOR SHALL EXERCISE CAUTION WHEN FINAL TROWELING OF CONCRETE SO AS NOT TO FILL IN THESE JOINTS WITH CONCRETE CREAM. ANY CRACKS OUTSIDE OF JOINTS WHICH WERE CONSTRUCTED LESS THAN 1" DEEP, SHALL BE CAUSE FOR CONCRETE SLAB(S) TO BE REMOVED AND REPLACE AT CONTRACTORS EXPENSE.
19. ANY SCREED BOARDS SET WITHIN CONCRETE SLABS SHALL BE AN "OVERHEAD SCREED" SO THERE IS NO INTERFERENCE WITH THE PLACEMENT AND ALIGNMENT OF SLAB REINFORCING.
20. 3-1/2" FELT JOINTS WILL NOT BE ACCEPTED. PROVIDE A FULL 4" FELT JOINT FOR 4" SLAB CONSTRUCTION, AND A 6" FELT JOINT FOR A 6" SLAB SLAB CONSTRUCTION.
21. SHOULD ANY SHRINKAGE CRACKS OCCUR OUTSIDE OF EITHER THE EXPANSION JOINTS OR CRACK CONTROL JOINTS, THEN THE CONCRETE SLAB SHALL BE SAWCUT AT THE NEAREST JOINTS ON EACH SIDE OF THE CRACK AND THE CONCRETE SECTION SHALL BE, REMOVED AND REPLACED. NEW CONCRETE SHALL BE DOWELED INTO EXISTING CONCRETE PER DRAWING DETAIL.
22. ALL AREAS DISTURBED BY GRADING OPERATIONS WHETHER SHOWN ON THE DRAWINGS OR NOT SHALL BE HYDROSEEDED UNLESS OTHERWISE NOTED. HYDRO SEEDING SHALL CONFORM TO LOCAL CITY/COUNTY STANDARDS.
23. REPAIR OR PATCHING OF GALVANIZED METALS, SUCH AS AFTER WELDING GALVANIZED COMPONENTS, SHALL BE MADE USING A ZINC COMPOSITION "HOT STICK" APPLICATION PER ASTM A 780-01. GALVANIZING PAINTS WILL NOT BE ALLOWED.
24. AT LIMITS OF NEW PAVEMENT OR CURBS ADJACENT TO LANDSCAPING PROVIDE A 4:1 MINIMUM TRANSITION TO EXISTING GRADE WITH TOPSOIL. ADJUST EXISTING IRRIGATION HEADS TO FINISH GRADE AND PROVIDE SOD IN GRASS AREAS TO RESTORE TO EXISTING CONDITION.

37. TRANSITION BETWEEN PAVED SURFACES AND LANDSCAPE AREAS SHALL BE NO GREATER THAN 1", UNLESS NOTED OTHERWISE.
38. WITHIN LIMITS OF WORK THERE MAY BE EXISTING IRRIGATION LINES NOT SHOWN ON THIS PLAN. CONTRACTOR SHALL REMOVE LATERAL LINES AND HEADS ENCOUNTERED. MAIN LINES AND CONTROL WIRES MAY ONLY BE REMOVED PROVIDED THAT ROUTING IS KNOWN AND REMOVAL WILL NOT DEACTIVATE AN IRRIGATION SYSTEMS INTENDED TO REMAIN. IF CONFLICT IS FOUND, CONTACT THE ARCHITECT FOR DIRECTION.
39. GENERAL CONTRACTOR IS REQUIRED TO HIRE A LANDSCAPE SUBCONTRACTOR TO PERFORM ALL LANDSCAPE AND IRRIGATION REPAIRS.
40. WIDTH OF NEW SIDEWALKS SHALL MATCH WIDTH OF EXISTING, ADJACENT, SIDEWALKS.
41. SEE ARCHITECTURAL PLANS FOR EXPANSION AND CONTROL JOINT LAYOUT.
42. ADJUST TO FINISH GRADE ALL UTILITY BOXES, FRAMES, COVERS SLEEVES, POST HOLES GRATES, ETC. FOUND IN AREA OF WORK, WHETHER SHOWN OR NOT. CLEAN OR REPLACE AS NECESSARY TO ENSURE PROPER SEATING.
43. ALL NEW ASPHALT PAVING TO BE PROVIDED WITH 2 COATS OF SEALCOAT.
43. PRIOR TO NEW SEALCOAT ON EXISTING ASPHALT SURFACES, FILL ALL CRACKS 1/4" INCHES OR WIDER WITH AN APPROVED CRACK FILLER.
44. FOR ACCESSIBLE PATH OF TRAVEL REQUIREMENTS SEE ARCHITECTURAL SHEETS.
45. PERCENT OF SLOPE SHOWN ON ARROWS ARE MAXIMUM SLOPES AND NOT INTENDED TO SUPERCEDE SLOPES DEFINED BY SPOT ELEVATIONS. 0.0% MAX.
46. WITHIN THE LIMITS OF ACCESSIBLE PARKING AREA AND ACCESSIBLE DROP OFF ZONE THE SLOPE OF PAVEMENT SHALL NOT EXCEED 1.9% IN ANY DIRECTION.
47. SLOPE OF FINISHED PAVING TO BE 1% MINIMUM FOR ASPHALT, 0.5% MINIMUM FOR CONCRETE AND THE MAXIMUM SLOPE SHALL BE AS FOLLOWS;

    CROSS SLOPE PERPENDICULAR TO PATH OF TRAVEL – 1.9%
    DIRECTION OF TRAVEL – 4.9%
    RAMP IN DIRECTION OF TRAVEL – 8.0%
    PLAZA 1.9% – IN ANY DIRECTION
48. THE MINIMUM SLOPE AWAY FROM THE BUILDING ON PAVED SURFACES SHALL BE 1% MINIMUM AND 2% MAXIMUM.
49. TRANSITIONS BETWEEN CONCRETE AND OR ASPHALT SURFACES SHALL BE FLUSH, UNLESS NOTED OTHERWISE BY CURB OR STEP.

CIVIL SHEET INDEX

C0.1 CIVIL GENERAL NOTES AND ABBREVIATIONS
C1.1 DEMOLITION PLAN
C2.1 GRADING AND PAVING PLAN
C3.1 UTILITY PLAN

AGENCY APPROVAL:

IDENTIFICATION STAMP
DIV. OF THE STATE ARCHITECT
APP: 02-122976 INC:
REVIEWED FOR
SS ☑ FLS ☑ ACS ☑
DATE: 03/12/2025

TRACY UNIFIED SCHOOL DISTRICT

HMC Architects
3595005000
2101 CAPITOL AVENUE, SUITE 100
SACRAMENTO, CA 95816
916 368 7990 / www.hmcarchitects.com

ISSUE

Δ	DESCRIPTION	DATE
A	ADDENDUM "A"	3/20/25

KEYNOTES

GENERAL NOTES

REGISTERED PROFESSIONAL ENGINEER
ANTHONY J. TASSANO
NO. C74696
CIVIL
STATE OF CALIFORNIA

WCE
WARREN CONSULTING ENGINEERS, INC.
1117 WINDFIELD WAY, SUITE 110
EL DORADO HILLS, CA 95762 | (916) 985-1870

FACILITY:
JACOBSON ELEMENTARY SCHOOL
1750 W KAVANAGH AVE
TRACY, CA 95376

PROJECT:
JACOBSON ES - TK CLASSROOM

SHEET NAME:
CIVIL GENERAL NOTES AND ABBREVIATIONS

CONSTRUCTION DOCUMENTS

DATE: **1/16/2024** CLIENT PROJ NO: **3595005000**

SHEET:
C0.1

ADDENDUM "A"

PLEASE RECYCLE
THE LINE SHOWN ABOVE IS EXACTLY ONE INCH LONG AT THIS SHEETS ORIGINAL PAGE SIZE

THE LINE SHOWN ABOVE IS EQUAL TO ONE INCH ON SHEETS 22X34 ONLY

DEMOLITION NOTES

1. REMOVE AND DISPOSE OF EXISTING TURF AND ASSOCIATED IRRIGATION PIPING/SPRINKLERS WITHIN AREAS OF WORK. CUT AND CAP ANY MAINLINES NEAR WHERE THEY ENTER THE BOUNDARY OF THE PROJECT. MARK ALL CAPPED LINES WITH AN IRRIGATION VALVE BO.. ALL EXISTING IRRIGATION AREAS OUTSIDE THE PROJECT WORK AREA SHALL BE PRESERVED AND OPERATIONAL. INTEGRITY SHALL BE MAINTAINED WITH PROPER SPRINKLER COVERAGE TO TURF AREAS TO REMAIN.

GRAPHIC SCALE

10' 0 5' 10' 20'

(IN FEET) 1 inch = 10 feet

THIS DRAWING MAY HAVE BEEN ENLARGED OR REDUCED.

NORTH

12/12/2023 4:58:53 PM

PLEASE RECYCLE

AGENCY APPROVAL:

IDENTIFICATION STAMP
DIV. OF THE STATE ARCHITECT
APP: 02-122976 INC:
REVIEWED FOR
SS ☑ FLS ☑ ACS ☑
DATE: 03/12/2025

TRACY UNIFIED SCHOOL DISTRICT

HMC Architects

3595005000

2101 CAPITOL AVENUE, SUITE 100
SACRAMENTO, CA 95816
916 368 7990 / www.hmcarchitects.com

ISSUE

Δ	DESCRIPTION	DATE
1	ADDENDUM "A"	3/20/25

KEYNOTES

GENERAL NOTES

REGISTERED PROFESSIONAL ENGINEER
ANTHONY J. TASSANO
NO. C74696
OF CALIFORNIA

WCE

WARREN CONSULTING ENGINEERS, INC.
1117 WINDFIELD WAY, SUITE 110
EL DORADO HILLS, CA 95762 | (916) 985-1870

FACILITY:

JACOBSON ELEMENTARY SCHOOL
1750 W KAVANAGH AVE
TRACY, CA 95376

PROJECT:

JACOBSON ES - TK CLASSROOM

SHEET NAME:

DEMOLITION PLAN

CONSTRUCTION DOCUMENTS

DATE: **1/16/2024** | CLIENT PROJ NO: **3595005000**

SHEET:

C1.1

ADDENDUM "A"

THE LINE SHOWN ABOVE IS EQUAL TO ONE INCH ON SHEETS LARGER THAN 22X34

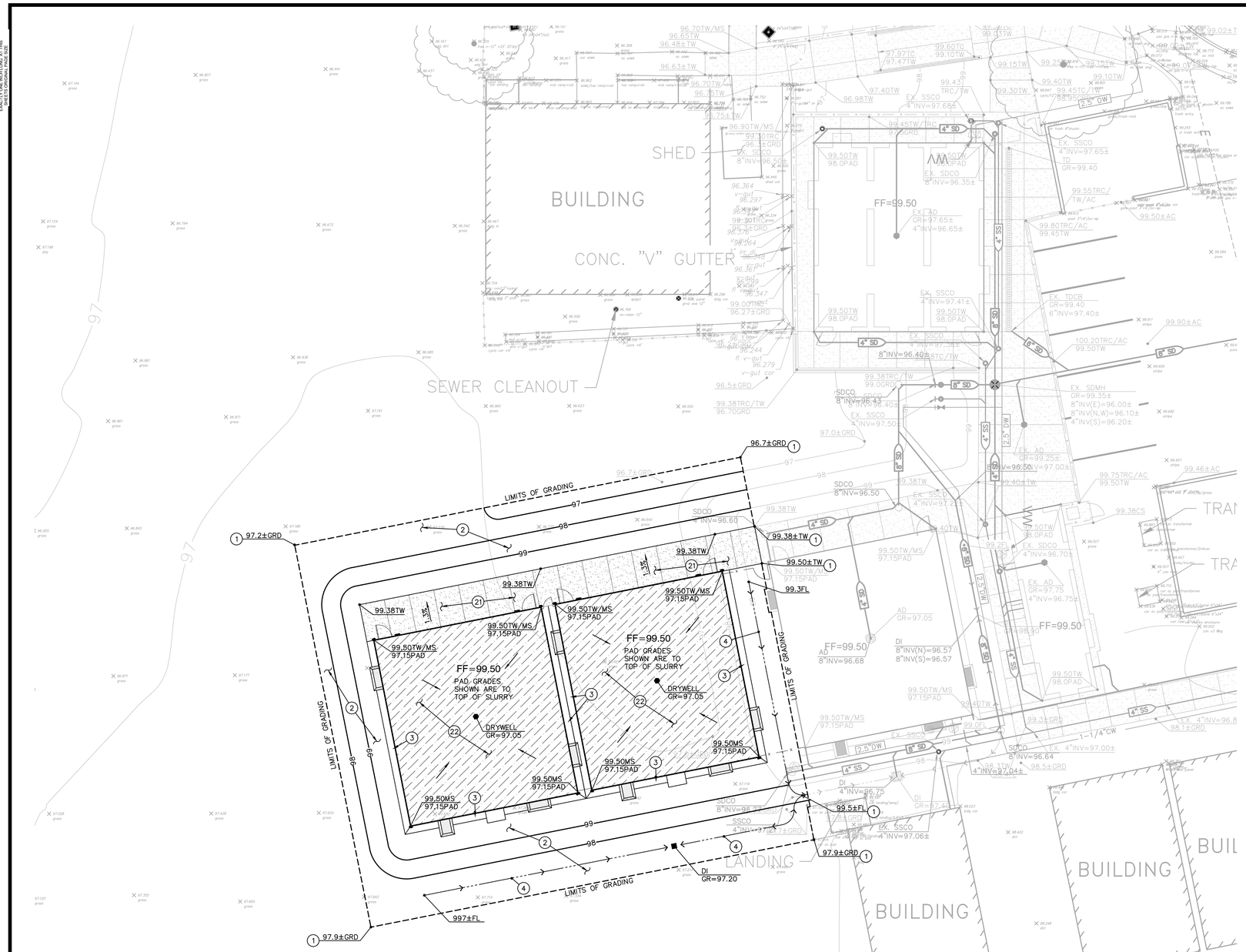

SUBGRADE PREPARATION

FOLLOWING SITE DEMOLITION ACTIVITIES:

EXCAVATE DOWN TO ROUGH SUBGRADE ELEVATION, SCARIFY THE EXISTING SOILS TO A MINIMUM DEPTH OF 12 INCHES, MOISTURE CONDITION TO AT LEAST 2 PERCENT ABOVE THE OPTIMUM MOISTURE AND COMPACT TO AT LEAST 90 PERCENT OF THE MAXIMUM DRY DENSITY DETERMINED BY THE ASTM D1557 TEST METHOD. UPPER 12 INCHES OF SUBGRADE SUPPORTING ASPHALT AND CONCRETE PAVEMENT SHALL BE COMPACTED TO 95 PERCENT.

PAVING GENERAL NOTE

PAVING ADJACENT TO BUILDINGS ARE TO SLOPE 1% MINIMUM AWAY FROM THE BUILDING. WHERE CROSS SLOPE OCCURS ON PATH OF TRAVEL, SLOPE CANNOT EXCEED 2%.

GRADING NOTES

1. MATCH EXISTING GRADE/ELEVATION.
2. PLACE SOD IN ALL AREAS DISTURBED BY CONSTRUCTION ACTIVITIES THAT ARE NOT TO BE PAVED. PROVIDE NEW IRRIGATION PIPING/SPRINKLERS AS REQUIRED TO MAINTAIN PROPER COVERAGE.
3. CONSTRUCT 18" WIDE CONCRETE BAND AT BUILDING PER 1/C2.1
4. CONSTRUCT SWALE.

PAVING LEGEND

21 TYPE 21 PAVING

PLACE 5" PCC WITH #4 REBAR @ 24" O.C.E.W. OVER 16" CLASS II AB ON SUBGRADE COMPACTED PER THIS SHEET AND SPECIFICATION SECTION 310000. 2/C2.1

22 TYPE 22 PAVING

PLACE 2" THICK 3-SACK CONCRETE SLURRY SLAB AT MODULAR CRAWL SPACE.

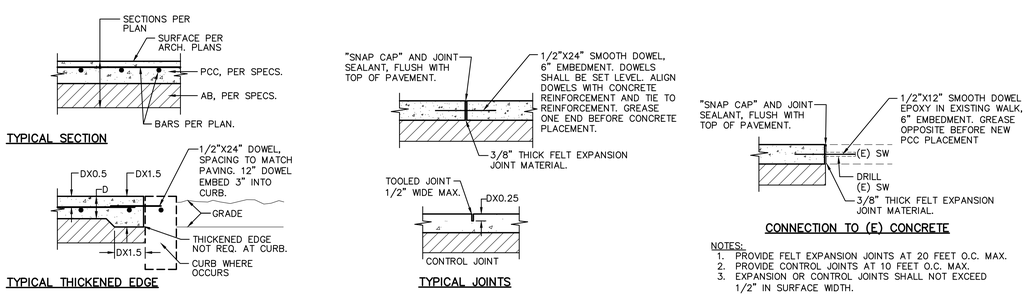

NOTES:
1. PROVIDE FELT EXPANSION JOINTS AT 20 FEET O.C. MAX.
2. PROVIDE CONTROL JOINTS AT 10 FEET O.C. MAX.
3. EXPANSION OR CONTROL JOINTS SHALL NOT EXCEED 1/2" IN SURFACE WIDTH.

2/C2.1 CONCRETE SIDEWALK

NO SCALE

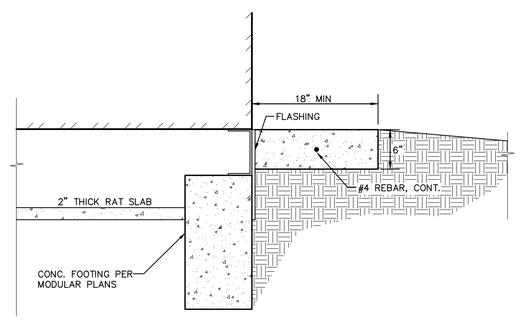

1/C2.1 CONCRETE BAND

NO SCALE

GRAPHIC SCALE

10' 0 5' 10' 20'

(IN FEET) 1 inch = 10 feet

NORTH

THIS DRAWING MAY HAVE BEEN ENLARGED OR REDUCED.

AGENCY APPROVAL:

IDENTIFICATION STAMP
DIV. OF THE STATE ARCHITECT
APP: 02-122976 INC:
REVIEWED FOR
SS ☑ FLS ☑ ACS ☑
DATE: 03/12/2025

TRACY UNIFIED SCHOOL DISTRICT

HMC Architects

3595005000

2101 CAPITOL AVENUE, SUITE 100
SACRAMENTO, CA 95816
916 368 7990 / www.hmcarchitects.com

ISSUE

Δ	DESCRIPTION	DATE
1	ADDENDUM "A"	3/20/25

KEYNOTES

GENERAL NOTES

REGISTERED PROFESSIONAL ENGINEER ANTHONY J. TASSANO NO. C74696 OF CALIFORNIA

WCE

WARREN CONSULTING ENGINEERS, INC.
1117 WINDFIELD WAY, SUITE 110
EL DORADO HILLS, CA 95762 | (916) 985-1870

FACILITY:

JACOBSON ELEMENTARY SCHOOL
1750 W KAVANAGH AVE
TRACY, CA 95376

PROJECT:

JACOBSON ES - TK CLASSROOM

SHEET NAME:

GRADING AND PAVING PLAN

CONSTRUCTION DOCUMENTS

DATE: 1/16/2024 | CLIENT PROJ NO: 3595005000

SHEET:

C2.1

ADDENDUM "A"

12/12/2023 4:58:53 PM

PLEASE RECYCLE

THE LINE SHOWN ABOVE IS EQUAL TO ONE INCH ON ANSI A SIZE PLANS

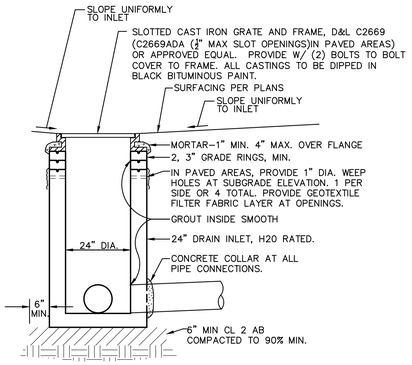

1 C3.1 DROP INLET
NO SCALE

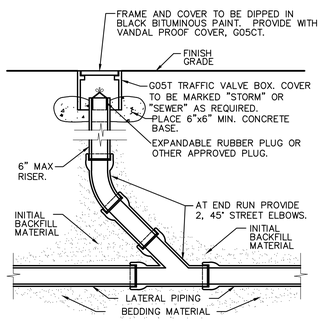

2 C3.1 CLEANOUT
NO SCALE

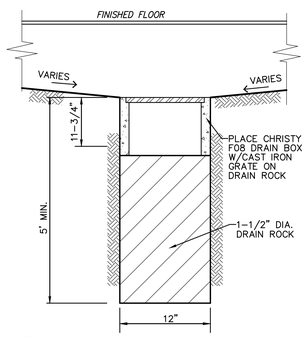

3 C3.1 DRYWELL
NO SCALE

DRAINAGE NOTES

31. CONSTRUCT DROP INLET PER 1/C3.1
32. CONSTRUCT STORM DRAIN CLEANOUT PER 2/C3.1
33. CONSTRUCT DRYWELL PER 3/C3.1
34. PROVIDE DOWNSPOUT CONNECTION PER 4/C3.1
35. PLACE 4" STORM DRAIN PER 5/C3.1
36. PLACE 6" STORM DRAIN PER 5/C3.1
37. CONNECT TO EXISTING STORM DRAIN. FIELD VERIFY EXACT DEPTH, LOCATION AND CONDITION PRIOR TO TRENCHING. PROVIDE ALL FITTINGS NECESSARY TO MAKE CONNECTION.

SEWER NOTES

51. PLACE 4" SEWER PER 5/C3.1
52. CONSTRUCT SEWER CLEANOUT PER 2/C3.1
53. CONNECT TO BUILDING SEWER SERVICE. COORDINATE EXACT LOCATION AND DEPTH AT BUILDING PRIOR TO TRENCHING. PROVIDE ALL FITTINGS NECESSARY TO MAKE CONNECTION.
54. CONNECT TO EXISTING SEWER. FIELD VERIFY EXACT DEPTH, AND LOCATION PRIOR TO TRENCHING. PROVIDE ALL FITTINGS NECESSARY TO MAKE CONNECTION.

DOMESTIC WATER NOTES

71. PLACE 2" WATER PIPE PER 6/C3.1
72. PLACE GATE VALVE AND VALVE BOX. SIZE TO MATCH LINE SIZE. 7/C3.1
73. CONNECT TO BUILDING DOMESTIC WATER SERVICE. COORDINATE EXACT LOCATION AND DEPTH AT BUILDING PRIOR TO TRENCHING. PROVIDE ALL FITTINGS NECESSARY TO MAKE CONNECTION.
74. CONNECT TO EXISTING WATER LINE. FIELD VERIFY EXACT DEPTH AND LOCATION PRIOR TO TRENCHING. PROVIDE ALL FITTINGS NECESSARY TO MAKE CONNECTION.

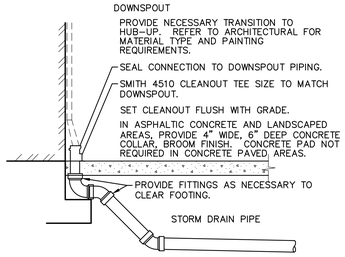

4 C3.1 DOWNSPOUT CONNECTION
NO SCALE

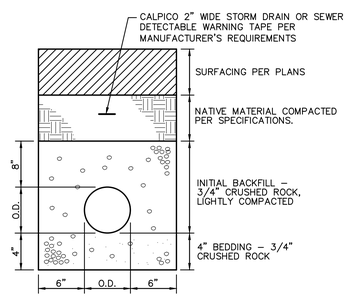

5 C3.1 SEWER AND STORM DRAIN TRENCH
NO SCALE

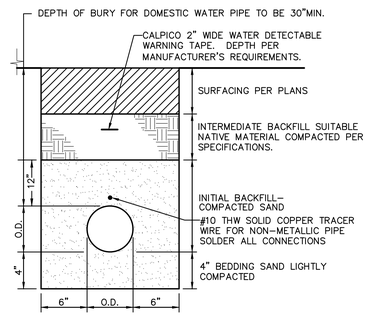

6 C3.1 WATER TRENCH
NO SCALE

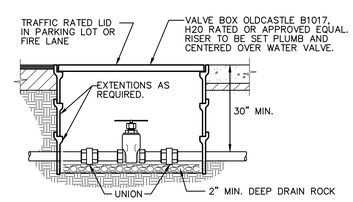

7 C3.1 WATER VALVE
1/2" TO 3" PIPE
NO SCALE

GRAPHIC SCALE
10' 0 5' 10' 20'
(IN FEET) 1 inch = 10 feet
NORTH
THIS DRAWING MAY HAVE BEEN ENLARGED OR REDUCED.

AGENCY APPROVAL:

IDENTIFICATION STAMP
DIV. OF THE STATE ARCHITECT
APP: 02-122976 INC:
REVIEWED FOR
SS ☑ FLS ☑ ACS ☑
DATE: 03/12/2025

TRACY UNIFIED SCHOOL DISTRICT

HMC Architects
3595005000
2101 CAPITOL AVENUE, SUITE 100
SACRAMENTO, CA 95816
916 368 7990 / www.hmcarchitects.com

ISSUE

Δ	DESCRIPTION	DATE
1	ADDENDUM "A"	3/20/25

KEYNOTES

GENERAL NOTES

REGISTERED PROFESSIONAL ENGINEER ANTHONY J. TASSANO NO. C74696 OF CALIFORNIA

WCE
WARREN CONSULTING ENGINEERS, INC.
1117 WINDFIELD WAY, SUITE 110
EL DORADO HILLS, CA 95762 | (916) 985-1870

FACILITY:
JACOBSON ELEMENTARY SCHOOL
1750 W KAVANAGH AVE
TRACY, CA 95376

PROJECT:
JACOBSON ES - TK CLASSROOM

SHEET NAME:
UTILITY PLAN

CONSTRUCTION DOCUMENTS

DATE: **1/16/2024** CLIENT PROJ NO: **3595005000**

SHEET:
C3.1

ADDENDUM "A"

12/12/2023 4:58:53 PM

PLEASE RECYCLE

THE LINE SHOWN ABOVE IS EXACTLY ONE INCH LONG ON ORIGINAL DRAWING SHEETS

PORTABLE ASSITIVE LISTENING SYSTEM REQUIREMENTS

TOTAL CLASSROOMS 2 x 3 RECEIVERS = 6 RECEIVERS. BOTH REQUIRE TO BE HEARING AID COMPATIBLE IN EACH CLASSROOM SO TOTAL NUMBER OF AL RECEIVERS THAT ARE HEARING AID COMPATIBLE = 4 .

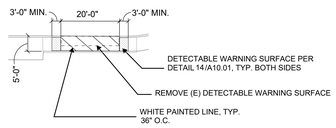

ENLARGED SITE PLAN 2
ACCESS AISLE 1" = 20'-0"

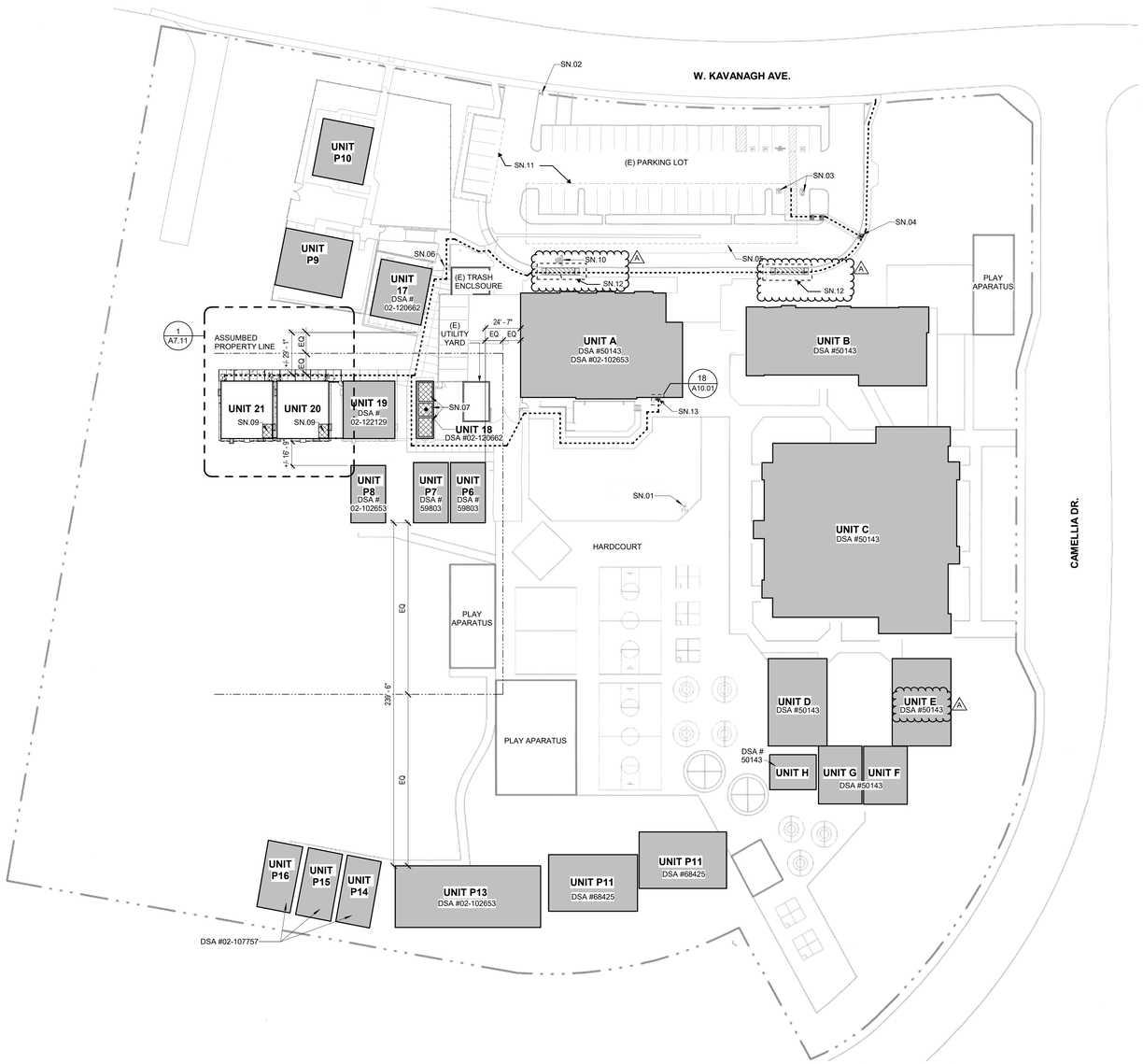

OVERALL SITE PLAN 1
1" = 40'-0"

LEGEND

X	NEW BUILDINGS		PROPERTY LINE
X	EXISTING BUILDINGS		(E) CHAIN LINK FENCE
X	FUTURE BUILDINGS		(E) FIRE HYDRANT (NTS)
	CONCRETE WALK / PAVING		ACCESSIBLE PATH OF TRAVEL (SEE DEFINITION ON THIS SHEET)
	(E) ACCESSIBLE RESTROOM		

ACCESSIBLE PATH OF TRAVEL

PATH OF TRAVEL (P.O.T.) AS INDICATED, IS A BARRIER FREE ACCESS ROUTE WITHOUT ANY ABRUPT VERTICAL CHANGES EXCEEDING 1/2" BEVELED AT 1:2 MAXIMUM SLOPE EXCEPT LEVEL CHAGES THAT DO NOT EXCEED 1/4" VERTICAL. THE PATH OF TRAVEL IS AT LEAST 48" WIDE WITH SLIP RESISTANT SURFACE, STABLE, FIRM AND SMOOTH. CROSS-SLOPE DOES NOT EXCEED 2% AND SLOPE IN THE DIRECTION OF TRAVEL IS LESS THAN 5% UNLESS OTHERWISE INDICATED. THE PATH OF TRAVEL SHALL BE MAINTAINED FREE OF OVERHANGING OBSTRUCTION TO 80" A.F.F. MINIMUM AND WALL MOUNTED OBJECTS WITH THE BOTTOM EDGE BETWEEN 27" AND 80" A.F.F. SHALL PROTRUDE NO MORE THAN 4" INTO THE PEDESTRIAN CIRCULATION AREA. ARCHITECT TO VERIFY THAT ALL BARRIERS IN THE PATH OF TRAVEL HAVE BEEN REMOVED OR WILL BE REMOVED UNDER PROJECT, AND PATH OF TRAVEL COMPLIES WITH CBC 11B-202.4.

EXISTING PATH OF TRAVEL (ARCHITECT'S STATEMENT)

DESIGN PROFESSIONAL IN GENERAL RESPONSIBLE IN CHARGE STATEMENT: THE P.O.T. IDENTIFIED IN THESE DOCUMENTS IS COMPLIANT WITH THE CURRENT APPLICABLE CALIFORNIA BUILDING CODE ACCESSIBILITY PROVISIONS FOR PATH OF TRAVEL REQUIREMENTS FOR ALTERATIONS, ADDITIONS, AND STRUCTURAL REPAIRS. AS PART OF THE DESIGN OF THIS PROJECT, THE P.O.T. WAS EXAMINED AND ANY ELEMENTS, COMPONENTS, OR PORTIONS OF THE P.O.T. THAT WERE DETERMINED TO BE NON-COMPLIANT

1. HAVE BEEN IDENTIFIED AND
2. THE CORRECTIVE WORK NECESSARY TO BRING THEM INTO COMPLIANCE HAS BEEN INCLUDED WITHIN THE SCOPE OF THIS PROJECT'S WORK THROUGH DETAILS, DRAWINGS, AND SPECIFICATIONS INCORPORATED INTO THESE CONSTRUCTION DOCUMENTS.

ANY NON-COMPLIANT ELEMENTS, COMPONENTS, OR PORTIONS OF THE P.O.T. THAT WILL NOT BE CORRECTED BY THIS PROJECT BASED ON VALUATION THRESHOLD LIMITATIONS OR A FINDING OF UNREASONABLE HARDSHIP ARE SO INDICATED IN THESE CONSTRUCTION DOCUMENTS.

DURING CONSTRUCTION, IF P.O.T. ITEMS WITHIN THE SCOPE OF THIS PROJECT REPRESENTED AS CBC COMPLIANT ARE FOUND TO BE NON-CONFORMING BEYOND REASONABLE CONSTRUCTION TOLERANCES, THEY SHALL BE BROUGHT TO COMPLIANCE WITH THE CBC AS PART OF THIS PROJECT BY MEANS OF A CONSTRUCTION CHANGE DOCUMENT.

EXISTING PARKING CALCULATIONS

TOTAL EXISTING PARKING STALL COUNT:	48 STALLS
ACCESSIBLE PARKING STALLS (PER TABLE 11B-208.2)	
REQUIRED ACCESSIBLE STALLS	2 (26-50 TOTAL STALLS)
REQUIRED VAN ACCESSIBLE STALLS	1 (1-6 ACCESSIBLE STALLS)
EXISTING ACCESSIBLE STALLS PROVIDED	1 STANDARD & 1 VAN

BUILDING DATA AND CODE ANALYSIS

BLDG.	OCCUPANCY	CONSTRUCTION TYPE	OCC. LOAD	ALLOWABLE AREA (S.F.)	ACTUAL AREA (S.F.)
(E) P6*	E	V-B, NON-SPRINKLERED	960 S.F. / 20 NET =48 OCC.	9,500	BLDG.: 960 OVERHANG: 180 TOTAL: 1,140
(E) P7*	E	V-B, NON-SPRINKLERED	960 S.F. / 20 NET =48 OCC.	9,500	BLDG.: 960 OVERHANG: 180 TOTAL: 1,140
(E) P8*	E	V-B, NON-SPRINKLERED	960 S.F. / 20 NET = 48 OCC.	9,500	BLDG.: 960 OVERHANG: 180 TOTAL: 1,140
(E) P18*	E	V-B, NON-SPRINKLERED	NO OCC.	9,500	BLDG: 480 OVERHANG: 60 TOTAL: 540
(E) P19*	E	V-B, NON-SPRINKLERED	1,440 S.F. / 20 NET =72 OCC.	9,500	BLDG: 1,440 OVERHANG: 270 TOTAL: 1,710
P20	E	V-B, NON-SPRINKLERED	1,440 S.F. / 20 NET =72 OCC.	9,500	BLDG: 1,440 OVERHANG: 270 TOTAL: 1,710
P21	E	V-B, NON-SPRINKLERED	1,440 S.F. / 20 NET =72 OCC.	9,500	BLDG: 1,440 OVERHANG: 270 TOTAL: 1,710
			TOTAL: 216 OCC.		TOTAL: 9,090 S.F. < 9,500 = OK

*THE AREA OF THESE BUILDINGS IS BEING COMBINED DUE TO THEIR PROXIMITY TO EACH OTHER AND ARE BEING ANALYZED AS A SINGLE BUILDING. THEIR COMBINED AREAS ARE WITHIN THE ALLOWABLE FLOOR AREA.

SEE OTHER SHEETS FOR CONSTRUCTION

THIS PLAN INCLUDES CODE INFORMATION ONLY, INCLUDING ACCESSIBLE FEATURES ALONG THE PATH OF TRAVEL. REFER TO OTHER SHEETS FOR SITE CONSTRUCTION DETAILS.

EMERGENCY RESPONDER RADIO COVERAGE

NEW BUILDINGS SHALL PE PROVIDED WITH EMERGENCY RESPONDER RADIO COVERAGE IN ACCORANCE WITH CALIFORNIA FIRE CODE SECTION 510. THE PROJECT ARCHITECT (AOR) SHALL CONTACT THE LOCAL FIRE DEPARTMENT AND/OR EMERGENCY COMMUNICATIONS AUTHORITY TO OBTAIN DESIGN, EQUIPMENT SPECIFICATIONS, TESTING AND ACCEPTANCE CRITERIA. PLANS AND REQUEST DOCUMENTATION SHALL BE SUBMITTED TO THE LOCAL AUTHORITY HAVING JURISDICTION FOR REVIEW AND APPROVAL UPON COMPLETION, COPIES OF THE APPROVED PLANS, EQUIPMENT DATA SHEETS, TESTING AND ACCEPTANCE DOCUMENTATION SHALL BE PROVIDED TO THE SCHOOL DISTRICT.

AGENCY APPROVAL:

IDENTIFICATION STAMP
DIV. OF THE STATE ARCHITECT
APP: 02-122976 INC:
REVIEWED FOR
SS ☑ FLS ☑ ACS ☑
DATE: 03/12/2025

TRACY
UNIFIED SCHOOL DISTRICT

HMC Architects
3595005000
2101 CAPITOL AVENUE, SUITE 100
SACRAMENTO, CA 95816
916 368 7990 / www.hmcarchitects.com

LICENSED ARCHITECT JENNIFER PEARSON HANNA C-35691 REN. 05/31/25 STATE OF CALIFORNIA

ISSUE

Δ	DESCRIPTION	DATE
1	ADDENDUM "A"	3/20/25

GENERAL NOTES

1. CONTRACTOR SHALL PROVIDE TEMPORARY FENCING DURING CONSTRUCTION TO SECURE ENTIRE AREA OF WORK.
2. CONTRACTOR SHALL COMPLY WITH 2019 CALIFORNIA FIRE CODE CHAPTER 33, FIRE SAFETY DURING CONSTRUCTION AND DEMOLITION, THROUGHOUT THE ENTIRE PROJECT.
3. PROVIDE 3/4" CHAMFER AT EXPOSED EDGES OF CONCRETE, UNLESS OTHERWISE INDICATED.

SHEET NOTES

SN.01 (E) FIRE HYDRANT
SN.02 (E) TOW AWAY SIGN PER DSA #02-114933
SN.03 (E) ACCESSIBLE PARKING PER DSA APP #02-114933
SN.04 (E) ACCESSIBLE CURB RAMP PER DSA APP #02-114933
SN.05 SOLAR ARRAY STRUCTURE PER DSA #02-118909
SN.06 (E) ACCESSIBLE GATE WITH PANIC HARDWARE PER DSA #02-120662
SN.07 (E) BOYS, GIRLS, AND STAFF ACCESSIBLE RESTROOMS PER DSA #02-120662
SN.08 NOT USED
SN.09 ACCESSIBLE STUDENT RESTROOM
SN.10 (E) STUDENT DROP OFF ZONE PER DSA #02-114933
SN.11 (E) SOLAR ARRAY STRUCTURES PER DSA #02-118910
SN.12 (E) PASSANGER DROP OFF PER DSA @02-114933. REMOVE (E) DETECTABLE WARNING SURFACE AND PROVIDE STRIPING PER ENLARGED PLAN 2/A1.11
SN.13 REMOVE EXISTING DUAL HEIGHT DRINKING FOUNTAN AND REPLACE w/ "ELKAY EZH20 VANDAL-RESISTANT, MECHANICAL BOTTLE FILLING STATIONS AND BI-LEVEL COOLER, NON-FILTERED, NON-REFRIGERATED S.S. MODEL VRCTLDDWSK_MECH, LEFT HAND" AT SAME LOCATION. REMOVE AND PATCH (E) CEMENT PLASTER AS REQUIRED TO INSTALL THE NEW BOTTLE FILLING STATION AND BI-LEVEL COOLER. SEE DETAILS 19, 20 & 21 ON A10.01

FACILITY:
JACOBSON ELEMENTARY SCHOOL
1750 W KAVANAGH AVE.
TRACY, CA 95376

PROJECT:
JACOBSON ES - TK CLASSROOM

SHEET NAME:
OVERALL SITE PLAN AND CODE INFORMATION

CONSTRUCTION DOCUMENTS

DATE: **02/23/24** CLIENT PROJ NO: **3595005000**

SHEET:
A1.11
ADDENDUM "A"

Autodesk Docs://3595005000 TUSD TK CLASSROOMS 2025 R22/3595005000-A-TUSD-JACOBSON-SITE.rvt
1/31/2025 9:11:33 PM

PLEASE RECYCLE

THE LINE SHOWN ABOVE IS EXACTLY 1" WHEN PLOTTED ON ANSI D SHEETS ORIGINAL PAGE SIZE

GATE SCHEDULE

GATE NO.	TYPE	PAIR	Width	Height	NOTES
G01	CHAIN LINK		3' - 0"	6' - 0"	SEE DETAIL 6/A10.01
G02	CHAIN LINK		3' - 0"	6' - 0"	SEE DETAIL 16/A10.01

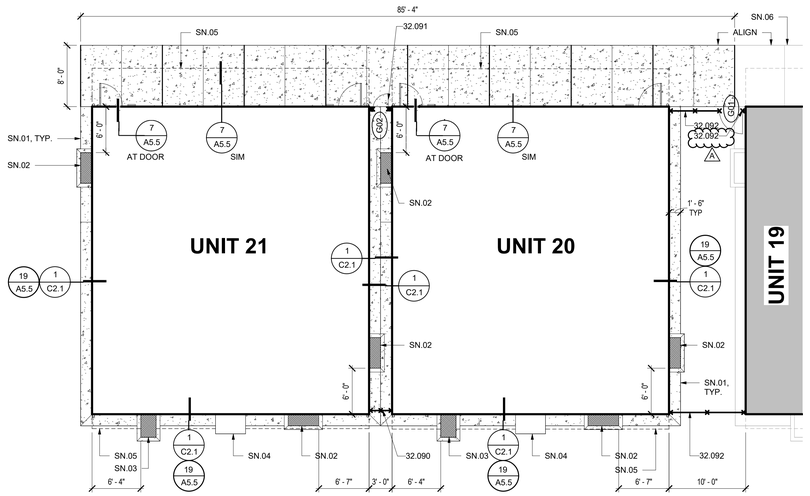

N

ENLARGED SITE PLAN

1
1/8" = 1'-0"

LEGEND

X	NEW BUILDINGS
X	EXISTING BUILDINGS
	CONCRETE WALK / PAVING
	EXPANSION JOINT (20'-0" MAX. SPACING)
	CONTROL JOINT (10'-0" MAX. SPACING)
	(E) CHAINLINK FENCE
	CHAINLINK FENCE

AGENCY APPROVAL:

IDENTIFICATION STAMP
DIV. OF THE STATE ARCHITECT
APP: 02-122976 INC:
REVIEWED FOR
SS ☑ FLS ☑ ACS ☑
DATE: 03/12/2025

TRACY
UNIFIED SCHOOL DISTRICT

HMC Architects

3595005000

2101 CAPITOL AVENUE, SUITE 100
SACRAMENTO, CA 95816
916 368 7990 / www.hmcarchitects.com

LICENSED ARCHITECT
JENNIFER PEARSON NUANO
C-35691
REN. 05/31/25
STATE OF CALIFORNIA

ISSUE

Δ	DESCRIPTION	DATE
A	ADDENDUM "A"	3/20/25

KEYNOTES

32.090 CHAIN LINK FENCE, SEE DETAIL 17 / A10.01
32.091 CHAIN LINK GATE, SEE DETAIL 16 / A10.01
32.092 CHAIN LINK FENCE, SEE DETAIL 6/A10.01 A

GENERAL NOTES

1. CONTRACTOR SHALL PROVIDE TEMPORARY FENCING DURING CONSTRUCTION TO SECURE ENTIRE AREA OF WORK.
2. CONTRACTOR SHALL COMPLY WITH 2019 CALIFORNIA FIRE CODE CHAPTER 33, FIRE SAFETY DURING CONSTRUCTION AND DEMOLITION, THROUGHOUT THE ENTIRE PROJECT.
3. PROVIDE 3/4" CHAMFER AT EXPOSED EDGES OF CONCRETE, UNLESS OTHERWISE INDICATED.

SHEET NOTES

SN.01 CONCRETE APRON
SN.02 1'-6"x4' FOUNDATION VENT WITH GRATE PER DETAIL 2/S1.4
SN.03 2'x3' ACCESS VENT WITH GRATE PER DETAIL 1/S1.5
SN.04 HVAC UNIT
SN.05 ROOF OVERHEAD, SHOWN DASHED
SN.06 (E) CONCRETE PAVING

FACILITY:

JACOBSON ELEMENTARY SCHOOL
1750 W KAVANAGH AVE.
TRACY, CA 95376

PROJECT:

JACOBSON ES - TK CLASSROOM

SHEET NAME:

ENLARGED SITE PLAN AND SITE DETAILS

CONSTRUCTION DOCUMENTS

DATE: **02/23/24** CLIENT PROJ NO: **3595005000**

SHEET:

A7.11

ADDENDUM "A"

PLEASE RECYCLE

Autodesk Docs://3595005000 TUSD TK CLASSROOMS 2025 R22/3595005000-A-TUSD-JACOBSON-SITE.rvt
1/31/2025 9:11:34 PM

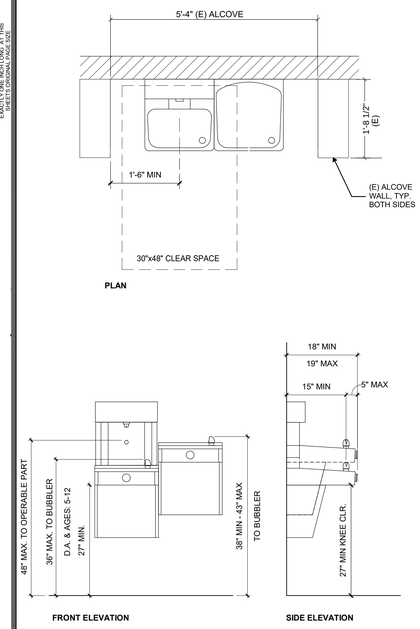

DRINKING FOUNTAIN W/ BOTTLE FILLER 19
3/4" = 1'-0"

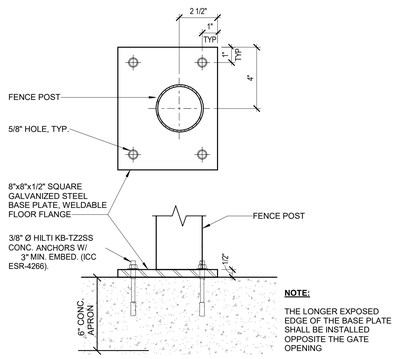

NOTE:
THE LONGER EXPOSED EDGE OF THE BASE PLATE SHALL BE INSTALLED OPPOSITE THE GATE OPENING

FENCE POST BASE PLATE 18
3" = 1'-0"

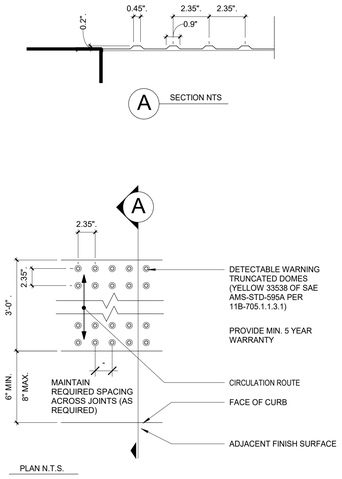

DETECTABLE WARNING TRUNCATED DOMES 14
1/8" = 1'-0"

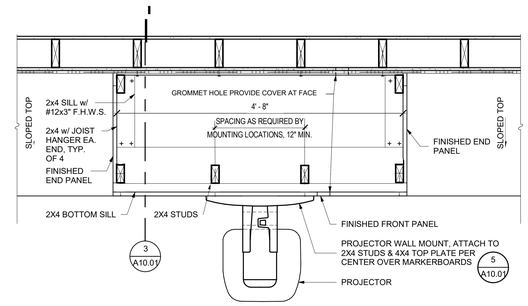

PROJECTOR MOUNT SUPPORT PLAN 9
1" = 1'-0"

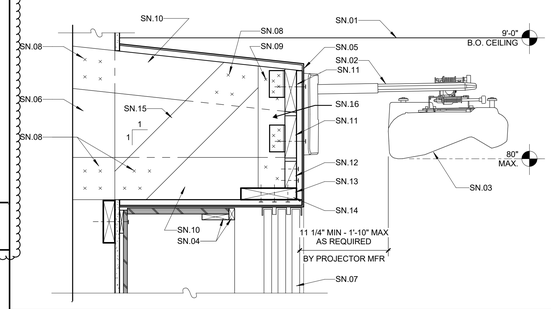

SHEET NOTES:

SN.01 CEILING PER PLAN
SN.02 WALL MOUNTED PROJECTOR ARM (18.5 LBS) FURNISHED BY OWNER, INSTALLED BY CONTRACTOR. INSTALL w/ 4 - #12 w/ 2" MIN. EMBED. PER MFR WRITTEN INSTRUCTIONS. PROVIDE 2X6 BLOCKING AT LOWER FASTENERS. HEIGHT AS REQ'D FOR PROPER PROJECTION TO TOP OF MARKER BOARD.
SN.03 PROJECTOR, OWNER FURNISHED, CONTRACTOR INSTALLED (12.2 LBS)
SN.04 PROVIDE 1x3 SUPPORT AND 1x TURN DOWN AT FRONT OF CENTER CABINET COVER w/ P.LAM.
SN.05 PLASTIC LAMINATE PANEL o/ 3/4" PARTICLE BOARD ALL SIDES TO MATCH LEARNING WALL. COVER SCREW HEADS
SN.06 (E) WALL FRAMING
SN.07 3 - SLIDING MARKER BOARDS (56 LBS EA.) @ LEARNING WALL, SEE INTERIOR ELEVATIONS
SN.08 4 - 16d
SN.09 2 - 16d
SN.10 2x6 @ EACH STUD
SN.11 2x6 BLOCKING @ PROJECTOR WITH A35 @ EACH END
SN.12 2x4 w/ 2-16d @ EACH CONTACT
SN.13 2x8 CONT. w/ 3 - #12 WOOD SCREWS @ EACH LOWER 2x6
SN.14 NOTCH LOWER 2x6 TO PASS RUNNER
SN.15 2x6 BRACE
SN.16 4X4 WOOD STUDS

PROJECTOR MOUNTING 5
1 1/2" = 1'-0"

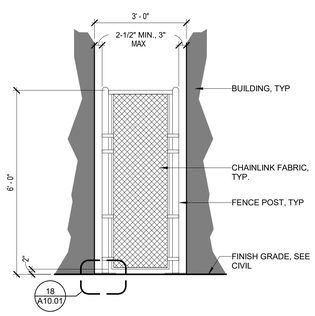

CHAIN LINK FENCE 17
1/2" = 1'-0"

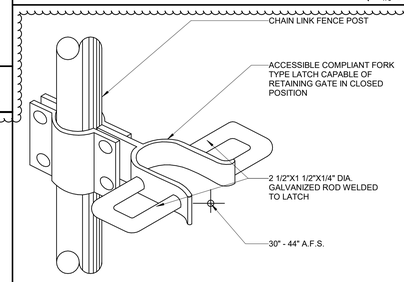

ACCESSIBLE FORK TYPE LATCH 13
1/2" = 1'-0"

NOTE :
GRIND ALL EDGES AND WELDS SMOOTH
ALL EXPOSED SURFACES SHALL BE GALVANIZED

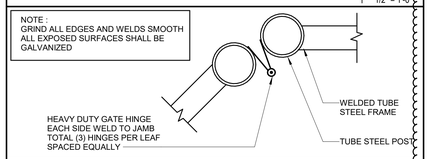

C.L. GATE DETAIL 12
1/4" = 1'-0"

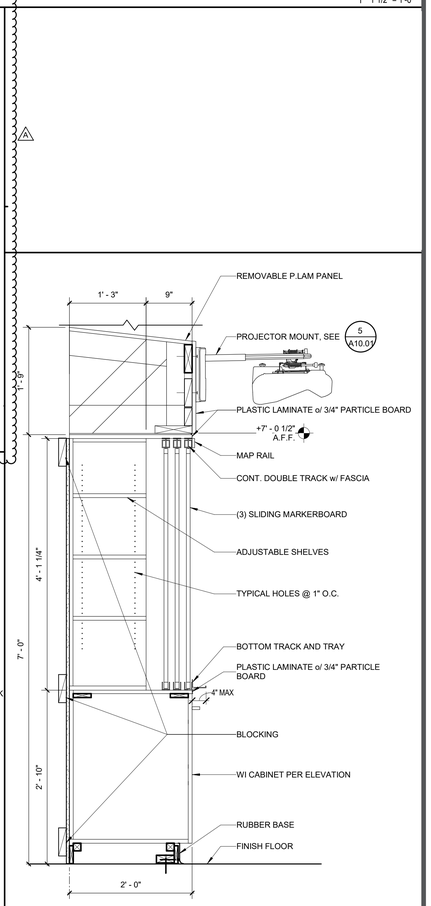

LEARNING WALL 3
1" = 1'-0"

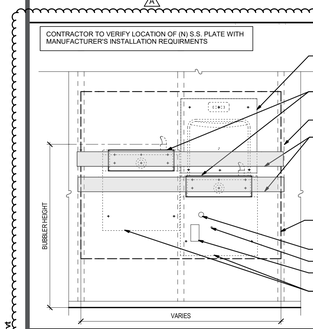

DRINKING FOUNTAIN w/BOTTLE FILLER MOUNTING DETAIL 20

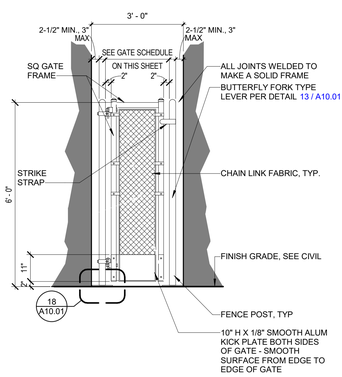

SINGLE CHAIN LINK GATE 16
1/2" = 1'-0"

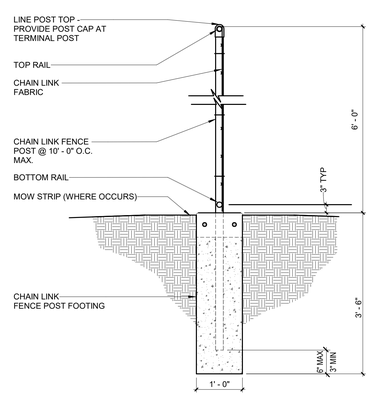

CHAIN LINK FENCE SECTION 11
3/4" = 1'-0"

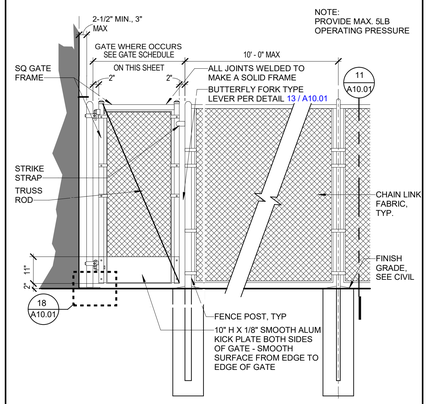

SINGLE CHAIN LINK GATE AND FENCE 6
1/2" = 1'-0"

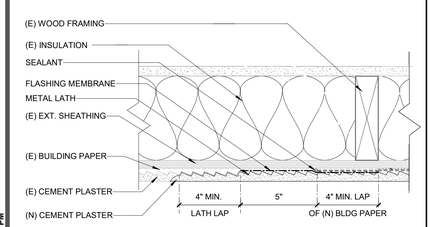

EXTERIOR CEMENT PLASTER PATCH 21
3" = 1'-0"

IDENTIFICATION STAMP
DIV. OF THE STATE ARCHITECT
APP: 02-122976 INC:
REVIEWED FOR
SS ☑ FLS ☑ ACS ☑
DATE: 03/12/2025

TRACY
UNIFIED SCHOOL DISTRICT

HMC Architects
3595005000
2101 CAPITOL AVENUE, SUITE 100
SACRAMENTO, CA 95816
916 368 7990 / www.hmcarchitects.com

LICENSED ARCHITECT
JENNIFER PEARSON HUANG
C-35691
REN. 05/31/25
STATE OF CALIFORNIA

ISSUE

Δ	DESCRIPTION	DATE
1	ADDENDUM "A"	3/20/25

FACILITY:
JACOBSON ELEMENTARY SCHOOL
1750 W KAVANAGH AVE.
TRACY, CA 95376

PROJECT:
JACOBSON ES - TK CLASSROOM

SHEET NAME:
DETAILS

CONSTRUCTION DOCUMENTS

DATE: **02/23/24** CLIENT PROJ NO: **3595005000**

SHEET:
A10.01
ADDENDUM "A"

PLEASE RECYCLE

Autodesk Docs://3595005000 TUSD_TK CLASSROOMS 2025 R22/3595005000-A-TUSD-JACOBSON-SITE.rvt
1/31/2025 9:11:34 PM

THE LINE SHOWN ABOVE IS EXACTLY ONE INCH LONG AT THIS SHEETS ORIGINAL PAGE SIZE

ELECTRICAL GENERAL NOTES

1) ALL WORK AND MATERIALS SHALL BE PERFORMED AND INSTALLED IN COMPLIANCE WITH THE FOLLOWING CODES AS AMENDED AND ADOPTED BY THE AUTHORITY(IES) HAVING JURISDICTION: 2022 CALIFORNIA ADMINISTRATIVE CODE (CAC), 2022 CALIFORNIA BUILDING CODE (CBC), 2022 CALIFORNIA FIRE CODE (CFC), 2022 CALIFORNIA MECHANICAL CODE (CMC), 2022 CALIFORNIA PLUMBING CODE (CPC), 2022 CALIFORNIA ELECTRICAL CODE (CEC), 2022 CALIFORNIA ENERGY CODE (CENC), 2022 CALIFORNIA GREEN BUILDING CODE (CGC), NATIONAL FIRE PROTECTION ASSOCIATION (NFPA), TITLE 19 C.C.R. PUBLIC SAFETY, STATE FIRE MARSHAL REGULATIONS, AND ANY OTHER LOCAL CODES, ORDINANCES, REGULATIONS, OR AUTHORITIES HAVING JURISDICTION. NOTHING IN THESE PLANS IS TO BE CONSTRUED TO PERMIT WORK NOT CONFORMING TO THESE CODES OR OTHER CODES AND REGULATIONS APPLICABLE TO THIS PROJECT. THESE CODES SHALL DETERMINE MINIMUM REQUIREMENTS FOR MATERIALS, METHODS, AND LABOR PRACTICES NOT OTHERWISE DEFINED IN THESE SPECIFICATIONS.

2) ALL CONDUCTORS SHALL BE PER DESIGN SHEETS. CEC AND MAXIMUM VOLTAGE DROP OF 5% WILL DEFINE CONDUCTOR SIZING.

3) ALL CONDUCTORS SHALL BE IN CONDUITS, U.O.N. CONDUITS SHALL BE USED IN THE FOLLOWING METHODS:
- POLYVINYL CHLORIDE (PVC) CONDUITS ALLOWED FOR UNDERGROUND OTHERWISE PROVIDE RMC OR IMC, INSTALL PER CEC TABLE 300.5 BURIAL DEPTH REQUIREMENTS
- ELECTRICAL METALLIC TUBING (EMT) WITH COMPRESSION FITTINGS MAY BE USED IN OR ON WALLS OR CEILINGS WHERE NOT SUBJECT TO MECHANICAL DAMAGE, DAMP CONDITIONS OR CORROSIVE CONDITIONS;
- LIQUID TIGHT FLEXIBLE METAL CONDUIT WHERE REQUIRED;
- FLEXIBLE METALLIC CONDUIT, WHERE REQUIRED BY CEC, IN DRY LOCATIONS. NOTE: ALL CONDUITS IN HAZARDOUS LOCATIONS (PER CEC) SHALL MEET THE REQUIREMENTS OF CEC CHAPTER 5.
- CONNECTION TO LIGHT FIXTURES ABOVE LAY-IN CEILING MAY USE 3/8" FLEXIBLE METAL CONDUIT PER CEC 348.20(A)(2)
- ALL EXPOSED CONDUIT SUBJECT TO WEAR OR COLLISION SHALL BE RIGID GALVANIZED STEEL (RGS) OR INTERMEDIATE METALLIC TUBING (IMT). APPLY BITUMASTIC COATING TO ALL METALLIC CONDUITS IN SLABS OR UNDERGROUND.
- PROVIDE FIRE RETARDANT U.L. APPROVED SEALANT ON ALL RACEWAY PENETRATIONS OF FIRE RATED CEILINGS, PARTITIONS, WALLS AND STRUCTURAL SLABS.

4) FOR TELEPHONE SYSTEM: PROVIDE GROUNDING FOR ALL TELEPHONE BACKBOARDS, TERMINAL CABINETS AND EQUIPMENT PER REQUIREMENTS OF CEC 800 AND TELEPHONE COMPANY.

5) ALL EQUIPMENT SHALL BE PROVIDED WITH AN APPROVED DISCONNECTING MEANS PER CEC. ALL DISCONNECT SWITCHES SHALL BE SIZED PER CEC TO ACCOMMODATE EQUIPMENT SERVED, INCLUDING REQUIRED FUSES, U.O.N. SWITCHES SHALL BE HORSE POWER RATED, OF HEAVY DUTY TYPE. PROVIDE MEANS FOR PAD LOCKING IN THE OPEN POSITION.

6) ALL CIRCUIT BREAKERS SHALL BE INVERSE TIME (THERMAL MAGNETIC) "PERMANENT TRIP" TYPE. TWO AND THREE POLE CIRCUIT BREAKERS SHALL BE COMMON TRIP. AMPACITY IS EQUAL TO OR GREATER THAN CIRCUIT BREAKER FRAME AMPERE RATING.

7) ALL CONNECTIONS TO GROUND RODS AND GRID, ETC., SHALL BE MADE WITH U.L. APPROVED WELDED CONNECTIONS, UNLESS NOTED OTHERWISE.

8) LIGHTING SYSTEMS SHALL COMPLY WITH CENC. ALL LIGHTING FIXTURES, LAMPS, BALLASTS, DIMMER SWITCHES, AND CONTROLS SHALL BE CERTIFIED WITH THE CALIFORNIA ENERGY COMMISSION AS MEETING ALL CENC REQUIREMENTS AND BE LISTED IN THE APPLICABLE ENERGY COMMISSION DIRECTORY. ALL SUCH DEVICES AND EQUIPMENT SHALL BE INSTALLED PER THE MANUFACTURER'S INSTRUCTIONS. LIGHT FIXTURES IN SUSPENDED CEILINGS SHALL BE SUPPORTED IN STRICT ACCORDANCE WITH CBC SEISMIC REQUIREMENTS.

9) LIGHT POLLUTION REDUCTION: OUTDOOR LIGHTING SYSTEMS SHALL BE INSTALLED TO COMPLY WITH THE FOLLOWING:
1) THE MINIMUM REQUIREMENTS IN CENC FOR LIGHTING ZONES 0-4 AS DEFINED IN CH. 10 OF CAC
2) BACKLIGHT RATINGS AS DEFINED IN IES TM-15-11
3) UPLIGHT AND GLARE RATINGS AS DEFINED IN CEC TABLES 130.2-A AND 130.2B
4) ALLOWABLE BUG RATING NOT EXCEEDING THOSE SHOWN IN TABLE 5.106.8, OR

COMPLY WITH A LOCAL ORDINANCE LAWFULLY ENACTED PURSUANT TO SECTION 101.7, WHICHEVER IS MORE STRINGENT.

10) ALL ELECTRICAL EQUIPMENT, DEVICES, WIRE, ETC., SHALL BE LISTED, FOR THE INTENDED USE, WITH UNDERWRITER'S LABORATORIES, INC., (UL), WHERE STANDARDS HAVE BEEN ESTABLISHED BY UL. ALL EQUIPMENT SHALL BE RAIN TIGHT WHERE EXPOSED TO THE WEATHER. ALL FLEX CONDUITS CONNECTED TO SUCH EQUIPMENT SHALL BE METALLIC LIQUID TIGHT. ALL EQUIPMENT IN HAZARDOUS LOCATIONS, PER CEC, CHAPTER 5, SHALL BE IN ACCORDANCE WITH THE CEC. ALL EQUIPMENT IN CORROSIVE ENVIRONMENTS SHALL BE IN ENCLOSURES (SUCH AS NEMA 4X) RATED FOR THE ENVIRONMENT.

11) UTILITY SERVICE AND REQUIREMENTS SHALL BE COORDINATED WITH POWER SERVICE WITH POWER COMPANY; PROVIDE FOR ALL STANDARD POWER COMPANY REQUIREMENTS. FAULT CURRENT RATINGS SHALL BE PROVIDED BY UTILITY.

12) THE LAYOUTS OF THE CONTRACT DRAWINGS ARE DIAGRAMMATIC. IT IS NOT INTENDED TO SHOW EVERY OFFSET AND FITTING, NOR EVERY STRUCTURAL DIFFICULTY THAT WILL BE ENCOUNTERED DURING THE INSTALLATION OF THE WORK. ALIGNMENT OF EQUIPMENT AND ROUTING OF RACEWAYS MAY BE VARIED SLIGHTLY TO ACCOMMODATE ARCHITECTURAL CONDITIONS OR TO AVOID THE WORK OF OTHER TRADES. IF ANY CONFLICTS OCCUR NECESSITATING DEPARTURES FROM CONTRACT DRAWINGS, DETAILS OF DEPARTURES AND REASONS THEREFORE SHALL BE SUBMITTED AS SOON AS PRACTICABLE FOR WRITTEN APPROVAL OF THE ENGINEER.

13) THE WORD "CONTRACTOR", AS USED IN THE ELECTRICAL CONTRACT DOCUMENTS, SHALL MEAN THE PRIME (I.E. GENERAL) CONTRACTOR AND HIS/HER SUBCONTRACTORS FOR THE APPROPRIATE TRADE. WHERE THE OWNER ACTS AS HIS OWN CONTRACTOR, THE WORD CONTRACTOR APPLIES TO THE OWNER.

14) CONTRACTOR SHALL PROVIDE EVIDENCE OF LICENSING, BONDING, AND INSURANCE, AND PROVIDE OTHER NECESSARY ADMINISTRATIVE FUNCTIONS FOR CONTRACTOR'S WORK.

15) CONTRACTOR SHALL PROCURE AND PAY FOR ALL REQUIRED PERMITS AND SERVICE CHARGES.

16) COORDINATION: CONFORM TO GENERAL CONSTRUCTION CONTRACT DOCUMENTS EXCEPT AS MODIFIED HEREIN. REFER ALSO TO STRUCTURAL AND MECHANICAL CONTRACT DOCUMENTS. COORDINATE ALL WORK WITH OTHER TRADES.

17) CUTTING AND PATCHING: ANY CUTTING, ATTACHING, OR WELDING TO BUILDING STRUCTURE SHOULD BE COORDINATED AND APPROVED BY A CALIFORNIA LICENSED STRUCTURAL ENGINEER. PATCHING SUBJECT TO ACCEPTANCE BY OWNER.

18) SAW CUT TRENCHES IN SLAB SHALL BE FULLY RESTORED AND REINFORCED TO PREVENT SAGGING. ROUGHEN SAW CUT EDGES PRIOR TO RE-POURING CONCRETE.

19) COORDINATE ALL WORK WITH OTHER TRADES TO PROVIDE A COMPLETE INSTALLATION. CONNECT ALL EQUIPMENT FURNISHED BY OTHERS AS REQUIRED. INSTALL ALL WORK TO CLEAR ARCHITECTURAL AND STRUCTURAL MEMBERS. INSTALL ALL ABOVE GRADE (OVERHEAD) PIPING AS HIGH AS PRACTICAL.

20) RESTORE ALL DAMAGE RESULTING FROM THE WORK AND LEAVE PREMISES IN CLEAN CONDITION WHEN FINISHED WITH WORK. ADJUST, CLEAN, REPAIR, OR REPLACE PRODUCTS, WHICH HAVE BEEN DAMAGED.

21) PROVIDE FLASHING AND COUNTER FLASHING FOR ALL WALL AND ROOF PENETRATIONS.

22) WARRANTY: ALL MATERIALS AND EQUIPMENT INSTALLED UNDER THIS CONTRACT SHALL BE GUARANTEED FREE FROM ALL MECHANICAL, ELECTRICAL, AND WORKMANSHIP DEFECTS FOR A MINIMUM OF ONE YEAR FROM DATE OF FINAL ACCEPTANCE. CONTRACTOR SHALL BE RESPONSIBLE FOR ALL DAMAGES TO THE PREMISES CAUSED BY WORK UNDER THIS CONTRACT, AS WELL AS ANY DAMAGE FROM LEAKS VIA ROOF PENETRATIONS MADE AND SEALED UNDER CONTRACTOR'S SCOPE.

ELECTRICAL CALGREEN NOTES

5.106.5.3 ELECTRIC VEHICLE (EV) CHARGING. CONSTRUCTION SHALL COMPLY WITH CGC SECTION 5.106.5.3.1 OR SECTION 5.106.5.3.2 TO FACILITATE FUTURE INSTALLATION OF ELECTRIC VEHICLE SUPPLY EQUIPMENT (EVSE).

5.106.5.3.1 SINGLE CHARGING SPACE REQUIREMENTS. WHEN ONLY A SINGLE CHARGING SPACE IS REQUIRED PER CGC TABLE 5.106.5.3.3, A RACEWAY IS REQUIRED TO BE INSTALLED AT THE TIME OF CONSTRUCTION AND SHALL BE INSTALLED IN ACCORDANCE WITH CEC

5.106.5.3.2 MULTIPLE CHARGING SPACES REQUIREMENTS. WHEN MULTIPLE CHARGING SPACES ARE REQUIRED PER CGC TABLE 5.106.5.3.3, RACEWAY(S) IS/ARE REQUIRED TO BE INSTALLED AT THE TIME OF CONSTRUCTION AND SHALL BE INSTALLED IN ACCORDANCE WITH CEC

5.106.5.3.3 EV CHARGING SPACE CALCULATION. CGC TABLE 5.106.5.3.3 SHALL BE USED TO DETERMINE IF SINGLE OR MULTIPLE CHARGING SPACE REQUIREMENTS APPLY FOR THE FUTURE INSTALLATION OF EVSE.

5.106.5.3.4 IDENTIFICATION. THE SERVICE PANEL OR SUBPANEL(S) CIRCUIT DIRECTORY SHALL IDENTIFY THE RESERVED OVERCURRENT PROTECTIVE DEVICE SPACE(S) FOR FUTURE EV CHARGING AS "EV CAPABLE". THE RACEWAY TERMINATION SHALL BE PERMANENTLY AND VISIBLY MARKED AS "EV CAPABLE"

5.106.5.3.5 FUTURE CHARGING SPACES: FUTURE CHARGING SPACES QUALIFY AS DESIGNATED PARKING AS DESCRIBED IN CGC SECTION 5.106.5.2 DESIGNATED PARKING FOR CLEAN AIR VEHICLES.

MEP ANCHORAGE AND BRACING NOTE

ALL MECHANICAL, PLUMBING, AND ELECTRICAL COMPONENTS SHALL BE ANCHORED AND INSTALLED PER THE DETAILS ON THE DSA-APPROVED CONSTRUCTION DOCUMENTS. THE FOLLOWING COMPONENTS SHALL BE ANCHORED OR BRACED TO MEET THE FORCE AND DISPLACEMENT REQUIREMENTS PRESCRIBED IN THE 2022 CBC SECTIONS 1617A.1.18 THROUGH 1617A.1.26 AND ASCE 7-16 CHAPTERS 13, 26, AND 30:

1. ALL PERMANENT EQUIPMENT AND COMPONENTS.
2. TEMPORARY, MOVABLE OR MOBILE EQUIPMENT THAT IS PERMANENTLY ATTACHED (E.G. HARD WIRED) TO THE BUILDING UTILITY SERVICES SUCH AS ELECTRICITY, GAS, OR WATER. "PERMANENTLY ATTACHED" SHALL INCLUDE ALL ELECTRICAL CONNECTIONS EXCEPT PLUGS FOR 110/220 VOLT RECEPTACLES HAVING A FLEXIBLE CABLE.
3. TEMPORARY, MOVABLE OR MOBILE EQUIPMENT WHICH IS HEAVIER THAN 400 POUNDS OR HAS A CENTER OF MASS LOCATED 4 FEET OR MORE ABOVE THE ADJACENT FLOOR OR ROOF LEVEL THAT DIRECTLY SUPPORT THE COMPONENT IS REQUIRED TO BE RESTRAINED IN A MANNER APPROVED BY DSA.

THE FOLLOWING MECHANICAL AND ELECTRICAL COMPONENTS SHALL BE POSITIVELY ATTACHED TO THE STRUCTURE BUT NEED NOT DEMONSTRATE DESIGN COMPLIANCE WITH THE REFERENCES NOTED ABOVE. THESE COMPONENTS SHALL HAVE FLEXIBLE CONNECTIONS PROVIDED BETWEEN THE COMPONENT AND ASSOCIATED DUCTWORK, PIPING, AND CONDUIT. FLEXIBLE CONNECTIONS MUST ALLOW MOVEMENT IN BOTH TRANSVERSE AND LONGITUDINAL DIRECTIONS:

A. COMPONENTS WEIGHING LESS THAN 400 POUNDS AND HAVING A CENTER OF MASS LOCATED 4 FEET OR LESS ABOVE THE ADJACENT FLOOR OR ROOF LEVEL THAT DIRECTLY SUPPORT THE COMPONENT.

B. COMPONENTS WEIGHING LESS THAN 20 POUNDS, OR IN THE CASE OF DISTRIBUTED SYSTEMS, LESS THAN 5 POUNDS PER FOOT, WHICH ARE SUSPENDED FROM A ROOF OR FLOOR OR HUNG FROM A WALL.

THE ANCHORAGE OF ALL MECHANICAL, ELECTRICAL, AND PLUMBING COMPONENTS SHALL BE SUBJECT TO THE APPROVAL OF THE DESIGN PROFESSIONAL IN GENERAL RESPONSIBLE CHARGE OR STRUCTURAL ENGINEER DELEGATED RESPONSIBILITY AND ACCEPTANCE BY DSA. THE PROJECT INSPECTOR WILL VERIFY THAT ALL COMPONENTS AND EQUIPMENT HAVE BEEN ANCHORED IN ACCORDANCE WITH THE ABOVE REQUIREMENTS.

PIPING, DUCTWORK, AND ELECTRICAL DISTRIBUTION SYSTEMS SHALL BE BRACED TO COMPLY WITH THE FORCES AND DISPLACEMENTS PRESCRIBED IN ASCE 7-16 SECTION 13.3 AS DEFINED IN ASCE 7-16 SECTIONS 13.6.5, 13.6.6, 13.6.7, 13.6.8; AND 2022 CBC, SECTIONS 1617A.1.24, 1617A.1.25, AND 1617A.1.26.

THE METHOD OF SHOWING BRACING AND ATTACHMENTS TO THE STRUCTURE FOR ALL THE MECHANICAL, PLUMBING, AND ELECTRICAL COMPONENTS SHALL BE DETAILED ON THE APPROVED DRAWINGS WITH PROJECT SPECIFIC NOTES AND DETAILS.

CABLE SCHEDULE

TAG	DESCRIPTION	USE
F	12 STRAND SINGLEMODE	FIBER
–	SEE SPEC	DATA
G	4-WIRE, #18 AWG SHIELDED	INTRUSION ALARM SYSTEM WIRING
GX	4-WIRE, #16 AWG SHIELDED, AQUASEAL	INTRUSION ALARM SYSTEM TRUNK

FIBER RISER DIAGRAM

FIBER RISER NOTES:

1. (E) EXISTING
(N) NEW
(R) RELOCATED
(D) DEMO
2. ALL EQUIPMENT AND WIRING SHOWN IS (N), U.O.N.
3. CONTRACTOR SHALL REVIEW ALL DISTRICT I.T. SPECIFICATIONS FOR INSTALLATION DETAILS, EQUIPMENT, AND FIELD LABELING
4. AN OPTICAL TIME DOMAIN REFLECTOMETER (OTDR) TEST WILL BE REQUIRED ON THE NEW FIBER PATHWAYS. DISTRICT IT WILL PROVIDE FINAL ACCEPTANCE OF THE OTDR TEST RESULTS AND SUFFICIENCY.

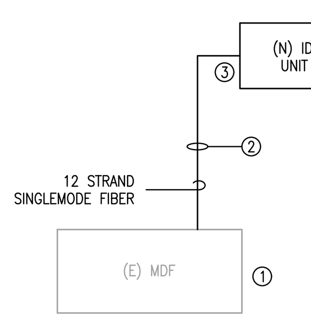

FIBER RISER KEY NOTES:

1. CONTRACTOR TO VERIFY (E) FIBER OPTIC TERMINATION PANEL AT (E) MDF AND PROVIDE ALL PATCH PANELS, MODULES, ETC. TO SUPPORT ALL NEW EQUIPMENT AS REQUIRED
2. ROUTE CABLING AS INDICATED ON THE SITE PLAN FROM MDF TO RELOCATABLE CLASSROOM. COORDINATE DATA CABLE REQUIREMENTS WITH DISTRICT I.T. DEPARTMENT PRIOR TO INSTALLING
3. SEE POWER & SIGNAL PLAN FOR EXACT LOCATION OF IDF

EXISTING PANEL 'DDP' SCHEDULE

Panel Name:	DDP	Bus Rating:	400A
Voltage & Phase:	120/208Y - 3Ø - 4W	AIC Rating:	35kAIC
Mounting:	Free-Standing	Main Type:	Circuit Breaker
Enclosure Rating:	NEMA 3R	MCB Rating:	400A

Code	VA	Description	BRK	Ckt	PHASE	Ckt	BRK	Description	VA	Code
O	8232	(E) Panel P17	100/2	1	A	2				
O	8131		-	3	B	4				
O	1922	(E) Panel P18	50/2	5	C	6				
O	1811		-	7	A	8				
O	8232	(E) Panel P19	125/2	9	B	10				
O	8131		-	11	C	12				
O	**10975**	**(N) Panel P20**	**125/2**	13	A	14				
O	**8932**		**-**	15	B	16				
O	**10975**	**(N) Panel P21**	**125/2**	17	C	18				
O	**8932**		**-**	19	A	20				
				21	B	22				
				23	C	24				
				25	A	26				
				27	B	28				
				29	C	30				
				31	A	32				
				33	B	34				
				35	C	36				
				37	A	38				
				39	B	40				
				41	C	42				

Largest Motor VA	4160
Largest Motor Phases:	A,B
Subfeed Breaker to Panel:	

Load Code	VA Load per Phase A	B	C	Calculation Total VA	Mult.	VA Load
R = Recept	0	0	0	0	1.00	0
K = Kitchen	0	0	0	0	1.00	0
M = Motor	0	0	0	0	1.00	0
L = Lighting	0	0	0	0	1.25	0
H = Heat	0	0	0	0	1.25	0
PV = Solar	0	0	0	0	1.25	0
EV = Elec. Vehicle	0	0	0	0	1.25	0
O = Other	29949.5	25295	21027.5	76272	1.00	76272
Load Totals	29949.5	25295	21027.5	76272	1.00	76272
VA of Largest Motor				4160	0.25	1040
Subfeed VA Loads	0.0	0.0	0.0			
Total VA Loads	30469.5	25815.0	21027.5			
Load Balance	118.2%	100.2%	81.6%			
			VA Load This Panel			77312.0
		Amperage This Panel Per Largest Phase VA				253.9

Notes:
- Panel AIC rating based on wire size and length

VOLTAGE DROP

Voltage Drop Summary				
Total Feeder Voltage Drop		Worst Case Branch Circuit		Worst Case Voltage Drop
MSB-->DDP-->P20	2.65%	-	-	2.65%
MSB-->DDP-->P21	3.10%	-	-	3.10%

PARTIAL ONE-LINE DIAGRAM

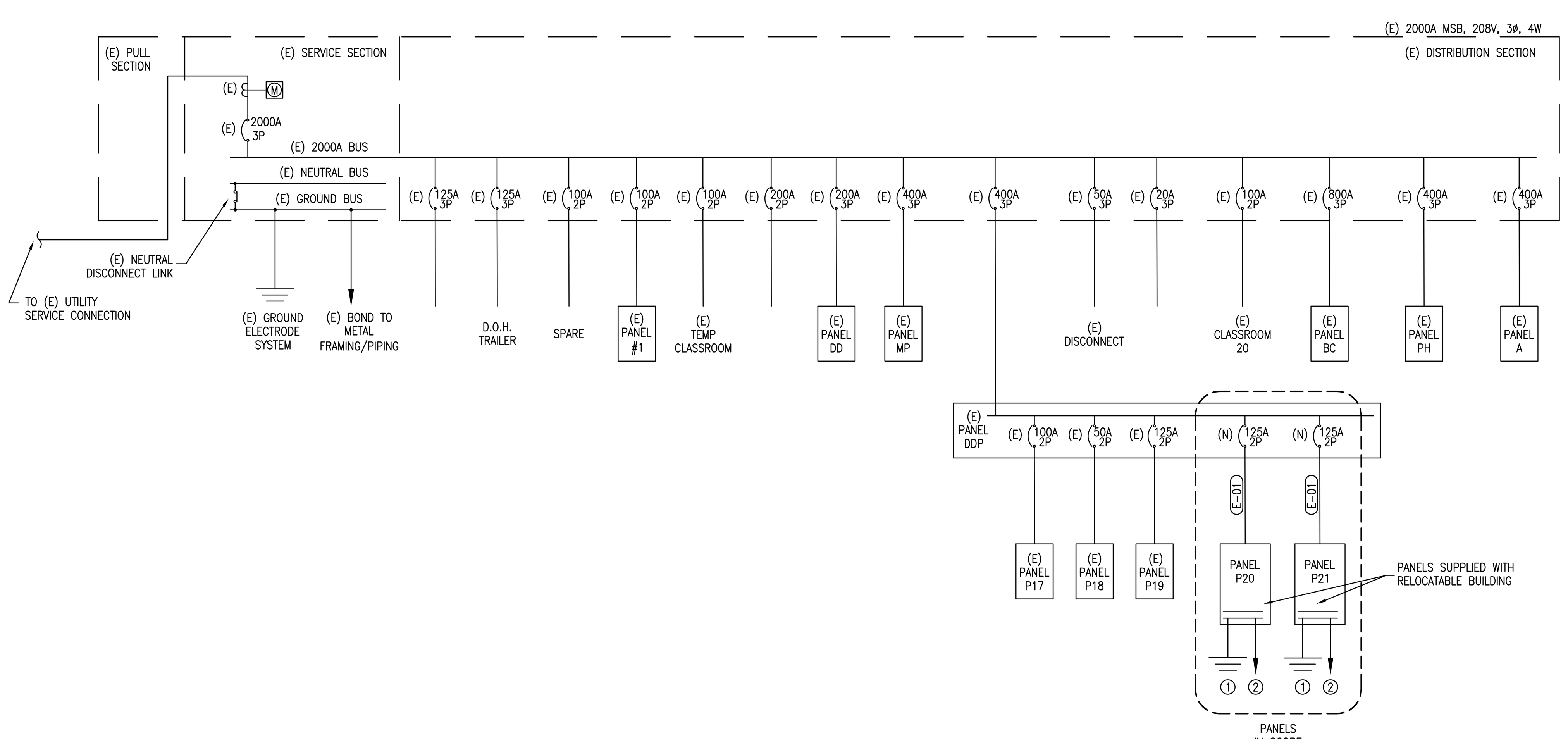

ONE-LINE NOTES:

1. (N) - NEW
(E) - EXISTING
(R) - REPLACED
(F) - FUTURE
2. ALL EQUIPMENT/WIRING IS (E) U.O.N.
3. ALL WIRING INSULATION SHALL BE THWN-2, U.O.N.
4. THE SERVICE DISCONNECT SHALL BE PERMANENTLY MARKED PER CEC 230.70(B)
5. POST A DATED AVAILABLE FAULT CURRENT CALCULATION AT THE SERVICE EQUIPMENT PER CEC 110.24
6. ALL SWITCHBOARDS AND PANELBOARDS SUPPLIED BY A FEEDER SHALL BE MARKED TO INDICATE THE DEVICE OR EQUIPMENT WHERE THE POWER SUPPLY ORIGINATES PER CEC 408.4(B)

ONE-LINE KEY NOTES:

1. GROUND ELECTRODE SYSTEM: PROVIDE GROUND ELECTRODE PER DETAIL 1/E2.0, AND CONNECT TO SEPARATE BUILDING OR STRUCTURE DISCONNECT EQUIPMENT WITH MINIMUM #6 AWG CU GEC. NO NEUTRAL-TO-GROUND CONNECTION IS PERMITTED
2. MINIMUM #4 BARE COPPER BOND TO METAL FRAMING AND METAL PIPING

FEEDER SCHEDULE

TAG	# OF SETS	CONDUIT (PER SET)	CONDUCTORS (PER SET) PHASE/NEUTRAL	GROUND	REMARKS
E-01	1	1-1/2"ø	(3) #1/0 AWG CU	(1) #4 AWG CU	UTILIZE (E) CONDUIT, SEE DETAIL 2/E2.0 FOR CONNECTION TO PANEL

ELECTRICAL LEGEND

- 2X4 LIGHT FIXTURE (SURFACE, RECESSED)
- 2X2 LIGHT FIXTURE (SURFACE, RECESSED)
- FIXTURE W/ BATTERY BACKUP (TYP. ALL SHADED FIXTURES)
- RECESSED DOWNLIGHT
- ROUND SURFACE MOUNT LIGHT
- PENDANT LIGHT
- TRACK LIGHT
- SIGNLIGHT
- WALL MOUNT LIGHT
- POLE MOUNT LIGHT - 2 HEAD
- POLE MOUNT LIGHT - 1 HEAD
- EXIT/EMERGENCY COMBO LIGHT
- EMERGENCY FIXTURE
- EXIT LIGHT
- CEILING EXHAUST FAN
- S"X" WALL MOUNTED SWITCH, MOUNT SO TOP IS AT 44" AFF
- S3,"X" WALL MOUNTED 3-WAY SWITCH, MOUNT SO TOP IS AT 44" AFF
- P PHOTOCELL
- PRIMARY DAYLIGHT AREAS
- SECONDARY DAYLIGHT AREAS
- "X" CEILING MOUNTED SENSOR
- DUPLEX OUTLET - WALL (MOUNT SO BOTTOM IS 16" AFF), FLOOR, CEILING
- QUADRUPLEX OUTLET - WALL (MOUNT SO BOTTOM IS 16" AFF), FLOOR, CEILING
- DEDICATED OUTLET - WALL (MOUNT SO BOTTOM IS 16" AFF), FLOOR, CEILING
- 2-POLE OUTLET - 208/240V - WALL (MOUNT SO BOTTOM IS 16" AFF), FLOOR, CEILING
- 30A, 120V OUTLET (NEMA 5-30R), MOUNT SO BOTTOM IS 16" AFF
- 30A, 208/240V OUTLET (NEMA 6-30R), MOUNT SO BOTTOM IS 16" AFF
- DUPLEX OUTLET WITH USB PORT, MOUNT SO BOTTOM IS AT 16" AFF
- DATA PORT, MOUNT SO BOTTOM IS AT 16" AFF
- S SMOKE DETECTOR
- C CARBON MONOXIDE DECTECTOR
- J JUNCTION BOX
- 3P 60/40 DISCONNECT - POLES (CAPACITY/FUSE)
- "X"-1,3,5 HOME RUN - PANEL-CIRCUIT(S)
- WIRE/CONDUIT - OVERHEAD
- WIRE/CONDUIT - UNDERGROUND
- POWER PANEL
- T TRANSFORMER

AFF	ABOVE FINISHED FLOOR
+XX"	HEIGHT (INCHES) AFF
D	DIMMER
M	OCCUPANCY SENSOR
V	VACANCY SENSOR
GFI	GROUND FAULT INTERRUPTER
CH	COUNTERHEIGHT (+44") AND GFI
WP	WEATHERPROOF
HP	HORSEPOWER
BHP	BRAKE HORSEPOWER
NTS	NOT TO SCALE
TYP	TYPICAL
GND	GROUND
GEC	GROUNDING ELECTRODE CONDUCTOR
MSB	MAIN SWITCHBOARD
SBJ	SYSTEM BONDING JUMPER
SSBJ	SUPPLY SIDE BONDING JUMPER
BCPM	BRANCH CIRCUIT POWER METER
UON	UNLESS OTHERWISE NOTED

AGENCY APPROVAL:

IDENTIFICATION STAMP
DIV. OF THE STATE ARCHITECT
APP: 02-122976 INC:
REVIEWED FOR
SS ☑ FLS ☑ ACS ☑
DATE: 03/12/2025

TRACY UNIFIED SCHOOL DISTRICT

HMC Architects
3595005000
2101 CAPITOL AVENUE, SUITE 100
SACRAMENTO, CA 95816
916 368 7990 / www.hmcarchitects.com

ISSUE

Δ	DESCRIPTION	DATE
A	ADDENDUM "A"	3/20/25

OPTIMIZED ENERGY & FACILITIES CONSULTING, INC.
5734 Lonetree Boulevard, Rocklin, CA 95765
Office: (916) 626 5518 www.oefcinc.com

REGISTERED PROFESSIONAL ENGINEER
ALEXANDRE M. BATISTA
No.E23735
EXP.12-31-2025
ELECTRICAL
STATE OF CALIFORNIA

FACILITY:
JACOBSON ELEMENTARY SCHOOL
1750 W KAVANAGH AVE
TRACY, CA 95376

PROJECT:
JACOBSON ES - TK CLASSROOM

SHEET NAME:
ELECTRICAL SCHEDULES, ONE-LINES, & GENERAL NOTES

CONSTRUCTION DOCUMENTS

DATE: **03/03/2025** CLIENT PROJ NO: **3595005000**

SHEET:
E0.1
ADDENDUM "A"

PLEASE RECYCLE

THE LINE SHOWN ABOVE IS 2" LONG ON ORIGINAL PAGE SIZE SHEETS ORIGINAL PAGE SIZE

PORTABLE ASSITIVE LISTENING SYSTEM REQUIREMENTS

TOTAL CLASSROOMS 2 x 3 RECEIVERS = 6 RECEIVERS. BOTH REQUIRE TO BE HEARING AID COMPATIBLE IN EACH CLASSROOM SO TOTAL NUMBER OF AL RECEIVERS THAT ARE HEARING AID COMPATIBLE = 4 . (Δ 1)

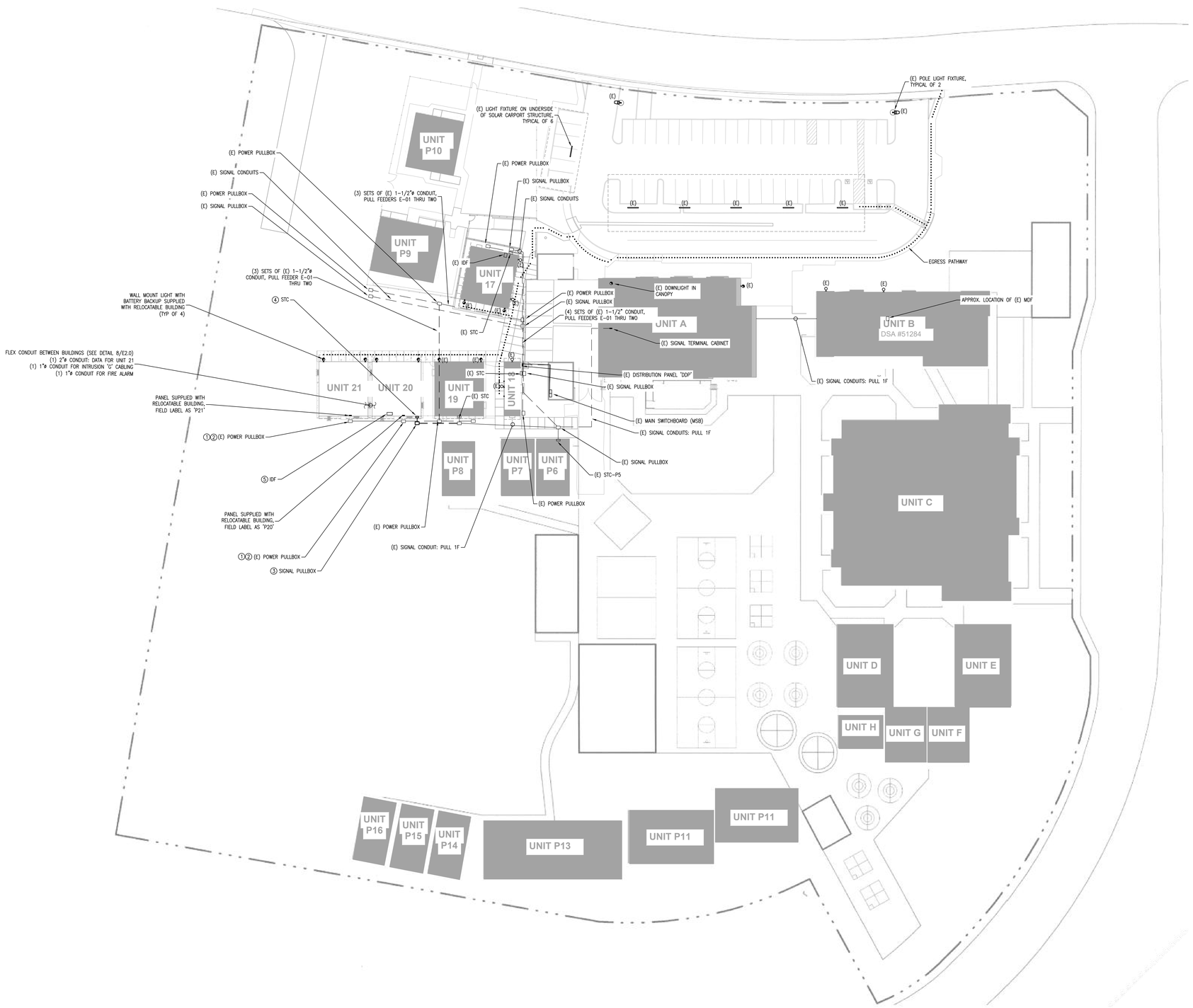

A POWER & SIGNAL - SITE PLAN
SCALE: 1/32"=1'-0"

SHEET NOTES:

1. (E) EXISTING
   (N) NEW
   (R) RELOCATED
   (D) DEMO
2. ALL EQUIPMENT AND POWER/CABLES/ CONDUIT SHOWN ARE (N) AND CONTRACTOR FURNISHED-CONTRACTOR INSTALLED (CFCI) U.O.N.
3. ALL UNDERGROUND CONDUIT SHALL BE PVC U.O.N. AND HAVE A MINIMUM BURIAL DEPTH PER CEC TABLE 300.5
4. PULL BOX LOCATIONS ARE DIAGRAMMATIC AND NOT DIMENSIONED. LOCATE NEW PULL BOXES IN CLOSEST LANDSCAPED AREA WHEREVER POSSIBLE. COORDINATE WITH LANDSCAPE ARCHITECT
5. PULL BOXES FOR POWER DISTRIBUTION SHALL BE TYPE N9 MINIMUM, LID SHALL BE ENGRAVED "POWER", U.O.N. REFER TO POWER ONE-LINE DIAGRAM FOR FEEDER REQUIREMENTS
6. PULL BOXES FOR SIGNAL SYSTEMS DUCT BANK SHALL BE MIN. N16. LID SHALL BE ENGRAVED "SIGNAL."
7. PROVIDE PULL STRINGS IN ALL EMPTY CONDUITS
8. PROVIDE CONDUIT SLEEVES INTO BUILDINGS FROM SIGNAL AND FIRE ALARM ENCLOSURES TO MATCH THE CONDUITS SERVING THE BUILDINGS
9. PRIOR TO COMMENCING TRENCHING OPERATIONS, CONTACT THE UTILITIES UNDERGROUND SERVICE ALERT BUREAU AND DETERMINE THE EXACT LOCATION OF ANY EXISTING UTILITY LINES WHICH MIGHT BE DAMAGED DURING THE INSTALLATION OF THIS WORK. HAND TRENCH, BACKFILL, AND COMPACT IN AREAS OF EXISTING UTILITY LINES TO AVOID DAMAGE TO SAME.
10. EXISTING EXTERIOR SITE LIGHTING SHOWN PROVIDES THE MINIMUM REQUIRED 1 FOOT-CANDLE ILLUMINATION ALONG THE EGRESS PATH TO THE PUBLIC WAY.
11. ALL EQUIPMENT (INCLUDING, BUT NOT LIMITED TO, BREAKERS, CONDUIT, CONDUCTORS, PULL BOXES, GROUND RODS, ETC.) LABELED AS EXISTING, IS BASED ON RECENT PREVIOUS PROJECTS AND IS SUBJECT TO FIELD VERIFICATION BY THE CONTRACTOR. CONTACT ENGINEER OF RECORD IN CASE OF ANY DISCREPANCIES

KEY NOTES:

1. INSTALL A BUILDING GROUNDING SYSTEM USING A GROUND ROD ADJACENT THE POWER PULLBOX. INSTALL: 5/8"ø COPPER CLAD GROUND ROD; GROUND ROD VAULT AND COVER; THE INSPECTOR OF RECORD SHALL WITNESS AND VERIFY THE MEGGER READING OF THE RESISTANCE TO GROUND. IF THE RESISTANCE IS GREATER THAN 25 OHMS, ADD ANOTHER GROUND ROD AT LEAST 6 FEET AWAY. REFER TO GROUND ROD DETAIL 1/E2.0. THE GROUND ROD SHALL BE BONDED (VIA RIGID CONDUIT AND COPPER CONDUCTORS) TO THE ELECTRICAL SERVICES AND PANELS ON THE PORTABLE BUILDING
2. (E) POWER PULLBOX, PULL FEEDER E-01 PER SCHEDULE TO PANEL IN RELOCATABLE, REFER TO DETAIL 2/E2.0 FOR POWER FEEDER CONNECTION
3. SIGNAL PULLBOX, PROVIDE AND CONNECT TO NEW SIGNAL TERMINAL CABINET ON THE EXTERIOR OF THE RELOCATABLE BUILDING PER DETAIL 3/E2.0
4. PULL FIBER (1F) FROM (E) MDF AND PULL INTRUSION CABLING (1GX) FROM NEAREST SIGNAL TERMINAL CABINET WITH (E) INTRUSION CABLING
5. CONTRACTOR SHALL FURNISH AND INSTALL THE FIBER OPTIC CABLE (1F) FROM THE NEW IDF TO THE EXISTING MDF ON CAMPUS. THE CONTRACTOR SHALL BE RESPONSIBLE FOR FIELD VERIFYING THE EXACT LOCATION AND PATHWAY

AGENCY APPROVAL:

IDENTIFICATION STAMP
DIV. OF THE STATE ARCHITECT
APP: 02-122976 INC:
REVIEWED FOR
SS ☑ FLS ☑ ACS ☑
DATE: 03/12/2025

TRACY
UNIFIED SCHOOL DISTRICT

HMC Architects
3595005000
2101 CAPITOL AVENUE, SUITE 100
SACRAMENTO, CA 95816
916 368 7990 / www.hmcarchitects.com

ISSUE

Δ	DESCRIPTION	DATE
1	ADDENDUM "A"	3/20/25

OPTIMIZEDENERGY & FACILITIES CONSULTING, INC.
5734 Lonetree Boulevard, Rocklin, CA 95765
Office: (916) 626 5518 www.oefcinc.com

REGISTERED PROFESSIONAL ENGINEER
ALEXANDRE M. BATYREV
No.E23735
EXP. 12-31-2025
ELECTRICAL
STATE OF CALIFORNIA

FACILITY:
JACOBSON ELEMENTARY SCHOOL
1750 W KAVANAGH AVE
TRACY, CA 95376

PROJECT:
JACOBSON ES - TK CLASSROOM

SHEET NAME:
POWER & SIGNAL SITE PLAN

CONSTRUCTION DOCUMENTS

DATE: **03/03/2025** CLIENT PROJ NO: **3595005000**

SHEET:

E1.0

ADDENDUM "A"

12/12/2023 4:58:53 PM

PLEASE RECYCLE

THE LINE SHOWN ABOVE IS EXACTLY 1" WHEN PRINTED ON ANSI SIZE E SHEETS ORIGINAL PAGE SIZE

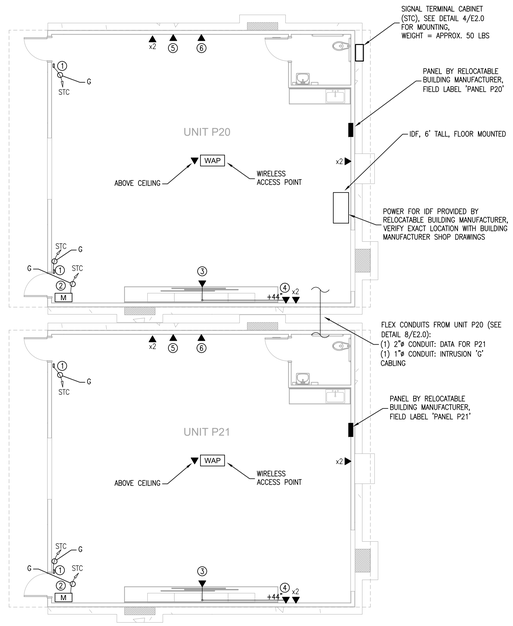

1 SIGNAL, DATA, & INTRUSION PLAN - RELOCATABLE CLASSROOM
SCALE: 1/8"=1'-0"

NORTH

SHEET NOTES:

1. (E) EXISTING
   (N) NEW
   (R) RELOCATED
   (D) DEMO
2. ALL RECEPTACLES/LIGHTING/MISC EQUIPMENT SHOWN ARE (N) AND CONTRACTOR FURNISHED-CONTRACTOR INSTALLED (CFCI), U.O.N.
3. CONTRACTOR SHALL FIELD VERIFY ALL RECEPTACLES AND DISCONNECTS PROVIDED WITH THE RELOCATABLE BUILDING AND ENSURE THEY ARE WIRED AND INSTALLED PER CEC. REPLACE RECEPTACLES AS NEEDED
4. CONTRACTOR SHALL FIELD VERIFY ALL RELOCATABLE LIGHT FIXTURES AND CONTROLS FUNCTION PROPERLY, INTEGRATE TO ANY EXISTING CAMPUS WIDE ENERGY MANAGEMENT (OR BUILDING MANAGEMENT) SYSTEMS, AND REPAIR AS NEEDED
5. LOW VOLTAGE WIRING SHALL TRANSITION TO FREE AIR ABOVE THE CEILING, SUPPORTED BY J-HOOKS OR CABLE TRAYS AS SPECIFIED. PROVIDE CONDUIT SLEEVES THROUGH SHEAR WALLS, DRAFT STOPS, ETC. AND ABOVE NON-ACCESSIBLE CEILINGS
6. COORDINATE CONDUIT DROPS FOR ALL DATA SHOWN WITH RELOCATABLE BUILDING MANUFACTURER, ENSURE MINIMUM 3/4"ø CONDUIT WITH PULL STRING WAS PROVIDED FROM EACH DATA OUTLET UP TO CEILING SPACE, SITE CONTRACTOR SHALL PULL DATA CABLING FROM EACH LOCATION SHOWN
7. ALL DATA SHALL HOMERUN TO THE (N) IDF LOCATED IN UNIT P20, U.O.N., CONTRACTOR SHALL REFER TO THE IT SPECIFICATIONS PROVIDED BY THE DISTRICT AND COORDINATE ALL DATA REQUIREMENTS WITH THE DISTRICT IT DEPARTMENT PRIOR TO FURNISHING AND INSTALLING

KEY NOTES:

1. PROVIDE SURFACE MOUNTED DOOR CONTACTS (ALL WIRE SHALL BE COVERED WITH RACEWAY) AND TIE INTO (E) INTRUSION SYSTEM, COORDINATE DETAILS WITH RELOCATABLE BUILDING MANUFACTURER AND LOCATION OF ROOM SIGNAGE BY ARCHITECT
2. PROVIDE MOTION SENSOR AND TIE INTO (E) INTRUSION SYSTEM
3. FURNISH AND INSTALL PROJECTOR (EPSON BRIGHTLINK 1485FI) ON THE TEACHING WALL. PRIOR TO INSTALLATION COORDINATE EXACT HEIGHT AND LOCATION WITH ARCHITECT, SEE DETAIL 2/A10.1 FOR MOUNTING, AND COORDINATE POWER AND DATA CONNECTIONS WITH THE RELOCATABLE BUILDING MANUFACTURER
4. FURNISH AND INSTALL PROJECTOR CONTROL PAD (EPSON PILOT), COORDINATE POWER CONNECTION WITH THE RELOCATABLE BUILDING MANUFACTURER, PROVIDE CAT6 CABLE BETWEEN PROJECTOR AND PROJECTOR CONTROL PAD, AND CAT6 CABLE FROM CONTROL PAD TO THE (N) IDF IN UNIT P20
5. PROVIDE SPEAKER INSTALLED ON A RECESSED BACKBOX AT 96" AFF, PROVIDE REQUIRED CABLING, COORDINATE SPEAKER REQUIREMENTS WITH OWNER
6. PROVIDE CLOCK INSTALLED ON A RECESSED BACKBOX AT 96" AFF, COORDINATE CLOCK REQUIREMENTS WITH OWNER

AGENCY APPROVAL:

IDENTIFICATION STAMP
DIV. OF THE STATE ARCHITECT
APP: 02-122976 INC:
REVIEWED FOR
SS ☑ FLS ☑ ACS ☑
DATE: 03/12/2025

TRACY
UNIFIED SCHOOL DISTRICT

HMC Architects
3595005000
2101 CAPITOL AVENUE, SUITE 100
SACRAMENTO, CA 95816
916 368 7990 / www.hmcarchitects.com

ISSUE

Δ	DESCRIPTION	DATE
1	ADDENDUM "A"	3/20/25

OPTIMIZEDENERGY & FACILITIES CONSULTING, INC.
5734 Lonetree Boulevard, Rocklin, CA 95765
Office: (916) 626 5518 www.oefcinc.com

REGISTERED PROFESSIONAL ENGINEER
ALEXANDRE M. BATTISTA
No.E23735
EXP.12-31-2025
STATE OF CALIFORNIA

FACILITY:
JACOBSON ELEMENTARY SCHOOL
1750 W KAVANAGH AVE
TRACY, CA 95376

PROJECT:
JACOBSON ES - TK CLASSROOM

SHEET NAME:
SIGNAL, DATA, & INTRUSION
ENLARGED PLAN - RELOCATABLE CLASSROOM

CONSTRUCTION DOCUMENTS

DATE: **03/03/2025** | CLIENT PROJ NO: **3595005000**

SHEET:

E1.1

ADDENDUM "A"

12/12/2023 4:58:53 PM

PLEASE RECYCLE

THE LINE SHOWN ABOVE IS EXACTLY 1" WHEN PLOTTED ON ANSI B SHEETS ORIGINAL PAGE SIZE

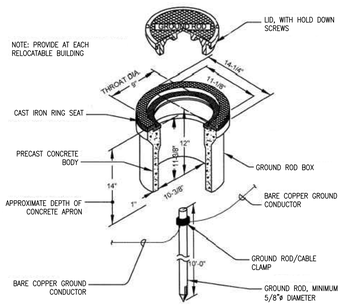

GROUND ROD INSTALLATION (1 / E2.0)

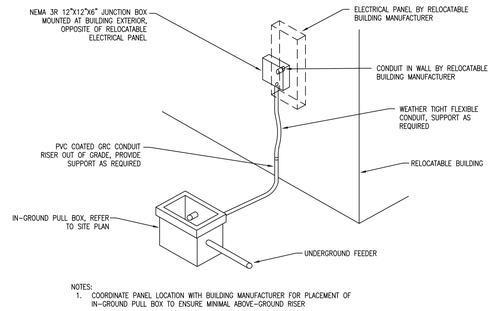

NOTES:
1. COORDINATE PANEL LOCATION WITH BUILDING MANUFACTURER FOR PLACEMENT OF IN-GROUND PULL BOX TO ENSURE MINIMAL ABOVE-GROUND RISER

RELOCATABLE BUILDING POWER FEEDER (2 / E2.0)

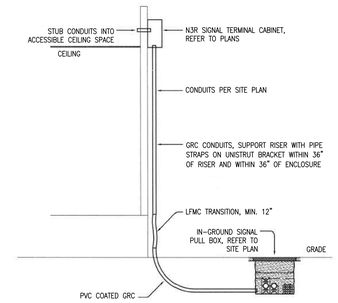

RELOCATABLE BUILDING SIGNAL CONNECTION (3 / E2.0)

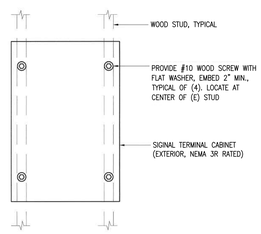

NOTE:
MAX. WEIGHT = 50 LBS.

SIGNAL TERMANAL CABINET MOUNTING (4 / E2.0)

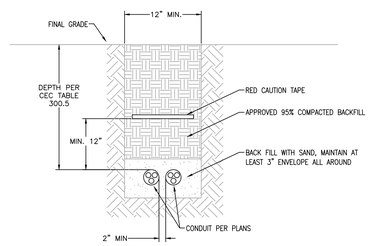

NOTES:
1. BOTTOM OF TRENCH SHALL BE SQUARE AND CLEAN
2. REFER TO PLANS FOR QUANTITY AND SIZES OF CONDUITS
3. SAND SHALL BE FINE GRANULAR MATERIAL, FREE OF ORGANIC MATTER, MICA, LOAM OR CLAY
4. PROVIDE MIN. 12" CLEARANCE ELECTRICAL AND OTHER UTILITIES (GAS, WATER, ETC.)

UNDERGROUND ELECTRICAL TRENCH (5 / E2.0)

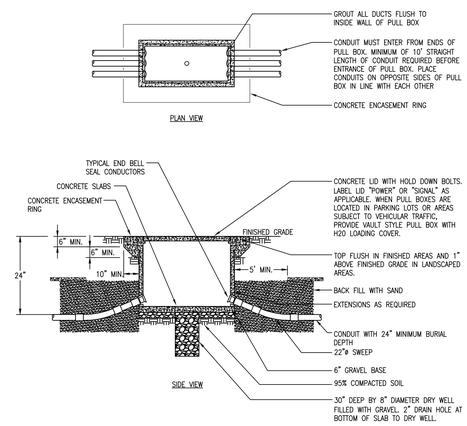

IN GROUND PULL BOX INSTALLATION (6 / E2.0)

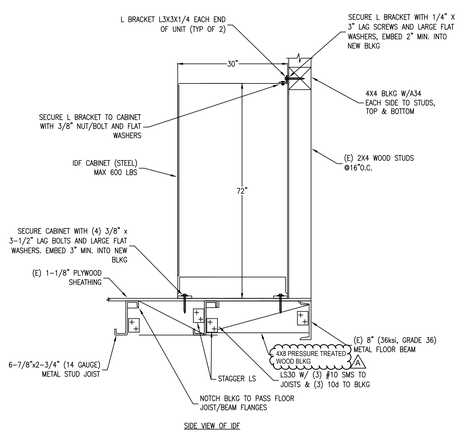

IDF CABINET MOUNTING DETAIL (7 / E2.0)

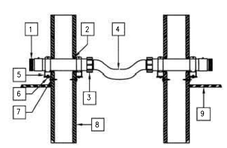

NOTES:

1. PLASTIC BUSHING ON SET-SCREW CONNECTOR
2. CAULKING ACCORDING TO FIRE RATING, TYPICAL
3. WATER-TIGHT CONNECTORS IN ACCORDANCE WITH CODE AND SPECIFICATIONS
4. WATER-TIGHT FLEXIBLE CONDUIT WITH ENOUGH SLACK TO ALLOW BUILDING TO MOVE 12" WITHOUT OVER STRESSING CONDUIT. REFER TO PLANS FOR CONDUIT SIZES AND QUANTITY
5. CHANNEL STRUT BOLTED TO HEAVY L BRACKET
6. 3/8" X 1-1/2" MACHINE BOLT WITH WASHERS BOTH SIDES AND HEX NUT
7. 3/8" LAG SCREW, MIN. 2-1/2" EMBEDMENT
8. EXTERIOR OF BUILDING
9. DROPPED CEILING INSIDE BUILDING

RELOCATABLE BUILDINGS CONDUIT CONNECTION (8 / E2.0)

12/12/2023 4:58:53 PM

AGENCY APPROVAL:

IDENTIFICATION STAMP
DIV. OF THE STATE ARCHITECT
APP: 02-122976 INC:
REVIEWED FOR
SS ☑ FLS ☑ ACS ☑
DATE: 03/12/2025

TRACY UNIFIED SCHOOL DISTRICT

HMC Architects
3595005000
2101 CAPITOL AVENUE, SUITE 100
SACRAMENTO, CA 95816
916 368 7990 / www.hmcarchitects.com

ISSUE

Δ	DESCRIPTION	DATE
1	ADDENDUM "A"	3/20/25

OPTIMIZED ENERGY & FACILITIES CONSULTING, INC.
5734 Lonetree Boulevard, Rocklin, CA 95765
Office: (916) 626 5518 www.oefcinc.com

REGISTERED PROFESSIONAL ENGINEER ALEXANDRE M. BATTISTA No.E23735 EXP.12-31-2025 STATE OF CALIFORNIA

FACILITY:
JACOBSON ELEMENTARY SCHOOL
1750 W KAVANAGH AVE
TRACY, CA 95376

PROJECT:
JACOBSON ES - TK CLASSROOM

SHEET NAME:
POWER & SIGNAL DETAILS

CONSTRUCTION DOCUMENTS

DATE: 03/03/2025 | CLIENT PROJ NO: 3595005000

SHEET:
E2.0

ADDENDUM "A"

PLEASE RECYCLE

THE LINE SHOWN ABOVE IS EXACTLY ONE INCH LONG AT THIS SHEETS ORIGINAL PAGE SIZE

FIRE ALARM GENERAL NOTES

1) THE FIRE ALARM SYSTEM SHALL CONFORM TO THE 2022 CALIFORNIA ELECTRICAL CODE ARTICLE 760, 2022 CALIFORNIA BUILDING CODE CHAPTER 9, AND THE 2022 CALIFORNIA FIRE CODE CHAPTER 9 & 2022 NFPA 72.

2) THESE DRAWINGS CONSTITUTE A "COMPLETE PLAN SUBMITTAL" AS DESCRIBED BY DSA. THE EXISTING FIRE ALARM SYSTEM IS AN ADDRESSABLE, CONVENTIONAL CLASS B SYSTEM. FIRE ALARM INITIATION WITHIN THE PROJECT SCOPE OF WORK SHALL BE FULL AUTOMATIC.

3) VISIBLE NOTIFICATION APPLIANCES SHALL MEET AND BE INSTALLED IN ACCORDANCE WITH THE 2022 NFPA 72, CHAPTER 18.

4) AUDIBLE NOTIFICATION APPLIANCES SHALL MEET AND BE INSTALLED IN ACCORDANCE WITH THE 2022 NFPA 72, CHAPTER 18.

5) UPON COMPLETION OF THE SYSTEM INSTALLATION, THE SYSTEM SHALL BE TESTED IN THE PRESENCE OF AND IN A MANNER ACCEPTABLE TO THE DSA PROJECT INSPECTOR. THE CONTRACTOR MUST SUPPLY NECESSARY TESTING EQUIPMENT INCLUDING A "SOUND LEVEL METER" TO CHECK ACCEPTABLE DECIBEL LEVELS OF AUDIBLE DEVICES, PROVIDE TEST RESULTS PER THE NFPA 72 "RECORD OF COMPLETION" TO THE ARCHITECT, DSA PROJECT INSPECTOR, OWNER, AND THE LOCAL FIRE AUTHORITY. ALL NORMALLY OCCUPIED AREAS SHALL BE PROVIDED WITH A FIRE ALARM AUDIBLE DECIBEL AT 15 DBA ABOVE MINIMUM NOISE LEVELS.

6) THE ACTUAL FIRE ALARM NOTIFICATION CIRCUIT VOLTAGE DROP SHALL BE WITNESSED AND RECORDED BY THE DSA PROJECT INSPECTOR DURING THE TESTING OF THE CIRCUIT UNDER FULL LOAD.

7) THE "END OF LINE RESISTANCE" FOR EACH CIRCUIT SHALL BE TESTED IN THE PRESENCE OF THE DSA PROJECT INSPECTOR AND SHALL NOT EXCEED A MAXIMUM OF 10% OF THE 24 VOLT SYSTEM. EACH COMPONENT IN THE CIRCUIT SHALL NOT EXCEED THE LISTED MANUFACTURER'S MINIMUM OPERATING VOLTAGES. SEE NFPA 72, LOOP RESISTANCE. THIS SECTION REQUIRES THAT ALL INITIATING AND INDICATING (NOTIFICATION APPLIANCE) CIRCUITS BE MEASURED AND RECORDED.

8) FIRE ALARM CONTRACTOR SHALL PROVIDE A "RECORD OF COMPLETION" TO THE DSA INSPECTOR OF RECORD AFTER COMPLETION OF OPERATIONAL ACCEPTANCE TESTS (PER NFPA 72 7.5.6)

9) THE SUPERVISING MONITORING AGENCY SHALL BE BY AN APPROVED SUPERVISING STATION PER CBC 907.2.3.5 & NFPA CHAPTER 26.

10) FIRE ALARM CONDUIT SHALL BE SIZED PER MANUFACTURER RECOMMENDATION, PROVIDE 3/4" MINIMUM.

11) PROVIDE ALL REQUIRED ELECTRONICS, CARDS, HARDWARE, ETC. FOR A COMPLETE AND FUNCTIONAL FIRE ALARM SYSTEM AND MAKE ALL FINAL CONNECTIONS AS REQUIRED. PROVIDE ALL FIRE ALARM ZONE SCHEDULES AND ZONE INDICATORS AT FIRE ALARM CONTROL PANEL.

12) INSTALLATION OF THE SYSTEMS SHALL NOT BE STARTED UNTIL DETAILED DESIGN DOCUMENTATION AND SPECIFICATIONS, INCLUDING STATE FIRE MARSHALL LISTINGS SHEETS FOR EACH COMPONENT OF THE SYSTEM HAS BEEN APPROVED BY DSA.

13) A STAMPED SET OF APPROVED FIRE ALARM DESIGN DRAWINGS SHALL BE ON THE JOB SITE AND USED FOR INSTALLATION.

14) ANY DISCREPANCIES BETWEEN THE DRAWINGS AND THE CODE OR RECOGNIZED STANDARDS SHALL BE BROUGHT TO THE ATTENTION OF DSA AND THE ARCHITECT/ENGINEER OF RECORD

15) DSA, ARCHITECT/ENGINEER, AND OWNER SHALL BE NOTIFIED A MINIMUM OF 48 HOURS PRIOR TO THE FINAL INSPECTION AND/OR TESTING.

16) AUDIBLE DEVICES SHALL PROVIDE A SOUND PRESSURE LEVEL OF 15 DECIBELS (DBA) ABOVE THE AVERAGE AMBIENT SOUND LEVEL OR FIVE dBA ABOVE THE MAXIMUM SOUND LEVEL HAVING A DURATION OF AT LEAST 60 SECONDS, WHICHEVER IS GREATER, IN EVERY OCCUPIABLE SPACE WITHIN THE BUILDING.

17) AUDIBLE DEVICES SHALL BE SYNCHRONIZED TEMPORAL CODE 3 PATTERN.

18) THE CONTRACTOR SHALL ADJUST/INSTALL DEVICES TO MAXIMIZE PERFORMANCE AND TO MINIMIZE FALSE ALARMS.

19) VISUAL DEVICES SHOULD NOT EXCEED 2 FLASHES PER SECOND AND SHOULD NOT BE SLOWER THAN 1 FLASH EVERY SECOND. THE DEVICE SHALL HAVE A PULSING LIGHT SOURCE NOT LESS THAN 15 CANDELA. VISUAL DEVICES WITHIN 55' FROM EACH OTHER SHALL BE SYNCHRONIZED.

20) UNDERGROUND AND EXTERIOR CONDUIT TO HAVE WATERTIGHT FITTINGS AND WIRE TO BE APPROVED FOR WET LOCATIONS.

21) ALL FIRE ALARM WIRING SHALL BE FPL OR FPLP (FIRE POWER LIMITED OR FIRE POWER LIMITED PLENUM) AS REQUIRED FOR APPLICATION. WIRING IN CONDUIT ABOVE GROUND MAY BE THHN OR THWN.

22) PER CEC STANDARDS, ALL WIRING IS TO BE PULLED THROUGH EACH JUNCTION BOX AND CONNECTED DIRECTLY TO EACH FIRE DEVICE. DO NOT SPLICE THE WIRE. ALL BOXES TO BE SIZED PER CEC.

23) ALL FIRE ALARM CIRCUITS ARE TO BE IN CONDUIT, SURFACE RACEWAY OR OPEN RUN ABOVE THE CEILINGS, UNDER FLOORS AND IN WALLS IN A NEAT AND PROTECTED MANNER AS INDICATED ON THE DESIGN DOCUMENTS. EXPOSED CIRCUITS ARE ONLY PERMITTED WHEN NOTED AS EXPOSED ON DESIGN DOCUMENTS.

24) FIRE ALARM PANEL, REMOTES, AND COMPONENTS SHALL BE SECURED TO MOUNTING SURFACES PER MANUFACTURERS SPECIFICATIONS. NO DEVICE SHALL EXCEED THE WEIGHT OF 20 LBS. WITHOUT SPECIAL MOUNTING DETAILS.

25) A DEDICATED BRANCH CIRCUIT SHALL BE PROVIDED FOR FIRE ALARM EQUIPMENT AND THAT CIRCUIT SHALL BE ENERGIZED FROM A COMMON USE AREA PANEL. THE BREAKER SHALL HAVE A RED LOCKING DEVICE TO BLOCK THE HANDLE IN THE "ON" POSITION. THE CIRCUIT BREAKER SHALL BE LABELED "FIRE ALARM CIRCUIT CONTROL." CIRCUIT TO BE LABELED AT FIRE PANEL/EXPANDERS.

26) THE INSTALLING CONTRACTOR SHALL PROVIDE SYSTEM PROGRAMMING FOR SUPERVISORY MONITORING PER CBC SECTION 901.6

27) SUPERVISORY MONITORING SHALL BE TESTED AND VERIFIED AS SENDING CORRECT SIGNALS IN CONJUNCTION WITH FINAL ACCEPTANCE TESTING.

28) OWNER SHALL BE RESPONSIBLE FOR ESTABLISHING A FIRE SYSTEM MONITORING CONTRACT OR PROVISIONS. AUTOMATIC FIRE ALARM SYSTEMS SHALL TRANSMIT THE ALARM, SUPERVISORY, AND TROUBLE SIGNALS TO AN APPROVED SUPERVISING STATION AS REQUIRED BY NFPA 72 AND CBC 907.6.6.4. THE SUPERVISING STATION SHALL BE LISTED AS EITHER UUFX OR UUIS BY UL OR SHALL MEET THE REQUIREMENTS OF FM STANDARDS 3011.

29) BEFORE REQUESTING FINAL APPROVAL OF THE INSTALLATION THE INSTALLING CONTRACTOR SHALL FURNISH A WRITTEN STATEMENT TO THE DSA PROJECT INSPECTOR TO THE EFFECT THAT THE SYSTEM HAS BEEN INSTALLED AND TESTED IN ACCORDANCE WITH 2022 NFPA 72 SECTION 14.4.1.

30) TEST, INSPECTION, AND MAINTENANCE SHALL COMPLY WITH 2022 NFPA 72 CHAPTER 14 REQUIREMENTS.

31) AUTOMATIC FIRE ALARM SYSTEMS SHALL BE MONITORED AND SHALL TRANSMIT THE ALARM, SUPERVISORY, AND TROUBLE SIGNALS TO AN APPROVED SUPERVISING STATION IN ACCORDANCE WITH NFPA 72, AS AMENDED BY CFC CHAPTER 80. THE SUPERVISING STATION SHALL BE LISTED AS EITHER UUFX (CENTRAL STATION) OR UUJS (REMOTE & PROPRIETARY) BY UNDERWRITERS LABORATORY INC. (UL) OR OTHER APPROVED LISTING AND TESTING LABORATORY OR SHALL COMPLY WITH THE REQUIREMENTS OF STANDARD, FACTORY MUTUAL (FM) 3011. TERMINATION OF MONITORING SERVICES SHALL BE IN ACCORDANCE WITH CBC/CFC SECTION 907.6.6.2.

EXISTING FIRE ALARM COMPONENT SCHEDULE

SYMBOL	DESCRIPTION	MANUFACTURER	MODEL NO.	CSFM LISTING NO.
FACP	FIRE ALARM CONTROL PANEL	GAMEWELL-FCI	E3	7165-1703:0125
FAPS	REMOTE POWER SUPPLY	FIRE-LITE	FCPS-24FS6	7315-0075:0206
VAB	VOICE EVAC AMPLIFIER, 50W	GAMEWELL-FCI	AM-50	7165-1703:0125
F	MANUAL PULL STATION	GAMEWELL-FCI	MS-7AF	7150-1703:0119
S	SMOKE DETECTOR CEILING MOUNTED ADDRESSABLE	GAMEWELL-FCI	ASD-PL2F	7272-1703:0121
H C	HEAT DETECTOR CEILING	GAMEWELL-FCI	ATD-RL2F	7270-1703:0115
H	HEAT DETECTOR (190°F)	GAMEWELL-FCI	ATD-HL2F	7270-1703:0115
H AC	HEAT DETECTOR ABOVE CEILING	THERMOTECH	302-194 W/ APP-P	7270-0021:0001
MM	MONITOR MODULE	GAMEWELL-FCI	AMM-4F	7300-1703:0102
	SPEAKER (EXTERIOR)	WHEELOCK	ET-1010-R	7320-0785:0105
	SPEAKER, CEILING	WHEELOCK	LSPKRC	7320-0785:0179
	SPEAKER/STROBE, CEILING	WHEELOCK	LSPSTRC3	7320-0785:0502
	STROBE, CEILING	WHEELOCK	LSTRC3	7320-0785:0501

NEW FIRE ALARM COMPONENT SCHEDULE

SYMBOL	DESCRIPTION	MANUFACTURER	MODEL NO.	CSFM LISTING NO.
S	ADDRESSABLE SMOKE DETECTOR W/ CEILING MOUNT BASE	GAMEWELL-FCI	ASD-PL3	7272-1703:0501
H AC	ADDRESSABLE HEAT DETECTOR (190°F) ABOVE CEILING	GAMEWELL-FCI	ATD-L3H	7270-1703:0502
	SENSOR BASE	SYSTEM SENSOR	B300-6	7300-1653:0109
XXCD	SPEAKER/STROBE (15/75 CD)	WHEELOCK	ELSPSTRC	7320-0785:0505
XXCD	STROBE (15 CD)	WHEELOCK	ELSTRC	7135-0785:0504

FIRE ALARM SEQUENCE OF OPERATION

X = REQUIRED ACTION
BLANK MEANS NOT APPLICABLE

	CAUSE \ EFFECT	ALARM: ALARM AT FACP	ALARM: ALARM AT OFF-SITE REPORTING	ALARM: ACTIVATE AUDIBLE/VISUAL ALARMS				TROUBLE: TROUBLE AT FACP	TROUBLE: TROUBLE AT OFF-SITE REPORTING		SUPERVISORY: SUPERVISORY CONDITION AT FACP	SUPERVISORY: SUPERVISORY CONDITION AT OFF-SITE REPORTING			REMARKS
1	SMOKE DETECTOR	X	X	X											
2	HEAT DETECTOR	X	X	X											
3	MANUAL PULL STATION	X	X	X											
4	DUCT DETECTOR	X	X	X											SHUTDOWN ASSOCIATED MECHANICAL UNIT (BY MECHANICAL)
5	POWER FAILURE							X	X						
6	TAMPER SWITCH AT POST INDICATOR VALVE										X	X			
7	TAMPER SWITCH AT FIRE SPRINKLER RISER										X	X			
8	FLOW SWITCH AT FIRE SPRINKLER RISER	X	X	X											
9	FIRE ALARM TROUBLE (OPEN, SHORTS OR GROUNDS ON INITIATION, NOTIFICATION OR SIGNALING LINE CIRCUITS)							X	X						

FIRE ALARM CABLE SCHEDULE

DESIGN	DESCRIPTION	USE
I	2#16 GENESIS 4111	FIRE ALARM ADDRESSABLE CABLE
IX	2#16 GENESIS 4206	FIRE ALARM ADDRESSABLE TRUNK
N	2#12 GENESIS 4320	FIRE ALARM NOTIFICATION WIRING
NX	2#12 THWN W/AQUASEAL	FIRE ALARM NOTIFICATION TRUNK
S	2#16 WEST PENN AQ225	VOICE EVACUATION SPEAKER CABLE
SX	2#16 WEST PENN AQ294 W/AQUASEAL	VOICE EVACUATION SPEAKER TRUNK

BATTERY CAPACITY CALCULATIONS (FAPS-P4)

DEVICE		QUANTITY	STANDBY	ALARM	STANDBY CURRENT	ALARM CURRENT
(E) REMOTE POWER SUPPLY		1	0.065	0.145	0.0650	0.1450
(E) NAC CIRCUIT "NP6"		–	–	–	0	0.8610
(E) NAC CIRCUIT "NP7"	(E) DEVICES	–	–	–	0	0.1420
	(N) DEVICES	–	–	–	0	0.2840
				TOTAL:	0.0650	1.4320

USING THE FOLLOWING FORMULA:

[(24 HOURS X STANDBY CURRENT) + (15 MINUTES X ALARM CURRENT)] X 1.25 SAFETY FACTOR = MINIMUM BATTERY AH

MINIMUM BATTERY AH REQUIRED ARE:

[(24 X 0.065) + (0.25 X 1.432)] x 1.25 = 2.40 AH

THE EXISTING 7AH BATTERY SYSTEM IS SUFFICIENT

BATTERY CAPACITY CALCULATIONS (VAB-P4)

DEVICE		QUANTITY	CURRENT PER DEVICE: STANDBY	CURRENT PER DEVICE: ALARM	STANDBY CURRENT	ALARM CURRENT
(E) VOICE EVAC AMPLIFIER, 50W		1	0.086	2.206	0.0860	2.2060
(E) CIRCUIT "SP6"		–	–	–	0	1.1635
(E) CIRCUIT "SP7"	(E) SPEAKERS	–	–	–	0	0.0832
	(N) SPEAKERS	–	–	–	0	0.1664
				TOTAL:	0.0860	3.6191

USING THE FOLLOWING FORMULA:

[(24 HOURS X STANDBY CURRENT) + (15 MINUTES X ALARM CURRENT)] X 1.25 SAFETY FACTOR = MINIMUM BATTERY AH

MINIMUM BATTERY AH REQUIRED ARE:

[(24 X 0.086) + (0.25 X 3.6191)] x 1.25 = 3.71 AH

THE EXISTING 12AH BATTERY SYSTEM IS SUFFICIENT

FIRE ALARM VOLTAGE DROP CALCULATIONS

CIRCUIT NO.	LENGTH (FT)	CIRCUIT VOLTAGE	WIRE SIZE (AWG)	WIRE OHMS/ 1000 FT	ALARM AMPS	VOLTAGE DROP: VOLTS	VOLTAGE DROP: TOTAL % OF NOM.
NP7	360	24V	12	2.01	1.2870	1.8625	7.76%
SP7	360	25V	12	2.01	0.2500	0.3618	1.44%

NOTES:

1. LONGEST LUMP SUM METHOD

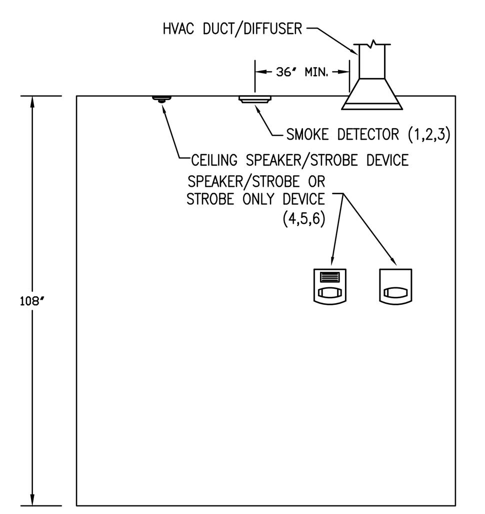

1. MAXIMUM DISTANCE BETWEEN SMOKE DETECTORS IS 30' AND 15' FROM WALLS, MAXIMUM DISTANCE FROM A CORNER IS 21' WITH CEILINGS 10' OR LESS
2. MOUNT SMOKE DETECTORS MINIMUM OF 3' AWAY FROM DIFFUSER VENT
3. SMOKE DETECTORS SHALL BE MOUNTED ON THE CEILING MINIMUM 4" FROM WALL
4. MOUNT EXTERNAL SPEAKER AT 90" MINIMUM AND 100" MAXIMUM TO THE TOP OF THE DEVICE
5. FOR APPLICATIONS WHERE THE STRUCTURE IS BELOW 90", MOUNT SPEAKER AS HIGH AS POSSIBLE WITH A MINIMUM OF 6" CLEARANCE TO THE TOP OF THE DEVICE
6. MOUNT SPEAKER/STROBE SO THE ENTIRE LENS IS WITHIN 80" AND 96" A.F.F.
7. WITH EVERY NEW FIRE ALARM SYSTEM A DOCUMENTATION CABINET SHALL BE INSTALLED AT THE FIRE ALARM CONTROL PANEL OR AT ANOTHER LOCATION APPROVED BY THE AHJ. THE CABINET SHALL BE PROMINENTLY LABELED "SYSTEM RECORD DOCUMENTS" PER NFPA 72 7.7.2

FIRE ALARM DEVICE ELEVATION DETAIL — 1 / E3.0

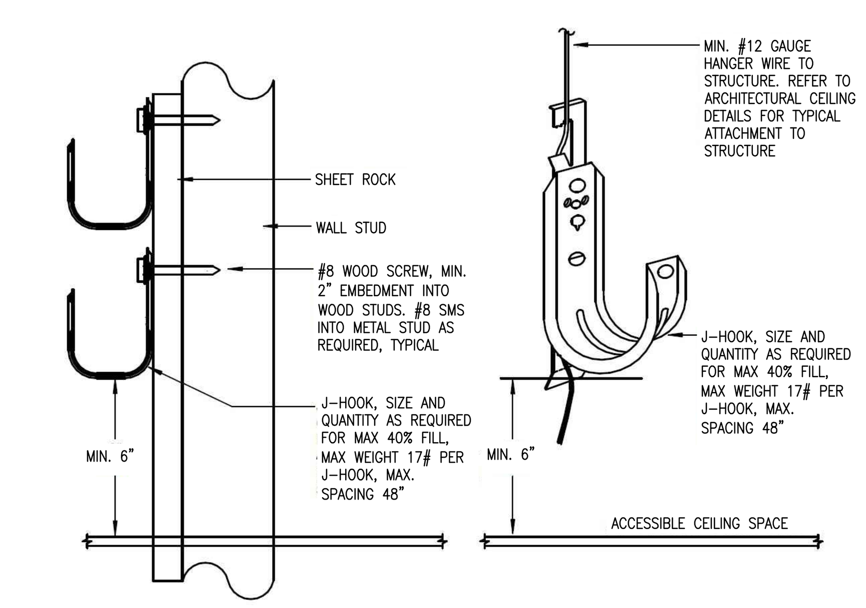

NOTES:

1. PROVIDE SEPARATE CABLE MANAGEMENT SYSTEM FOR EACH INDIVIDUAL LOW VOLTAGE SYSTEM
2. SPACING BETWEEN J-HOOKS SHALL BE 48" ON CENTER

CABLE SUPPORT DETAIL — 2 / E3.0

EXISTING PARTIAL FIRE ALARM RISER DIAGRAM

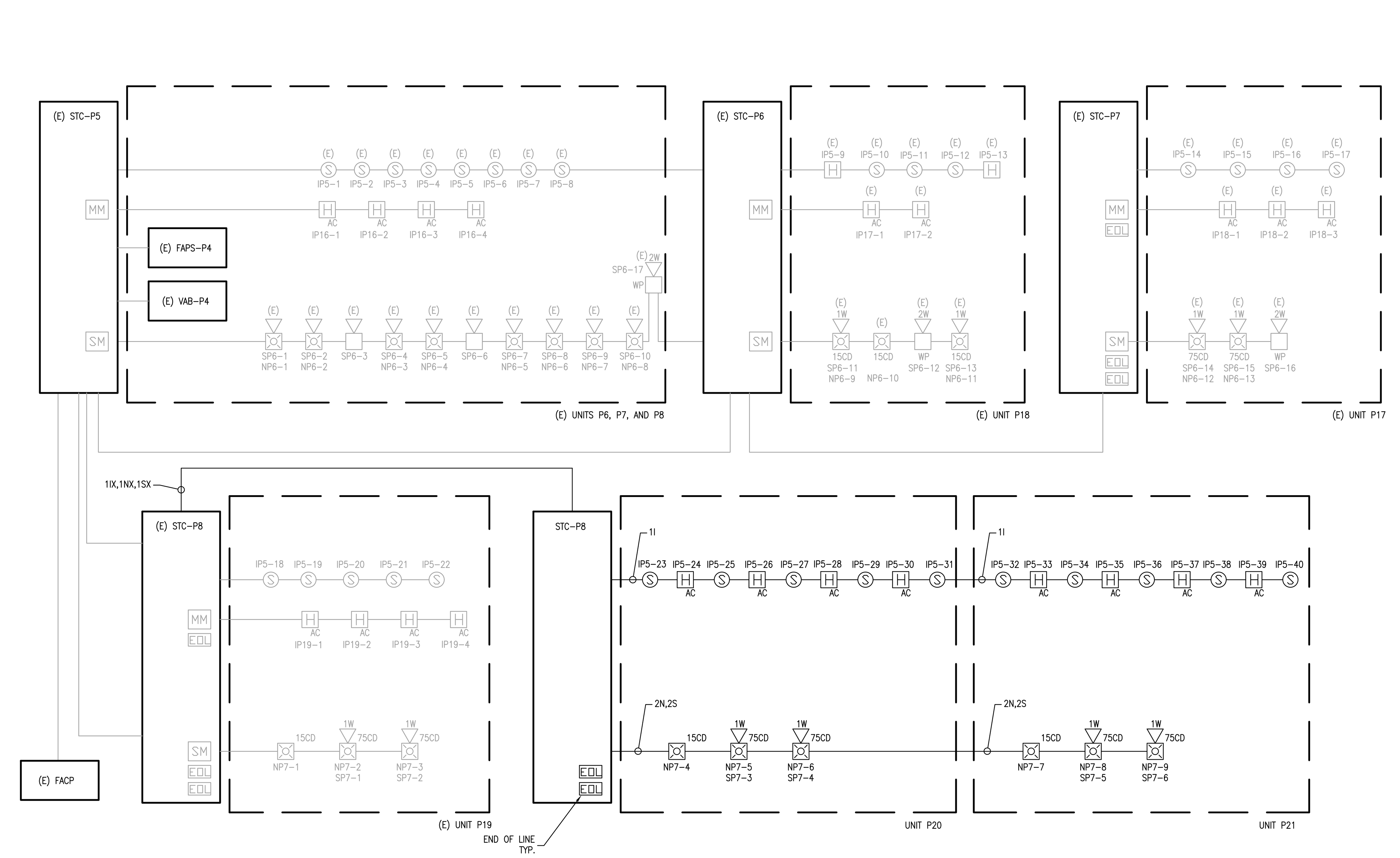

AGENCY APPROVAL:

IDENTIFICATION STAMP
DIV. OF THE STATE ARCHITECT
APP: 02-122976 INC:
REVIEWED FOR
SS ☑ FLS ☑ ACS ☑
DATE: 03/12/2025

TRACY UNIFIED SCHOOL DISTRICT

HMC Architects

3595005000

2101 CAPITOL AVENUE, SUITE 100
SACRAMENTO, CA 95816
916 368 7990 / www.hmcarchitects.com

ISSUE

Δ	DESCRIPTION	DATE
A	ADDENDUM "A"	3/20/25

OPTIMIZED ENERGY & FACILITIES CONSULTING, INC.
5734 Lonetree Boulevard, Rocklin, CA 95765
Office: (916) 626 5518 www.oefcinc.com

REGISTERED PROFESSIONAL ENGINEER
ALEXANDRE M. BATISTA
No.E23735
EXP.12-31-2025
ELECTRICAL
STATE OF CALIFORNIA

FACILITY:
JACOBSON ELEMENTARY SCHOOL
1750 W KAVANAGH AVE
TRACY, CA 95376

PROJECT:
JACOBSON ES - TK CLASSROOM

SHEET NAME:
FIRE ALARM
GENERAL NOTES, RISER DIAGRAM, & SCHEDULES

CONSTRUCTION DOCUMENTS

DATE: **03/03/2025** CLIENT PROJ NO: **3595005000**

SHEET:
E3.0
ADDENDUM "A"

12/12/2023 4:58:53 PM

PLEASE RECYCLE

THE LINE SHOWN ABOVE IS EXACTLY 1" WHEN PRINTED ON ANSI SHEETS ORIGINAL PAGE SIZE

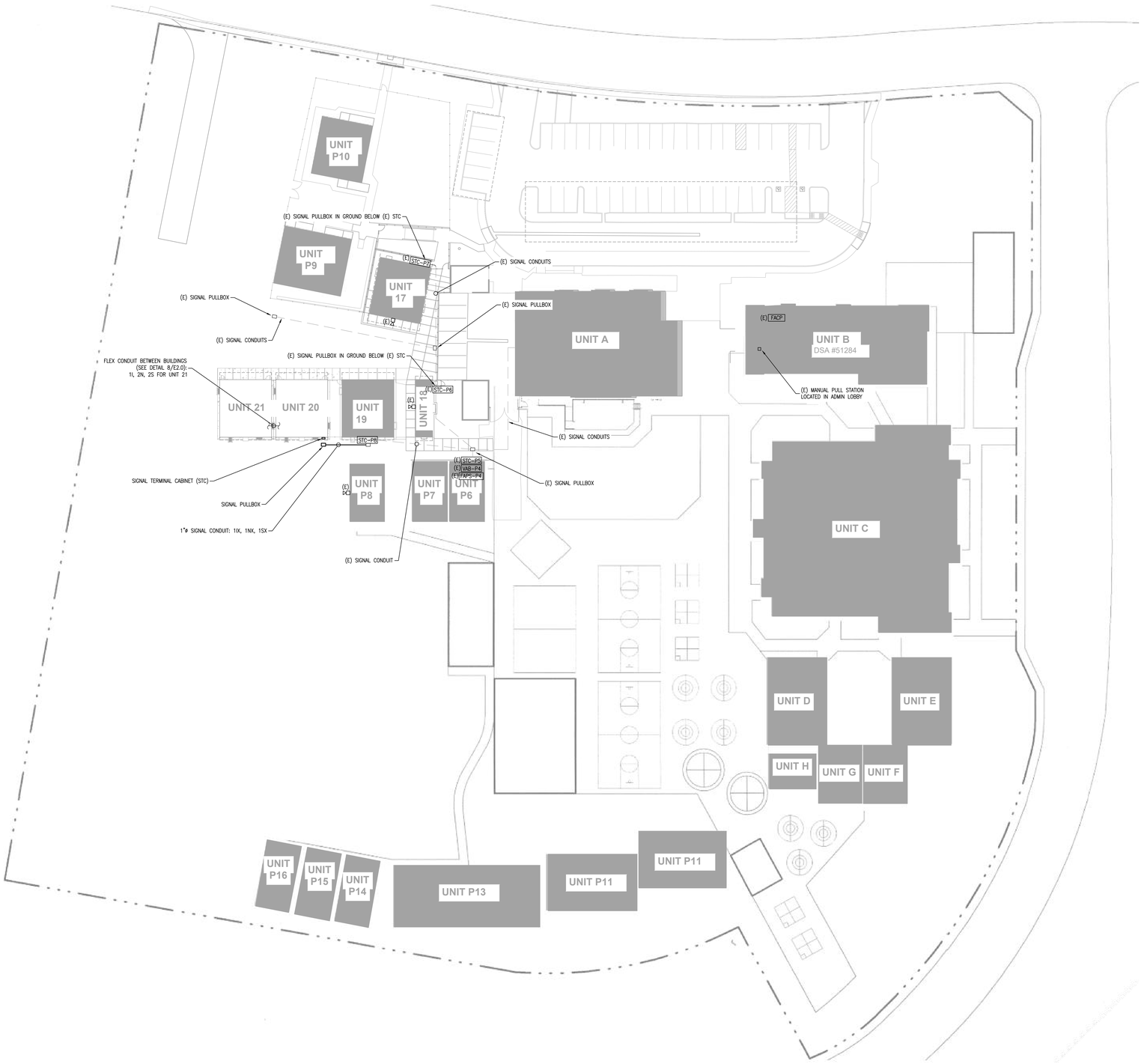

A FIRE ALARM - SITE PLAN
SCALE: 1/32"=1'-0"

NORTH

SHEET NOTES:

1. (E) EXISTING
   (N) NEW
   (R) REPLACED
   (D) DEMO
2. ALL FIRE ALARM DEVICES, PULL BOXES, AND CONDUIT/CABLING SHOWN ARE (N) AND CONTRACTOR FURNISHED-CONTRACTOR INSTALLED (CFCI) U.O.N.
3. ALL UNDERGROUND CONDUIT SHALL BE PVC U.O.N. AND HAVE A MINIMUM BURIAL DEPTH PER CEC TABLE 300.5
4. PULL BOXES FOR SIGNAL SYSTEMS DUCT BANK SHALL BE MIN. N16. LID SHALL BE ENGRAVED "SIGNAL", LOCATIONS ARE DIAGRAMMATIC AND NOT DIMENSIONED
5. FIRE ALARM CIRCUITS AND CIRCUIT ROUTING ARE SHOWN SCHEMATICALLY FOR CLARITY ILLUSTRATING THE WIRING CONFIGURATION NECESSARY FOR PROPER CIRCUIT SUPERVISION
6. PROVIDE EXTERIOR MOUNTED, NEMA 3R RATED SIGNAL TERMINAL CABINET (STC) AS SHOWN ON THE PLANS
7. RESTORE ASPHALT, CONCRETE, AND LANDSCAPE SURFACE TO MATCH ORIGINAL CONDITION WHERE SAWCUTTING/TRENCHING IS REQUIRED OUTSIDE THE DEMOLISHED AREA PER THE CIVIL DEMOLITION DRAWINGS
8. PRIOR TO COMMENCING TRENCHING OPERATIONS, CONTACT THE UTILITIES UNDERGROUND SERVICE ALERT BUREAU AND DETERMINE THE EXACT LOCATION OF ANY EXISTING UTILITY LINES WHICH MIGHT BE DAMAGED DURING THE INSTALLATION OF THIS WORK. HAND TRENCH, BACKFILL, AND COMPACT IN AREAS OF EXISTING UTILITY LINES TO AVOID DAMAGE TO SAME.

AGENCY APPROVAL:

IDENTIFICATION STAMP
DIV. OF THE STATE ARCHITECT
APP: 02-122976 INC:
REVIEWED FOR
SS ☑ FLS ☑ ACS ☑
DATE: 03/12/2025

TRACY
UNIFIED SCHOOL DISTRICT

HMC Architects
3595005000
2101 CAPITOL AVENUE, SUITE 100
SACRAMENTO, CA 95816
916 368 7990 / www.hmcarchitects.com

ISSUE

Δ	DESCRIPTION	DATE
1	ADDENDUM "A"	3/20/25

OPTIMIZEDENERGY & FACILITIES CONSULTING, INC.
5734 Lonetree Boulevard, Rocklin, CA 95765
Office: (916) 626 5518 www.oefcinc.com

REGISTERED PROFESSIONAL ENGINEER
ALEXANDRE M. BATTISTA
No.E23735
EXP.12-31-2025
ELECTRICAL
STATE OF CALIFORNIA

FACILITY:
JACOBSON ELEMENTARY SCHOOL
1750 W KAVANAGH AVE
TRACY, CA 95376

PROJECT:
JACOBSON ES - TK CLASSROOM

SHEET NAME:
FIRE ALARM SITE PLAN

CONSTRUCTION DOCUMENTS

DATE: **03/03/2025** | CLIENT PROJ NO: **3595005000**

SHEET:

E3.1

ADDENDUM "A"

12/12/2023 4:58:53 PM

PLEASE RECYCLE

THE LINE SHOWN ABOVE IS EXACTLY 1" WHEN PRINTED ON THIS SHEET'S ORIGINAL PAGE SIZE

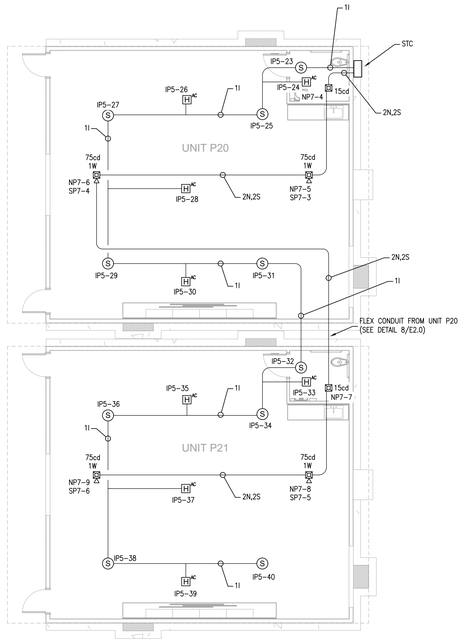

1 FIRE ALARM PLAN - RELOCATABLE CLASSROOM
SCALE: 1/8"=1'-0"

NORTH

SHEET NOTES:

1. (E) EXISTING
   (N) NEW
   (R) REPLACED
   (D) DEMO
2. ALL FIRE ALARM DEVICES AND CONDUIT/CABLING SHOWN ARE (N) U.O.N.
3. MINIMUM SIZE CONDUIT PATHWAY SHALL BE 3/4"ø, U.O.N.
4. FIRE ALARM SYSTEM INSTALLATION SHALL COMPLY WITH ALL REQUIREMENTS OF APPLICABLE CODES, STANDARDS, AND STATE REGULATIONS
5. FIRE ALARM SYSTEM SHALL BE TESTED AND INSPECTED IN ACCORDANCE WITH NFPA 72, CHAPTER 14
6. FIRE ALARM CIRCUITS AND CIRCUIT ROUTING ARE SHOWN SCHEMATICALLY FOR CLARITY ILLUSTRATING THE WIRING CONFIGURATION NECESSARY FOR PROPER CIRCUIT SUPERVISION
7. COORDINATE CEILING MOUNTED FIRE ALARM DEVICE LOCATIONS WITH LIGHT FIXTURES AND HVAC GRILLES BY MODULAR BUILDING CONTRACTOR. AVOID ALL CONFLICTS AND ENSURE MINIMUM 3" CLEARANCE IS MAINTAINED FROM SMOKE DETECTOR TO ALL HVAC GRILLES
8. INSTALL FIRE ALARM CONDUCTORS IN CONDUIT OR METAL SURFACE RACEWAY WHEN IN EXPOSED SPACES. MINIMUM SIZE OF CONDUIT SHALL BE 3/4"ø. UTILIZE WIREMOLD 700 SERIES SURFACE RACEWAY (IN LIEU OF CONDUIT) FOR AREA WHERE CONDUIT CANNOT BE INSTALLED CONCEALED. CABLE ABOVE ACCESSIBLE CEILING CAN BE INSTALLED FREE AIR WHEN USING APPLICABLE CABLE. SUPPORT ALL FREE AIR CABLE EVERY 48" WITH J-HOOKS.

AGENCY APPROVAL:

IDENTIFICATION STAMP
DIV. OF THE STATE ARCHITECT
APP: 02-122976 INC:
REVIEWED FOR
SS ☑ FLS ☑ ACS ☑
DATE: 03/12/2025

TRACY
UNIFIED SCHOOL DISTRICT

HMC Architects

3595005000

2101 CAPITOL AVENUE, SUITE 100
SACRAMENTO, CA 95816
916 368 7990 / www.hmcarchitects.com

ISSUE

Δ	DESCRIPTION	DATE
1	ADDENDUM "A"	3/20/25

OPTIMIZED ENERGY & FACILITIES CONSULTING, INC.
5734 Lonetree Boulevard, Rocklin, CA 95765
Office: (916) 626 5518 www.oefcinc.com

REGISTERED PROFESSIONAL ENGINEER
ALEXANDRE M. BATTISTA
No.E23735
EXP.12-31-2025
ELECTRICAL
STATE OF CALIFORNIA

FACILITY:
JACOBSON ELEMENTARY SCHOOL
1750 W KAVANAGH AVE
TRACY, CA 95376

PROJECT:
JACOBSON ES - TK CLASSROOM

SHEET NAME:
FIRE ALARM
ENLARGED PLAN - RELOCATABLE CLASSROOM

CONSTRUCTION DOCUMENTS

DATE: **03/03/2025** | CLIENT PROJ NO: **3595005000**

SHEET:

E3.2

ADDENDUM "A"

12/12/2023 4:58:53 PM

PLEASE RECYCLE

THE LINE SHOWN ABOVE IS EXACTLY ONE INCH LONG AT THIS SHEETS ORIGINAL PAGE SIZE

DOORS							FRAMES			
DOOR NO.	DOOR TYPE	DOOR SIZE	QUANTITY	MATERIAL	FINISH	HARDWARE SET NO.	FRAME TYPE	MATERIAL	FINISH	REMARKS
1	D1	3'-0" x 7'-0"	2	HM	PT	A	F1	HM	PT	HARDWARE LOCKABLE FROM THE INSIDE, SEE DOOR NOTE #3
2	D2	3'-0" x 7'-0"	1	SC	PT	B	F1	S	PT	

DOOR ABBREVIATIONS

HM - HOLLOW METAL
AL - ALUMINUM
S - STEEL
SST - STAINLESS STEEL
STL - STEEL FRAME, 16ga. FULLY WELDED
WWF - WINDOW WALL FRAME
SC - SOLID CORE WOOD
HC - HOLLOW CORE WOOD
PT - PAINTED
CA - CLEAR ANODIZED
BR - BRONZE ANODIZED
CLR - CLEAR FINISH

DOOR NOTES

1. DOORS SHALL COMPLY WITH C.B.C. SECTION 1010.
2. CLASSROOMS ≥ 981 S.F WILL REQUIRE PANIC HARDWARE THAT COMPLIES WITH C.B.C. SECTION 1010.2.9.
3. PER C.B.C. 1010.2.8.2: PROVIDE LOCKS THAT ALLOW DOORS TO CLASSROOMS AND ANY ROOM WITH AN OCCUPANCY OF FIVE OR MORE PERSONS TO BE LOCKED FROM THE INSIDE. LOCKS SHALL COMPLY WITH C.B.C. SECTION 1010.2.4.

DOOR SCHEDULE

WINDOW TYPE	QTY.	FUNCTION	'W' WIDTH	'H' HEIGHT	FINISH	GLASS TYPE	U FACTOR	SHGC	VT MIN	MIN STC RATING	REMARKS
A	2	FIXED	8'-0" MAX.	4'-0" MAX.	BRONZE ANODIZED	SOLAR GREY[6]	0.42	0.25	0.44	27	INOPERABLE

1. EXTERIOR LITE - 3/16" MINIMUM TEMPERED GLASS, OR LAMINATED AS 1 GLASS OF SOLAR GRAY GLARE REDUCING TYPE WITH A LIGHT TRANSMISSION FACTOR OF 45% MAXIMUM. GLASS SHALL BE DUAL-PANE.
2. WINDOWS THAT MEETS ALL OF THE FOLLOWING CONDITIONS SPECIFIED IN SECTION 2406.4.3, SHALL BE CONSIDERED A HAZARDOUS LOCATION:
   A. THE EXPOSED AREA OF AN INDIVIDUAL PANE IS GREATER THAN 9 SQUARE FEET.
   B. THE BOTTOM EDGE OF THE GLAZING IS LESS THAN 18" ABOVE FINISH FLOOR.
   C. THE TOP EDGE OF THE GLAZING IS GREATER THAN 36" ABOVE FINISH FLOOR.
   D. ONE OR MORE WALKING SURFACE(S) ARE WITHIN 36", MEASURED HORIZONTALLY AND IN A STRAIGHT LINE, OF THE PLANE OF THE GLAZING.
3. WINDOWS THAT ARE CONSIDERED A HAZARDOUS LOCATION SHALL CONTAIN FULLY TEMPERED SAFETY GLAZING & MEET THE FOLLOWING REQUIREMENTS:
   A. PASS THE IMPACT TEST REQUIREMENTS IN ACCORDANCE WITH "CPSC 16 CFR PART 1201" PER SECTION 2406.2, WITH A TEST CRITERIA OF CATEGORY II, UNLESS OTHERWISE INDICATED IN C.B.C. TABLE 2406.2(1).
   B. IDENTIFICATION OF SAFETY GLAZING PER C.B.C. 2406.3
4. ALL WINDOWS SHALL HAVE METAL FRAMES AND BE MANUFACTURED BY OTHERS.
5. WINDOWS SHALL BE NFRC RATED
6. THE MINIMUM STANDARD GLASS TYPE FOR ALL WINDOWS SHALL SOLAR GREY GLAZING. UPGRADED GLAZING (LOW E, LOW E2, ETC.) MAY BE USED PER SITE SPECIFIC REQUIREMENTS. WINDOWS TO BE DUAL-PANE PER CA ENERGY CODE.
7. ALL NFRC RATED FENESTRATION AS NOTED ON THE WINDOW SCHEDULE REQUIRE TEMPORARY NFRC LABELS. TEMPORARY NFRC LABELS SHALL STAY ON FENESTRATION PRODUCTS UNTIL INSPECTOR HAS VERIFIED THAT THE INSTALLED U-FACTOR, SHGC, AND VT MATCH THE WINDOW SCHEDULE.

WINDOW SCHEDULE

FINISHES										
				WALLS						
ROOM NUMBER	ROOM NAME	FLOOR	BASE	FRONT	REAR	RIGHT	LEFT	CEILING	CEILING HEIGHT	REMARKS
901 TYP	CLASSROOM - STANDARD	A	D	F	F	F	F	K	9'-0"	
902 TYP	SINGLE TOILET R.R.	B	S	J	J	J	J	K	9'-0"	

FINISH INDICATOR OPTIONS

A - CARPET; PER STATE OF CALIF SPEC COMPLYING WITH GROUP 1, TYPE A OR TYPE B, CLASS 2, DENSITY 4600.
B - SHEET VINYL FLOORING; 0.6 MIN, C.D.F. PER ASTM D 2047
C - VCT; ARMSTRONG, STANDARD, OR EXCELON.
D - TOP SET BASE; 4"
E - TOP SET BASE; 6"
F - WALL FINISH; 1/2" VINYL TACKBOARD CLASS 1 OVER 1/2" GYP BOARD BACKING
G - 1/2" W.R. GYP BOARD; TAPE, PAINTED FINISH
H - 1/2" GYP BOARD; TAPE, PAINTED FINISH
J - 3/32" F.R.P.; OVER 1/2" W.R. GYP BOARD
K - ACOUSTICAL LAY-IN GRID CEILING PANELS; 2'x2' OR 2'x4'
L - 1/2" VINYL TACKBOARD; CLASS 1, OVER 5/8" TYPE "X" GYP BOARD BACKING
M - 5/8" TYPE 'X' GYP BOARD; TAPE, TEXTURE, PAINTED FINISH
N - CERAMIC TILE - (FULL HEIGHT AT WALLS)
O - EXPOSED CONCRETE WITH CONCRETE SEALER
P - CLOUD CEILING PANELS
S- 6" SELF COVED VINYL SHEET BASE

NOTE: ALL INTERIOR FINISHES SHALL COMPLY WITH CFC, CBC & TITLE 19.

ROOM FINISHES SCHEDULE

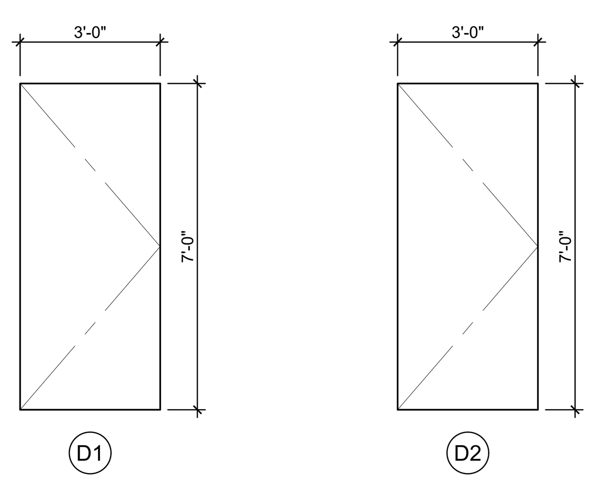

DOOR TYPES

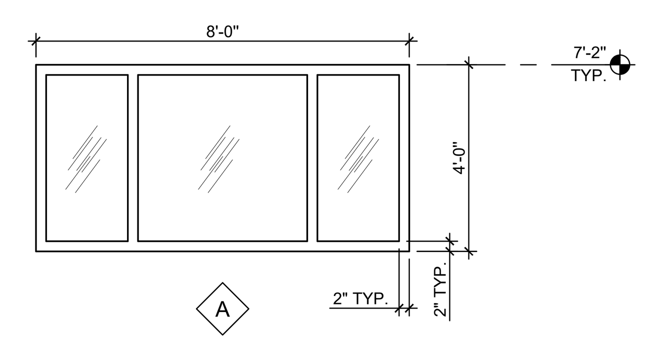

NOTES:
1. WINDOWS ARE INOPERABLE.
2. IDENTIFICATION OF GLASS & SAFETY GLAZING PER CBC CHAPTER 24

WINDOW TYPES

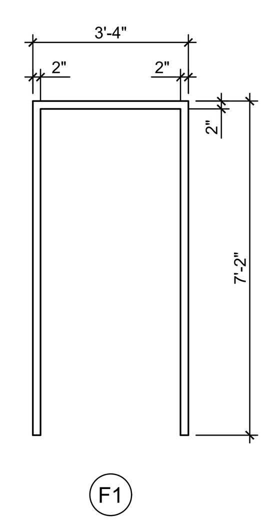

DOOR FRAME TYPES

WINDOW GLAZING AREA TABLE	
BUILDING SIZE (FT)	MAX ALLOWED WINDOW AREA (SQ FT)*
24'x40'	160
36'x40'	240
48'x40'	320
60'x40'	400
72'x40'	480
84'x40'	560
96'x40'	640
108'x40'	720
120'x40'	800

*NOTE: WINDOW PLACEMENT & SIZE MAY VARY AS TITLE 24 MODEL REFLECTS THE LARGEST WINDOW OPTION. THE TOTAL WINDOW AREA OF ANY BUILDING MAY NOT EXCEED THE MAXIMUM ALLOWED WINDOW AREA (SQ.FT.) LISTED IN THE TABLE ABOVE. IF A BUILDING EXCEEDS THE MAXIMUM AREA, A PROJECT SPECIFIC TITLE 24 REPORT SHALL B E PROVIDED.

WINDOW GLAZING TABLE

A	EXTERIOR DOOR PANIC BAR w/PULL ON EXTERIOR VON DUPRIN AX22PANL(REQUIRED WHEN OCCUPANT LOAD IS 50 OR MORE)
B	INTERIOR RESTROOM SCHLAGE ND40S-RESTROOM w/ LEVER

EXTERIOR DOOR HARDWARE

1. HINGES: HAGER 4-1/2x4-1/2 BUTTS, BB1279 US26D, 1-1/2 PAIR PER DOOR, WITH SET SCREW IN BARREL AND BALL BEARING DESIGN.
2. CLOSER: NORTON 8500DA OR 8500BF SERIES, LCN 1460 DEL SERIES OR EQUAL. (5 LBS. MAX. PRESSURE) ALL SCHLAGE HARDWARE IS PROVIDED WITH A CLOSER
3. WEATHERSTRIPPING: ALL EXTERIOR DOORS SHALL BE WEATHERSTRIPPED WITH PEMKO 299D, ULTRA WS007 OR EQUAL, AT DOOR JAMBS AND HEAD.
4. THRESHOLD: THRESHOLD SHALL BE PEMKO 271 AV 5" ALUMINUM WITH PEMKO 216 AV ULTRA TH042 DOOR BOTTOM.
5. LOCKDOWN: INTERIOR TEACHERS' MANUAL LOCK FOR CAMPUS LOCK DOWN CRITERIA - REQUIRED FOR STATE-FUNDED SCHOOLS, PER EDUCATION CODE SECTION 17075.50 (AND ALSO CBC 1010.2.8.2): PROVIDE LOCKS THAT ALLOW DOORS TO CLASSROOMS AND ANY ROOM WITH AN OCCUPANCY OF FIVE OR MORE PERSONS TO BE LOCKED FROM THE INSIDE. LOCKS SHALL COMPLY WITH C.B.C. SECTION 1010.2.4.

DOOR HARDWARE NOTES

1. 11B-404.2.3 CLEAR WIDTH
   DOOR OPENINGS SHALL PROVIDE A CLEAR WIDTH OF 32 INCHES (813 MM) MINIMUM. CLEAR OPENINGS OF DOORWAYS WITH SWINGING DOORS SHALL BE MEASURED BETWEEN THE FACE OF THE DOOR AND THE STOP, WITH THE DOOR OPEN 90 DEGREES. OPENINGS MORE THAN 24 INCHES (610 MM) DEEP SHALL PROVIDE A CLEAR OPENING OF 36 INCHES (914 MM) MINIMUM. THERE SHALL BE NO PROJECTIONS INTO THE REQUIRED CLEAR OPENING WIDTH LOWER THAN 34 INCHES (864 MM) ABOVE THE FINISH FLOOR OR GROUND. PROJECTIONS INTO THE CLEAR OPENING WIDTH BETWEEN 34 INCHES (864 MM) AND 80 INCHES (2032 MM) ABOVE THE FINISH FLOOR OR GROUND SHALL NOT EXCEED 4 INCHES (102 MM).

   EXCEPTIONS:
   1. IN ALTERATIONS, A PROJECTION OF 5/8 INCH (15.9 MM) MAXIMUM INTO THE REQUIRED CLEAR WIDTH SHALL BE PERMITTED FOR THE LATCH SIDE STOP.
   2. DOOR CLOSERS AND DOOR STOPS SHALL BE PERMITTED TO BE 78 INCHES (1981 MM) MINIMUM ABOVE THE FINISH FLOOR OR GROUND.

2. HANDLES, PULLS, LATCHES, LOCKS AND OTHERS OPERABLE PARTS ON DOORS SHALL BE OPERABLE WITH ONE HAND AND SHALL NOT REQUIRE TIGHT GRASPING, PINCHING OR TWISTING OF THE WRIST. THE FORCE REQUIRED TO ACTIVATE OPERABLE PARTS SHALL BE 5 lbs. MAX. (11B-404.2.7, 11B-309.4)
3. DOORS SHALL BE OPERABLE FROM INSIDE WITH A SINGLE MOTION W/O THE USE OF ANY TOOLS, EFFORT, OR SPECIAL KNOWLEDGE.
4. EMERGENCY EXIT AND PANIC HARDWARE
   EMERGENCY EXIT AND PANIC HARDWARE SHALL COMPLY WITH SFM STANDARD 12-10-3, SECTION 12-10-302
   A) THE CROSS-BAR SHALL EXTEND ACROSS NOT LESS THAN ONE-HALF THE WIDTH OF THE DOOR/GATE
   D) THE ENDS OF THE CROSS-BAR SHALL BE CURVED, GUARDED OR OTHERWISE DESIGNED TO PREVENT CATCHING ON THE CLOTHING OF PERSONS DURING EGRESS.

*ADDITIONAL DOORS MAY BE REQUIRED BASED ON BUILDING LAYOUT.

DOOR HARDWARE SCHEDULE

EMERGENCY EXIT AND PANIC HARDWARE:
IN COMPLIANCE WITH SFM STANDARD 12-10-3, SECTION 12-1-302

(A) THE CROSS BAR SHALL EXTEND ACROSS NOT LESS THAN ONE HALF THE WIDTH OF THE DOOR/GATE.

(B) THE ENDS OF THE CROSS BAR SHALL BE CURVED, GUARDED OR OTHERWISE DESIGNED TO PREVENT CATCHING ON THE CLOTHING OF PERSONS DURING EGRESS.

EMERGENCY EXIT AND PANIC HARDWARE

American Modular Systems
787 Spreckels Ave., Manteca, CA 95336
Phone (209) 825-1921 Fax (209) 825-7018
www.americanmodular.com

INTELLECTUAL-PROPERTY & PROPRIETARY RIGHTS STATEMENT
COPYRIGHT © AMERICAN MODULAR SYSTEMS (AMS)
AMS OWNS ALL COPYRIGHT AND OTHER INTELLECTUAL-PROPERTY AND PROPRIETARY RIGHTS IN THESE DRAWINGS, SPECIFICATIONS, AND THE MATERIAL CONTAINED HEREIN. CERTAIN ELEMENTS SHOWN IN THESE DOCUMENTS ARE REGISTERED TRADEMARKS OF AMS. ALL PATENTABLE MATERIALS CONTAINED IN THESE DOCUMENTS AND ORIGINATING WITH AMS WILL REMAIN THE SOLE PROPERTY OF AMS. THESE DRAWING, SPECIFICATIONS, AND THE MATERIAL CONTAINED HEREIN MAY NOT BE REPRODUCED, TRANSMITTED, COPIED, DISTRIBUTED, MODIFIED, OR OTHERWISE DISPOSED OF (DIRECTLY OR INDIRECTLY) AND MAY NOT BE USED (IN WHOLE OR IN PART) TO ASSIST IN THE CONSTRUCTION, DESIGN, OR OTHER MAKING OF, OR FOR THE PURPOSE OF FURNISHING ANY INFORMATION FOR THE CONSTRUCTION, DESIGN, OR OTHER MAKING OF, ANY BUILDINGS (MODULAR OR OTHERWISE), DRAWINGS, SPECIFICATIONS, PRINTS, APPARATUS, OR PARTS THEREOF, EXCEPT AS EXPRESSLY PERMITTED BY WRITTEN CONSENT OF, OR IN A WRITTEN AGREEMENT WITH, AMS. SUBMITTAL OR DISTRIBUTION TO MEET OFFICIAL REGULATORY REQUIREMENTS WILL NOT BE CONSTRUED AS PUBLICATION IN DEROGATION OF AMS'S COPYRIGHT OR OTHER INTELLECTUAL-PROPERTY OR PROPRIETARY RIGHTS.

PRE-CHECKED SET NAME
36' x 40' STANDARD MODULAR BUILDING (LOW SEISMIC)
FORM®

SITE SPECIFIC PROJECT NAME
TRACY USD
JACOBSON ES
(2) 36' x 40' BULIDINGS

MANUFACTURER PROFESSIONAL OF RECORD

THESE DRAWINGS ARE PRELIMINARY AND NOT FOR CONSTRUCTION UNLESS STAMPED & SIGNED BY THE DESIGN PROFESSIONAL OF RECORD.

REVISIONS
1
2
3
4

DRAWN BY:	LS
SCALE:	AS NOTED
DATE:	02/07/24
PROJECT NO:	1919-24

SHEET TITLE:
TYPICAL SCHEDULES: DOORS, WINDOWS & FINISHES

SHEET NUMBER:
N3.0-N

IDENTIFICATION STAMP
DIV. OF THE STATE ARCHITECT
APP: 02-122976 INC:
REVIEWED FOR
SS ☑ FLS ☑ ACS ☑
DATE: 03/12/2025

TRACY UNIFIED SCHOOL DISTRICT

HMC Architects
3595001000
2101 CAPITOL AVENUE, SUITE 100
SACRAMENTO, CA 95816
916 368 7990 / www.hmcarchitects.com

ISSUE

Δ	DESCRIPTION	DATE
A	ADDENDUM "A"	3/20/25

KEYNOTES

GENERAL NOTES

FACILITY:
**JACOBSON ELEMENTARY SCHOOL
1750 W KAVANAGH AVE
TRACY, CA 95376**

PROJECT:
JACOBSON ES - TK CLASSROOM

SHEET NAME:
TYPICAL SCHEDULES - DOORS, WINDOWS & FINISHES

DATE: **04/03/24** CLIENT PROJ NO: **3595001000**

SHEET:
N3.0-N
ADDENDUM "A"

PLEASE RECYCLE

Autodesk Docs://3595005000 TUSD TK CLASSROOMS 2025 R22/3595005000-A-TUSD-BOHN-SITE.rvt
12/3/2024 9:55:46 AM

THE LINE SHOWN ABOVE IS EXACTLY ONE INCH LONG AT THIS SHEETS ORIGINAL PAGE SIZE

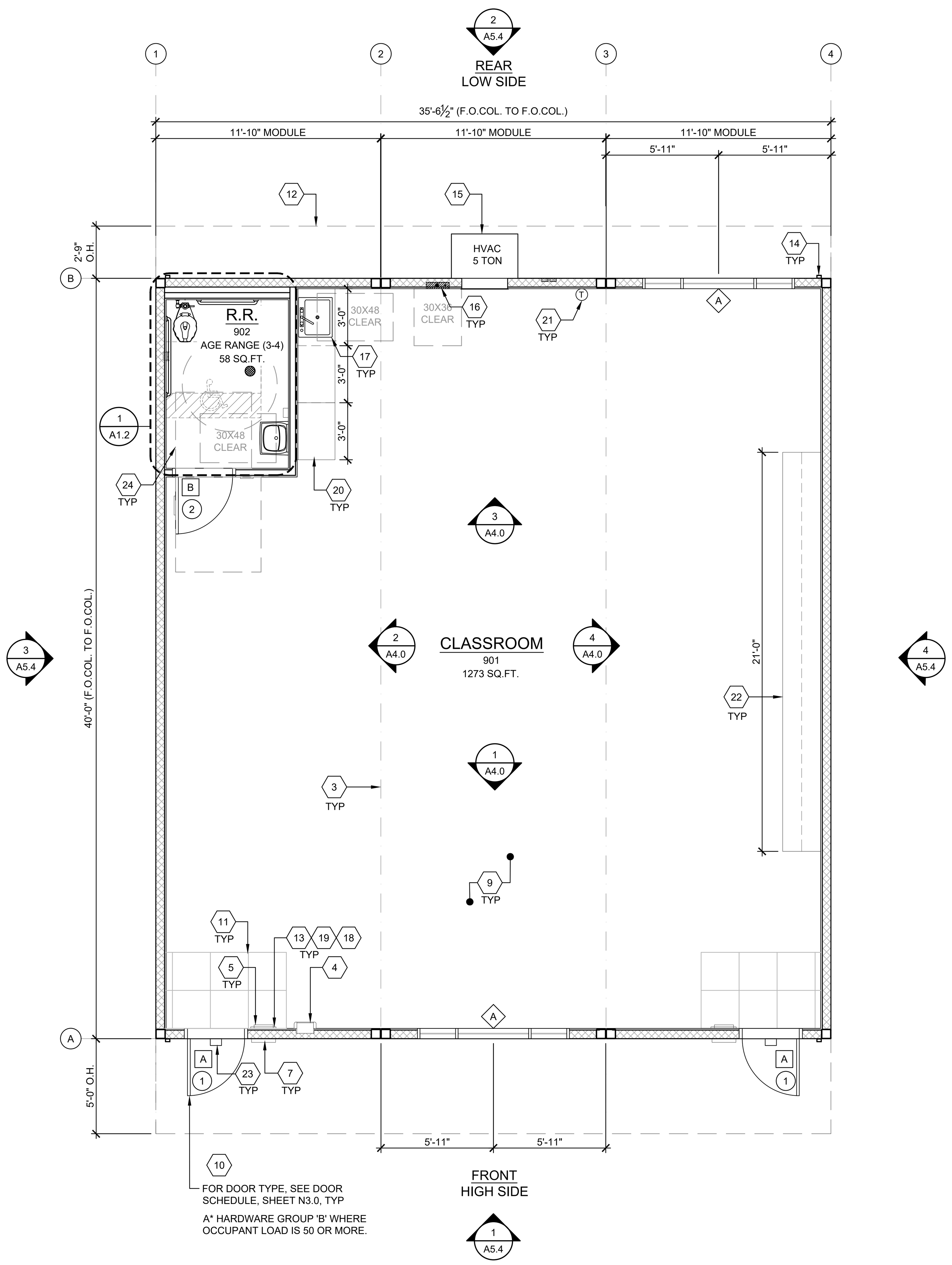

BUILDING SIZE SCHEDULE			
BUILDING SIZE (FT)	TOTAL # OF 12'-0" WIDE MODULES	TOTAL # OF CENTER MODULES	OVERALL BUILDING WIDTH[1]
☐ 24'x40'	2	0	23'-8½"
☒ 36'x40'	3	1	35'-6¾"
☐ 48'x40'	4	2	47'-5"
☐ 60'x40'	5	3	59'-3¼"
☐ 72'x40'	6	4	71'-1½"
☐ 84'x40'	7	5	82'-11¾"
☐ 96'x40'	8	6	94'-10"
☐ 108'x40'	9	7	106'-8¼"
☐ 120'x40'	10	8	118'-6½"

NOTES:

1. TOTAL BUILDING WIDTH INCLUDES 1/4" PER MODULAR CONSTRUCTION TOLERANCE PER FOUNDATION SHEET S1.1

TYPICAL FLOOR PLAN

SCALE: 1/4" = 1'-0" A

KEYNOTES (PLAN)

1. NOT USED
2. NOT USED
3. TYP MOD LINE
4. SEMI - RECESSED FIRE EXTINGUISHER - TOP OF HANDLE @ +48" A.F.F. 4" MAX PROTRUSION FROM WALL IF BOTTOM OF FIRE EXTINGUISHER IS ABOVE 27" A.F.F. - SEE 19/N4.0
5. TACTILE EXIT SIGN PER DETAIL 10/N4.0 (BY OTHERS)
6. NOT USED
7. ROOM SIGNAGE AND I.S.A. PER DETAILS 5&9/N4.0 (BY OTHERS)
8. NOT USED
9. CARPET
10. EGRESS DOOR
11. NON-ABSORBENT FLOOR AREA (2'-0" MIN. IN ALL DIRECTIONS @ ALL ENTRY DOOR) CHANGES IN LEVEL ARE NOT PERMITTED IN DOOR MANEUVERING CLEARANCE NON-ABSORBENT MATERIAL SHALL BE FLUSH WITH CARPET (11B-404.2.4).
12. OVERHANG
13. OCCUPANT LOAD SIGN PER DETAIL 11/N4.0 (BY OTHERS)
14. DOWNSPOUT - DISCHARGE TO SPLASH BLOCK (U.O.N.) (QUANTITY AND LOCATION MAY VARY)
15. HVAC - SEE MECHANICAL AND NOTES ON EXTERIOR ELEVATIONS.
16. ELECTRICAL PANEL (LOCATION MAY VARY) - SEE ELECTRICAL
17. CASEWORK WITH SINK - REFER TO 17/-
18. FLOOR LIVE LOAD SIGN PER 2022 CBC SECTION 106.1. *(FLOOR LIVE LOAD SIGN IS REQUIRED ONLY FOR COMMERCIAL OR INSTITUTIONAL BUILDINGS DESIGNED WITH LIVE LOADS EXCEEDING 50 PSF) WHERE 150 PSF LIVE LOAD IS SPECIFIED, THE TEXT "LONG TERM STORAGE NOT PERMITTED" SHALL ALSO BE INCLUDED ON THE SIGN.*
19. ASSISTIVE LISTENING (AL) SIGN POSTED IN PROMINENT PLACE AT OR NEAR THE ENTRANCE PER 17/N4.0. - (SIGNAGE BY OTHERS)
20. CASEWORK - BLOCKING PER A7.1
21. THERMOSTAT - TOP @ 46" A.F.F. - SEE ELECTRICAL SHEET
22. TEACHING WALL- BLOCKING PER A7.1
23. EXTERIOR LIGHT w/ EMERGENCY POWERED BACKUP - SEE ELECTRICAL
24. ACCESSIBLE DOOR CLEARANCE

PORTABLE ASSITIVE LISTENING SYSTEM REQUIREMENTS (A)

TOTAL CLASSROOMS _2_ x 3 RECEIVERS = _6_ RECEIVERS. BOTH REQUIRE TO BE HEARING AID COMPATIBLE IN EACH CLASSROOM SO TOTAL NUMBER OF AL RECEIVERS THAT ARE HEARING AID COMPATIBLE = _4_ .

KEY NOTES

1. REFER TO SHEET N5.0 FOR POSSIBLE ADDITIONAL FLOOR PLAN CONFIGURATIONS.
2. OPTIONAL INTERIOR WALLS MAY OCCUR THROUGHOUT THE BUILDING AS CONSTRUCTED PER SHEET S8.1. THE PC TITLE 24 HAS BEEN RUN FOR THE WORST CASE ENVELOPE BASED ON AREA.
3. PANIC HARDWARE COMPLYING WITH C.B.C. 1010.2.9 IS REQUIRED TO BE INSTALLED WHEN THE CONFIGURATION OF ANY ROOM PROVIDES AN OCCUPANT LOAD OF 50 OR GREATER.
4. IF OCCUPANCY LOAD EXCEEDS 50, PROVIDE A SECOND EXIT DOOR, PER CBC TABLE 1006.2.1.
5. FOR EVERY ROOM OR SPACE USED FOR ASSEMBLY OR CLASSROOM, PROVIDE AN OCCUPANT LOAD SIGN (BY OTHERS) IN A CONSPICUOUS PLACE, NEAR THE MAIN EXIT, PER C.B.C. SECTION 1004.9.
6. ALL PRIMARY EXTERIOR DOOR ENTRIES SHALL BE COVERED TO PREVENT WATER INTRUSION BY USING NONABSORBENT FLOOR AND WALL FINISHES WITHIN AT LEAST 2 FEET AROUND AND PERPENDICULAR TO OPENING, PER CALGREEN, SECTION 5.407.2.2.1.
7. PRIMARY EXTERIOR DOOR ENTRIES SHALL HAVE AT LEAST ONE OF THE FOLLOWING:
   - ROOF OVERHANG AT LEAST 4 FEET IN DEPTH.
8. WINDOW PLACEMENT & SIZE MAY VARY AS THE TITLE 24 MODEL REFLECTS THE LARGEST WINDOW OPTION. NO PC'S TOTAL WINDOW AREA MAY EXCEED THE TOTAL FENESTRATION AREA LISTED IN SECTION G1. ENVELOPE GENERAL INFORMATION OF THE TITLE 24 REPORT.
9. CABINETRY MAY BE INSTALLED ON ONE OR BOTH SIDES OF INTERIOR WALLS AND THE INSIDE FACE OF EXTERIOR WALLS WHEN INSTALLED PER THE DETAIL 8/A7.1.

3/16:12 (1%) MINIMUM TO 1/4:12 (2%) MAXIMUM GRADE FROM FACE OF BUILDING MUST BE ADHERED TO FOR WATER RUN-OFF. PONDING MAY OCCUR AROUND THE PERIMETER OF THE BUILDING.

SHEET NOTES

3. IN THE EVENT THAT A PC CLASSROOM IS DESIGNED TO CONNECT TO ANOTHER PC CLASSROOM OR RESTROOM, INTERIOR SOUND TRANSMISSION IN THE INTERIOR ADJOINING WALL AND FLOOR/CEILING SHALL MEET THE MINIMUM REQUIREMENT OF A STC OF 40, PER CALGREEN CODE SECTION 507.4.3. (EXAMPLES OF QUALIFYING ASSEMBLIES SHOWN BELOW).

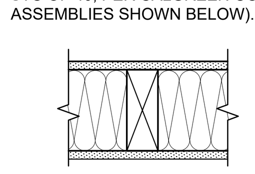

(2) LAYER 5/8" GYPSUM BOARD SECURED TO MIN. 2x4 STUDS @ 24" O.C. MAX. w/ 3½" THK. BATT INSULATION

STC=40
TEST REF.: AUDIO ALLOY L.L.C TEST NUMBER: OL-05-1003

4. MINIMUM WINDOW & DOOR RATINGS: ALL WINDOWS AND DOORS SPECIFIED ON THE SCHEDULES FOUND ON SHEET N3.0 OF THIS PACKAGE SHALL MEET A MINIMUM STC RATING OF 27.

WALL LEGEND

(NO HATCH) — 2X4 WALLS

(CROSS HATCH) — 2X6 WALLS

⟨X⟩ = KEY NOTE - SEE KEY NOTES ABOVE
(X) = DOOR TYPE - SEE SCHEDULE, SHEET N3.0
[X] = DOOR HARDWARE - SEE HARDWARE SCHEDULE, SHEET N3.0
◇X = WINDOW TYPE - SEE SCHEDULE, SHEET N3.0

16 SYMBOLS LEGEND

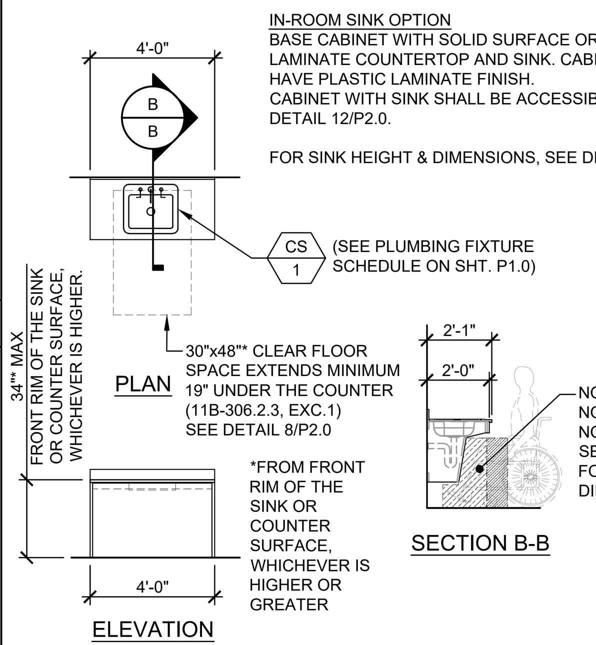

IN-ROOM SINK OPTION
BASE CABINET WITH SOLID SURFACE OR PLASTIC LAMINATE COUNTERTOP AND SINK. CABINET SHALL HAVE PLASTIC LAMINATE FINISH.
CABINET WITH SINK SHALL BE ACCESSIBLE - SEE DETAIL 12/P2.0.

FOR SINK HEIGHT & DIMENSIONS, SEE DETAIL 8/P2.0.

17 CLASSROOM SINK

SCALE: 1/4" = 1'-0"

ENERGY CONTROLS

1. DEMAND RESPONSE CONTROLS:
   ONLY REQUIRED IN BUILDINGS LARGER THAN 10,000 S.F., THEREFORE, NOT REQUIRED FOR THIS PC.
2. AUTOMATIC DAYLIGHTING CONTROLS:
   NOT REQUIRED IN ROOMS WHERE COMBINED INSTALLED LIGHTING POWER IN COMBINED SKYLIT & PRIMARY DAYLIT ZONES ARE <120 WATTS. INSTALLED WATTAGE IN PRIMARY SIDELIT DAY LIT ZONE IS 90 WATTS (2x 45w, AS SHOWN ON SHEET E1.0). THEREFORE, AUTOMATIC DAYLIGHTING CONTROLS ARE ONLY REQUIRED WHEN "SOLATUBES" ARE INSTALLED. SEE A1.1
3. ENERGY MANAGEMENT CONTROL SYSTEM (EMCS) CONNECTION:
   PER TITLE 24 CODE, "AN EMCS MAY BE INSTALLED TO COMPLY WITH THE REQUIREMENTS OF ONE OR MORE LIGHTING CONTROLS IF IT MEETS THE MINIMUM REQUIREMENTS". PC MAY CONTAIN OCCUPANCY SENSORS AND PHOTOCELL CONTROL LIGHTING, IN THAT CASE, AN EMCS IS NOT REQUIRED FOR THIS PC.
4. SOLAR-READY ZONE REQUIREMENTS:
   REQUIREMENTS & TABLE CAN BE FOUND ON SHEET A2.0

NOTE:
ANY MONITORING EQUIPMENT OR ASSOCIATED SENSORS ARE SITE SPECIFIC AND ARE NOT INCLUDED IN THE BASE PC.

ENERGY NOTES

ACOUSTIC CONTROLS

1. WHEN THE PRE-CHECK (PC) BUILDING IS SITE ADAPTED, THE BUILDING AND SITE FEATURES SHALL COMPLY WITH THE CALGREEN CODE, SECTION 5.507.4, FOR THE SPECIFIC SITE LOCATION.
2. MINIMUM WALL ASSEMBLIES:
   WALL ASSEMBLIES SHALL BE CONSTRUCTED PER DETAIL SHEET A5.5 WITH EITHER 2x4 WOOD STUDS OR 6" STEEL STUDS PER LISTED OPTIONS. MINIMUM STC RATINGS LISTED BELOW ARE PER THE CATALOG OF STC & IIC RATINGS FOR WALL AND FLOOR/CEILING ASSEMBLIES, PRODUCED BY THE OFFICE OF NOISE CONTROL, CA DEPARTMENT OF HEALTH SERVICES.

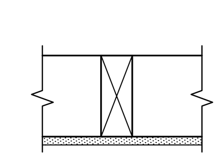

(1) LAYER 1/2" GYPSUM BOARD SECURED TO MIN. 2x4 STUDS @ 16" O.C. MAX.

STC=28
(CATALOG SECTION 1.2.1.5.4.1)
TEST REF.: NATIONAL RESEARCH COUNCIL OF CANADA - NRC #66

ACOUSTIC NOTES

IDENTIFICATION STAMP
DIV. OF THE STATE ARCHITECT
APP: 02-122976 INC:
REVIEWED FOR
SS ☑ FLS ☑ ACS ☑
DATE: 03/12/2025

TRACY UNIFIED SCHOOL DISTRICT

HMC Architects

3595001000

2101 CAPITOL AVENUE, SUITE 100
SACRAMENTO, CA 95816
916 368 7990 / www.hmcarchitects.com

ISSUE

Δ	DESCRIPTION	DATE
A	ADDENDUM "A"	3/20/25

AMS®
American Modular Systems
787 Spreckels Ave., Manteca, CA 95336
Phone (209) 825-1921 Fax (209) 825-7018
www.americanmodular.com

INTELLECTUAL-PROPERTY & PROPRIETARY RIGHTS STATEMENT
COPYRIGHT © AMERICAN MODULAR SYSTEMS (AMS)
AMS OWNS ALL COPYRIGHT AND OTHER INTELLECTUAL-PROPERTY AND PROPRIETARY RIGHTS IN THESE DRAWINGS, SPECIFICATIONS, AND THE MATERIAL CONTAINED HEREIN. CERTAIN ELEMENTS SHOWN IN THESE DOCUMENTS ARE REGISTERED TRADEMARKS OF AMS. ALL PATENTABLE MATERIALS CONTAINED IN THESE DOCUMENTS AND ORIGINATING WITH AMS WILL REMAIN THE SOLE PROPERTY OF AMS. THESE DRAWING, SPECIFICATIONS, AND THE MATERIAL CONTAINED HEREIN MAY NOT BE REPRODUCED, TRANSMITTED, COPIED, DISTRIBUTED, MODIFIED, OR OTHERWISE DISPOSED OF (DIRECTLY OR INDIRECTLY) AND MAY NOT BE USED (IN WHOLE OR IN PART) TO ASSIST IN THE CONSTRUCTION, DESIGN, OR OTHER MAKING OF, OR FOR THE PURPOSE OF FURNISHING ANY INFORMATION FOR THE CONSTRUCTION, DESIGN, OR OTHER MAKING OF, ANY BUILDINGS (MODULAR OR OTHERWISE), DRAWINGS, SPECIFICATIONS, PRINTS, APPARATUS, OR PARTS THEREOF, EXCEPT AS EXPRESSLY PERMITTED BY WRITTEN CONSENT OF, OR IN A WRITTEN AGREEMENT WITH, AMS. SUBMITTAL OR DISTRIBUTION TO MEET OFFICIAL REGULATORY REQUIREMENTS WILL NOT BE CONSTRUED AS PUBLICATION IN DEROGATION OF AMS'S COPYRIGHT OR OTHER INTELLECTUAL-PROPERTY OR PROPRIETARY RIGHTS.

PRE-CHECKED SET NAME
36' x 40' STANDARD MODULAR BUILDING
(LOW SEISMIC)
FORM®

SITE SPECIFIC PROJECT NAME
TRACY USD
JACOBSON ES
(2) 36' x 40' BULIDINGS

KEYNOTES

GENERAL NOTES

MANUFACTURER PROFESSIONAL OF RECORD

LICENSED ARCHITECT
RANDALL PATRICK CAVANAGH
No. C12631
Ren. 3-31-25
STATE OF CALIFORNIA

THESE DRAWINGS ARE PRELIMINARY AND NOT FOR CONSTRUCTION UNLESS STAMPED & SIGNED BY THE DESIGN PROFESSIONAL OF RECORD.

REVISIONS
1
2
3
4

DRAWN BY:	LS
SCALE:	AS NOTED
DATE:	02/07/24
PROJECT NO:	1919-24

SHEET TITLE:
TYPICAL FLOOR PLAN

SHEET NUMBER:
A1.0-N

FACILITY:
JACOBSON ELEMENTARY SCHOOL
1750 W KAVANAGH AVE
TRACY, CA 95376

PROJECT:
JACOBSON ES - TK CLASSROOM

SHEET NAME:
TYPICAL FLOOR PLAN

DATE: **04/03/24** CLIENT PROJ NO: **3595001000**

SHEET:
A1.0-N
ADDENDUM "A"

PLEASE RECYCLE

Autodesk Docs://3595005000 TUSD TK CLASSROOMS 2025 R22/3595005000-A-TUSD-BOHN-SITE.rvt

THE LINE SHOWN ABOVE IS EXACTLY ONE INCH LONG ON ORIGINAL PAPER SIZE

ACCESSIBLE CLEARANCE FOR WATER CLOSETS			
		WALL MOUNTED	FLOOR MOUNTED
'A'	CHILDREN	59" MIN.	59" MIN.
	ADULT	56" MIN.	69" MIN.

1. ACCESSIBLE TOILET COMPARTMENT'S SHALL HAVE A MANEUVERING SPACE COMPLYING WITH 2022 CBC SECTION 11B-604.8.1.1.
2. THE TABLE ABOVE IS A LIST OF REQ'D WATER CLOSET CLEARANCE. THE W.C. MANEUVERING SPACE IS LOCATED IN FRONT OF THE W.C. AND IS DESCRIBED IN 11B-604.8.1.1.1, 11B-604.8.1.1.2 AND 11B-604.8.1.1.3 DEPENDING ON IF THE DOOR IS END-OPENING OR SIDE-OPENING AND DIRECTION OF SWING.
3. THE MANEUVERING CLEARANCE FOR ALL ACCESSIBLE TOILET COMPARTMENTS SHOWN IN THESE PLANS SHALL COMPLY WITH 11B-604.8.1.1.1 (IN-SWINGING) & 11B-604.8.1.1.2. (SIDE-OPENING)

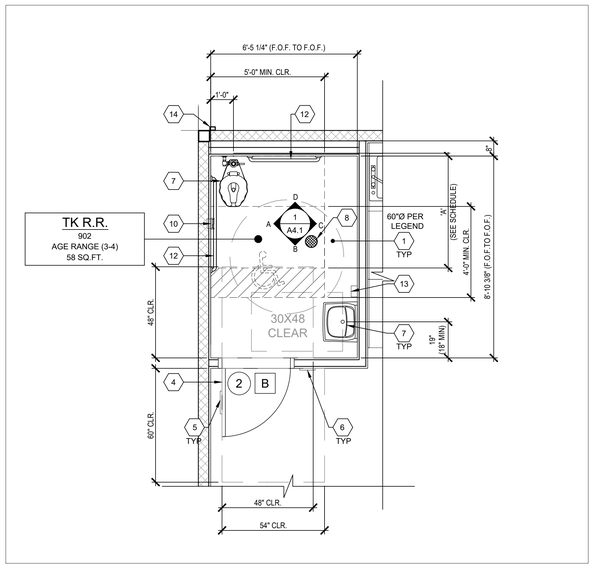

TK RESTROOM FLOOR PLAN OPTION

AGE RANGE: 3-4

SCALE: 3/8" = 1'-0"

A

NOT USED

B

1. CLEAR FLOOR SPACE AREA
2. TYP. MOD LINE
3. NOT USED
4. DOOR PER SCHEDULE ON SHEET N3.0, TYP.
5. RESTROOM SIGNAGE (BY OTHERS) PER DETAILS 1-9, SHEET N4.0
6. ROOM AND ISA SIGNAGE (BY OTHERS) PER DETAILS 5&9/N4.0
7. PLUMBING FIXTURE PER P1.0
8. FLOOR DRAIN (LOCATION MAY VARY) - PER P1.0. 1:48 FLOOR SLOPE MAX
9. NOT USED
10. TOILET TISSUE DISPENSER PER ACCESSIBLE HEIGHTS TABLE 10/P2.0
11. NOT USED
12. GRAB BARS - SEE 18/P2.0
13. SOAP DISPENSER (BY OTHERS)
14. DOWNSPOUT - DISCHARGE TO SPLASH BLOCK (U.N.O.) (QUANTITY AND LOCATION MAY VARY)

KEY NOTES

1. DIMENSIONS ARE TO FACE OF FINISH (F.O.F.) UNLESS NOTED OTHERWISE (i.e. F.O.C., ℄)
2. RESTROOM CONFIGURATION MAY VARY PER BUILDING CONFIGURATION.
3. RESTROOM MODULE OCCURS ONLY AT END OF BUILDING. SINGLE RESTROOMS MAY OCCUR IN ANY PART OF A BUILDING.
4. RESTROOM MODULE CANNOT STAND ALONE AND SHALL BE ASSEMBLED TOGETHER WITH AT LEAST ONE OTHER MODULE OF THE SAME SIZE.
5. INTERIOR WALLS MAY OCCUR THROUGHOUT BUILDING. REFER TO SHEET S8.1 FOR ATTACHMENTS.
6. REFER TO SCHEDULE 10/P2.0 FOR ACCESSIBLE HEIGHTS & DIMENSIONS.
7. SEWER AND WATER STUB OUTS SHALL BE LOCATED WITHIN THE ALLOWABLE AREA AS SHOWN ON FLOOR PLAN AND CONNECTIONS SHALL BE EASILY ACCESSIBLE FOR FUTURE RELOCATION. STUB OUT HEIGHT SHALL BE COORDINATED BY THE MANUFACTURER.
8. PIPING MATERIAL
   a. WATER: COPPER TYPE "L", 95/5 SOLDER.
   b. WASTE DRAIN AND VENT: ABS.
9. TOILET COMPARTMENT DOORS LOCATED IN THE SIDE WALL OR PARTITION, THE DOOR OPENING SHALL BE 4 INCHES (102MM) MAXIMUM FROM THE FRONT PARTITION, PER C.B.C. SECTION 11B-604.8.1.2.
10. ALL RESTROOM AND SINK ACCESSORIES NOT SHOWN HERE MUST BE COORDINATED BY THE PROJECT AOR/DISTRICT BEFORE SUBMITTING SITE-SPECIFIC PLANS TO DSA FOR REVIEW.

PLUMBING NOTE

MODULAR MFR. TO STUB THROUGH FLOOR ALL PLUMBING LINES. BUILDING PERIMETER POC'S SHOWN ARE FOR COORDINATION PURPOSES ONLY. ALL UNDER-FLOOR CONNECTIONS ARE BY SITE CONTRACTOR, U.O.N.

SITE NOTE

3/16:12 (1%) MINIMUM TO 1/4:12 (2%) MAXIMUM GRADE FROM FACE OF BUILDING MUST BE ADHERED TO FOR WATER RUN-OFF. PONDING MAY OCCUR AROUND THE PERIMETER OF THE BUILDING.

GENERAL NOTES

NOT USED 16

NOT USED 17

NOT USED 18

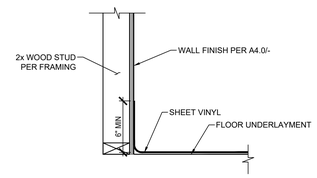

SCALE: 1-1/2" = 1'-0"

PROTECTION OF WOOD WALLS @ TOILET ROOMS

19

= KEY NOTE - SEE KEY NOTES, THIS SHEET

= DOOR TYPE - SEE SCHEDULE SHEET N3.0

= DOOR HARDWARE - SEE HARDWARE SCHEDULE SHEET N3.0

= WINDOW TYPE - SEE SCHEDULE SHEET N3.0

= 60" DIAMETER CLEAR FLOOR TURNING SPACE

= 30"x48" CLEAR FLOOR SPACE

SYMBOLS LEGEND

SCALE: 1/4" = 1'-0"

20

IDENTIFICATION STAMP
DIV. OF THE STATE ARCHITECT
APP: 02-122976 INC:
REVIEWED FOR
SS ☑ FLS ☑ ACS ☑
DATE: 03/12/2025

TRACY UNIFIED SCHOOL DISTRICT

HMC Architects

3595001000

2101 CAPITOL AVENUE, SUITE 100
SACRAMENTO, CA 95816
916 368 7990 / www.hmcarchitects.com

ISSUE

Δ	DESCRIPTION	DATE
1	ADDENDUM "A"	3/20/25

AMS®
American Modular Systems
787 Spreckels Ave., Manteca, CA 95336
Phone (209) 825-1921 Fax (209) 825-7018
www.americanmodular.com

INTELLECTUAL-PROPERTY & PROPRIETARY RIGHTS STATEMENT
COPYRIGHT © AMERICAN MODULAR SYSTEMS (AMS)

AMS OWNS ALL COPYRIGHT AND OTHER INTELLECTUAL-PROPERTY AND PROPRIETARY RIGHTS IN THESE DRAWINGS, SPECIFICATIONS, AND THE MATERIAL CONTAINED HEREIN. CERTAIN ELEMENTS SHOWN IN THESE DOCUMENTS ARE REGISTERED TRADEMARKS OF AMS. ALL PATENTABLE MATERIALS CONTAINED IN THESE DOCUMENTS AND ORIGINATING WITH AMS WILL REMAIN THE SOLE PROPERTY OF AMS. THESE DRAWING, SPECIFICATIONS, AND THE MATERIAL CONTAINED HEREIN MAY NOT BE REPRODUCED, TRANSMITTED, COPIED, DISTRIBUTED, MODIFIED, OR OTHERWISE DISPOSED OF (DIRECTLY OR INDIRECTLY) AND MAY NOT BE USED (IN WHOLE OR IN PART) TO ASSIST IN THE CONSTRUCTION, DESIGN, OR OTHER MAKING OF, OR FOR THE PURPOSE OF FURNISHING ANY BUILDINGS (MODULAR OR OTHERWISE) OR TO ASSIST IN MAKING ANY BUILDINGS (MODULAR OR OTHERWISE), DRAWINGS, SPECIFICATIONS, PRINTS, APPARATUS, OR PARTS THEREOF, EXCEPT AS EXPRESSLY PERMITTED BY WRITTEN CONSENT OF, OR IN A WRITTEN AGREEMENT WITH, AMS. SUBMITTAL OR DISTRIBUTION TO MEET OFFICIAL REGULATORY REQUIREMENTS WILL NOT BE CONSTRUED AS PUBLICATION IN DEROGATION OF AMS'S COPYRIGHT OR OTHER INTELLECTUAL-PROPERTY OR PROPRIETARY RIGHTS.

PRE-CHECKED SET NAME

36' x 40' STANDARD MODULAR BUILDING (LOW SEISMIC)

FORM®

SITE SPECIFIC PROJECT NAME

TRACY USD
JACOBSON ES
(2) 36' x 40' BULIDINGS

MANUFACTURER PROFESSIONAL OF RECORD

LICENSED ARCHITECT
DAVID PATRICK CONNOLLY
No. C12631
Ren. 3-31-25
STATE OF CALIFORNIA

THESE DRAWINGS ARE PRELIMINARY AND NOT FOR CONSTRUCTION UNLESS STAMPED & SIGNED BY THE DESIGN PROFESSIONAL OF RECORD.

REVISIONS

DRAWN BY:	LS
SCALE:	AS NOTED
DATE:	02/07/24
PROJECT NO:	1919-24

SHEET TITLE:

RESTROOM FLOOR PLAN OPTIONS - AGE RANGE 3-4

SHEET NUMBER:

A1.2-N

KEYNOTES

GENERAL NOTES

FACILITY:

JACOBSON ELEMENTARY SCHOOL
1750 W KAVANAGH AVE
TRACY, CA 95376

PROJECT:

JACOBSON ES - TK CLASSROOM

SHEET NAME:

RESTROOM FLOOR PLAN OPTIONS - AGE RANGE 3-4

DATE: **04/03/24** CLIENT PROJ NO: **3595001000**

SHEET:

A1.2 - N

ADDENDUM "A"

PLEASE RECYCLE

Autodesk Docs://3595005000 TUSD TK CLASSROOMS 2025 R23/3595005000-A-TUSD-BOHN-SITE.rvt

THE LINE SHOWN ABOVE IS
EQUAL TO ONE INCH ON
SHEET ORIGINALLY 22X34

IDENTIFICATION STAMP
DIV. OF THE STATE ARCHITECT
APP: 02-122976 INC:
REVIEWED FOR
SS ☑ FLS ☑ ACS ☑
DATE: 03/12/2025

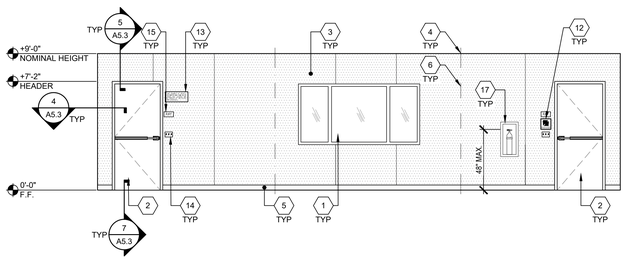

TYPICAL CLASSROOM FRONT END WALL ELEVATION SCALE : 1/4"=1'-0" 1

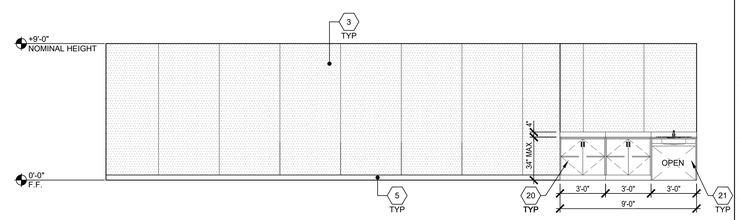

TYPICAL CLASSROOM SIDE WALL ELEVATION SCALE : 1/4"=1'-0" 2

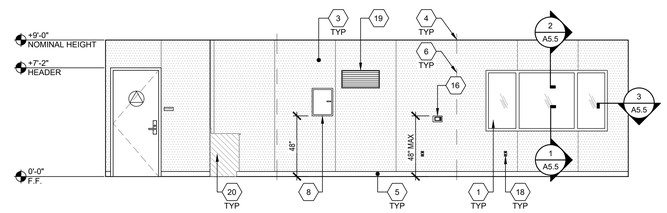

TYPICAL CLASSROOM REAR END WALL ELEVATION SCALE : 1/4"=1'-0" 3

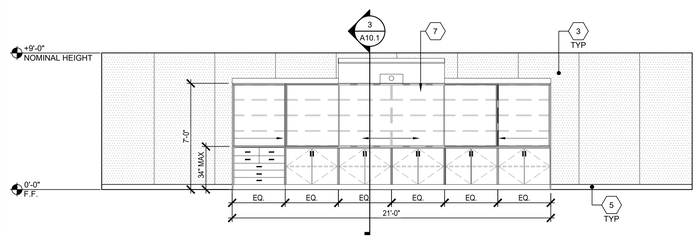

TYPICAL CLASSROOM SIDE WALL ELEVATION SCALE : 1/4"=1'-0" 4

NOT USED 5

NOT USED 6

NOT USED 7

NOT USED 8

NOT USED 9

NOT USED 10

NOT USED 11

NOT USED 12

1. WINDOW, SEE N3.0 FOR SPECS
2. TYP EXTERIOR DOOR, SEE N3.0 FOR SPECS
3. TACKBOARD - (FLAME RESISTANT INDUSTRIAL TACKABLE BOARD) - SHALL BE CLASS A RATED (ASTM E-84). NOMINAL PANEL THICKNESS SHALL BE ± 0.5" AND SHALL BE INSTALED IN ACCORDANCE WITH THE MANUFACTURER'S GUIDELINES.
4. TYP MOD LINE
5. TOP SET BASE
6. FULL PANEL CLOSE-UP AT MOD-LINES, TYP
7. TEACHING WALL, BLOCKING AS NEEDED PER A7.1
8. ELECTRICAL PANEL - SEE ELECTRICAL SHEETS
9. NOT USED
10. NOT USED
11. NOT USED
12. ASSISTIVE LISTENING SIGH, BY OTHERS, INSTALLED PER DETAIL 17/N4.0 SIGN SHALL BE A MAXIMUM OF 70" A.F.F. TO BASELINE OF HIGHEST TEXT.
13. OCCUPANT LOAD SIGN PER DETAIL 11/N4.0 (BY OTHERS)
14. LIGHT SWITCH - SEE ELECTRICAL SHEETS
15. EXIT TACTILE SIGN PER DETAIL 10/N4.0 (NIC)
16. THERMOSTAT, TOP @ 48" A.F.F. - SEE MECHANICAL SHEETS
17. FIRE EXTINGUISHER TOP OF HANDLE @ +48" MAX. A.F.F. PROTRUSION MAX 4" FROM WALL IF BOTTOM OF FIRE EXTINGUISHER GREATER THAN +27" A.F.F
18. TYP DUPLEX OUTLET - SEE ELECTRICAL SHEETS
19. HVAC VENT, SEE MECHANICAL
20. CASEWORK- BLOCKING AS NEEDED PER A7.1
21. CASEWORK W/SINK PER 17/A1.0B.A AND 12/P2.0 - BLKG AS NEEDED PER A7.1

KEY NOTES

American Modular Systems
787 Spreckels Ave., Manteca, CA 95336
Phone (209) 825-1921 Fax (209) 825-7018
www.americanmodular.com

INTELLECTUAL-PROPERTY & PROPRIETARY RIGHTS STATEMENT
COPYRIGHT © AMERICAN MODULAR SYSTEMS (AMS)
AMS OWNS ALL COPYRIGHT AND OTHER INTELLECTUAL-PROPERTY AND PROPRIETARY RIGHTS IN THESE DRAWINGS, SPECIFICATIONS, AND THE MATERIAL CONTAINED HEREIN. UNLESS OTHERWISE INDICATED OR AGREED, THESE DRAWINGS, SPECIFICATIONS, AND MATERIAL CONTAINED HEREIN, INCLUDING THE INTELLECTUAL PROPERTY RIGHTS EMBODIED THEREIN, WITH AMS WILL REMAIN THE SOLE PROPERTY OF AMS. THESE DRAWINGS, SPECIFICATIONS, AND THE MATERIAL CONTAINED HEREIN MAY NOT BE REPRODUCED, TRANSMITTED, COPIED, DISTRIBUTED, MODIFIED, OR OTHERWISE DISPOSED OF (DIRECTLY OR INDIRECTLY) AND MAY NOT BE USED (IN WHOLE OR IN PART) TO ASSIST IN THE CONSTRUCTION, DESIGN, OR OTHER MAKING OF, OR FOR THE PURPOSE OF FURNISHING ANY INFORMATION FOR THE CONSTRUCTION, DESIGN, OR OTHER MAKING OF, ANY BUILDINGS (MODULAR OR OTHERWISE), DRAWINGS, SPECIFICATIONS, PRINTS, APPARATUS, OR PARTS THEREOF, EXCEPT AS EXPRESSLY PERMITTED BY WRITTEN CONSENT OF, OR IN A WRITTEN AGREEMENT WITH, AMS. SUBMITTAL OR DISTRIBUTION TO MEET OFFICIAL REGULATORY REQUIREMENTS WILL NOT BE CONSTRUED AS PUBLICATION IN DEROGATION OF AMS'S COPYRIGHT OR OTHER INTELLECTUAL-PROPERTY OR PROPRIETARY RIGHTS.

PRE-CHECKED SET NAME
36' x 40' STANDARD MODULAR BUILDING (LOW SEISMIC)
FORM®

SITE SPECIFIC PROJECT NAME
TRACY USD
JACOBSON ES
(2) 36' x 40' BULIDINGS

MANUFACTURER PROFESSIONAL OF RECORD
LICENSED ARCHITECT
JOHN PATRICK CONNELLY
No. C12631
Ren. 3-31-25
STATE OF CALIFORNIA

THESE DRAWINGS ARE PRELIMINARY AND NOT FOR CONSTRUCTION UNLESS STAMPED & SIGNED BY THE DESIGN PROFESSIONAL OF RECORD

REVISIONS
1
2
3
4

DRAWN BY:	LS
SCALE:	AS NOTED
DATE:	02/07/24
PROJECT NO:	1919-24

SHEET TITLE:
INTERIOR ELEVATIONS
TYPICAL CLASSROOM

SHEET NUMBER:
A4.0-N

TRACY
UNIFIED SCHOOL DISTRICT

HMC Architects
3595001000
2101 CAPITOL AVENUE, SUITE 100
SACRAMENTO, CA 95816
916 368 7990 / www.hmcarchitects.com

ISSUE

Δ	DESCRIPTION	DATE
1	ADDENDUM "A"	3/20/25

KEYNOTES

GENERAL NOTES

FACILITY:
JACOBSON ELEMENTARY SCHOOL
1750 W KAVANAGH AVE
TRACY, CA 95376

PROJECT:
JACOBSON ES - TK CLASSROOM

SHEET NAME:
INTERIOR ELEVATIONS TYPICAL CLASSROOM

DATE: **04/03/24** CLIENT PROJ NO: **3595001000**

SHEET:
A4.0-N
ADDENDUM "A"

Autodesk Docs://3595001000 TUSD TK CLASSROOMS 2025 R22/3595001000-A-TUSD-BOHN-SITE.rvt

THE LINE SHOWN ABOVE IS EQUAL TO ONE INCH ON ORIGINAL 22X27 SHEETS

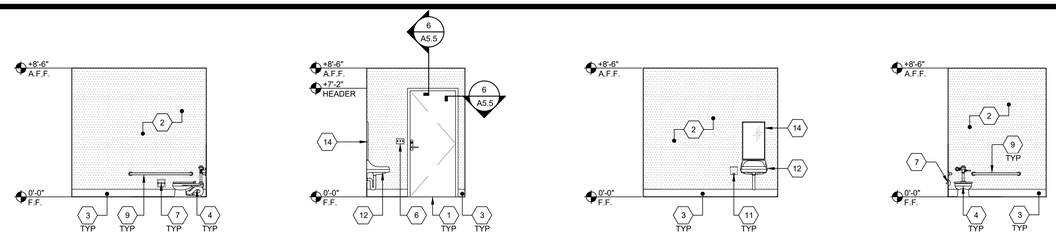

TK R.R. (AGE RANGE: 3-4)

SCALE: 1/4" = 1'-0" | 1

NOT USED | 2

KEY NOTES

NOT USED | 3

NOT USED | 4

NOT USED 5	NOT USED 6	NOT USED 7	NOT USED 8
NOT USED 9			
NOT USED 10	NOT USED 11	NOT USED 12	NOT USED 13
NOT USED 14			

1. TYPICAL DOOR, SEE N3.0 FOR SPECS
2. F.R.P.(FIBER REINFORCED PLASTIC) - SHALL BE CLASS C RATED (ASTM E-84) EMBOSSED & SMOOTH INTERIOR WALL PANELS. NOMINAL PANELS. NOMINAL PANEL THICKNESS SHALL BE ± 0.090 - PANEL SHALL BE INSTALLED IN ACCORDANCE WITH THE MANUFACTURER'S GUIDELINES.
3. 6" TOP SET BASE - REFER TO DETAIL 19/A1.2-N
4. ACCESSIBLE TOILET - SEE DETAIL 14/P2.0
5. NOT USED
6. LIGHT SWITCH - SEE ELECTRICAL SHEETS
7. TOILET PAPER DISPENSER PER P2.0
8. NOT USED
9. GRAB BAR - SEE DETAIL 18/P2.0
10. NOT USED
11. WALL MOUNTED SOAP DISPENSER (BY OTHERS)
12. ACCESSIBLE LAVATORY - SEE DETAIL 17/P2.0
13. NOT USED
14. TYP. MIRROR (19# MAX. WEIGHT) - SEE DETAIL 17/P2.0
15. NOT USED

NOTE: FOR ACCESSIBLE FIXTURES & ACCESSORIES MOUNTING HEIGHT REQUIREMENTS (PER CBC CHAPTER 11B), SEE SHEET P2.0, DETAIL 10.

AMS®
American Modular Systems
787 Spreckels Ave., Manteca, CA 95336
Phone (209) 825-1921 Fax (209) 825-7018
www.americanmodular.com

INTELLECTUAL-PROPERTY & PROPRIETARY RIGHTS STATEMENT
COPYRIGHT © AMERICAN MODULAR SYSTEMS (AMS)
AMS OWNS ALL COPYRIGHT AND OTHER INTELLECTUAL-PROPERTY AND PROPRIETARY RIGHTS IN THE DRAWINGS, SPECIFICATIONS, AND MATERIAL CONTAINED HEREIN, CERTAIN MARKS SHOWN IN THE DOCUMENTS ARE SERVICE MARKS AND TRADEMARKS OF AMS. ALL PATENTABLE MATERIALS CONTAINED IN THESE DOCUMENTS AND ORIGINATING WITH AMS WILL REMAIN THE SOLE PROPERTY OF AMS. THESE DRAWING, SPECIFICATIONS, AND THE MATERIAL CONTAINED HEREIN MAY NOT BE REPRODUCED, TRANSMITTED, COPIED, DISTRIBUTED, MODIFIED, OR OTHERWISE DISPOSED OF (DIRECTLY OR INDIRECTLY) AND MAY NOT BE USED (IN WHOLE OR IN PART) TO ASSIST IN THE CONSTRUCTION, DESIGN, OR OTHER MAKING OF, OR FOR THE PURPOSE OF FURNISHING ANY INFORMATION FOR THE CONSTRUCTION, DESIGN, OR OTHER MAKING OF, ANY BUILDINGS (MODULAR OR OTHERWISE), DRAWINGS, SPECIFICATIONS, PRINTS, APPARATUS, OR PARTS THEREOF, EXCEPT AS EXPRESSLY PERMITTED BY WRITTEN CONSENT OF, OR IN A WRITTEN AGREEMENT WITH, AMS. SUBMITTAL OR DISTRIBUTION TO MEET OFFICIAL REGULATORY REQUIREMENTS WILL NOT BE CONSTRUED AS PUBLICATION IN DEROGATION OF AMS'S COPYRIGHT OR OTHER INTELLECTUAL-PROPERTY OR PROPRIETARY RIGHTS.

PRE-CHECKED SET NAME

36' x 40' STANDARD MODULAR BUILDING
(LOW SEISMIC)

FORM®

SITE SPECIFIC PROJECT NAME

TRACY USD
JACOBSON ES
(2) 36' x 40' BULIDINGS

MANUFACTURER PROFESSIONAL OF RECORD

LICENSED ARCHITECT
JOHN PATRICK CONNAGHAN
No. C12631
Ren. 3-31-25
STATE OF CALIFORNIA

THESE DRAWINGS ARE PRELIMINARY AND NOT FOR CONSTRUCTION UNLESS STAMPED & SIGNED BY THE DESIGN PROFESSIONAL OF RECORD

REVISIONS

DRAWN BY:	LS
SCALE:	AS NOTED
DATE:	02/07/24
PROJECT NO:	1919-24

SHEET TITLE:

INTERIOR ELEVATIONS
RESTROOM OPTIONS

SHEET NUMBER:

A4.1-N

IDENTIFICATION STAMP
DIV. OF THE STATE ARCHITECT
APP: 02-122976 INC:
REVIEWED FOR
SS ☑ FLS ☑ ACS ☑
DATE: 03/12/2025

TRACY
UNIFIED SCHOOL DISTRICT

HMC Architects

3595001000

2101 CAPITOL AVENUE, SUITE 100
SACRAMENTO, CA 95816
916 368 7990 / www.hmcarchitects.com

ISSUE

Δ	DESCRIPTION	DATE
1	ADDENDUM "A"	3/20/25

KEYNOTES

GENERAL NOTES

FACILITY:
JACOBSON ELEMENTARY SCHOOL
1750 W KAVANAGH AVE
TRACY, CA 95376

PROJECT:
JACOBSON ES - TK CLASSROOM

SHEET NAME:
INTERIOR ELEVATIONS RESTROOM OPTIONS

DATE: **04/03/24** | CLIENT PROJ NO: **3595001000**

SHEET:

A4.1-N

ADDENDUM "A"

PLEASE RECYCLE

Autodesk Docs://3595005000 TUSD TK CLASSROOMS 2025 R22/3595005000-A-TUSD-BOHN-SITE.rvt

THE LINE SHOWN ABOVE IS 2" LONG ON ORIGINAL DRAWING SHEET. IF NOT, ADJUST SCALE.

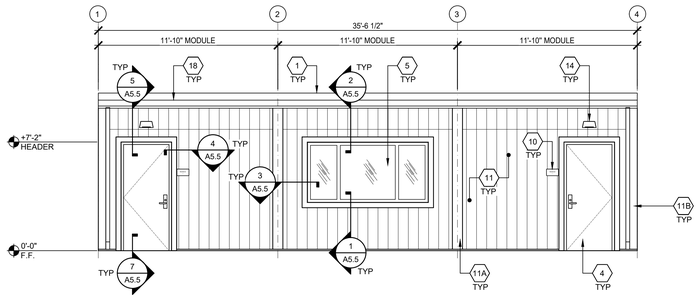

EXTERIOR ELEVATION - FRONT

SCALE: 1/4" = 1'-0" | 1

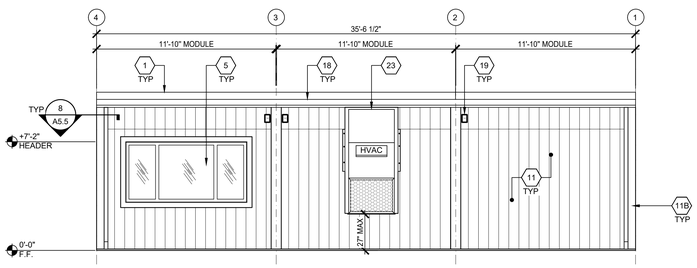

NOTES:
1. FOR ITEMS NOT NOTED, SEE "TYPICAL" ELEVATION SHOWN ABOVE.
2. WHEN ELEMENTS HIGHER THAN +27" ABOVE FINISH GRADE PROJECT MORE THAN 4" INTO CIRCULATION AREAS (INCLUDING GRASS PLAY AREAS), THAN CANE-DETECTION ELEMENTS WILL BE REQUIRED.

EXTERIOR ELEVATION - REAR

SCALE: 1/4" = 1'-0" | 2

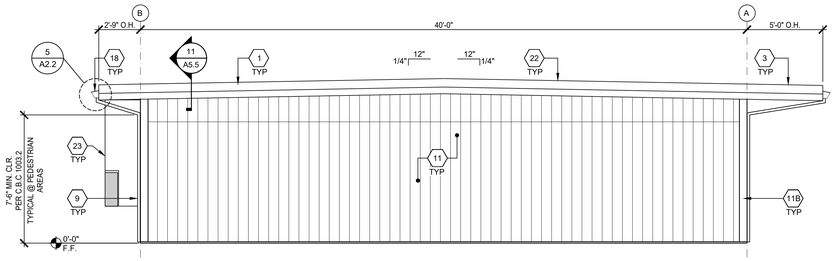

NOTES:
1. FOR ITEMS NOT NOTED, SEE "TYPICAL" ELEVATION SHOWN ABOVE.
2. WHEN ELEMENTS HIGHER THAN +27" ABOVE FINISH GRADE PROJECT MORE THAN 4" INTO CIRCULATION AREAS (INCLUDING GRASS PLAY AREAS), THAN CANE-DETECTION ELEMENTS WILL BE REQUIRED.

EXTERIOR ELEVATION - LEFT

SCALE: 1/4" = 1'-0" | 3

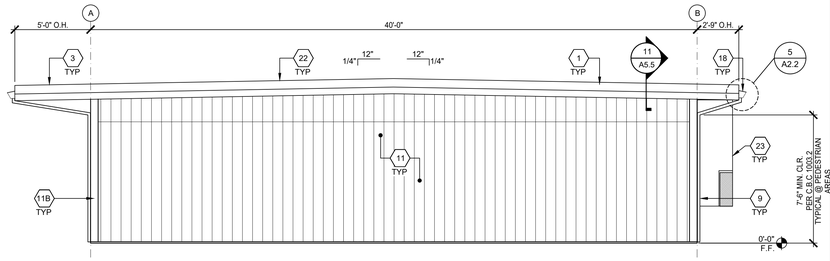

NOTES:
1. FOR ITEMS NOT NOTED, SEE "TYPICAL" ELEVATION SHOWN ABOVE.
2. WHEN ELEMENTS HIGHER THAN +27" ABOVE FINISH GRADE PROJECT MORE THAN 4" INTO CIRCULATION AREAS (INCLUDING GRASS PLAY AREAS), THAN CANE-DETECTION ELEMENTS WILL BE REQUIRED.

EXTERIOR ELEVATION - RIGHT

SCALE: 1/4" = 1'-0" | 4

KEY NOTES

1. STANDING SEAM METAL ROOFING
2. NOT USED
3. OVERHANG - SEE STRUCTURAL
4. TYP EXTERIOR DOOR - SEE SCHEDULE SHEET N3.0
5. WINDOW - SEE SCHEDULE SHEET N3.0
6. NOT USED
7. NOT USED
8. NOT USED
9. DOWNSPOUT SEE DETAIL 8/A5.5 FOR ATTACHMENT
10. ROOM ID AND ISA SIGNAGE (BY OTHER) SEE DETAILS 5 & 9/N4.0
11. CEMENTITIOUS VERTICAL GROOVE SIDING
11A. 1X8 MODLINE HARDIE TRIM
11B. 1X6 CORNER HARDIE TRIM
12. NOT USED
13. NOT USED
14. EXTERIOR LIGHT - SEE ELECTRICAL
15. NOT USED
16. NOT USED
17. NOT USED
18. GUTTER - SEE ATTACHMENT DETAIL 5/A2.2 AT STANDING SEAM ROOFING
19. MODULAR IDENTIFICATION TAG +90" ABOVE A.F.F.
20. NOT USED
21. NOT USED
22. DUAL SLOPE OPTION
23. HVAC UNIT
24. NOT USED

BUILDING SIZE SCHEDULE

BUILDING SIZE SCHEDULE				
BUILDING SIZE (FT)	TOTAL # OF 12'-0" WIDE MODULES	TOTAL # OF CENTER MODULES	OVERALL BUILDING WIDTH	
24'x40'	2	0	23'-4½"	
36'x40'	3	1	35'-4½"	
48'x40'	4	2	47'-0"	
60'x40'	5	3	59'-3½"	
72'x40'	6	4	71'-½"	
84'x40'	7	5	82'-11½"	
96'x40'	8	6	94'-10"	
108'x40'	9	7	106'-8½"	
120'x40'	10	8	118'-8½"	

NOTES:
1. TOTAL BUILDING WIDTH INCLUDES ½" PER MODULE CONSTRUCTION TOLERANCE PER FOUNDATION SHEET S1.1

AMS®
American Modular Systems
787 Spreckels Ave., Manteca, CA 95336
Phone (209) 825-1921 Fax (209) 825-7018
www.americanmodular.com

INTELLECTUAL-PROPERTY & PROPRIETARY RIGHTS STATEMENT
COPYRIGHT © AMERICAN MODULAR SYSTEMS (AMS)
AMS OWNS ALL COPYRIGHT AND OTHER INTELLECTUAL-PROPERTY AND PROPRIETARY RIGHTS IN THESE DRAWINGS, SPECIFICATIONS, AND THE MATERIAL CONTAINED HEREIN. CERTAIN ELEMENTS SHOWN IN THESE DOCUMENTS ARE REGISTERED TRADEMARKS OF AMS. ALL PATENTABLE MATERIALS CONTAINED IN THESE DOCUMENTS AND ORIGINATING WITH AMS WILL REMAIN THE SOLE PROPERTY OF AMS. THESE DRAWING, SPECIFICATIONS, AND THE MATERIAL CONTAINED HEREIN MAY NOT BE REPRODUCED, TRANSMITTED, COPIED, DISTRIBUTED, MODIFIED, OR OTHERWISE DISPOSED OF (DIRECTLY OR INDIRECTLY) AND MAY NOT BE USED (IN WHOLE OR IN PART) TO ASSIST IN THE CONSTRUCTION, DESIGN, OR OTHER MAKING OF, OR FOR THE PURPOSE OF FURNISHING ANY INFORMATION FOR THE CONSTRUCTION, DESIGN, OR OTHER MAKING OF, ANY BUILDINGS (MODULAR OR OTHERWISE), DRAWINGS, SPECIFICATIONS, PRINTS, ANALYSES, OR OTHER MATERIAL, WITHOUT THE PRIOR WRITTEN CONSENT OF AMS. WRITTEN CONSENT OF, OR IN A WRITTEN AGREEMENT WITH, AMS, SUBMITTAL OR DISTRIBUTION TO MEET OFFICIAL REGULATORY REQUIREMENTS WILL NOT BE CONSTRUED AS PUBLICATION IN DEROGATION OF AMS'S COPYRIGHT OR OTHER INTELLECTUAL-PROPERTY OR PROPRIETARY RIGHTS.

PRE-CHECKED SET NAME

36' x 40' STANDARD MODULAR BUILDING (LOW SEISMIC)

FORM®

SITE SPECIFIC PROJECT NAME

TRACY USD
JACOBSON ES
(2) 36' x 40' BULIDINGS

MANUFACTURER PROFESSIONAL OF RECORD

LICENSED ARCHITECT
JOHN PATRICK CONNELLY
No. C12631
Ren. 3-31-25
STATE OF CALIFORNIA

THESE DRAWINGS ARE PRELIMINARY AND NOT FOR CONSTRUCTION UNLESS STAMPED & SIGNED BY THE DESIGN PROFESSIONAL OF RECORD.

REVISIONS

DRAWN BY:	LS
SCALE:	AS NOTED
DATE:	02/07/24
PROJECT NO:	1919-24

SHEET TITLE:

TYPICAL EXTERIOR ELEVATIONS - LAP SIDING OPTION

SHEET NUMBER:

A5.4-N

IDENTIFICATION STAMP
DIV. OF THE STATE ARCHITECT
APP: 02-122976 INC:
REVIEWED FOR
SS ☑ FLS ☑ ACS ☑
DATE: 03/12/2025

TRACY UNIFIED SCHOOL DISTRICT

HMC Architects
3595001000
2101 CAPITOL AVENUE, SUITE 100
SACRAMENTO, CA 95816
916 368 7990 / www.hmcarchitects.com

ISSUE

Δ	DESCRIPTION	DATE
1	ADDENDUM "A"	3/20/25

KEYNOTES

GENERAL NOTES

FACILITY:
JACOBSON ELEMENTARY SCHOOL
1750 W KAVANAGH AVE
TRACY, CA 95376

PROJECT:
JACOBSON ES - TK CLASSROOM

SHEET NAME:
TYPICAL EXTERIOR ELEVATIONS - LAP SIDING OPTION

DATE: **04/03/24** | CLIENT PROJ NO: **3595001000**

SHEET:

A5.4-N

ADDENDUM "A"

PLEASE RECYCLE

Autodesk Docs://3595001000 TUSD TK CLASSROOMS 2025 R22/3595001000-A-TUSD-BOHN-SITE.rvt

THE LINE SHOWN ABOVE IS
EQUAL TO ONE INCH ON
SHEET ORIGINALLY ISSUED

IDENTIFICATION STAMP
DIV. OF THE STATE ARCHITECT
APP: 02-122976 INC:
REVIEWED FOR
SS ☑ FLS ☑ ACS ☑
DATE: 03/12/2025

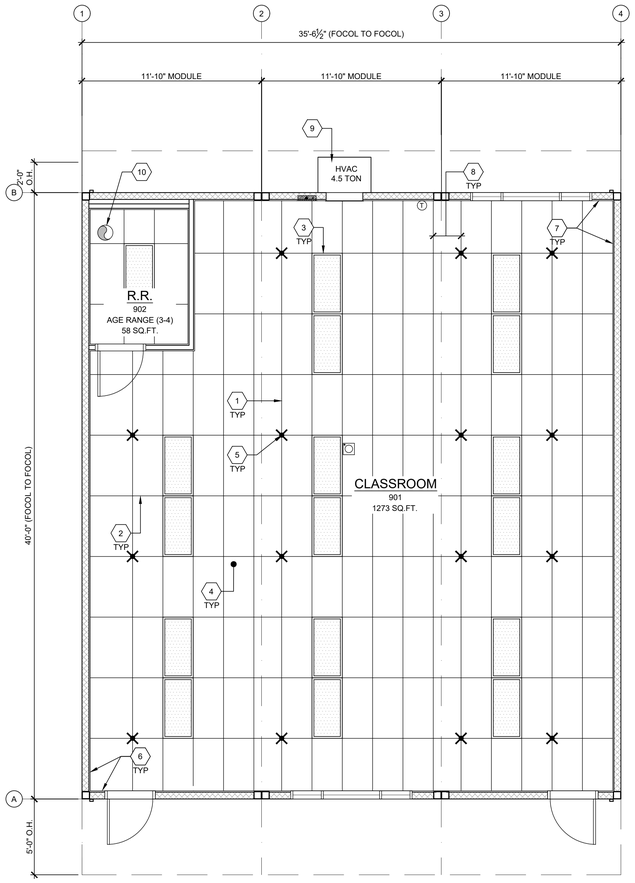

TYPICAL REFLECTED CEILING PLAN

SCALE: 1/4" = 1'-0" | 1

1. MAIN TEE RUNNER TYP. PER TABLE A, SHEET M1.7
2. CROSS TEE RUNNER TYP. PER TABLE A, SHEET M1.7
3. INTERIOR LIGHT FIXTURE, REFER TO SHEET SHEET E1.0 FOR SPEC'S ATTACHMENT PER DETAIL 7/M1.4
4. CEILING HEIGHT @ 9'-0" MIN.
5. STRUT/SPLAY WIRE ASSEMBLY, SEE 2/M1.4 FOR DETAILS
6. FIXED CEILING END, SEE DETAIL 5A/M1.4
7. FREE CEILING END, SEE DETAIL 5B/M1.4
8. CENTER SECTION THAT CROSSES MODULE LINE TO BE FIELD INSTALLED, SEE DETAIL 5C/M1.4
9. TYP. HVAC UNIT
10. EXHAUST FAN - SEE M1.1

KEY NOTES

1. WHERE TWO OR MORE HVAC UNITS SERVE A COMMON SPACE, UNITS SHALL BE EQUIPPED WITH A DUCT SMOKE DETECTOR FOR AUTO SHUTDOWN. INTERCONNECT WITH FIRE ALARM SYSTEM.
2. AUTOMATIC SHUT-OFF IS NOT REQUIRED WHEN ALL OCCUPIED ROOMS SERVED BY THE AIR HANDLING EQUIPMENT HAVE DIRECT ACCESS TO THE EXTERIOR AND THE TRAVEL DISTANCE DOES NOT EXCEED 100 FT. PER C.M.C. 608.1 EXCEPTION #2.
3. LIGHT FIXTURES MAY BE INSTALLED ROTATED 90° FROM SHOWN TO MATCH T-GRID.
4. PC TITLE 24 HAS BEEN RUN FOR WORSE CASE OUTDOOR VENTILATION REQUIREMENTS (SEE OUTDOOR VENTILATION ON SHEET N2.0 FOR OUR OUTDOOR VENTILATION DESIGN REQUIREMENT NOTES)
5. ACCEPTANCE TESTING PER ENERGY CODE SECTION 10-103.
6. ACCEPTANCE TESTS TO BE COMPLETED ON NEWLY INSTALLED OR REPLACEMENT OF MECHANICAL SYSTEMS BEFORE PROJECT COMPLETION PER THE CALIFORNIA ENERGY CODE SECTION 10-103. ACCEPTANCE TESTS MUST BE PERFORMED BY A CERTIFIED ACCEPTANCE TEST TECHNICIAN (ATT). THE ACCEPTANCE TESTING PROCEDURES MUST BE REPEATED, AND DEFICIENCIES CORRECTED UNTIL THE INSTALLATION OF THE SPECIFIED SYSTEMS CONFORM AND PASS THE REQUIRED ACCEPTANCE CRITERIA. COMPLETED NRCA FORMS SHALL BE SUBMITTED TO THE PROJECT INSPECTOR AND THE DISTRICT.

GENERAL NOTES

MEP COMPONENT ANCHORAGE NOTES

ALL MECHANICAL, PLUMBING, AND ELECTRICAL COMPONENTS SHALL BE ANCHORED AND INSTALLED PER THE DETAILS ON THE DSA APPROVED CONSTRUCTION DOCUMENTS. THE FOLLOWING COMPONENTS SHALL BE ANCHORED OR BRACED TO MEET THE FORCE AND DISPLACEMENT REQUIREMENTS PRESCRIBED IN THE 2022 CBC, SECTIONS 1617A.1.18 THROUGH 1617A.1.26 AND ASCE 7-16 CHAPTER 13, 26 AND 30.

1. ALL PERMANENT EQUIPMENT AND COMPONENTS.
2. TEMPORARY, MOVABLE OR MOBILE EQUIPMENT THAT IS PERMANENTLY ATTACHED (E.G. HARD WIRED) TO THE BUILDING UTILITY SERVICES SUCH AS ELECTRICITY, GAS OR WATER. "PERMANENTLY ATTACHED" SHALL INCLUDE ALL ELECTRICAL CONNECTIONS EXCEPT PLUGS FOR110/220 VOLT RECEPTACLES HAVING A FLEXBLE CABLE.
3. TEMPORARY, MOVABLE OR MOBILE EQUIPMENT WHICH IS HEAVIER THAN 400 POUNDS OR HAS A CENTER OF MASS LOCATED 4 FEET OR MORE ABOVE THE ADJACENT FLOOR OR ROOF LEVEL THAT DIRECTLY SUPPORT THE COMPONENT IS REQUIRED TO BE RESTRAINED IN A MANNER APPROVED BY DSA.

THE FOLLOWING MECHANICAL AND ELECTRICAL COMPONENTS SHALL BE POSITIVELY ATTACHED TO THE STRUCTURE BUT NEED NOT DEMONSTRATE DESIGN COMPLIANCE WITH THE REFERENCE NOTED ABOVE. THESE COMPONENTS SHALL HAVE FLEXIBLE CONNECTIONS PROVIDED BETWEEN THE COMPONENT AND ASSOCIATED DUCTWORK, PIPING, AND CONDUIT. FLEXIBLE CONNECTIONS MUST ALLOW MOVEMENT IN BOTH TRANSVERSE AND LONGITUDINAL DIRECTIONS:

A. COMPONENTS WEIGHING LESS THAN 400 POUNDS AND HAVE A CENTER OF MASS LOCATED 4 FEET OR LESS ABOVE THE ADJACENT FLOOR OR ROOF LEVEL THAT DIRECTLY SUPPORT THE COMPONENT.
B. COMPONENTS WEIGHING LESS THAN 20 POUNDS, OR IN THE CASE OF DISTRIBUTED SYSTEMS, LESS THAN 5 POUNDS PER FOOT, WHICH ARE SUSPENDED FROM A ROOF OR FLOOR OR HUNG FROM A WALL.

THE ANCHORAGE OF ALL MECHANICAL, ELECTRICAL AND PLUMBING COMPONENTS SHALL BE SUBJECT TO THE APPROVAL OF THE DESIGN PROFESSIONAL IN GENERAL RESPONSIBLE CHARGE OR STRUCTURAL ENGINEER DELEGATED RESPONSIBILITY AND ACCEPTANCE BY DSA. THE PROJECT INSPECTOR WILL VERIFY THAT ALL COMPONENTS AND EQUIPMENT HAVE BEEN ANCHORED IN ACCORDANCE WITH THE ABOVE REQUIREMENTS.

PIPING, DUCTWORK, AND ELECTRICAL DISTRIBUTION SYSTEM BRACING NOTES

PIPING, DUCTWORK, AND ELECTRICAL DISTRIBUTION SYSTEMS SHALL BE BRACED TO COMPLY WITH THE FORCES AND DISPLACEMENTS PRESCRIBED IN ASCE 7-16 SECTION 13.3 AS DEFINED IN ASCE 7-16 SECTION 13.6.5, 13.6.6, 13.6.7, 13.6.8; AND 2022 CBC, SECTIONS 1617A.1.24, 1617A.1.25 AND 1617A.1.26.

THE METHOD OF SHOWING BRACING AND ATTACHMENTS TO THE STRUCTURE FOR THE IDENTIFIED DISTRIBUTION SYSTEM ARE AS NOTED BELOW. WHEN BRACING AND ATTACHMENTS ARE BASED ON A PRE-APPROVED INSTALLATION GUIDE (E.G., OSHPD OPM FOR 2013 CBC OR LATER), COPIES OF THE BRACING SYSTEM INSTALLATION GUIDE OR MANUAL SHALL BE AVAILABLE ON THE JOBSITE PRIOR TO THE START OF AND DURING THE HANGING AND BRACING OF THE DISTRIBUTION SYSTEMS. THE STRUCTURAL ENGINEER OF RECORD SHALL VERIFY THE ADEQUACY OF THE STRUCTURE TO SUPPORT THE HANGER AND BRACE LOADS.

MECHANICAL PIPING (MP), MECHANICAL DUCTS (MD), PLUMBING PIPING (PP), ELECTRICAL DISTRIBUTION SYSTEMS (E):

MP☒ MD☒ PP☒ E☒ OPTION 1: DETAILED ON THE APPROVED DRAWINGS WITH PROJECT SPECIFIC NOTES AND DETAILS.

MP☐ MD☐ PP☐ E☐ OPTION 2: SHALL COMPLY WITH THE APPLICABLE OSHPD PRE-APPROVAL (OPM #) #_____.

BUILDING SIZE SCHEDULE				
	BUILDING SIZE (FT)	TOTAL # OF 12'-0" WIDE MODULES	TOTAL # OF CENTER MODULES	TOTAL FNDN WIDTH[1]
☐	24'x40'	2	0	23'-8½"
☒	36'x40'	3	1	35'-6¾"
☐	48'x40'	4	2	47'-5"
☐	60'x40'	5	3	59'-3¼"
☐	72'x40'	6	4	71'-1½"
☐	84'x40'	7	5	82'-11¾"
☐	96'x40'	8	6	94'-10"
☐	108'x40'	9	7	106'-8¼"
☐	120'x40'	10	8	118'-6½"

NOTES:

1. TOTAL BUILDING WIDTH INCLUDES ¼" PER MODULE CONSTRUCTION TOLERANCE PER FOUNDATION SHEET S1.1

NOT USED | NOT USED | NOT USED | BUILDING SIZE SCHEDULE | MEP COMPONENT ANCHORAGE NOTES

American Modular Systems
787 Spreckels Ave., Manteca, CA 95336
Phone (209) 825-1921 Fax (209) 825-7018
www.americanmodular.com

INTELLECTUAL-PROPERTY & PROPRIETARY RIGHTS STATEMENT
COPYRIGHT © AMERICAN MODULAR SYSTEMS (AMS)
AMS OWNS ALL COPYRIGHT AND OTHER INTELLECTUAL-PROPERTY AND PROPRIETARY RIGHTS IN THESE DRAWINGS, SPECIFICATIONS, AND THE MATERIAL CONTAINED HEREIN. CERTAIN ELEMENTS SHOWN IN THESE DOCUMENTS ARE REGISTERED TRADEMARKS OF AMS. ALL PATENTABLE MATERIALS CONTAINED IN THESE DOCUMENTS AND ORIGINATING WITHIN AMS, INCLUDING BUT NOT LIMITED TO, THE ARRANGEMENT OF BUILDING LOCATIONS AND THE MATERIAL CONTAINED HEREIN MAY NOT BE REPRODUCED, TRANSMITTED, COPIED, DISTRIBUTED, MODIFIED, OR OTHERWISE DISPOSED OF (DIRECTLY OR INDIRECTLY) AND MAY NOT BE USED (IN WHOLE OR IN PART) TO ASSIST IN THE CONSTRUCTION, DESIGN, OR OTHER MAKING OF, OR FOR THE PURPOSE OF FURNISHING ANY INFORMATION FOR THE CONSTRUCTION, DESIGN, OR OTHER MAKING OF, ANY BUILDINGS (MODULAR OR OTHERWISE), DRAWINGS, SPECIFICATIONS, PRINTS, APPARATUS, OR PARTS THEREOF, EXCEPT AS EXPRESSLY PERMITTED BY WRITTEN CONSENT OF, OR IN A WRITTEN AGREEMENT WITH, AMS. SUBMITTAL OR DISTRIBUTION TO MEET OFFICIAL REGULATORY REQUIREMENTS WILL NOT BE CONSTRUED AS PUBLICATION IN DEROGATION OF AMS'S COPYRIGHT OR OTHER INTELLECTUAL-PROPERTY OR PROPRIETARY RIGHTS.

PRE-CHECKED SET NAME
36' x 40' STANDARD MODULAR BUILDING (LOW SEISMIC)
FORM®

SITE SPECIFIC PROJECT NAME
TRACY USD
JACOBSON ES
(2) 36' x 40' BULIDINGS

MANUFACTURER PROFESSIONAL OF RECORD
LICENSED ARCHITECT
PATRICK CONNOR
No. C12631
Ren. 3-31-25
STATE OF CALIFORNIA

THESE DRAWINGS ARE PRELIMINARY AND NOT FOR CONSTRUCTION UNLESS STAMPED & SIGNED BY THE DESIGN PROFESSIONAL OF RECORD.

REVISIONS
1
2
3
4

DRAWN BY:	LS
SCALE:	AS NOTED
DATE:	02/07/24
PROJECT NO:	1919-24

SHEET TITLE:
TYPICAL REFLECTED CEILING PLAN

SHEET NUMBER:
M1.0-N

TRACY
UNIFIED SCHOOL DISTRICT

HMC Architects
3595001000
2101 CAPITOL AVENUE, SUITE 100
SACRAMENTO, CA 95816
916 368 7990 / www.hmcarchitects.com

ISSUE

Δ	DESCRIPTION	DATE
1	ADDENDUM "A"	3/20/25

KEYNOTES

GENERAL NOTES

FACILITY:
JACOBSON ELEMENTARY SCHOOL
1750 W KAVANAGH AVE
TRACY, CA 95376

PROJECT:
JACOBSON ES - TK CLASSROOM

SHEET NAME:
TYPICAL REFLECTED CEILING PLAN

DATE: **04/03/24** | CLIENT PROJ NO: **3595001000**

SHEET:
M1.0-N

ADDENDUM "A"

Autodesk Docs://3595001000 TUSD TK CLASSROOM5 2025 R23/3595001000-A-TUSD-BOHN-SITE.rvt

PLEASE RECYCLE

THE LINE SHOWN ABOVE IS 1" WHEN PLOTTED ON ANSI D SHEET OR ORIGINAL FACE SCALE

IDENTIFICATION STAMP
DIV. OF THE STATE ARCHITECT
APP: 02-122976 INC:
REVIEWED FOR
SS ☑ FLS ☑ ACS ☑
DATE: 03/12/2025

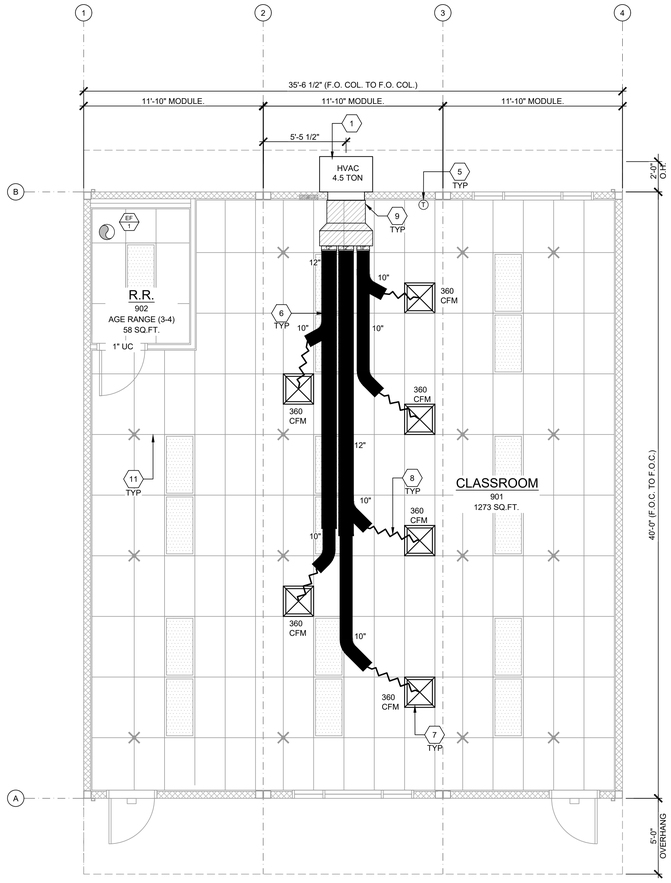

MECHANICAL PLAN

SCALE: 1/4"=1'-0"

1

1. WALL HUNG HVAC UNIT - SEE 10/M1.4.
2. NOT USED.
3. NOT USED
3A. NOT USED
3B. NOT USED
4. NOT USED
5. THERMOSTAT - 48" A.F.F, MAX TO TOP OF BOX
6. CONCEALED SUPPLY AIR DUCT ABOVE T-BAR CEILING - SEE 1/M1.4.
7. TYPICAL 4-WAY SUPPLY AIR REGISTER LOCATION AND SIZE MAY VARY PER CEILING LAYOUT AND BUILDING SIZE - SEE 7/M1.5.
8. FLEX DUCT - NOMINAL 10" MIN. (MAY VARY) - SEE 8/M1.5.
9. RETURN AIR AS PART OF UNIT.
10. NOT USED
11. STRUT/SPLAY WIRE ASSEMBLY, SEE 5/M1.4 FOR DETAILS
12. NOT USED

NOTE: FLEXIBLE AIR DUCTS AND CONNECTORS SHALL BE NOT MORE THAN 5 FEET IN LENGTH AND SHALL NOT BE USED IN LIEU OF RIGID ELBOWS OR FITTINGS. FLEXIBLE AIR DUCTS SHALL BE PERMITTED TO BE USED AS AN ELBOW AT A TERMINAL DEVICE PER ENERGY CODE 120.4 AND CMC 603.4.1

KEY NOTES

BUILDING SIZE SCHEDULE

BUILDING SIZE (FT)	TOTAL # OF 12'-0" WIDE MODULES	TOTAL # OF CENTER MODULES	TOTAL FNDN WIDTH[1]
☐ 24'x40'	2	0	23'-8½"
☒ 36'x40'	3	1	35'-6¾"
☐ 48'x40'	4	2	47'-5"
☐ 60'x40'	5	3	59'-3¼"
☐ 72'x40'	6	4	71'-1½"
☐ 84'x40'	7	5	82'-11¾"
☐ 96'x40'	8	6	94'-10"
☐ 108'x40'	9	7	106'-8¼"
☐ 120'x40'	10	8	118'-6½"

NOTES:

1. TOTAL BUILDING WIDTH INCLUDES ¼" PER MODULE CONSTRUCTION TOLERANCE PER FOUNDATION SHEET S1.1
2. REFER TO SHEET M1.7 FOR TYPICAL NOTES AND CALL OUTS.

BUILDING SIZE SCHEDULE

1. WHERE TWO OR MORE HVAC UNITS SERVE A COMMON SPACE, UNITS SHALL BE EQUIPPED WITH A DUCT SMOKE DETECTOR FOR AUTOMATIC SHUTDOWN. INTERCONNECT WITH FIRE ALARM SYSTEM.
2. AIR-MOVING SYSTEMS SUPPLYING AIR IN EXCESS OF 2000 CUBIC FEET PER MINUTE TO ENCLOSED SPACES WITHIN THE BUILDING SHALL BE EQUIPPED WITH AN AUTOMATIC SHUTOFF.
3. AUTOMATIC SHUT-OFF IS NOT REQUIRED WHEN OCCUPIED ROOMS SERVED BY THE AIR HANDLING EQUIPMENT HAVE A DIRECT EXIT TO THE EXTERIOR AND THE TRAVEL DISTANCE DOES NOT EXCEED 100 FT. (PER C.M.C. 608.1 EXCEPTION #2.)
4. LIGHTING FIXTURE MAY BE INSTALLED ROTATED 90° FROM SHOWN TO MATCH T-GRID.
5. FOR T-BAR CEILING SPECIFICATIONS, SEE M1.7.
6. PROVIDE CO2 SENSORS AT ALL CLASSROOMS THAT MEET REQUIREMENTS OF CALGREEN 5.506.
7. EACH PUBLIC K-12 SCHOOL CLASSROOM, AS LISTED IN TABLE 120.1-A OF THE CALIFORNIA ENERGY CODE, SHALL BE EQUIPPED WITH A CARBON DIOXIDE MONITOR OR SENSOR THAT MEETS THE FOLLOWING REQUIREMENTS: 1.THE MONITOR OR SENSOR SHALL BE PERMANENTLY AFFIXED IN A TAMPER-PROOF MANNER IN EACH CLASSROOM BETWEEN 3 AND 6 FEET (914 MM AND 1829 MM) ABOVE THE FLOOR AND AT LEAST 5 FEET (1524 MM) AWAY FROM DOORS AND OPERABLE WINDOWS. 2.WHEN THE MONITOR OR SENSOR IS NOT INTEGRAL TO AN ENERGY MANAGEMENT CONTROL SYSTEM (EMCS), THE MONITOR OR SENSOR SHALL DISPLAY THE CARBON DIOXIDE READINGS ON THE DEVICE. WHEN THE SENSOR IS INTEGRAL TO AN EMCS, THE CARBON DIOXIDE READINGS SHALL BE AVAILABLE TO AND REGULARLY MONITORED BY FACILITY PERSONNEL. 3.A MONITOR SHALL PROVIDE NOTIFICATION THROUGH A VISUAL INDICATOR ON THE MONITOR WHEN THE CARBON DIOXIDE LEVELS IN THE CLASSROOM HAVE EXCEEDED 1,100 PPM. A SENSOR INTEGRAL TO AN EMCS SHALL PROVIDE NOTIFICATION TO FACILITY PERSONNEL THROUGH A VISUAL AND/OR AUDIBLE INDICATOR WHEN THE CARBON DIOXIDE LEVELS IN THE CLASSROOM HAVE EXCEEDED 1,100 PPM. 4.THE MONITOR OR SENSOR SHALL MEASURE CARBON DIOXIDE LEVELS AT MINIMUM 15-MINUTE INTERVALS AND SHALL MAINTAIN A RECORD OF PREVIOUS CARBON DIOXIDE MEASUREMENTS OF NOT LESS THAN 30 DAYS DURATION. 5.THE MONITOR OR SENSOR USED TO MEASURE CARBON DIOXIDE LEVELS SHALL HAVE THE CAPACITY TO MEASURE CARBON DIOXIDE LEVELS WITH A RANGE OF 400 PPM TO 2000 PPM OR GREATER. 6.THE MONITOR OR SENSOR SHALL BE CERTIFIED BY THE MANUFACTURER TO BE ACCURATE WITHIN 75 PPM AT 1,000 PPM CARBON DIOXIDE CONCENTRATION AND SHALL BE CERTIFIED BY THE MANUFACTURER TO REQUIRE CALIBRATION NO MORE FREQUENTLY THAN ONCE EVERY 5 YEARS.
8. PER ENERGY CODE 120.1(D): THERMOSTAT SHALL BE PROGRAMMED SO THAT THE AIR HANDLER FAN WILL RUN CONTINUALLY DURING OCCUPIED TIMES. PRE-OCCUPANCY PURGE SHALL BE PROGRAMED ONE HOUR PRIOR TO THE MODULAR BUILDING BEING NORMALLY OCCUPIED. SHOW THERMOSTAT PLACEMENT ON THE PLANS TO BE PLACED AWAY FROM DOORS AND OPERABLE WINDOWS. MECHANICAL PLANS SHOW THERMOSTAT AND SENSOR LOCATIONS, CONTROL DEVICES, AND INCLUDE A CONTROL SEQUENCE OF OPERATIONS. MANUAL OVERRIDE CONTROLS ARE A MANDATORY MEASURE UNDER ENERGY CODE SECTION 120.2(E). ALL HVAC SYSTEMS SHALL HAVE A MANUAL OVERRIDE ACCESSIBLE TO THE OCCUPANTS THAT ALLOWS THEM TO TURN ON THE HVAC SYSTEM DURING NORMALLY UNOCCUPIED TIMES. THIS CAN BE A MANUAL OVERRIDE FOR UP TO 4 HOURS, OCCUPANCY SENSOR OR A 4 HOUR MANUALLY OPERATED TIMER.

SHEET NOTES

MARK	DESCRIPTION	CFM	WATTS	S.P.	VOLT/PH	
EF 1	EXHAUST FAN	110	47.3	.10"	120-1Ø	NUTONE AN110 CEILING MOUNTED 180W INPUT 10 LBS (OR EQUAL)

NOTES:

1. VENT EXHAUST FAN THROUGH THE ROOF
2. FANS MUST WEIGH LESS THAN 25 LBS.
3. LIGHTING FIXTURES MAY BE INSTALLED ROTATED 90° FROM SHOWN TO MATCH T-GRID LAYOUT.
4. FOR INSTALLATION DETAILS REFER TO AA & 16/M1.6

EXHAUST FAN SCHEDULE

NOT USED

2

AMS®
American Modular Systems
787 Spreckels Ave., Manteca, CA 95336
Phone (209) 825-1921 Fax (209) 825-7018
www.americanmodular.com

INTELLECTUAL-PROPERTY & PROPRIETARY RIGHTS STATEMENT
COPYRIGHT © AMERICAN MODULAR SYSTEMS (AMS)
AMS OWNS ALL COPYRIGHT AND OTHER INTELLECTUAL-PROPERTY AND PROPRIETARY RIGHTS IN THESE DRAWINGS, SPECIFICATIONS, AND THE MATERIAL CONTAINED HEREIN. CERTAIN ELEMENTS SHOWN IN THESE DOCUMENTS ARE REGISTERED TRADEMARKS OF AMS. ALL PATENTABLE MATERIALS CONTAINED IN THESE DOCUMENTS AND ORIGINATING WITHIN AMS ARE THE PROPERTY OF AMS. ALL RIGHTS ARE RESERVED. THESE DRAWINGS AND THE MATERIAL CONTAINED HEREIN MAY NOT BE REPRODUCED, TRANSMITTED, COPIED, DISTRIBUTED, MODIFIED, OR OTHERWISE DISPOSED OF (DIRECTLY OR INDIRECTLY) AND MAY NOT BE USED (IN WHOLE OR IN PART) TO ASSIST IN THE CONSTRUCTION, DESIGN, OR OTHER MAKING OF, OR FOR THE PURPOSE OF FURNISHING ANY INFORMATION FOR THE CONSTRUCTION, DESIGN, OR OTHER MAKING OF, ANY BUILDINGS (MODULAR OR OTHERWISE), DRAWINGS, SPECIFICATIONS, PRINTS, APPARATUS, OR PARTS THEREOF, EXCEPT AS EXPRESSLY PERMITTED BY WRITTEN CONSENT OF, OR IN A WRITTEN AGREEMENT WITH, AMS. SUBMITTAL OR DISTRIBUTION TO MEET OFFICIAL REGULATORY REQUIREMENTS WILL NOT BE CONSTRUED AS PUBLICATION IN DEROGATION OF AMS'S COPYRIGHT OR OTHER INTELLECTUAL-PROPERTY OR PROPRIETARY RIGHTS.

PRE-CHECKED SET NAME
36' x 40' STANDARD MODULAR BUILDING (LOW SEISMIC)
FORM®

SITE SPECIFIC PROJECT NAME
TRACY USD
JACOBSON ES
(2) 36' x 40' BULIDINGS

MANUFACTURER PROFESSIONAL OF RECORD

LICENSED ARCHITECT
PATRICK CONAGHY
No. C12631
Ren. 3-31-26
STATE OF CALIFORNIA

THESE DRAWINGS ARE PRELIMINARY AND NOT FOR CONSTRUCTION UNLESS STAMPED & SIGNED BY THE DESIGN PROFESSIONAL OF RECORD.

REVISIONS
1
2
3
4

DRAWN BY:	LS
SCALE:	AS NOTED
DATE:	02/07/24
PROJECT NO:	1919-24

SHEET TITLE:
TYPICAL MECHANICAL PLAN

SHEET NUMBER:
M1.1A-N

TRACY
UNIFIED SCHOOL DISTRICT

HMC Architects

3595001000

2101 CAPITOL AVENUE, SUITE 100
SACRAMENTO, CA 95816
916 368 7990 / www.hmcarchitects.com

ISSUE

Δ	DESCRIPTION	DATE
1	ADDENDUM "A"	3/20/25

KEYNOTES

GENERAL NOTES

FACILITY:
JACOBSON ELEMENTARY SCHOOL
1750 W KAVANAGH AVE
TRACY, CA 95376

PROJECT:
JACOBSON ES - TK CLASSROOM

SHEET NAME:
TYPICAL MECHANICAL PLAN

DATE: **04/03/24** CLIENT PROJ NO: **3595001000**

SHEET:
M1.1A-N
ADDENDUM "A"

Autodesk Docs://3595005000 TUSD TK CLASSROOMS 2025 R23/3595005000-A-TUSD-BOHN-SITE.rvt

THE LINE SHOWN ABOVE IS EQUAL TO ONE INCH ON ORIGINAL DRAWING SET-PR-

IDENTIFICATION STAMP
DIV. OF THE STATE ARCHITECT
APP: 02-122976 INC:
REVIEWED FOR
SS ☑ FLS ☑ ACS ☑
DATE: 03/12/2025

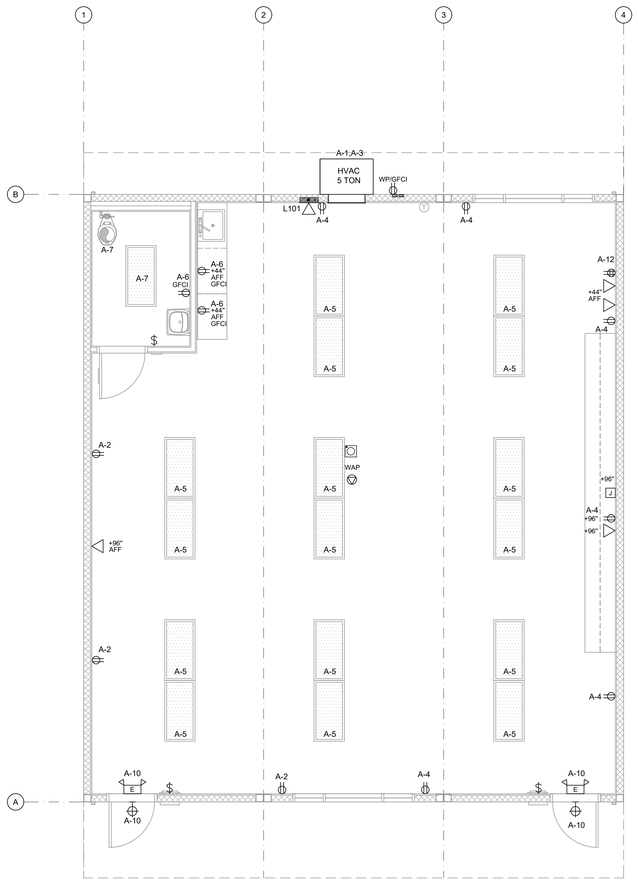

TYPICAL ELECTRICAL PLAN

SCALE: 1/4" = 1' - 0" 1

	ELECTRICAL PANEL - MOUNT FLUSH WITH WALL FINISH, U.O.N.
	EXTERIOR LIGHT FIXTURE @ EACH DOOR, LED OR EQUAL (MAX 40W) - WHERE THERE ARE TWO OR MORE EXITS; A MINIMUM 90 MIN. BATTERY BACK-UP IS REQUIRED
	UNCONTROLLED-DUPLEX WALL CONVENIENCE OUTLET - MOUNT @ +18" A.F.F. TO CENTERLINE, U.O.N.
	FOURPLEX WALL OUTLET - MOUNT @ +18" A.F.F. TO CENTER LINE - U.O.N.
WP/GFCI	WEATHER-PROOF GROUND FAULT CIRCUIT INTERRUPT OUTLET - MOUNT @ 18" A.F.F. TO CENTERLINE - U.O.N.
T	THERMOSTAT - TOP OF BOX MOUNTED @ +48" A.F.F.
J	ELECTRICAL CROSSOVER - J-BOX - ABOVE CEILING - #1- 4"x1", #22- 4"x2"
	DATA/COMMUNICATION - OUTLET ONLY - 4" SQ BOX WITH SINGLE DEVICE RING AND COVER - MOUNT @ +18" A.F.F. TO CENTERLINE, U.O.N., AND PROVIDE A 3/4" CONDUIT STUBBED ABOVE CEILING - DEVICE BY OTHERS
$	CONTROLLED-SINGLE POLE LIGHT SWITCHES - MOUNT @ +48" A.F.F. MAX TO TOP OF BOX - HUBBELL PREMIUM, BRYANT HEAVY DUTY, OR LEVITON SPECIFICATIONS GRADE.
	ULTRASONIC OCCUPANCY SENSOR - MOUNTED TO FINISH CEILING (PROVIDE WITH COMBINATION PHOTOCELL SENSOR WHEN DAYLIT CONTROLS ARE REQUIRED)
	2'x4' LED EDGE FIT FIXTURE, MODEL: LSI, SFP24 5601K LUMENS - 45 WATTS MAX OR EQUAL
	24 HOUR EMERGENCY LIGHTING WITH MINIMUM 90-MINUTE BATTERY BACK-UP - WHERE TWO OR MORE EXITS ARE REQUIRED
E	EMERGENCY EXIT LIGHT, - WHERE THERE ARE TWO OR MORE EXITS, AN EXIT SIGN WITH INTEGRAL EMERGENCY LIGHTING W/MINIMUM 90-MINUTE BATTERY BACK-UP IS REQUIRED.

ELECTRICAL SYMBOLS

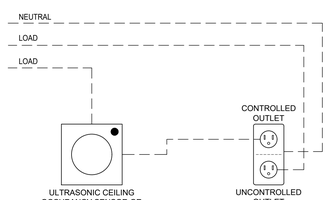

NOTE:
REQUIRED FOR OFFICES, LOBBY, AND MEETING ROOMS ONLY.

TYP. CONTROLLED/UNCONTROLLED RECEPTACLE WIRING DIAGRAM

N.T.S. 2

ENERGY CONTROLS

1. AUTOMATIC DAYLIGHTING CONTROLS:
   NOT REQUIRED IN ROOMS WHERE COMBINED INSTALLED LIGHTING POWER IN COMBINED SKYLIT & PRIMARY DAYLIT ZONES ARE <120 WATTS. INSTALLED WATTAGE IN PRIMARY SIDELIT DAY LIT ZONE IS 90 WATTS (2x 45w, AS SHOWN IN THE SHADED AREAS). THEREFORE, AUTOMATIC DAYLIGHTING CONTROLS ARE ONLY REQUIRED WHEN "SOLATUBES" ARE INSTALLED. SEE A1.1. WHEN DAYLIT CONTROLS ARE REQUIRED, PROVIDE COMBINATION OCCUPANCY/PHOTOCELL SENSOR.
2. ENERGY MANAGEMENT CONTROL SYSTEM (EMCS) CONNECTION:
   PER TITLE 24 CODE, "AN EMCS MAY BE INSTALLED TO COMPLY WITH THE REQUIREMENTS OF ONE OR MORE LIGHTING CONTROLS IF IT MEETS THE MINIMUM REQUIREMENTS". PC MAY CONTAIN OCCUPANCY SENSORS AND PHOTOCELL CONTROL LIGHTING, IN THAT CASE, AN EMCS IS NOT REQUIRED FOR THIS PC.
3. SOLAR-READY ZONE REQUIREMENTS:
   REQUIREMENTS & TABLE CAN BE FOUND ON SHEET A2.0
4. SUGGESTED CONTROLS DIAGRAM FOR TYPICAL DAYLIT ZONE:

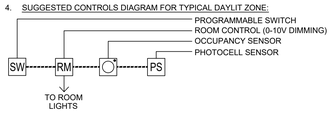

NOTE: ANT MONITORING EQUIPMENT OR ASSOCIATED SENSORS ARE SITE SPECIFIC AND ARE NOT INCLUDED IN THE BASE PC.

ENERGY NOTES

1. THE PROJECT ARCHITECT SHALL BE RESPONSIBLE FOR THE PLACEMENT OF HEAT & SMOKE DETECTORS, EVACS AND PULL STATIONS, AND COMPLETE FIRE ALARM SYSTEM WHEN THE SITE SPECIFIC PROJECT IS REQUIRED TO MEET THE PROVISIONS OF SB 575 & CBC 907.2.3.
2. ANY MONITORING EQUIPMENT OR ASSOCIATED SENSORS ARE SITE SPECIFIC AND ARE NOT INCLUDED IN THIS BASE PC.
3. PULL STATIONS ARE REQUIRED AT EVERY EXIT. AT ANY SPACE REQUIRING 2 OR MORE EXITS, PROVIDE EXIT SIGNS (CBC 1013) AND EMERGENCY EXIT ILLUMINATION (CBC 1008).
4. SEE PLANS FOR LOCATIONS OF ALL DEVICES.
5. STUB-OUT LOCATIONS FOR ELECTRICAL PANEL, FIRE ALARM, AND DATA BOXES ARE SHOWN DIAGRAMMATICAL ONLY. EXACT LOCATIONS MAY VARY +/- SEVERAL FEET. PLEASE CONTACT AMERICAN MODULAR SYSTEMS FOR EXACT LOCATIONS. POINT OF CONNECTION WILL BE AT FACE OF BUILDING.
6. STUB-UP ALL FIRE ALARM JUNCTION BOXES TO ACCESSIBLE ATTIC SPACE WITH 1/2" MIN. GALV. THIN WALL TUBING (EMT). DO NOT CONNECT FIRE ALARM CONDUIT WITH ANY OTHER ELECTRICAL CONDUIT.
7. THE LIGHTS FOR EACH ROOM OVER 250 SQ FT SHALL BE CONTROLLED BY ULTRASONIC OCCUPANCY SENSOR: WATT STOPPER W-500A, W-1000A, OR W-2000A (OR EQUAL) BASED ON THE ROOM SIZE, IN CONJUNCTION WITH BI-LEVEL SWITCHING.
8. FIXTURE MOUNTING SHALL COMPLY WITH CALIFORNIA SEISMIC REGULATIONS.
9. LIGHTING FIXTURES MAY BE INSTALLED ROTATED 90° FROM SHOWN TO MATCH T-BAR GRID LAYOUT.
10. ACCEPTANCE TESTS SHALL BE COMPLETED ON NEWLY INSTALLED OR REPLACEMENT OF LIGHTING CONTROLS BEFORE PROJECT COMPLETION PER THE CALIFORNIA ENERGY CODE SECTION 10-103. ACCEPTANCE TESTS MUST BE PERFORMED BY A CERTIFIED ACCEPTANCE TEST TECHNICIAN (ATT). THE ACCEPTANCE TESTING PROCEDURES MUST BE REPEATED, AND DEFICIENCIES CORRECTED UNTIL THE INSTALLATION OF THE SPECIFIED SYSTEMS CONFORM AND PASS THE REQUIRED ACCEPTANCE CRITERIA. COMPLETED NRCA FORMS SHALL BE SUBMITTED TO THE PROJECT INSPECTOR AND THE DISTRICT.

DEMAND RESPONSE CONTROLS

1. DEMAND RESPONSE CONTROLS ARE REQUIRED IN BUILDINGS LARGER THAN 10,000 S.F.
2. DEMAND RESPONSE CONTROLS, WHERE REQUIRED, ARE TO BE PROVIDED BY OTHERS.
3. DEMAND RESPONSE CONTROLS AND EQUIPMENT SHALL BE CAPABLE OF RECEIVING AND AUTOMATICALLY RESPONDING TO AT LEAST ONE STANDARD-BASED MESSAGING PROTOCOL WHICH ENABLES DEMAND RESPONSE AFTER RECEIVING A DEMAND SIGNAL.
4. SITE-SPECIFIC PROJECTS WHICH REQUIRE DEMAND RESPONSE CONTROLS MUST INCLUDE THE SUBMITTAL OF FORM NRCC-ELC-O1-E TO DSA (BY OTHERS).

GENERAL NOTES

American Modular Systems
787 Spreckels Ave., Manteca, CA 95336
Phone (209) 825-1921 Fax (209) 825-7018
www.americanmodular.com

INTELLECTUAL-PROPERTY & PROPRIETARY RIGHTS STATEMENT
COPYRIGHT © AMERICAN MODULAR SYSTEMS (AMS)
AMS OWNS ALL COPYRIGHT AND OTHER INTELLECTUAL-PROPERTY AND PROPRIETARY RIGHTS IN THESE DRAWINGS, SPECIFICATIONS, AND THE MATERIAL CONTAINED HEREIN. CERTAIN ELEMENTS SHOWN IN THESE DOCUMENTS ARE REGISTERED TRADEMARKS OF AMS. ALL PATENTABLE MATERIALS CONTAINED IN THESE DOCUMENTS AND ORIGINATING WITH AMS WILL REMAIN THE SOLE PROPERTY OF AMS. THESE DRAWING, SPECIFICATIONS AND THE MATERIAL CONTAINED HEREIN MAY NOT BE REPRODUCED, TRANSMITTED, COPIED, DISTRIBUTED, MODIFIED, OR OTHERWISE DISPOSED OF (DIRECTLY OR INDIRECTLY) AND MAY NOT BE USED (IN WHOLE OR IN PART) TO ASSIST IN THE CONSTRUCTION, DESIGN, OR OTHER MAKING OF, OR FOR THE PURPOSE OF FURNISHING ANY INFORMATION FOR THE CONSTRUCTION, DESIGN, OR OTHER MAKING OF, ANY BUILDINGS (MODULAR OR OTHERWISE), DRAWINGS, SPECIFICATIONS, PRINTS, APPARATUS, OR PARTS THEREOF, EXCEPT AS EXPRESSLY PERMITTED BY WRITTEN CONSENT OF, OR IN A WRITTEN AGREEMENT WITH, AMS. SUBMITTAL OR DISTRIBUTION TO MEET OFFICIAL REGULATORY REQUIREMENTS SHALL NOT BE CONSTRUED AS PUBLICATION IN DEROGATION OF AMS'S COPYRIGHT OR OTHER INTELLECTUAL-PROPERTY OR PROPRIETARY RIGHTS.

PRE-CHECKED SET NAME
36' x 40' STANDARD MODULAR BUILDING (LOW SEISMIC)
FORM®

SITE SPECIFIC PROJECT NAME
TRACY USD
JACOBSON ES
(2) 36' x 40' BULIDINGS

MANUFACTURER PROFESSIONAL OF RECORD
LICENSED ARCHITECT
MICHAEL PATRICK CONNELLY
No. C12631
Ren. 3-31-25
STATE OF CALIFORNIA

THESE DRAWINGS ARE PRELIMINARY AND NOT FOR CONSTRUCTION UNLESS STAMPED & SIGNED BY THE DESIGN PROFESSIONAL OF RECORD.

REVISIONS
1
2
3
4

DRAWN BY:	LS
SCALE:	AS NOTED
DATE:	02/07/24
PROJECT NO:	1919-24

SHEET TITLE:
TYPICAL ELECTRICAL PLAN

SHEET NUMBER:
E1.0-N

TRACY
UNIFIED SCHOOL DISTRICT

HMC Architects
3595001000
2101 CAPITOL AVENUE, SUITE 100
SACRAMENTO, CA 95816
916 368 7990 / www.hmcarchitects.com

ISSUE

Δ	DESCRIPTION	DATE
1	ADDENDUM "A"	3/20/25

KEYNOTES

GENERAL NOTES

FACILITY:
JACOBSON ELEMENTARY SCHOOL
1750 W KAVANAGH AVE
TRACY, CA 95376

PROJECT:
JACOBSON ES - TK CLASSROOM

SHEET NAME:
TYPICAL ELECTRICAL PLAN

DATE: **04/03/24** CLIENT PROJ NO: **3595001000**

SHEET:
E1.0-N
ADDENDUM "A"

Autodesk Docs://3595005000 TUSD TK CLASSROOMS 2025 R22/3595005000-A-TUSD-BOHN-SITE.rvt

THE LINE SHOWN ABOVE IS EXACTLY ONE INCH LONG AT THIS SHEETS ORIGINAL PAGE SIZE

IDENTIFICATION STAMP
DIV. OF THE STATE ARCHITECT
APP: 02-122976 INC:
REVIEWED FOR
SS ☑ FLS ☑ ACS ☑
DATE: 03/12/2025

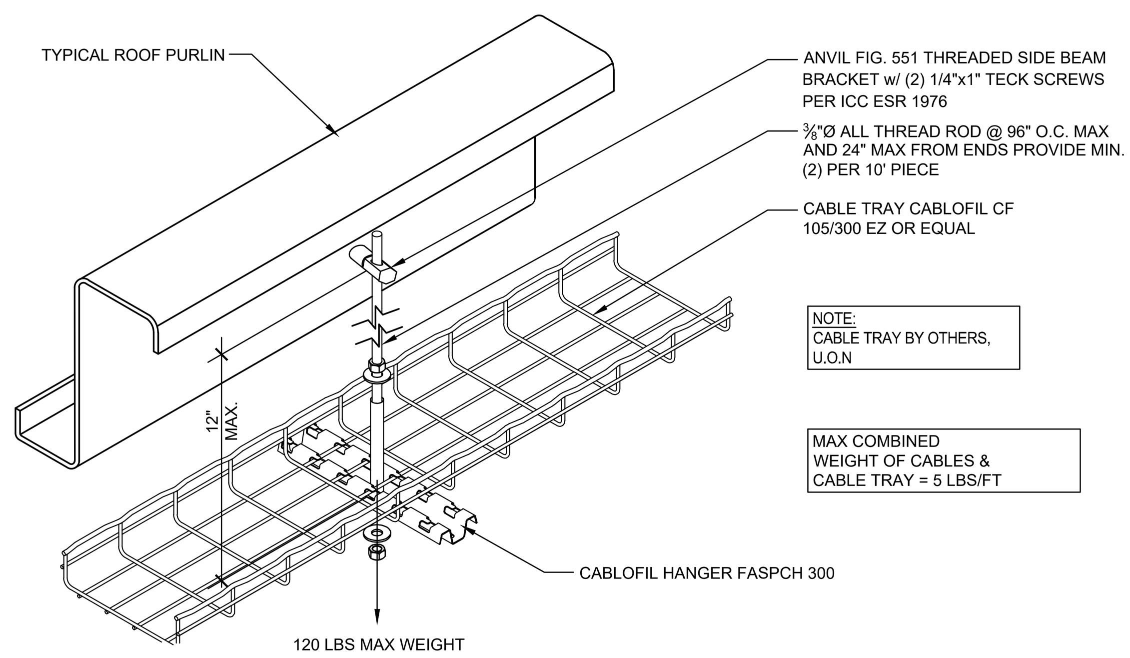

CABLE TRAY DETAIL

SCALE: N.T.S. | 1

250.52 GROUNDING ELECTRODES.

250.52(A) ELECTRODES PERMITTED FOR GROUNDING.

(1) METAL UNDERGROUND WATER PIPE. A METAL UNDERGROUND WATER PIPE IN DIRECT CONTACT WITH THE EARTH FOR 3.0 M (10 FT) OR MORE (INCLUDING ANY METAL WELL CASING BONDED TO THE PIPE) AND ELECTRICALLY CONTINUOUS (OR MADE ELECTRICALLY CONTINUOUS BY BONDING AROUND INSULATING JOINTS OR INSULATING PIPE) TO THE POINTS OF CONNECTION OF THE GROUNDING ELECTRODE CONDUCTOR AND THE BONDING CONDUCTOR(S) OR JUMPER(S), IF INSTALLED.

(2) METAL IN-GROUND SUPPORT STRUCTURE(S). ONE OR MORE METAL IN-GROUND SUPPORT STRUCTURE(S) IN DIRECT CONTACT WITH THE EARTH VERTICALLY FOR 3.0 M (10 FT) OR MORE, WITH OR WITHOUT CONCRETE ENCASEMENT. IF MULTIPLE METAL IN-GROUND SUPPORT STRUCTURES ARE PRESENT AT A BUILDING OR A STRUCTURE, IT SHALL BE PERMISSIBLE TO BOND ONLY ONE INTO THE GROUNDING ELECTRODE SYSTEM.

INFORMATIONAL NOTE: METAL IN-GROUND SUPPORT STRUCTURES INCLUDE, BUT ARE NOT LIMITED TO, PILINGS, CASINGS, AND OTHER STRUCTURAL METAL.

(3) CONCRETE-ENCASED ELECTRODE. A CONCRETE-ENCASED ELECTRODE SHALL CONSIST OF AT LEAST 6.0 M (20 FT) OF EITHER (1) OR (2):

(1) ONE OR MORE BARE OR ZINC GALVANIZED OR OTHER ELECTRICALLY CONDUCTIVE COATED STEEL REINFORCING BARS OR RODS OF NOT LESS THAN 13 MM (1⁄2 IN.) IN DIAMETER, INSTALLED IN ONE CONTINUOUS 6.0 M (20 FT) LENGTH, OR IF IN MULTIPLE PIECES CONNECTED TOGETHER BY THE USUAL STEEL TIE WIRES, EXOTHERMIC WELDING, WELDING, OR OTHER EFFECTIVE MEANS TO CREATE A 6.0 M (20 FT) OR GREATER LENGTH; OR

(2) BARE COPPER CONDUCTOR NOT SMALLER THAN 4 AWG

METALLIC COMPONENTS SHALL BE ENCASED BY AT LEAST 50 MM (2 IN.) OF CONCRETE AND SHALL BE LOCATED HORIZONTALLY WITHIN THAT PORTION OF A CONCRETE FOUNDATION OR FOOTING THAT IS IN DIRECT CONTACT WITH THE EARTH OR WITHIN VERTICAL FOUNDATIONS OR STRUCTURAL COMPONENTS OR MEMBERS THAT ARE IN DIRECT CONTACT WITH THE EARTH. IF MULTIPLE CONCRETE-ENCASED ELECTRODES ARE PRESENT AT A BUILDING OR STRUCTURE, IT SHALL BE PERMISSIBLE TO BOND ONLY ONE INTO THE GROUNDING ELECTRODE SYSTEM.

INFORMATIONAL NOTE: CONCRETE INSTALLED WITH INSULATION, VAPOR BARRIERS, FILMS OR SIMILAR ITEMS SEPARATING THE CONCRETE FROM THE EARTH IS NOT CONSIDERED TO BE IN "DIRECT CONTACT" WITH THE EARTH.

(4) GROUND RING. A GROUND RING ENCIRCLING THE BUILDING OR STRUCTURE, IN DIRECT CONTACT WITH THE EARTH, CONSISTING OF AT LEAST 6.0 M (20 FT) OF BARE COPPER CONDUCTOR NOT SMALLER THAN 2 AWG.

(5) ROD AND PIPE ELECTRODES. ROD AND PIPE ELECTRODES SHALL NOT BE LESS THAN 2.44 M (8 FT) IN LENGTH AND SHALL CONSIST OF THE FOLLOWING MATERIALS.

(A) GROUNDING ELECTRODES OF PIPE OR CONDUIT SHALL NOT BE SMALLER THAN METRIC DESIGNATOR 21 (TRADE SIZE 3⁄4) AND, WHERE OF STEEL, SHALL HAVE THE OUTER SURFACE GALVANIZED OR OTHERWISE METAL-COATED FOR CORROSION PROTECTION.

(B) ROD-TYPE GROUNDING ELECTRODES OF STAINLESS STEEL AND COPPER OR ZINC COATED STEEL SHALL BE AT LEAST 15.87 MM (5⁄8 IN.) IN DIAMETER, UNLESS LISTED.

(6) OTHER LISTED ELECTRODES. OTHER LISTED GROUNDING ELECTRODES SHALL BE PERMITTED.

(7) PLATE ELECTRODES. EACH PLATE ELECTRODE SHALL EXPOSE NOT LESS THAN 0.186 M2 (2 FT2) OF SURFACE TO EXTERIOR SOIL. ELECTRODES OF BARE OR ELECTRICALLY CONDUCTIVE COATED IRON OR STEEL PLATES SHALL BE AT LEAST 6.4 MM (1⁄4 IN.) IN THICKNESS. SOLID, UNCOATED ELECTRODES OF NONFERROUS METAL SHALL BE AT LEAST 1.5 MM (0.06 IN.) IN THICKNESS.

(8) OTHER LOCAL METAL UNDERGROUND SYSTEMS OR STRUCTURES. OTHER LOCAL METAL UNDERGROUND SYSTEMS OR STRUCTURES SUCH AS PIPING SYSTEMS, UNDERGROUND TANKS, AND UNDERGROUND METAL WELL CASINGS THAT ARE NOT BONDED TO A METAL WATER PIPE.

(B) NOT PERMITTED FOR USE AS GROUNDING ELECTRODES
THE FOLLOWING SYSTEMS AND MATERIALS SHALL NOT BE USED AS GROUNDING ELECTRODES:

(1) METAL UNDERGROUND GAS PIPING SYSTEMS
(2) ALUMINUM
(3) THE STRUCTURES AND STRUCTURAL REINFORCING STEEL DESCRIBED IN 680.26(B)(1) AND (B)(2)

INFORMATIONAL NOTE:
SEE 250.104(B) FOR BONDING REQUIREMENTS OF GAS PIPING.

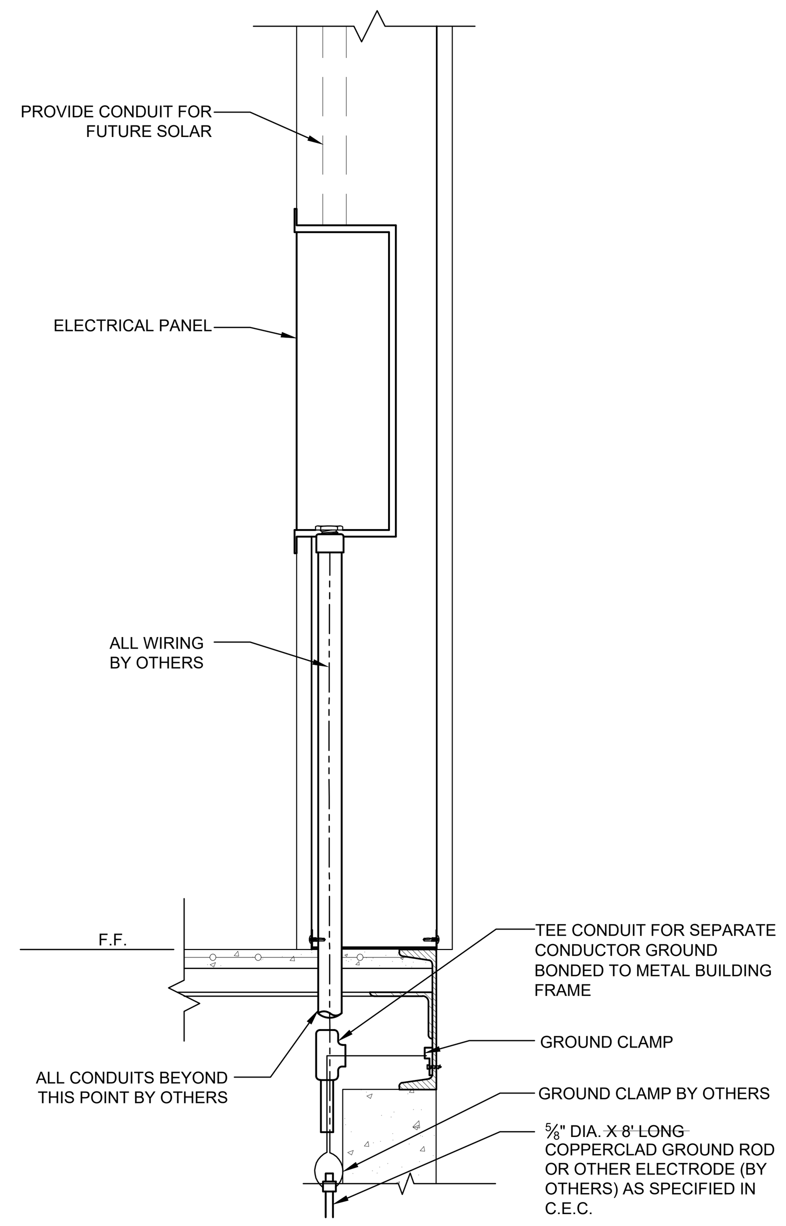

1. SIZE OF CONDUCTORS SHALL COMPLY w/CEC.A
2. BOND SEPARATE CONDUCTORS FROM GROUND ROD TO ELECTRICAL PANEL & METAL BUILDING FRAME (CEC). IN ADDITION TO THE DETAIL SHOWN ABOVE, BOND THE ELECTRICAL GROUND TO METAL WATER PIPE EMBEDDED AT LEAST 10' INTO THE SOIL IF AVAILABLE (CEC).
3. ELECTRICAL BOND MODULES TOGETHER W/#8 CU @ MODLINE. BY MANUFACTURER. CHECK RESISTANCE TO GROUND. IF RESISTANCE EXCEEDS 25 OHMS, INSTALL ADDITIONAL GROUND RODS (CEC) AS REQUIRED. GROUNDING DETAIL PER DSA IR E-1. INSPECTOR TO WITNESS GROUNDING TEST.

NOT USED

2

ELECTRICAL PANEL CONNECTION DETAIL - UNDERFLOOR OPTION

SCALE: 1-1/2" = 1' - 0" | 3

PANEL: L101 S/N:				PHASE: SINGLE		VOLTS: 120/240		BUSS: 125 AMP			MAIN: 125 AMP					LOCATION: EXTERIOR			FEED: BOTTOM		MOUNTING: SURFACE
OBJECT DESCRIPTION	WATT PER	NO. OF	LCL	WATTS A	WATTS B	BRK	POLE	WIRE SIZE	CKT NO	LEG A	LEG B	CKT NO	WIRE SIZE	POLE	BRK	WATTS A	WATTS B	LCL	NO OF	WATT PER	OBJECT DESCRIPTION
5 TON HVAC	7333	1	x	7333		80	2	#4	1	X		2	#12	1	20	720			4	180	RECEPTS
5 TON HVAC	7333	/	x		7333	/	/	#4	3		X	4	#12	1	20		900		5	180	RECEPTS
INTERIOR LIGHTS	49	16		784		20	1	#12	5	X		6	#12	1	20	360			2	180	RECEPT-GFCI
(1) INT LIGHT (1) FAN	159	1			159	20	1	#12	7		X	8	#12	1	20		180		1	180	RECEPT-WP/GFCI
				0					9	X		10	#12	1	20	142			1	142	(2) EXT/ (2) EXIT LIGHTS
					0				11		X	12	#12	1	20		360		1	360	QUAD RECEPT
				0					13	X		14				0					
					0				15		X	16					0				
				0					17	X		18				0					
					0				19		X	20					0				
	LEG TOTALS			8117	7492											1222	1440	LEG TOTALS			
LCL=3666.5+18271=21937.5																					
TOTAL WATTS=21937.5							LEG BALANCE = 2.2%										TOTAL AMPS: 91.41				

NOTE:
FIRE ALARM DEDICATED CIRCUIT SHALL BE IDENTIFIED WITH A RED MARKED DISCONNECT WITH LOCK-ON CAPABILITY (NFPA 72 10.6.5.2)

LOAD PANEL CALCULATIONS

FIRE ALARM SYSTEM

1. THE FIRE ALARM SYSTEM SHALL CONFORM TO THE CALIFORNIA ELECTRICAL CODE, CALIFORNIA FIRE CODE AND THE CALIFORNIA BUILDING CODE.
2. INSTALLATION OF THE FIRE ALARM SYSTEM SHALL NOT BE STARTED UNTIL DETAILED PLANS AND SPECIFICATIONS, INCLUDING CALIFORNIA STATE FIRE MARSHAL LISTINGS FOR EACH COMPONENT OF THE SYSTEM, HAVE BEEN APPROVED BY DSA.
3. UPON COMPLETION OF THE INSTALLATION OF THE FIRE ALARM SYSTEM, A SATISFACTORY TEST OF THE ENTIRE SYSTEM SHALL BE MADE IN THE PRESENCE OF THE ENFORCING AGENCY.
4. JUNCTION BOXES - GALVANIZED SHEET METAL, SQUARE OR RECTANGULAR WITH BLANK COVERS. LOCATE ONE BOX AT REAR OF BUILDING NEAR MAIN ELECTRICAL PANEL @ +18" ABOVE FINISH FLOOR FOR FUTURE CONNECTION.
5. COVERS - INSTALL GASKETED, METAL, WATERPROOF, FINISH COVERS AT EXTERIOR LOCATIONS. INSTALL FINISH COVERS AT INTERIOR LOCATIONS.
6. THE AUTOMATIC ALARM SYSTEM SHALL BE INSTALLED, TESTED, AND MAINTAINED IN ACCORDANCE WITH THE STATE FIRE MARSHALL'S REGULATIONS (CBC SEC. 907.2.3) AND THE 2022 EDITION OF NFPA 72.
7. THE LOCATION OF AUTOMATIC DETECTORS, MANUAL STATIONS AND OTHER FIRE ALARM EQUIPMENT AND DEVICES, AS SHOWN ON PLAN, ARE FOR REFERENCE ONLY AND DO NOT CONSTITUTE SHOP DRAWINGS WHICH ARE REQUIRED FOR REVIEW AND APPROVAL.
8. ALARM-INDICATING DEVICES OF A FIRE ALARM SYSTEM INTENDED TO ALERT ALL OCCUPANTS SHALL CAUSE A LEVEL OF AUDIBILITY OF NOT LESS THAN 15 dBA ABOVE THE AVERAGE AMBIENT NOISE LEVELS OR 5dBA ABOVE THE MAXIMUM SOUND LEVEL HAVING A DURATION OF 60 SECONDS, WHICHEVER IS GREATER, MEASURED 5' ABOVE THE FLOOR. AMBIENT NOISE LEVELS MEANS THE LEVEL WHICH CAN NORMALLY BE EXPECTED WHEN THE FACILITY, BUILDING, ROOM, OR AREA IS FUNCTIONING UNDER NORMAL OPERATING OR WORKING CONDITIONS (NFPA 72, SEC. 18.4.1).
9. THE ALARM SYSTEM SHALL ACTIVATE A MEANS OF WARNING THE HEARING IMPAIRED. FLASHING VISUAL WARNINGS SHALL HAVE A FLASH RATE NOT EXCEEDING TWO FLASHES PER SECOND (2 HZ), NOR BE LESS THAN ONE FLASH EVERY SECOND (1 HZ). STROBE SIGNALING DEVICES FOR THE HEARING IMPAIRED SHALL BE STATE FIRE MARSHALL APPROVED AND LISTED (NFPA 72, SEC. 18.5.3).
10. AUTOMATIC FIRE ALARM SYSTEM SHALL TRANSMIT THE ALARM, SUPERVISORY AND TROUBLE SIGNALS TO AN APPROVED SUPERVISING STATION AS REQUIRED BY NFPA 72 CHAPTER 26. THE SUPERVISING STATION SHALL BE LISTED AS EITHER UUFX OR UUJS BY UNDERWRITERS LABORATORY OR SHALL MEET THE REQUIREMENTS OF FACTORY MUTUAL RESEARCH APPROVAL STANDARD 3011. SUPERVISION OF SYSTEM AND LEASED TELEPHONE LINES SHALL BE ARRANGED BY OWNER. IF TESTING RESULTS DETERMINE FIRE ALARM AUDIBILITY DOES NOT MEET 15db OVER AMBIENT NOISE LEVELS, ADDITIONAL FIRE ALARM SIGNALING DEVICES MAY BE REQUIRED BY THE ENFORCING AGENCY.

NOTE:
SEE SHEET M1.0 FOR ALL BRACING AND ANCHORAGE NOTES.

GENERAL NOTES

1. GROUNDING ELECTRODE CONDUCTOR SIZED PER CEC.
2. PROVIDE BONDS TO BLDG. STEEL & PANEL (#8 CU)
3. PANEL TO LISTED FOR USE AS SERVICE EQUIPMENT.
4. ALL PANELS, SWITCHES, DISCONNECTS, BREAKERS, METERS, AND OTHER ELECTRICAL ELEMENTS SHALL BE PLACED ABOVE THE ELEVATION REQUIRED BY ASCE 24-14, SECTION 7.2.
5. WHERE FLEXIBLE CONDUIT IS PASSING BETWEEN BUILDING SEPARATION JOINTS, PROVIDE SUFFICIENT LENGTH OF CONDUIT TO PERMIT DIFFERENTIAL DISPLACEMENTS BETWEEN BUILDINGS IN COMPLIANCE WITH ASCE 7 SECTION 13.6.9 & DSA IR PC-2 SECTION 1.18. ADDITIONAL CONDUIT & JOINT DETAIL SHALL BE PROVIDED BY OTHERS.

FIXTURE NOTES:

1. ALL FLUORESCENT LIGHT FIXTURES SHALL HAVE ENERGY SAVING LAMPS AND BALLASTS.
2. LUMINARIES/BALLASTS SHALL BE CERTIFIED PER CALIFORNIA BUILDING CODE, TITLE 24.
3. FLUORESCENT LIGHT FIXTURE TYPE "A" SHALL BE CONTROLLED TO PROVIDE TWO LEVELS OF LIGHTING. SWITCH (SA) SHALL CONTROL THE TWO OUTER LAMPS AND SWITCH (SB) SHALL CONTROL THE TWO INNER LAMPS.
4. ELECTRICAL SERVICE DROP AND CONNECTIONS SUPPLIED BY OTHERS.
5. MANUFACTURER TO PROVIDE STUB-OUT FROM BACK OF ELECTRICAL PANEL THROUGH THE EXTERIOR WALL OR TO BELOW FLOOR FOR RECEIVING EITHER UNDERGROUND OR OVERHEAD SERVICE & FITTING FOR GROUNDING CABLE.
6. ELECTRICAL PANEL BOARD SHALL BE RECESS MOUNTED INSIDE THE BUILDING, SIZED TO ACCOMMODATE ALL CONNECTED LOADS INCLUDING SPACES AS SHOWN. OVERCURRENT PROTECTIVE DEVICES IN THE PANEL BOARDS SHALL HAVE ADEQUATE SHORT CIRCUIT INTERRUPTING CAPACITY. ALL BUSES INCLUDING BUS SHALL BE COPPER OR ALUMINUM.
7. 2X4 FLUORESCENT FIXTURES SHALL HAVE A STEEL FRAME, LENS SHALL BE HINGED AND LOCKED IN PLACE BY TWO LOCKING DEVICES. THE LENS DIFFUSERS SHALL BE KHS, INC. #KSH-2, CAROLITE, INC. #C-12 OR PLASKOLITE, INC. #PL21A. MINIMUM LENS THICKNESS SHALL BE 0.125 INCHES.
8. FLUORESCENT BALLAST SHALL BE ENERGY SAVER WHILE MAINTAINING FULL LIGHT OUTPUT, CLASS "P" EQUIPPED WITH THERMAL PROTECTORS, GUARANTEED AGAINST FAILURE FOR (2) YEARS AND BE REPLACEABLE FROM INSIDE THE FIXTURE.
9. CLOCK - 12" DIAL CLOCK ON CLOCK OUTLET.
   A. CLOCK SHALL BE GENERAL ELECTRIC MODEL 2912 129V 60 CYCLE
   B. CLOCK OUTLET SHALL BE BRYANT #2828 OR EQUAL WITH SEPARABLE HANGING CLIP & APP'D RECEPT. THE H.V.A.C. UNIT FEEDER CIRCUIT - PANEL CIRCUIT BREAKER, FEEDER WIRE, UNIT DISCONNECT AND FUSES (WHERE USED) - IS TO BE COORDINATED WITH THE NAME PLATE DATA AT THE TIME OF MANUFACTURE. H.V.A.C. UNITS HAVING KVA RATINGS LARGER THAN THAT INDICATED ON THIS PANEL SCHEDULE WILL NOT BE ALLOWED TO BE INSTALLED ON THIS BUILDING.
   C. IF 60 DEGREES WIRE IS TO BE USED IN THIS INSTALLATION, CALCULATIONS DEMONSTRATING AMPACITY SHALL BE PROVIDED ON THE DRAWING.

GENERAL NOTES

AMS® American Modular Systems
787 Spreckels Ave., Manteca, CA 95336
Phone (209) 825-1921 Fax (209) 825-7018
www.americanmodular.com

INTELLECTUAL-PROPERTY & PROPRIETARY RIGHTS STATEMENT
COPYRIGHT © AMERICAN MODULAR SYSTEMS (AMS)
AMS OWNS ALL COPYRIGHT AND OTHER INTELLECTUAL-PROPERTY AND PROPRIETARY RIGHTS IN THESE DRAWINGS, SPECIFICATIONS, AND THE MATERIAL CONTAINED HEREIN. CERTAIN ELEMENTS SHOWN IN THESE DOCUMENTS ARE REGISTERED TRADEMARKS OF AMS. ALL PATENTABLE MATERIALS CONTAINED IN THESE DOCUMENTS AND ORIGINATING WITH AMS WILL REMAIN THE SOLE PROPERTY OF AMS. THESE DRAWING, SPECIFICATIONS, AND THE MATERIAL CONTAINED HEREIN MAY NOT BE REPRODUCED, TRANSMITTED, COPIED, DISTRIBUTED, MODIFIED, OR OTHERWISE DISPOSED OF (DIRECTLY OR INDIRECTLY) AND MAY NOT BE USED (IN WHOLE OR IN PART) TO ASSIST IN THE CONSTRUCTION, DESIGN, OR OTHER MAKING OF, OR FOR THE PURPOSE OF FURNISHING ANY INFORMATION FOR THE CONSTRUCTION, DESIGN, OR OTHER MAKING OF, ANY BUILDINGS (MODULAR OR OTHERWISE), DRAWINGS, SPECIFICATIONS, PRINTS, APPARATUS, OR PARTS THEREOF, EXCEPT AS EXPRESSLY PERMITTED BY WRITTEN CONSENT OF, OR IN A WRITTEN AGREEMENT WITH, AMS. SUBMITTAL OR DISTRIBUTION TO MEET OFFICIAL REGULATORY REQUIREMENTS WILL NOT BE CONSTRUED AS PUBLICATION IN DEROGATION OF AMS'S COPYRIGHT OR OTHER INTELLECTUAL-PROPERTY OR PROPRIETARY RIGHTS.

PRE-CHECKED SET NAME
36' x 40' STANDARD MODULAR BUILDING
(LOW SEISMIC)
FORM®

SITE SPECIFIC PROJECT NAME
TRACY USD
JACOBSON ES
(2) 36' x 40' BULIDINGS

MANUFACTURER PROFESSIONAL OF RECORD
LICENSED ARCHITECT RANDAL PATRICK CAVANAGH No. C12631 Ren. 3-31-25 STATE OF CALIFORNIA

THESE DRAWINGS ARE PRELIMINARY AND NOT FOR CONSTRUCTION UNLESS STAMPED & SIGNED BY THE DESIGN PROFESSIONAL OF RECORD.

REVISIONS
1
2
3
4

DRAWN BY:	LS
SCALE:	AS NOTED
DATE:	02/07/24
PROJECT NO:	1919-24

SHEET TITLE:
ELECTRICAL NOTES & DETAILS

SHEET NUMBER:
E1.2-N

TRACY UNIFIED SCHOOL DISTRICT
HMC Architects
3595001000
2101 CAPITOL AVENUE, SUITE 100
SACRAMENTO, CA 95816
916 368 7990 / www.hmcarchitects.com

ISSUE

Δ	DESCRIPTION	DATE
A	ADDENDUM "A"	3/20/25

KEYNOTES

GENERAL NOTES

FACILITY:
JACOBSON ELEMENTARY SCHOOL
1750 W KAVANAGH AVE
TRACY, CA 95376

PROJECT:
JACOBSON ES - TK CLASSROOM

SHEET NAME:
ELECTRICAL NOTES & DETAILS

DATE: 04/03/24 CLIENT PROJ NO: 3595001000

SHEET:
E1.2-N
ADDENDUM "A"

PLEASE RECYCLE

Autodesk Docs://3595005000 TUSD TK CLASSROOMS 2025 R22/3595005000-A-TUSD-BOHN-SITE.rvt

THE LINE SHOWN ABOVE IS EXACTLY ONE INCH LONG AT THIS SHEETS ORIGINAL PAGE SIZE

IDENTIFICATION STAMP
DIV. OF THE STATE ARCHITECT
APP: 02-122976 INC:
REVIEWED FOR
SS ☑ FLS ☑ ACS ☑
DATE: 03/12/2025

TRACY UNIFIED SCHOOL DISTRICT

HMC Architects

3595001000

2101 CAPITOL AVENUE, SUITE 100
SACRAMENTO, CA 95816
916 368 7990 / www.hmcarchitects.com

ISSUE

Δ	DESCRIPTION	DATE
A	ADDENDUM "A"	3/20/25

KEYNOTES

GENERAL NOTES

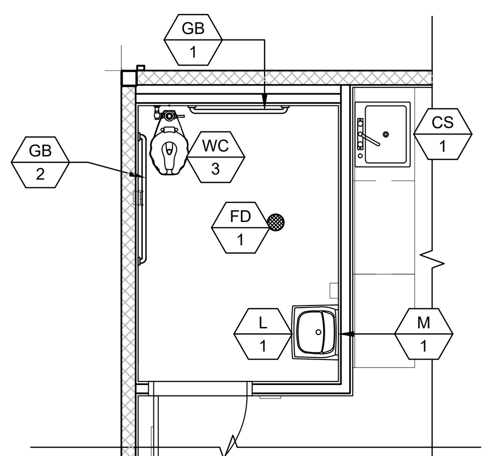

BOYS, GIRLS & STAFF R.R. PLAN 1
AGE RANGE: 13-ADULT SCALE: 1/4" = 1'-0"

NOT USED 2

MARK	FIXTURE[1]	TYPE AT KINDERGARTEN (AGES 3-4)	TYPE AT ELEMENTARY (AGES 5-8)	TYPE AT MIDDLE SCHOOL (AGES 9-12)	TYPE AT HIGH SCHOOL (AGES 13-ADULT)	REMARKS
WC 1 ACC [2]	WALL MOUNT WATER CLOSET	CANNOT USE	CANNOT USE	KOHLER 'KINGSTON' MODEL K-4325 OR EQUAL. LOWEST AT 15" HIGHEST AT 17" A.F.F. TO TOP OF SEAT w/BEMIS 1955SSCT TOILET SEAT OR EQUAL	KOHLER 'KINGSTON' MODEL K-4325 OR EQUAL. LOWEST AT 17" A.F.F. 19" HIGHEST TO TOP OF SEAT w/BEMIS 1955SSCT TOILET SEAT OR EQUAL	FLUSH VALVE ZURN MODEL Z6000AV-HET - 1.28 G.P.F OR EQUAL. LOCATE AS SPECIFIED ON FLOOR PLANS. MOUNT ACCESSIBLE FIXTURES PER SCHEDULE 10/P2.0.
WC 2	FLOOR MOUNT TANK TYPE	AMERICAN STANDARD 4019 828 w/BEMIS 1955SSCT OR EQUAL TOILET SET	AMERICAN STANDARD 4019 828 w/2L2050T SEAT (2" THICK) #3128.001 FOR BOWL #4019.228 LEFT TANK #4019.828 RIGHT TANK	KOHLER 'WELLWORTH' MODEL K-3998 OR EQUALw/BEMIS 1955SSCT OR EQUAL TOILET SEAT	KOHLER 'WELLWORTH' MODEL K-3999 OR EQUAL w/BEMIS 1955SSCT OR EQUAL TOILET SEAT	WC/2 FIXTURE MAX FLOW RATE OF 1.28 G.P.F - LOCATE AS SPECIFIED ON FLOOR PLANS. MOUNT ACCESSIBLE FIXTURES PER SCHEDULE 10/P2.0
WC 3 ACC	FLOOR MOUNT FLUSH VALVE	KOHLER 'PRIMARY' MODEL K-96064 OR EQUAL. w/BEMIS 1955SSCT TOILET SEAT OR EQUAL	KOHLER 'PRIMARY' MODEL K-96064 OR EQUAL w/2L205T (2" THICK) TOILET SEAT OR EQUAL	FLOOR MOUNT FLUSH VALVE TYPE KOHLER 'WELLCOMME ULTRA' MODEL K-96053 OR EQUAL w/BEMIS 1955SSCT OR EQUAL TOILET SEAT	FLOOR MOUNT FLUSH VALVE TYPE KOHLER 'HIGHCLIFF ULTRA' MODEL K-96057 OR EQUAL w/BEMIS 1955SSCT OR EQUAL TOILET SEAT	FLUSH VALVE ZURN MODEL Z6000AV-HET - 1.28 G.P.F OR EQUAL. LOCATE AS SPECIFIED ON FLOOR PLANS. MOUNT ACCESSIBLE FIXTURES PER SCHEDULE 10/P2.0.
L 1	BOYS/GIRLS LAVATORY	KOHLER 'KINGSTON' MODEL K-2007-0				BOY/GIRL RESTROOM - ZURN MODEL Z86100-XL-3M - COLD WATER ONLY - SINGLE SPOUT MOUNT AS SPECIFIED IN FLOOR PLANS. MOUNT ACCESSIBLE FIXTURES PER SCHEDULE 10/P2.0 - FLOW RATE OF 0.5 G.P.M. METER FAUCETS SHALL REMAIN OPEN FOR 10 SECONDS MIN.
L 2	ADULT LAVATORY	KOHLER 'KINGSTON' MODEL K-2005-0				ADULT RESTROOM - ZURN MODEL Z7440-XL-FC HOT/COLD WATER - 4" ON CENTER HOLE. MOUNT AS SPECIFIED IN FLOOR PLANS. MOUNT ACCESSIBLE FIXTURES PER SCHEDULE 10/P2.0 - FLOW RATE OF 0.5 G.P.M.
UR 1 ACC	URINAL	WALL MOUNT TYPE KOHLER MODEL DEXTER K-5452-ET-0 OR EQUAL FLOW RATE = 0.125 gpf				FLUSH VALVE ZURN MODEL Z6003-AV (0.125gpf) OR EQUAL. MOUNT AS SPECIFIED IN FLOOR PLANS. MOUNT ACCESSIBLE FIXTURES PER SCHEDULE 10/P2.0
M 1	MIRROR	WALL MOUNT TYPE BOBRICK MODEL B165 18X30 OR EQUAL				MOUNT AS SPECIFIED IN FLOOR PLANS. MOUNT ACCESSIBLE MIRROR PER SCHEDULE 10/P2.0
GB 1	36" GRAB BARS	WALL MOUNT TYPE MOEN MODEL 8736 & 8748 (1 1/4" CONCEALED SCREW 36"& 48") OR EQUAL				18 GA. 304 STAINLESS STEEL SATIN FINISH MOUNT AS SPECIFIED IN FLOOR PLANS AND PER SCHEDULE 10/P2.0. (STRUCTURAL STRENGTH OF GRAB BARS 250# MIN.)
GB 2	48" GRAB BARS					
WH 1	WATER HEATER	RHEEM ELECTRIC WATER HEATER MODEL PROE20-1-RH-POU 240 VOLT SINGLE PHASE				AVAILABLE IN 6, 10, 20 AND 30 GALLON MODELS (MAX WATER HEATER WEIGHT) PER 6/M1.4 OR 1/P2.0
ITWH 1	INSTANT-TEMP WATER HEATER	CHRONOMITE INSTANT-TEMP WATER HEATER MODEL M20L/240 INSTANT SINGLE PHASE 104°				CHRONOMITE MODEL M20L/208 OR EQUAL SEE DETAIL 7/P2.0
FS 1	CUSTODIAN SINK	FLORESTONE FLOOR SINK MOLDED MOP RECEPTORS MODEL MSR-2424 W/ 3" DRAIN OR EQUAL				ZURN 843-MI-RC OR EQUAL
ULS 1	UTILITY SINK	WALL MOUNT TYPE FLORESTONE FM OR EQUAL				CAITLIN CBK110CP OR EQUAL
FD 1	FLOOR DRAIN	WOOD FLOOR DRAIN SIOUIX CHIEF MODEL MODEL 822-2DNRV OR EQUAL				LOCATE AS SPECIFIED ON FLOOR PLANS. PROVIDE GRATE WITH MAX 1/2" OPENINGS, MEASURED IN BOTH DIRECTIONS
FD 2	FLOOR DRAIN	CONCRETE FLOOR DRAIN ZURN MODEL P415-CC W/ STANDARD GRATE ZURN 33160-002 OR EQUAL				LOCATE AS SPECIFIED ON FLOOR PLANS. (FLOOR DRAIN TO BE USED ON CONCRETE ONLY.) PROVIDE GRATE WITH MAX 1/2" OPENINGS, MEASURED IN BOTH DIRECTIONS
CS 1	CLASSROOM SINK	DAYTON MODEL D12521 25"x21-1/4" SINGLE BOWL SINK OR EQUAL				FAUCET - ZURN MODEL Z2871-B4-XL W/WRIST BLADES. LOCATE AS SPECIFIED ON FLOOR PLANS. MOUNT ACCESSIBLE FIXTURES PER SCHEDULE 10/P2.0
DF 1	DRINKING FOUNTAIN	ELKAY MODEL EDFP217C WALL MOUNT WATER FOUNTAIN				
HB 1	HOSE BIBB	STANDARD HOSE BIBB ARROWHEAD MODEL 353LKLF OR EQUAL				LOCATE AS SPECIFIED ON FLOOR PLANS.

NOTES:
1. ALL WATER FIXTURES MUST MEET REQUIREMENTS OF CAL-GREEN TITLE 24, PART 11, SECTION 5.303.3 "WATER CONSERVING PLUMBING FIXTURES & FITTINGS".
2. FOR OPTIONAL ACCESSIBLE FLOOR-MOUNT WATER CLOSET, SEE PLUMBING SCHEDULE MARK WC/3 (NOT SHOWN ON PLAN).
3. NOT ALL ITEMS LISTED MAY OCCUR IN THIS PROJECT.
4. THERE SHOULD BE NO SHARP OR ABRASIVE SURFACES UNDER LAVS OR SINKS.
5. REFER TO DETAIL 10/P2.0 FOR SCHEDULE OF ACCESSIBLE HEIGHTS AT FIXTURES.

PLUMBING FIXTURE SCHEDULE

SINGLE TOILET PLAN 6
FRONT WALL APPROACH - AGE RANGE: 13-ADULT SCALE: 1/4" = 1'-0"

SINGLE TOILET PLAN 7
SIDE WALL APPROACH - AGE RANGE: 13-ADULT SCALE: 1/4" = 1'-0"

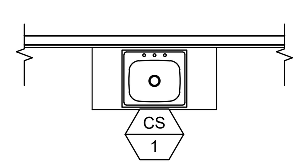

CLASSROOM SINK PLAN 8
SCALE: 1/4" = 1'-0"

A 1 = PLUMBING FIXTURE I.D. - SEE SCHEDULE ABOVE

SYMBOLS LEGEND

PLANS SHALL MEET ENERGY CODE 120.3 FOR PIPE INSULATION. ALL WATER HEATERS SHALL HAVE R7.7 ON HOT AND COLD LINES FOR THE FIRST 8 FEET FROM WATER HEATER (TANK TYPE AND INSTANT). SECTION 609.12 REQUIRES HOT WATER PIPING FROM THE WATER HEATER TO THE FIXTURE (CONTROL VALVE) BE INSULATED TO A MINIMUM WALL THICKNESS OF NOT LESS THAN THE DIAMETER OF THE PIPE FOR A PIPE UP TO 2 INCHES (50 MM) IN DIAMETER. INSULATION WALL THICKNESS SHALL BE NOT LESS THAN 2 INCHES (51 MM) FOR A PIPE OF 2 INCHES (50 MM) OR MORE IN DIAMETER. PER PLUMBING CODE 609.12 UPDATE PLANS TO SHOW HOW THE HOT WATER PIPING IS INSULATED FROM THE WATER HEATER TO THE FIXTURE (CONTROL VALVE) TO A MINIMUM WALL THICKNESS OF NOT LESS THAN THE DIAMETER OF THE PIPE. INSTANTANEOUS WATER HEATERS WITH AN INPUT GREATER THAN 6.8 KBTU/H OR 2 KW (ALL INSTANTANEOUS ARE OVER 4KW) SHALL HAVE ISOLATION VALVES ON BOTH THE INCOMING COLD WATER SUPPLY AND THE HOT WATER PIPE LEAVING THE WATER HEATER, TO ASSIST IN THE FLUSHING OF THE HEAT EXCHANGER AND HELP PROLONG THE LIFE OF THE WATER HEATERS PER ENERGY CODE 110.3(C).

PLUMBING NOTE

MODULAR MFR. TO STUB THROUGH FLOOR ALL PLUMBING LINES. BUILDING PERIMETER POC'S SHOWN ARE FOR COORDINATION PURPOSES ONLY. ALL UNDER-FLOOR CONNECTIONS ARE BY SITE CONTRACTOR, U.O.N.

1. DIMENSIONS ARE TO FACE OF FINISH (F.O.F.) UNLESS NOTED OTHERWISE (i.e. F.O.C., ℄)
2. RESTROOM CONFIGURATION MAY VARY PER BUILDING CONFIGURATION.
3. RESTROOM MODULE OCCURS ONLY AT END OF BUILDING. SINGLE RESTROOMS MAY OCCUR IN ANY PART OF A BUILDING.
4. RESTROOM MODULE CANNOT STAND ALONE AND SHALL BE ASSEMBLED TOGETHER WITH AT LEAST ONE OTHER 12'x40' MODULE.
5. INTERIOR WALLS MAY OCCUR THROUGHOUT BUILDING. REFER TO SHEET S8.1 OR S9.1 FOR ATTACHMENTS.
6. REFER TO SCHEDULE 10/P2.0 FOR ACCESSIBLE HEIGHTS AT TOILETS.
7. REFER TO DETAILS 1, 3, 4 & 5, SHEET A7.1 FOR TOILET PARTITION ANCHORAGE BLOCKING.
8. SEWER AND WATER STUB OUTS SHALL BE LOCATED WITHIN THE ALLOWABLE AREA AS SHOWN ON FLOOR PLAN AND CONNECTIONS SHALL BE EASILY ACCESSIBLE FOR FUTURE RELOCATION. STUB OUT HEIGHT SHALL BE COORDINATED BY THE MANUFACTURER.
9. PIPING MATERIAL
   a. WATER: COPPER TYPE "L", 95/5 SOLDER.
   b. WASTE DRAIN AND VENT: ABS.
10. REFER TO SHEET M1.0 FOR TYPICAL BRACING AND ANCHORAGE NOTES.

GENERAL NOTES

AMS American Modular Systems
787 Spreckels Ave., Manteca, CA 95336
Phone (209) 825-1921 Fax (209) 825-7018
www.americanmodular.com

INTELLECTUAL-PROPERTY & PROPRIETARY RIGHTS STATEMENT
COPYRIGHT © AMERICAN MODULAR SYSTEMS (AMS)
AMS OWNS ALL COPYRIGHT AND OTHER INTELLECTUAL-PROPERTY AND PROPRIETARY RIGHTS IN THESE DRAWINGS, SPECIFICATIONS, AND THE MATERIAL CONTAINED HEREIN. CERTAIN ELEMENTS SHOWN IN THESE DOCUMENTS ARE REGISTERED TRADEMARKS OF AMS. ALL PATENTABLE MATERIALS CONTAINED IN THESE DOCUMENTS AND ORIGINATING WITH AMS WILL REMAIN THE SOLE PROPERTY OF AMS. THESE DRAWING, SPECIFICATIONS, AND THE MATERIAL CONTAINED HEREIN MAY NOT BE REPRODUCED, TRANSMITTED, COPIED, DISTRIBUTED, MODIFIED, OR OTHERWISE DISPOSED OF (DIRECTLY OR INDIRECTLY) AND MAY NOT BE USED (IN WHOLE OR IN PART) TO ASSIST IN THE CONSTRUCTION, DESIGN, OR OTHER MAKING OF, OR FOR THE PURPOSE OF FURNISHING ANY INFORMATION FOR THE CONSTRUCTION, DESIGN, OR OTHER MAKING OF, ANY BUILDINGS (MODULAR OR OTHERWISE), DRAWINGS, SPECIFICATIONS, PRINTS, APPARATUS, OR PARTS THEREOF, EXCEPT AS EXPRESSLY PERMITTED BY WRITTEN CONSENT OF, OR IN A WRITTEN AGREEMENT WITH, AMS. SUBMITTAL OR DISTRIBUTION TO MEET OFFICIAL REGULATORY REQUIREMENTS WILL NOT BE CONSTRUED AS PUBLICATION IN DEROGATION OF AMS'S COPYRIGHT OR OTHER INTELLECTUAL-PROPERTY OR PROPRIETARY RIGHTS.

PRE-CHECKED SET NAME
36' x 40' STANDARD MODULAR BUILDING (LOW SEISMIC)
FORM

SITE SPECIFIC PROJECT NAME
TRACY USD
JACOBSON ES
(2) 36' x 40' BULIDINGS

MANUFACTURER PROFESSIONAL OF RECORD
LICENSED ARCHITECT RANDALL PATRICK CAVANAGH No. C12631 Ren. 3-31-25 STATE OF CALIFORNIA

THESE DRAWINGS ARE PRELIMINARY AND NOT FOR CONSTRUCTION UNLESS STAMPED & SIGNED BY THE DESIGN PROFESSIONAL OF RECORD.

REVISIONS
1
2
3
4

DRAWN BY:	LS
SCALE:	AS NOTED
DATE:	02/07/24
PROJECT NO:	1919-24

SHEET TITLE:
RESTROOM OPTIONS PLUMBING PLAN & FIXTURE SCHEDULE

SHEET NUMBER:
P1.0-N

FACILITY:
JACOBSON ELEMENTARY SCHOOL
1750 W KAVANAGH AVE
TRACY, CA 95376

PROJECT:
JACOBSON ES - TK CLASSROOM

SHEET NAME:
RESTROOM OPTIONS PLUMBING PLAN & FIXTURE SCHEDULE

DATE: **04/03/24** CLIENT PROJ NO: **3595001000**

SHEET:
P1.0-N
ADDENDUM "A"

PLEASE RECYCLE

Autodesk Docs://3595005000 TUSD TK CLASSROOMS 2025 R22/3595005000-A-TUSD-BOHN-SITE.rvt

THE LINE SHOWN ABOVE IS EQUAL TO ONE INCH ON ORIGINAL DRAWING SIZE D

American Modular Systems

24' x 40' THRU 120' x 40'
STANDARD BUILDING (LOW SEISMIC)

APPLICABLE CODES

PARTIAL LIST OF APPLICABLE CODES AS OF JANUARY 1, 2023

- 2022 CALIFORNIA ADMINISTRATIVE CODE (CAC) - PART 1, TITLE 24, CCR)
- 2022 CALIFORNIA BUILDING CODE (CBC), VOLUME 1 & 2 - (PART 2, TITLE 24 CCR) BASED ON THE 2021 INTERNATIONAL BUILDING CODE WITH 2022 CALIFORNIA AMENDMENTS
- 2022 CALIFORNIA ELECTRICAL CODE (CEC) - (PART 3, TITLE 24, CCR) BASED ON THE 2020 NATIONAL ELECTRIC CODE WITH 2022 CALIFORNIA AMENDMENTS
- 2022 CALIFORNIA MECHANICAL CODE (CMC) - (PART 4, TITLE 24, CCR) BASED ON THE 2021 IAPMO UNIFORM MECHANICAL CODE WITH 2022 CALIFORNIA AMENDMENTS
- 2022 CALIFORNIA PLUMBING CODE (CPC) - (PART 5, TITLE 24, CCR) BASED ON THE 2021 IAPMO UNIFORM PLUMBING CODE WITH 2022 CALIFORNIA AMENDMENTS
- 2022 CALIFORNIA ENERGY CODE (CEC) - (PART 6, TITLE 24, CCR)
- 2022 CALIFORNIA FIRE CODE (CFC) - (PART 9, TITLE 24, CCR) BASED ON THE 2021 INTERNATIONAL FIRE CODE WITH 2022 CALIFORNIA AMENDMENTS
- 2022 CALIFORNIA GREEN BUILDING CODE (CGC) - (PART 11, TITLE 24, CCR)
- 2022 CALIFORNIA REFERENCED STANDARDS CODE (PART 12, TITLE 24, CCR)
-
-

PARTIAL LIST OF APPLICABLE STANDARDS

• NFPA 13	AUTOMATIC SPRINKLER SYSTEM	2022 EDITION
• NFPA 14	STANDPIPE AND HOSE SYSTEMS	2019 EDITION
• NFPA 17	DRY CHEMICAL EXTINGUISHING SYSTEMS	2021 EDITION
• NFPA 17A	WET CHEMICAL EXTINGUISHING SYSTEMS	2021 EDITION
• NFPA 20	STATIONARY PUMPS	2019 EDITION
• NFPA 24	PRIVATE FIRE MAINS	2019 EDITION
• NFPA 72	NATIONAL FIRE ALARM AND SIGNALING CODE (CALIFORNIA AMENDED) (NOTE: SEE UL, STANDARD 1971 FOR "VISUAL DEVICES")	2022 EDITION
• NFPA 253	CRITICAL RADIANT FLUX OF FLOOR COVERING SYSTEMS	2019 EDITION
• NFPA 2001	CLEAN AGENT FIRE EXTINGUISHING SYSTEMS (CA AMMENDED)	2018 EDITION

GENERAL NOTES

1. SUBSTITUTION OF PRODUCTS OR PROCESSES WHICH CHANGE THE STRUCTURAL SAFETY, FIRE & LIFE-SAFETY, OR ACCESSIBILTY OF THIS BUILDING SHALL BE SUBMITTED TO THE DSA AS AN ADDENDUM OR CONSTRUCTION CHANGE DOCUMENT.
2. PC BUILDING APPROVED ONLY FOR OCCUPANCY "E" OR "B".
3. PC BUILDING EXITING IS BASED ON THE USE OR OCCUPANCY AND WILL BE REVIEWED AS SITE SPECIFIC.
4. PC BUILDINGS LOCATED IN FIRE HAZARD SEVERITY ZONES PER WILDLAND URBAN INTERFACE FIRE AREAS (WUI) SHALL CONFORM TO CBC CHAPTER 7A. PC IS NOT APPROVED FOR WUI.
5. AUTOMATIC SPRINKLER SYSTEMS MIGHT BE REQUIRED FOR SITE SPECIFIC PROJECTS. OPTIONAL AUTOMATIC FIRE SPRINKLER DESIGNS ARE INCLUDED IN THIS PC APPROVAL. (NOTE: SEE BUILDING DATA THIS SHEET FOR FIRE SPRINKLER SYSTEM WEIGHT INCLUDED IN BUILDING DESIGN)
6. FIRE SERVICE UNDERGROUND SHALL BE REVIEWED AS A SITE SPECIFIC APPLICATION. WATER SUPPLY SHALL BE DESIGNED TO MEET THE PC SPRINKLER DEMAND REQUIREMENTS.
7. PROVIDE A SITE SPECIFIC FIRE FLOW LETTER OF CERTIFICATION FROM AN APPROVED WATER PURVEYOR OR LOCAL FIRE AUTHORITY.
8. THIS PC PLAN SHALL NOT BE USED TO HOUSE "ROOMS OR AREAS WITH SPECIAL HAZARDS" SUCH AS LABORATORIES, VOCATIONAL SHOPS AND OTHER SUCH AREAS NOT CLASSIFIED AS GROUP H, LOCATED IN GROUP E OCCUPANCIES.
9. A SEPARATE NON-PC DSA APPLICATION NUMBER (SITE SPECIFIC JOB OR STOCKPILE) IS REQUIRED FOR DESIGN & ROOF-TOP INSTALLATION OF SOLAR PANEL SYSTEMS, ITS ANCHORAGE & SUPPORT STRUCTURE ABOVE THE ROOF FRAMING. THE PC ROOF FRAMING IS DESIGNED FOR SOLAR PANELS TO BE INSTALLED FLAT ON THE ROOF. (NOTE: SEE BUILDING DATA THIS SHEET FOR SOLAR PANEL SYSTEM WEIGHT & WIND LOAD INCLUDED IN BUILDING DESIGN FOR ROOF-TOP.) SUBMITTALS OF ROOF-TOP SOLAR SYSTEM SHALL NOT BE SUBMITTED AS AN OVER-THE-COUNTER SUBMITTAL.
10. IF THE STRUCTURE IS LOCATED IN AN AREA WITH LIQUEFIABLE SOIL OR SITE CLASS F, OVER-THE-COUNTER SUBMITTAL IS NOT ALLOWED AND SITE SPECIFIC PROJECT SUBMITTAL IS REQUIRED. IF THE SITE IS NOT IN A MAPPED LIQUEFACTION HAZARD ZONE, IT MAY BE PRESUMED THAT NO LIQUEFACTION HAZARD EXISTS ON THAT SITE UNLESS A SITE-SPECIFIC GEOTECHNICAL REPORT IDENTIFIES SUCH HAZARD.
11. THIS PC BUILDING IS NOT DESIGNED FOR FLOOD HAZARD AREAS. WHEN A SITE-SPECIFIC PROJECT IS LOCATED IN A FLOOD ZONE OTHER THAN ZONE X, A LETTER STAMPED AND SIGNED FROM A GEOTHECHNICAL ENGINEER IS NEEDED TO VALIDATE THAT THE ALLOWABLE SOIL VALUES SPECIFIED IN THE PC DRAWINGS ARE STILL APPLICABLE. UNLESS THE BOTTOMS OF FOUNDATIONS ARE RAISED ABOVE THE DESIGN FLOOD ELEVATION, A VALIDATION LETTER FROM THE GEOTHECNICAL ENGINEER SHALL BE PROVIDED, EVEN IF THE PRESUMPTIVE LOAD-BEARING VALUES PER CBC SECTION 1806A.2 ARE USED. PROJECT SHALL BE EXEMPT FROM THE VALIDATION LETTER FOR PROJECTS LOCATED IN ZONE D (UNDEFINED) IF THE APPLICANT PROVIDES EVIDENCE FROM THE LOCAL JURISDICTION OR A QUALIFIED DESIGN PROFESSIONAL CONFIRMING THAT THE SITE IS NOT IN A FLOOD HAZARD ZONE. LOCATION OF ELECTRICAL ELEMENTS SHALL CONFORM TO THE AMERICAN SOCIETY OF CIVIL ENGINEERS.
12. THE PLACEMENT OF THE PC BUILDING(S) ON OR ADJACENT TO SLOPES SHALL COMPLY WITH THE 'FOUNDATION CLEARANCES FROM SLOPES' SPECIFICATIONS FOUND ON SHEET N2.0 OF THESE DRAWINGS.
13. PC BUILDING SHALL NOT BE PLACED OR BE RELOCATED IN AREAS HAVING A NOISE CONTOUR GREATER THAN OR EQUAL TO 65 CNEL, OR IN AREAS EXPOSED TO A NOISE LEVEL OF 65 dB L_{eq}-1-hr DURING ANY HOUR OF OPERATION WHEN NOISE CONTOURS ARE NOT READILY AVAILABLE, AS SPECIFIED IN CALGREEN CODE, SECTION 5.507.4.1 & 5.507.4.1.1.
14. THIS PC BUILDING IS NOT DESIGNED FOR SNOW LOADS.
15. THIS PC BUILDING IS NOT DESIGNED FOR ICE LOADS.
16. BUILDING SHALL BE MANUFACTURED IN COMPLIANCE WITH CFC CHAPTER 33 FOR FIRE SAFETY DURING CONSTRUCTION.
17. SUBMITTAL AND APPROVAL OF A GEOHAZARD REPORT BY THE CALIFORNIA GEOLOGICAL SURVEY (CGS) IS NOT REQUIRED FOR SINGLE-STORY MODULAR BUILDINGS PROVIDED THAT THEY DO NOT EXCEED 4,000 SQUARE FEET IN PLAN AREA AND ARE NOT LOCATED WITHIN STATE OR LOCAL GEOLOGICAL HAZARD ZONES IN ACCORDANCE WITH IA A-4, SECTION 3.2.1.
18. ACCEPTANCE TESTS BE COMPLETED ON NEWLY INSTALLED OR REPLACEMENT OF LIGHTING CONTROLS, MECHANICAL SYSTEMS, FENESTRATION, AND PROCESS EQUIPMENT BEFORE PROJECT COMPLETION PER THE CALIFORNIA ENERGY CODE SECTION 10-103. ACCEPTANCE TESTS MUST BE PERFORMED BY A CERTIFIED ACCEPTANCE TEST TECHNICIAN (ATT). THE ACCEPTANCE TESTING PROCEDURES MUST BE REPEATED, AND DEFICIENCIES CORRECTED UNTIL THE INSTALLATION OF THE SPECIFIED SYSTEMS CONFORM AND PASS THE REQUIRED ACCEPTANCE CRITERIA. COMPLETED NRCA FORMS SHALL BE SUBMITTED TO THE PROJECT INSPECTOR AND THE DISTRICT.
19. THIS PC WILL NOT BE PLACED ON ANY CAMPUS IN AND OF THE FOLLOWING LOCATIONS:
    - 19.1. WITHIN THE 65 CNEL NOISE CONTOUR OF AN AIRPORT.
    - 19.2. WITHIN THE 65 CNEL OR LDN NOISE CONTOUR OF A FREEWAY, EXPRESSWAY, RAILROAD OR INDUSTRIAL SOURCE GUIDEWAY.
    - 19.3. WHERE EXPOSED TO NOISE LEVELS OF 65 DB-LEQ-1-HOUR DURING ANY HOUR OF OPERATION.

© 2023 BY AMERICAN MODULAR SYSTEMS, INC.

ALL OF THE DRAWINGS AND DETAILS CONTAINED IN THIS PACKAGE ARE THE INTELLECTUAL PROPERTY OF AMS AND MAY NOT BE USED FOR CONSTRUCTION OR DESIGN BY ANOTHER ENTITY WITHOUT THE EXPRESS WRITTEN PERMISSION OF AMS.

COPYRIGHT: © 2023 BY AMERICAN MODULAR SYSTEMS, INC. ALL RIGHTS RESERVED. NO PART OF THIS DOCUMENT MAY BE REPRODUCED OR TRANSMITTED IN ANY FORM OR BY ANY MEANS, ELECTRONIC, MECHANICAL, PHOTOCOPYING, RECORDING, OR OTHERWISE, WITHOUT THE PRIOR WRITTEN PERMISSION OF AMERICAN MODULAR SYSTEMS, INC. CERTAIN ELEMENTS CONTAINED IN THESE DOCUMENTS ARE REGISTERED TRADEMARKS. ALL PATENTABLE MATERIALS CONTAINED IN THESE DOCUMENTS AND ORIGINATING WITH AMERICAN MODULAR SYSTEMS, INC. SHALL REMAIN THE SOLE PROPERTY OF AMERICAN MODULAR SYSTEMS, INC. SUBMITTAL OR DISTRIBUTION TO MEET OFFICIAL REGULATORY REQUIREMENTS WILL NOT BE CONSTRUED AS PUBLICATION IN DEROGATION OF AMERICAN MODULAR SYSTEM, INC.'S COPYRIGHT OR OTHER RESERVED INTELLECTUAL PROPERTY RIGHTS AND INTERESTS.

BUILDING DATA

OCCUPANCY	E OR B (CLASSROOM USE FOR COLLEGE)
TYPE OF CONSTRUCTION	V-B (CATEGORY I & II)
WIND LOAD ASCE 7-16 SECTION28.5.3 SIMPLIFIED PROCEDURE	V = 99 MPH BASIC WIND SPEED EXPOSURE = C INTERNAL PRESSURE COEFF., GC_{pi} = ±0.18 ROOF ANGLE = 1.2 DEGREES RISK CATEGORY II K_{zt} = 1.00
ICE LOAD	NOT CONSIDERED (SEE GENERAL NOTE #15 THIS SHEET)
SNOW LOAD	NOT CONSIDERED (SEE GENERAL NOTE #14 THIS SHEET)
ROOF LIVE LOAD (MAX PSF)	20 (REDUCIBLE)
FLOOR LIVE LOAD (PSF)	☐ 50 ☒ 50+15 ☐ 100 ☐ 150 (NON-STORAGE)
DESIGN DEAD LOADS (MAX PSF)	21.0 RF - 12.0 WD FLR - 48.0 CONC. FLR - 18.0 EXT WALLS
FIRE SPRINKLER SYSTEM DESIGN WT.	1.5 PSF INCLUDED IN ROOF DESIGN DEAD LOADS ABOVE (SEE GENERAL NOTES #5 - #7 THIS SHEET)
ROOF SOLAR PANEL SYSTEM DESIGN WT.	3.0 PSF INCLUDED IN ROOF DESIGN DEAD LOADS ABOVE (SEE GENERAL NOTE #9 THIS SHEET)
ALLOWABLE SOIL PRESSURE (PSF)	1500 (1/3 INCREASE IN SOIL BEARING CAPACITY NOT PERMITTED FOR WIND & SEISMIC LOAD COMBINATIONS UNLESS USING ALTERNATE BASIC LOAD COMBINATIONS PER CBC 1605A.3.2)
FLOOD HAZARD AREA	NO (SEE GENERAL NOTE #11 THIS SHEET)
RAIN INTENSITY (IN/HR)	3" MAX.
BUILDING AREA (SQ. FT.)	960 MIN. THRU 4800 MAX.
CLIMATE ZONE GROUP	☐ A (1,16) ☐ B (2-5) ☒ C (6-13) ☐ D (14,15) (REFER TO EN.1 FOR REQUIREMENTS)
MODULES	LIGHT MODULAR STEEL MOMENT-FRAMES PER CBC SECION 2212A
SYSTEM	12'x40' MODULES (2 MODULES MINIMUM)
FOUNDATION TYPE	CONCRETE

SITE-SPECIFIC OPTIONS

FLOOR DECK	☒ 1⅛" PLYWOOD SHTG.	☐ BH-36 DECK 1½"x18 GA.	☐ 3WxH DECK 3"x18 GA.	
WALL STUDS	☒ WOOD	☐ LIGHT-GAUGE STEEL		
EXTERIOR WALL FINISH	☐ STUCCO	☐ SYNTHETIC STUCCO	☒ LAP SIDING	
HVAC (SEE TABLE IN M1.7A FOR HVAC TYPE)	☐ INTERIOR FLOOR MOUNTED	☒ EXTERIOR WALL MOUNTED	☐ SPLIT SYSTEM	☐ ROOF MOUNTED
ROOFING	☒ 3" x 20 GA. STANDING SEAM	☐ 3" x 22 GA. STANDING SEAM (INSTALLED OVER SHEATHING)	☐ BUILT-UP ROOFING	☐ SINGLE PLY ROOFING
ROOF PITCH	☐ SINGLE PITCH	☒ DUAL PITCH		
ROOF DIAPHRAGM	☒ STEEL STRAP CROSS BRACING - SEE SHEET S4.0	☐ ½" SHEATHING - SEE SHEET S4.1		
FRONT OVERHANG	☐ NO	☒ YES - LENGTH: 5'-0"	ENCLOSED - 7'-0" MAX	
REAR OVERHANG	☐ NO	☒ YES - LENGTH: 2'-0"	ENCLOSED - 7'-0" MAX	
SOLATUBE ON ROOF	☒ NO	☐ YES		
FIRE SPRINKLERS	☒ NO	☐ YES (SEE GENERAL NOTES #5 - #7 THIS SHEET)		
SOLAR PANELS	☒ NO	☐ YES (SEE GENERAL NOTE #9 THIS SHEET)		
OPTIONAL SIDE WALL CANOPY	☒ NO	☐ YES (SEE SHEET S5.4A)		
LIQUEFIABLE SOILS	☒ NO	☐ YES (SEE GENERAL NOTE #10 THIS SHEET)		
MAPPED GEOHAZARD ZONE	☒ NO	☐ YES (AS DEFINED BY PC-6 SECTION 1.8)		
GEOHAZARD REPORT	☒ NO	☐ YES		
IF YES	GEOTECHNICAL FIRM:			
	REPORT #:		REPORT DATE:	
GEOTECHNICAL REPORT	☒ NO	☐ YES	* REQUIRED IF BUILDING AREA > 4,000 SF	
IF YES	GEOTECHNICAL FIRM:			
	REPORT #:		REPORT DATE:	
	DEEPER FOOTINGS REQUIRED?	☐ NO	☐ YES - REQUIRED DEPTH:	
	WIDER FOOTINGS REQUIRED?	☐ NO	☐ YES - REQUIRED WIDTH:	
BELOW GRADE CONCRETE MIX DESIGN	☒ DEFAULT CONCRETE MIX DESIGN FOR BELOW GRADE CONCRETE PER SHEET N1.0A.			
	☐ OPTIONAL SITE-SPECIFIC CONCRETE MIX DESIGN FOR BELOW GRADE CONCRETE PER SHEET N1.0A.			

☐ THIS SHEET CONTAINS DESIGN OPTION BOXES AVAILABLE FOR SELECTION BASED ON SITE SPECIFIC REQUIREMENTS.

SEE SHEET TS2 FOR SHEET INDEX

SITE SPECIFIC WIND VALUES

SITE SPECIFIC BASIC WIND SPEED = 93 MPH WIND EXPOSURE = C

SITE SPECIFIC SEISMIC VALUES

SITE SPECIFIC S_S = 1.18 SITE SPECIFIC S_1 = 0.411 SITE CLASS = D

(NOTE: SITE SHALL BE SITE CLASS "D" IF NO SOILS REPORT)

PC BUILDING SEISMIC DESIGN CRITERIA

Ie = 1.0 T = 0.240_S R = 3.5 (OMF) RISK CATEGORY II
Ω_0 = 3.0 C_d = 3.0 ρ = 1.0 SEISMIC DESIGN CATEGORY: D (S_1 < 0.75) E (S_1 ≥ 0.75)

MAXIMUM STORY DRIFT RATIO = 2.0% (I.E. MAX DRIFT = 0.020 x THE HEIGHT UNDER CONSIDERATION.)
LATERAL FORCE RESISTING SYSTEM: LIGHT MODULAR STEEL MOMENT FRAMES PER 2212A
ANALYSIS PROCEDURE: EQUIVALENT LATERAL FORCE

NOTE: COMPONENTS AND CLADDING DESIGNED FOR: S_{DS} = 1.62

☒ NO SOILS REPORT - ASSUMED SITE CLASS "D" DEFAULT

S_S = 2.026 MAX (SITE) 1.418 (DESIGN)* F_a= 1.2 S_{DS} = 1.62 MAX (SITE) 1.13 (DESIGN)*
S_1 = 1.001 MAX (SITE & DESIGN) F_v= 1.7 S_{D1} = 1.13 MAX (SITE & DESIGN) C_S = 0.324 W (DESIGN)*

☐ WITH SOILS REPORT - SITE CLASS "A", "B" OR "D"

NOTE: GROUND MOTION HAZARD ANALYSIS IS NOT REQUIRED WHERE THE VALUE OF THE PARAMETERS S IS INCREASED BY 50% FOR ALL APPLICATIONS OF SM1 (ASCE 7-16 w/SUPPLEMENT #3, SECTION 11.4.8, EXCEPTION1)
DESIGN BASED ON SITE CLASS DETERMINED PER CHAPTER 20 OF ASCE 7-16

S_S = 3.332 MAX (SITE) 2.332 (DESIGN)* F_a= 1.0 S_{DS} = 2.22 MAX (SITE) 1.55 (DESIGN)*
S_1 = 1.372 MAX (SITE & DESIGN) F_v= 1.7 S_{D1} = 1.55 MAX (SITE & DESIGN) C_S = 0.444 W (DESIGN)*

☐ WITH SOILS REPORT - SITE CLASS "C"

DESIGN BASED ON SITE CLASS DETERMINED PER CHAPTER 20 OF ASCE 7-16

S_S = 2.776 MAX (SITE) 1.943 (DESIGN)* F_a= 1.2 S_{DS} = 2.22 (SITE) 1.55 (DESIGN)*
S_1 = 1.666 MAX (SITE & DESIGN) F_v= 1.4 S_{D1} = 1.55 MAX (SITE & DESIGN) C_S = 0.444 W (DESIGN)*

☐ WITH SOILS REPORT - SITE CLASS "E"

NOTE: GROUND MOTION HAZARD ANALYSIS IS NOT REQUIRED WHERE THE EQUIVALENT LATERAL FORCE PROCEDURE IS USED FOR DESIGN AND THE VALUE OF C_S IS DETERMINED BY EQ (12.8-2) FOR ALL VALUES OF T (ASCE 7-16 w/SUPPLEMENT #3, SECTION 11.4.8, EXCEPTION 2) SEE GENERAL NOTE #10.
DESIGN BASED ON SITE CLASS DETERMINED PER CHAPTER 20 OF ASCE 7-16

S_S = 1.943 MAX (SITE) 1.943 (DESIGN) F_a= 1.2 S_{DS} = 1.55 (SITE) 1.55 (DESIGN)
S_1 = 1.166 MAX (SITE & DESIGN) F_v= 2.0 S_{D1} = 1.55 MAX (SITE & DESIGN) C_S = 0.444 W (DESIGN)

☐ WITH SOILS REPORT - SITE CLASS "F"

NOTE: GROUND MOTION HAZARD ANALYSIS IS NOT REQUIRED WHERE THE EQUIVALENT LATERAL FORCE PROCEDURE IS USED FOR DESIGN AND THE VALUE OF C_S IS DETERMINED BY EQ (12.8-2) FOR ALL VALUES OF T (ASCE 7-16 w/SUPPLEMENT #3, SECTION 11.4.8, EXCEPTION 2) SEE GENERAL NOTE #10.

SITE SPECIFIC S_{DS} = _____
SITE SPECIFIC S_{D1} = _____ S_{DS} = S_{D1} = 1.55 MAX C_S = 0.444 W (DESIGN)

*PER ASCE 7-16, SECTION 12.8.1.3:
THE VALUE OF C_S AND E_v ARE PERMITTED TO BE CALCULATED USING A VALUE OF S_{DS} EQUAL TO 1.0, BUT NOT LESS THAN 70% OF S_{DS} AS DEFINED IN SECTION 11.4.5, PROVIDED THAT ALL OF THE FOLLOWING CRITERIA ARE MET:
1. STRUCTURE DOES NOT HAVE IRREGULARITIES;
2. STRUCTURE DOES NOT EXCEED FIVE (5) STORIES ABOVE THE LOWER OF THE BASE OR GRADE PLANE;
3. STRUCTURE HAS A FUNDAMENTAL PERIOD, T, THAT DOES NOT EXCEED 0.5 SECONDS;
4. STRUCTURE MEETS REQUIREMENTS FOR REDUNDANCY FACTOR, ρ, TO BE TAKEN AS 1.0;
5. SITE SOIL PROPERTIES ARE NOT CLASSIFIED AS SITE CLASS 'E' OR 'F';
6. STRUCTURE IS CLASSIFIED AS RISK CATEGORY II.
7. WHEN SITE SPECIFIC GROUND MOTION PROCEDURE IS REQUIRED PER 11.4.8, SITE-SPECIFIC PROJECTS ARE NOT ALLOWED FOR OTC SUBMITTAL.

PV SYSTEM REQUIREMENT TABLE

REQUIRED PV SYSTEM SIZE (kW)									
CLIMATE ZONE	BUILDING SIZE								
	☐ 24'x40'	☒ 36'x40'	☐ 48'x40'	☐ 60'x40'	☐ 72'x40'	☐ 84'x40'	☐ 96'x40'	☐ 108'x40'	☐ 120'x40'
	APPROXIMATE CONDITIONED FLOOR AREA								
	960	1440	1920	2400	2880	3360	3840	4320	4800
☐ 1 & 16	NONE	NONE	NONE	NONE	NONE	3.9	0.2	NONE	NONE
☐ 2 - 5	NONE	NONE	NONE	NONE	NONE	1.0	NONE	NONE	NONE
☒ 6 - 13	NONE	NONE	NONE	NONE	3.2	NONE	NONE	NONE	NONE
☐ 14	NONE	NONE	1.5	3.4	3.6	2.1	3.6	1.5	4.6
☐ 15	NONE	NONE	2.2	5.2	5.4	3.2	5.4	2.2	7.0

NOTE: FOR SITE-SPECIFIC PROJECT, INDICATE BUILDING SIZE AND PV SYSTEM SIZE. IF PV REQUIRED, SEE NOTE #9 UNDER GENERAL NOTES

IDENTIFICATION STAMP
DIV. OF THE STATE ARCHITECT
APP: 02-122976 INC:
REVIEWED FOR
SS ☑ FLS ☑ ACS ☑
DATE: 03/12/2025

TRACY UNIFIED SCHOOL DISTRICT

HMC Architects
3595001000
2101 CAPITOL AVENUE, SUITE 100
SACRAMENTO, CA 95816
916 368 7990 / www.hmcarchitects.com

ISSUE

Δ	DESCRIPTION	DATE
1	ADDENDUM "A"	3/20/25

American Modular Systems
787 Spreckels Ave., Manteca, CA 95336
Phone (209) 825-1921 Fax (209) 825-7018
www.americanmodular.com

INTELLECTUAL-PROPERTY & PROPRIETARY RIGHTS STATEMENT
COPYRIGHT © AMERICAN MODULAR SYSTEMS (AMS)
AMS OWNS ALL COPYRIGHT AND OTHER INTELLECTUAL-PROPERTY AND PROPRIETARY RIGHTS IN THESE DRAWINGS, SPECIFICATIONS, AND THE MATERIAL CONTAINED HEREIN. CERTAIN ELEMENTS SHOWN IN THESE DOCUMENTS ARE REGISTERED TRADEMARKS OF AMS. ALL PATENTABLE MATERIALS CONTAINED IN THESE DOCUMENTS AND ORIGINATING WITH AMS SHALL REMAIN THE SOLE PROPERTY OF AMS. CERTAIN ELEMENTS CONTAINED IN THESE DOCUMENTS AND THE MATERIAL CONTAINED HEREIN MAY NOT BE REPRODUCED, TRANSMITTED, COPIED, DISTRIBUTED, MODIFIED, OR OTHERWISE DISPOSED OF (DIRECTLY OR INDIRECTLY) AND MAY NOT BE USED (IN WHOLE OR IN PART) TO ASSIST IN THE CONSTRUCTION, DESIGN, OR OTHER MAKING OF, OR FOR THE PURPOSE OF FURNISHING ANY INFORMATION FOR THE CONSTRUCTION, DESIGN, OR OTHER MAKING OF, ANY BUILDINGS (MODULAR OR OTHERWISE), DRAWINGS, SPECIFICATIONS, PRINTS, APPARATUS, OR PARTS THEREOF, EXCEPT AS EXPRESSLY PERMITTED BY WRITTEN CONSENT OF, OR IN A WRITTEN AGREEMENT WITH, AMS. SUBMITTAL OR DISTRIBUTION TO MEET OFFICIAL REGULATORY REQUIREMENTS WILL NOT BE CONSTRUED AS PUBLICATION IN DEROGATION OF AMS'S COPYRIGHT OR OTHER INTELLECTUAL-PROPERTY OR PROPRIETARY RIGHTS.

PRE-CHECKED SET NAME
24' x 40' THRU 120' x 40'
STANDARD MODULAR BUILDING
(LOW SEISMIC)
FORM®

SITE SPECIFIC PROJECT NAME

APPROVED
DIV. OF THE STATE ARCHITECT
APP: 04-122050 PC
REVIEWED FOR
SS ☑ FLS ☑ ACS ☑ CG ☑
DATE: 12/11/2023

☐ 2022 CBC PRE-CHECK (PC) DOCUMENT
A SEPARATE PROJECT APPLICATION FOR CONSTRUCTION IS REQUIRED.

MANUFACTURER PROFESSIONAL OF RECORD ON PC

LICENSED ARCHITECT PATRICK CAREY No. C12631 Exp. Rem. 3-31-25 STATE OF CALIFORNIA

THESE DRAWINGS ARE PRELIMINARY AND NOT FOR CONSTRUCTION UNLESS STAMPED & SIGNED BY THE DESIGN PROFESSIONAL OF RECORD.

REVISIONS
1
2
3
4

DRAWN BY:	AA
SCALE:	AS NOTED
DATE:	MM/DD/YY
PROJECT NO:	XXXX-22

SHEET TITLE:
TITLE SHEET

SHEET NUMBER:
TS

KEYNOTES

GENERAL NOTES

FACILITY:
JACOBSON ELEMENTARY SCHOOL
1750 W KAVANAGH AVE
TRACY, CA 95376

PROJECT:
JACOBSON ES - TK CLASSROOM

SHEET NAME:
TITLE SHEET

DATE: **04/03/24** CLIENT PROJ NO: **3595001000**

SHEET:
TS

ADDENDUM "A"

PLEASE RECYCLE

Autodesk Docs://3595000000 TUSD TK CLASSROOMS 2025 R22/3595000000-A-TUSD-BOHH-SITE.rvt
12/3/2024 9:55:54 AM

THE LINE SHOWN ABOVE IS EXACTLY ONE INCH LONG AT THIS SHEETS ORIGINAL PAGE SIZE

AGENCY APPROVAL:

IDENTIFICATION STAMP
DIV. OF THE STATE ARCHITECT
APP: 02-122976 INC:
REVIEWED FOR
SS ☑ FLS ☑ ACS ☑
DATE: 03/12/2025

TRACY UNIFIED SCHOOL DISTRICT

HMC Architects
3595001000
2101 CAPITOL AVENUE, SUITE 100
SACRAMENTO, CA 95816
916 368 7990 / www.hmcarchitects.com

AMS®
American Modular Systems
24' x 40' THRU 120' x 40'
STANDARD BUILDING (LOW SEISMIC)

SHEET INDEX

ARCHITECTURAL

OPTIONS		SHEET NUMBER	SHEET TITLE
COVER SHEET		☒ TS	TITLE SHEET
		☒ TS-2	SHEET INDEX
INSPECTION FORM		☒ D1	FORM DSA-103
		☒ D2	FORM DSA-103
GENERAL NOTES & SPECIFICATIONS		☒ N1.0	GENERAL NOTES & SPECIFICATIONS
		☒ N1.0A	BELOW GRADE CONCRETE MIX DESIGN REQUIREMENTS
		☒ N2.0	GENERAL NOTES & SPECIFICATIONS
		☒ N3.0	TYPICAL SCHEDULES: DOORS, WINDOWS & FINISHES
		☒ N4.0	ACCESSIBILITY STANDARDS AND DETAILS
		☐ N5.0	MULTIPLE FLOOR PLAN CONFIGURATIONS
		☐ N5.1	MULTIPLE FLOOR PLAN CONFIGURATIONS
ENERGY SHEETS & CALCULATIONS		☒ EN.1A-EN.1B	ENERGY CALCULATIONS - SUMMATION SHEETS
		☐ EN.2-EN.3	ENERGY CALCULATIONS - 24'x40' BUILDING - GROUP A
		☐ EN.4-EN.5	ENERGY CALCULATIONS - 24'x40' BUILDING - GROUP B
		☐ EN.6-EN.7	ENERGY CALCULATIONS - 24'x40' BUILDING - GROUP C
		☐ EN.8-EN.9	ENERGY CALCULATIONS - 24'x40' BUILDING - GROUP D
		☐ EN.10-EN.11	ENERGY CALCULATIONS - 36'x40' BUILDING - GROUP A
		☐ EN.12-EN.13	ENERGY CALCULATIONS - 36'x40' BUILDING - GROUP B
		☒ EN.14-EN.15	ENERGY CALCULATIONS - 36'x40' BUILDING - GROUP C
		☐ EN.16-EN.17	ENERGY CALCULATIONS - 36'x40' BUILDING - GROUP D
		☐ EN.18-EN.19	ENERGY CALCULATIONS - 48'x40' BUILDING - GROUP A
		☐ EN.20-EN.21	ENERGY CALCULATIONS - 48'x40' BUILDING - GROUP B
		☐ EN.22-EN.23	ENERGY CALCULATIONS - 48'x40' BUILDING - GROUP C
		☐ EN.24-EN.25	ENERGY CALCULATIONS - 48'x40' BUILDING - GROUP D
		☐ EN.26-EN.27	ENERGY CALCULATIONS - 60'x40' BUILDING - GROUP A
		☐ EN.28-EN.29	ENERGY CALCULATIONS - 60'x40' BUILDING - GROUP B
		☐ EN.30-EN.31	ENERGY CALCULATIONS - 60'x40' BUILDING - GROUP C
		☐ EN.32-EN.33	ENERGY CALCULATIONS - 60'x40' BUILDING - GROUP D
		☐ EN.34-EN.35	ENERGY CALCULATIONS - 72'x40' BUILDING - GROUP A
		☐ EN.36-EN.37	ENERGY CALCULATIONS - 72'x40' BUILDING - GROUP B
		☐ EN.38-EN.39	ENERGY CALCULATIONS - 72'x40' BUILDING - GROUP C
		☐ EN.40-EN.41	ENERGY CALCULATIONS - 72'x40' BUILDING - GROUP D
		☐ EN.42-EN.43	ENERGY CALCULATIONS - 84'x40' BUILDING - GROUP A
		☐ EN.44-EN.45	ENERGY CALCULATIONS - 84'x40' BUILDING - GROUP B
		☐ EN.46-EN.47	ENERGY CALCULATIONS - 84'x40' BUILDING - GROUP C
		☐ EN.48-EN.49	ENERGY CALCULATIONS - 84'x40' BUILDING - GROUP D
		☐ EN.50-EN.51	ENERGY CALCULATIONS - 96'x40' BUILDING - GROUP A
		☐ EN.52-EN.53	ENERGY CALCULATIONS - 96'x40' BUILDING - GROUP B
		☐ EN.54-EN.55	ENERGY CALCULATIONS - 96'x40' BUILDING - GROUP C
		☐ EN.56-EN.57	ENERGY CALCULATIONS - 96'x40' BUILDING - GROUP D
		☐ EN.58-EN.59	ENERGY CALCULATIONS - 108'x40' BUILDING - GROUP A
		☐ EN.60-EN.61	ENERGY CALCULATIONS - 108'x40' BUILDING - GROUP B
		☐ EN.62-EN.63	ENERGY CALCULATIONS - 108'x40' BUILDING - GROUP C
		☐ EN.64-EN.65	ENERGY CALCULATIONS - 108'x40' BUILDING - GROUP D
		☐ EN.66-EN.67	ENERGY CALCULATIONS - 120'x40' BUILDING - GROUP A
		☐ EN.68-EN.69	ENERGY CALCULATIONS - 120'x40' BUILDING - GROUP B
		☐ EN.70-EN.71	ENERGY CALCULATIONS - 120'x40' BUILDING - GROUP C
		☐ EN.72-EN.73	ENERGY CALCULATIONS - 120'x40' BUILDING - GROUP D
		☒ EN.74-EN.76	ENERGY CALCULATIONS - SUPPLEMENTAL SHEETS
FLOOR PLANS		☒ A1.0	TYPICAL FLOOR PLAN
		☐ A1.1	TYPICAL FLOOR PLAN w/ SOLATUBE OPTION
		☐ A1.2	RESTROOM FLOOR PLAN OPTIONS - AGE RANGE: 13-ADULT
		☐ A1.3	RESTROOM FLOOR PLAN OPTIONS - AGE RANGE: 9-12
		☐ A1.4	RESTROOM FLOOR PLAN OPTIONS - AGE RANGE: 5-8
		☒ A1.5	RESTROOM FLOOR PLAN OPTIONS - AGE RANGE: 3-4
ROOF PLAN & DETAILS	METAL STANDING SEAM	☒ A2.0	TYPICAL ROOF PLAN - METAL STANDING SEAM (WITHOUT PARAPETS)
		☐ A2.1	TYPICAL ROOF PLAN - METAL STANDING SEAM (WITH PARAPETS)
		☒ A2.2	TYPICAL ROOF DETAILS - METAL STANDING SEAM
	SINGLE-PLY OR BUILT-UP	☐ A2.3	TYPICAL ROOF PLAN - SINGLE-PLY OR BUILT-UP (WITHOUT PARAPETS)
		☐ A2.4	TYPICAL ROOF PLAN - SINGLE-PLY OR BUILT-UP (WITH PARAPETS)
		☐ A2.5	TYPICAL ROOF DETAILS - SINGLE-PLY OR BUILT-UP ROOFING

ARCHITECTURAL (CONTINUATION)

OPTIONS		SHEET NUMBER	SHEET TITLE
INTERIOR ELEVATIONS		☒ A4.0	INTERIOR ELEVATIONS - TYPICAL CLASSROOM
		☒ A4.1	INTERIOR ELEVATIONS - RESTROOM OPTIONS
		☐ A4.2	INTERIOR ELEVATIONS - RESTROOM OPTIONS - ALT. TOILET TYPES
EXTERIOR ELEVATIONS & ARCHITECTURAL DETAILS	STUCCO	☐ A5.2	TYPICAL EXTERIOR ELEVATIONS - STUCCO OPTION
		☐ A5.3	TYPICAL ARCHITECTURAL DETAILS - STUCCO OPTION
		☐ A5.3A	DETERIORATION DETAILS GREATER THAN 2160 SQ. FT. - STUCCO OPTION
	LAP SIDING	☒ A5.4	TYPICAL EXTERIOR ELEVATIONS - LAP SIDING OPTION
		☒ A5.5	TYPICAL ARCHITECTURAL DETAILS - LAP SIDING OPTION
		☐ A5.5A	DETERIORATION DETAILS GREATER THAN 2160 SQ. FT. - LAP SIDING OPTION
	SYNTHETIC STUCCO	☐ A5.6	TYPICAL EXTERIOR ELEVATIONS - SYNTHETIC STUCCO OPTION
		☐ A5.7	TYPICAL ARCHITECTURAL DETAILS - SYNTHETIC STUCCO OPTION
		☐ A5.7A	DETERIORATION DETAILS GREATER THAN 2160 SQ. FT. - SYNTHETIC STUCCO OPTION
MISCELLANEOUS DETAILS		☐ A7.0	ARCHITECTURAL EXTERIOR FINISH OPTIONS DETAILS
		☒ A7.1	MISCELLANEOUS ARCHITECTURAL DETAILS
		☒ A7.3	TYPICAL LONGITUDINAL AND TRANSVERSE FRAME SECTIONS
		☐ A8.0	1-HR FIRE RATED CONSTRUCTION DETAILS

STRUCTURAL

OPTIONS		SHEET NUMBER	SHEET TITLE
STEEL MEMBER PROPERTIES		☒ S0.0	STEEL MEMBER PROPERTIES
FOUNDATION PLANS & DETAILS	CONCRETE	☐ S1.0	CONCRETE FOUNDATION PLAN (50 PSF MAX FLOOR LIVE LOAD)
		☒ S1.1	CONCRETE FOUNDATION PLAN (50 PSF LIVE LOAD +15 PSF PARTITION LOAD)
		☐ S1.2	CONCRETE FOUNDATION PLAN (100 PSF MAX FLOOR LIVE LOAD)
		☐ S1.3	CONCRETE FOUNDATION PLAN (150 PSF MAX FLOOR LIVE LOAD)
		☒ S1.4	CONCRETE FOUNDATION DETAILS
		☒ S1.5	CONCRETE FOUNDATION DETAILS
		☒ S1.6A	STANDARD ANCHORAGE FOUNDATION DETAILS
		☒ S1.6B	UPGRADED ANCHORAGE FOUNDATION DETAILS
		☒ S1.7	CONCRETE FOUNDATION OPTIONAL UTILITY OPENINGS IN FOOTINGS
FLOOR FRAMING PLAN & DETAILS	PLYWOOD	☒ S3.0	FLOOR FRAMING PLAN & DETAILS FOR PLYWOOD FLOOR
	CONCRETE w/ METAL DECK	☐ S3.1	FLOOR FRAMING PLAN & DETAILS FOR CONCRETE FLOOR w/BH-DECK OPTION (100 PSF MAX FLOOR L.L.)
		☐ S3.3	FLOOR FRAMING PLAN & DETAILS FOR CONCRETE FLOOR w/3WxH-DECK OPTION (150 PSF MAX FLOOR L.L.)
ROOF FRAMING PLANS & DETAILS		☒ S4.0	ROOF FRAMING PLAN & DETAILS - CROSS BRACING OPTION
		☐ S4.1	ROOF FRAMING PLAN & DETAILS - ROOF SHEATHING OPTION
		☒ S4.2	ROOF FRAMING DETAILS - CROSS BRACING OPTION
		☐ S4.3	ROOF FRAMING DETAILS - ROOF SHEATHING OPTION
		☐ S4.4	OPTIONAL PARAPET FRAMING ELEVATIONS & DETAILS
BUILDING FRAMING ELEVATIONS & DETAILS		☒ S5.0	MOMENT FRAME ELEVATIONS & DETAILS
		☒ S5.1	MOMENT FRAME CONNECTION DETAILS
		☐ S5.4A	OPTIONAL SIDE WALL CANOPY PLAN & DETAILS
WALL FRAMING	WOOD STUDS	☒ S8.0	WALL FRAMING ELEVATIONS & SCHEDULES - WOOD STUDS
		☒ S8.1	WALL FRAMING DETAILS - WOOD STUDS
	METAL STUDS	☐ S9.0	WALL FRAMING ELEVATIONS & SCHEDULES - METAL STUD OPTION
		☐ S9.1	WALL FRAMING DETAILS - METAL STUD OPTION
		☐ S9.2	TYPICAL METAL STUD FRAMING DETAILS & PROPERTIES

MECHANICAL

OPTIONS	SHEET NUMBER	SHEET TITLE
FLOOR PLANS	☒ M1.0	TYPICAL REFLECTED CEILING PLAN
	☒ M1.1A	TYPICAL MECHANICAL PLAN OPTIONS
	☐ M1.1B	TYPICAL MECHANICAL PLAN OPTIONS
	☐ M1.1C	TYPICAL MECHANICAL PLAN OPTIONS
	☐ M1.3	RESTROOM REFLECTED CEILING PLANS & OPTIONS
DETAILS	☒ M1.4	MECHANICAL & CEILING DETAILS
	☐ M1.4A	MECHANICAL & CEILING DETAILS
	☒ M1.5	MECHANICAL & CEILING DETAILS
	☐ M1.5A	MECHANICAL & CEILING DETAILS
	☒ M1.6	MECHANICAL ROOF DETAILS
	☐ M1.6A	MECHANICAL ROOF DETAILS
MISCELLANEOUS	☒ M1.7	CEILING NOTES & SPECIFICATIONS
	☒ M1.7A	MECHANICAL NOTES & SCHEDULES

ELECTRICAL

OPTIONS	SHEET NUMBER	SHEET TITLE
FLOOR PLANS & DETAILS	☒ E1.0	TYPICAL ELECTRICAL PLAN
	☐ E1.1	RESTROOM OPTIONS ELECTRICAL PLANS
	☒ E1.2	ELECTRICAL NOTES & DETAILS

PLUMBING

OPTIONS	SHEET NUMBER	SHEET TITLE
FLOOR PLAN & DETAILS	☒ P1.0	RESTROOM OPTIONS, PLUMBING PLAN, & FIXTURE SCHEDULE
	☒ P2.0	PLUMBING DETAILS & ACCESSIBLE DETAILS
	☒ P3.0	PLUMBING ISOMETRIC DRAWINGS

FIRE SPRINKLERS

OPTIONS	SHEET NUMBER	SHEET TITLE
FLOOR PLAN & DETAILS	☐ FS-1	OPTIONAL FIRE SPRINKLER TYP. NOTES & DETAILS
	☐ FS-2	OPTIONAL FIRE SPRINKLER TYPICAL PLANS

TOTAL OF 52 SHEETS

AMS®
American Modular Systems
787 Spreckels Ave., Manteca, CA 95336
Phone (209) 825-1921 Fax (209) 825-7018
www.americanmodular.com

INTELLECTUAL-PROPERTY & PROPRIETARY RIGHTS STATEMENT
COPYRIGHT © AMERICAN MODULAR SYSTEMS (AMS)
AMS OWNS ALL COPYRIGHT AND OTHER INTELLECTUAL-PROPERTY AND PROPRIETARY RIGHTS IN THESE DRAWINGS, SPECIFICATIONS, AND THE MATERIAL CONTAINED HEREIN. CERTAIN ELEMENTS SHOWN IN THESE DOCUMENTS ARE REGISTERED TRADEMARKS OF AMS. ALL PATENTABLE MATERIALS CONTAINED IN THESE DOCUMENTS AND ORIGINATING WITH AMS WILL REMAIN THE SOLE PROPERTY OF AMS. THESE DRAWING, SPECIFICATIONS, AND THE MATERIAL CONTAINED HEREIN MAY NOT BE REPRODUCED, TRANSMITTED, COPIED, DISTRIBUTED, MODIFIED, OR OTHERWISE DISPOSED OF (DIRECTLY OR INDIRECTLY) AND MAY NOT BE USED (IN WHOLE OR IN PART) TO ASSIST IN THE CONSTRUCTION, DESIGN, OR OTHER MAKING OF, OR FOR THE PURPOSE OF FURNISHING ANY INFORMATION FOR THE CONSTRUCTION, DESIGN, OR OTHER MAKING OF, ANY BUILDINGS (MODULAR OR OTHERWISE), DRAWINGS, SPECIFICATIONS, PRINTS, APPARATUS, OR PARTS THEREOF, EXCEPT AS EXPRESSLY PERMITTED BY WRITTEN CONSENT OF, OR IN A WRITTEN AGREEMENT WITH, AMS. SUBMITTAL OR DISTRIBUTION TO MEET OFFICIAL REGULATORY REQUIREMENTS WILL NOT BE CONSTRUED AS PUBLICATION IN DEROGATION OF AMS'S COPYRIGHT OR OTHER INTELLECTUAL-PROPERTY OR PROPRIETARY RIGHTS.

PRE-CHECKED SET NAME
24' x 40' THRU 120' x 40'
STANDARD MODULAR BUILDING
(LOW SEISMIC)
FORM®

SITE SPECIFIC PROJECT NAME
.
.
.

APPROVED
DIV. OF THE STATE ARCHITECT
APP: 04-122050 PC
REVIEWED FOR
SS ☑ FLS ☑ ACS ☑ CG ☑
DATE: 12/11/2023

☐ 2022 CBC PRE-CHECK (PC) DOCUMENT
A SEPARATE PROJECT APPLICATION FOR CONSTRUCTION IS REQUIRED.

MANUFACTURER PROFESSIONAL OF RECORD ON PC

LICENSED ARCHITECT
RANDALL PATRICK CAVANAGH
No. C12631
Ren. 3-31-25
STATE OF CALIFORNIA

THESE DRAWINGS ARE PRELIMINARY AND NOT FOR CONSTRUCTION UNLESS STAMPED & SIGNED BY THE DESIGN PROFESSIONAL OF RECORD.

REVISIONS
1
2
3
4

DRAWN BY:	AA
SCALE:	AS NOTED
DATE:	MM/DD/YY
PROJECT NO:	XXXX-22

SHEET TITLE:
SHEET INDEX

SHEET NUMBER:
TS-2

ISSUE

Δ	DESCRIPTION	DATE
A	ADDENDUM "A"	3/20/25

KEYNOTES

GENERAL NOTES

FACILITY:
JACOBSON ELEMENTARY SCHOOL
1750 W KAVANAGH AVE
TRACY, CA 95376

PROJECT:
JACOBSON ES - TK CLASSROOM

SHEET NAME:
SHEET INDEX

DATE: **04/03/24** CLIENT PROJ NO: **3595001000**

SHEET:
TS-2
ADDENDUM "A"

PLEASE RECYCLE

Autodesk Docs://3595005000 TUSD TK CLASSROOMS 2025 R22/3595005000-A-TUSD-BOHN-SITE.rvt
12/3/2024 9:55:51 AM

THE LINE SHOWN ABOVE IS EXACTLY ONE INCH LONG AT THIS SHEETS ORIGINAL PAGE SIZE

AUTHORIZED USE: ALL INFORMATION INCLUDED ON THIS SHEET (FORM DSA-103) IS FOR THE SOLE PURPOSE OF RECEIVING DSA APPROVAL AND ISSUANCE OF A PC NUMBER. NO OTHER USE IS AUTHORIZED WITHOUT THE EXPRESS WRITTEN CONSENT OF AMERICAN MODULAR SYSTEMS, INC.

Additional Information for PC designs only, not to be added to DSA-103:

	STOCKPILE	CONSTRUCTION OF PERMANENT MODULAR OR RELOCATABLE BUILDING	RELOCATION OF CERTIFIED RELOCATABLE BUILDING
INSPECTOR CLASS (minimum requirements)	RBIP or Class 1	In Plant: RBIP or Class 1 Site: Class 4 for Single Story Site: Class 2 for Two-Story	Class 4 for Single Story Class 2 for Two-Story
Selection of the Project Inspector and Testing/Special Inspection Agency	by the Owner (not manufacturer) and approved by DSA, A/E of Record and Structural Engineer	by the School District and approved by DSA and A/E responsible for in-plant construction observation.	by the Owner (not manufacturer) and approved by DSA, A/E of Record and Structural Engineer
Cost of the Project Inspector (CAC, Section 4-333(b)) and Testing/Special Inspection Agency (CAC, Section 4-335(b))	by the Owner (not manufacturer)	by the School District	

NOTES: NOTE 1: REINFORCING STEEL TESTS MAY BE WAIVED FOR ONE-STORY BUILDINGS, PER CBC, SECTION 1910A.2 (1909.2.4*).
NOTE 2: REQUIRED ONLY WHERE THE DETAILS OF THE PC SPECIFY THE USE OF THIS TYPE OF ANCHOR.
NOTE 3: REQUIRED ONLY WHERE THE DETAILS OF THE PC SPECIFY THIS WELDING.
NOTE 4: THESE TESTS AND INSPECTIONS ARE APPLICABLE ONLY WHEN A GEOTECHNICAL REPORT IS REQUIRED.
NOTE 5: WOOD FOUNDATIONS ARE NOT PERMITTED FOR PERMANENT MODULAR BUILDINGS PER CBC SECTION 1807A.1.4.

*INDICATES ALTERNATIVE CBC SECTIONS THAT COMMUNITY COLLEGES MAY USE PER CBC SECTION 1.9.2.2.

HOLLO-BOLT MANUFACTURER'S INSPECTION PROCEDURES

PERIODIC SPECIAL INSPECTION REQUIREMENTS

ICC ES ESR-3330 Seismic Approved

LA DBS DEPARTMENT OF BUILDING AND SAFETY

TO VERIFY CORRECT INSTALLATION INCLUDING USE IN SEISMIC OR WIND LOADING APPLICATIONS IN ACCORDANCE WITH THE 2022 CALIFORNIA BUILDING CODE SECTIONS 1705A.1, 1705A.2, AND 1704A.3 PLEASE REFER TO THE FOLLOWING INSTRUCTIONS.

A. INSPECTION PRIOR TO INSTALLATION

1. ENSURE THAT THERE ARE NO GAPS BETWEEN THE CONNECTING STEELWORK.
2. ENSURE THAT THE HOLES ARE ALIGNED AND THAT THE HOLES HAVE THE CORRECT DIAMETER AND SPACING FOR THE CHOSEN HOLLO-BOLT.
3. THE HOLES MUST BE STANDARD DIAMETER HOLES CONFORMING TO AISC 360 WHERE THE HOLE DIAMETER MUST BE NO GREATER THAN THE SLEEVE OUTER DIAMETER +1/16".
4. BURRS IN THE HOLES MUST BE REMOVED BEFORE INSERTION OF THE HOLLO-BOLT.

B. INSPECTION DURING INSTALLATION

1. ENSURE THAT THE HOLLO-BOLTS ARE INSTALLED AS PER LINDAPTER'S INSTALLATION INSTRUCTION SHEET.
2. ENSURE THAT THE TORQUE WRENCH(S) HAS A CURRENT VALID CALIBRATION CERTIFICATE AND IS CALIBRATED ON REGULAR BASIS.
3. IF USING AIR POWERED WRENCHES TO TIGHTEN THE HOLLO-BOLT, CHECK THAT THE WRENCH IS SET CORRECTLY TO AVOID OVERTIGHTING. THE FINAL TORQUE MUST BE CHECKED WITH A CALIBRATED TORQUE WRENCH.
4. IF AFTER TIGHTENING THERE IS A GAP EVIDENT BETWEEN THE HOLLO-BOLT AND THE CONTACT SURFACE OF THE CONNECTING ELEMENT THIS MAY INDICATE INCORRECT INSTALLATION. REMOVE AND DISCARD THE HOLLO-BOLT, REALIGN THE CONNECTING STEELWORK AND INSTALL A NEW HOLLO-BOLT AS PER LINDAPTER'S INSTALLATION INSTRUCTION SHEET.
5. IF AFTER TIGHTENING THE BOLT HEAD CONTINUES TO TURN THIS MAY BE AN INDICATION OF OVER TIGHTENING, OR IF USING A STAINLESS STEEL HOLLO-BOLT THIS MAY BE DUE TO GALLING*, REMOVE AND DISCARD THE HOLLO-BOLT AND INSTALL A NEW HOLLO-BOLT AS PER LINDAPTER'S INSTALLATION INSTRUCTION SHEET.

* 'GALLING' IS A TERM USED WHEN TWO SURFACES SEIZE UP AS A RESULT OF COLD WELDING AND IS COMMON WHEN TIGHTENING STAINLESS STEEL BOLTS.

C. INSPECTION AFTER INSTALLATION

1. ENSURE THAT THERE ARE NO GAPS BETWEEN THE CONNECTING STEELWORK.
2. ENSURE THAT THERE ARE NO GAPS BETWEEN THE HOLLO-BOLT AND THE CONTACT SURFACE OF THE CONNECTING ELEMENT.
3. CHECK THE TIGHTENING TORQUE OF BETWEEN 5-10% OF THE INSTALLED HOLLO-BOLTS CHOSEN AT RANDOM USING A CALIBRATED TORQUE WRENCH.

FOOTNOTES

1. WAIVER OF CONTINUOUS BATCH PLANT INSPECTION (PER CBC 1705A3.3.1 AND DSA IR 17-13)
   A. CONTINUOUS BATCH PLANT INSPECTION MAY BE WAIVED IF THE CONCRETE PLANT COMPLIES FULLY WITH ASTM C94, SECTION 9 AND 10, AND HAS A CURRENT CERTIFICATION FROM THE "NATIONAL READY MIXED CONCRETE ASSOCIATION" OR ANOTHER AGENCY ACCEPTABLE TO THE ENFORCEMENT AGENCY. THE CERTIFICATION SHALL INDICATE THAT THE PLANT HAS AUTOMATIC BATCHING AND RECORDING CAPABILITIES.
   B. IF THE BATCH PLANT INSPECTION IS WAIVED, THE FOLLOWING REQUIREMENTS a) THRU c) SHALL BE MET:
      a) AN APPROVED AGENCY OR CERTIFIED TECHNICIAN OF THE TESTING LABORATORY SHALL CHECK THE FIRST BATCH AT START OF WORK DAY TO VERIFY MATERIALS AND PROPORTIONS CONFORM TO THE APPROVED MIX DESIGN.
      b) THE LICENSED WEIGHMASTER SHALL POSITIVELY IDENTIFY QUANTITY OF MATERIALS AND CERTIFY EACH LOAD BY A BATCH TICKET.
      c) BATCH TICKETS, INCLUDING MATERIAL QUANTITIES AND WEIGHTS, SHALL BE TRANSMITTED TO THE INSPECTOR OF RECORD PRIOR TO CONCRETE PLACEMENT.
2. ELIMINATION OF CONTINUOUS BATCH PLANT INSPECTION (PER CBC 1705A3.3.2):
   A. BATCH PLANT INSPECTION IS NOT REQUIRED FOR ANY OF THE FOLLOWING CONDITIONS:
      a) SITE FLATWORK,
      b) UNENCLOSED SITE STRUCTURES, INCLUDING BUT NOT LIMITED TO LUNCH OR CAR SHELTERS, BLEACHERS, SOLAR STRUCTURES, FLAG OR LIGHT POLES, OR RETAINING WALLS,
      c) CONTROLLED LOW-STRENGTH MATERIAL BACKFILL, OR
      d) SINGLE STORY RELOCATABLE BUILDINGS LESS THAN 2,160 SQUARE FEET.
3. PER CBC 1910A.2, TESTING MAY BE WAIVED FOR ONE-STORY BUILDINGS IF A CERTIFIED MILL TEST REPORT IS PROVIDED.
4. REQUIRED ONLY WHERE DETAILS SPECIFY THE USE OF THESE ATTACHMENTS.
5. NOT USED
6. THE APPENDIX TO DSA-103 SHALL BE COMPLETED BY THE DESIGN PROFESSIONAL IN GENERAL RESPONSIBLE CHARGE.
7. ULTRASONIC TESTING PER DSA IR-PC2 SECTION 10.1 SHALL BE PERFORMED ON 100% OF CJP GROOVE WELDS WHEN THE COLUMNS PER SCHEDULE ON SHEET S5.1 HAVE A THICKNESS OF 5/16" OR GREATER. MAGNETIC PARTICLE TESTING SHALL BE PERFORMED ON 25% OF ALL BEAM-TO-COLUMN CJP GROOVE WELDS. NONDESTRUCTIVE TESTING OF COMPLETE JOINT PENETRATION WELDS AT GRAVITY CONNECTIONS SHALL COMPLY WITH AISC 360, CHAPTER N, PER 2022 CBC 1705A.2.1.
8. EXAMPLE DSA-103 FORMS WILL BE USED AS GUIDE TO DEVELOP A SITE-SPECIFIC DSA-103 FORM FOR THE SITE-SPECIFIC PROJECT. EXAMPLE FORMS ON THE PC DRAWINGS WILL BE CROSSED OUT WHEN SITE-SPECIFIC DSA-103 FORMS ARE PROVIDED DURING OTC REVIEW.
9. QUALIFIED REPRESENTATIVE OF LABORATORY OF RECORD OR APPROVED SPECIAL INSPECTOR SHALL VERIFY ALL STEEL IDENTIFICATION PER 2022 CBC 2202A.1 AND DSA IR 17-3 STRUCTURAL WELDING INSPECTION.

72' x 40' BUILDING FLOOR PLAN

DSA 103-22: LISTING OF STRUCTURAL TESTS & SPECIAL INSPECTIONS, 2022 CBC

Application Number: 04-122050 | School Name: PC | School District: PC
DSA File Number: | Increment Number: | Date Created: 2023-11-01 14:38:17

2022 CBC

IMPORTANT: This form is only a summary list of structural tests and some of the special inspections required for the project. Generally, the structural tests and special inspections noted on this form are those that will be performed by the Geotechnical Engineer of Record, Laboratory of Record, or Special Inspector. The actual complete test and inspection program must be performed as detailed on the DSA approved documents. The appendix at the bottom of this form identifies work NOT subject to DSA requirements for special inspection or structural testing. The project inspector is responsible for providing inspection of all facets of construction, including but not limited to, special inspections not listed on this form such as structural wood framing, high-load wood diaphragms, cold-formed steel framing, anchorage of non-structural components, etc., per Title 24, Part 2, Chapter 17A (2022 CBC).

**NOTE: Undefined section and table references found in this document are from the CBC, or California Building Code.

KEY TO COLUMNS

1. TYPE	2. PERFORMED BY
Continuous – Indicates that a continuous special inspection is required Periodic – Indicates that a periodic special inspection is required Test – Indicates that a test is required	GE (Geotechnical Engineer) – Indicates that the special inspection shall be performed by a registered geotechnical engineer or his or her authorized representative. LOR (Laboratory of Record) – Indicates that the test or special inspection shall be performed by a testing laboratory accepted in the DSA Laboratory Evaluation and Acceptance (LEA) Program. See CAC Section 4-335. PI (Project Inspector) – Indicates that the special inspection may be performed by a project inspector when specifically approved by DSA. SI (Special Inspection) – Indicates that the special inspection shall be performed by an appropriately qualified/approved special inspector.

	Test or Special Inspection	Type	Performed By	Code References and Notes
	S/A1. STRUCTURAL STEEL, COLD-FORMED STEEL AND ALUMINUM USED FOR STRUCTURAL PURPOSES			
☑	a. Verify identification of all materials and: • Mill certificates indicate material properties that comply with requirements. • Material sizes, types and grades comply with requirements.	Periodic	*	Table 1705A.2.1 Item 3a–3c. 2202A.1; AISI S100-20 Section A3.1 & A3.2, AISI S240-20 Section A3 & A5, AISI S220-20 Sections A4 & A6. * By special inspector or qualified technician when performed off-site.
☑	b. Test unidentified materials	Test	LOR	2202A.1.
☑	c. Examine seam welds of HSS shapes	Periodic	SI	DSA IR 17-3.
☑	d. Verify and document steel fabrication per DSA-approved construction documents.	Periodic	SI	Not applicable to cold-formed steel light-frame construction, except for trusses (1705A.2.4).
	S/A3. WELDING:			
☑	a. Verify weld filler material identification markings per AWS designation listed on the DSA-approved documents and the WPS.	Periodic	SI	1705A.2.5, Table 1705A.2.1 Items 4 & 5; AWS D1.1 and AWS D1.8 for structural steel; AWS D1.2 for Aluminum; AWS D1.3 for cold-formed steel; AWS D1.4 for reinforcing steel; DSA IR 17-3.
☑	b. Verify weld filler material manufacturer's certificate of compliance.	Periodic	SI	DSA IR 17-3.
☑	c. Verify WPS, welder qualifications and equipment.	Periodic	SI	DSA IR 17-3.
	S/A4. SHOP WELDING (IN ADDITION TO SECTION S/A3):			
☑	a. Inspect groove welds, multi-pass fillet welds, single pass fillet welds > 5/16", plug and slot welds.	Continuous	SI	Table 1705A.2.1 Items 5a.1–4; AISC 360-16 (and AISC 341-16 as applicable); DSA IR 17-3.
☑	b. Inspect single-pass fillet welds ≤ 5/16", floor and roof deck welds.	Periodic	SI	1705A.2.2, Table 1705A.2.1 Items 5a.5 & 5a.6; AISC 360-16 (and AISC 341-16 as applicable); DSA IR 17-3.
	Test or Special Inspection	Type	Performed By	Code References and Notes
	S/A6. NONDESTRUCTIVE TESTING:			
☑	b. Magnetic Particle	Test	LOR	1705A.2.1, 1705A.2.5; AISC 341-16 J6.2, AISC 360-16 N5.5; AWS D1.1, AWS D1.8; DSA IR 17-2.
	S/A11. Other Steel			
☑	a. Shop Welding - Inspect welding of cold-formed steel Periodic/Special Inspector	Periodic	SI	
☑	b. Hollow bolts	Continuous	PI	Verify the torque installation torque

1. Structural Testing and Inspection: Laboratory Verified Report Form DSA 291
2. Shop Welding Inspection: Laboratory Verified Report Form DSA 291, or, for independently contracting SI, Special Inspection Verified Report Form DSA 292

☐ STOCKPILE WOOD FLOOR

DSA 103-22: LISTING OF STRUCTURAL TESTS & SPECIAL INSPECTIONS, 2022 CBC

Application Number: 04-122050 | School Name: PC | School District: PC
DSA File Number: | Increment Number: | Date Created: 2023-11-01 14:47:08

2022 CBC

IMPORTANT: This form is only a summary list of structural tests and some of the special inspections required for the project. Generally, the structural tests and special inspections noted on this form are those that will be performed by the Geotechnical Engineer of Record, Laboratory of Record, or Special Inspector. The actual complete test and inspection program must be performed as detailed on the DSA approved documents. The appendix at the bottom of this form identifies work NOT subject to DSA requirements for special inspection or structural testing. The project inspector is responsible for providing inspection of all facets of construction, including but not limited to, special inspections not listed on this form such as structural wood framing, high-load wood diaphragms, cold-formed steel framing, anchorage of non-structural components, etc., per Title 24, Part 2, Chapter 17A (2022 CBC).

**NOTE: Undefined section and table references found in this document are from the CBC, or California Building Code.

KEY TO COLUMNS

1. TYPE	2. PERFORMED BY
Continuous – Indicates that a continuous special inspection is required Periodic – Indicates that a periodic special inspection is required Test – Indicates that a test is required	GE (Geotechnical Engineer) – Indicates that the special inspection shall be performed by a registered geotechnical engineer or his or her authorized representative. LOR (Laboratory of Record) – Indicates that the test or special inspection shall be performed by a testing laboratory accepted in the DSA Laboratory Evaluation and Acceptance (LEA) Program. See CAC Section 4-335. PI (Project Inspector) – Indicates that the special inspection may be performed by a project inspector when specifically approved by DSA. SI (Special Inspection) – Indicates that the special inspection shall be performed by an appropriately qualified/approved special inspector.

	Test or Special Inspection	Type	Performed By	Code References and Notes
	S/A1. STRUCTURAL STEEL, COLD-FORMED STEEL AND ALUMINUM USED FOR STRUCTURAL PURPOSES			
☑	a. Verify identification of all materials and: • Mill certificates indicate material properties that comply with requirements. • Material sizes, types and grades comply with requirements.	Periodic	*	Table 1705A.2.1 Item 3a–3c. 2202A.1; AISI S100-20 Section A3.1 & A3.2, AISI S240-20 Section A3 & A5, AISI S220-20 Sections A4 & A6. * By special inspector or qualified technician when performed off-site.
☑	b. Test unidentified materials	Test	LOR	2202A.1.
☑	d. Verify and document steel fabrication per DSA-approved construction documents.	Periodic	SI	Not applicable to cold-formed steel light-frame construction, except for trusses (1705A.2.4).
	S/A3. WELDING:			
☑	a. Verify weld filler material identification markings per AWS designation listed on the DSA-approved documents and the WPS.	Periodic	SI	1705A.2.5, Table 1705A.2.1 Items 4 & 5; AWS D1.1 and AWS D1.8 for structural steel; AWS D1.2 for Aluminum; AWS D1.3 for cold-formed steel; AWS D1.4 for reinforcing steel; DSA IR 17-3.
☑	b. Verify weld filler material manufacturer's certificate of compliance.	Periodic	SI	DSA IR 17-3.
☑	c. Verify WPS, welder qualifications and equipment.	Periodic	SI	DSA IR 17-3.
	S/A4. SHOP WELDING (IN ADDITION TO SECTION S/A3):			
☑	a. Inspect groove welds, multi-pass fillet welds, single pass fillet welds > 5/16", plug and slot welds.	Continuous	SI	Table 1705A.2.1 Items 5a.1–4; AISC 360-16 (and AISC 341-16 as applicable); DSA IR 17-3.
☑	b. Inspect single-pass fillet welds ≤ 5/16", floor and roof deck welds.	Periodic	SI	1705A.2.2, Table 1705A.2.1 Items 5a.5 & 5a.6; AISC 360-16 (and AISC 341-16 as applicable); DSA IR 17-3.
	Test or Special Inspection	Type	Performed By	Code References and Notes
	S/A6. NONDESTRUCTIVE TESTING:			
☑	b. Magnetic Particle	Test	LOR	1705A.2.1, 1705A.2.5; AISC 341-16 J6.2, AISC 360-16 N5.5; AWS D1.1, AWS D1.8; DSA IR 17-2.
	S/A11. Other Steel			
☑	a. Shop Welding - Inspect welding of cold-formed steel Periodic/Special Inspector	Periodic	SI	
☑	b. Shop Welding - Inspect welding of steel floor deck welds Periodic/Special Inspector	Periodic	SI	
☑	b. Hollow bolts	Continuous	PI	Verify the torque installation torque

1. Structural Testing and Inspection: Laboratory Verified Report Form DSA 291
2. Shop Welding Inspection: Laboratory Verified Report Form DSA 291, or, for independently contracting SI, Special Inspection Verified Report Form DSA 292

☐ STOCKPILE CONCRETE FLOOR

American Modular Systems
787 Spreckels Ave., Manteca, CA 95336
Phone (209) 825-1921 Fax (209) 825-7018
www.americanmodular.com

INTELLECTUAL-PROPERTY & PROPRIETARY RIGHTS STATEMENT
COPYRIGHT © AMERICAN MODULAR SYSTEMS (AMS)
AMS OWNS ALL COPYRIGHT AND OTHER INTELLECTUAL-PROPERTY AND PROPRIETARY RIGHTS IN THESE DRAWINGS, SPECIFICATIONS, AND THE MATERIAL CONTAINED HEREIN. CERTAIN ELEMENTS SHOWN IN THESE DOCUMENTS ARE REGISTERED TRADEMARKS OF AMS. ALL PATENTABLE MATERIALS CONTAINED IN THESE DOCUMENTS AND ORIGINATING WITH AMS WILL REMAIN THE SOLE PROPERTY OF AMS. THESE DRAWING, SPECIFICATIONS, AND THE MATERIAL CONTAINED HEREIN MAY NOT BE REPRODUCED, TRANSMITTED, COPIED, DISTRIBUTED, MODIFIED, OR OTHERWISE DISPOSED OF (DIRECTLY OR INDIRECTLY) AND MAY NOT BE USED (IN WHOLE OR IN PART) TO ASSIST IN THE CONSTRUCTION, DESIGN, OR OTHER MAKING OF, OR FOR THE PURPOSE OF FURNISHING ANY INFORMATION FOR THE CONSTRUCTION, DESIGN, OR OTHER MAKING OF, ANY BUILDINGS (MODULAR OR OTHERWISE), DRAWINGS, SPECIFICATIONS, PRINTS, APPARATUS, OR PARTS THEREOF, EXCEPT AS EXPRESSLY PERMITTED BY WRITTEN CONSENT OF, OR IN A WRITTEN AGREEMENT WITH, AMS. SUBMITTAL OR DISTRIBUTION TO MEET OFFICIAL REGULATORY REQUIREMENTS WILL NOT BE CONSTRUED AS PUBLICATION IN DEROGATION OF AMS'S COPYRIGHT OR OTHER INTELLECTUAL-PROPERTY OR PROPRIETARY RIGHTS.

PRE-CHECKED SET NAME
24' x 40' THRU 120' x 40' STANDARD MODULAR BUILDING (LOW SEISMIC)
FORM®

SITE SPECIFIC PROJECT NAME
.
.
.

APPROVED
DIV. OF THE STATE ARCHITECT
APP: 04-122050 PC
REVIEWED FOR
SS ☑ FLS ☑ ACS ☑ CG ☑
DATE: 12/11/2023

☐ 2022 CBC PRE-CHECK (PC) DOCUMENT
A SEPARATE PROJECT APPLICATION FOR CONSTRUCTION IS REQUIRED.

MANUFACTURER PROFESSIONAL OF RECORD ON PC

LICENSED ARCHITECT
RANDALL PATRICK CAVANAGH
No. C12631
Ren. 3-31-25
STATE OF CALIFORNIA

THESE DRAWINGS ARE PRELIMINARY AND NOT FOR CONSTRUCTION UNLESS STAMPED & SIGNED BY THE DESIGN PROFESSIONAL OF RECORD.

REVISIONS
1
2
3
4

DRAWN BY:	AA
SCALE:	AS NOTED
DATE:	MM/DD/YY
PROJECT NO:	XXXX-22

SHEET TITLE:
FORM DSA-103

SHEET NUMBER:
D1

IDENTIFICATION STAMP
DIV. OF THE STATE ARCHITECT
APP: 02-122976 INC:
REVIEWED FOR
SS ☑ FLS ☑ ACS ☑
DATE: 03/12/2025

TRACY UNIFIED SCHOOL DISTRICT

HMC Architects
3595001000
2101 CAPITOL AVENUE, SUITE 100
SACRAMENTO, CA 95816
916 368 7990 / www.hmcarchitects.com

ISSUE

Δ	DESCRIPTION	DATE
A	ADDENDUM "A"	3/20/25

KEYNOTES

GENERAL NOTES

FACILITY:
JACOBSON ELEMENTARY SCHOOL
1750 W KAVANAGH AVE
TRACY, CA 95376

PROJECT:
JACOBSON ES - TK CLASSROOM

SHEET NAME:
FORM DSA-103

DATE: **04/03/24** | CLIENT PROJ NO: **3595001000**

SHEET:
D1

ADDENDUM "A"

PLEASE RECYCLE

Autodesk Docs://3595005000 TUSD TK CLASSROOMS 2025 R22/3595005000-A-TUSD-BOHN-SITE.rvt
12/3/2024 9:55:40 AM

THE LINE SHOWN ABOVE IS EXACTLY ONE INCH LONG AT THIS SHEETS ORIGINAL PAGE SIZE

DSA 103-22: LISTING OF STRUCTURAL TESTS & SPECIAL INSPECTIONS, 2022 CBC

Application Number:	School Name:	School District:
04-122050	PC	PC
DSA File Number:	Increment Number:	Date Created: 2023-11-01 15:01:26

2022 CBC

IMPORTANT: This form is only a summary list of structural tests and some of the special inspections required for the project. Generally, the structural tests and special inspections noted on this form are those that will be performed by the Geotechnical Engineer of Record, Laboratory of Record, or Special Inspector. The actual complete test and inspection program must be performed as detailed on the DSA approved documents. The appendix at the bottom of this form identifies work NOT subject to DSA requirements for special inspection or structural testing. The project inspector is responsible for providing inspection of all facets of construction, including but not limited to, special inspections not listed on this form such as structural wood framing, high-load wood diaphragms, cold-formed steel framing, anchorage of non-structural components, etc., per Title 24, Part 2, Chapter 17A (2022 CBC).

**NOTE: Undefined section and table references found in this document are from the CBC, or California Building Code.

KEY TO COLUMNS

1. TYPE	2. PERFORMED BY
Continuous – Indicates that a continuous special inspection is required	GE (Geotechnical Engineer) – Indicates that the special inspection shall be performed by a registered geotechnical engineer or his or her authorized representative.
Periodic – Indicates that a periodic special inspection is required	LOR (Laboratory of Record) – Indicates that the test or special inspection shall be performed by a testing laboratory accepted in the DSA Laboratory Evaluation and Acceptance (LEA) Program. See CAC Section 4-335.
Test – Indicates that a test is required	PI (Project Inspector) – Indicates that the special inspection may be performed by a project inspector when specifically approved by DSA.
	SI (Special Inspection) – Indicates that the special inspection shall be performed by an appropriately qualified/approved special inspector.

Geotechnical Reports: Project does NOT have and does NOT require a geotechnical report

	S1. GENERAL:			
	Test or Special Inspection	Type	Performed By	Code References and Notes
☑	a. Verify that: • Site has been prepared properly prior to placement of controlled fill and/or excavations for foundations. • Foundation excavations are extended to proper depth and have reached proper material. • Materials below footings are adequate to achieve the design bearing capacity.	See Notes	PI	Refer to specific items identified in the Appendix listing exemptions for limitations. Placement of controlled fill exceeding 12" depth under foundations is not permitted without a geotechnical report.
	S2. SOIL COMPACTION AND FILL:			
	Test or Special Inspection	Type	Performed By	Code References and Notes
☑	a. Verify use of proper materials, densities and inspect lift thicknesses, placement and compaction during placement of fill.	Continuous	LOR*	* Under the supervision of a geotechnical engineer or LOR's engineering manager. Refer to specific items identified in the Appendix listing exemptions for limitations.
☑	b. Compaction testing.	Test	LOR*	* Under the supervision of a geotechnical engineer or LOR's engineering manager. Refer to specific items identified in the Appendix listing exemptions for limitations.
	C1. CAST-IN-PLACE CONCRETE			
	Test or Special Inspection	Type	Performed By	Code References and Notes
☑	a. Verify use of required design mix.	Periodic	SI	Table 1705A.3 Item 5, 1910A.1.
☑	b. Identifiy, sample, and test reinforcing steel.	Test	LOR	1910A.2; ACI 318-19 Ch.20 and Section 26.6.1.2; DSA IR 17-10. (See Appendix (end of this form) for exemptions.)
☑	c. During concrete placement, fabricate specimens for strength tests, perform slump and air content tests, and determine the temperature of the concrete.	Test	LOR	Table 1705A.3 Item 6; ACI 318-19 Sections 26.5 & 26.12.
☑	d. Test concrete (f'_c).	Test	LOR	1905A.1.17; ACI 318-19 Section 26.12.
☑	e. Batch plant inspection: Continuous	See Notes	SI	Default of 'Continuous' per 1705A.3.3. If approved by DSA, batch plant inspection may be reduced to 'Periodic' subject to requirements in Section 1705A.3.3.1, or eliminated per 1705A.3.3.2. See IR 17-13. (See Appendix (end of this form) for exemptions.)
	S/A1. STRUCTURAL STEEL, COLD-FORMED STEEL AND ALUMINUM USED FOR STRUCTURAL PURPOSES			
	Test or Special Inspection	Type	Performed By	Code References and Notes
☑	a. Verify identification of all materials and: • Mill certificates indicate material properties that comply with requirements. • Material sizes, types and grades comply with requirements.	Periodic	*	Table 1705A.2.1 Item 3a–3c. 2202A.1; AISI S100-20 Section A3.1 & A3.2, AISI S240-20 Section A3 & A5, AISI S220-20 Sections A4 & A6. * By special inspector or qualified technician when performed off-site.
☑	b. Test unidentified materials	Test	LOR	2202A.1.
☑	c. Examine seam welds of HSS shapes	Periodic	SI	DSA IR 17-3.
☑	d. Verify and document steel fabrication per DSA-approved construction documents.	Periodic	SI	Not applicable to cold-formed steel light-frame construction, except for trusses (1705A.2.4).
	S/A3. WELDING:			
	Test or Special Inspection	Type	Performed By	Code References and Notes
☑	a. Verify weld filler material identification markings per AWS designation listed on the DSA-approved documents and the WPS.	Periodic	SI	1705A.2.5, Table 1705A.2.1 Items 4 & 5; AWS D1.1 and AWS D1.8 for structural steel; AWS D1.2 for Aluminum; AWS D1.3 for cold-formed steel; AWS D1.4 for reinforcing steel; DSA IR 17-3.
☑	b. Verify weld filler material manufacturer's certificate of compliance.	Periodic	SI	DSA IR 17-3.
☑	c. Verify WPS, welder qualifications and equipment.	Periodic	SI	DSA IR 17-3.
	S/A4. SHOP WELDING (IN ADDITION TO SECTION S/A3):			
	Test or Special Inspection	Type	Performed By	Code References and Notes
☑	a. Inspect groove welds, multi-pass fillet welds, single pass fillet welds > 5/16", plug and slot welds.	Continuous	SI	Table 1705A.2.1 Items 5a.1–4; AISC 360-16 (and AISC 341-16 as applicable); DSA IR 17-3.
☑	b. Inspect single-pass fillet welds ≤ 5/16", floor and roof deck welds.	Periodic	SI	1705A.2.2, Table 1705A.2.1 Items 5a.5 & 5a.6; AISC 360-16 (and AISC 341-16 as applicable); DSA IR 17-3.
	Test or Special Inspection	Type	Performed By	Code References and Notes
	S/A5. FIELD WELDING (IN ADDITION TO SECTION S/A3):			
	Test or Special Inspection	Type	Performed By	Code References and Notes
☑	b. Inspect single-pass fillet welds ≤ 5/16".	Periodic	SI	Table 1705A.2.1 Item 5a.5; AISC 360-16 (AISC 341-16 as applicable); DSA IR 17-3.
	Test or Special Inspection	Type	Performed By	Code References and Notes
	S/A6. NONDESTRUCTIVE TESTING:			
	Test or Special Inspection	Type	Performed By	Code References and Notes
☑	b. Magnetic Particle	Test	LOR	1705A.2.1, 1705A.2.5; AISC 341-16 J6.2, AISC 360-16 N5.5; AWS D1.1, AWS D1.8; DSA IR 17-2.
	S/A11. Other Steel			
	Test or Special Inspection	Type	Performed By	Code References and Notes
☑	a. Shop Welding - Inspect welding of cold-formed steel Periodic/Special Inspector	Periodic	SI	
☑	b. Hollow bolts	Continuous	PI	Verify the torque installation torque

1. Structural Testing and Inspection: Laboratory Verified Report Form DSA 291
2. Concrete Batch Plant Inspection: Laboratory Verified Report Form DSA 291
3. Shop Welding Inspection: Laboratory Verified Report Form DSA 291, or, for independently contracting SI, Special Inspection Verified Report Form DSA 292
4. Field Welding Inspection: Laboratory Verified Report Form DSA 291, or, for independently contracting SI, Special Inspection Verified Report Form DSA 292

☐ CONSTRUCTION OF PERMANENT MODULAR RELOCATABLE BUILDING - WOOD FLOOR / CONCRETE FOUNDATION

DSA 103-22: LISTING OF STRUCTURAL TESTS & SPECIAL INSPECTIONS, 2022 CBC

Application Number:	School Name:	School District:
04-122050	PC	PC
DSA File Number:	Increment Number:	Date Created: 2023-11-01 15:07:53

2022 CBC

IMPORTANT: This form is only a summary list of structural tests and some of the special inspections required for the project. Generally, the structural tests and special inspections noted on this form are those that will be performed by the Geotechnical Engineer of Record, Laboratory of Record, or Special Inspector. The actual complete test and inspection program must be performed as detailed on the DSA approved documents. The appendix at the bottom of this form identifies work NOT subject to DSA requirements for special inspection or structural testing. The project inspector is responsible for providing inspection of all facets of construction, including but not limited to, special inspections not listed on this form such as structural wood framing, high-load wood diaphragms, cold-formed steel framing, anchorage of non-structural components, etc., per Title 24, Part 2, Chapter 17A (2022 CBC).

**NOTE: Undefined section and table references found in this document are from the CBC, or California Building Code.

KEY TO COLUMNS

1. TYPE	2. PERFORMED BY
Continuous – Indicates that a continuous special inspection is required	GE (Geotechnical Engineer) – Indicates that the special inspection shall be performed by a registered geotechnical engineer or his or her authorized representative.
Periodic – Indicates that a periodic special inspection is required	LOR (Laboratory of Record) – Indicates that the test or special inspection shall be performed by a testing laboratory accepted in the DSA Laboratory Evaluation and Acceptance (LEA) Program. See CAC Section 4-335.
Test – Indicates that a test is required	PI (Project Inspector) – Indicates that the special inspection may be performed by a project inspector when specifically approved by DSA.
	SI (Special Inspection) – Indicates that the special inspection shall be performed by an appropriately qualified/approved special inspector.

Geotechnical Reports: Project does NOT have and does NOT require a geotechnical report

	S2. SOIL COMPACTION AND FILL:			
	Test or Special Inspection	Type	Performed By	Code References and Notes
☑	a. Verify use of proper materials, densities and inspect lift thicknesses, placement and compaction during placement of fill.	Continuous	LOR*	* Under the supervision of a geotechnical engineer or LOR's engineering manager. Refer to specific items identified in the Appendix listing exemptions for limitations.
☑	b. Compaction testing.	Test	LOR*	* Under the supervision of a geotechnical engineer or LOR's engineering manager. Refer to specific items identified in the Appendix listing exemptions for limitations.
	C1. CAST-IN-PLACE CONCRETE			
	Test or Special Inspection	Type	Performed By	Code References and Notes
☑	a. Verify use of required design mix.	Periodic	SI	Table 1705A.3 Item 5, 1910A.1.
☑	b. Identifiy, sample, and test reinforcing steel.	Test	LOR	1910A.2; ACI 318-19 Ch.20 and Section 26.6.1.2; DSA IR 17-10. (See Appendix (end of this form) for exemptions.)
☑	c. During concrete placement, fabricate specimens for strength tests, perform slump and air content tests, and determine the temperature of the concrete.	Test	LOR	Table 1705A.3 Item 6; ACI 318-19 Sections 26.5 & 26.12.
☑	d. Test concrete (f'_c).	Test	LOR	1905A.1.17; ACI 318-19 Section 26.12.
☑	e. Batch plant inspection: Continuous	See Notes	SI	Default of 'Continuous' per 1705A.3.3. If approved by DSA, batch plant inspection may be reduced to 'Periodic' subject to requirements in Section 1705A.3.3.1, or eliminated per 1705A.3.3.2. See IR 17-13. (See Appendix (end of this form) for exemptions.)
	S/A1. STRUCTURAL STEEL, COLD-FORMED STEEL AND ALUMINUM USED FOR STRUCTURAL PURPOSES			
	Test or Special Inspection	Type	Performed By	Code References and Notes
☑	a. Verify identification of all materials and: • Mill certificates indicate material properties that comply with requirements. • Material sizes, types and grades comply with requirements.	Periodic	*	Table 1705A.2.1 Item 3a–3c. 2202A.1; AISI S100-20 Section A3.1 & A3.2, AISI S240-20 Section A3 & A5, AISI S220-20 Sections A4 & A6. * By special inspector or qualified technician when performed off-site.
☑	b. Test unidentified materials	Test	LOR	2202A.1.
☑	c. Examine seam welds of HSS shapes	Periodic	SI	DSA IR 17-3.
☑	d. Verify and document steel fabrication per DSA-approved construction documents.	Periodic	SI	Not applicable to cold-formed steel light-frame construction, except for trusses (1705A.2.4).
	S/A3. WELDING:			
	Test or Special Inspection	Type	Performed By	Code References and Notes
☑	a. Verify weld filler material identification markings per AWS designation listed on the DSA-approved documents and the WPS.	Periodic	SI	1705A.2.5, Table 1705A.2.1 Items 4 & 5; AWS D1.1 and AWS D1.8 for structural steel; AWS D1.2 for Aluminum; AWS D1.3 for cold-formed steel; AWS D1.4 for reinforcing steel; DSA IR 17-3.
☑	b. Verify weld filler material manufacturer's certificate of compliance.	Periodic	SI	DSA IR 17-3.
☑	c. Verify WPS, welder qualifications and equipment.	Periodic	SI	DSA IR 17-3.
	S/A4. SHOP WELDING (IN ADDITION TO SECTION S/A3):			
	Test or Special Inspection	Type	Performed By	Code References and Notes
☑	a. Inspect groove welds, multi-pass fillet welds, single pass fillet welds > 5/16", plug and slot welds.	Continuous	SI	Table 1705A.2.1 Items 5a.1–4; AISC 360-16 (and AISC 341-16 as applicable); DSA IR 17-3.
☑	b. Inspect single-pass fillet welds ≤ 5/16", floor and roof deck welds.	Periodic	SI	1705A.2.2, Table 1705A.2.1 Items 5a.5 & 5a.6; AISC 360-16 (and AISC 341-16 as applicable); DSA IR 17-3.
	Test or Special Inspection	Type	Performed By	Code References and Notes
	S/A5. FIELD WELDING (IN ADDITION TO SECTION S/A3):			
	Test or Special Inspection	Type	Performed By	Code References and Notes
☑	b. Inspect single-pass fillet welds ≤ 5/16".	Periodic	SI	Table 1705A.2.1 Item 5a.5; AISC 360-16 (AISC 341-16 as applicable); DSA IR 17-3.
	Test or Special Inspection	Type	Performed By	Code References and Notes
	S/A6. NONDESTRUCTIVE TESTING:			
	Test or Special Inspection	Type	Performed By	Code References and Notes
☑	b. Magnetic Particle	Test	LOR	1705A.2.1, 1705A.2.5; AISC 341-16 J6.2, AISC 360-16 N5.5; AWS D1.1, AWS D1.8; DSA IR 17-2.
	S/A11. Other Steel			
	Test or Special Inspection	Type	Performed By	Code References and Notes
☑	a. Shop Welding - Inspect welding of cold-formed steel Periodic/Special Inspector	Periodic	SI	
☑	b. Shop Welding - Inspect welding of steel floor deck welds Periodic/Special Inspector	Periodic	SI	
☑	c. Hollow bolts	Continuous	PI	Verify the torque installation torque

1. Structural Testing and Inspection: Laboratory Verified Report Form DSA 291
2. Concrete Batch Plant Inspection: Laboratory Verified Report Form DSA 291
3. Shop Welding Inspection: Laboratory Verified Report Form DSA 291, or, for independently contracting SI, Special Inspection Verified Report Form DSA 292
4. Field Welding Inspection: Laboratory Verified Report Form DSA 291, or, for independently contracting SI, Special Inspection Verified Report Form DSA 292

☐ CONSTRUCTION OF PERMANENT MODULAR RELOCATABLE BUILDING - CONCRETE FLOOR / CONCRETE FOUNDATION

DSA 103-22: LISTING OF STRUCTURAL TESTS & SPECIAL INSPECTIONS, 2022 CBC

Application Number:	School Name:	School District:
04-122050	PC	PC
DSA File Number:	Increment Number:	Date Created: 2023-11-01 15:11:51

2022 CBC

IMPORTANT: This form is only a summary list of structural tests and some of the special inspections required for the project. Generally, the structural tests and special inspections noted on this form are those that will be performed by the Geotechnical Engineer of Record, Laboratory of Record, or Special Inspector. The actual complete test and inspection program must be performed as detailed on the DSA approved documents. The appendix at the bottom of this form identifies work NOT subject to DSA requirements for special inspection or structural testing. The project inspector is responsible for providing inspection of all facets of construction, including but not limited to, special inspections not listed on this form such as structural wood framing, high-load wood diaphragms, cold-formed steel framing, anchorage of non-structural components, etc., per Title 24, Part 2, Chapter 17A (2022 CBC).

**NOTE: Undefined section and table references found in this document are from the CBC, or California Building Code.

KEY TO COLUMNS

1. TYPE	2. PERFORMED BY
Continuous – Indicates that a continuous special inspection is required	GE (Geotechnical Engineer) – Indicates that the special inspection shall be performed by a registered geotechnical engineer or his or her authorized representative.
Periodic – Indicates that a periodic special inspection is required	LOR (Laboratory of Record) – Indicates that the test or special inspection shall be performed by a testing laboratory accepted in the DSA Laboratory Evaluation and Acceptance (LEA) Program. See CAC Section 4-335.
Test – Indicates that a test is required	PI (Project Inspector) – Indicates that the special inspection may be performed by a project inspector when specifically approved by DSA.
	SI (Special Inspection) – Indicates that the special inspection shall be performed by an appropriately qualified/approved special inspector.

Geotechnical Reports: Project does NOT have and does NOT require a geotechnical report

	S2. SOIL COMPACTION AND FILL:			
	Test or Special Inspection	Type	Performed By	Code References and Notes
☑	a. Verify use of proper materials, densities and inspect lift thicknesses, placement and compaction during placement of fill.	Continuous	LOR*	* Under the supervision of a geotechnical engineer or LOR's engineering manager. Refer to specific items identified in the Appendix listing exemptions for limitations.
☑	b. Compaction testing.	Test	LOR*	* Under the supervision of a geotechnical engineer or LOR's engineering manager. Refer to specific items identified in the Appendix listing exemptions for limitations.
	C1. CAST-IN-PLACE CONCRETE			
	Test or Special Inspection	Type	Performed By	Code References and Notes
☑	a. Verify use of required design mix.	Periodic	SI	Table 1705A.3 Item 5, 1910A.1.
☑	b. Identifiy, sample, and test reinforcing steel.	Test	LOR	1910A.2; ACI 318-19 Ch.20 and Section 26.6.1.2; DSA IR 17-10. (See Appendix (end of this form) for exemptions.)
☑	c. During concrete placement, fabricate specimens for strength tests, perform slump and air content tests, and determine the temperature of the concrete.	Test	LOR	Table 1705A.3 Item 6; ACI 318-19 Sections 26.5 & 26.12.
☑	d. Test concrete (f'_c).	Test	LOR	1905A.1.17; ACI 318-19 Section 26.12.
☑	e. Batch plant inspection: Continuous	See Notes	SI	Default of 'Continuous' per 1705A.3.3. If approved by DSA, batch plant inspection may be reduced to 'Periodic' subject to requirements in Section 1705A.3.3.1, or eliminated per 1705A.3.3.2. See IR 17-13. (See Appendix (end of this form) for exemptions.)
	S/A3. WELDING:			
	Test or Special Inspection	Type	Performed By	Code References and Notes
☑	a. Verify weld filler material identification markings per AWS designation listed on the DSA-approved documents and the WPS.	Periodic	SI	1705A.2.5, Table 1705A.2.1 Items 4 & 5; AWS D1.1 and AWS D1.8 for structural steel; AWS D1.2 for Aluminum; AWS D1.3 for cold-formed steel; AWS D1.4 for reinforcing steel; DSA IR 17-3.
☑	b. Verify weld filler material manufacturer's certificate of compliance.	Periodic	SI	DSA IR 17-3.
☑	c. Verify WPS, welder qualifications and equipment.	Periodic	SI	DSA IR 17-3.
	Test or Special Inspection	Type	Performed By	Code References and Notes
	S/A5. FIELD WELDING (IN ADDITION TO SECTION S/A3):			
	Test or Special Inspection	Type	Performed By	Code References and Notes
☑	b. Inspect single-pass fillet welds ≤ 5/16".	Periodic	SI	Table 1705A.2.1 Item 5a.5; AISC 360-16 (AISC 341-16 as applicable); DSA IR 17-3.

1. Structural Testing and Inspection: Laboratory Verified Report Form DSA 291
2. Concrete Batch Plant Inspection: Laboratory Verified Report Form DSA 291
3. Field Welding Inspection: Laboratory Verified Report Form DSA 291, or, for independently contracting SI, Special Inspection Verified Report Form DSA 292

☐ RELOCATION OF CERTIFIED RELOCATABLE BUILDING

American Modular Systems
787 Spreckels Ave., Manteca, CA 95336
Phone (209) 825-1921 Fax (209) 825-7018
www.americanmodular.com

INTELLECTUAL-PROPERTY & PROPRIETARY RIGHTS STATEMENT
COPYRIGHT © AMERICAN MODULAR SYSTEMS (AMS)
AMS OWNS ALL COPYRIGHT AND OTHER INTELLECTUAL-PROPERTY AND PROPRIETARY RIGHTS IN THESE DRAWINGS, SPECIFICATIONS, AND THE MATERIAL CONTAINED HEREIN. CERTAIN ELEMENTS SHOWN IN THESE DOCUMENTS ARE REGISTERED TRADEMARKS OF AMS. ALL PATENTABLE MATERIALS CONTAINED IN THESE DOCUMENTS AND ORIGINATING WITH AMS WILL REMAIN THE SOLE PROPERTY OF AMS. THESE DRAWING, SPECIFICATIONS, AND THE MATERIAL CONTAINED HEREIN MAY NOT BE REPRODUCED, TRANSMITTED, COPIED, DISTRIBUTED, MODIFIED, OR OTHERWISE DISPOSED OF (DIRECTLY OR INDIRECTLY) AND MAY NOT BE USED (IN WHOLE OR IN PART) TO ASSIST IN THE CONSTRUCTION, DESIGN, OR OTHER MAKING OF, OR FOR THE PURPOSE OF FURNISHING ANY INFORMATION FOR THE CONSTRUCTION, DESIGN, OR OTHER MAKING OF, ANY BUILDINGS (MODULAR OR OTHERWISE), DRAWINGS, SPECIFICATIONS, PRINTS, APPARATUS, OR PARTS THEREOF, EXCEPT AS EXPRESSLY PERMITTED BY WRITTEN CONSENT OF, OR IN A WRITTEN AGREEMENT WITH, AMS. SUBMITTAL OR DISTRIBUTION TO MEET OFFICIAL REGULATORY REQUIREMENTS WILL NOT BE CONSTRUED AS PUBLICATION IN DEROGATION OF AMS'S COPYRIGHT OR OTHER INTELLECTUAL-PROPERTY OR PROPRIETARY RIGHTS.

PRE-CHECKED SET NAME
24' x 40' THRU 120' x 40'
STANDARD MODULAR BUILDING
(LOW SEISMIC)
FORM

SITE SPECIFIC PROJECT NAME
.
.
.

APPROVED
DIV. OF THE STATE ARCHITECT
APP: 04-122050 PC
REVIEWED FOR
SS ☑ FLS ☑ ACS ☑ CG ☑
DATE: 12/11/2023

☐ 2022 CBC PRE-CHECK (PC) DOCUMENT
A SEPARATE PROJECT APPLICATION FOR CONSTRUCTION IS REQUIRED.

MANUFACTURER PROFESSIONAL OF RECORD ON PC

LICENSED ARCHITECT
RANDALL PATRICK CAVANAGH
No. C12631
Ren. 3-31-25
STATE OF CALIFORNIA

THESE DRAWINGS ARE PRELIMINARY AND NOT FOR CONSTRUCTION UNLESS STAMPED & SIGNED BY THE DESIGN PROFESSIONAL OF RECORD.

REVISIONS
1
2
3
4

DRAWN BY:	AA
SCALE:	AS NOTED
DATE:	MM/DD/YY
PROJECT NO:	XXXX-22

SHEET TITLE:
FORM
DSA-103

SHEET NUMBER:
D2

IDENTIFICATION STAMP
DIV. OF THE STATE ARCHITECT
APP: 02-122976 INC:
REVIEWED FOR
SS ☑ FLS ☑ ACS ☑
DATE: 03/12/2025

TRACY
UNIFIED SCHOOL DISTRICT

HMC Architects

3595001000

2101 CAPITOL AVENUE, SUITE 100
SACRAMENTO, CA 95816
916 368 7990 / www.hmcarchitects.com

ISSUE

Δ	DESCRIPTION	DATE
A	ADDENDUM "A"	3/20/25

KEYNOTES

GENERAL NOTES

FACILITY:
JACOBSON ELEMENTARY SCHOOL
1750 W KAVANAGH AVE
TRACY, CA 95376

PROJECT:
JACOBSON ES - TK CLASSROOM

SHEET NAME:
FORM DSA-103

DATE: **04/03/24** CLIENT PROJ NO: **3595001000**

SHEET:
D2

ADDENDUM "A"

PLEASE RECYCLE

Autodesk Docs://3595005000 TUSD TK CLASSROOMS 2025 R22/3595005000-A-TUSD-BOHN-SITE.rvt
12/3/2024 9:55:40 AM

THE LINE SHOWN ABOVE IS EXACTLY ONE INCH LONG AT THIS SHEETS ORIGINAL PAGE SIZE

SECTION 1 GENERAL REQUIREMENTS

1. GENERAL
   - A. THE REQUIREMENTS OF THE GENERAL CONDITIONS OF THE AGREEMENT AND THIS GENERAL REQUIREMENT APPLY TO THE SEVERAL TRADE SECTIONS WITH THE SAME FORCE AS THOUGH FULLY REPEATED IN EACH TRADE SECTION.
   - B. NAME BRANDS ARE INDICATED TO ESTABLISH A STANDARD OF QUALITY. ITEMS OF EQUAL OR BETTER QUALITY MAY BE SUBSTITUTED FOR THE LISTED BRAND NAMED PRODUCTS WITH THE WRITTEN APPROVAL OF D.S.A. AND THE RDPRC.
   - C. ALL WORK SHALL COMPLY WITH THE REQUIREMENTS OF TITLES 19 AND 24 CALIFORNIA CODE OF REGULATIONS, 2022 C.B.C. NO CHANGES SHALL BE MADE FROM D.S.A. APPROVED DRAWINGS OR SPECIFICATIONS WITHOUT PRIOR WRITTEN APPROVAL OF D.S.A. AND THE RDPRC.
2. SCOPE OF WORK
   - A. THE WORK CONSISTS OF MANUFACTURING OFF-SITE IN A PLANT AND INSTALLING ON-SITE, MODULAR RELOCATABLE BUILDINGS AS DEFINED HEREIN AND SHOWN AND DETAILED ON DRAWINGS.
   - B. ALL REQUIREMENTS OF TITLE 24 OF THE STATE OF CALIFORNIA, CODE OF REGULATIONS, RELATING TO INSPECTIONS AND VERIFIED REPORTS SHALL BE COMPLIED WITH AND SHALL INCLUDE:
     1. GENERAL RESPONSIBLE CHARGE OF FIELD ADMINISTRATION TO BE PROVIDED BY THE RDPRC.
     2. INSPECTION IN-PLANT DURING THE COURSE OF CONSTRUCTION BY AN INSPECTOR APPROVED BY THE DIVISION OF THE STATE ARCHITECT AND THE DISTRICT ARCHITECT. THE INSPECTOR SHALL BE RESPONSIBLE FOR AND APPROVED TO INSPECT THE GENERAL CONSTRUCTION WELDING, MECHANICAL, AND ELECTRICAL WORK. COST OF THESE INSPECTIONS SHALL BE BORNE BY THE SCHOOL DISTRICTS.
     3. ON-SITE INSPECTION OF THE BUILDING INSTALLATION ELECTRICAL AND UTILITY INSTALLATION OR CONNECTIONS BY AN INSPECTOR APPROVED BY THE DIVISION OF THE STATE ARCHITECT AND THE DISTRICT ARCHITECT AND RETAINED BY THE SCHOOL DISTRICT.
     4. OTHER SPECIAL TESTS OR INSPECTIONS AS MAY BE REQUIRED BY THE DIVISION OF THE STATE ARCHITECT.
     5. ADDENDUMS SHALL BE SIGNED BY THE RDPRC & APPROVED BY D.S.A.
     6. CHANGES TO CONSTRUCTION DOCUMENT AFFECTING ACS, FLS & SSS SHALL BE SIGNED BY THE OWNER & THE RDPRC & APPROVED BY D.S.A. PRIOR TO COMMENCING WORK. CHANGES TO THE CONSTRUCTION COST ARE REPORTED TO D.S.A. USING FORM DSA-168 AT THE CONCLUSION OF THE PROJECT.
     7. THE TESTING LAB SHALL BE IN THE EMPLOY OF THE OWNER.
     8. ALL CONTRACTORS SHALL VERIFY ALL WORK CONDITIONS, DIMENSIONS AND DETAILS AND REPORT ANY OR ALL OMISSIONS AND DISCREPANCIES TO THE RDPRC/OWNER IMMEDIATELY BEFORE COMMENCING WORK.
     9. EACH CONTRACTOR TO BE RESPONSIBLE TO SEE THAT THEIR WORK CONFORMS TO ALL GOVERNMENTAL CODES WHETHER OR NOT SO STATED ON THE DRAWINGS.
     10. ALL MATERIALS AND WORKMANSHIP TO CONFORM TO THE LATEST REQUIREMENTS OF THE GOVERNING BUILDING CODES IN EFFECT AT TIME OF DSA APPLICATION.
     11. ALL MANUFACTURED ARTICLES, MATERIALS AND EQUIPMENT SHALL BE APPLIED, INSTALLED, CONNECTED AND ERECTED PER MANUFACTURER'S DIRECTIONS AND INSTRUCTIONS.
     12. SHOP DRAWINGS MAY BE REQUIRED. IF SO, THEY WILL BE ACCURATELY DRAWN TO A LARGE ENOUGH SCALE TO SHOW ALL PERTINENT FEATURES OF THE ITEM AND ITS CONNECTION TO RELATED WORK.
     13. THE MANUFACTURER OF BUILDING IS TO PLACE TWO PERMANENT METAL IDENTIFICATION LABEL ON EACH MODULE, MECHANICALLY FASTENED TO THE FRAME SEE "GENERAL DESIGN REQUIREMENTS", SHEET N2.0. FOR PROJECTS MANUFACTURED OFF-SITE, THE PLANT INSPECTOR IS TO INDICATE THE MANUFACTURER'S NAME AND SERIAL NUMBER OF EACH MODULE ON THE VERIFIED REPORT AND D.S.A. APP. NUMBER.
     14. ALL TESTS AND INSPECTIONS REQUIRED BY DSA SHALL BE COMPLIED WITH. ALL TESTS REQUIRED BY FIRE AND LIFE SAFETY REGULATIONS SHALL BE BY A NATIONALLY RECOGNIZED TESTING LABORATORY.

SECTION 2 FOUNDATION

1. ASSUMED ALLOWABLE SOIL BEARING:
   - 1500 P.S.F. FOR CONCRETE FOUNDATIONS EMBEDDED 12" MINIMUM BELOW GRADE. (1/3 INCREASE IN SOIL BEARING CAPACITY NOT PERMITTED FOR WIND & SEISMIC LOAD COMBINATIONS UNLESS USING ALTERNATIVE BASIC LOAD COMBINATIONS PER CBC SECTION 1605A.3.2)
2. FOOTINGS SHALL BE LOCATED ON UNDISTURBED, FIRM, NATURAL SOIL OR APPROVED COMPACTED FILL.
3. WORK NOT INCLUDED:
   - A. ALL ON-SITE OR OFF-SITE UTILITIES AND THE CONNECTION OF THEM TO THE BUILDING UNLESS INDICATED ON THE DRAWINGS.
   - B. ALL LEVELING, GRADING OR OTHER SITE PREPARATION EXCEPT CONCRETE OR WOOD LEVELING STRIPS WHERE REQUIRED, UNLESS OTHERWISE INDICATED ON THE DRAWINGS.
   - C. FIRE ALARM SYSTEM, PROGRAM BELL, PUBLIC ADDRESS SYSTEM, INTERCOM SYSTEM, TV, TELEPHONE SYSTEM, UNLESS OTHERWISE INDICATED ON THE DRAWINGS, OR MODIFIED BY CHANGE ORDER.
4. WHEELS AND HITCH SHALL REMAIN THE PROPERTY OF THE CONTRACTOR.
5. ACCESSIBILITY OF SITE: THE SCHOOL DISTRICT SHALL PROVIDE ACCESS TO THE SITE FOR THE INSTALLATION OF BUILDINGS. REMOVAL OF TREES, SHRUBS, FENCING, SPRINKLERS ETC. NECESSARY FOR THE MOVE-IN OF BUILDINGS SHALL BE THE RESPONSIBILITY OF THE SCHOOL DISTRICT.

SECTION 3 CONCRETE

1. CONCRETE CONSTRUCTION SHALL CONFORM TO ACI 318-19.
2. THE MINIMUM 28 DAY STRENGTH AND TYPE OF CONCRETE SHALL BE AS FOLLOWS:
   FOUNDATIONS..........PER SHEET N1.0A (150 PCF)
   FOUNDATION VENTS & ACCESS WELLS..........PER SHEET N1.0A (150 PCF)
   CONCRETE OVER METAL DECK..........3000 PSI (110 PCF)
3. THE MAXIMUM WATER TO CEMENT (W/C) RATIO SHALL BE PER SHEET N1.0A FOR FOUNDATIONS AND 0.45 FOR CONCRETE OVER METAL DECK SLABS.
4. CONCRETE SLUMP SHALL BE 4" ± 1" PRIOR TO ADDING ANY WATER REDUCING ADMIXTURES. CONCRETE SLUMP SHALL NOT EXCEED 8"± 1 ½" WHEN USING A WATER REDUCING ADMIXTURE.
5. CEMENT SHALL CONFORM TO ASTM C150. CEMENT TYPE SHALL BE PER SHEET N1.0A FOR FOUNDATIONS, TYPE I OR II FOR CONCRETE OVER METAL DECK SLABS.
   - A. FLY ASH SHALL CONFORM TO ASTM C618 CLASS 'F' OR 'N' AND SHALL NOT EXCEED 15% CEMENT REPLACEMENT BY WEIGHT.
   - B. SLAG CEMENT SHALL CONFORM TO ASTM C989, GRADE 100 OR 120 AND SHALL NOT EXCEED 50% CEMENT REPLACEMENT BY WEIGHT.
   - C. COMBINATION OF FLY ASH & SLAG CEMENT SHALL NOT EXCEED 50% CEMENT REPLACEMENT BY WEIGHT.
6. CONCRETE AGGREGATES:
   - A. NATURAL SAND AND ROCK AGGREGATES SHALL CONFORM TO ASTM C33.
   - B. LIGHTWEIGHT AGGREGATE SHALL CONFORM TO ASTM C330.
   - C. MAX AGGREGATE SIZE SHALL BE 1"±1/4" FOR NORMAL WT. CONCRETE EXCEPT 3/8" OR 1/2" MAX MAY BE USED FOR FOUNDATION VENTS & ACCESS WELLS.
   - D. MAX AGGREGATE SIZE SHALL BE 3/8" OR 1/2" FOR LIGHT WT. CONCRETE.
7. REINFORCING SHALL CONFORM TO ASTM A615-GRADE 60, UNLESS OTHERWISE NOTED.

CONCRETE continued

8. CONCRETE COVER OVER REINFORCING STEEL SHALL BE AS FOLLOWS, UNLESS OTHERWISE NOTED ON DRAWINGS:
   CONCRETE DIRECTLY AGAINST GROUND (EXCEPT SLABS)..........3"
   CONCRETE EXPOSED TO GROUND BUT PLACED IN FORMS..........2"
   SLABS (ON GROUND)..........POSITION IN CENTER OF SLAB
9. ALL BARS SHALL HAVE A CLASS B MINIMUM LAP SPLICE PER DETAILS 6 & 9/S1.4 AND SPLICES IN ADJACENT BARS SHALL BE STAGGERED, U.N.O.
10. REINFORCING BARS SHALL NOT BE WELDED UNLESS SPECIFICALLY DETAILED IN THE APPROVED DRAWINGS. BARS DETAILED TO BE WELDED SHALL BE ASTM A706 BARS AND WELDING ELECTRODES SHALL BE E80XX. WELDING SHALL CONFORM WITH AWS D1.4-2017 AND SHALL BE CONTINUOUSLY INSPECTED.
11. WELDED WIRE FABRIC SHALL CONFORM TO ASTM A185 AND SHALL BE LAP SPLICED TWO SQUARES MINIMUM EACH DIRECTION.
12. NOTIFY THE RDPRC PRIOR TO PLACING CONCRETE.
13. CHEMICAL ADMIXTURES SHALL CONFORM TO ASTM C494.
14. AIR-ENTRAINING ADMIXTURE SHALL CONFORM TO ASTM C260.
15. NON-SHRINK GROUT: ASTM C1107, 5000 PSI MIN AT 7 DAYS.

SECTION 5 STEEL

1. GENERAL - ALL WORK SHALL CONFORM TO THE REQUIREMENTS OF AISC 360-16, TITLE 24 OF CALIFORNIA CODE OF REGULATIONS SECTION 2212A.1.2, AND THE AMERICAN IRON AND STEEL INSTITUTE SPECIFICATIONS FOR DESIGN OF STEEL STRUCTURAL MEMBERS. A COPY OF TITLE 24 SHALL BE KEPT AT THE JOBSITE AT ALL TIMES.
   - A. FABRICATION AND ERECTION SHALL COMPLY WITH AISC 360-16 CHAPTER 'M' AND AISC 341-16 CHAPTER 'I'.
2. WELDING - ALL WELDING SHALL COMPLY WITH REQUIREMENTS OF THE "STRUCTURAL WELDING CODE" OF THE AMERICAN WELDING SOCIETY AND WELDING DONE BY OPERATORS QUALIFIED BY TESTS ACCEPTABLE TO THE DIVISION OF THE STATE ARCHITECT. WELDING INSPECTION PER TITLE 24, PART 2, CCR, SECTIONS 1705A.2.5. WELDING ELECTRODES, IF UTILIZED, SHALL BE E70XX. ALL WELDS USED IN PRIMARY MEMBERS AND CONNECTIONS IN THE LATERAL FORCE-RESISTING SYSTEMS SHALL BE MADE WITH A FILLER METAL THAT HAS A MINIMUM CHARPY V-NOTCH TOUGHNESS OF 20FT-LBS AT ZERO DEGREES F AND COMPLYING WITH AWS D1.8-2016. SECTION 6.1.
3. STRUCTURAL STEEL SHAPES SHALL CONFORM TO THE FOLLOWING:
   - A. WIDE FLANGE BEAMS SHALL CONFORM TO ASTM A992, GRADE 50, TYP. U.N.O.
   - B. STRUCTURAL STEEL CHANNELS SHALL CONFORM TO ASTM A36 (36 KSI) TYP. U.N.O. WHERE DRAWINGS SPECIFY 50 KSI, CHANNELS SHALL CONFORM TO ASTM A572, GR. 50. NOTE: ASTM A572, GR. 50 MAY BE SUBSTITUTED FOR ASTM A36 (36 KSI).
   - C. PIPE COLUMNS SHALL CONFORM TO ASTM A-53 WITH SULFUR CONTENT NOT EXCEEDING 0.05% TYP. U.N,O.
   - D. STRUCTURAL STEEL TUBING (HSS) FOR STEEL MOMENT FRAME COLUMNS PER SHEET S5.0 SHALL CONFORM TO ASTM A1085. ALL OTHER STEEL TUBING (HSS) MAY CONFORM TO ASTM A500 GRADE B OR C OR ASTM A1085, TYP UNO.
   - E. STEEL PLATES, ANGLES, BARS AND MISC. SHAPES SHALL CONFORM TO ASTM A36 (36 KSI) TYP. U.N.O. WHERE DRAWINGS SPECIFY 50 KSI, STEEL SHALL CONFORM TO ASTM A572, GR. 50. NOTE: ASTM A572, GR. 50. MAY BE SUBSTITUTED FOR ASTM A36 (36 KSI).
4. ERECTION - STRUCTURAL STEEL ERECTED TRUE, STRAIGHT, PLUMB AND TO ITS DESIGNATED LOCATIONS. FIELD CONNECTIONS BOLTED OR WELDED AS INDICATED ON THE DRAWINGS.
5. NAILS, BOLTS, SCREWS AND NUTS, ETC. - FOR EXTERIOR WORK SHALL BE CADMIUM PLATED OR GALVANIZED.
   - A. BOLTS FOR STRUCTURAL STEEL CONNECTIONS SHALL CONFORM TO ASTM A-307 UNLESS OTHERWISE NOTED. ALL HOLES FOR BOLTS THRU STEEL TO BE DRILLED, OR TORCHED PILOT HOLE AND REAMED TO DIAMETER OF BOLT +1/16" UNLESS OTHERWISE NOTED. NELSON STUDS (WELDED TO STEEL) MAY BE SUBSTITUTED FOR BOLTS SAME LENGTH AND DIAMETER.
   - B. SEE "FASTENERS FOR ATTACHMENT TO STEEL" ON SHEET N2.0 FOR SHOT PINS & SCREWS.
6. HANDRAILS - FABRICATED, AS DETAILED, NON-FILLET WELDS GROUND SMOOTH.
7. SHOP PAINT
   - A. EXPOSED STEEL COATED WITH ONE SHOP COAT OF RED OXIDE PRIMER.
   - B. ALL SURFACES THOROUGHLY CLEANED BY EFFECTIVE MEANS PRIOR TO APPLICATION OF SHOP COATS.
8. TESTS
   - A. PROVIDE MILL CERTIFICATES OR TEST ALL STEEL MEMBERS PER TITLE-24 PART 2, CCR SECTION 1705A.2 & 2202A.

SECTION 6 CARPENTRY

1. SCOPE OF WORK
   CONTRACTOR SHALL PROVIDE ALL LABOR, MATERIALS AND SERVICES TO INSTALL CARPENTRY.
2. MATERIALS
   LUMBER GRADE MARKED IN ACCORDANCE WITH AN APPROVED GRADING AGENCY PER DOC PS20-20 INCLUDING "STANDARD GRADING AND DRESSING RULES NO. 17" OF WEST COAST LUMBER INSPECTION BUREAU, OR "WESTERN LUMBER GRADING RULES", LATEST EDITION OF WESTERN WOOD PRODUCTS ASSOCIATION. OSB OR PLYWOOD GRADE MARKED IN ACCORDANCE WITH PRODUCT STANDARD PS 1-19, PS 2-19, OR PRP-108 FOR SOFTWOOD OSB OR PLYWOOD, OF THE AMERICAN PLYWOOD ASSOCIATION (APA). EACH SHEET SHALL BEAR THE STAMP OF APA, PITTSBURGH TESTING, OR TECO. MOISTURE CONTENT SHALL NOT EXCEED 19%.
   - A. JOISTS, HEADERS, PLATES, STUDS: DOUGLAS FIR S4S #2 OR HEM FIR S4S #2 MINIMUM, U.N.O. NOTE: MSR 1650 E1.5 MAY BE SUBSTITUTED FOR #2 GRADE IF IT MEETS THE STRUCTURAL REQUIREMENTS FOR FLOOR AND ROOF MEMBERS.
   - B. PSL HEADERS: TRUS JOIST PARALLAM PSL BY WEYERHAEUSER (ICC ESR-1387) OR EQUIV. MEETING THE FOLLOWING STRUCTURAL PROPERTIES:

BEAMS ≤ 7" DEEP & COLUMNS	BEAMS ≥ 9¼" DEEP
F_b = 2400 PSI MIN.	F_b = 2900 PSI MIN.
F_v = 190 PSI MIN.	F_v = 290 PSI MIN.
E = 1.8E6 PSI MIN.	E = 2.0E6 PSI MIN.

   - C. POSTS AND TIMBERS: DOUGLAS FIR S4S #1 OR HEM FIR S4S #1 MIN.
   - D. BLOCKING: DOUG FIR #3, OR HEM FIR #3, OR STD. & BET.
   - E. SILLS AND LUMBER & SHIM PLATES IN CONTACT WITH CONCRETE, MASONRY OR EARTH: DOUG FIR #2 OR HEM FIR #2 MIN. PRESSURE TREATED IN ACCORDANCE WITH CBC 2304.12.1. EACH PIECE SHALL BEAR AWPA STAMP. AWPA STANDARD U1 & T1 GROUND CONTACT, D.F. (OR H.F.) #2 ABOVE GROUND.
   - F. MOISTURE BARRIER: KRAFT WATERPROOF BUILDING PAPER, OR 15 LB. FELT, CBC SECTION 1403.2. & ASTM D226, TYPE I.
   - G. STUDS - S4S DOUG FIR #2 OR #2 HEM FIR. MAXIMUM MOISTURE CONTENT OF 19% AT TIME OF INSTALLATION.
   - H. FASTENERS - EXTERIOR USE FASTENERS EXPOSED TO THE OUTSIDE ENVIRONMENT (INCLUDING FASTENERS USED FOR THE ATTACHMENT OF EXTERIOR WALL COVERINGS) SHALL BE CORROSION RESISTANT IN ACCORDANCE WITH C.B.C. SECTION 2304.10.1.1.
   - I. BUILDING TRIM - 2x RESAWN SELECT D.F., H.F., OR CEDAR.
   - J. DOOR/WINDOW TRIM - 1x4 RESAWN D.F., H.F., OR CEDAR.
   - K. FRAMING CONNECTORS SHALL BE FROM SIMPSON CATALOG LATEST ED.
   - L. FIRE BLOCKS SHALL CONFORM TO CBC SECTION 718.2
   - M. ALL NAILS SHALL BE COMMON NAILS PER ASTM F1667 UNLESS OTHERWISE NOTED.
   - N. ALL CUT ENDS AND HOLES IN PRESSURE TREATED LUMBER SHALL BE TREATED WITH "CUPRINOL".
   - O. ALL BOLTS AND LAG SCREWS SHALL COMPLY WITH THE 2018 NATIONAL DESIGN SPECIFICATION FOR WOOD CONSTRUCTION (ANSI\AWC NDS-2018).

CARPENTRY continued

   - P. HOLES FOR BOLTS IN WOOD SHALL BE BORED WITH A BIT OF THE SAME NOMINAL DIAMETER AS THE BOLT + 1/16".
   - Q. HOLES FOR LAG SCREWS SHALL BE FIRST BORED TO THE SAME NOMINAL DIAMETER AND DEPTH AS THE SHANK. THE REMAINDER OF THE HOLE SHALL BE 40% TO 70% OF THE SHANK DIAMETER.
   - R. ALL BOLTS AND LAG SCREWS SHALL BE PROVIDED WITH METAL WASHERS UNDER HEADS AND NUTS WHICH BEAR ON WOOD.
3. WORKMANSHIP
   - A. FRAMING - SECURELY NAILED, BRIDGED AND BLOCKED TO FORM RIGID STRUCTURE. WORK CUT, FITTED AND ASSEMBLED LEVEL PLUMB AND TRUE TO LINE. TRIM IN AS LONG LENGTHS AS POSSIBLE WITH ALL STANDING TRIM IN ONE PIECE. TRIM SEALED AT ALL EDGES.
   - B. NAILING - IN ACCORDANCE WITH TITLE 24, CALIFORNIA BUILDING CODE, TABLE 2304.10.1.
   - C. EXTERIOR WALLS - FACTORY FABRICATED. CAULKING PROVIDED BETWEEN PERIMETER OF WALL AND STRUCTURAL MEMBERS PROVIDING WEATHER-PROOF AND WATER-TIGHT SEAL. NECESSARY CLOSERS, SEALS, AND FLASHINGS PLACED AT TOP AND BASE SUPPORT OF PANELS AND AROUND OPENINGS.
   - D. NAILS INTO P.T. LUMBER TO BE HOT DIPPED GALVANIZED.
   - E. MACHINE APPLIED NAILING: USE OF MACHINE NAILING IS SUBJECT TO A SATISFACTORY JOBSITE DEMONSTRATION FOR EACH PROJECT AND THE APPROVAL BY THE RDPRC AND THE DIVISION OF THE STATE ARCHITECT. THE APPROVAL IS SUBJECT TO CONTINUED SATISFACTORY PERFORMANCE. MACHINE NAILING WILL NOT BE APPROVED IN 5/16" OSB. IF NAILHEADS PENETRATE THE OUTER PLY MORE THAN WOULD BE NORMAL FOR A HAND HAMMER OR IF MINIMUM ALLOWABLE EDGE DISTANCES ARE NOT MAINTAINED THE PERFORMANCE WILL BE DEEMED UNSATISFACTORY.
   - F. MOISTURE BARRIER - APPLIED TO STUDS WEATHER-BOARD FASHION, HORIZONTAL JOINTS LAPPED MIN 6" INCLUDING BUILDING CORNERS. SHEATHING APPLIED OVER MOISTURE BARRIER.
   - G. TRIM SEALED AT ALL EDGES. SEALANT PAINTED TO MATCH TRIM OR SIDING UNLESS TRANSPARENT TYPE.

SECTION 7A SHEET METAL (NON-STRUCTURAL)

1. SCOPE OF WORK
   CONTRACTOR SHALL PROVIDE ALL LABOR, MATERIALS AND SERVICES TO INSTALL INDICATED SHEET METAL.
2. MATERIALS
   - A. SHEET METAL - STEEL SHEETS HOT DIP GALVANIZED WITH 1.25 OZ. PER SQUARE FOOT ZINC COATING CONFORMING TO ASTM A653 MINIMUM 26 GA. UNLESS OTHERWISE NOTED ON THE DRAWINGS.
   - B. SOLDER - OF STAND, GRADE "A" OF EQUAL PARTS, ARD BRAND, LEAD AND TIN ASTM B32.
   - C. FLUX - ZINC SATURATED MURIATIC ACID.
   - D. GUTTERS: 26 GA. G-90 GALV. STEEL
     DOWNSPOUTS: 2"x3" CONVOLUTED 30 GA. G-90 GALV. STEEL
     GUTTER ENDCAPS: 26 GA. G-90 GALV. STEEL
     GUTTER CLIPS: 18 GA. G-90 GALV. STEEL
     FLASHING: 22 GA. G-90 GALV. STEEL U.O.N.
   - E. FASTENERS:
     SELF-DRILLING OR SELF-TAPPING SHEET METAL SCREWS.
     LENGTH TO HAVE (3) EXPOSED THREADS MIN.
3. WORKMANSHIP
   SHEET METAL ACCURATELY FORMED TO DIMENSIONS AND SHAPES DETAILED WITH TRUE STRAIGHT LINES, CORNERS AND ANGLES. FLASHING INSTALLED IN LONGEST LENGTHS POSSIBLE. EXTERIOR WORK FORMED, FABRICATED AND INSTALLED SO THAT IT ADEQUATELY PROVIDES FOR EXPANSION AND CONTRACTION IN THE COMPLETED WORK AND FINISHES WATER AND WEATHER TIGHT. ALUMINUM SHALL BE SEPARATED FROM FERROUS METAL BY POLYETHYLENE TAPE OR FLOOD COAT OF ASPHALTIC PAINT.

SECTION 7B METAL ROOFING

1. SCOPE OF WORK
   CONTRACTOR SHALL PROVIDE ALL LABOR, MATERIALS AND SERVICES TO INSTALL METAL ROOFING.
2. MATERIALS
   - A. ROOF SHALL BE CONSTRUCTED OF 3" STANDING SEAM INTERLOCKING (UN-PENETRATED) STEEL SHEETS.
   - B. PROPERTIES INCLUDING THICKNESS SHALL BE PER SHEET S0.0.
   - C. BASE MATERIAL SHALL BE EITHER ASTM A1011 SS, GRADE 36 (Fy = 36 KSI) OR ASTM A653 SS, GRADE 37 (Fy = 37 KSI) AND SHALL BE GALVANIZED WITH G90 GALVANIZATION.
   - D. SHEETS MAY BE PAINTED.
   - E. CLASS B FIRE RATED.
   - F. CLIP ANGLES SHALL BE HOT-DIPPED GALVANIZED.
   - G. FASTENERS SHALL BE EXTERIOR USE SCREWS WITH A CORROSION PROTECTIVE COATING PER THE "FASTENERS FOR ATTACHMENT TO STEEL" SECTION ON SHEET N2.0. ALL SCREWS USED FOR METAL ROOFING ATTACHMENT SHALL HAVE A NEOPRENE OR EPDM WASHER.

SECTION 7C SEALANT

1. SCOPE OF WORK
   CONTRACTOR SHALL PROVIDE ALL LABOR, MATERIAL AND SERVICES TO SEAL BUILDINGS.
2. MATERIALS
   VULKEM SEALANT, POLYURETHANE, MANUFACTURED BY MAMECO INTERNATIONAL FOR ROOFS. "GEOCEL" SILICONIZED CAULK, GE, DUPONT, EAGLESEAL OR DAP FOR ALL OTHER APPLICATIONS, OR EQUAL.
   - A. SEALANT V.O.C. LIMITS PER SCAQMD RULE 1168 (AS SHOWN IN TITLE 24, PART 11, TABLE 5.504.4.1 AND TABLE 5.504.4.2)
3. WORKMANSHIP
   SEALANT APPLIED TO DRY CLEAN SURFACES, WHEREVER INDICATED ON DETAILS AND AS NEEDED TO MAKE BUILDING WATERTIGHT IN ACCORDANCE WITH MANUFACTURER'S SPECIFICATIONS.

SECTION 7D SINGLE-PLY ROOFING

1. SCOPE OF WORK
   CONTRACTOR SHALL PROVIDE ALL LABOR, MATERIAL AND SERVICES TO INSTALL SINGLY-PLY OR BUILT-UP ROOFING. THE ROOFING SYSTEM SHALL WITHSTAND THE UPLIFT OF 100 MPH BASIC WIND SPEED.
2. MATERIALS
   MEMBRANE: PVC FILM LAMINATED TO BOTH SIDES OF A REINFORCEMENT FABRIC, OR EQUIV. - PROPRIETARY THERMOPLASTIC PVC FORMULATION OF RESINS, PLASTICIZERS, STABILIZERS, BIOCIDES, FLAME RETARDANTS, AND U.V. ABSORBENTS. CLASS B FIRE RATING.
   - A. WOOD NAILERS MUST BE A #2 GRADE LUMBER, OR EQUIVALENT, TO SUBSTRATE.
3. WORKMANSHIP
   MEMBRANE APPLIED ON SUBSTRATES THAT ARE DRY, CLEAN, AND FREE OF FINS, SHARP EDGES AND LOOSE, FOREIGN MATERIALS, WHEREVER INDICATED ON DETAILS. AN INSULATION OR SLIP SHEET HAVING AN APPROVED FACER MUST BE USED WHEN ROOFING OVER ASPHALT OR COAL TAR ROOFS.
4. TESTING:
   - A. MEMBRANE SHALL BE DESIGNED TO PERFORM IN ALL TYPES OF WEATHER AND SHALL COMPLY TO ASTM D-2136 TESTING METHODS.
   - B. MEMBRANE SHALL BE DESIGNED IN ACCORDANCE TO ASTM D-4434 "STANDARD SPECIFICATIONS FOR POLY (VINYL CHLORIDE) SHEET ROOFING" AND BE CLASSIFIED AS A TYPE IV, INTERNALLY REINFORCED SHEET.

SECTION 8 HOLLOW METAL DOORS AND FRAMES

1. SCOPE OF WORK
   CONTRACTOR SHALL PROVIDE ALL LABOR, MATERIALS AND SERVICES TO INSTALL HOLLOW METAL DOORS AND FRAMES.
2. MATERIALS
   - A. DOORS - INSULATED TYPE L FULL FLUSH, MANUFACTURED BY AMWELD MANUFACTURING COMPANY, 18 GA. 1-3/4" THICK PER CS242 MIN, REINFORCE FOR HARDWARE-BOTH FACES FOR CLOSER, SOUND DEADEN INTERIOR.
   - B. FRAMES - 16 GA COLD ROLLED, 2" FACES, CS242 MIN. 3 ANCHORS PER JAMB + ADJUSTABLE FLOOR ANCHOR, EACH JAMB REINFORCE FOR HARDWARE. PROVIDE STRIKE BOX, PROVIDE SOUND DEADENING: 1/8" UNDERCOATING OR INSULATING FILL.
3. WORKMANSHIP
   ALL WORK FABRICATED IN SHOP TO REQUIRED PROFILES BY FORMING AND WELDING, WITH ARISES AND EDGES STRAIGHT, SHARP FIT FABRICATED ACCURATELY WITH SQUARE CORNERS, HAIRLINE JOINTS AND SURFACES FREE FROM WARP, WAVE, BUCKLE OR OTHER DEFECTS AFTER FABRICATION, DOORS AND FRAMES CLEANED THOROUGHLY, ALL WELDS GROUND SMOOTH AND GIVEN PRIME COAT.

SECTION 9A STUCCO (EXTERIOR PORTLAND CEMENT PLASTER)

LATHING AND PLASTERING MATERIALS AND ACCESSORIES SHALL BE MARKED BY THE MANUFACTURER'S DESIGNATION TO INDICATE COMPLIANCE WITH THE APPROPRIATE STANDARDS REFERENCED IN THIS SECTION AND STORED IN SUCH A MANNER TO PROTECT THEM FROM THE WEATHER, PER C.B.C 2507.1.

LATHING AND PLASTERING MATERIALS SHALL CONFORM TO THE STANDARDS LISTED IN C.B.C. TABLE 2507.2 AND CHAPTER 35, AND, WHERE REQUIRED FOR FIRE PROTECTION, SHALL ALSO CONFORM TO THE PROVISIONS OF CHAPTER 7.

GYPSUM BOARD AND GYPSUM PLASTER CONSTRUCTION SHALL BE OF THE MATERIALS LISTED IN C.B.C. TABLES 2506.2 AND 2507.2. THESE MATERIALS SHALL BE ASSEMBLED AND INSTALLED IN COMPLIANCE WITH THE APPROPRIATE STANDARDS LISTED IN TABLES 2508.1 AND 2511.1, AND CHAPTER 35 (PER 2508.1).

WATER-RESISTIVE BARRIERS SHALL BE IN ACCORDANCE WITH C.B.C. SECTION 2510.6. WATER-RESISTIVE BARRIERS SHALL BE INSTALLED AS REQUIRED PER SECTION 1404.2, AND WHERE APPLIED OVER WOOD-BASED SHEATHING, SHALL INCLUDE A WATER-RESISTIVE VAPOR-PERMEABLE BARRIER WITH A PERFORMANCE AT LEAST EQUIVALENT TO TWO LAYERS OF GRADE D PAPER.

EXCEPTION: WHERE THE WATER-RESISTIVE BARRIER THAT IS APPLIED OVER WOOD-BASED SHEATHING HAS A WATER RESISTANCE EQUAL TO OR GREATER THAN THAT 60-MINUTE GRADE D PAPER COMPLYING WITH ASTM E 2556, TYPE II AND IS SEPARATED FROM THE STUCCO BY AN INTERVENING, SUBSTANTIALLY NONWATER-ABSORBING LAYER OR DRAINAGE SPACE.

1. PLASTER NOTES: PLASTERING WITH CEMENT PLASTER SHALL NOT BE LESS THAN THREE COATS WHEN APPLIED OVER METAL LATH OR WIRE FABRIC LATH AND SHALL NOT BE LESS THAN TWO COATS WHEN APPLIED OVER MASONRY CONCRETE OR GYPSUM BACKING AS SPECIFIED IN SECTION 2510.5.
   - A. THE FIRST COAT SHALL BE MIN. 3/8" THICK & APPLIED WITH SUFFICIENT MATERIAL AND PRESSURE TO FILL SOLIDLY ALL OPENINGS IN THE LATH. THE SURFACE SHALL BE SCORED HORIZONTALLY SUFFICIENTLY ROUGH TO PROVIDE ADEQUATE BOND TO RECEIVE THE SECOND COAT.
   - B. THE SECOND COAT SHALL BE BROUGHT OUT TO MIN. 3/8" THICKNESS, RODDED AND FLOATED SUFFICIENTLY ROUGH TO PROVIDE ADEQUATE BOND FOR THE FINISH COAT. THE SECOND COAT SHALL HAVE NO VARIATION GREATER TO THAN 1/4 INCH (6.4 mm) IN ANY DIRECTION UNDER 5-FOOT STRAIGHT EDGE.
   - C. THE FINISH COATS SHALL BE MIN. 1/8" THICK & APPLIED OVER BASE COATS THAT HAVE BEEN IN PLACE FOR THE TIME PERIODS SET FORTH IN ASTM C 926. THE THIRD OR FINISH COAT SHALL BE APPLIED WITH SUFFICIENT MATERIAL AND PRESSURE TO BOND TO AND TO COVER THE BROWN COAT AND SHALL BE OF SUFFICIENT THICKNESS TO CONCEAL THE BROWN COAT.

SECTION 9B PAINTS & COATINGS

1. SCOPE OF WORK.
   CONTRACTOR SHALL PROVIDE ALL LABOR, MATERIALS AND SERVICES TO PAINT BUILDING. ALL EXPOSED SURFACES OF BUILDING AND RAMPS SHALL BE PAINTED EXCEPT ALUMINUM WINDOW FRAMES, THRESHOLDS, AND ROOFING.
2. MATERIALS
   - A. FOR EXTERIOR WOOD:

REF.BRAND	DUNN EDWARDS	KELLY MOORE	SHERWIN WILLIAMS	SINCLAIR
PRIMER	42-9M	1240	Y24W20	289-N
FINISH	QD-60-XX	1240-XXX	B54WZ102	GE2-NXX

   - B. FOR INTERIOR TRIM:

REF.BRAND	DUNN EDWARDS	KELLY MOORE	SHERWIN WILLIAMS	SINCLAIR
FINISH	W450-XX	1650-XXX	A26W11	40XX

   - C. FOR METAL:

REF.BRAND	DUNN EDWARDS	KELLY MOORE	SHERWIN WILLIAMS	SINCLAIR
PRIMER	43-4	1710	B50NZ6	15N
FINISH	10-XX	1700-XXX	B54WZ102	GE2-NXX

   - D. INTERIOR PAINT & COATINGS SHALL COMPLY WITH TITLE 24, PART 11, "CAL-GREEN" SECTION 5.504.4.3, AND V.O.C. LIMITS PER TABLE 5.504.4.3.
3. WORKMANSHIP
   ALL EXPOSED SURFACES SHALL BE PAINTED EXCEPT ALUMINUM WINDOW FRAMES, THRESHOLDS AND METAL ROOFING. MATERIAL SHALL BE OF THE GRADE SPECIFIED OR EQUAL.
   - A. EXTERIOR WOOD SIDING, TRIM AND SKIRTING - FLAT OR SEMI-GLOSS LATEX. APPLY ONE COAT OF PRIME AND AT LEAST ONE FINISH COAT. PRIME COAT SHALL BE BRUSHED ON OR SPRAYED AND BACK BRUSHED INTO ALL GROOVES IN THE SIDING. IF NECESSARY, IN THE OPINION OF THE INSPECTOR, AN EXTRA COAT SHALL BE APPLIED TO ALL GROOVES SO THAT THE FINISH COAT WILL HAVE A UNIFORM APPEARANCE. ALLOW PRIME COAT TO DRY ACCORDING TO MANUFACTURER'S RECOMMENDATION. PRIME AND FINISH COATS SHALL BE COMPATIBLE AND MANUFACTURED BY THE SAME COMPANY.
   - B. INTERIOR TRIM - TRIM NOT PRE-COATED SHALL BE PAINTED WITH TWO COATS OF SEMI-GLOSS LATEX OVER PRIMER.
   - C. INTERIOR HARDWOOD CABINETS - TWO COATS LOW LUSTER POLYURETHANE FINISH. APPLY FIRST COAT THINNED WITH ONE QUART MINERAL SPIRITS PER GALLON. APPLY SECOND COAT AS RECOMMENDED BY MANUFACTURER.
   - D. METAL - ALL METAL SURFACES SHALL BE PAINTED WITH TWO COATS OF ALKYD FINISH COAT OVER ZINC CHROMATE OR EQUAL RUST INHIBITING PRIMER.
   - E. RAMP - ONE COAT OF FERROX NON-SLIP (0.8 MIN. C.O.F.) SURFACING AS MANUFACTURED BY AMERICAN ABRASIVE METALS OR COMPARABLE. ALL PAINTS OF THE TYPE INDICATED SHALL BE LISTED ON THE STATE OF CALIFORNIA QUALIFIED PRODUCTS LIST, OR EQUAL.
   - F. SUBMIT ONE SET OF COLOR SAMPLES TO THE RDPRC FOR EACH PRODUCT TO ASSIST IN SELECTION.

SECTION 9C INTERIOR AIR QUALITY CONTROL

THE INTERIOR ENVIRONMENT SHALL BE ASSEMBLED WITH PRODUCTS THAT CONTRIBUTE TO A HEALTHY INDOOR AIR QUALITY (IAQ). THE FOLLOWING SHALL COMPLY TITLE 24, PART 11 ("CAL-GREEN"):
1. ADHESIVES, SEALANTS, CAULKS — SECTION 5.504.4.1
2. PAINTS, COATINGS — SECTION 5.504.4.3
3. AEROSOL PAINTS & COATINGS — SECTION 5.504.4.3.1
4. CARPET SYSTEMS — SECTION 5.504.4.4
   - A. CARPET SHALL MEET CRI'S "GREEN LABEL PLUS" PROGRAM, NSF/ANSI '140 GOLD' LEVEL, OR OTHER APPROVED TESTING PER 5.504.4.4.
5. CARPET CUSHION OR PAD — SECTION 5.504.4.4.1
   - A. CUSHION/PAD SHALL MEET THE CRI'S "GREEN LABEL" PROGRAM.
6. CARPET ADHESIVE — SECTION 5.504.4.4.2
   - A. ADHESIVES SHALL MEET THE REQUIREMENTS OF TABLE 5.504.4.1.
7. COMPOSITE WOOD PRODUCTS — SECTION 5.504.4.5
   - A. ALL COMPOSITE WOODS MUST NOT EXCEED THE FORMALDEHYDE LIMITS AS SPECIFIED IN ARB'S "AIR TOXICS CONTROL MEASURE" (17 CCR 93120), OR NON-EXEMPT MATERIALS PER TABLE 5.504.4.5.
8. RESILIENT FLOORING SYSTEMS — SECTION 5.504.4.6
   - A. RESILIENT FLOORING SHALL BE CERTIFIED UNDER THE "FLOORSCORE" PROGRAM BY RFCI, COMPLY WITH CA-CHPS, OR OTHER APPROVED TESTING PER 5.504.4.6.
9. HVAC FILTER (MERV RATING OF 13 AND MINIMUM 2-INCH DEPTH) SECTION 5.504.5.3.1
   - A. SEE SHEET M1.7 FOR HVAC FILTER REQUIREMENTS

SECTION 13 SITE ASSEMBLY

1. SCOPE OF WORK
   CONTRACTOR SHALL PROVIDE ALL LABOR MATERIALS AND SERVICES TO PREPARE THE BUILDING ELEMENTS, TRANSPORT THEM FROM THE PLANT TO THE SITE AND TO COMPLETE THE ASSEMBLY AT THE SITE. THE CONDITION OF THE SITE, SUCH AS DRAINAGE AND SOIL BEARING CAPACITY, SHALL BE THE RESPONSIBILITY OF THE SCHOOL DISTRICT. UNLESS SPECIFICALLY CALLED FOR IN THE CONTRACT, STEPS, RAMPS, OR HANDRAILS SHALL BE THE RESPONSIBILITY OF THE CONTRACTOR.
2. ASSEMBLY OF ELEMENTS
   - A. IN A LOCATION ON THE SITE AS DETERMINED BY THE SCHOOL DISTRICT, (APPROVED BY DSA) THE CONTRACTOR SHALL PLACE WOOD LEVELING STRIPS OR OTHER SUITABLE SUPPORTS AS DETAILED ON THE DRAWINGS.
   - B. THE ELEMENTS SHALL BE BROUGHT TO THE SITE ON WHEEL ASSEMBLY AND TRANSFERRED TO THE PREPARED SITE. GREAT CARE SHALL BE TAKEN TO AVOID DAMAGE TO THE ELEMENTS BY RACKING OR BUMPING EACH OTHER.
   - C. CONNECTION OF THE ELEMENTS TOGETHER SHALL BE DONE ACCORDING TO INSTRUCTION ON THE DRAWINGS. FLASHINGS, TRIM AND OTHER LOOSE ITEMS SHALL BE INSTALLED PER DETAILS ON THE DRAWINGS.

SECTION 23 AIR CONDITIONING

1. SCOPE OF WORK (SEE SHEET M1.7 FOR HVAC SPEC. AND NOTES)
   CONTRACTOR SHALL PROVIDE ALL LABOR, MATERIALS AND SERVICES TO INSTALL THE AIR CONDITIONING SYSTEM AS SHOWN ON THE DRAWINGS AND SPECIFICATIONS, INCLUDING A/C UNITS AND ACCESSORIES, REMOTE THERMOSTAT, GRILLS AND POWER WIRING COMPLETE TO LOAD CENTER. CONTRACTOR SHALL INSTRUCT OWNER'S OPERATORS ON OPERATION AND MAINTENANCE OF A/C SYSTEM.
2. EQUIPMENT
   SEE NOTE ON FLOOR PLAN FOR SIZE AND TYPE.
3. WORKMANSHIP
   UNITS SHALL BE INSTALLED COMPLETE AND OPERATING WITH ALL ACCESSORIES IN ACCORDANCE WITH THE MANUFACTURER'S INSTRUCTIONS.

SECTION 26 ELECTRICAL

1. SCOPE OF WORK
   - A. CONTRACTOR SHALL PROVIDE ALL LABOR, MATERIALS AND SERVICES FOR ELECTRICAL INSTALLATION COMPLETE WITH ASSOCIATED EQUIPMENT AND FIXTURES, IN OPERATING CONDITION READY FOR USE. THE WORK INCLUDES: LIGHT AND POWER SYSTEMS, LIGHTING FIXTURES COMPLETE WITH LAMPS, CONNECTIONS AND DISCONNECTS TO A/C EQUIPMENT, EMERGENCY VOICE ALARM COMMUNICATION SYSTEMS (EVACS).
   - B. PROVIDE CONDUIT WITH PULL STRINGS AND JUNCTION BOXES FOR AUTOMATIC DETECTION FIRE ALARM SYSTEM AND NOTIFICATION PER NFPA 72.
2. MATERIALS
   ALL NEW COMPLYING WITH REQUIREMENTS OF CALIFORNIA ELECTRIC CODE.
   - A. ELECTRIC METALLIC TUBING - COUPLING AND FLEX CONDUIT GALVANIZED OR SHERARDIZED. EXTERIOR FLEX-GALV. STEEL WITH FACTORY APPLIED P.V.C. JACKET.
   - B. PANEL BOARDS - FLUSH MOUNTED.
   - C. CONDUCTORS - COPPER, INSULATED FOR 600 VOLTS, TYPE THHN FOR SIZES #12 TO #6, TYPE THW FOR LARGER SIZES. MINIMUM SIZE-#14.
   - D. RECEPTACLES - AS NOTED. +18" A.F.F. MIN. TO BOTTOM OF BOX
   - E. CLOCK RECEPTACLE - AS NOTED.
   - F. SWITCHES - AS NOTED. +48" A.F.F. MAX. TO TOP OF BOX
   - G. LIGHTING FIXTURES - AS NOTED ON THE DRAWINGS.
3. WORKMANSHIP
   MATERIALS AND EQUIPMENT INSTALLED IN A SECURE, NEAT, WORKMANLIKE MANNER IN ACCORDANCE WITH CODE REQUIREMENTS. PANEL BOARD CARDS SHALL BE FILLED OUT. CONDUIT AND CABLE INSTALLED IN WALL AND CEILING SPACES. WORK PIERCING WATERPROOFED AREAS FLASHED AND SEALED TO A WATERTIGHT CONDITION. BUILDING CONDUIT/WIRING FROM FACE OF BUILDING TO SITE TERMINATION BY SITE CONTRACTOR (N.I.C.). (FLEXIBLE CONDUIT S-BEND SEALTITE).

INSPECTION

INSPECTION OF PREFABRICATED BUILDINGS IS DIVIDED INTO TWO SEPARATE FUNCTIONS:

1. IN-PLANT INSPECTION.
2. ON-SITE INSPECTION.

THE CONTRACTOR SHALL ALLOW UP TO SEVEN (7) DAYS FROM THE DATE OF PLAN APPROVAL TO OBTAIN AN IN-PLANT INSPECTOR APPROVED BY D.S.A.

IN-PLANT INSPECTION AND MATERIAL TESTING SHALL BE ACCOMPLISHED UNDER THE SUPERVISION OF THE DISTRICT ARCHITECT. THE CONTRACTOR SHALL NOTIFY THE DISTRICT ARCHITECT, DSA, AND THE DESIGNATED INSPECTOR/INSPECTION AGENCY AT LEAST 48 HOURS PRIOR TO COMMENCING WORK. THE MANUFACTURER SHALL PROVIDE THE INSPECTOR WITH FULL ACCESS TO ALL PLANT OPERATIONS INVOLVING WORK UNDER THIS CONTRACT AND SHALL ADVISE THE INSPECTOR IN ADVANCE OF THE TIME AND PLACE OF OPERATIONS THAT THE INSPECTOR WANTS TO OBSERVE TAKE PLACE. BEFORE THE BUILDING(S) ARE REMOVED FROM THE PLANT FOR DELIVERY TO THE STORAGE FACILITY, OR FROM THE STORAGE FACILITY TO THE SITE, THE INSPECTOR SHALL DETERMINE THAT THEY ARE ACCEPTABLE AND ISSUE A WRITTEN RELEASE WHICH SHALL BE IN THE FORM OF A VERIFIED REPORT (FORM DSA 152-IPI).

A COPY OF THE INSPECTOR'S VERIFIED REPORT SHALL ACCOMPANY EACH BUILDING TO STORAGE OR TO THE SITE. THE INSPECTOR SHALL PUT ONE COPY IN EACH BUILDING.

American Modular Systems
787 Spreckels Ave., Manteca, CA 95336
Phone (209) 825-1921 Fax (209) 825-7018
www.americanmodular.com

INTELLECTUAL-PROPERTY & PROPRIETARY RIGHTS STATEMENT
COPYRIGHT © AMERICAN MODULAR SYSTEMS (AMS)
AMS OWNS ALL COPYRIGHT AND OTHER INTELLECTUAL-PROPERTY AND PROPRIETARY RIGHTS IN THESE DRAWINGS, SPECIFICATIONS, AND THE MATERIAL CONTAINED HEREIN. CERTAIN ELEMENTS SHOWN IN THESE DOCUMENTS ARE REGISTERED TRADEMARKS OF AMS. ALL PATENTABLE MATERIALS CONTAINED IN THESE DOCUMENTS AND ORIGINATING WITH AMS WILL REMAIN THE SOLE PROPERTY OF AMS. THESE DRAWING, SPECIFICATIONS, AND THE MATERIAL CONTAINED HEREIN MAY NOT BE REPRODUCED, TRANSMITTED, COPIED, DISTRIBUTED, MODIFIED, OR OTHERWISE DISPOSED OF (DIRECTLY OR INDIRECTLY) AND MAY NOT BE USED (IN WHOLE OR IN PART) TO ASSIST IN THE CONSTRUCTION, DESIGN, OR OTHER MAKING OF, OR FOR THE PURPOSE OF FURNISHING ANY INFORMATION FOR THE CONSTRUCTION, DESIGN, OR OTHER MAKING OF, ANY BUILDINGS (MODULAR OR OTHERWISE), DRAWINGS, SPECIFICATIONS, PRINTS, APPARATUS, OR PARTS THEREOF, EXCEPT AS EXPRESSLY PERMITTED BY WRITTEN CONSENT OF, OR IN A WRITTEN AGREEMENT WITH, AMS. SUBMITTAL OR DISTRIBUTION TO MEET OFFICIAL REGULATORY REQUIREMENTS WILL NOT BE CONSTRUED AS PUBLICATION IN DEROGATION OF AMS'S COPYRIGHT OR OTHER INTELLECTUAL-PROPERTY OR PROPRIETARY RIGHTS.

PRE-CHECKED SET NAME
24' x 40' THRU 120' x 40' STANDARD MODULAR BUILDING (LOW SEISMIC)
FORM

SITE SPECIFIC PROJECT NAME
.
.
.

APPROVED
DIV. OF THE STATE ARCHITECT
APP: 04-122050 PC
REVIEWED FOR
SS ☑ FLS ☑ ACS ☑ CG ☑
DATE: 12/11/2023

☐ 2022 CBC PRE-CHECK (PC) DOCUMENT
A SEPARATE PROJECT APPLICATION FOR CONSTRUCTION IS REQUIRED.

MANUFACTURER PROFESSIONAL OF RECORD ON PC

LICENSED ARCHITECT
RANDALL PATRICK CAVANAGH
No. C12631
Ren. 3-31-25
STATE OF CALIFORNIA

THESE DRAWINGS ARE PRELIMINARY AND NOT FOR CONSTRUCTION UNLESS STAMPED & SIGNED BY THE DESIGN PROFESSIONAL OF RECORD.

REVISIONS
1
2
3
4

DRAWN BY:	AA
SCALE:	AS NOTED
DATE:	MM/DD/YY
PROJECT NO:	XXXX-22

SHEET TITLE:
GENERAL NOTES & SPECIFICATIONS

SHEET NUMBER:
N1.0

IDENTIFICATION STAMP
DIV. OF THE STATE ARCHITECT
APP: 02-122976 INC:
REVIEWED FOR
SS ☑ FLS ☑ ACS ☑
DATE: 03/12/2025

TRACY
UNIFIED SCHOOL DISTRICT

HMC Architects

3595001000

2101 CAPITOL AVENUE, SUITE 100
SACRAMENTO, CA 95816
916 368 7990 / www.hmcarchitects.com

ISSUE

Δ	DESCRIPTION	DATE
A	ADDENDUM "A"	3/20/25

KEYNOTES

GENERAL NOTES

FACILITY:
JACOBSON ELEMENTARY SCHOOL
1750 W KAVANAGH AVE
TRACY, CA 95376

PROJECT:
JACOBSON ES - TK CLASSROOM

SHEET NAME:
GENERAL NOTES & SPECIFICATIONS

DATE: **04/03/24** CLIENT PROJ NO: **3595001000**

SHEET:
N1.0
ADDENDUM "A"

PLEASE RECYCLE

Autodesk Docs://3595005000 TUSD TK CLASSROOMS 2025 R22/3595005000-A-TUSD-BOHN-SITE.rvt
12/3/2024 9:55:46 AM

THE LINE SHOWN ABOVE IS EQUAL TO ONE INCH ON ORIGINAL 22X34 SHEETS UNLESS OTHERWISE NOTED

☒ DEFAULT CONCRETE MIX DESIGN REQUIREMENTS FOR BELOW GRADE NORMAL WEIGHT CONCRETE [1]

BELOW GRADE CONCRETE ELEMENT	MAXIMUM W/C RATIO	MINIMUM 28-DAY STRENGTH (f'_c) (PSI)	CEMENTITIOUS MATERIALS (CEMENT TYPE PER ASTM C150)	TARGET AIR CONTENT (%)		
				MAX AGGREGATE SIZE (IN)	☒ CONCRETE NOT EXPOSED TO FREEZING-AND-THAWING CYCLES	☐ CONCRETE EXPOSED TO FREEZING-AND-THAWING CYCLES
FOUNDATIONS [2]	0.45	4500	V	1" ± ¼"	N/A	6
FOUNDATION VENTS & ACCESS WELLS	0.45	4500	V	3/8"	N/A	7.5
				1/2"	N/A	7
				1" ± ¼"	N/A	6

[1] PROPORTIONING OF CONCRETE MIXTURES SHALL BE IN ACCORDANCE WITH ACI 318-19, SECTION 26.4.3.
DOCUMENTATION OF CONCRETE MIXTURE CHARACTERISTICS SHALL BE IN ACCORDANCE WITH ACI 318-19, SECTION 26.4.4.
CEMENT SHALL BE CERTIFIED PER TITLE 24, PART 2, SECTION 1910A.1.
SEE CONCRETE NOTES ON SHEET N1.0 FOR ADDITIONAL REQUIREMENTS.
[2] FOUNDATIONS CONSERVATIVELY DESIGNED FOR A MIMINUM 28-DAY CONCRETE STRENGTH OF 3,500 PSI.

☐ OPTIONAL SITE-SPECIFIC CONCRETE MIX DESIGN REQUIREMENTS FOR BELOW GRADE NORMAL WEIGHT CONCRETE [1]

(MOST RESTRICTIVE REQUIREMENTS FROM EXPOSURE TABLES BELOW)

BELOW GRADE CONCRETE ELEMENT	MAXIMUM W/C RATIO	MINIMUM 28-DAY STRENGTH (f'_c) (PSI)	CEMENTITIOUS MATERIALS (CEMENT TYPE PER ASTM C150)	MAX AGGREGATE SIZE (IN)	TARGET AIR CONTENT (%)	MAXIMUM WATER-SOLUBLE CHLORIDE ION (Cl-) CONTENT IN CONCRETE, PERCENT BY WEIGHT OF CEMENT
FOUNDATIONS [2]				1" ± ¼"		
FOUNDATION VENTS & ACCESS WELLS				3/8"		
				1/2"		
				1" ± ¼"		

[1] PROPORTIONING OF CONCRETE MIXTURES SHALL BE IN ACCORDANCE WITH ACI 318-19, SECTION 26.4.3.
DOCUMENTATION OF CONCRETE MIXTURE CHARACTERISTICS SHALL BE IN ACCORDANCE WITH ACI 318-14, SECTION 26.4.4.
CEMENT SHALL BE CERTIFIED PER TITLE 24, PART 2, SECTION 1910A.1.
SEE CONCRETE NOTES ON SHEET N1.0 FOR ADDITIONAL REQUIREMENTS.
[2] FOUNDATIONS HAVE BEEN DESIGNED FOR THE WORST CASE MIMINUM 28-DAY CONCRETE STRENGTH OF 3,500 PSI.

EXPOSURE CATEGORY: FREEZING & THAWING (F)

(ACI 318-19, SECTION 19.3)

EXPOSURE CLASS [1]		CONDITION	MAXIMUM W/C RATIO	MINIMUM 28-DAY STRENGTH (f'_c) (PSI)		AIR CONTENT	
				FOUNDATIONS	FOUNDATION VENTS & ACCESS WELLS	MAX AGGREGATE SIZE (IN) [2]	TARGET AIR CONTENT (%)
☐	F0	CONCRETE NOT EXPOSED TO FREEZING-AND-THAWING CYCLES	0.55	3500	3000	N/A	
☐	F1	CONCRETE EXPOSED TO FREEZING-AND-THAWING CYCLES WITH LIMITED EXPOSURE TO WATER	0.55	3500	3500	3/8	6
						1/2	5.5
						3/4	5
						1	4.5
						1½	4.5
☐	F2	CONCRETE EXPOSED TO FREEZING-AND-THAWING CYCLES WITH FREQUENT EXPOSURE TO WATER	0.50	4500	4500	3/8	7.5
						1/2	7
☐	F3	CONCRETE EXPOSED TO FREEZING-AND-THAWING CYCLES WITH FREQUENT EXPOSURE TO WATER AND EXPOSURE TO DEICING CHEMICALS	0.40	5000	5000	3/4	6
						1	6
						1½	5.5

[1] IF EXPOSURE CLASS IS UNCERTAIN, F2 MAY BE ASSUMED.
[2] SEE CONCRETE NOTES ON SHEET N1.0 FOR MAX AGGREGATE SIZES.

EXPOSURE CATEGORY: SULFATE (S)

(ACI 318-19, SECTION 19.3)

EXPOSURE CLASS [1]		CONDITION		MAXIMUM W/C RATIO	MINIMUM 28-DAY STRENGTH (f'_c) (PSI)		CEMENTITIOUS MATERIALS (CEMENT TYPE PER ASTM C150)
		WATER-SOLUBLE SULFATE (SO_4^{2-}) IN SOIL, PERCENT BY MASS [2]	DISSOLVED SULFATE (SO_4^{2-}) IN WATER, PPM [3]		FOUNDATIONS	FOUNDATION VENTS & ACCESS WELLS	
☐	S0	$SO_4^{2-} < 0.10$	$SO_4^{2-} < 150$	0.55	3500	3000	I OR II
☐	S1	$0.10 \le SO_4^{2-} < 0.20$	$150 \le SO_4^{2-} < 1500$ OR SEAWATER	0.50	4000	4000	II
☐	S2	$0.20 \le SO_4^{2-} \le 2.00$	$1500 \le SO_4^{2-} \le 10,000$	0.45	4500	4500	V
☐	S3	$SO_4^{2-} > 2.00$	$SO_4^{2-} > 10,000$	0.45	4500	4500	V PLUS FLYASH OR SLAG CEMENT [4]

[1] IF EXPOSURE CLASS IS UNKNOWN, S2 MAY BE ASSUMED.
[2] PERCENT SULFATE BY MASS IN SOIL SHALL BE DETERMINED BY ASTM C1580.
[3] CONCENTRATION OF DISSOLVED SULFATES IN WATER, IN PPM, SHALL BE DETERMINED BY ASTM D516 OR ASTM D4130.
[4] PER ACI 318-14, TABLE 19.3.2.1, FOOTNOTE 6, THE AMOUNT OF THE SPECIFIC SOURCE OF THE POZZOLAN OR SLAG CEMENT TO BE USED SHALL BE AT LEAST THE AMOUNT THAT HAS BEEN DETERMINED BY SERVICE RECORD TO IMPROVE SULFATE RESISTANCE WHEN USED IN CONCRETE CONTAINING TYPEV CEMENT. ALTERNATIVELY, THE AMOUNT OF THE SPECIFIC SOURCE OF THE POZZOLAN OR SLAG CEMENT TO BE USED SHALL BE AT LEAST THE AMOUNT TESTED IN ACCORDANCE WITH ASTM C1012 AND MEETING THE CRITERIA IN ACI 318-14, SECTION 26.4.2.2(c). SEE CONCRETE NOTES ON SHEET N1.0 FOR ADDITIONAL REQUIREMENTS.

EXPOSURE CATEGORY: IN CONTACT WITH WATER (W)

(ACI 318-19, SECTION 19.3)

EXPOSURE CLASS		CONDITION	MAXIMUM W/C RATIO	MINIMUM 28-DAY STRENGTH (f'_c) (PSI)		ADDITIONAL REQUIREMENTS
				FOUNDATIONS	FOUNDATION VENTS & ACCESS WELLS	
☐	W0	CONCRETE DRY IN SERVICE OR CONCRETE IN CONTACT WITH WATER AND LOW PERMEABILITY IS NOT REQUIRED	0.55	3500	3000	NONE
☐	W1 [1]	CONCRETE IN CONTACT WITH WATER AND LOW PERMEABILITY IS REQUIRED	0.50	4000	4000	NONE

[1] EXPOSURE CLASS W1 IS ONLY REQUIRED IF CONCRETE IS BELOW THE GROUNDWATER TABLE.

EXPOSURE CATEGORY: CORROSION PROTECTION OF REINFORCEMENT (C)

(ACI 318-19, SECTION 19.3)

EXPOSURE CLASS		CONDITION	MAXIMUM W/C RATIO	MINIMUM 28-DAY STRENGTH (f'_c) (PSI)		MAXIMUM WATER-SOLUBLE CHLORIDE ION (Cl-) CONTENT IN CONCRETE, PERCENT BY WEIGHT OF CEMENT
				FOUNDATIONS	FOUNDATION VENTS & ACCESS WELLS	
☐	C1	CONCRETE EXPOSED TO MOISTURE BUT NOT TO AN EXTERNAL SOURCE OF CHLORIDES	0.55	3500	3000	0.30
☐	C2	CONCRETE EXPOSED TO MOISTURE AND AN EXTERNAL SOURCE OF CHLORIDES FROM DEICING CHEMICALS, SALT, BRACKISH WATER, SEAWATER, OR SPRAY FROM THESE SOURCES	0.40	5000	5000	0.15

NOT USED

SHEET NOTES:
1. THE DEFAULT CONCRETE MIX DESIGN REQUIREMENTS MAY BE SELECTED AND USED TO DETERMINE THE CONCRETE MIX REQUIREMENTS FOR ANY SITE PER DSA IR PC-2 SECTION 5.5 OR PC-6 SECTION 5.5.
2. THE DEFAULT CONCRETE MIX DESIGN REQUIREMENTS MAY BE SELECTED REGARDLESS OF WHETHER A SITE SPECIFIC GEOTECHNICAL REPORT EXISTS FOR THE SITE.
3. IF THE SITE CONDITIONS FOR THE SOIL ARE KNOWN AS REPORTED BY A GEOTECHNICAL OR OTHER APPROVED SOIL CONDITIONS REPORT, THE OPTIONAL SITE-SPECIFIC CONCRETE MIX DESIGN REQUIREMENTS MAY BE UTILIZED.
4. IF THE OPTIONAL SITE-SPECIFIC CONCRETE MIX DESIGN REQUIREMENTS ARE UTILIZED, THE REPORT MUST BE REFERENCED ON THE COVER SHEET OF THIS DRAWING PACKAGE.

Autodesk Docs://3595005000 TUSD TK CLASSROOMS 2025 R22/3595005000-A-TUSD-BOHN-SITE.rvt
12/3/2024 9:55:45 AM

PLEASE RECYCLE

IDENTIFICATION STAMP
DIV. OF THE STATE ARCHITECT
APP: 02-122976 INC:
REVIEWED FOR
SS ☑ FLS ☑ ACS ☑
DATE: 03/12/2025

TRACY UNIFIED SCHOOL DISTRICT

HMC Architects
3595001000
2101 CAPITOL AVENUE, SUITE 100
SACRAMENTO, CA 95816
916 368 7990 / www.hmcarchitects.com

ISSUE

Δ	DESCRIPTION	DATE
1	ADDENDUM "A"	3/20/25

AMS®
American Modular Systems
787 Spreckels Ave., Manteca, CA 95336
Phone (209) 825-1921 Fax (209) 825-7018
www.americanmodular.com

INTELLECTUAL-PROPERTY & PROPRIETARY RIGHTS STATEMENT
COPYRIGHT © AMERICAN MODULAR SYSTEMS (AMS)
AMS OWNS ALL COPYRIGHT AND OTHER INTELLECTUAL-PROPERTY AND PROPRIETARY RIGHTS IN THESE DRAWINGS, SPECIFICATIONS, AND THE MATERIAL CONTAINED HEREIN. CERTAIN ELEMENTS SHOWN IN THESE DOCUMENTS ARE REGISTERED TRADEMARKS OF AMS AND OTHERS. ALL RIGHTS NOT EXPRESSLY GRANTED HEREIN ARE RESERVED. NOTHING WITHIN AMS WILL REMAIN THE SOLE PROPERTY OF AMS. THESE DRAWINGS AND SPECIFICATIONS, AND THE MATERIAL CONTAINED HEREIN MAY NOT BE REPRODUCED, TRANSMITTED, COPIED, DISTRIBUTED, MODIFIED, OR OTHERWISE DISPOSED OF (DIRECTLY OR INDIRECTLY) AND MAY NOT BE USED (IN WHOLE OR IN PART) TO ASSIST IN THE CONSTRUCTION, DESIGN, OR OTHER MAKING OF, OR FOR THE PURPOSE OF FURNISHING ANY INFORMATION FOR THE CONSTRUCTION, DESIGN, OR OTHER MAKING OF, ANY BUILDINGS (MODULAR OR OTHERWISE); DRAWINGS, SPECIFICATIONS, PRINTS, APPARATUS, OR PARTS THEREOF, EXCEPT AS EXPRESSLY PERMITTED BY WRITTEN CONSENT OF, OR IN A WRITTEN AGREEMENT WITH, AMS. SUBMITTAL OR DISTRIBUTION TO MEET OFFICIAL REGULATORY REQUIREMENTS WILL NOT BE CONSTRUED AS PUBLICATION IN DEROGATION OF AMS'S COPYRIGHT OR OTHER INTELLECTUAL-PROPERTY OR PROPRIETARY RIGHTS.

PRE-CHECKED SET NAME
24' x 40' THRU 120' x 40'
STANDARD MODULAR BUILDING
(LOW SEISMIC)
FORM®

SITE SPECIFIC PROJECT NAME

APPROVED
DIV. OF THE STATE ARCHITECT
APP: 04-122050 PC
REVIEWED FOR
SS ☑ FLS ☑ ACS ☑ CG ☑
DATE: 12/11/2023

☐ 2022 CBC PRE-CHECK (PC) DOCUMENT
A SEPARATE PROJECT APPLICATION FOR CONSTRUCTION IS REQUIRED.

MANUFACTURER PROFESSIONAL OF RECORD ON PC

LICENSED ARCHITECT
PATRICK C. MAHONEY
No. C12631
Ren. 3-31-25
STATE OF CALIFORNIA

THESE DRAWINGS ARE PRELIMINARY AND NOT FOR CONSTRUCTION UNLESS STAMPED & SIGNED BY THE DESIGN PROFESSIONAL OF RECORD.

REVISIONS
1
2
3
4

DRAWN BY:	AA
SCALE:	AS NOTED
DATE:	MM/DD/YY
PROJECT NO:	XXXX-22

SHEET TITLE:
BELOW GRADE CONCRETE MIX DESIGN REQUIREMENTS

SHEET NUMBER:
N1.0A

KEYNOTES

GENERAL NOTES

FACILITY:
JACOBSON ELEMENTARY SCHOOL
1750 W KAVANAGH AVE
TRACY, CA 95376

PROJECT:
JACOBSON ES - TK CLASSROOM

SHEET NAME:
BELOW GRADE CONCRETE MIX DESIGN REQUIREMENTS

DATE: **04/03/24** CLIENT PROJ NO: **3595001000**

SHEET:
N1.0A
ADDENDUM "A"

THE LINE SHOWN ABOVE IS EXACTLY ONE INCH LONG AT THIS SHEETS ORIGINAL PAGE SIZE

COORDINATION OF WORK

THE CONTRACTOR IS RESPONSIBLE FOR MAKING ALL NECESSARY ARRANGEMENTS WITH THE SCHOOL DISTRICT AUTHORIZED REPRESENTATIVE FOR ACCESS TO GROUNDS AND REMOVAL OF EQUIPMENT, IF NECESSARY. THIS CONTACT SHALL BE MADE AT LEAST 48 HOURS PRIOR TO DELIVERY OF ANY MODULE. ON-SITE INSPECTION SHALL BE DONE BY THE SITE INSPECTOR. ALL WORK WHICH THE MANUFACTURER OR HIS SUBCONTRACTORS PERFORM AT THE SITE SHALL BE SUBJECT TO THE INSPECTION OF THE SITE INSPECTOR. THE MANUFACTURER WILL FURNISH THE SITE INSPECTOR WITH SUCH INFORMATION AS MAY BE NECESSARY TO KEEP HIM FULLY INFORMED AS TO PROGRESS OF WORK AND DATES WHEN SITE WORK WILL OCCUR. THE CONTRACTOR SHALL NOTIFY THE INSPECTION AGENCY AT LEAST 48 HOURS PRIOR TO COMMENCING WORK.

THE CONTRACTOR SHALL VERIFY THAT THE DISTRICT'S SITE IS READY TO RECEIVE THE CLASSROOM(S) PRIOR TO THE DELIVERY OF ANY CLASSROOM(S) BY VISITING EACH SITE (THIS MAY BE DONE BY THE INSPECTOR).

MATERIALS AND WORKMANSHIP

1. ALL CONTRACTORS SHALL CERTIFY THAT NO ASBESTOS-CONTAINING BUILDING MATERIALS WHICH EXCEED STATE AND FEDERAL MANDATED SAFE ASBESTOS LEVELS HAVE BEEN USED IN THE CONSTRUCTION OF RELOCATABLE FACILITIES.
2. ALL WORKMEN SHALL BE SKILLED AND QUALIFIED FOR THE WORK WHICH THEY PERFORM. ALL MATERIALS USED, UNLESS OTHERWISE SPECIFIED, SHALL BE NEW AND OF THE TYPES AND GRADES SPECIFIED. THE CONTRACTOR SHALL, IF REQUESTED, FURNISH EVIDENCE SATISFACTORY TO THE RDPRC THAT SUCH IS THE CASE.
3. CONTRACTOR'S CREWS ASSIGNED TO ANY WORK PERFORMED UNDER THIS CONTRACT SHALL INCLUDE ONE COMPETENT AND FULLY EXPERIENCED PERSON DESIGNATED AS THE RESPONSIBLE PERSON IN CHARGE. SUCH PERSON MUST BE IDENTIFIED BY NAME TO THE DISTRICT IN ADVANCE OF ANY WORK. UPON REQUEST, THE CONTRACTOR SHALL PROMPTLY FURNISH TO THE DISTRICT INFORMATION RELATING TO THIS EMPLOYEE'S EXPERIENCE.
4. WORKMANSHIP SHALL BE EQUAL OR BETTER IN QUALITY TO THAT REQUIRED BY THE CONSTRUCTION TRADES FOR A FINISHED PRODUCT. A QUALITY CONTROL SUPERVISOR, DESIGNATED BY THE MANUFACTURER, SHALL REVIEW ALL WORK IN PROGRESS AND SHALL REVIEW THE FINISHED BUILDING PRIOR TO FINAL INSPECTION TO ASSURE IT IS COMPLETE AND CORRECT. THE QUALITY CONTROL SUPERVISOR SHALL HAVE THE AUTHORITY TO HAVE MATERIALS REPLACED AND WORK REDONE IN ORDER TO CORRECT FAULTY MATERIALS OR WORKMANSHIP.

GENERAL DESIGN REQUIREMENTS

1. UP TO TEN (10) MODULES, APPROXIMATELY 12' x 40', DESIGNED SO THAT TWO (2) OR MORE MODULES MAY BE JOINED TOGETHER TO FORM A COMPLETE STRUCTURE, TO MAINTAIN A POSITIVE ALIGNMENT OF FLOORS, WALLS, AND ROOF, AND TO PERMIT SIMPLE NON-DESTRUCTIVE DETACHMENT FOR FUTURE RELOCATION.
2. EACH MODULE SHALL BE PERMANENTLY IDENTIFIED WITH (2) IMPRINTED (STAMPED, NOT ENGRAVED) METAL IDENTIFICATION TAGS 3"x1-1/2" MINIMUM SIZE WITH THE FOLLOWING INFORMATION:
   A. MANUFACTURER'S NAME AND BUILDING SERIAL NUMBER.
   B. DESIGN WIND SPEED / EXPOSURE
   C. DESIGN SEISMIC S_{DS} VALUE
   D. DESIGN ROOF LIVE LOAD & SNOW LOAD.
   E. DESIGN FLOOR LIVE LOAD
   F. D.S.A. APPLICATION NUMBER
3. 2-TAGS PER MODULE: ONE ON EXTERIOR, AND ONE ON MODULE BEAM AT FRONT OF BUILDING ABOVE CEILING.
4. EACH MODULE SHALL BE CAPABLE OF RESISTING ALL VERTICAL AND LATERAL LOADS DURING TRANSPORTATION AND RELOCATION. (NORMAL INDUSTRY PRACTICE FOR BRACING MODULES DURING TRANSPORTATION AND RELOCATIONS IS ACCEPTABLE.) WHEN MODULES ARE ASSEMBLED JOINTS SHALL BE SEALED WITH REMOVABLE CLOSING STRIPS OR OTHER METHOD TO PRESENT A FINISHED APPEARANCE AND BE PERMANENTLY WATERPROOF.
5. EACH MODULE SHALL BE SUFFICIENTLY RIGID TO BE JACKED UP AT THE FRONT AND BACK CORNERS FOR RELOCATION WITHOUT DAMAGE OR THE MODULE SHALL HAVE LIFT LUGS AT FRONT AND BACK LOCATED AS REQUIRED SO THAT THE MODULE MAY BE JACKED UP FOR RELOCATION IN ONE PIECE WITHOUT ADDITIONAL SUPPORTS OF ANY TYPE. EVIDENCE OF EXCESSIVE BOWING DURING THE INSTALLATION OF THE MODULES WHICH, IN THE OPINION OF THE RDPRC, CAUSES EXCESSIVE WORKING AT ANY JOINT OR COMPROMISES THE STRUCTURAL INTEGRITY OF THE MODULE SHALL BE SUFFICIENT REASON FOR REJECTION OF THE MODULE.
6. FINISH AND BASE MATERIALS AT EACH MODULE SHALL TERMINATE AT INTERIOR MODULE JOINTS IN A MANNER TO JOIN FLUSH AND TIGHT WITH SAME MATERIAL IN ADJACENT MODULE SO THE MODULE MAY BE RELOCATED WITH MINIMUM CUTTING AND PATCHING.

MARKERBOARD SPECIFICATIONS

MARKERBOARDS SHALL BE 24 GA. PORCELAIN STEEL FACING SHEET SUITABLE TO ACCEPT DRY ERASE FELT MARKERS. THE FACING SHEET SHALL BE LAMINATED TO PARTICLE BOARD SUBSTRATE WITH A MINIMUM DENSITY OF 45lbs./cu.ft. THE PANEL SHALL HAVE A FOIL BACKING. THE PANELS SHALL HAVE EXTRUDED ALUMINUM MOLDING AND CHALKRAIL WITH A MINIMUM OF 2 15/16" PROJECTION FROM THE FACE OF PANEL. THREE MAP HOOKS WITH CLIPS PER PANEL SHALL BE PROVIDED. ONE FLAG HOLDER, 1/2" SIZE, SHALL BE PROVIDED FOR EACH CLASSROOM. EACH CLASSROOM SHALL HAVE 2 EACH 4'x8' PANELS INSTALLED SIDE BY SIDE TO MAKE A 4'x16' PANEL, CENTERED ON THE WALL.

FOR ANCHORAGE DETAIL, SEE DETAIL 8/A4.0.

REFERENCE BRANDS: CHATFIELD-CLARKE Co, Inc. SERIES 500 OR NELSON ADAMS Co. NACO SERIES 60.

GENERAL NOTE

IT IS THE RESPONSIBILITY OF THE DESIGN PROFESSIONAL ON RECORD TO ENSURE THAT ALL SPECIFICATIONS MEET THE MINIMUM REQUIREMENTS OF THE CURRENT EDITION S OF THE CALIFORNIA STATE TITLES 19 AND 24. APPROVAL OF THESE SPECIFICATIONS DOES NOT CONSTITUTE APPROVAL FOR WAIVER OR ANY REQUIREMENTS OF THOSE REGULATIONS.

Autodesk Docs://3595005000 TUSD TK CLASSROOMS 2025 R22/3595005000-A-TUSD-BOHN-SITE.rvt
12/3/2024 9:55:46 AM

INTERIOR

1. FLOOR COVERING: PER CBC SECTION 804, COMPLY WITH NFPA 253 CLASS I OR II. COMPLY WITH ASTM E 648 FOR SPECIFIC OPTICAL DENSITY SMOKE RATING NOT TO EXCEED 450. IN EXIT PASSAGEWAYS OR CORRIDORS, THE MINIMUM CRITICAL RADIANT FLUX (CBC 804.4.2) SHALL NOT BE LESS THAN CLASS II. (CARPET SHALL BE SECURELY ATTACHED, HAVE FIRM CUSHION, PAD OR BACKING, OR NONE AT ALL. PILE YARN SHALL BE BRANDED NYLON AND HAVE A LEVEL LOOP, TEXTURED LOOP, LEVEL-CUT PILE OR LEVEL-CUT/UNCUT PILE TEXTURE. THE MAXIMUM PILE HEIGHT SHALL BE 1/2" INCH. NO CROSS SEAMS SHALL BE ALLOWED. THE CARPET DENSITY SHALL BE 4600 MINIMUM. CARPET EDGE TRIM SHALL COMPLY WITH SECTION 11B-303. COLOR TO BE SELECTED BY THE RDPRC OR OWNER.)
2. BASE: RESILIENT COVE BASE - BEST QUALITY, MOULDED RUBBER, 1/8" THICK, 4" HIGH MOULDED TOP SET COVE. PROVIDE PREFORMED BASE FOR SQUARE EXTERNAL CORNERS AND PREFORMED END STOPS WHERE BASE DOES NOT ABUT. SOLID COLOR AS MANUFACTURE BY "JOHNSONITE CO.", FLEXCO, OR EQUAL. APPLY COVE TO COMPLETE PERIMETER OF CLASSROOM.
3. INTERIOR WALLS SHALL BE VINYL COVERED TACKBOARD (U.O.N.) APPLIED IN ONE CONTINUOUS LENGTH FROM FLOOR TO CEILING. THE TACKBOARD SHALL BE INDUSTRIAL INSULATION BOARD MANUFACTURED SPECIFICALLY AS A SUBSTITUTE FOR VINYL COVERED WALL PANELS. THE BOARD SHALL BE ASPHALT FREE, SHALL HAVE AN IRONED-ON COATING AND SHALL HAVE A MINIMUM DENSITY OF 18 LBS. PER FOOT. THE VINYL COATING SHALL BE MADE OF VIRGIN VINYL CALENDERED BASE COLOR, WEIGHING A MINIMUM OF 8 OZ. PER SQUARE YARD. THE COATING BACKING SHALL BE SHEETING OR NON-WOVEN FABRIC. THE VINYL COATING SHALL BE MECHANICALLY LAMINATED, WITH THE LONG EDGES WRAPPED, TO THE TACKBOARD. TACKBOARD SHALL BE APPLIED OVER 1/2" SHEETROCK OR OSB SHEATHING. THE VINYL WALL COVERED PANEL SHALL HAVE A CLASS 'C' RATING (PER ASTM E 84 OR UL 723). FLAME SPREAD/SMOKE DEVELOPED INDEX MAXIMUMS PER NOTE #6 BELOW. THE PANEL SHALL BE APPROVED FOR CLASSROOM USE BY THE CALIFORNIA STATE FIRE MARSHAL. REFERENCE BRAND: VINYL COVERED TACKBOARD AS MANUFACTURED BY CHATFIELD-CLARKE OR COMPARABLE. CARE SHALL BE TAKEN IN MOUNTING THE TACKBOARD SO THAT THE TEXTURE OF ALL PANELS WILL HAVE THE SAME ORIENTATION AND COLOR MATCH. TACKBOARD FLAME SPREAD: 126.6 & SMOKE DEVELOPMENT: 45
4. CEILING: SUSPENDED T-BAR SYSTEM, SEE SHEET M1.4 FOR DETAILS, MATERIALS AND INSTALLATION PER ASTM C635, ASTM C636, ASTM E580, AND DSA-IR 25-2.13 AS APPLICABLE TO CLASSROOMS. PANELS SHALL BE 5/8" MINIMUM THICK, MINERAL FIBERBOARD OR VINYL-FACED FIBERGLASS LAY-IN PANELS, SQUARE EDGE, LIGHT REFLECTION 75% MINIMUM. NOISE REDUCTION COEFFICIENT OF 0.65 MINIMUM. ASTM E 84 TESTED, RATED CLASS 'C': FLAME SPREAD INDEX NOT TO EXCEED 200, SMOKE DEVELOPED INDEX RATING NOT TO EXCEED 450.
5. THE INTERIOR ENVIRONMENT SHALL BE ASSEMBLED WITH PRODUCTS THAT CONTRIBUTE TO A HEALTHY INDOOR AIR QUALITY (IAQ). THE FOLLOWING SHALL COMPLY TITLE 24, PART 11 ("CAL-GREEN"), SECTION 5.504.4. (SEE SHEET N1.0, SECTION 9C "INTERIOR AIR QUALITY CONTROL")
6. FLAME SPREAD/SMOKE-DEVELOPED INDEX (TESTED IN ACCORDANCE WITH ASTM E 84 OR UL 723, PER CBC 803.1.1):

   WALL FINISH MATERIAL (CLASS 'C')
   FLAME SPREAD MAX = 200
   SMOKE DEVELOPED MAX = 450

   PIPE INSULATION (CLASS 'A')
   FLAME SPREAD MAX = 25
   SMOKE DEVELOPED MAX = 450

   BUILDING INSULATION (CLASS 'A')
   FLAME SPREAD MAX = 25
   SMOKE DEVELOPED MAX = 450

   DUCT INSULATION (CLASS 'A')
   FLAME SPREAD MAX = 25
   SMOKE DEVELOPED MAX = 50
7. TOILET PARTITIONS: SOLID PLASTIC BY ACCURATE PARTITIONS CORP. OR EQUIVALENT w/ FLOOR ANCHORS, OVERHEAD BRACED OR EQUIVALENT. MINIMUM FLAME SPREAD RATING: 50. MINIMUM SMOKE DEVELOPMENT RATING: 450. (BY OTHERS)
8. INTERIOR VENTILATION: EAVE VENTS AND ATTIC VENTS SHALL BE PROVIDED WITH CORROSION-RESISTANT WIRE CLOTH SCREENING, HARDWARE CLOTH, PERFORATED VINYL OR SIMILAR MATERIAL WITH OPENINGS HAVING A LEAST DIMENSION OF NOT LESS THAN 1/16" AND NOT MORE THAN 1/4" INCH, PER C.B.C. SECTION 1202.2.2.

DOORS & WINDOWS

1. EXTERIOR DOORS: METAL DOORS - 3'-0"x7'-0" HOLLOW METAL DOOR CONSTRUCTION OF 1 SHEET OF 18 GA. GRADE II STEEL ASSEMBLED PER CS242 MINIMUM, AND REINFORCED WITH 20 GA. MINIMUM. FILL DOOR SPACES WITH MINERAL WOOL OR OTHER INSULATION. (REINFORCE BOTH FACES FOR CLOSURE.) PROVIDE FLUSH TOP ON DOORS. HARDWARE REINFORCEMENT SHALL BE 10 GA. MIN FOR HINGES, DOOR FRAME SHALL BE 16 GA. PRESSED STEEL FRAME ASTM A366 & C5242. HARDWARE REINFORCEMENT SHALL BE 10 GA. PLATE. FRAMES SHALL BE DESIGNED WITH INTEGRAL STOP AND TRIM. PROVIDE (3) ANCHORS PER JAMB PLUS ADJUSTABLE FLOOR ANCHOR. ROOMS WITH AN OCCUPANT LOAD OF FIVE OR MORE SHALL HAVE DOOR HARDWARE CAPABLE OF BEING LOCKED FROM THE INSIDE (PER CBC 1010.1.11).
2. EXTERIOR WINDOWS: PROVIDE ANODIZED ALUMINUM FRAME 5/8" MINIMUM DUAL PANE WINDOW UNITS, AS SHOWN ON FLOOR PLANS. THE 5/8" DIMENSION IS THE MINIMUM THICKNESS FOR THE DUAL GLAZED WINDOW PANEL CONSISTING OF TWO LITES OF GLASS AND THE AIR SPACE.
3. GLAZING MATERIAL SHALL BE: EXTERIOR LITE - 3/16" MINIMUM TEMPERED GLASS OR LAMINATED AS - 1 GLASS OF SOLAR GRAY GLARE REDUCING TYPE WITH A LIGHT TRANSMISSION FACTOR OF 45% MAXIMUM. INTERIOR LITE - 1/8" MINIMUM CLEAR TEMPERED. MINIMUM AIR SPACE SHALL BE 1/4" SPACE - BENT OR SEALED CORNER ALUMINUM WITH DESICCANT FILL SEALER - BUTYL PRIMARY SEAL AND POLYSULFIDE OR SILICONE SECONDARY SEAL. CERTIFICATION - ALL GLAZING TO BE CERTIFIED IN ACCORDANCE WITH ASTM E-773, E-774.
4. HEADER HEIGHT SHALL BE THE SAME AS THE DOOR. ALL OPERABLE SASH SHALL HAVE ALUMINUM SCREENS. WINDOWS SHALL NOT BE MOUNTED TO THE EXTERIOR OSB SURFACE. ALL WINDOWS SHALL MEET THE AAMA GS101-88 VOLUNTARY SPEC. FOR ALUMINUM PRIME WINDOWS AND SLIDING GLASS (ANS1), COMMERCIAL GRADE.
5. WINDOWS TO MATCH WHAT IS REQUIRED BY ENERGY REPORT. IF WINDOWS MUST BE NFRC RATED THAN NFRC LABELS SHALL BE LEFT ON THE WINDOWS FOR THE INSPECTOR TO VERIFY.

MECHANICAL EQUIPMENT PROTECTION

1. ALL MECHANICAL EQUIPMENT SHALL BE THOROUGLY CLEANED PROGRESSIVELY DURING CONSTRUCTION AND COMPLETION OF THE JOB. ALL OPEN ENDS OF DUCTWORK AND EQUIPMENT SHALL BE COVERED AT END OF EACH WORK DAY AND DURING SHIPMENT OF RELOCATABLE BUILDINGS

FOUNDATION CLEARANCES FROM SLOPES

CBC 1808A.7.1 BUILDING CLEARANCE FROM ASCENDING SLOPES. IN GENERAL, BUILDINGS BELOW SLOPES SHALL BE SET A SUFFICIENT DISTANCE FROM THE SLOPE TO PROVIDE PROTECTION FROM SLOPE DRAINAGE, EROSION AND SHALLOW FAILURES. EXCEPT AS PROVIDED IN SECTION CBC 1808A.7.5 AND FIGURE CBC 1808A.7.1, THE FOLLOWING CRITERIA WILL BE ASSUMED TO PROVIDE THIS PROTECTION. WHERE THE EXISTING SLOPE IS STEEPER THAN ONE UNIT VERTICAL IN ONE UNIT HORIZONTAL (100-PERCENT SLOPE), THE TOE OF THE SLOPE SHALL BE ASSUMED TO BE AT THE INTERSECTION OF A HORIZONTAL PLANE DRAWN FORM THE TOP OF THE FOUNDATION AND A PLANE DRAWN TANGENT TO THE SLOPE AT AN ANGLE OF 45 DEGREES (0.79 RAD) TO THE HORIZONTAL. WHERE A RETAINING WALL IS CONSTRUCTED AT THE TOE OF THE SLOPE, THE HEIGHT OF THE SLOPE SHALL BE MEASURED FROM THE TOP OF THE WALL TO THE TOP OF THE SLOPE.

CBC 1808A.7.2 FOUNDATION SETBACK FROM DESCENDING SLOPE SURFACE. FOUNDATIONS ON OR ADJACENT TO SLOPE SURFACES SHALL BE FOUNDED IN FIRM MATERIAL WITH AN EMBEDMENT AND SET BACK FROM THE SLOPE SURFACE SUFFICIENT TO PROVIDE VERTICAL AND LATERAL SUPPORT FOR THE FOUNDATION WITHOUT DETRIMENTAL SETTLEMENT. EXCEPT AS PROVIDED FOR IN SECTION CBC 1808A.7.5 AND FIGURE CBC 1808A.7.1, THE FOLLOWING SETBACK IS DEEMED ADEQUATE TO MEET THE CRITERIA. WHERE THE SLOPE IS STEEPER THAN 1 UNIT VERTICAL IN 1 UNIT HORIZONTAL 100-PERCENT SLOPE), THE REQUIRED SETBACK SHALL BE MEASURED FROM AN IMAGINARY PLANE 45 DEGREES (0.79 RAD) TO THE HORIZONTAL, PROJECTED UPWARD FROM THE TOE OF THE SLOPE.

FIRE EXTINGUISHER

1. EACH CLASSROOM SHALL BE EQUIPPED WITH PRESSURE TYPE FIRE EXTINGUISHERS WITH 2A10BC UL RATING. MOUNT ON THE INTERIOR WALL OF THE BUILDING NEAR THE DOORWAY(S) AT A MAXIMUM HEIGHT OF 4 FEET TO THE TOP OF THE OPERATING HANDLE, AND THE BOTTOM OF F.E. MOUNTED 27" OR LESS A.F.F. FIRE EXTINGUISHERS SHALL BE TOTALLY CHARGED AND HAVE A DIAL INDICATING THE STATE OF CHARGE.

ACCESSIBILITY STANDARDS

REFERENCE: 2022 CALIFORNIA BUILDING CODE (TITLE 24, PART 2, CCR), CHAPTER 11B "ACCESSIBILITY TO PUBLIC..."

SECTION 11B-206.2 BUILDING ACCESSIBILITY, GENERAL
1. AT LEAST ONE ACCESSIBLE ROUTE SHALL CONNECT ALL BUILDINGS, ELEMENTS, AND AREAS, AND EACH FLOOR INCLUDING MEZZANINES.

SECTION 11B-216 SIGNAGE
(ALSO REFER TO SECTIONS 11B-703, 1009.9, 1009.10, 1023.9)
SIGNAGE IS REQUIRED:
1. TO IDENTIFY PERMANENT ROOMS & SPACES
2. TO PROVIDE DIRECTIONS AND INFORMATION ABOUT SPACES & FACILITIES
3. TO IDENTIFY MEANS OF EGRESS
   A. AREAS OF REFUGE AND AREA FOR ASSISTED RESCUE (PER 1009.9 AND 1009.11)
   B. DIRECTIONS TO AN EXIT (PER 1009.10)
   C. DELAYED EGRESS LOCKS (PER 1010.1.9.7 ITEM 6)
   D. EXIT WAYS (PER 1013.4)
      - AT EACH GRADE LEVEL EXTERIOR EXIT DOOR
      - AT AN EXIT BY MEANS OF A STAIRWAY OR RAMP ("EXIT STAIR DOWN" OR "EXIT RAMP DOWN")
      - AT AN EXIT ROUTE VIA ENCLOSURE, PASSAGEWAY, CORRIDOR, HALLWAY, ETC.
      - OTHER HORIZONTAL WAYS WHERE THE EXIT OR EXIT PATH IS NOT IMMEDIATELY VISIBLE (PER 1013.1)
4. TO IDENTIFY ACCESSIBLE PARKING SPACES
5. TO IDENTIFY ENTRANCES OR ROUTE TO AN ACCESSIBLE ENTRANCE
6. TO IDENTIFY ELEVATORS
7. TO IDENTIFY TOILET ROOMS
8. TO IDENTIFY PUBLIC TELEPHONES, TTY and ASSISTIVE LISTENING SYSTEMS

SIGNS, WHERE LOCATED WITHIN AN ACCESSIBLE ROUTE, MOUNTED LESS THAN 80" ABOVE THE FINISHED FLOOR, MUST HAVE ROUNDED EDGES OR AN EASED RADIUS MINIMUM OF 0.125".

SECTION 11B-404.2.8 DOOR CLOSING SPEED
1. THE SWEEP PERIOD OF ACCESSIBLE DOORS SHALL BE 5 SECONDS MINIMUM, FROM AN OPEN DOOR POSITION OF 90 DEGREES, TO A DOOR POSITION OF 12° FROM THE LATCH.

SECTION 11B-404.2.9 DOOR OPENING FORCE
1. THE EFFORT TO OPEN ANY DOOR SHALL NOT EXCEED 5LBS, EXCEPT FIRE DOORS, WHICH SHALL NOT EXCEED 15LBS FORCE. THE MINIMUM FORCE NEEDED SHALL BE USED.

SECTIONS 11B-404.2.4.3 RECESSED DOORS
1. DOORS RECESSED 8" OR MORE SHALL HAVE STRIKE EDGE CLEARANCES IN ACCORDANCE WITH FIGURE 11B-404.2.4.3.

SECTION 11B-405.5 RAMP WIDTH
1. THE CLEAR WIDTH OF A RAMP SHALL BE 48" MINIMUM.

SECTION 11B-505 HANDRAILS
1. THE TOP OF THE GRIPPING SURFACE OF HANDRAILS SHALL BE BETWEEN 34" AND 38", MEASURED VERTICALLY FROM WALKING SURFACES AND STAIR NOSINGS.
2. HANDRAILS SHALL HAVE AT LEAST 1-1/2" CLEARANCE ALONG THE SIDE; MAX. 20% OBSTRUCTIONS ON THE BOTTOM (11B-505.6).
3. HANDRAILS SHALL EXTEND BEYOND, AND IN THE SAME DIRECTION, OF STAIRS AND RAMPS.

SECTION 11B-606.4 WATER CONTROLS
1. CONTROLS TO OPERATE A WATER FAUCET OR OUTLET SHALL BE A SINGLE-LEVER DESIGN, CAPABLE OF BEING OPERATED WITH A SINGLE HAND, AND SHALL NOT REQUIRE TIGHT GRASPING, PINCHING, OR TWISTING OF THE WRIST.
2. THE FORCE REQUIRED TO OPERATE CONTROLS SHALL NOT EXCEED 5 LBS.

SECTION 11B-604 TOILET ROOMS AND BATHING ROOMS
1. AN ACCESSIBLE TOILET STALL SHALL HAVE A MINIMUM WIDTH OF 60" AND SHALL BE EQUIPPED WITH A DOOR THAT HAS AN AUTOMATIC-CLOSING DEVICE, AND SHALL HAVE A CLEAR, UNOBSTRUCTED OPENING WIDTH OF 32 INCHES WHEN LOCATED AT THE END AND 34 INCHES WHEN LOCATED AT THE SIDE, WITH THE DOOR POSITIONED AT AN ANGLE OF 90 DEGREES FROM ITS CLOSED POSITION.
2. THE INSIDE AND OUTSIDE OF THE ACCESSIBLE COMPARTMENT DOOR SHALL BE EQUIPPED WITH A LOOP OR U-SHAPED HANDLE IMMEDIATELY BELOW THE LATCH. THE LATCH SHALL BE FLIP-OVER STYLE, SLIDING OR OTHER HARDWARE NOT REQUIRING THE USER TO GRASP OR TWIST. THE LATCH AND PULL SHALL COMPLY WITH 11B-404.2.7. MAXIMUM 5 LB FORCE TO ACTIVATE (11B-309.4).
3. EXCEPT FOR DOOR-OPENING WIDTHS AND DOOR SWINGS, A CLEAR, UNOBSTRUCTED ACCESS OF NOT LESS THAN 44 INCHES SHALL BE PROVIDED TO THE WATER CLOSET COMPARTMENTS DESIGNED FOR USE BY PERSONS WITH DISABILITIES.
4. A 27"-29" MINIMUM DIMENSION IS REQUIRED FOR LAVATORY/SINK KNEE CLEARANCE, WHICH IS THE DISTANCE FROM THE FINISH FLOOR TO THE UNDERSIDE OF THE LAVATORY/SINK AND THE LAV FRONT EDGE.
5. TABLE 11B-604.9 SUGGESTS DIMENSIONS FOR CHILDREN'S USE.
6. TOILET ACCESSORIES LOCATED IN THE CIRCULATION PATH AND WITH THE BOTTOM MOUNTED ABOVE 27" SHALL BE 4" DEEP MAX (11B-307.2).

OUTDOOR VENTILATION REQUIREMENTS:

CLASSROOMS ARE DESIGNED FOR MINIMUM OUTSIDE AIR OF 0.38 CFM PER SF. PER
1. THE CALIFORNIA ENERGY CODE (CEC), SPACES SHALL BE DESIGNED TO THE MINIMUM REQUIREMENTS AS SPECIFIED OR TO 15 CFM PER OCCUPANT, WHICHEVER IS GREATER. THE BUILDING MANUFACTURER SHALL VERIFY WITH THE SCHOOL DISTRICT THE EXPECTED NUMBER OF OCCUPANTS IN THE CLASSROOM SO THAT THE OUTDOOR VENTILATION RATE FOR MECHANICAL SYSTEMS CAN BE ADEQUATELY ADJUSTED UPON SITE INSTALLATION OF THE BUILDING. THE BUILDING MANUFACTURER SHALL ALSO CONFIRM WITH HVAC EQUIPMENT MANUFACTURER THAT THE SELECTED EQUIPMENT WILL BE ABLE TO PERFORM TO ACCOMMODATE THE ADDITIONAL OUTDOOR AIR REQUIREMENTS UNDER PEAK DESIGN CONDITIONS FOR THE CLIMATE ZONE IN WHICH THE BUILDING IS LOCATED. AT OCCUPANCY, THE BUILDING MANUFACTURER SHALL PROVIDE TO BUILDING OWNER A DESCRIPTION OF THE QUANTITIES OF OUTDOOR AND RECIRCULATED AIR THAT THE VENTILATION SYSTEMS ARE DESIGNED TO PROVIDE TO EACH AREA.

FIG. 1808A.7.1

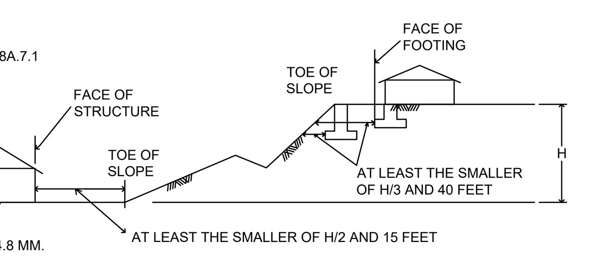

FOR SI: 1 FOOT=304.8 MM.

LIGHT GAUGE METAL STUDS & COLD FORMED STEEL

1. ALL LIGHT GAUGE METAL STUDS & COLD FORMED STEEL SHALL BE FORMED FROM STEEL THAT CORRESPONDS TO THE MINIMUM REQUIREMENTS OF THE AISI S100-16.
2. ALL GALVANIZED STUDS, JOISTS, TRACK, BRIDGING AND ACCESSORIES SHALL BE FORMED FROM STEEL HAVING A GALVANIZED COATING MEETING THE REQUIREMENTS OF ASTM A653.
3. CUSTOM FORMED SHAPES SHALL BE BENT FROM ASTM A1011 SS STEEL SHEETS.
4. STUD AND TRACK DESIGNATIONS ARE BASED ON STEEL STUD MANUFACTURERS ASSOCIATION. ICC-ES EVALUATION REPORT ESR-3064P.
5. GALVANIZED FRAMING PRODUCTS SHALL BE COATED IN ACCORDANCE WITH AISI S240-20, SECTION 20 A4. PRODUCTS WILL BE FURNISHED WITH A G-60 OR EQUIVALENT COATING IF SPECIFIED, AND SHALL BE IN CONFORMANCE WITH ASTM C-955, OTHERWISE, G-90 OR EQUIVALENT COATING WILL BE PROVIDED.
6. WELDING OF LIGHT GAUGE METAL STUDS & COLD FORMED STEEL SHALL COMPLY WITH AWS D1.3-08.
7. ALL COLD-ROLLED MEMBERS FABRICATED BY AMS SHALL USE HOT-ROLLED SHEETS WITH THE FOLLOWING MIN. SPECIFICATIONS UNLESS NOTED OTHERWISE ON THE DRAWINGS.

GA	MATERIAL	DESIGN THICKNESS	MIN. THICKNESS
20	A1011 SS Gr. 36	0.0346"	0.0329"
18	A1011 SS Gr. 36	0.0451"	0.0428"
16	A1011 SS Gr. 50	0.0566"	0.0538"
14	A1011 SS Gr. 45	0.0713"	0.0677"
12	A1011 SS Gr. 45	0.1017"	0.0966"
10	A1011 SS Gr. 50	0.1345"	0.1278"

METAL FLOOR DECK

1. SECTION PROPERTIES SHALL BE DERIVED IN ACCORDANCE WITH AISI, "SPECIFICATION FOR DESIGN OF COLD-FORMED STEEL STRUCTURAL MEMBERS, LATEST EDITION."
2. METAL DECKING IS TO BE ATTACHED TO THE STRUCTURAL FRAME IN CONFORMANCE WITH AWS D1.1 AND D1.3, "SPECIFICATION FOR WELDING SHEET STEEL IN STRUCTURES."

METAL FLOOR DECK (CONTINUED)

3. ASTM REFERENCE NUMBERS: ASTM A653, STEEL SHEET, ZINC-COATED (GALVANIZED) OR ZINC-IRON ALLOY-COATED (GALVANEALED) BY THE HOT-DIP PROCESS STRUCTURAL (PHYSICAL) QUALITY.
4. STEEL DECK INSTITUTE (SDI)-METAL FLOOR DECK PROFILES SHALL BE IN CONFORMANCE WITH SDI STANDARDS.
5. METAL FLOOR DECK TO BE ASC STEEL DECK PER IAPMO ER-0329:
   1.1. BH-36, 18 GAUGE, 1½" DEEP x 36" WIDE
   1.2. 3WxH-36, 18 GAUGE, 3" DEEP x 36" WIDE
6. DECK UNITS ARE TO BE FABRICATED FROM SHEET STEEL CONFORMING TO:
   1.1. ASTM A653 SS, F_Y=50 KSI WITH A GALVANIZED COATING, G-60 OR G-90.

FASTENERS FOR ATTACHMENT TO STEEL

1. SCREWS FOR STEEL TO STEEL & WOOD TO STEEL CONNECTIONS SHALL BE SELF-DRILLING, SELF-TAPPING SCREWS (SDSTS) PER ASTM C1513, UNO.
   1.1 HEAD TYPE AS REQUIRED FOR APPLICATION.
   1.2 SCREW LENGTHS TO HAVE 3 EXPOSED THREADS MIN.
   1.3 CORROSION PROTECTION: INTERIOR USE SCREWS AND SCREWS THAT ARE PROTECTED FROM THE OUTSIDE ENVIRONMENT SHALL BE ELECTRO-ZINC PLATED MIN, UNO. EXTERIOR USE SCREWS THAT ARE EXPOSED TO THE OUTSIDE ENVIRONMENT SHALL BE ONE OF THE FOLLOWING, UNO:
      A. ITW BUILDEX TEKS SELF-DRILLING TAPPING SCREWS WITH CLIMASEAL COATING PER ICC ESR-1976.
      B. HILTI SELF-DRILLING AND SELF-PIERCING TAPPING SCREWS WITH KWIK-COTE COATING PER ICC ESR-2196.
      C. GRABBER SELF-DRILLING TAPPING SCREWS WITH GRABBERGARD COATING PER ICC ESR-1271.
2. SHOT PINS SPECIFIED FOR PLYWOOD DIAPHRAM TO LIGHT GAUGE STEEL CONNECTIONS SHALL BE ET&F PINS PER IAPMO UES REPORT ER-0335.
3. SHOT PINS FOR ATTACHMENT OF 2X WOOD OR LIGHT GAUGE STEEL MEMBERS TO STRUCTURAL STEEL OR CONCRETE SHALL BE BY HILTI UNO.

ABBREVIATION LEGEND

ACC	ACCESSIBLE
AC	ASPHALT CONCRETE
A/C	AIR CONDITIONING
ACI	AMERICAN CONCRETE INSTITUTE
ACOUS	ACOUSTICAL
ADD	ADDENDUM
ADD'L	ADDITIONAL
ADJ	ADJUSTABLE OR ADJACENT
AISC	AMERICAN INSTITUTE OF STEEL CONSTRUCTION
AISI	AMERICAN IRON AND STEEL INSTITUTE
ALT	ALTERNATE
ALUM	ALUMINUM
ANSI	AMERICAN NATIONAL STANDARDS INSTITUTE
APA	AMERICAN PLYWOOD ASSOCIATION
ARCH	ARCHITECT(URAL)
ASTM	AMERICAN SOCIETY FOR TESTING AND MATERIALS
AWC	AMERICAN WOOD COUNCIL
AWPA	AMERICAN WOOD PROTECTION ASSOCIATION
AWS	AMERICAN WELDING SOCIETY
BD	BOARD
BLDG	BUILDING
BLK	BLOCK
BLKG	BLOCKING
BLW	BELOW
BM	BEAM
BN	BOUNDARY NAILING
BOT/BOTT	BOTTOM
BRG	BEARING
BTWN	BETWEEN
BUR	BUILT UP ROOFING
C	CARPET
CAB	CABINET
CB	CATCH BASIN
CBC	CALIFORNIA BUILDING CODE
CCR	CALIFORNIA CODE OF REGULATIONS
CEM	CEMENT
CF	CUBIC FOOT
CJ	CONTROL JOINT
CJP	COMPLETE JOINT PENETRATION
CLG	CEILING
CLR	CLEAR
CT	CERAMIC TILE
CMU	CONCRETE MASONRY UNIT
CNEL	COMMUNITY NOISE EQUIVALENT LEVEL
CO	CLEAN OUT
COL	COLUMN
CONC	CONCRETE
CONN	CONNECTION
CONT	CONTINUOUS
CSK	COUNTERSINK
CTRD	CENTERED
CW	COLD WATER
DBL	DOUBLE
DET	DETAIL
DF	DRINKING FOUNTAIN OR DOUGLAS FIR
DIA	DIAMETER
DIAG	DIAGONAL
DIM	DIMENSION
DIV	DIVISION
DR	DOOR
DS	DOWNSPOUT
DSA	DIVISION OF THE STATE ARCHITECT
DWG	DRAWING
(E)	EXISTING
EA	EACH
EJ	EXPANSION JOINT
ELEV	ELEVATION
ELECT	ELECTRICAL
EMBED	EMBEDMENT
EMT	ELECTRICAL MAGNETIC TUBING
EN	EDGE NAILING (OR EDGE FASTENING)
ETC	ET CETERA
EQ	EQUAL
EW	EACH WAY
EXP	EXPOSURE
EXT	EXTERIOR
F	FAHRENHEIT
FUT	FUTURE
FAB	FABRICATION
FAC	FACTORY
FD	FLOOR DRAIN
FF	FINISHED FLOOR
FG	FINISHED GRADE
FHWS	FLAT HEAD WOOD SCREW
FIN	FINISH
FLR	FLOOR
FLSHG	FLASHING
FN	FIELD NAILING
FND/FNDN	FOUNDATION
FO	FACE OF
FOC	FACE OF CONCRETE
FOCOL	FACE OF COLUMN
FOF	FACE OF FINISH
FOP	FACE OF PLYWOOD
FOS	FACE OF STUD
FRP	FIBERGLASS REINFORCED PLASTIC PANELS
FT	FOOT
FTG	FOOTING
FURR	FURRED (-ING)
GA	GAUGE
GB	GYPSUM BOARD
GL	GLASS OR GLAZING
GLV/GALV	GALVANIZED
GSM	GALVANIZED SHEET METAL
GYP	GYPSUM
GYP.BD.	GYPSUM BOARD
HB	HOSE BIBB
HC	HOLLOW CORE
HDR	HEADER
HDW	HARDWOOD
HF	HEM FIR
HM	HOLLOW METAL (STEEL)
HOR/HORIZ	HORIZONTAL
HSS	HOLLOW STRUCTURAL SECTION (STEEL)
HT	HEIGHT
HVAC	HEATING VENTILATING AIR CONDITIONING
HW	HOT WATER
IAPMO	INTERNATIONAL ASSOCIATION OF PLUMBING AND MECHANICAL OFFICIALS
ICC	INTERNATIONAL CODE COUNCIL
ID	INSIDE DIAMETER
IN	INCH
INSUL	INSULATE (D), (ION)
INT	INTERIOR
INV	INVERT
IR	INTERPRETATION OF REGULATIONS
ISA	INTERNATIONAL SYMBOL OF ACCESSIBILITY/ACCESS
JT	JOINT
KSI	KIPS PER SQUARE INCH (KIPS = 1,000LBS)
LAM	LAMINATE(D)
LAV	LAVATORY
LB, LBS	POUND
LLH	LONG LEG HORIZONTAL
LLV	LONG LEG VERTICAL
LNDG	LANDING
LONG	LONGITUDINAL
LS	LAG SCREW
LT	LIGHT
LW	LIGHT WEIGHT
LWC	LIGHT WEIGHT CONCRETE
MATL	MATERIAL
MAX	MAXIMUM
MB	MECHANICAL BOLT
MECH	MECHANICAL
MFG	MANUFACTURING
MFR	MANUFACTURER
MIN	MINIMUM
MIR	MIRROR
MISC	MISCELLANEOUS
MM	MILLIMETER
MTL	METAL
(N)	NEW
NIC	NOT IN CONTRACT
NDS	NATIONAL DESIGN SPECIFICATION
NW	NORMAL WEIGHT
NWC	NORMAL WEIGHT CONCRETE
O/	OVER
OC	ON CENTER
OD	OUTSIDE DIAMETER
OH	OPPOSITE HAND OR OVERHANG
OL	OCCUPANT LOAD
OPG	OPENING
OPP	OPPOSITE
OSB	ORIENTED STRAND BOARD
PAF	POWER-ACTUATED FASTENER
PL	PROPERTY LINE
PLAM	PLASTIC LAMINATE
PLAS	PLASTER
PLF	POUNDS PER LINEAR FOOT
PLT	PLATE
PLWD/PLY	PLYWOOD
PNL	PANEL
POC	POINT OF CONNECTION
PS	PRODUCT STANDARD
PSF	POUNDS PER SQUARE FOOT
PSI	POUNDS PER SQUARE INCH
PSL	PARALLEL STRAND LUMBER
PT	PRESSURE TREATED
PTDF	PRESERVATIVE TREATED DOUGLAS FIR
PTN	PARTITION
PVC	POLYVINYL CHLORIDE
R	RISER
RD	ROOF DRAIN
RDPRC	REGISTERED DESIGN PROFESSIONAL IN RESPONSIBLE CHARGE
RDWD	REDWOOD
REF	REFERENCE
REFR	REFRIGERATOR
REINF	REINFORCING
REQ'D/REQ	REQUIRED
RES	RESILIENT
RDWD	REDWOOD
RWL	RAIN WATER LEADER
SCH/SCHED	SCHEDULE
SD	STORM DRAIN
SDSTS	SELF-DRILLING, SELF-TAPPING SCREW
SEC	SECTION
SEP	SEPARATION
SF	SQUARE FEET
SHT	SHEET
SHTG	SHEATHING
SIM	SIMILAR
SMS	SHEET METAL SCREW
SOG	SLAB-ON-GRADE
SP	STRUCTURAL PLYWOOD
SPEC	SPECIFICATIONS
SQ	SQUARE
SS	STAINLESS STEEL
SSMA	STEEL STUD MANUFACTURERS ASSOCIATION
STAGG	STAGGERED
STN	STAIN
STD	STANDARD
STL	STEEL
STS	SELF TAPPING SCREW
STSMS	SELF TAPPING SHEET METAL SCREW
T&B	TOP AND BOTTOM
T&G	TONGUE AND GROOVE
TEMP	TEMPERED
THRU	THROUGH
TJ	TOOL JOINT
TOC	TOP OF CURB, CRICKET, OR CONCRETE
TOP	TOP OF PARAPET
TOS	TOP OF SLAB, SHEATHING, OR STEEL
TOW	TOP OF WALL
TRANS	TRANSVERSE
TS	TOP OF SHEATHING
TV	TELEVISION
TYP	TYPICAL
UON	UNLESS OTHERWISE NOTED
UNO	UNLESS NOTED OTHERWISE
VAR	VARIES
VCT	VINYL COMPOSITION TILE
VCTB	VINYL COVERED TACKBOARD
VERT	VERTICAL
VOC	VOLATILE ORGANIC COMPOUND(S)
VFY	VERIFY
VIF	VERIFY IN FIELD
VWC	VINYL WALL COVERING
W/	WITH
WD	WOOD
WF	WIDE FLANGE
WIN	WINDOW
W/O	WITHOUT
WS	WOODSCREW
WSCT	WAINSCOT
WT	WEIGHT
WWF	WELDED WIRE FABRIC
∠	ANGLE
@	AT
℄	CENTER LINE
Ø	DIAMETER
°	DEGREES
M̸L	MODULE LINE
±	PLUS/MINUS

American Modular Systems
787 Spreckels Ave., Manteca, CA 95336
Phone (209) 825-1921 Fax (209) 825-7018
www.americanmodular.com

INTELLECTUAL-PROPERTY & PROPRIETARY RIGHTS STATEMENT
COPYRIGHT © AMERICAN MODULAR SYSTEMS (AMS)
AMS OWNS ALL COPYRIGHT AND OTHER INTELLECTUAL-PROPERTY AND PROPRIETARY RIGHTS IN THESE DRAWINGS, SPECIFICATIONS, AND THE MATERIAL CONTAINED HEREIN. CERTAIN ELEMENTS SHOWN IN THESE DOCUMENTS ARE REGISTERED TRADEMARKS OF AMS. ALL PATENTABLE MATERIALS CONTAINED IN THESE DOCUMENTS AND ORIGINATING WITH AMS WILL REMAIN THE SOLE PROPERTY OF AMS. THESE DRAWING, SPECIFICATIONS, AND THE MATERIAL CONTAINED HEREIN MAY NOT BE REPRODUCED, TRANSMITTED, COPIED, DISTRIBUTED, MODIFIED, OR OTHERWISE DISPOSED OF (DIRECTLY OR INDIRECTLY) AND MAY NOT BE USED (IN WHOLE OR IN PART) TO ASSIST IN THE CONSTRUCTION, DESIGN, OR OTHER MAKING OF, OR FOR THE PURPOSE OF FURNISHING ANY INFORMATION FOR THE CONSTRUCTION, DESIGN, OR OTHER MAKING OF, ANY BUILDINGS (MODULAR OR OTHERWISE), DRAWINGS, SPECIFICATIONS, PRINTS, APPARATUS, OR PARTS THEREOF, EXCEPT AS EXPRESSLY PERMITTED BY WRITTEN CONSENT OF, OR IN A WRITTEN AGREEMENT WITH, AMS. SUBMITTAL OR DISTRIBUTION TO MEET OFFICIAL REGULATORY REQUIREMENTS WILL NOT BE CONSTRUED AS PUBLICATION IN DEROGATION OF AMS'S COPYRIGHT OR OTHER INTELLECTUAL-PROPERTY OR PROPRIETARY RIGHTS.

PRE-CHECKED SET NAME
24' x 40' THRU 120' x 40'
STANDARD MODULAR BUILDING

SITE SPECIFIC PROJECT NAME
PLEASANT VIEW USD
PLEASANT VIEW ELEMENTARY
(1) 108' x 40' BUILDING

APPROVED
DIV. OF THE STATE ARCHITECT
APP: 04-122050 PC
REVIEWED FOR
SS ☑ FLS ☑ ACS ☑ CG ☑
DATE: 12/11/2023

MANUFACTURER PROFESSIONAL OF RECORD
LICENSED ARCHITECT
RANDALL PATRICK CAVANAGH
No. C12631
Ren. 3-31-25
STATE OF CALIFORNIA

THESE DRAWINGS ARE PRELIMINARY AND NOT FOR CONSTRUCTION UNLESS STAMPED & SIGNED BY THE ENGINEER OF RECORD.

REVISIONS
1
2
3
4

DRAWN BY:	WY
SCALE:	AS NOTED
DATE:	06/20/2023
PROJECT NO:	1715-22

SHEET TITLE:
GENERAL NOTES
&
SPECIFICATIONS

SHEET NUMBER:
N2.0

IDENTIFICATION STAMP
DIV. OF THE STATE ARCHITECT
APP: 02-122976 INC:
REVIEWED FOR
SS ☑ FLS ☑ ACS ☑
DATE: 03/12/2025

TRACY
UNIFIED SCHOOL DISTRICT

HMC Architects

3595001000

2101 CAPITOL AVENUE, SUITE 100
SACRAMENTO, CA 95816
916 368 7990 / www.hmcarchitects.com

ISSUE

Δ	DESCRIPTION	DATE
A	ADDENDUM "A"	3/20/25

KEYNOTES

GENERAL NOTES

FACILITY:
JACOBSON ELEMENTARY SCHOOL
1750 W KAVANAGH AVE
TRACY, CA 95376

PROJECT:
JACOBSON ES - TK CLASSROOM

SHEET NAME:
GENERAL NOTES & SPECIFICATIONS

DATE: **04/03/24** CLIENT PROJ NO: **3595001000**

SHEET:
N2.0

ADDENDUM "A"

PLEASE RECYCLE

THE LINE SHOWN ABOVE IS EXACTLY ONE INCH LONG AT THIS SHEETS ORIGINAL PAGE SIZE

DOOR NO.	DOOR TYPE	DOOR SIZE	QUANTITY	MATERIAL	FINISH	HARDWARE SET NO.	FRAME TYPE	FRAME MATERIAL	FRAME FINISH	REMARKS
1	D1	3'-0" x 7'-0"		HM	PT	A/B	F1	S	PT	HARDWARE LOCKABLE FROM THE INSIDE, SEE DOOR NOTE #3
2	D2	3'-0" x 7'-0"	-	HM	PT	H/I	F1	S	PT	
3	D3	2'-0" x 7'-0"	-	HM	PT	J	F2	S	PT	
4	D4	3'-0" x 7'-0"	-	SC	CLR	D	F1	S	PT	

DOOR ABBREVIATIONS

HM - HOLLOW METAL
AL - ALUMINUM
S - STEEL
SST - STAINLESS STEEL
STL - STEEL FRAME, 16ga. FULLY WELDED
WWF - WINDOW WALL FRAME
SC - SOLID CORE WOOD
HC - HOLLOW CORE WOOD
PT - PAINTED
CA - CLEAR ANODIZED
BR - BRONZE ANODIZED
CLR - CLEAR FINISH

DOOR NOTES

1. DOORS SHALL COMPLY WITH C.B.C. SECTION 1010.
2. CLASSROOMS ≥ 1000 S.F WILL REQUIRE PANIC HARDWARE THAT COMPLIES WITH C.B.C. SECTION 1010.2.9.
3. PER C.B.C. 1010.2.8.2: PROVIDE LOCKS THAT ALLOW DOORS TO CLASSROOMS AND ANY ROOM WITH AN OCCUPANCY OF FIVE OR MORE PERSONS TO BE LOCKED FROM THE INSIDE. LOCKS SHALL COMPLY WITH C.B.C. SECTION 1010.2.

DOOR SCHEDULE

WINDOW TYPE	QTY.	FUNCTION	'W' WIDTH	'H' HEIGHT	FINISH	GLASS TYPE	U FACTOR	SHGC	VT MIN	MIN STC RATING	REMARKS
A	-	FIXED	10'-0" MAX.	8'-0" MAX.	BRONZE ANODIZED	SOLAR GREY[6]	0.42	0.25	0.44	27	INOPERABLE
B	-	FIXED	6'-0" MAX.	6'-0" MAX.	BRONZE ANODIZED	SOLAR GREY[6]	0.42	0.25	0.44	27	INOPERABLE

1. EXTERIOR LITE - 3/16" MINIMUM TEMPERED GLASS, OR LAMINATED AS 1 GLASS OF SOLAR GRAY GLARE REDUCING TYPE WITH A LIGHT TRANSMISSION FACTOR OF 45% MAXIMUM.
2. WINDOWS THAT MEETS ALL OF THE FOLLOWING CONDITIONS SPECIFIED IN SECTION 2406.4.3, SHALL BE CONSIDERED A HAZARDOUS LOCATION:
   A. THE EXPOSED AREA OF AN INDIVIDUAL PANE IS GREATER THAN 9 SQUARE FEET.
   B. THE BOTTOM EDGE OF THE GLAZING IS LESS THAN 18" ABOVE FINISH FLOOR.
   C. THE TOP EDGE OF THE GLAZING IS GREATER THAN 36" ABOVE FINISH FLOOR.
   D. ONE OR MORE WALKING SURFACE(S) ARE WITHIN 36", MEASURED HORIZONTALLY AND IN A STRAIGHT LINE, OF THE PLANE OF THE GLAZING.
3. WINDOWS THAT ARE CONSIDERED A HAZARDOUS LOCATION SHALL CONTAIN FULLY TEMPERED SAFETY GLAZING & MEET THE FOLLOWING REQUIREMENTS:
   A. PASS THE IMPACT TEST REQUIREMENTS IN ACCORDANCE WITH "CPSC 16 CFR PART 1201" PER SECTION 2406.2, WITH A TEST CRITERIA OF CATEGORY II, UNLESS OTHERWISE INDICATED IN C.B.C. TABLE 2406.2(1).
   B. IDENTIFICATION OF SAFETY GLAZING PER C.B.C. 2406.3
4. ALL WINDOWS SHALL HAVE METAL FRAMES AND BE MANUFACTURED BY OTHERS.
5. WINDOWS SHALL BE NFRC RATED
6. THE MINIMUM STANDARD GLASS TYPE FOR ALL WINDOWS SHALL SOLAR GREY GLAZING. UPGRADED GLAZING (LOW E, LOW E2, ETC.) MAY BE USED PER SITE SPECIFIC REQUIREMENTS.
7. ALL NFRC RATED FENESTRATION AS NOTED ON THE WINDOW SCHEDULE REQUIRE TEMPORARY NFRC LABELS. TEMPORARY NFRC LABELS SHALL STAY ON FENESTRATION PRODUCTS UNTIL INSPECTOR HAS VERIFIED THAT THE INSTALLED U-FACTOR, SHGC, AND VT MATCH THE WINDOW SCHEDULE.

WINDOW SCHEDULE

FINISHES

ROOM NUMBER	ROOM NAME	FLOOR	BASE	WALLS FRONT	WALLS REAR	WALLS RIGHT	WALLS LEFT	CEILING	CEILING HEIGHT	REMARKS
101 TYP	CLASSROOM - STANDARD	A	D	F	F	F	F	K	8'-6"	
102 TYP	CLASSROOM - STANDARD	A	D	F	F	F	F	K	8'-6"	
--- TYP	BOYS R.R.	B	E	J	J	J	J	H	8'-6"	
--- TYP	GIRLS R.R.	B	E	J	J	J	J	H	8'-6"	
--- TYP	STAFF ROOM	B	E	J	J	J	J	H	8'-6"	
--- TYP	SINGLE TOILET R.R.	B	E	J	J	J	J	H	8'-0"	

FINISH INDICATOR OPTIONS

A - CARPET; PER STATE OF CA SPEC COMPLYING WITH GROUP 1, TYPE A OR TYPE B, CLASS 2, DENSITY 4600.
B - VINYL SHEET FLOORING; 0.6 MIN, C.D.F. PER ASTM D 2047
C - VCT; ARMSTRONG, STANDARD, OR EXCELON.
D - TOP SET BASE; 4"
E - TOP SET BASE; 6"
F - WALL FINISH; 1/2" VINYL TACKBOARD CLASS 1 OVER 1/2" GYP BOARD BACKING
G - 1/2" W.R. GYP BOARD; TAPE, PAINTED FINISH
H - 1/2" GYP BOARD; TAPE, PAINTED FINISH
J - 3/32" F.R.P.; OVER 1/2" W.R. GYP BOARD
K - ACOUSTICAL LAY-IN GRID CEILING PANELS; 2'x2' OR 2'x4'
L - 1/2" VINYL TACKBOARD; CLASS 1, OVER 5/8" TYPE "X" GYP BOARD BACKING
M - 5/8" TYPE 'X' GYP BOARD; TAPE, TEXTURE, PAINTED FINISH
N - CERAMIC TILE - (FULL HEIGHT AT WALLS)
O - EXPOSED CONCRETE WITH CONCRETE SEALER
P - CLOUD CEILING PANELS

CBC & TITLE 19.

ROOM FINISHES SCHEDULE

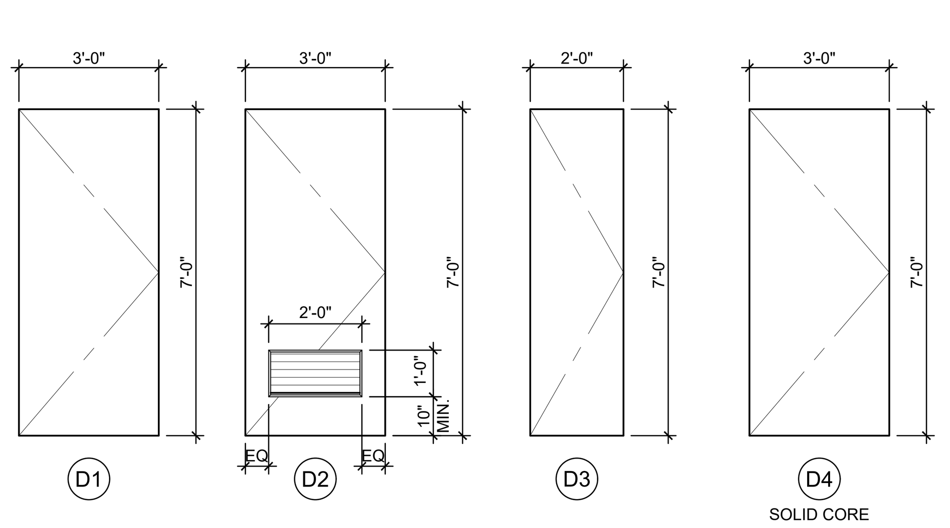

DOOR TYPES

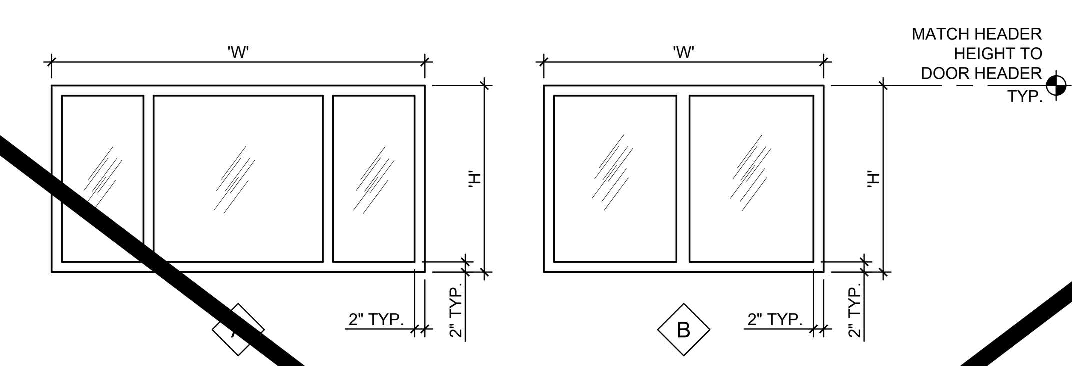

SEE SHEET N3.0-N FOR SITE-SPECIFIC SHEET

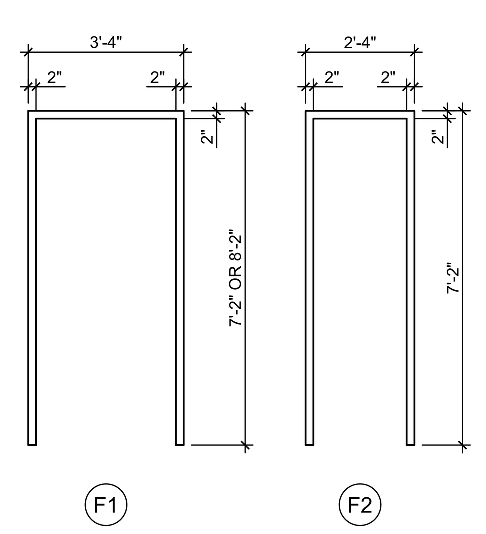

DOOR FRAME TYPES

36'x40'	240
48'x40'	320
60'x40'	400
72'x40'	480
84'x40'	560
96'x40'	640
108'x40'	720
120'x40'	800

* WINDOW PLACEMENT & SIZE MAY VARY AS TITLE 24 MOBDEL REFLECTS THE LARGEST WINDOW OPTION. THE TOTAL WINDOW AREA OF ANY BUILDING MAY NOT EXCEED THE MAXIMUM ALLOWED WINDOW AREA (SQ FT) LISTED IN THE TABLE ABOVE. IF A BUILDING EXCEEDS THE MAXIMUM AREA, A PROJECT SPECIFIC TITLE 24 REPORT SHALL BE PROVIDED.

WINDOW GLAZING AREA TABLE

A	EXTERIOR DOOR LOCKSET w/LEVER RHODES SCHLAGE ND95PD - CLASSROOM LOCK
B	EXTERIOR DOOR PANIC BAR w/PULL ON EXTERIOR VON DUPRIN AX22PANL (REQUIRED WHEN OCCUPANT LOAD IS 50 0R MORE)
C	INTERIOR PASSAGE COPPER CREEK 6220-PASSAGE w/ LEVER
D	INTERIOR RESTROOM COPPER CREEK 6231-RESTROOM w/ LEVER
E	INTERIOR ENTRY/OFFICE COPPER CREEK 6241-ENTRY/OFFICE w/ LEVER
F	INTERIOR STOREROOM COPPER CREEK 6250-STOREROOM w/ LEVER
G	INTERIOR CLASSROOM COPPER CREEK 6260-CLASSROOM w/ LEVER
H	EXTERIOR DOOR LOCKSET w/LEVER RHODES SCHLAGE ND70PD - MULTI-ACCOMODATION RESTROOM LOCK
I	EXTERIOR DOOR LOCKSET w/LEVER & PUSH BUTTON RHODES SCHLAGE ND85PD - SINGLE USER RESTROOM LOCK
J	EXTERIOR DOOR LOCKSET w/LEVER RHODES SCHLAGE ND80PD - STOREROOM LOCK

EXTERIOR DOOR HARDWARE

1. HINGES: HAGER 4-1/2x4-1/2 BUTTS, BB1279 US26D, 1-1/2 PAIR PER DOOR, WITH SET SCREW IN BARREL AND BALL BEARING DESIGN.
2. CLOSER: NORTON 8500DA OR 8500BF SERIES, LCN 1460 DEL SERIES OR EQUAL. (5 LBS. MAX. PRESSURE) ALL SCHLAGE HARDWARE IS PROVIDED WITH A CLOSER
3. WEATHERSTRIPPING: ALL EXTERIOR DOORS SHALL BE WEATHERSTRIPPED WITH PEMKO 299D, ULTRA WS007 OR EQUAL, AT DOOR JAMBS AND HEAD.
4. THRESHOLD: THRESHOLD SHALL BE PEMKO 271 AV 5" ALUMINUM WITH PEMKO 216 AV ULTRA TH042 DOOR BOTTOM.
5. LOCKDOWN: INTERIOR TEACHERS' MANUAL LOCK FOR CAMPUS LOCK DOWN CRITERIA - REQUIRED FOR STATE-FUNDED SCHOOLS, PER EDUCATION CODE SECTION 17075.50 (AND ALSO CBC 1010.1.11): PROVIDE LOCKS THAT ALLOW DOORS TO CLASSROOMS AND ANY ROOM WITH AN OCCUPANCY OF FIVE OR MORE PERSONS TO BE LOCKED FROM THE INSIDE. LOCKS SHALL COMPLY WITH C.B.C. SECTION 1010.1.9.

DOOR HARDWARE NOTES

1. 11B-404.2.3 CLEAR WIDTH
   DOOR OPENINGS SHALL PROVIDE A CLEAR WIDTH OF 32 INCHES (813 MM) MINIMUM. CLEAR OPENINGS OF DOORWAYS WITH SWINGING DOORS SHALL BE MEASURED BETWEEN THE FACE OF THE DOOR AND THE STOP, WITH THE DOOR OPEN 90 DEGREES. OPENINGS MORE THAN 24 INCHES (610 MM) DEEP SHALL PROVIDE A CLEAR OPENING OF 36 INCHES (914 MM) MINIMUM. THERE SHALL BE NO PROJECTIONS INTO THE REQUIRED CLEAR OPENING WIDTH LOWER THAN 34 INCHES (864 MM) ABOVE THE FINISH FLOOR OR GROUND. PROJECTIONS INTO THE CLEAR OPENING WIDTH BETWEEN 34 INCHES (864 MM) AND 80 INCHES (2032 MM) ABOVE THE FINISH FLOOR OR GROUND SHALL NOT EXCEED 4 INCHES (102 MM).

   EXCEPTIONS:
   1. IN ALTERATIONS, A PROJECTION OF 5/8 INCH (15.9 MM) MAXIMUM INTO THE REQUIRED CLEAR WIDTH SHALL BE PERMITTED FOR THE LATCH SIDE STOP.
   2. DOOR CLOSERS AND DOOR STOPS SHALL BE PERMITTED TO BE 78 INCHES (1981 MM) MINIMUM ABOVE THE FINISH FLOOR OR GROUND.
2. HANDLES, PULLS, LATCHES, LOCKS AND OTHERS OPERABLE PARTS ON DOORS SHALL BE OPERABLE WITH ONE HAND AND SHALL NOT REQUIRE TIGHT GRASPING, PINCHING OR TWISTING OF THE WRIST. THE FORCE REQUIRED TO ACTIVATE OPERABLE PARTS SHALL BE 5 lbs. MAX. (11B-404.2.7, 11B-309.4)
3. DOORS SHALL BE OPERABLE FROM INSIDE WITH A SINGLE MOTION W/O THE USE OF ANY TOOLS, EFFORT, OR SPECIAL KNOWLEDGE.
4. EMERGENCY EXIT AND PANIC HARDWARE
   EMERGENCY EXIT AND PANIC HARDWARE SHALL COMPLY WITH SFM STANDARD 12-10-3, SECTION 12-10-302
   A) THE CROSS-BAR SHALL EXTEND ACROSS NOT LESS THAN ONE-HALF THE WIDTH OF THE DOOR/GATE
   D) THE ENDS OF THE CROSS-BAR SHALL BE CURVED, GUARDED OR OTHERWISE DESIGNED TO PREVENT CATCHING ON THE CLOTHING OF PERSONS DURING EGRESS.

*ADDITIONAL DOORS MAY BE REQUIRED BASED ON BUILDING LAYOUT.

DOOR HARDWARE SCHEDULE

EMERGENCY EXIT AND PANIC HARDWARE:
IN COMPLIANCE WITH SFM STANDARD 12-10-3, SECTION 12-1-302

(A) THE CROSS BAR SHALL EXTEND ACROSS NOT LESS THAN ONE HALF THE WIDTH OF THE DOOR/GATE.

(B) THE ENDS OF THE CROSS BAR SHALL BE CURVED, GUARDED OR OTHERWISE DESIGNED TO PREVENT CATCHING ON THE CLOTHING OF PERSONS DURING EGRESS.

EMERGENCY EXIT AND PANIC HARDWARE

Autodesk Docs://3595005000 TUSD TK CLASSROOMS 2025 R22/3595005000-A-TUSD-BOHN-SITE.rvt
12/3/2024 9:55:46 AM

AMS American Modular Systems
787 Spreckels Ave., Manteca, CA 95336
Phone (209) 825-1921 Fax (209) 825-7018
www.americanmodular.com

INTELLECTUAL-PROPERTY & PROPRIETARY RIGHTS STATEMENT
COPYRIGHT © AMERICAN MODULAR SYSTEMS (AMS)
AMS OWNS ALL COPYRIGHT AND OTHER INTELLECTUAL-PROPERTY AND PROPRIETARY RIGHTS IN THESE DRAWINGS, SPECIFICATIONS, AND THE MATERIAL CONTAINED HEREIN. CERTAIN ELEMENTS SHOWN IN THESE DOCUMENTS ARE REGISTERED TRADEMARKS OF AMS. ALL PATENTABLE MATERIALS CONTAINED IN THESE DOCUMENTS AND ORIGINATING WITH AMS WILL REMAIN THE SOLE PROPERTY OF AMS. THESE DRAWING, SPECIFICATIONS, AND THE MATERIAL CONTAINED HEREIN MAY NOT BE REPRODUCED, TRANSMITTED, COPIED, DISTRIBUTED, MODIFIED, OR OTHERWISE DISPOSED OF (DIRECTLY OR INDIRECTLY) AND MAY NOT BE USED (IN WHOLE OR IN PART) TO ASSIST IN THE CONSTRUCTION, DESIGN, OR OTHER MAKING OF, OR FOR THE PURPOSE OF FURNISHING ANY INFORMATION FOR THE CONSTRUCTION, DESIGN, OR OTHER MAKING OF, ANY BUILDINGS (MODULAR OR OTHERWISE), DRAWINGS, SPECIFICATIONS, PRINTS, APPARATUS, OR PARTS THEREOF, EXCEPT AS EXPRESSLY PERMITTED BY WRITTEN CONSENT OF, OR IN A WRITTEN AGREEMENT WITH, AMS. SUBMITTAL OR DISTRIBUTION TO MEET OFFICIAL REGULATORY REQUIREMENTS WILL NOT BE CONSTRUED AS PUBLICATION IN DEROGATION OF AMS'S COPYRIGHT OR OTHER INTELLECTUAL-PROPERTY OR PROPRIETARY RIGHTS.

PRE-CHECKED SET NAME
24' x 40' THRU 120' x 40' STANDARD MODULAR BUILDING (LOW SEISMIC)
FORM

SITE SPECIFIC PROJECT NAME

APPROVED DIV. OF THE STATE ARCHITECT
APP: 04-122050 PC
REVIEWED FOR SS ☑ FLS ☑ ACS ☑ CG ☑
DATE: 12/11/2023

2022 CBC PRE-CHECK (PC) DOCUMENT
A SEPARATE PROJECT APPLICATION FOR CONSTRUCTION IS REQUIRED.

MANUFACTURER PROFESSIONAL OF RECORD ON PC
LICENSED ARCHITECT RANDALL PATRICK CAVANAGH No. C12631 Ren. 3-31-25 STATE OF CALIFORNIA

THESE DRAWINGS ARE PRELIMINARY AND NOT FOR CONSTRUCTION UNLESS STAMPED & SIGNED BY THE DESIGN PROFESSIONAL OF RECORD.

REVISIONS
1
2
3
4

DRAWN BY:	AA
SCALE:	AS NOTED
DATE:	MM/DD/YY
PROJECT NO:	XXXX-22

SHEET TITLE:
TYPICAL SCHEDULES: DOORS, WINDOWS & FINISHES

SHEET NUMBER:
N3.0

PLEASE RECYCLE

IDENTIFICATION STAMP DIV. OF THE STATE ARCHITECT
APP: 02-122976 INC:
REVIEWED FOR SS ☑ FLS ☑ ACS ☑
DATE: 03/12/2025

TRACY UNIFIED SCHOOL DISTRICT

HMC Architects
3595001000
2101 CAPITOL AVENUE, SUITE 100
SACRAMENTO, CA 95816
916 368 7990 / www.hmcarchitects.com

ISSUE

Δ	DESCRIPTION	DATE
A	ADDENDUM "A"	3/20/25

KEYNOTES

GENERAL NOTES

FACILITY:
JACOBSON ELEMENTARY SCHOOL
1750 W KAVANAGH AVE
TRACY, CA 95376

PROJECT:
JACOBSON ES - TK CLASSROOM

SHEET NAME:
TYPICAL SCHEDULES - DOORS, WINDOWS & FINISHES

DATE: **04/03/24** CLIENT PROJ NO: **3595001000**

SHEET:
N3.0

ADDENDUM "A"

THE LINE SHOWN ABOVE IS EXACTLY ONE INCH LONG AT THIS SHEETS ORIGINAL PAGE SIZE

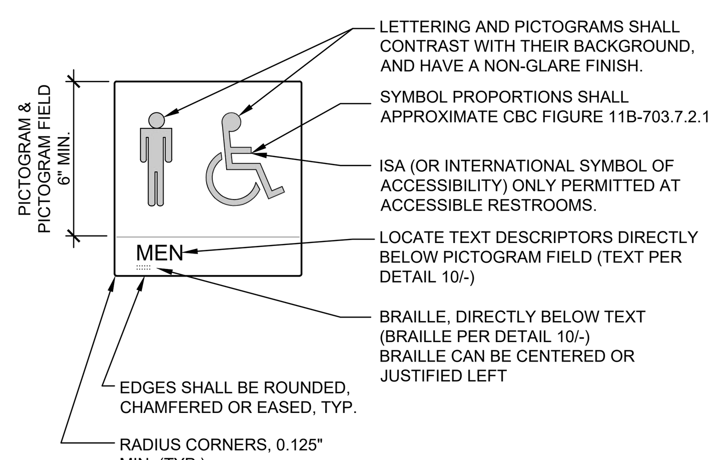

NOTES:
1. ATTACH SIGNS USING ADHESIVE AND (2) TWO FLATHEAD COUNTERSUNK SCREWS, COMPATIBLE WITH WALL MATERIAL.
2. LOCATE PER DETAIL 4/-
3. SIGNS ARE NOT IN MODULAR MFR. SCOPE OF WORK.
4. ISA COLOR AND PROPORTIONS SHALL MATCH CBC FIGURE 11B-703.7.2.1

WALL MOUNTED RESTROOM SYMBOLS-MEN 1
NOT TO SCALE

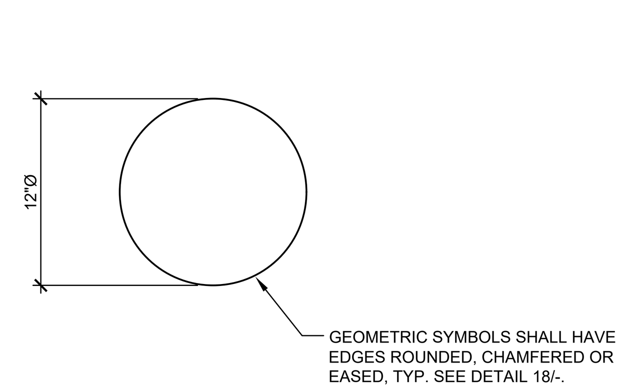

NOTES:
1. ATTACH SIGNS USING ADHESIVE AND (2) TWO FLATHEAD COUNTERSUNK SCREWS, COMPATIBLE WITH DOOR MATERIAL.
2. LOCATE PER DETAIL 4/-.
3. SIGNS ARE NOT IN MODULAR MFR. SCOPE OF WORK.
4. GEOMETRIC SYMBOLS SHALL COMPLY WITH 11B-703.7.2.6 - SEE DETAIL 18/-
5. ISA COLOR AND PROPORTIONS SHALL MATCH CBC FIGURE 11B-703.7.2.1

DOOR MOUNTED RESTROOM SYMBOLS-WOMEN 2
NOT TO SCALE

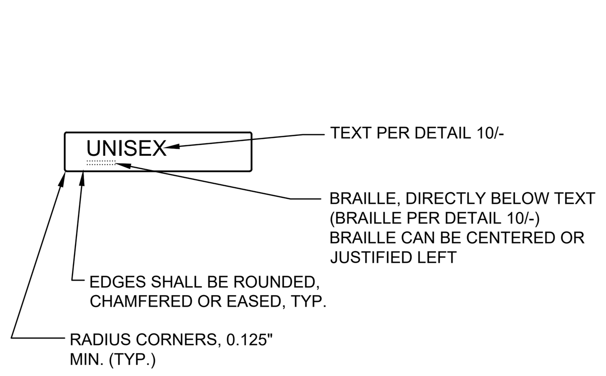

NOTES:
1. ATTACH SIGNS USING ADHESIVE AND (2) TWO FLATHEAD COUNTERSUNK SCREWS, COMPATIBLE WITH WALL MATERIAL.
2. LOCATE PER DETAIL 4/-.
3. SIGNS ARE NOT IN MODULAR MFR. SCOPE OF WORK.
4. THE UNISEX WALL-MOUNTED SIGN SHALL HAVE RAISED TEXT, CORRESPONDING BRAILLE, AND NO PICTOGRAM (DSA BU 17-01)
5. ISA COLOR AND PROPORTIONS SHALL MATCH CBC FIGURE 11B-703.7.2.1

WALL MOUNTED RESTROOM SYMBOLS-UNISEX 3
NOT TO SCALE

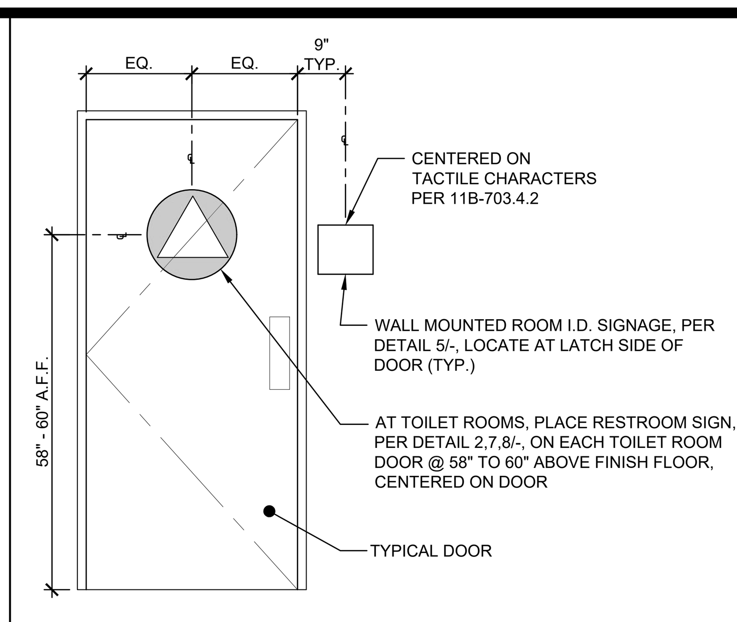

NOTE:
SIGNS ARE NOT IN MODULAR MFR. SCOPE OF WORK.

ROOM IDENTIFICATION SIGNAGE 4
NOT TO SCALE

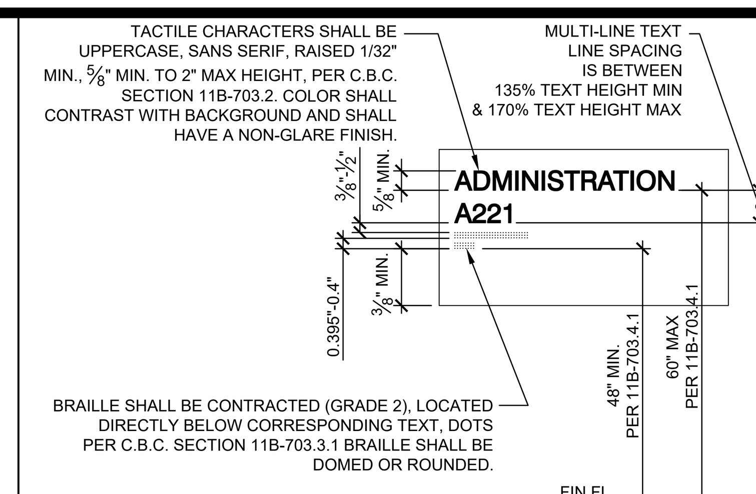

NOTE:
1. PER 11B-216 2022, NEW OR ALTERED SIGNAGE SHALL COMPLY WITH C.B.C. SECTION 11B-703.
2. FOR REQUIRED TACTILE & NON-TACTILE SIGNS LOCATIONS, SEE SHEET N2.0, ACCESSIBILITY STANDARDS, "SECTION 11B-216".
3. SIGNS ARE NOT IN MODULAR MFR. SCOPE OF WORK.
4. ATTACH SIGNS USING ADHESIVE OR MIN (2) TWO FLATHEAD COUNTERSUNK SCREWS, COMPATIBLE WITH WALL MATERIAL.
5. SIGN TO BE PLACED PER DETAIL 4/-

PERMANENT ROOM I.D. SIGNAGE 5
NOT TO SCALE

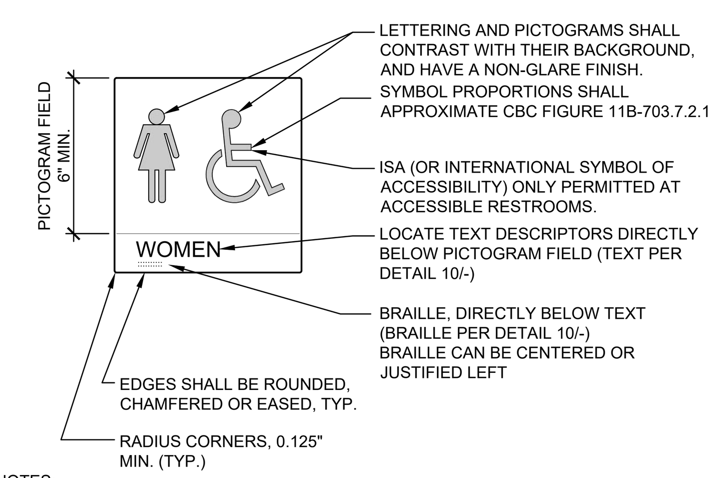

NOTES:
1. ATTACH SIGNS USING ADHESIVE AND (2) TW0 FLATHEAD COUNTERSUNK SCREWS, COMPATIBLE WITH WALL MATERIAL.
2. LOCATE PER DETAIL 4/-
3. SIGNS ARE NOT IN MODULAR MFR. SCOPE OF WORK.
4. ISA COLOR AND PROPORTIONS SHALL MATCH CBC FIGURE 11B-703.7.2.1

WALL MOUNTED RESTROOM SYMBOLS-WOMEN 6
NOT TO SCALE

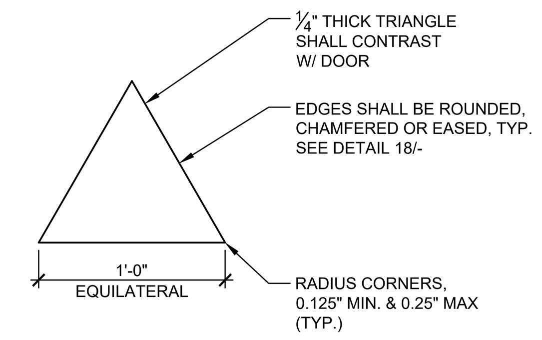

NOTES:
1. ATTACH SIGNS USING ADHESIVE AND (2) TW0 FLATHEAD COUNTERSUNK SCREWS, COMPATIBLE WITH DOOR MATERIAL.
2. LOCATE PER DETAIL 4/-
3. SIGNS ARE NOT IN MODULAR MFR. SCOPE OF WORK.
4. GEOMETRIC SYMBOLS SHALL COMPLY WITH 11B-703.7.2.6 - SEE DETAIL 18/-
5. ISA COLOR AND PROPORTIONS SHALL MATCH CBC FIGURE 11B-703.7.2.1

DOOR MOUNTED RESTROOM SYMBOL-MEN 7
NOT TO SCALE

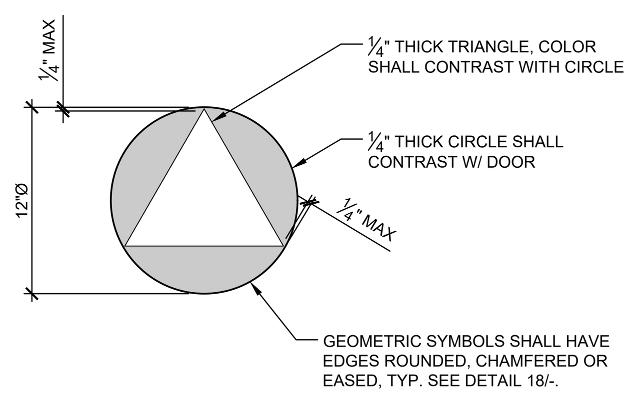

NOTES:
1. ATTACH SIGNS USING ADHESIVE AND (2) TWO FLATHEAD COUNTERSUNK SCREWS, COMPATIBLE WITH DOOR MATERIAL.
2. LOCATE PER DETAIL 4/-
3. SIGNS ARE NOT IN MODULAR MFR. SCOPE OF WORK.
4. GEOMETRIC SYMBOLS SHALL COMPLY WITH 11B-703.7.2.6 - SEE DETAIL 18/-
5. UNISEX DOOR SYMBOL SHALL BE PROVIDED WITHOUT TEXT, BRAILLE OR THE USE OF A PICTOGRAM PER DSA BU 17-01
6. ISA COLOR AND PROPORTIONS SHALL MATCH CBC FIGURE 11B-703.7.2.1

DOOR MOUNTED RESTROOM SYMBOLS-UNISEX 8
NOT TO SCALE

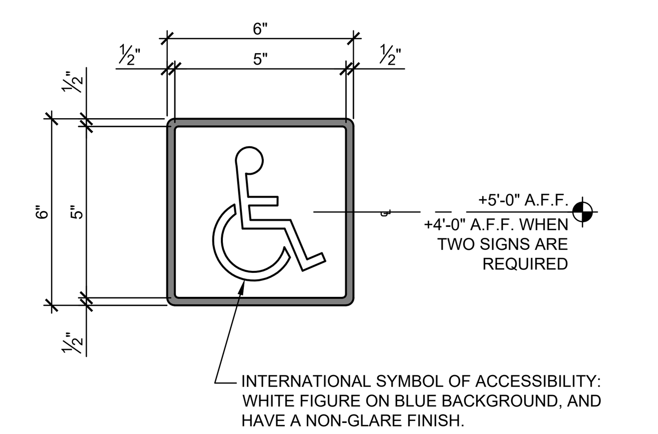

NOTES:
1. PROVIDE MECHANICAL MOUNTING w/VANDAL RESISTANT FASTENERS. PROVIDE ADHESIVE MOUNTING SYSTEM WHEN ATTACHED TO GLAZING.
2. SYMBOL PER C.B.C. SECTION 11B-703.7.2.1
3. SIGNS ARE NOT IN MODULAR MFR. SCOPE OF WORK.

INT'L SYMBOL OF ACCESSIBILITY 9
NOT TO SCALE

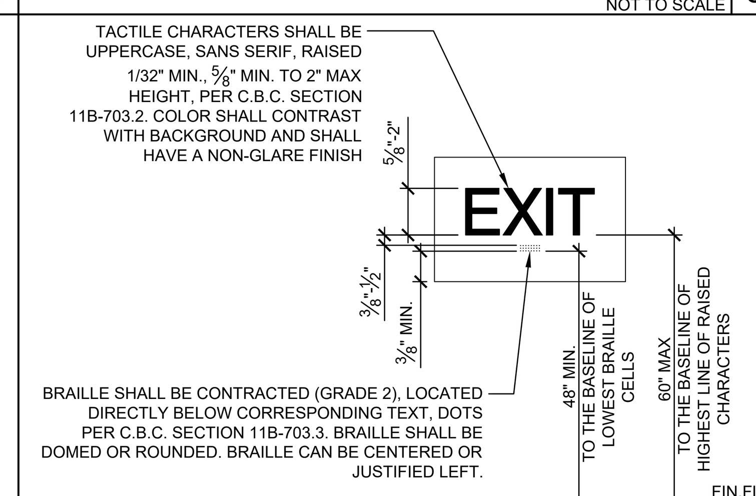

NOTE:
1. PER 11B-216, NEW OR ALTERED SIGNAGE SHALL COMPLY WITH C.B.C. SECTION 11B-703.
2. FOR REQUIRED TACTILE AND NON-TACTILE SIGNS LOCATIONS, SEE SHEET N2.0, ACCESSIBILITY STANDARDS, "SECTION 11B-216".
3. SIGNS ARE NOT IN MODULAR MFR. SCOPE OF WORK.
4. ATTACH SIGNS USING ADHESIVE OR MIN (2) TWO FLATHEAD COUNTERSUNK SCREWS, COMPATIBLE WITH WALL MATERIAL.
5. SIGN TO BE PLACED PER DETAIL 4/-

TACTILE SIGNAGE REQUIREMENTS 10
NOT TO SCALE

A. TYPESTYLE: 1" HIGH BLOCK 1/16" THICK ENGRAVED PLASTIC.

B. MOUNTING: (4) #8x1" SCREWS OR SELF-ADHESIVE. HEIGHT AS SHOWN.

C. CAPACITY POSTING PER C.B.C. SECTION 1004.3 TITLE 19 C.C.R., SECTION 3.30: "THIS ROOM SHALL BE POSTED WITH A DURABLE SIGN NEAR THE MAIN EXIT FROM THE ROOM".

D. THE SIGN SHALL BE WORDED AS FOLLOWS, WITH THE APPROPRIATE CAPACITY NUMBER LISTED:

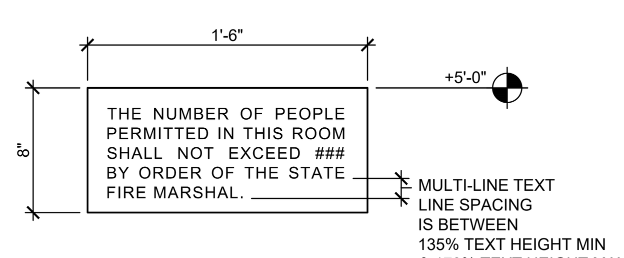

NOTES:
1. SIGNS ARE NOT IN MODULAR MFR. SCOPE OF WORK.
2. 11B-216.3 SIGNS THAT PROVIDE INFORMATION ABOUT INTERIOR SPACES SHALL COMPLY WITH SECTION 11B-703.5

OCCUPANT LOAD SIGN 11
NOT TO SCALE

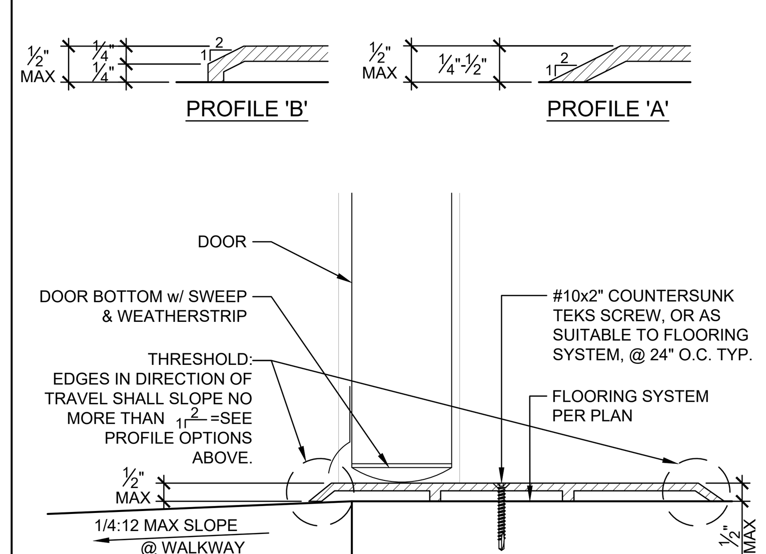

THRESHOLD @ EXTERIOR DOOR 12
NOT TO SCALE

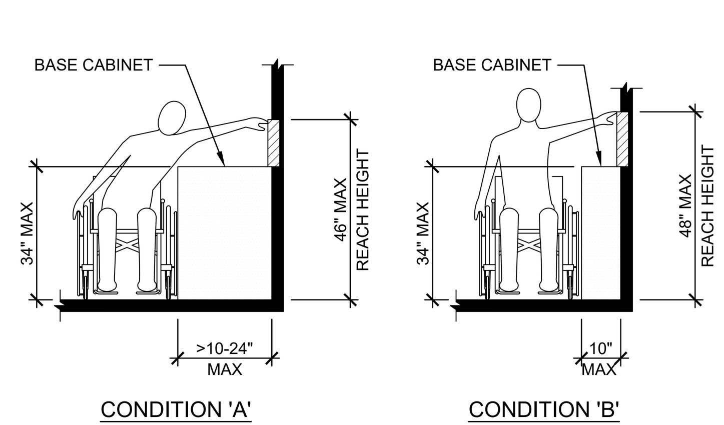

SIDE REACH AT BASE CABINET 13
NOT TO SCALE

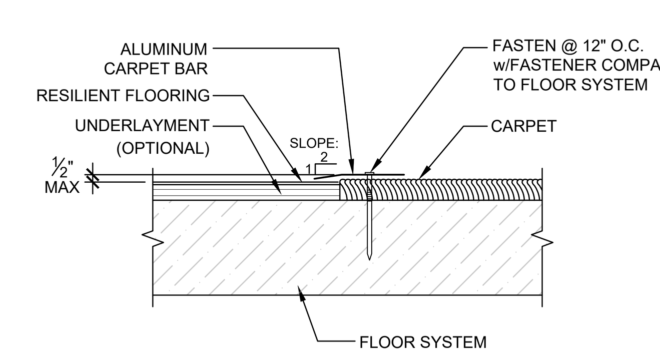

FLOORING TRANSITION DETAIL 14
NOT TO SCALE

ACCESSIBLE MEANS OF EGRESS SHALL BE PROVIDED AT THE FOLLOWING:
(PER CBC 1009.10)

- AT EXIT WAYS (PER C.B.C. 1013.4)
  1. AT EACH GRADE LEVEL EXTERIOR EXIT DOOR
  2. AT AN EXIT BY MEANS OF A RAMP ("EXIT RAMP DOWN")
  3. AT AN EXIT ROUTE VIA ENCLOSURE, PASSAGEWAY, CORRIDOR, HALLWAY, ETC.

SIGNAGE PER C.B.C. SECTION 11B-216.
(ALSO REFER TO SECTIONS 11B-703, 1009.9, 1009.10, 1023.9)

SIGN REQUIREMENTS PER DETAIL 10/- & 16/-

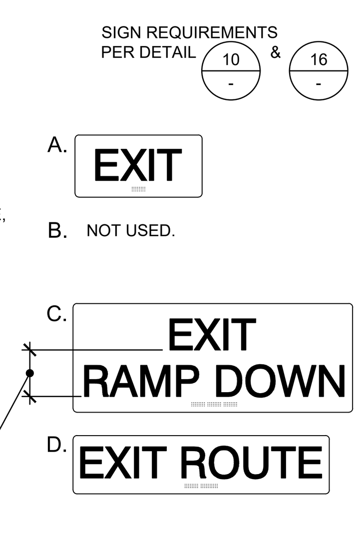

NOTE:
1. SIGNS ARE NOT IN MODULAR MFR. SCOPE OF WORK.

EGRESS SIGNAGE 15
NOT TO SCALE

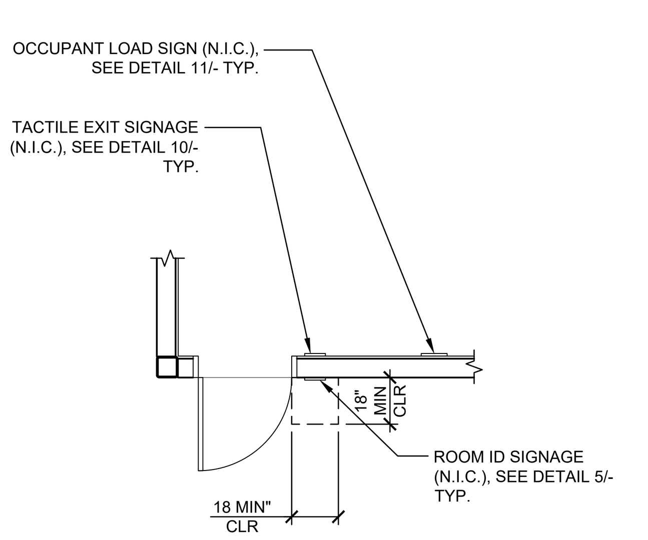

NOTE:
18" MIN CLEAR FLOOR SPACE SHALL BE CENTERED ON THE TACTILE CHARACTERS OF THE SIGN PER 11B-703.4.4.2

TYPICAL CLASSROOM SIGNAGE LOCATION 16
NOT TO SCALE

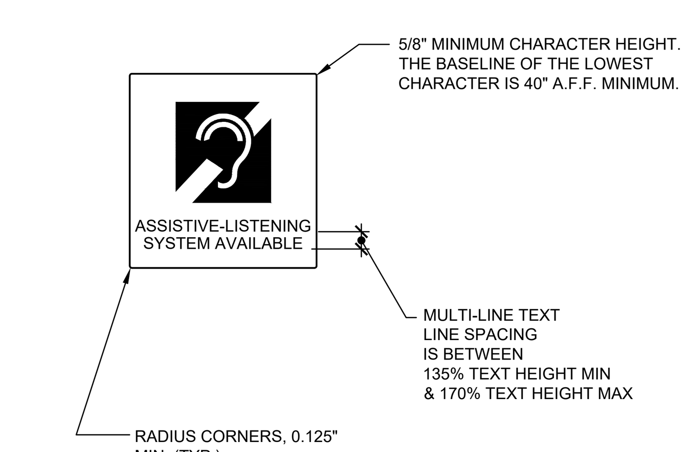

NOTES:
1. ATTACH SIGNS USING ADHESIVE AND (2) TW0 FLATHEAD COUNTERSUNK SCREWS, COMPATIBLE WITH WALL MATERIAL.
2. LOCATE AT OR NEAR THE ENTRANCE IN A PROMINENT PLACE. (11B-216.10)
3. SIGNS ARE NOT IN MODULAR MFR. SCOPE OF WORK.
4. SYMBOL PER CBC SECTION 11B-703.7.2.4
5. THE SIGN SHALL COMPLY WITH 11B-703.5 AND TABLE 11B-703.5.5.
6. ISA COLOR AND PROPORTIONS SHALL MATCH CBC FIGURE 11B-703.7.2.1

ASSISTIVE LISTENING SIGN 17
NOT TO SCALE

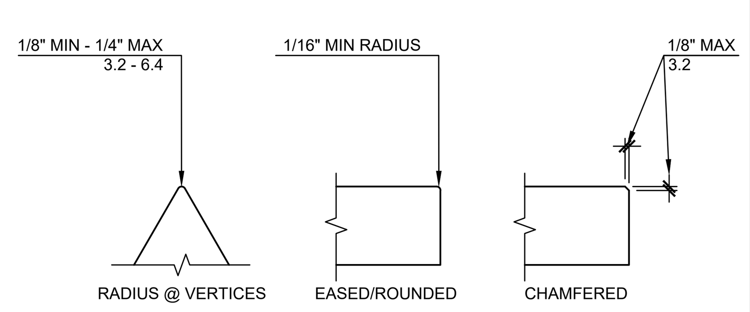

FIGURE 11B-703.7.2.6.4
EDGES AND VERTICES ON GEOMETRIC SYMBOLS

NOTES:
1. FIGURE PER 11B-703.7.2.6.4

EDGES AND VERTICES ON GEOMETRIC SYMBOLS 18
NOT TO SCALE

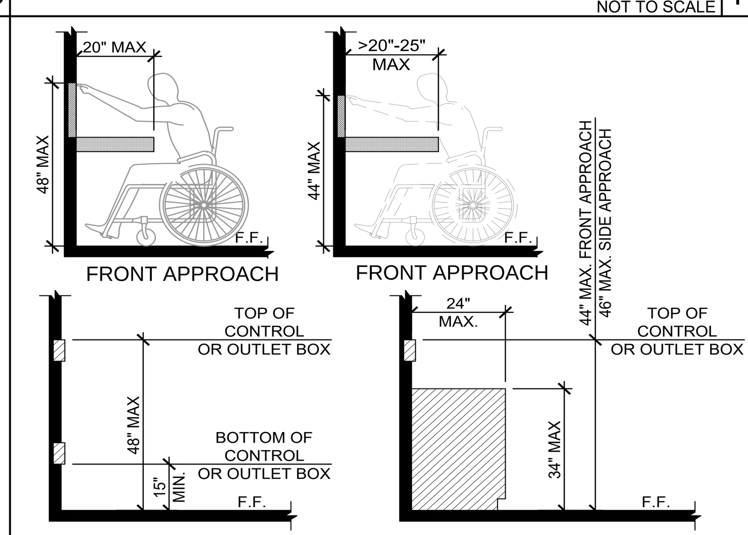

NOTES:
1. COMPLY WITH CBC 11B-308.2.2 AND 11B-308.3.2
2. FORWARD OR FRONT APPROACH FOR DEVICES MOUNTED ABOVE A COUNTER ASSUMES THAT DIRECTLY BELOW THE DEVICE, THE COUNTER HAS A 30" MINIMUM WIDTH x 27" MINIMUM HEIGHT x A CLEAR DEPTH EQUAL TO THE DEPTH OF THE COUNTER NOT TO EXCEED 24".

DEVICE MOUNTING OVER OBSTRUCTION DETAIL 19
SCALE: 1-1/2" = 1'-0"

SHEET NOTES

Autodesk Docs://3595005000 TUSD TK CLASSROOMS 2025 R22/3595005000-A-TUSD-BOHN-SITE.rvt
12/3/2024 9:55:46 AM

American Modular Systems
787 Spreckels Ave., Manteca, CA 95336
Phone (209) 825-1921 Fax (209) 825-7018
www.americanmodular.com

INTELLECTUAL-PROPERTY & PROPRIETARY RIGHTS STATEMENT
COPYRIGHT © AMERICAN MODULAR SYSTEMS (AMS)
AMS OWNS ALL COPYRIGHT AND OTHER INTELLECTUAL-PROPERTY AND PROPRIETARY RIGHTS IN THESE DRAWINGS, SPECIFICATIONS, AND THE MATERIAL CONTAINED HEREIN. CERTAIN ELEMENTS SHOWN IN THESE DOCUMENTS ARE REGISTERED TRADEMARKS OF AMS. ALL PATENTABLE MATERIALS CONTAINED IN THESE DOCUMENTS AND ORIGINATING WITH AMS WILL REMAIN THE SOLE PROPERTY OF AMS. THESE DRAWING, SPECIFICATIONS, AND THE MATERIAL CONTAINED HEREIN MAY NOT BE REPRODUCED, TRANSMITTED, COPIED, DISTRIBUTED, MODIFIED, OR OTHERWISE DISPOSED OF (DIRECTLY OR INDIRECTLY) AND MAY NOT BE USED (IN WHOLE OR IN PART) TO ASSIST IN THE CONSTRUCTION, DESIGN, OR OTHER MAKING OF, OR FOR THE PURPOSE OF FURNISHING ANY INFORMATION FOR THE CONSTRUCTION, DESIGN, OR OTHER MAKING OF, ANY BUILDINGS (MODULAR OR OTHERWISE), DRAWINGS, SPECIFICATIONS, PRINTS, APPARATUS, OR PARTS THEREOF, EXCEPT AS EXPRESSLY PERMITTED BY WRITTEN CONSENT OF, OR IN A WRITTEN AGREEMENT WITH, AMS. SUBMITTAL OR DISTRIBUTION TO MEET OFFICIAL REGULATORY REQUIREMENTS WILL NOT BE CONSTRUED AS PUBLICATION IN DEROGATION OF AMS'S COPYRIGHT OR OTHER INTELLECTUAL-PROPERTY OR PROPRIETARY RIGHTS.

PRE-CHECKED SET NAME
24' x 40' THRU 120' x 40'
STANDARD MODULAR BUILDING
(LOW SEISMIC)
FORM®

SITE SPECIFIC PROJECT NAME
.
.
.

APPROVED
DIV. OF THE STATE ARCHITECT
APP: 04-122050 PC
REVIEWED FOR
SS ☑ FLS ☑ ACS ☒ CG ☑
DATE: 12/11/2023

☐ 2022 CBC PRE-CHECK (PC) DOCUMENT
A SEPARATE PROJECT APPLICATION FOR CONSTRUCTION IS REQUIRED.

MANUFACTURER PROFESSIONAL OF RECORD ON PC

LICENSED ARCHITECT
RANDALL PATRICK CAVANAGH
No. C12631
Ren. 3-31-25
STATE OF CALIFORNIA

THESE DRAWINGS ARE PRELIMINARY AND NOT FOR CONSTRUCTION UNLESS STAMPED & SIGNED BY THE DESIGN PROFESSIONAL OF RECORD.

REVISIONS
1
2
3
4

DRAWN BY:	AA
SCALE:	AS NOTED
DATE:	MM/DD/YY
PROJECT NO:	XXXX-22

SHEET TITLE:
ACCESSIBILITY STANDARDS AND DETAILS

SHEET NUMBER:
N4.0

IDENTIFICATION STAMP
DIV. OF THE STATE ARCHITECT
APP: 02-122976 INC:
REVIEWED FOR
SS ☑ FLS ☑ ACS ☑
DATE: 03/12/2025

TRACY
UNIFIED SCHOOL DISTRICT

HMC Architects
3595001000
2101 CAPITOL AVENUE, SUITE 100
SACRAMENTO, CA 95816
916 368 7990 / www.hmcarchitects.com

ISSUE

Δ	DESCRIPTION	DATE
A	ADDENDUM "A"	3/20/25

KEYNOTES

GENERAL NOTES

FACILITY:
JACOBSON ELEMENTARY SCHOOL
1750 W KAVANAGH AVE
TRACY, CA 95376

PROJECT:
JACOBSON ES - TK CLASSROOM

SHEET NAME:
ACCESSIBILITY STANDARDS AND DETAILS

DATE: **04/03/24** CLIENT PROJ NO: **3595001000**

SHEET:
N4.0
ADDENDUM "A"

PLEASE RECYCLE

THE LINE SHOWN ABOVE IS EXACTLY ONE INCH LONG AT THIS SHEETS ORIGINAL PAGE SIZE

Autodesk Docs://3595005000 TUSD TK CLASSROOMS 2025 R22/3595005000-A-TUSD-BOHN-SITE.rvt
12/3/2024 9:55:44 AM

AMS 24x40

CZ Group	Climate Zone	Reference City	Roof Rigid R-value[1]	Ground Floor R-value[2]	Metal Stud Wall R-value[3]	Window U-factor[4]	Window SHGC[4]	Air Barrier (Y/N)	Cool Roof (Y/N)	CO Sensor (Y/N)	FC-1 Unit Type[5]	Number of FC-1 Units[6]	OSA per FC-1 (cfm)[7]	FC-2 Unit Type[5]	Number of FC-2 Units[6]	OSA per FC-2 (cfm)[7]	Design PV (kW DC)
A	CZ01 **CZ16**	Arcata **Blue Canyon**	R-15 ci	R-5 ci	R-5 ci	0.42	0.25	Y	N	N	W42HC	1	364.8	na	0	na	0.0
B	CZ02 CZ03 CZ04 **CZ05**	Santa Rosa Oakland San Jose-Reid **Santa Maria**	R-5 ci	na	R-5 ci	0.42	0.25	Y	N	N	W42HC	1	364.8	na	0	na	0.0
C	CZ06 CZ07 CZ08 CZ09 CZ10 CZ11 CZ12 **CZ13**	Torrance San Diego-Lindbergh Fullerton Burbank-Glendale Riverside Red Bluff Sacramento **Fresno**	R-5 ci	na	R-5 ci	0.42	0.25	Y	N	N	W42HC	1	364.8	na	0	na	0.0
D	CZ14 **CZ15**	Palmdale **Palm Spring-Intl**	R-5 ci	na	R-5 ci	0.42	0.25	Y	N	N	W42HC	1	364.8	na	0	na	0.0

AMS 36x40

CZ Group	Climate Zone	Reference City	Roof Rigid R-value[1]	Ground Floor R-value[2]	Metal Stud Wall R-value[3]	Window U-factor[4]	Window SHGC[4]	Air Barrier (Y/N)	Cool Roof (Y/N)	CO Sensor (Y/N)	FC-1 Unit Type[5]	Number of FC-1 Units[6]	OSA per FC-1 (cfm)[7]	FC-2 Unit Type[5]	Number of FC-2 Units[6]	OSA per FC-2 (cfm)[7]	Design PV (kW DC)
A	CZ01 **CZ16**	Arcata **Blue Canyon**	R-15 ci	R-5 ci	R-5 ci	0.42	0.25	Y	N	N	W42HC	1	547.2	na	0	na	0.0
B	CZ02 CZ03 CZ04 **CZ05**	Santa Rosa Oakland San Jose-Reid **Santa Maria**	R-5 ci	na	R-5 ci	0.42	0.25	Y	N	N	W42HC	1	547.2	na	0	na	0.0
C	CZ06 CZ07 CZ08 CZ09 CZ10 CZ11 CZ12 **CZ13**	Torrance San Diego-Lindbergh Fullerton Burbank-Glendale Riverside Red Bluff Sacramento **Fresno**	R-5 ci	na	R-5 ci	0.42	0.25	Y	N	Y	SysAir 4T	1	547.2	na	0	na	0.0
D	CZ14 **CZ15**	Palmdale **Palm Spring-Intl**	R-5 ci	na	R-5 ci	0.42	0.25	Y	N	Y	SysAir 4T	1	547.2	na	0	na	0.0

AMS 48x40

CZ Group	Climate Zone	Reference City	Roof Rigid R-value[1]	Ground Floor R-value[2]	Metal Stud Wall R-value[3]	Window U-factor[4]	Window SHGC[4]	Air Barrier (Y/N)	Cool Roof (Y/N)	CO Sensor (Y/N)	FC-1 Unit Type[5]	Number of FC-1 Units[6]	OSA per FC-1 (cfm)[7]	FC-2 Unit Type[5]	Number of FC-2 Units[6]	OSA per FC-2 (cfm)[7]	Design PV (kW DC)
A	CZ01 **CZ16**	Arcata **Blue Canyon**	R-15 ci	R-5 ci	R-5 ci	0.42	0.25	Y	N	N	W42HC	2	364.8	na	0	na	0.0
B	CZ02 CZ03 CZ04 **CZ05**	Santa Rosa Oakland San Jose-Reid **Santa Maria**	R-5 ci	na	R-5 ci	0.42	0.25	Y	N	N	W42HC	2	364.8	na	0	na	0.0
C	CZ06 CZ07 CZ08 CZ09 CZ10 CZ11 CZ12 **CZ13**	Torrance San Diego-Lindbergh Fullerton Burbank-Glendale Riverside Red Bluff Sacramento **Fresno**	R-5 ci	na	R-5 ci	0.42	0.25	Y	N	N	W42HC	2	364.8	na	0	na	0.0
D	CZ14 **CZ15**	Palmdale **Palm Spring-Intl**	R-5 ci	na	R-5 ci	0.42	0.25	Y	N	N	W42HC	2	364.8	na	0	na	1.5 2.2

PC 60x40

CZ Group	Climate Zone	Reference City	Roof Rigid R-value[1]	Ground Floor R-value[2]	Metal Stud Wall R-value[3]	Window U-factor[4]	Window SHGC[4]	Air Barrier (Y/N)	Cool Roof (Y/N)	CO Sensor (Y/N)	FC-1 Unit Type[5]	Number of FC-1 Units[6]	OSA per FC-1 (cfm)[7]	FC-2 Unit Type[5]	Number of FC-2 Units[6]	OSA per FC-2 (cfm)[7]	Design PV (kW DC)
A	CZ01 **CZ16**	Arcata **Blue Canyon**	R-15 ci	R-5 ci	R-5 ci	0.42	0.25	Y	N	N	W42HC	2	456.0	na	0	na	0.0
B	CZ02 CZ03 CZ04 **CZ05**	Santa Rosa Oakland San Jose-Reid **Santa Maria**	R-5 ci	na	R-5 ci	0.42	0.25	Y	N	N	W42HC	2	456	na	0	na	0.0
C	CZ06 CZ07 CZ08 CZ09 CZ10 CZ11 CZ12 **CZ13**	Torrance San Diego-Lindbergh Fullerton Burbank-Glendale Riverside Red Bluff Sacramento **Fresno**	R-5 ci	na	R-5 ci	0.42	0.25	Y	N	N	W42HC	2	456	na	0	na	0.0
D	CZ14 **CZ15**	Palmdale **Palm Spring-Intl**	R-5 ci	na	R-5 ci	0.42	0.25	Y	N	N	W48HC	2	456	na	0	na	3.4 5.2

PC 72x40

CZ Group	Climate Zone	Reference City	Roof Rigid R-value[1]	Ground Floor R-value[2]	Metal Stud Wall R-value[3]	Window U-factor[4]	Window SHGC[4]	Air Barrier (Y/N)	Cool Roof (Y/N)	CO Sensor (Y/N)	FC-1 Unit Type[5]	Number of FC-1 Units[6]	OSA per FC-1 (cfm)[7]	FC-2 Unit Type[5]	Number of FC-2 Units[6]	OSA per FC-2 (cfm)[7]	Design PV (kW DC)
A	CZ01 **CZ16**	Arcata **Blue Canyon**	R-15 ci	R-5 ci	R-5 ci	0.42	0.25	Y	N	N	W42HC	2	547.2	na	0	na	0.0
B	CZ02 CZ03 CZ04 **CZ05**	Santa Rosa Oakland San Jose-Reid **Santa Maria**	R-5 ci	na	R-5 ci	0.42	0.25	Y	N	N	W42HC	2	547.2	na	0	na	0.0
C	CZ06 CZ07 CZ08 CZ09 CZ10 CZ11 CZ12 **CZ13**	Torrance San Diego-Lindbergh Fullerton Burbank-Glendale Riverside Red Bluff Sacramento **Fresno**	R-5 ci	na	R-5 ci	0.42	0.25	Y	N	Y	SysAir 4T	2	547.2	na	0	na	3.2
D	CZ14 **CZ15**	Palmdale **Palm Spring-Intl**	R-5 ci	na	R-5 ci	0.42	0.25	Y	N	Y	SysAir 4T	2	547.2	na	0	na	3.6 5.4

AMS 84x40

CZ Group	Climate Zone	Reference City	Roof Rigid R-value[1]	Ground Floor R-value[2]	Metal Stud Wall R-value[3]	Window U-factor[4]	Window SHGC[4]	Air Barrier (Y/N)	Cool Roof (Y/N)	CO Sensor (Y/N)	FC-1 Unit Type[5]	Number of FC-1 Units[6]	OSA per FC-1 (cfm)[7]	FC-2 Unit Type[5]	Number of FC-2 Units[6]	OSA per FC-2 (cfm)[7]	Design PV (kW DC)
A	CZ01 **CZ16**	Arcata **Blue Canyon**	R-15 ci	R-15 ci	R-5 ci	0.42	0.25	Y	N	N	W42HC	2	364.8	W42HC	1	547.2	3.9
B	CZ02 CZ03 CZ04 **CZ05**	Santa Rosa Oakland San Jose-Reid **Santa Maria**	R-5 ci	na	R-5 ci	0.42	0.25	Y	N	N	W42HC	2	364.8	W42HC	1	547.2	1.0 0.8 1.0 0.8
C	CZ06 CZ07 CZ08 CZ09 CZ10 CZ11 CZ12 **CZ13**	Torrance San Diego-Lindbergh Fullerton Burbank-Glendale Riverside Red Bluff Sacramento **Fresno**	R-5 ci	na	R-5 ci	0.42	0.25	Y	N	Y	SysAir 4T	2	364.8	SysAir 4T	1	547.2	0.0
D	CZ14 **CZ15**	Palmdale **Palm Spring-Intl**	R-5 ci	na	R-5 ci	0.42	0.25	Y	N	Y	SysAir 4T	2	364.8	SysAir 5T	1	547.2	2.1 3.2

AMS 96x40

CZ Group	Climate Zone	Reference City	Roof Rigid R-value[1]	Ground Floor R-value[2]	Metal Stud Wall R-value[3]	Window U-factor[4]	Window SHGC[4]	Air Barrier (Y/N)	Cool Roof (Y/N)	CO Sensor (Y/N)	FC-1 Unit Type[5]	Number of FC-1 Units[6]	OSA per FC-1 (cfm)[7]	FC-2 Unit Type[5]	Number of FC-2 Units[6]	OSA per FC-2 (cfm)[7]	Design PV (kW DC)
A	CZ01 **CZ16**	Arcata **Blue Canyon**	R-15 ci	R-5 ci	R-5 ci	0.42	0.25	Y	N	N	W42HC	4	364.8	na	0	na	0.2
B	CZ02 CZ03 CZ04 **CZ05**	Santa Rosa Oakland San Jose-Reid **Santa Maria**	R-5 ci	na	R-5 ci	0.42	0.25	Y	N	N	W42HC	4	364.8	na	0	na	0.0
C	CZ06 CZ07 CZ08 CZ09 CZ10 CZ11 CZ12 **CZ13**	Torrance San Diego-Lindbergh Fullerton Burbank-Glendale Riverside Red Bluff Sacramento **Fresno**	R-5 ci	na	R-5 ci	0.42	0.25	Y	N	N	W42HC	4	364.8	na	0	na	0.0
D	CZ14 **CZ15**	Palmdale **Palm Spring-Intl**	R-5 ci	na	R-5 ci	0.42	0.25	Y	N	N	W42HC	4	364.8	na	0	na	3.6 5.4

AMS 108x40

CZ Group	Climate Zone	Reference City	Roof Rigid R-value[1]	Ground Floor R-value[2]	Metal Stud Wall R-value[3]	Window U-factor[4]	Window SHGC[4]	Air Barrier (Y/N)	Cool Roof (Y/N)	CO Sensor (Y/N)	FC-1 Unit Type[5]	Number of FC-1 Units[6]	OSA per FC-1 (cfm)[7]	FC-2 Unit Type[5]	Number of FC-2 Units[6]	OSA per FC-2 (cfm)[7]	Design PV (kW DC)
A	CZ01 **CZ16**	Arcata **Blue Canyon**	R-15 ci	R-15 ci	R-5 ci	0.42	0.25	Y	N	N	W42HC	3	364.8	W42HC	1	547.2	0.0
B	CZ02 CZ03 CZ04 **CZ05**	Santa Rosa Oakland San Jose-Reid **Santa Maria**	R-5 ci	na	R-5 ci	0.42	0.25	Y	N	N	W42HC	3	364.8	W42HC	1	547.2	0.0 0.0 0.0 0.0
C	CZ06 CZ07 CZ08 CZ09 CZ10 CZ11 CZ12 **CZ13**	Torrance San Diego-Lindbergh Fullerton Burbank-Glendale Riverside Red Bluff Sacramento **Fresno**	R-5 ci	na	R-5 ci	0.42	0.25	Y	N	Y	SysAir 4T	3	364.8	SysAir 4T	1	547.2	0.0
D	CZ14 **CZ15**	Palmdale **Palm Spring-Intl**	R-5 ci	na	R-5 ci	0.42	0.25	Y	N	Y	SysAir 4T	3	364.8	SysAir 4T	1	547.2	1.5 2.2

AMS 120x40

CZ Group	Climate Zone	Reference City	Roof Rigid R-value[1]	Ground Floor R-value[2]	Metal Stud Wall R-value[3]	Window U-factor[4]	Window SHGC[4]	Air Barrier (Y/N)	Cool Roof (Y/N)	CO Sensor (Y/N)	FC-1 Unit Type[5]	Number of FC-1 Units[6]	OSA per FC-1 (cfm)[7]	FC-2 Unit Type[5]	Number of FC-2 Units[6]	OSA per FC-2 (cfm)[7]	Design PV (kW DC)
A	CZ01 **CZ16**	Arcata **Blue Canyon**	R-15 ci	R-5 ci	R-5 ci	0.42	0.25	Y	N	N	W42HC	5	364.8	na	0	na	0.0
B	CZ02 CZ03 CZ04 **CZ05**	Santa Rosa Oakland San Jose-Reid **Santa Maria**	R-5 ci	na	R-5 ci	0.42	0.25	Y	N	N	W42HC	5	364.8	na	0	na	0.0
C	CZ06 CZ07 CZ08 CZ09 CZ10 CZ11 CZ12 **CZ13**	Torrance San Diego-Lindbergh Fullerton Burbank-Glendale Riverside Red Bluff Sacramento **Fresno**	R-5 ci	na	R-5 ci	0.42	0.25	Y	N	N	W42HC	5	364.8	na	0	na	0.0
D	CZ14 **CZ15**	Palmdale **Palm Spring-Intl**	R-5 ci	na	R-5 ci	0.42	0.25	Y	N	N	W42HC	5	364.8	na	0	na	4.6 7.0

PC DESIGN REVIEW INFORMATION

Title 24-2022, Part 6, Energy Code

Model Name and Option: AMS 24x40 — Calculation Date/Time of Energy Report: 9/3/2023
Total Floor Area: 960 — DSA Application:
HVAC System Type: VSHP

CZ Group	Climate Zone / Azimuth (Front Orientation)	Metric	Standard Design	Proposed Design	Margin	Worst Case
CZ Group	**Climate Zone 16 Blue Canyon**	**Metric**	**Standard Design**	**Proposed Design**	**Margin**	**Worst Case**
A	30°	TDV-E	289.3	248.3	40.9	
		TDV-T	289.3	248.3	40.9	
		SOURCE	39.0	23.7	15.3	
	75°	TDV-E	295.8	249.3	46.6	
		TDV-T	295.8	249.3	46.6	
		SOURCE	39.2	23.8	15.4	
	120°	TDV-E	291.8	249.2	42.6	
		TDV-T	291.8	249.2	42.6	
		SOURCE	39.0	23.8	15.2	
	165°	TDV-E	275.6	247.9	27.7	Worst Case
		TDV-T	275.6	247.9	27.7	Worst Case
		SOURCE	38.3	23.7	14.7	Worst Case
	210°	TDV-E	292.8	248.9	43.9	
		TDV-T	292.8	248.9	43.9	
		SOURCE	39.2	23.8	15.4	
	255°	TDV-E	302.1	249.0	53.0	
		TDV-T	302.1	249.0	53.0	
		SOURCE	39.4	23.8	15.7	
	300°	TDV-E	291.2	248.3	42.9	
		TDV-T	291.2	248.3	42.9	
		SOURCE	38.9	23.7	15.2	
	345°	TDV-E	279.9	246.9	32.9	
		TDV-T	279.9	246.9	32.9	
		SOURCE	38.3	23.6	14.8	
CZ Group	**Climate Zone 05 Santa Maria**	**Azimuth (Front Orientation)**	**Standard Design**	**Proposed Design**	**Margin**	**Worst Case**
B	30°	TDV-E	201.7	128.7	73.0	
		TDV-T	201.7	128.7	73.0	
		SOURCE	19.0	13.1	5.9	
	75°	TDV-E	202.2	128.4	73.8	
		TDV-T	202.2	128.4	73.8	
		SOURCE	19.1	13.1	5.9	
	120°	TDV-E	222.5	128.0	94.5	
		TDV-T	222.5	128.0	94.5	
		SOURCE	20.8	13.1	7.7	
	165°	TDV-E	220.0	127.8	92.2	
		TDV-T	220.0	127.8	92.2	
		SOURCE	20.6	13.1	7.5	
	210°	TDV-E	197.3	128.6	68.7	
		TDV-T	197.3	128.6	68.7	
		SOURCE	18.6	13.2	5.5	
	255°	TDV-E	197.0	127.6	69.4	
		TDV-T	197.0	127.6	69.4	
		SOURCE	18.6	13.1	5.5	
	300°	TDV-E	218.4	127.2	91.3	
		TDV-T	218.4	127.2	91.3	
		SOURCE	20.4	13.0	7.4	
	345°	TDV-E	193.7	127.5	66.3	Worst Case
		TDV-T	193.7	127.5	66.3	Worst Case
		SOURCE	18.3	13.1	5.3	Worst Case
CZ Group	**Climate Zone 13 Fresno**	**Azimuth (Front Orientation)**	**Standard Design**	**Proposed Design**	**Margin**	**Worst Case**
C	30°	TDV-E	315.5	235.7	79.8	
		TDV-T	315.5	235.7	79.8	
		SOURCE	25.0	17.9	7.1	
	75°	TDV-E	325.9	238.3	87.6	
		TDV-T	325.9	238.3	87.6	
		SOURCE	25.8	18.0	7.8	
	120°	TDV-E	321.2	237.8	83.5	
		TDV-T	321.2	237.8	83.5	
		SOURCE	25.5	18.0	7.5	
	165°	TDV-E	298.7	233.8	64.9	Worst Case
		TDV-T	298.7	233.8	64.9	Worst Case
		SOURCE	23.7	17.8	5.9	Worst Case
	210°	TDV-E	311.0	235.6	75.5	
		TDV-T	311.0	235.6	75.5	
		SOURCE	24.7	17.9	6.8	
	255°	TDV-E	318.8	237.5	81.3	
		TDV-T	318.8	237.5	81.3	
		SOURCE	25.2	17.9	7.2	
	300°	TDV-E	315.2	236.6	78.6	
		TDV-T	315.2	236.6	78.6	
		SOURCE	24.9	17.9	7.0	
	345°	TDV-E	301.0	233.4	67.5	
		TDV-T	301.0	233.4	67.5	
		SOURCE	23.8	17.7	6.1	
CZ Group	**Climate Zone 15 Palm Spring-Intl**	**Azimuth (Front Orientation)**	**Standard Design**	**Proposed Design**	**Margin**	**Worst Case**
D	30°	TDV-E	345.7	270.2	75.5	
		TDV-T	345.7	270.2	75.5	
		SOURCE	24.8	17.0	7.8	
	75°	TDV-E	359.0	271.7	87.3	
		TDV-T	359.0	271.7	87.3	
		SOURCE	25.8	17.1	8.7	
	120°	TDV-E	356.4	270.5	85.9	
		TDV-T	356.4	270.5	85.9	
		SOURCE	25.6	17.1	8.6	
	165°	TDV-E	331.4	267.5	63.9	
		TDV-T	331.4	267.5	63.9	
		SOURCE	23.6	16.8	6.8	
	210°	TDV-E	342.0	269.7	72.2	
		TDV-T	342.0	269.7	72.2	
		SOURCE	24.7	17.0	7.7	
	255°	TDV-E	352.7	271.2	81.4	
		TDV-T	352.7	271.2	81.4	
		SOURCE	25.4	17.1	8.4	
	300°	TDV-E	345.4	270.4	75.0	
		TDV-T	345.4	270.4	75.0	
		SOURCE	24.8	17.0	7.8	
	345°	TDV-E	329.3	268.0	61.4	Worst Case
		TDV-T	329.3	268.0	61.4	Worst Case
		SOURCE	23.4	16.8	6.6	Worst Case

PC DESIGN REVIEW INFORMATION

Title 24-2022, Part 6, Energy Code

Model Name and Option: AMS 36x40 — Calculation Date/Time of Energy Report: 9/3/2023
Total Floor Area: 1440 — DSA Application:
HVAC System Type: VSHP

CZ Group	Climate Zone / Azimuth (Front Orientation)	Metric	Standard Design	Proposed Design	Margin	Worst Case
CZ Group	**Climate Zone 16 Blue Canyon**	**Metric**	**Standard Design**	**Proposed Design**	**Margin**	**Worst Case**
A	30°	TDV-E	279.4	230.9	48.5	
		TDV-T	279.4	230.9	48.5	
		SOURCE	36.4	21.5	14.9	
	75°	TDV-E	291.1	231.3	59.9	
		TDV-T	291.1	231.3	59.9	
		SOURCE	36.7	21.5	15.2	
	120°	TDV-E	278.0	230.1	47.8	
		TDV-T	278.0	230.1	47.8	
		SOURCE	35.9	21.4	14.5	
	165°	TDV-E	269.3	227.8	41.4	
		TDV-T	269.3	227.8	41.4	
		SOURCE	35.5	21.2	14.3	
	210°	TDV-E	278.3	229.1	49.2	
		TDV-T	278.3	229.1	49.2	
		SOURCE	36.1	21.3	14.8	
	255°	TDV-E	279.5	231.0	48.5	
		TDV-T	279.5	231.0	48.5	
		SOURCE	36.0	21.5	14.6	
	300°	TDV-E	275.1	231.6	43.5	
		TDV-T	275.1	231.6	43.5	
		SOURCE	35.9	21.6	14.3	
	345°	TDV-E	261.8	230.0	31.7	Worst Case
		TDV-T	261.8	230.0	31.7	Worst Case
		SOURCE	35.5	21.4	14.1	Worst Case
CZ Group	**Climate Zone 05 Santa Maria**	**Azimuth (Front Orientation)**	**Standard Design**	**Proposed Design**	**Margin**	**Worst Case**
B	30°	TDV-E	189.1	111.0	78.1	
		TDV-T	189.1	111.0	78.1	
		SOURCE	17.8	11.4	6.3	
	75°	TDV-E	189.2	110.0	79.1	
		TDV-T	189.2	110.0	79.1	
		SOURCE	17.8	11.3	6.4	
	120°	TDV-E	181.1	109.6	71.5	Worst Case
		TDV-T	181.1	109.6	71.5	Worst Case
		SOURCE	17.0	11.3	5.8	Worst Case
	165°	TDV-E	188.8	109.6	79.2	
		TDV-T	188.8	109.6	79.2	
		SOURCE	17.8	11.3	6.5	
	210°	TDV-E	197.2	111.1	86.1	
		TDV-T	197.2	111.1	86.1	
		SOURCE	18.4	11.4	7.1	
	255°	TDV-E	192.9	110.6	82.3	
		TDV-T	192.9	110.6	82.3	
		SOURCE	18.1	11.3	6.7	
	300°	TDV-E	183.4	110.1	73.2	
		TDV-T	183.4	110.1	73.2	
		SOURCE	17.3	11.4	5.9	
	345°	TDV-E	182.8	110.1	72.7	
		TDV-T	182.8	110.1	72.7	
		SOURCE	17.3	11.4	5.9	
CZ Group	**Climate Zone 13 Fresno**	**Azimuth (Front Orientation)**	**Standard Design**	**Proposed Design**	**Margin**	**Worst Case**
C	30°	TDV-E	208.0	171.9	36.0	
		TDV-T	208.0	171.9	36.0	
		SOURCE	15.1	12.4	2.7	
	75°	TDV-E	204.9	174.9	30.0	Worst Case
		TDV-T	204.9	174.9	30.0	Worst Case
		SOURCE	15.2	12.4	2.8	
	120°	TDV-E	212.4	174.1	38.3	
		TDV-T	212.4	174.1	38.3	
		SOURCE	15.1	12.4	2.7	
	165°	TDV-E	286.8	169.6	117.2	
		TDV-T	286.8	169.6	117.2	
		SOURCE	22.7	12.1	10.6	
	210°	TDV-E	211.9	172.9	39.0	
		TDV-T	211.9	172.9	39.0	
		SOURCE	15.3	12.4	2.9	
	255°	TDV-E	207.4	177.3	30.1	
		TDV-T	207.4	177.3	30.1	
		SOURCE	15.4	12.5	2.9	
	300°	TDV-E	214.5	176.4	38.0	
		TDV-T	214.5	176.4	38.0	
		SOURCE	15.2	12.5	2.7	
	345°	TDV-E	204.4	170.3	34.2	
		TDV-T	204.4	170.3	34.2	
		SOURCE	14.7	12.2	2.5	Worst Case
CZ Group	**Climate Zone 15 Palm Spring-Intl**	**Azimuth (Front Orientation)**	**Standard Design**	**Proposed Design**	**Margin**	**Worst Case**
D	30°	TDV-E	326.4	203.4	123.0	
		TDV-T	326.4	203.4	123.0	
		SOURCE	23.4	12.2	11.2	
	75°	TDV-E	339.2	205.9	133.3	
		TDV-T	339.2	205.9	133.3	
		SOURCE	24.4	12.3	12.1	
	120°	TDV-E	330.4	205.1	125.4	
		TDV-T	330.4	205.1	125.4	
		SOURCE	23.6	12.2	11.4	
	165°	TDV-E	237.3	202.0	35.3	
		TDV-T	237.3	202.0	35.3	
		SOURCE	14.5	12.0	2.5	
	210°	TDV-E	252.3	204.9	47.3	
		TDV-T	252.3	204.9	47.3	
		SOURCE	15.7	12.3	3.4	
	255°	TDV-E	264.4	207.8	56.6	
		TDV-T	264.4	207.8	56.6	
		SOURCE	16.4	12.4	4.0	
	300°	TDV-E	254.2	205.9	48.3	
		TDV-T	254.2	205.9	48.3	
		SOURCE	15.8	12.3	3.5	
	345°	TDV-E	235.8	201.6	34.2	Worst Case
		TDV-T	235.8	201.6	34.2	Worst Case
		SOURCE	14.3	12.0	2.4	Worst Case

PC DESIGN REVIEW INFORMATION

Title 24-2022, Part 6, Energy Code

Model Name and Option: AMS 48x40 — Calculation Date/Time of Energy Report: 9/3/2023
Total Floor Area: 1920 — DSA Application:
HVAC System Type: VSHP

CZ Group	Climate Zone / Azimuth (Front Orientation)	Metric	Standard Design	Proposed Design	Margin	Worst Case
CZ Group	**Climate Zone 16 Blue Canyon**	**Metric**	**Standard Design**	**Proposed Design**	**Margin**	**Worst Case**
A	30°	TDV-E	267.2	221.6	45.6	
		TDV-T	267.2	221.6	45.6	
		SOURCE	34.0	21.0	13.1	
	75°	TDV-E	277.2	223.4	53.8	
		TDV-T	277.2	223.4	53.8	
		SOURCE	34.5	21.1	13.4	
	120°	TDV-E	268.7	223.4	45.3	
		TDV-T	268.7	223.4	45.3	
		SOURCE	34.1	21.2	13.0	
	165°	TDV-E	254.1	221.1	33.0	Worst Case
		TDV-T	254.1	221.1	33.0	Worst Case
		SOURCE	33.5	21.0	12.5	Worst Case
	210°	TDV-E	271.8	222.1	49.6	
		TDV-T	271.8	222.1	49.6	
		SOURCE	34.3	21.0	13.3	
	255°	TDV-E	283.5	223.4	60.1	
		TDV-T	283.5	223.4	60.1	
		SOURCE	34.7	21.1	13.6	
	300°	TDV-E	271.8	222.8	49.0	
		TDV-T	271.8	222.8	49.0	
		SOURCE	34.1	21.1	13.0	
	345°	TDV-E	258.1	220.2	37.9	
		TDV-T	258.1	220.2	37.9	
		SOURCE	33.4	20.9	12.6	
CZ Group	**Climate Zone 05 Santa Maria**	**Azimuth (Front Orientation)**	**Standard Design**	**Proposed Design**	**Margin**	**Worst Case**
B	30°	TDV-E	190.3	120.3	70.0	
		TDV-T	190.3	120.3	70.0	
		SOURCE	17.6	12.1	5.5	
	75°	TDV-E	190.3	120.2	70.2	
		TDV-T	190.3	120.2	70.2	
		SOURCE	17.6	12.1	5.5	
	120°	TDV-E	211.2	119.4	91.7	
		TDV-T	211.2	119.4	91.7	
		SOURCE	19.4	12.1	7.3	
	165°	TDV-E	208.0	118.9	89.1	
		TDV-T	208.0	118.9	89.1	
		SOURCE	19.2	12.0	7.1	
	210°	TDV-E	185.6	120.0	65.6	Worst Case
		TDV-T	185.6	120.0	65.6	Worst Case
		SOURCE	17.2	12.1	5.1	Worst Case
	255°	TDV-E	215.6	119.4	96.2	
		TDV-T	215.6	119.4	96.2	
		SOURCE	19.7	12.0	7.7	
	300°	TDV-E	206.5	119.0	87.5	
		TDV-T	206.5	119.0	87.5	
		SOURCE	19.0	12.0	7.0	
	345°	TDV-E	211.8	118.8	93.0	
		TDV-T	211.8	118.8	93.0	
		SOURCE	19.4	12.0	7.4	
CZ Group	**Climate Zone 13 Fresno**	**Azimuth (Front Orientation)**	**Standard Design**	**Proposed Design**	**Margin**	**Worst Case**
C	30°	TDV-E	296.6	221.7	74.9	
		TDV-T	296.6	221.7	74.9	
		SOURCE	23.2	16.7	6.5	
	75°	TDV-E	307.3	225.9	81.4	
		TDV-T	307.3	225.9	81.4	
		SOURCE	24.0	16.9	7.1	
	120°	TDV-E	301.6	224.8	76.8	
		TDV-T	301.6	224.8	76.8	
		SOURCE	23.6	16.9	6.7	
	165°	TDV-E	280.3	219.2	61.2	
		TDV-T	280.3	219.2	61.2	
		SOURCE	21.9	16.6	5.4	Worst Case
	210°	TDV-E	291.7	221.2	70.5	
		TDV-T	291.7	221.2	70.5	
		SOURCE	22.9	16.8	6.2	
	255°	TDV-E	300.3	224.7	75.6	
		TDV-T	300.3	224.7	75.6	
		SOURCE	23.4	16.9	6.6	
	300°	TDV-E	296.3	224.1	72.2	
		TDV-T	296.3	224.1	72.2	
		SOURCE	23.1	16.8	6.3	
	345°	TDV-E	280.0	219.0	61.0	Worst Case
		TDV-T	280.0	219.0	61.0	Worst Case
		SOURCE	22.0	16.5	5.4	
CZ Group	**Climate Zone 15 Palm Spring-Intl**	**Azimuth (Front Orientation)**	**Standard Design**	**Proposed Design**	**Margin**	**Worst Case**
D	30°	TDV-E	319.2	257.1	62.2	
		TDV-T	231.5	218.6	12.9	
		SOURCE	19.2	14.7	4.5	
	75°	TDV-E	337.7	260.0	77.6	
		TDV-T	249.9	222.3	27.6	
		SOURCE	20.5	14.9	5.6	
	120°	TDV-E	332.9	258.4	74.5	
		TDV-T	245.2	221.8	23.4	
		SOURCE	20.1	14.9	5.3	
	165°	TDV-E	305.9	253.6	52.3	Worst Case
		TDV-T	218.1	215.0	3.1	Worst Case
		SOURCE	18.0	14.4	3.6	Worst Case
	210°	TDV-E	321.9	256.3	65.6	
		TDV-T	234.1	217.8	16.4	
		SOURCE	19.5	14.7	4.8	
	255°	TDV-E	335.5	259.4	76.2	
		TDV-T	247.8	221.6	26.1	
		SOURCE	20.5	14.9	5.6	
	300°	TDV-E	327.1	258.7	68.4	
		TDV-T	239.3	220.8	18.6	
		SOURCE	19.7	14.7	5.0	
	345°	TDV-E	309.0	254.6	54.5	
		TDV-T	221.3	216.0	5.3	
		SOURCE	18.2	14.4	3.8	

PC DESIGN REVIEW INFORMATION

Title 24-2022, Part 6, Energy Code

Model Name and Option: PC 60x40 — Calculation Date/Time of Energy Report: 9/3/2023
Total Floor Area: 2400 — DSA Application:
HVAC System Type: VSHP

CZ Group	Climate Zone / Azimuth (Front Orientation)	Metric	Standard Design	Proposed Design	Margin	Worst Case
CZ Group	**Climate Zone 16 Blue Canyon**	**Metric**	**Standard Design**	**Proposed Design**	**Margin**	**Worst Case**
A	30°	TDV-E	263.0	221.7	41.3	
		TDV-T	263.0	221.7	41.3	
		SOURCE	33.4	20.5	12.9	
	75°	TDV-E	275.0	224.0	51.0	
		TDV-T	275.0	224.0	51.0	
		SOURCE	33.8	20.7	13.1	
	120°	TDV-E	262.7	223.3	39.4	
		TDV-T	262.7	223.3	39.4	
		SOURCE	33.2	20.6	12.5	
	165°	TDV-E	254.0	219.8	34.1	
		TDV-T	254.0	219.8	34.1	
		SOURCE	32.7	20.3	12.4	
	210°	TDV-E	262.1	221.0	41.2	
		TDV-T	262.1	221.0	41.2	
		SOURCE	33.2	20.4	12.9	
	255°	TDV-E	270.8	223.8	47.0	
		TDV-T	270.8	223.8	47.0	
		SOURCE	33.6	20.6	13.0	
	300°	TDV-E	263.9	223.8	40.1	
		TDV-T	263.9	223.8	40.1	
		SOURCE	33.3	20.7	12.6	
	345°	TDV-E	251.6	220.7	30.9	Worst Case
		TDV-T	251.6	220.7	30.9	Worst Case
		SOURCE	32.7	20.4	12.3	Worst Case
CZ Group	**Climate Zone 05 Santa Maria**	**Azimuth (Front Orientation)**	**Standard Design**	**Proposed Design**	**Margin**	**Worst Case**
B	30°	TDV-E	185.2	120.4	64.8	
		TDV-T	185.2	120.4	64.8	
		SOURCE	17.2	11.7	5.5	
	75°	TDV-E	185.3	120.6	64.7	
		TDV-T	185.3	120.6	64.7	
		SOURCE	17.2	11.8	5.5	
	120°	TDV-E	177.1	120.0	57.2	Worst Case
		TDV-T	177.1	120.0	57.2	Worst Case
		SOURCE	16.5	11.7	4.8	Worst Case
	165°	TDV-E	180.8	119.1	61.7	
		TDV-T	180.8	119.1	61.7	
		SOURCE	16.9	11.6	5.2	
	210°	TDV-E	188.2	120.4	67.8	
		TDV-T	188.2	120.4	67.8	
		SOURCE	17.4	11.7	5.7	
	255°	TDV-E	187.9	120.8	67.1	
		TDV-T	187.9	120.8	67.1	
		SOURCE	17.4	11.7	5.7	
	300°	TDV-E	178.7	120.1	58.6	
		TDV-T	178.7	120.1	58.6	
		SOURCE	16.7	11.7	4.9	
	345°	TDV-E	178.4	119.1	59.2	
		TDV-T	178.4	119.1	59.2	
		SOURCE	16.7	11.7	5.0	
CZ Group	**Climate Zone 13 Fresno**	**Azimuth (Front Orientation)**	**Standard Design**	**Proposed Design**	**Margin**	**Worst Case**
C	30°	TDV-E	289.6	216.0	73.6	
		TDV-T	289.6	216.0	73.6	
		SOURCE	22.8	16.0	6.8	
	75°	TDV-E	299.1	221.0	78.1	
		TDV-T	299.1	221.0	78.1	
		SOURCE	23.4	16.2	7.2	
	120°	TDV-E	294.2	220.1	74.1	
		TDV-T	294.2	220.1	74.1	
		SOURCE	23.1	16.2	6.9	
	165°	TDV-E	274.9	213.8	61.1	Worst Case
		TDV-T	274.9	213.8	61.1	Worst Case
		SOURCE	21.7	15.8	5.9	Worst Case
	210°	TDV-E	290.9	216.2	74.6	
		TDV-T	290.9	216.2	74.6	
		SOURCE	22.9	16.0	6.9	
	255°	TDV-E	301.8	221.7	80.1	
		TDV-T	301.8	221.7	80.1	
		SOURCE	23.6	16.2	7.4	
	300°	TDV-E	296.0	220.7	75.3	
		TDV-T	296.0	220.7	75.3	
		SOURCE	23.2	16.2	7.0	
	345°	TDV-E	277.3	213.9	63.4	
		TDV-T	277.3	213.9	63.4	
		SOURCE	21.8	15.8	6.0	
CZ Group	**Climate Zone 15 Palm Spring-Intl**	**Azimuth (Front Orientation)**	**Standard Design**	**Proposed Design**	**Margin**	**Worst Case**
D	30°	TDV-E	311.4	284.4	27.1	
		TDV-T	223.7	211.6	12.1	
		SOURCE	18.7	15.8	2.9	
	75°	TDV-E	324.6	288.3	36.3	
		TDV-T	236.9	217.0	19.8	
		SOURCE	19.7	16.2	3.5	
	120°	TDV-E	324.3	287.2	37.2	
		TDV-T	236.6	217.9	18.7	
		SOURCE	19.5	16.2	3.3	
	165°	TDV-E	303.0	282.1	21.0	
		TDV-T	215.3	209.1	6.2	
		SOURCE	17.9	15.5	2.4	
	210°	TDV-E	316.2	285.0	31.2	
		TDV-T	228.4	212.1	16.3	
		SOURCE	19.0	15.9	3.1	
	255°	TDV-E	331.7	289.0	42.7	
		TDV-T	244.0	217.7	26.3	
		SOURCE	20.1	16.2	3.9	
	300°	TDV-E	326.6	287.2	39.4	
		TDV-T	238.8	215.5	23.3	
		SOURCE	19.7	16.0	3.7	
	345°	TDV-E	302.0	281.8	20.1	Worst Case
		TDV-T	214.2	208.8	5.4	Worst Case
		SOURCE	17.8	15.5	2.3	Worst Case

HVAC Specification Table

	Capacity (Ton)	Cooling (Btu/h)	Heating (Btu/h)	Supply Fan CV/VFD	Supply Fan (CFM)	Supply Fan (HP)	Cooling Efficiency (EER)	Heating Efficiency (COP)
Bard W18H-W60H Series Wall-Mount								
W42HC	3.5	42,000	39,000	CV	1,350	0.50	11.0	3.3
W48HC	4.0	47,500	42,500	CV	1,550	0.75	11	3.3
W60HC	4.5	54,500	52,500	CV	1,750	0.75	11.0	3.3
Systemair Sophomore								
SysAir 3T	3.0	35,600	32,400	VFD	1,100	0.50	11.1	3.41
SysAir 4T	4.0	47,500	44,800	VFD	1,600	0.50	11.0	3.54
SysAir 5T	5.0	57,100	56,200	VFD	1,800	0.75	11.0	3.39

Notes

(green)	Indicates deviation from predominant design
(blue)	Indicates Systemair Sophomore HVAC unit
1	Rigid insulation R-value added above the R-19 Roof Structure per detail
2	Rigid insulation R-value added to the exterior R-13 Metal Stud walls, per detail
3	Rigid insulation R-value below the ground floor slab
4	NFRC Tested Window U-factor and SHGC
5	HVAC Unit Specification
6	Total number of specified HVAC units in PC
7	Design Ouside Air (OSA / cfm) per HVAC unit per Section H3. or the Title 24 reports

PV System [8]

- The kW DC OPV required for compliance is indicated in this table.
- PV panel Azimuth is based on the PC orientation, see Section F1 on pg. 9 of the Title 24 report for details
- PV panel = 5 degree per Section F1 of the Title 24 report for details

STATE OF CALIFORNIA
Solar And Battery — CALIFORNIA ENERGY COMMISSION

CERTIFICATE OF COMPLIANCE	NRCC-SAB-E
This document is used to demonstrate compliance with prescriptive PV and battery requirements in 140.10/ 170.2 for nonresidential, multifamily and mixed-use buildings and prescriptive solar thermal requirements in 170.2(d)3C for multifamily and hotel/ motel occupancies. When PV/battery/solar thermal requirements don't apply or are traded using the performance approach, this document demonstrates compliance with mandatory solar readiness requirements in 110.10/ 160.8 for newly constructed buildings which are either multifamily ten stories or fewer, hotel/motel ten stories or fewer or all other nonresidential buildings three stories or fewer. It is also used to demonstrate compliance with solar readiness in 110.10/ 160.8 for additions to nonresidential, multifamily or hotel/motel building types which add more than 2,000 ft² of roof area. Alterations, or additions of less than 2,000 ft² of roof area, are not required to comply with solar readiness, solar PV and battery requirements and do not need to complete this document.	
Project Name: AMS PC 24-120x40	Report Page: (Page 1 of 7)
Project Address:	Date Prepared: 2023-10-10T21:09:32-04:00

A. GENERAL INFORMATION

01	Project Location (city)	Palm Spring-Intl	04	Building Occupancies	School or Classroom
02	Climate Zone	15	05	Construction Type	New construction
03	Conditioned Floor Area (ft²)	4800	06	Number of Stories	Bldg <= 3 stories

B. PROJECT SCOPE

The compliance path the project is using to comply per 110.10(b)1B/ 140.10/ 170.2(g and h) is indicated below.

Compliance with Solar Readiness Requirements in 110.10(b)1B

		01
☒	Provide Solar Ready Area no exceptions	The project has allocated a solar zone on the roof plan per requirements in §110.10(b), as documented in Table F.
☐	Exception to Solar Ready Area: Installed Solar Photovoltaic System	The project includes a permanently installed solar electric system having a nameplate DC power rating, measured under Standard Test Conditions, of no less than one watt per square foot of roof area as documented in Table G.
☐	Exception to Solar Ready Area: Installed Solar Water Heating System	The project is a hotel/motel or high-rise multifamily occupancy and includes a permanently installed domestic solar water-heating system complying with 170.2(d)3C and Reference Residential Appendix RA4, as documented in Table H.
☐	Exception to Solar Ready Area: Smart Thermostat and Alternative Energy Efficiency Measure	The project is a multifamily occupancy where all thermostats in each dwelling unit comply with §110.12(a) AND at least one additional measure listed in Exception 4 to §110.10(b)1B is installed, as documented in Table I.
☐	Exception to Solar Ready Area: Roof is designed for vehicular traffic, parking or for heliport	Plan sheet showing roof designed for vehicular traffic, parking or heliport
☐	Exception to Solar Ready Area: Roof too small	The project is new construction and has a total roof area <= 533 square feet[1]
☐	Exception to Solar Ready Area: Number of building stories	The project is nonresidential > 3 stories or multifamily/ hotel/motel > 10 stories.

[1]FOOTNOTE: Buildings with roof area <=533 ft² would have a required solar zone < 80 ft² and are therefore exempt per 110.10(b)1.

Generated Date/Time: — Documentation Software: Energy Code Ace
CA Building Energy Efficiency Standards - 2022 Nonresidential Compliance — Report Version: 2022.0.000 Schema Version: rev 20220101 — Compliance ID: 92981-1023-0032 Report Generated: 2023-10-10 18:09:34

STATE OF CALIFORNIA
Solar And Battery — CALIFORNIA ENERGY COMMISSION

CERTIFICATE OF COMPLIANCE	NRCC-SAB-E
Project Name: AMS PC 24-120x40	Report Page: (Page 2 of 7)
	Date Prepared: 2023-10-10T21:09:32-04:00

Compliance with Solar Photovoltaic (PV) and Battery Requirements in 140.10/ 170.2(g and h)

		01
☐	Provided PV system and battery storage sized per 140.10/ 170.2 (g and h)	The project has included an installed PV system and battery storage system per requirements in 140.10/ 170.2(g and h) as documented in Table J.
☐	Exception to PV and Battery: Not enough Solar Access Roof Area	The total of all available Solar Access Roof Area(s) of the project site is less than three percent of the conditioned floor area as documented in Table J.
☐	Exception to PV and Battery: Required PV < 4kW	The required PV system size is less than 4 kW dc as documented in Table J..
☐	Exception to PV and Battery: No contiguous Solar Access Roof Area	The Solar Access Roof Area(s) of the project site contains less than 80 contiguous square feet as documented in Table J.
☐	Exception to PV and Battery: Can't meet snow load	The project has a roof design where the enforcement authority has verified it is not possible for the PV system, including panels, modules, components, supports, and attachments to the roof structure, to meet ASCE 7-16 Chapter 7, Snow Loads.
☐	Exception to PV and Battery: Multi-tenant without VNEM or Community Solar	The project is a multi-tenant building in an area where a load serving entity does not provide either a Virtual Net Metering (VNEM) or community solar program.
☒	The prescriptive PV/battery requirement has been traded off using the performance compliance approach as documented on the PRF Certificate of Compliance form.	

Compliance with Solar Thermal Water Heating Requirements in 170.2(d)3C (Multifamiily and hotel/ motel occupancies only)

	01
☐	The project includes a hotel/motel or multifamily occupancy with a gas or propane central water-heating system (serves 2+ dwelling units) and includes a permanently installed domestic solar water-heating system to comply with 170.2(d)3C and Reference Residential Appendix RA4, as documented in Table H. Compliance meets Exception 2 to solar ready requirements in 110.10(b).

Generated Date/Time: — Documentation Software: Energy Code Ace
CA Building Energy Efficiency Standards - 2022 Nonresidential Compliance — Report Version: 2022.0.000 Schema Version: rev 20220101 — Compliance ID: 92981-1023-0032 Report Generated: 2023-10-10 18:09:34

IDENTIFICATION STAMP
DIV. OF THE STATE ARCHITECT
APP: 02-122976 INC:
REVIEWED FOR
SS ☑ FLS ☑ ACS ☑
DATE: 03/12/2025

TRACY
UNIFIED SCHOOL DISTRICT

HMC Architects

3595001000

2101 CAPITOL AVENUE, SUITE 100
SACRAMENTO, CA 95816
916 368 7990 / www.hmcarchitects.com

ISSUE

Δ	DESCRIPTION	DATE
A	ADDENDUM "A"	3/20/25

American Modular Systems
787 Spreckels Ave., Manteca, CA 95336
Phone (209) 825-1921 Fax (209) 825-7018
www.americanmodular.com

INTELLECTUAL-PROPERTY & PROPRIETARY RIGHTS STATEMENT
COPYRIGHT © AMERICAN MODULAR SYSTEMS (AMS)
AMS OWNS ALL COPYRIGHT AND OTHER INTELLECTUAL-PROPERTY AND PROPRIETARY RIGHTS IN THESE DRAWINGS, SPECIFICATIONS, AND THE MATERIAL CONTAINED HEREIN. CERTAIN ELEMENTS SHOWN IN THESE DOCUMENTS ARE REGISTERED TRADEMARKS OF AMS. ALL PATENTABLE MATERIALS CONTAINED IN THESE DOCUMENTS AND ORIGINATING WITH AMS WILL REMAIN THE SOLE PROPERTY OF AMS. THESE DRAWING, SPECIFICATIONS, AND THE MATERIAL CONTAINED HEREIN MAY NOT BE REPRODUCED, TRANSMITTED, COPIED, DISTRIBUTED, MODIFIED, OR OTHERWISE DISPOSED OF (DIRECTLY OR INDIRECTLY) AND MAY NOT BE USED (IN WHOLE OR IN PART) TO ASSIST IN THE CONSTRUCTION, DESIGN, OR OTHER MAKING OF, OR FOR THE PURPOSE OF FURNISHING ANY INFORMATION FOR THE CONSTRUCTION, DESIGN, OR OTHER MAKING OF, ANY BUILDINGS (MODULAR OR OTHERWISE), DRAWINGS, SPECIFICATIONS, PRINTS, APPARATUS, OR PARTS THEREOF, EXCEPT AS EXPRESSLY PERMITTED BY WRITTEN CONSENT OF, OR IN A WRITTEN AGREEMENT WITH, AMS. SUBMITTAL OR DISTRIBUTION TO MEET OFFICIAL REGULATORY REQUIREMENTS WILL NOT BE CONSTRUED AS PUBLICATION IN DEROGATION OF AMS'S COPYRIGHT OR OTHER INTELLECTUAL-PROPERTY OR PROPRIETARY RIGHTS.

PRE-CHECKED SET NAME
24' x 40' THRU 120' x 40'
STANDARD MODULAR BUILDING
(LOW SEISMIC)
FORM

SITE SPECIFIC PROJECT NAME
.
.
.

APPROVED
DIV. OF THE STATE ARCHITECT
APP: 04-122050 PC
REVIEWED FOR
SS ☑ FLS ☑ ACS ☒ CG ☑
DATE: 12/11/2023

☐ 2022 CBC PRE-CHECK (PC) DOCUMENT
A SEPARATE PROJECT APPLICATION FOR CONSTRUCTION IS REQUIRED.

MANUFACTURER PROFESSIONAL OF RECORD ON PC

LICENSED ARCHITECT
RANDALL PATRICK CAVANAGH
No. C12631
Ren. 3-31-25
STATE OF CALIFORNIA

THESE DRAWINGS ARE PRELIMINARY AND NOT FOR CONSTRUCTION UNLESS STAMPED & SIGNED BY THE DESIGN PROFESSIONAL OF RECORD.

REVISIONS

1
2
3
4

DRAWN BY:	AA
SCALE:	AS NOTED
DATE:	MM/DD/YY
PROJECT NO:	XXXX-22

SHEET TITLE:
ENERGY CALCULATIONS SUMMATION SHEET

SHEET NUMBER:
EN.1A

KEYNOTES

GENERAL NOTES

FACILITY:
JACOBSON ELEMENTARY SCHOOL
1750 W KAVANAGH AVE
TRACY, CA 95376

PROJECT:
JACOBSON ES - TK CLASSROOM

SHEET NAME:
ENERGY CALCULATIONS SUMMATION SHEET

DATE: **04/03/24** — CLIENT PROJ NO: **3595001000**

SHEET:
EN.1A
ADDENDUM "A"

PLEASE RECYCLE

THE LINE SHOWN ABOVE IS EXACTLY ONE INCH LONG AT THIS SHEETS ORIGINAL PAGE SIZE

PC DESIGN REVIEW INFORMATION

Title 24-2022, Part 6, Energy Code

Model Name and Option: PC 72x40 — Calculation Date/Time of Energy Report: 9/3/2023
Total Floor Area: 2880 — DSA Application:
HVAC System Type: VSHP

CZ Group	Climate Zone	Metric	Standard Design	Proposed Design	Margin	Worst Case
CZ Group	Climate Zone 16 Blue Canyon	Metric	Standard Design	Proposed Design	Margin	Worst Case
A		TDV-E	258.8	217.8	41.0	
	30°	TDV-T	258.8	217.8	41.0	
		SOURCE	32.4	19.8	12.6	
		TDV-E	265.8	220.8	45.1	
	75°	TDV-T	265.8	220.8	45.1	
		SOURCE	32.7	20.0	12.7	
		TDV-E	260.7	220.7	40.0	
	120°	TDV-T	260.7	220.7	40.0	
		SOURCE	32.5	20.1	12.4	
		TDV-E	246.6	217.4	29.1	Worst Case
	165°	TDV-T	246.6	217.4	29.1	Worst Case
		SOURCE	31.8	19.8	12.0	Worst Case
		TDV-E	259.6	218.3	41.3	
	210°	TDV-T	259.6	218.3	41.3	
		SOURCE	32.5	19.8	12.7	
		TDV-E	272.1	220.6	51.4	
	255°	TDV-T	272.1	220.6	51.4	
		SOURCE	33.0	20.0	12.9	
		TDV-E	259.5	220.1	39.4	
	300°	TDV-T	259.5	220.1	39.4	
		SOURCE	32.3	20.0	12.3	
		TDV-E	250.1	216.7	33.4	
	345°	TDV-T	250.1	216.7	33.4	
		SOURCE	31.8	19.7	12.1	
CZ Group	Climate Zone 05 Santa Maria	Azimuth (Front Orientation)	Standard Design	Proposed Design	Margin	Worst Case
B		TDV-E	186.7	114.9	71.8	
	30°	TDV-T	186.7	114.9	71.8	
		SOURCE	17.2	11.2	6.1	
		TDV-E	186.7	115.3	71.4	
	75°	TDV-T	186.7	115.3	71.4	
		SOURCE	17.3	11.2	6.0	
		TDV-E	177.8	114.3	63.5	
	120°	TDV-T	177.8	114.3	63.5	
		SOURCE	16.5	11.2	5.3	
		TDV-E	175.6	113.3	62.3	
	165°	TDV-T	175.6	113.3	62.3	
		SOURCE	16.3	11.1	5.2	
		TDV-E	182.1	114.3	67.8	
	210°	TDV-T	182.1	114.3	67.8	
		SOURCE	16.9	11.2	5.7	
		TDV-E	182.1	114.6	67.5	
	255°	TDV-T	182.1	114.6	67.5	
		SOURCE	16.8	11.2	5.7	
		TDV-E	173.6	113.9	59.6	Worst Case
	300°	TDV-T	173.6	113.9	59.6	Worst Case
		SOURCE	16.1	11.1	5.0	Worst Case
		TDV-E	178.8	113.3	65.6	
	345°	TDV-T	178.8	113.3	65.6	
		SOURCE	16.6	11.1	5.5	
CZ Group	Climate Zone 13 Fresno	Azimuth (Front Orientation)	Standard Design	Proposed Design	Margin	Worst Case
C		TDV-E	201.4	172.2	29.2	
	30°	TDV-T	150.2	138.1	12.0	
		SOURCE	12.6	10.8	1.8	
		TDV-E	207.8	178.9	29.0	
	75°	TDV-T	156.6	145.1	11.5	
		SOURCE	12.9	11.1	1.8	
		TDV-E	207.4	177.4	30.0	
	120°	TDV-T	156.1	144.5	11.7	
		SOURCE	12.7	11.1	1.7	
		TDV-E	272.2	169.3	102.9	
	165°	TDV-T	220.9	135.5	85.4	
		SOURCE	19.5	10.6	9.0	
		TDV-E	198.9	171.4	27.5	
	210°	TDV-T	147.7	137.3	10.4	
		SOURCE	12.5	10.8	1.7	
		TDV-E	203.5	177.5	26.0	
	255°	TDV-T	152.3	143.7	8.6	
		SOURCE	12.6	11.1	1.5	
		TDV-E	198.7	176.3	22.4	Worst Case
	300°	TDV-T	147.4	143.4	4.0	Worst Case
		SOURCE	12.2	11.0	1.3	Worst Case
		TDV-E	272.2	169.2	103.0	
	345°	TDV-T	220.9	135.5	85.4	
		SOURCE	19.6	10.5	9.0	
CZ Group	Climate Zone 15 Palm Spring-Intl	Azimuth (Front Orientation)	Standard Design	Proposed Design	Margin	Worst Case
D		TDV-E	234.7	206.1	28.6	Worst Case
	30°	TDV-T	146.9	143.0	3.9	
		SOURCE	10.9	9.9	1.0	
		TDV-E	248.2	211.0	37.1	
	75°	TDV-T	160.4	149.3	11.1	
		SOURCE	11.6	10.2	1.4	
		TDV-E	239.8	209.0	30.8	
	120°	TDV-T	152.0	149.1	2.9	Worst Case
		SOURCE	11.0	10.1	0.8	Worst Case
		TDV-E	296.1	202.4	93.6	
	165°	TDV-T	208.3	139.2	69.1	
		SOURCE	17.3	9.5	7.9	
		TDV-E	308.7	204.7	103.9	
	210°	TDV-T	220.9	141.7	79.2	
		SOURCE	18.5	9.8	8.7	
		TDV-E	323.3	210.0	113.3	
	255°	TDV-T	235.5	148.3	87.2	
		SOURCE	19.6	10.2	9.4	
		TDV-E	313.5	208.9	104.6	
	300°	TDV-T	225.7	146.8	78.9	
		SOURCE	18.7	9.9	8.8	
		TDV-E	300.6	203.2	97.4	
	345°	TDV-T	212.9	140.0	72.8	
		SOURCE	17.6	9.5	8.1	

PC DESIGN REVIEW INFORMATION

Title 24-2022, Part 6, Energy Code

Model Name and Option: AMS 84x40 — Calculation Date/Time of Energy Report: 9/3/2023
Total Floor Area: 3360 — DSA Application:
HVAC System Type: VSHP

CZ Group	Climate Zone	Metric	Standard Design	Proposed Design	Margin	Worst Case
CZ Group	Climate Zone 16 Blue Canyon	Metric	Standard Design	Proposed Design	Margin	Worst Case
A		TDV-E	222.2	201.8	20.4	
	30°	TDV-T	182.6	168.7	13.9	
		SOURCE	33.8	17.4	16.4	
		TDV-E	231.4	204.0	27.4	
	75°	TDV-T	191.8	171.7	20.1	
		SOURCE	34.2	17.6	16.6	
		TDV-E	223.9	203.5	20.4	
	120°	TDV-T	184.3	172.4	11.9	
		SOURCE	33.8	17.7	16.1	
		TDV-E	212.5	200.3	12.2	
	165°	TDV-T	172.9	167.0	5.8	
		SOURCE	33.1	17.3	15.8	
		TDV-E	221.6	201.4	20.2	
	210°	TDV-T	182.0	168.3	13.7	
		SOURCE	33.8	17.4	16.4	
		TDV-E	229.2	203.7	25.6	
	255°	TDV-T	189.6	171.4	18.3	
		SOURCE	34.2	17.6	16.6	
		TDV-E	223.4	203.6	19.9	
	300°	TDV-T	183.8	171.0	12.9	
		SOURCE	33.9	17.6	16.2	
		TDV-E	209.3	200.7	8.6	Worst Case
	345°	TDV-T	169.7	167.4	2.3	Worst Case
		SOURCE	33.1	17.4	15.7	Worst Case
CZ Group	Climate Zone 05 Santa Maria	Azimuth (Front Orientation)	Standard Design	Proposed Design	Margin	Worst Case
B		TDV-E	146.3	112.2	34.1	Worst Case
	30°	TDV-T	106.5	105.2	1.3	Worst Case
		SOURCE	11.6	10.9	0.7	Worst Case
		TDV-E	146.6	112.0	34.6	
	75°	TDV-T	106.8	105.2	1.6	
		SOURCE	11.6	10.9	0.7	
		TDV-E	187.7	111.3	76.3	
	120°	TDV-T	147.9	104.7	43.1	
		SOURCE	15.5	10.9	4.6	
		TDV-E	189.7	110.8	78.9	
	165°	TDV-T	149.9	103.9	46.0	
		SOURCE	15.7	10.8	4.8	
		TDV-E	149.7	112.1	37.6	
	210°	TDV-T	109.9	105.2	4.7	
		SOURCE	11.9	10.9	1.0	
		TDV-E	197.2	111.8	85.4	
	255°	TDV-T	157.4	105.0	52.4	
		SOURCE	16.3	10.9	5.4	
		TDV-E	188.1	111.2	76.9	
	300°	TDV-T	148.3	104.5	43.9	
		SOURCE	15.5	10.9	4.7	
		TDV-E	188.5	110.8	77.7	
	345°	TDV-T	148.7	103.9	44.8	
		SOURCE	15.6	10.8	4.7	
CZ Group	Climate Zone 13 Fresno	Azimuth (Front Orientation)	Standard Design	Proposed Design	Margin	Worst Case
C		TDV-E	238.2	169.5	68.8	
	30°	TDV-T	187.0	169.5	17.5	
		SOURCE	15.9	11.9	4.1	Worst Case
		TDV-E	244.3	174.9	69.3	
	75°	TDV-T	193.0	174.9	18.1	
		SOURCE	16.4	12.1	4.3	
		TDV-E	259.1	173.9	85.2	
	120°	TDV-T	207.8	173.9	33.9	
		SOURCE	17.3	12.1	5.3	
		TDV-E	244.3	167.2	77.1	
	165°	TDV-T	193.0	167.2	25.8	
		SOURCE	16.4	11.7	4.7	
		TDV-E	234.6	169.8	64.9	
	210°	TDV-T	183.3	169.8	13.6	
		SOURCE	16.0	11.9	4.1	
		TDV-E	239.9	175.5	64.4	Worst Case
	255°	TDV-T	188.6	175.5	13.1	Worst Case
		SOURCE	16.4	12.2	4.2	
		TDV-E	242.0	174.3	67.8	
	300°	TDV-T	190.8	174.3	16.5	
		SOURCE	16.2	12.1	4.1	
		TDV-E	243.9	167.2	76.7	
	345°	TDV-T	192.6	167.2	25.4	
		SOURCE	16.5	11.7	4.8	
CZ Group	Climate Zone 15 Palm Spring-Intl	Azimuth (Front Orientation)	Standard Design	Proposed Design	Margin	Worst Case
D		TDV-E	289.0	206.2	82.7	
	30°	TDV-T	201.2	174.2	27.0	
		SOURCE	15.6	11.1	4.5	
		TDV-E	300.1	211.1	89.0	
	75°	TDV-T	212.3	179.7	32.6	
		SOURCE	16.3	11.4	4.9	
		TDV-E	296.0	209.4	86.6	
	120°	TDV-T	208.2	179.0	29.2	
		SOURCE	15.8	11.3	4.6	
		TDV-E	274.8	203.4	71.4	
	165°	TDV-T	187.0	171.3	15.7	
		SOURCE	14.4	10.8	3.5	
		TDV-E	287.6	206.5	81.0	
	210°	TDV-T	199.8	174.5	25.3	
		SOURCE	15.6	11.2	4.4	
		TDV-E	276.0	211.3	64.7	
	255°	TDV-T	188.2	180.0	8.3	
		SOURCE	15.3	11.4	3.9	
		TDV-E	284.3	210.0	74.3	
	300°	TDV-T	196.6	178.5	18.1	
		SOURCE	15.2	11.2	4.0	
		TDV-E	260.9	203.6	57.3	Worst Case
	345°	TDV-T	173.2	171.6	1.6	Worst Case
		SOURCE	13.5	10.8	2.7	Worst Case

PC DESIGN REVIEW INFORMATION

Title 24-2022, Part 6, Energy Code

Model Name and Option: AMS 96x40 — Calculation Date/Time of Energy Report: 9/3/2023
Total Floor Area: 3840 — DSA Application:
HVAC System Type: VSHP

CZ Group	Climate Zone	Metric	Standard Design	Proposed Design	Margin	Worst Case
CZ Group	Climate Zone 16 Blue Canyon	Metric	Standard Design	Proposed Design	Margin	Worst Case
A		TDV-E	255.6	208.5	47.1	
	30°	TDV-T	216.0	207.0	9.0	
		SOURCE	30.0	19.6	10.4	
		TDV-E	267.3	211.0	56.3	
	75°	TDV-T	227.7	209.5	18.2	
		SOURCE	30.6	19.8	10.8	
		TDV-E	257.2	211.0	46.3	
	120°	TDV-T	217.6	209.6	8.1	
		SOURCE	30.1	19.8	10.3	
		TDV-E	284.6	208.1	76.5	
	165°	TDV-T	245.0	206.6	38.4	
		SOURCE	40.3	19.6	20.7	
		TDV-E	260.9	209.1	51.8	
	210°	TDV-T	221.3	207.6	13.7	
		SOURCE	30.3	19.6	10.7	
		TDV-E	273.7	211.0	62.7	
	255°	TDV-T	234.1	209.5	24.6	
		SOURCE	30.8	19.8	11.1	
		TDV-E	261.3	210.3	50.9	
	300°	TDV-T	221.7	208.9	12.8	
		SOURCE	30.2	19.8	10.4	
		TDV-E	246.8	207.3	39.5	Worst Case
	345°	TDV-T	207.2	205.8	1.4	Worst Case
		SOURCE	29.4	19.5	9.9	Worst Case
CZ Group	Climate Zone 05 Santa Maria	Azimuth (Front Orientation)	Standard Design	Proposed Design	Margin	Worst Case
B		TDV-E	184.3	116.3	68.0	
	30°	TDV-T	144.5	116.3	28.2	
		SOURCE	15.1	11.5	3.6	
		TDV-E	184.3	116.3	68.0	
	75°	TDV-T	144.5	116.3	28.2	
		SOURCE	15.2	11.5	3.6	
		TDV-E	205.2	115.5	89.6	
	120°	TDV-T	165.4	115.5	49.8	
		SOURCE	17.0	11.5	5.5	
		TDV-E	201.6	114.6	87.0	
	165°	TDV-T	161.8	114.6	47.2	
		SOURCE	16.7	11.5	5.2	
		TDV-E	179.5	115.8	63.7	Worst Case
	210°	TDV-T	139.7	115.8	23.9	Worst Case
		SOURCE	14.8	11.5	3.2	Worst Case
		TDV-E	209.5	115.8	93.8	
	255°	TDV-T	169.7	115.8	54.0	
		SOURCE	17.3	11.5	5.8	
		TDV-E	200.8	115.0	85.8	
	300°	TDV-T	161.0	115.0	46.1	
		SOURCE	16.6	11.5	5.2	
		TDV-E	205.6	114.5	91.1	
	345°	TDV-T	165.8	114.5	51.3	
		SOURCE	17.0	11.4	5.6	
CZ Group	Climate Zone 13 Fresno	Azimuth (Front Orientation)	Standard Design	Proposed Design	Margin	Worst Case
C		TDV-E	286.6	214.7	71.9	
	30°	TDV-T	235.3	214.7	20.6	
		SOURCE	20.5	16.1	4.3	
		TDV-E	298.0	219.9	78.1	
	75°	TDV-T	246.7	219.9	26.8	
		SOURCE	21.2	16.4	4.9	
		TDV-E	291.6	218.5	73.1	
	120°	TDV-T	240.3	218.5	21.8	
		SOURCE	20.8	16.4	4.5	
		TDV-E	270.2	212.0	58.2	Worst Case
	165°	TDV-T	218.9	212.0	7.0	Worst Case
		SOURCE	19.2	16.0	3.2	Worst Case
		TDV-E	281.8	214.2	67.6	
	210°	TDV-T	230.5	214.2	16.3	
		SOURCE	20.2	16.2	4.0	
		TDV-E	291.0	218.8	72.3	
	255°	TDV-T	239.8	218.8	21.0	
		SOURCE	20.8	16.4	4.4	
		TDV-E	286.4	217.8	68.6	
	300°	TDV-T	235.1	217.8	17.3	
		SOURCE	20.4	16.3	4.1	
		TDV-E	270.6	211.9	58.7	
	345°	TDV-T	219.3	211.9	7.5	
		SOURCE	19.3	15.9	3.4	
CZ Group	Climate Zone 15 Palm Spring-Intl	Azimuth (Front Orientation)	Standard Design	Proposed Design	Margin	Worst Case
D		TDV-E	309.4	250.4	59.0	
	30°	TDV-T	221.6	203.1	18.5	
		SOURCE	18.4	13.9	4.4	
		TDV-E	321.6	254.3	67.2	
	75°	TDV-T	233.8	208.0	25.8	
		SOURCE	19.3	14.2	5.0	
		TDV-E	320.6	252.3	68.3	
	120°	TDV-T	232.8	207.4	25.4	
		SOURCE	19.0	14.1	4.9	
		TDV-E	290.6	246.7	43.9	Worst Case
	165°	TDV-T	202.8	199.3	3.5	Worst Case
		SOURCE	16.9	13.6	3.3	Worst Case
		TDV-E	311.8	249.5	62.2	
	210°	TDV-T	224.0	202.2	21.7	
		SOURCE	18.6	13.9	4.7	
		TDV-E	326.8	253.5	73.2	
	255°	TDV-T	239.0	207.2	31.8	
		SOURCE	19.8	14.2	5.6	
		TDV-E	317.1	252.7	64.4	
	300°	TDV-T	229.3	206.1	23.2	
		SOURCE	18.8	14.0	4.9	
		TDV-E	298.7	247.7	51.1	
	345°	TDV-T	211.0	200.3	10.7	
		SOURCE	17.4	13.6	3.8	

PC DESIGN REVIEW INFORMATION

Title 24-2022, Part 6, Energy Code

Model Name and Option: AMS 108x40 — Calculation Date/Time of Energy Report: 9/3/2023
Total Floor Area: 4320 — DSA Application:
HVAC System Type: VSHP

CZ Group	Climate Zone	Metric	Standard Design	Proposed Design	Margin	Worst Case
CZ Group	Climate Zone 16 Blue Canyon	Metric	Standard Design	Proposed Design	Margin	Worst Case
A		TDV-E	254.3	193.0	61.3	
	30°	TDV-T	214.7	193.0	21.7	
		SOURCE	29.0	17.9	11.2	
		TDV-E	268.1	196.2	71.9	
	75°	TDV-T	228.5	196.2	32.3	
		SOURCE	29.7	18.1	11.6	
		TDV-E	256.3	195.7	60.6	
	120°	TDV-T	216.7	195.7	21.0	
		SOURCE	29.1	18.1	11.0	
		TDV-E	267.6	191.9	75.7	
	165°	TDV-T	228.0	191.9	36.1	
		SOURCE	35.4	17.8	17.6	
		TDV-E	255.7	192.6	63.2	
	210°	TDV-T	216.1	192.6	23.6	
		SOURCE	29.1	17.8	11.3	
		TDV-E	268.1	195.2	72.9	
	255°	TDV-T	228.5	195.2	33.3	
		SOURCE	29.7	18.0	11.6	
		TDV-E	257.4	194.8	62.6	
	300°	TDV-T	217.8	194.8	23.0	
		SOURCE	29.1	18.0	11.1	
		TDV-E	239.5	191.5	47.9	Worst Case
	345°	TDV-T	199.9	191.5	8.3	Worst Case
		SOURCE	28.2	17.7	10.4	Worst Case
CZ Group	Climate Zone 05 Santa Maria	Azimuth (Front Orientation)	Standard Design	Proposed Design	Margin	Worst Case
B		TDV-E	178.8	110.7	68.1	Worst Case
	30°	TDV-T	139.0	110.7	28.3	Worst Case
		SOURCE	14.5	10.9	3.6	Worst Case
		TDV-E	199.4	110.9	88.5	
	75°	TDV-T	159.6	110.9	48.7	
		SOURCE	16.2	11.0	5.3	
		TDV-E	190.9	110.1	80.8	
	120°	TDV-T	151.1	110.1	41.0	
		SOURCE	15.6	10.9	4.7	
		TDV-E	191.2	109.3	81.9	
	165°	TDV-T	151.4	109.3	42.1	
		SOURCE	15.6	10.9	4.8	
		TDV-E	198.6	110.6	88.0	
	210°	TDV-T	158.8	110.6	48.2	
		SOURCE	16.2	10.9	5.3	
		TDV-E	199.2	110.6	88.5	
	255°	TDV-T	159.4	110.6	48.7	
		SOURCE	16.2	10.9	5.3	
		TDV-E	190.5	109.8	80.8	
	300°	TDV-T	150.7	109.8	41.0	
		SOURCE	15.5	10.9	4.7	
		TDV-E	191.6	109.2	82.4	
	345°	TDV-T	151.8	109.2	42.6	
		SOURCE	15.6	10.8	4.7	
CZ Group	Climate Zone 13 Fresno	Azimuth (Front Orientation)	Standard Design	Proposed Design	Margin	Worst Case
C		TDV-E	252.5	166.6	85.9	
	30°	TDV-T	201.2	166.6	34.6	
		SOURCE	17.3	11.7	5.6	
		TDV-E	260.0	172.7	87.3	
	75°	TDV-T	208.7	172.7	36.0	
		SOURCE	17.8	11.9	5.8	
		TDV-E	256.8	171.2	85.6	
	120°	TDV-T	205.5	171.2	34.4	
		SOURCE	17.4	11.9	5.6	
		TDV-E	265.9	163.6	102.3	
	165°	TDV-T	214.6	163.6	51.0	
		SOURCE	18.8	11.4	7.3	
		TDV-E	250.4	166.1	84.3	
	210°	TDV-T	199.1	166.1	33.0	
		SOURCE	17.1	11.6	5.4	Worst Case
		TDV-E	261.8	173.0	88.8	
	255°	TDV-T	210.6	173.0	37.6	
		SOURCE	17.7	11.9	5.8	
		TDV-E	255.9	171.9	84.0	Worst Case
	300°	TDV-T	204.7	171.9	32.8	Worst Case
		SOURCE	17.3	11.8	5.5	
		TDV-E	266.7	164.2	102.5	
	345°	TDV-T	215.5	164.2	51.3	
		SOURCE	18.8	11.4	7.4	
CZ Group	Climate Zone 15 Palm Spring-Intl	Azimuth (Front Orientation)	Standard Design	Proposed Design	Margin	Worst Case
D		TDV-E	308.0	198.9	109.1	
	30°	TDV-T	220.2	181.7	38.5	
		SOURCE	18.3	11.3	7.0	
		TDV-E	321.9	204.3	117.6	
	75°	TDV-T	234.2	187.6	46.6	
		SOURCE	19.3	11.5	7.7	
		TDV-E	312.6	202.6	110.0	
	120°	TDV-T	224.9	186.4	38.5	
		SOURCE	18.5	11.4	7.1	
		TDV-E	267.7	195.7	72.0	Worst Case
	165°	TDV-T	180.0	178.6	1.4	Worst Case
		SOURCE	14.5	10.9	3.5	Worst Case
		TDV-E	309.6	198.8	110.8	
	210°	TDV-T	221.8	181.7	40.1	
		SOURCE	18.4	11.3	7.1	
		TDV-E	301.1	205.1	96.0	
	255°	TDV-T	213.4	188.3	25.0	
		SOURCE	17.0	11.6	5.4	
		TDV-E	293.1	203.5	89.6	
	300°	TDV-T	205.4	186.7	18.7	
		SOURCE	16.2	11.4	4.9	
		TDV-E	269.8	196.2	73.6	
	345°	TDV-T	182.0	179.1	3.0	
		SOURCE	14.6	11.0	3.6	

PC DESIGN REVIEW INFORMATION

Title 24-2022, Part 6, Energy Code

Model Name and Option: AMS 120x40 — Calculation Date/Time of Energy Report: 9/3/2023
Total Floor Area: 4800 — DSA Application:
HVAC System Type: VSHP

CZ Group	Climate Zone	Metric	Standard Design	Proposed Design	Margin	Worst Case
CZ Group	Climate Zone 16 Blue Canyon	Metric	Standard Design	Proposed Design	Margin	Worst Case
A		TDV-E	253.4	205.8	47.6	
	30°	TDV-T	213.8	205.8	8.0	
		SOURCE	29.5	19.3	10.2	
		TDV-E	265.3	208.5	56.8	
	75°	TDV-T	225.7	208.5	17.2	
		SOURCE	30.1	19.6	10.5	
		TDV-E	255.1	208.5	46.6	
	120°	TDV-T	215.5	208.5	7.0	
		SOURCE	29.6	19.6	10.0	
		TDV-E	282.2	205.5	76.6	
	165°	TDV-T	242.6	205.5	37.0	
		SOURCE	39.8	19.4	20.4	
		TDV-E	258.7	206.5	52.2	
	210°	TDV-T	219.1	206.5	12.6	
		SOURCE	29.8	19.4	10.4	
		TDV-E	271.8	208.5	63.3	
	255°	TDV-T	232.2	208.5	23.7	
		SOURCE	30.4	19.6	10.8	
		TDV-E	259.0	207.9	51.1	
	300°	TDV-T	219.4	207.9	11.5	
		SOURCE	29.7	19.6	10.1	
		TDV-E	244.3	204.7	39.7	Worst Case
	345°	TDV-T	204.7	204.7	0.1	Worst Case
		SOURCE	28.9	19.3	9.6	Worst Case
CZ Group	Climate Zone 05 Santa Maria	Azimuth (Front Orientation)	Standard Design	Proposed Design	Margin	Worst Case
B		TDV-E	183.1	115.4	67.7	Worst Case
	30°	TDV-T	143.3	115.4	27.9	Worst Case
		SOURCE	15.0	11.4	3.6	Worst Case
		TDV-E	214.0	115.6	98.5	
	75°	TDV-T	174.2	115.6	58.7	
		SOURCE	17.6	11.4	6.2	
		TDV-E	204.0	114.7	89.3	
	120°	TDV-T	164.2	114.7	49.5	
		SOURCE	16.9	11.4	5.4	
		TDV-E	200.4	113.8	86.6	
	165°	TDV-T	160.6	113.8	46.8	
		SOURCE	16.6	11.4	5.2	
		TDV-E	207.4	115.0	92.4	
	210°	TDV-T	167.6	115.0	52.6	
		SOURCE	17.1	11.4	5.6	
		TDV-E	208.3	115.0	93.3	
	255°	TDV-T	168.5	115.0	53.5	
		SOURCE	17.1	11.4	5.7	
		TDV-E	199.7	114.1	85.5	
	300°	TDV-T	159.9	114.1	45.7	
		SOURCE	16.5	11.4	5.1	
		TDV-E	204.4	113.7	90.8	
	345°	TDV-T	164.6	113.7	51.0	
		SOURCE	16.8	11.3	5.5	
CZ Group	Climate Zone 13 Fresno	Azimuth (Front Orientation)	Standard Design	Proposed Design	Margin	Worst Case
C		TDV-E	284.6	213.3	71.2	
	30°	TDV-T	233.3	213.3	20.0	
		SOURCE	20.3	16.0	4.3	
		TDV-E	296.1	218.7	77.4	
	75°	TDV-T	244.9	218.7	26.1	
		SOURCE	21.1	16.3	4.8	
		TDV-E	289.7	217.3	72.4	
	120°	TDV-T	238.4	217.3	21.1	
		SOURCE	20.7	16.3	4.4	
		TDV-E	268.3	210.6	57.7	Worst Case
	165°	TDV-T	217.0	210.6	6.4	Worst Case
		SOURCE	19.0	15.9	3.2	Worst Case
		TDV-E	279.7	212.8	66.9	
	210°	TDV-T	228.5	212.8	15.7	
		SOURCE	20.0	16.1	3.9	
		TDV-E	289.3	217.6	71.7	
	255°	TDV-T	238.0	217.6	20.4	
		SOURCE	20.6	16.3	4.3	
		TDV-E	284.5	216.6	67.9	
	300°	TDV-T	233.2	216.6	16.6	
		SOURCE	20.2	16.2	4.0	
		TDV-E	268.7	210.5	58.3	
	345°	TDV-T	217.5	210.5	7.0	
		SOURCE	19.1	15.8	3.3	
CZ Group	Climate Zone 15 Palm Spring-Intl	Azimuth (Front Orientation)	Standard Design	Proposed Design	Margin	Worst Case
D		TDV-E	307.5	249.0	58.5	
	30°	TDV-T	219.7	200.0	19.7	
		SOURCE	18.2	13.8	4.4	
		TDV-E	319.8	253.2	66.6	
	75°	TDV-T	232.0	205.1	26.8	
		SOURCE	19.1	14.1	5.0	
		TDV-E	318.4	251.1	67.3	
	120°	TDV-T	230.7	204.5	26.2	
		SOURCE	18.9	14.0	4.9	
		TDV-E	288.6	245.2	43.4	Worst Case
	165°	TDV-T	200.8	196.1	4.7	Worst Case
		SOURCE	16.7	13.4	3.3	Worst Case
		TDV-E	309.8	248.1	61.7	
	210°	TDV-T	222.1	199.1	23.0	
		SOURCE	18.5	13.8	4.7	
		TDV-E	325.0	252.4	72.6	
	255°	TDV-T	237.3	204.4	32.9	
		SOURCE	19.6	14.0	5.6	
		TDV-E	315.2	251.5	63.7	
	300°	TDV-T	227.4	203.2	24.3	
		SOURCE	18.7	13.8	4.9	
		TDV-E	296.8	246.3	50.5	
	345°	TDV-T	209.0	197.1	11.9	
		SOURCE	17.2	13.4	3.8	

STATE OF CALIFORNIA
Solar And Battery — CALIFORNIA ENERGY COMMISSION
CERTIFICATE OF COMPLIANCE — NRCC-SAB-E
Project Name: AMS PC 24-120x40 — Report Page: (Page 3 of 7)
Date Prepared: 2023-10-10T21:09:32-04:00

C. COMPLIANCE RESULTS

Results in this table are automatically calculated from data input and calculations in Tables F through I. Note: If any cell on this table says "DOES NOT COMPLY" or "COMPLIES with Exceptional Conditions" refer to Table D. for guidance or see the applicable Table referenced below.

Allocated Solar Zone 01 Required Minimum Area (ft²)		02 Designated Area (ft²)		Installed PV System 03 Required Minimum DC Power Rating (Watts)		04 Designed DC Power Rating (Watts)		Installed SWH System 05 Required Minimum Solar Savings Fraction		06 Designed/Rated Solar Savings Fraction		07 JA5 Compliant Thermostat Specified?	08 Alternative Energy Efficiency Measure	Compliance Results
(See Table F)				(See Tables G or J)				(See Table H)				(See Table I)		COMPLIES
720	<=	720	OR		<=		OR		<=		OR			
A2.0 Roofing Plan for Solar Zones		Location in construction documents showing the location for inverters and metering equipment and a pathway for the routing of conduit/ plumbing to the electrical service/ water heating system per §110.10(c).												COMPLIES
Battery storage system design meets the minimum requirements in Joint Appendix JA12 and the minimum energy (kWh)/ power (kW) capacity per Table J.														Not Applicable

D. EXCEPTIONAL CONDITIONS
This table is auto-filled with uneditable comments because of selections made or data entered in tables throughout the form.

E. ADDITIONAL REMARKS
This table is includes remarks made by the permit applicant to the Authority Having Jurisdiction.

CA Building Energy Efficiency Standards - 2022 Nonresidential Compliance — Generated Date/Time: Report Version: 2022.0.000 Schema Version: rev 20220101 — Documentation Software: Energy Code Ace Compliance ID: 92981-1023-0032 Report Generated: 2023-10-10 18:09:34

STATE OF CALIFORNIA
Solar And Battery — CALIFORNIA ENERGY COMMISSION
CERTIFICATE OF COMPLIANCE — NRCC-SAB-E
Project Name: AMS PC 24-120x40 — Report Page: (Page 4 of 7)
Date Prepared: 2023-10-10T21:09:32-04:00

F. ALLOCATED SOLAR ZONE

This table is completed if the project is designating a solar zone to comply with §110.10(b)1B. New construction consider the total roof area; Additions consider newly added roof area. This table demonstrates that the project has designated the minimum area required for the Allocated Solar Zone, and also that the requirements for Solar Zone Subareas have been met. Each subarea must be shown on a roof plan or documented in construction documents. The solar zones must also comply with fire code requirements, including, but not limited to, setback and pathway requirements. Requirements for interconnection pathways must also be included in construction documents, and the location is specified in this table.

Required Minimum Solar Zone

01 Minimum Solar Zone Area Calculation Method	02 Total New or Added Roof Area (ft²)	03 Total New or Added Roof Area Covered with Skylights (ft²)	04 Minimum Solar Zone Based on Total or Added Roof Area (0.15 x (Roof-Skylt)) (ft²)	05 Method/ Tools Used to Determine Annual Solar Access for Potential Zones¹	06 Low-Sloped Area (<= 2:12 pitch) (ft²)	Steep-Sloped Area (> 2:12 pitch) Oriented 90° - 300° (ft²)	Total Potential Solar Zone Area (ft²)	07 Minimum Solar Zone Based on Potential Zone (0.5 x (Total Potential Zone)) (ft²)	08 Required Minimum Solar Zone Area (ft²)
Total New or Added Roof Area	4800	0	720						720

Designated Solar Zone Subareas

09 Subarea Name or Tag	10 Building Plan Reference	11 Roof or Overhang Slope (Low <= 2:12 pitch) (Steep > 2:12 pitch)	12 Is Steep-Sloped Roof or Overhang between 90 and 300 degrees?	13 Subarea Complies with Title 24, Part 9	14 Solar Zone Subarea Free of Obstructions per §110.10(b)3A	15 Subarea is Required Distance from Potential Obstructions per §110.10(b)3B	16 Is the Smallest Dimension 5 feet or greater?	17 Min. Area Required per Subarea (ft²)	18 Designated Area (ft²)	19 Subarea Complies?
A2.0 Roofing Plan for Solar Zones	A2.0 Roofing Plan for Solar Zones	Low slope		Yes	Yes	Yes	Yes	80	720	COMPLIES

CA Building Energy Efficiency Standards - 2022 Nonresidential Compliance — Generated Date/Time: Report Version: 2022.0.000 Schema Version: rev 20220101 — Documentation Software: Energy Code Ace Compliance ID: 92981-1023-0032 Report Generated: 2023-10-10 18:09:34

STATE OF CALIFORNIA
Solar And Battery — CALIFORNIA ENERGY COMMISSION
CERTIFICATE OF COMPLIANCE — NRCC-SAB-E
Project Name: AMS PC 24-120x40 — Report Page: (Page 5 of 7)
Date Prepared: 2023-10-10T21:09:32-04:00

Interconnection Pathways
Location in construction documents showing the location for inverters and metering equipment and a pathway for the routing of conduit/ plumbing to the electrical service/ water heating system per §110.10(c). — A2.0 Roofing Plan for Solar Zones
¹FOOTNOTE: This field is used to document how the percentage of annual solar access was determined per §110.10(b)1B. Solar access is the ratio of solar insolation including shade to the solar insolation without shade. Shading from obstructions located on the roof or any other part of the building shall not be included in the determination of annual solar access.

G. PERMANENTLY INSTALLED SOLAR PV FOR SOLAR READY EXCEPTION
This section does not apply to this project.

H. PERMANENTLY INSTALLED SOLAR HOT WATER SYSTEMS
This section does not apply to this project.

I. SMART THERMOSTATS AND ALTERNATIVE EFFICIENCY MEASURE FOR SOLAR READY EXCEPTION
This section does not apply to this project.

J. PHOTOVOLTAIC (PV) AND BATTERY SYSTEMS
This section does not apply to this project.

K. DECLARATION OF REQUIRED CERTIFICATES OF INSTALLATION
Selections have been made based on information provided in this document. If any selections have been changed by the permit applicant, an explanation should be included Table E. Additional Remarks and ExceptionalConditionMessageCCSABE == UserChangedSelectionInCI. These documents must be provided to the building inspector during construction and can be found online
Form/Title
NRCI-SAB-01-E - Must be submitted for all buildings that must comply with solar readiness or PV/Battery requirements.

CA Building Energy Efficiency Standards - 2022 Nonresidential Compliance — Generated Date/Time: Report Version: 2022.0.000 Schema Version: rev 20220101 — Documentation Software: Energy Code Ace Compliance ID: 92981-1023-0032 Report Generated: 2023-10-10 18:09:34

STATE OF CALIFORNIA
Solar And Battery — CALIFORNIA ENERGY COMMISSION
CERTIFICATE OF COMPLIANCE — NRCC-SAB-E
Project Name: AMS PC 24-120x40 — Report Page: (Page 6 of 7)
Date Prepared: 2023-10-10T21:09:32-04:00

L. DECLARATION OF REQUIRED CERTIFICATES OF ACCEPTANCE
There are no forms required for this project.

CA Building Energy Efficiency Standards - 2022 Nonresidential Compliance — Generated Date/Time: Report Version: 2022.0.000 Schema Version: rev 20220101 — Documentation Software: Energy Code Ace Compliance ID: 92981-1023-0032 Report Generated: 2023-10-10 18:09:34

STATE OF CALIFORNIA
Solar And Battery — CALIFORNIA ENERGY COMMISSION
CERTIFICATE OF COMPLIANCE — NRCC-SAB-E
Project Name: AMS PC 24-120x40 — Report Page: (Page 7 of 7)
Project Address: — Date Prepared: 2023-10-10T21:09:32-04:00

DOCUMENTATION AUTHOR'S DECLARATION STATEMENT
I certify that this Certificate of Compliance documentation is accurate and complete.
Documentation Author Name: Hans Marsman — Documentation Author Signature:
Company: Marsman Consulting — Signature Date:
Address: 1150 J Street #409 — CEA/ HERS Certification Identification (if applicable):
City/State/Zip: San Diego, CA 92101 — Phone: (619) 573-6374

RESPONSIBLE PERSON'S DECLARATION STATEMENT
I certify the following under penalty of perjury, under the laws of the State of California:
1. The information provided on this Certificate of Compliance is true and correct.
2. I am eligible under Division 3 of the Business and Professions Code to accept responsibility for the building design or system design identified on this Certificate of Compliance (responsible designer).
3. The energy features and performance specifications, materials, components, and manufactured devices for the building design or system design identified on this Certificate of Compliance conform to the requirements of Title 24, Part 1 and Part 6 of the California Code of Regulations.
4. The building design features or system design features identified on this Certificate of Compliance are consistent with the information provided on other applicable compliance documents, worksheets, calculations, plans and specifications submitted to the enforcement agency for approval with this building permit application.
5. I will ensure that a completed signed copy of this Certificate of Compliance shall be made available with the building permit(s) issued for the building, and made available to the enforcement agency for all applicable inspections. I understand that a completed signed copy of this Certificate of Compliance is required to be included with the documentation the builder provides to the building owner at occupancy.

Responsible Designer Name: Randall P Cavanagh — Responsible Designer Signature:
Company: American Modular Systems | Gen7 Schools — Date Signed: 10/10/2023
Address: 787 Spreckels Avenue — License: C12631
City/State/Zip: Manteca, CA 95336 — Phone: 209.825.1921

CA Building Energy Efficiency Standards - 2022 Nonresidential Compliance — Generated Date/Time: Report Version: 2022.0.000 Schema Version: rev 20220101 — Documentation Software: Energy Code Ace Compliance ID: 92981-1023-0032 Report Generated: 2023-10-10 18:09:34

American Modular Systems
787 Spreckels Ave., Manteca, CA 95336
Phone (209) 825-1921 Fax (209) 825-7018
www.americanmodular.com

INTELLECTUAL-PROPERTY & PROPRIETARY RIGHTS STATEMENT
COPYRIGHT © AMERICAN MODULAR SYSTEMS (AMS)
AMS OWNS ALL COPYRIGHT AND OTHER INTELLECTUAL-PROPERTY AND PROPRIETARY RIGHTS IN THESE DRAWINGS, SPECIFICATIONS, AND THE MATERIAL CONTAINED HEREIN. CERTAIN ELEMENTS SHOWN IN THESE DOCUMENTS ARE REGISTERED TRADEMARKS OF AMS. ALL PATENTABLE MATERIALS CONTAINED IN THESE DOCUMENTS AND ORIGINATING WITH AMS WILL REMAIN THE SOLE PROPERTY OF AMS. THESE DRAWING, SPECIFICATIONS, AND THE MATERIAL CONTAINED HEREIN MAY NOT BE REPRODUCED, TRANSMITTED, COPIED, DISTRIBUTED, MODIFIED, OR OTHERWISE DISPOSED OF (DIRECTLY OR INDIRECTLY) AND MAY NOT BE USED (IN WHOLE OR IN PART) TO ASSIST IN THE CONSTRUCTION, DESIGN, OR OTHER MAKING OF, OR FOR THE PURPOSE OF FURNISHING ANY INFORMATION FOR THE CONSTRUCTION, DESIGN, OR OTHER MAKING OF, ANY BUILDINGS (MODULAR OR OTHERWISE), DRAWINGS, SPECIFICATIONS, PRINTS, APPARATUS, OR PARTS THEREOF, EXCEPT AS EXPRESSLY PERMITTED BY WRITTEN CONSENT OF, OR IN A WRITTEN AGREEMENT WITH, AMS. SUBMITTAL OR DISTRIBUTION TO MEET OFFICIAL REGULATORY REQUIREMENTS WILL NOT BE CONSTRUED AS PUBLICATION IN DEROGATION OF AMS'S COPYRIGHT OR OTHER INTELLECTUAL-PROPERTY OR PROPRIETARY RIGHTS.

PRE-CHECKED SET NAME
24' x 40' THRU 120' x 40'
STANDARD MODULAR BUILDING
(LOW SEISMIC)
FORM®

SITE SPECIFIC PROJECT NAME
.
.
.

APPROVED
DIV. OF THE STATE ARCHITECT
APP: 04-122050 PC
REVIEWED FOR
SS ☑ FLS ☑ ACS ☑ CG ☑
DATE: 12/11/2023

☐ 2022 CBC PRE-CHECK (PC) DOCUMENT
A SEPARATE PROJECT APPLICATION FOR CONSTRUCTION IS REQUIRED.

MANUFACTURER PROFESSIONAL OF RECORD ON PC
LICENSED ARCHITECT — RANDALL PATRICK CAVANAGH — No. C12631 — Ren. 3-31-25 — STATE OF CALIFORNIA

THESE DRAWINGS ARE PRELIMINARY AND NOT FOR CONSTRUCTION UNLESS STAMPED & SIGNED BY THE DESIGN PROFESSIONAL OF RECORD.

REVISIONS
1
2
3
4

DRAWN BY: AA
SCALE: AS NOTED
DATE: MM/DD/YY
PROJECT NO: XXXX-22

SHEET TITLE:
ENERGY CALCULATIONS SUMMATION SHEET

SHEET NUMBER:
EN.1B

IDENTIFICATION STAMP
DIV. OF THE STATE ARCHITECT
APP: 02-122976 INC:
REVIEWED FOR
SS ☑ FLS ☑ ACS ☑
DATE: 03/12/2025

TRACY
UNIFIED SCHOOL DISTRICT

HMC Architects
3595001000
2101 CAPITOL AVENUE, SUITE 100
SACRAMENTO, CA 95816
916 368 7990 / www.hmcarchitects.com

ISSUE

Δ	DESCRIPTION	DATE
A	ADDENDUM "A"	3/20/25

KEYNOTES

GENERAL NOTES

FACILITY:
JACOBSON ELEMENTARY SCHOOL
1750 W KAVANAGH AVE
TRACY, CA 95376

PROJECT:
JACOBSON ES - TK CLASSROOM

SHEET NAME:
ENERGY CALCULATIONS SUMMATION SHEET

DATE: **04/03/24** — CLIENT PROJ NO: **3595001000**

SHEET:
EN.1B
ADDENDUM "A"

PLEASE RECYCLE

Autodesk Docs://3595005000 TUSD TK CLASSROOMS 2025 R22/3595005000-A-TUSD-BOHN-SITE.rvt
12/3/2024 9:55:42 AM

THE LINE SHOWN ABOVE IS EXACTLY ONE INCH LONG AT THIS SHEETS ORIGINAL PAGE SIZE

Project Name:	AMS PC 36x40	Date Prepared:	2023-09-03

A. General Information

1	Project Name	AMS PC 36x40			
2	Run Title	Title 24 Analysis			
3	Project Location				
4	City	Fresno	5	Standards Version	Compliance 2022
6	Zip code	93703	7	Compliance Software (version)	CBECC 2022.3.0 (1302)
8	Climate Zone	13	9	Building Orientation (deg)	75
10	Building Type(s)	• Nonresidential	11	Weather File	FRESNO-YOSEMITE_STYP20.epw
12	Project Scope	• New complete scope	13	Number of Dwelling Units	0
14	Total Conditioned Floor Area in Scope (ft^2)	1440	15	Total # of hotel/motel rooms	0
16	Total Unconditioned Floor Area (ft^2)	0	17	Fuel Type	None
18	Nonresidential Conditioned Floor Area	1440	19	Total # of Stories (Habitable Above Grade)	1
20	Residential Conditioned Floor Area	0			

B. PROJECT SUMMARY

Table B shows which building components are included in the performance calculation. If indicated as not included, the project must show compliance prescriptively if within the permit application.

Building Components Complying via Performance						Building Components Complying Prescriptively	
Envelope (See Table G)	Nonres	Performance	Solar Thermal Water Heating (See Table I3)	☐	Performance	The following building components are ONLY eligible for prescriptive compliance and should be documented on the NRCC form listed if within the scope of the permit application (i.e. compliance will not be shown on the NRCC-PRF-E).	
	MultiFam	Not Included		☒	Not Included		
Mechanical (See Table H)	Nonres	Performance	Covered Process: Commercial Kitchens (see Table J)	☐	Performance	Indoor Lighting (Unconditioned) 140.6 & 170.2(e)	NRCC-LTI-E is required
	MultiFam	Not Included		☒	Not Included	Outdoor Lighting 140.7 & 170.2(e)	NRCC-LTO-E is required
Domestic Hot Water (See Table I)	Nonres	Not Included	Covered Process: Laboratory Exhaust (see Table J)	☐	Performance	Sign Lighting 140.8 & 170.2(e)	NRCC-LTS-E is required
	MultiFam	Not Included		☒	Not Included	**Building Components Complying with Mandatory Measures**	
Lighting (Indoor Conditioned, see Table K)	Nonres	Performance	Photovoltaics (see Table F)	☐	Performance	Electrical power systems, commissioning, solar ready, elevator and escalator requirements are mandatory and should be documented on the NRCC form listed if applicable (i.e. compliance will not be shown on the NRCC-PRF-E.)	
	MultiFam	Not Included		☒	Not Included	Electrical Power Distribution 110.11	NRCC-ELC-E is required
			Battery (see Table F)	☐	Performance	Commissioning 120.8	NRCC-CXR-E is required
				☒	Not Included	Solar and Battery 110.10	NRCC-SAB-E is required

C1. COMPLIANCE SUMMARY

COMPLIES[3]

	Time Dependent Valuaton (TDV)		Source Energy Use
	Efficiency[1] (kBtu/ft^2 - yr)	Total[2] (kBtu/ft^2 - yr)	Total[2] (kBtu/ft^2 - yr)
Standard Design	204.88	204.88	15.2
Proposed Design	174.85	174.85	12.43
Compliance Margins	**30.03**	**30.03**	**2.77**
	Pass	**Pass**	**Pass**

1 Efficiency measures include improvements like a better building envelope and more efficient equipment
2 Compliance Totals include efficiency, photovoltaics and batteries
3 New Construction, Complete Addition Scope: Building complies when all efficiency and total compliance margins are greater than or equal to zero and unmet load hour limits are not exceeded
Existing, Addition and Alteration Scope: Building complies when efficiency compliance margin is greater than or equal to zero and unmet load hour limits are not exceeded

C2. TDV ENERGY COMPLIANCE RESULTS FOR PERFORMANCE COMPONENTS (Annual TDV Energy Use, kBtu/ft^2 - yr)

COMPLIES[2]

Energy Component	Standard Design (TDV)	Proposed Design (TDV)	Compliance Margin (TDV)[1]
Space Heating	32.98	39.75	-6.77
Space Cooling	99.19	114.99	-15.8
Indoor Fans	51.04	9.87	41.17
Heat Rejection	0	0	0
Pumps & Misc.	0	0	0
Domestic Hot Water	0	0	0
Indoor Lighting	21.67	10.24	11.43
Flexibility	---	---	---
EFFICIENCY COMPLIANCE TOTAL	**204.88**	**174.85**	**30.03 (14.7%)**
Photovoltaics	---	---	---
Batteries	---	---	---
TOTAL COMPLIANCE	**204.88**	**174.85**	**30.03 (14.7%)**

1 Notes: This number in parenthesis following the Compliance Margin in column 4, represents the Percent Better than Standard.

C3. TDV ENERGY RESULTS FOR NON-REGULATED COMPONENTS[1]

Non-Regulated Energy Component	Standard Design (TDV)	Proposed Design (TDV)	Compliance Margin (TDV)[1]
Receptacle	65.89	65.89	---
Process	---	---	---
Other Ltg	---	---	---
Process Motors	---	---	---
TOTAL (TOTAL COMPLIANCE + NON-REGULATED COMPONENTS)	**270.77**	**240.74**	**30.03 (11.1%)**

1 Notes: This table is not used for Energy Code Compliance.

C4. SOURCE ENERGY COMPLIANCE RESULTS FOR PERFORMANCE COMPONENTS (Annual SOURCE Energy Use, kBtu/ft^2 /yr)

COMPLIES[2]

Energy Component	Standard Design (SOURCE)	Proposed Design (SOURCE)	Compliance Margin (SOURCE)[1]
Space Heating	4.69	5.67	-0.98
Space Cooling	4.36	4.96	-0.6
Indoor Fans	4.08	0.67	3.41
Heat Rejection	0	0	0
Pumps & Misc.	0	0	0
Domestic Hot Water	0	0	0
Indoor Lighting	2.07	1.13	0.94
Flexibility	---	---	---
EFFICIENCY COMPLIANCE TOTAL	**15.2**	**12.43**	**2.77 (18.2%)**
Photovoltaics	---	---	---
Batteries	---	---	---
TOTAL COMPLIANCE	**15.2**	**12.43**	**2.77 (18.2%)**

1 Notes: This number in parenthesis following the Compliance Margin in column 4, represents the Percent Better than Standard.

C5. SOURCE ENERGY RESULTS FOR NON-REGULATED COMPONENTS[1]

Non-Regulated Energy Component	Standard Design (SOURCE)	Proposed Design (SOURCE)	Compliance Margin (SOURCE)[1]
Receptacle	4.93	4.93	---
Process	---	---	---
Other Ltg	---	---	---
Process Motors	---	---	---
TOTAL (TOTAL COMPLIANCE + NON-REGULATED COMPONENTS)	**20.13**	**17.36**	**2.77 (13.8%)**

1 Notes: This table is not used for Energy Code Compliance.

C6. 'ABOVE CODE' QUALIFICATIONS

☐ This project is pursuing CalGreen Tier 1 ☐ This project is pursuing CalGreen Tier 2

C7. ENERGY USE SUMMARY

Energy Component	Standard Design Site (MWh)	Proposed Design Site (MWh)	Margin (MWh)	Standard Design Site (MBtu)	Proposed Design Site (MBtu)	Margin (MBtu)
Space Heating	1.5	1.9	-0.4	---	---	---
Space Cooling	3.9	4.5	-0.6	---	---	---
Indoor Fans	2.3	0.4	1.9	---	---	---
Heat Rejection	---	---	---	---	---	---
Pumps & Misc.	---	---	---	---	---	---
Domestic Hot Water	---	---	---	---	---	---
Indoor Lighting	1.1	0.5	0.6	---	---	---
Flexibility	---	---	---	---	---	---
EFFICIENCY TOTAL	**8.8**	**7.3**	**1.5**	**0**	**0**	**0**
Photovoltaics	---	---	---	---	---	---
Batteries	---	---	---	---	---	---
ENERGY USE SUBTOTAL	**8.8**	**7.3**	**1.5**	**0**	**0**	**0**
Receptacle	3.8	3.8	0	---	---	---
Process	---	---	---	---	---	---
Other Ltg	---	---	---	---	---	---
Process Motors	---	---	---	---	---	---
ENERGY USE TOTAL	**12.6**	**11.1**	**1.5**	**0**	**0**	**0**

C8. ENERGY USE INTENSITY (EUI)

	Standard Design (kBtu/ft^2 / yr)	Proposed Design (kBtu/ft^2 / yr)	Margin (kBtu/ft^2 / yr)	Margin Percentage
GROSS EUI[1]	29.85	26.3	3.55	11.89
NET EUI[1]	29.85	26.3	3.55	11.89

1 Notes: Gross EUI is Energy Use Total (not including PV)/Total Building Area. Net EUI is Energy Use Total (including PV)/Total Building Area.

D1. EXCEPTIONAL CONDITIONS

- The building does not include service water heating. Verify that service water heating is not required and is not included in the design.
- Project is claiming Exception 2 to Section 140.10(a): No PV system is required where the required PV system size is less than 4 kWdc.
- Project is claiming Exception 2 to Section 140.10(b): No battery storage system is required in buildings with battery storage system requirements with less than 10 kWh rated capacity.
- Project is claiming Exception 3 to Section 140.10(b): No battery storage system required for tenant spaces less than or equal to 5,000 ft2.

G1. ENVELOPE GENERAL INFORMATION (conditioned spaces only)

01	02	03	04
Opaque Surfaces & Orientation	Total Gross Surface Area (ft^2)	Total Fenestration Area (ft^2)	Window to Wall Ratio (%)
North-Facing[1]	400	0	0
East-Facing[2]	360	160	44.44
South-Facing[3]	400	0	0
West-Facing[4]	360	80	22.22
Total	**1520**	**240**	**15.79**
Roof	1440	0	0

Notes
1North-Facing is oriented to within 45 degrees of true north, including 45 00'00" east of north (NE), but excluding 45 00'00" west of north (NW),
2East-Facing is oriented to within 45 degrees of true east, including 45 00'00" south of east (SE), but excluding 45 00'00" north of east (NE),
3South-Facing is oriented to within 45 degrees of true south, including 45 00'00" west of south (SW), but excluding 45 00'00" east of south (SE),
4West-Facing is oriented to within 45 degrees of true west, including 45 00'00" north of west (NW), but excluding 45 00'00" south of west (SW),

G4. NONRESIDENTIAL AIR BARRIER

01	02
Building Story Name	Air Barrier
Ground Floor	Air barrier - not verified

G5. OPAQUE SURFACE ASSEMBLY SUMMARY

01	02	03	04	05	06		07	08	09	10
Surface Name	Construction Type	Area (ft^2)	Framing Type	Cavity R-Value	Continuous R-Value		Units	Value	Description of Assembly Layers	Status[1]
					Interior	Exterior				
Ext Roof	Roof	1,440	Metal	19	N/A	5	U-factor	0.0528	Metal Standing Seam - 1/16 in. Compliance Insulation R5.00 Plywood - 1/2 in. Roof Structure Air - Roof - 3 1/2 in. Acoustic Tile - 3/8 in.	N
Ext Wall	Exterior Wall	1,520	Metal	13	N/A	5	U-factor	0.0978	Wood siding - 1/2 in. Vapor permeable felt - 1/8 in. Compliance Insulation R5.00 R-13 in Metal Studs Gypsum Board - 1/2 in.	N
Floor over Crawlspace	Exterior Floor	1,440	N/A	0	N/A	N/A	U-factor	0.104	Vented Crawl Space Concrete - 140 lb/ft3 - 2 in. Carpet - 3/4 in.	N

1 Status: N - New, A - Altered, E - Existing

G6A. OPAQUE DOOR SUMMARY (NONRESIDENTIAL)

01	02	03	04
Assembly Name	Area (ft^2)	Overall U-factor	Status[1]
Door	42	0.7	N

1 Status: N - New, A - Altered, E - Existing

G7A. FENESTRATION ASSEMBLY SUMMARY (NONRESIDENTIAL)

01	02	03	04	05	06	07	08	09
Fenestration Assembly Name	Fenestration Type/ Product Type / Frame Type	Certification Method[1]	Assembly Method	Area (ft^2)	Overall U-factor	Overall SHGC	Overall VT	Status[2]
Windows	Vertical fenestration Fixed window N/A	NFRC	Manufactured	240	0.42	0.25	0.44	N

1 Notes: Newly installed fenestration shall have a certified NFRC Label Certificate or use the CEC default tables found in Table 110.6-A and Table 110.6-B. Center of Glass (COG) values are for the glass-only, determined by the manufacturer, and are shown for ease of verification. Site-built fenestration values are calculated per Nonresidential Appendix NA6 and are used in the analysis.
2 Status: N - New, A - Altered, E - Existing

H1. DRY SYSTEM EQUIPMENT (FURNACES, AIR HANDLING UNITS, HEAT PUMPS, VRF, ECONOMIZERS ETC.)

01	02	03	04	05	06	07	08	09	10	11	12
			Heating				Cooling				
Equipment Name	Equipment Type	Qty	Total Heating Output (kBtu/h)	Supp Heat Output (kBtu/h)	Efficiency Unit	Efficiency	Total Cooling Output (kBtu/h)	Efficiency Unit	Efficiency	Economizer Type (if present)	Status[1]
FC-1	Package SZ VAV Heat Pump Air System	1	44.8	3.41	COP HSPF	3.55 8	47.5	EER SEER	11 14	No Economizer	N

1 Status: N - New, A - Altered, E - Existing

H3. NONRESIDENTIAL / COMMON USE AREA FAN SYSTEMS SUMMARY

01	02	03	04	05	06	07	08	09	10	11	12	13
Name or Item Tag	Qty	Design OA CFM	Supply Fan				Return / Relief Fan					Status[1]
			CFM	Power	Power Units	Control	Fan Type	CFM	Power	Power Units	Control	
FC-1	1	547.2	1,600	0.7	InH2O	VSD	N/A	N/A	N/A	N/A	N/A	N

1 Status: N - New, A - Altered, E - Existing

H8. SYSTEM SPECIAL FEATURES

01	02	03	04
System Name	Equipment Type	Interlocks per 140.4(n)[1]	Other Special Features and Controls
FC-1	Package SZ VAV Heat Pump Air System	No	Zone(s) With CO2 Sensor Vent. Control

Notes: This table includes controls related to the performance path only. For projects using the prescriptive path, mandatory and prescriptive controls requirements are documented on the NRCC-MCH-E.
1 Yes = interlocks are provided, No = interlocks are not provided, NA means no operable openings.

H9. NONRESIDENTIAL / COMMON USE AREA & HOTEL/MOTEL VENTILATION

01	02	03	04	05	06	07
Zone Name	Mechanical Ventilation				Conditioned Area (sf)	DCV or Occupant Sensor Controls, or Both
	Ventilation Function	# of People	Supply OA CFM	Exhaust CFM		
Zn FC-1 L01	Education - Classrooms (ages 9-18)	36	547.2	0	1440	DCV

American Modular Systems
787 Spreckels Ave., Manteca, CA 95336
Phone (209) 825-1921 Fax (209) 825-7018
www.americanmodular.com

INTELLECTUAL-PROPERTY & PROPRIETARY RIGHTS STATEMENT
COPYRIGHT © AMERICAN MODULAR SYSTEMS (AMS)
AMS OWNS ALL COPYRIGHT AND OTHER INTELLECTUAL-PROPERTY AND PROPRIETARY RIGHTS IN THESE DRAWINGS, SPECIFICATIONS, AND THE MATERIAL CONTAINED HEREIN. CERTAIN ELEMENTS SHOWN IN THESE DOCUMENTS ARE REGISTERED TRADEMARKS OF AMS. ALL PATENTABLE MATERIALS CONTAINED IN THESE DOCUMENTS AND ORIGINATING WITH AMS WILL REMAIN THE SOLE PROPERTY OF AMS. THESE DRAWING, SPECIFICATIONS, AND THE MATERIAL CONTAINED HEREIN MAY NOT BE REPRODUCED, TRANSMITTED, COPIED, DISTRIBUTED, MODIFIED, OR OTHERWISE DISPOSED OF (DIRECTLY OR INDIRECTLY) AND MAY NOT BE USED (IN WHOLE OR IN PART) TO ASSIST IN THE CONSTRUCTION, DESIGN, OR OTHER MAKING OF, OR FOR THE PURPOSE OF FURNISHING ANY INFORMATION FOR THE CONSTRUCTION, DESIGN, OR OTHER MAKING OF, ANY BUILDINGS (MODULAR OR OTHERWISE), DRAWINGS, SPECIFICATIONS, PRINTS, APPARATUS, OR PARTS THEREOF, EXCEPT AS EXPRESSLY PERMITTED BY WRITTEN CONSENT OF, OR IN A WRITTEN AGREEMENT WITH, AMS. SUBMITTAL OR DISTRIBUTION TO MEET OFFICIAL REGULATORY REQUIREMENTS WILL NOT BE CONSTRUED AS PUBLICATION IN DEROGATION OF AMS'S COPYRIGHT OR OTHER INTELLECTUAL-PROPERTY OR PROPRIETARY RIGHTS.

PRE-CHECKED SET NAME
24' x 40' THRU 120' x 40' STANDARD MODULAR BUILDING (LOW SEISMIC)
FORM®

SITE SPECIFIC PROJECT NAME
.
.
.

APPROVED
DIV. OF THE STATE ARCHITECT
APP: 04-122050 PC
REVIEWED FOR
SS ☑ FLS ☑ ACS ☑ CG ☑
DATE: 12/11/2023

☐ 2022 CBC PRE-CHECK (PC) DOCUMENT
A SEPARATE PROJECT APPLICATION FOR CONSTRUCTION IS REQUIRED.

MANUFACTURER PROFESSIONAL OF RECORD ON PC

LICENSED ARCHITECT
RANDALL PATRICK CAVANAGH
No. C12631
Ren. 3-31-25
STATE OF CALIFORNIA

THESE DRAWINGS ARE PRELIMINARY AND NOT FOR CONSTRUCTION UNLESS STAMPED & SIGNED BY THE DESIGN PROFESSIONAL OF RECORD.

REVISIONS
1
2
3
4

DRAWN BY:	AA
SCALE:	AS NOTED
DATE:	MM/DD/YY
PROJECT NO:	XXXX-22

SHEET TITLE:
ENERGY CALCULATIONS
36'x40' BUILDING
GROUP 'C'

SHEET NUMBER:
EN.14

IDENTIFICATION STAMP
DIV. OF THE STATE ARCHITECT
APP: 02-122976 INC:
REVIEWED FOR
SS ☑ FLS ☑ ACS ☑
DATE: 03/12/2025

TRACY UNIFIED SCHOOL DISTRICT

HMC Architects
3595001000
2101 CAPITOL AVENUE, SUITE 100
SACRAMENTO, CA 95816
916 368 7990 / www.hmcarchitects.com

ISSUE

Δ	DESCRIPTION	DATE
A	ADDENDUM "A"	3/20/25

KEYNOTES

GENERAL NOTES

FACILITY:
JACOBSON ELEMENTARY SCHOOL
1750 W KAVANAGH AVE
TRACY, CA 95376

PROJECT:
JACOBSON ES - TK CLASSROOM

SHEET NAME:
ENERGY CALCULATIONS 36'x40' BUILDING GROUP 'C'

DATE: **04/03/24** CLIENT PROJ NO: **3595001000**

SHEET:
EN.14
ADDENDUM "A"

PLEASE RECYCLE

Autodesk Docs://3595005000 TUSD TK CLASSROOMS 2025 R22/3595005000-A-TUSD-BOHN-SITE.rvt
12/3/2024 9:55:42 AM

THE LINE SHOWN ABOVE IS EXACTLY ONE INCH LONG AT THIS SHEETS ORIGINAL PAGE SIZE

CERTIFICATE OF COMPLIANCE - NONRESIDENTIAL PERFORMANCE COMPLIANCE METHOD — **NRCC-PRF-E**

Nonresidential Performance Compliance Method — **(Page 13 of 18)**

H11. ZONAL SYSTEM AND TERMINAL UNIT SUMMARY

01	02	03	04	05	06	07	08	09	10	11	12
System ID	System Type	Qty	Rated Capacity (kBtuh)		Airflow (cfm)			Fan			VSD
			Heating	Cooling	Design	MIn.	Min. Ratio	Power	Power Units	Cycles	
FC-1_TRM	Variable Air Volume No Reheat Box	1	N/A	N/A	1,600	650	0.41	N/A	N/A	N/A	☐

K1. INDOOR CONDITIONED LIGHTING GENERAL INFO

01	02	03	04	05	06
Occupancy Type[1]	Conditioned Floor Area[2] (ft^2)	Installed Lighting Power (Watts)	Lighting Control Credits (Watts)	Additional (Custom) Allowance	
				Area Category Footnotes (Watts)	Area Category Footnotes (Watts)
Classroom, Lecture, or Training Vocational	1440	540	0	0	0
Building Totals:	**1440**	**540**	**0**	**0**	**0**

[1]*See Table 140.6-C*
[2]*See NRCC-LTI--E for unconditioned spaces*
[3]*Lighting information for existing spaces modeled is not included in this table*

CERTIFICATE OF COMPLIANCE - NONRESIDENTIAL PERFORMANCE COMPLIANCE METHOD — **NRCC-PRF-E**

Nonresidential Performance Compliance Method — **(Page 14 of 18)**

K2. INDOOR CONDITIONED LIGHTING SCHEDULE

Luminaire Schedule (includes all permanent installed lighting in conditioned space, and portable lighting over 0.3 w/ft² in offices)

01	02	03	04	05	06
Name or Item Tag	Complete Luminaire Description (i.e. 3-lamp fluorescent troffer, F32T8, one dimmable electronic ballast)	Installed Watts (Conditioned)			
		Watts per luminaire	How is Wattage determined	Total Number of Luminaires	Installed Watts
2x4 LED	2x4 - LED	45	According to 130.0(c)	12	540

[1]*If lighting power densities were used in the compliance model Building Departments will need to check prescriptive forms for Luminaire Schedule details.*

K3. INDOOR CONDITIONED LIGHTING CONTROL CREDITS

Lighting Control Credits Schedule (includes all lighting controls installed in conditioned space for compliance credit per 140.6(a)2 and Table 140.6-A)

01	02	03	04	05	06	07	08	09
Area Description	Primary Function Area (must meet requirements of Table 140.6-A and 170.2-L)	Type of Lighting Control	Power Adjustment Factor (PAF)	Luminaire Item Tag	Watts per Luminaire	# of Luminaires	Lighting Controlled (Watts)	Control Credit (Watts)
Classroom 101	Classroom, Lecture, or Training Vocational	N/A	N/A	2x4 LED	45	6	270	0
Classroom 101	Classroom, Lecture, or Training Vocational	N/A	N/A	2x4 LED	45	6	270	0
Lighting Control Credits (Conditioned) Total (Watts)								**0**

K4. INDOOR CONDITIONED LIGHTING MANDATORY LIGHTING CONTROL

Building Level Controls

01	02
Mandatory Demand Response 110.12(c)	**Shut-Off Controls 130.1(c) & 160.5(b)4C**
NA	**Required**

CERTIFICATE OF COMPLIANCE - NONRESIDENTIAL PERFORMANCE COMPLIANCE METHOD — **NRCC-PRF-E**

Nonresidential Performance Compliance Method — **(Page 15 of 18)**

Area Level Controls (includes all lighting controls installed in conditioned space to meet mandatory requirements per 130.1)

03	04	05	06	07	08	09
Area Description	Area Category Primary Function Area	Area Controls 130.1(a) & 160.5(b)4A	Multi-Level Controls 130.1(b) & 160.5(b)4B	Shut-Off Controls 130.1(c) & 160.5(b)4C	Primary Daylighting 130.1(d) & 160.5(b)4D	Secondary Daylighting 140.5(d) & 160.5(b)4D
Classrooms Skylit Zn	Classroom, Lecture, or Training Vocational	Required	Required	Required	Required	NA

L. DECLARATION OF REQUIRED CERTIFICATES OF INSTALLATION

Selections made by Documentation Author indicate which Certificates of Installation must be submitted for the features to be recognized for compliance. These documents must be retained and provided to the building inspector during construction and can be found online

Building Component	Form/Title
Envelope	NRCI-ENV-01-E - Must be submitted for all buildings
Envelope	NRCI-ENV-E - Envelope (for all buildings)
Mechanical	NRCI-MCH-01-E - Must be submitted for all buildings
Mechanical	NRCI-MCH-E - For all buildings with Mechanical Systems
Plumbing	NRCI-PLB-01-E - Must be submitted for all buildings
Indoor Lighting	NRCI-LTI-01-E - Must be submitted for all buildings
Indoor Lighting	NRCI-LTI-E - Indoor Lighting (for all buildings)
Indoor Lighting	NRCI-LTI-02-E- Must be submitted for a lighting control system, or for an Energy Management Control System (EMCS), to be recognized for compliance.

M. DECLARATION OF REQUIRED CERTIFICATES OF ACCEPTANCE

Selections made by Documentation Author indicate which Certificates of Acceptance must be submitted for the features to be recognized for compliance. These documents must be provided to the building inspector during construction and must be completed through an Acceptance Test Technician Certification Provider (ATTCP).

Building Component	Form/Title
Envelope	NRCA-ENV-02-F - NRFC label verification for fenestration
Indoor Lighting	NRCA-LTI-02-A - Occupancy Sensors and Automatic Time Switch Controls.
Indoor Lighting	NRCA-LTI-03-A - Automatic Daylight Controls.
Mechanical	NRCA-MCH-02-A - Outdoor Air must be submitted for all newly installed HVAC units. Note: MCH-02-A can be performed in conjunction with MCH-07-A Supply Fan VFD Acceptance (if applicable) since testing activities overlap

CERTIFICATE OF COMPLIANCE - NONRESIDENTIAL PERFORMANCE COMPLIANCE METHOD — **NRCC-PRF-E**

Nonresidential Performance Compliance Method — **(Page 16 of 18)**

M. DECLARATION OF REQUIRED CERTIFICATES OF ACCEPTANCE

Selections made by Documentation Author indicate which Certificates of Acceptance must be submitted for the features to be recognized for compliance. These documents must be provided to the building inspector during construction and must be completed through an Acceptance Test Technician Certification Provider (ATTCP).

Building Component	Form/Title
Mechanical	NRCA-MCH-06-A Demand Control Ventilation Systems must be submitted for all systems required to employ demand controlled ventilation (refer to) can vary outside ventilation flow rates based on maintaining interior carbon dioxide (CO2) concentration setpoints.
Mechanical	NRCA-MCH-07-A Supply Fan Variable Flow Controls
Mechanical	NRCA-MCH-19-A Occupancy Sensor Controls

N. DECLARATION OF REQUIRED CERTIFICATES OF VERIFICATION

Selections made by Documentation Author indicate which Certificates of Verification must be submitted for the features to be recognized for compliance. These documents must be retained and provided to the building inspector during construction and can be found online

There are no Certificates of Verification applicable to this project

CERTIFICATE OF COMPLIANCE - NONRESIDENTIAL PERFORMANCE COMPLIANCE METHOD — **NRCC-PRF-E**

Nonresidential Performance Compliance Method — **(Page 17 of 18)**

Documentation Author's Declaration Statement

1. I certify that this Certificate of Compliance documentation is accurate and complete.

Documentation Author Name: Hans Marsman, CEA, LEED AP BD+C	Documentation Author Signature:
Company: Marsman Consulting	Signature Date:
Address: 1150 J Street #409	CEA/HERS Certification Identification (if applicable) — Digitally signed by Hans Marsman, LEED AP, CEA Date: 2023.09.07 15:07:47-06'00'
City/State/Zip: San Diego, CA 92101	Phone: (619) 573-6374

Responsible Person's Declaration statement

I certify the following under penalty of perjury, under the laws of the State of California:

1. The information provided on this Certificate of Compliance is true and correct.
2. I am eligible under Division 3 of the Business and Professions Code to accept responsibility for the building design or system design identified on this Certificate of Compliance (responsible designer)
3. The energy features and performance specifications, materials, components, and manufactured devices for the building design or system design identified on this Certificate of Compliance conform to the requirements of Title 24, Part 1 and Part 6 of the California Code of Regulations.
4. The building design features or system design features identified on this Certificate of Compliance are consistent with the information provided on other applicable compliance documents, worksheets, calculations, plans and specifications submitted to the enforcement agency for approval with this building permit application.
5. I understand that a registered copy of this Certificate of Compliance shall be made available with the building permit(s) issued for the building, and made available to the enforcement agency for all applicable inspections, and I will take the necessary steps to accomplish this requirement.
6. I understand that a registered copy of this Certificate of Compliance is required to be included with the documentation the builder provides to the building owner at occupancy, and I will take the necessary steps to accomplish these requirements.

Responsible Designer Name: Randall P Cavannagh	Responsible Designer Signature: [signature]	
Company: American Modular Systems | Gen7 Schools		
Address: 787 Spreckels Avenue	Date Signed: 09/05/23	
City/State/Zip: Manteca, CA 95336	License #: C12631	
Phone: 209.825.1921	Title: Architect	Scope: Envelope
Responsible Designer Name: Randall P Cavannagh	Responsible Designer Signature: [signature]	
Company: American Modular Systems | Gen7 Schools		
Address: 787 Spreckels Avenue	Date Signed: 09/05/23	
City/State/Zip: Manteca, CA 95336	License #: C12631	
Phone: 209.825.1921	Title: Architect	Scope: Mechanical

CERTIFICATE OF COMPLIANCE - NONRESIDENTIAL PERFORMANCE COMPLIANCE METHOD — **NRCC-PRF-E**

Nonresidential Performance Compliance Method — **(Page 18 of 18)**

Responsible Designer Name: Randall P Cavannagh	Responsible Designer Signature: [signature]	
Company: American Modular Systems | Gen7 Schools		
Address: 787 Spreckels Avenue	Date Signed: 09/05/23	
City/State/Zip: Manteca, CA 95336	License #: C12631	
Phone: 209.825.1921	Title: Architect	Scope: Lighting

American Modular Systems
787 Spreckels Ave., Manteca, CA 95336
Phone (209) 825-1921 Fax (209) 825-7018
www.americanmodular.com

INTELLECTUAL-PROPERTY & PROPRIETARY RIGHTS STATEMENT
COPYRIGHT © AMERICAN MODULAR SYSTEMS (AMS)
AMS OWNS ALL COPYRIGHT AND OTHER INTELLECTUAL-PROPERTY AND PROPRIETARY RIGHTS IN THESE DRAWINGS, SPECIFICATIONS, AND THE MATERIAL CONTAINED HEREIN. CERTAIN ELEMENTS SHOWN IN THESE DOCUMENTS ARE REGISTERED TRADEMARKS OF AMS. ALL PATENTABLE MATERIALS CONTAINED IN THESE DOCUMENTS AND ORIGINATING WITH AMS WILL REMAIN THE SOLE PROPERTY OF AMS. THESE DRAWING, SPECIFICATIONS, AND THE MATERIAL CONTAINED HEREIN MAY NOT BE REPRODUCED, TRANSMITTED, COPIED, DISTRIBUTED, MODIFIED, OR OTHERWISE DISPOSED OF (DIRECTLY OR INDIRECTLY) AND MAY NOT BE USED (IN WHOLE OR IN PART) TO ASSIST IN THE CONSTRUCTION, DESIGN, OR OTHER MAKING OF, OR FOR THE PURPOSE OF FURNISHING ANY INFORMATION FOR THE CONSTRUCTION, DESIGN, OR OTHER MAKING OF, ANY BUILDINGS (MODULAR OR OTHERWISE), DRAWINGS, SPECIFICATIONS, PRINTS, APPARATUS, OR PARTS THEREOF, EXCEPT AS EXPRESSLY PERMITTED BY WRITTEN CONSENT OF, OR IN A WRITTEN AGREEMENT WITH, AMS. SUBMITTAL OR DISTRIBUTION TO MEET OFFICIAL REGULATORY REQUIREMENTS WILL NOT BE CONSTRUED AS PUBLICATION IN DEROGATION OF AMS'S COPYRIGHT OR OTHER INTELLECTUAL-PROPERTY OR PROPRIETARY RIGHTS.

PRE-CHECKED SET NAME
24' x 40' THRU 120' x 40'
STANDARD MODULAR BUILDING
(LOW SEISMIC)
FORM®

SITE SPECIFIC PROJECT NAME
.
.
.

APPROVED
DIV. OF THE STATE ARCHITECT
APP: 04-122050 PC
REVIEWED FOR
SS ☑ FLS ☑ ACS ☑ CG ☑
DATE: 12/11/2023

☐ **2022 CBC PRE-CHECK (PC) DOCUMENT**
A SEPARATE PROJECT APPLICATION FOR CONSTRUCTION IS REQUIRED.

MANUFACTURER PROFESSIONAL OF RECORD ON PC

LICENSED ARCHITECT
RANDALL PATRICK CAVANAGH
No. C12631
Ren. 3-31-25
STATE OF CALIFORNIA

THESE DRAWINGS ARE PRELIMINARY AND NOT FOR CONSTRUCTION UNLESS STAMPED & SIGNED BY THE DESIGN PROFESSIONAL OF RECORD.

REVISIONS
1
2
3
4

DRAWN BY:	AA
SCALE:	AS NOTED
DATE:	MM/DD/YY
PROJECT NO:	XXXX-22

SHEET TITLE:
ENERGY CALCULATIONS
36'x40' BUILDING
GROUP 'C'

SHEET NUMBER:
EN.15

IDENTIFICATION STAMP
DIV. OF THE STATE ARCHITECT
APP: 02-122976 INC:
REVIEWED FOR
SS ☑ FLS ☑ ACS ☑
DATE: 03/12/2025

TRACY
UNIFIED SCHOOL DISTRICT

HMC Architects

3595001000

2101 CAPITOL AVENUE, SUITE 100
SACRAMENTO, CA 95816
916 368 7990 / www.hmcarchitects.com

ISSUE

Δ	DESCRIPTION	DATE
A	ADDENDUM "A"	3/20/25

KEYNOTES

GENERAL NOTES

FACILITY:
JACOBSON ELEMENTARY SCHOOL
1750 W KAVANAGH AVE
TRACY, CA 95376

PROJECT:
JACOBSON ES - TK CLASSROOM

SHEET NAME:
ENERGY CALCULATIONS 36'x40' BUILDING GROUP 'C'

DATE: **04/03/24** CLIENT PROJ NO: **3595001000**

SHEET:
EN.15
ADDENDUM "A"

PLEASE RECYCLE

Autodesk Docs://3595005000 TUSD TK CLASSROOMS 2025 R22/3595005000-A-TUSD-BOHN-SITE.rvt
12/3/2024 9:55:42 AM

THE LINE SHOWN ABOVE IS 1 INCH WHEN PLOTTED ON ANSI E SIZED PAPER, SCALE TO SUIT

STATE OF CALIFORNIA
Indoor Lighting
CALIFORNIA ENERGY COMMISSION

CERTIFICATE OF COMPLIANCE			NRCC-LTI-E
Project Name:	AMS PC 24x40 UC Liq	Report Page:	(Page 1 of 7)
Project Address:		Date Prepared:	2023-03-06T11:31:48-05:00

This document is used to demonstrate compliance with requirements in 110.9, 110.12(c), 130.0, 130.1, 140.6 and 141.0(b)2 for indoor lighting scopes using the prescriptive path for nonresidential and hotel/motel occupancies. It is also used to document compliance with requirements in 160.5, 170.2(e) and 180.2(b)4 for indoor lighting scopes using the prescriptive path for multifamily occupancies. Multifamily includes dormitory and senior living facilities.

A. GENERAL INFORMATION

01 Project Location (city)	Palmdale	04 Total Conditioned Floor Area (ft^2)	0
02 Climate Zone	14	05 Total Unconditioned Floor Area (ft^2)	480
03 Occupancy Types Within Project (select all that apply):		06 # of Stories (Habitable Above Grade)	1
● Classroom			

B. PROJECT SCOPE

This table includes any lighting systems that are within the scope of the permit application and are demonstrating compliance using the prescriptive path outlined in 140.6 / 170.2(e) or 141.0(b)2 / 180.2(b)4 for alterations.

Scope of Work	Conditioned Spaces		Unconditioned Spaces	
	02	03	04	05
My Project Consists of (check all that apply):	Calculation Method	Area (ft^2)	Calculation Method	Area (ft^2)
☒ New Lighting System	Area Category Method	0	Area Category Method	480
☐ New Lighting System - Parking Garage	N/A	0	N/A	0
Total Area of Work (ft^2)			480	

Registration Number: CA Building Energy Efficiency Standards - 2022 Nonresidential Compliance
Generated Date/Time: Report Version: 2022.0.000 Schema Version: rev 20220101
Documentation Software: Energy Code Ace Compliance ID: 93007-0323-0004 Report Generated: 2023-03-06 08:31:50

STATE OF CALIFORNIA
Indoor Lighting
CALIFORNIA ENERGY COMMISSION

CERTIFICATE OF COMPLIANCE			NRCC-LTI-E
Project Name:	AMS PC 24x40 UC Liq	Report Page:	(Page 2 of 7)
		Date Prepared:	2023-03-06T11:31:48-05:00

C. COMPLIANCE RESULTS

If any cell on this table says "DOES NOT COMPLY" or "COMPLIES with Exceptional Conditions" refer to Table D for guidance.

Lighting in conditioned and unconditioned spaces must not be combined for compliance per 140.6(b) / 170.2(e)	Allowed Lighting Power per 140.6(b) / 170.2(e) (Watts)						Adjusted Lighting Power per 140.6(a) / 170.2(e) (Watts)				Compliance Results
	01	02	03	04	05		06	07		08	09
	Complete Building 140.3(c)1	Area Category 140.6(c)2 / 170.2(e)4	Area Category Additional 140.6(c)2b / 170.2(e)4Aa [n]	Tailored 140.6(c)3 / 170.2(e)4B [+]	Total Allowed (Watts)	>	Total Designed (Watts)	Adjustments PAF Lighting Control Credits 140.6(a)2 / 170.2(e)1B [ ]	=	Total Adjusted (Watts) *Includes Adjustments	05 must be >= 08 140.6 / 170.2(e)
	[See Table I]	[See Table I]	[See Table J]	[See Table K]			[See Table F]	[See Table P]			
Conditioned					=	2	280		=	280	COMPLIES
Unconditioned		283.25			=	283.25	2	280	=	280	COMPLIES
Controls Compliance (See Table H for Details)											COMPLIES
Rated Power Reduction Compliance (See Table Q for Details)											

D. EXCEPTIONAL CONDITIONS

This table is auto-filled with uneditable comments because of selections made or data entered in tables throughout the form.

E. ADDITIONAL REMARKS

This table includes remarks made by the permit applicant to the Authority Having Jurisdiction.

Registration Number: CA Building Energy Efficiency Standards - 2022 Nonresidential Compliance
Generated Date/Time: Report Version: 2022.0.000 Schema Version: rev 20220101
Documentation Software: Energy Code Ace Compliance ID: 93007-0323-0004 Report Generated: 2023-03-06 08:31:50

STATE OF CALIFORNIA
Indoor Lighting
CALIFORNIA ENERGY COMMISSION

CERTIFICATE OF COMPLIANCE			NRCC-LTI-E
Project Name:	AMS PC 24x40 UC Liq	Report Page:	(Page 3 of 7)
		Date Prepared:	2023-03-06T11:31:48-05:00

F. INDOOR LIGHTING FIXTURE SCHEDULE

This table includes all planned permanent and portable lighting other than dwelling unit/ hotel/ motel room lighting. Multifamily dwelling unit and hotel/motel room lighting is documented in Table T. If using Table T to document lighting in multifamily common use areas providing shared provisions for living, eating, cooking or sanitation, those luminaires are not included here.

Designed Wattage: Unconditioned Spaces

01	02	03	04	05	06	07	08	09	10	
Name or Item Tag	Complete Luminaire Description	Modular (Track) Fixture	Small Aperture & Color Change[1]	Watts per luminaire[2]	How is Wattage determined	Total Number of Luminaires	Excluded per 140.6(a)3 / 170.2(e)2C	Design Watts	Field Inspector	
									Pass	Fail
2x4 LED	2x4 LED	No	NA	50	Mfr. Spec	4	No	200	☐	☐
40W Incandescent	40W Incandescent	No	NA	40	Mfr. Spec	2	No	80	☐	☐
					[See Table F]	[See Table P]	**Total Designed Watts: UNCONDITIONED SPACES**	280		

[1]FOOTNOTE: Design Watts for small aperture and color changing luminaires which qualify per 140.6(a)4B / 170.2(e)2D is adjusted to be 75% /80% of their rated wattage. Table F automatically makes this adjustment, the permit applicant should enter full rated wattage in column 05.

[2]Authority Having Jurisdiction may ask for Luminaire cut sheets to confirm wattage used for compliance per 130.0(c) / 160.5(b). Wattage used must be the maximum rated for the luminaire, not the lamp.

G. MODULAR LIGHTING SYSTEMS

This section does not apply to this project.

H. INDOOR LIGHTING CONTROLS (Not including PAFs)

This table includes lighting controls for conditioned and unconditioned spaces.

Building Level Controls

01	02	03	
		Field Inspector	
		Pass	Fail
Mandatory Demand Response 110.12(c)	Shut-off controls 130.1(c) / 160.5(b)4C	☐	☐
NA < 4,000W subject to multilevel	See Area/Space Level Controls	☐	☐

Registration Number: CA Building Energy Efficiency Standards - 2022 Nonresidential Compliance
Generated Date/Time: Report Version: 2022.0.000 Schema Version: rev 20220101
Documentation Software: Energy Code Ace Compliance ID: 93007-0323-0004 Report Generated: 2023-03-06 08:31:50

STATE OF CALIFORNIA
Indoor Lighting
CALIFORNIA ENERGY COMMISSION

CERTIFICATE OF COMPLIANCE			NRCC-LTI-E
Project Name:	AMS PC 24x40 UC Liq	Report Page:	(Page 4 of 7)
		Date Prepared:	2023-03-06T11:31:48-05:00

H. INDOOR LIGHTING CONTROLS (Not including PAFs)

Area Level Controls

04	05	06	07	08	09	10	11	12	
Area Description	Complete Building or Area Category Primary Function Area	Manual Area Controls 130.1(a) / 160.5(b)4A	Multi-Level Controls 130.1(b) / 160.5(b)4B	Shut-Off Controls 130.1(c) / 160.5(b)4C	Primary/Sky in Daylighting 130.1(d) / 160.5(b)4D	Secondary Daylighting 130.1(d) / 160.5(b)4D	Interlocked Systems 140.6(a)1/ 170.2(e)1A	Field Inspector	
								Pass	Fail
Restrooms	Restroom	Readily Accessible	NA: Restrooms	Occupancy Sensor	NA: Not daylit zone	NA: Not daylit zone	No	☐	☐
Plumb Chase	Electrical Mechancial Telephone Room	Readily Accessible	NA: General Ltg <= 0.5W/SF	NA: Elec. equip. rm	NA: Not daylit zone	NA: Not daylit zone	No	☐	☐
							13	Plan Sheet Showing Daylit Zones:	

I. LIGHTING POWER ALLOWANCE: COMPLETE BUILDING OR AREA CATEGORY METHODS

Each area complying using the Complete Building or Area Category Methods per 140.6(b) are included in this table. Column 06 indicates if additional lighting power allowances per 140.6(c) or adjustments per 140.6(a) are being used .

Unconditioned Spaces

01	02	03	04	05	06
Area Description	Complete Building or Area Category Primary Function Area	Allowed Density (W/ft^2)	Area (ft^2)	Allowed Wattage (Watts)	Additional Allowance / Adjustment
				Area Category	PAF
Restrooms	Restroom	0.65	365	237.25	No No
Plumb Chase	Electrical Mechancial Telephone Room	0.4	115	46	No No
		TOTALS:	480	283.25	See Tables L or P for detail

J. ADDITIONAL ALLOWANCE: AREA CATEGORY METHOD QUALIFYING LIGHTING SYSTEM

This section does not apply to this project.

Registration Number: CA Building Energy Efficiency Standards - 2022 Nonresidential Compliance
Generated Date/Time: Report Version: 2022.0.000 Schema Version: rev 20220101
Documentation Software: Energy Code Ace Compliance ID: 93007-0323-0004 Report Generated: 2023-03-06 08:31:50

STATE OF CALIFORNIA
Indoor Lighting
CALIFORNIA ENERGY COMMISSION

CERTIFICATE OF COMPLIANCE			NRCC-LTI-E
Project Name:	AMS PC 24x40 UC Liq	Report Page:	(Page 5 of 7)
		Date Prepared:	2023-03-06T11:31:48-05:00

K. TAILORED METHOD GENERAL LIGHTING POWER ALLOWANCE

This section does not apply to this project.

L. ADDITIONAL LIGHTING ALLOWANCE: TAILORED WALL DISPLAY

This section does not apply to this project.

M. ADDITIONAL LIGHTING ALLOWANCE: TAILORED FLOOR AND TASK LIGHTING

This section does not apply to this project.

N. ADDITIONAL LIGHTING ALLOWANCE: TAILORED DECORATIVE /SPECIAL EFFECTS

This section does not apply to this project.

O. ADDITIONAL LIGHTING ALLOWANCE: TAILORED VERY VALUABLE MERCHANDISE

This section does not apply to this project.

P. POWER ADJUSTMENT: LIGHTING CONTROL CREDIT (POWER ADJUSTMENT FACTOR (PAF))

This section does not apply to this project.

Q. RATED POWER REDUCTION COMPLIANCE FOR ONE-FOR-ONE ALTERATIONS

This section does not apply to this project.

R. 80% LIGHTING POWER FOR ALL ALTERATIONS - CONTROLS EXCEPTIONS

This section does not apply to this project.

Registration Number: CA Building Energy Efficiency Standards - 2022 Nonresidential Compliance
Generated Date/Time: Report Version: 2022.0.000 Schema Version: rev 20220101
Documentation Software: Energy Code Ace Compliance ID: 93007-0323-0004 Report Generated: 2023-03-06 08:31:50

STATE OF CALIFORNIA
Indoor Lighting
CALIFORNIA ENERGY COMMISSION

CERTIFICATE OF COMPLIANCE			NRCC-LTI-E
Project Name:	AMS PC 24x40 UC Liq	Report Page:	(Page 6 of 7)
		Date Prepared:	2023-03-06T11:31:48-05:00

S. DAYLIGHT DESIGN POWER ADJUSTMENT FACTOR (PAF)

This section does not apply to this project.

T. DWELLING UNIT LIGHTING

This section does not apply to this project.

U. DECLARATION OF REQUIRED CERTIFICATES OF INSTALLATION

Form/Title
NRCI-LTI-E - Must be submitted for all buildings

V. DECLARATION OF REQUIRED CERTIFICATES OF ACCEPTANCE

Form/Title	Systems/Spaces To Be Field Verified
NRCA-LTI-02-A - Must be submitted for occupancy sensors and automatic time switch controls.	Restrooms

Registration Number: CA Building Energy Efficiency Standards - 2022 Nonresidential Compliance
Generated Date/Time: Report Version: 2022.0.000 Schema Version: rev 20220101
Documentation Software: Energy Code Ace Compliance ID: 93007-0323-0004 Report Generated: 2023-03-06 08:31:50

STATE OF CALIFORNIA
Indoor Lighting
CALIFORNIA ENERGY COMMISSION

CERTIFICATE OF COMPLIANCE			NRCC-LTI-E
Project Name:	AMS PC 24x40 UC Liq	Report Page:	(Page 7 of 7)
Project Address:		Date Prepared:	2023-03-06T11:31:48-05:00

DOCUMENTATION AUTHOR'S DECLARATION STATEMENT

I certify that this Certificate of Compliance documentation is accurate and complete.

Documentation Author Name: Hans Marsman		Documentation Author Signature:	
Company: Marsman Consulting		Signature Date:	
Address: 1150 J Street #809		CEA/ HERS Certification Identification (if applicable):	
City/State/Zip: San Diego, CA 92101		Phone: (619) 571-6574	

Digitally signed by Hans Marsman DN: cn=Hans Marsman, o=CEA, ou=HERS, email=hans@cea-ca.com, c=US Date: 2023.03.06 15:08:29-08'00'

RESPONSIBLE PERSON'S DECLARATION STATEMENT

I certify the following under penalty of perjury under the laws of the State of California:

1. The information provided on this Certificate of Compliance is true and correct.
2. I am eligible under Division 3 of the Business and Professions Code to accept responsibility for the building design or system design identified on this Certificate of Compliance (responsible designer)
3. The energy features and performance specifications, materials, components, and manufactured devices for the building design or system design identified on this Certificate of Compliance conform to the requirements of Title 24, Part 1 and Part 6 of the California Code of Regulations.
4. The building design features or system design features identified on this Certificate of Compliance are consistent with the information provided on other applicable compliance documents, worksheets, calculations, plans and specifications submitted to the building department for approval of the building or system.
5. I will ensure that a completed signed copy of this Certificate of Compliance shall be made available with the building permit(s) issued for the building, and made available to the enforcement agency for all applicable inspections. I understand that a completed signed copy of this Certificate of Compliance is required to be included with the documentation the builder provides to the building owner at occupancy.

Responsible Designer Name: Randall P Cavanaugh		Responsible Designer Signature:	
Company: American Modular Systems	Gen7 Schools	Date Signed: 03/06/2023	
Address: 787 Spreckels Avenue		License: C12631	
City/State/Zip: Manteca, CA 95336		Phone: 209.825.1921	

Registration Number: CA Building Energy Efficiency Standards - 2022 Nonresidential Compliance
Generated Date/Time: Report Version: 2022.0.000 Schema Version: rev 20220101
Documentation Software: Energy Code Ace Compliance ID: 93007-0323-0004 Report Generated: 2023-03-06 08:31:50

STATE OF CALIFORNIA
Outdoor Lighting
CALIFORNIA ENERGY COMMISSION

CERTIFICATE OF COMPLIANCE			NRCC-LTO-E
Project Name:	AMS PCs Ext Ltg - T24-22	Report Page:	(Page 1 of 7)
Project Address:		Date Prepared:	2023-03-06T10:40:21-05:00

This document is used to demonstrate compliance with requirements in 110.9, 130.0, 130.2, 140.7, and 141.0(b)3, for outdoor lighting scopes using the prescriptive path for nonresidential and hotel/motel occupancies. It is also used to document compliance with requirements in 160.5, 170.2(c)6, 180.1(a) and 180.2(b)4b for outdoor lighting scopes using the prescriptive path for multifamily and mixed-use occupancies. Multifamily includes dormitory and senior living facilities.

A. GENERAL INFORMATION

01 Project Location (city)	Palmdale	04 Total Illuminated Hardscape Area (ft^2)	0
02 Climate Zone	14		
03 Outdoor Lighting Zone per Title 24 Part 1 §10.114 or as designated by Authority Having Jurisdiction (AHJ):			
☐ LZ-0: Very Low - Undeveloped Parkland	☐ LZ-2: Moderate - Urban Clusters	☐ LZ-4: High - Must be reviewed by CA Energy Commission for Approval	
☐ LZ-1: Low - Rural Areas	☒ LZ-3: Moderately High - Urban Areas		
05 Occupancy Types within Project			
● Classroom			

B. PROJECT SCOPE

This table includes outdoor lighting systems that are within the scope of the permit application and are demonstrating compliance using the prescriptive path outlined in 140.7 / 170.2(c)6 or 141.0(b)3, / 180.2(b)4b for alterations.

My Project Consists of:

01	02
☒ New Lighting System	Must Comply with Allowances from 140.7 / 170.2(c)6
☐ Altered Lighting System	Is your alteration increasing the connected lighting load (Watts)? ○ Yes ○ No

03	04	05
% of Existing Luminaires Being Altered[1]	Sum Total of Luminaires Being Added or Altered	Calculation Method
☐ < 10% ☐ >= 10% and < 50% ☐ >= 50%		

Please proceed to Table F. Outdoor Lighting Fixture Schedule to define the project's luminaires.

[1] FOOTNOTES: % of Existing Luminaires Being Altered = (Sum Total of Luminaires Being Added or Altered / Existing Luminaires within the Scope of the Permit Application) x 100.

Registration Number: CA Building Energy Efficiency Standards - 2022 Nonresidential Compliance
Generated Date/Time: Report Version: 2022.0.000 Schema Version: rev 20220101
Documentation Software: Energy Code Ace Compliance ID: 92981-0323-0007 Report Generated: 2023-03-06 07:40:22

STATE OF CALIFORNIA
Outdoor Lighting
CALIFORNIA ENERGY COMMISSION

CERTIFICATE OF COMPLIANCE			NRCC-LTO-E
Project Name:	AMS PCs Ext Ltg - T24-22	Report Page:	(Page 2 of 7)
		Date Prepared:	2023-03-06T10:40:21-05:00

C. COMPLIANCE RESULTS

Results in this table are automatically calculated from data input and calculations in Tables F through N. Note: If any cell on this table says "COMPLIES with Exceptional Conditions" refer to Table D. Exceptional Conditions for guidance or see applicable Table referenced below.

Calculations of Total Allowed Lighting Power (Watts) 140.7 / 170.2(c)6 or 141.0(b)3L / 180.2(b)4Bv

01		02		03		04		05		06		07		08		09	Compliance Results
General Hardscape Allowance 140.7(d1) / 170.2(c)6 [See Table I]	+	Per Application 140.7(d2) / 170.2(c)6 [See Table J]	+	Sales Frontage 140.7(d2 [See Table K]	+	Ornamental 140.7(d2 / 170.2(c)6 [See Table L]	+	Per Specific Area 140.7(d2) / 170.2(c)6 [See Table M]	OR	Existing Power Allowance 141.0(b)2L / 180.2(b)4Bv [See Table N]	=	Total Allowed (Watts)	≥	Total Actual (Watts)		07 must be >= 08	
0	+	17	+	---	+	---	+	---	OR	---	=	17	≥	17		COMPLIES	
Shielding Compliance (See Table G for Details)																N/A	
Controls Compliance (See Table H for Details)																COMPLIES	

D. EXCEPTIONAL CONDITIONS

This table is auto-filled with uneditable comments because of selections made or data entered in tables throughout the form.

E. ADDITIONAL REMARKS

This table includes remarks made by the permit applicant to the Authority Having Jurisdiction.

Registration Number: CA Building Energy Efficiency Standards - 2022 Nonresidential Compliance
Generated Date/Time: Report Version: 2022.0.000 Schema Version: rev 20220101
Documentation Software: Energy Code Ace Compliance ID: 92981-0323-0007 Report Generated: 2023-03-06 07:40:22

STATE OF CALIFORNIA
Outdoor Lighting
CALIFORNIA ENERGY COMMISSION

CERTIFICATE OF COMPLIANCE			NRCC-LTO-E
Project Name:	AMS PCs Ext Ltg - T24-22	Report Page:	(Page 3 of 7)
		Date Prepared:	2023-03-06T10:40:21-05:00

F. OUTDOOR LIGHTING FIXTURE SCHEDULE

For new or altered lighting systems demonstrating compliance with 140.7 / 170.2(c)6 all new luminaires being installed and any existing luminaires remaining or being moved within the spaces covered by the permit application are included in the Table below. For altered lighting systems using the Existing Power method per 141.0(b)2L only new luminaires being installed and replacement luminaires being installed as part of the project scope are included (ie, existing luminaires remaining or existing luminaires being moved are not included). Outdoor lighting attached to multifamily buildings and controlled from the inside of a dwelling unit are included in Table H. and are not included here. All other multifamily outdoor lighting is included here.

Designed Wattage:

01	02	03	04	05	06	07	08	09	10	
Name or Item Tag	Complete Luminaire Description		Watts per luminaire[1, 2]	How is Wattage determined	Total Number Luminaires[1]	Luminaire Status[3]	Design Watts	Cutoff Req. = 6,200 initial lumen output 130.2(b) / 160.5(c)1[4]	Field Inspector	
									Pass	Fail
Ext Lig Fixture @ Door	Lihtonia ARC LED	☐ Linear	17	Mfr. Spec	1	New	☐	17	NA: < 6200 lumens	☐ ☐
							Total Design Watts:	17		

** NOTES: Selections with a * require a note in the space below explaining how compliance is achieved.*
EX: Luminaire is lighting a statue; EXCEPTION 2 to 130.2(b)

[1]FOOTNOTES: Authority Having Jurisdiction may ask for Luminaire cut sheets to confirm wattage used for compliance per 130.0(c) / 160.5(b)
[2] For linear luminaires, wattage should be indicated as W/ft instead of Watts/luminaire. Total linear feet should be indicated in column 05 instead of number of luminaires.
[3] Select "New" for new luminaires in a new outdoor lighting project, or for added luminaires in an alteration. Select "Altered" for replacement luminaires in an alteration. Select "Existing to Remain" for existing luminaires within the project scope that are not being altered and are remaining. Select "Existing Reinstalled" for existing luminaires which are being removed and reinstalled as part of the project scope.
[4] Compliance with mandatory shielding requirements is required for luminaires with initial lumen output >= 6,200 unless exempted by 130.2(b) / 160.5(c)

G. SHIELDING REQUIREMENTS (BUG)

This section does not apply to this project.

Registration Number: CA Building Energy Efficiency Standards - 2022 Nonresidential Compliance
Generated Date/Time: Report Version: 2022.0.000 Schema Version: rev 20220101
Documentation Software: Energy Code Ace Compliance ID: 92981-0323-0007 Report Generated: 2023-03-06 07:40:22

STATE OF CALIFORNIA
Outdoor Lighting
CALIFORNIA ENERGY COMMISSION

CERTIFICATE OF COMPLIANCE			NRCC-LTO-E
Project Name:	AMS PCs Ext Ltg - T24-22	Report Page:	(Page 4 of 7)
		Date Prepared:	2023-03-06T10:40:21-05:00

H. OUTDOOR LIGHTING CONTROLS

This table demonstrates compliance with controls requirements for all new or altered luminaires installed as part of the permit application. For alteration projects, luminaires which are existing to remain (ie untouched) and luminaires which are removed and reinstalled (wiring only) do not need to be included in this table even if they are within the spaces covered by the permit application.
Outdoor lighting for nonresidential buildings, parking garages and common service areas in multifamily buildings must be documented separately from outdoor lighting attached to multifamily buildings and controlled from the inside of a dwelling unit

Mandatory Controls for Nonresidential Occupancies, Parking Garages & Common Areas in Multifamily Buildings

01	02	03	04	05	
Area Description	Shut-Off 130.2(c)1 / 160.5(c)	Auto-Schedule 130.2(c)2 / 160.5(c)	Motion Sensor 130.2(c)3 / 160.5(c)	Field Inspector	
				Pass	Fail
Entry Door(s): "Ext Ltg Fixture @ Door"	Astronomical Timer	Provided	Provided	☐	☐

[1]FOOTNOTE: Text has been abbreviated, please refer to Table 160.5-A to confirm compliance with the specific light source technologies listed.
[2]Authority Having Jurisdiction may ask for cutsheets or other documentation to confirm compliance of light source.
[3]Recessed luminaires marked for use in fire-rated installations, and recessed luminaires installed in non-insulated ceilings are excepted from J and K.

I. LIGHTING POWER ALLOWANCE (per 140.7 / 170.2(e))

This table includes areas using allowance calculations per 140.7 / 170.2(e). General Hardscape Allowance is per Table 140.7-A/Table 170.2-A while "Use it or lose it" Allowances are per Table 140.7-B /Table 170.2-b. Indicate which allowances are being used to expend sections for user input. Luminaires that qualify for one of the "Use it or lose it" allowances shall not qualify for another "Use it or lose it" allowance.
Outdoor lighting attached to multifamily buildings and controlled from the inside of a dwelling unit are included in Table H. and are not included here. All other multifamily outdoor lighting is included here.

	01			
		"Use it or lose it" Allowance (select all that apply) (select all that apply)		
☐ General Hardscape Allowance Table I (below)	☒ Per Application Table J	☐ Sales Frontage Table K	☐ Ornamental Table L	☐ Per Specific Area Table M

Registration Number: CA Building Energy Efficiency Standards - 2022 Nonresidential Compliance
Generated Date/Time: Report Version: 2022.0.000 Schema Version: rev 20220101
Documentation Software: Energy Code Ace Compliance ID: 92981-0323-0007 Report Generated: 2023-03-06 07:40:22

STATE OF CALIFORNIA
Outdoor Lighting
CALIFORNIA ENERGY COMMISSION

CERTIFICATE OF COMPLIANCE			NRCC-LTO-E
Project Name:	AMS PCs Ext Ltg - T24-22	Report Page:	(Page 5 of 7)
		Date Prepared:	2023-03-06T10:40:21-05:00

J. LIGHTING ALLOWANCE: PER APPLICATION

This table includes areas using the wattage allowance per application from Table 140.7-B / Table 170.2-S.

01	02	03	04	05	06	07	08	09	10
Area Description	Application per Table 140.7-B[1]	# of Locations	Allowance per Location[2]	Extra Allowance (Watts)	Luminaire Name or Item Tag	Watts per Luminaire	# of Luminaires	Design Watts	Additional Allowance (Watts)
Entry Door(s)	Building Entrance/Exit	1	19	15	Ext Ltg Fixture @ Door	17	1	17	17
					Total Design Watts for this Area:			17	
					Total Allowance (Watts) All Areas:				17

[1]FOOTNOTES: Primary entrance applications are only available for senior care facilities, healthcare facilities, police stations, hospitals, fire stations, and emergency vehicle facilities.
[2] The Allowance per Location for ATMs is 120W for the first ATM and 35W for each additional per Table 140.7-B /Table 170.2-S.
[3] For luminaires indicated in Table F as linear, wattage in column 07 is W/ft instead of Watts/luminaire. Total linear feet should be indicated in column 08 instead of number of luminaires.

K. LIGHTING ALLOWANCE: SALES FRONTAGE

This section does not apply to this project.

L. LIGHTING ALLOWANCE: ORNAMENTAL

This section does not apply to this project.

M. LIGHTING ALLOWANCE: PER SPECIFIC AREA

This section does not apply to this project.

N. EXISTING CONDITIONS POWER ALLOWANCE (alterations only)

This section does not apply to this project.

Registration Number: CA Building Energy Efficiency Standards - 2022 Nonresidential Compliance
Generated Date/Time: Report Version: 2022.0.000 Schema Version: rev 20220101
Documentation Software: Energy Code Ace Compliance ID: 92981-0323-0007 Report Generated: 2023-03-06 07:40:22

IDENTIFICATION STAMP
DIV. OF THE STATE ARCHITECT
APP: 02-122976 INC:
REVIEWED FOR
SS ☑ FLS ☑ ACS ☑
DATE: 03/12/2025

TRACY UNIFIED SCHOOL DISTRICT

HMC Architects

3595001000

2101 CAPITOL AVENUE, SUITE 100
SACRAMENTO, CA 95816
916 368 7990 / www.hmcarchitects.com

ISSUE

Δ	DESCRIPTION	DATE
1	ADDENDUM "A"	3/20/25

AMS®
American Modular Systems
787 Spreckels Ave., Manteca, CS 95336
Phone (209) 825-1921 Fax (209) 825-7018
www.americanmodular.com

INTELLECTUAL-PROPERTY & PROPRIETARY RIGHTS STATEMENT
COPYRIGHT © AMERICAN MODULAR SYSTEMS (AMS)
AMS OWNS ALL COPYRIGHT AND OTHER INTELLECTUAL-PROPERTY AND PROPRIETARY RIGHTS IN THESE DRAWINGS, SPECIFICATIONS, AND THE MATERIAL CONTAINED HEREIN. CERTAIN ELEMENTS SHOWN IN THESE DOCUMENTS ARE REGISTERED TRADEMARKS OF AMS. ALL PATENTABLE MATERIALS CONTAINED IN THESE DOCUMENTS AND ORIGINATING FROM AMS ARE THE PROPERTY OF AMS. ALL RIGHTS ARE RESERVED. THESE DRAWINGS AND THE MATERIAL CONTAINED HEREIN MAY NOT BE REPRODUCED, TRANSMITTED, COPIED, DISTRIBUTED, MODIFIED, OR OTHERWISE DISPOSED OF (DIRECTLY OR INDIRECTLY) AND MAY NOT BE USED (IN WHOLE OR IN PART) TO ASSIST IN THE CONSTRUCTION, DESIGN, OR OTHER MAKING OF, OR FOR THE PURPOSE OF FURNISHING ANY INFORMATION FOR THE CONSTRUCTION, DESIGN, OR OTHER MAKING OF, ANY BUILDINGS (MODULAR OR OTHERWISE), DRAWINGS, SPECIFICATIONS, PRINTS, APPARATUS, OR PARTS THEREOF, EXCEPT AS EXPRESSLY PERMITTED BY WRITTEN CONSENT OF, OR IN A WRITTEN AGREEMENT WITH, AMS. SUBMITTAL OR DISTRIBUTION TO MEET OFFICIAL REGULATORY REQUIREMENTS WILL NOT BE CONSTRUED AS PUBLICATION IN DEROGATION OF AMS'S COPYRIGHT OR OTHER INTELLECTUAL-PROPERTY OR PROPRIETARY RIGHTS.

PRE-CHECKED SET NAME
24' x 40' THRU 120' x 40'
STANDARD MODULAR BUILDING
(LOW SEISMIC)
FORM®

SITE SPECIFIC PROJECT NAME

APPROVED
DIV. OF THE STATE ARCHITECT
APP: 04-122059 PC
REVIEWED FOR
SS ☑ FLS ☑ ACS ☑ CG ☑
DATE: 12/11/2023

☐ **2022 CBC PRE-CHECK (PC) DOCUMENT**
A SEPARATE PROJECT SPECIFIC SUBMITTAL IS REQUIRED.

MANUFACTURER PROFESSIONAL OF RECORD ON PC

LICENSED ARCHITECT RANDALL PATRICK CAVANAUGH No. C12631 Exp. 3-31-25 STATE OF CALIFORNIA

THESE DRAWINGS ARE PRELIMINARY AND NOT FOR CONSTRUCTION UNLESS STAMPED & SIGNED BY THE DESIGN PROFESSIONAL OF RECORD.

REVISIONS
1
2
3
4

DRAWN BY: AA
SCALE: AS NOTED
DATE: MM/DD/YY
PROJECT NO: XXXX-22

SHEET TITLE:
ENERGY CALCULATIONS SUPPLEMENTAL SHEET

SHEET NUMBER:
EN.74

KEYNOTES

GENERAL NOTES

FACILITY:
JACOBSON ELEMENTARY SCHOOL
1750 W KAVANAGH AVE
TRACY, CA 95376

PROJECT:
JACOBSON ES - TK CLASSROOM

SHEET NAME:
ENERGY CALCULATIONS SUPPLEMENTAL SHEET

DATE: **04/03/24** CLIENT PROJ NO: **3595001000**

SHEET:
EN.74
ADDENDUM "A"

PLEASE RECYCLE

Autodesk Docs://3595001000 TUSD TK CLASSROOMS 2025 R22/3595001000-A-TUSD-BOHN-SITE.rvt
12/3/2024 8:55:45 AM

THE LINE SHOWN ABOVE IS EXACTLY ONE INCH LONG AT THIS SHEETS ORIGINAL PAGE SIZE

STATE OF CALIFORNIA

Outdoor Lighting

CALIFORNIA ENERGY COMMISSION

CERTIFICATE OF COMPLIANCE			NRCC-LTO-E
Project Name:	AMS PCs Ext Ltg - T24-22	**Report Page:**	**(Page 6 of 7)**
		Date Prepared:	2023-03-06T10:40:21-05:00

O. DECLARATION OF REQUIRED CERTIFICATES OF INSTALLATION

Form/Title
NRCI-LTO-E - Must be submitted for all buildings

P. DECLARATION OF REQUIRED CERTIFICATES OF ACCEPTANCE

Form/Title	Systems/Spaces To Be Field Verified
NRCA-LTO-02-A - Must be submitted for all outdoor lighting controls except for alterations where controls are added to <= 20 luminaires.	Entry Door(s): "Ext Ltg Fixture @ Door"

Registration Number: | Generated Date/Time: | Documentation Software: Energy Code Ace

CA Building Energy Efficiency Standards - 2022 Nonresidential Compliance | Report Version: 2022.0.000 Schema Version: rev 20220101 | Compliance ID: 92981-0323-0007 Report Generated: 2023-03-06 07:40:22

STATE OF CALIFORNIA

Outdoor Lighting

CALIFORNIA ENERGY COMMISSION

CERTIFICATE OF COMPLIANCE			NRCC-LTO-E
Project Name:	AMS PCs Ext Ltg - T24-22	**Report Page:**	**(Page 7 of 7)**
Project Address:		**Date Prepared:**	2023-03-06T10:40:21-05:00

DOCUMENTATION AUTHOR'S DECLARATION STATEMENT

I certify that this Certificate of Compliance documentation is accurate and complete.

Documentation Author Name: Hans Marsman	Documentation Author Signature: (CEA — Hans Marsman R19-20-30039 NR19-09-30012) Digitally signed by Hans Marsman, LEED AP, CEA Date: 2023.03.06 09:51:37-06'00'
Company: Marsman Consulting	Signature Date:
Address: 1150 J Street #409	CEA/ HERS Certification Identification (if applicable):
City/State/Zip: San Diego, CA 92101	Phone: (619) 573-6374

RESPONSIBLE PERSON'S DECLARATION STATEMENT

I certify the following under penalty of perjury, under the laws of the State of California:

1. The information provided on this Certificate of Compliance is true and correct.
2. I am eligible under Division 3 of the Business and Professions Code to accept responsibility for the building design or system design identified on this Certificate of Compliance (responsible designer)
3. The energy features and performance specifications, materials, components, and manufactured devices for the building design or system design identified on this Certificate of Compliance conform to the requirements of Title 24, Part 1 and Part 6 of the California Code of Regulations.
4. The building design features or system design features identified on this Certificate of Compliance are consistent with the information provided on other applicable compliance documents, worksheets, calculations, plans and specifications submitted to the enforcement agency for approval with this building permit application.
5. I will ensure that a completed signed copy of this Certificate of Compliance shall be made available with the building permit(s) issued for the building, and made available to the enforcement agency for all applicable inspections. I understand that a completed signed copy of this Certificate of Compliance is required to be included with the documentation the builder provides to the building owner at occupancy.

Responsible Designer Name: Randall P Cavannagh	Responsible Designer Signature:
Company: American Modular Systems | Gen7 Schools	Date Signed: 03/04/2023
Address: 787 Spreckels Avenue	License: C12631
City/State/Zip: Manteca, CA 95336	Phone: 209.825.1921

Registration Number: | Generated Date/Time: | Documentation Software: Energy Code Ace

CA Building Energy Efficiency Standards - 2022 Nonresidential Compliance | Report Version: 2022.0.000 Schema Version: rev 20220101 | Compliance ID: 92981-0323-0007 Report Generated: 2023-03-06 07:40:22

STATE OF CALIFORNIA

Domestic Water Heating System

CALIFORNIA ENERGY COMMISSION

CERTIFICATE OF COMPLIANCE — NRCC-PLB-E

This document is used to demonstrate compliance for nonresidential occupancies with requirements in 110.1, 110.3, 120.3, and 140.5, and with requirements in 141.0 for additions and alterations, for domestic water heating scopes using the prescriptive path. For high-rise residential and hotel/motel occupancies compliance is demonstrated with requirements in 110.1, 110.3, 160.4 and 170.2(d), and with requirements 180.1 for additions and 180.2 for alterations.

Project Name:	AMS PCs Water Heating - T24-22	**Report Page:**	**(Page 1 of 6)**
Project Address:		**Date Prepared:**	2023-03-06T10:41:54-05:00

A. GENERAL INFORMATION

01	Project Location (city)	Palmdale	02	Climate Zone	14
03	Occupancy Types Within Project (select all that apply):				

● Classroom

B. PROJECT SCOPE

This table includes domestic water heating systems that are within the scope of the permit application and are demonstrating compliance using the prescriptive paths outlined in 140./170.2(d) and 141.0(a)/ 180.1, or 141.0(b)2N / 180.2 for additions or alterations. Solar water heating systems are documented on the NRCC-SAB compliance document. Combined hydronic water heating systems are documented on the NRCC-MCH compliance document.

01	02	03		
My project consists of (check all that apply):	System Type[1,2]	System Components		
☒ New system (DHW system being installed for the first time in newly constructed building)	Individual System (serving nonresidential spaces)	☒ Equipment	☒ Distribution	☒ Controls
☐ System Alteration (equipment, distribution or controls)		☐ Equipment	☐ Distribution	☐ Controls

[1]FOOTNOTES: Point of use water heaters, or other non-central systems used to serve nonresidential spaces, are considered individual systems.
[2] Dwelling units refers to hotel/motel guest rooms and units in a multifamily residential occupancy.
[3] DHW systems serving 2 or more dwelling units are considered "Central Systems" for multifamily occupancies

C. COMPLIANCE RESULTS

Table C will indicate if the project data input into the compliance document is compliant with water heating requirements. If this table says "DOES NOT COMPLY" or "COMPLIES with Exceptional Conditions" refer to Table D. or the table indicated as not compliant for guidance.

01	02	03	04
Domestic Hot Water Equipment	Distribution Systems	Controls	**Compliance Results**
Table F	Table G	Table H	
Yes	Yes	Yes	COMPLIES

D. EXCEPTIONAL CONDITIONS

This table is auto-filled with uneditable comments because of selections made or data entered in tables throughout the form.

Registration Number: | Generated Date/Time: | Documentation Software: Energy Code Ace

CA Building Energy Efficiency Standards - 2022 Nonresidential Compliance | Report Version: 2022.0.000 Schema Version: rev 20220101 | Compliance ID: 92981-0323-0009 Report Generated: 2023-03-06 07:41:56

STATE OF CALIFORNIA

Domestic Water Heating System

CALIFORNIA ENERGY COMMISSION

CERTIFICATE OF COMPLIANCE			NRCC-PLB-E
Project Name:	AMS PCs Water Heating - T24-22	**Report Page:**	**(Page 2 of 6)**
		Date Prepared:	2023-03-06T10:41:54-05:00

E. ADDITIONAL REMARKS

This table includes remarks made by the permit applicant to the Authority Having Jurisdiction.

F. DOMESTIC HOT WATER EQUIPMENT

This table is used to demonstrate compliance with mandatory equipment requirements in 110.1 and 110.3. Compliance with prescriptive requirements in 140.5(c) / 170.2(d) must also be demonstrated and with 141.0 / 180.1/ 180.2 for addition and alteration scopes.

Equipment Schedule: Water Heating Efficiency and Standby Loss

03		04		05		06	
System Name	EWH-1	Exception to 140.5(c)/ 170.2(d)3	Exceptions Do Not Apply	☐	Gas Service Water Heating System >= 1MMBtu/h[1]	Capacity-weighted Average Efficiency %	

07	08	09	10		11	12	13	14	15
Name or Item Tag	Equipment Type	Volume (gal)	Rated Input Capacity (Btu/h)	Max GPM/ First Hour Rating (FHR)	Rated Efficiency	Minimum Efficiency Required	Efficiency Unit	Designed Standby Loss	Maximum Standby Loss
EWH-1	Commercial Electric Storage Water Heater	20	6,824					1.25	1.65

[1]FOOTNOTE: In systems >= 1MMBtu/h with multiple units, gas water heaters with input capacity > 100,000 Btu/h may meet 90% Et requirements via an input capacity-weighted average.

Water Heating Equipment All Occupancies

	Yes	No	Not Applicable	Requirement
18	☒	☐	☐	Unfired storage tank insulation shall have Internal + External >=R-16 OR External >=R-3.5. Label required per 110.3(c)3
19	☐	☐	☒	New state buildings 60% of energy for service water heating from site solar energy or recovered energy per 110.3(c)5
20	☐	☐	☒	Isolation valves for instantaneous water heater with input rating >6.8 kBTUH or 2 kW has been specified per 110.3(c)6
21	☐	☐	☒	School buildings < 25,000 ft² and < 4 stories must install a heat pump water heating system per 140.5(a)1. Water heating systems serving an individual bathroom space may be an instantaneous electric water heater.

Registration Number: | Generated Date/Time: | Documentation Software: Energy Code Ace

CA Building Energy Efficiency Standards - 2022 Nonresidential Compliance | Report Version: 2022.0.000 Schema Version: rev 20220101 | Compliance ID: 92981-0323-0009 Report Generated: 2023-03-06 07:41:56

STATE OF CALIFORNIA

Domestic Water Heating System

CALIFORNIA ENERGY COMMISSION

CERTIFICATE OF COMPLIANCE			NRCC-PLB-E
Project Name:	AMS PCs Water Heating - T24-22	**Report Page:**	**(Page 3 of 6)**
		Date Prepared:	2023-03-06T10:41:54-05:00

G. DOMESTIC HOT WATER DISTRIBUTION SYSTEM

This table is used to demonstrate compliance for nonresidential occupancies with distribution requirements in 120.3 and 140.5. For multifamily and hotel/motel occupancies, compliance is demonstrated with requirements 110.3(c), 160.4, 170.2(d).

Mandatory Pipe Insulation All Occupancies

13	☐	For systems serving dwelling units, pipe insulation must meet the minimum insulation requirements in Table 160.4-A (see blow) except: • Piping that penetrates framing members shall not be required to have pipe insulation for the distance of the framing penetration. Piping that penetrates metal framing shall use grommets, plugs, wrapping or other insulating material to assure that no contact is made with the metal framing. Insulation shall abut securely against all framing members • Piping installed in interior or exterior walls shall not be required to have pipe insulation if all of the requirements are met for compliance with Quality Insulation Installation (QII) as specified in the Reference Residential Appendix RA3.5. • Piping surrounded with a minimum of 1 inch of wall insulation, 2 inches of crawlspace insulation, or 4 inches of attic insulation, shall not be required to have pipe insulation.
14	☐	For systems serving nonresidential spaces, pipe insulation for the following applications is specified to comply with Table 120.3-A (see below) per 120.3: • Recirculating system piping, including supply and return piping of the water heater • The first 8 ft of hot and cold outlet piping, including between storage tank and heat trap, for a nonrecirculating storage system • Pipes that are externally heated
15	☒	Insulation shall be protected from damage, including that due to sunlight, moisture, equipment maintenance, and wind. Insulation exposed to weather shall be installed with a cover suitable for outdoor service per 120.3(b) / 160.4(f). Pipe insulation buried below grade must be installed in a water proof and non-crushable casing or sleeve.

TABLE 120.3-A / 160.4-A PIPE INSULATION THICKNESS

Fluid Temperature Range (°F)	Conductivity Range (Btu-in per hour per ft² per °F)	Insulation Mean Rating Temp (°F)	Nominal Pipe Diameter (in)			
			< 1	1 to < 1.5	1.5 to < 4	1.5 to < 4 Multifamily & Hotel/Motel
			Minimum Insulation Required			
105-140	0.22 - 0.28	100	1.0 in or R-7.7	1.5 in or R-12.5	1.5 in or R-11	2.0 in or R-16

Registration Number: | Generated Date/Time: | Documentation Software: Energy Code Ace

CA Building Energy Efficiency Standards - 2022 Nonresidential Compliance | Report Version: 2022.0.000 Schema Version: rev 20220101 | Compliance ID: 92981-0323-0009 Report Generated: 2023-03-06 07:41:56

STATE OF CALIFORNIA

Domestic Water Heating System

CALIFORNIA ENERGY COMMISSION

CERTIFICATE OF COMPLIANCE			NRCC-PLB-E
Project Name:	AMS PCs Water Heating - T24-22	**Report Page:**	**(Page 4 of 6)**
		Date Prepared:	2023-03-06T10:41:54-05:00

H. DOMESTIC HOT WATER CONTROLS

This table is used to demonstrate compliance with control requirements in 110.3 for all occupancies. For multifamily residential and hotel/motel occupancies, compliance is also demonstrated with requirements in 160.4(e) / 170.2(d).

	Yes	No	Not Applicable	Requirement
01	☒	☐	☐	Construction documents require manufacturer certification that service water-heating systems are equipped with automatic temperature controls capable of adjusting temperature settings per 110.3(a).
02	☐	☐	☒	Systems with capacity > 167,000 BTUH equipped with outlet temperature controls per 110.3(c)1 unless covered by California Plumbing Code 613.0.
03	☐	☐	☒	Controls for circulating pumps or electrical heat trace systems are capable of automatically turning off the system per §110.3(c)2 unless systems serves healthcare facility.
04	☐	☐	☒	For recirculation systems serving multiple dwelling units, design includes automatic pump controls per 170.2(d) or 180.1(b)3 for additions.
05	☐	☐	☒	For recirculation systems serving individual dwelling units, design includes manual on/off controls as specified in Reference Appendix RA4.4.9 per 170.2(d).
06	☐	☐	☒	Combustion air positive shut-off shall be provided per 160.4(3).on all newly installed commercial boilers as follows: • Boilers with input capacity >= 2.5 MMBtu/h, in which the boiler is designed to operate with a nonpositive vent static pressure • Boilers where one stack serves two or more boilers with a total combined input capacity per stack of 2.5 MMBtu/h.
07	☐	☐	☒	Boiler combustion air fans with motor >= 10 hp shall meet one of the following • The fan motor shall be driven by a variable speed drive OR • The fan motor shall include controls that limit the fan motor demand to <=30% of the total design wattage at 50% of the design air volume.
08	☐	☐	☒	Newly installed boilers with an input capacity {d:gte/] 5MMBtu/h and a steady state full-load combustion efficiency < 90% shall maintain excess (stack-gas) oxygen concentrations <= 5% by volume on a dry basis over firing rates of 20-100%. Combustion air volume shall be controlled with respect to firing rate or flue gas oxygen concentration. Use of a common gas and combustion air control linkage or jack shaft is prohibited.

I. DECLARATION OF REQUIRED CERTIFICATES OF INSTALLATION

Form/Title
NRCI-PLB-E - Must be submitted for all buildings

Registration Number: | Generated Date/Time: | Documentation Software: Energy Code Ace

CA Building Energy Efficiency Standards - 2022 Nonresidential Compliance | Report Version: 2022.0.000 Schema Version: rev 20220101 | Compliance ID: 92981-0323-0009 Report Generated: 2023-03-06 07:41:56

STATE OF CALIFORNIA

Domestic Water Heating System

CALIFORNIA ENERGY COMMISSION

CERTIFICATE OF COMPLIANCE			NRCC-PLB-E
Project Name:	AMS PCs Water Heating - T24-22	**Report Page:**	**(Page 5 of 6)**
		Date Prepared:	2023-03-06T10:41:54-05:00

J. DECLARATION OF REQUIRED CERTIFICATES OF ACCEPTANCE

There are no forms required for this project.

K. DECLARATION OF REQUIRED CERTIFICATES OF VERIFICATION

There are no forms required for this project.

Registration Number: | Generated Date/Time: | Documentation Software: Energy Code Ace

CA Building Energy Efficiency Standards - 2022 Nonresidential Compliance | Report Version: 2022.0.000 Schema Version: rev 20220101 | Compliance ID: 92981-0323-0009 Report Generated: 2023-03-06 07:41:56

STATE OF CALIFORNIA

Domestic Water Heating System

CALIFORNIA ENERGY COMMISSION

CERTIFICATE OF COMPLIANCE			NRCC-PLB-E
Project Name:	AMS PCs Water Heating - T24-22	**Report Page:**	**(Page 6 of 6)**
Project Address:		**Date Prepared:**	2023-03-06T10:41:54-05:00

DOCUMENTATION AUTHOR'S DECLARATION STATEMENT

I certify that this Certificate of Compliance documentation is accurate and complete.

Documentation Author Name: Hans Marsman	Documentation Author Signature: (CEA — Hans Marsman R19-20-30039 NR19-09-30012) Digitally signed by Hans Marsman, LEED AP, CEA Date: 2023.03.06 09:51:00-06'00'
Company: Marsman Consulting	Signature Date:
Address: 1150 J Street #409	CEA/ HERS Certification Identification (if applicable):
City/State/Zip: San Diego, CA 92101	Phone: (619) 573-6374

RESPONSIBLE PERSON'S DECLARATION STATEMENT

I certify the following under penalty of perjury, under the laws of the State of California:

1. The information provided on this Certificate of Compliance is true and correct.
2. I am eligible under Division 3 of the Business and Professions Code to accept responsibility for the building design or system design identified on this Certificate of Compliance (responsible designer)
3. The energy features and performance specifications, materials, components, and manufactured devices for the building design or system design identified on this Certificate of Compliance conform to the requirements of Title 24, Part 1 and Part 6 of the California Code of Regulations.
4. The building design features or system design features identified on this Certificate of Compliance are consistent with the information provided on other applicable compliance documents, worksheets, calculations, plans and specifications submitted to the enforcement agency for approval with this building permit application.
5. I will ensure that a completed signed copy of this Certificate of Compliance shall be made available with the building permit(s) issued for the building, and made available to the enforcement agency for all applicable inspections. I understand that a completed signed copy of this Certificate of Compliance is required to be included with the documentation the builder provides to the building owner at occupancy.

Responsible Designer Name: Randall P Cavannagh	Responsible Designer Signature:
Company: American Modular Systems | Gen7 Schools	Date Signed: 03/04/2023
Address: 787 Spreckels Avenue	License: C12631
City/State/Zip: Manteca, CA 95336	Phone: 209.825.1921

Registration Number: | Generated Date/Time: | Documentation Software: Energy Code Ace

CA Building Energy Efficiency Standards - 2022 Nonresidential Compliance | Report Version: 2022.0.000 Schema Version: rev 20220101 | Compliance ID: 92981-0323-0009 Report Generated: 2023-03-06 07:41:56

CALIFORNIA ENERGY COMMISSION

ELECTRICAL POWER DISTRIBUTION

CEC-NRCC-ELC-E

CERTIFICATE OF COMPLIANCE

This document is used to demonstrate compliance with mandatory requirements in §130.5 for electrical systems in newly constructed nonresidential and hotel/motel occupancies and §160.6 and §160.9 for electrical systems in newly constructed multifamily occupancies. Additions and alterations to electrical service systems in nonresidential & hotel/motel occupancies will also use this document to demonstrate compliance per §141.0(a) or §141.0(b)2P for alterations. For multifamily addition or alterations compliance will be documented per §180.1(a) or §180.2(b)4Bvii.

Project Name: PC 48'-240'x40'	Enforcement Agency: DSA
Dwelling Address: N/A	Permit Number: N/A
City and Zip Code: N/A	Permit Application Date:

A. GENERAL INFORMATION

01	Project Location (city)					02	Climate Zone				
						03	Occupancy Types Within Project:				
☐	Office	☐	Retail	☐	Warehouse	☐	Hotel/ Motel				
☐	High-Rise Residential Multifamily/ MF Mixed-use >= 4 stories (new construction)	☐	High-Rise Residential Multifamily/ MF Mixed-use >= 4 stories (Addition or Alteration)	☐	Healthcare Facilities	☐	Parking Garage	☒	School	☐	Support Areas
				☐	Relocatable	☐	All Others	☐	Theater	☐	Sports Arena
☐	Auditorium	☐	Commercial/ Industrial	☐	Grocery Store	☐	Religious Facility	☐	Data Center	☐	Convention Center
☐	Classroom	☐	Library	☐	Gymnasium	☐	Restaurant/ Commercial Kitchen	☐	Financial Institution	☐	Medical Clinic

CA Building Energy Efficiency Standards - 2022 Nonresidential Compliance | January 2022

CALIFORNIA ENERGY COMMISSION

ELECTRICAL POWER DISTRIBUTION

CEC-NRCC-ELC-E

B. PROJECT SCOPE

This table includes electrical service systems that are within the scope of the permit application.

01	02	03	04	05	06	07
Electrical Service Designation/ Description	Scope of Work[1]	Rating[2] (kVA)	Utility Provided Metering System Exception to §130.5(a)/§160.6(a)[3]	System subject to CA Elec Code Article 517 Exception to §130.5(a)&(b)	Demand Response Controls: Where required, demand response controls must be specified which are capable of receiving and automatically responding to at least one standard based messaging protocol which enables demand response after receiving a demand response signal. Sections §120.2/§160.3, §130.1/§160.5 and §130.3/§160.5 and mechanical, indoor lighting, and sign lighting Certificate of Compliance documents-will indicate when demand response controls are required.	Provides power to dwelling units/common living areas only in multifamily occupancy
			☐	☐		☐

[1]FOOTNOTES: Adding only new feeders and branch circuits triggers Voltage Drop 130.5(c)/160.6(c), no other requirements from 130.5/160.6 are required.
[2] If common use areas in a multifamily occupancy are submetered, rating is for submeter size serving common use areas.
[3] Applicable if the utility company is providing a metering system that indicates instantaneous kW demand and kWh for a utility-defined period.

CA Building Energy Efficiency Standards - 2022 Nonresidential Compliance | January 2022

CALIFORNIA ENERGY COMMISSION

ELECTRICAL POWER DISTRIBUTION

CEC-NRCC-ELC-E

C. COMPLIANCE RESULTS

Results in this table are automatically calculated from data input and calculations in Tables F through J.

Note: If any cell on this table says "COMPLIES with Exceptional Conditions" refer to Table D. Exceptional Conditions for guidance or see the applicable Table referenced below.

01		02		03		04		05	06
Service Electrical Metering §130.5(a)/ §160.6(a)	AND	Separation for Monitoring §130.5(b)/ §160.6(b)	AND	Voltage Drop §130.5(c)/ §160.6(c)	AND	Controlled Receptacles §130.5(d)/ §160.6(d)	AND	Electric Ready §160.9	Compliance Results
(See Table F)		(See Table G)		(See Table H)		(See Table I)		(See Table J)	
Yes/No	**AND**	Yes/No	**AND**	Yes/No	**AND**	Yes/No	**AND**	Yes/No	**COMPLIES, DOES NOT COMPLY, Or COMPLIES with Exceptional Conditions**

D. EXCEPTIONAL CONDITIONS

This table is auto-filled with uneditable comments because of selections made or data entered in tables throughout the form.

CA Building Energy Efficiency Standards - 2022 Nonresidential Compliance | January 2022

CALIFORNIA ENERGY COMMISSION

ELECTRICAL POWER DISTRIBUTION

CEC-NRCC-ELC-E

E. ADDITIONAL REMARKS

This table includes remarks made by the installer to the Authority Having Jurisdiction.

F. SERVICE ELECTRICAL METERING

This table includes new or replacement electrical service systems OR equipment to demonstrate compliance with §130.5(a)/§160.6(a). For multifamily occupancies, submetered systems that provide power to common use areas must meet the following metering requirements. Submetered systems providing power to dwelling units do not.

01	02	F. SERVICE ELECTRICAL METERING 03				04	05	
		Required Metering Capabilities per Table 130.5-A					Field Inspector	
Electrical Service Designation/ Description	Rating[1] (kVA)	Instantaneous Demand (kW)	Historical Peak Demand (kW)	Tracking kWh for user-defined period	kWh per rate period	Location of Requirements in Construction Documents	Pass	Fail
		☐	☐	☐	☐		☐	☐
		☐	☐	☐	☐		☐	☐

[1]FOOTNOTES: If common use areas in a multifamily occupancy are submetered, rating is for submeter size serving common use areas.

CA Building Energy Efficiency Standards - 2022 Nonresidential Compliance | January 2022

AMS American Modular Systems
787 Spreckels Ave., Manteca, CA 95336
Phone (209) 825-1921 Fax (209) 825-7018
www.americanmodular.com

INTELLECTUAL-PROPERTY & PROPRIETARY RIGHTS STATEMENT
COPYRIGHT © AMERICAN MODULAR SYSTEMS (AMS)
AMS OWNS ALL COPYRIGHT AND OTHER INTELLECTUAL-PROPERTY AND PROPRIETARY RIGHTS IN THESE DRAWINGS, SPECIFICATIONS, AND THE MATERIAL CONTAINED HEREIN. CERTAIN ELEMENTS SHOWN IN THESE DOCUMENTS ARE REGISTERED TRADEMARKS OF AMS. ALL PATENTABLE MATERIALS CONTAINED IN THESE DOCUMENTS AND ORIGINATING WITH AMS WILL REMAIN THE SOLE PROPERTY OF AMS. THESE DRAWING, SPECIFICATIONS, AND THE MATERIAL CONTAINED HEREIN MAY NOT BE REPRODUCED, TRANSMITTED, COPIED, DISTRIBUTED, MODIFIED, OR OTHERWISE DISPOSED OF (DIRECTLY OR INDIRECTLY) AND MAY NOT BE USED (IN WHOLE OR IN PART) TO ASSIST IN THE CONSTRUCTION, DESIGN, OR OTHER MAKING OF, OR FOR THE PURPOSE OF FURNISHING ANY INFORMATION FOR THE CONSTRUCTION, DESIGN, OR OTHER MAKING OF, ANY BUILDINGS (MODULAR OR OTHERWISE), DRAWINGS, SPECIFICATIONS, PRINTS, APPARATUS, OR PARTS THEREOF, EXCEPT AS EXPRESSLY PERMITTED BY WRITTEN CONSENT OF, OR IN A WRITTEN AGREEMENT WITH, AMS. SUBMITTAL OR DISTRIBUTION TO MEET OFFICIAL REGULATORY REQUIREMENTS WILL NOT BE CONSTRUED AS PUBLICATION IN DEROGATION OF AMS'S COPYRIGHT OR OTHER INTELLECTUAL-PROPERTY OR PROPRIETARY RIGHTS.

PRE-CHECKED SET NAME
24' x 40' THRU 120' x 40' STANDARD MODULAR BUILDING (LOW SEISMIC)
FORM®

SITE SPECIFIC PROJECT NAME
.
.
.

APPROVED DIV. OF THE STATE ARCHITECT
APP: 04-122050 PC
REVIEWED FOR SS ☑ FLS ☑ ACS ☑ CG ☑
DATE: 12/11/2023

☐ 2022 CBC PRE-CHECK (PC) DOCUMENT
A SEPARATE PROJECT APPLICATION FOR CONSTRUCTION IS REQUIRED.

MANUFACTURER PROFESSIONAL OF RECORD ON PC

LICENSED ARCHITECT RANDALL PATRICK CAVANAGH No. C12631 Ren. 3-31-25 STATE OF CALIFORNIA

THESE DRAWINGS ARE PRELIMINARY AND NOT FOR CONSTRUCTION UNLESS STAMPED & SIGNED BY THE DESIGN PROFESSIONAL OF RECORD.

REVISIONS
1
2
3
4

DRAWN BY:	AA
SCALE:	AS NOTED
DATE:	MM/DD/YY
PROJECT NO:	XXXX-22

SHEET TITLE:
ENERGY CALCULATIONS SUPPLEMENTAL SHEET

SHEET NUMBER:
EN.75

IDENTIFICATION STAMP DIV. OF THE STATE ARCHITECT
APP: 02-122976 INC:
REVIEWED FOR SS ☑ FLS ☑ ACS ☑
DATE: 03/12/2025

TRACY UNIFIED SCHOOL DISTRICT

HMC Architects

3595001000

2101 CAPITOL AVENUE, SUITE 100
SACRAMENTO, CA 95816
916 368 7990 / www.hmcarchitects.com

ISSUE

Δ	DESCRIPTION	DATE
A	ADDENDUM "A"	3/20/25

KEYNOTES

GENERAL NOTES

FACILITY:
JACOBSON ELEMENTARY SCHOOL
1750 W KAVANAGH AVE
TRACY, CA 95376

PROJECT:
JACOBSON ES - TK CLASSROOM

SHEET NAME:
ENERGY CALCULATION SUPPLEMENTAL SHEET

DATE: **04/03/24** | CLIENT PROJ NO: **3595001000**

SHEET:
EN.75
ADDENDUM "A"

PLEASE RECYCLE

Autodesk Docs://3595005000 TUSD TK CLASSROOMS 2025 R22/3595005000-A-TUSD-BOHN-SITE.rvt
12/3/2024 9:55:42 AM

THE LINE SHOWN ABOVE IS EXACTLY ONE INCH LONG AT THIS SHEETS ORIGINAL PAGE SIZE

ELECTRICAL POWER DISTRIBUTION

CALIFORNIA ENERGY COMMISSION

CEC-NRCC-ELC-E

G. SEPARATION OF ELECTRICAL CIRCUITS FOR ENERGY MONITORING

This table includes entirely new or complete replacement electrical power distribution systems to demonstrate compliance with §130.5(b)/§160.6(b). Any load types that are not included in the service do not need to be shown. For multifamily occupancies, submetered systems that provide power to dwelling units do not need to meet these separation requirements and therefore load types on those submetered systems also do not need to be shown.

Electrical Service Designation/ Description:					
01	02	03	04	05	
Load Type per Table 130.5-B[1]	Minimum Required Separation of Load per Table 130.5-B	Compliance Method[2]	Location of Requirements in Construction Documents	Field Inspector	
				Pass	Fail
				☐	☐

NOTES If "Other" is selected under Compliance Method above, please indicate how compliance has been achieved in the space provided below.

[1] FOOTNOTES: For each separate load type, up to 10% of the connected load may be of any type.

[2] Method 1: Switchboards/ motor control centers/ panelboard loads disaggregated for each load type.
Method 2: Switchboards/ motor control centers/ panelboard supply other distribution equipment with loads disaggregated for each load type.
Method 3: Branch circuits serve load types individually & provisions for adding future branch circuit monitoring.
Method 4: Complete metering system measures and reports loads by type.
See Chapter 8 of the Nonresidential Compliance Manual for more detail on Compliance Methods.

ELECTRICAL POWER DISTRIBUTION

CALIFORNIA ENERGY COMMISSION

CEC-NRCC-ELC-E

H. VOLTAGE DROP

This table includes entirely new or complete replacement electrical power distribution systems, or alterations that add, modify or replace both feeders and branch circuits to demonstrate compliance with §130.5(c)/§160.6(c). For alterations, only the altered circuits must demonstrate compliance per §141.0(b)2Piii/§180.2(b) 4Bviic.

NOTES If "Permitted by CA Elec Code" is selected under Compliance Method above, please indicate where the exception applies in the space provided below.

01	02		03	04	05	
Electrical Service Designation/ Description	Combined Voltage Drop on Installed Feeder/Branch Circuit Conductors Compliance Method		Location of Voltage Drop Calculations[1]	Sheet Number for Voltage Drop Calculations in Construction Documents	Field Inspector	
					Pass	Fail
	☐ Voltage drop ≤ 5%	☐ Permitted by CA Elec Code (Exception to §130.5(c))*			☐	☐

[1] FOOTNOTES: Voltage drop calculations may be attached to the permit application outside the construction documents if allowed by the Authority Having Jurisdiction. Select "attached" if applicable. If calculations will be the responsibility of the installing contractor, select "Contractor Responsible".

ELECTRICAL POWER DISTRIBUTION

CALIFORNIA ENERGY COMMISSION

CEC-NRCC-ELC-E

I. CIRCUIT CONTROLS FOR 120-VOLT RECEPTACLES AND CONTROLLED RECEPTACLES

This table includes entirely new or complete replacement electrical power distribution systems to demonstrate compliance with §130.5(d)/§160.6(d). Both controlled and uncontrolled receptacles must be provided in office areas, lobbies, conference rooms, kitchen areas in office spaces, copy rooms and hotel/motel guest rooms.

01	02	03	04	05	06	07	
Room Name or Description	Location/ Type of Controlled Receptacles[1]	Shut-Off Controls	Demand Responsive Controls	Permanent Durable Marking Will be Used	Location of Requirements in Construction Documents	Field Inspector	
						Pass	Fail
				☐		☐	☐

NOTES: If "Other" is selected under Shut-Off Controls above, please indicate how compliance has been achieved in the space provided below.

[1] FOOTNOTES: Receptacles dedicated to refrigerators and water dispensers in kitchens, located a minimum of 6ft above the floor specifically for clocks, network copiers, fax machines, A/V and data equipment other than personal computers in copy rooms, circuits rated more than 20 Amps, or connected to a UPS that are intended to be in continuous use and are marked to differentiate them from other receptacles or circuits are excepted from the requirements.

J. ELECTRIC READY BUILDINGS

This table includes electrical system requirements that must be met when using gas or propane heating, cooking or clothes drying in multifamily occupancies to demonstrate compliance with §160.9.

01	Systems serving multifamily occupancy that use gas or propane include:	☐ Furnaces serving individual dwelling units	☐ Cooktops serving individual dwelling units	☐ Clothes dryers serving individual dwelling units	☐ Clothes dryers in common areas	☐ None of these

ELECTRICAL POWER DISTRIBUTION

CALIFORNIA ENERGY COMMISSION

CEC-NRCC-ELC-E

Gas/ Propane Furnaces Serving Individual Dwelling Units (Heat Pump Space Heater Ready)

	Yes	Requirement
02	☐	A dedicated 240 volt branch circuit shall be installed within 3 feet from the furnace and accessible to the furnace with no obstructions. The branch circuit shall be rated at 30 amps minimum. The blank cover shall be identified as "240V ready". All electrical components shall be installed in accordance with the California Electrical Code.
03	☐	The main electrical service panel shall have a reserved space to allow for the installation of a double pole circuit breaker for a future heat pump space heater installation. The reserved space shall be permanently marked as "For Future 240V use".

Gas/ Propane Cooktops Serving Individual Dwelling Units

	Yes	Requirement
04	☐	A dedicated 240 volt branch circuit shall be installed within 3 feet from the cooktop and accessible to the cooktop with no obstructions. The branch circuit shall be rated at 50 amps minimum. The blank cover shall be identified as "240V ready". All electrical components shall be installed in accordance with the California Electrical Code.
05	☐	The main electrical service panel shall have a reserved space to allow for the installation of a double pole circuit breaker for a future electric cooktop installation. The reserved space shall be permanently marked as "For Future 240V use".

Gas/ Propane Clothes Dryers Serving Individual Dwelling Units

	Yes	Requirement
06	☐	A dedicated 240 volt branch circuit shall be installed within 3 feet from the clothes dryer and accessible to the clothes dryer with no obstructions. The branch circuit shall be rated at 30 amps minimum. The blank cover shall be identified as "240V ready". All electrical components shall be installed in accordance with the California Electrical Code.
07	☐	The main electrical service panel shall have a reserved space to allow for the installation of a double pole circuit breaker for a future electric clothes dryer installation. The reserved space shall be permanently marked as "For Future 240V use".

ELECTRICAL POWER DISTRIBUTION

CALIFORNIA ENERGY COMMISSION

CEC-NRCC-ELC-E

Gas/ Propane Clothes Dryers In Common Areas

	Yes	Requirement
08	☐	Conductors or raceway shall be installed with termination points at the main electrical panel, via subpanels panels if applicable, to a location no more than 3 feet from each gas outlet or a designated location of future electric replacement equipment. Both ends of the conductors or raceway shall be labelled "Future 240V Use." The conductors or raceway and any intervening subpanels, panelboards, switchboards, and busbars shall be sized to meet the future electric power requirements, at the service voltage to the point at which the conductors serving the building connect to the utility distribution system, as specified below. The capacity requirements may be adjusted for demand factors in accordance with the California Electric Code. Gas flow rates shall be determined in accordance with the California Plumbing Code. Capacity shall be one of the following: - 24 amps at 208/240 volts per clothes dryer; - 2.6 kVA for each 10,000 Btu per hour of rated gas input or gas pipe capacity; or - The electrical power required to provide equivalent functionality of the gas-powered equipment as calculated by the responsible person.

K. DECLARATION OF REQUIRED CERTIFICATES OF INSTALLATION

Selections have been made based on information provided in this document. If any selections have been changed by the permit applicant, an explanation should be included in Table E. Additional Remarks. These documents must be provided to the building inspector during construction and can be found online.

YES	NO	Form/Title	Field Inspector	
			Pass	Fail
●	❍	NRCI-ELC-E - Must be submitted for all buildings.	☐	☐

L. DECLARATION OF REQUIRED CERTIFICATES OF ACCEPTANCE

There are no Certificates of Acceptance applicable to electrical power distribution requirements.

ELECTRICAL POWER DISTRIBUTION

CALIFORNIA ENERGY COMMISSION

CEC-NRCC-ELC-E

DOCUMENTATION AUTHOR'S DECLARATION STATEMENT

1. I certify that this Certificate of Compliance documentation is accurate and complete.

Documentation Author Name: JOSE AREVALO	Documentation Author Signature: Jose M Arevalo
Documentation Author Company Name: AMERICAN MODULAR SYSTEMS	Date Signed: 06/30/23
Address: 787 SPRECKELS AVE	CEA Certification Identification (If applicable):
City/State/Zip: MANTECA, CA	Phone: 209-825-1921

RESPONSIBLE PERSON'S DECLARATION STATEMENT

2. I certify the following under penalty of perjury, under the laws of the State of California:
   1. The information provided on this Certificate of Compliance is true and correct.
   2. I am eligible under Division 3 of the Business and Professions Code to accept responsibility for the building design or system design identified on this Certificate of Compliance (responsible designer).
   3. The energy features and performance specifications, materials, components, and manufactured devices for the building design or system design identified on this Certificate of Compliance conform to the requirements of Title 24, Part 1 and Part 6 of the California Code of Regulations.
   4. The building design features or system design features identified on this Certificate of Compliance are consistent with the information provided on other applicable compliance documents, worksheets, calculations, plans and specifications submitted to the enforcement agency for approval with this building permit application.
   5. I understand that a registered copy of this Certificate of Compliance shall be made available with the building permit(s) issued for the building, and made available to the enforcement agency for all applicable inspections, and I will take the necessary steps to accomplish this requirement.
   6. I understand that a registered copy of this Certificate of Compliance is required to be included with the documentation the builder provides to the building owner at occupancy, and I will take the necessary steps to accomplish these requirements.

Responsible Designer Name: Randall Cavanagh	Responsible Designer Signature:
Company: American Modular systems	Date Signed: 6-28-23
Address: 787 Spreckels Avenue	License: C12631
City/State/Zip: Manteca, Ca 95363	Phone: (209)825-1921

For assistance or questions regarding the Energy Standards, contact the Energy Hotline at: 1-800-772-3300

CERTIFICATE OF COMPLIANCE – USER INSTRUCTIONS	NRCC-ELC-E
Electrical Power Distribution	(Page 1 of 3)

A. General Information
1. Enter the City the project is located in.
2. Climate Zone: Select from dropdown.
3. Select the applicable Occupancy Types within the Project.

B. Project Scope
1. Enter the Electrical Service Designation/Description.
2. Scope of Work: Select from dropdown.
3. Enter the kVA Rating.
4. Check if the Utility Provided Metering System meets Exception to §130.5(a)/§160.6(a)3.
5. Check if the System is subject to CA Elec Code Article 517 Exception to §130.5(a)&(b).
6. Demand Response Controls static text.
7. Check if power is provided to dwelling units/common living areas only in a multifamily occupancy.

C. Compliance Results
1. Results in this table are automatically calculated from data input and calculations in Tables F through J.

D. Exceptional Conditions
1. This table is auto-filled with uneditable comments because of selections made or data entered in tables throughout the form.

E. Additional Remarks
1. Enter any notes or comments for the AHJ.

F. Service Electrical Metering
1. This field is filled out automatically.
2. This field is filled out automatically.
3. Instantaneous Demand checkbox is always checked.
   Historical Peak Demand checkbox is checked automatically.
   Tracking kWh for user-defined period checkbox is always checked.
   kWh per rate period is checked automatically.
4. Enter the Location of Requirements in Construction Documents.
5. This is a Pass or Fail checkbox for the field inspector.

CERTIFICATE OF COMPLIANCE – USER INSTRUCTIONS	NRCC-ELC-E
Electrical Power Distribution	(Page 2 of 3)

G. Separation of Electrical Circuits for Energy Monitoring
1. Load Type per Table 130.5-B: Select from dropdown.
2. This field is filled out automatically.
3. Compliance Method: Select from dropdown.
4. Enter the Location of Requirements in the Construction Documents.
5. This is a Pass or Fail checkbox for the field inspector.

H. Voltage Drop
1. This field is filled out automatically.
2. Select the Combined Voltage Drop on Installed Feeder/Branch Circuit Conductors Compliance Method.
3. Location of Voltage Drop Calculation: Select from dropdown.
4. Enter the Sheet Number for Voltage Drop Calculation in Construction Documents.
5. This is a Pass or Fail checkbox for the field inspector.

I. Circuit Controls for 120-Volt Receptacles and Controlled Receptacles
1. Enter the Room Name or Description.
2. Location/Type of Controlled Receptacles: Select from dropdown.
3. Shut-Off Controls: Select from dropdown.
4. Demand Responsive Controls: Select from dropdown.
5. Check if a Permanent Durable Marking Will be Used.
6. Enter the Location of Requirements in the Construction Documents.
7. This is a Pass or Fail checkbox for the field inspector.

J. Electric Ready Buildings
1. Select the applicable systems serving multifamily occupancy that use gas or propane.

2-8. Check Yes to verify your project meets the requirements.

K. Declaration of Required Certificates of Installation
Selections have been automatically made based on information provided in this document. If any selections have been changed by the permit applicant, an explanation should be included in Table E. Additional Remarks.

L. Declaration of Required Certificates of Acceptance

CERTIFICATE OF COMPLIANCE – USER INSTRUCTIONS	NRCC-ELC-E
Electrical Power Distribution	(Page 3 of 3)

Selections have been made based on information provided in this document. If any selections have been changed by the permit applicant, an explanation should be included in Table E. Additional Remarks.

Documentation Declaration Statements
1. The person who prepared the NRCC will sign and complete the fields for their name, company (if applicable), address, phone number, certification information (if applicable), date and signature.
2. The person who is assuming responsibility for the project being built to comply with Title 24, Part 6, will complete the fields for their name, company (if applicable), address, phone number, license number (if applicable), date and signature.

American Modular Systems — Gen7 healthy schools, delivered

April 30, 2023

DSA
Division of the State Architect
5100 Q street
Sacramento, CA 95811

This letter is in regards to the 2022 Energy/CALGreen Code DSA Plan Review, **2022 CBC - AMS PC Submissions.**

American Modular Systems (AMS) shall conform their on-site construction practices to comply with the required construction waste management practices illustrated in the Part 11, Title 24 California Green Building Code (CDC). The intent of this letter is to inform, illustrate, and demonstrate that AMS and its buildings comply to the following applicable code section illustrated below:

2022 California Green Building Code (CGC) – (Part 11, Title 24, CCR)

- ***Section 5.408.1 – Construction Waste Management***
  If the construction waste management takes place in the factory, provide program specifics to CALGreen plan reviewer which identifies:
  1. Percentage of waste to be salvaged or recycled with a minimum of 65% of nonhazardous construction waste.
  2. Procedures for waste management reporting.
  3. Type of waste to be diverted.
  4. If sorted or bulk mixed
  5. If handled by a waste management company or a diversion facility.
  6. If calculated by weight or volume.

AMS shall comply to this section by the following procedure & practice:
1. AMS shall be responsible for the organization and management of construction waste on the factory site, including the responsibility of recycling waste that is a minimum of 65% of non-hazardous construction waste.
2. AMS shall order rental waste & recycling bin(s) from a licensed and authorized waste management company from the City of Manteca, or equivalent in that matter. Upon approval, the bin(s) shall be dropped off on factory site by hired waste management company. As the bin(s) reach full capacity of construction waste, AMS schedules a pick-up for the bin(s) and is given invoice receipts from the waste management company.
3. AMS shall station the bin(s) whereas needed for AMS plant workers to salvage and/or recycle construction waste during the work day. **Each bin is labeled to help sort the different types of construction waste (e.g. Wood, Scrap Metal, Glass, Leather).**
4. AMS plant workers and management are responsible for **sorting** each bin with the correct types of construction waste listed above.
5. The invoice provided by the **hired waste management company** provides a description of the bin(s) and additional information.
6. Invoice receipts provides calculated **weights** of each bin & pricing of rental usage.

The PC plans and specifications will not reflect and show these procedures for any project. Any questions regarding the construction waste management procedures, please feel free to contact AMS's office.

Thank you,

Randall P. Cavanagh

LICENSED ARCHITECT — RANDALL PATRICK CAVANAGH — No. C12631 — Ren. 03-31-25 — STATE OF CALIFORNIA

American Modular Systems, Inc., 787 Spreckels Ave. Manteca, California 95336, Ph: 209 825 1921 Fax: 209 825 7018
www.americanmodular.com

Page **1** of **1**

AMS® American Modular Systems
787 Spreckels Ave., Manteca, CA 95336
Phone (209) 825-1921 Fax (209) 825-7018
www.americanmodular.com

INTELLECTUAL-PROPERTY & PROPRIETARY RIGHTS STATEMENT
COPYRIGHT © AMERICAN MODULAR SYSTEMS (AMS)
AMS OWNS ALL COPYRIGHT AND OTHER INTELLECTUAL-PROPERTY AND PROPRIETARY RIGHTS IN THESE DRAWINGS, SPECIFICATIONS, AND THE MATERIAL CONTAINED HEREIN. CERTAIN ELEMENTS SHOWN IN THESE DOCUMENTS ARE REGISTERED TRADEMARKS OF AMS. ALL PATENTABLE MATERIALS CONTAINED IN THESE DOCUMENTS AND ORIGINATING WITH AMS WILL REMAIN THE SOLE PROPERTY OF AMS. THESE DRAWING, SPECIFICATIONS, AND THE MATERIAL CONTAINED HEREIN MAY NOT BE REPRODUCED, TRANSMITTED, COPIED, DISTRIBUTED, MODIFIED, OR OTHERWISE DISPOSED OF (DIRECTLY OR INDIRECTLY) AND MAY NOT BE USED (IN WHOLE OR IN PART) TO ASSIST IN THE CONSTRUCTION, DESIGN, OR OTHER MAKING OF, OR FOR THE PURPOSE OF FURNISHING ANY INFORMATION FOR THE CONSTRUCTION, DESIGN, OR OTHER MAKING OF, ANY BUILDINGS (MODULAR OR OTHERWISE), DRAWINGS, SPECIFICATIONS, PRINTS, APPARATUS, OR PARTS THEREOF, EXCEPT AS EXPRESSLY PERMITTED BY WRITTEN CONSENT OF, OR IN A WRITTEN AGREEMENT WITH, AMS. SUBMITTAL OR DISTRIBUTION TO MEET OFFICIAL REGULATORY REQUIREMENTS WILL NOT BE CONSTRUED AS PUBLICATION IN DEROGATION OF AMS'S COPYRIGHT OR OTHER INTELLECTUAL-PROPERTY OR PROPRIETARY RIGHTS.

PRE-CHECKED SET NAME
24' x 40' THRU 120' x 40' STANDARD MODULAR BUILDING (LOW SEISMIC)
FORM®

SITE SPECIFIC PROJECT NAME
.
.
.

APPROVED
DIV. OF THE STATE ARCHITECT
APP: 04-122050 PC
REVIEWED FOR
SS ☑ FLS ☑ ACS ☑ CG ☑
DATE: 12/11/2023

☐ 2022 CBC PRE-CHECK (PC) DOCUMENT
A SEPARATE PROJECT APPLICATION FOR CONSTRUCTION IS REQUIRED.

MANUFACTURER PROFESSIONAL OF RECORD ON PC

LICENSED ARCHITECT — RANDALL PATRICK CAVANAGH — No. C12631 — Ren. 3-31-25 — STATE OF CALIFORNIA

THESE DRAWINGS ARE PRELIMINARY AND NOT FOR CONSTRUCTION UNLESS STAMPED & SIGNED BY THE DESIGN PROFESSIONAL OF RECORD.

REVISIONS
1
2
3
4

DRAWN BY:	AA
SCALE:	AS NOTED
DATE:	MM/DD/YY
PROJECT NO:	XXXX-22

SHEET TITLE:
ENERGY CALCULATIONS SUPPLEMENTAL SHEET

SHEET NUMBER:
EN.76

IDENTIFICATION STAMP
DIV. OF THE STATE ARCHITECT
APP: 02-122976 INC:
REVIEWED FOR
SS ☑ FLS ☑ ACS ☑
DATE: 03/12/2025

TRACY UNIFIED SCHOOL DISTRICT

HMC Architects

3595001000

2101 CAPITOL AVENUE, SUITE 100
SACRAMENTO, CA 95816
916 368 7990 / www.hmcarchitects.com

ISSUE

Δ	DESCRIPTION	DATE
A	ADDENDUM "A"	3/20/25

KEYNOTES

GENERAL NOTES

FACILITY:
JACOBSON ELEMENTARY SCHOOL
1750 W KAVANAGH AVE
TRACY, CA 95376

PROJECT:
JACOBSON ES - TK CLASSROOM

SHEET NAME:
ENERGY CALCULATIONS SUPPLEMENTAL SHEET

DATE: **04/03/24** CLIENT PROJ NO: **3595001000**

SHEET:
EN.76
ADDENDUM "A"

PLEASE RECYCLE

Autodesk Docs://3595005000 TUSD TK CLASSROOMS 2025 R22/3595005000-A-TUSD-BOHN-SITE.rvt
12/3/2024 9:55:48 AM

SEE SHEET A1.0-N FOR SITE-SPECIFIC SHEET

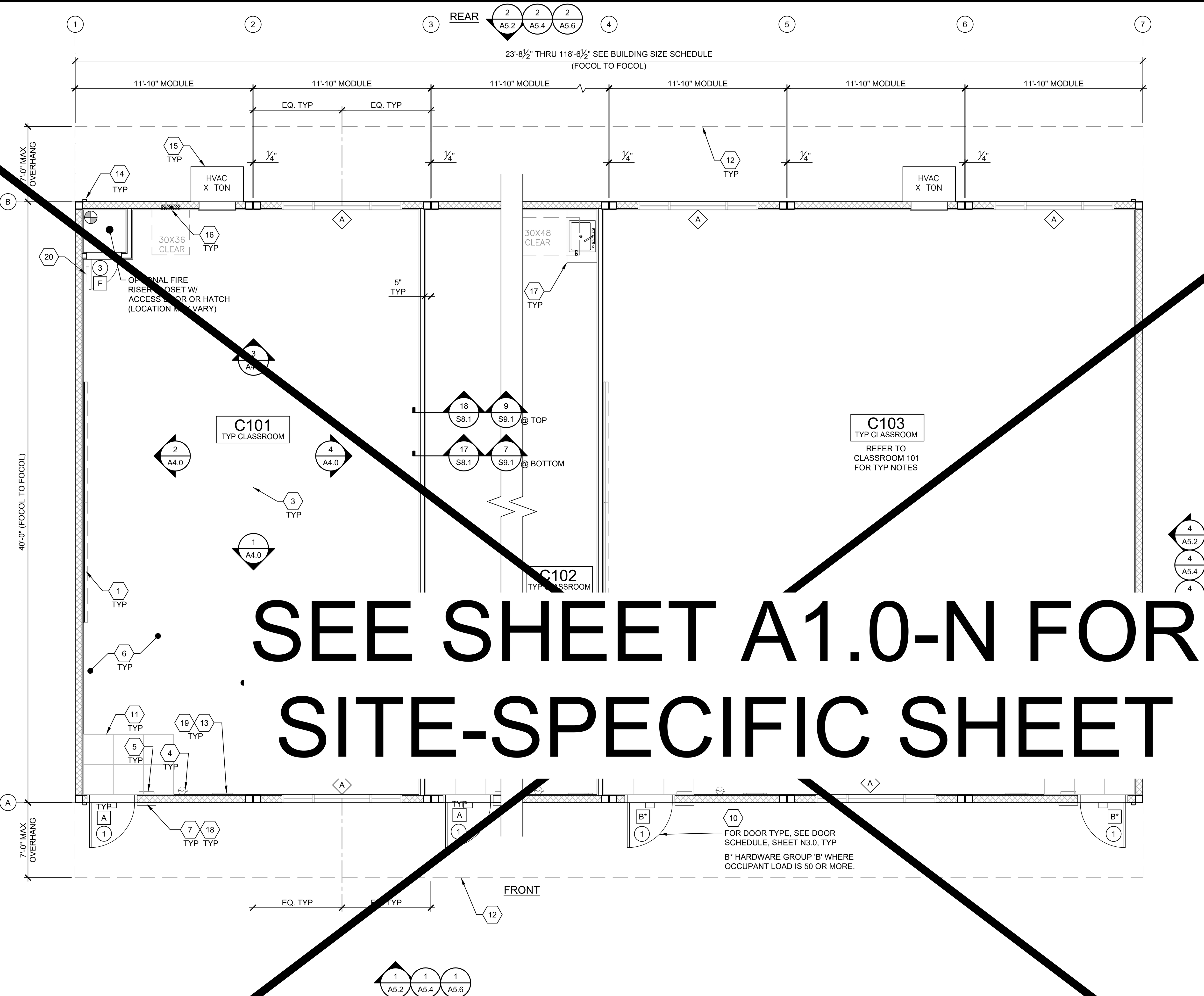

BUILDING SIZE SCHEDULE				
	BUILDING SIZE (FT)	TOTAL # OF 12'-0" WIDE MODULES	TOTAL # OF CENTER MODULES	OVERALL BUILDING WIDTH[1]
☐	24'x40'	2	0	23'-8½"
☐	36'x40'	3	1	35'-6¾"
☐	48'x40'	4	2	47'-5"
☐	60'x40'	5	3	59'-3¼"
☐	72'x40'	6	4	71'-1½"
☐	84'x40'	7	5	82'-11¾"
☐	96'x40'	8	6	94'-10"
☐	108'x40'	9	7	106'-8¼"
☐	120'x40'	10	8	118'-6½"

NOTES:

1. TOTAL BUILDING WIDTH INCLUDES 1/4" PER MODULAR CONSTRUCTION TOLERANCE PER FOUNDATION SHEETS S1.0, S1.1, S1.2, & S1.3.

TYPICAL FLOOR PLAN

SCALE: 1/4" = 1'-0" A

1. (2) 8'x4' MARKER BOARDS - SEE SHEET A4.0
2. NOT USED
3. TYP MOD LINE
4. FIRE EXTINGUISHER - TOP OF HANDLE @ +48" A.F.F. 4" MAX PROTRUSION FROM WALL IF BOTTOM OF FIRE EXTINGUISHER IS ABOVE 27" A.F.F. - SEE 19/N4.0
5. TACTILE EXIT SIGN PER DETAIL 10/N4.0 (BY OTHERS)
6. EGRESS AREA
7. ROOM SIGNAGE AND I.S.A. PER DETAILS 5&9/N4.0 (BY OTHERS)
8. NOT USED
9. CARPET
10. EGRESS DOOR
11. NON-ABSORBENT FLOOR AREA (2'-0" MIN. IN ALL DIRECTIONS @ ALL ENTRY DOOR) CHANGES IN LEVEL ARE NOT PERMITTED IN DOOR MANEUVERING CLEARANCE NON-ABSORBENT MATERIAL SHALL BE FLUSH WITH CARPET (11B-404.2.4).
12. OPTIONAL OVERHANG
13. OCCUPANT LOAD SIGN PER DETAIL 11/N4.0 (BY OTHERS)
14. DOWNSPOUT - DISCHARGE TO SPLASH BLOCK (U.O.N.) (QUANTITY AND LOCATION MAY VARY)
15. HVAC - SEE MECHANICAL AND NOTES ON EXTERIOR ELEVATIONS.
16. ELECTRICAL PANEL (LOCATION MAY VARY)
17. CASEWORK WITH SINK - REFER TO 17/-
18. FLOOR LIVE LOAD SIGN PER 2022 CBC SECTION 106.1. *(FLOOR LIVE LOAD SIGN IS REQUIRED ONLY FOR COMMERCIAL OR INSTITUTIONAL BUILDINGS DESIGNED WITH LIVE LOADS EXCEEDING 50 PSF) WHERE 150 PSF LIVE LOAD IS SPECIFIED, THE TEXT "LONG TERM STORAGE NOT PERMITTED" SHALL ALSO BE INCLUDED ON THE SIGN.*
19. ASSISTIVE LISTENING (AL) SIGN POSTED IN PROMINENT PLACE AT OR NEAR THE ENTRANCE PER 17/N4.0.
20. FIRE RISER SIGNAGE WITH 2" LETTERING WITH ⅜" MIN. STROKE ON THE CONTRASTING BACKGROUND

KEY NOTES

1. REFER TO SHEETS N5.0 AND N5.1 FOR POSSIBLE ADDITIONAL FLOOR PLAN CONFIGURATIONS.
2. OPTIONAL INTERIOR WALLS MAY OCCUR THROUGHOUT THE BUILDING AS CONSTRUCTED PER SHEETS S8.1 OR S9.1. THE PC TITLE 24 HAS BEEN RUN FOR THE WORST CASE ENVELOPE BASED ON AREA.
3. PANIC HARDWARE COMPLYING WITH C.B.C. 1010.2.9 IS REQUIRED TO BE INSTALLED WHEN THE CONFIGURATION OF ANY ROOM PROVIDES AN OCCUPANT LOAD OF 50 OR GREATER.
4. IF OCCUPANCY LOAD EXCEEDS 50, PROVIDE A SECOND EXIT DOOR, PER CBC TABLE 1006.2.1.
5. FOR EVERY ROOM OR SPACE USED FOR ASSEMBLY OR CLASSROOM, PROVIDE AN OCCUPANT LOAD SIGN (BY OTHERS) IN A CONSPICUOUS PLACE, NEAR THE MAIN EXIT, PER C.B.C. SECTION 1004.9.
6. ALL PRIMARY EXTERIOR DOOR ENTRIES SHALL BE COVERED TO PREVENT WATER INTRUSION BY USING NONABSORBENT FLOOR AND WALL FINISHES WITHIN AT LEAST 2 FEET AROUND AND PERPENDICULAR TO OPENING, PER CALGREEN, SECTION 5.407.2.2.1.
7. PRIMARY EXTERIOR DOOR ENTRIES SHALL HAVE AT LEAST ONE OF THE FOLLOWING:
   - INSTALLED AWNING AT LEAST 4 FEET IN DEPTH (BY OTHERS).
   - OPTIONAL SIDE WALL CANOPY (4 FEET IN DEPTH) PER SHEET S5.4A.
   - ROOF OVERHANG AT LEAST 4 FEET IN DEPTH.
   - DOOR RECESSED AT LEAST 4 FEET.
   - OTHER METHODS WHICH PROVIDE EQUIVALENT PROTECTION (BY OTHERS).
8. WINDOW PLACEMENT & SIZE MAY VARY. THE WINDOW GLASS SHALL NOT EXCEED THE AREA LISTED IN THE WINDOW GLAZING AREA TABLE IN SHEET N3.0
9. CABINETRY MAY BE INSTALLED ON ONE OR BOTH SIDES OF INTERIOR WALLS AND THE INSIDE FACE OF EXTERIOR WALLS WHEN INSTALLED PER THE DETAIL 8/A7.1.
10. IF FIRE RATED WALLS ARE REQUIRED DUE TO SITE SPECIFIC REQUIREMENTS, REFER TO SHEET A8.0 FOR 1 HOUR RATED DETAILS

SITE NOTE

3/16:12 (1%) MINIMUM TO 1/4:12 (2%) MAXIMUM GRADE FROM FACE OF BUILDING MUST BE ADHERED TO FOR WATER RUN-OFF. PONDING MAY OCCUR AROUND THE PERIMETER OF THE BUILDING.

SHEET NOTES

3. IN THE EVENT THAT A PC CLASSROOM IS DESIGNED TO CONNECT TO ANOTHER PC CLASSROOM OR RESTROOM, INTERIOR SOUND TRANSMISSION IN THE INTERIOR ADJOINING WALL AND FLOOR/CEILING SHALL MEET THE MINIMUM REQUIREMENT OF A STC OF 40, PER CALGREEN CODE SECTION 507.4.3. (EXAMPLES OF QUALIFYING ASSEMBLIES SHOWN BELOW).

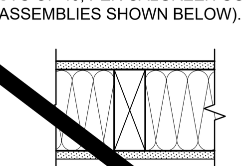

(2) LAYER 5/8" GYPSUM BOARD SECURED TO MIN. 2x4 STUDS @ 24" O.C. MAX. w/ 3½" THK. BATT INSULATION

STC=40
TEST REF.: AUDIO ALLOY L.L.C TEST NUMBER: OL-05-1003

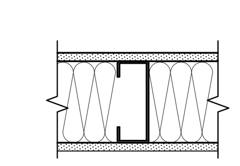

(2) LAYER 5/8" GYPSUM BOARD SECURED TO MIN. 2½" METAL STUDS @ 24" O.C. MAX. W/3½ THK BATT INSULATION

STC=48
TEST REF.: AUDIO ALLOY L.L.C TEST NUMBER OL-92-410

4. MINIMUM WINDOW & DOOR RATINGS: ALL WINDOWS AND DOORS SPECIFIED ON THE SCHEDULES FOUND ON SHEET N3.0 OF THIS PACKAGE SHALL MEET A MINIMUM STC RATING OF 27.

WALL LEGEND

(NO HATCH) 2X4 WALLS

2X6 WALLS

SYMBOLS LEGEND

- ⬡X = KEY NOTE - SEE KEY NOTES ABOVE
- ⓧ = DOOR TYPE - SEE SCHEDULE, SHEET N3.0
- ☒ = DOOR HARDWARE - SEE HARDWARE SCHEDULE, SHEET N3.0
- ◇X = WINDOW TYPE - SEE SCHEDULE, SHEET N3.0

16

CLASSROOM SINK - OPTIONAL

IN-ROOM SINK OPTION
BASE CABINET WITH SOLID SURFACE OR PLASTIC LAMINATE COUNTERTOP AND SINK. CABINET SHALL HAVE PLASTIC LAMINATE FINISH.
CABINET WITH SINK SHALL BE ACCESSIBLE - SEE DETAIL 12/P2.0.

FOR SINK HEIGHT & DIMENSIONS, SEE DETAIL 8/P2.0.

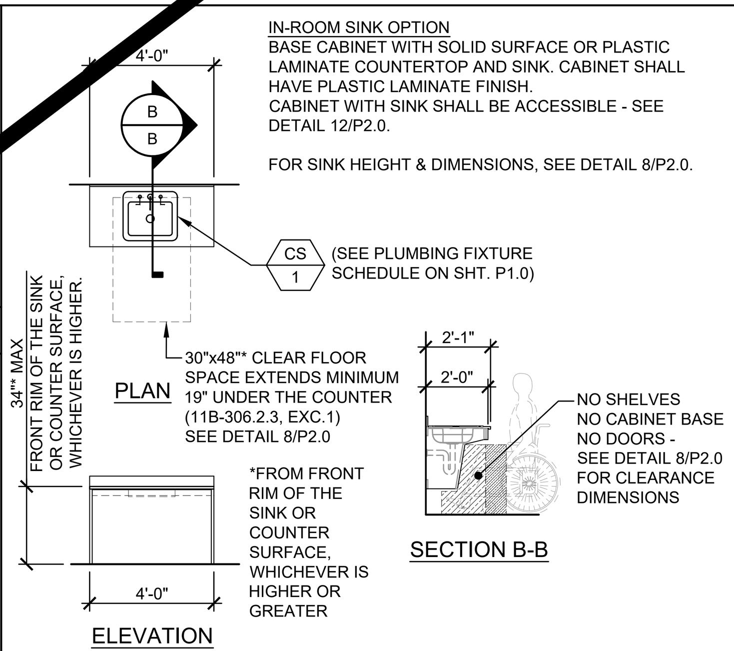

SCALE: 1/4" = 1'-0" 17

ENERGY CONTROLS

1. DEMAND RESPONSE CONTROLS: ONLY REQUIRED IN BUILDINGS LARGER THAN 10,000 S.F., THEREFORE, NOT REQUIRED FOR THIS PC.
2. AUTOMATIC DAYLIGHTING CONTROLS: NOT REQUIRED IN ROOMS WHERE COMBINED INSTALLED LIGHTING POWER IN COMBINED SKYLIT & PRIMARY DAYLIT ZONES ARE <120 WATTS. INSTALLED WATTAGE IN PRIMARY SIDELIT DAY LIT ZONE IS 90 WATTS (2x 45w, AS SHOWN ON SHEET E1.0). THEREFORE, AUTOMATIC DAYLIGHTING CONTROLS ARE ONLY REQUIRED WHEN "SOLATUBES" ARE INSTALLED. SEE A1.1
3. ENERGY MANAGEMENT CONTROL SYSTEM (EMCS) CONNECTION: PER TITLE 24 CODE, "AN EMCS MAY BE INSTALLED TO COMPLY WITH THE REQUIREMENTS OF ONE OR MORE LIGHTING CONTROLS IF IT MEETS THE MINIMUM REQUIREMENTS". PC MAY CONTAIN OCCUPANCY SENSORS AND PHOTOCELL CONTROL LIGHTING, IN THAT CASE, AN EMCS IS NOT REQUIRED FOR THIS PC.
4. SOLAR-READY ZONE REQUIREMENTS: REQUIREMENTS & TABLE CAN BE FOUND ON SHEET A2.0

NOTE:
ANY MONITORING EQUIPMENT OR ASSOCIATED SENSORS ARE SITE SPECIFIC AND ARE NOT INCLUDED IN THE BASE PC.

ENERGY NOTES

ACOUSTIC CONTROLS

1. WHEN THE PRE-CHECK (PC) BUILDING IS SITE ADAPTED, THE BUILDING AND SITE FEATURES SHALL COMPLY WITH THE CALGREEN CODE, SECTION 5.507.4, FOR THE SPECIFIC SITE LOCATION.
2. MINIMUM WALL ASSEMBLIES: WALL ASSEMBLIES SHALL BE CONSTRUCTED PER DETAIL SHEETS A5.3, A5.5, A5.7, & A8.0, WITH EITHER 2x4 WOOD STUDS OR 6" STEEL STUDS PER LISTED OPTIONS. MINIMUM STC RATINGS LISTED BELOW ARE PER THE CATALOG OF STC & IIC RATINGS FOR WALL AND FLOOR/CEILING ASSEMBLIES, PRODUCED BY THE OFFICE OF NOISE CONTROL, CA DEPARTMENT OF HEALTH SERVICES.

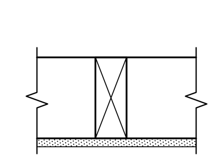

(1) LAYER 1/2" GYPSUM BOARD SECURED TO MIN. 2x4 STUDS @ 16" O.C. MAX.

STC=28
(CATALOG SECTION 1.2.1.5.4.1)
TEST REF.: NATIONAL RESEARCH COUNCIL OF CANADA - NRC #66

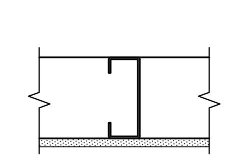

(1) LAYER 1/2" GYPSUM BOARD SECURED TO MIN. 2½" METAL STUDS @ 24" O.C. MAX.

STC=27
(CATALOG SECTION 1.3.2.5.4.1)
TEST REF.: NATIONAL RESEARCH COUNCIL OF CANADA - NRC #66

ACOUSTIC NOTES

AMS American Modular Systems
787 Spreckels Ave., Manteca, CA 95336
Phone (209) 825-1921 Fax (209) 825-7018
www.americanmodular.com

INTELLECTUAL-PROPERTY & PROPRIETARY RIGHTS STATEMENT
COPYRIGHT © AMERICAN MODULAR SYSTEMS (AMS)
AMS OWNS ALL COPYRIGHT AND OTHER INTELLECTUAL-PROPERTY AND PROPRIETARY RIGHTS IN THESE DRAWINGS, SPECIFICATIONS, AND THE MATERIAL CONTAINED HEREIN. CERTAIN ELEMENTS SHOWN IN THESE DOCUMENTS ARE REGISTERED TRADEMARKS OF AMS. ALL PATENTABLE MATERIALS CONTAINED IN THESE DOCUMENTS AND ORIGINATING WITH AMS WILL REMAIN THE SOLE PROPERTY OF AMS. THESE DRAWING, SPECIFICATIONS, AND THE MATERIAL CONTAINED HEREIN MAY NOT BE REPRODUCED, TRANSMITTED, COPIED, DISTRIBUTED, MODIFIED, OR OTHERWISE DISPOSED OF (DIRECTLY OR INDIRECTLY) AND MAY NOT BE USED (IN WHOLE OR IN PART) TO ASSIST IN THE CONSTRUCTION, DESIGN, OR OTHER MAKING OF, OR FOR THE PURPOSE OF FURNISHING ANY INFORMATION FOR THE CONSTRUCTION, DESIGN, OR OTHER MAKING OF, ANY BUILDINGS (MODULAR OR OTHERWISE), DRAWINGS, SPECIFICATIONS, PRINTS, APPARATUS, OR PARTS THEREOF, EXCEPT AS EXPRESSLY PERMITTED BY WRITTEN CONSENT OF, OR IN A WRITTEN AGREEMENT WITH, AMS. SUBMITTAL OR DISTRIBUTION TO MEET OFFICIAL REGULATORY REQUIREMENTS WILL NOT BE CONSTRUED AS PUBLICATION IN DEROGATION OF AMS'S COPYRIGHT OR OTHER INTELLECTUAL-PROPERTY OR PROPRIETARY RIGHTS.

PRE-CHECKED SET NAME
24' x 40' THRU 120' x 40'
STANDARD MODULAR BUILDING
(LOW SEISMIC)
FORM®

SITE SPECIFIC PROJECT NAME
.
.
.

APPROVED
DIV. OF THE STATE ARCHITECT
APP: 04-122050 PC
REVIEWED FOR
SS ☑ FLS ☑ ACS ☑ CG ☑
DATE: 12/11/2023

☐ 2022 CBC PRE-CHECK (PC) DOCUMENT
A SEPARATE PROJECT APPLICATION FOR CONSTRUCTION IS REQUIRED.

MANUFACTURER PROFESSIONAL OF RECORD ON PC

LICENSED ARCHITECT RANDALL PATRICK CAVANAGH No. C12631 Ren. 3-31-25 STATE OF CALIFORNIA

THESE DRAWINGS ARE PRELIMINARY AND NOT FOR CONSTRUCTION UNLESS STAMPED & SIGNED BY THE DESIGN PROFESSIONAL OF RECORD.

REVISIONS
1
2
3
4

DRAWN BY:	AA
SCALE:	AS NOTED
DATE:	MM/DD/YY
PROJECT NO:	XXXX-22

SHEET TITLE:
TYPICAL FLOOR PLAN

SHEET NUMBER:
A1.0

PLEASE RECYCLE

IDENTIFICATION STAMP
DIV. OF THE STATE ARCHITECT
APP: 02-122976 INC:
REVIEWED FOR
SS ☑ FLS ☑ ACS ☑
DATE: 03/12/2025

TRACY UNIFIED SCHOOL DISTRICT

HMC Architects

3595001000

2101 CAPITOL AVENUE, SUITE 100
SACRAMENTO, CA 95816
916 368 7990 / www.hmcarchitects.com

ISSUE

Δ	DESCRIPTION	DATE
A	ADDENDUM "A"	3/20/25

KEYNOTES

GENERAL NOTES

FACILITY:
JACOBSON ELEMENTARY SCHOOL
1750 W KAVANAGH AVE
TRACY, CA 95376

PROJECT:
JACOBSON ES - TK CLASSROOM

SHEET NAME:
TYPICAL FLOOR PLAN

DATE: 04/03/24 | CLIENT PROJ NO: 3595001000

SHEET:
A1.0
ADDENDUM "A"

THE LINE SHOWN ABOVE IS EXACTLY ONE INCH LONG AT THIS SHEETS ORIGINAL PAGE SIZE

Autodesk Docs://3595005000 TUSD TK CLASSROOMS 2025 R22/3595005000-A-TUSD-BOHN-SITE.rvt
12/3/2024 9:55:36 AM

THE LINE SHOWN ABOVE IS EXACTLY ONE INCH LONG AT THIS SHEETS ORIGINAL PAGE SIZE

SEE SHEET A1.2-N FOR SITE-SPECIFIC SHEET

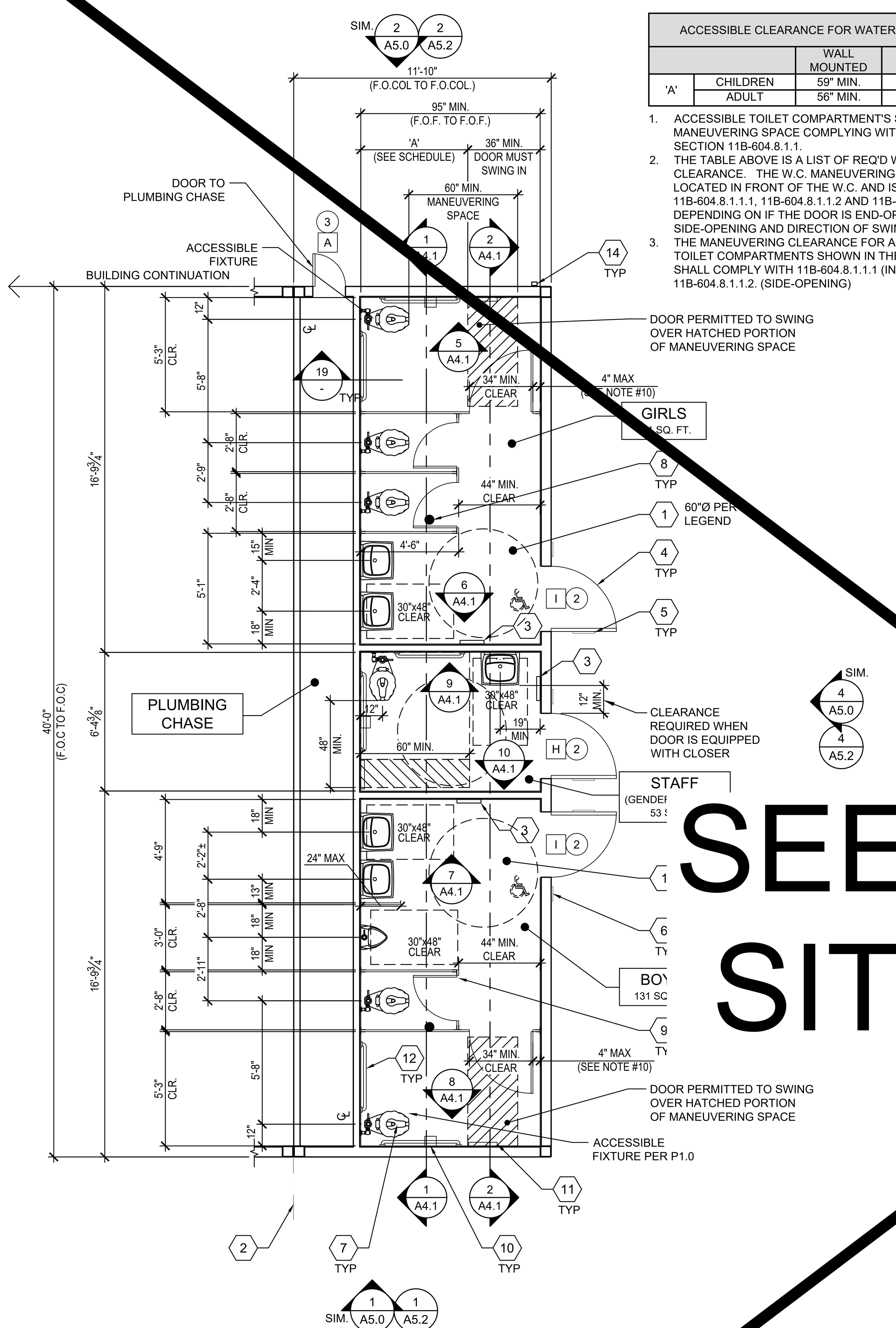

BOYS, GIRLS & STAFF RESTROOM FLOOR PLAN OPTION
AGE RANGE: 3-4
SCALE: 1/4" = 1'-0" | A

ACCESSIBLE CLEARANCE FOR WATER CLOSETS			
		WALL MOUNTED	FLOOR MOUNTED
'A'	CHILDREN	59" MIN.	59" MIN.
	ADULT	56" MIN.	59" MIN.

1. ACCESSIBLE TOILET COMPARTMENT'S SHALL HAVE A MANEUVERING SPACE COMPLYING WITH 2022 CBC SECTION 11B-604.8.1.1.
2. THE TABLE ABOVE IS A LIST OF REQ'D WATER CLOSET CLEARANCE. THE W.C. MANEUVERING SPACE IS LOCATED IN FRONT OF THE W.C. AND IS DESCRIBED IN 11B-604.8.1.1.1, 11B-604.8.1.1.2 AND 11B-604.8.1.1.3 DEPENDING ON IF THE DOOR IS END-OPENING OR SIDE-OPENING AND DIRECTION OF SWING.
3. THE MANEUVERING CLEARANCE FOR ALL ACCESSIBLE TOILET COMPARTMENTS SHOWN IN THESE PLANS SHALL COMPLY WITH 11B-604.8.1.1.1 (IN-SWINGING) & 11B-604.8.1.1.2. (SIDE-OPENING)

BOYS & GIRLS RESTROOM FLOOR PLAN OPTION
AGE RANGE: 3-4
SCALE: 1/4" = 1'-0" | B

ACCESSIBLE CLEARANCE FOR WATER CLOSETS			
		WALL MOUNTED	FLOOR MOUNTED
'A'	CHILDREN	59" MIN.	59" MIN.

1. ACCESSIBLE TOILET COMPARTMENT'S SHALL HAVE A MANEUVERING SPACE COMPLYING WITH 2022 CBC SECTION 11B-604.8.1.1.
2. THE TABLE ABOVE IS A LIST OF REQ'D WATER CLOSET CLEARANCE. THE W.C. MANEUVERING SPACE IS LOCATED IN FRONT OF THE W.C. AND IS DESCRIBED IN 11B-604.8.1.1.1, 11B-604.8.1.1.2 AND 11B-604.8.1.1.3 DEPENDING ON IF THE DOOR IS END-OPENING OR SIDE-OPENING AND DIRECTION OF SWING.
3. THE MANEUVERING CLEARANCE FOR ALL ACCESSIBLE TOILET COMPARTMENTS SHOWN IN THESE PLANS SHALL COMPLY WITH 11B-604.8.1.1.1 (IN-SWINGING) & 11B-604.8.1.1.2. (SIDE-OPENING)

KEY NOTES

1. CLEAR FLOOR SPACE AREA
2. TYP. MOD LINE
3. PAPER TOWEL OR HAND DRYER (BY OTHERS) MAXIMUM PROJECTION 4" INTO PATH OF TRAVEL AND SHALL NOT ENCROACH THE LAV CLEAR FLOOR SPACE
4. DOOR PER SCHEDULE ON SHEET N3.0, TYP.
5. RESTROOM SIGNAGE (BY OTHERS) PER DETAILS 1-9, SHEET N4.0
6. ROOM AND ISA SIGNAGE (BY OTHERS) PER DETAILS 5&9/N4.0
7. PLUMBING FIXTURE PER P1.0
8. FLOOR DRAIN (LOCATION MAY VARY) - PER P1.0. 1:48 FLOOR SLOPE MAX
9. TOILET PARTITIONS (ACCURATE, SOLID PLASTIC, OR EQUAL)
10. TOILET TISSUE DISPENSER PER ACCESSIBLE HEIGHTS TABLE 10/P2.0
11. TOILET SEAT COVER DISPENSER PER P1.0 (BRADLEY MODEL 508-32, OR EQUAL)
12. GRAB BARS - SEE 6/A7.1
13. NOT USED
14. DOWNSPOUT - DISCHARGE TO SPLASH BLOCK (U.N.O.) (QUANTITY AND LOCATION MAY VARY)

GENERAL NOTES

1. DIMENSIONS ARE TO FACE OF FINISH (F.O.F.) UNLESS NOTED OTHERWISE (i.e. F.O.C., ℄)
2. RESTROOM CONFIGURATION MAY VARY PER BUILDING CONFIGURATION.
3. RESTROOM MODULE OCCURS ONLY AT END OF BUILDING. SINGLE RESTROOMS MAY OCCUR IN ANY PART OF A BUILDING.
4. RESTROOM MODULE CANNOT STAND ALONE AND SHALL BE ASSEMBLED TOGETHER WITH AT LEAST ONE OTHER MODULE OF THE SAME SIZE.
5. INTERIOR WALLS MAY OCCUR THROUGHOUT BUILDING. REFER TO SHEET S8.1 FOR ATTACHMENTS.
6. REFER TO SCHEDULE 10/P2.0 FOR ACCESSIBLE HEIGHTS & DIMENSIONS.
7. REFER TO DETAILS 3, 4 & 5, SHEET A7.1 FOR TOILET PARTITION ANCHORAGE BLOCKING.
8. SEWER AND WATER STUB OUTS SHALL BE LOCATED WITHIN THE ALLOWABLE AREA AS SHOWN ON FLOOR PLAN AND CONNECTIONS SHALL BE EASILY ACCESSIBLE FOR FUTURE RELOCATION. STUB OUT HEIGHT SHALL BE COORDINATED BY THE MANUFACTURER.
9. PIPING MATERIAL
   a. WATER: COPPER TYPE "L", 95/5 SOLDER.
   b. WASTE DRAIN AND VENT: ABS.
10. TOILET COMPARTMENT DOORS LOCATED IN THE SIDE WALL OR PARTITION, THE DOOR OPENING SHALL BE 4 INCHES (102MM) MAXIMUM FROM THE FRONT PARTITION, PER C.B.C. SECTION 11B-604.8.1.2.
11. ALL RESTROOM AND SINK ACCESSORIES NOT SHOWN HERE MUST BE COORDINATED BY THE PROJECT AOR/DISTRICT BEFORE SUBMITTING SITE-SPECIFIC PLANS TO DSA FOR REVIEW.

PLUMBING NOTE

MODULAR MFR. TO STUB THROUGH FLOOR ALL PLUMBING LINES. BUILDING PERIMETER POC'S SHOWN ARE FOR COORDINATION PURPOSES ONLY. ALL UNDER-FLOOR CONNECTIONS ARE BY SITE CONTRACTOR, U.O.N.

SITE NOTE

3/16:12 (1%) MINIMUM TO 1/4:12 (2%) MAXIMUM GRADE FROM FACE OF BUILDING MUST BE ADHERED TO FOR WATER RUN-OFF. PONDING MAY OCCUR AROUND THE PERIMETER OF THE BUILDING.

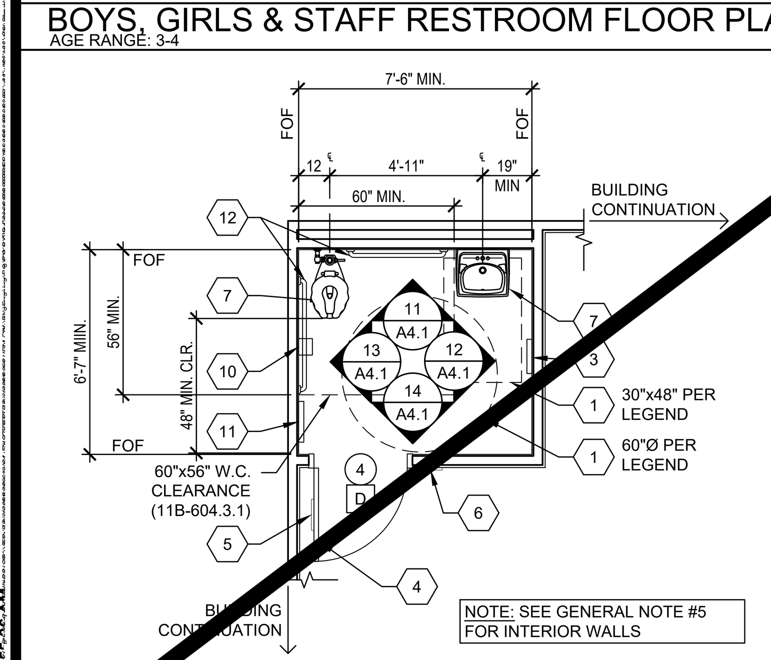

(THIS RESTROOM OPTION CAN OCCUR ANYWHERE IN THE BUILDING)

SINGLE TOILET PLAN - FRONT WALL APPROACH | SCALE: 1/4" = 1'-0" | 16

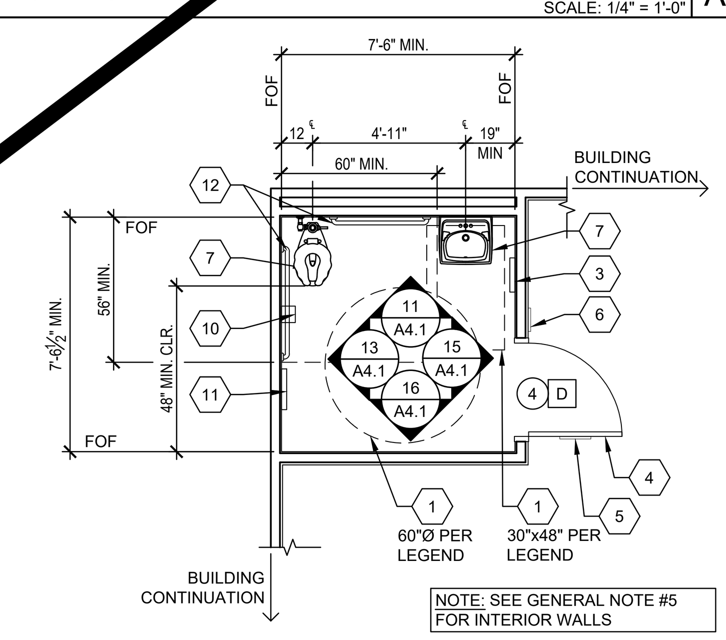

(THIS RESTROOM OPTION CAN OCCUR ANYWHERE IN THE BUILDING)

SINGLE TOILET PLAN - SIDE WALL APPROACH | SCALE: 1/4" = 1'-0" | 17

IF WATER HEATER IS MOUNTED ABOVE CIRCULATION AREA, BOTTOM EDGE OF MOUNT AND EQUIPMENT SHALL BE MIN. +80" PER 11B-307. (CLARIFY WHEN OPTIONAL MOUNT IS REQUIRED)

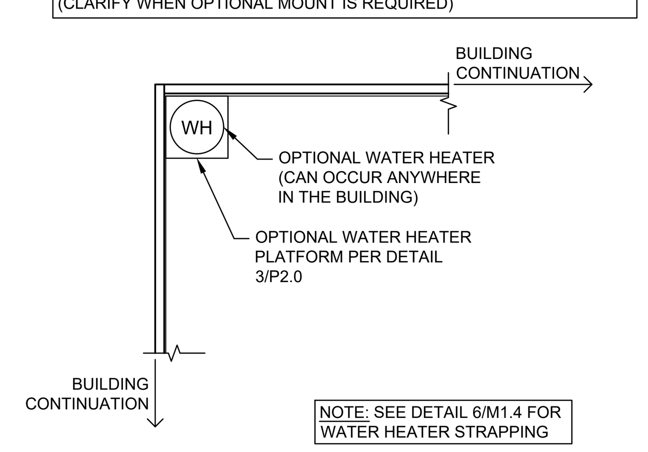

NOTE: SEE DETAIL 6/M1.4 FOR WATER HEATER STRAPPING

NOTE: SEE GENERAL NOTE #5 FOR INTERIOR WALLS

OPTIONAL WATER HEATER | SCALE: 1/4" = 1'-0" | 18

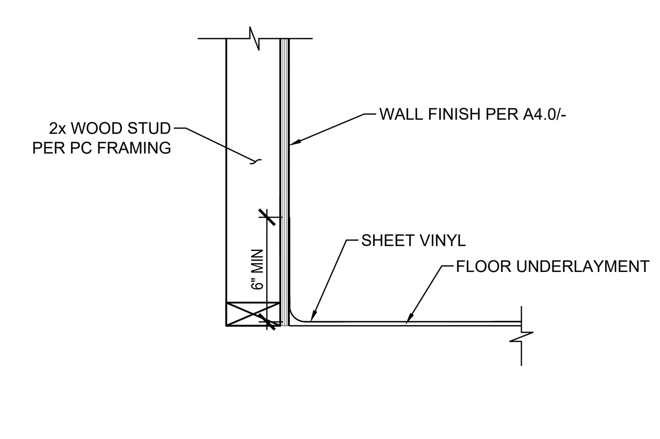

PROTECTION OF WOOD WALLS @ TOILET ROOMS | SCALE: 1/4" = 1'-0" | 19

- (1) = KEY NOTE - SEE KEY NOTES, THIS SHEET
- (X) = DOOR TYPE - SEE SCHEDULE SHEET N3.0
- [X] = DOOR HARDWARE - SEE HARDWARE SCHEDULE SHEET N3.0
- ◇X = WINDOW TYPE - SEE SCHEDULE SHEET N3.0
- = 60" DIAMETER CLEAR FLOOR TURNING SPACE
- = 30"x48" CLEAR FLOOR SPACE

SYMBOLS LEGEND | SCALE: 1/4" = 1'-0" | 20

IDENTIFICATION STAMP
DIV. OF THE STATE ARCHITECT
APP: 02-122976 INC:
REVIEWED FOR
SS ☑ FLS ☑ ACS ☑
DATE: 03/12/2025

TRACY UNIFIED SCHOOL DISTRICT

HMC Architects
3595001000
2101 CAPITOL AVENUE, SUITE 100
SACRAMENTO, CA 95816
916 368 7990 / www.hmcarchitects.com

ISSUE

Δ	DESCRIPTION	DATE
A	ADDENDUM "A"	3/20/25

AMS® American Modular Systems
787 Spreckels Ave., Manteca, CA 95336
Phone (209) 825-1921 Fax (209) 825-7018
www.americanmodular.com

INTELLECTUAL-PROPERTY & PROPRIETARY RIGHTS STATEMENT
COPYRIGHT © AMERICAN MODULAR SYSTEMS (AMS)
AMS OWNS ALL COPYRIGHT AND OTHER INTELLECTUAL-PROPERTY AND PROPRIETARY RIGHTS IN THESE DRAWINGS, SPECIFICATIONS, AND THE MATERIAL CONTAINED HEREIN. CERTAIN ELEMENTS SHOWN IN THESE DOCUMENTS ARE REGISTERED TRADEMARKS OF AMS. ALL PATENTABLE MATERIALS CONTAINED IN THESE DOCUMENTS AND ORIGINATING WITH AMS WILL REMAIN THE SOLE PROPERTY OF AMS. THESE DRAWING, SPECIFICATIONS, AND THE MATERIAL CONTAINED HEREIN MAY NOT BE REPRODUCED, TRANSMITTED, COPIED, DISTRIBUTED, MODIFIED, OR OTHERWISE DISPOSED OF (DIRECTLY OR INDIRECTLY) AND MAY NOT BE USED (IN WHOLE OR IN PART) TO ASSIST IN THE CONSTRUCTION, DESIGN, OR OTHER MAKING OF, OR FOR THE PURPOSE OF FURNISHING ANY INFORMATION FOR THE CONSTRUCTION, DESIGN, OR OTHER MAKING OF, ANY BUILDINGS (MODULAR OR OTHERWISE), DRAWINGS, SPECIFICATIONS, PRINTS, APPARATUS, OR PARTS THEREOF, EXCEPT AS EXPRESSLY PERMITTED BY WRITTEN CONSENT OF, OR IN A WRITTEN AGREEMENT WITH, AMS. SUBMITTAL OR DISTRIBUTION TO MEET OFFICIAL REGULATORY REQUIREMENTS WILL NOT BE CONSTRUED AS PUBLICATION IN DEROGATION OF AMS'S COPYRIGHT OR OTHER INTELLECTUAL-PROPERTY OR PROPRIETARY RIGHTS.

PRE-CHECKED SET NAME
24' x 40' THRU 120' x 40'
STANDARD MODULAR BUILDING
(LOW SEISMIC)
FORM®

SITE SPECIFIC PROJECT NAME
.
.
.

APPROVED
DIV. OF THE STATE ARCHITECT
APP: 04-122050 PC
REVIEWED FOR
SS ☑ FLS ☑ ACS ☑ CG ☑
DATE: 12/11/2023

☐ 2022 CBC PRE-CHECK (PC) DOCUMENT
A SEPARATE PROJECT APPLICATION FOR CONSTRUCTION IS REQUIRED.

MANUFACTURER PROFESSIONAL OF RECORD ON PC

LICENSED ARCHITECT
RANDALL PATRICK CAVANAGH
No. C12631
Ren. 3-31-25
STATE OF CALIFORNIA

THESE DRAWINGS ARE PRELIMINARY AND NOT FOR CONSTRUCTION UNLESS STAMPED & SIGNED BY THE DESIGN PROFESSIONAL OF RECORD.

REVISIONS
1
2
3
4

DRAWN BY:	AA
SCALE:	AS NOTED
DATE:	MM/DD/YY
PROJECT NO:	XXXX-22

SHEET TITLE:
RESTROOM FLOOR PLAN OPTIONS - AGE RANGE 3-4

SHEET NUMBER:
A1.5

KEYNOTES

GENERAL NOTES

FACILITY:
JACOBSON ELEMENTARY SCHOOL
1750 W KAVANAGH AVE
TRACY, CA 95376

PROJECT:
JACOBSON ES - TK CLASSROOM

SHEET NAME:
RESTROOM FLOOR PLAN OPTIONS - AGE RANGE 3-4

DATE: **04/03/24** | CLIENT PROJ NO: **3595001000**

SHEET:
A1.5
ADDENDUM "A"

PLEASE RECYCLE

THE LINE SHOWN ABOVE IS ONE INCH LONG ON ORIGINAL DRAWING. IF NOT ONE INCH, ADJUST SCALE ACCORDINGLY

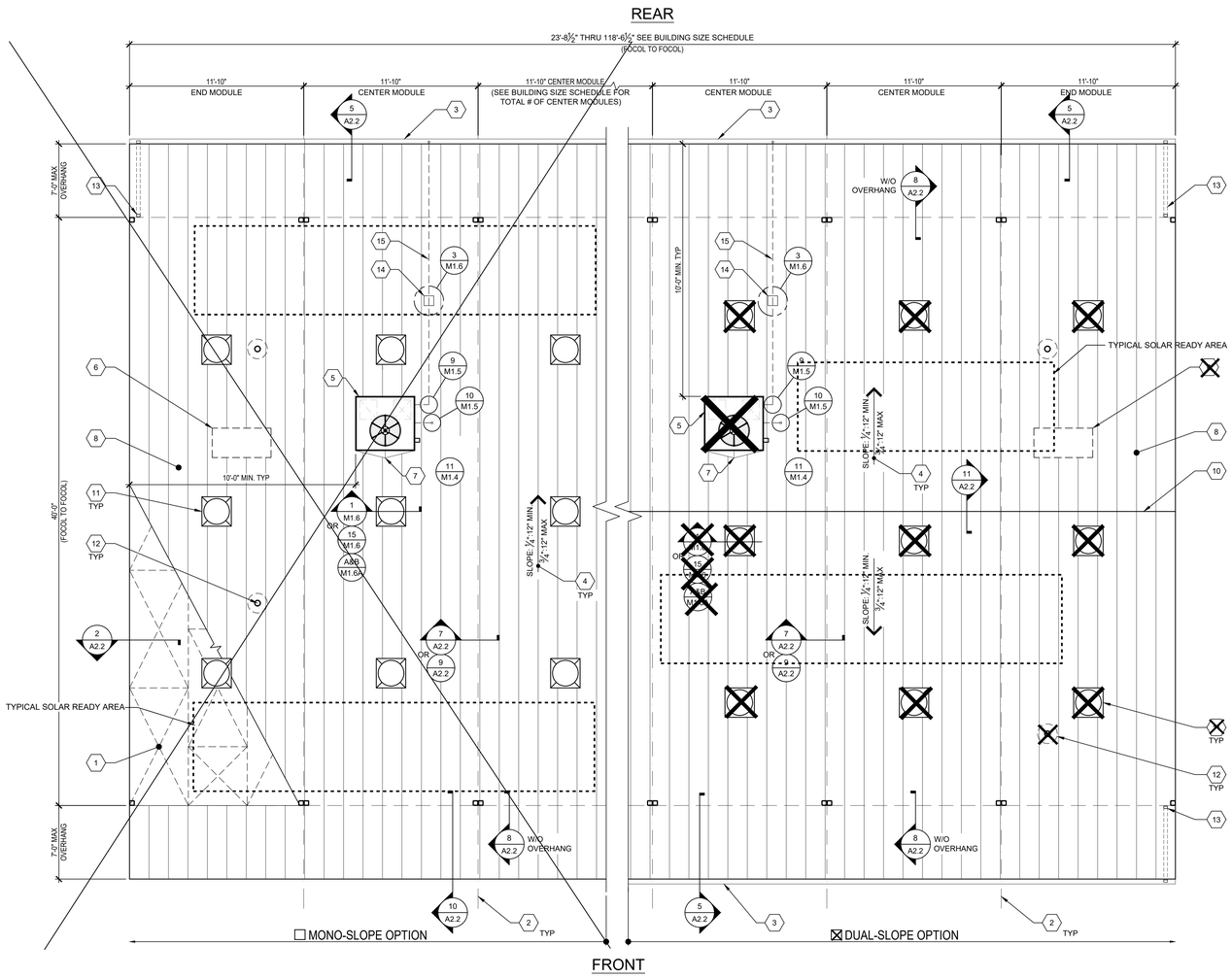

TYPICAL ROOF PLAN

SCALE: 1/4" = 1'-0" | 1

1	ROOF SHEATHING PER SHEET S4.1 OR STEEL STRAP CROSS BRACING PER S4.0
2	TYPICAL MOD LINE
3	OPTIONAL GUTTER PER DETAIL 5/A2.2
4	TYPICAL ROOF SLOPE
5	OPTIONAL ROOF MOUNTED HVAC PER M1.7
6	OPTIONAL ATTIC MOUNTED SPLIT-SYSTEM HVAC PER M1.7
7	CRICKET @ OPTIONAL HVAC PER 12/A2.2
8	STANDING SEAM METAL ROOF PER 7/S0.0 & DETAILS ON SHEET A2.2
9	NOT USED
10	RIDGE @ DUAL SLOPE OPTION
11	OPTIONAL SOLATUBE - SEE SHEET NOTE #1
12	PIPE VENT PER PLUMBING PLANS & 2/M1.6
13	OPTIONAL DOWNSPOUT - SEE ROOF DRAIN SCHEDULE BELOW FOR MIN. # OF DRAINS.
14	ROOF-TOP PIPE SUPPORT BLOCK PER DETAIL 3/M1.6
15	CONDENSATE LINE PER DETAIL 9/M1.5

KEY NOTES

1. SOLATUBE LOCATIONS SHOWN ON PLAN ARE GENERIC AND ACTUAL LOCATIONS MAY VARY - (4) MAX. PER MOD. FRAMING PER S4.0 & S4.1 INSTALLATION PER DETAILS 1 OR 15/M1.6
2. OPTIONAL GUTTERS SHALL BE LOCATED ALONG THE END-WALLS OF THE BUILDING(S):
   - MONO-SLOPE: REAR END WALLS ONLY.
   - DUAL-PITCH: BOTH FRONT & REAR END WALLS.
3. EITHER ROOF-SHEATHING OR STRAP CROSS BRACING MAY BE USED FOR MONO-SLOPE OR DUAL PITCH SLOPED BUILDING(S).

SHEET NOTES

SOLAR ZONE REQUIRED, PER TITLE 24 SECTION 110.10: FOR NON-RESIDENTIAL BUILDINGS, 3 STORIES OR LESS, A MINIMUM OF 15% OF ROOF AREA (EXCLUDING SKYLIGHTS) MUST BE SET ASIDE FOR PHOTO-VOLTAICS (PV). THE ROOF MUST HAVE NO ROOF OBSTRUCTIONS.

1. REQUIRED SOLAR-READY ZONE, AREA PER THE CHART BELOW, MUST BE PROVIDED ON BUILDING ROOF.
2. ZONE MUST BE LEFT VOID OF ROOF-MOUNTED HVAC UNITS, SKYLIGHTS OR OTHER OBSTRUCTIONS THAT WOULD HINDER FUTURE INSTALLATION OF SOLAR SYSTEM COMPONENTS, INCLUDING PV PANELS.
3. TOTAL AREA REQUIRED FOR SOLAR-READY ZONE DOES NOT NEED TO BE LOCATED IN ONE AREA BUT CAN BE SPREAD OUT OVER ROOF.
4. SOLAR-READY ZONE SHALL NOT INCLUDE ROOF OVERHANGS, AND SOLAR SYSTEM COMPONENTS MAY NOT BE PLACED THERE.
5. THE ROOF STRUCTURE HAS BEEN DESIGNED PER THE DESIGN LOADS SPECIFIED ON SHEET TS, WHICH DOES INCLUDE LOADS FROM SOLAR EQUIPMENT THAT MIGHT BE INSTALLED AT A LATER DATE.
6. EQUIPMENT SUCH AS SOLAR MODULES, INVERTERS, AND METERING EQUIPMENT DO NOT NEED TO BE INSTALLED, NOR DOES CONDUIT, PIPING, OR PRE-INSTALLED MOUNTING HARDWARE.
7. A STRUCTURAL ENGINEER SHOULD BE CONSULTED PRIOR TO ANY FUTURE SOLAR INSTALLATIONS TO DETERMINE THE ADEQUACY OF THE ROOF FRAMING TO SUSTAIN THE LOADS OF THE INSTALLATION ON THE BUILDING STRUCTURE.
8. A SEPARATE DSA APPLICATION NUMBER IS REQUIRED FOR DESIGN & INSTALLATION OF THE SOLAR PANEL SYSTEM, ITS ANCHORAGE & ROOF SUPPORT STRUCTURE.

ROOF DRAIN SCHEDULE

ROOF AREA DRAINS (WITH 7'+7' OVERHANGS)

BUILDING SIZE (NOM.)	ROOF AREA	MINIMUM NO. OF DRAINS	SIZE OF DRAIN
☐ 24'x40'	1296	1	2x3
☒ 36'x40'	1644	1	2x3
☐ 48'x40'	2592	1	2x3
☐ 60'x40'	3420	2	2x3
☐ 72'x40'	3888	2	2x3
☐ 84'x40'	4536	2	2x3
☐ 96'x40'	5184	2	2x3
☐ 108'x40'	5832	2	2x3
☐ 120'x40'	6480	3	2x3

NOTES:
1. DOWNSPOUTS & LEADERS PER C.P.C. 1106.1 AND TABLE 1103.1.
2. PC DOWNSPOUT SIZING BASED ON ROOF AREA AND MAX RAINFALL RATE OF 3" PER HOUR. SITE SPECIFIC BUILDING MAY UTILIZE LOCAL RAINFALL RATE--PROVIDE SITE RAINFALL RATE TO DETERMINE MINIMUM NUMBER OF DRAINS REQUIRED.

BUILDING SIZE SCHEDULE

BUILDING SIZE (FT)	TOTAL # OF 12'-0" WIDE MODULES	TOTAL # OF CENTER MODULES	OVERALL BUILDING WIDTH[1]
☐ 24'x40'	2	0	23'-8½"
☒ 36'x40'	3	1	35'-6¾"
☐ 48'x40'	4	2	47'-5"
☐ 60'x40'	5	3	59'-3¼"
☐ 72'x40'	6	4	71'-1½"
☐ 84'x40'	7	5	82'-11¾"
☐ 96'x40'	8	6	94'-10"
☐ 108'x40'	9	7	106'-8¼"
☐ 120'x40'	10	8	118'-6½"

NOTES:
1. TOTAL WIDTH INCLUDES 1/4" PER MODULE CONSTRUCTION TOLERANCE PER FOUNDATION.

NOT USED | 3

NOT USED | 4

SOLAR-READY ZONE REQUIREMENTS

REQUIRED SOLAR-READY ZONE

BUILDING SIZE (NOM.)	MAX. ROOF AREA (SQ. FT.)	REQ'D ZONE AREA (SQ. FT.)	*CLIMATE ZONE GROUP(S)
☐ 24'x40'	960	0	N/A
☒ 36'x40'	1440	0	N/A
☐ 48'x40'	1920	288	D
☐ 60'x40'	2400	360	D
☐ 72'x40'	2880	432	C, D
☐ 84'x40'	3360	504	A, B & D
☐ 96'x40'	3840	576	A & D
☐ 108'x40'	4320	648	D
☐ 120'x40'	4800	720	D

*NOTE:
GROUP A: CLIMATE ZONES 1, 16
GROUP B: CLIMATE ZONES 2 - 5
GROUP C: CLIMATE ZONES 6 - 13
GROUP D: CLIMATE ZONES 14, 15

IDENTIFICATION STAMP
DIV. OF THE STATE ARCHITECT
APP: 02-122976 INC:
REVIEWED FOR
SS ☑ FLS ☑ ACS ☑
DATE: 03/12/2025

TRACY UNIFIED SCHOOL DISTRICT

HMC Architects

3595001000

2101 CAPITOL AVENUE, SUITE 100
SACRAMENTO, CA 95816
916 368 7990 / www.hmcarchitects.com

ISSUE

Δ	DESCRIPTION	DATE
1	ADDENDUM "A"	3/20/25

KEYNOTES

GENERAL NOTES

AMS®
American Modular Systems
787 Spreckels Ave., Manteca, CA 95336
Phone (209) 825-1921 Fax (209) 825-7018
www.americanmodular.com

INTELLECTUAL-PROPERTY & PROPRIETARY RIGHTS STATEMENT
COPYRIGHT © AMERICAN MODULAR SYSTEMS (AMS)
AMS OWNS ALL COPYRIGHT AND OTHER INTELLECTUAL-PROPERTY AND PROPRIETARY RIGHTS IN THESE DRAWINGS, SPECIFICATIONS, AND THE MATERIAL CONTAINED HEREIN. CERTAIN ELEMENTS SHOWN IN THESE DOCUMENTS ARE REGISTERED TRADEMARKS OF AMS. ALL RIGHTS NOT EXPRESSLY GRANTED HEREIN ARE RESERVED. DESIGNS AND DRAWINGS WITH AMS WILL REMAIN THE SOLE PROPERTY OF AMS. THESE DRAWINGS AND SPECIFICATIONS, AND THE MATERIAL CONTAINED HEREIN MAY NOT BE REPRODUCED, TRANSMITTED, COPIED, DISTRIBUTED, MODIFIED, OR OTHERWISE DISPOSED OF (DIRECTLY OR INDIRECTLY) AND MAY NOT BE USED (IN WHOLE OR IN PART) TO ASSIST IN THE CONSTRUCTION, DESIGN, OR OTHER MAKING OF, OR FOR THE PURPOSE OF FURNISHING ANY INFORMATION FOR THE CONSTRUCTION, DESIGN, OR OTHER MAKING OF, ANY BUILDINGS (MODULAR OR OTHERWISE), DRAWINGS, SPECIFICATIONS, PRINTS, APPARATUS, OR PARTS THEREOF, EXCEPT AS EXPRESSLY PERMITTED BY WRITTEN CONSENT OF, OR IN A WRITTEN AGREEMENT WITH, AMS. SUBMITTAL OR DISTRIBUTION TO MEET OFFICIAL REGULATORY REQUIREMENTS WILL NOT BE CONSTRUED AS PUBLICATION IN DEROGATION OF AMS'S COPYRIGHT OR OTHER INTELLECTUAL-PROPERTY OR PROPRIETARY RIGHTS.

PRE-CHECKED SET NAME

24' x 40' THRU 120' x 40'
STANDARD MODULAR BUILDING
(LOW SEISMIC)

FORM®

SITE SPECIFIC PROJECT NAME

APPROVED
DIV. OF THE STATE ARCHITECT
APP: 04-122059 PC
REVIEWED FOR
SS ☑ FLS ☑ ACS ☑ CG ☑
DATE: 12/11/2023

☐ 2022 CBC PRE-CHECK (PC) DOCUMENT
A SEPARATE PROJECT APPLICATION FOR CONSTRUCTION IS REQUIRED.

MANUFACTURER PROFESSIONAL OF RECORD ON PC

LICENSED ARCHITECT PATRICK CONNELLY No. C12631 Exp. 3-31-25 STATE OF CALIFORNIA

THESE DRAWINGS ARE PRELIMINARY AND NOT FOR CONSTRUCTION UNLESS STAMPED & SIGNED BY THE DESIGN PROFESSIONAL OF RECORD.

REVISIONS
1
2
3
4

DRAWN BY:	AA
SCALE:	AS NOTED
DATE:	MM/DD/YY
PROJECT NO:	XXXX-22

SHEET TITLE:
TYPICAL ROOF PLAN
METAL STANDING SEAM
(WITHOUT PARAPETS)

SHEET NUMBER:
A2.0

FACILITY:
JACOBSON ELEMENTARY SCHOOL
1750 W KAVANAGH AVE
TRACY, CA 95376

PROJECT:
JACOBSON ES - TK CLASSROOM

SHEET NAME:
TYPICAL ROOF PLAN METAL STANDING SEAM (WITHOUT PARAPETS)

DATE: **04/03/24** | CLIENT PROJ NO: **3595001000**

SHEET:
A2.0
ADDENDUM "A"

PLEASE RECYCLE

Autodesk Docs://3595005000 TUSD TK CLASSROOMS 2025 R22/3595005000-A-TUSD-BOHN-SITE.rvt
12/3/2024 8:05:46 AM

1. REFER TO BUILDING SECTIONS IN SHEET A7.3 FOR BUILDING ENVELOPE
2. REFER TO MINIMUM INSULATION SCHEDULES ON SHEET M1.7 FOR ALL INSULATION REQUIREMENTS.

NOTES 1

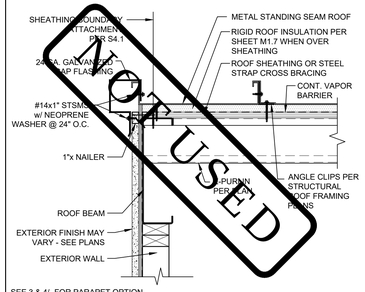

SEE 3 & 4/- FOR PARAPET OPTION.
SEE SHEETS A5.2, A5.4, & A5.6 FOR EXTERIOR FINISHES.

METAL ROOF w/ DECKING SCALE : 1 1/2"=1'-0" 2

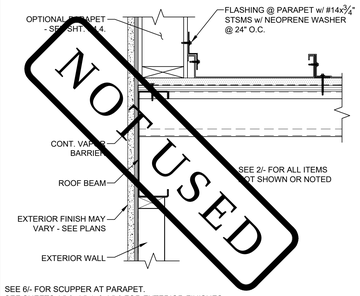

SEE 6/- FOR SCUPPER AT PARAPET.
SEE SHEETS A5.2, A5.4, & A5.6 FOR EXTERIOR FINISHES.

OPTIONAL PARAPET @ METAL ROOF SIDE SCALE : 1 1/2"=1'-0" 3

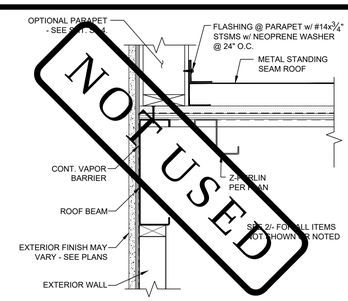

SEE 6/- FOR SCUPPER AT PARAPET.
SEE SHEETS A5.2, A5.4, & A5.6 FOR EXTERIOR FINISHES.

OPTIONAL PARAPET @ METAL ROOF END SCALE : 1 1/2"=1'-0" 4

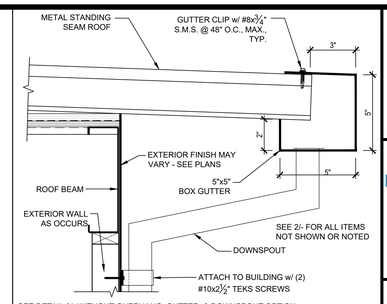

SEE DETAIL 8/- WITHOUT OVERHANG, GUTTER, & DOWNSPOUT OPTION.
SEE DETAIL 10/- WITH OVERHANG OPTION ONLY.
SEE SHEET S4.1 FOR SOFFIT NOT SHOWN.

TYP. GUTTER ATTACHMENT SCALE : 1 1/2"=1'-0" 5

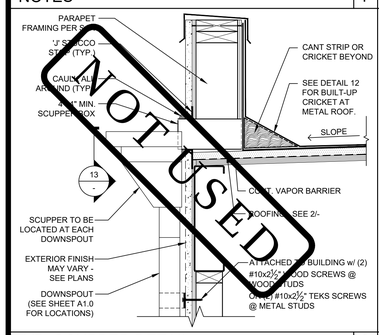

TYP. SCUPPER DETAIL SCALE : 1 1/2"=1'-0" 6

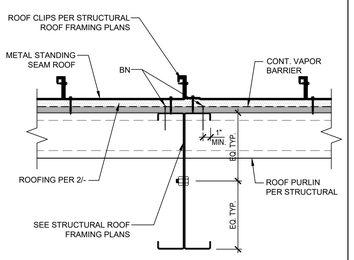

NOTE: SEE DETAIL 9/- FOR OPTIONAL MOD-LINE CONNECTION AT SEISMIC JOINT.

TYP. ROOF BEAM CONN. @ MODLINE SCALE : 1 1/2"=1'-0" 7

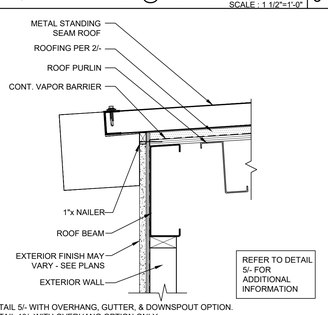

SEE DETAIL 5/- WITH OVERHANG, GUTTER, & DOWNSPOUT OPTION.
SEE DETAIL 10/- WITH OVERHANG OPTION ONLY.
SEE SHEET S4.1 FOR SOFFIT NOT SHOWN.

METAL ROOF @ END WALLS (w/o OVERHANGS) SCALE : 1 1/2"=1'-0" 8

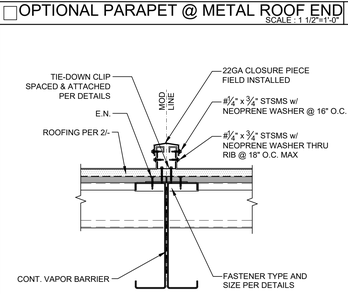

NOTE: SEE DETAIL 7/- FOR TYPICAL MOD-LINE CONNECTION.

METAL ROOF @ MODLINE OPTION SCALE : 1 1/2"=1'-0" 9

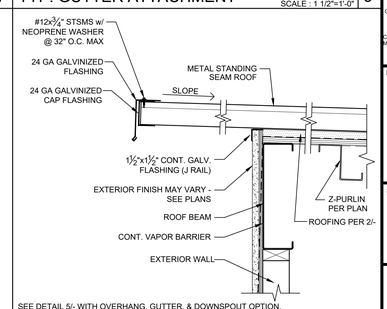

SEE DETAIL 5/- WITH OVERHANG, GUTTER, & DOWNSPOUT OPTION.
SEE DETAIL 8/- WITHOUT OVERHANG, GUTTER, & DOWNSPOUT OPTION.
SEE SHEET S4.1 FOR SOFFIT NOT SHOWN.

METAL ROOF EDGE @ OVERHANG SCALE : 1 1/2"=1'-0" 10

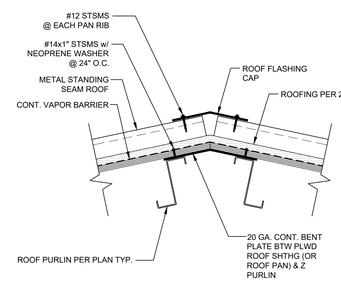

OPTIONAL METAL DUAL SLOPED SCALE: 1-1/2"=1'-0" 11

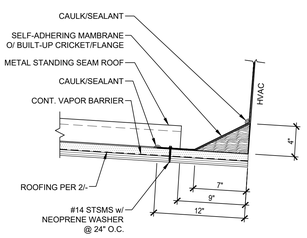

BUILT-UP CRICKET AT METAL ROOF SCALE: 1-1/2"=1'-0" 12

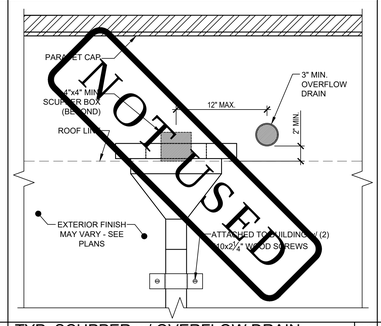

TYP. SCUPPER w/ OVERFLOW DRAIN SCALE: 1-1/2"=1'-0" 13

NOT USED 14

NOT USED 15

NOT USED 16

NOT USED 17

NOT USED 18

NOT USED 19

NOT USED 20

PLEASE RECYCLE

IDENTIFICATION STAMP
DIV. OF THE STATE ARCHITECT
APP: 02-122976 INC:
REVIEWED FOR
SS ☑ FLS ☑ ACS ☑
DATE: 03/12/2025

TRACY UNIFIED SCHOOL DISTRICT

HMC Architects
3595001000
2101 CAPITOL AVENUE, SUITE 100
SACRAMENTO, CA 95816
916 368 7990 / www.hmcarchitects.com

ISSUE

Δ	DESCRIPTION	DATE
1	ADDENDUM "A"	3/20/25

AMS American Modular Systems
787 Spreckels Ave., Manteca, CA 95336
Phone (209) 825-1921 Fax (209) 825-7018
www.americanmodular.com

INTELLECTUAL-PROPERTY & PROPRIETARY RIGHTS STATEMENT
COPYRIGHT © AMERICAN MODULAR SYSTEMS (AMS)
AMS OWNS ALL COPYRIGHT AND OTHER INTELLECTUAL-PROPERTY AND PROPRIETARY RIGHTS IN THESE DRAWINGS, SPECIFICATIONS, AND THE MATERIAL CONTAINED HEREIN. CERTAIN ELEMENTS SHOWN IN THESE DOCUMENTS ARE REGISTERED TRADEMARKS OF AMS. ALL PATENTABLE MATERIALS CONTAINED IN THESE DOCUMENTS AND ORIGINATING WITH AMS ARE PATENT PENDING. THE DRAWINGS, SPECIFICATIONS, DOCUMENTS, DESCRIPTIONS, AND THE MATERIAL CONTAINED HEREIN MAY NOT BE REPRODUCED, TRANSMITTED, COPIED, DISTRIBUTED, MODIFIED, OR OTHERWISE DISPOSED OF (DIRECTLY OR INDIRECTLY) AND MAY NOT BE USED (IN WHOLE OR IN PART) TO ASSIST IN THE CONSTRUCTION, DESIGN, OR OTHER MAKING OF, OR FOR THE PURPOSE OF FURNISHING ANY INFORMATION FOR THE CONSTRUCTION, DESIGN, OR OTHER MAKING OF, ANY BUILDINGS (MODULAR OR OTHERWISE), DRAWINGS, SPECIFICATIONS, PRINTS, APPARATUS, OR PARTS THEREOF, EXCEPT AS EXPRESSLY PERMITTED BY WRITTEN CONSENT OF, OR IN A WRITTEN AGREEMENT WITH, AMS. SUBMITTAL OR DISTRIBUTION TO MEET OFFICIAL REGULATORY REQUIREMENTS WILL NOT BE CONSTRUED AS PUBLICATION IN DEROGATION OF AMS'S COPYRIGHT OR OTHER INTELLECTUAL-PROPERTY OR PROPRIETARY RIGHTS.

PRE-CHECKED SET NAME
24' x 40' THRU 120' x 40'
STANDARD MODULAR BUILDING
(LOW SEISMIC)
FORM®

SITE SPECIFIC PROJECT NAME

APPROVED
DIV. OF THE STATE ARCHITECT
APP: 04-122050 PC
REVIEWED FOR
SS ☑ FLS ☑ ACS ☑ CG ☑
DATE: 12/11/2023

☐ 2022 CBC PRE-CHECK (PC) DOCUMENT
A SEPARATE PROJECT APPLICATION FOR CONSTRUCTION IS REQUIRED

MANUFACTURER PROFESSIONAL OF RECORD ON PC

LICENSED ARCHITECT PATRICK CHU No. C12631 Ren. 3-31-25 STATE OF CALIFORNIA

THESE DRAWINGS ARE PRELIMINARY AND NOT FOR CONSTRUCTION UNLESS STAMPED & SIGNED BY THE DESIGN PROFESSIONAL OF RECORD.

REVISIONS
1
2
3
4

DRAWN BY:	AA
SCALE:	AS NOTED
DATE:	MM/DD/YY
PROJECT NO:	XXXX-22

SHEET TITLE:
TYPICAL ROOF DETAILS
METAL STANDING SEAM

SHEET NUMBER:
A2.2

KEYNOTES

GENERAL NOTES

FACILITY:
JACOBSON ELEMENTARY SCHOOL
1750 W KAVANAGH AVE
TRACY, CA 95376

PROJECT:
JACOBSON ES - TK CLASSROOM

SHEET NAME:
TYPICAL ROOF DETAILS METAL STANDING SEAM

DATE: **04/03/24** CLIENT PROJ NO: **3595001000**

SHEET:
A2.2
ADDENDUM "A"

THE LINE SHOWN ABOVE IS 1" WHEN PLOTTED ON ANSI A (11x8.5) SHEETS UNLESS OTHERWISE NOTED
Autodesk Docs://3595001000 TUSD TK CLASSROOMS 2025 R22/3595001000-A-TUSD-BOHN-SITE.rvt
12/3/2024 8:55:37 AM

THE LINE SHOWN ABOVE IS ONE INCH (1") WHEN PLOTTED ON ORIGINAL 24X36 SHEETS

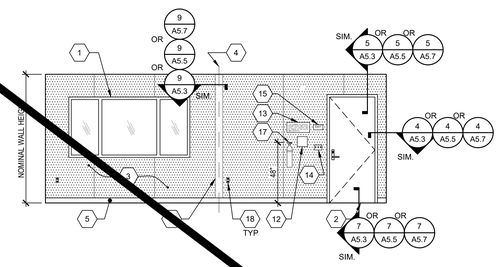

TYPICAL CLASSROOM FRONT END WALL ELEVATION SCALE : 1/4"=1'-0" 1

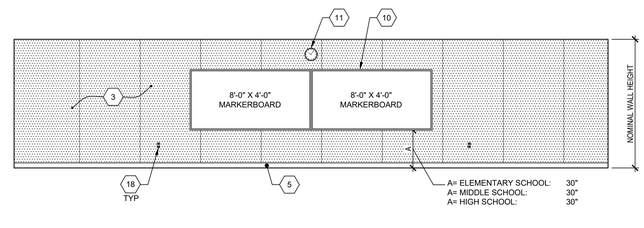

TYPICAL CLASSROOM SIDE WALL ELEVATION SCALE : 1/4"=1'-0" 2

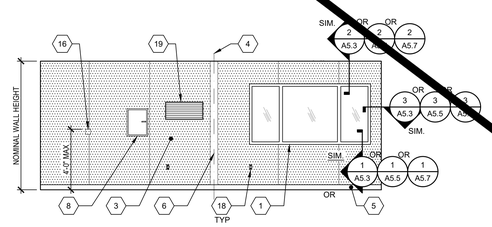

TYPICAL CLASSROOM REAR END WALL ELEVATION

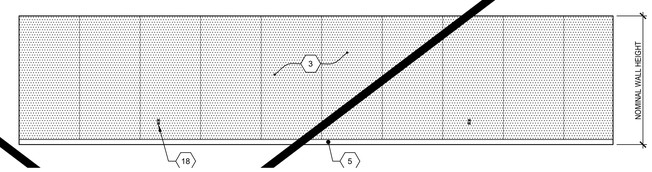

SEE SHEET A4.0-N FOR SITE-SPECIFIC SHEET

1. WINDOW, SEE SPEC'S
2. TYP EXTERIOR DOOR
3. TACKBOARD - (FLAME RESISTANT INDUSTRIAL TACKABLE BOARD) - SHALL BE CLASS A RATED (ASTM E-84). NOMINAL PANEL THICKNESS SHALL BE ± 0.5" AND SHALL BE INSTALED IN ACCORDANCE WITH THE MANUFACTURER'S GUIDELINES.
4. TYP MOD LINE
5. TOP SET BASE
6. FULL PANEL CLOSE-UP AT MOD-LINE, TYP
7. NOT USED
8. ELECTRICAL PANEL - SEE ELECTRICAL SHEETS
9. NOT USED
10. (2) 8'x4' MARKER BOARDS - SEE DETAIL 8/A4.0
11. CLOCK
12. ASSISTIVE LISTENING SIGN, BY OTHERS, INSTALLED PER DETAIL 17/N4.0 SIGN SHALL BE A MAXIMUM OF 70" A.F.F. TO BASELINE OF HIGHEST TEXT.
13. OCCUPANT LOAD SIGN PER DETAIL 11/N4.0 (BY OTHERS)
14. LIGHT SWITCH - SEE ELECTRICAL SHEETS
15. EXIT TACTILE SIGN PER DETAIL 10/N4.0 (NIC)
16. THERMOSTAT, TOP @ 48" A.F.F. - SEE MECHANICAL SHEETS
17. FIRE EXTINGUISHER TOP OF HANDLE @ +48" MAX. A.F.F. PROTRUSION MAX 4" FROM WALL IF BOTTOM OF FIRE EXTINGUISHER GREATER THAN +27" A.F.F - SEE 19/N4.0
18. TYP DUPLEX OUTLET - SEE ELECTRICAL SHEETS
19. HVAC GRILL

NOT USED 5

NOT USED 6

NOT USED 7

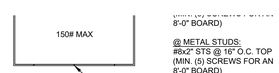

8'-0" BOARD)

@ METAL STUDS:
#8x2" STS @ 16" O.C. TOP (MIN. (5) SCREWS FOR AN 8'-0" BOARD)

@ WOOD STUDS:
#12 (2 ½" MIN PENETRATION INTO STUD) WOOD SCREWS @ 32" O.C. BOT. (MIN. (3) SCREWS FOR AN 8'-0" BOARD)

@ METAL STUDS:
#8x2" STS @ 32" O.C. BOT. (MIN. (3) SCREWS FOR AN 8'-0" BOARD)

NOTE:
1. ATTACHMENT IS FOR EACH MARKER BOARD.
2. EACH WHITEBOARD SHALL PROTRUDE 4" MAX HORIZONTALLY INTO THE CIRCULATION PATH, PER CBC SECTION 11B-307.2.
3. EACH WHITEBOARD SHALL HAVE FASTENERS PROVIDED BY MANUFACTURER AS NOTED ABOVE.

MARKERBOARD ATT. DETAIL SCALE : 1/4"=1'-0" 8

NOT USED 9

NOT USED 10

NOT USED 11

NOT USED 12

KEY NOTES

IDENTIFICATION STAMP
DIV. OF THE STATE ARCHITECT
APP: 02-122976 INC:
REVIEWED FOR
SS ☑ FLS ☑ ACS ☑
DATE: 03/12/2025

TRACY UNIFIED SCHOOL DISTRICT

HMC Architects

3595001000

2101 CAPITOL AVENUE, SUITE 100
SACRAMENTO, CA 95816
916 368 7990 / www.hmcarchitects.com

ISSUE

Δ	DESCRIPTION	DATE
1	ADDENDUM "A"	3/20/25

AMS®
American Modular Systems
787 Spreckels Ave., Manteca, CA 95336
Phone (209) 825-1921 Fax (209) 825-7018
www.americanmodular.com

INTELLECTUAL-PROPERTY & PROPRIETARY RIGHTS STATEMENT
COPYRIGHT © AMERICAN MODULAR SYSTEMS (AMS)
AMS OWNS ALL COPYRIGHT AND OTHER INTELLECTUAL-PROPERTY AND PROPRIETARY RIGHTS IN THESE DRAWINGS, SPECIFICATIONS, AND THE MATERIAL CONTAINED HEREIN. CERTAIN ELEMENTS SHOWN IN THESE DOCUMENTS ARE REGISTERED TRADEMARKS OF AMS. ALL PATENTABLE MATERIALS CONTAINED IN THESE DOCUMENTS AND ORIGINATING FROM AMS ARE THE PROPERTY OF AMS. THESE DRAWINGS, SPECIFICATIONS, DRAWINGS, AND THE MATERIAL CONTAINED HEREIN MAY NOT BE REPRODUCED, TRANSMITTED, COPIED, DISTRIBUTED, MODIFIED, OR OTHERWISE DISPOSED OF (DIRECTLY OR INDIRECTLY) AND MAY NOT BE USED (IN WHOLE OR IN PART) TO ASSIST IN THE CONSTRUCTION, DESIGN, OR OTHER MAKING OF, OR FOR THE PURPOSE OF FURNISHING ANY INFORMATION FOR THE CONSTRUCTION, DESIGN, OR OTHER MAKING OF, ANY BUILDINGS (MODULAR OR OTHERWISE), DRAWINGS, SPECIFICATIONS, PRINTS, APPARATUS, OR PARTS THEREOF, EXCEPT AS EXPRESSLY PERMITTED BY WRITTEN CONSENT OF, OR IN A WRITTEN AGREEMENT WITH, AMS. SUBMITTAL OR DISTRIBUTION TO MEET OFFICIAL REGULATORY REQUIREMENTS WILL NOT BE CONSTRUED AS PUBLICATION IN DEROGATION OF AMS'S COPYRIGHT OR OTHER INTELLECTUAL-PROPERTY OR PROPRIETARY RIGHTS.

PRE-CHECKED SET NAME
24' x 40' THRU 120' x 40'
STANDARD MODULAR BUILDING
(LOW SEISMIC)
FORM®

SITE SPECIFIC PROJECT NAME

APPROVED
DIV. OF THE STATE ARCHITECT
APP: 04-122050 PC
REVIEWED FOR
SS ☑ FLS ☑ ACS ☑ CG ☑
DATE: 12/11/2023

☐ 2022 CBC PRE-CHECK (PC) DOCUMENT
A SEPARATE PROJECT APPLICATION FOR CONSTRUCTION IS REQUIRED

MANUFACTURER PROFESSIONAL OF RECORD ON PC

LICENSED ARCHITECT PATRICK CHUNG No. C12631 Exp. 3-31-25 STATE OF CALIFORNIA

THESE DRAWINGS ARE PRELIMINARY AND NOT FOR CONSTRUCTION UNLESS STAMPED & SIGNED BY THE DESIGN PROFESSIONAL OF RECORD.

REVISIONS
1
2
3
4

DRAWN BY:	AA
SCALE:	AS NOTED
DATE:	MM/DD/YY
PROJECT NO:	XXXX-22

SHEET TITLE:
INTERIOR ELEVATIONS
TYPICAL CLASSROOM

SHEET NUMBER:
A4.0

KEYNOTES

GENERAL NOTES

FACILITY:
JACOBSON ELEMENTARY SCHOOL
1750 W KAVANAGH AVE
TRACY, CA 95376

PROJECT:
JACOBSON ES - TK CLASSROOM

SHEET NAME:
INTERIOR ELEVATIONS TYPICAL CLASSROOM

DATE: **04/03/24** CLIENT PROJ NO: **3595001000**

SHEET:
A4.0
ADDENDUM "A"

PLEASE RECYCLE

Autodesk Docs://3595001000 TUSD TK CLASSROOMS 2025 R22/3595001000-A-TUSD-BOHN-SITE.rvt
12/3/2024 6:05:37 AM

THE LINE SHOWN ABOVE IS EQUAL TO ONE INCH ON ORIGINAL 22X34 SHEETS UNLESS OTHERWISE NOTED

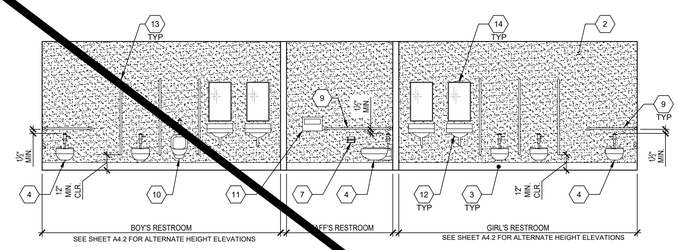

RESTROOM SIDEWALL ELEVATION - GIRLS, STAFF, BOYS SCALE: 1/4" = 1'-0" 1

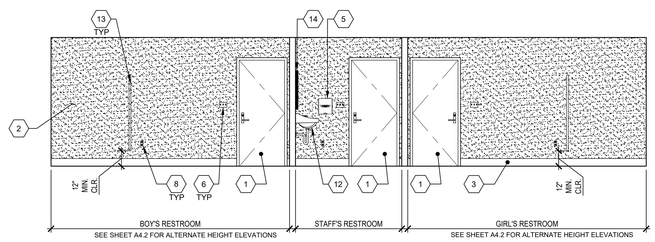

RESTROOM SIDEWALL ELEVATION - GIRLS, STAFF, BOYS SCALE: 1/4" = 1'-0" 2

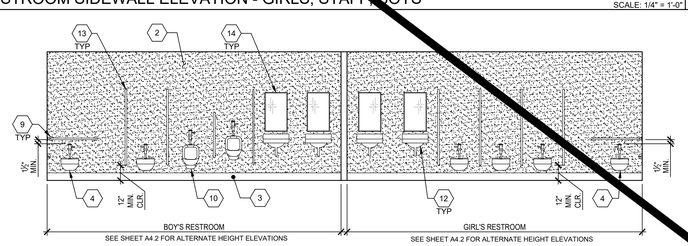

RESTROOM SIDEWALL ELEVATION - BOYS & GIRLS SCALE: 1/4" = 1'-0" 3

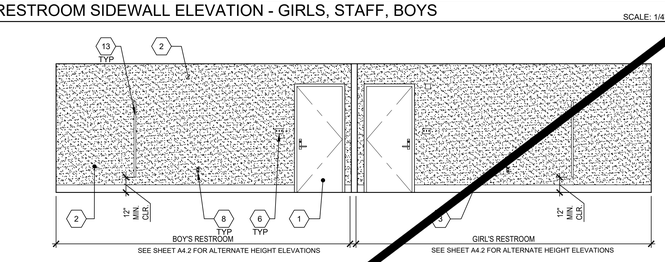

RESTROOM SIDEWALL ELEVATION - BOYS & GIRLS SCALE: 1/4" = 1'-0" 4

1. TYPICAL DOOR
2. F.R.P. (FIBER REINFORCED PLASTIC) - SHALL BE CLASS C RATED (ASTM E84) EMBOSSED & SMOOTH INTERIOR WALL PANELS. NOMINAL PANELS. NOMINAL PANEL THICKNESS SHALL BE ± 0.090 - PANEL SHALL BE INSTALLED IN ACCORDANCE WITH THE MANUFACTURER'S GUIDELINES.
3. 6" TOP SET BASE - REFER TO DETAIL 5/A1.2
4. ACCESSIBLE TOILET - SEE DETAIL 14/P2.0
5. PAPER TOWEL DISPENSER OR HAND DRYER (BY OTHERS)
6. LIGHT SWITCH - SEE ELECTRICAL SHEETS
7. TOILET PAPER DISPENSER PER P1.0
8. TYP. GFCI OUTLET - SEE ELECTRICAL SHEETS
9. GRAB BAR - SEE DETAIL 6/A7.1
10. ACCESSIBLE URINAL - SEE DETAIL 15/P2.0
11. TOILET SEAT COVER DISPENSER PER P1.0
12. ACCESSIBLE LAVATORY - SEE DETAIL 17/P2.0
13. TOILET PARTITIONS: SOLID PLASTIC BY ACCURATE PARTITIONS CORP., OR EQUIVALENT, w/ FLOOR ANCHORS. OVERHEAD BRACED OR EQUIVALENT. MINIMUM FLAME SPREAD RATING: 50. MINIMUM SMOKE DEVELOPMENT RATING: 450. (BY OTHERS)
14. TYP. MIRROR (19# MAX. WEIGHT) - SEE DETAIL 17/P2.0
15. WINDOW - SEE SPEC'S

NOTE: FOR ACCESSIBLE FIXTURES & ACCESSORIES MOUNTING HEIGHT REQUIREMENTS (PER CBC CHAPTER 11B), SEE SHEET P2.0/10 FOR ACCESSIBLE HEIGHTS TABLE.

SEE SHEET A4.1-N FOR SITE-SPECIFIC SHEET

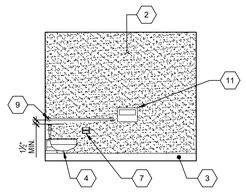

SEE SHEET A4.2 FOR ALTERNATE HEIGHT ELEVATIONS

RESTROOM ENDWALL ELEV. - GIRLS SCALE: 1/4" = 1'-0" 5

SEE SHEET A4.2 FOR ALTERNATE HEIGHT ELEVATIONS

RESTROOM INTERIOR WALL ELEV. - GIRLS SCALE: 1/4" = 1'-0" 6

SEE SHEET A4.2 FOR ALTERNATE HEIGHT ELEVATIONS

RESTROOM INTERIOR WALL ELEV. - BOYS SCALE: 1/4" = 1'-0" 7

SEE SHEET A4.2 FOR ALTERNATE HEIGHT ELEVATIONS

RESTROOM ENDWALL ELEV. - BOYS SCALE: 1/4" = 1'-0" 8

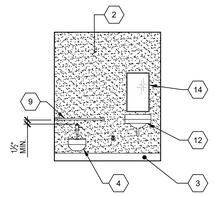

SEE SHEET A4.2 FOR ALTERNATE HEIGHT ELEVATIONS

RESTROOM INTERIOR WALL ELEV. - STAFF SCALE: 1/4" = 1'-0" 9

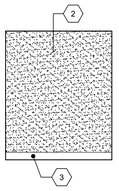

RESTROOM INTERIOR WALL ELEV. - STAFF SCALE: 1/4" = 1'-0" 10

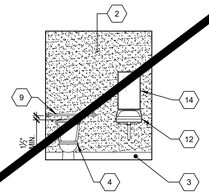

SINGLE TOILET ELEVATION - UNISEX SCALE: 1/4" = 1'-0" 11

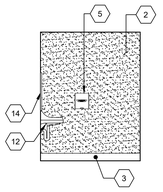

SINGLE TOILET ELEVATION - UNISEX SCALE: 1/4" = 1'-0" 12

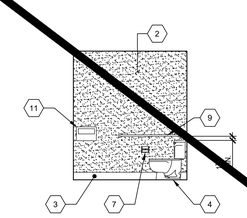

SINGLE TOILET ELEVATION - UNISEX SCALE: 1/4" = 1'-0" 13

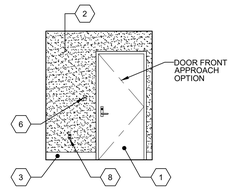

SINGLE TOILET ELEVATION - UNISEX SCALE: 1/4" = 1'-0" 14

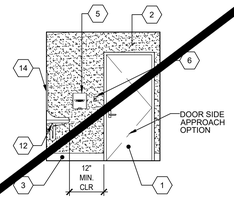

SINGLE TOILET ELEVATION - UNISEX SCALE: 1/4" = 1'-0" 15

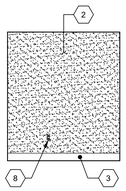

SINGLE TOILET ELEVATION - UNISEX SCALE: 1/4" = 1'-0" 16

NOT USED 17

NOT USED 18

NOT USED 19

KEY NOTES

AMS®
American Modular Systems
787 Spreckels Ave., Manteca, CA 95336
Phone (209) 825-1921 Fax (209) 825-7018
www.americanmodular.com

INTELLECTUAL-PROPERTY & PROPRIETARY RIGHTS STATEMENT
COPYRIGHT © AMERICAN MODULAR SYSTEMS (AMS)
AMS OWNS ALL COPYRIGHT AND OTHER INTELLECTUAL-PROPERTY AND PROPRIETARY RIGHTS IN THESE DRAWINGS, SPECIFICATIONS, AND THE MATERIAL CONTAINED HEREIN. CERTAIN ELEMENTS SHOWN IN THESE DOCUMENTS ARE REGISTERED TRADEMARKS OF AMS. ALL PATENTABLE MATERIALS CONTAINED IN THESE DOCUMENTS AND ORIGINATING WITH AMS ARE SUBJECT TO PATENT RIGHTS OF AMS. THESE DRAWINGS, SPECIFICATIONS, AND THE MATERIAL CONTAINED HEREIN MAY NOT BE REPRODUCED, TRANSMITTED, COPIED, DISTRIBUTED, MODIFIED, OR OTHERWISE DISPOSED OF (DIRECTLY OR INDIRECTLY) AND MAY NOT BE USED (IN WHOLE OR IN PART) TO ASSIST IN THE CONSTRUCTION, DESIGN, OR OTHER MAKING OF, OR FOR THE PURPOSE OF FURNISHING ANY INFORMATION FOR THE CONSTRUCTION, DESIGN, OR OTHER MAKING OF, ANY BUILDINGS (MODULAR OR OTHERWISE); DRAWINGS, SPECIFICATIONS, PRINTS, APPARATUS, OR PARTS THEREOF, EXCEPT AS EXPRESSLY PERMITTED BY WRITTEN CONSENT OF, OR IN A WRITTEN AGREEMENT WITH, AMS. SUBMITTAL OR DISTRIBUTION TO MEET OFFICIAL REGULATORY REQUIREMENTS WILL NOT BE CONSTRUED AS PUBLICATION IN DEROGATION OF AMS'S COPYRIGHT OR OTHER INTELLECTUAL-PROPERTY OR PROPRIETARY RIGHTS.

PRE-CHECKED SET NAME
24' x 40' THRU 120' x 40'
STANDARD MODULAR BUILDING
(LOW SEISMIC)
FORM®

SITE SPECIFIC PROJECT NAME

APPROVED
DIV. OF THE STATE ARCHITECT
APP: 04-122050 PC
REVIEWED FOR
SS ☑ FLS ☑ ACS ☑ CG ☑
DATE: 12/11/2023

☐ 2022 CBC PRE-CHECK (PC) DOCUMENT
A SEPARATE PROJECT APPLICATION FOR CONSTRUCTION IS REQUIRED.

MANUFACTURER PROFESSIONAL OF RECORD ON PC

LICENSED ARCHITECT
PATRICK J. MURPHY
No. C12631
Exp. 3-31-25
STATE OF CALIFORNIA

THESE DRAWINGS ARE PRELIMINARY AND NOT FOR CONSTRUCTION UNLESS STAMPED & SIGNED BY THE DESIGN PROFESSIONAL OF RECORD.

REVISIONS
1
2
3
4

DRAWN BY:	AA
SCALE:	AS NOTED
DATE:	MM/DD/YY
PROJECT NO:	XXXX-22

SHEET TITLE:
INTERIOR ELEVATIONS
RESTROOM OPTIONS

SHEET NUMBER:
A4.1

PLEASE RECYCLE

IDENTIFICATION STAMP
DIV. OF THE STATE ARCHITECT
APP: 02-122976 INC:
REVIEWED FOR
SS ☑ FLS ☑ ACS ☑
DATE: 03/12/2025

TRACY
UNIFIED SCHOOL DISTRICT

HMC Architects

3595001000

2101 CAPITOL AVENUE, SUITE 100
SACRAMENTO, CA 95816
916 368 7990 / www.hmcarchitects.com

ISSUE

Δ	DESCRIPTION	DATE
1	ADDENDUM "A"	3/20/25

KEYNOTES

GENERAL NOTES

FACILITY:
JACOBSON ELEMENTARY SCHOOL
1750 W KAVANAGH AVE
TRACY, CA 95376

PROJECT:
JACOBSON ES - TK CLASSROOM

SHEET NAME:
INTERIOR ELEVATIONS RESTROOM OPTIONS

DATE: **04/03/24** CLIENT PROJ NO: **3595001000**

SHEET:
A4.1
ADDENDUM "A"

Autodesk Docs://3595001000 TUSD TK CLASSROOMS 2025 R22/3595001000-A-TUSD-BOHN-SITE.rvt
12/3/2024 6:05:37 AM

THE LINE SHOWN ABOVE IS 1" ON ORIGINAL DRAWING. IF NOT 1" ADJUST DRAWING SCALES ACCORDINGLY

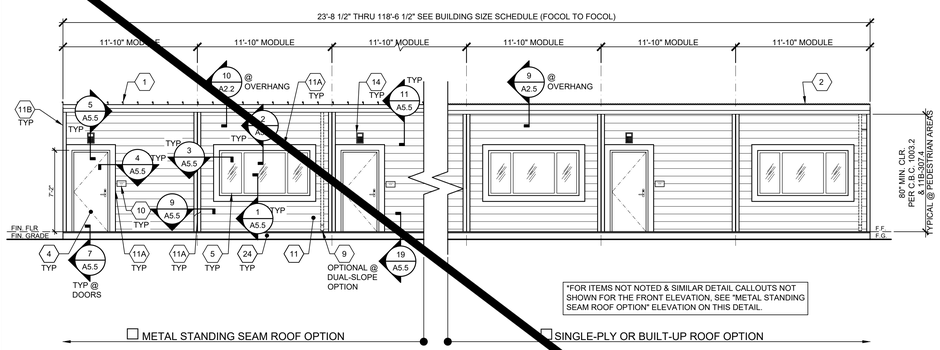

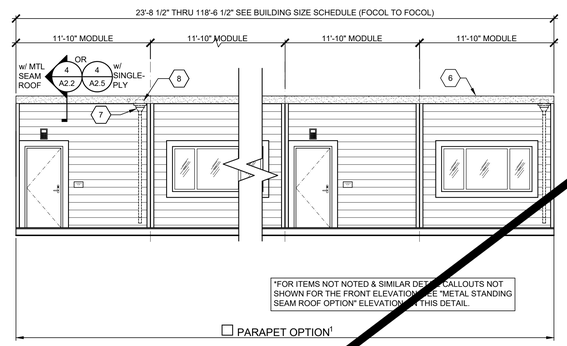

NOTES:
1. METAL STANDING SEAM OR SINGLE-PLY/BUILT-UP MAY BE USED WITH PARAPET OPTION.

EXTERIOR ELEVATION - FRONT

SCALE: 3/16" = 1'-0" 1

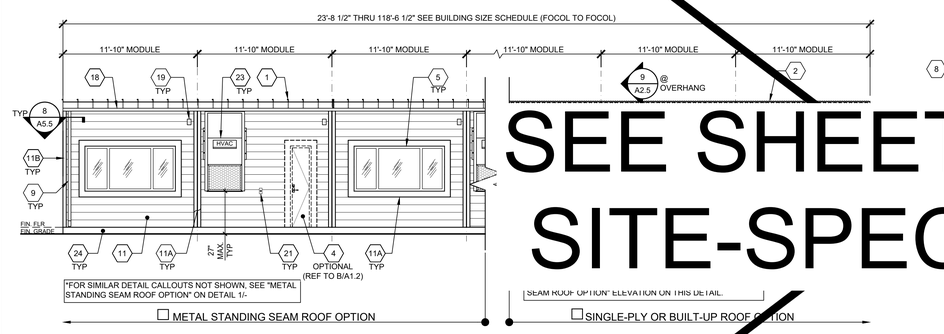

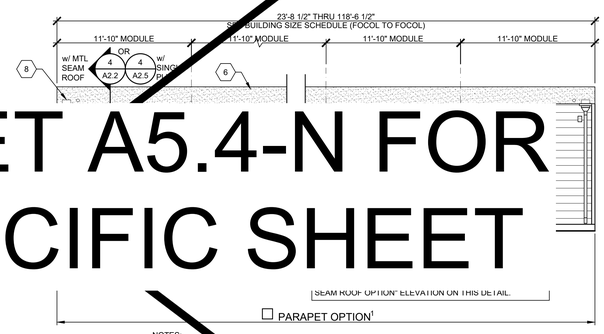

SEE SHEET A5.4-N FOR SITE-SPECIFIC SHEET

NOTES:
1. METAL STANDING SEAM OR SINGLE-PLY/BUILT-UP MAY BE USED WITH PARAPET OPTION.
2. IF DISTANCE FROM WALKING SURFACE TO LOWEST PART OF HVAC IS MORE THAN 27", PROTECTIVE GUARDS SHALL BE INSTALLED (BY OWNER) AT PATH OF TRAVEL LOCATIONS.

EXTERIOR ELEVATION - REAR

SCALE: 3/16" = 1'-0" 2

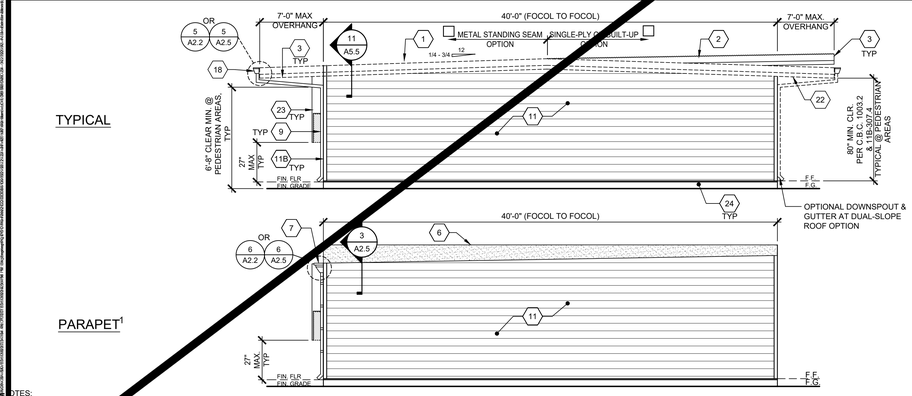

NOTES:
1. METAL STANDING SEAM OR SINGLE-PLY/BUILT-UP MAY BE USED WITH PARAPET OPTION. *FOR ITEMS NOT NOTED, "SEE ABOVE"
2. IF DISTANCE FROM WALKING SURFACE TO LOWEST PART OF HVAC IS MORE THAN 27", PROTECTIVE GUARDS SHALL BE INSTALLED (BY OWNER) AT PATH OF TRAVEL LOCATIONS.

EXTERIOR ELEVATION - LEFT

SCALE: 3/16" = 1'-0" 3

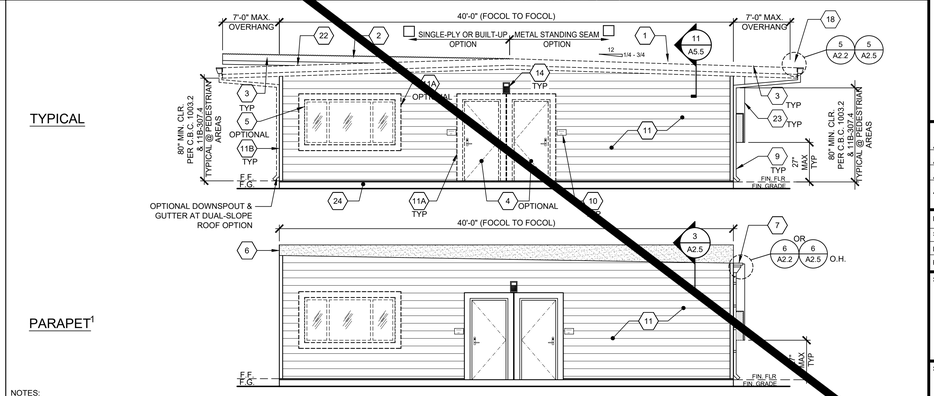

NOTES:
1. METAL STANDING SEAM OR SINGLE-PLY/BUILT-UP MAY BE USED WITH PARAPET OPTION. *FOR ITEMS NOT NOTED, "SEE ABOVE"
2. IF DISTANCE FROM WALKING SURFACE TO LOWEST PART OF HVAC IS MORE THAN 27", PROTECTIVE GUARDS SHALL BE INSTALLED (BY OWNER) AT PATH OF TRAVEL LOCATIONS.

EXTERIOR ELEVATION - RIGHT

SCALE: 3/16" = 1'-0" 4

1. STANDING SEAM METAL ROOFING
2. SINGLE-PLY ROOFING
3. OVERHANG - SEE STRUCTURAL
4. TYP EXTERIOR DOOR - SEE SCHEDULE SHEET N3.0
5. WINDOW - SEE SCHEDULE SHEET N3.0
6. OPTIONAL PARAPET - SEE SHEET S4.3
7. SCUPPER @ PARAPET OPTION - SEE DETAIL 6/A2.5
8. 4"x4" MIN. SCUPPER BOX @ PARAPET OPTION - SEE DETAIL 6/A2.5
9. DOWNSPOUT SEE DETAIL 8/A5.5 FOR ATTACHMENT
10. ROOM ID AND ISA SIGNAGE (BY OTHER) SEE DETAILS 5 & 9/N4.0 - TYP
11. 5/16" HARDIPLANK LAP SIDING
11A. 1x4 TRIM
11B. 22 GA. CORNER FLASHING
12. NOT USED
13. NOT USED
14. EXTERIOR LIGHT - SEE ELECTRICAL
15. NOT USED
16. NOT USED
17. NOT USED
18. GUTTER - SEE ATTACHMENT DETAIL 5/A2.2 AT STANDING SEAM ROOFING, OR 5/A2.5 AT SINGLE-PLY / BUILT-UP ROOFING
19. MODULAR IDENTIFICATION TAG +90" ABOVE A.F.F.
20. FIRE ALARM HORN(BY OTHERS)-REFER TO ELECTRICAL PLANS
21. WP/G.F.C.I. @ HVAC UNITS - REFER TO ELECTRICAL PLANS
22. DUAL SLOPE OPTION
23. HVAC UNIT
24. SHEET METAL FLASHING PAINTED BODY COLOR

KEY NOTES

BUILDING SIZE SCHEDULE

BUILDING SIZE (FT)	TOTAL # OF 12'-0" WIDE MODULES	TOTAL # OF CENTER MODULES	OVERALL BUILDING WIDTH[1]
24'x40'	2	0	23'-8½"
36'x40'	3	1	35'-8½"
48'x40'	4	2	47'-5"
60'x40'	5	3	59'-3½"
72'x40'	6	4	71'-1½"
84'x40'	7	5	82'-11½"
96'x40'	8	6	94'-10"
108'x40'	9	7	106'-8½"
120'x40'	10	8	118'-6½"

NOTES:
1. TOTAL BUILDING WIDTH INCLUDES ½" PER MODULE CONSTRUCTION TOLERANCE PER FOUNDATION SHEETS S1.0, S1.1, S1.2 & S1.3.

BUILDING SIZE SCHEDULE

American Modular Systems
787 Spreckels Ave., Manteca, CA 95336
Phone (209) 825-1921 Fax (209) 825-7018
www.americanmodular.com

INTELLECTUAL-PROPERTY & PROPRIETARY RIGHTS STATEMENT
COPYRIGHT © AMERICAN MODULAR SYSTEMS (AMS)
AMS OWNS ALL COPYRIGHT AND OTHER INTELLECTUAL-PROPERTY AND PROPRIETARY RIGHTS IN THESE DRAWINGS, SPECIFICATIONS, AND THE MATERIAL CONTAINED HEREIN. CERTAIN ELEMENTS SHOWN IN THESE DOCUMENTS ARE REGISTERED TRADEMARKS OF AMS. ALL PATENTABLE MATERIALS CONTAINED IN THESE DOCUMENTS AND ORIGINATING WITH AMS ARE THE PROPERTY OF AMS. THESE DRAWINGS, SPECIFICATIONS, DRAWINGS AND THE MATERIAL CONTAINED HEREIN MAY NOT BE REPRODUCED, TRANSMITTED, COPIED, DISTRIBUTED, MODIFIED, OR OTHERWISE DISPOSED OF (DIRECTLY OR INDIRECTLY) AND MAY NOT BE USED (IN WHOLE OR IN PART) TO ASSIST IN THE CONSTRUCTION, DESIGN, OR OTHER MAKING OF, OR FOR THE PURPOSE OF FURNISHING ANY INFORMATION FOR THE CONSTRUCTION, DESIGN, OR OTHER MAKING OF, ANY BUILDINGS (MODULAR OR OTHERWISE), DRAWINGS, SPECIFICATIONS, PRINTS, APPARATUS, OR PARTS THEREOF, EXCEPT AS EXPRESSLY PERMITTED BY WRITTEN CONSENT OF, OR IN A WRITTEN AGREEMENT WITH, AMS. SUBMITTAL OR DISTRIBUTION TO MEET OFFICIAL REGULATORY REQUIREMENTS WILL NOT BE CONSTRUED AS PUBLICATION IN DEROGATION OF AMS'S COPYRIGHT OR OTHER INTELLECTUAL-PROPERTY OR PROPRIETARY RIGHTS.

PRE-CHECKED SET NAME
24' x 40' THRU 120' x 40'
STANDARD MODULAR BUILDING
(LOW SEISMIC)
FORM®

SITE SPECIFIC PROJECT NAME

APPROVED
DIV. OF THE STATE ARCHITECT
APP: 04-122050 PC
REVIEWED FOR
SS ☑ FLS ☑ ACS ☑ CG ☑
DATE: 12/11/2023

☐ 2022 CBC PRE-CHECK (PC) DOCUMENT
A SEPARATE PROJECT APPLICATION FOR CONSTRUCTION IS REQUIRED.

MANUFACTURER PROFESSIONAL OF RECORD ON PC

LICENSED ARCHITECT PATRICK CHUNG No. C12631 Exp. 3-31-25 STATE OF CALIFORNIA

THESE DRAWINGS ARE PRELIMINARY AND NOT FOR CONSTRUCTION UNLESS STAMPED & SIGNED BY THE DESIGN PROFESSIONAL OF RECORD.

REVISIONS
1
2
3
4

DRAWN BY:	AA
SCALE:	AS NOTED
DATE:	MM/DD/YY
PROJECT NO:	XXXX-22

SHEET TITLE:
TYPICAL EXTERIOR ELEVATIONS - LAP SIDING OPTION

SHEET NUMBER:
A5.4

IDENTIFICATION STAMP
DIV. OF THE STATE ARCHITECT
APP: 02-122976 INC:
REVIEWED FOR
SS ☑ FLS ☑ ACS ☑
DATE: 03/12/2025

TRACY UNIFIED SCHOOL DISTRICT

HMC Architects
3595001000
2101 CAPITOL AVENUE, SUITE 100
SACRAMENTO, CA 95816
916 368 7990 / www.hmcarchitects.com

ISSUE

Δ	DESCRIPTION	DATE
1	ADDENDUM "A"	3/20/25

KEYNOTES

GENERAL NOTES

FACILITY:
JACOBSON ELEMENTARY SCHOOL
1750 W KAVANAGH AVE
TRACY, CA 95376

PROJECT:
JACOBSON ES - TK CLASSROOM

SHEET NAME:
TYPICAL EXTERIOR ELEVATIONS - LAP SIDING OPTION

DATE: **04/03/24** CLIENT PROJ NO: **3595001000**

SHEET:
A5.4
ADDENDUM "A"

PLEASE RECYCLE

Autodesk Docs://3595001000 TUSD TK CLASSROOMS 2025 R23/3595001000-A-TUSD-BOHN-SITE.rvt
12/3/2024 6:05:38 AM

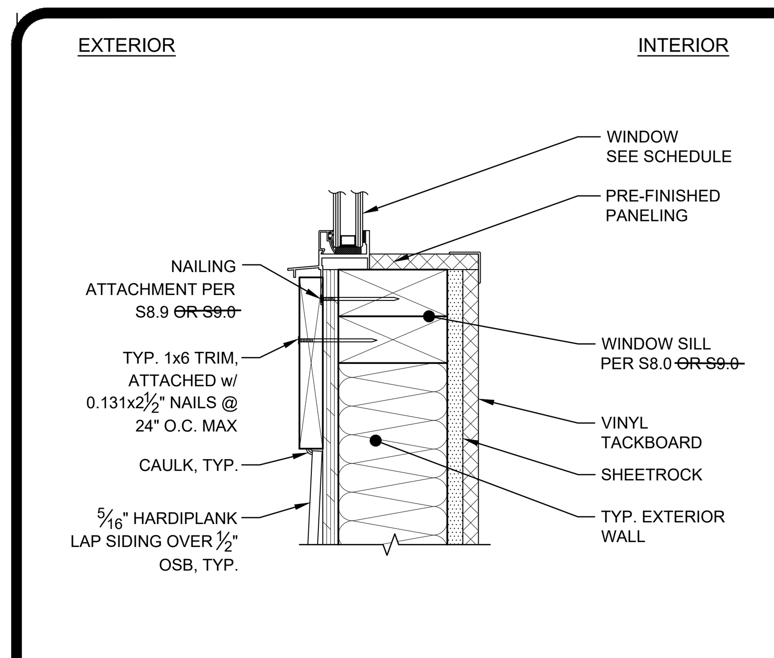

TYPICAL WINDOW SILL — SCALE: 3" = 1'-0" — 1

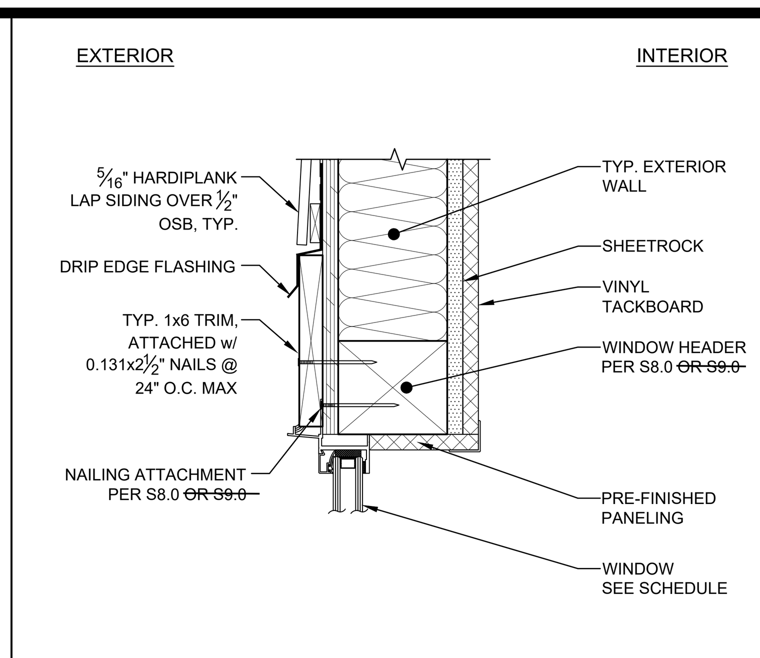

TYPICAL WINDOW HEADER — SCALE: 3" = 1'-0" — 2

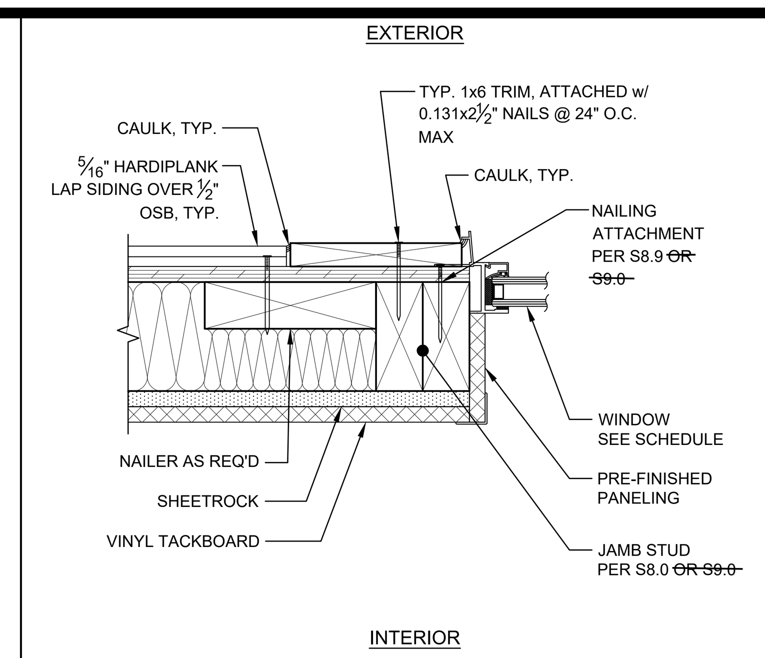

TYPICAL WINDOW JAMB — SCALE: 3" = 1'-0" — 3

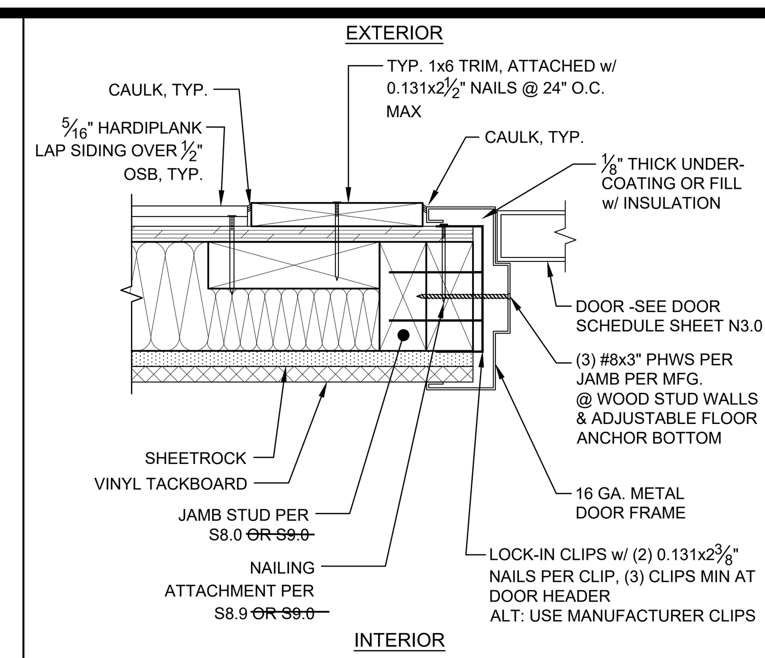

TYPICAL DOOR JAMB — SCALE: 3" = 1'-0" — 4

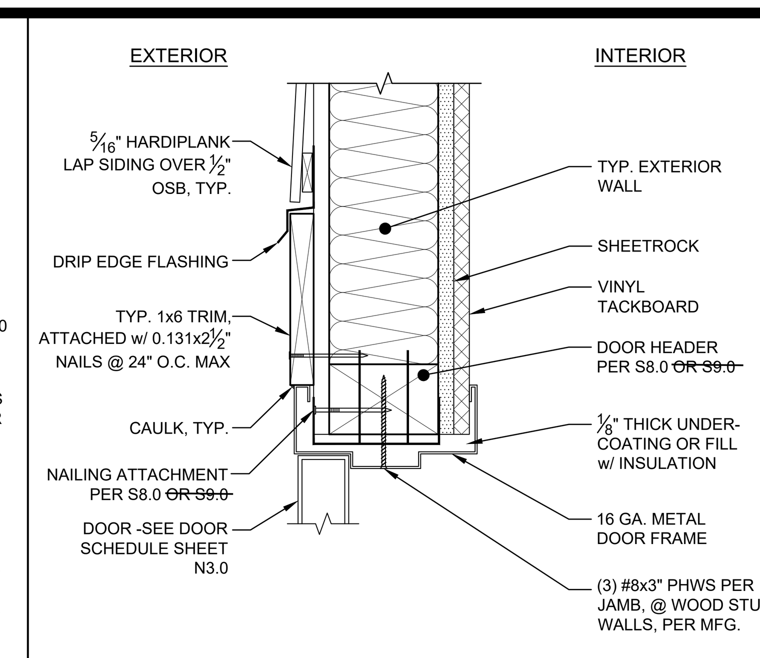

TYPICAL DOOR HEADER — SCALE: 3" = 1'-0" — 5

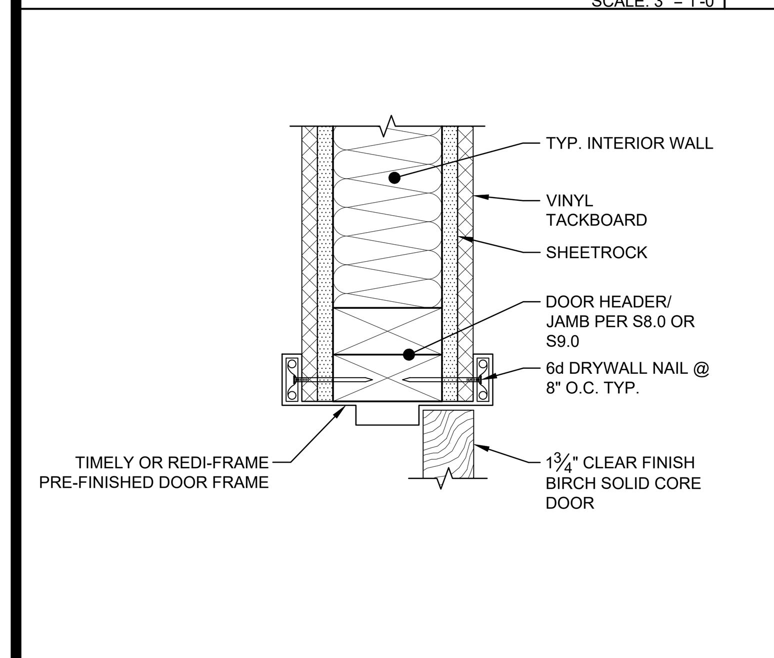

TYP. INTERIOR DOOR HEADER/JAMB — SCALE: 3" = 1'-0" — 6

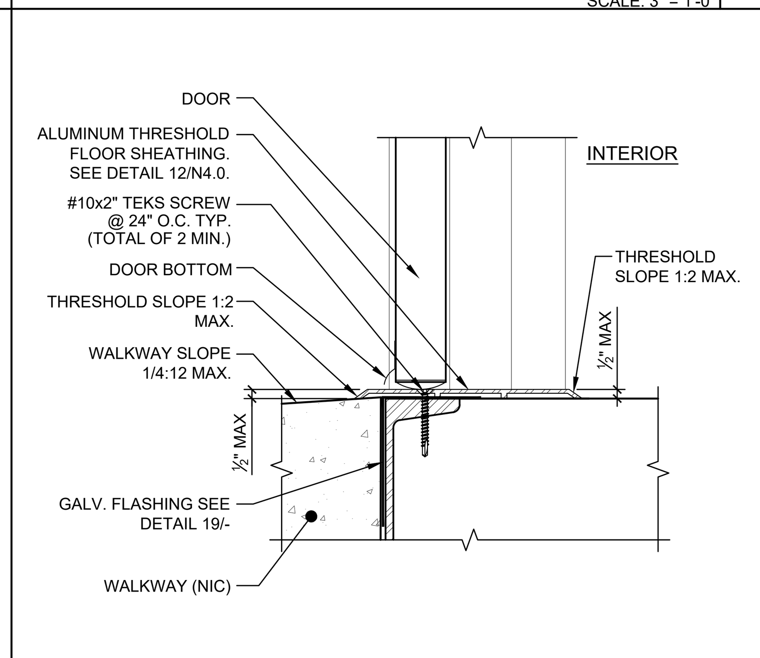

TYPICAL THRESHOLD DETAIL — SCALE: 3" = 1'-0" — 7

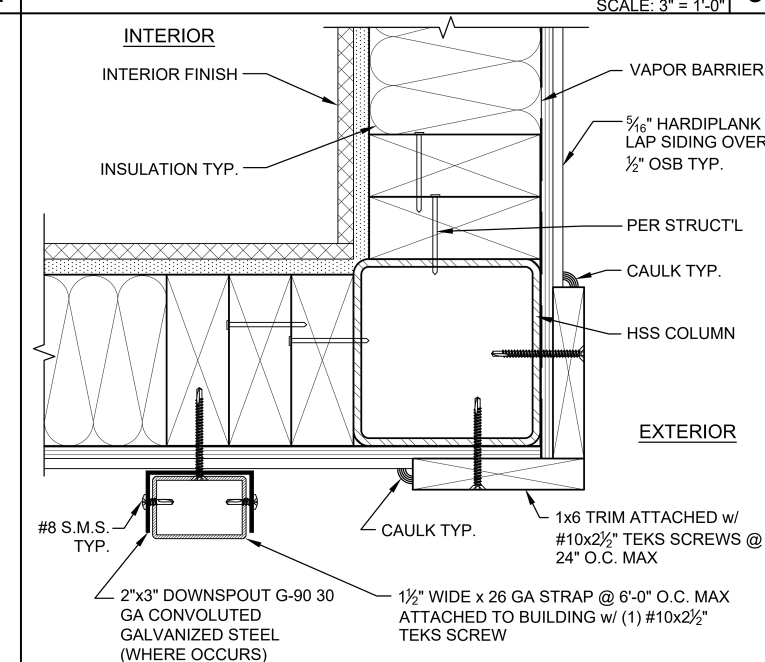

TYP. BLDG CORNER & DOWNSPOUT ATTACHMENT DETAIL — SCALE: 3" = 1'-0" — 8

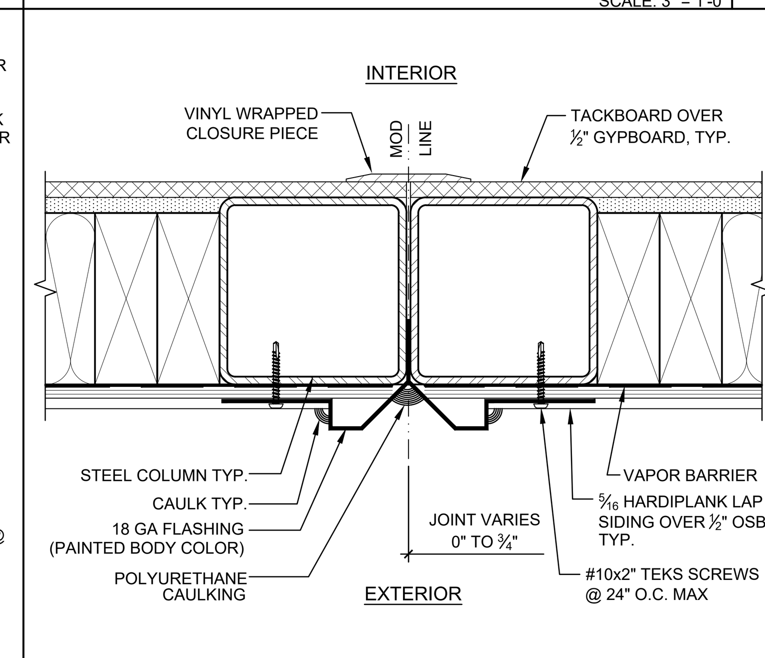

TYP. MODLINE CLOSURE DETAIL — SCALE: 3" = 1'-0" — 9

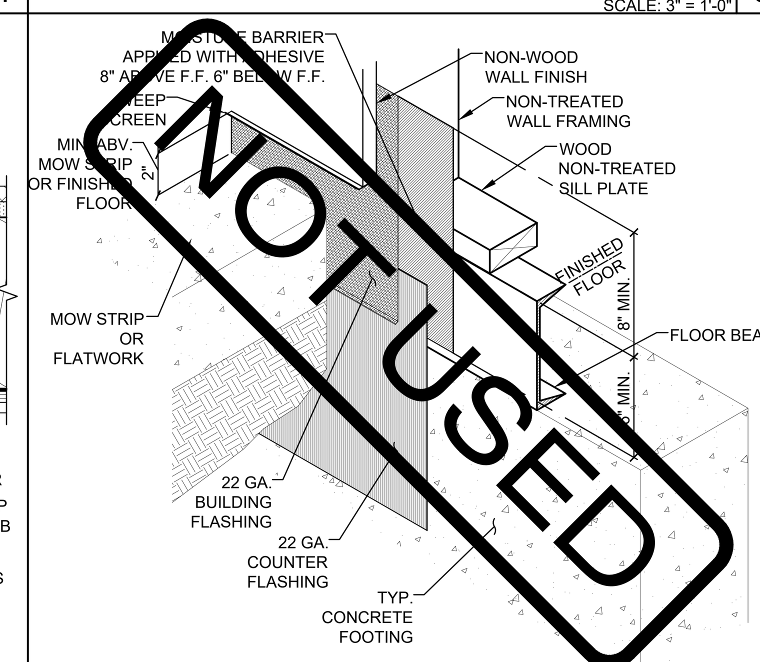

ISOMETRIC FLASHING DETAIL FOR BUILDINGS 2160 SQ. FT. OR LESS — SCALE: 1 1/2" = 1'-0" — 10

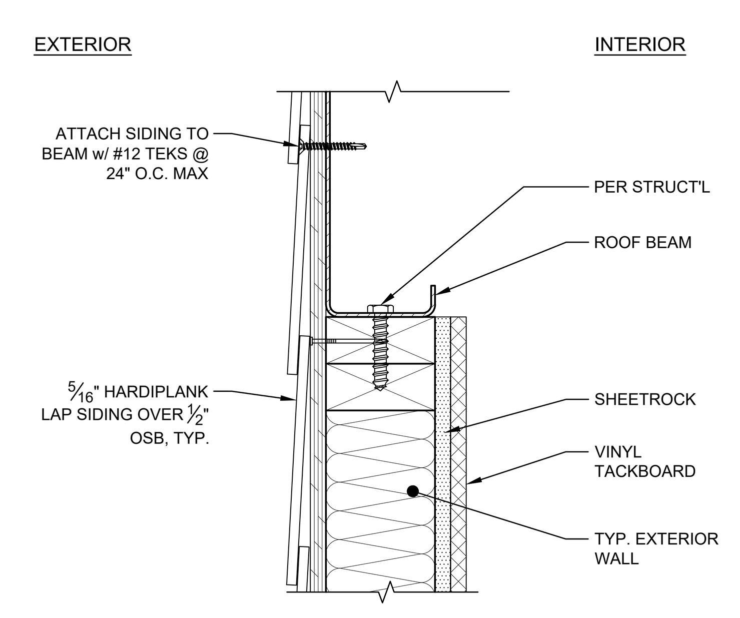

SIDING DETAIL @ ROOF BEAM — SCALE: 3" = 1'-0" — 11

NOT USED — 12

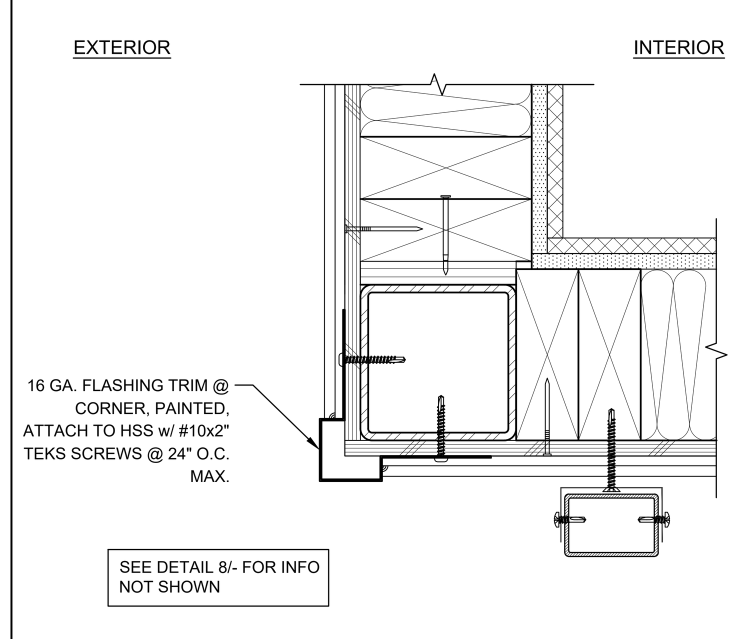

ALTERNATE BUILDING CORNER DETAIL — SCALE: 3" = 1'-0" — 13

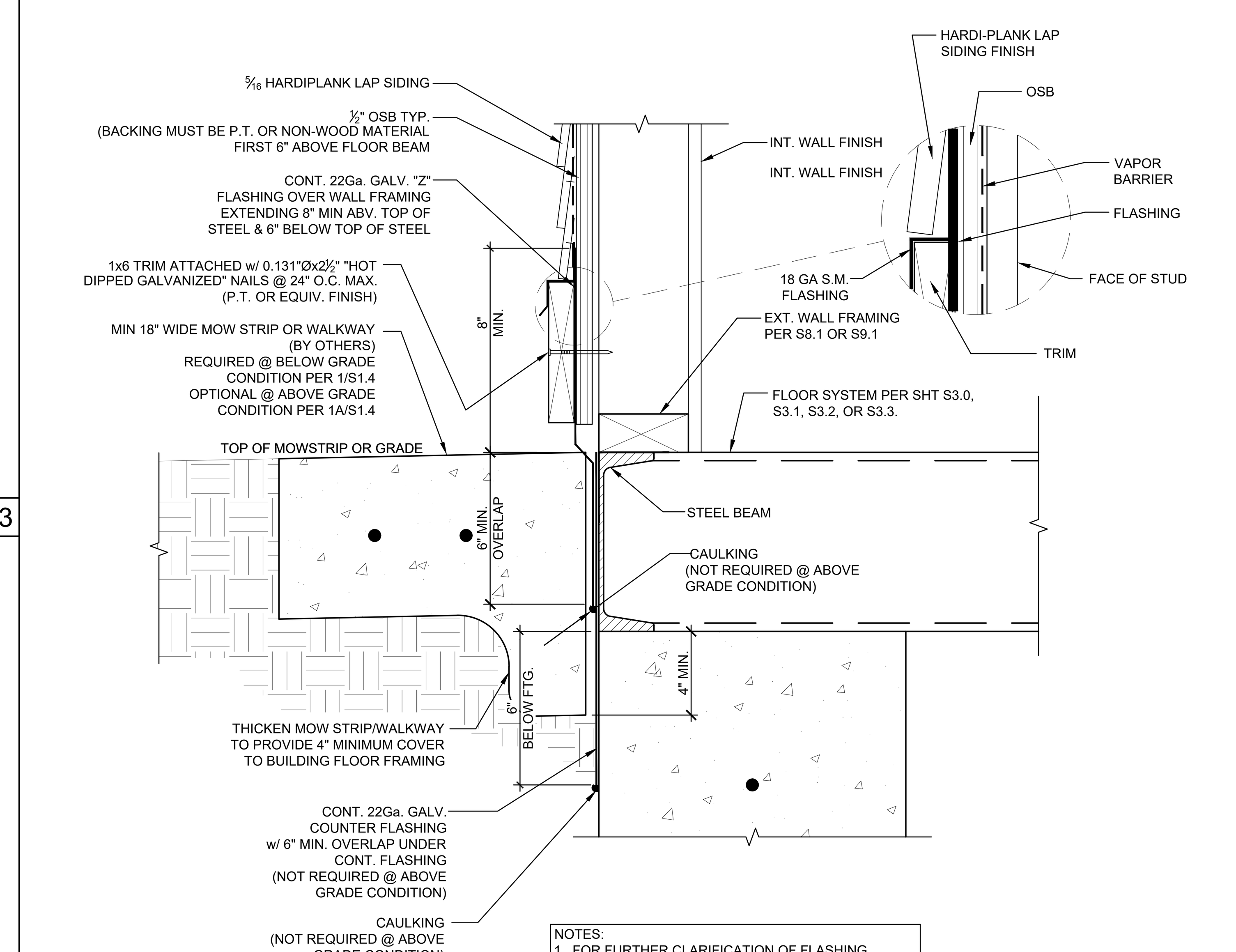

NOTES:
1. FOR FURTHER CLARIFICATION OF FLASHING, SEE ISOMETRIC VIEW - DETAIL 10/-.
2. FLASHING DETAILS 10 & 19/- ARE VALID FOR ALL BUILDINGS 2160 SQ. FT. OR LESS AND FOR ALL BUILDINGS FOR WHICH DETERIORATION PROTECTION IS NOT REQUIRED PER SHEET A5.5A.

FLASHING DETAIL FOR BUILDINGS 2160 SQ. FT. OR LESS — SCALE: 3" = 1'-0" — 19

SHEET NOTES

1. FOR OPTIONAL METAL STUD FRAMING, SEE S9.0-S9.2.
2. ADDITIONAL R-5 RIGID INSULATION REQUIRED @ METAL STUD WALLS. REFER TO MINIMUM INSULATION SCHEDULES ON SHEET M1.7. & DETAIL 18/-
3. FOR FINISH OPTIONS, SEE SHEET A7.0.
4. REFER TO SHEET A7.3 FOR ALL BUILDING INSULATION INSTALLATION NOT SHOWN OR NOTED ON DETAIL ON THIS SHEET.
5. FOR BUILDINGS 2160 SQ. FT. OR LESS & ALL BUILDINGS INSTALLED ON ABOVE GRADE FOUNDATIONS PER 1A/S1.4 , FLASHING SHALL BE PROVIDED PER DETAILS 10 & 19/-.
6. FOR BUILDINGS LARGER THAN 2160 SQ. FT. INSTALLED ON BELOW GRADE FOUNDATIONS PER 1/S1.4, FLASHING & DETERIORATION PROTECTION SHALL BE PROVIDED PER SHEET S5.5A. WHERE DETERIORATION PROTECTION IS NOT REQUIRED BY THE SHEET NOTES OF SHEET A5.5A, FLASHING SHALL BE PROVIDED BY DETAIL 10 & 19/-.
7. LAP SIDING SPECIFICATIONS - FACTORY PRIMED FIBER CEMENT BOARDS - 12' LENGTH X 4"-10-3/4" PLANKS. ASTM-D3359 & ASTM-E136 TESTED - INSTALLATION PER MANUFACTURER'S INSTRUCTIONS. PLANKS SHALL BE ATTACHED WITH 8D RING SHANK GALVANIZED NAILS TO EACH STUD (16" O.C.).
8. FLAME SPREAD OF 0 (ASTM E84) & SMOKE DEVELOPMENT OF LESS THAN 5 PER ASTM E84

NOT USED — 17

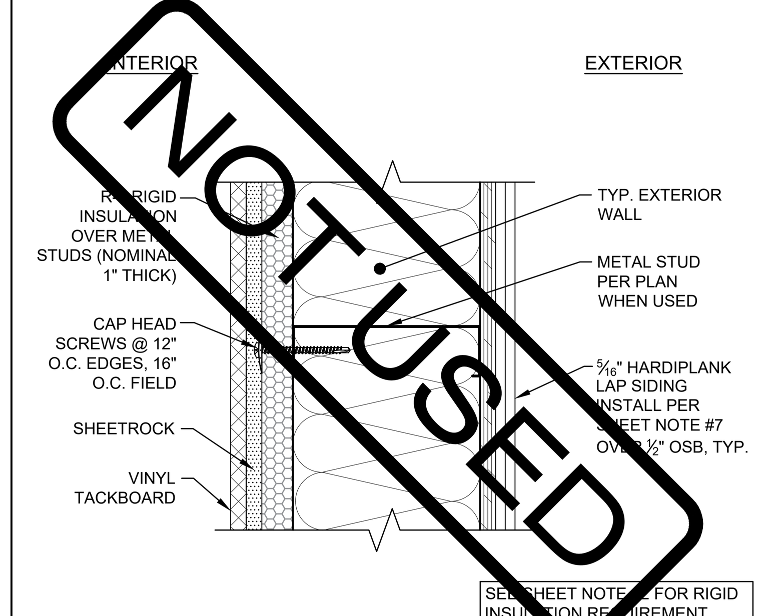

RIGID INSULATION @ METAL STUDS — SCALE: 3" = 1'-0" — 18

THE LINE SHOWN ABOVE IS EXACTLY ONE INCH LONG AT THIS SHEETS ORIGINAL PAGE SIZE

Autodesk Docs://3595005000 TUSD TK CLASSROOMS 2025 R22/3595005000-A-TUSD-BOHN-SITE.rvt

IDENTIFICATION STAMP DIV. OF THE STATE ARCHITECT
APP: 02-122976 INC:
REVIEWED FOR
SS ☑ FLS ☑ ACS ☑
DATE: 03/12/2025

TRACY UNIFIED SCHOOL DISTRICT

HMC Architects

3595001000

2101 CAPITOL AVENUE, SUITE 100
SACRAMENTO, CA 95816
916 368 7990 / www.hmcarchitects.com

ISSUE

Δ	DESCRIPTION	DATE
A	ADDENDUM "A"	3/20/25

AMS American Modular Systems
787 Spreckels Ave., Manteca, CA 95336
Phone (209) 825-1921 Fax (209) 825-7018
www.americanmodular.com

INTELLECTUAL-PROPERTY & PROPRIETARY RIGHTS STATEMENT
COPYRIGHT © AMERICAN MODULAR SYSTEMS (AMS)
AMS OWNS ALL COPYRIGHT AND OTHER INTELLECTUAL-PROPERTY AND PROPRIETARY RIGHTS IN THESE DRAWINGS, SPECIFICATIONS, AND THE MATERIAL CONTAINED HEREIN. CERTAIN ELEMENTS SHOWN IN THESE DOCUMENTS ARE REGISTERED TRADEMARKS OF AMS. ALL PATENTABLE MATERIALS CONTAINED IN THESE DOCUMENTS AND ORIGINATING WITH AMS WILL REMAIN THE SOLE PROPERTY OF AMS. THESE DRAWING, SPECIFICATIONS, AND THE MATERIAL CONTAINED HEREIN MAY NOT BE REPRODUCED, TRANSMITTED, COPIED, DISTRIBUTED, MODIFIED, OR OTHERWISE DISPOSED OF (DIRECTLY OR INDIRECTLY) AND MAY NOT BE USED (IN WHOLE OR IN PART) TO ASSIST IN THE CONSTRUCTION, DESIGN, OR OTHER MAKING OF, OR FOR THE PURPOSE OF FURNISHING ANY INFORMATION FOR THE CONSTRUCTION, DESIGN, OR OTHER MAKING OF, ANY BUILDINGS (MODULAR OR OTHERWISE), DRAWINGS, SPECIFICATIONS, PRINTS, APPARATUS, OR PARTS THEREOF, EXCEPT AS EXPRESSLY PERMITTED BY WRITTEN CONSENT OF, OR IN A WRITTEN AGREEMENT WITH, AMS. SUBMITTAL OR DISTRIBUTION TO MEET OFFICIAL REGULATORY REQUIREMENTS WILL NOT BE CONSTRUED AS PUBLICATION IN DEROGATION OF AMS'S COPYRIGHT OR OTHER INTELLECTUAL-PROPERTY OR PROPRIETARY RIGHTS.

PRE-CHECKED SET NAME
24' x 40' THRU 120' x 40' STANDARD MODULAR BUILDING (LOW SEISMIC)
FORM

SITE SPECIFIC PROJECT NAME
.
.
.

APPROVED DIV. OF THE STATE ARCHITECT
APP: 04-122050 PC
REVIEWED FOR
SS ☑ FLS ☑ ACS ☑ CG ☑
DATE: 12/11/2023

☐ 2022 CBC PRE-CHECK (PC) DOCUMENT
A SEPARATE PROJECT APPLICATION FOR CONSTRUCTION IS REQUIRED.

MANUFACTURER PROFESSIONAL OF RECORD ON PC

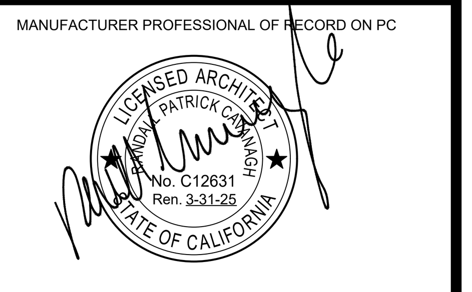

THESE DRAWINGS ARE PRELIMINARY AND NOT FOR CONSTRUCTION UNLESS STAMPED & SIGNED BY THE DESIGN PROFESSIONAL OF RECORD.

REVISIONS

1	
2	
3	
4	

DRAWN BY:	AA
SCALE:	AS NOTED
DATE:	MM/DD/YY
PROJECT NO:	XXXX-22

SHEET TITLE:
TYP. ARCHITECTURAL DETAILS - LAP SIDING OPTION

SHEET NUMBER:
A5.5

KEYNOTES

GENERAL NOTES

FACILITY:
JACOBSON ELEMENTARY SCHOOL
1750 W KAVANAGH AVE
TRACY, CA 95376

PROJECT:
JACOBSON ES - TK CLASSROOM

SHEET NAME:
TYP. ARCHITECTURAL DETAILS - LAP SIDING OPTION

DATE: **04/03/24** CLIENT PROJ NO: **3595001000**

SHEET:
A5.5

ADDENDUM "A"

PLEASE RECYCLE

THE LINE SHOWN ABOVE IS EXACTLY ONE INCH LONG AT THIS SHEETS ORIGINAL PAGE SIZE

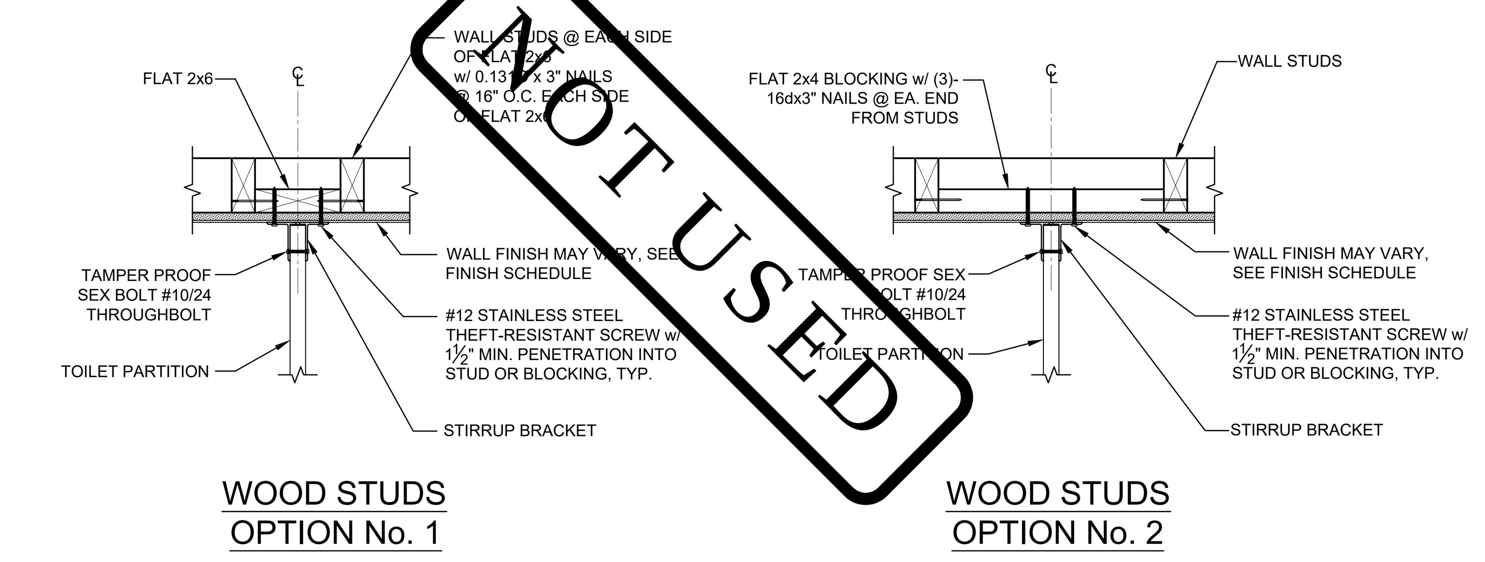

TOILET PARTITION ANCHORAGE BLOCKING DETAILS @ WALL — SCALE: 1-1/2" = 1'-0" — 1

NOTCH & BORING SCHEDULE

	NOMINAL STUD SIZE	ACTUAL STUD DEPTH	MAX NOTCH DEPTH	MAX BORED HOLE DIAMETER
EXTERIOR WALL	2x6	5½"	NOT PERMITTED	1"
	2x8	7¼"	1½"	1¾"
INTERIOR WALL	2x4	3½"	NOT PERMITTED	¾"
	2x6	5½"	¾"	1½"
	2x8	7¼"	1½"	2½"

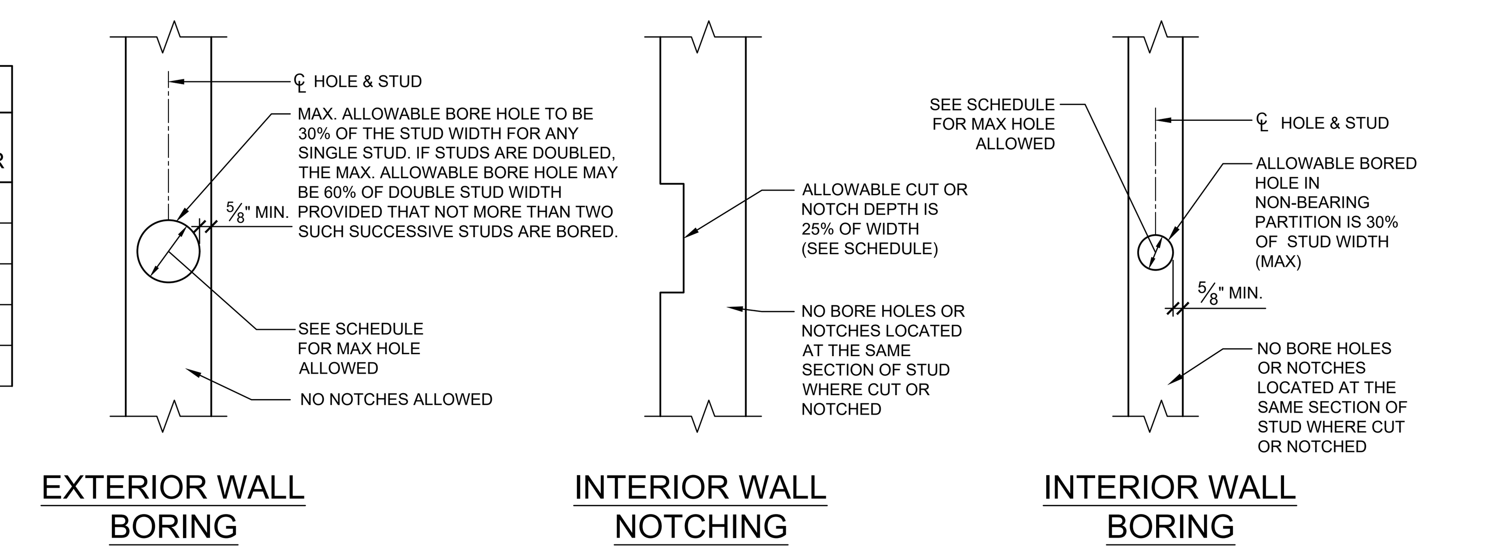

STUD NOTCHING AND BORING DETAILS — NOT TO SCALE — 2

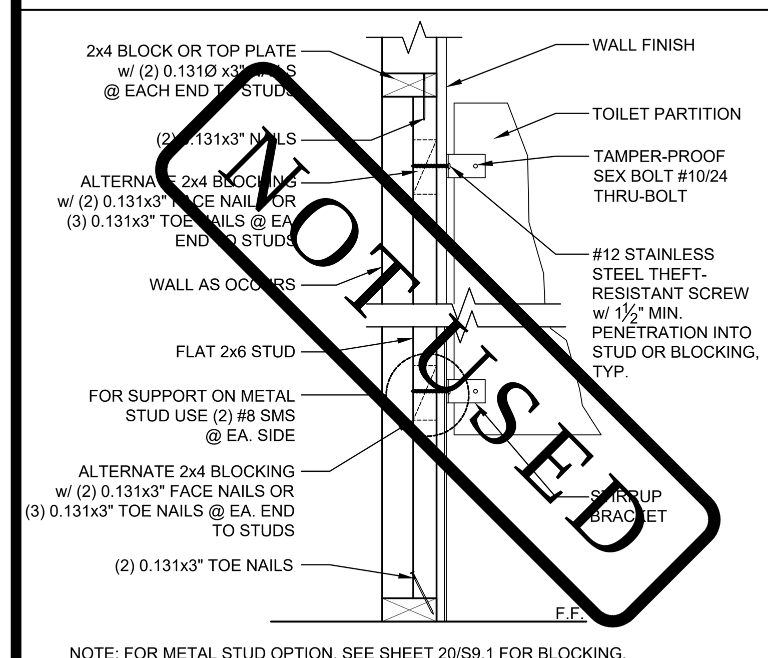

NOTE: FOR METAL STUD OPTION, SEE SHEET 20/S9.1 FOR BLOCKING.

TOILET PARTITION WALL BLOCKING — NOT TO SCALE — 3

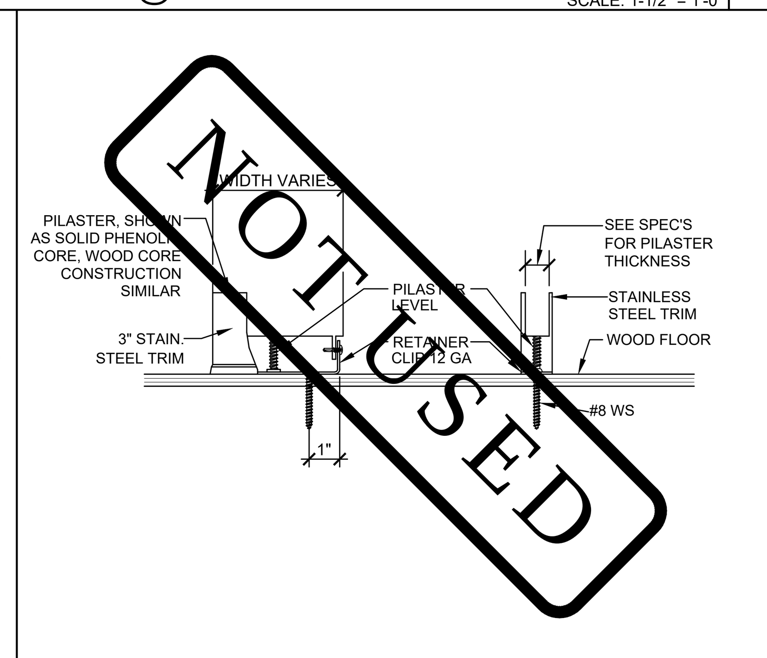

PARTITION TO WOOD FLOOR — NOT TO SCALE — 4

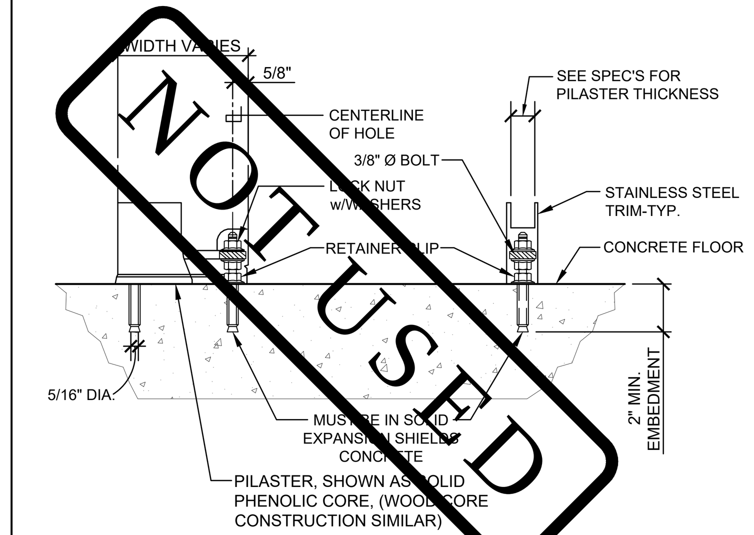

DRILL HOLES FOR FLOOR ATTACHMENT 5/8" FROM EDGE OF PILASTER. TYPICAL FOR ALL LOCATIONS. NOTE: PLACE STAINLESS STEEL TRIM ON PILASTER, SLIDE UP BEFORE SECURING PILASTER TO FLOOR ATTACHMENT.

PARTITION TO CONCRETE FLOOR — NOT TO SCALE — 5

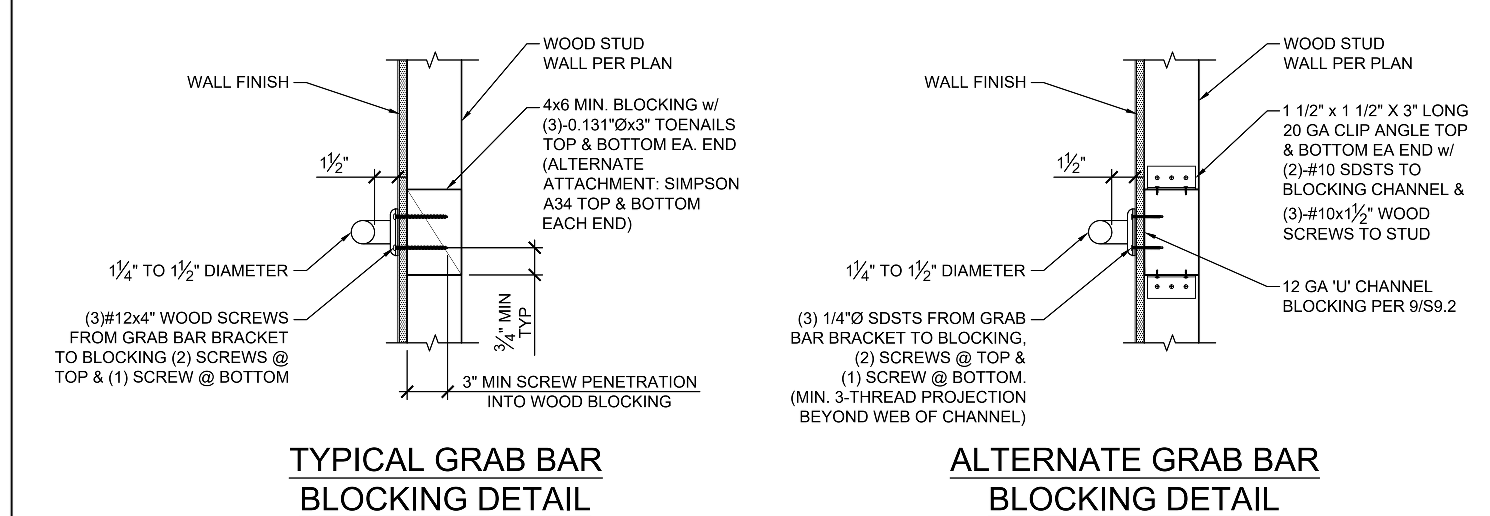

NOTE: FOR METAL STUD WALL OPTION, SEE DETAILS 9&10/S9.2.

GRAB BAR BLOCKING DETAIL — SCALE: 1-1/2" = 1'-0" — 6

NOTE:
1. FOR BRACING OF PARTITION WALLS WITH CABINETS OR BOOKSHELVES, REFER TO DETAILS 13&18/S8.1 @ WOOD STUD WALLS & DETAILS 9&10/S9.1 @ METAL STUD WALLS.
2. WHERE WORK SURFACES ARE PROVIDED FOR USE BY OTHER THAN EMPLOYEES, AT LEAST 5% SHALL BE ACCESSIBLE WITH FORWARD APPROACH. SEE 6/P2.0. (11B-226, 11B-902)
3. WHERE WORK SURFACES THAT ARE USED PRIMARILY BY CHILDREN 5 YEARS AND YOUNGER SHALL NOT BE REQUIRED TO COMPLY WITH SECTION 11B-902.4.

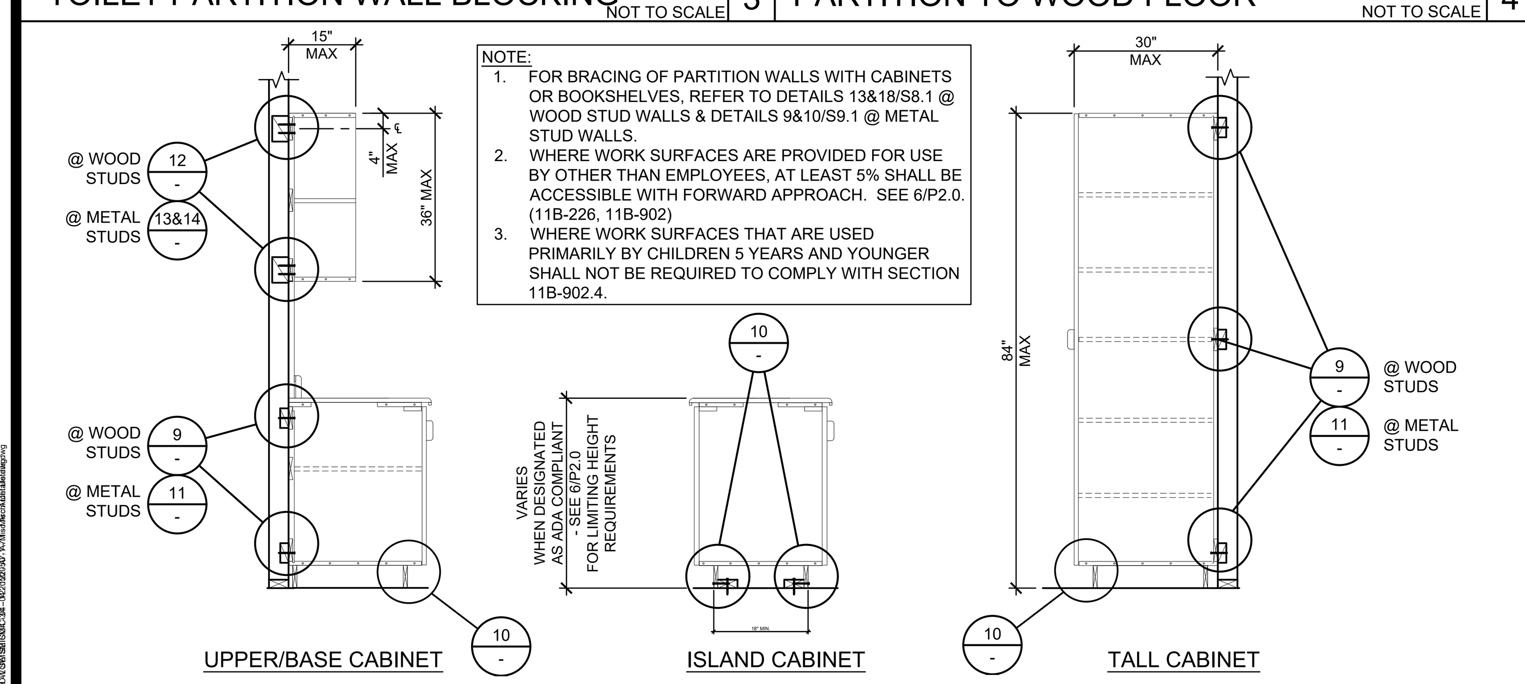

TYP. CABINET ATTACHMENT — NOT TO SCALE — 8

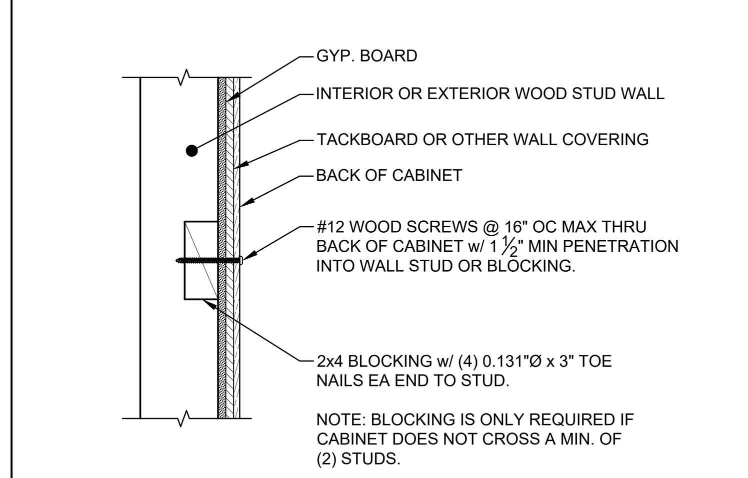

NOTE: SEE 11/- FOR METAL STUD WALLS.

FLOOR SUPPORTED CABINET ATTACHMENT @ WOOD STUD WALLS — SCALE: 1-1/2" = 1'-0" — 9

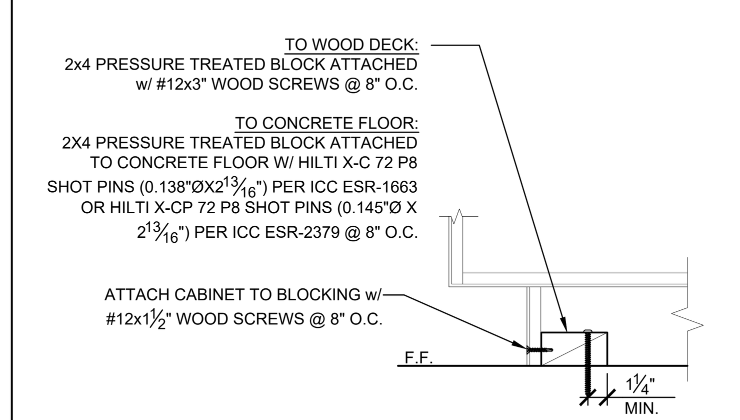

BASE CABINET ATTACHMENT @ FLOOR — SCALE: 1-1/2" = 1'-0" — 10

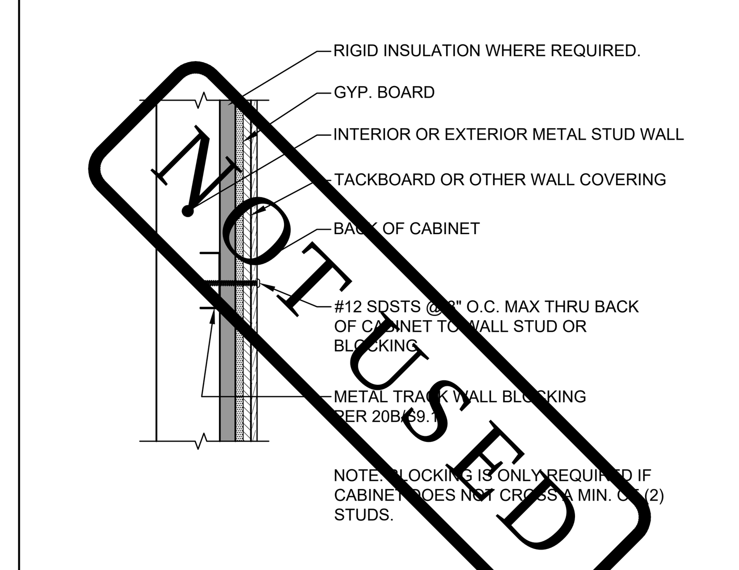

NOTE: SEE 9/- FOR WOOD STUD WALLS.

FLOOR SUPPORTED CABINET ATTACHMENT @ METAL STUD WALLS — SCALE: 1-1/2" = 1'-0" — 11

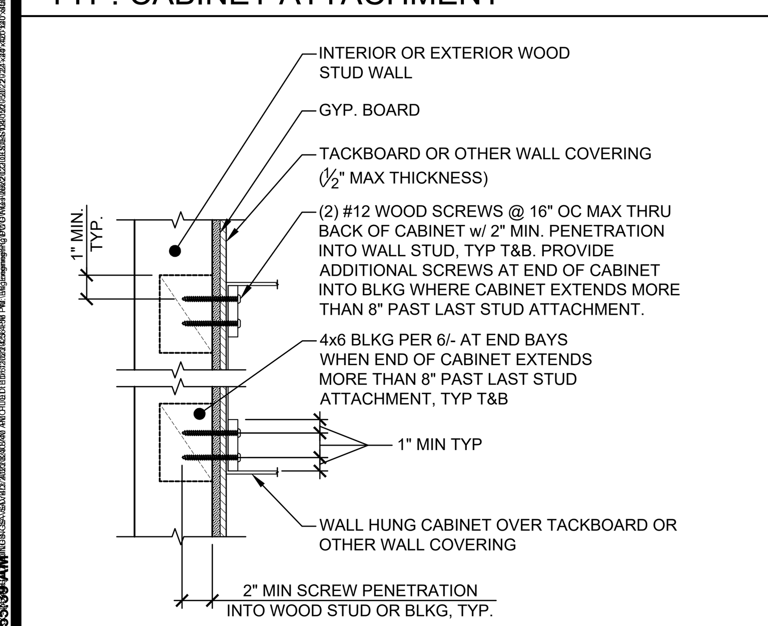

NOTE: SEE 13&14/- FOR METAL STUD WALLS.

WALL HUNG CABINET ATTACHMENT @ WOOD STUD WALLS (INTERIOR & EXTERIOR WALLS) — SCALE: 1-1/2" = 1'-0" — 12

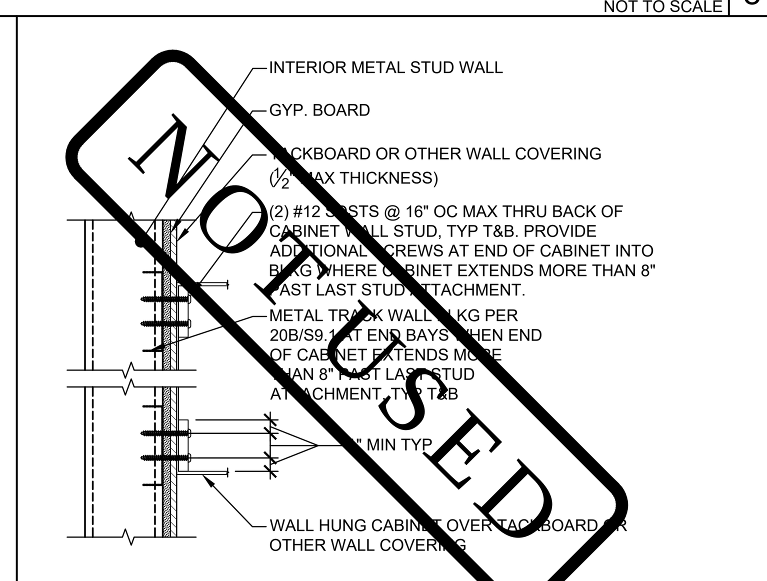

NOTE: SEE 14/- FOR EXTERIOR METAL STUD WALLS. SEE 12/- FOR WOOD STUDS WALLS.

WALL HUNG CABINET ATTACHMENT @ INTERIOR METAL STUD WALLS — SCALE: 1-1/2" = 1'-0" — 13

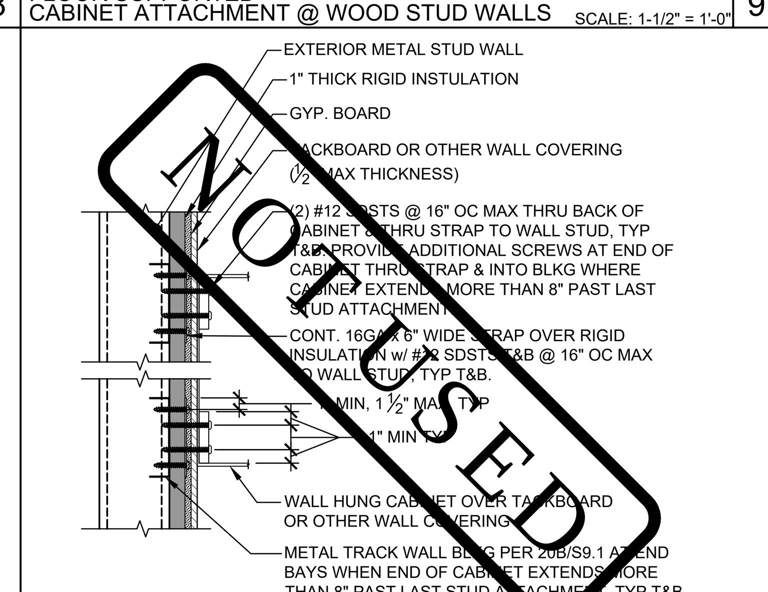

NOTE: SEE 13/- FOR INTERIOR METAL STUD WALLS. SEE 12/- FOR WOOD STUDS WALLS.

WALL HUNG CABINET ATTACHMENT @ EXTERIOR METAL STUD WALLS — SCALE: 1-1/2" = 1'-0" — 14

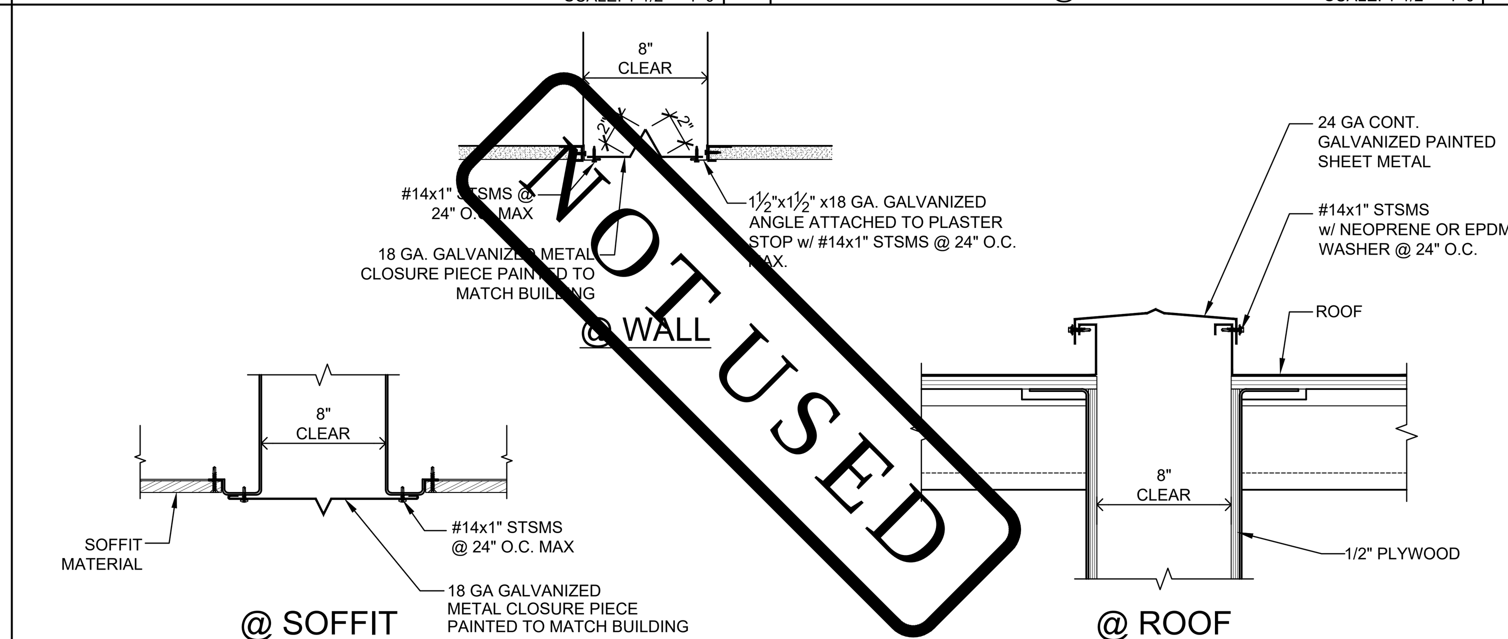

SEISMIC CLOSURE DETAILS — 15

Autodesk Docs://3595005000 TUSD TK CLASSROOMS 2025 R22/3595005000-A-TUSD-BOHN-SITE.rvt
12/3/2024 9:55:30 AM

IDENTIFICATION STAMP
DIV. OF THE STATE ARCHITECT
APP: 02-122976 INC:
REVIEWED FOR
SS ☑ FLS ☑ ACS ☑
DATE: 03/12/2025

TRACY UNIFIED SCHOOL DISTRICT

HMC Architects

3595001000

2101 CAPITOL AVENUE, SUITE 100
SACRAMENTO, CA 95816
916 368 7990 / www.hmcarchitects.com

ISSUE

Δ	DESCRIPTION	DATE
A	ADDENDUM "A"	3/20/25

KEYNOTES

GENERAL NOTES

AMS American Modular Systems
787 Spreckels Ave., Manteca, CA 95336
Phone (209) 825-1921 Fax (209) 825-7018
www.americanmodular.com

INTELLECTUAL-PROPERTY & PROPRIETARY RIGHTS STATEMENT
COPYRIGHT © AMERICAN MODULAR SYSTEMS (AMS)
AMS OWNS ALL COPYRIGHT AND OTHER INTELLECTUAL-PROPERTY AND PROPRIETARY RIGHTS IN THESE DRAWINGS, SPECIFICATIONS, AND THE MATERIAL CONTAINED HEREIN. CERTAIN ELEMENTS SHOWN IN THESE DOCUMENTS ARE REGISTERED TRADEMARKS OF AMS. ALL PATENTABLE MATERIALS CONTAINED IN THESE DOCUMENTS AND ORIGINATING WITH AMS WILL REMAIN THE SOLE PROPERTY OF AMS. THESE DRAWING, SPECIFICATIONS, AND THE MATERIAL CONTAINED HEREIN MAY NOT BE REPRODUCED, TRANSMITTED, COPIED, DISTRIBUTED, MODIFIED, OR OTHERWISE DISPOSED OF (DIRECTLY OR INDIRECTLY) AND MAY NOT BE USED (IN WHOLE OR IN PART) TO ASSIST IN THE CONSTRUCTION, DESIGN, OR OTHER MAKING OF, OR FOR THE PURPOSE OF FURNISHING ANY INFORMATION FOR THE CONSTRUCTION, DESIGN, OR OTHER MAKING OF, ANY BUILDINGS (MODULAR OR OTHERWISE), DRAWINGS, SPECIFICATIONS, PRINTS, APPARATUS, OR PARTS THEREOF, EXCEPT AS EXPRESSLY PERMITTED BY WRITTEN CONSENT OF, OR IN A WRITTEN AGREEMENT WITH, AMS. SUBMITTAL OR DISTRIBUTION TO MEET OFFICIAL REGULATORY REQUIREMENTS WILL NOT BE CONSTRUED AS PUBLICATION IN DEROGATION OF AMS'S COPYRIGHT OR OTHER INTELLECTUAL-PROPERTY OR PROPRIETARY RIGHTS.

PRE-CHECKED SET NAME
24' x 40' THRU 120' x 40'
STANDARD MODULAR BUILDING
(LOW SEISMIC)
FORM®

SITE SPECIFIC PROJECT NAME
.
.
.

APPROVED
DIV. OF THE STATE ARCHITECT
APP: 04-122050 PC
REVIEWED FOR
SS ☑ FLS ☑ ACS ☑ CG ☑
DATE: 12/11/2023

☐ 2022 CBC PRE-CHECK (PC) DOCUMENT
A SEPARATE PROJECT APPLICATION FOR CONSTRUCTION IS REQUIRED.

MANUFACTURER PROFESSIONAL OF RECORD ON PC

LICENSED ARCHITECT
RANDALL PATRICK CAVANAGH
No. C12631
Ren. 3-31-25
STATE OF CALIFORNIA

THESE DRAWINGS ARE PRELIMINARY AND NOT FOR CONSTRUCTION UNLESS STAMPED & SIGNED BY THE DESIGN PROFESSIONAL OF RECORD.

REVISIONS
1
2
3
4

DRAWN BY:	AA
SCALE:	AS NOTED
DATE:	MM/DD/YY
PROJECT NO:	XXXX-22

SHEET TITLE:
MISCELLANEOUS ARCHITECTURAL DETAILS

SHEET NUMBER:
A7.1

FACILITY:
JACOBSON ELEMENTARY SCHOOL
1750 W KAVANAGH AVE
TRACY, CA 95376

PROJECT:
JACOBSON ES - TK CLASSROOM

SHEET NAME:
MISCELLANEOUS ARCHITECTURAL DETAILS

DATE: **04/03/24** CLIENT PROJ NO: **3595001000**

SHEET:
A7.1
ADDENDUM "A"

PLEASE RECYCLE

THE LINE SHOWN ABOVE IS 1" WHEN PLOTTED ON ANSI D SHEET OR ONE-HALF SCALE

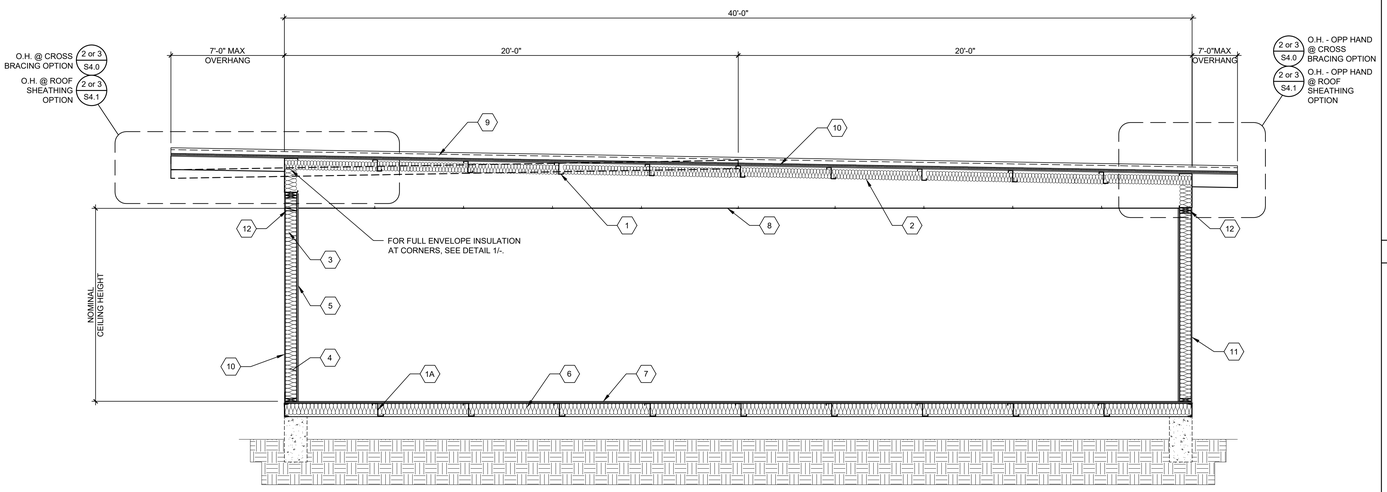

TYP. LONGITUDINAL SECTION - MONO/DUAL PITCH

SCALE: 3/8"=1'-0" A

1. ROOF PURLINS PER ROOF FRAMING PLAN
1A. FLOOR JOISTS PER FLOOR FRAMING PLAN
2. BATT ROOF INSULATION PER INSULATION SCHEDULE ON SHEET M1.7
3. WALL FRAMING PER SHEETS S8.0 OR S9.0
4. WALL INSULATION PER INSULATION SCHEDULE ON SHEET M1.7
5. VINYL FABRIC OVER TACKABLE BRACING PANELS
6. FLOOR INSULATION PER INSULATION SCHEDULE ON SHEET M1.7
7. PLYWOOD FLOOR PER SHEET S3.0 OR CONCRETE FLOOR PER SHEETS S3.1 - S3.3
8. SUSPENDED T-BAR CEILING PER M1.0
9. FINISHED ROOFING PER ROOF PLAN & ROOF FRAMING PLAN
10. RIGID ROOF INSULATION PER INSULATION SCHEDULES ON SHEET M1.7 OVER ROOF SHEATHING (S4.1)
OR STEEL CROSS BRACING WITHOUT RIGID ROOF INSULATION (S4.0)
11. EXTERIOR WALL FINISH PER EXTERIOR ELEVATIONS
PROVIDE R-5 RIGID INSULATION AT METAL STUD WALLS
12. FIRE BLOCKING @ CEILING LEVEL PER CBC 718.2
13. RIGID INSULATION @ CONCRETE FLOORS - REFER TO INSULATION SCHEDULES IN SHEET M1.7

KEY NOTES

BUILDING SIZE SCHEDULE			
BUILDING SIZE (FT)	TOTAL # OF 12'-0" WIDE MODULES	TOTAL # OF CENTER MODULES	OVERALL BUILDING WIDTH[1]
☐ 24'x40'	2	0	23'-8½"
☒ 36'x40'	3	1	35'-6¾"
☐ 48'x40'	4	2	47'-5"
☐ 60'x40'	5	3	59'-3¼"
☐ 72'x40'	6	4	71'-1½"
☐ 84'x40'	7	5	82'-11¾"
☐ 96'x40'	8	6	94'-10"
☐ 108'x40'	9	7	106'-8¼"
☐ 120'x40'	10	8	118'-6½"

NOTES:

1. TOTAL BUILDING WIDTH INCLUDES 1/4" PER MODULE CONSTRUCTION TOLERANCE PER FOUNDATION SHEETS S1.0, S1.1, S1.2 & S1.3

BUILDING SIZE SCHEDULE

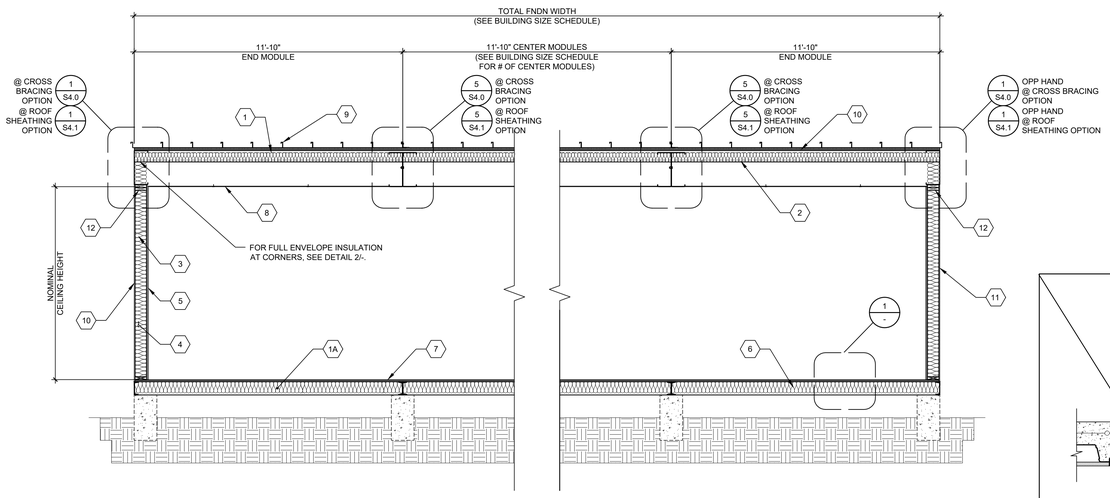

TYP. TRANSVERSE SECTION - MONO/DUAL PITCH

SCALE: 3/8"=1'-0" B

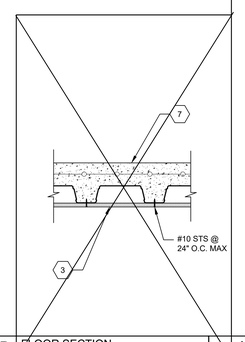

FLOOR SECTION CONCRETE FLOOR

SCALE: NTS 1

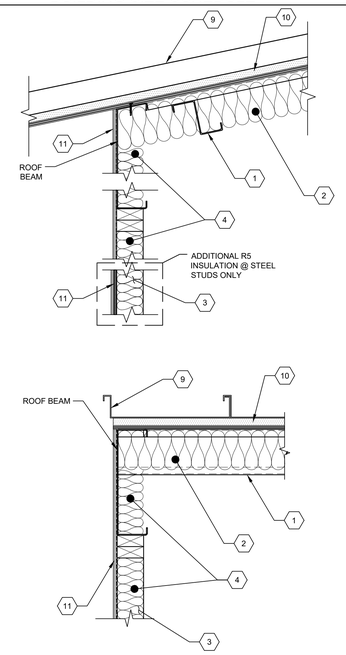

INSULATION CORNER DET.

SCALE: 1-1/2"=1'-0" 2

IDENTIFICATION STAMP
DIV. OF THE STATE ARCHITECT
APP: 02-122976 INC:
REVIEWED FOR
SS ☑ FLS ☑ ACS ☑
DATE: 03/12/2025

TRACY UNIFIED SCHOOL DISTRICT

HMC Architects

3595001000

2101 CAPITOL AVENUE, SUITE 100
SACRAMENTO, CA 95816
916 368 7990 / www.hmcarchitects.com

ISSUE

Δ	DESCRIPTION	DATE
1	ADDENDUM "A"	3/20/25

AMS®
American Modular Systems
787 Spreckels Ave., Manteca, CA 95336
Phone (209) 825-1921 Fax (209) 825-7018
www.americanmodular.com

INTELLECTUAL-PROPERTY & PROPRIETARY RIGHTS STATEMENT
COPYRIGHT © AMERICAN MODULAR SYSTEMS (AMS)
AMS OWNS ALL COPYRIGHT AND OTHER INTELLECTUAL-PROPERTY AND PROPRIETARY RIGHTS IN THESE DOCUMENTS. THE NAMES AND MARKS OF AMS AND OTHERS REFERRED TO HEREIN CERTAIN ELEMENTS SHOWN IN THESE DOCUMENTS ARE REGISTERED TRADEMARKS OF AMS. ALL PATENTABLE MATERIALS CONTAINED IN THESE DOCUMENTS AND ORIGINATING WITH AMS WILL REMAIN THE SOLE PROPERTY OF AMS. THESE DRAWING, SPECIFICATIONS, AND THE MATERIAL CONTAINED HEREIN MAY NOT BE REPRODUCED, TRANSMITTED, COPIED, DISTRIBUTED, MODIFIED, OR OTHERWISE DISPOSED OF (DIRECTLY OR INDIRECTLY) AND MAY NOT BE USED (IN WHOLE OR IN PART) TO ASSIST IN THE CONSTRUCTION, DESIGN, OR OTHER MAKING OF, OR FOR THE PURPOSE OF FURNISHING ANY INFORMATION FOR THE CONSTRUCTION, DESIGN, OR OTHER MAKING OF, ANY BUILDINGS (MODULAR OR OTHERWISE), DRAWINGS, SPECIFICATIONS, PRINTS, APPARATUS, OR PARTS THEREOF, EXCEPT AS EXPRESSLY PERMITTED BY WRITTEN CONSENT OF, OR IN A WRITTEN AGREEMENT WITH, AMS. SUBMITTAL OR DISTRIBUTION TO MEET OFFICIAL REGULATORY REQUIREMENTS WILL NOT BE CONSTRUED AS PUBLICATION IN DEROGATION OF AMS'S COPYRIGHT OTHER INTELLECTUAL-PROPERTY OR PROPRIETARY RIGHTS.

PRE-CHECKED SET NAME

24' x 40' THRU 120' x 40'
STANDARD MODULAR BUILDING
(LOW SEISMIC)

FORM®

SITE SPECIFIC PROJECT NAME

.
.
.

APPROVED
DIV. OF THE STATE ARCHITECT
APP: 04-122050 PC
REVIEWED FOR
SS ☑ FLS ☑ ACS ☑ CG ☑
DATE: 12/11/2023

☐ 2022 CBC PRE-CHECK (PC) DOCUMENT
A SEPARATE PROJECT APPLICATION FOR CONSTRUCTION IS REQUIRED

MANUFACTURER PROFESSIONAL OF RECORD ON PC

LICENSED ARCHITECT PATRICK CAMPBELL No. C12631 Ren. 3-31-25 STATE OF CALIFORNIA

THESE DRAWINGS ARE PRELIMINARY AND NOT FOR CONSTRUCTION UNLESS STAMPED & SIGNED BY THE DESIGN PROFESSIONAL OF RECORD

REVISIONS

DRAWN BY:	AA
SCALE:	AS NOTED
DATE:	MM/DD/YY
PROJECT NO:	XXXX-22

SHEET TITLE:
TYPICAL LONGITUDINAL AND TRANSVERSE FRAME SECTIONS

SHEET NUMBER:
A7.3

KEYNOTES

GENERAL NOTES

FACILITY:
JACOBSON ELEMENTARY SCHOOL
1750 W KAVANAGH AVE
TRACY, CA 95376

PROJECT:
JACOBSON ES - TK CLASSROOM

SHEET NAME:
TYPICAL LONGITUDINAL AND TRANSVERSE FRAME SECTIONS

DATE: **04/03/24** CLIENT PROJ NO: **3595001000**

SHEET:
A7.3

ADDENDUM "A"

THE LINE SHOWN ABOVE IS EXACTLY ONE INCH LONG AT THIS SHEETS ORIGINAL PAGE SIZE

IDENTIFICATION STAMP
DIV. OF THE STATE ARCHITECT
APP: 02-122976 INC:
REVIEWED FOR
SS ☑ FLS ☑ ACS ☑
DATE: 03/12/2025

TRACY UNIFIED SCHOOL DISTRICT

HMC Architects
3595001000
2101 CAPITOL AVENUE, SUITE 100
SACRAMENTO, CA 95816
916 368 7990 / www.hmcarchitects.com

ISSUE

Δ	DESCRIPTION	DATE
A	ADDENDUM "A"	3/20/25

20GA ROOF PAN PROPERTIES (2)

1504.4.2 STRUCTURAL METAL PANEL ROOF SYSTEMS:
WHERE THE METAL ROOF PANEL FUNCTIONS AS THE ROOF DECK AND ROOF COVERING AND IT PROVIDES BOTH WEATHER PROTECTION AND SUPPORT FOR LOADS, THE STRUCTURAL METAL PANEL ROOF SYSTEM SHALL COMPLY WITH THIS SECTION. STRUCTURAL STANDING-SEAM METAL PANEL ROOF SYSTEMS SHALL BE TESTED IN ACCORDANCE WITH ASTM E1592 OR FM 4474. STRUCTURAL THROUGH FASTENED METAL PANEL ROOF SYSTEMS SHALL BE TESTED IN ACCORDANCE WITH ASTM E1592, FM 4474 OR UL 580.

EXCEPTIONS:
1. METAL ROOFS CONSTRUCTED OF COLD-FORMED STEEL SHALL BE PERMITTED TO BE DESIGNED AND TESTED IN ACCORDANCE WITH THE APPLICABLE REFERENCED STRUCTURAL DESIGN STANDARD IN SECTION 2210.1.

TESTING REPORT:
TWINNING TEST REPORT #226045.R1 UL 1897

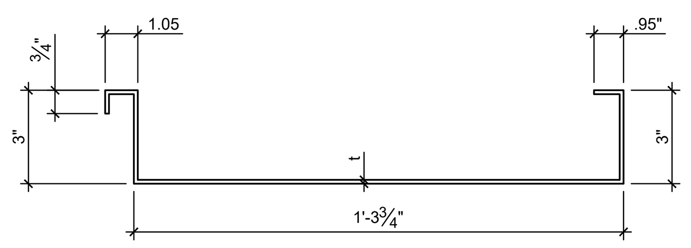

ASTM A1011 SS, GRADE 36
Fy = 36 ksi

w/ GALVANIZATION
t=0.0356 IN. MIN.

w/0 GALVANIZATION
t=0.0329 IN. MIN.
(0.035 IN. DESIGN)

EFFECTIVE SECTION PROPERTIES

$Sx^+(t)$ = 0.364 IN.^{3}
$Sx^+(b)$ = 1.371 IN.^{3}
Ix^+ = 0.863 IN.^{4}

$Sx^-(t)$ = 0.330 IN.^{3}
$Sx^-(b)$ = 0.306 IN.^{3}
Ix^- = 0.476 IN.
Ae = 0.259 IN.^{2}

GROSS SECTION PROPERTIES

A = 0.844 IN^2
Sx(t)= 0.418 IN^3
Sx(b)= 1.412 IN^3
Ix = 0.968 IN^4

20GA ROOF PAN MAY BE USED @ ROOFS WITH SHEATHING (S4.1) OR WITHOUT SHEATHING (S4.0)

SOFFIT BEAM PROPERTIES (3)

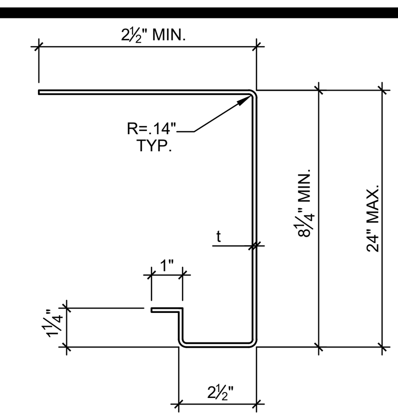

8 1/4" MIN. * x2½"x14ga
SOFFIT BEAM
ASTM A1011 SS, GRADE 45
Fy = 45 ksi
A = 0.97 IN^2
Sx^- = 1.78 IN^3
Sx^+ = 1.31 IN^3
Ix = 6.87 IN^4
t = 0.068 IN MIN.
(0.0713 IN DESIGN)

*- NOTE:
BEAM TO BE 8 1/4" MIN. DEEP TO MATCH OUTRIGGER BEAM. PROPERTIES & DESIGN BASED ON 7" MIN. MEMBER.

LIGHT GAUGE FLOOR JOIST PROPERTIES (5)

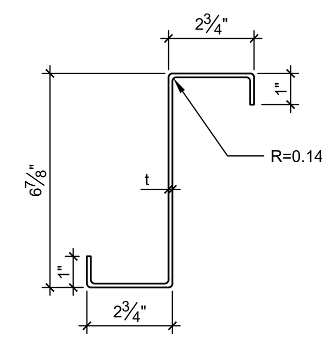

6⅞"x2¾"x14ga
FLOOR JOIST
ASTM A1011 SS, GRADE 45
Fy = 45 ksi
A = 0.98 IN^2
Sx = 2.10 IN^3
Ix = 7.22 IN^4
t = 0.068 IN MIN.
(0.0713 IN DESIGN)

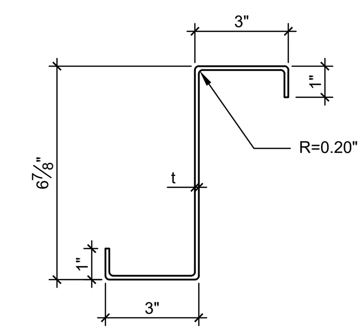

6⅞"x3"x12ga
FLOOR JOIST
ASTM A1011 SS, GRADE 45
Fy = 45 ksi
A = 1.43 IN^2
Sx = 3.06 IN^3
Ix = 10.54 IN^4
t = 0.097 IN MIN.
(0.1017 IN DESIGN)

22GA ROOF PAN PROPERTIES (7)

1504.4.2 STRUCTURAL METAL PANEL ROOF SYSTEMS:
WHERE THE METAL ROOF PANEL FUNCTIONS AS THE ROOF DECK AND ROOF COVERING AND IT PROVIDES BOTH WEATHER PROTECTION AND SUPPORT FOR LOADS, THE STRUCTURAL METAL PANEL ROOF SYSTEM SHALL COMPLY WITH THIS SECTION. STRUCTURAL STANDING-SEAM METAL PANEL ROOF SYSTEMS SHALL BE TESTED IN ACCORDANCE WITH ASTM E1592 OR FM 4474. STRUCTURAL THROUGH FASTENED METAL PANEL ROOF SYSTEMS SHALL BE TESTED IN ACCORDANCE WITH ASTM E1592, FM 4474 OR UL 580.

EXCEPTIONS:
1. METAL ROOFS CONSTRUCTED OF COLD-FORMED STEEL SHALL BE PERMITTED TO BE DESIGNED AND TESTED IN ACCORDANCE WITH THE APPLICABLE REFERENCED STRUCTURAL DESIGN STANDARD IN SECTION 2210.1.

TESTING REPORT:
TWINNING TEST REPORT #226045.R1 UL 1897

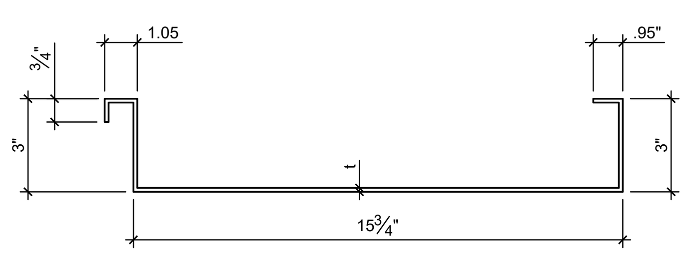

ASTM A1011 SS, GRADE 36 (Fy = 36 ksi)
OR ASTM A653 SS, GRADE 37 (Fy = 37 ksi)

w/ GALVANIZATION
t=0.0296 IN. MIN.

w/o GALVANIZATION
t=0.0269 IN. MIN.
(0.0283 IN. DESIGN)

EFFECTIVE SECTION PROPERTIES

$Sx^+(t)$ = 0.253 IN.^{3}
$Sx^+(b)$ = 1.109 IN.^{3}
Ix^+ = 0.618 IN.^{4}

$Sx^-(t)$ = 0.260 IN.^{3}
$Sx^-(b)$ = 0.226 IN.^{3}
Ix^- = 0.363 IN.
Ae = 0.180 IN.^{2}

GROSS SECTION PROPERTIES

A = 0.682 IN^2
Sx(t)= 0.338 IN^3
Sx(b)= 1.148 IN^3
Ix = 0.784 IN^4

22GA ROOF PAN MAY BE ONLY USED @ ROOFS WITH SHEATHING (S4.1)

OUTRIGGER BEAM PROPERTIES (8)

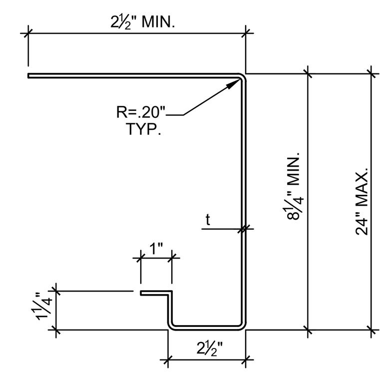

8 1/4" MIN.x2½"x12ga
SOFFIT OUTRIGGER BEAM
ASTM A1011 SS, GRADE 45
Fy = 45 ksi
A = 1.4785 IN^2
Sx^- = 3.0614 IN^3
Sx^+ = 2.5100 IN^3
Ix = 13.642 IN^4
t = 0.097 IN MIN.
(0.1017 IN DESIGN)

LIGHT GAUGE ROOF PURLIN PROPERTIES (FOR USE W/ ROOF FRAMING PLANS S4.0 & S4.1) (10)

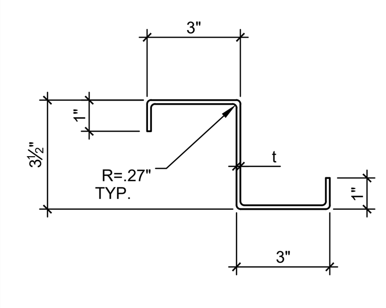

3½"x3"x10ga
ROOF PURLIN
ASTM A1011 SS, GRADE 50
Fy = 50 ksi
A = 1.31 IN^2
Sx = 1.51 IN^3
Ix = 2.64 IN^4
t = 0.1278 IN MIN.
(0.1345 IN DESIGN)

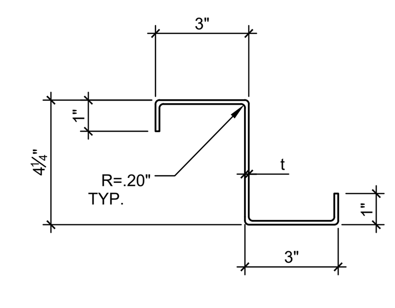

4¼"x3"x12ga
ROOF PURLIN
ASTM A1011 SS, GRADE 45
Fy = 45 ksi
A = 1.16 IN^2
Sx = 1.63 IN^3
Ix = 3.46 IN^4
t = 0.097 IN MIN.
(0.1017 IN DESIGN)

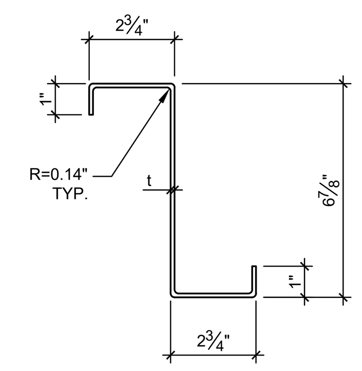

6⅞"x2¾"x14ga
ROOF PURLIN
ASTM A1011 SS, GRADE 45
Fy = 45 ksi
A = 0.98 IN^2
Sx = 2.10 IN^3
Ix = 7.22 IN^4
t = 0.068 IN MIN.
(0.0713 IN DESIGN)

LIGHT GAUGE ROOF PURLIN PROPERTIES (FOR USE W/ ROOF FRAMING PLAN S4.1 ONLY) (15)

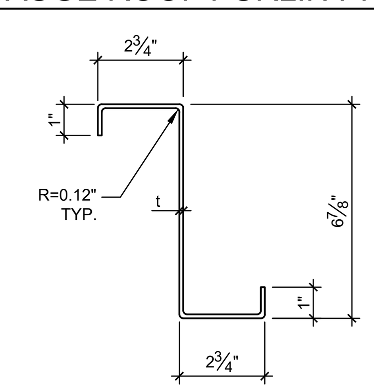

6⅞"x2¾"x16ga 'Z'
TYPICAL ROOF PURLIN
ASTM A1011 SS, GRADE 50
Fy = 50 ksi
A = 0.79 IN^2
Sx = 1.69 IN^3
Ix = 5.82 IN^4
t = 0.0538 IN MIN.
(0.0566 IN DESIGN)

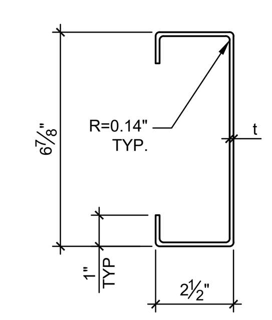

6⅞"x2½"x14ga 'C'
ALTERNATE ROOF PURLIN
ASTM A1011 SS, GRADE 45
Fy = 45 ksi
A = 0.95 IN^2
Sx = 1.98 IN^3
Ix = 6.81 IN^4
t = 0.0677 IN MIN.
(0.0713 IN DESIGN)

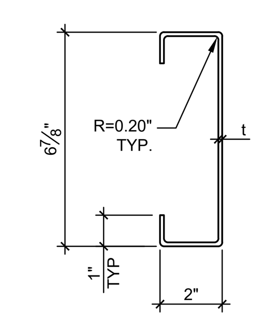

6⅞"x2"x12ga 'C'
ALTERNATE ROOF PURLIN
ASTM A1011 SS, GRADE 45
Fy = 45 ksi
A = 1.22 IN^2
Sx = 2.39 IN^3
Ix = 8.20 IN^4
t = 0.0966 IN MIN.
(0.1017 IN DESIGN)

ROOF BEAM PROPERTIES (18)

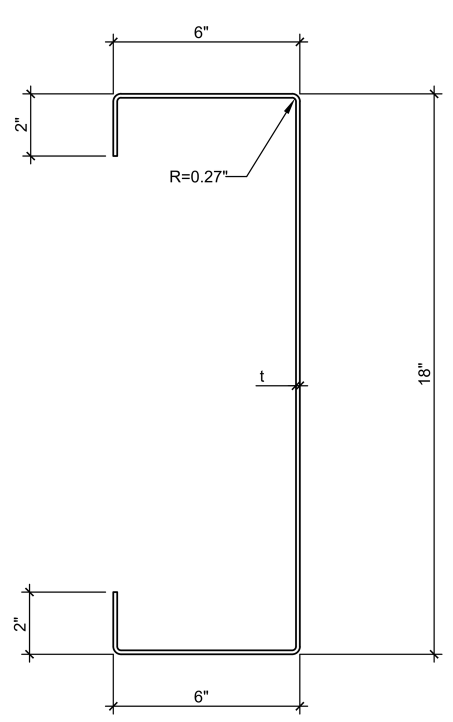

10 GA. LONGITUDINAL & TRANSVERSE BEAMS

ASTM = A1011 SS
GRADE = 50
Fy = 50ksi
t = 0.1278 IN. MIN.
(0.1345 IN. DESIGN)

BEAM DEPTH	18"
A (IN^2)	4.42
S_X MIN. (IN^3)	24.077
I_X MIN. (IN^4)	216.70

NOT USED (19)

SHEET NOTES

1. THE MATERIAL THICKNESS OF LIGHT GAUGE STRUCTURAL MEMBERS, IN THEIR END-USE, SHALL MEET OR EXCEED THE MINIMUM BASE METAL THICKNESS SPECIFIED ON SHEET S0.0 THE MATERIAL GAGE DESIGNATION IN THE PLAN SHALL BE USED AS REFERENCE ONLY.
2. UNLESS NOTED OTHERWISE, ALL SECTION PROPERTIES ARE GROSS SECTION PROPERTIES.
3. LIGHT GAUGE STRUCTURAL MEMBERS TO BE FABRICATED FROM HOT ROLLED SHEETS WITH RUST INHIBITIVE COATING. SEE SHEET N2.0, "LIGHT GAUGE METAL STUDS & COLD FORMED STEEL", FOR ADDITIONAL INFORMATION.

American Modular Systems
787 Spreckels Ave., Manteca, CA 95336
Phone (209) 825-1921 Fax (209) 825-7018
www.americanmodular.com

INTELLECTUAL-PROPERTY & PROPRIETARY RIGHTS STATEMENT
COPYRIGHT © AMERICAN MODULAR SYSTEMS (AMS)
AMS OWNS ALL COPYRIGHT AND OTHER INTELLECTUAL-PROPERTY AND PROPRIETARY RIGHTS IN THESE DRAWINGS, SPECIFICATIONS, AND THE MATERIAL CONTAINED HEREIN. CERTAIN ELEMENTS SHOWN IN THESE DOCUMENTS ARE REGISTERED TRADEMARKS OF AMS. ALL PATENTABLE MATERIALS CONTAINED IN THESE DOCUMENTS AND ORIGINATING WITH AMS WILL REMAIN THE SOLE PROPERTY OF AMS. THESE DRAWING, SPECIFICATIONS, AND THE MATERIAL CONTAINED HEREIN MAY NOT BE REPRODUCED, TRANSMITTED, COPIED, DISTRIBUTED, MODIFIED, OR OTHERWISE DISPOSED OF (DIRECTLY OR INDIRECTLY) AND MAY NOT BE USED (IN WHOLE OR IN PART) TO ASSIST IN THE CONSTRUCTION, DESIGN, OR OTHER MAKING OF, OR FOR THE PURPOSE OF FURNISHING ANY INFORMATION FOR THE CONSTRUCTION, DESIGN, OR OTHER MAKING OF, ANY BUILDINGS (MODULAR OR OTHERWISE), DRAWINGS, SPECIFICATIONS, PRINTS, APPARATUS, OR PARTS THEREOF, EXCEPT AS EXPRESSLY PERMITTED BY WRITTEN CONSENT OF, OR IN A WRITTEN AGREEMENT WITH, AMS. SUBMITTAL OR DISTRIBUTION TO MEET OFFICIAL REGULATORY REQUIREMENTS WILL NOT BE CONSTRUED AS PUBLICATION IN DEROGATION OF AMS'S COPYRIGHT OR OTHER INTELLECTUAL-PROPERTY OR PROPRIETARY RIGHTS.

PRE-CHECKED SET NAME
24' x 40' THRU 120' x 40'
STANDARD MODULAR BUILDING
(LOW SEISMIC)
FORM

SITE SPECIFIC PROJECT NAME
.
.
.

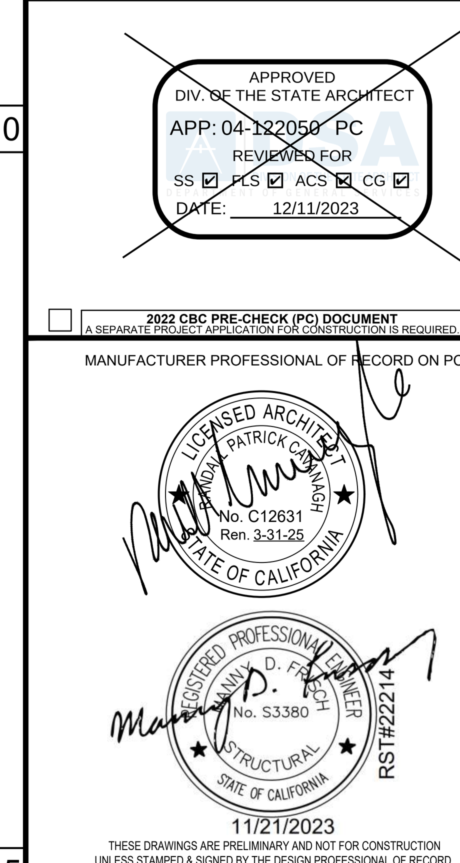

REVISIONS
1
2
3
4

DRAWN BY:	AA
SCALE:	AS NOTED
DATE:	MM/DD/YY
PROJECT NO:	XXXX-22

SHEET TITLE:
STEEL MEMBER PROPERTIES

SHEET NUMBER:
S0.0

KEYNOTES

GENERAL NOTES

FACILITY:
JACOBSON ELEMENTARY SCHOOL
1750 W KAVANAGH AVE
TRACY, CA 95376

PROJECT:
JACOBSON ES - TK CLASSROOM

SHEET NAME:
STEEL MEMBER PROPERTIES

DATE: **04/03/24** CLIENT PROJ NO: **3595001000**

SHEET:
S0.0
ADDENDUM "A"

PLEASE RECYCLE

Autodesk Docs://3595005000 TUSD TK CLASSROOMS 2025 R22/3595005000-A-TUSD-BOHN-SITE.rvt
12/3/2024 9:55:48 AM

THE LINE SHOWN ABOVE IS EXACTLY ONE INCH LONG AT THIS SHEETS ORIGINAL PAGE SIZE

IDENTIFICATION STAMP
DIV. OF THE STATE ARCHITECT
APP: 02-122976 INC:
REVIEWED FOR
SS ☑ FLS ☑ ACS ☑
DATE: 03/12/2025

TRACY UNIFIED SCHOOL DISTRICT

HMC Architects

3595001000

2101 CAPITOL AVENUE, SUITE 100
SACRAMENTO, CA 95816
916 368 7990 / www.hmcarchitects.com

ISSUE

Δ	DESCRIPTION	DATE
A	ADDENDUM "A"	3/20/25

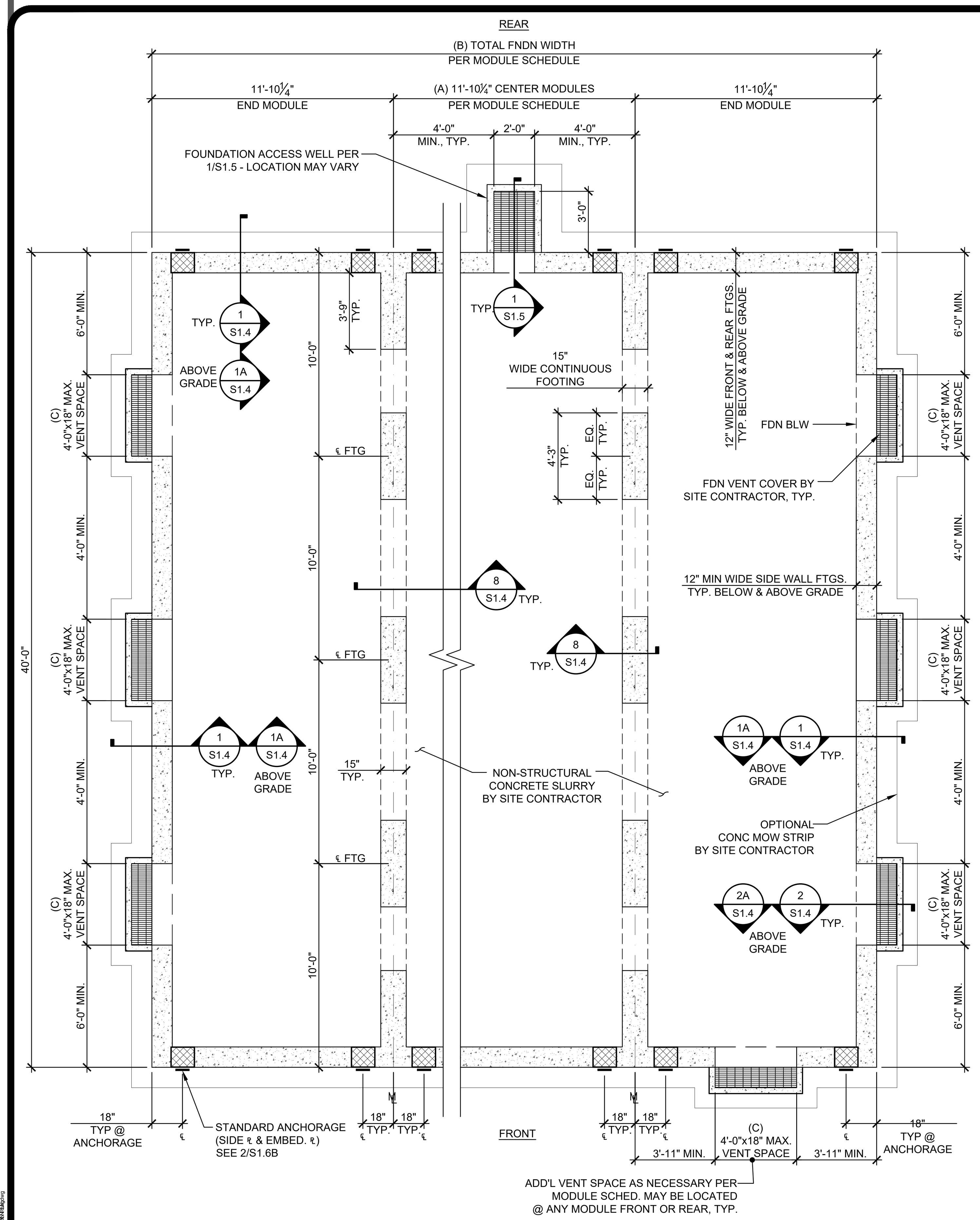

☒ CONCRETE FOUNDATION PLAN (PLYWOOD FLOOR) 50 PSF LIVE LOAD + 15 PSF PARTITION LOAD — SCALE: 1/4"=1'-0" — A

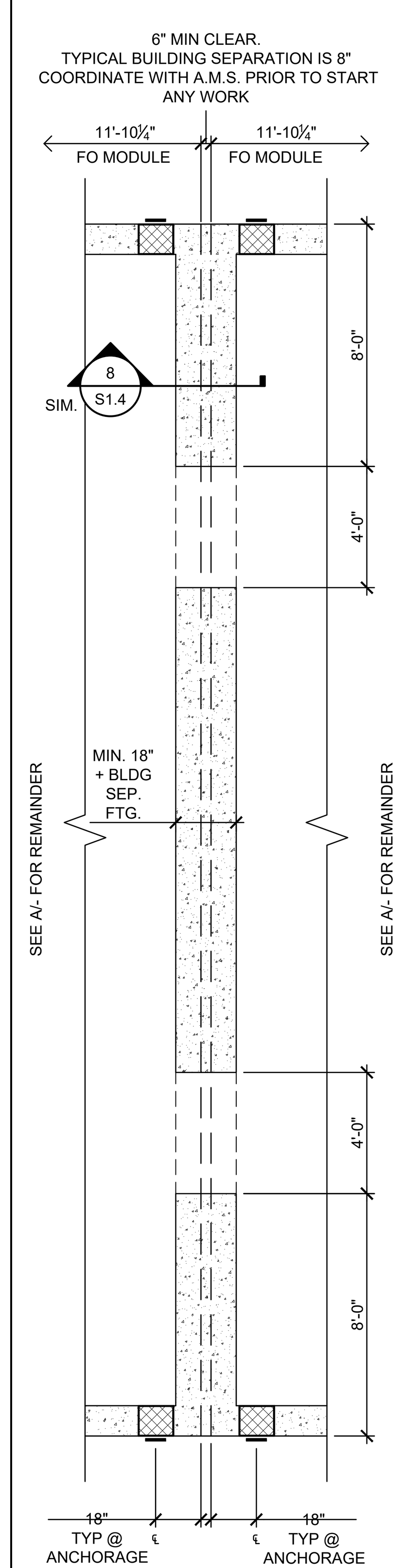

☐ FOUNDATION PLAN COMBINED — SCALE: 1/4"=1'-0" — A1

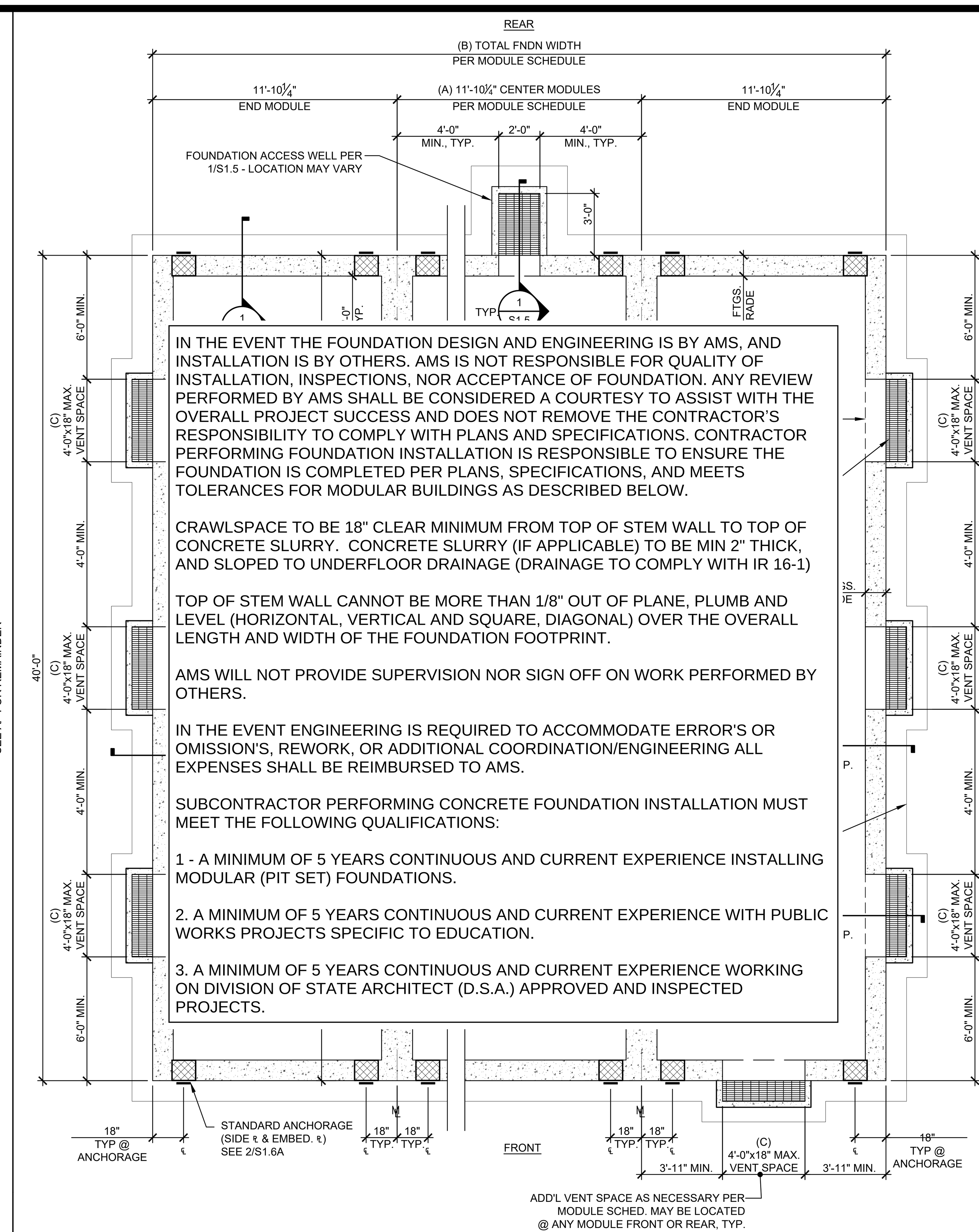

IN THE EVENT THE FOUNDATION DESIGN AND ENGINEERING IS BY AMS, AND INSTALLATION IS BY OTHERS. AMS IS NOT RESPONSIBLE FOR QUALITY OF INSTALLATION, INSPECTIONS, NOR ACCEPTANCE OF FOUNDATION. ANY REVIEW PERFORMED BY AMS SHALL BE CONSIDERED A COURTESY TO ASSIST WITH THE OVERALL PROJECT SUCCESS AND DOES NOT REMOVE THE CONTRACTOR'S RESPONSIBILITY TO COMPLY WITH PLANS AND SPECIFICATIONS. CONTRACTOR PERFORMING FOUNDATION INSTALLATION IS RESPONSIBLE TO ENSURE THE FOUNDATION IS COMPLETED PER PLANS, SPECIFICATIONS, AND MEETS TOLERANCES FOR MODULAR BUILDINGS AS DESCRIBED BELOW.

CRAWLSPACE TO BE 18" CLEAR MINIMUM FROM TOP OF STEM WALL TO TOP OF CONCRETE SLURRY. CONCRETE SLURRY (IF APPLICABLE) TO BE MIN 2" THICK, AND SLOPED TO UNDERFLOOR DRAINAGE (DRAINAGE TO COMPLY WITH IR 16-1)

TOP OF STEM WALL CANNOT BE MORE THAN 1/8" OUT OF PLANE, PLUMB AND LEVEL (HORIZONTAL, VERTICAL AND SQUARE, DIAGONAL) OVER THE OVERALL LENGTH AND WIDTH OF THE FOUNDATION FOOTPRINT.

AMS WILL NOT PROVIDE SUPERVISION NOR SIGN OFF ON WORK PERFORMED BY OTHERS.

IN THE EVENT ENGINEERING IS REQUIRED TO ACCOMMODATE ERROR'S OR OMISSION'S, REWORK, OR ADDITIONAL COORDINATION/ENGINEERING ALL EXPENSES SHALL BE REIMBURSED TO AMS.

SUBCONTRACTOR PERFORMING CONCRETE FOUNDATION INSTALLATION MUST MEET THE FOLLOWING QUALIFICATIONS:

1 - A MINIMUM OF 5 YEARS CONTINUOUS AND CURRENT EXPERIENCE INSTALLING MODULAR (PIT SET) FOUNDATIONS.

2. A MINIMUM OF 5 YEARS CONTINUOUS AND CURRENT EXPERIENCE WITH PUBLIC WORKS PROJECTS SPECIFIC TO EDUCATION.

3. A MINIMUM OF 5 YEARS CONTINUOUS AND CURRENT EXPERIENCE WORKING ON DIVISION OF STATE ARCHITECT (D.S.A.) APPROVED AND INSPECTED PROJECTS.

☐ CONCRETE FOUNDATION PLAN (CONCRETE FLOOR) 50 PSF LIVE LOAD + 15 PSF PARTITION LOAD — SCALE: 1/4"=1'-0" — B

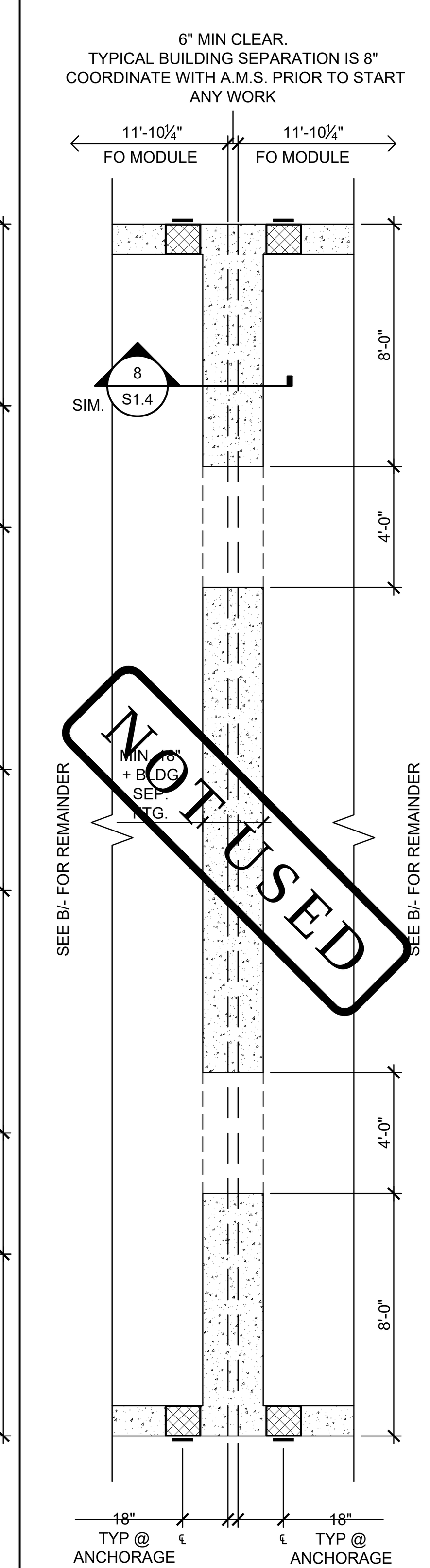

☐ FOUNDATION PLAN COMBINED — SCALE: 1/4"=1'-0" — B1

NOTES

1. CONCRETE MIXTURES:
   A. ULTIMATE 28-DAY CONCRETE COMPRESSIVE STRENGTH (f'c) SHALL BE PER SHEET N1.0A
   B. PROPORTIONING OF CONCRETE MIXTURES SHALL BE IN ACCORDANCE WITH ACI 318-19, SECTION 26.4.3.
   C. DOCUMENTATION OF CONCRETE MIXTURE CHARACTERISTICS SHALL BE IN ACCORDANCE WITH ACI 318-19, SECTION 26.4.4.
   D. CEMENT SHALL BE CERTIFIED PER TITLE 24, PART 2, SECTION 1910A.1.
   E. SEE SHEET N1.0 FOR ADDITIONAL CONCRETE NOTES.

2. BUILDINGS MAY BE SET ON CONCRETE FOUNDATIONS THAT HAVE REACHED A MINIMUM CONCRETE COMPRESSIVE STRENGTH OF 2,500 PSI. PRIOR TO THE SETTING OF THE MODULAR BUILDING ON CONCRETE FOUNDATIONS THAT HAVE NOT YET CURED 28 DAYS POST PLACEMENT OF FOUNDATION CONCRETE, THE FOUNDATION CONTRACTOR SHALL
   A. HAVE THE PROJECT TESTING LAB PERFORM CONCRETE CYLINDER COMPRESSION TESTS OF THE FOUNDATION CONCRETE USED AT THE SITE,
   B. FURNISH THE PROJECT IOR AND THE REGISTERED DESIGN PROFESSIONAL IN RESPONSIBLE CHARGE WITH THE CONCRETE TEST REPORTS VERIFYING THAT THE FOUNDATION CONCRETE HAS REACHED THE MINIMUM STRENGTH AS SPECIFIED ABOVE, AND
   C. NOTIFY THE PROJECT IOR AND THE REGISTERED DESIGN PROFESSIONAL IN RESPONSIBLE CHARGE OF THEIR INTENT TO SET THE MODULAR BUILDING PRIOR TO 28 DAYS POST PLACEMENT OF FOUNDATION CONCRETE.

3. REINFORCING STEEL SHALL BE 60,000 PSI MINIMUM, PER ASTM A615. THE REINFORCING BARS SHALL BE TESTED PER TITLE 24, PART 2, SECTION 1910A.2. TEST OF REINFORCING BARS MAY BE WAIVED PROVIDED CERTIFIED MILL TEST REPORTS ARE PROVIDED FOR EACH SHIPMENT OF SUCH REINFORCEMENT.

4. DESIGN SOIL BEARING CAPACITY: 1500 PSF.
   (1/3 INCREASE IN SOIL BEARING CAPACITY NOT PERMITTED FOR WIND & SEISMIC LOAD COMBINATIONS UNLESS USING ALTERNATIVE BASIC LOAD COMBINATIONS PER CBC SECTION 1605A.3.2)

5. THE REGISTERED DESIGN PROFESSIONAL IN RESPONSIBLE CHARGE SHALL VERIFY THE NET AREA OF THE UNDER-FLOOR VENTING IS EQUAL TO OR LARGER THAN THE VENT AREA REQUIRED (AS SHOWN ON THE ADJACENT TABLE).

MODULE SCHEDULE AND VENTING

NOMINAL BLDG SIZE (FT)	TOTAL # OF 12' WIDE MODULES	"A" TOTAL # OF CENTER MODULES	"B" TOTAL FNDN WIDTH[1]	TOTAL NOMINAL FLOOR AREA (FT^2)	NET FREE VENT AREA REQ'D[3] (FT^2)	IF 4'x12" VENTS ARE USED SOLELY: "C" MIN. TOTAL VENTS REQ'D[3]	IF 4'x12" VENTS ARE USED SOLELY: NET FREE VENT AREA PROVIDED[3] (FT^2)	IF 4'x18" VENTS ARE USED SOLELY: "C" MIN. TOTAL VENTS REQ'D[3]	IF 4'x18" VENTS ARE USED SOLELY: NET FREE VENT AREA PROVIDED[3] (FT^2)
☐ 24'x40'	2	0	23'-8½"	960	6.4	3	8.7	2	8.8
☒ 36'x40'	3	1	35'-6¾"	1440	9.6	4	11.6	3	13.1
☐ 48'x40'	4	2	47'-5"	1920	12.8	5	14.6	4	17.5
☐ 60'x40'	5	3	59'-3¼"	2400	16.0	6	17.5	4	17.5
☐ 72'x40'	6	4	71'-1½"	2880	19.2	7	20.4	5	21.9
☐ 84'x40'	7	5	82'-11¾"	3360	22.4	8	23.3	6	26.3
☐ 96'x40'	8	6	94'-10"	3840	25.6	9	26.2	6	26.3
☐ 108'x40'	9	7	106'-8¼"	4320	28.8	10	29.2	7	30.7
☐ 120'x40'	10	8	118'-6½"	4800	32.0	11	32.1	8	35.0

NOTES:

TOTAL FOUNDATION WIDTH INCLUDES ¼" PER MODULE CONSTRUCTION TOLERANCE.

1. UNLESS NOTED OTHERWISE, DIMENSIONS ARE FROM FACE OF CONCRETE TO FACE OF CONCRETE (FOC TO FOC)
2. THE NUMBER OF VENTS REQUIRED IS BASED ON THE VENT NET FREE AREA (NFA) PROVIDED BEING GREATER OR EQUAL TO THE VENT NFA REQUIRED. VENT NFA REQUIRED IS BASED ON A 1:150 VENTILATION RATIO OF THE NOMINAL BUILDING FLOOR AREA. VENT NFA PROVIDED IS THE ACTUAL OPEN AREA WITH A VENT GROSS AREA REDUCTION PERCENTAGE OF 73% & NUMBER OF VENTS PROVIDED.

   $NFA_{REQUIRED} = A_{FLOOR} / 150$ $NFA_{PROVIDED} > NFA_{REQUIRED}$ $A_{VENT,GROSS} \times 73\% \times (\# \text{ OF VENTS}) > NFA_{REQUIRED}$

4. REQUIRED VENTING MAY BE ACHIEVED BY A COMBINATION OF ACCESS VENT(S) AND VENTS OF DIFFERENT SIZES BASED ON THE VALUES LISTED BELOW.

   4'x12" VENTS x 0.73 x (# OF VENTS) = 2.92 FT^2 x (# OF VENTS) **4'x18" VENTS** x 0.73 x (# OF VENTS) = 4.38 FT^2 x (# OF VENTS)
   ACCESS VENTS - 2' x1.5' x (# OF VENTS) = 3.00 FT^2 x (# OF VENTS)

American Modular Systems
787 Spreckels Ave., Manteca, CA 95336
Phone (209) 825-1921 Fax (209) 825-7018
www.americanmodular.com

INTELLECTUAL-PROPERTY & PROPRIETARY RIGHTS STATEMENT
COPYRIGHT © AMERICAN MODULAR SYSTEMS (AMS)
AMS OWNS ALL COPYRIGHT AND OTHER INTELLECTUAL-PROPERTY AND PROPRIETARY RIGHTS IN THESE DRAWINGS, SPECIFICATIONS, AND THE MATERIAL CONTAINED HEREIN. CERTAIN ELEMENTS SHOWN IN THESE DOCUMENTS ARE REGISTERED TRADEMARKS OF AMS. ALL PATENTABLE MATERIALS CONTAINED IN THESE DOCUMENTS AND ORIGINATING WITH AMS WILL REMAIN THE SOLE PROPERTY OF AMS. THESE DRAWING, SPECIFICATIONS, AND THE MATERIAL CONTAINED HEREIN MAY NOT BE REPRODUCED, TRANSMITTED, COPIED, DISTRIBUTED, MODIFIED, OR OTHERWISE DISPOSED OF (DIRECTLY OR INDIRECTLY) AND MAY NOT BE USED (IN WHOLE OR IN PART) TO ASSIST IN THE CONSTRUCTION, DESIGN, OR OTHER MAKING OF, OR FOR THE PURPOSE OF FURNISHING ANY INFORMATION FOR THE CONSTRUCTION, DESIGN, OR OTHER MAKING OF, ANY BUILDINGS (MODULAR OR OTHERWISE), DRAWINGS, SPECIFICATIONS, PRINTS, APPARATUS, OR PARTS THEREOF, EXCEPT AS EXPRESSLY PERMITTED BY WRITTEN CONSENT OF, OR IN A WRITTEN AGREEMENT WITH, AMS. SUBMITTAL OR DISTRIBUTION TO MEET OFFICIAL REGULATORY REQUIREMENTS WILL NOT BE CONSTRUED AS PUBLICATION IN DEROGATION OF AMS'S COPYRIGHT OR OTHER INTELLECTUAL-PROPERTY OR PROPRIETARY RIGHTS.

PRE-CHECKED SET NAME
24' x 40' THRU 120' x 40' STANDARD MODULAR BUILDING (LOW SEISMIC)
FORM

SITE SPECIFIC PROJECT NAME

APPROVED
DIV. OF THE STATE ARCHITECT
APP: 04-122050 PC
REVIEWED FOR
SS ☑ FLS ☑ ACS ☒ CG ☑
DATE: 12/11/2023

☐ 2022 CBC PRE-CHECK (PC) DOCUMENT
A SEPARATE PROJECT APPLICATION FOR CONSTRUCTION IS REQUIRED.

MANUFACTURER PROFESSIONAL OF RECORD ON PC
LICENSED ARCHITECT RANDALL PATRICK CAVANAGH No. C12631 Ren. 3-31-25 STATE OF CALIFORNIA
REGISTERED PROFESSIONAL ENGINEER MANNY D. FRENCH No. S3380 STRUCTURAL STATE OF CALIFORNIA
RST#22214
11/21/2023
THESE DRAWINGS ARE PRELIMINARY AND NOT FOR CONSTRUCTION UNLESS STAMPED & SIGNED BY THE DESIGN PROFESSIONAL OF RECORD.

REVISIONS
1
2
3
4

DRAWN BY:	AA
SCALE:	AS NOTED
DATE:	MM/DD/YY
PROJECT NO:	XXXX-22

SHEET TITLE:
CONCRETE FOUNDATION PLAN (50 PSF LIVE LOAD + 15 PSF FLOOR PARTITION LOAD)

SHEET NUMBER:
S1.1

KEYNOTES

GENERAL NOTES

FACILITY:
JACOBSON ELEMENTARY SCHOOL
1750 W KAVANAGH AVE
TRACY, CA 95376

PROJECT:
JACOBSON ES - TK CLASSROOM

SHEET NAME:
CONCRETE FOUNDATION PLAN (50PSF LIVE LOAD + 15PSF FLOOR PARTITION LOAD)

DATE: **04/03/24** CLIENT PROJ NO: **3595001000**

SHEET:
S1.1
ADDENDUM "A"

PLEASE RECYCLE

Autodesk Docs://3595005000 TUSD TK CLASSROOMS 2025 R22/3595005000-A-TUSD-BOHN-SITE.rvt
12/3/2024 9:55:48 AM

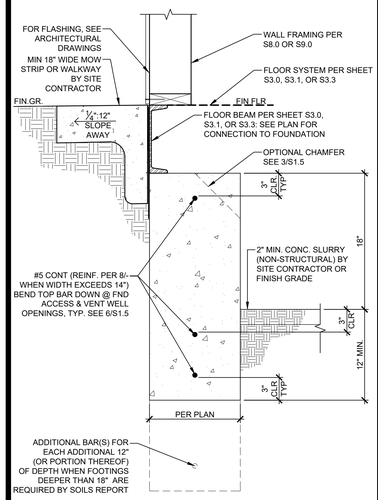

TYP. FOOTING - BELOW GRADE 1
SCALE: 1-1/2" = 1'-0"

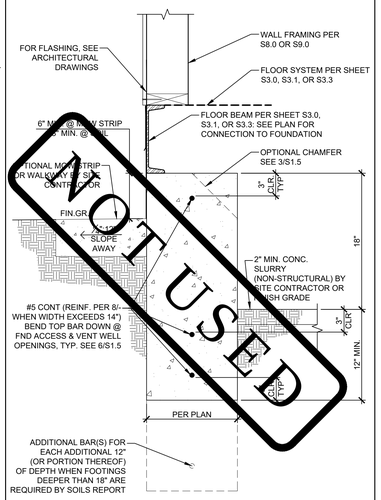

TYP. FOOTING - ABOVE GRADE 1A
SCALE: 1-1/2" = 1'-0"

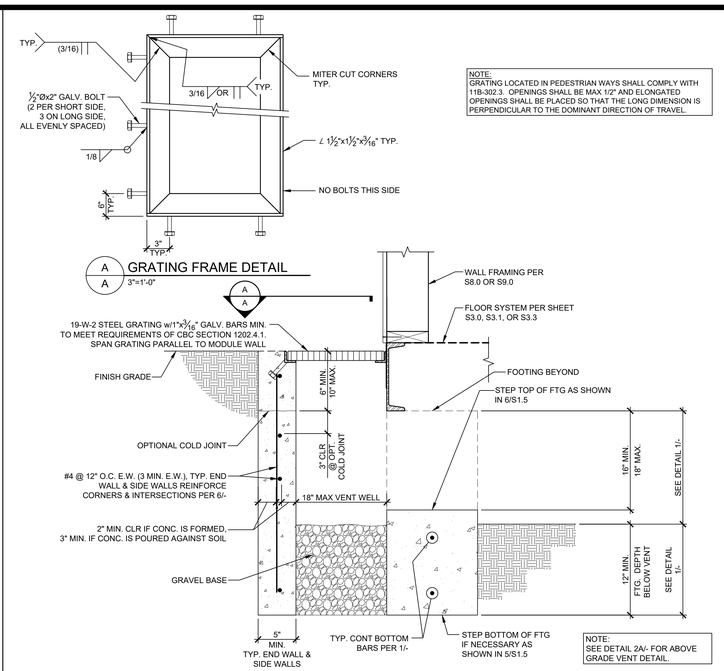

NOTE:
GRATING LOCATED IN PEDESTRIAN WAYS SHALL COMPLY WITH 11B-302.3. OPENINGS SHALL BE MAX 1/2" AND ELONGATED OPENINGS SHALL BE PLACED SO THAT THE LONG DIMENSION IS PERPENDICULAR TO THE DOMINANT DIRECTION OF TRAVEL.

TYP. VENT DETAIL - BELOW GRADE 2
SCALE: 1-1/2" = 1'-0"

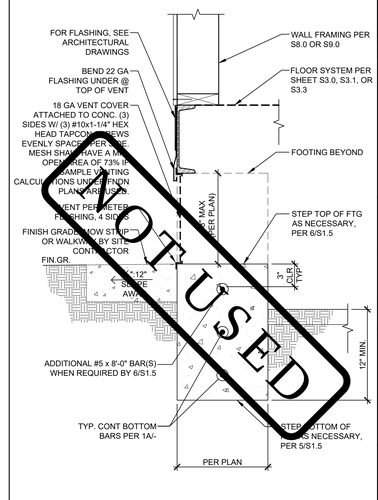

NOTE:
SEE DETAIL 2/- FOR INFO NOT SHOWN

TYP. VENT DETAIL - ABOVE GRADE 2A
SCALE: 1-1/2" = 1'-0"

NOT USED 3

NOT USED 3A

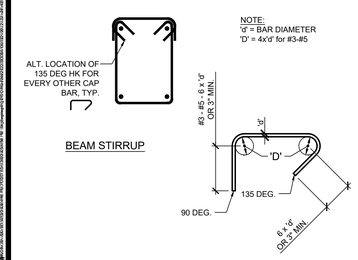

TYPICAL HOOP-STIRRUP DETAIL 5
SCALE: 1-1/2" = 1'-0"

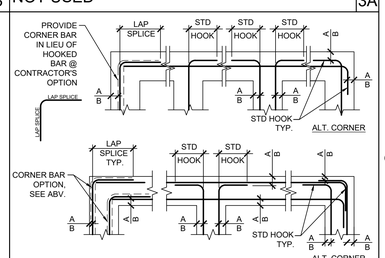

NOTES:
1. LAP SPLICE SHALL BE TYPICAL CLASS B SPLICE PER DETAIL 9/-.
2. HOOK LENGTH SHALL BE MIN 12d OR 12", WHICHEVER IS GREATER, WHERE d = DIAMETER OF THE BAR.
3. "A" = 2" COVER @ FORMED FOOTING
4. "B" = 3" COVER @ UNFORMED FOOTING

TYPICAL FOOTING REINFORCING 6
SCALE: 1-1/2" = 1'-0"

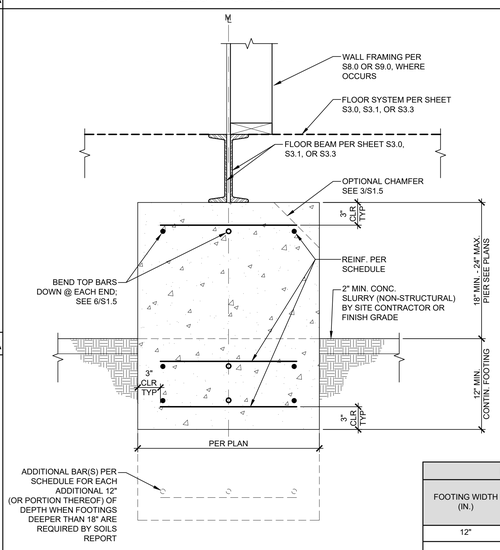

REINFORCING SCHEDULE		
FOOTING WIDTH (IN.)	CONTINUOUS LONGITUDINAL REINFORCING (EACH HORIZ. LEVEL)	TRANSVERSE REINFORCING (EACH HORIZ. LEVEL)
12"	(1) #5	NOT REQ'D
12"< W ≤ 16"	(1) #6	NOT REQ'D
	(2) #5	#4 @ 24" O.C.
16"< W ≤ 24"	(2) #5	#4 @ 24" O.C.
24"< W ≤ 36"	(3) #5	#4 @ 24" O.C.
36"< W ≤ 48"	(4) #5	#4 @ 24" O.C.

TYPICAL INTERIOR MODLINE FOOTING SECTION 8

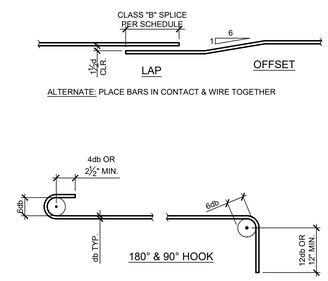

BAR SIZE #	DEVELOPMENT LENGTH[3]			TYPICAL CLASS B LAP SPLICE LENGTH[4]					
				3000 PSI		3500 PSI		4000+ PSI	
	3000 PSI (IN)	3500 PSI (IN)	4000+ PSI (IN)	TOP[2] (IN)	BOTTOM (IN)	TOP[2] (IN)	BOTTOM (IN)	TOP[2] (IN)	BOTTOM (IN)
3	13	12	12	21	16	20	16	20	16
4	17	16	15	28	22	26	20	24	19
5	21	20	18	35	27	33	25	30	24
6	25	23	22	42	32	39	30	36	28

NOTES:
1. THE ABOVE TABLE IS BASED ON GRADE 60 STEEL
2. TOP BARS ARE ANY BARS WITH MORE THAN 12" OF CONCRETE PLACED BELOW.
3. DEVELOPMENT LENGTH IS CALCULATED FOR TYP. BARS - Ψ_t=1.0
4. LAP SPLICES IN ADJACENT BARS SHALL BE STAGGERED, UNLESS OTHERWISE NOTED.

TYP. REINFORCING LAPS & BENDS 9
SCALE: 1-1/2" = 1'-0"

PLEASE RECYCLE

IDENTIFICATION STAMP
DIV. OF THE STATE ARCHITECT
APP: 02-122976 INC:
REVIEWED FOR
SS ☑ FLS ☑ ACS ☑
DATE: 03/12/2025

TRACY UNIFIED SCHOOL DISTRICT

HMC Architects
3595001000
2101 CAPITOL AVENUE, SUITE 100
SACRAMENTO, CA 95816
916 368 7990 / www.hmcarchitects.com

ISSUE

Δ	DESCRIPTION	DATE
1	ADDENDUM "A"	3/20/25

AMS American Modular Systems
787 Spreckels Ave., Manteca, CA 95336
Phone (209) 825-1921 Fax (209) 825-7018
www.americanmodular.com

INTELLECTUAL-PROPERTY & PROPRIETARY RIGHTS STATEMENT
COPYRIGHT © AMERICAN MODULAR SYSTEMS (AMS)
AMS OWNS ALL COPYRIGHT AND OTHER INTELLECTUAL-PROPERTY AND PROPRIETARY RIGHTS IN THESE DRAWINGS, SPECIFICATIONS, AND THE MATERIAL CONTAINED HEREIN. CERTAIN ELEMENTS SHOWN IN THESE DOCUMENTS ARE REGISTERED TRADEMARKS OF AMS. ALL PATENTABLE MATERIALS CONTAINED IN THESE DOCUMENTS AND ORIGINATING WITH AMS ARE SUBJECT TO PATENT RIGHTS. ALL RIGHTS ARE RESERVED. NO PORTIONS OF OR THE MATERIAL CONTAINED HEREIN MAY NOT BE REPRODUCED, TRANSMITTED, COPIED, DISTRIBUTED, MODIFIED, OR OTHERWISE DISPOSED OF (DIRECTLY OR INDIRECTLY) AND MAY NOT BE USED (IN WHOLE OR IN PART) TO ASSIST IN THE CONSTRUCTION, DESIGN, OR OTHER MAKING OF, OR FOR THE PURPOSE OF FURNISHING ANY INFORMATION FOR THE CONSTRUCTION, DESIGN, OR OTHER MAKING OF, ANY BUILDINGS (MODULAR OR OTHERWISE), DRAWINGS, SPECIFICATIONS, PRINTS, APPARATUS, OR PARTS THEREOF, EXCEPT AS EXPRESSLY PERMITTED BY WRITTEN CONSENT OF, OR IN A WRITTEN AGREEMENT WITH, AMS. SUBMITTAL OR DISTRIBUTION TO MEET OFFICIAL REGULATORY REQUIREMENTS WILL NOT BE CONSTRUED AS PUBLICATION IN DEROGATION OF AMS'S COPYRIGHT OR OTHER INTELLECTUAL-PROPERTY OR PROPRIETARY RIGHTS.

PRE-CHECKED SET NAME
24' x 40' THRU 120' x 40'
STANDARD MODULAR BUILDING
(LOW SEISMIC)
FORM®

SITE SPECIFIC PROJECT NAME

APPROVED
DIV. OF THE STATE ARCHITECT
APP: 04-122050 PC
REVIEWED FOR
SS ☑ FLS ☑ ACS ☑ CG ☑
DATE: 12/11/2023

☐ 2022 CBC PRE-CHECK (PC) DOCUMENT
A SEPARATE REVIEW FOR ADDITIONAL DOCUMENTS IS REQUIRED

MANUFACTURER PROFESSIONAL OF RECORD ON PC

LICENSED ARCHITECT PATRICK CONNOR HUNT No. C12631 Exp. 3-31-25 STATE OF CALIFORNIA

REGISTERED PROFESSIONAL ENGINEER MARK D. ZIMMERMAN No. S3380 STRUCTURAL STATE OF CALIFORNIA RST#22214

11/21/2023

THESE DRAWINGS ARE PRELIMINARY AND NOT FOR CONSTRUCTION UNLESS STAMPED & SIGNED BY THE DESIGN PROFESSIONAL OF RECORD.

REVISIONS
1
2
3
4

DRAWN BY:	AA
SCALE:	AS NOTED
DATE:	MM/DD/YY
PROJECT NO:	XXXX-22

SHEET TITLE:
CONCRETE FOUNDATION DETAILS

SHEET NUMBER:
S1.4

KEYNOTES

GENERAL NOTES

FACILITY:
JACOBSON ELEMENTARY SCHOOL
1750 W KAVANAGH AVE
TRACY, CA 95376

PROJECT:
JACOBSON ES - TK CLASSROOM

SHEET NAME:
CONCRETE FOUNDATION DETAILS

DATE: **04/03/24** CLIENT PROJ NO: **3595001000**

SHEET:
S1.4
ADDENDUM "A"

THE LINE SHOWN ABOVE IS EXACTLY ONE INCH LONG ON THE SHEET ORIGINAL SIZE: 22x34
Autodesk Docs://3595005000 TUSD TK CLASSROOMS 2025 R22/3595005000-A-TUSD-BOHN-SITE.rvt
12/3/2024 8:55:49 AM

THE LINE SHOWN ABOVE IS EXACTLY ONE INCH LONG AT THIS SHEETS ORIGINAL PAGE SIZE

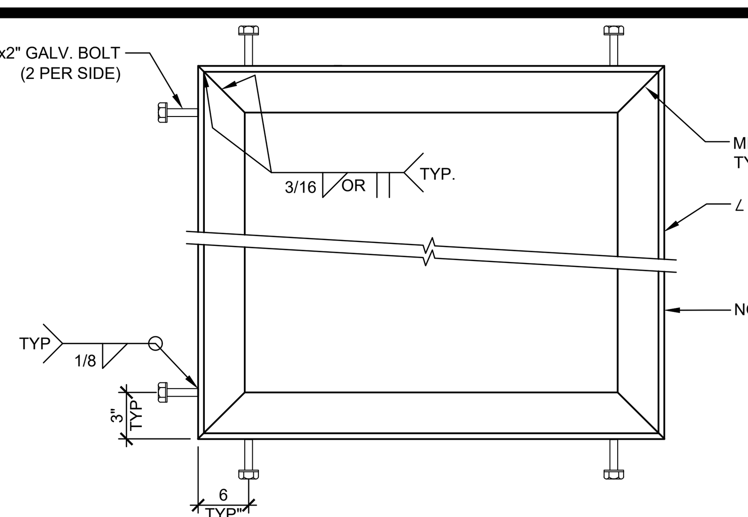

NOTE:
GRATING LOCATED IN PEDESTRIAN WAYS SHALL COMPLY WITH 11B-302.3. OPENINGS SHALL BE MAX 1/2" AND ELONGATED OPENINGS SHALL BE PLACED SO THAT THE LONG DIMENSION IS PERPENDICULAR TO THE DOMINANT DIRECTION OF TRAVEL.

A/A GRATING FRAME DETAIL
3"=1'-0"

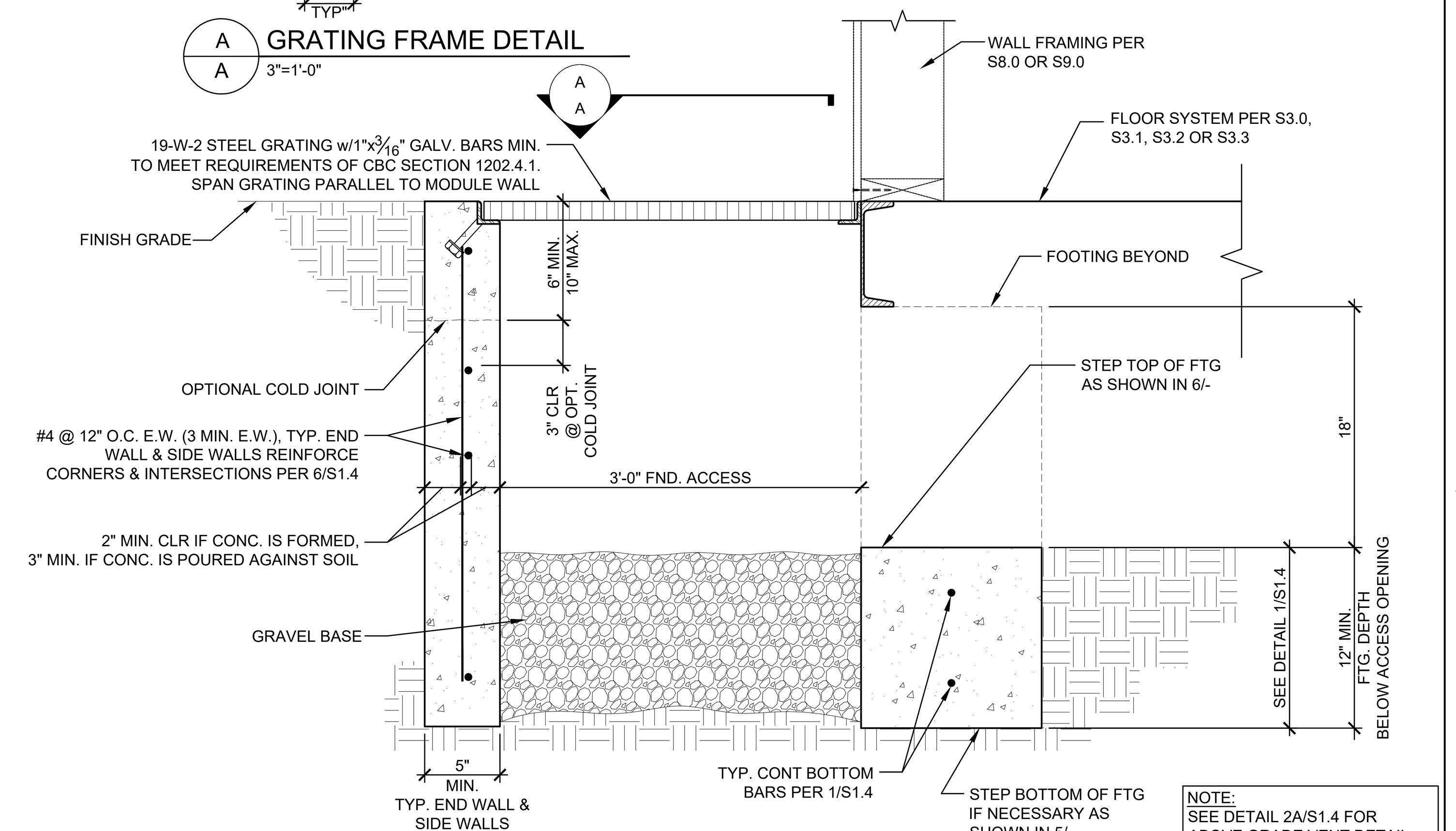

NOTE:
SEE DETAIL 2A/S1.4 FOR ABOVE GRADE VENT DETAIL.

BELOW GRADE SECTION / ACCESS WELL DETAIL — SCALE:1 1/2"=1'-0" — 1

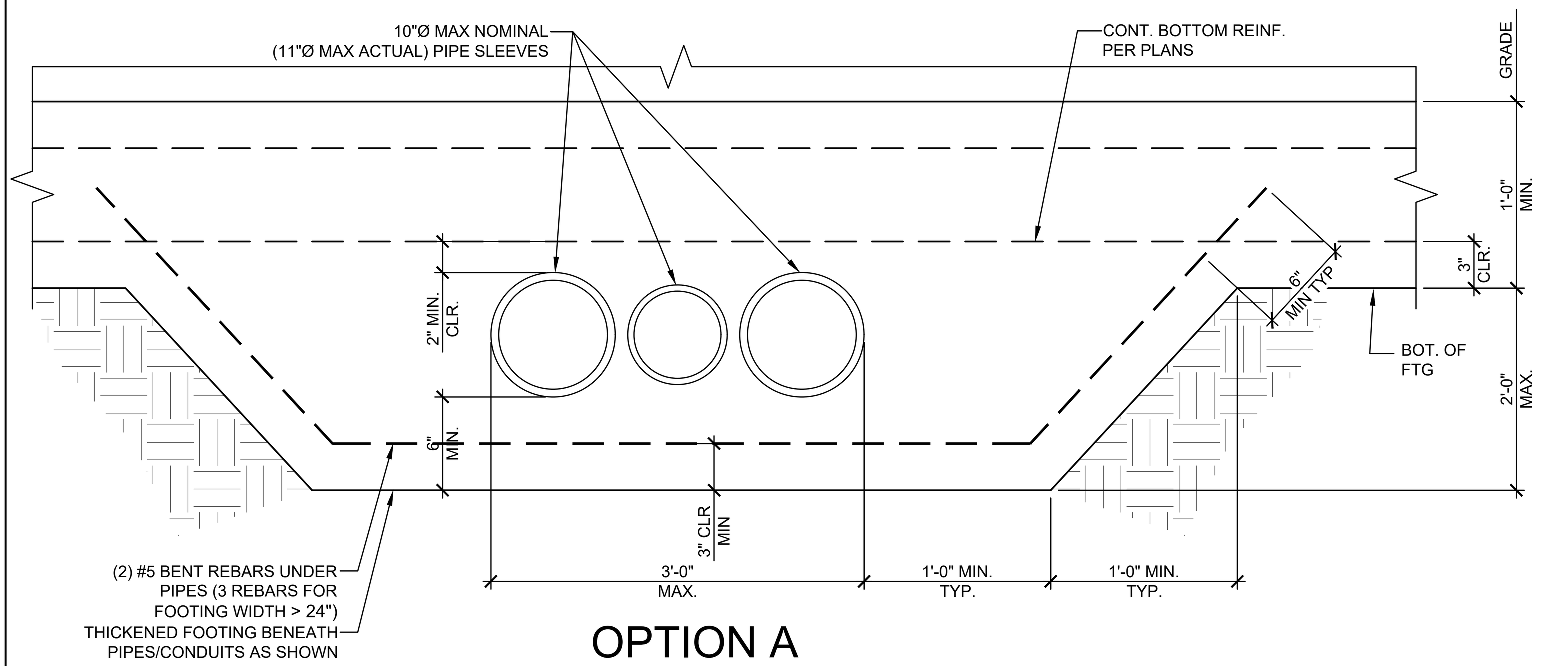

OPTION A

NOTES:
1. AS AN OPTION TO INDIVIDUAL PIPE SLEEVES, THE FOOTING MAY BE BLOCKED OUT FOR MULTIPLE PIPES (10" HIGH x 36" WIDE MAX @ OPTION "A", 10" HIGH x 24" WIDE MAX OPTION "B") OR INDIVIDUALLY. PROVIDE 1" MIN. CLEARANCE ALL AROUND BETWEEN PIPES/CONDUITS & BLOCKOUT/SLEEVES & FILL w/ CAULK.
2. CONCRETE SHALL BE WELL CONSOLIDATED AROUND & UNDER PIPES, CONDUITS, SLEEVES, BLOCKOUTS TO PREVENT CONCRETE VOIDS.
3. PROVIDE 2" CLEAR MIN BETWEEN BLOCKOUT SLEEVES AND REINFORCEMENT.
4. WHERE TOP OF PIPES/CONDUITS ARE 12" OR MORE BELOW THE BOTTOM OF THE FOOTING, THICKENED FOOTING AROUND PIPES/CONDUITS IS NOT REQUIRED. BACKFILL & COMPACT TO 95% OVER PIPES / CONDUITS PRIOR TO PLACING FOOTING.

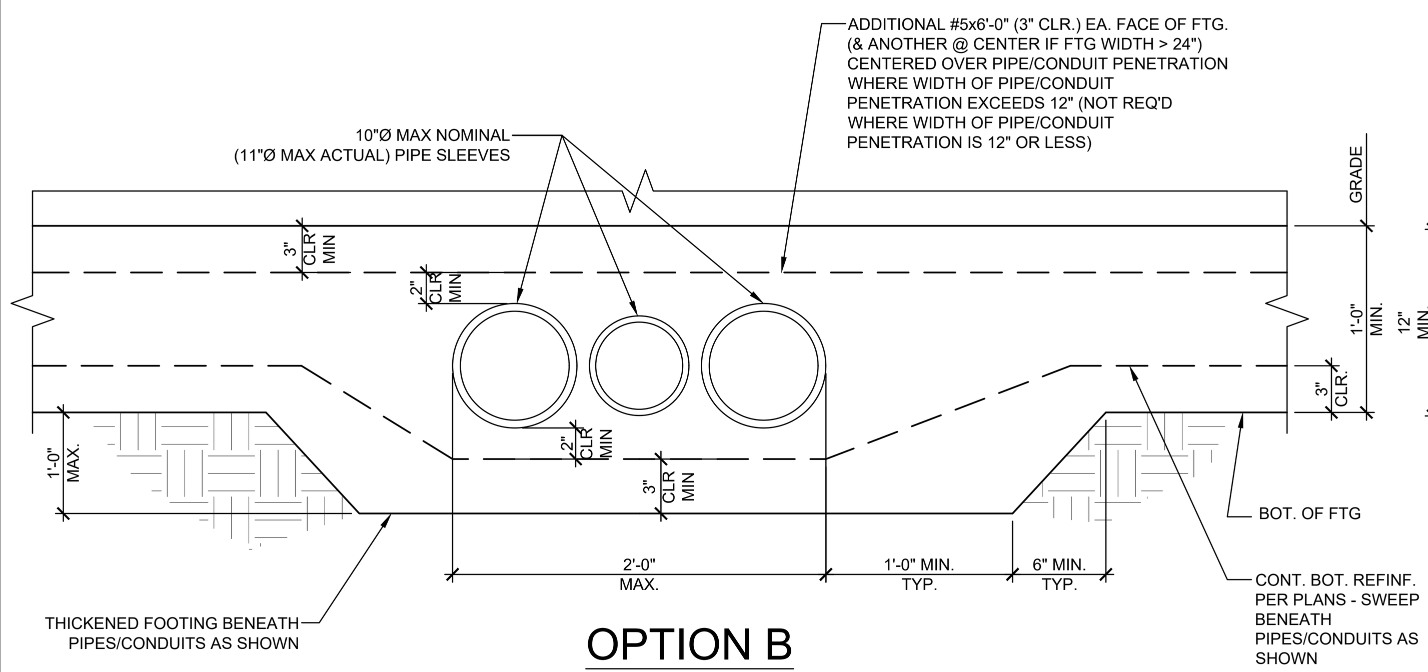

OPTION B

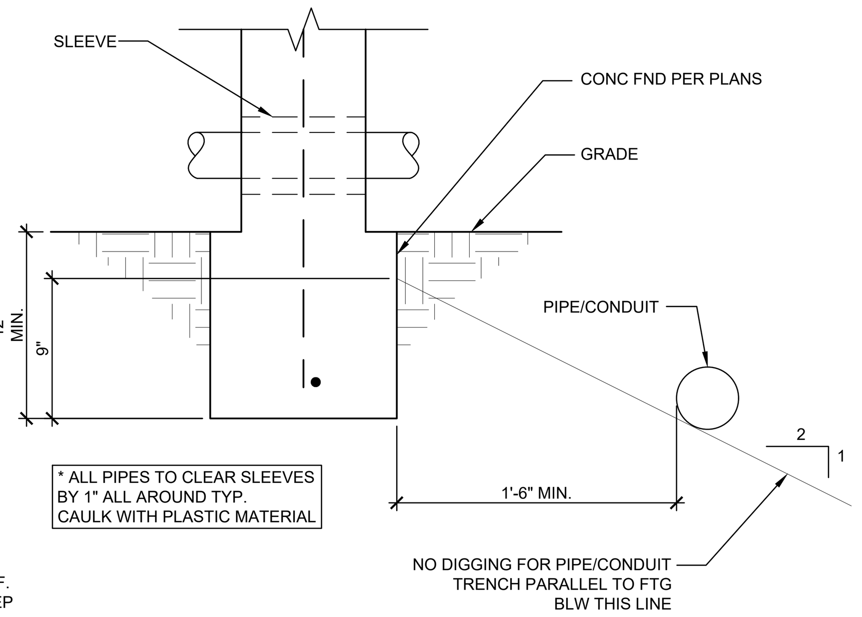

* ALL PIPES TO CLEAR SLEEVES BY 1" ALL AROUND TYP. CAULK WITH PLASTIC MATERIAL

PIPE SLEEVE DETAIL — SCALE: 1-1/2"=1'-0" — 2

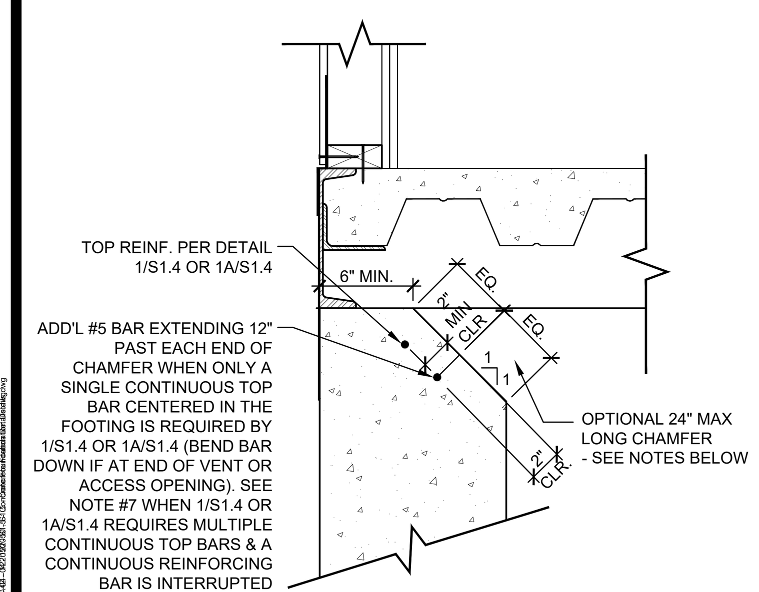

NOTES:

1. CHAMFER MAY BE LOCATED ALONG ALL LOCATIONS OF THE PERIMETER OF THE BUILDING FOUNDATION UNLESS OTHERWISE NOTED ON PLAN OR AS DESCRIBED BELOW.
2. CHAMFER SHALL NOT BE LOCATED WITHIN 3'-6" OF THE CORNERS OF THE BUILDING FOUNDATION.
3. CHAMFERS AT FRONT OR REAR END WALL FOOTINGS SHALL NOT BE LOCATED WITHIN 2'-0" OF A MODULE LINE
4. CHAMFER SHALL NOT BE LOCATED WITHIN 1'-6" OF ANCHORAGE EMDED. PLATE LOCATION.
5. CHAMFERS SHALL NOT BE LOCATED WITHIN 1'-6" OF UTILITY OPENINGS PER SHEET S1.7
6. CHAMFER MAY OCCUR AT THE ENDS OF VENT OR ACCESS OPENINGS (ALONG THE INTERIOR EDGE OF THE STEMWALL PARALLEL TO THE FLOOR BEAM AS SHOWN ABOVE)
7. BOTTOM OF CHAMFER SHALL NOT BE LOWER THAN FINISHED GRADE
8. WHEN 1/S1.4 OR 1A/S1.4 REQUIRED MULTIPLE CONTINUOUS TOP BARS AND THE CHAMFER INTERRUPTS A CONTINUOUS LONGITUDINAL REINFORCING BAR, PROVIDE AN ADDITIONAL #5 x 6'-0" BAR 2" CLEAR AND CENTERED ON THE CHAMFER (BEND BAR DOWN IF AT END OF VENT OR ACCESS OPENING)
9. FOR ALL ITEMS NOT SHOWN OR NOTED SEE DETAILS 1/S1.4 & 1A/S1.4.

CHAMFER DETAILS @ PERIMETER — SCALE:1 1/2"=1'-0" — 3

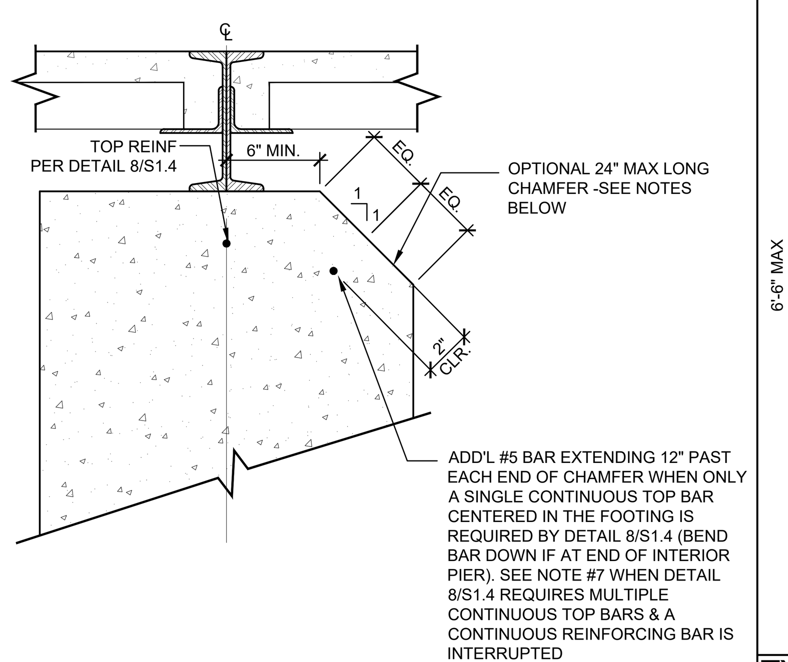

NOTES:

1. CHAMFER MAY BE LOCATED ALONG ALL LOCATIONS OF INTERIOR FOOTING OF THE BUILDING FOUNDATION UNLESS OTHERWISE NOTED ON PLAN OR AS DESCRIBED BELOW.
2. CHAMFER SHALL NOT BE LOCATED WITHIN 2'-6" OF THE ENDS OF THE BUILDING.
3. CHAMFER MAY OCCUR ON BOTH SIDES OF THE FOOTING CONCURRENTLY.
4. CHAMFER SHALL NOT BE LOCATED WITHIN 1'-6" OF UTILITY OPENING PER SHEET S1.7
5. CHAMFER MAY OCCUR AT THE ENDS OF INTERIOR PIERS (ALONG THE SIDE OF THE PIER PARALLEL TO THE FLOOR BEAMS AS SHOWN ABOVE)
6. BOTTOM OF CHAMFER SHALL NOT BE LOWER THAN FINISHED GRADE
7. WHEN DETAIL 8/S1.4 REQUIRES MULTIPLE CONTINUOUS TOP BARS AND THE CHAMFER INTERRUPTS A CONTINUOUS LONGITUDINAL REINFORCING BAR, PROVIDE AN ADDITIONAL #5 x 6'-0" BAR 2" CLEAR AND CENTERED ON THE CHAMFER (BEND BAR DOWN IF AT END OF INTERIOR PIER)
8. FOR ALL ITEMS NOT SHOWN OR NOTED - SEE DETAIL 8/S1.4.

CHAMFER DETAILS @ INTERIOR — SCALE:1 1/2"=1'-0" — 4

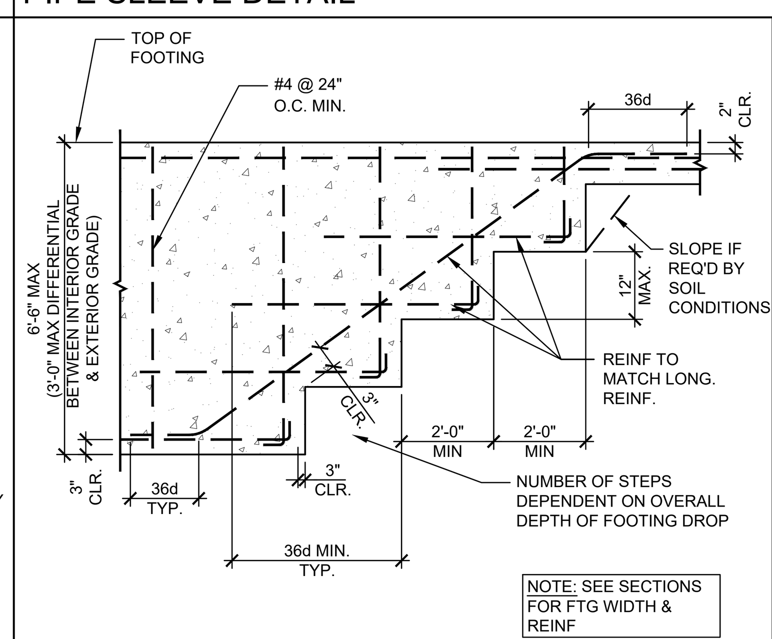

NOTE: SEE SECTIONS FOR FTG WIDTH & REINF

TYPICAL STEPPED FOOTING DETAIL — SCALE:1 1/2"=1'-0" — 5

NOTE: SEE SECTIONS FOR FTG WIDTH & REINF

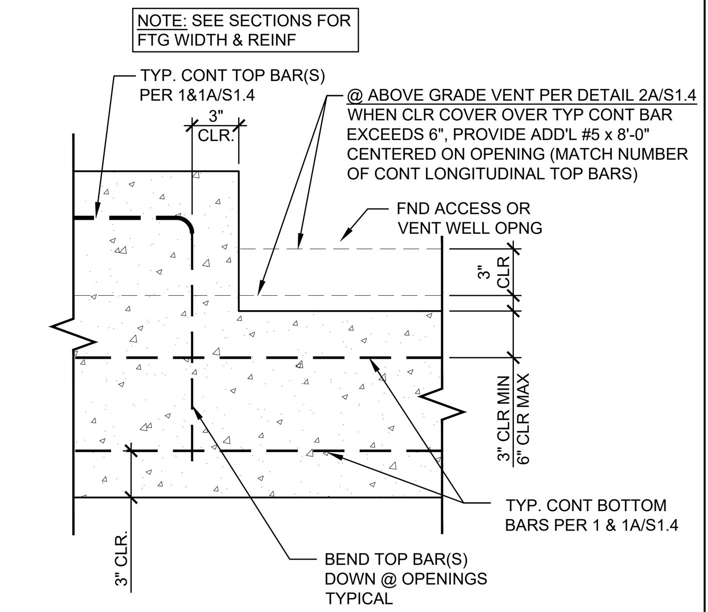

VENT/ACCESS OPENING DETAIL — SCALE:1 1/2"=1'-0" — 6

NOT USED — 7

AMS American Modular Systems
787 Spreckels Ave., Manteca, CA 95336
Phone (209) 825-1921 Fax (209) 825-7018
www.americanmodular.com

INTELLECTUAL-PROPERTY & PROPRIETARY RIGHTS STATEMENT
COPYRIGHT © AMERICAN MODULAR SYSTEMS (AMS)
AMS OWNS ALL COPYRIGHT AND OTHER INTELLECTUAL-PROPERTY AND PROPRIETARY RIGHTS IN THESE DRAWINGS, SPECIFICATIONS, AND THE MATERIAL CONTAINED HEREIN. CERTAIN ELEMENTS SHOWN IN THESE DOCUMENTS ARE REGISTERED TRADEMARKS OF AMS. ALL PATENTABLE MATERIALS CONTAINED IN THESE DOCUMENTS AND ORIGINATING WITH AMS WILL REMAIN THE SOLE PROPERTY OF AMS. THESE DRAWING, SPECIFICATIONS, AND THE MATERIAL CONTAINED HEREIN MAY NOT BE REPRODUCED, TRANSMITTED, COPIED, DISTRIBUTED, MODIFIED, OR OTHERWISE DISPOSED OF (DIRECTLY OR INDIRECTLY) AND MAY NOT BE USED (IN WHOLE OR IN PART) TO ASSIST IN THE CONSTRUCTION, DESIGN, OR OTHER MAKING OF, OR FOR THE PURPOSE OF FURNISHING ANY INFORMATION FOR THE CONSTRUCTION, DESIGN, OR OTHER MAKING OF, ANY BUILDINGS (MODULAR OR OTHERWISE), DRAWINGS, SPECIFICATIONS, PRINTS, APPARATUS, OR PARTS THEREOF, EXCEPT AS EXPRESSLY PERMITTED BY WRITTEN CONSENT OF, OR IN A WRITTEN AGREEMENT WITH, AMS. SUBMITTAL OR DISTRIBUTION TO MEET OFFICIAL REGULATORY REQUIREMENTS WILL NOT BE CONSTRUED AS PUBLICATION IN DEROGATION OF AMS'S COPYRIGHT OR OTHER INTELLECTUAL-PROPERTY OR PROPRIETARY RIGHTS.

PRE-CHECKED SET NAME
24' x 40' THRU 120' x 40' STANDARD MODULAR BUILDING (LOW SEISMIC)
FORM®

SITE SPECIFIC PROJECT NAME
.
.
.

APPROVED
DIV. OF THE STATE ARCHITECT
APP: 04-122050 PC
REVIEWED FOR
SS ☑ FLS ☑ ACS ☑ CG ☑
DATE: 12/11/2023

☐ 2022 CBC PRE-CHECK (PC) DOCUMENT
A SEPARATE PROJECT APPLICATION FOR CONSTRUCTION IS REQUIRED.

MANUFACTURER PROFESSIONAL OF RECORD ON PC
LICENSED ARCHITECT RANDALL PATRICK CAVANAGH No. C12631 Ren. 3-31-25 STATE OF CALIFORNIA
REGISTERED PROFESSIONAL ENGINEER MANNY D. FRESCH No. S3380 STRUCTURAL STATE OF CALIFORNIA
RST#22214
11/21/2023
THESE DRAWINGS ARE PRELIMINARY AND NOT FOR CONSTRUCTION UNLESS STAMPED & SIGNED BY THE DESIGN PROFESSIONAL OF RECORD.

REVISIONS
1
2
3
4

DRAWN BY:	AA
SCALE:	AS NOTED
DATE:	MM/DD/YY
PROJECT NO:	XXXX-22

SHEET TITLE:
CONCRETE FOUNDATION DETAILS

SHEET NUMBER:
S1.5

IDENTIFICATION STAMP
DIV. OF THE STATE ARCHITECT
APP: 02-122976 INC:
REVIEWED FOR
SS ☑ FLS ☑ ACS ☑
DATE: 03/12/2025

TRACY UNIFIED SCHOOL DISTRICT

HMC Architects
3595001000
2101 CAPITOL AVENUE, SUITE 100
SACRAMENTO, CA 95816
916 368 7990 / www.hmcarchitects.com

ISSUE

Δ	DESCRIPTION	DATE
A	ADDENDUM "A"	3/20/25

KEYNOTES

GENERAL NOTES

FACILITY:
JACOBSON ELEMENTARY SCHOOL
1750 W KAVANAGH AVE
TRACY, CA 95376

PROJECT:
JACOBSON ES - TK CLASSROOM

SHEET NAME:
CONCRETE FOUNDATION DETAILS

DATE: 04/03/24 | CLIENT PROJ NO: 3595001000

SHEET:
S1.5
ADDENDUM "A"

PLEASE RECYCLE

Autodesk Docs://3595005000 TUSD TK CLASSROOMS 2025 R22/3595005000-A-TUSD-BOHN-SITE.rvt
12/3/2024 9:55:48 AM

THE LINE SHOWN ABOVE IS EXACTLY ONE INCH LONG AT THIS SHEETS ORIGINAL PAGE SIZE

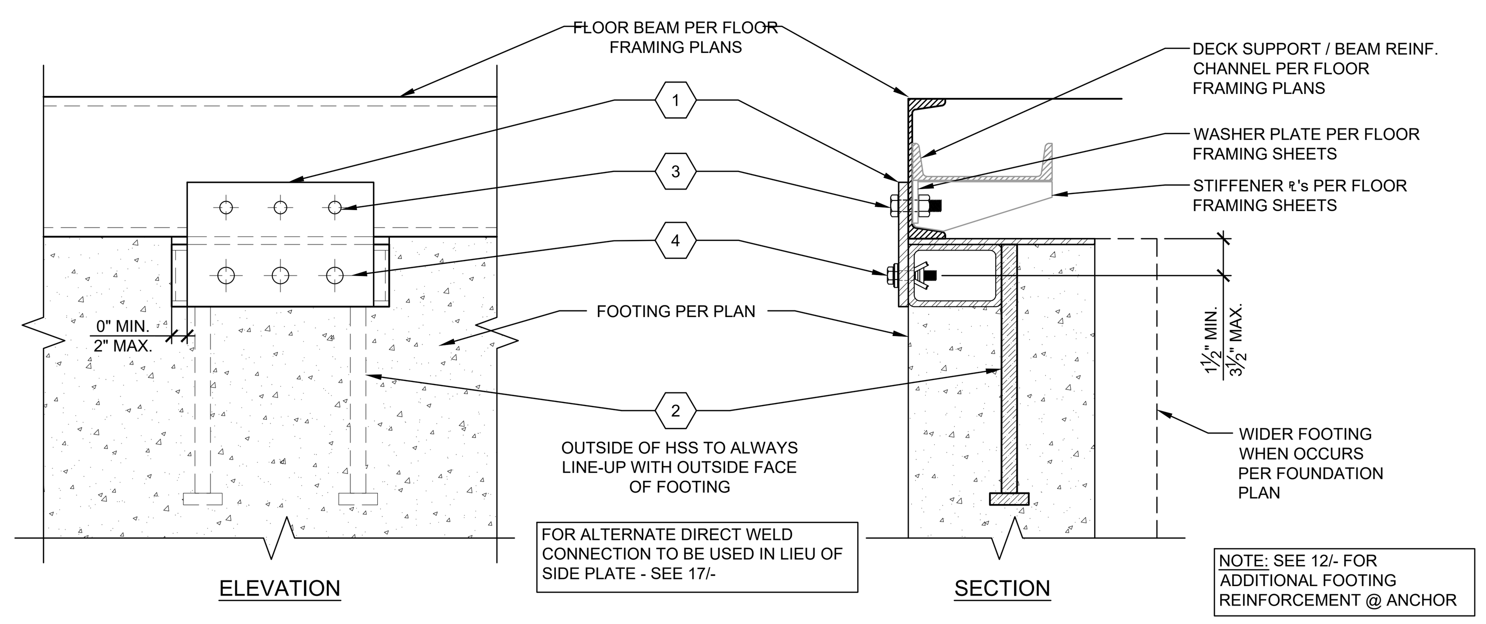

STANDARD ANCHORAGE DETAIL
SCALE: 1-1/2" = 1'-0" | 2

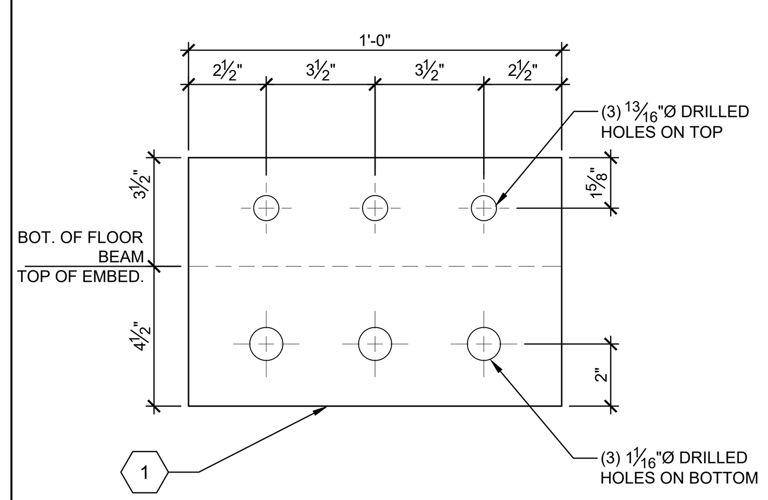

SIDE PLATE DETAIL
SCALE: 3" = 1'-0" | 3

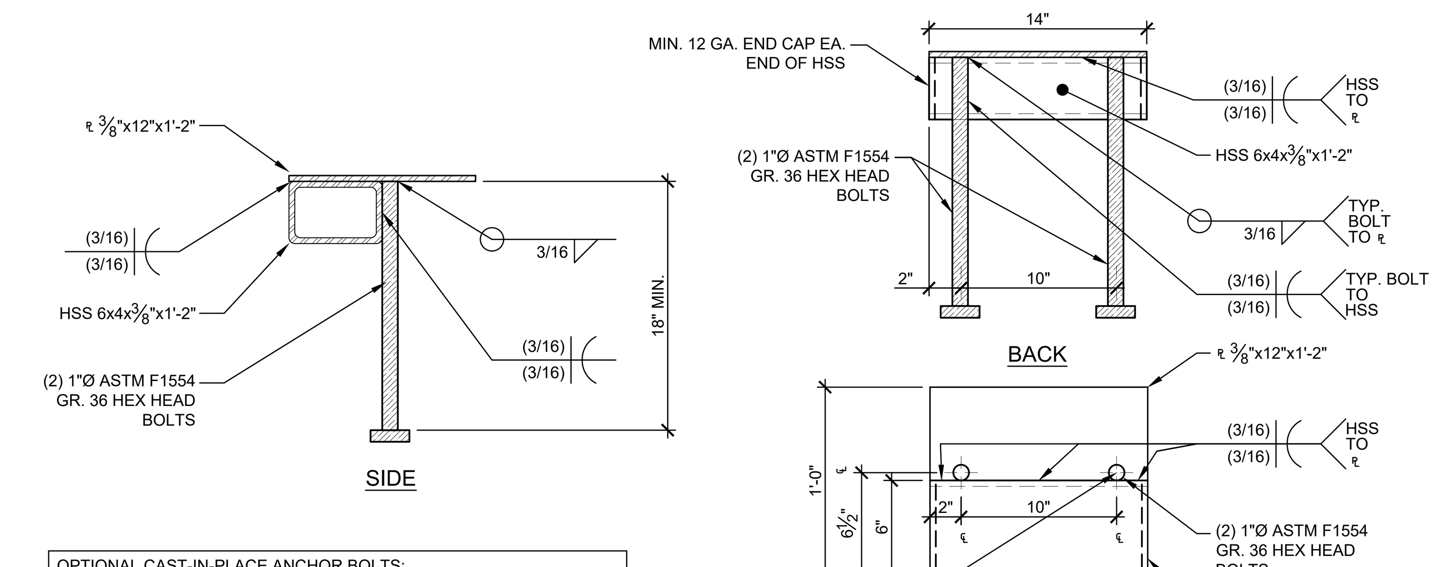

EMBEDDED ANCHOR DETAIL
SCALE: 1-1/2" = 1'-0" | 5

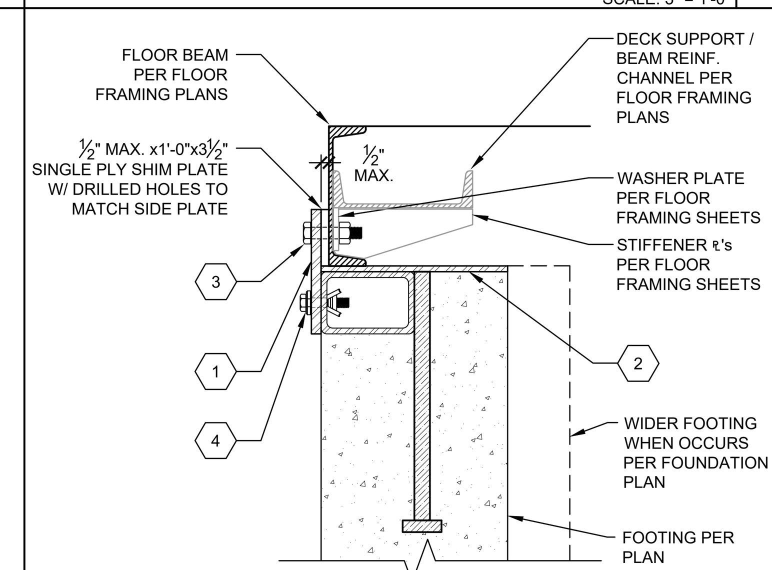

OPT. SHIM @ TOP
SCALE: 1-1/2" = 1'-0" | 8

NOT USED
9

1. ½"x8"x1'-0" (36 KSI) OR 3/8"x8"x1'-0" (50 KSI) SIDE PLATE. LOCATION PER PLAN - SEE 3/-
2. EMBEDDED ANCHOR. LOCATION PER PLAN - SEE 5/-
3. (3) ¾"Ø M.B. THRU-BOLTED THROUGH SIDE ℄ & FLOOR BEAM w/ 13/16"Ø HOLES - SEE 8/- FOR OPTIONAL SHIM DETAIL.
4. (3) 5/8"Ø LHBM16 "HOLLO-BOLT" EXPANSION BOLTS PER ICC ESR-3330 THROUGH SIDE ℄ INTO THE HSS OF THE EMBEDDED ANCHOR w/ 1 1/16"Ø HOLES
   - SEE GENERAL NOTES FOR SPECS. & INSTALLATION REQUIREMENTS,
   - SEE 13/- FOR OPTIONAL SHIM DETAIL.
5. (3) #3 VERTICAL HOOPS PER 12/-, FORMED PER 5/S1.4 & EVENLY SPACED @ ANCHORS.
6. (2) #4 BENT BARS CENTERED ON ANCHORS - (1) EA. SIDE OF ANCHORS.
   30" * 30" * 16"
   * BEND DOWN @ VENTS OR AROUND PERIMETER @ CORNER.
7. #3 HORIZONTAL HOOPS PER 12/-, FORMED PER 5/S1.4 & SPACED @ 6" O.C.
8. ADDITIONAL #5x8'-0" CENTERED @ ANCHOR. BEND DOWN @ VENTS OR AROUND PERIMETER @ CORNERS.

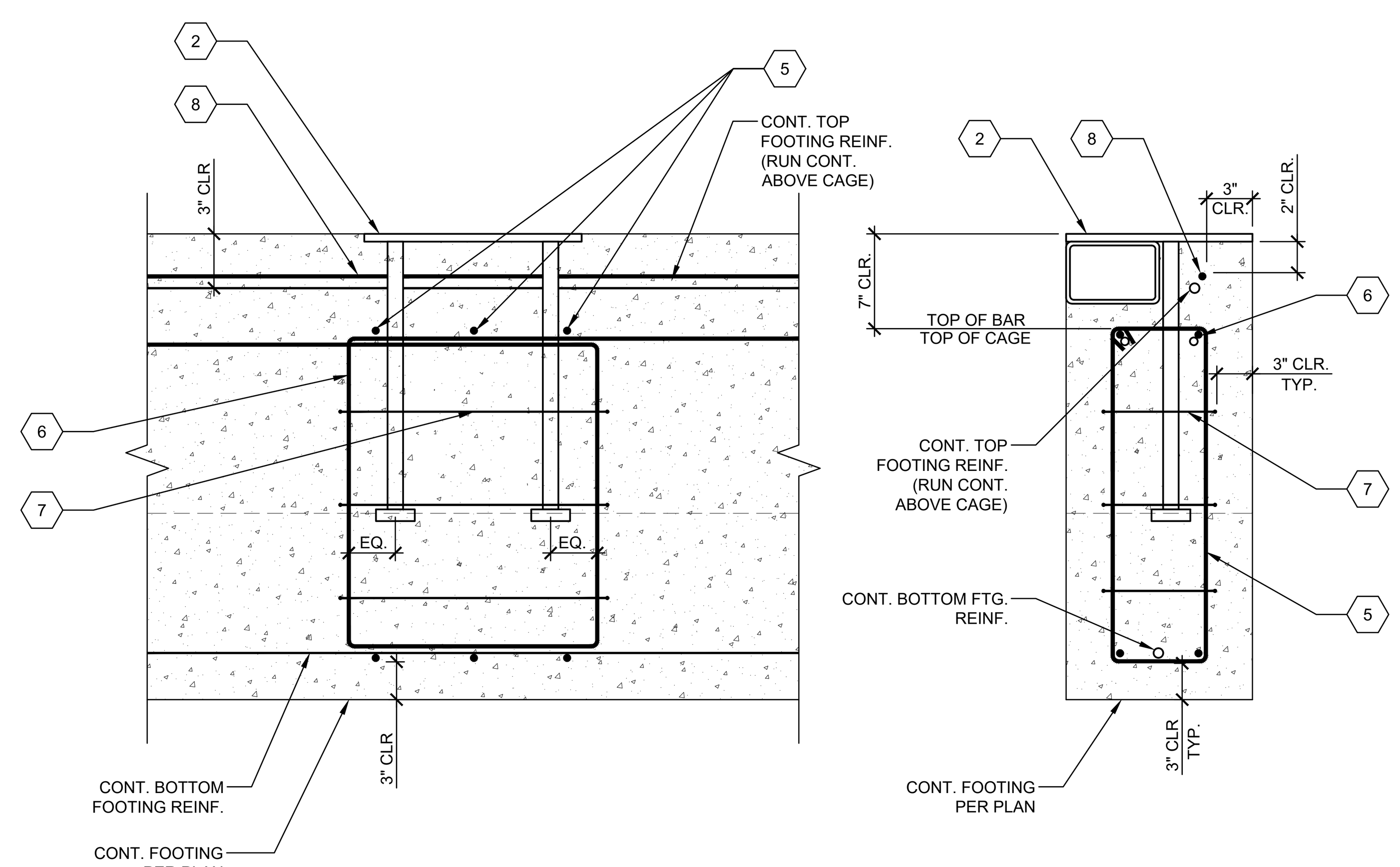

EMBEDDED ANCHOR REINFORCEMENT DETAIL
SCALE: 1-1/2" = 1'-0" | 12

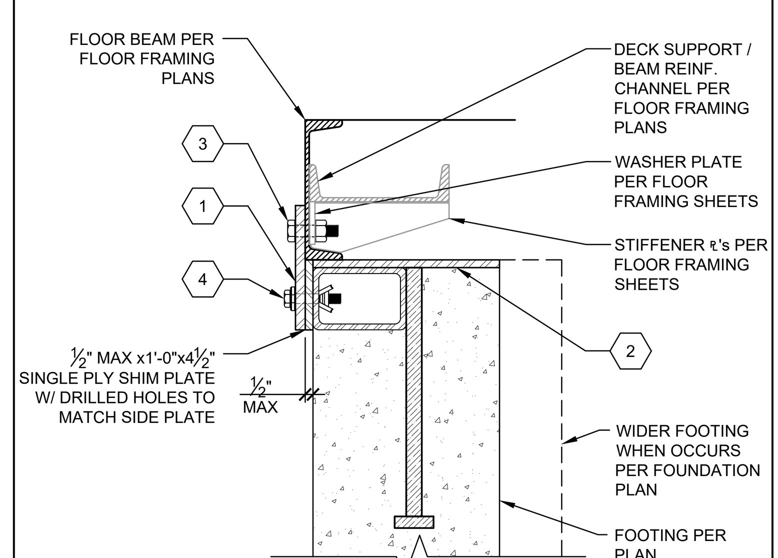

OPT. SHIM @ BOT
SCALE: 1-1/2" = 1'-0" | 13

NOT USED
14

KEY NOTES

1. DETAILS ON THIS SHEET SHALL APPLY WHERE STANDARD ANCHORAGE IS SPECIFIED ON THE FOUNDATION PLANS.
2. EACH ANCHORAGE POINT SPECIFIED ON PLAN SHALL CONSIST OF AN EMBEDDED ANCHOR AND EITHER A BOLTED SIDE PLATE OR ALTERNATE DIRECT WELD AS DETAILED ON DETAIL 2/-.
3. ANCHOR REINFORCEMENT PER DETAIL 12/- SHALL BE PLACED AT ALL EMBEDDED ANCHOR LOCATIONS.
4. EXPANSION BOLTS SHALL BE "HOLLO-BOLTS" BY LINDAPTER OR AN EQUIVALENT ICC ACCEPTED BOLT.
5. "HOLLO-BOLTS" ARE SPECIFIED AND TO BE INSTALLED PER ICC-ES REPORT ESR-3330 WITH AN INSTALLATION TIGHTENING TORQUE OF 140 FT.-LBS & ARE TO BE SUBJECT TO THE MANUFACTURER'S INSPECTION PROCEDURES FOUND ON SHEET D1 OF THESE DRAWINGS.
6. "HOLLO-BOLT" HEADS MAY BE HEXAGONAL OR COUNTERSUNK, AS SHOWN BELOW (NOT TO SCALE). FLUSH FIT "HOLLO-BOLT" OPTION NOT PERMITTED.

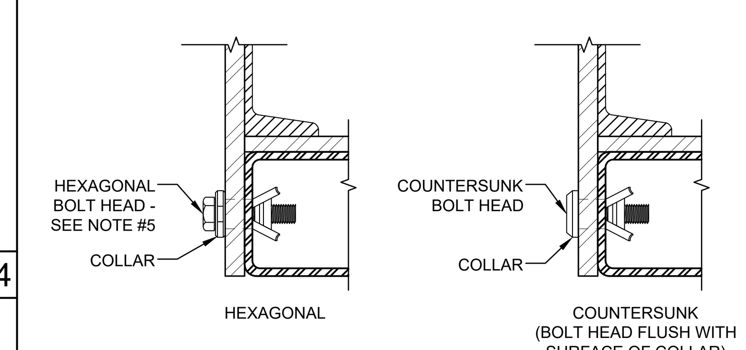

7. UPGRADED ANCHORAGE PER SHEET S1.6B MAY BE USED AS AN ALTERNATIVE TO STANDARD ANCHORAGE WHERE STANDARD ANCHORAGE IS SPECIFIED ON PLANS.

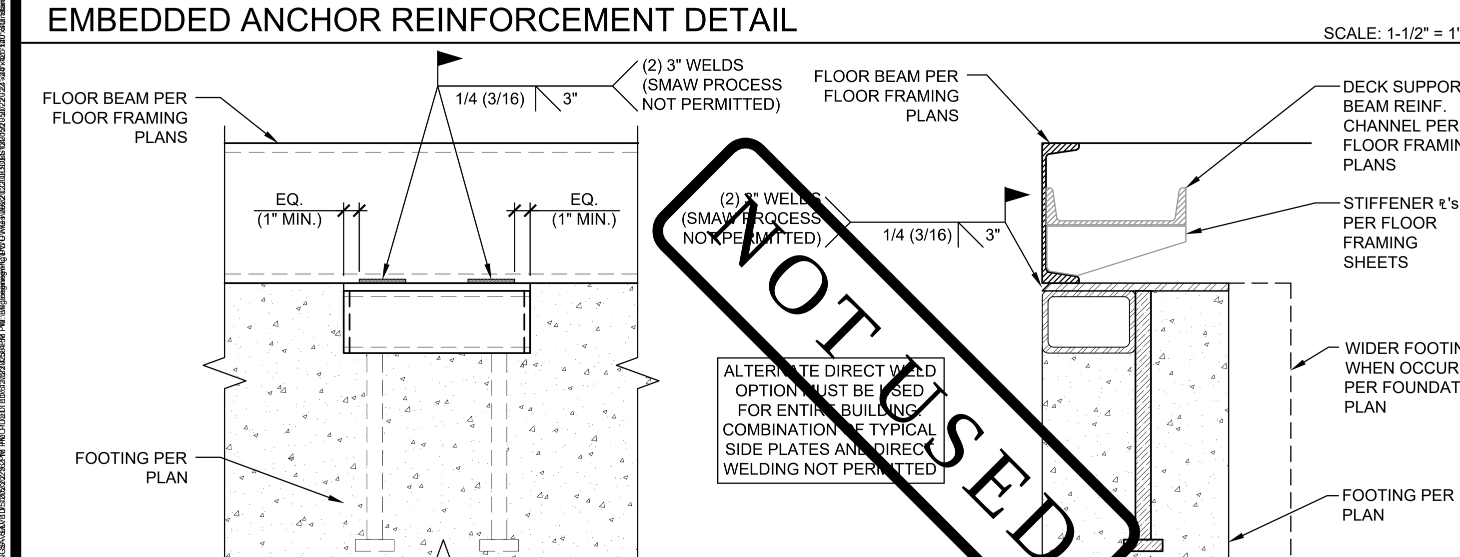

NOTES:
1. SEE 18/- FOR CONDITION WHERE FLOOR BEAM EXTENDS PAST FOOTING.
2. SEE 19/- FOR CONDITION WHERE FOOTING EXTENDS PAST FLOOR BEAM.
3. WHEN ALTERNATE DIRECT WELD OPTION IS USED, IT MUST BE USED FOR THE ENTIRE BUILDING. COMBINATION OF TYPICAL SIDE PLATES & DIRECT WELDING IS NOT PERMITTED.

ALTERNATE DIRECT WELD CONNECTION
SCALE: 1-1/2" = 1'-0" | 17

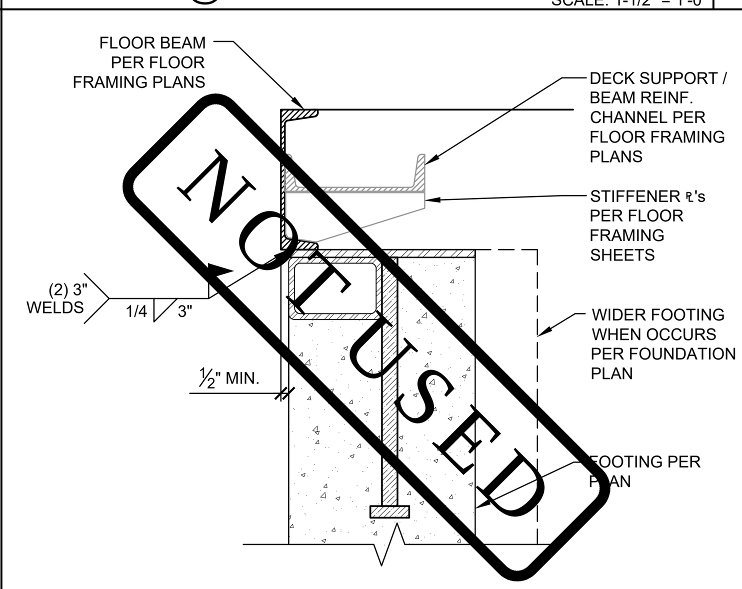

ALTERNATE DIRECT WELD @ OFFSET
SCALE: 1-1/2" = 1'-0" | 18

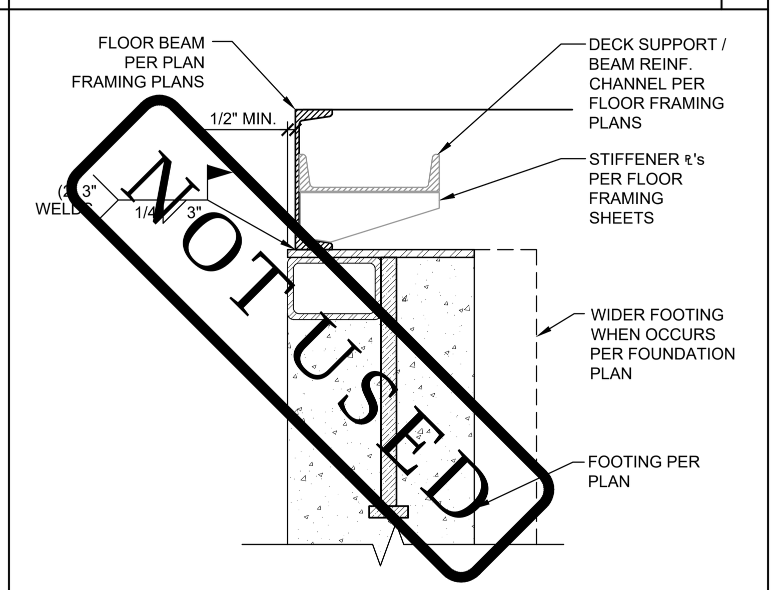

ALTERNATE DIRECT WELD @ OFFSET
SCALE: 1-1/2" = 1'-0" | 19

GENERAL NOTES

Autodesk Docs://3595005000 TUSD TK CLASSROOMS 2025 R22/3595005000-A-TUSD-BOHN-SITE.rvt
12/3/2024 9:55:49 AM

American Modular Systems
787 Spreckels Ave., Manteca, CA 95336
Phone (209) 825-1921 Fax (209) 825-7018
www.americanmodular.com

INTELLECTUAL-PROPERTY & PROPRIETARY RIGHTS STATEMENT
COPYRIGHT © AMERICAN MODULAR SYSTEMS (AMS)
AMS OWNS ALL COPYRIGHT AND OTHER INTELLECTUAL-PROPERTY AND PROPRIETARY RIGHTS IN THESE DRAWINGS, SPECIFICATIONS, AND THE MATERIAL CONTAINED HEREIN. CERTAIN ELEMENTS SHOWN IN THESE DOCUMENTS ARE REGISTERED TRADEMARKS OF AMS. ALL PATENTABLE MATERIALS CONTAINED IN THESE DOCUMENTS AND ORIGINATING WITH AMS WILL REMAIN THE SOLE PROPERTY OF AMS. THESE DRAWING, SPECIFICATIONS, AND THE MATERIAL CONTAINED HEREIN MAY NOT BE REPRODUCED, TRANSMITTED, COPIED, DISTRIBUTED, MODIFIED, OR OTHERWISE DISPOSED OF (DIRECTLY OR INDIRECTLY) AND MAY NOT BE USED (IN WHOLE OR IN PART) TO ASSIST IN THE CONSTRUCTION, DESIGN, OR OTHER MAKING OF, OR FOR THE PURPOSE OF FURNISHING ANY INFORMATION FOR THE CONSTRUCTION, DESIGN, OR OTHER MAKING OF, ANY BUILDINGS (MODULAR OR OTHERWISE), DRAWINGS, SPECIFICATIONS, PRINTS, APPARATUS, OR PARTS THEREOF, EXCEPT AS EXPRESSLY PERMITTED BY WRITTEN CONSENT OF, OR IN A WRITTEN AGREEMENT WITH, AMS. SUBMITTAL OR DISTRIBUTION TO MEET OFFICIAL REGULATORY REQUIREMENTS WILL NOT BE CONSTRUED AS PUBLICATION IN DEROGATION OF AMS'S COPYRIGHT OR OTHER INTELLECTUAL-PROPERTY OR PROPRIETARY RIGHTS.

PRE-CHECKED SET NAME
24' x 40' THRU 120' x 40'
STANDARD MODULAR BUILDING
(LOW SEISMIC)
FORM

SITE SPECIFIC PROJECT NAME
.
.
.

APPROVED
DIV. OF THE STATE ARCHITECT
APP: 04-122050 PC
REVIEWED FOR
SS ☑ FLS ☑ ACS ☑ CG ☑
DATE: 12/11/2023

☐ 2022 CBC PRE-CHECK (PC) DOCUMENT
A SEPARATE PROJECT APPLICATION FOR CONSTRUCTION IS REQUIRED.

MANUFACTURER PROFESSIONAL OF RECORD ON PC

LICENSED ARCHITECT RANDALL PATRICK CAVANAGH No. C12631 Ren. 3-31-25 STATE OF CALIFORNIA

REGISTERED PROFESSIONAL ENGINEER MANNY D. FRESCH No. S3380 STRUCTURAL STATE OF CALIFORNIA
RST#22214
11/21/2023

THESE DRAWINGS ARE PRELIMINARY AND NOT FOR CONSTRUCTION UNLESS STAMPED & SIGNED BY THE DESIGN PROFESSIONAL OF RECORD.

REVISIONS
1
2
3
4

DRAWN BY:	AA
SCALE:	AS NOTED
DATE:	MM/DD/YY
PROJECT NO:	XXXX-22

SHEET TITLE:
STANDARD ANCHORAGE FOUNDATION DETAILS

SHEET NUMBER:
S1.6A

PLEASE RECYCLE

IDENTIFICATION STAMP
DIV. OF THE STATE ARCHITECT
APP: 02-122976 INC:
REVIEWED FOR
SS ☑ FLS ☑ ACS ☑
DATE: 03/12/2025

TRACY UNIFIED SCHOOL DISTRICT

HMC Architects

3595001000

2101 CAPITOL AVENUE, SUITE 100
SACRAMENTO, CA 95816
916 368 7990 / www.hmcarchitects.com

ISSUE

Δ	DESCRIPTION	DATE
A	ADDENDUM "A"	3/20/25

KEYNOTES

GENERAL NOTES

FACILITY:
JACOBSON ELEMENTARY SCHOOL
1750 W KAVANAGH AVE
TRACY, CA 95376

PROJECT:
JACOBSON ES - TK CLASSROOM

SHEET NAME:
STANDARD ACHORAGE FOUNDATION DETAILS

DATE: **04/03/24** | CLIENT PROJ NO: **3595001000**

SHEET:
S1.6A
ADDENDUM "A"

THE LINE SHOWN ABOVE IS EXACTLY ONE INCH LONG AT THIS SHEETS ORIGINAL PAGE SIZE

IDENTIFICATION STAMP
DIV. OF THE STATE ARCHITECT
APP: 02-122976 INC:
REVIEWED FOR
SS ☑ FLS ☑ ACS ☑
DATE: 03/12/2025

TRACY UNIFIED SCHOOL DISTRICT
HMC Architects
3595001000
2101 CAPITOL AVENUE, SUITE 100
SACRAMENTO, CA 95816
916 368 7990 / www.hmcarchitects.com

ISSUE

Δ	DESCRIPTION	DATE
A	ADDENDUM "A"	3/20/25

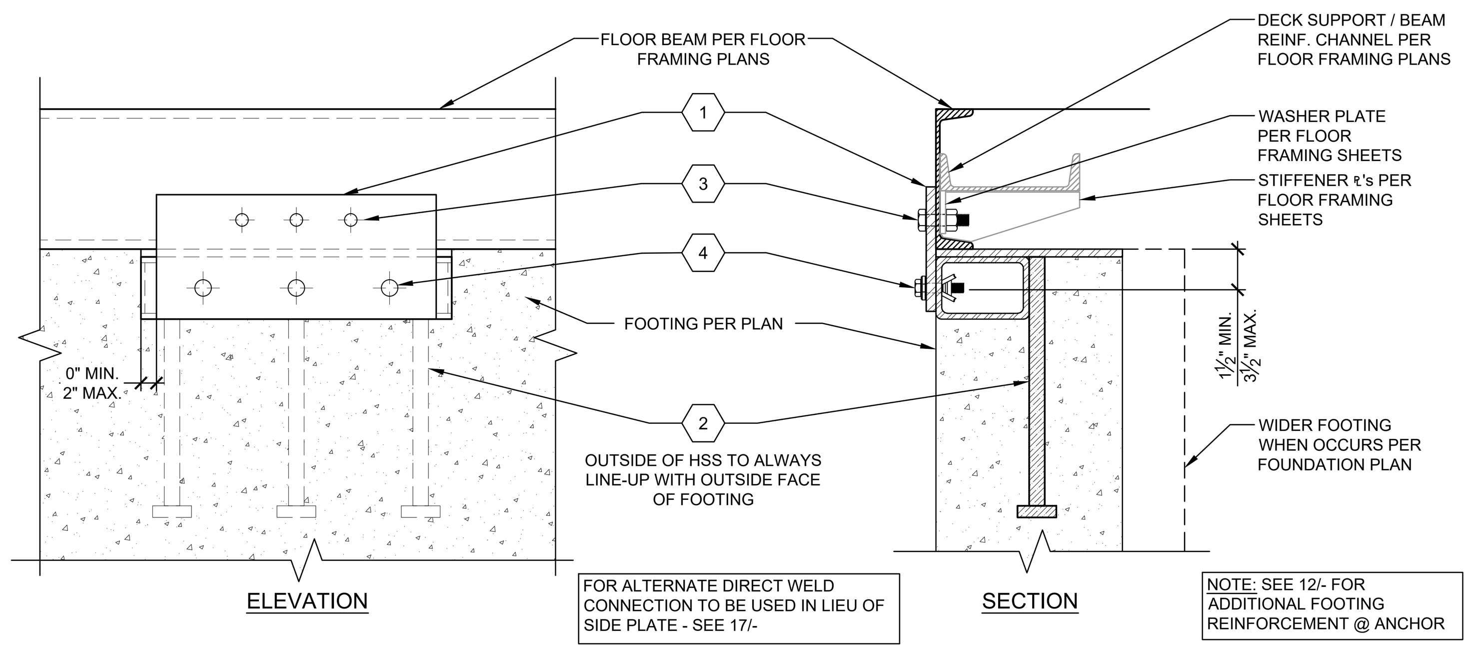

STANDARD ANCHORAGE DETAIL
SCALE: 1-1/2" = 1'-0" | 2

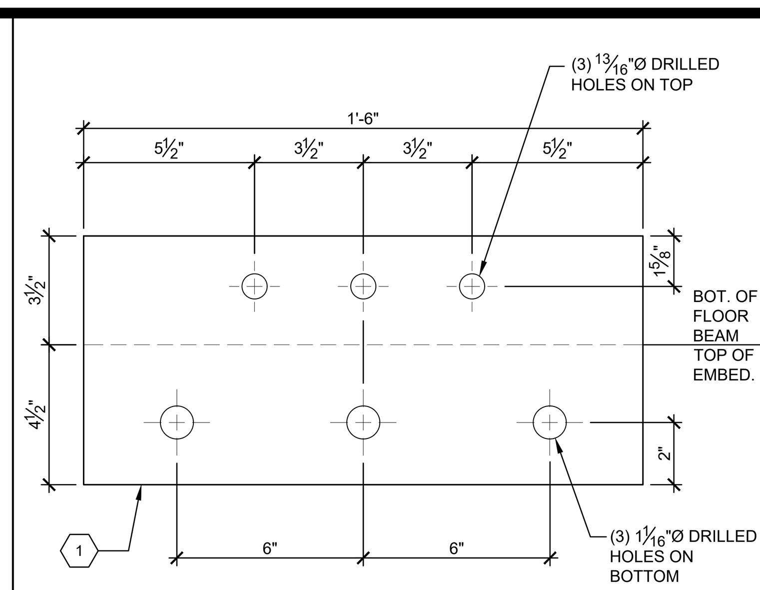

SIDE PLATE DETAIL
SCALE: 3" = 1'-0" | 3

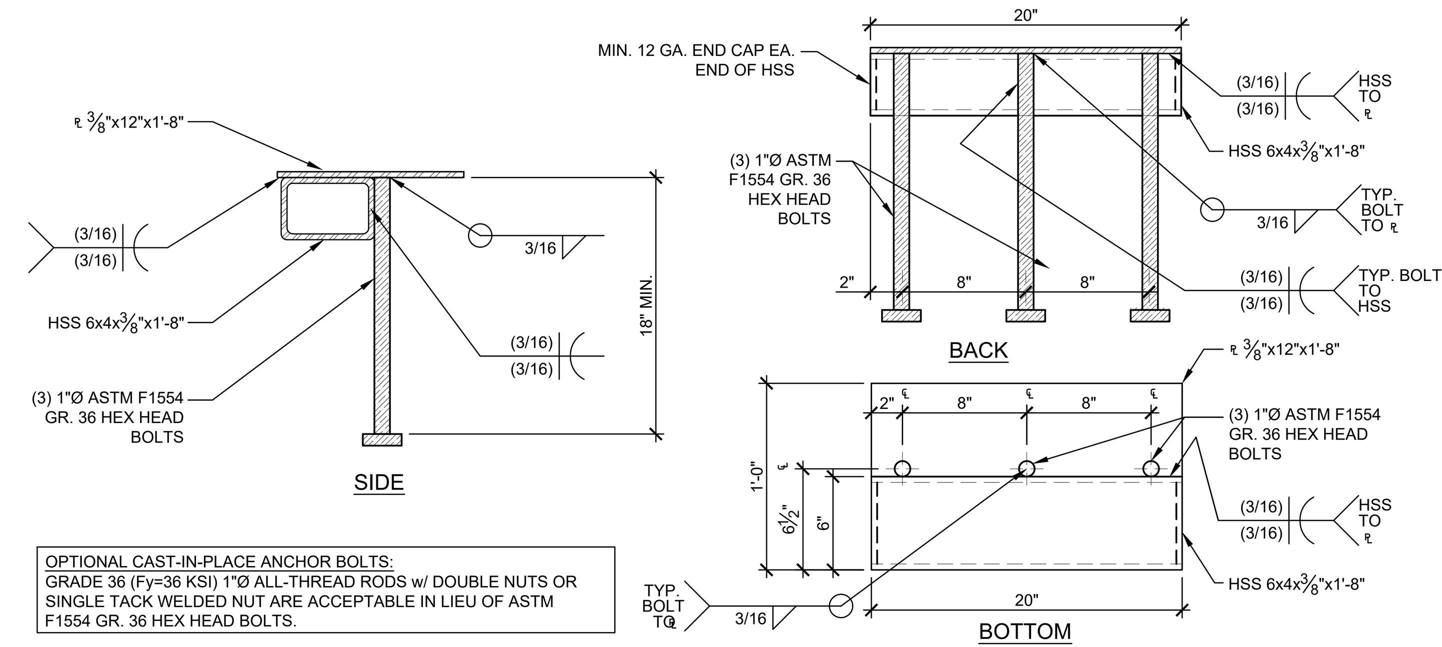

EMBEDDED ANCHOR DETAIL
SCALE: 1-1/2" = 1'-0" | 5

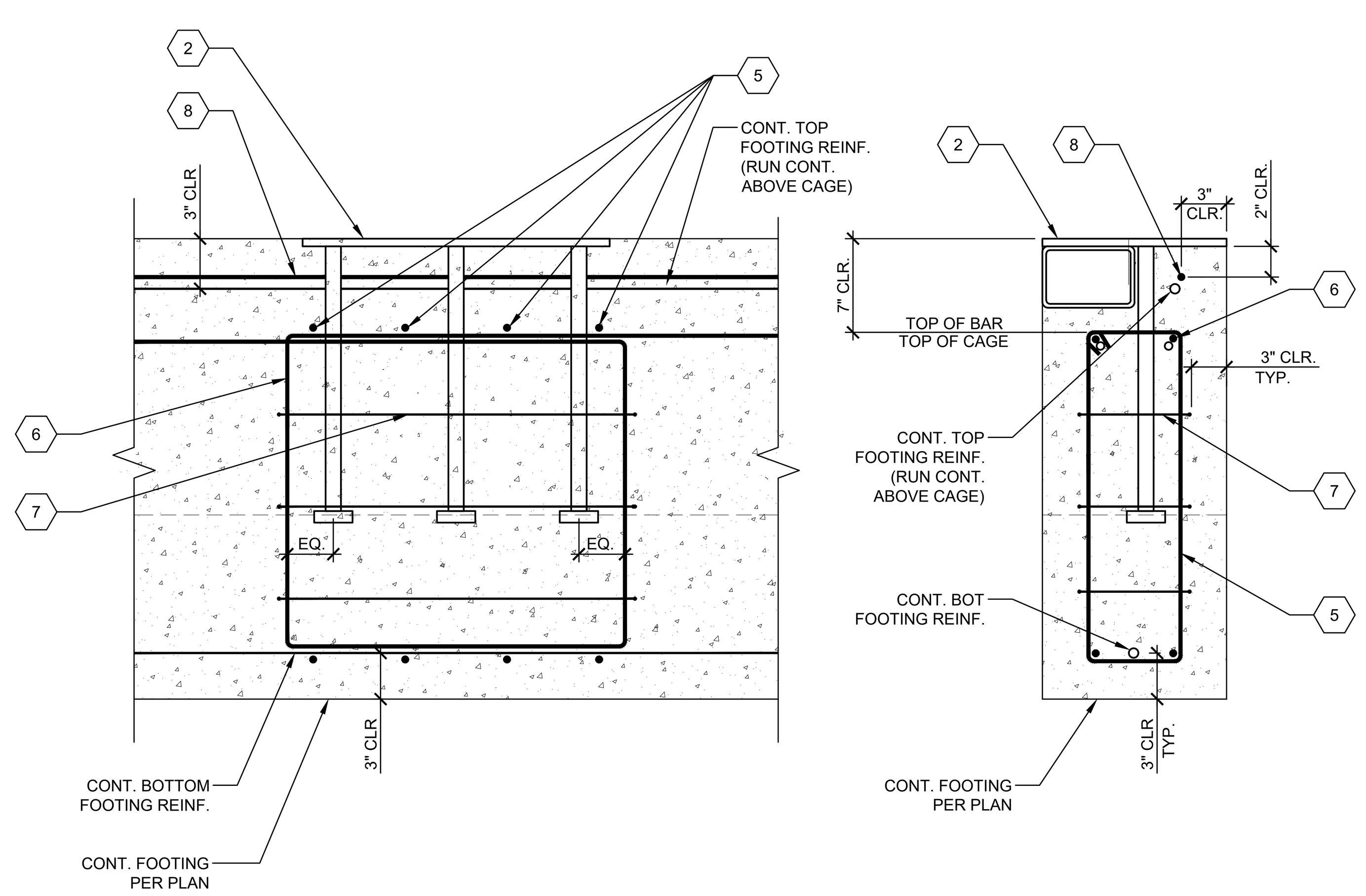

EMBEDDED ANCHOR REINFORCEMENT DETAIL
SCALE: 1-1/2" = 1'-0" | 12

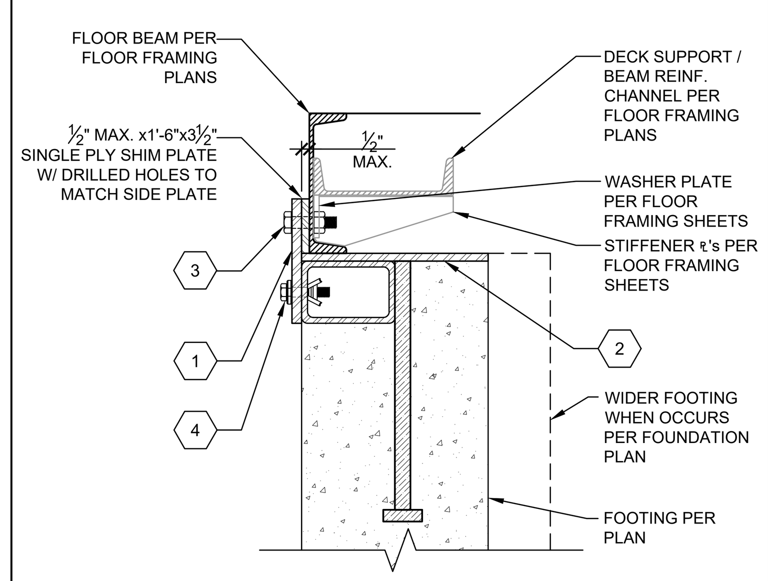

OPT. SHIM @ TOP
SCALE: 1-1/2" = 1'-0" | 8

NOT USED
9

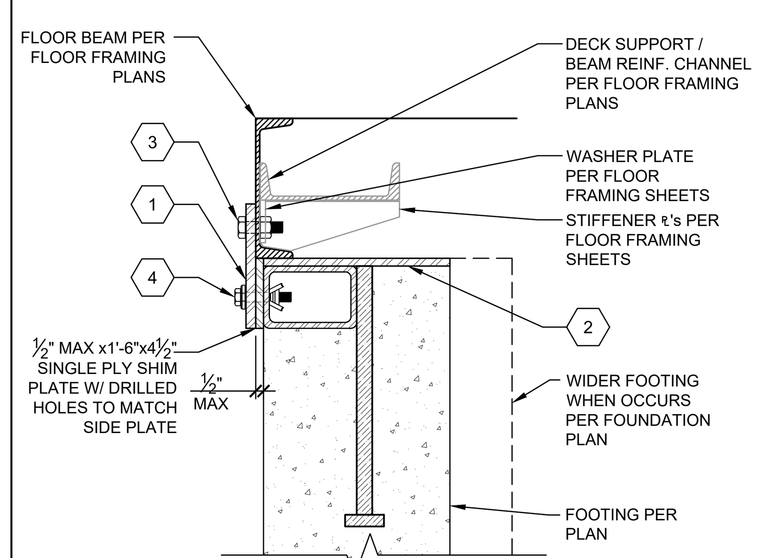

OPT. SHIM @ BOT
SCALE: 1-1/2" = 1'-0" | 13

NOT USED
14

1. ½"x8"x1'-6" (36 KSI) OR ⅜"x8"x1'-6" (50 KSI) SIDE PLATE. LOCATION PER PLAN - SEE 3/-
2. EMBEDDED ANCHOR. LOCATION PER PLAN - SEE 5/-
3. (3) ¾"Ø M.B. THRU-BOLTED THROUGH SIDE ℄ & FLOOR BEAM w/ 13/16"Ø HOLES - SEE 8/- FOR OPTIONAL SHIM DETAIL.
4. (3) ⅝"Ø LHBM16 "HOLLO-BOLT" EXPANSION BOLTS PER ICC ESR-3330 THROUGH SIDE ℄ INTO THE HSS OF THE EMBEDDED ANCHOR w/ 1 1/16"Ø HOLES
   - SEE GENERAL NOTES FOR SPECS. & INSTALLATION REQUIREMENTS,
   - SEE 13/- FOR OPTIONAL SHIM DETAIL.
5. (4) #3 VERTICAL HOOPS PER 12/-, FORMED PER 5/S1.4 & EVENLY SPACED @ ANCHORS.
6. (2) #4 BENT BARS CENTERED ON ANCHORS - (1) EA. SIDE OF ANCHORS.

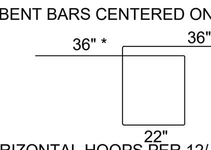

* BEND DOWN @ VENTS OR AROUND PERIMETER @ CORNER.

7. #3 HORIZONTAL HOOPS PER 12/-, FORMED PER 5/S1.4 & SPACED @ 6" O.C.
8. ADDITIONAL #5x8'-0" CENTERED @ ANCHOR. BEND DOWN @ VENTS OR AROUND PERIMETER @ CORNERS.

KEY NOTES

1. DETAILS ON THIS SHEET SHALL APPLY WHERE UPGRADED ANCHORAGE IS SPECIFIED ON THE FOUNDATION PLANS.
2. EACH ANCHORAGE POINT SPECIFIED ON PLAN SHALL CONSIST OF AN EMBEDDED ANCHOR AND EITHER A BOLTED SIDE PLATE OR ALTERNATE DIRECT WELD AS DETAILED ON DETAIL 2/-.
3. ANCHOR REINFORCEMENT PER DETAIL 12/- SHALL BE PLACED AT ALL EMBEDDED ANCHOR LOCATIONS.
4. EXPANSION BOLTS SHALL BE "HOLLO-BOLTS" BY LINDAPTER OR AN EQUIVALENT ICC ACCEPTED BOLT.
5. "HOLLO-BOLTS" ARE SPECIFIED AND TO BE INSTALLED PER ICC-ES REPORT ESR-3330 WITH AN INSTALLATION TIGHTENING TORQUE OF 140 FT.-LBS & ARE TO BE SUBJECT TO THE MANUFACTURER'S INSPECTION PROCEDURES FOUND ON SHEET D1 OF THESE DRAWINGS.
6. "HOLLO-BOLT" HEADS MAY BE HEXAGONAL OR COUNTERSUNK, AS SHOWN BELOW (NOT TO SCALE). FLUSH FIT "HOLLO-BOLT" OPTION NOT PERMITTED.

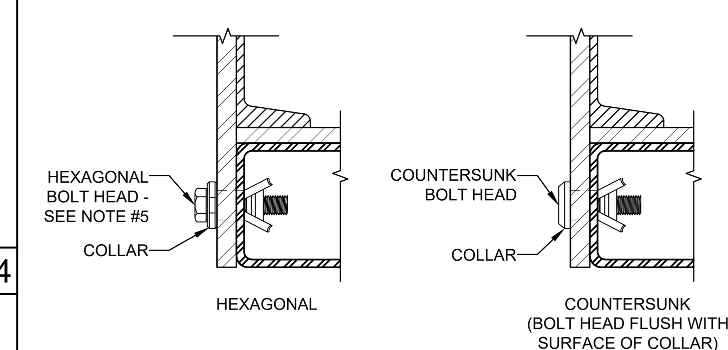

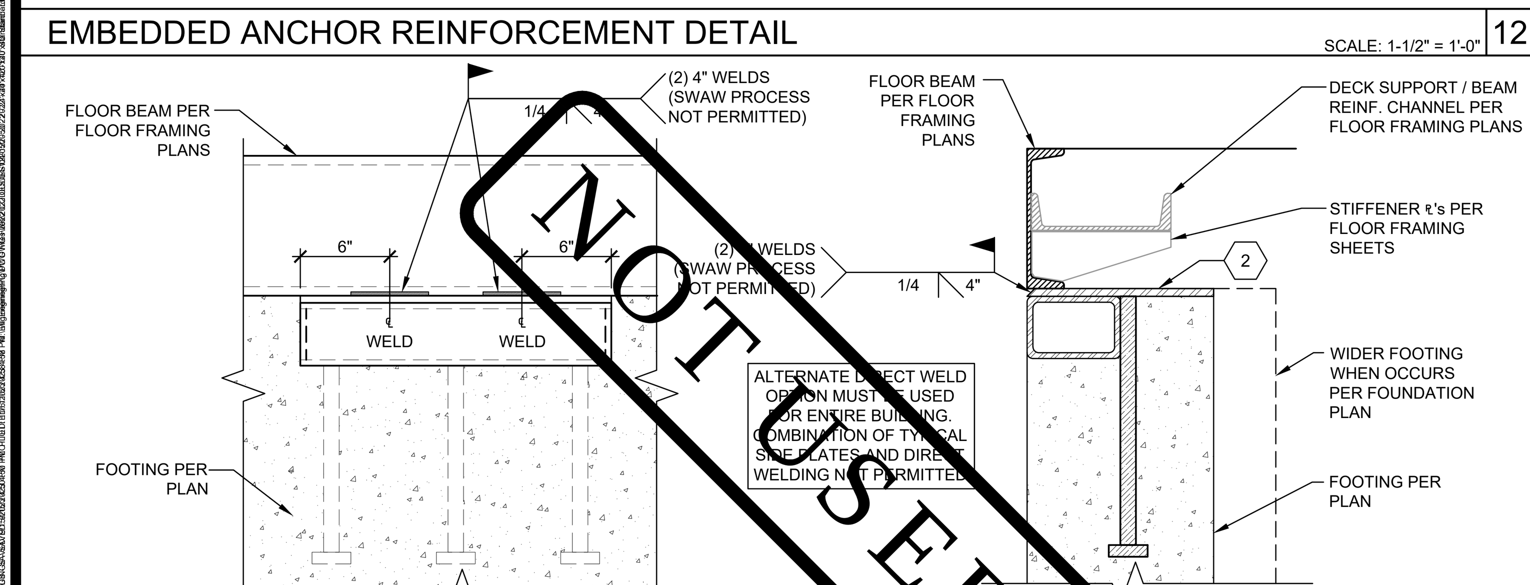

NOTES:
1. SEE 18/- FOR CONDITION WHERE FLOOR BEAM EXTENDS PAST FOOTING.
2. SEE 19/- FOR CONDITION WHERE FOOTING EXTENDS PAST FLOOR BEAM.
3. WHEN ALTERNATE DIRECT WELD OPTION IS USED, IT MUST BE USED FOR THE ENTIRE BUILDING. COMBINATION OF TYPICAL SIDE PLATES & DIRECT WELDING IS NOT PERMITTED.

ALTERNATE DIRECT WELD CONNECTION
SCALE: 1-1/2" = 1'-0" | 17

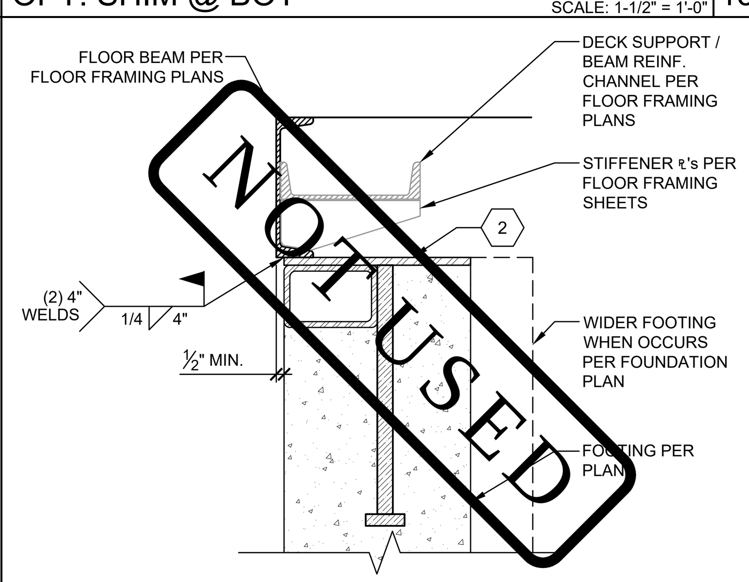

ALTERNATE DIRECT WELD @ OFFSET
SCALE: 1-1/2" = 1'-0" | 18

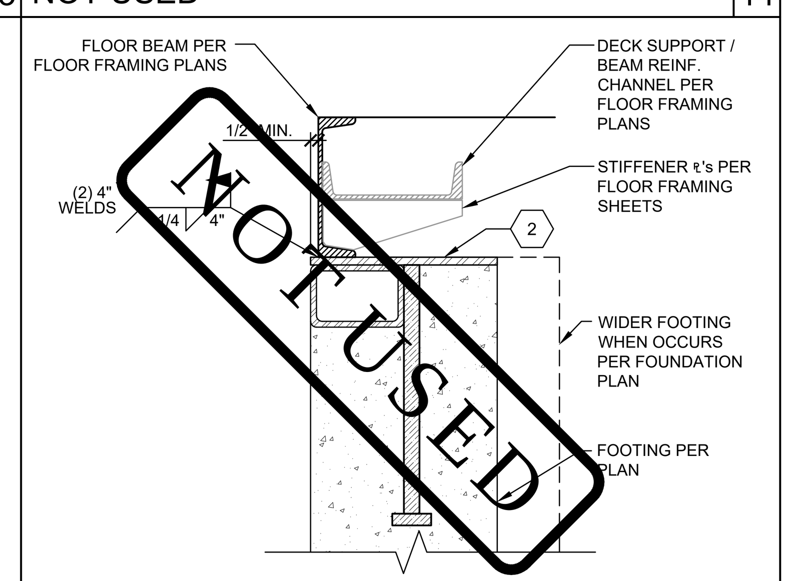

ALTERNATE DIRECT WELD @ OFFSET
SCALE: 1-1/2" = 1'-0" | 19

GENERAL NOTES

American Modular Systems
787 Spreckels Ave., Manteca, CA 95336
Phone (209) 825-1921 Fax (209) 825-7018
www.americanmodular.com

INTELLECTUAL-PROPERTY & PROPRIETARY RIGHTS STATEMENT
COPYRIGHT © AMERICAN MODULAR SYSTEMS (AMS)
AMS OWNS ALL COPYRIGHT AND OTHER INTELLECTUAL-PROPERTY AND PROPRIETARY RIGHTS IN THESE DRAWINGS, SPECIFICATIONS, AND THE MATERIAL CONTAINED HEREIN. CERTAIN ELEMENTS SHOWN IN THESE DOCUMENTS ARE REGISTERED TRADEMARKS OF AMS. ALL PATENTABLE MATERIALS CONTAINED IN THESE DOCUMENTS AND ORIGINATING WITH AMS WILL REMAIN THE SOLE PROPERTY OF AMS. THESE DRAWING, SPECIFICATIONS, AND THE MATERIAL CONTAINED HEREIN MAY NOT BE REPRODUCED, TRANSMITTED, COPIED, DISTRIBUTED, MODIFIED, OR OTHERWISE DISPOSED OF (DIRECTLY OR INDIRECTLY) AND MAY NOT BE USED (IN WHOLE OR IN PART) TO ASSIST IN THE CONSTRUCTION, DESIGN, OR OTHER MAKING OF, OR FOR THE PURPOSE OF FURNISHING ANY INFORMATION FOR THE CONSTRUCTION, DESIGN, OR OTHER MAKING OF, ANY BUILDINGS (MODULAR OR OTHERWISE), DRAWINGS, SPECIFICATIONS, PRINTS, APPARATUS, OR PARTS THEREOF, EXCEPT AS EXPRESSLY PERMITTED BY WRITTEN CONSENT OF, OR IN A WRITTEN AGREEMENT WITH, AMS. SUBMITTAL OR DISTRIBUTION TO MEET OFFICIAL REGULATORY REQUIREMENTS WILL NOT BE CONSTRUED AS PUBLICATION IN DEROGATION OF AMS'S COPYRIGHT OR OTHER INTELLECTUAL-PROPERTY OR PROPRIETARY RIGHTS.

PRE-CHECKED SET NAME
24' x 40' THRU 120' x 40'
STANDARD MODULAR BUILDING
(LOW SEISMIC)
FORM

SITE SPECIFIC PROJECT NAME

APPROVED
DIV. OF THE STATE ARCHITECT
APP: 04-122050 PC
REVIEWED FOR
SS ☑ FLS ☑ ACS ☑ CG ☑
DATE: 12/11/2023
2022 CBC PRE-CHECK (PC) DOCUMENT
A SEPARATE PROJECT APPLICATION FOR CONSTRUCTION IS REQUIRED.

MANUFACTURER PROFESSIONAL OF RECORD ON PC

UNLESS STAMPED & SIGNED BY THE DESIGN PROFESSIONAL OF RECORD.

REVISIONS
1
2
3
4

DRAWN BY:	AA
SCALE:	AS NOTED
DATE:	MM/DD/YY
PROJECT NO:	XXXX-22

SHEET TITLE:
UPGRADED ANCHORAGE FOUNDATION DETAILS

SHEET NUMBER:
S1.6B

KEYNOTES

GENERAL NOTES

FACILITY:
JACOBSON ELEMENTARY SCHOOL
1750 W KAVANAGH AVE
TRACY, CA 95376

PROJECT:
JACOBSON ES - TK CLASSROOM

SHEET NAME:
UPGRADED ANCHORAGE FOUNDATION DETAILS

DATE: **04/03/24** | CLIENT PROJ NO: **3595001000**

SHEET:
S1.6B
ADDENDUM "A"

PLEASE RECYCLE

Autodesk Docs://3595005000 TUSD TK CLASSROOMS 2025 R22/3595005000-A-TUSD-BOHN-SITE.rvt
12/3/2024 9:55:49 AM

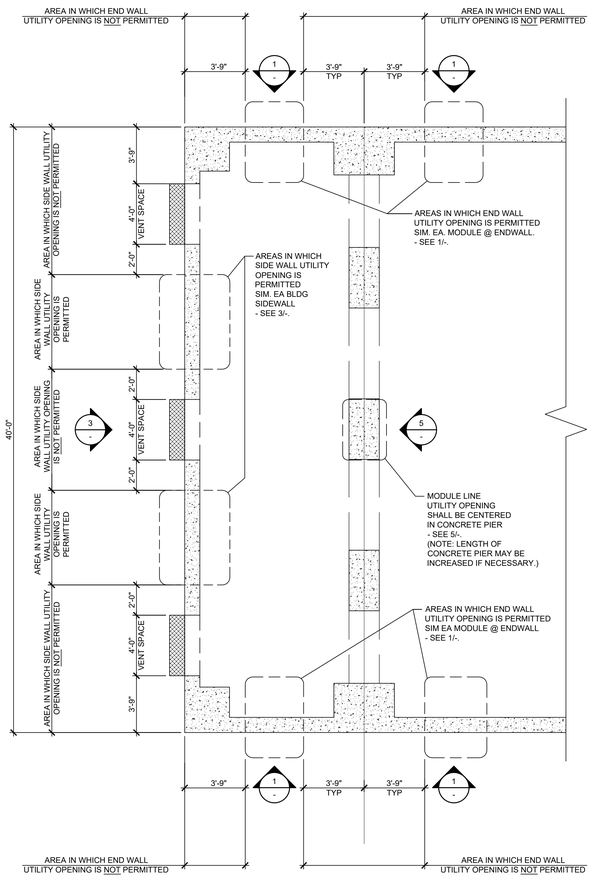

☐ OPTIONAL UTILITY OPENINGS PLAN — SCALE: 1/4"=1'-0" — A

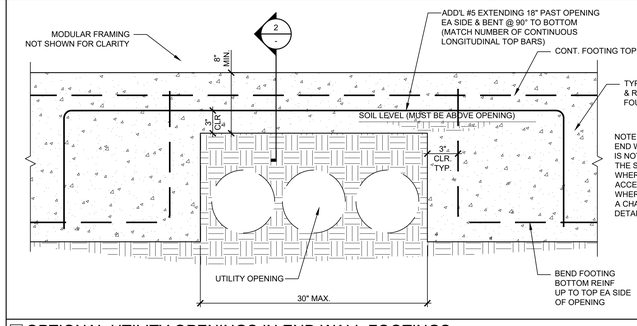

☐ OPTIONAL UTILITY OPENINGS IN END WALL FOOTINGS — N.T.S. — 1

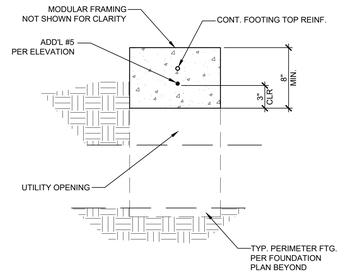

DETAIL — N.T.S. — 2

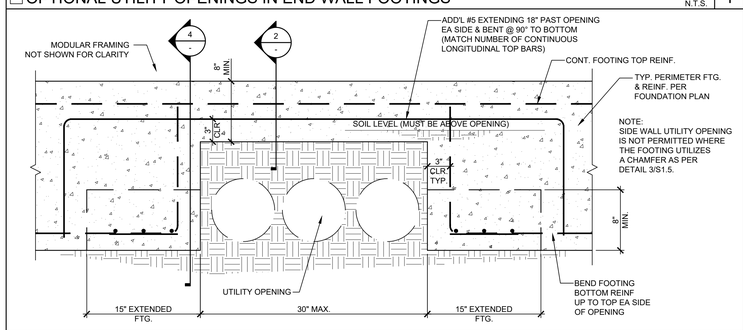

☐ OPTIONAL UTILITY OPENINGS IN SIDE WALL FOOTINGS — N.T.S. — 3

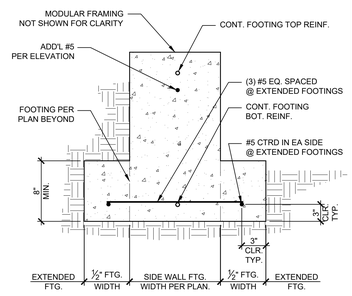

DETAIL — N.T.S. — 4

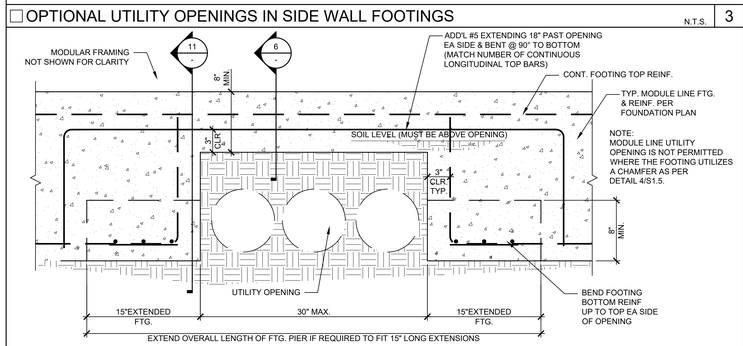

☐ OPTIONAL UTILITY OPENINGS IN MODULE LINE FOOTINGS — N.T.S. — 5

DETAIL — N.T.S. — 6

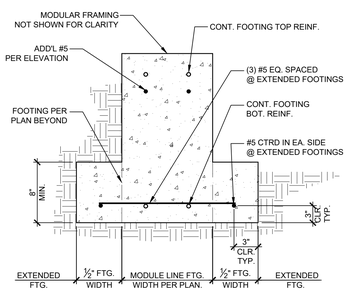

DETAIL — N.T.S. — 11

NOT USED — 7

NOT USED — 8

NOT USED — 9

NOT USED — 10

PLEASE RECYCLE

IDENTIFICATION STAMP
DIV. OF THE STATE ARCHITECT
APP: 02-122976 INC:
REVIEWED FOR
SS ☑ FLS ☑ ACS ☑
DATE: 03/12/2025

TRACY UNIFIED SCHOOL DISTRICT

HMC Architects
3595001000
2101 CAPITOL AVENUE, SUITE 100
SACRAMENTO, CA 95816
916 368 7990 / www.hmcarchitects.com

ISSUE

Δ	DESCRIPTION	DATE
1	ADDENDUM "A"	3/20/25

AMS®
American Modular Systems
787 Spreckels Ave., Manteca, CA 95336
Phone (209) 825-1921 Fax (209) 825-7018
www.americanmodular.com

INTELLECTUAL-PROPERTY & PROPRIETARY RIGHTS STATEMENT
COPYRIGHT © AMERICAN MODULAR SYSTEMS (AMS)
AMS OWNS ALL COPYRIGHT AND OTHER INTELLECTUAL-PROPERTY AND PROPRIETARY RIGHTS IN THESE DRAWINGS, SPECIFICATIONS, AND THE MATERIAL CONTAINED HEREIN (CIRCULAR ELEMENTS) KNOWN IN THESE DOCUMENTS AS THE COPYRIGHTED TRADE DRAWINGS OF AMS. ALL CIRCULAR ELEMENTS CONTAINED IN THESE DOCUMENTS ARE REGISTERED. NO OWNERSHIP IN AMS WILL REMAIN THE SOLE PROPERTY OF AMS. THESE DRAWINGS, SPECIFICATIONS, AND THE MATERIAL CONTAINED HEREIN MAY NOT BE REPRODUCED, TRANSMITTED, COPIED, DISTRIBUTED, MODIFIED, OR OTHERWISE DISPOSED OF (DIRECTLY OR INDIRECTLY) AND MAY NOT BE USED (IN WHOLE OR IN PART) TO ASSIST IN THE CONSTRUCTION, DESIGN, OR OTHER MAKING OF, OR FOR THE PURPOSE OF FURNISHING ANY INFORMATION FOR THE CONSTRUCTION, DESIGN, OR OTHER MAKING OF, ANY BUILDINGS (MODULAR OR OTHERWISE), DRAWINGS, SPECIFICATIONS, PRINTS, APPARATUS, OR PARTS THEREOF, EXCEPT AS EXPRESSLY PERMITTED BY WRITTEN CONSENT OF, OR IN A WRITTEN AGREEMENT WITH, AMS. SUBMITTAL OR DISTRIBUTION TO MEET OFFICIAL REGULATORY REQUIREMENTS WILL NOT BE CONSTRUED AS PUBLICATION IN DEROGATION OF AMS'S COPYRIGHT OR OTHER INTELLECTUAL-PROPERTY OR PROPRIETARY RIGHTS.

PRE-CHECKED SET NAME
24' x 40' THRU 120' x 40'
STANDARD MODULAR BUILDING
(LOW SEISMIC)
FORM®

SITE SPECIFIC PROJECT NAME

APPROVED
DIV. OF THE STATE ARCHITECT
APP: 04-122050 PC
REVIEWED FOR
SS ☑ FLS ☑ ACS ☑ CG ☑
DATE: 12/11/2023

☐ 2022 CBC PRE-CHECK (PC) DOCUMENT
A SEPARATE PROJECT APPLICATION FOR CONSTRUCTION IS REQUIRED.

MANUFACTURER PROFESSIONAL OF RECORD ON PC

LICENSED ARCHITECT — MICHAEL PATRICK MURPHY — No. C12631 — Exp. 3-31-25 — STATE OF CALIFORNIA

REGISTERED PROFESSIONAL ENGINEER — MARIA D. SAVAGE — No. S3380 — STRUCTURAL — STATE OF CALIFORNIA — RST#22214

11/21/2023

THESE DRAWINGS ARE PRELIMINARY AND NOT FOR CONSTRUCTION UNLESS STAMPED & SIGNED BY THE DESIGN PROFESSIONAL OF RECORD.

REVISIONS

DRAWN BY:	AA
SCALE:	AS NOTED
DATE:	MM/DD/YY
PROJECT NO:	XXXX-22

SHEET TITLE:
CONCRETE FOUNDATION OPTIONAL UTILITY OPENINGS IN FOOTINGS

SHEET NUMBER:
S1.7

KEYNOTES

GENERAL NOTES

FACILITY:
JACOBSON ELEMENTARY SCHOOL
1750 W KAVANAGH AVE
TRACY, CA 95376

PROJECT:
JACOBSON ES - TK CLASSROOM

SHEET NAME:
CONCRETE FOUNDATION OPTIONAL UTILITY OPENINGS IN FOOTINGS

DATE: **04/03/24** | CLIENT PROJ NO: **3595001000**

SHEET:
S1.7
ADDENDUM "A"

THE LINE SHOWN ABOVE IS 1" LONG ON ORIGINAL 22X34 SHEETS OR 0.5" ON ORIGINAL 11X17 SHEETS
Autodesk Docs://3595005000 TUSD TK CLASSROOMS 2025 R22/3595005000-A-TUSD-BOHN-SITE.rvt
12/3/2024 8:05:49 AM

THE LINE SHOWN ABOVE IS EXACTLY ONE INCH LONG AT THIS SHEETS ORIGINAL PAGE SIZE

IDENTIFICATION STAMP
DIV. OF THE STATE ARCHITECT
APP: 02-122976 INC:
REVIEWED FOR
SS ☑ FLS ☑ ACS ☑
DATE: 03/12/2025

TRACY UNIFIED SCHOOL DISTRICT

HMC Architects
3595001000
2101 CAPITOL AVENUE, SUITE 100
SACRAMENTO, CA 95816
916 368 7990 / www.hmcarchitects.com

ISSUE

Δ	DESCRIPTION	DATE
A	ADDENDUM "A"	3/20/25

FRAMING PLAN (PLYWOOD FLOOR) — A

SCALE : 1/4" = 1'-0"

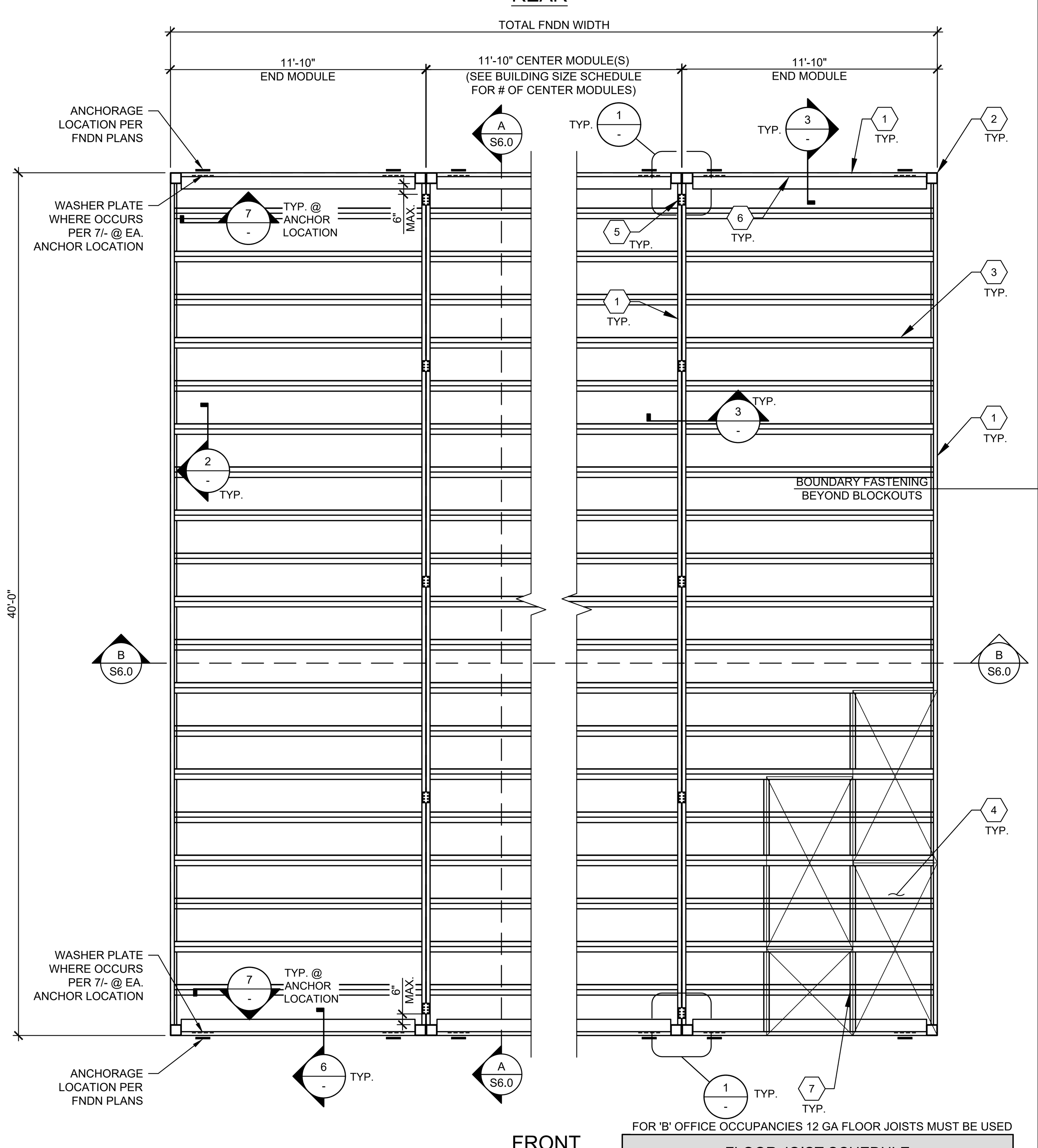

FOR 'B' OFFICE OCCUPANCIES 12 GA FLOOR JOISTS MUST BE USED

FLOOR JOIST SCHEDULE		
LIVE LOAD PSF	14 GA. JOIST	12 GA. JOIST
☐ 50 PSF	24" O.C.	24" O.C.
☒ 50+15 PSF	24" O.C.	24" O.C.
☐ 100 PSF	24" O.C.	24" O.C.
☐ 150 PSF	18" O.C.	24" O.C.

NOTES:
FOR SECTION PROPERTIES - SEE S0.0
EITHER 14GA OR 12GA ARE ACCEPTABLE BASED ON CURRENT AVAILABILITIES.

TYP. FLOOR BEAMS CONNECTION — 1

SCALE : 3" = 1'-0"

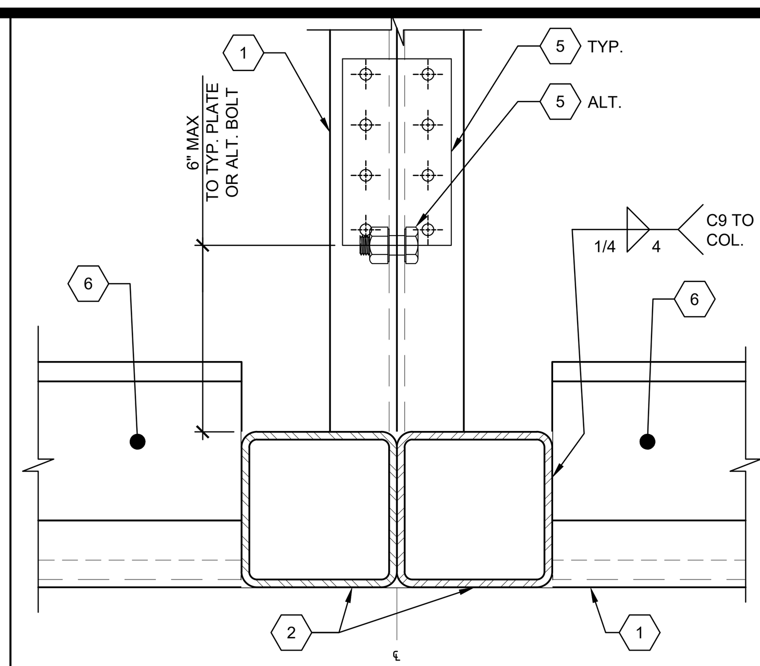

TYP. JOIST ATTACTMENT TO BEAM — 2

SCALE : 3" = 1'-0"

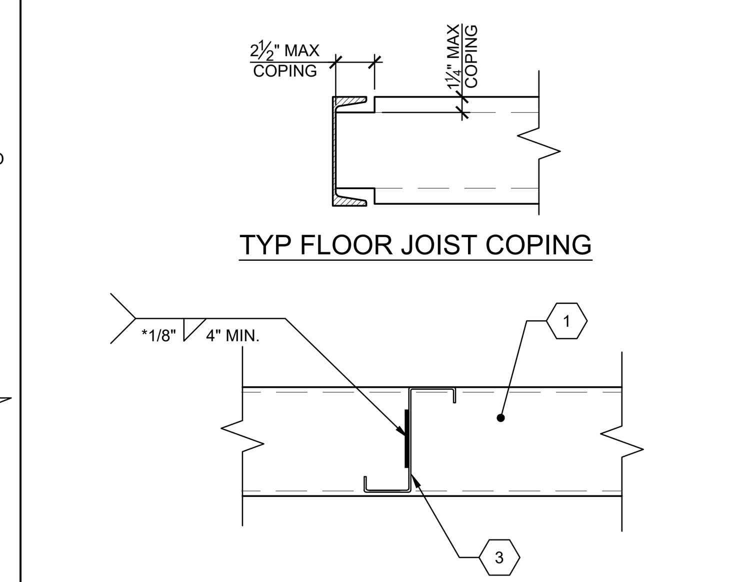

*NOTE: SEE NOTE #5 OF GENERAL NOTES

1. FLOOR BEAM PER SHEET S5.0. USE SINGLE SIZE CHANNEL THROUGHOUT FLOOR SYSTEM.
2. HSS COLUMN PER SHEET S5.0
3. FLOOR JOIST - SEE SCHEDULE
4. 1⅛" T&G PLYWOOD FLOOR SHTG STURDI-I-FLOOR 48" O.C. SPAN RATING EXP. 1 CONFORMING TO PS 1-19, 2 SPANS MIN. (EXCEPT CENTER PANEL @ MODULE END BAYS WHEN JOIST SPACING IS MORE THAN 24" O.C.) OPTION: UNI-FLOOR BY PITTSBURGH TESTING LAB CONFORMING TO PS 1-19. STAGGER SHEETS 48" O.C. AS SHOWN w/ FACE GRAIN PERPENDICULAR TO FLOOR JOISTS. FASTEN PER SCHEDULES.
5. PLATE ⅛"x3½"x6" @ 10'-0" O.C. MAX w/ (8) #12x1" SDSTS TO FLOOR BEAMS; SEE DETAIL 3/-.
ALTERNATE: ½"Øx1½" MB @ 10'-0" O.C. MAX AND 6" MAX FROM EACH END OF MODULE. BOLT Ø ±1/16" MAX HOLE THRU CHANNELS; SEE DETAIL 3/-.
6. C9x13.4 TRANSVERSE FLOOR BEAM REINFORCING CHANNEL PER DETAIL 6/-. C9 MAY HAVE 3"Ø MAX HOLES THRU WEB WITHOUT WEB REINFORCEMENT PER THE FOLLOWING:
   1. HOLES MUST BE CENTERED ON WEB.
   2. MULTIPLE HOLES MUST BE SPACED A MIN. OF 24" APART.
   3. HOLES MUST BE 24" MIN. FROM INSIDE FACE OF COLUMNS.

NOTE: C9 CHANNEL AND REINFORCING ONLY REQUIRED AT BUILDINGS ON CONCRETE FOUNDATIONS.

KEY NOTES

1. NOT USED
2. THE MATERIAL THICKNESS OF LIGHT GAUGE STRUCTURAL MEMBERS, IN THEIR END-USE, SHALL MEET OR EXCEED THE MINIMUM BASE METAL THICKNESS SPECIFIED ON SHEET S0.O. THE MATERIAL GAUGE DESIGNATION IN THE PLAN SHALL BE USED AS REFERENCE ONLY.
3. SDSTS PER ASTM C1513 AND ICC ESR-1976 (OR EQUAL)
4. ET&F PINS PER IAPMO REPORT ER-335
5. MAX FILLET WELD SIZE SHALL BE EQUAL TO THE THICKNESS OF THE THINNER SHEET STEEL (AWS D1.3, SECTION 2.3.3)

GENERAL NOTES

TYP. BEAM TO BEAM CONNECTION — 3

SCALE : 3" = 1'-0"

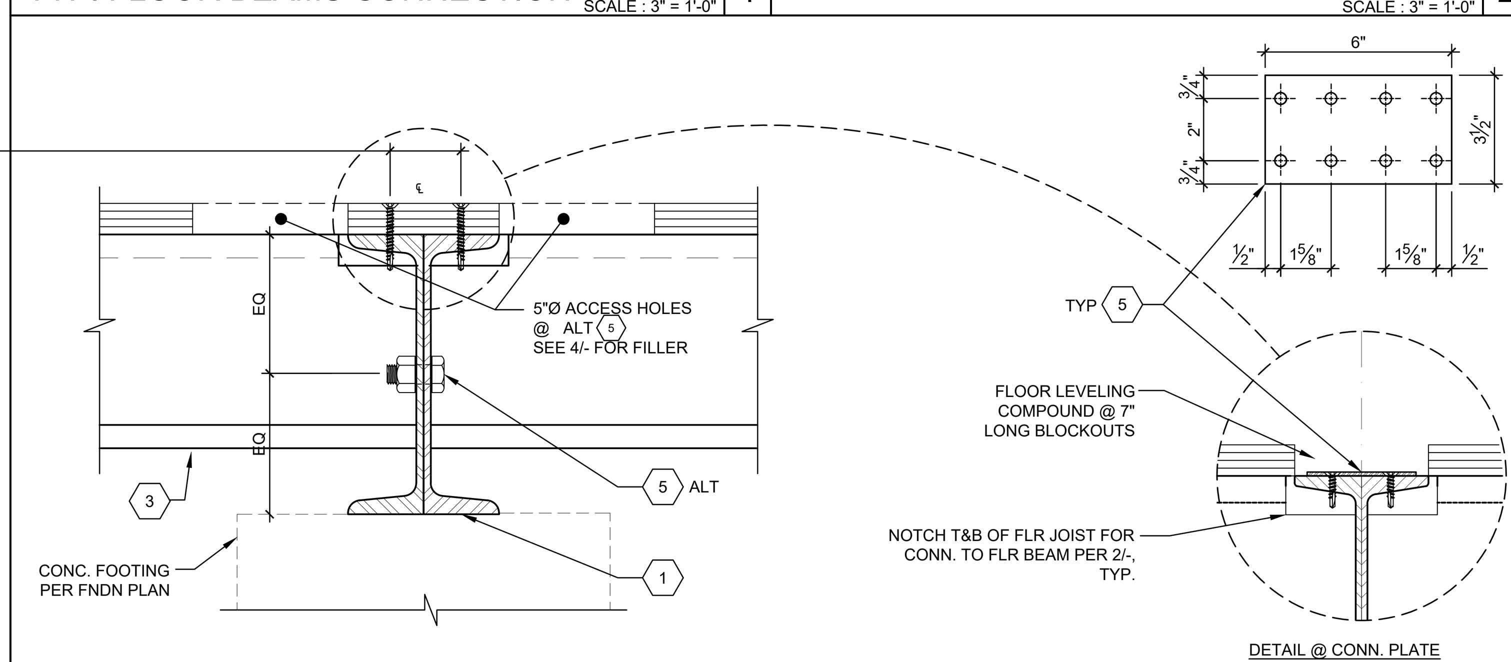

TYP. ACCESS HOLE FILLER — 4

SCALE : 3" = 1'-0"

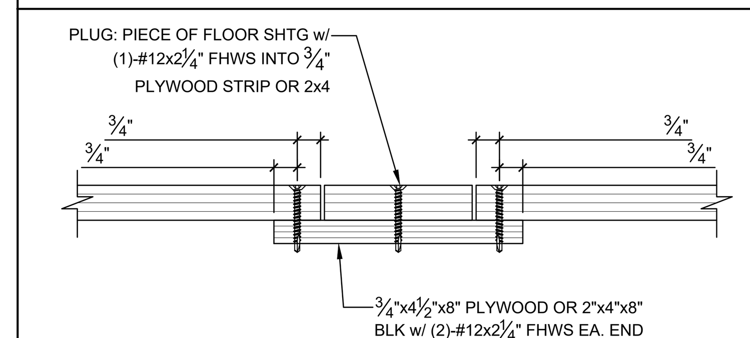

OPTIONAL BLOCKING ANGLE ATTACHMENT — 5

SCALE : 3" = 1'-0"

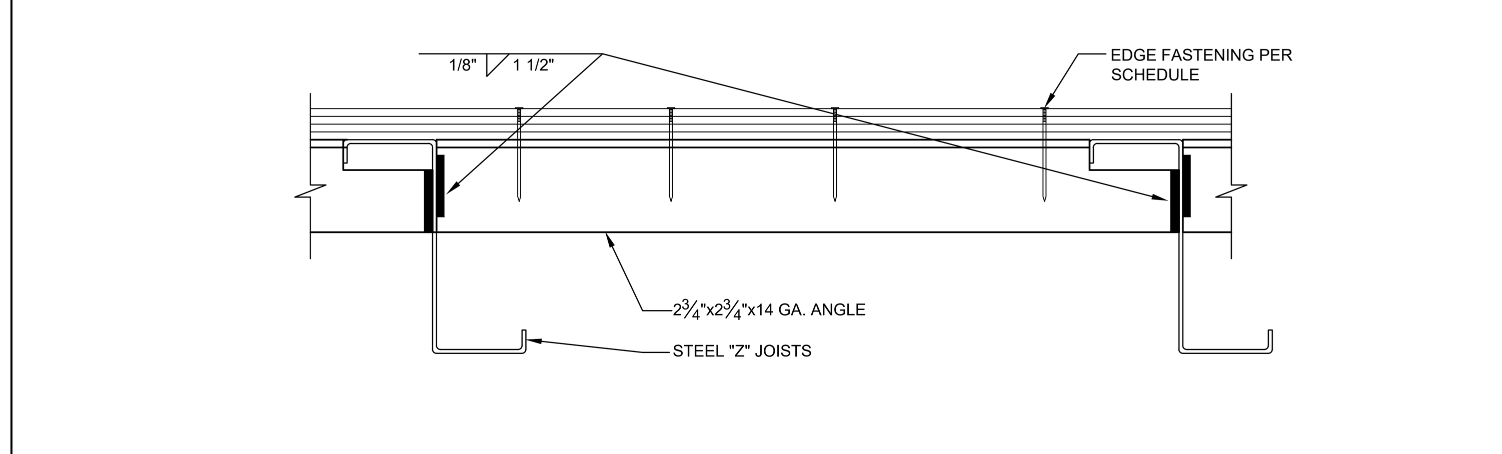

TYP. TRANSVERSE FLOOR BEAM REINFORCING — 6

(NOT REQ'D @ LONGITUDINAL FLOOR BEAMS) SCALE : 3" = 1'-0"

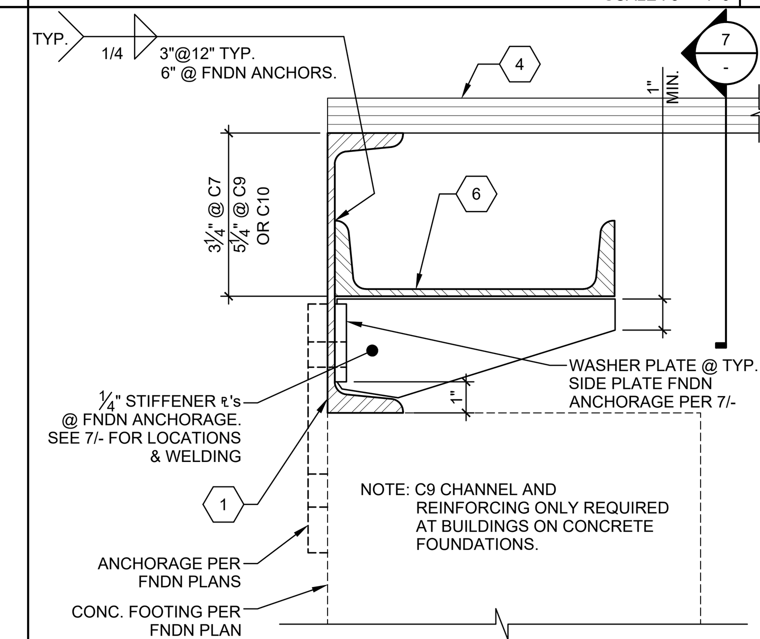

BUILDING SIZE SCHEDULE			
BUILDING SIZE (FT)	TOTAL # OF 12'-0" WIDE MODULES	TOTAL # OF CENTER MODULES	OVERALL BUILDING WIDTH[1]
☐ 24'x40'	2	0	23'-8½"
☒ 36'x40'	3	1	35'-6¾"
☐ 48'x40'	4	2	47'-5"
☐ 60'x40'	5	3	59'-3¼"
☐ 72'x40'	6	4	71'-1½"
☐ 84'x40'	7	5	82'-11¾"
☐ 96'x40'	8	6	94'-10"
☐ 108'x40'	9	7	106'-8¼"
☐ 120'x40'	10	8	118'-6½"

NOTE:

1. TOTAL BUILDING WIDTH INCLUDES ¼" PER MODULE CONSTRUCTION TOLERANCE PER FOUNDATION SHEETS S1.0, S1.1, S1.2, & S1.3.

BUILDING SIZE SCHEDULE

TYP. FASTENER SPACING SCHEDULE		
BOUNDARY FASTENING*	EDGE FASTENING	FIELD FASTENING
#12x2 ¼" SDSTS	0.144"Øx2" ET&F PINS	0.144"Øx2" ET&F PINS
6" O.C.	6" O.C.	12" O.C.

*BOUNDARY FASTENING IS APPLIED TO PERIMETER OF ALL MODULES ALONG FRAME LINES

NOTES:
SCHEDULE APPLIES TO ALL FLOOR LIVE LOADS.
REFER TO GENERAL NOTE #3 FOR ICC ESR#

FASTENER SPACING SCHEDULE

ALT. FASTENER SPACING SCHEDULE		
BOUNDARY FASTENING*	EDGE FASTENING	FIELD FASTENING
#12x2 ¼" SDSTS	#10 OR 12x2 ¼" SDSTS	#10 OR 12x2 ¼" SDSTS
6" O.C.	6" O.C.	12" O.C.

*BOUNDARY FASTENING IS APPLIED TO PERIMETER OF ALL MODULES ALONG FRAME LINES

NOTES:
SCHEDULE APPLIES TO ALL FLOOR LIVE LOADS.
REFER TO GENERAL NOTE #3 FOR ICC ESR#

ALT. FASTENER SPACING SCHEDULE

TYP. REINFORCED FLOOR FRAMING @ FOUNDATION ANCHORAGE — 7

SCALE : 3" = 1'-0"

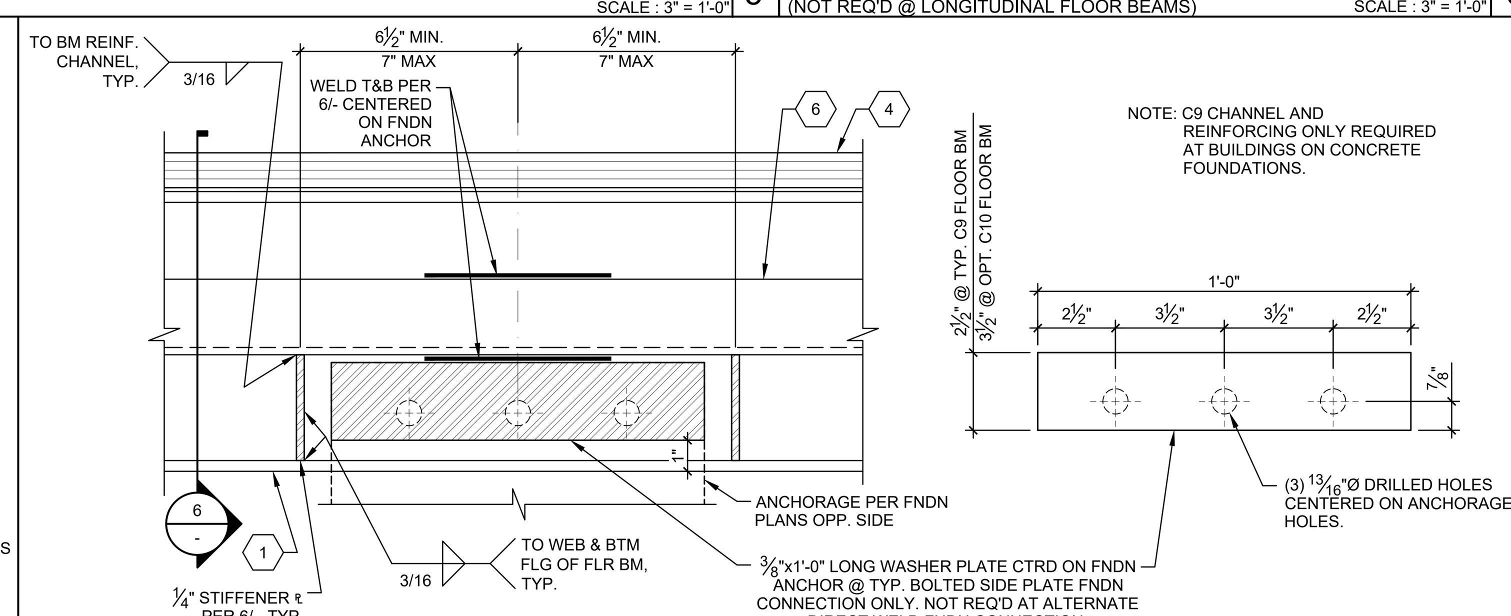

American Modular Systems
787 Spreckels Ave., Manteca, CA 95336
Phone (209) 825-1921 Fax (209) 825-7018
www.americanmodular.com

INTELLECTUAL-PROPERTY & PROPRIETARY RIGHTS STATEMENT
COPYRIGHT © AMERICAN MODULAR SYSTEMS (AMS)
AMS OWNS ALL COPYRIGHT AND OTHER INTELLECTUAL-PROPERTY AND PROPRIETARY RIGHTS IN THESE DRAWINGS, SPECIFICATIONS, AND THE MATERIAL CONTAINED HEREIN. CERTAIN ELEMENTS SHOWN IN THESE DOCUMENTS ARE REGISTERED TRADEMARKS OF AMS. ALL PATENTABLE MATERIALS CONTAINED IN THESE DOCUMENTS AND ORIGINATING WITH AMS WILL REMAIN THE SOLE PROPERTY OF AMS. THESE DRAWING, SPECIFICATIONS, AND THE MATERIAL CONTAINED HEREIN MAY NOT BE REPRODUCED, TRANSMITTED, COPIED, DISTRIBUTED, MODIFIED, OR OTHERWISE DISPOSED OF (DIRECTLY OR INDIRECTLY) AND MAY NOT BE USED (IN WHOLE OR IN PART) TO ASSIST IN THE CONSTRUCTION, DESIGN, OR OTHER MAKING OF, OR FOR THE PURPOSE OF FURNISHING ANY INFORMATION FOR THE CONSTRUCTION, DESIGN, OR OTHER MAKING OF, ANY BUILDINGS (MODULAR OR OTHERWISE), DRAWINGS, SPECIFICATIONS, PRINTS, APPARATUS, OR PARTS THEREOF, EXCEPT AS EXPRESSLY PERMITTED BY WRITTEN CONSENT OF, OR IN A WRITTEN AGREEMENT WITH, AMS. SUBMITTAL OR DISTRIBUTION TO MEET OFFICIAL REGULATORY REQUIREMENTS WILL NOT BE CONSTRUED AS PUBLICATION IN DEROGATION OF AMS'S COPYRIGHT OR OTHER INTELLECTUAL-PROPERTY OR PROPRIETARY RIGHTS.

PRE-CHECKED SET NAME
24' x 40' THRU 120' x 40'
STANDARD MODULAR BUILDING
(LOW SEISMIC)
FORM®

SITE SPECIFIC PROJECT NAME
.
.
.

APPROVED
DIV. OF THE STATE ARCHITECT
APP: 04-122050 PC
REVIEWED FOR
SS ☑ FLS ☑ ACS ☑ CG ☑
DATE: 12/11/2023

☐ 2022 CBC PRE-CHECK (PC) DOCUMENT
A SEPARATE PROJECT APPLICATION FOR CONSTRUCTION IS REQUIRED.

MANUFACTURER PROFESSIONAL OF RECORD ON PC

LICENSED ARCHITECT RANDALL PATRICK CAVANAGH No. C12631 Ren. 3-31-25 STATE OF CALIFORNIA

REGISTERED PROFESSIONAL ENGINEER MANNY D. FRISCH No. S3380 STRUCTURAL STATE OF CALIFORNIA
RST#22214
11/21/2023

THESE DRAWINGS ARE PRELIMINARY AND NOT FOR CONSTRUCTION UNLESS STAMPED & SIGNED BY THE DESIGN PROFESSIONAL OF RECORD.

REVISIONS
1
2
3
4

DRAWN BY:	AA
SCALE:	AS NOTED
DATE:	MM/DD/YY
PROJECT NO:	XXXX-22

SHEET TITLE:
FLOOR FRAMING PLAN & DETAILS FOR PLYWOOD FLOOR

SHEET NUMBER:
S3.0

KEYNOTES

GENERAL NOTES

FACILITY:
JACOBSON ELEMENTARY SCHOOL
1750 W KAVANAGH AVE
TRACY, CA 95376

PROJECT:
JACOBSON ES - TK CLASSROOM

SHEET NAME:
FLOOR FRAMING PLAN & DETAILS FOR PLYWOOD FLOOR

DATE: **04/03/24** CLIENT PROJ NO: **3595001000**

SHEET:
S3.0
ADDENDUM "A"

PLEASE RECYCLE

Autodesk Docs://3595005000 TUSD TK CLASSROOMS 2025 R22/3595005000-A-TUSD-BOHN-SITE.rvt
12/3/2024 8:55:49 AM

THE LINE SHOWN ABOVE IS
ONE INCH LONG ON ORIGINAL
SHEET (PER ORIGINAL SCALE)

IDENTIFICATION STAMP
DIV. OF THE STATE ARCHITECT
APP: 02-122976 INC:
REVIEWED FOR
SS ☑ FLS ☑ ACS ☑
DATE: 03/12/2025

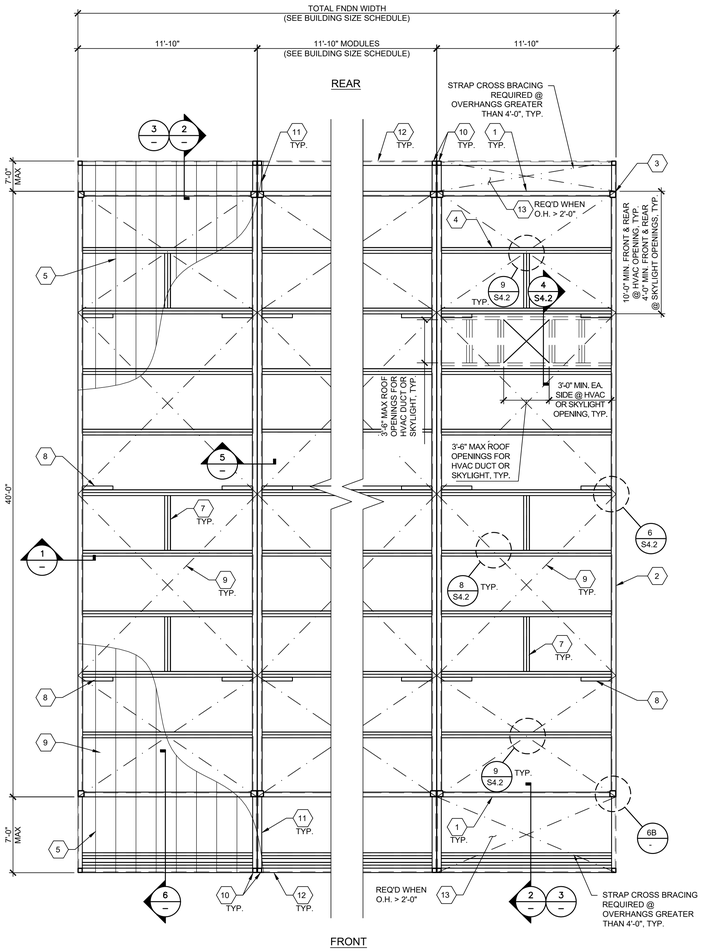

TYPICAL ROOF FRAMING LAYOUT (ENCLOSED SOFFIT)

SCALE: 1/4"=1'-0" A

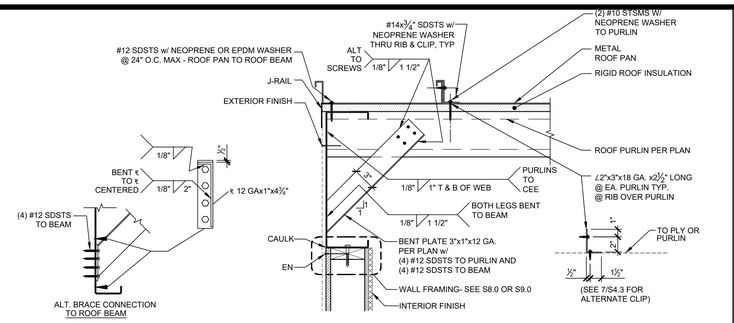

SIDE WALL TO ROOM BEAM DETAIL

SCALE: 1 1/2"=1'-0" 1

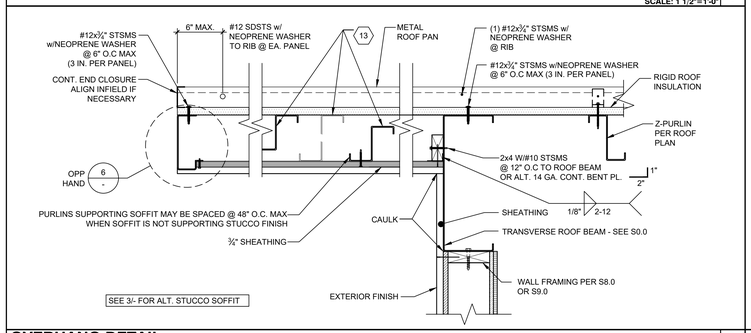

OVERHANG DETAIL

SCALE: 1 1/2"=1'-0" 2

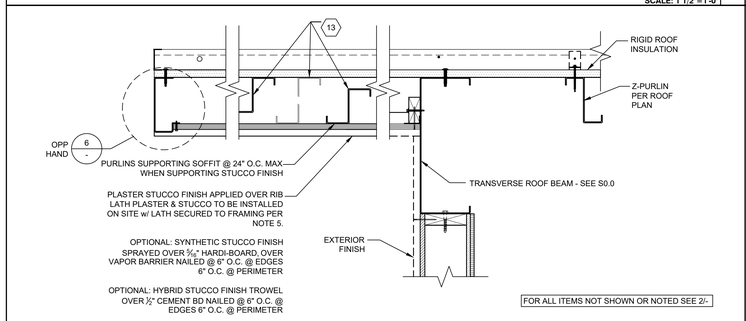

ALTERNATE OVERHANG DETAIL w/ STUCCO SOFFIT

SCALE: 1 1/2"=1'-0" 3

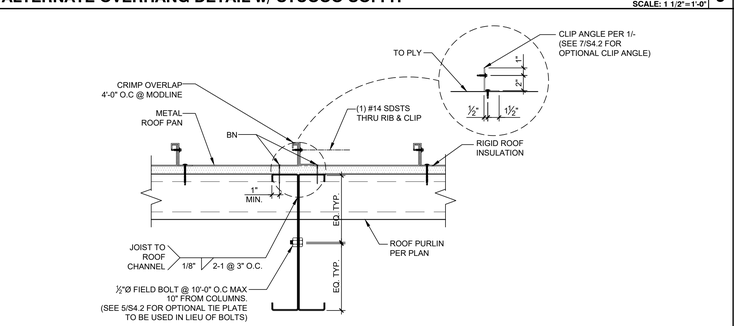

ROOF BEAM CONNECTION DETAIL

SCALE: 1 1/2"=1'-0" 5

1. TRANSVERSE ROOF BEAM PER SHEET S0.0.
2. LONGITUDINAL ROOF BEAM PER SHEET S0.0.
3. HSS COLUMN PER SHEET S5.0.
4. ROOF PURLINS @ 48" O.C. MAX. -SEE SHEET S0.0
5. 20 GA. METAL ROOF PAN - SEE SHEET S0.0.
6. PROVIDE DOUBLE PURLINS AND BLOCKING PER 2-4/S4.2 @ OPTIONAL HVAC UNIT (800# MAX), (1) HVAC UNIT PER MODULE MAX. LOCATE PER ROOF PLAN & PROVIDE 48" CLEAR MIN. BETWEEN ALL DUCT & SKYLIGHT OPENINGS, TYP.

   NOTE: DO NOT HEAD OFF MORE THAN ONE (1) ROOF PURLIN. MULTIPLE CONSECUTIVE ROOF PURLINS SHALL NOT BE INTERRUPED UNO- SEE 2/S4.2.
7. MID-SPAN PURLIN BLOCKING WELD TO ROOF PURLINS PER DETAIL 3/S4.2 BLOCKING IS ONLY REQUIRED AT END MODULES AT PURLINS WITH DIAGONAL BEAM BRACING AT EXTERIOR SIDE WALLS PER 8 BELOW.
8. 3x1x12 GA. BENT PLATE DIAGONAL BRACE TO ROOF BEAM @ 8'-0" FROM HSS COLUMNS & @ MIDSPAN IF SINGLE PITCH OR (2) @ RIDGE IF DUAL PITCH
   PROVIDE PURLIN BLOCKING @ EACH BRACE @ END MODULES ONLY PER 7 ABOVE.
9. 2"x16GA (GRADE 50) STEEL STRAP CROSS BRACING ALTERNATE: 3"x18GA (GRADE 50) STRAPS.
10. 2½" SQ. HSS SOFFIT COLUMN - SEE 5/S5.0.
11. SOFFIT OUTRIGGER BEAM - SEE S0.0
12. SOFFIT BEAM - SEE S0.0
13. ROOF PURLINS @ 48" O.C. MAX IN OVERHANGS - SEE S0.0. MAY BE ACHIEVED WITH FULL DEPTH PURLINS SUPPORTING ROOF SHEATHING & SOFFIT SHEATHING OR BY SEPARATE SMALLER JOISTS @ EACH LEVEL MAINTAINING MAX SPACING AT EACH LEVEL

KEY NOTES

1. THE MATERIAL THICKNESS OF LIGHT GAUGE STRUCTURAL MEMBERS, IN THEIR END-USE, SHALL MEET OR EXCEED THE MINIMUM BASE METAL THICKNESS SPECIFIED ON SHEET S0.0. THE MATERIAL GAGE DESIGNATION IN THE PLAN SHALL BE USED AS REFERENCE ONLY.
2. SEE SHEET S8.0 & S9.0 FOR TYP. SIDE WALL FRAMING.
3. SEE SHEET S8.0 & S9.0 FOR TYP. END WALL FRAMING.
4. ALL FASTENERS THRU METAL ROOF PANEL SHALL BE INSTALLED w/ NEOPRENE WASHERS.
5. FOR PLASTER STUCCO FINISH @ SOFFIT, LATH SHALL BE SECURED PER THE FOLLOWING (CBC 2507.3):
   SECURE LATH TO ALTERNATE SUPPORTS WITH TIES CONSISTING OF A DOUBLE STRAND OF NO. 18 W & M GAGE GALVANIZED ANNEALED WIRE AT ONE EDGE OF EACH SHEET OF LATH. WIRE TIES SHALL BE INSTALLED NOT LESS THAN 3 INCHES (76MM) BACK FROM THE EDGE OF EACH SHEET AND SHALL BE LOOPED AROUND STRIPPING, OR ATTACHED TO A #8 SMS SCREW INTO EACH SIDE OF THE PURLIN - 2 INCHES (51MM) ABOVE THE BOTTOM OF THE PURLIN OR TO EACH END OF A #12 SMS DRIVEN HORIZONTALLY THROUGH THE PURLIN - 2 INCHES (51MM) ABOVE THE BOTTOM OF THE PURLIN AND THE ENDS OF THE WIRE SECURED TOGETHER WITH THREE TWISTS OF WIRE.
6. REFER TO MINIMUM INSULATION SCHEDULES ON SHEET M1.7 FOR ALL INSULATION REQUIREMENTS.

GENERAL NOTES

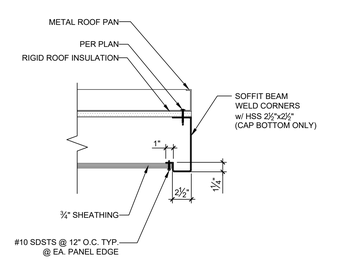

ENCLOSED SOFFIT DETAIL

SCALE: 1 1/2"=1'-0" 6

BUILDING SIZE SCHEDULE			
BUILDING SIZE (FT)	TOTAL # OF 12'-0" WIDE MODULES	TOTAL # OF CENTER MODULES	OVERALL BUILDING WIDTH[1]
☐ 24'x40'	2	0	23'-8½"
☒ 36'x40'	3	1	35'-6¼"
☐ 48'x40'	4	2	47'-5"
☐ 60'x40'	5	3	59'-3¾"
☐ 72'x40'	6	4	71'-1½"
☐ 84'x40'	7	5	82'-11¼"
☐ 96'x40'	8	6	94'-10"
☐ 108'x40'	9	7	106'-8¾"
☐ 120'x40'	10	8	118'-6½"

NOTES:

1. TOTAL BUILDING WIDTH INCLUDES 1/4" PER MODULAR CONSTRUCTION TOLERANCE PER FOUNDATION SHEETS S1.1, S1.2, & S1.3.

BUILDING SIZE SCHEDULE

NOT USED

TRACY
UNIFIED SCHOOL DISTRICT

HMC Architects

3595001000

2101 CAPITOL AVENUE, SUITE 100
SACRAMENTO, CA 95816
916 368 7990 / www.hmcarchitects.com

ISSUE

Δ	DESCRIPTION	DATE
1	ADDENDUM "A"	3/20/25

AMS®
American Modular Systems
787 Spreckels Ave., Manteca, CA 95336
Phone (209) 825-1921 Fax (209) 825-7018
www.americanmodular.com

INTELLECTUAL-PROPERTY & PROPRIETARY RIGHTS STATEMENT
COPYRIGHT © AMERICAN MODULAR SYSTEMS (AMS)
AMS OWNS ALL COPYRIGHT AND OTHER INTELLECTUAL-PROPERTY AND PROPRIETARY RIGHTS IN THESE DRAWINGS, SPECIFICATIONS, AND THE MATERIAL CONTAINED HEREIN. CERTAIN ELEMENTS SHOWN IN THESE DOCUMENTS ARE REGISTERED TRADEMARKS OF AMS. ALL PATENTABLE MATERIALS CONTAINED IN THESE DOCUMENTS AND ORIGINATING WITHIN THE PREMISES OF AMS ARE THE PROPERTY OF AMS. THESE DRAWINGS, SPECIFICATIONS, AND THE MATERIAL CONTAINED HEREIN MAY NOT BE REPRODUCED, TRANSMITTED, COPIED, DISTRIBUTED, MODIFIED, OR OTHERWISE DISPOSED OF (DIRECTLY OR INDIRECTLY) AND MAY NOT BE USED (IN WHOLE OR IN PART) TO ASSIST IN THE CONSTRUCTION, DESIGN, OR OTHER MAKING OF, OR FOR THE PURPOSE OF FURNISHING ANY INFORMATION FOR THE CONSTRUCTION, DESIGN, OR OTHER MAKING OF, ANY BUILDINGS (MODULAR OR OTHERWISE), DRAWINGS, SPECIFICATIONS, PRINTS, APPARATUS, OR PARTS THEREOF, EXCEPT AS EXPRESSLY PERMITTED BY WRITTEN CONSENT OF, OR IN A WRITTEN AGREEMENT WITH, AMS. SUBMITTAL OR DISTRIBUTION TO MEET OFFICIAL REGULATORY REQUIREMENTS WILL NOT BE CONSTRUED AS PUBLICATION IN DEROGATION OF AMS'S COPYRIGHT OR OTHER INTELLECTUAL-PROPERTY OR PROPRIETARY RIGHTS.

PRE-CHECKED SET NAME

24' x 40' THRU 120' x 40'
STANDARD MODULAR BUILDING
(LOW SEISMIC)
FORM®

SITE SPECIFIC PROJECT NAME

APPROVED
DIV. OF THE STATE ARCHITECT
APP: 04-122050 PC
REVIEWED FOR
SS ☑ FLS ☑ ACS ☑ CG ☑
DATE: 12/11/2023

☐ 2022 CBC PRE-CHECK (PC) DOCUMENT
A SEPARATE PRE-CHECK APPROVAL FOR CONSTRUCTION IS REQUIRED.

MANUFACTURER PROFESSIONAL OF RECORD ON PC

LICENSED ARCHITECT — MICHAEL PATRICK CONNELLY — No. C12631 — Ren. 3-31-25 — STATE OF CALIFORNIA

LICENSED PROFESSIONAL ENGINEER — MARK D. HAMILTON — No. S3380 — STRUCTURAL — STATE OF CALIFORNIA — RST#22214

11/21/2023

THESE DRAWINGS ARE PRELIMINARY AND NOT FOR CONSTRUCTION UNLESS STAMPED & SIGNED BY THE DESIGN PROFESSIONAL OF RECORD.

REVISIONS

DRAWN BY:	AA
SCALE:	AS NOTED
DATE:	MM/DD/YY
PROJECT NO:	XXXX-22

SHEET TITLE:

ROOF FRAMING PLAN
AND DETAILS
CROSS BRACING OPTION

SHEET NUMBER:

S4.0

KEYNOTES

GENERAL NOTES

FACILITY:

JACOBSON ELEMENTARY SCHOOL
1750 W KAVANAGH AVE
TRACY, CA 95376

PROJECT:

JACOBSON ES - TK CLASSROOM

SHEET NAME:

ROOF FRAMING PLAN AND DETAILS CROSS BRACING OPTION

DATE: **04/03/24** CLIENT PROJ NO: **3595001000**

SHEET:

S4.0

ADDENDUM "A"

Autodesk Docs://3595005000 TUSD TK CLASSROOMS 2025 R22/3595005000-A-TUSD-BOHN-SITE.rvt
12/3/2024 8:55:49 AM

PLEASE RECYCLE

THE LINE SHOWN ABOVE IS EQUAL TO ONE INCH ON ORIGINAL DRAWING. IF NOT ONE INCH, ADJUST SCALES ACCORDINGLY

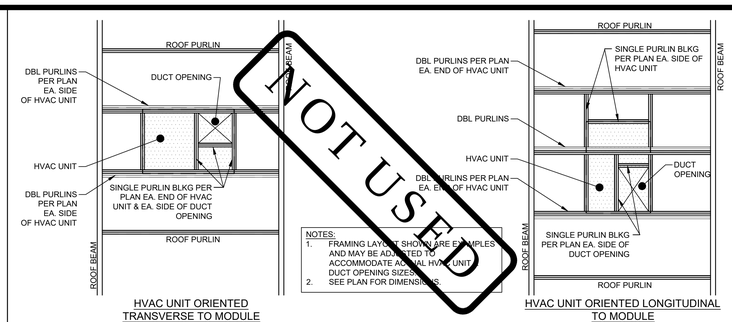

NOTES:
1. FRAMING LAYOUT SHOWN ARE EXAMPLES AND MAY BE ADJUSTED TO ACCOMMODATE ACTUAL HVAC UNIT DUCT OPENING SIZES.
2. SEE PLAN FOR DIMENSIONS.

HVAC UNIT ORIENTED TRANSVERSE TO MODULE

HVAC UNIT ORIENTED LONGITUDINAL TO MODULE

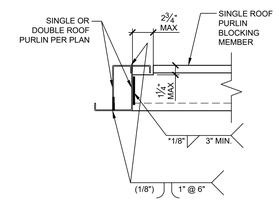

*NOTE: SEE NOTE #1 OF GENERAL NOTES

NOT USED | 1

EXAMPLE OF ROOF FRAMING AT ROOFTOP HVAC UNITS | 2

SCALE: 1 1/2"=1'-0"

BLOCKING & DBL PURLIN CONNECTION DETAIL | 3

SCALE: 1 1/2"=1'-0"

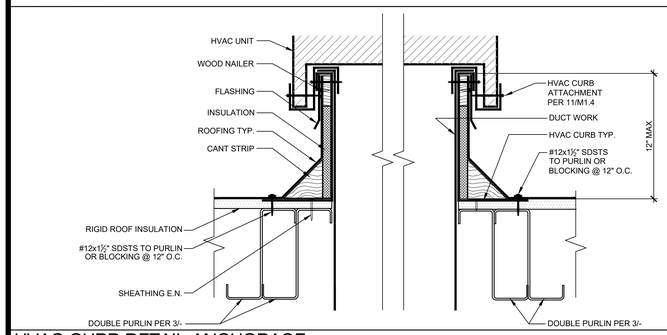

HVAC CURB DETAIL ANCHORAGE | 4

SCALE: 1 1/2"=1'-0"

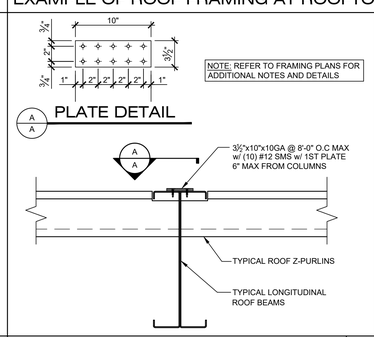

NOTE: REFER TO FRAMING PLANS FOR ADDITIONAL NOTES AND DETAILS

A/A PLATE DETAIL

OPTIONAL ROOF TIE PLATE | 5

SCALE: 1 1/2"=1'-0"

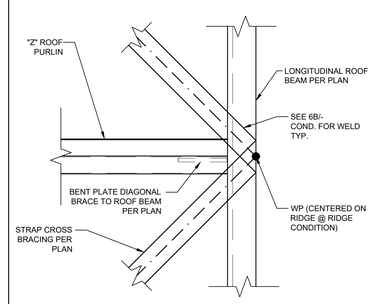

TYP. CROSS BRACING DETAILS | 6

SCALE: 1 1/2"=1'-0"

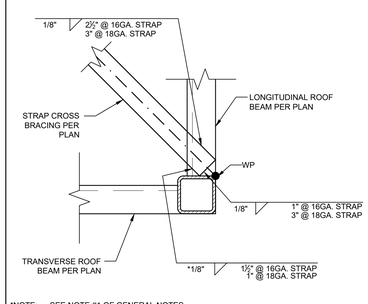

*NOTE: SEE NOTE #1 OF GENERAL NOTES

TYP. CROSS BRACING DETAILS | 6B

SCALE: 1 1/2"=1'-0"

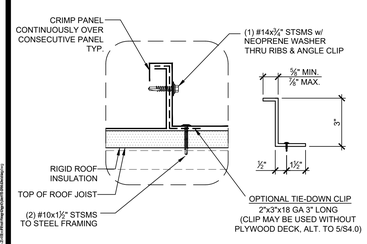

NOTE:
MECHANICALLY CRIMP EACH STANDING SEAM ENTIRELY.
MECHANICALLY CRIMP PANELS OVER ALL CLIPS.

ROOF DETAIL (OPTIONAL ROOF PAN CLIP) | 7

SCALE: 1 1/2"=1'-0"

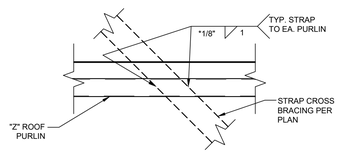

*NOTE: SEE NOTE #1 OF GENERAL NOTES

TYP. CROSS BRACING DETAILS | 8

SCALE: 1 1/2"=1'-0"

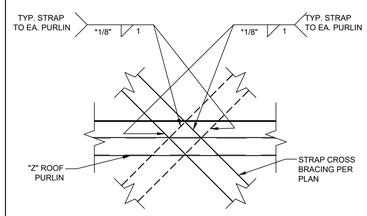

*NOTE: SEE NOTE #1 OF GENERAL NOTES

TYP. CROSS BRACING DETAILS | 9

SCALE: 1 1/2"=1'-0"

NOT USED | 10

NOT USED | 11

1. THE MATERIAL THICKNESS OF LIGHT GAUGE STRUCTURAL MEMBERS, IN THEIR END-USE, SHALL MEET OR EXCEED THE MINIMUM BASE METAL THICKNESS SPECIFIED ON SHEET S0.0 THE MATERIAL GAGE DESIGNATION IN THE PLAN SHALL BE USED AS REFERENCE ONLY.
2. STRAP PRETENSIONING PER AISI S400 SECTION E3.4(c)
3. MAX FILLET WELD SIZE SHALL BE EQUAL TO THE THICKNESS OF THE THINNER SHEET STEEL (AWS D1.3, SECTION 2.3.3)
4. REFER TO MINIMUM INSULATION SCHEDULES ON SHEET M1.7 FOR ALL INSULATION REQUIREMENTS.

GENERAL NOTES

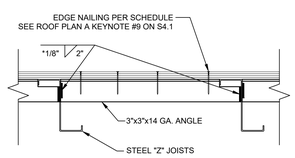

*NOTE: SEE NOTE #1 OF GENERAL NOTES

TYP. ANGLE TO Z-PURLIN ATTACHMENT | 12

SCALE: 1 1/2"=1'-0"

NOT USED | 13

NOT USED | 14

NOT USED | 15

IDENTIFICATION STAMP
DIV. OF THE STATE ARCHITECT
APP: 02-122976 INC:
REVIEWED FOR
SS ☑ FLS ☑ ACS ☑
DATE: 03/12/2025

TRACY UNIFIED SCHOOL DISTRICT

HMC Architects

3595001000

2101 CAPITOL AVENUE, SUITE 100
SACRAMENTO, CA 95816
916 368 7990 / www.hmcarchitects.com

ISSUE

Δ	DESCRIPTION	DATE
1	ADDENDUM "A"	3/20/25

AMS®
American Modular Systems
787 Spreckels Ave., Manteca, CA 95336
Phone (209) 825-1921 Fax (209) 825-7018
www.americanmodular.com

INTELLECTUAL-PROPERTY & PROPRIETARY RIGHTS STATEMENT
COPYRIGHT © AMERICAN MODULAR SYSTEMS (AMS)
AMS OWNS ALL COPYRIGHT AND OTHER INTELLECTUAL-PROPERTY AND PROPRIETARY RIGHTS IN THESE DRAWINGS, SPECIFICATIONS, AND THE MATERIAL CONTAINED HEREIN. CERTAIN ELEMENTS SHOWN IN THESE DOCUMENTS ARE REGISTERED TRADEMARKS OF AMS. ALL PATENTABLE MATERIALS CONTAINED IN THESE DOCUMENTS AND ORIGINATING WITH AMS ARE PATENT PENDING. THE DRAWINGS, SPECIFICATIONS, DESIGNS, OPTIONS AND THE MATERIAL CONTAINED HEREIN MAY NOT BE REPRODUCED, TRANSMITTED, COPIED, DISTRIBUTED, MODIFIED, OR OTHERWISE DISPOSED OF (DIRECTLY OR INDIRECTLY) AND MAY NOT BE USED (IN WHOLE OR IN PART) TO ASSIST IN THE CONSTRUCTION, DESIGN, OR OTHER MAKING OF, OR FOR THE PURPOSE OF FURNISHING ANY INFORMATION FOR THE CONSTRUCTION, DESIGN, OR OTHER MAKING OF, ANY BUILDINGS (MODULAR OR OTHERWISE), DRAWINGS, SPECIFICATIONS, PRINTS, APPARATUS, OR PARTS THEREOF, EXCEPT AS EXPRESSLY PERMITTED BY WRITTEN CONSENT OF, OR IN A WRITTEN AGREEMENT WITH, AMS. SUBMITTAL OR DISTRIBUTION TO MEET OFFICIAL REGULATORY REQUIREMENTS WILL NOT BE CONSTRUED AS PUBLICATION IN DEROGATION OF AMS'S COPYRIGHT OR OTHER INTELLECTUAL-PROPERTY OR PROPRIETARY RIGHTS.

PRE-CHECKED SET NAME
24' x 40' THRU 120' x 40'
STANDARD MODULAR BUILDING
(LOW SEISMIC)
FORM®

SITE SPECIFIC PROJECT NAME

APPROVED
DIV. OF THE STATE ARCHITECT
APP: 04-122050 PC
REVIEWED FOR
SS ☑ FLS ☑ ACS ☑ CG ☑
DATE: 12/11/2023

2022 CBC PRE-CHECK (PC) DOCUMENT
A SEPARATE PROJECT APPLICATION FOR CONSTRUCTION IS REQUIRED.

MANUFACTURER PROFESSIONAL OF RECORD ON PC

LICENSED ARCHITECT PATRICK CHUNG No. C12631 Exp. 3-31-25 STATE OF CALIFORNIA

REGISTERED PROFESSIONAL ENGINEER MANDAD D. ASLAM No. S3380 STRUCTURAL STATE OF CALIFORNIA RST#22214

11/21/2023

THESE DRAWINGS ARE PRELIMINARY AND NOT FOR CONSTRUCTION UNLESS STAMPED & SIGNED BY THE DESIGN PROFESSIONAL OF RECORD.

REVISIONS
1
2
3
4

DRAWN BY:	AA
SCALE:	AS NOTED
DATE:	MM/DD/YY
PROJECT NO:	XXXX-22

SHEET TITLE:
ROOF FRAMING DETAILS
CROSS BRACING OPTION

SHEET NUMBER:
S4.2

KEYNOTES

GENERAL NOTES

FACILITY:
JACOBSON ELEMENTARY SCHOOL
1750 W KAVANAGH AVE
TRACY, CA 95376

PROJECT:
JACOBSON ES - TK CLASSROOM

SHEET NAME:
ROOF FRAMING DETAILS CROSS BRACING OPTION

DATE: **04/03/24** | CLIENT PROJ NO: **3595001000**

SHEET:
S4.2

ADDENDUM "A"

PLEASE RECYCLE

Autodesk Docs://3595005000 TUSD TK CLASSROOMS 2025 R22/3595005000-A-TUSD-BOHN-SITE.rvt
12/3/2024 6:55:59 AM

THE LINE SHOWN ABOVE IS EQUAL TO ONE INCH ON THIS SHEET ORIGINAL DRAWING SIZE

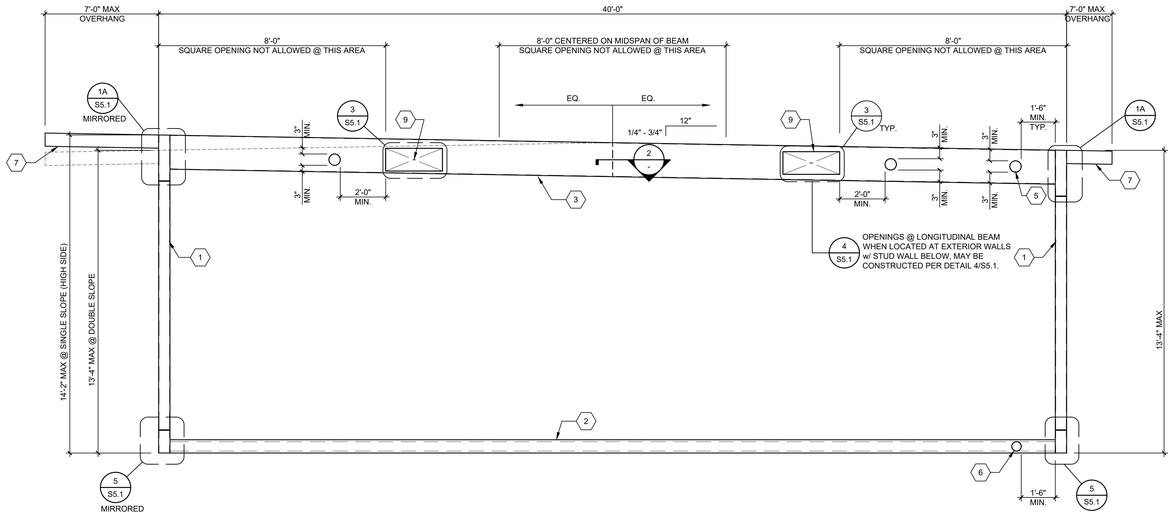

TYPICAL LONGITUDINAL FRAME ELEVATION

SCALE: 3/8"=1'-0" | 1

1. HSS COLUMN - SEE SCHEDULE 3 & BELOW
2. FLOOR BEAM - SEE SCHEDULE 3 & BELOW
3. LONGITUDINAL ROOF BEAM PER 18/S0.0 - GAUGE PER SCHEDULE 3 BELOW.
4. TRANSVERSE ROOF BEAM PER 18/S0.0 - GAUGE PER 3 BELOW.
5. 6"Ø MAX OPENING IN WEB OF FLOOR BEAM WITHOUT WEB REINFORCEMENT MINIMUM SPACING OF HOLES @ 48" O.C., HOLES MAY OCCUR @ ANY LOCATION ALONG LENGTH OF ROOF BEAM EXCEPT AS NOTED OTHERWISE ON FRAMING ELEVATION. - SEE 6/S5.1

   NOTE: IF HOLE IS 3" OR LESS, THEY MAY BE SPACED @ 24" O.C. MINIMUM
6. 4"Ø MAX OPENING IN WEB OF FLOOR BEAM WITHOUT WEB REINFORCEMENT MINIMUM SPACING OF HOLES @ 48" O.C. HOLES MAY OCCUR @ ANY LOCATION ALONG LENGTH OF FLOOR BEAM EXCEPT AS NOTED OTHERWISE ON FRAMING ELEVATION - SEE 6/S5.1.

   NOTE: IF HOLE IS 2" OR LESS, THEY MAY BE SPACED @ 24" O.C. MINIMUM.
7. SOFFIT OUTRIGGER BEAM AT ENCLOSED OVERHANG - REFER TO DETAIL 1A OR 1B/S5.1 & S0.0 FOR PROPERTIES.
8. SOFFIT BEAM AT ENCLOSED OVERHANG - REFER TO DETAIL 1A/S5.1 & S0.0 FOR PROPERTIES
9. LONGITUDINAL BEAM OPENING:
   REFER TO DETAIL 3/S5.1 FOR OPENING REINFORCEMENT (10"x30" MAX OPENING SIZE)
10. TRANSVERSE BEAM OPENING:
    REFER TO DETAIL 4/S5.1 FOR OPENING REINFORCEMENT (10"x30" MAX OPENING SIZE)

KEY NOTES

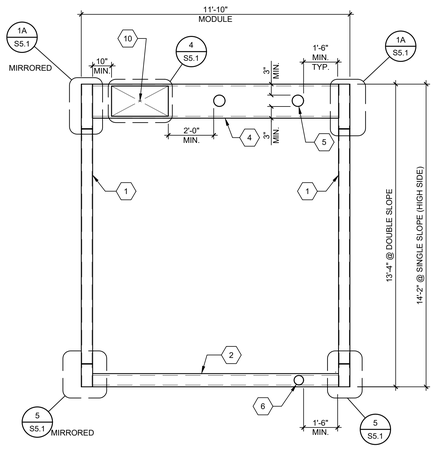

TYPICAL TRANSVERSE FRAME ELEVATION

SCALE : 3/8"=1'-0" | 4

THE WELDING PROCEDURE QUALIFICATION TEST RECORD AND WELDING PROCEDURE SPECIFICATION FOR THIS WELD SHALL BE PREPARED IN ACCORDANCE WITH AWS D1.1-15, D1.3-08 & D1.8-16 AND SUBMITTED TO THE STRUCTURAL ENGINEER FOR REVIEW AND SUBMITTAL TO THE D.S.A. TYPICAL ALL DETAILS THIS SHEET. ALL WELDS USED IN PRIMARY MEMBERS AND CONNECTIONS IN THE LATERAL FORCE-RESISTING SYSTEMS SHALL BE MADE WITH FILLER METAL THAT HAS A MINIMUM CHARPY V-NOTCHTOUGHNESS OF 20 FT.-LBS AT ZERO DEGREES F, AS DETERMINED BY AWS CLASSIFICATION.

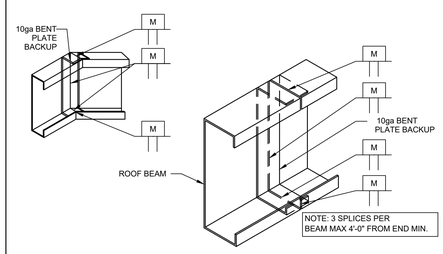

TYPICAL BEAM SLICE

SCALE: 1 1/2"=1'-0" | 2

FLOOR BEAMS		ALT. FLOOR BEAMS		COLUMNS	LONGITUDINAL ROOF BEAMS	TRANSVERSE ROOF BEAMS
☒ PLYWOOD FLOOR	☐ CONCRETE FLOOR	☐ PLYWOOD FLOOR	☐ CONCRETE FLOOR			
C9x13.4 (50 KSI)	C9x13.4 (50 KSI)	C9x13.4 OPTIONAL: C10x15.3	C10x15.3	HSS 6x6x¼ (ASTM A1085) Fy = 50ksi	10 GA.	10 GA.

NOTE: SEE ALL SECTION PROPERTIES ON SHEET S0.0

FRAME MEMBER SCHEDULE

3

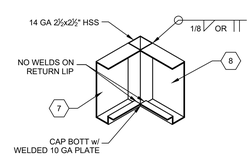

OVERHANG CORNER DETAIL

SCALE: 1 1/2"=1'-0" | 5

NOT USED

6

IDENTIFICATION STAMP
DIV. OF THE STATE ARCHITECT
APP: 02-122976 INC:
REVIEWED FOR
SS ☑ FLS ☑ ACS ☑
DATE: 03/12/2025

TRACY UNIFIED SCHOOL DISTRICT

HMC Architects

3595001000

2101 CAPITOL AVENUE, SUITE 100
SACRAMENTO, CA 95816
916 368 7990 / www.hmcarchitects.com

ISSUE

Δ	DESCRIPTION	DATE
1	ADDENDUM "A"	3/20/25

American Modular Systems
787 Spreckels Ave., Manteca, CA 95336
Phone (209) 825-1921 Fax (209) 825-7018
www.americanmodular.com

INTELLECTUAL-PROPERTY & PROPRIETARY RIGHTS STATEMENT
COPYRIGHT © AMERICAN MODULAR SYSTEMS (AMS)
AMS OWNS ALL COPYRIGHT AND OTHER INTELLECTUAL-PROPERTY AND PROPRIETARY RIGHTS IN THESE DRAWINGS, SPECIFICATIONS, AND THE MATERIAL CONTAINED HEREIN. CERTAIN ELEMENTS SHOWN IN THESE DOCUMENTS ARE REGISTERED TRADEMARKS OF AMS. ALL PATENTABLE MATERIALS CONTAINED IN THESE DOCUMENTS AND ORIGINATING WITHIN AMS, INCLUDING BUT NOT LIMITED TO, ANY IDEAS, DESIGNS, OPERATIONS AND THE MATERIAL CONTAINED HEREIN MAY NOT BE REPRODUCED, TRANSMITTED, COPIED, DISTRIBUTED, MODIFIED, OR OTHERWISE DISPOSED OF (DIRECTLY OR INDIRECTLY) AND MAY NOT BE USED (IN WHOLE OR IN PART) TO ASSIST IN THE CONSTRUCTION, DESIGN, OR OTHER MAKING OF, OR FOR THE PURPOSE OF FURNISHING ANY INFORMATION FOR THE CONSTRUCTION, DESIGN, OR OTHER MAKING OF, ANY BUILDINGS (MODULAR OR OTHERWISE), DRAWINGS, SPECIFICATIONS, PRINTS, APPARATUS, OR PARTS THEREOF, EXCEPT AS EXPRESSLY PERMITTED BY WRITTEN CONSENT OF, OR IN A WRITTEN AGREEMENT WITH, AMS. SUBMITTAL OR DISTRIBUTION TO MEET OFFICIAL REGULATORY REQUIREMENTS WILL NOT BE CONSTRUED AS PUBLICATION IN DEROGATION OF AMS'S COPYRIGHT OR OTHER INTELLECTUAL-PROPERTY OR PROPRIETARY RIGHTS.

PRE-CHECKED SET NAME
24' x 40' THRU 120' x 40'
STANDARD MODULAR BUILDING
(LOW SEISMIC)
FORM®

SITE SPECIFIC PROJECT NAME

APPROVED
DIV. OF THE STATE ARCHITECT
APP: 04-122050 PC
REVIEWED FOR
SS ☑ FLS ☑ ACS ☑ CG ☑
DATE: 12/11/2023

☐ 2022 CBC PRE-CHECK (PC) DOCUMENT
A SEPARATE PROJECT SPECIFIC APPLICATION FOR CONSTRUCTION IS REQUIRED

MANUFACTURER PROFESSIONAL OF RECORD ON PC

LICENSED ARCHITECT PATRICK J. CARROLL No. C12631 Exp. 3-31-25 STATE OF CALIFORNIA

REGISTERED PROFESSIONAL ENGINEER Mahdi D. Asgari No. S3380 STRUCTURAL STATE OF CALIFORNIA RST#22214

11/21/2023

THESE DRAWINGS ARE PRELIMINARY AND NOT FOR CONSTRUCTION UNLESS STAMPED & SIGNED BY THE DESIGN PROFESSIONAL OF RECORD.

REVISIONS
1
2
3
4

DRAWN BY:	AA
SCALE:	AS NOTED
DATE:	MM/DD/YY
PROJECT NO:	XXXX-22

SHEET TITLE:
MOMENT FRAME
ELEVATIONS & DETAILS

SHEET NUMBER:
S5.0

KEYNOTES

GENERAL NOTES

FACILITY:
JACOBSON ELEMENTARY SCHOOL
1750 W KAVANAGH AVE
TRACY, CA 95376

PROJECT:
JACOBSON ES - TK CLASSROOM

SHEET NAME:
MOMENT FRAME ELEVATIONS & DETAILS

DATE: **04/03/24** | CLIENT PROJ NO: **3595001000**

SHEET:
S5.0

ADDENDUM "A"

PLEASE RECYCLE

Autodesk Docs://3595001000 TUSD TK CLASSROOMS 2025 R22/3595001000-A-TUSD-BOHN-SITE.rvt
12/3/2024 8:55:59 AM

THE LINE SHOWN ABOVE IS EXACTLY ONE INCH LONG AT THIS SHEETS ORIGINAL PAGE SIZE

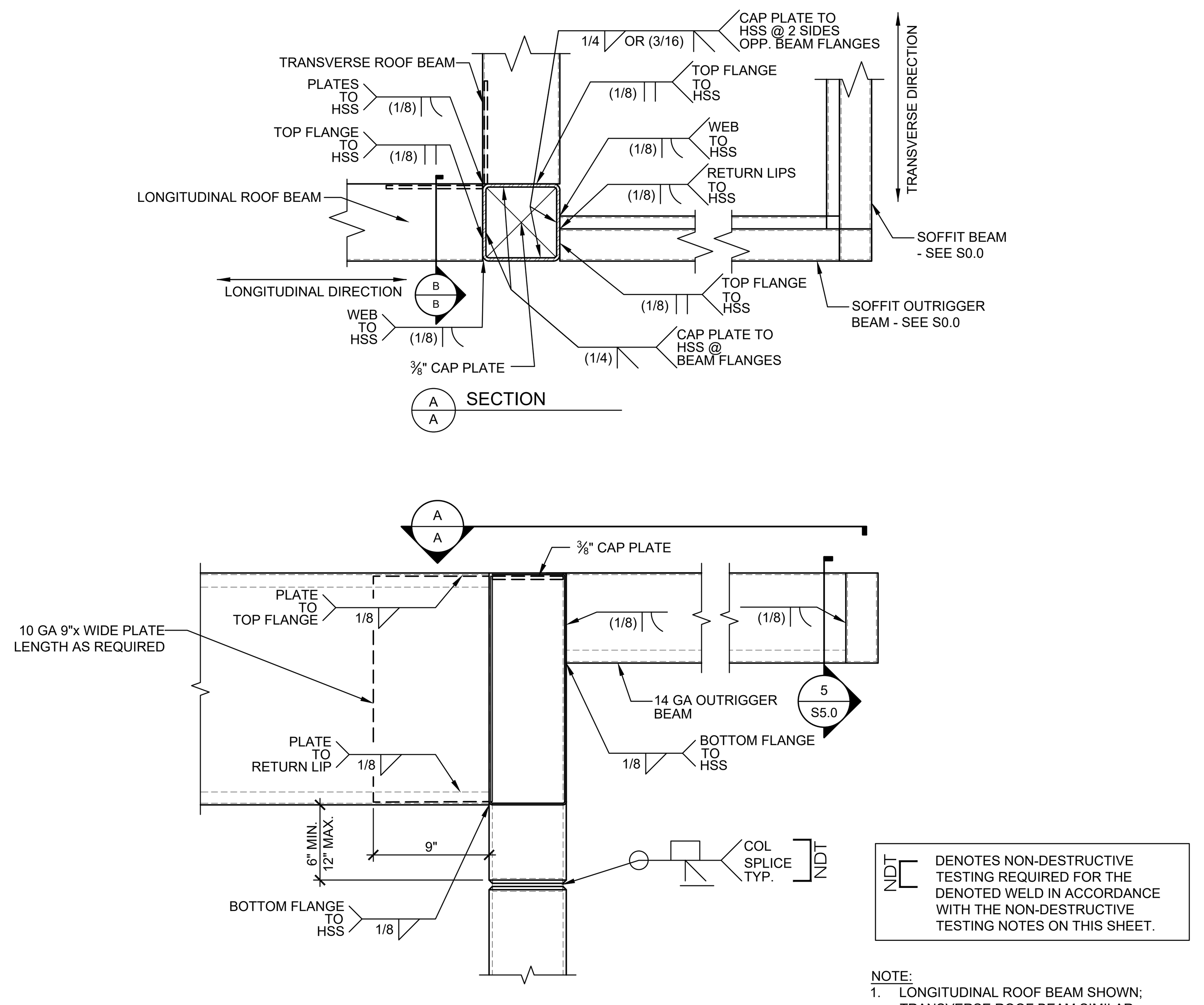

NDT DENOTES NON-DESTRUCTIVE TESTING REQUIRED FOR THE DENOTED WELD IN ACCORDANCE WITH THE NON-DESTRUCTIVE TESTING NOTES ON THIS SHEET.

NOTE:
1. LONGITUDINAL ROOF BEAM SHOWN; TRANSVERSE ROOF BEAM SIMILAR

TYPICAL ROOF BEAM TO HSS DETAIL
SCALE: 1 1/2"=1'-0" — 1A

NOT USED
1B

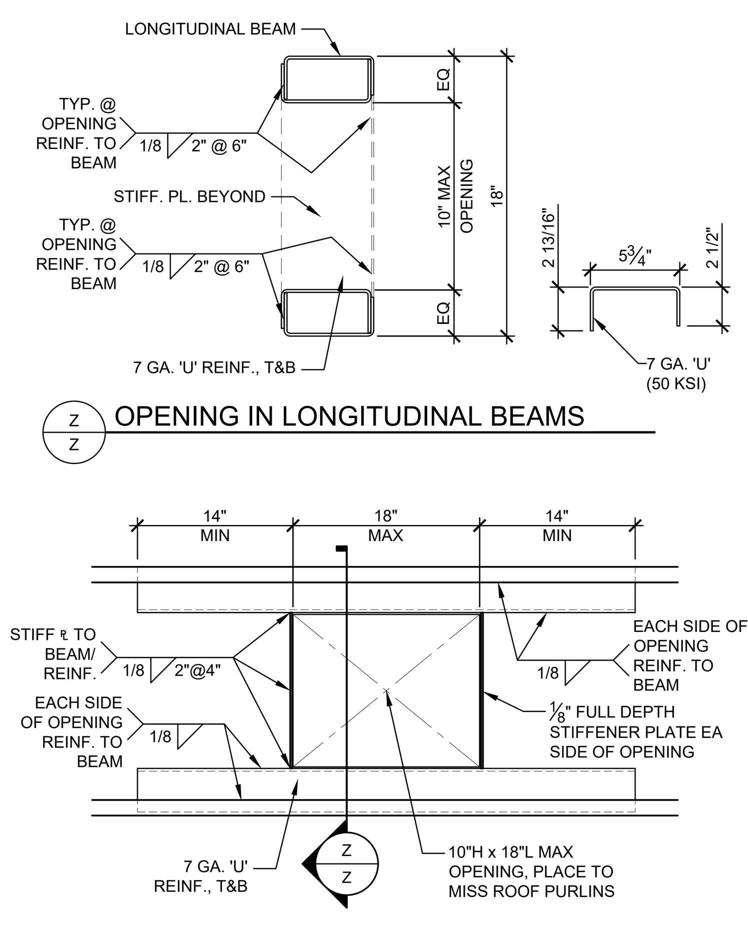

NOTES:
1. BEAM OPENING(S), LOCATED AT EXTERIOR WALLS w/ STUD WALL BELOW, MAY BE CONSTRUCTED PER DETAIL 4/S5.1.

OPENING @ ROOF BEAMS
(LONGITUDINAL BEAMS) SCALE: 1 1/2"=1'-0" — 3

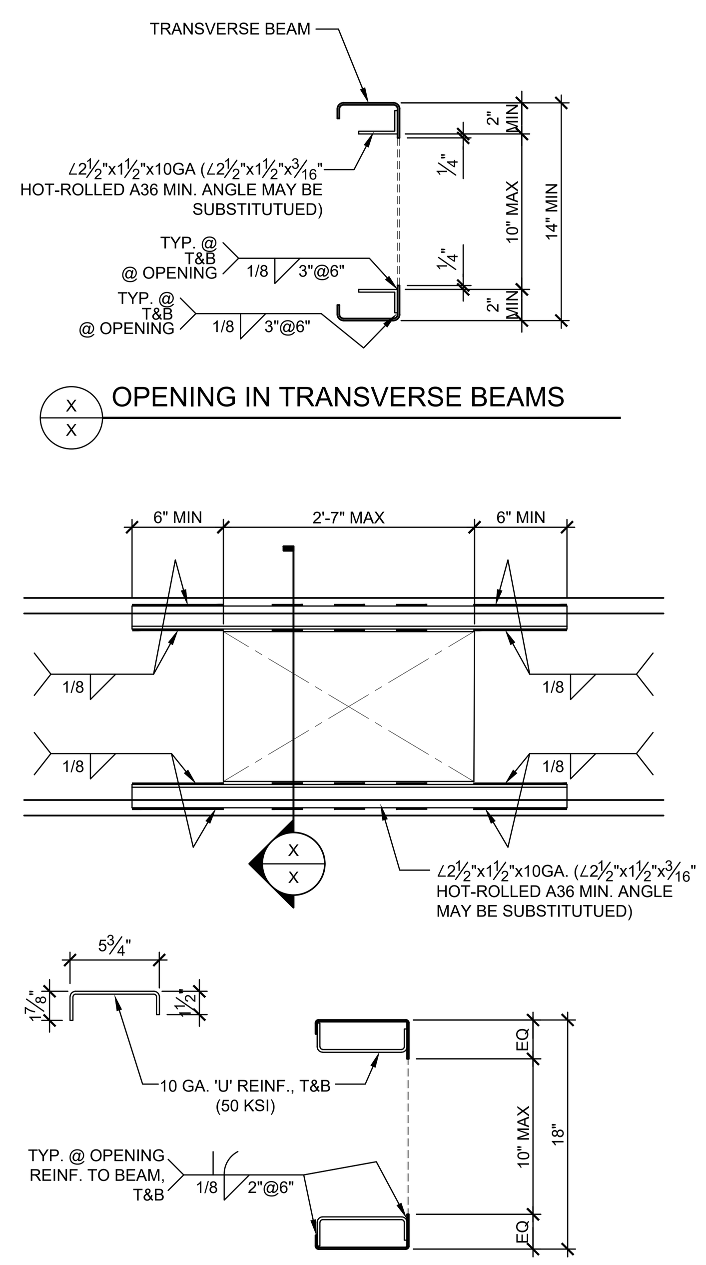

OPENING @ ROOF BEAMS
(TRANSVERSE BEAMS) SCALE: 1 1/2"=1'-0" — 4

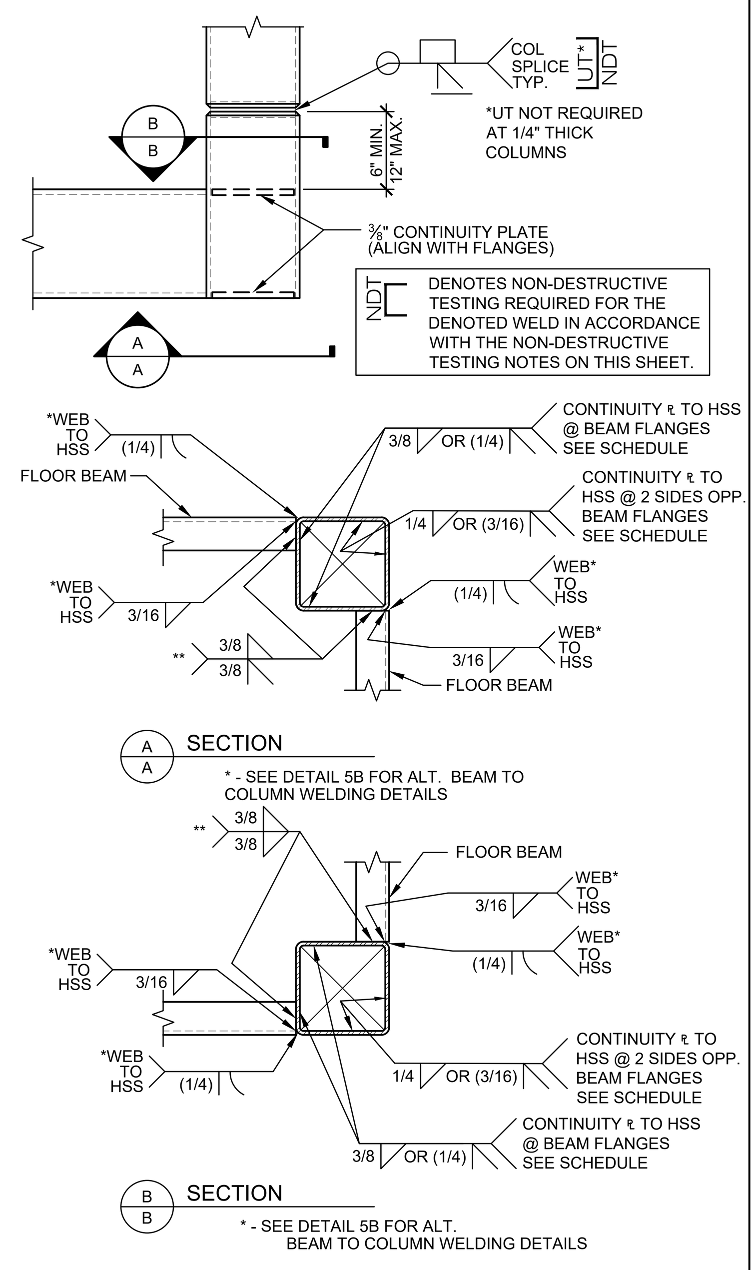

** FULL PEN WELD ALTERNATE - DETAIL 5B,MAY BE USED AS AN ALTERNATIVE TO THE DOUBLE SIDED FLANGE-TO-COLUMN WELDS SHOWN. NDT

TYP. CORNER TO FLOOR BM DETAIL
SCALE: 1 1/2"=1'-0" — 5

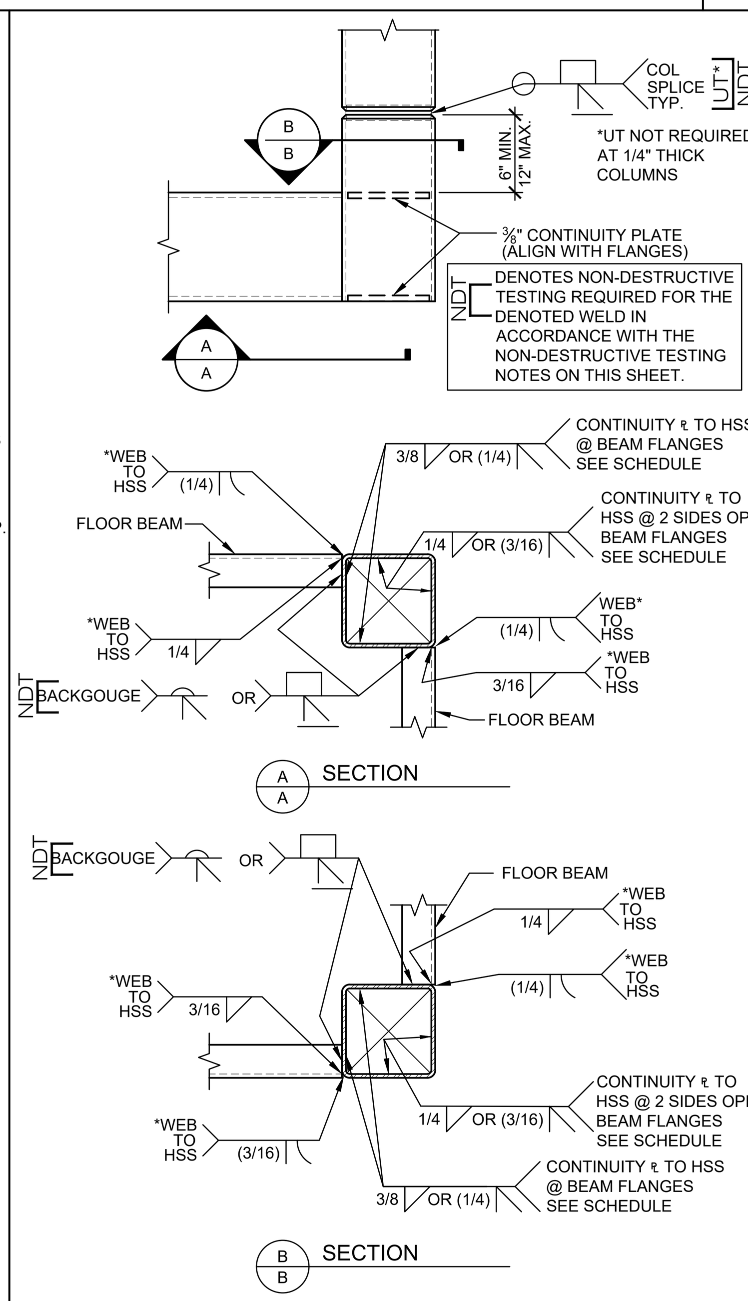

* FULL PEN WELD MAY BE USED AS AN ALTERNATIVE TO THE DOUBLE SIDED BEAM WEB-TO-COLUMN WELD SHOWN. NDT UT

ALTERNATE CORNER DETAIL
SCALE: 1 1/2"=1'-0" — 5B

THE WELDING PROCEDURE QUALIFICATION TEST RECORD AND WELDING PROCEDURE SPECIFICATION FOR WELDS ON THIS SHEET SHALL BE PREPARED IN ACCORDANCE WITH AWS D1.1-15 (HOT-ROLLED), D1.3-08 (COLD-FORMED) & D1.8-16 AND SUBMITTED TO THE STRUCTURAL ENGINEER FOR REVIEW AND SUBMITTAL TO D.S.A. UPON REQUEST. ALL WELDS USED IN PRIMARY MEMBERS AND CONNECTIONS IN THE LATERAL FORCE-RESISTING SYSTEMS SHALL BE MADE WITH FILLER METAL THAT HAS A MINIMUM CHARPY V-NOTCH TOUGHNESS OF 20 FT.-LBS AT ZERO DEGREES F, AS DETERMINED BY AWS CLASSIFICATION.

GENERAL NOTES

NON-DESTRUCTIVE TESTING OF COMPLETE JOINT PENETRATION (CJP) GROVE WELDS AT THE MOMENT-RESISTING BEAM-TO-COLUMN CONNECTIONS SHALL COMPLY WITH AISC 341-16 CHAPTER J PER CBC 1705A.2.1.

1. WELDS SUBJECT TO THE REQUIREMENTS OF NON-DESTRUCTIVE TESTING ARE NOTED ON THESE DRAWINGS WITH THE SYMBOL: NDT
2. ALL WELDS DESIGNATED FOR NON-DESTRUCTIVE TESTING REQUIRE MAGNETIC PARTICLE TESTING (MT) TO BE PERFORMED ON 25% OF THOSE WELDS.
3. ULTRASONIC TESTING (UT) IS TO BE PERFORMED ON 100% OF WELDS DENOTED WITH THE SYMBOL, NDT UT AND IS ONLY REQUIRED ON THOSE DESIGNATED WELDS.
4. ULTRASONIC TESTING (UT) IS ONLY REQUIRED WHERE THE THICKNESS OF THE WELDED MATERIAL IS 5/16" OR GREATER. UT IS NOT REQUIRED WHERE THE COLUMN THICKNESS IS LESS THAN 5/16". MAGNETIC PARTICLE TESTING (MT) IS STILL REQUIRED.
5. ULTRASONIC TESTING (UT) IS NOT REQUIRED ON WELDS FROM STRUCTURAL STEEL CHANNEL BEAM FLANGES TO COLUMNS AS UT TESTING IS NOT APPROPRIATE FOR SECTIONS WITH VARYING DEPTHS. MAGNETIC PARTICLE TESTING (MT) IS STILL REQUIRED.

NON-DESTRUCTIVE TESTING NOTES

1. FILLER METALS SHALL CONFORM TO THE REQUIREMENTS OF THE AISC SEISMIC PROVISIONS.
2. WELDING PROCEDURES SHALL BE IN ACCORDANCE WITH THE AISC SEISMIC PROVISIONS.
3. QUALITY CONTROL AND QUALITY ASSURANCE SHALL BE IN ACCORDANCE WITH THE AISC SEISMIC PROVISIONS.
4. WELD ACCESS HOLES SHALL BE IN ACCORDANCE WITH AISC 360-16, SECTION J1.6, AND SHALL BE CONSTRUCTED PER THE FOLLOWING DETAILS & NOTES.

WELD ACCESS HOLE GEOMETRY

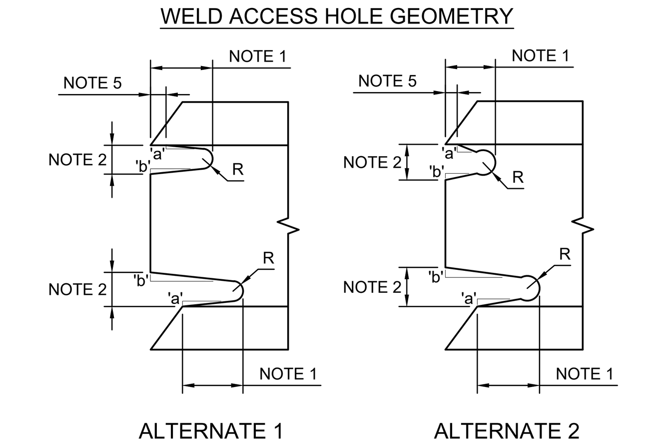

NOTES: THESE ARE TYPICAL DETAILS FOR JOINTS WELDED FROM ONE SIDE AGAINST STEEL BACKING WHERE WELD ACCESS HOLES ARE REQUIRED.
1) LENGTH: GREATER OF 1.5tw (WEB THICKNESS) OR 1-1/2 IN. (38 MM)
2) HEIGHT: GREATER OF 1.0tw OR 3/4 IN. (19 MM) BUT NEED NOT EXCEED 2 IN. (50 MM)
3) R: 3/8 IN. MIN. (10 MM). GRIND THE THERMALLY CUT SURFACES OF WELD ACCESS HOLES IN HEAVY SHAPES AS DEFINED IN SECTIONS A3.1(c) AND (d) OF AISC 360-16.
4) SLOPE 'a' FORMS A TRANSITION FROM THE WEB TO THE FLANGE. SLOPE 'b' MAY BE HORIZONTAL.
5) THE BOTTOM OF THE TOP FLANGE IS TO BE CONTOURED TO PERMIT THE TIGHT FIT OF BACKING BARS WHERE THEY ARE TO BE USED.

REQ. FOR FR. MOMENT CONNECTIONS

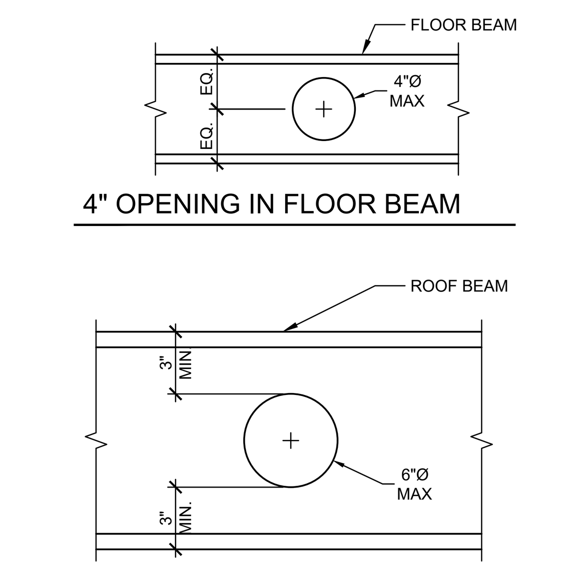

OPENING IN BEAMS
SCALE: 1 1/2"=1'-0" — 6

IDENTIFICATION STAMP
DIV. OF THE STATE ARCHITECT
APP: 02-122976 INC:
REVIEWED FOR
SS ☑ FLS ☑ ACS ☑
DATE: 03/12/2025

TRACY UNIFIED SCHOOL DISTRICT

HMC Architects
3595001000
2101 CAPITOL AVENUE, SUITE 100
SACRAMENTO, CA 95816
916 368 7990 / www.hmcarchitects.com

ISSUE

Δ	DESCRIPTION	DATE
A	ADDENDUM "A"	3/20/25

American Modular Systems
787 Spreckels Ave., Manteca, CA 95336
Phone (209) 825-1921 Fax (209) 825-7018
www.americanmodular.com

INTELLECTUAL-PROPERTY & PROPRIETARY RIGHTS STATEMENT
COPYRIGHT © AMERICAN MODULAR SYSTEMS (AMS)
AMS OWNS ALL COPYRIGHT AND OTHER INTELLECTUAL-PROPERTY AND PROPRIETARY RIGHTS IN THESE DRAWINGS, SPECIFICATIONS, AND THE MATERIAL CONTAINED HEREIN. CERTAIN ELEMENTS SHOWN IN THESE DOCUMENTS ARE REGISTERED TRADEMARKS OF AMS. ALL PATENTABLE MATERIALS CONTAINED IN THESE DOCUMENTS AND ORIGINATING WITH AMS WILL REMAIN THE SOLE PROPERTY OF AMS. THESE DRAWING, SPECIFICATIONS, AND THE MATERIAL CONTAINED HEREIN MAY NOT BE REPRODUCED, TRANSMITTED, COPIED, DISTRIBUTED, MODIFIED, OR OTHERWISE DISPOSED OF (DIRECTLY OR INDIRECTLY) AND MAY NOT BE USED (IN WHOLE OR IN PART) TO ASSIST IN THE CONSTRUCTION, DESIGN, OR OTHER MAKING OF, OR FOR THE PURPOSE OF FURNISHING ANY INFORMATION FOR THE CONSTRUCTION, DESIGN, OR OTHER MAKING OF, ANY BUILDINGS (MODULAR OR OTHERWISE), DRAWINGS, SPECIFICATIONS, PRINTS, APPARATUS, OR PARTS THEREOF, EXCEPT AS EXPRESSLY PERMITTED BY WRITTEN CONSENT OF, OR IN A WRITTEN AGREEMENT WITH, AMS. SUBMITTAL OR DISTRIBUTION TO MEET OFFICIAL REGULATORY REQUIREMENTS WILL NOT BE CONSTRUED AS PUBLICATION IN DEROGATION OF AMS'S COPYRIGHT OR OTHER INTELLECTUAL-PROPERTY OR PROPRIETARY RIGHTS.

PRE-CHECKED SET NAME
24' x 40' THRU 120' x 40'
STANDARD MODULAR BUILDING
(LOW SEISMIC)
FORM®

SITE SPECIFIC PROJECT NAME
.
.
.

APPROVED
DIV. OF THE STATE ARCHITECT
APP: 04-122050 PC
REVIEWED FOR
SS ☑ FLS ☑ ACS ☑ CG ☑
DATE: 12/11/2023

☐ 2022 CBC PRE-CHECK (PC) DOCUMENT
A SEPARATE PROJECT APPLICATION FOR CONSTRUCTION IS REQUIRED.

MANUFACTURER PROFESSIONAL OF RECORD ON PC

LICENSED ARCHITECT RANDALL PATRICK CAVANAGH No. C12631 Ren. 3-31-25 STATE OF CALIFORNIA

REGISTERED PROFESSIONAL ENGINEER MANNY D. FRESCH No. S3380 STRUCTURAL STATE OF CALIFORNIA
RST#22214
11/21/2023

THESE DRAWINGS ARE PRELIMINARY AND NOT FOR CONSTRUCTION UNLESS STAMPED & SIGNED BY THE DESIGN PROFESSIONAL OF RECORD.

REVISIONS
1
2
3
4

DRAWN BY:	AA
SCALE:	AS NOTED
DATE:	MM/DD/YY
PROJECT NO:	XXXX-22

SHEET TITLE:
MOMENT FRAME CONNECTION DETAILS

SHEET NUMBER:
S5.1

KEYNOTES

GENERAL NOTES

FACILITY:
JACOBSON ELEMENTARY SCHOOL
1750 W KAVANAGH AVE
TRACY, CA 95376

PROJECT:
JACOBSON ES - TK CLASSROOM

SHEET NAME:
MOMENT FRAME CONNECTION DETAILS

DATE: **04/03/24** CLIENT PROJ NO: **3595001000**

SHEET:
S5.1
ADDENDUM "A"

PLEASE RECYCLE
Autodesk Docs://3595005000 TUSD TK CLASSROOMS 2025 R22/3595005000-A-TUSD-BOHN-SITE.rvt
12/3/2024 9:55:50 AM

THE LINE SHOWN ABOVE IS EQUAL TO ONE INCH ON ORIGINAL 22X34 SHEETS UNLESS OTHERWISE NOTED

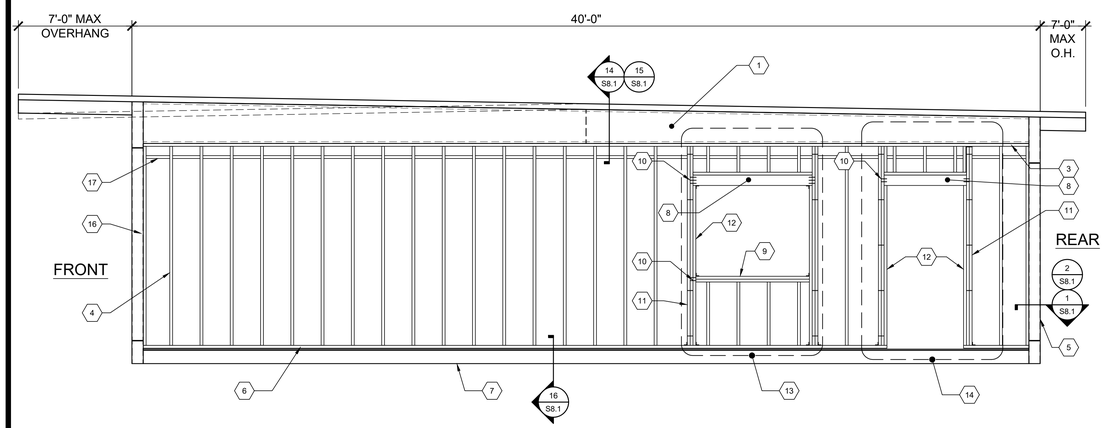

NOTE:
SEE S9.0 FOR ALTERNATE STEEL STUD WALL FRAMING.

TYPICAL SIDE WALL FRAMING (MONO/DUAL PITCH)

SCALE: 3/8"=1'-0" A

1. ROOF BEAM PER SHEET S5.0
2. 2x6 MIN. TOP PLATE - NO SPLICE
3. 2x6 MIN. TOP PLATE
4. 2x6 MIN. STUDS SPACED PER SCHEDULE W/(3) 0.131"Ø x3" END NAILS OR (4) 0.131"Ø x3" TOE NAILS T&B TO PLATES TYP.
5. HSS COLUMN PER SHEET S5.0
6. 2x6 MIN. BOTTOM PLATE - NO SPLICE (P.T. AT CONCRETE FLOORS)
6A. 2x6 MIN. BOTTOM PLATE (P.T. AT CONCRETE FLOORS)
7. PERIMETER FLOOR BEAM PER SHEET S5.0
8. HEADER PER OPENING SCHEDULE
9. WINDOW SILL PER OPENING SCHEDULE
10. END NAILS THROUGH KING STUD TO HEADER SILL PER OPENING SCHEDULE
11. KING STUDS PER OPENING SCHEDULE
12. 2x6 MIN. TRIMMER
13. OPTIONAL WINDOW OPENING FRAMING PER SCHEDULE (REFER TO 4/S8.0 FOR DETAILS AND FLOOR PLANS FOR LOCATIONS)
14. OPTIONAL DOOR OPENING FRAMING PER SCHEDULE (REFER TO 5/S8.0 FOR DETAILS AND FLOOR PLANS FOR LOCATIONS)
15. HVAC OPENING @ EXTERIOR WALL (600#MAX WT.) SEE DETAIL 3/S8.1 FOR HVAC ATTACHMENT - SEE DETAIL 3/S8.1 FOR HVAC ATTACHMENT
16. 2x DOUBLE NAILER
17. FIRE BLOCKING @ 10'-0" AFF VERTICALLY, HORIZONTALLY AT THE CEILING AND FLOOR LEVELS.

NOTE: SEE CARPENTRY NOTES SHEET N1.0 SECTION 6 FOR WOOD SPECIES & GRADE

KEY NOTES

EXTERIOR WALL SCHEDULE			
FINISH TYPE	WALL FINISH COMMENTS	STUD TYPE	STUD SPACING
7/8" HARDI-BOARD w/ SYNTHETIC STUCCO OR 7/16" HARDI-LAP SIDING	WALL FINISH PER A5.4, A5.5, A5.6 & A5.7	HEM FIR #2 OR DOUG FIR #2	16" O.C. MAX
1/2" PLYWOOD SHEATHING CONFORMING TO PS1-09, APA RATED, 5 PLY 32/16", OR 7/16" OSB PANELS EXPOSURE 1 w/ 7/8" STUCCO	WALL FINISH PER A5.2 & A5.3; NAILING PER BLDG SECTIONS[1,2]	HEM FIR #2 OR DOUG FIR #2	16" O.C. MAX

FOOTNOTES
1. ALL NAILS IN EXTERIOR APPLICATIONS SHALL BE GALVANIZED.
2. TYPICAL PLYWOOD NAILING WHERE OCCURS: 0.131"Ø x2 1/4" GALV. NAILS @ 6" O.C. E.N. & 12" O.C. F.N. (ALL EDGES BLOCKED).

EXTERIOR WALL FINISH/WALL STUD SCHEDULE

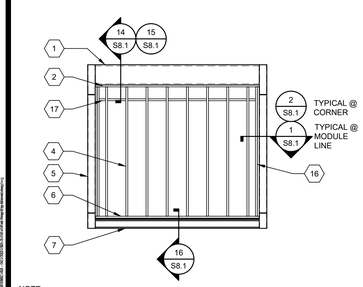

NOTE:
SEE S9.0 FOR ALTERNATE STEEL STUD WALL FRAMING.

TYP. END WALL FRAMING w/ NO OPENINGS SCALE: 1/4"=1'-0" 1

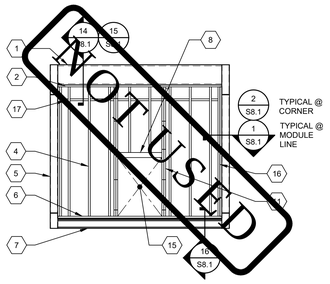

NOTE:
SEE S9.0 FOR ALTERNATE STEEL STUD WALL FRAMING.

TYP. END WALL FRAMING w/ INDOOR HVAC UNIT (OPTIONAL) SCALE: 1/4"=1'-0" 2

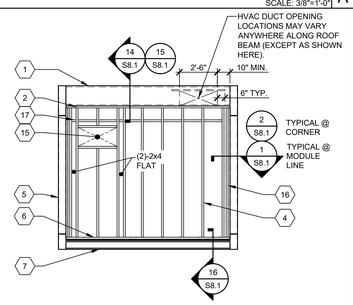

NOTE:
SEE S9.0 FOR ALTERNATE STEEL STUD WALL FRAMING.

TYP. END WALL FRAMING w/ WALL HUNG HVAC UNIT (OPTIONAL) SCALE: 1/4"=1'-0" 3

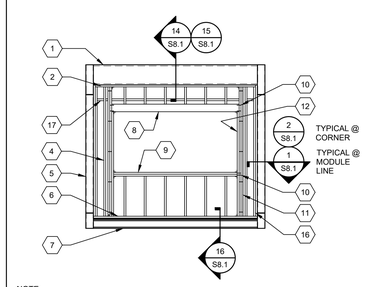

NOTE:
SEE S9.0 FOR ALTERNATE STEEL STUD WALL FRAMING.

TYPICAL END WALL FRAMING WINDOW SCALE: 1/4"=1'-0" 4

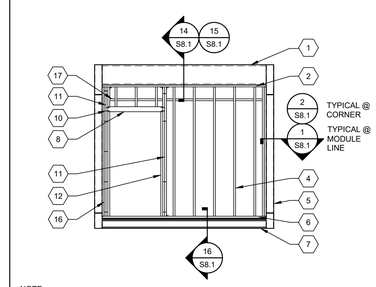

NOTE:
SEE S9.0 FOR ALTERNATE STEEL STUD WALL FRAMING.

TYPICAL END WALL FRAMING w/ DOOR SCALE: 1/4"=1'-0" 5

DOOR/WINDOW OPENING AT TYPICAL WALL (NO STUCCO)								
					HEADER TO KING STUD NAILING		WINDOW SILL TO KING STUD NAILING	
OPENING SIZE	HEADER	WINDOW SILL[2] (AS APPLICABLE)	KING STUDS[1]	KING STUD INTERNAIL SPACING	# END NAILS 1ST KING STUD TO HEADER[3] (0.131"Ø x3" NAILS)	# FACE NAILS KING STUD TO KING STUD @ HEADER (0.131"Ø x3" NAILS)	# END NAILS 1ST KING STUD TO WINDOW SILL[3] (0.131"Ø x3" NAILS)	# FACE NAILS KING STUD TO KING STUD @ WINDOW SILL (0.131"Ø x3" NAILS)
>8'-0" TO 10'-0"	6x6	(2) 2x6	(3) 2x6	0.131"Ø x3" NAILS @ 12" O.C. MAX STAGGERED	6	3	4	2
>6'-0" TO 8'-0"	6x6	(1) 2x6	(2) 2x6		5	3	3	2
>4'-0" TO 6'-0"	4x6 FLAT	(1) 2x6	(2) 2x6		4	2	3	2
4'-0" OR LESS	4x6 FLAT	(1) 2x6	(2) 2x6		4	2	3	2

DOOR/WINDOW OPENING AT STUCCO WALL								
					HEADER TO KING STUD NAILING		WINDOW SILL TO KING STUD NAILING	
OPENING SIZE	HEADER	WINDOW SILL[2] (AS APPLICABLE)	KING STUDS[1]	KING STUD INTERNAIL SPACING	# END NAILS 1ST KING STUD TO HEADER[3] (0.131"Ø x3" NAILS)	# FACE NAILS KING STUD TO KING STUD @ HEADER (0.131"Ø x3" NAILS)	# END NAILS 1ST KING STUD TO WINDOW SILL[3] (0.131"Ø x3" NAILS)	# FACE NAILS KING STUD TO KING STUD @ WINDOW SILL (0.131"Ø x3" NAILS)
>8'-0" TO 10'-0"	6x6	(2) 2x6	(3) 2x6	0.131"Ø x3" NAILS @ 12" O.C. MAX STAGGERED	6	3	4	2
>6'-0" TO 8'-0"	6x6	(2) 2x6	(3) 2x6		5	3	4	2
>4'-0" TO 6'-0"	4x6 FLAT	(1) 2x6	(2) 2x6		4	2	3	2
4'-0" OR LESS	4x6 FLAT	(1) 2x6	(2) 2x6		4	2	3	2

FOOTNOTES
1. PROVIDE (2) SIMPSON A34 T&B OF KING STUDS TO PLATES FOR OPENINGS GREATER THAN 4'-0". PROVIDE (1) SIMPSON A34 T&B OF KING STUDS TO PLATES FOR OPENINGS 4'-0" OR LESS.
2. WHEN MORE THAN A SINGLE SILL PLATE IS REQUIRED, INTERNAIL w/ 0.131"Ø x3" NAILS @ 12" O.C. STAGGERED.
3. TWO (2) END NAILS PER LAMINATION MINIMUM.

OPENING SCHEDULE

IDENTIFICATION STAMP
DIV. OF THE STATE ARCHITECT
APP: 02-122976 INC:
REVIEWED FOR
SS ☑ FLS ☑ ACS ☑
DATE: 03/12/2025

TRACY UNIFIED SCHOOL DISTRICT

HMC Architects

3595001000

2101 CAPITOL AVENUE, SUITE 100
SACRAMENTO, CA 95816
916 368 7990 / www.hmcarchitects.com

ISSUE

Δ	DESCRIPTION	DATE
1	ADDENDUM "A"	3/20/25

AMS American Modular Systems
787 Spreckels Ave., Manteca, CA 95336
Phone (209) 825-1921 Fax (209) 825-7018
www.americanmodular.com

INTELLECTUAL-PROPERTY & PROPRIETARY RIGHTS STATEMENT
COPYRIGHT © AMERICAN MODULAR SYSTEMS (AMS)
AMS OWNS ALL COPYRIGHT AND OTHER INTELLECTUAL-PROPERTY AND PROPRIETARY RIGHTS IN THESE DRAWINGS, SPECIFICATIONS, AND THE MATERIAL CONTAINED HEREIN. CERTAIN ELEMENTS SHOWN IN THESE DOCUMENTS ARE REGISTERED TRADEMARKS OF AMS. ALL RIGHTS NOT EXPRESSLY CONTAINED HEREIN ARE RESERVED. NOTHING CONTAINED HEREIN SHALL BE CONSTRUED AS IMPLYING OR CONFERRING ANY RIGHTS IN THESE DRAWINGS AND SPECIFICATIONS, AND THE MATERIAL CONTAINED HEREIN MAY NOT BE REPRODUCED, TRANSMITTED, COPIED, DISTRIBUTED, MODIFIED, OR OTHERWISE DISPOSED OF (DIRECTLY OR INDIRECTLY) AND MAY NOT BE USED (IN WHOLE OR IN PART) TO ASSIST IN THE CONSTRUCTION, DESIGN, OR OTHER MAKING OF, OR FOR THE PURPOSE OF FURNISHING ANY INFORMATION FOR THE CONSTRUCTION, DESIGN, OR OTHER MAKING OF, ANY BUILDINGS (MODULAR OR OTHERWISE), DRAWINGS, SPECIFICATIONS, PRINTS, APPARATUS, OR PARTS THEREOF, EXCEPT AS EXPRESSLY PERMITTED BY WRITTEN CONSENT OF, OR IN A WRITTEN AGREEMENT WITH, AMS. SUBMITTAL OR DISTRIBUTION TO MEET OFFICIAL REGULATORY REQUIREMENTS WILL NOT BE CONSTRUED AS PUBLICATION IN DEROGATION OF AMS'S COPYRIGHT OR OTHER INTELLECTUAL-PROPERTY OR PROPRIETARY RIGHTS.

PRE-CHECKED SET NAME
24' x 40' THRU 120' x 40'
STANDARD MODULAR BUILDING
(LOW SEISMIC)
FORM®

SITE SPECIFIC PROJECT NAME

APPROVED
DIV. OF THE STATE ARCHITECT
APP: 04-122059 PC
REVIEWED FOR
SS ☑ FLS ☑ ACS ☑ CG ☑
DATE: 12/11/2023

☐ 2022 CBC PRE-CHECK (PC) DOCUMENT
A SEPARATE PROJECT APPLICATION FOR CONSTRUCTION IS REQUIRED.

MANUFACTURER PROFESSIONAL OF RECORD ON PC

LICENSED ARCHITECT PATRICK J. MURPHY No. C12631 Ren. 3-31-25 STATE OF CALIFORNIA

LICENSED PROFESSIONAL ENGINEER MARK D. FOSTER No. S3380 STRUCTURAL STATE OF CALIFORNIA RS#22214

11/21/2023

THESE DRAWINGS ARE PRELIMINARY AND NOT FOR CONSTRUCTION UNLESS STAMPED & SIGNED BY THE DESIGN PROFESSIONAL OF RECORD.

REVISIONS
1
2
3
4

DRAWN BY:	AA
SCALE:	AS NOTED
DATE:	MM/DD/YY
PROJECT NO:	XXXX-22

SHEET TITLE:
WALL FRAMING
ELEVATIONS & SCHEDULES
- WOOD STUDS

SHEET NUMBER:
S8.0

KEYNOTES

GENERAL NOTES

FACILITY:
JACOBSON ELEMENTARY SCHOOL
1750 W KAVANAGH AVE
TRACY, CA 95376

PROJECT:
JACOBSON ES - TK CLASSROOM

SHEET NAME:
WALL FRAMING ELEVATIONS & SCHEDULES - WOOD STUDS

DATE: **04/03/24** CLIENT PROJ NO: **3595001000**

SHEET:
S8.0
ADDENDUM "A"

PLEASE RECYCLE

Autodesk Docs://3595005000 TUSD TK CLASSROOMS 2025 R22/3595005000-A-TUSD-BOHN-SITE.rvt
12/3/2024 9:05:40 AM

THE LINE SHOWN ABOVE IS EXACTLY ONE INCH LONG AT THIS SHEETS ORIGINAL PAGE SIZE

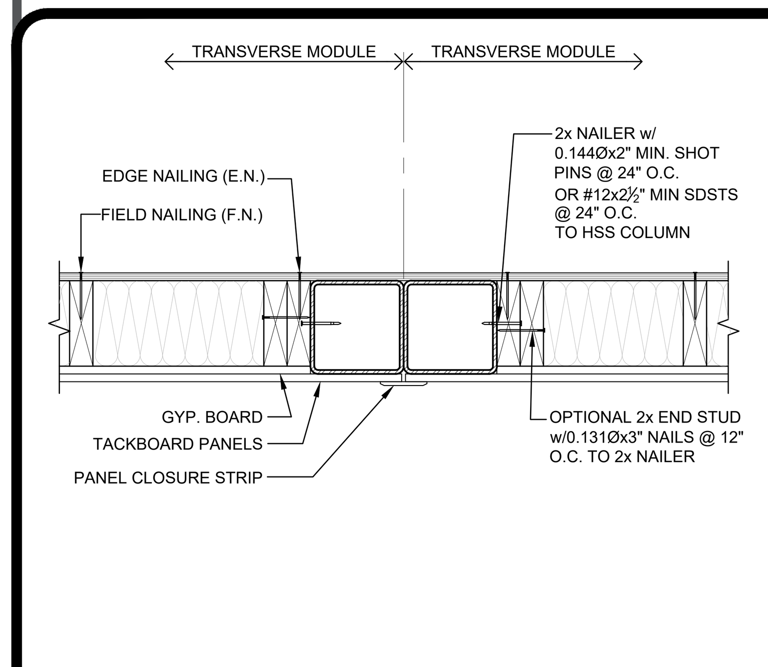

WALL TO COLUMN TYP. DETAIL @ MODLINES
FOR COLUMN LOCATION REFER TO ARCH. DETAILS SCALE: 1-1/2" = 1'-0" 1

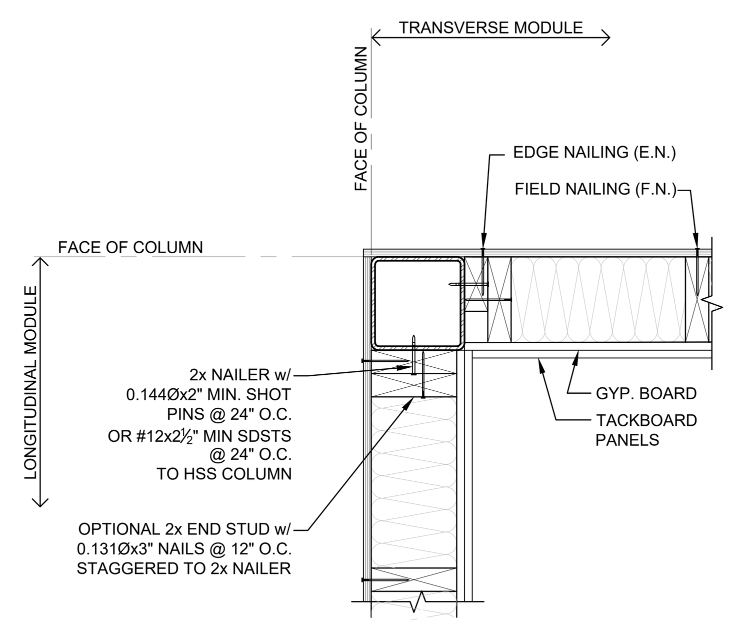

WALL TO COLUMN TYP. DETAIL @ CORNER
FOR COLUMN LOCATION REFER TO ARCH. DETAILS SCALE: 1-1/2" = 1'-0" 2

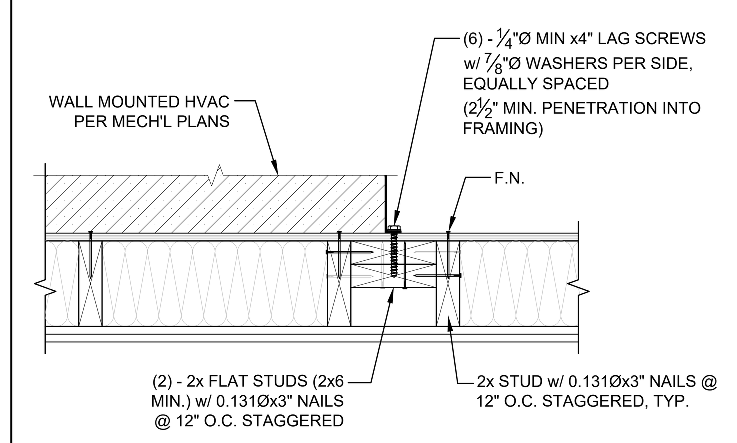

WALL HUNG HVAC ATTACHMENT DETAIL SCALE: 1-1/2" = 1'-0" 3

NOT USED 4

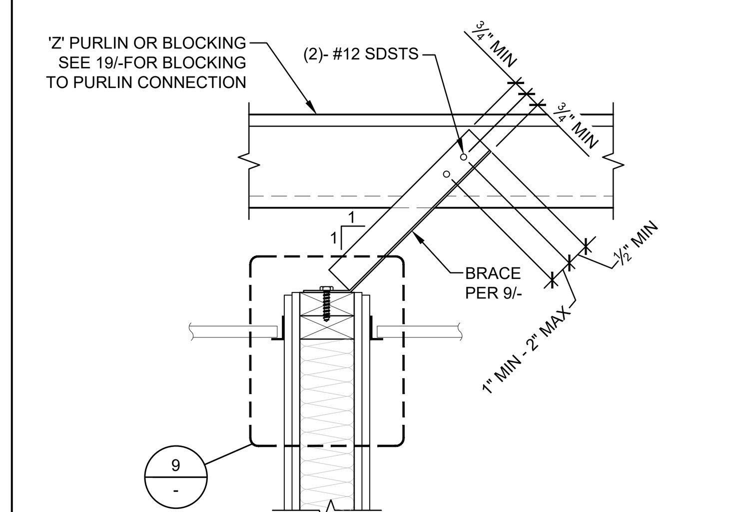

NOTE:
WALL MUST BE BRACED @ 8'-0" MAX BY EITHER AN INTERSECTING WALL OR WITH TOP PLATE BRACING TO ROOF FRAMING.

TYP. INTERIOR WALL BRACING
BRACE PARALLEL TO PURLINS SCALE: 1-1/2" = 1'-0" 5

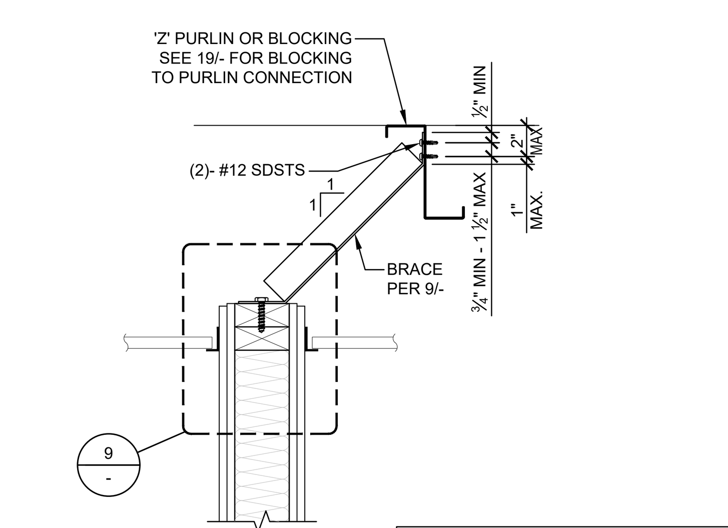

NOTE:
WALL MUST BE BRACED @ 8'-0" MAX BY EITHER AN INTERSECTING WALL OR WITH TOP PLATE BRACING TO ROOF FRAMING.

TYP. INTERIOR WALL BRACING
BRACE PERPENDICULAR TO PURLINS SCALE: 1-1/2" = 1'-0" 6

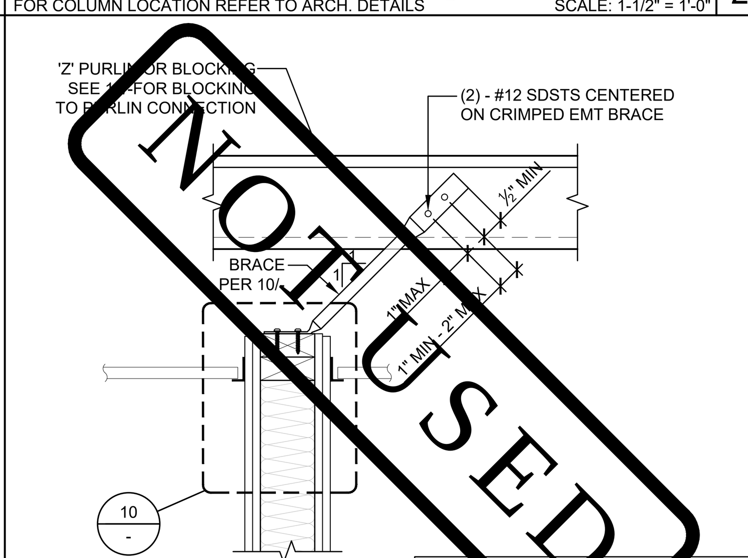

NOTE:
WALL MUST BE BRACED @ 8'-0" MAX BY EITHER AN INTERSECTING WALL OR WITH TOP PLATE BRACING TO ROOF FRAMING.

ALT. INTERIOR WALL BRACING w/ EMT BRACE
BRACE PARALLEL TO PURLINS SCALE: 1-1/2" = 1'-0" 7

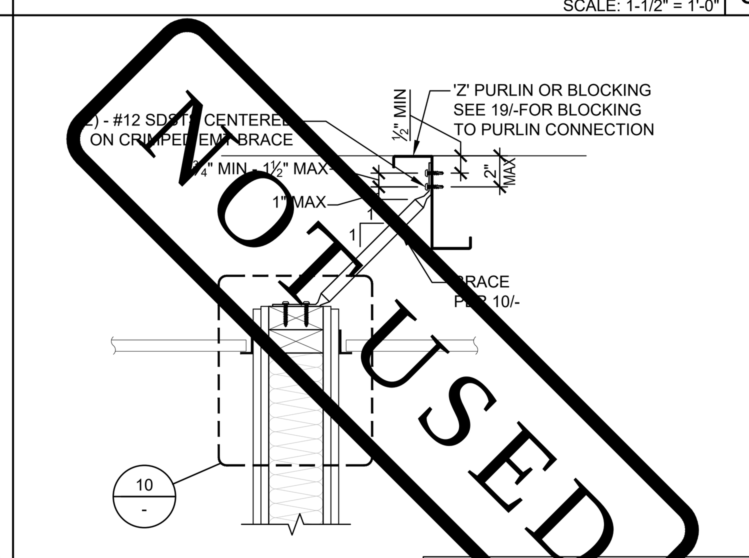

NOTE:
WALL MUST BE BRACED @ 8'-0" MAX BY EITHER AN INTERSECTING WALL OR WITH TOP PLATE BRACING TO ROOF FRAMING.

ALT. INTERIOR WALL BRACING w/ EMT BRACE
BRACE PERPENDICULAR TO PURLINS SCALE: 1-1/2" = 1'-0" 8

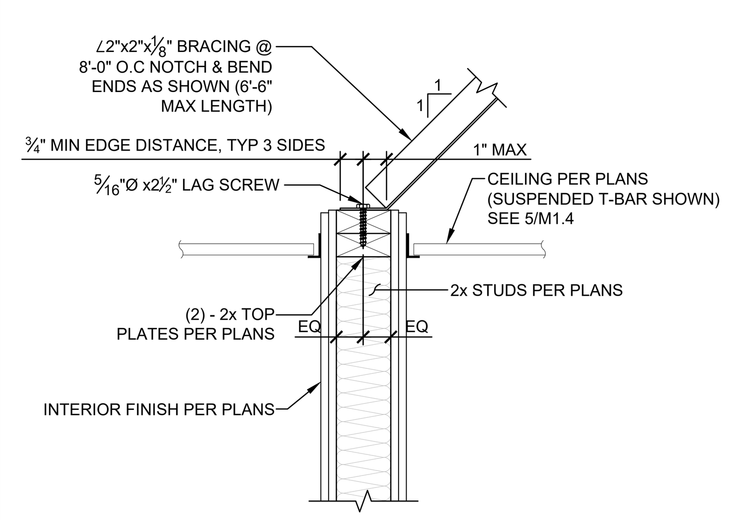

TYP. INTERIOR WALL BRACING
INTERIOR PARTITION BRACING SCALE: 1-1/2" = 1'-0" 9

EMT BRACE SCHEDULE	
MAX LENGTH	EMT SIZE
5'-2"	¾"Ø
6'-6"	1"Ø

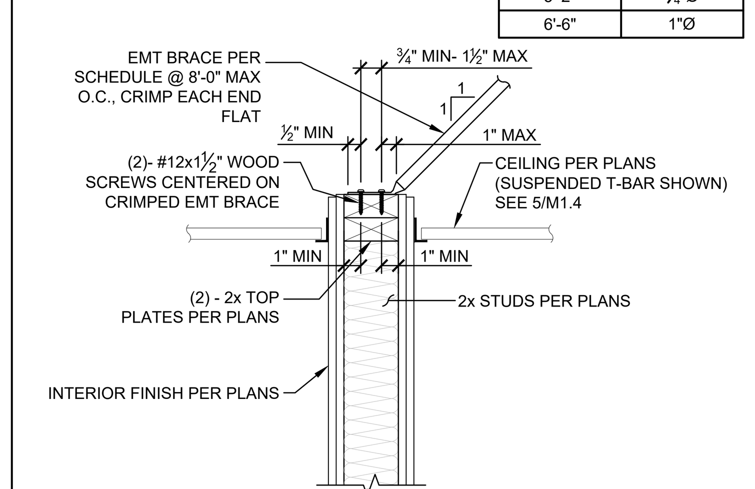

ALT. INTERIOR WALL BRACING
INTERIOR PARTITION BRACING w/ EMT BRACE SCALE: 1-1/2" = 1'-0" 10

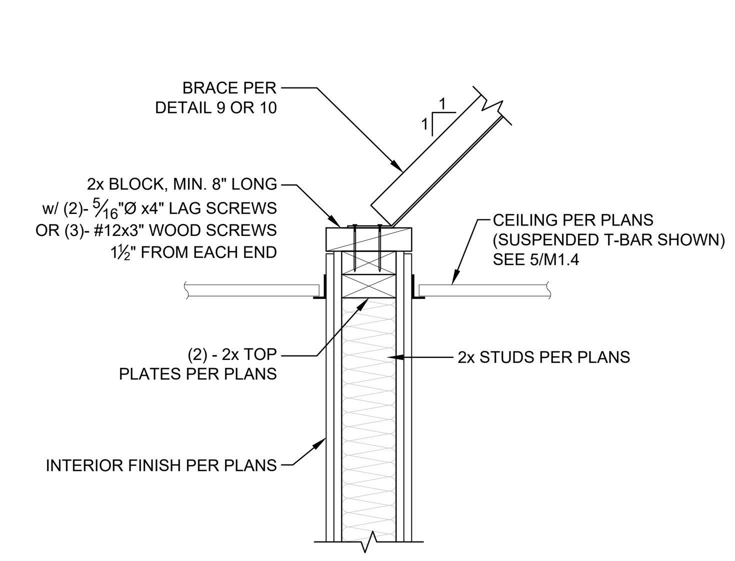

ALT. BLOCKING @ INT. WALL BRACING SCALE: 1-1/2" = 1'-0" 11

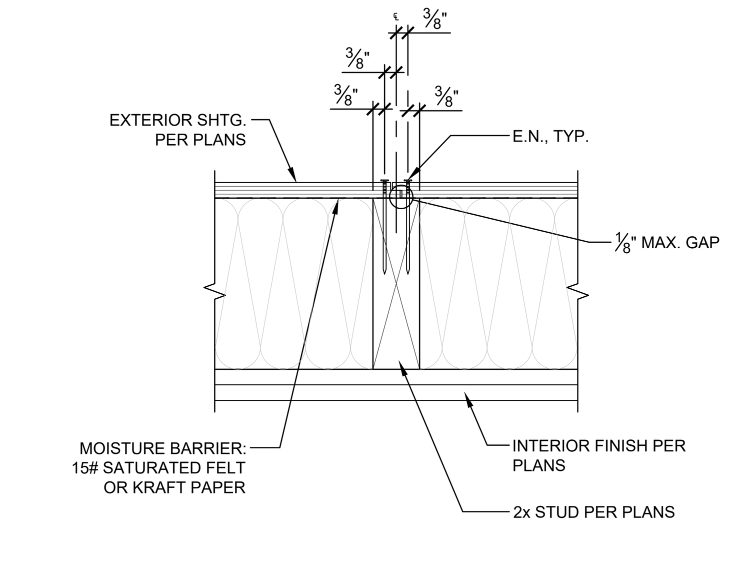

TYP. SHEATHING JOINT SCALE: 1-1/2" = 1'-0" 12

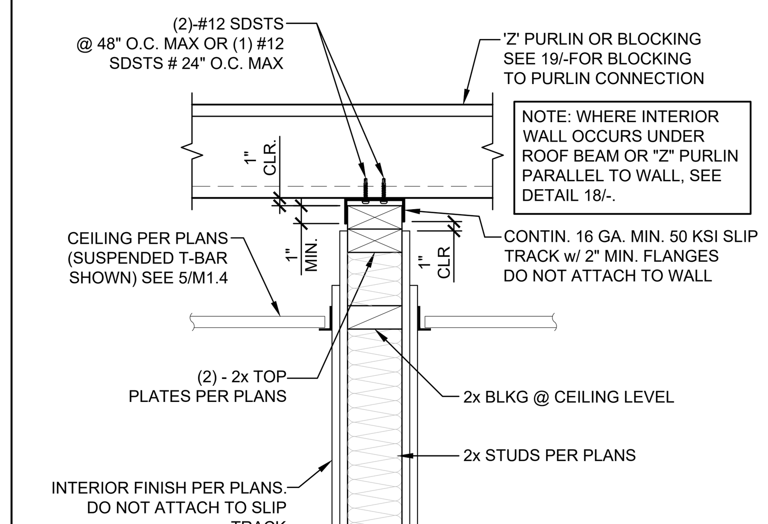

NOTE:
GYPSUM BOARD SHALL NOT BE ATTACHED TO THE SLIP TRACK.

ALT. INTERIOR WALL ATTACHMENT
TO PURLINS OR BLOCKING PERPENDICULAR TO WALL SCALE: 1-1/2" = 1'-0" 13

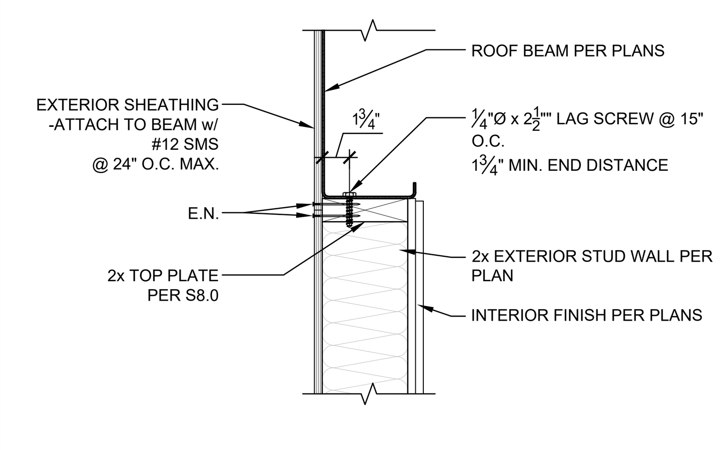

EXTERIOR WALL TO ROOF BEAM DETAIL SCALE: 1-1/2" = 1'-0" 14

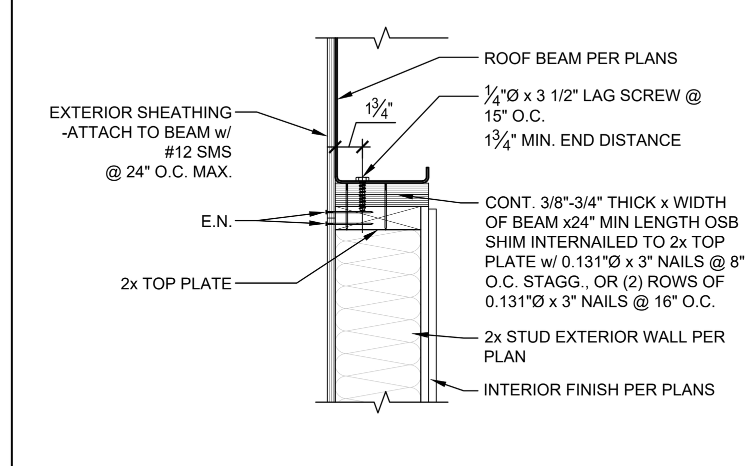

EXTERIOR WALL TO ROOF BEAM DETAIL
AT SHIM CONDITION SCALE: 1-1/2" = 1'-0" 15

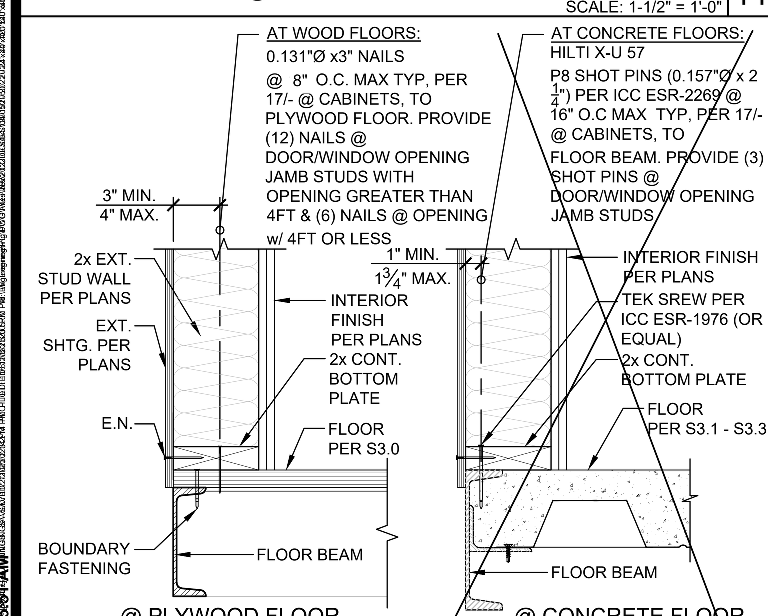

FASTENER END DISTANCE: 2" MIN - ½ OF SPACING MAX FROM ENDS OF PLATES, TYP.

TYP. EXTERIOR WALL TO FLOOR DETAIL SCALE: 1-1/2" = 1'-0" 16

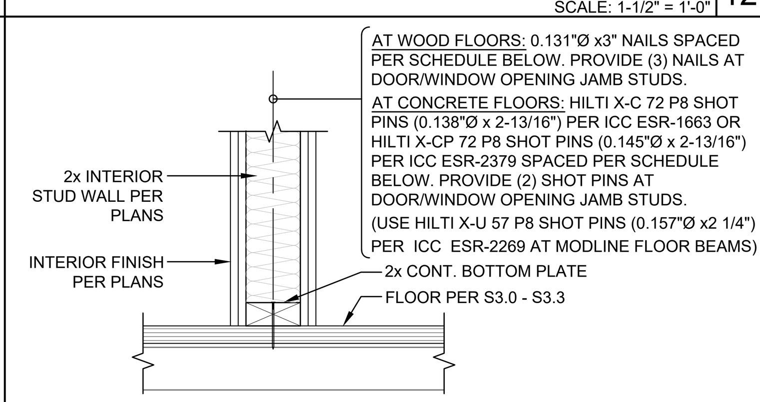

SILL PLATE FASTENER SPACING SCHEDULE		
	CONCRETE FLOOR	WOOD FLOOR
NO CABINETS	24" O.C.	24" O.C.
CABINETS ON ONE SIDE OF WALL	12" O.C.	10" O.C.
CABINETS ON BOTH SIDES OF WALL	6" O.C.	5" O.C.

FASTENER END DISTANCE: 2" MIN - ½ OF SPACING MAX FROM ENDS OF PLATES, TYP.

TYP. INTERIOR NON-BEARING WALL ATTACHMENT SCALE: 1-1/2" = 1'-0" 17

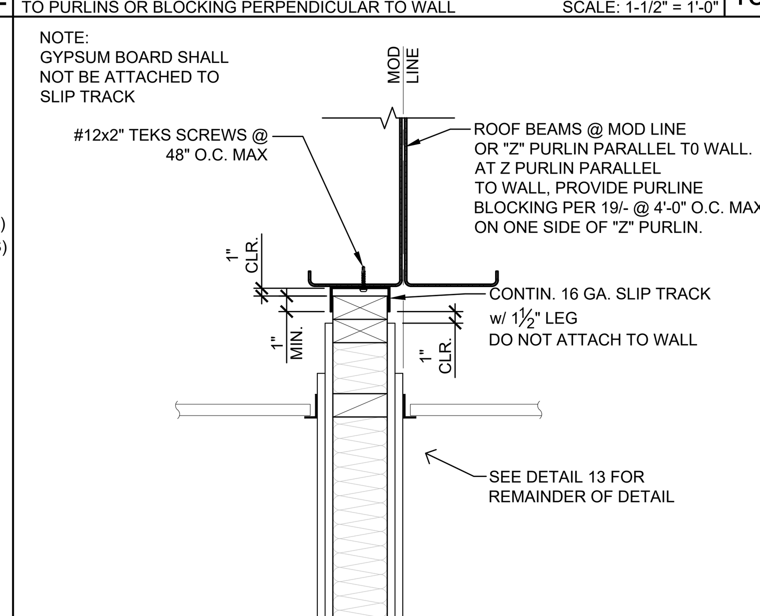

TYP. INTERIOR NON-BEARING WALL ATTACHMENT
TO ROOF BEAMS @ MODLINE OR 'Z' PURLINS PARALLEL TO WALL SCALE: 1-1/2" = 1'-0" 18

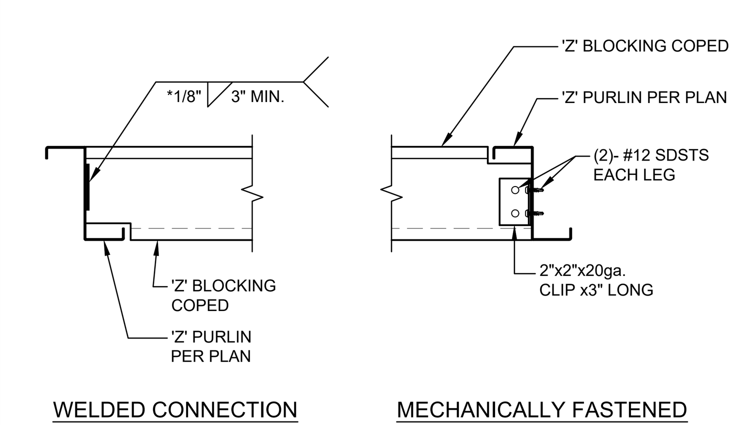

*NOTE: MAX FILLET WELD SIZE SHALL BE EQUAL TO THE THE THICKNESS OF THE THINNER SHEET STEEL (AWS D1.3, SECTION 2.3.3)

PURLIN BLOCKING CONNECTIONS SCALE: 1-1/2" = 1'-0" 19

TYPICAL INTERIOR NON-BEARING PARTITION WALL NOTES:

1. STUD SIZE: 2x4 MIN.
2. STUD SPACING: 16" O.C. MAX
3. WOOD SPECIES & GRADE: PER CARPENTRY NOTES SHEET N1.0 SECTION 6.
4. STUD NAILING TO T&B PLATES: (3)-0.131"Ø x 3" END NAILS OR (4)-0.131"Ø x 3" TOE NAILS.
5. DOUBLE 2x TOP PLATES: 0.131"Ø x 3" NAILS @ 16" O.C. TYP. LAP SPLICE 4'-0" MIN. w/0.131"Ø x 3" NAILS @ 6" O.C. & LAP CORNERS w/(4)-0.131"Ø x 3" NAILS.
6. INTERSECTIONS: FACE NAIL END STUD TO CROSS WALL (INCLUDING EXTERIOR WALLS) w/0.131"Ø x 3" NAILS @ 12" O.C. (ATTACH PER 2/- @ HSS COLUMNS)
7. DOOR, WINDOW, & HVAC OPENINGS: PER REQUIREMENTS FOR EXTERIOR STUCCO WALLS PER SHEET S8.0 EXCEPT FRAMING MAY BE 2x4 MIN.

PURLIN BLOCKING CONNECTIONS 20

Autodesk Docs://3595005000 TUSD TK CLASSROOMS 2025 R22/3595005000-A-TUSD-BOHN-SITE.rvt
12/3/2024 9:55:54 AM

IDENTIFICATION STAMP
DIV. OF THE STATE ARCHITECT
APP: 02-122976 INC:
REVIEWED FOR
SS ☑ FLS ☑ ACS ☑
DATE: 03/12/2025

TRACY UNIFIED SCHOOL DISTRICT

HMC Architects
3595001000
2101 CAPITOL AVENUE, SUITE 100
SACRAMENTO, CA 95816
916 368 7990 / www.hmcarchitects.com

ISSUE

Δ	DESCRIPTION	DATE
A	ADDENDUM "A"	3/20/25

American Modular Systems
787 Spreckels Ave., Manteca, CA 95336
Phone (209) 825-1921 Fax (209) 825-7018
www.americanmodular.com

INTELLECTUAL-PROPERTY & PROPRIETARY RIGHTS STATEMENT
COPYRIGHT © AMERICAN MODULAR SYSTEMS (AMS)
AMS OWNS ALL COPYRIGHT AND OTHER INTELLECTUAL-PROPERTY AND PROPRIETARY RIGHTS IN THESE DRAWINGS, SPECIFICATIONS, AND THE MATERIAL CONTAINED HEREIN. CERTAIN ELEMENTS SHOWN IN THESE DOCUMENTS ARE REGISTERED TRADEMARKS OF AMS. ALL PATENTABLE MATERIALS CONTAINED IN THESE DOCUMENTS AND ORIGINATING WITH AMS WILL REMAIN THE SOLE PROPERTY OF AMS. THESE DRAWING, SPECIFICATIONS, AND THE MATERIAL CONTAINED HEREIN MAY NOT BE REPRODUCED, TRANSMITTED, COPIED, DISTRIBUTED, MODIFIED, OR OTHERWISE DISPOSED OF (DIRECTLY OR INDIRECTLY) AND MAY NOT BE USED (IN WHOLE OR IN PART) TO ASSIST IN THE CONSTRUCTION, DESIGN, OR OTHER MAKING OF, OR FOR THE PURPOSE OF FURNISHING ANY INFORMATION FOR THE CONSTRUCTION, DESIGN, OR OTHER MAKING OF, ANY BUILDINGS (MODULAR OR OTHERWISE), DRAWINGS, SPECIFICATIONS, PRINTS, APPARATUS, OR PARTS THEREOF, EXCEPT AS EXPRESSLY PERMITTED BY WRITTEN CONSENT OF, OR IN A WRITTEN AGREEMENT WITH, AMS. SUBMITTAL OR DISTRIBUTION TO MEET OFFICIAL REGULATORY REQUIREMENTS WILL NOT BE CONSTRUED AS PUBLICATION IN DEROGATION OF AMS'S COPYRIGHT OR OTHER INTELLECTUAL-PROPERTY OR PROPRIETARY RIGHTS.

PRE-CHECKED SET NAME
24' x 40' THRU 120' x 40'
STANDARD MODULAR BUILDING
(LOW SEISMIC)
FORM

SITE SPECIFIC PROJECT NAME

APPROVED
DIV. OF THE STATE ARCHITECT
APP: 04-122050 PC
REVIEWED FOR
SS ☑ FLS ☑ ACS ☑ CG ☑
DATE: 12/11/2023

2022 CBC PRE-CHECK (PC) DOCUMENT
A SEPARATE PROJECT APPLICATION FOR CONSTRUCTION IS REQUIRED.

MANUFACTURER PROFESSIONAL OF RECORD ON PC

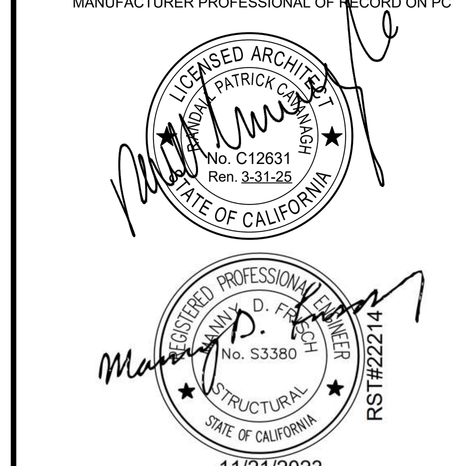

THESE DRAWINGS ARE PRELIMINARY AND NOT FOR CONSTRUCTION UNLESS STAMPED & SIGNED BY THE DESIGN PROFESSIONAL OF RECORD.

KEYNOTES

GENERAL NOTES

REVISIONS
1
2
3
4

DRAWN BY:	AA
SCALE:	AS NOTED
DATE:	MM/DD/YY
PROJECT NO:	XXXX-22

SHEET TITLE:
WALL FRAMING DETAILS - WOOD STUDS

SHEET NUMBER:
S8.1

FACILITY:
JACOBSON ELEMENTARY SCHOOL
1750 W KAVANAGH AVE
TRACY, CA 95376

PROJECT:
JACOBSON ES - TK CLASSROOM

SHEET NAME:
WALL FRAMING DETAILS - WOOD STUDS

DATE: **04/03/24** CLIENT PROJ NO: **3595001000**

SHEET:
S8.1
ADDENDUM "A"

PLEASE RECYCLE

THE LINE SHOWN ABOVE IS EQUAL TO ONE INCH ON ORIGINAL 22X34 SHEETS UNLESS OTHERWISE NOTED

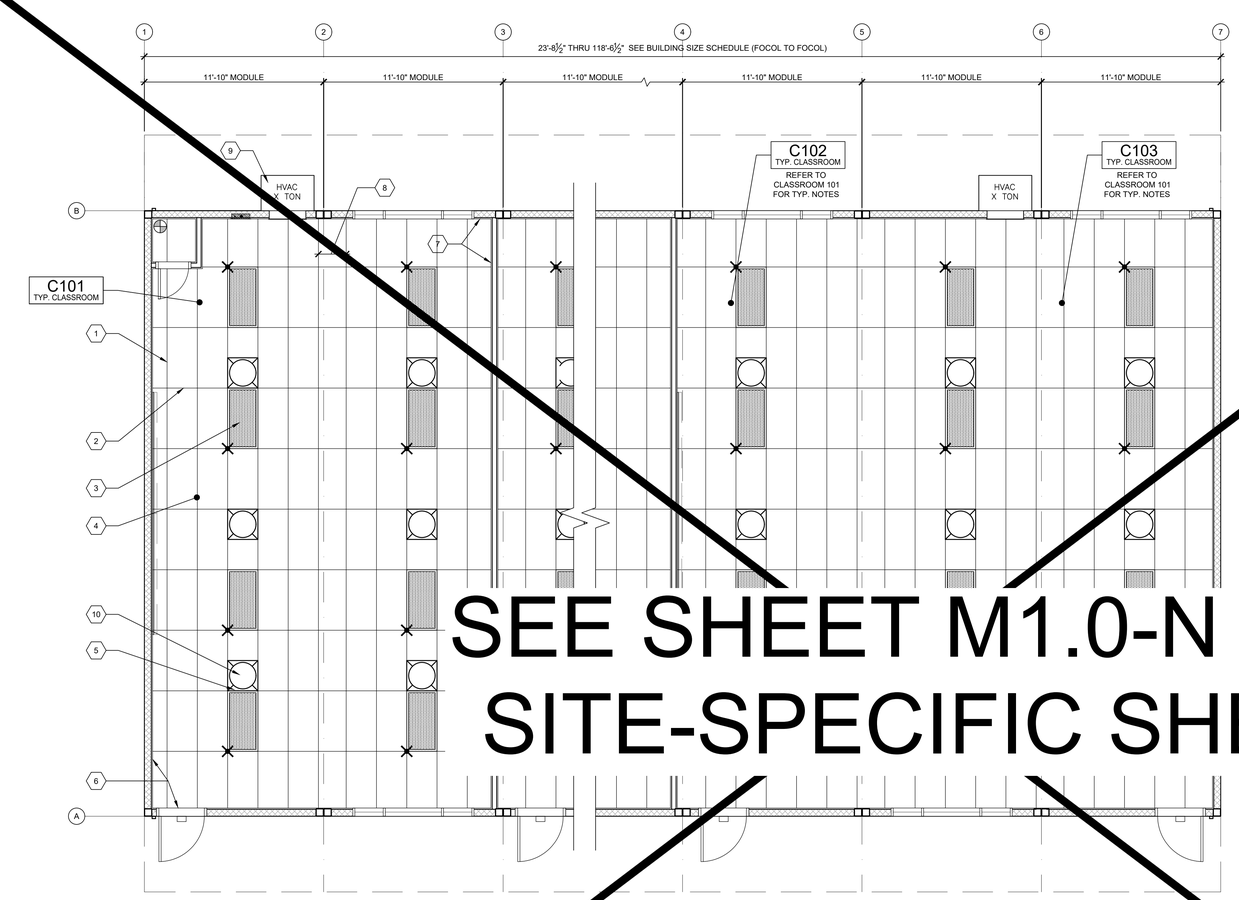

SEE SHEET M1.0-N FOR SITE-SPECIFIC SHEET

TYPICAL REFLECTED CEILING PLAN

SCALE: 1/4" = 1'-0" | 1

1. MAIN TEE RUNNER TYP. PER TABLE A, SHEET M1.7
2. CROSS TEE RUNNER TYP. PER TABLE A, SHEET M1.7
3. INTERIOR LIGHT FIXTURE, REFER TO SHEET SHEET E1.0 FOR SPEC'S ATTACHMENT PER DETAIL 7/M1.4
4. CEILING HEIGHT @ 8'-0" MIN.
5. STRUT/SPLAY WIRE ASSEMBLY, SEE 2/M1.4 FOR DETAILS
6. FIXED CEILING END, SEE DETAIL 5A/M1.4
7. FREE CEILING END, SEE DETAIL 5B/M1.4
8. CENTER SECTION THAT CROSSES MODULE LINE TO BE FIELD INSTALLED, SEE DETAIL 5C/M1.4
9. TYP. HVAC UNIT
10. OPTIONAL SOLA-TUBE - SEE DETAIL 1/M1.6

KEY NOTES

1. WHERE TWO OR MORE HVAC UNITS SERVE A COMMON SPACE, UNITS SHALL BE EQUIPPED WITH A DUCT SMOKE DETECTOR FOR AUTO SHUTDOWN. INTERCONNECT WITH FIRE ALARM SYSTEM.
2. AUTOMATIC SHUT-OFF IS NOT REQUIRED WHEN ALL OCCUPIED ROOMS SERVED BY THE AIR HANDLING EQUIPMENT HAVE DIRECT ACCESS TO THE EXTERIOR AND THE TRAVEL DISTANCE DOES NOT EXCEED 100 FT. PER C.M.C. 608.1 EXCEPTION #2.
3. LIGHT FIXTURES MAY BE INSTALLED ROTATED 90° FROM SHOWN TO MATCH T-GRID.
4. PC TITLE 24 HAS BEEN RUN FOR WORSE CASE OUTDOOR VENTILATION REQUIREMENTS (SEE OUTDOOR VENTILATION ON SHEET N2.0 FOR OUR OUTDOOR VENTILATION DESIGN REQUIREMENT NOTES)
5. ACCEPTANCE TESTING PER ENERGY CODE SECTION 10-103.
6. ACCEPTANCE TESTS TO BE COMPLETED ON NEWLY INSTALLED OR REPLACEMENT OF MECHANICAL SYSTEMS BEFORE PROJECT COMPLETION PER THE CALIFORNIA ENERGY CODE SECTION 10-103. ACCEPTANCE TESTS MUST BE PERFORMED BY A CERTIFIED ACCEPTANCE TEST TECHNICIAN (ATT). THE ACCEPTANCE TESTING PROCEDURES MUST BE REPEATED, AND DEFICIENCIES CORRECTED UNTIL THE INSTALLATION OF THE SPECIFIED SYSTEMS CONFORM AND PASS THE REQUIRED ACCEPTANCE CRITERIA. COMPLETED NRCA FORMS SHALL BE SUBMITTED TO THE PROJECT INSPECTOR AND THE DISTRICT.

GENERAL NOTES

MEP COMPONENT ANCHORAGE NOTES

ALL MECHANICAL, PLUMBING, AND ELECTRICAL COMPONENTS SHALL BE ANCHORED AND INSTALLED PER THE DETAILS ON THE DSA APPROVED CONSTRUCTION DOCUMENTS. THE FOLLOWING COMPONENTS SHALL BE ANCHORED OR BRACED TO MEET THE FORCE AND DISPLACEMENT REQUIREMENTS PRESCRIBED IN THE 2022 CBC, SECTIONS 1617A.1.18 THROUGH 1617A.1.26 AND ASCE 7-16 CHAPTER 13, 26 AND 30.

1. ALL PERMANENT EQUIPMENT AND COMPONENTS.
2. TEMPORARY, MOVABLE OR MOBILE EQUIPMENT THAT IS PERMANENTLY ATTACHED (E.G. HARD WIRED) TO THE BUILDING UTILITY SERVICES SUCH AS ELECTRICITY, GAS OR WATER. "PERMANENTLY ATTACHED" SHALL INCLUDE ALL ELECTRICAL CONNECTIONS EXCEPT PLUGS FOR110/220 VOLT RECEPTACLES HAVING A FLEXBLE CABLE.
3. TEMPORARY, MOVABLE OR MOBILE EQUIPMENT WHICH IS HEAVIER THAN 400 POUNDS OR HAS A CENTER OF MASS LOCATED 4 FEET OR MORE ABOVE THE ADJACENT FLOOR OR ROOF LEVEL THAT DIRECTLY SUPPORT THE COMPONENT IS REQUIRED TO BE RESTRAINED IN A MANNER APPROVED BY DSA.

THE FOLLOWING MECHANICAL AND ELECTRICAL COMPONENTS SHALL BE POSITIVELY ATTACHED TO THE STRUCTURE BUT NEED NOT DEMONSTRATE DESIGN COMPLIANCE WITH THE REFERENCE NOTED ABOVE. THESE COMPONENTS SHALL HAVE FLEXIBLE CONNECTIONS PROVIDED BETWEEN THE COMPONENT AND ASSOCIATED DUCTWORK, PIPING, AND CONDUIT. FLEXIBLE CONNECTIONS MUST ALLOW MOVEMENT IN BOTH TRANSVERSE AND LONGITUDINAL DIRECTIONS:

A. COMPONENTS WEIGHING LESS THAN 400 POUNDS AND HAVE A CENTER OF MASS LOCATED 4 FEET OR LESS ABOVE THE ADJACENT FLOOR OR ROOF LEVEL THAT DIRECTLY SUPPORT THE COMPONENT.
B. COMPONENTS WEIGHING LESS THAN 20 POUNDS, OR IN THE CASE OF DISTRIBUTED SYSTEMS, LESS THAN 5 POUNDS PER FOOT, WHICH ARE SUSPENDED FROM A ROOF OR FLOOR OR HUNG FROM A WALL.

THE ANCHORAGE OF ALL MECHANICAL, ELECTRICAL AND PLUMBING COMPONENTS SHALL BE SUBJECT TO THE APPROVAL OF THE DESIGN PROFESSIONAL IN GENERAL RESPONSIBLE CHARGE OR STRUCTURAL ENGINEER DELEGATED RESPONSIBILITY AND ACCEPTANCE BY DSA. THE PROJECT INSPECTOR WILL VERIFY THAT ALL COMPONENTS AND EQUIPMENT HAVE BEEN ANCHORED IN ACCORDANCE WITH THE ABOVE REQUIREMENTS.

PIPING, DUCTWORK, AND ELECTRICAL DISTRIBUTION SYSTEM BRACING NOTES

PIPING, DUCTWORK, AND ELECTRICAL DISTRIBUTION SYSTEMS SHALL BE BRACED TO COMPLY WITH THE FORCES AND DISPLACEMENTS PRESCRIBED IN ASCE 7-16 SECTION 13.3 AS DEFINED IN ASCE 7-16 SECTION 13.6.5, 13.6.6, 13.6.7, 13.6.8; AND 2022 CBC, SECTIONS 1617A.1.24, 1617A.1.25 AND 1617A.1.26.

THE METHOD OF SHOWING BRACING AND ATTACHMENTS TO THE STRUCTURE FOR THE IDENTIFIED DISTRIBUTION SYSTEM ARE AS NOTED BELOW. WHEN BRACING AND ATTACHMENTS ARE BASED ON A PRE-APPROVED INSTALLATION GUIDE (E.G., OSHPD OPM FOR 2013 CBC OR LATER), COPIES OF THE BRACING SYSTEM INSTALLATION GUIDE OR MANUAL SHALL BE AVAILABLE ON THE JOBSITE PRIOR TO THE START OF AND DURING THE HANGING AND BRACING OF THE DISTRIBUTION SYSTEMS. THE STRUCTURAL ENGINEER OF RECORD SHALL VERIFY THE ADEQUACY OF THE STRUCTURE TO SUPPORT THE HANGER AND BRACE LOADS.

MECHANICAL PIPING (MP), MECHANICAL DUCTS (MD), PLUMBING PIPING (PP), ELECTRICAL DISTRIBUTION SYSTEMS (E):

MP☒ MD☒ PP☒ E☒ OPTION 1: DETAILED ON THE APPROVED DRAWINGS WITH PROJECT SPECIFIC NOTES AND DETAILS.

MP☐ MD☐ PP☐ E☐ OPTION 2: SHALL COMPLY WITH THE APPLICABLE OSHPD PRE-APPROVAL (OPM #) #_____.

BUILDING SIZE SCHEDULE			
BUILDING SIZE (FT)	TOTAL # OF 12'-0" WIDE MODULES	TOTAL # OF CENTER MODULES	OVERALL BUILDING WIDTH[1]
24'x40'	2	0	23'-8½"
36'x40'	3	1	35'-6¾"
48'x40'	4	2	47'-5"
60'x40'	5	3	59'-3½"
72'x40'	6	4	71'-1½"
84'x40'	7	5	82'-11½"
96'x40'	8	6	94'-10"
108'x40'	9	7	106'-8½"
120'x40'	10	8	118'-6½"

NOTES:

1. TOTAL BUILDING WIDTH INCLUDES ¼" PER MODULE CONSTRUCTION TOLERANCE PER FOUNDATION SHEETS S1.0, S1.1, S1.2, & S1.3

NOT USED | NOT USED | NOT USED | BUILDING SIZE SCHEDULE | MEP COMPONENT ANCHORAGE NOTES

IDENTIFICATION STAMP
DIV. OF THE STATE ARCHITECT
APP: 02-122976 INC:
REVIEWED FOR
SS ☑ FLS ☑ ACS ☑
DATE: 03/12/2025

TRACY UNIFIED SCHOOL DISTRICT

HMC Architects

3595001000

2101 CAPITOL AVENUE, SUITE 100
SACRAMENTO, CA 95816
916 368 7990 / www.hmcarchitects.com

ISSUE

Δ	DESCRIPTION	DATE
1	ADDENDUM "A"	3/20/25

AMS®
American Modular Systems
787 Spreckels Ave., Manteca, CA 95336
Phone (209) 825-1921 Fax (209) 825-7018
www.americanmodular.com

INTELLECTUAL-PROPERTY & PROPRIETARY RIGHTS STATEMENT
COPYRIGHT © AMERICAN MODULAR SYSTEMS (AMS)
AMS OWNS ALL COPYRIGHT AND OTHER INTELLECTUAL-PROPERTY AND PROPRIETARY RIGHTS IN THESE DRAWINGS, SPECIFICATIONS, AND THE MATERIAL CONTAINED HEREIN. CERTAIN ELEMENTS SHOWN IN THESE DOCUMENTS MAY BE REGISTERED TRADEMARKS OF AMS. ALL RIGHTS EXPRESSLY CONTAINED IN THESE DOCUMENTS, INCLUDING BUT NOT LIMITED TO AMS WILL REMAIN THE SOLE PROPERTY OF AMS. THESE DRAWINGS AND SPECIFICATIONS AND THE MATERIAL CONTAINED HEREIN MAY NOT BE REPRODUCED, TRANSMITTED, COPIED, DISTRIBUTED, MODIFIED, OR OTHERWISE DISPOSED OF (DIRECTLY OR INDIRECTLY) AND MAY NOT BE USED (IN WHOLE OR IN PART) TO ASSIST IN THE CONSTRUCTION, DESIGN, OR OTHER MAKING OF, OR FOR THE PURPOSE OF FURNISHING ANY INFORMATION FOR THE CONSTRUCTION, DESIGN, OR OTHER MAKING OF, ANY BUILDINGS (MODULAR OR OTHERWISE); DRAWINGS, SPECIFICATIONS, PRINTS, APPARATUS, OR PARTS THEREOF, EXCEPT AS EXPRESSLY PERMITTED BY WRITTEN CONSENT OF, OR IN A WRITTEN AGREEMENT WITH, AMS. SUBMITTAL OR DISTRIBUTION TO MEET OFFICIAL REGULATORY REQUIREMENTS WILL NOT BE CONSTRUED AS PUBLICATION IN DEROGATION OF AMS'S COPYRIGHT OR OTHER INTELLECTUAL-PROPERTY OR PROPRIETARY RIGHTS.

PRE-CHECKED SET NAME

24' x 40' THRU 120' x 40'
STANDARD MODULAR BUILDING
(LOW SEISMIC)

FORM®

SITE SPECIFIC PROJECT NAME

APPROVED
DIV. OF THE STATE ARCHITECT
APP: 04-122050 PC
REVIEWED FOR
SS ☑ FLS ☑ ACS ☑ CG ☑
DATE: 12/11/2023

☐ 2022 CBC PRE-CHECK (PC) DOCUMENT
A SEPARATE PROJECT APPLICATION FOR CONSTRUCTION IS REQUIRED.

MANUFACTURER PROFESSIONAL OF RECORD ON PC

LICENSED ARCHITECT
PATRICK DONOVAN
No. C12631
Exp. 3-31-25
STATE OF CALIFORNIA

THESE DRAWINGS ARE PRELIMINARY AND NOT FOR CONSTRUCTION UNLESS STAMPED & SIGNED BY THE DESIGN PROFESSIONAL OF RECORD.

REVISIONS

DRAWN BY:	AA
SCALE:	AS NOTED
DATE:	MM/DD/YY
PROJECT NO:	XXXX-22

SHEET TITLE:
TYPICAL REFLECTED CEILING PLAN

SHEET NUMBER:
M1.0

KEYNOTES

GENERAL NOTES

FACILITY:
JACOBSON ELEMENTARY SCHOOL
1750 W KAVANAGH AVE
TRACY, CA 95376

PROJECT:
JACOBSON ES - TK CLASSROOM

SHEET NAME:
TYPICAL REFLECTED CEILING PLAN

DATE: **04/03/24** | CLIENT PROJ NO: **3595001000**

SHEET:
M1.0

ADDENDUM "A"

PLEASE RECYCLE

Autodesk Docs://3595001000 TUSD TK CLASSROOMS 2025 R23/3595001000-A-TUSD-BOHN-SITE.rvt
12/3/2024 6:05:49 AM

THE LINE SHOWN ABOVE IS EXACTLY ONE INCH LONG AT THIS SHEETS ORIGINAL PAGE SIZE

IDENTIFICATION STAMP
DIV. OF THE STATE ARCHITECT
APP: 02-122976 INC:
REVIEWED FOR
SS ☑ FLS ☑ ACS ☑
DATE: 03/12/2025

TRACY UNIFIED SCHOOL DISTRICT

HMC Architects

3595001000

2101 CAPITOL AVENUE, SUITE 100
SACRAMENTO, CA 95816
916 368 7990 / www.hmcarchitects.com

SEE SHEET M1.1A-N FOR SITE-SPECIFIC SHEET

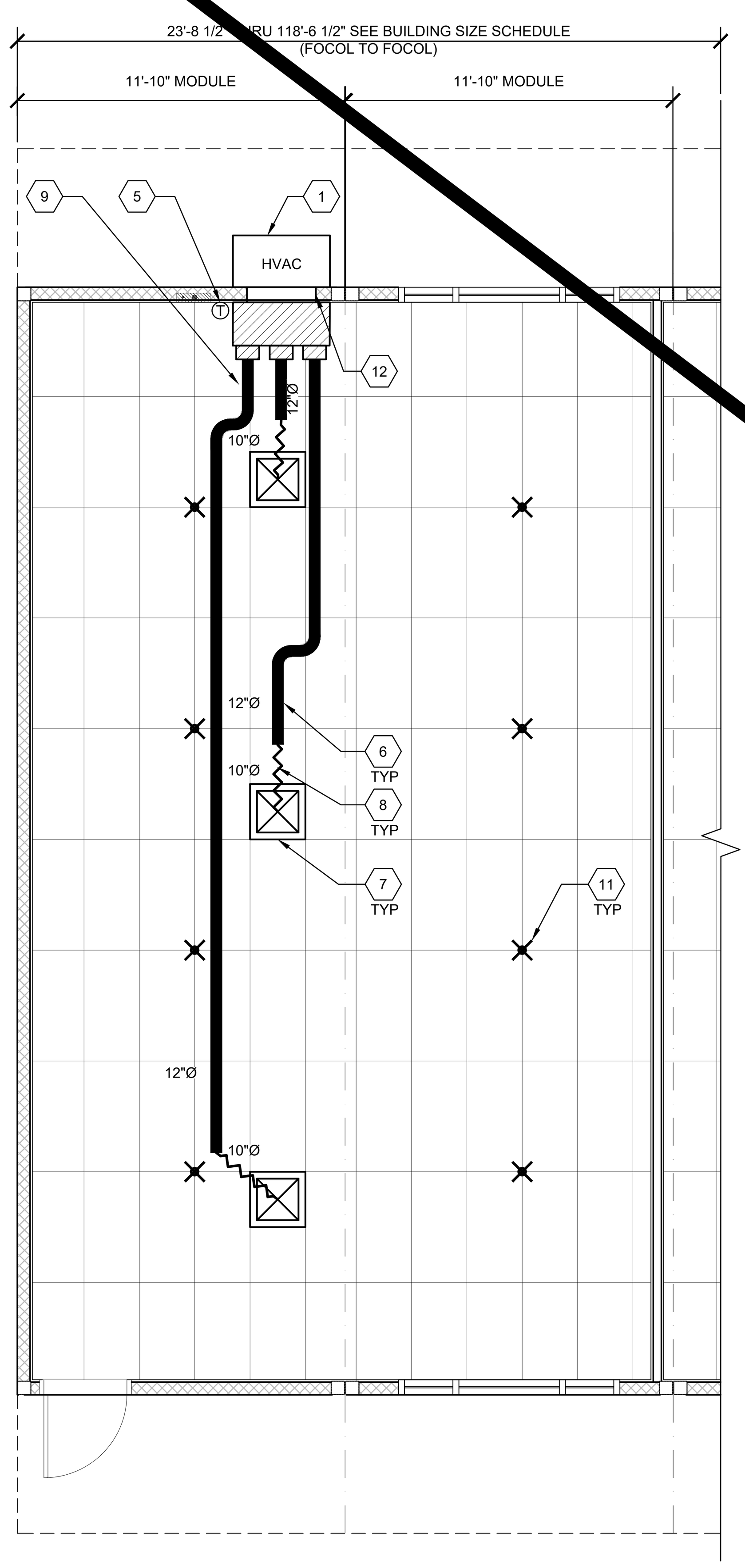

☐ WALL HUNG OPTION SCALE: 1/4"=1'-0" 1

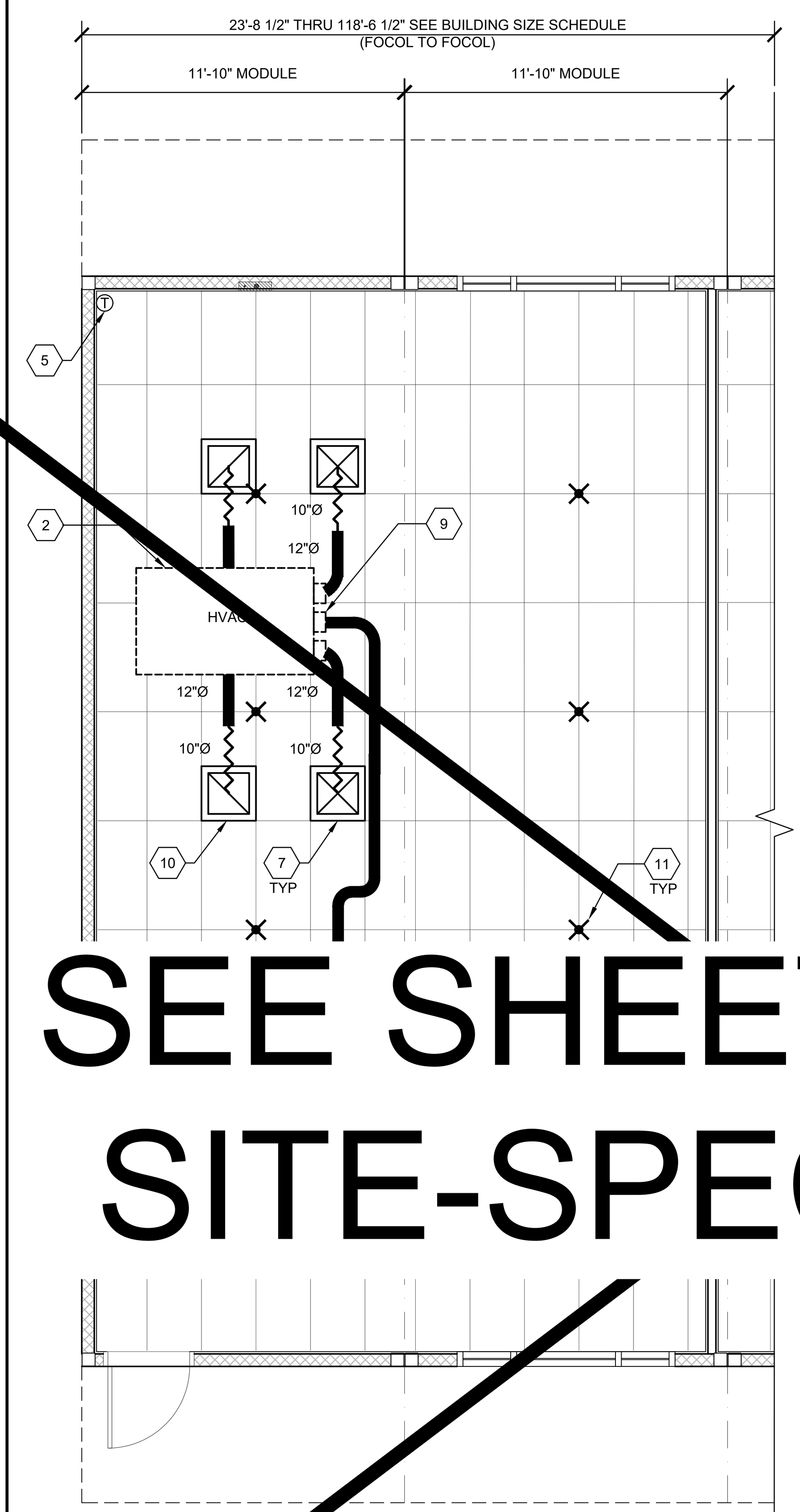

☐ ROOF MOUNT OPTION SCALE: 1/4"=1'-0" 2

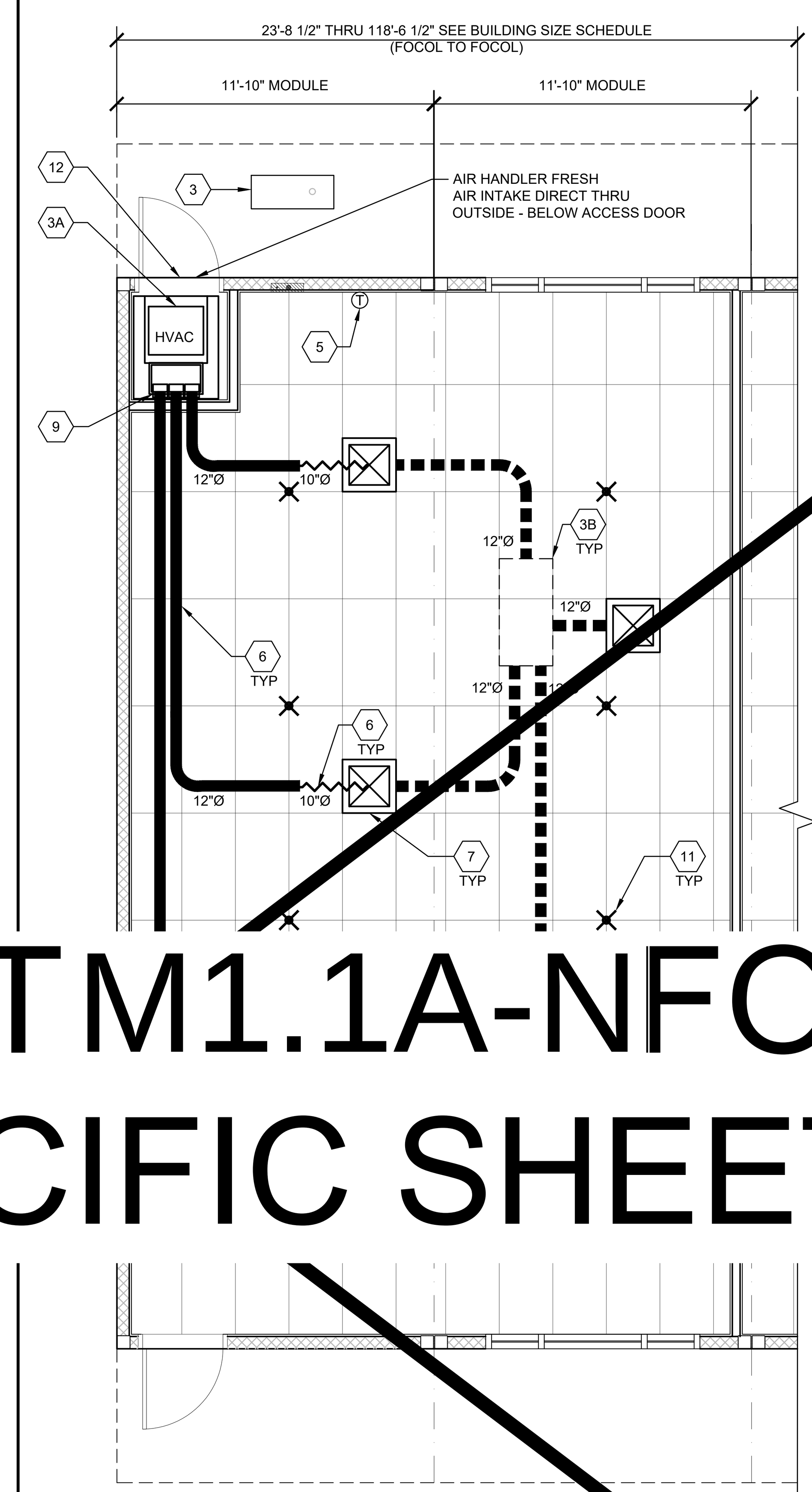

☐ SPLIT SYSTEM OPTION SCALE: 1/4"=1'-0" 3

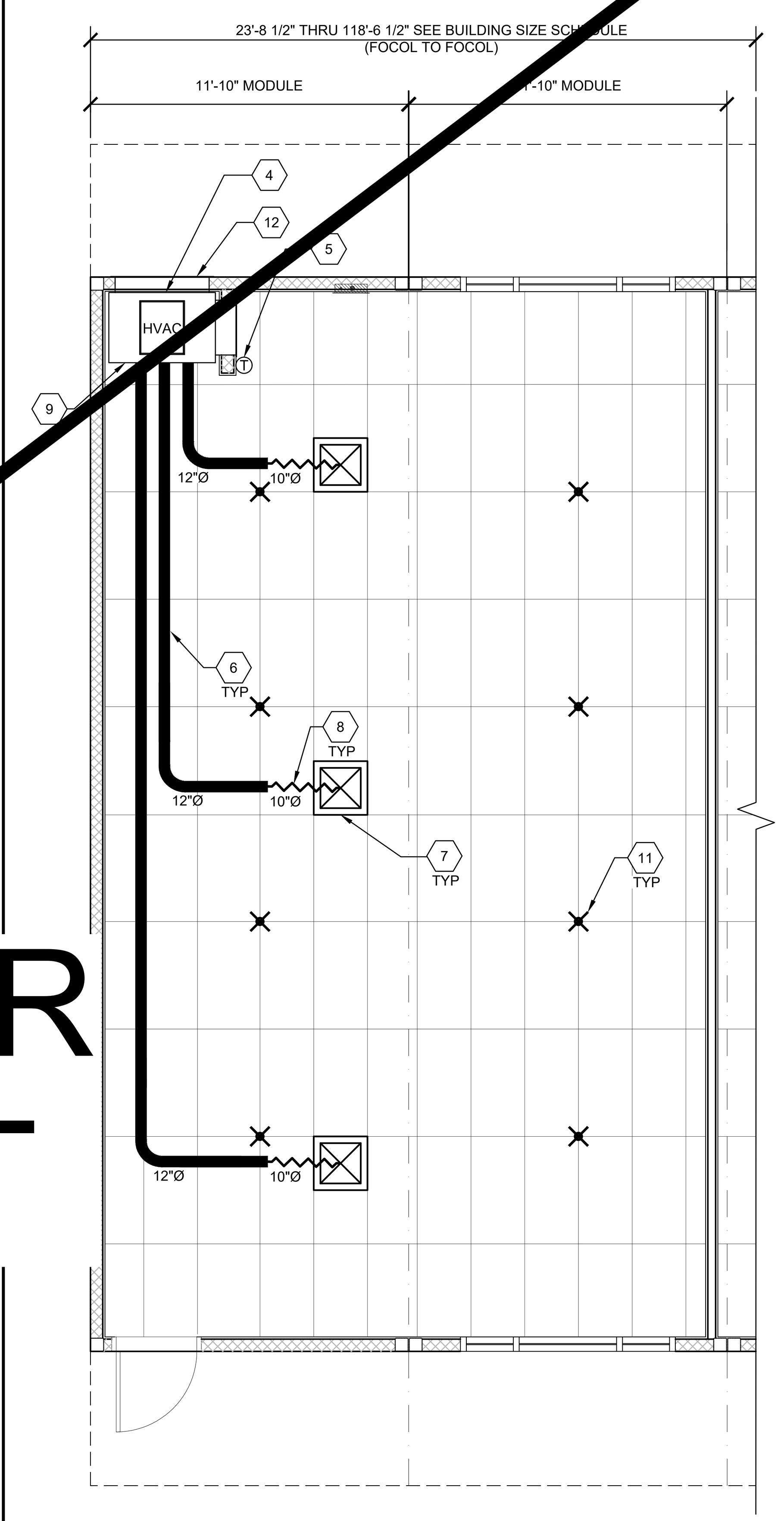

☐ INTERIOR SYSTEM OPTION SCALE: 1/4"=1'-0" 4

SHEET NOTES

1. WHERE TWO OR MORE HVAC UNITS SERVE A COMMON SPACE, UNITS SHALL BE EQUIPPED WITH A DUCT SMOKE DETECTOR FOR AUTOMATIC SHUTDOWN. INTERCONNECT WITH FIRE ALARM SYSTEM.
2. AIR-MOVING SYSTEMS SUPPLYING AIR IN EXCESS OF 2000 CUBIC FEET PER MINUTE TO ENCLOSED SPACES WITHIN THE BUILDING SHALL BE EQUIPPED WITH AN AUTOMATIC SHUTOFF.
3. AUTOMATIC SHUT-OFF IS NOT REQUIRED WHEN OCCUPIED ROOMS SERVED BY THE AIR HANDLING EQUIPMENT HAVE A DIRECT EXIT TO THE EXTERIOR AND THE TRAVEL DISTANCE DOES NOT EXCEED 100 FT. (PER C.M.C. 608.1 EXCEPTION #2.)
4. LIGHTING FIXTURE MAY BE INSTALLED ROTATED 90° FROM SHOWN TO MATCH T-GRID.
5. FOR T-BAR CEILING SPECIFICATIONS, SEE M1.7.
6. PROVIDE CO2 SENSORS AT ALL CLASSROOMS THAT MEET REQUIREMENTS OF CALGREEN 5.506.
6. EACH PUBLIC K-12 SCHOOL CLASSROOM, AS LISTED IN TABLE 120.1-A OF THE CALIFORNIA ENERGY CODE, SHALL BE EQUIPPED WITH A CARBON DIOXIDE MONITOR OR SENSOR THAT MEETS THE FOLLOWING REQUIREMENTS: 1.THE MONITOR OR SENSOR SHALL BE PERMANENTLY AFFIXED IN A TAMPER-PROOF MANNER IN EACH CLASSROOM BETWEEN 3 AND 6 FEET (914 MM AND 1829 MM) ABOVE THE FLOOR AND AT LEAST 5 FEET (1524 MM) AWAY FROM DOORS AND OPERABLE WINDOWS. 2.WHEN THE MONITOR OR SENSOR IS NOT INTEGRAL TO AN ENERGY MANAGEMENT CONTROL SYSTEM (EMCS), THE MONITOR OR SENSOR SHALL DISPLAY THE CARBON DIOXIDE READINGS ON THE DEVICE. WHEN THE SENSOR IS INTEGRAL TO AN EMCS, THE CARBON DIOXIDE READINGS SHALL BE AVAILABLE TO AND REGULARLY MONITORED BY FACILITY PERSONNEL. 3.A MONITOR SHALL PROVIDE NOTIFICATION THROUGH A VISUAL INDICATOR ON THE MONITOR WHEN THE CARBON DIOXIDE LEVELS IN THE CLASSROOM HAVE EXCEEDED 1,100 PPM. A SENSOR INTEGRAL TO AN EMCS SHALL PROVIDE NOTIFICATION TO FACILITY PERSONNEL THROUGH A VISUAL AND/OR AUDIBLE INDICATOR WHEN THE CARBON DIOXIDE LEVELS IN THE CLASSROOM HAVE EXCEEDED 1,100 PPM. 4.THE MONITOR OR SENSOR SHALL MEASURE CARBON DIOXIDE LEVELS AT MINIMUM 15-MINUTE INTERVALS AND SHALL MAINTAIN A RECORD OF PREVIOUS CARBON DIOXIDE MEASUREMENTS OF NOT LESS THAN 30 DAYS DURATION. 5.THE MONITOR OR SENSOR USED TO MEASURE CARBON DIOXIDE LEVELS SHALL HAVE THE CAPACITY TO MEASURE CARBON DIOXIDE LEVELS WITH A RANGE OF 400 PPM TO 2000 PPM OR GREATER. 6.THE MONITOR OR SENSOR SHALL BE CERTIFIED BY THE MANUFACTURER TO BE ACCURATE WITHIN 75 PPM AT 1,000 PPM CARBON DIOXIDE CONCENTRATION AND SHALL BE CERTIFIED BY THE MANUFACTURER TO REQUIRE CALIBRATION NO MORE FREQUENTLY THAN ONCE EVERY 5 YEARS.
7. PER ENERGY CODE 120.1(D): THERMOSTAT SHALL BE PROGRAMMED SO THAT THE AIR HANDLER FAN WILL RUN CONTINUALLY DURING OCCUPIED TIMES. PRE-OCCUPANCY PURGE SHALL BE PROGRAMED ONE HOUR PRIOR TO THE MODULAR BUILDING BEING NORMALLY OCCUPIED. SHOW THERMOSTAT PLACEMENT ON THE PLANS TO BE PLACED AWAY FROM DOORS AND OPERABLE WINDOWS. MECHANICAL PLANS SHOW THERMOSTAT AND SENSOR LOCATIONS, CONTROL DEVICES, AND INCLUDE A CONTROL SEQUENCE OF OPERATIONS. MANUAL OVERRIDE CONTROLS ARE A MANDATORY MEASURE UNDER ENERGY CODE SECTION 120.2(E). ALL HVAC SYSTEMS SHALL HAVE A MANUAL OVERRIDE ACCESSIBLE TO THE OCCUPANTS THAT ALLOWS THEM TO TURN ON THE HVAC SYSTEM DURING NORMALLY UNOCCUPIED TIMES. THIS CAN BE A MANUAL OVERRIDE FOR UP TO 4 HOURS, OCCUPANCY SENSOR OR A 4 HOUR MANUALLY OPERATED TIMER.

KEY NOTES

1. WALL HUNG HVAC UNIT - SEE 10/M1.4.
2. ROOF MOUNT UNIT - SEE 11/M1.4.
3. CONDENSER - GROUND MOUNT BY OTHERS ANCHORAGE DETAIL PER SITE SPECIFIC APPLICATION
3A. AIR HANDLER UNIT (IN ROOM) - SEE 1/M1.5.
3B. AIR HANDLER UNIT (ABOVE CEILING) - SEE DETAIL 3/M1.5. INSTALL FRESH AIR INTAKE THRU ROOF INTAKE, PENETRATION PER 2/M1.6 SIM.
4. INTERIOR HVAC SYSTEM - SEE 9/M1.4.
5. THERMOSTAT - 48" A.F.F, MAX TO TOP OF BOX
6. CONCEALED SUPPLY AIR DUCT ABOVE T-BAR CEILING - SEE 1/M1.4.
7. TYPICAL 4-WAY SUPPLY AIR REGISTER LOCATION AND SIZE MAY VARY PER CEILING LAYOUT AND BUILDING SIZE - SEE 7/M1.5.
8. FLEX DUCT - NOMINAL 10" MIN. (MAY VARY) - SEE 8/M1.5.
9. RETURN AIR AS PART OF UNIT.
10. RETURN AIR REGISTER - SEE 7/M1.5.
11. STRUT/SPLAY WIRE ASSEMBLY, SEE 5/M1.4 FOR DETAILS
12. HVAC EXTERIOR AIR VENT (SPLIT SYSTEM EXTERIOR AIR VENT FRAMED SEPARATELY FROM DOOR)

NOTE: FLEXIBLE AIR DUCTS AND CONNECTORS SHALL BE NOT MORE THAN 5 FEET IN LENGTH AND SHALL NOT BE USED IN LIEU OF RIGID ELBOWS OR FITTINGS. FLEXIBLE AIR DUCTS SHALL BE PERMITTED TO BE USED AS AN ELBOW AT A TERMINAL DEVICE PER ENERGY CODE 120.4 AND CMC 603.4.1

BUILDING SIZE SCHEDULE

BUILDING SIZE (FT)	TOTAL # OF 12'-0" WIDE MODULES	TOTAL # OF CENTER MODULES	OVERALL BUILDING WIDTH[1]
☐ 24'x40'	2	0	23'-8½"
☐ 36'x40'	3	1	35'-6¾"
☐ 48'x40'	4	2	47'-5"
☐ 60'x40'	5	3	59'-3¼"
☐ 72'x40'	6	4	71'-1½"
☐ 84'x40'	7	5	82'-11¾"
☐ 96'x40'	8	6	94'-10"
☐ 108'x40'	9	7	106'-8¼"
☐ 120'x40'	10	8	118'-6½"

NOTES:

1. TOTAL BUILDING WIDTH INCLUDES ¼" PER MODULE CONSTRUCTION TOLERANCE PER FOUNDATION SHEETS S1.0, S1.1, S1.2, & S1.3.
2. REFER TO SHEET M1.7 FOR TYPICAL NOTES AND CALL OUTS.

AMS American Modular Systems
787 Spreckels Ave., Manteca, CA 95336
Phone (209) 825-1921 Fax (209) 825-7018
www.americanmodular.com

INTELLECTUAL-PROPERTY & PROPRIETARY RIGHTS STATEMENT
COPYRIGHT © AMERICAN MODULAR SYSTEMS (AMS)
AMS OWNS ALL COPYRIGHT AND OTHER INTELLECTUAL-PROPERTY AND PROPRIETARY RIGHTS IN THESE DRAWINGS, SPECIFICATIONS, AND THE MATERIAL CONTAINED HEREIN. CERTAIN ELEMENTS SHOWN IN THESE DOCUMENTS ARE REGISTERED TRADEMARKS OF AMS. ALL PATENTABLE MATERIALS CONTAINED IN THESE DOCUMENTS AND ORIGINATING WITH AMS WILL REMAIN THE SOLE PROPERTY OF AMS. THESE DRAWING, SPECIFICATIONS, AND THE MATERIAL CONTAINED HEREIN MAY NOT BE REPRODUCED, TRANSMITTED, COPIED, DISTRIBUTED, MODIFIED, OR OTHERWISE DISPOSED OF (DIRECTLY OR INDIRECTLY) AND MAY NOT BE USED (IN WHOLE OR IN PART) TO ASSIST IN THE CONSTRUCTION, DESIGN, OR OTHER MAKING OF, OR FOR THE PURPOSE OF FURNISHING ANY INFORMATION FOR THE CONSTRUCTION, DESIGN, OR OTHER MAKING OF, ANY BUILDINGS (MODULAR OR OTHERWISE), DRAWINGS, SPECIFICATIONS, PRINTS, APPARATUS, OR PARTS THEREOF, EXCEPT AS EXPRESSLY PERMITTED BY WRITTEN CONSENT OF, OR IN A WRITTEN AGREEMENT WITH, AMS. SUBMITTAL OR DISTRIBUTION TO MEET OFFICIAL REGULATORY REQUIREMENTS WILL NOT BE CONSTRUED AS PUBLICATION IN DEROGATION OF AMS'S COPYRIGHT OR OTHER INTELLECTUAL-PROPERTY OR PROPRIETARY RIGHTS.

PRE-CHECKED SET NAME
24' x 40' THRU 120' x 40'
STANDARD MODULAR BUILDING
(LOW SEISMIC)
FORM

SITE SPECIFIC PROJECT NAME

APPROVED
DIV. OF THE STATE ARCHITECT
APP: 04-122050 PC
REVIEWED FOR
SS ☑ FLS ☑ ACS ☒ CG ☑
DATE: 12/11/2023

☐ 2022 CBC PRE-CHECK (PC) DOCUMENT
A SEPARATE PROJECT APPLICATION FOR CONSTRUCTION IS REQUIRED.

MANUFACTURER PROFESSIONAL OF RECORD ON PC

LICENSED ARCHITECT
RANDALL PATRICK CAVANAGH
No. C12631
Ren. 3-31-25
STATE OF CALIFORNIA

THESE DRAWINGS ARE PRELIMINARY AND NOT FOR CONSTRUCTION UNLESS STAMPED & SIGNED BY THE DESIGN PROFESSIONAL OF RECORD.

REVISIONS
1
2
3
4

DRAWN BY:	AA
SCALE:	AS NOTED
DATE:	MM/DD/YY
PROJECT NO:	XXXX-22

SHEET TITLE:
TYPICAL MECHANICAL PLAN OPTIONS

SHEET NUMBER:
M1.1A

ISSUE

Δ	DESCRIPTION	DATE
A	ADDENDUM "A"	3/20/25

KEYNOTES

GENERAL NOTES

FACILITY:
JACOBSON ELEMENTARY SCHOOL
1750 W KAVANAGH AVE
TRACY, CA 95376

PROJECT:
JACOBSON ES - TK CLASSROOM

SHEET NAME:
TYPICAL MECHANICAL PLAN OPTIONS

DATE: **04/03/24** CLIENT PROJ NO: **3595001000**

SHEET:
M1.1A
ADDENDUM "A"

Autodesk Docs://3595005000 TUSD TK CLASSROOMS 2025 R22/3595005000-A-TUSD-BOHN-SITE.rvt

PLEASE RECYCLE

THE LINE SHOWN ABOVE IS 8½" LONG ON ORIGINAL DRAWING. IF NOT, ADJUST DRAWING SCALE FACTORS

IDENTIFICATION STAMP
DIV. OF THE STATE ARCHITECT
APP: 02-122976 INC:
REVIEWED FOR
SS ☑ FLS ☑ ACS ☑
DATE: 03/12/2025

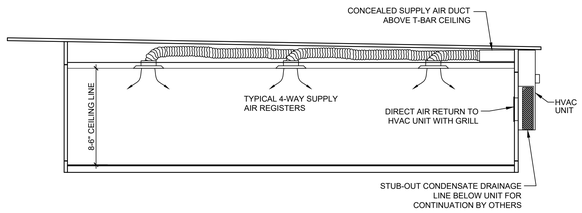

TYPICAL MECHANICAL SECTION 1

SCALE: 3/16" = 1'-0"

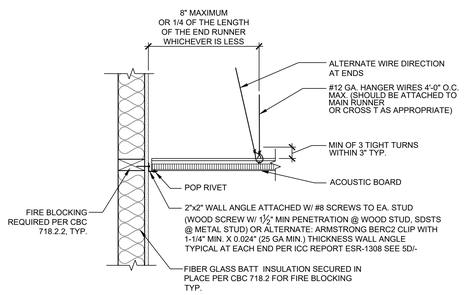

A FIXED END

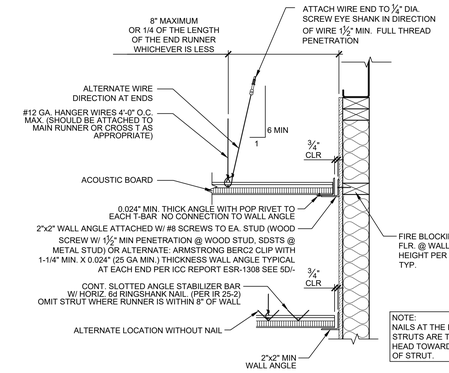

NOTE:
NAILS AT THE END OF HORIZONTAL STRUTS ARE TO BE PLACED WITH NAIL HEAD TOWARD CENTERLINE OF SPAN OF STRUT.

B FREE END

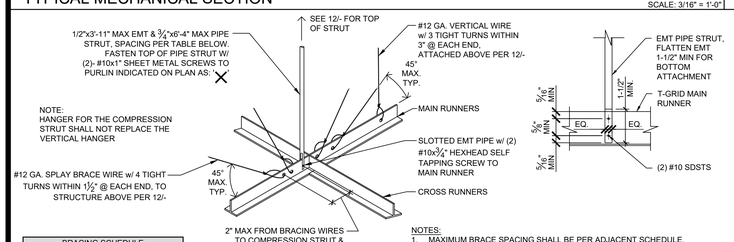

BRACING SCHEDULE	
SITE SPECIFIC S_{DS} (PER SHEET T/S1)	MAX. SPACING
☐ $S_{DS} \le 1.15$	12'x12'
☐ $1.15 \le S_{DS} \le 1.73$	8'x12'
☐ $S_{DS} > 1.73$	8'x8'

NOTES:
1. MAXIMUM BRACE SPACING SHALL BE PER ADJACENT SCHEDULE.
2. THERE SHALL BE A BRACE ASSEMBLY A DISTANCE OF NOT MORE THAN ONE HALF OF THE ABOVE SPACING FROM EACH SURROUNDING WALL, EXPANSION JOINT AND AT THE EDGES OF ANY CEILING VERTICAL OFFSET. FOR EXAMPLE, WHERE THE BRACE SPACING IS 8'x12', THE DISTANCE SHALL BE 4 FEET IN THE DIRECTION OF THE 8 FOOT SPACING AND 6 FEET IN THE DIRECTION OF THE 12 FOOT SPACING. FOR FURTHER INFORMATION REFER TO SPECIFICATIONS ON SHEET M1.7.

STRUT/SPLAY WIRE ASSEMBLY DETAIL 2

NOT TO SCALE

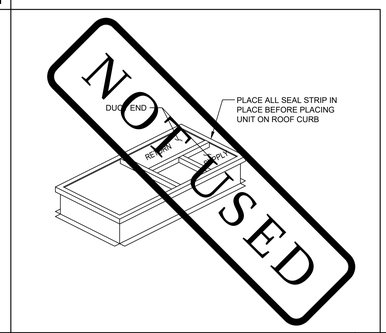

ROOF CURB SEAL DETAIL 4

SCALE : N.T.S.

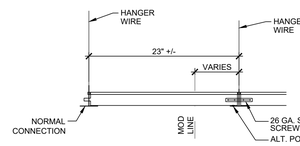

C RUNNER SPLICE AND CEILING CONNECTION @ MODULE LINE

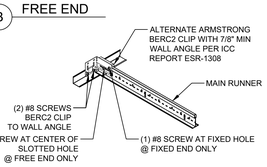

D ALTERNATE BERC2 CLIP DETAIL

SUSPENDED CEILING ATTACHMENT DETAILS 5

SCALE: 1-1/2" = 1'-0"

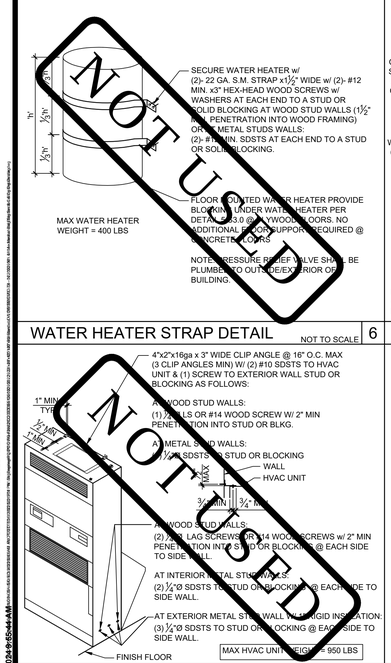

WATER HEATER STRAP DETAIL 6

NOT TO SCALE

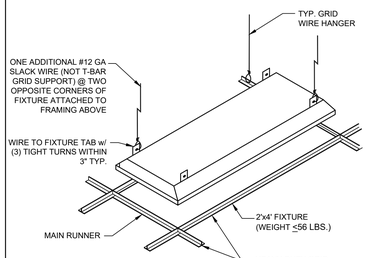

PROVIDE (1) #8-¾" SMS THRU GRID TO LIGHT FIXTURE @ 2 MIN. CORNERS

LIGHT FIXTURE ATTACHMENT 7

NOT TO SCALE

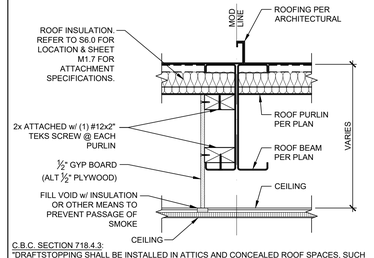

C.B.C. SECTION 718.4.3:
"DRAFTSTOPPING SHALL BE INSTALLED IN ATTICS AND CONCEALED ROOF SPACES, SUCH THAT ANY HORIZONTAL AREA DOES NOT EXCEED 3,000 SQUARE FEET."
NOTE EXCEPTION #2:
IN GROUP A, E, H, I, L OCCUPANCIES, WHERE AN AUTOMATIC SPRINKLER SYSTEM IN ACCORDANCE WITH SECTION 903.3.1.1 IS INSTALLED, THE AREA BETWEEN DRAFT STOPS MAY BE 9,000 SQUARE FEET AND THE GREATEST HORIZONTAL DISTANCE MAY BE 100 FEET.

CEILING DRAFT STOP DETAIL 8

SCALE: 1-1/2" = 1'-0"

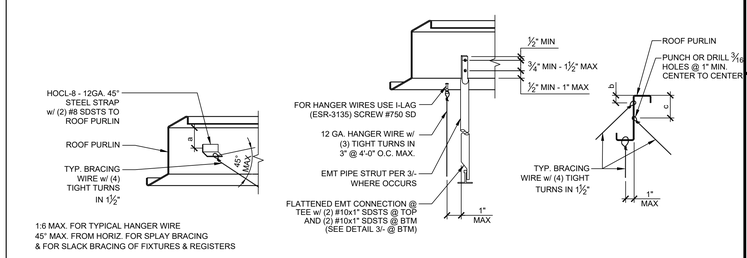

1:6 MAX. FOR TYPICAL HANGER WIRE
45° MAX. FROM HORIZ. FOR SPLAY BRACING
& FOR SLACK BRACING OF FIXTURES & REGISTERS

AT STEEL JOIST OR RAFTER

TO BOTTOM OF WEB OF JOIST OR RAFTER

ALTERNATE WIRE CONNECTIONS

INTERIOR HVAC ANCHORAGE 9

NOT TO SCALE

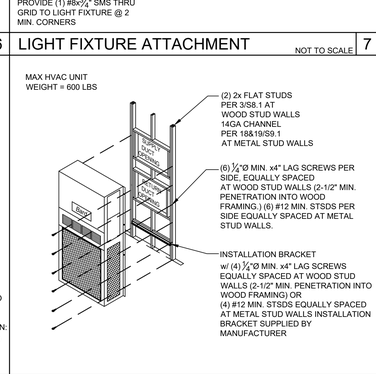

WALL MOUNT HVAC ANCHORAGE 10

NOT TO SCALE

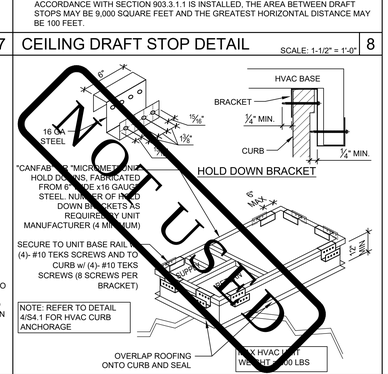

OPTIONAL HVAC ROOF CURB 11

NOT TO SCALE

GENERAL DETAIL NOTES:
1. TYPICAL HANGER WIRES & VERTICAL STRUTS SHALL BE INSTALLED AT A MAXIMUM 1:6 ANGLE FROM VERTICAL.
2. TYPICAL SPLAY BRACING WIRES & WIRES FOR SLACK BRACING OF FIXTURES OR REGISTERS SHALL BE INSTALLED AT A MAXIMUM 45° ANGLE FROM THE SURFACE TO WHICH THEY ARE ATTACHED.

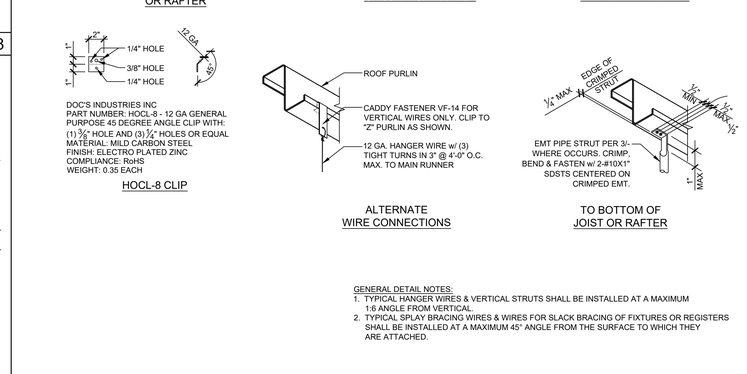

SUSPENDED CEILING TO PURLIN CONNECTION DETAILS 12

NOT TO SCALE

TRACY
UNIFIED SCHOOL DISTRICT

HMC Architects
3595001000
2101 CAPITOL AVENUE, SUITE 100
SACRAMENTO, CA 95816
916 368 7990 / www.hmcarchitects.com

ISSUE

Δ	DESCRIPTION	DATE
1	ADDENDUM "A"	3/20/25

AMS®
American Modular Systems
787 Spreckels Ave., Manteca, CA 95336
Phone (209) 825-1921 Fax (209) 825-7018
www.americanmodular.com

INTELLECTUAL-PROPERTY & PROPRIETARY RIGHTS STATEMENT
COPYRIGHT © AMERICAN MODULAR SYSTEMS (AMS)
AMS OWNS ALL COPYRIGHT AND OTHER INTELLECTUAL-PROPERTY AND PROPRIETARY RIGHTS IN THESE DRAWINGS, SPECIFICATIONS, AND THE MATERIAL CONTAINED HEREIN. CERTAIN ELEMENTS SHOWN IN THESE DOCUMENTS ARE REGISTERED TRADEMARKS OF AMS. ALL PATENTABLE MATERIALS CONTAINED IN THESE DOCUMENTS AND ORIGINATING WITH AMS WILL REMAIN THE SOLE PROPERTY OF AMS. THESE DRAWING, SPECIFICATIONS AND THE MATERIAL CONTAINED HEREIN MAY NOT BE REPRODUCED, TRANSMITTED, DISPLAYED, DISTRIBUTED, OR PUBLISHED IN ANY MANNER (INCLUDING BY ANY INDIRECT-Y) AND MAY NOT BE USED (IN WHOLE OR IN PART) TO ASSIST IN THE CONSTRUCTION, DESIGN, OR OTHER MAKING OF, OR FOR THE PURPOSE OF FURNISHING ANY INFORMATION FOR THE CONSTRUCTION, DESIGN, OR OTHER MAKING OF, ANY BUILDINGS (MODULAR OR OTHERWISE), DRAWINGS, SPECIFICATIONS, PRINTS, APPARATUS, OR PARTS THEREOF, EXCEPT AS EXPRESSLY PERMITTED BY WRITTEN CONSENT OF, OR IN A WRITTEN AGREEMENT WITH, AMS. SUBMITTAL OR DISTRIBUTION TO MEET OFFICIAL REGULATORY REQUIREMENTS WILL NOT BE CONSTRUED AS PUBLICATION IN DEROGATION OF AMS'S COPYRIGHT OR OTHER INTELLECTUAL-PROPERTY OR PROPRIETARY RIGHTS.

PRE-CHECKED SET NAME
24' x 40' THRU 120' x 40'
STANDARD MODULAR BUILDING
(LOW SEISMIC)
FORM®

SITE SPECIFIC PROJECT NAME

APPROVED
DIV. OF THE STATE ARCHITECT
APP: 04-122050 PC
REVIEWED FOR
SS ☑ FLS ☑ ACS ☑ CG ☑
DATE: 12/11/2023
☐ 2022 CBC PRE-CHECK (PC) DOCUMENT
A SEPARATE PROJECT APPLICATION FOR CONSTRUCTION IS REQUIRED.

MANUFACTURER PROFESSIONAL OF RECORD ON PC

LICENSED ARCHITECT PATRICK J. MURPHY No. C12631 Ren. 3-31-25 STATE OF CALIFORNIA

THESE DRAWINGS ARE PRELIMINARY AND NOT FOR CONSTRUCTION UNLESS STAMPED & SIGNED BY THE DESIGN PROFESSIONAL OF RECORD.

REVISIONS
1
2
3
4

DRAWN BY:	AA
SCALE:	AS NOTED
DATE:	MM/DD/YY
PROJECT NO:	XXXX-22

SHEET TITLE:
MECHANICAL AND CEILING DETAILS

SHEET NUMBER:
M1.4

KEYNOTES

GENERAL NOTES

FACILITY:
JACOBSON ELEMENTARY SCHOOL
1750 W KAVANAGH AVE
TRACY, CA 95376

PROJECT:
JACOBSON ES - TK CLASSROOM

SHEET NAME:
MECHANICAL AND CEILING DETAILS

DATE: **04/03/24** CLIENT PROJ NO: **3595001000**

SHEET:
M1.4
ADDENDUM "A"

Autodesk Docs://3595005000 TUSD TK CLASSROOMS 2025 R22/3595005000-A-TUSD-BOHN-SITE.rvt
12/3/2024 9:45:44 AM

PLEASE RECYCLE

THE LINE SHOWN ABOVE IS EXACTLY ONE INCH LONG AT THIS SHEETS ORIGINAL PAGE SIZE

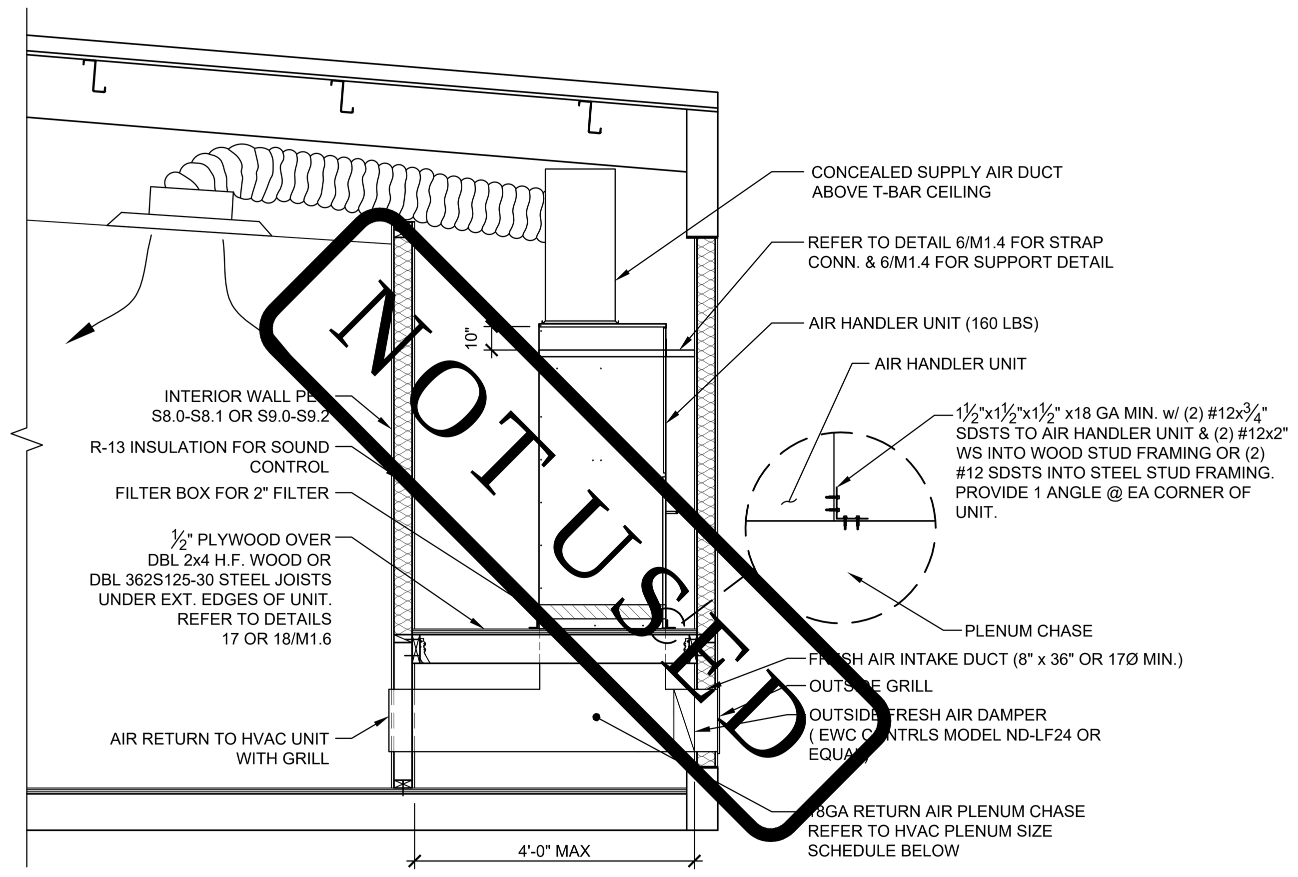

HVAC PLENUM SIZE SCHEDULE		
HVAC SIZE	MIN RETURN SIZE	MIN SUPPLY SIZE
3 TON	19¼"x11"	19¼"x11"
3 1/2" TON	19¼"x12"	19¼"x12"
4 TON	22¼"x12"	22¼"x12"
5 TON	22¼"x14"	22¼"x14"

NOTE: OUTSIDE AIR DUCT MUST INCLUDE A DAMPER THAT WILL FULLY CLOSE WHEN INDOOR FAN SHUTS DOWN PER SECTION 120.2(F).

SPLIT SYSTEM CROSS SECTION — SCALE: 1/2" = 1'-0" — 1

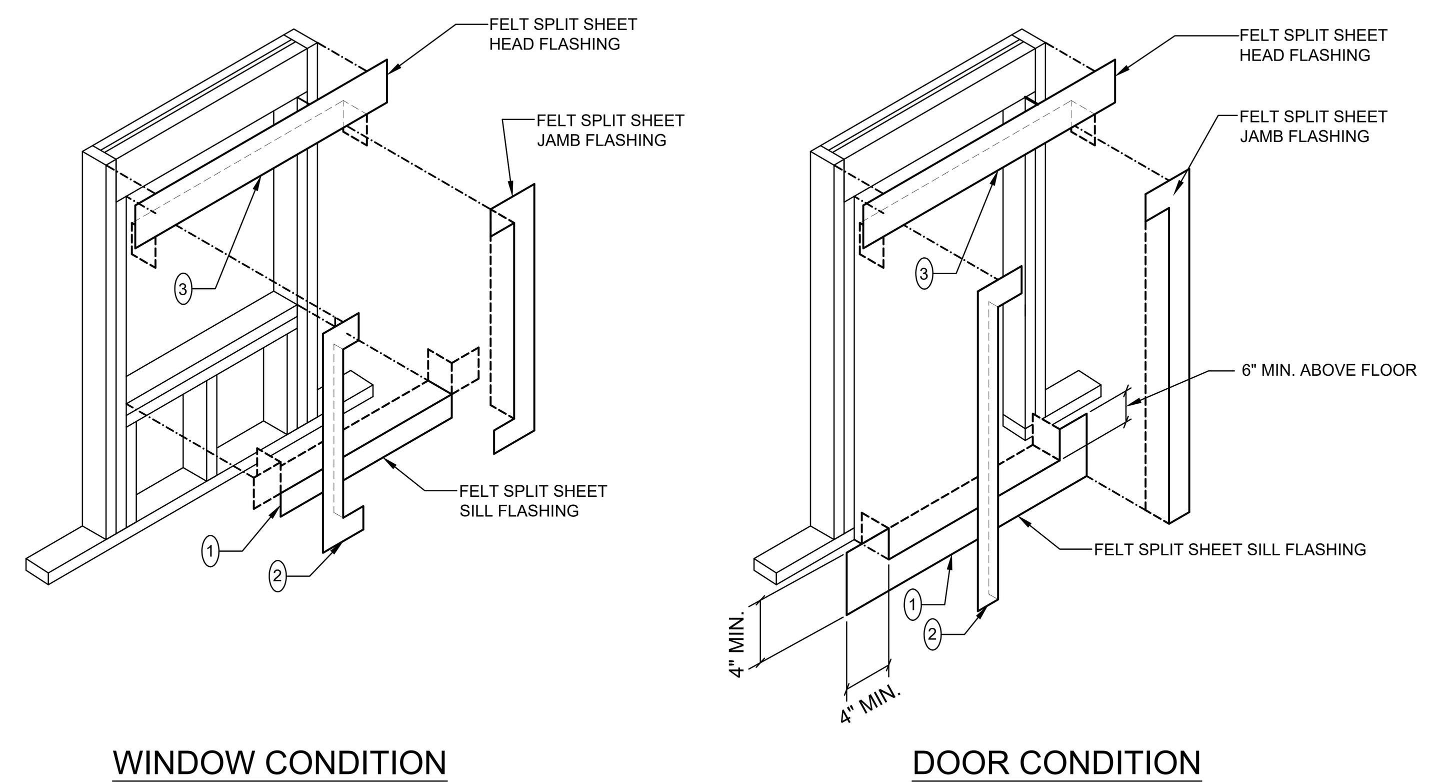

(#) = SEQUENCE OF ORDER

FLASHING @ WALL OPENINGS — NOT TO SCALE — 2

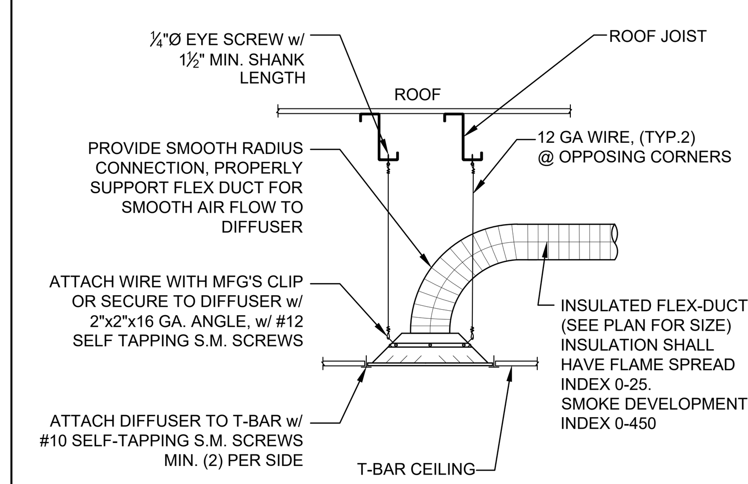

REGISTER MOUNTING DETAIL — NOT TO SCALE — 7

NOTES:

1. DUCTWORK SHALL BE SUPPORTED FROM ROOF JOISTS AT 4'-0" O.C.MAX TO ELIMINATE SAGGING.
2. FLEX DUCT (5'-0" MAX LENGTH) SHALL BE PULLED TIGHT TO ELIMINATE SAGGING.
3. DUCT TO PLENUM ATTACHMENT SHALL BE (3) #8 SCREWS & COVERED WITH 367-17 TAPE (UL181B-FX).
4. FOR DUCT ATTACHMENT TO DIFFUSER - SEE DETAIL 7/-.
5. ALL DUCTS TO BE SEALED WITH 367 MASTIC TAPE. OUTSIDE OF THE INSULATING LINER ON THE FLEX DUCT TO BE SEALED WITH 558CA CODE APPROVED DUCT TAPE.

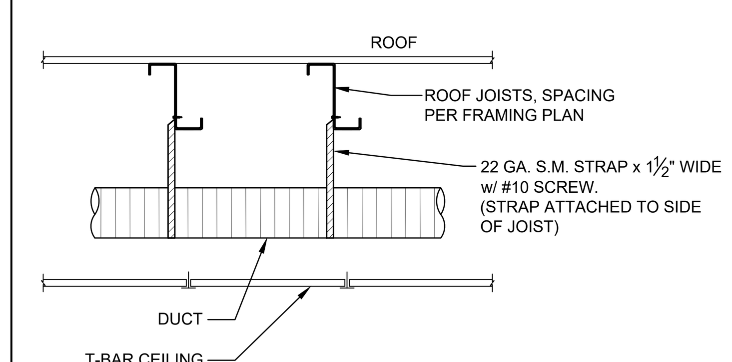

FLEX DUCTING SUPPORT DETAIL — NOT TO SCALE — 8

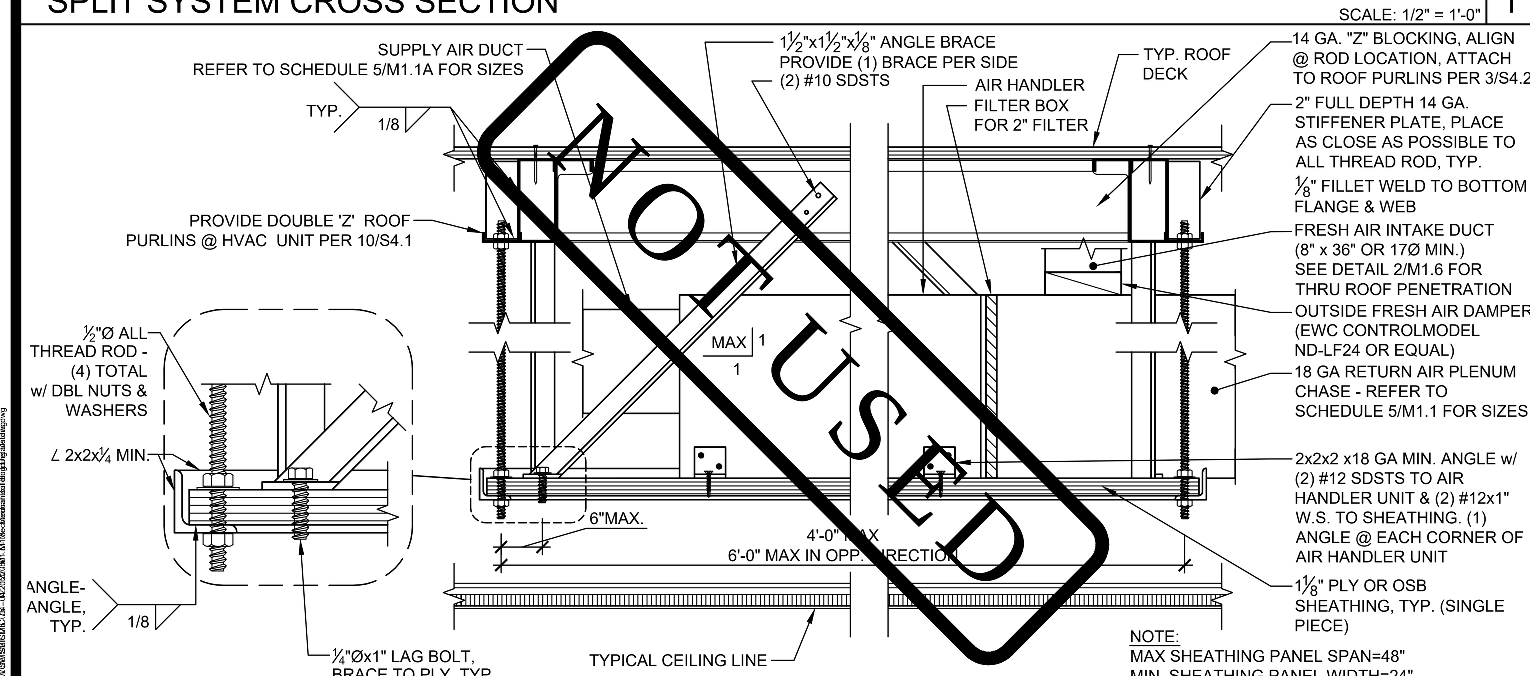

HVAC ATTIC MOUNTED SPLIT SYSTEM — NOT TO SCALE — 3

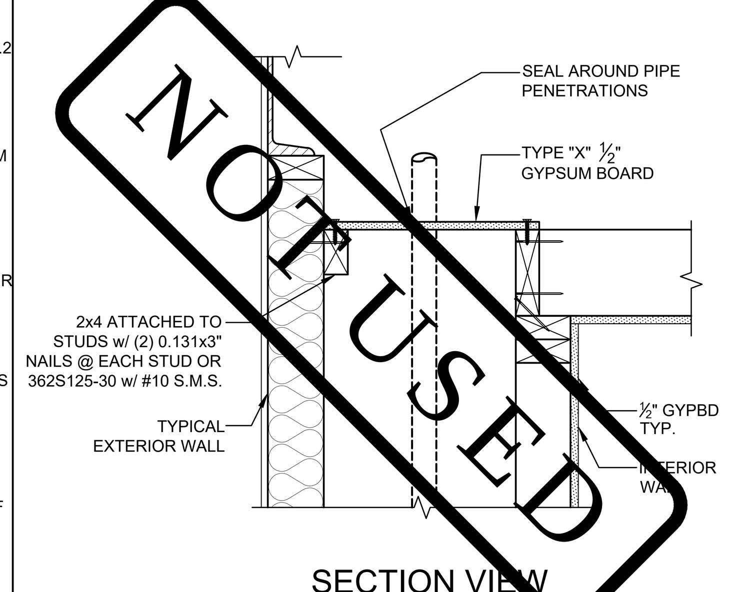

NOTE: REFER TO DETAILS 8/M1.6 AND 13/M1.6 FOR ADDITIONAL FRAMING DETAILS

DRAFT STOP @ PLUMBING CHASE — SCALE: 1" = 1'-0" — 4

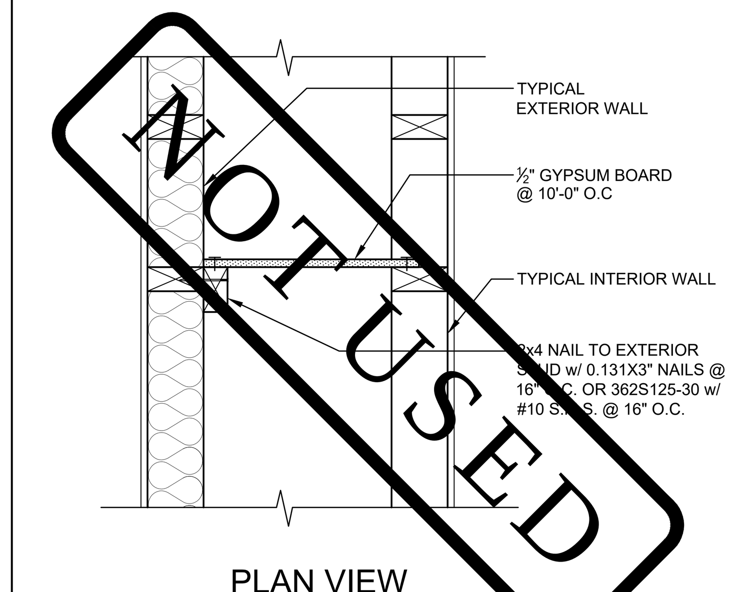

DRAFT STOP @ PLUMBING CHASE — SCALE: 1" = 1'-0" — 5

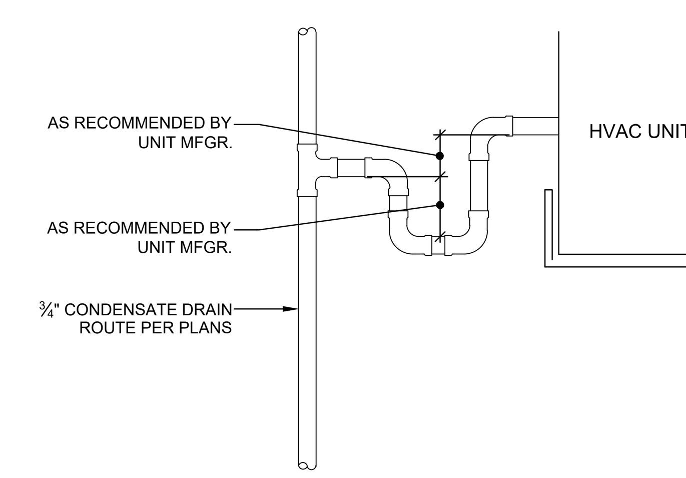

CONDENSATE DETAIL — NOT TO SCALE — 9

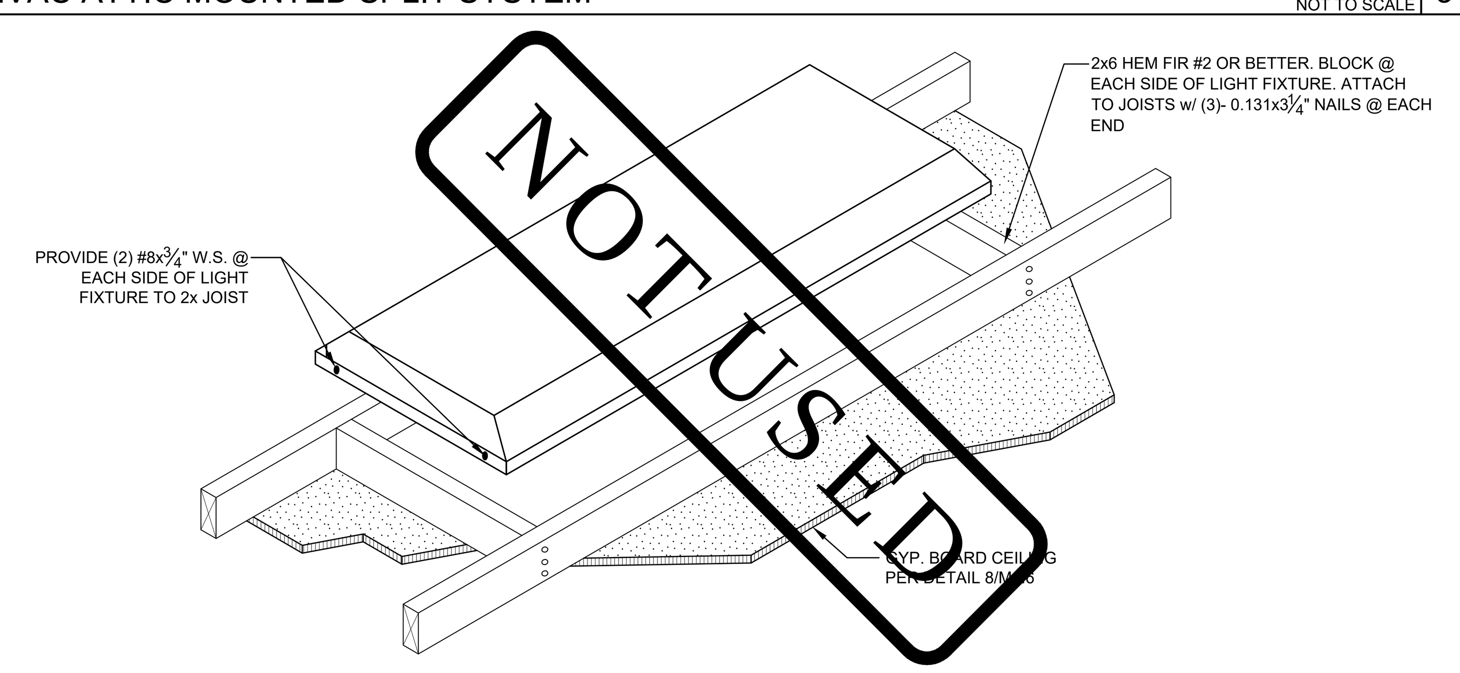

LIGHT FIXTURE ATTACHMENT DETAIL — NOT TO SCALE — 6A

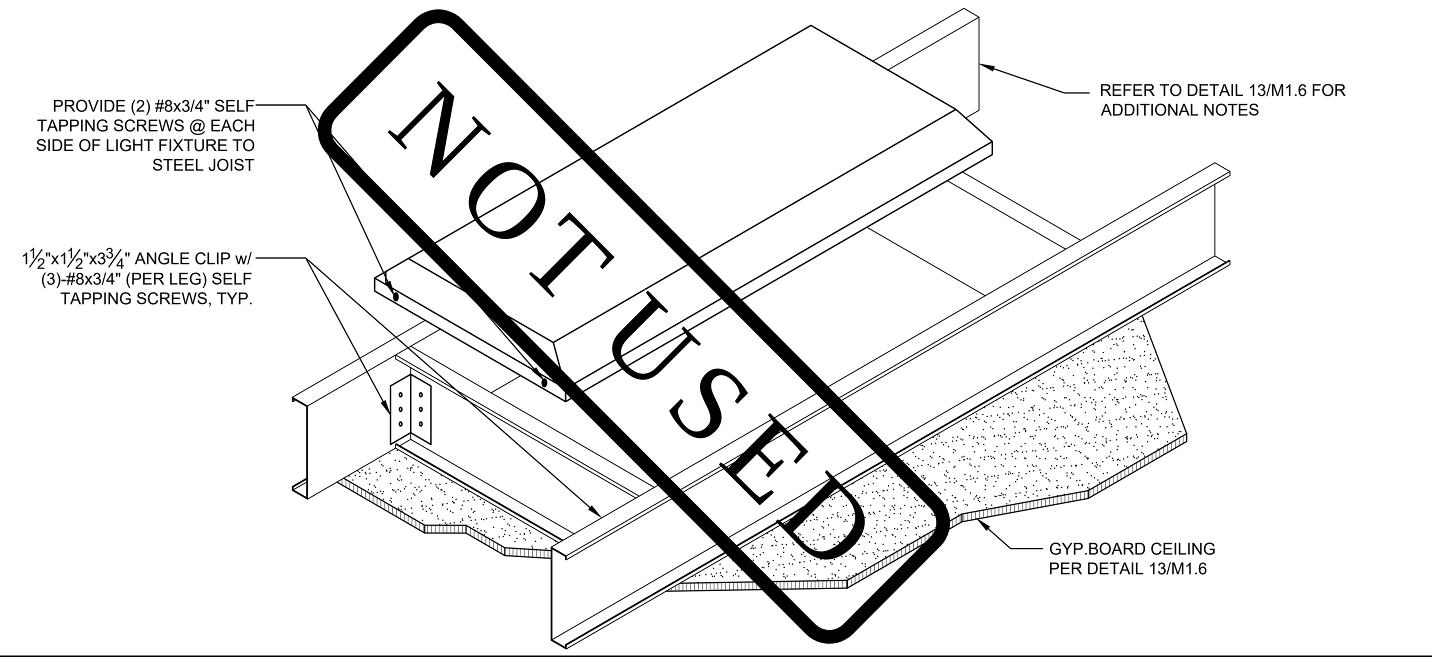

LIGHT FIXTURE ATTACHMENT DETAIL w /METAL STUDS — NOT TO SCALE — 6B

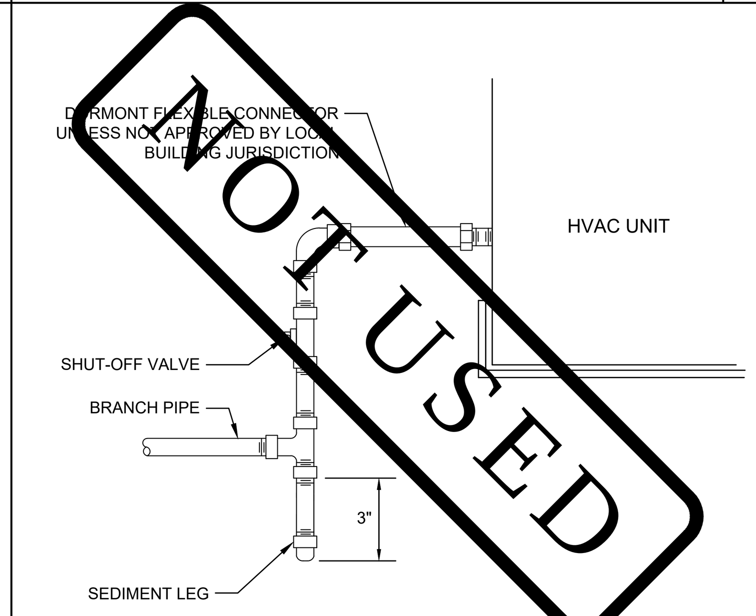

GAS CONNECTION DETAIL — NOT TO SCALE — 10

American Modular Systems
787 Spreckels Ave., Manteca, CA 95336
Phone (209) 825-1921 Fax (209) 825-7018
www.americanmodular.com

INTELLECTUAL-PROPERTY & PROPRIETARY RIGHTS STATEMENT
COPYRIGHT © AMERICAN MODULAR SYSTEMS (AMS)
AMS OWNS ALL COPYRIGHT AND OTHER INTELLECTUAL-PROPERTY AND PROPRIETARY RIGHTS IN THESE DRAWINGS, SPECIFICATIONS, AND THE MATERIAL CONTAINED HEREIN. CERTAIN ELEMENTS SHOWN IN THESE DOCUMENTS ARE REGISTERED TRADEMARKS OF AMS. ALL PATENTABLE MATERIALS CONTAINED IN THESE DOCUMENTS AND ORIGINATING WITH AMS WILL REMAIN THE SOLE PROPERTY OF AMS. THESE DRAWING, SPECIFICATIONS, AND THE MATERIAL CONTAINED HEREIN MAY NOT BE REPRODUCED, TRANSMITTED, COPIED, DISTRIBUTED, MODIFIED, OR OTHERWISE DISPOSED OF (DIRECTLY OR INDIRECTLY) AND MAY NOT BE USED (IN WHOLE OR IN PART) TO ASSIST IN THE CONSTRUCTION, DESIGN, OR OTHER MAKING OF, OR FOR THE PURPOSE OF FURNISHING ANY INFORMATION FOR THE CONSTRUCTION, DESIGN, OR OTHER MAKING OF, ANY BUILDINGS (MODULAR OR OTHERWISE), DRAWINGS, SPECIFICATIONS, PRINTS, APPARATUS, OR PARTS THEREOF, EXCEPT AS EXPRESSLY PERMITTED BY WRITTEN CONSENT OF, OR IN A WRITTEN AGREEMENT WITH, AMS. SUBMITTAL OR DISTRIBUTION TO MEET OFFICIAL REGULATORY REQUIREMENTS WILL NOT BE CONSTRUED AS PUBLICATION IN DEROGATION OF AMS'S COPYRIGHT OR OTHER INTELLECTUAL-PROPERTY OR PROPRIETARY RIGHTS.

PRE-CHECKED SET NAME

24' x 40' THRU 120' x 40'
STANDARD MODULAR BUILDING
(LOW SEISMIC)
FORM®

SITE SPECIFIC PROJECT NAME
.
.
.

APPROVED
DIV. OF THE STATE ARCHITECT
APP: 04-122050 PC
REVIEWED FOR
SS ☑ FLS ☑ ACS ☑ CG ☑
DATE: 12/11/2023

☐ 2022 CBC PRE-CHECK (PC) DOCUMENT
A SEPARATE PROJECT APPLICATION FOR CONSTRUCTION IS REQUIRED.

MANUFACTURER PROFESSIONAL OF RECORD ON PC

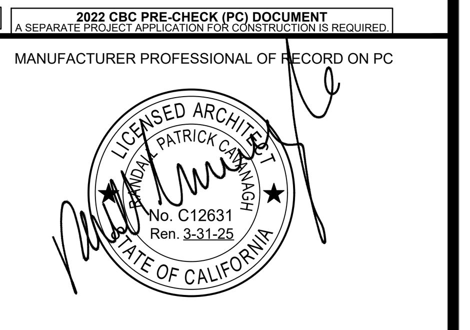

THESE DRAWINGS ARE PRELIMINARY AND NOT FOR CONSTRUCTION UNLESS STAMPED & SIGNED BY THE DESIGN PROFESSIONAL OF RECORD.

REVISIONS
1
2
3
4

DRAWN BY:	AA
SCALE:	AS NOTED
DATE:	MM/DD/YY
PROJECT NO:	XXXX-22

SHEET TITLE:
MECHANICAL & CEILING DETAILS

SHEET NUMBER:
M1.5

IDENTIFICATION STAMP
DIV. OF THE STATE ARCHITECT
APP: 02-122976 INC:
REVIEWED FOR
SS ☑ FLS ☑ ACS ☑
DATE: 03/12/2025

TRACY UNIFIED SCHOOL DISTRICT

HMC Architects

3595001000

2101 CAPITOL AVENUE, SUITE 100
SACRAMENTO, CA 95816
916 368 7990 / www.hmcarchitects.com

ISSUE

Δ	DESCRIPTION	DATE
A	ADDENDUM "A"	3/20/25

KEYNOTES

GENERAL NOTES

FACILITY:
JACOBSON ELEMENTARY SCHOOL
1750 W KAVANAGH AVE
TRACY, CA 95376

PROJECT:
JACOBSON ES - TK CLASSROOM

SHEET NAME:
MECHANICAL $ CEILING DETAILS

DATE: **04/03/24** CLIENT PROJ NO: **3595001000**

SHEET:
M1.5
ADDENDUM "A"

Autodesk Docs://3595005000 TUSD TK CLASSROOMS 2025 R22/3595005000-A-TUSD-BOHN-SITE.rvt
12/3/2024 9:55:44 AM

THE LINE SHOWN ABOVE IS EXACTLY ONE INCH LONG AT THIS SHEETS ORIGINAL PAGE SIZE

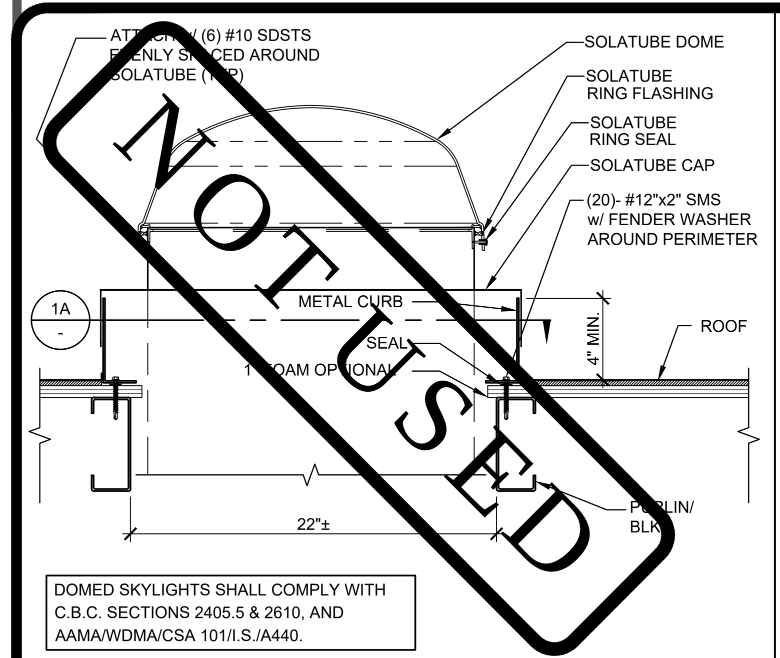

DOMED SKYLIGHTS SHALL COMPLY WITH C.B.C. SECTIONS 2405.5 & 2610, AND AAMA/WDMA/CSA 101/I.S./A440.

SOLATUBE ATTACHMENT DETAIL — SCALE: 1-1/2" = 1'-0" — 1

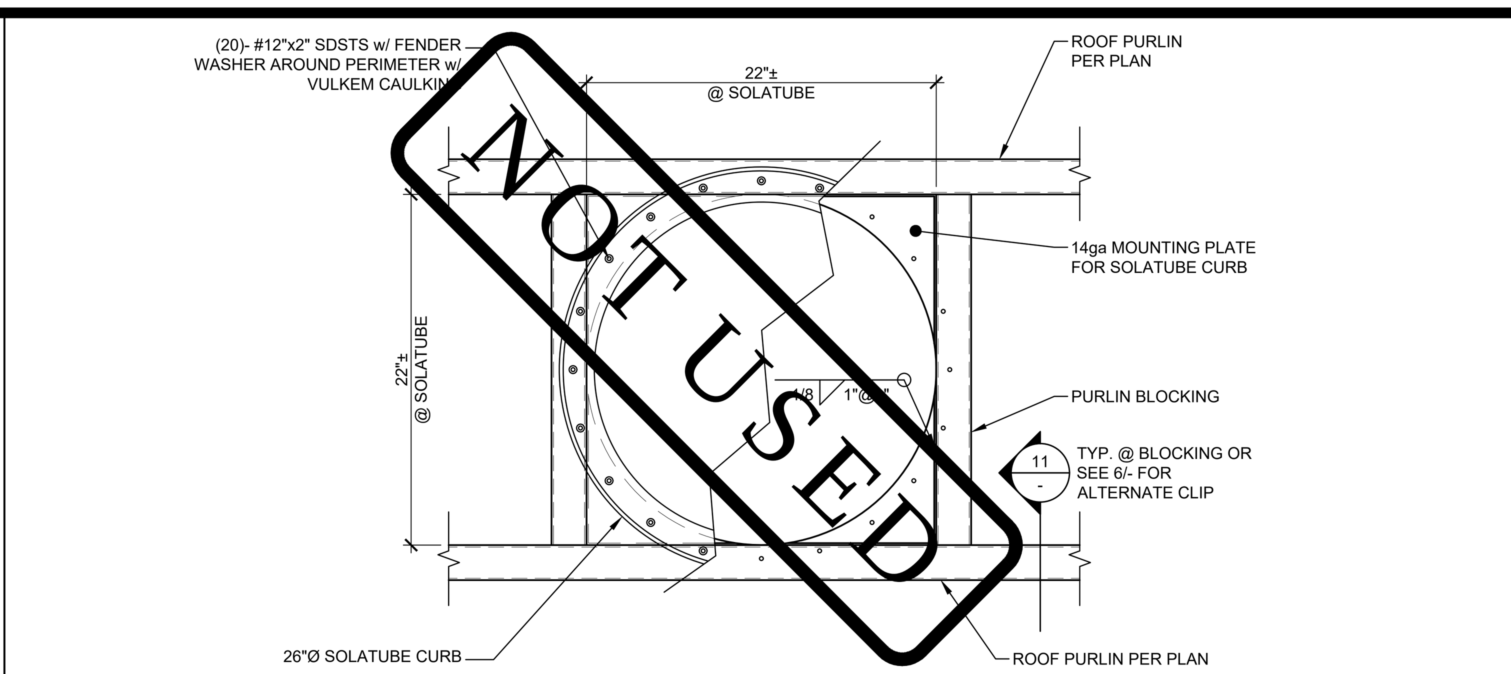

SOLATUBE CURB ATTACHMENT DETAIL — SCALE: 1-1/2" = 1'-0" — 1A

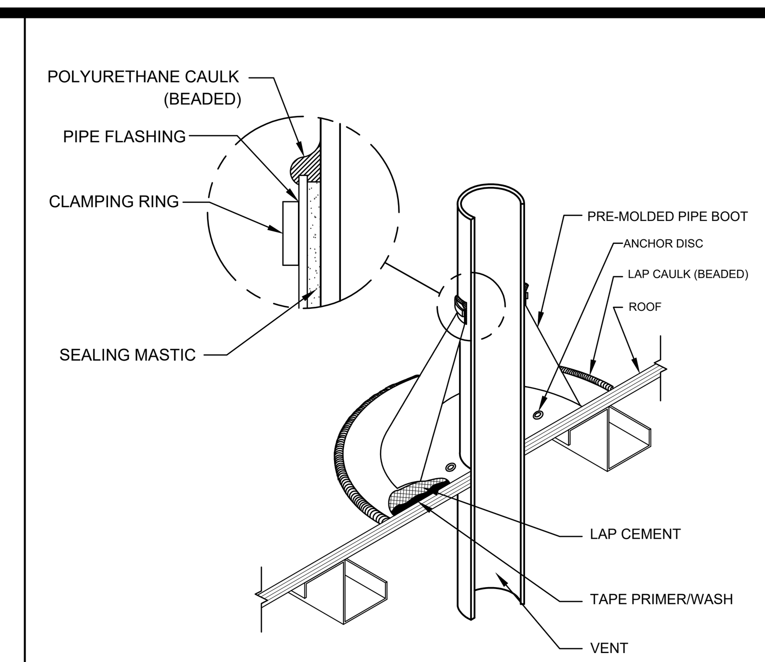

VENT THRU ROOF PENETRATION DETAIL — NOT TO SCALE — 2

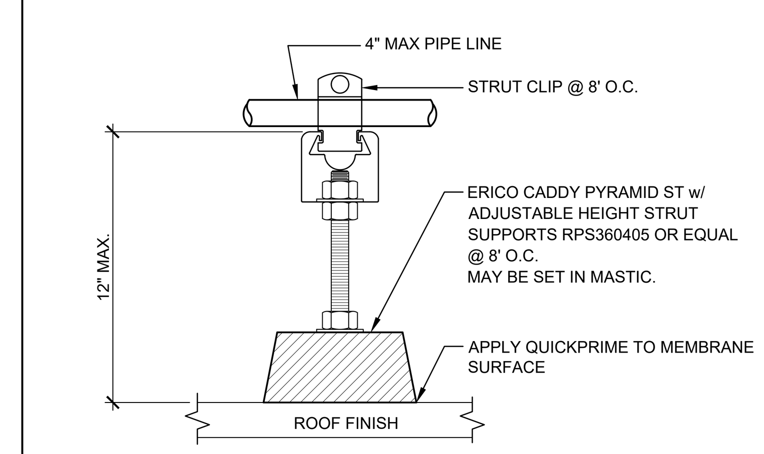

NOTE:
IF PIPE LINE SPANS GREATER THAN 16'-0" BETWEEN THE WALL SUPPORT AND THE HVAC UNIT, POSITIVE ATTACHMENT MUST BE PROVIDED BETWEEN THE BLOCK AND THE METAL ROOF

ROOF-TOP PIPE SUPPORT BLOCK — NOT TO SCALE — 3

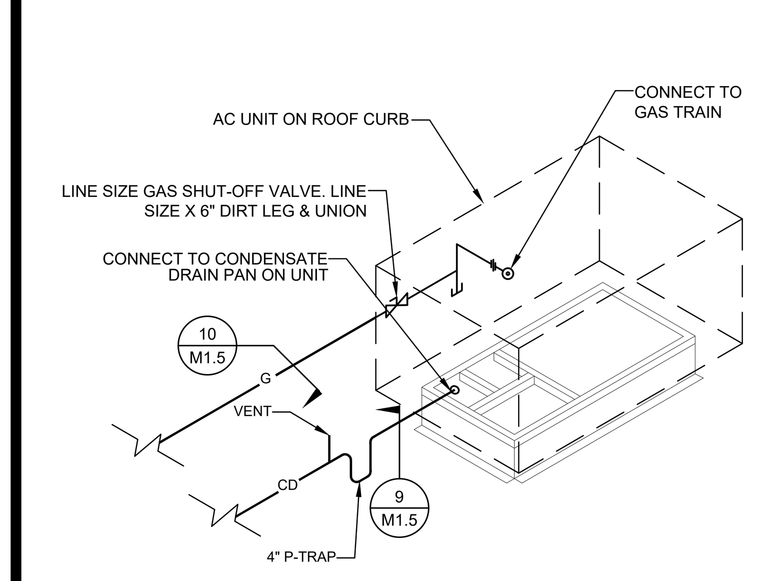

HVAC UNIT PIPING — NOT TO SCALE — 4

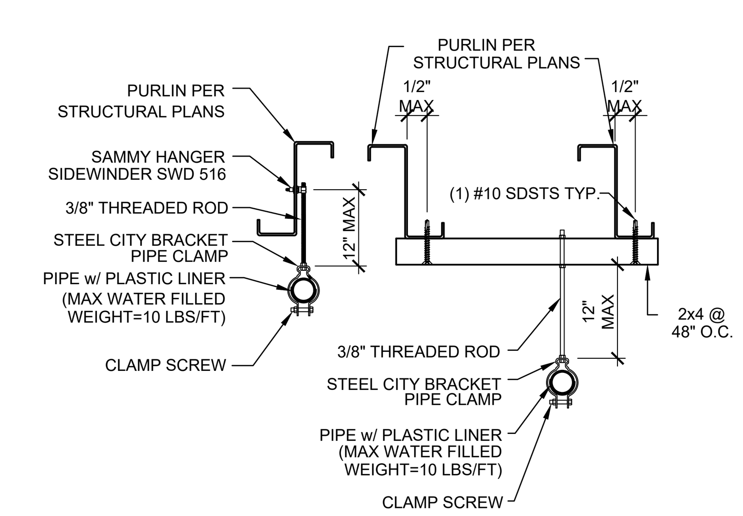

NOTES:
50 LBS MAXIMUM LOAD PER HANGER
100 LBS MAXIMUM LOAD PER ROOF PURLIN

PIPE HANGER DETAIL — SCALE: 1-1/2" = 1'-0" — 5

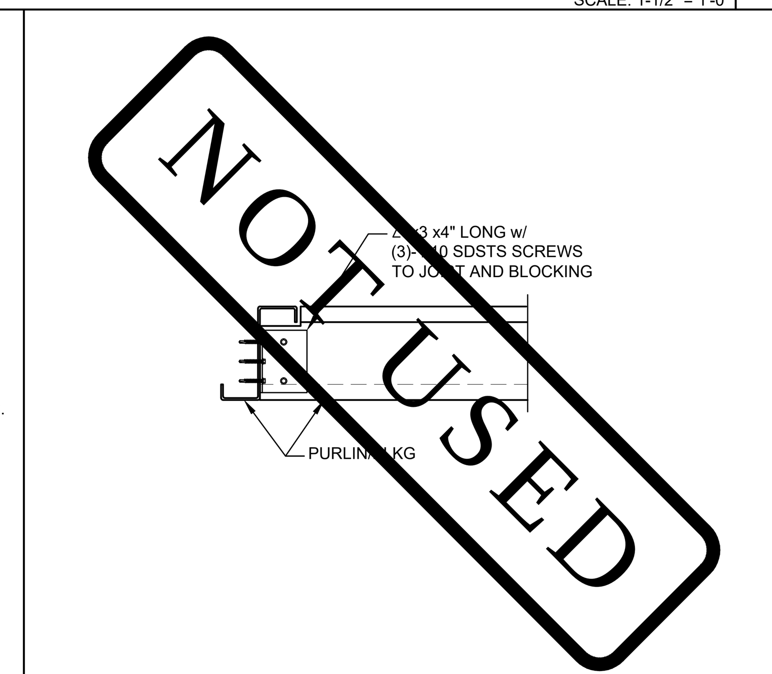

SOLATUBE SECTION (ALT. CLIP) — SCALE: 1-1/2" = 1'-0" — 6

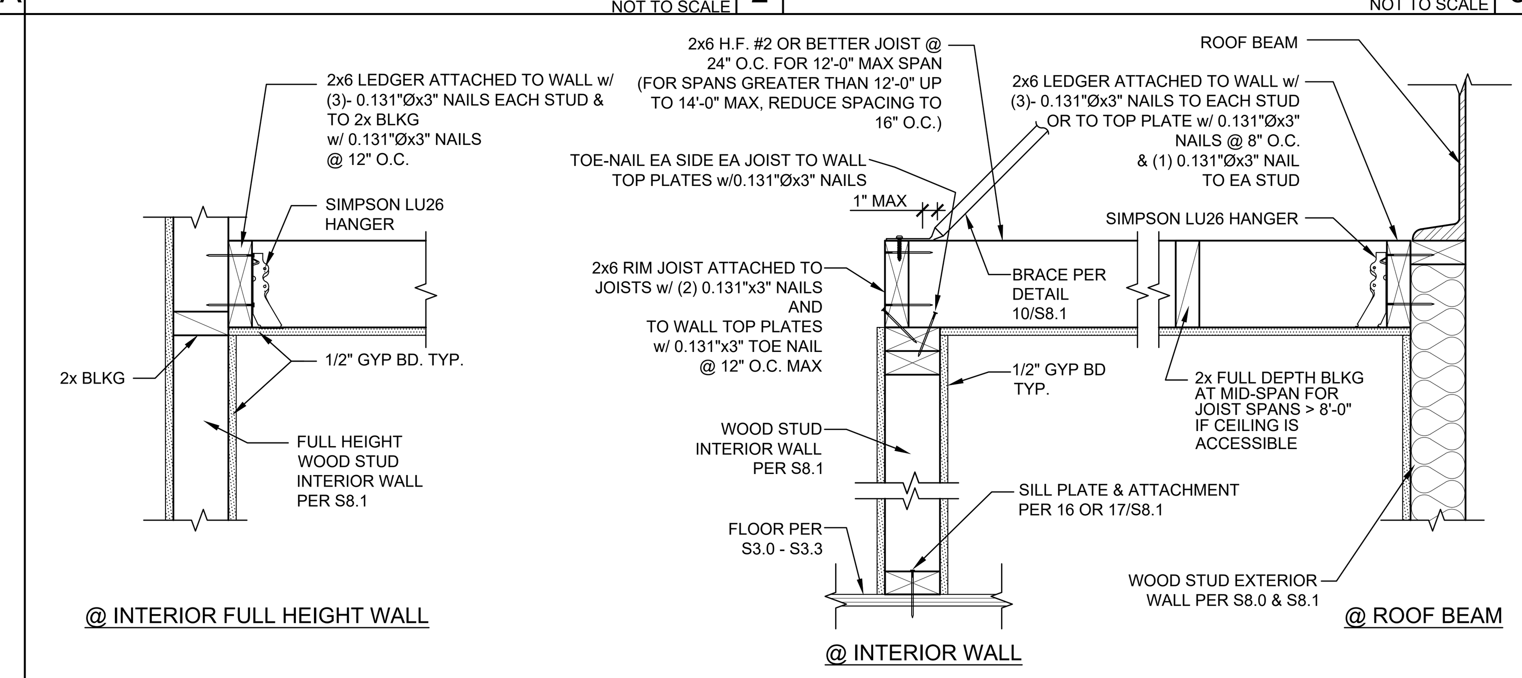

GYPSUM BOARD CEILING DETAIL w/ WOOD STUDS OPTION — SCALE: 1-1/2" = 1'-0" — 8

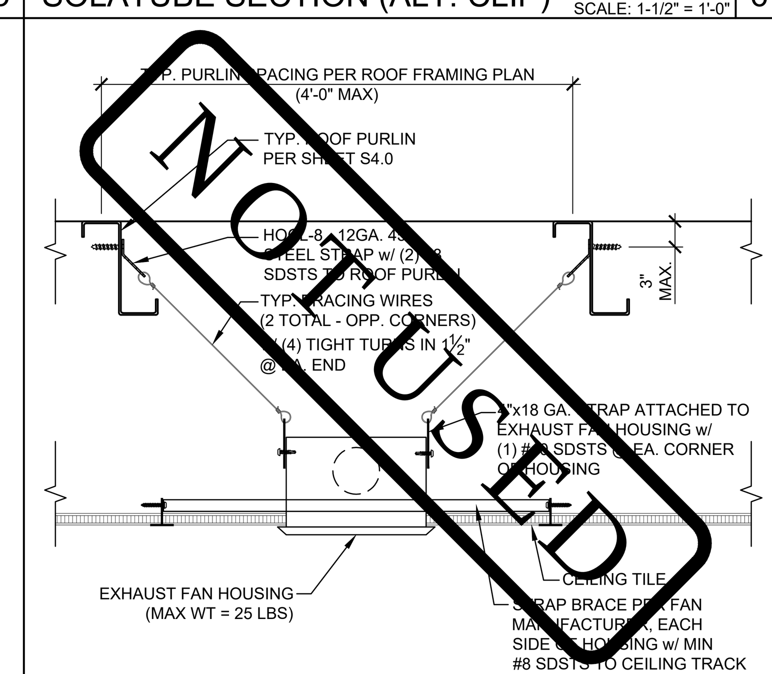

EXHAUST FAN @ T-BAR CEILING MOUNT — 11

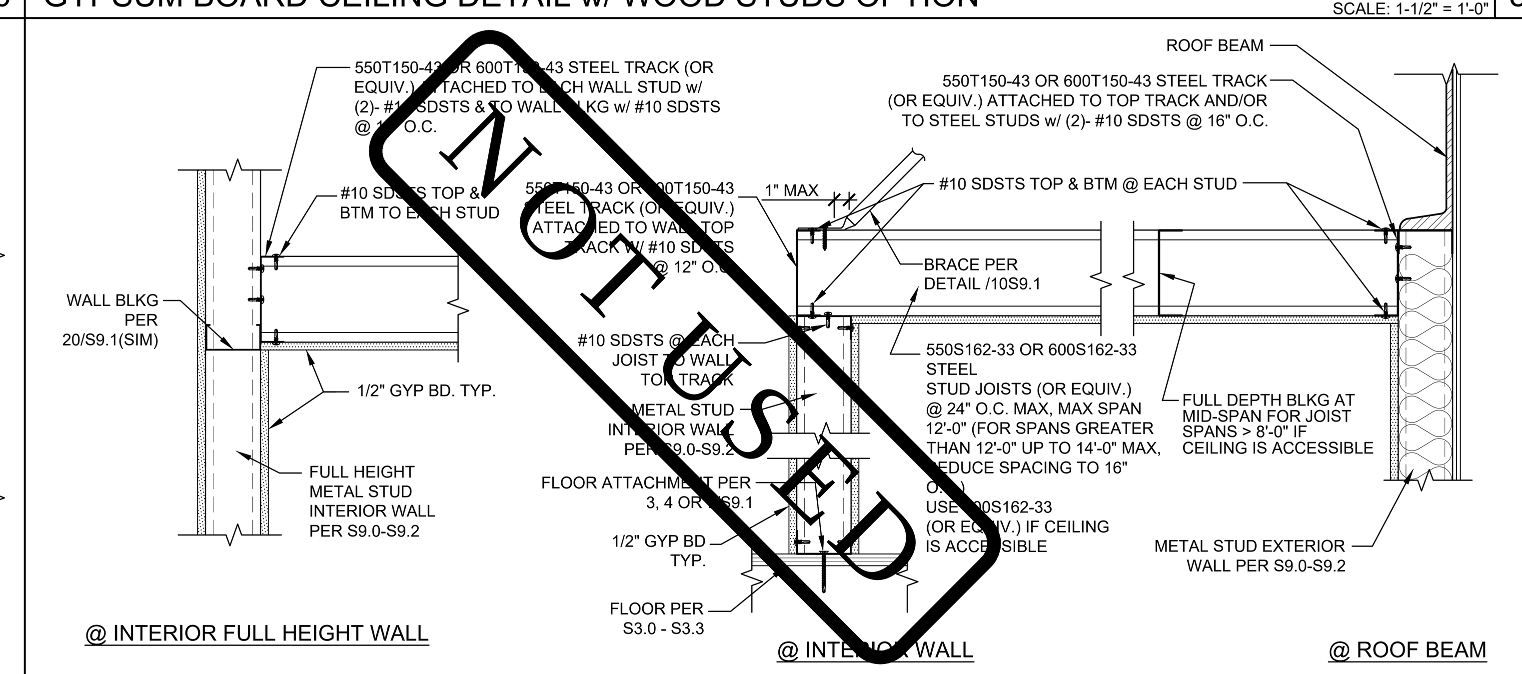

GYPSUM BOARD CEILING DETAIL w/ STEEL STUDS OPTION — SCALE: 1-1/2" = 1'-0" — 13

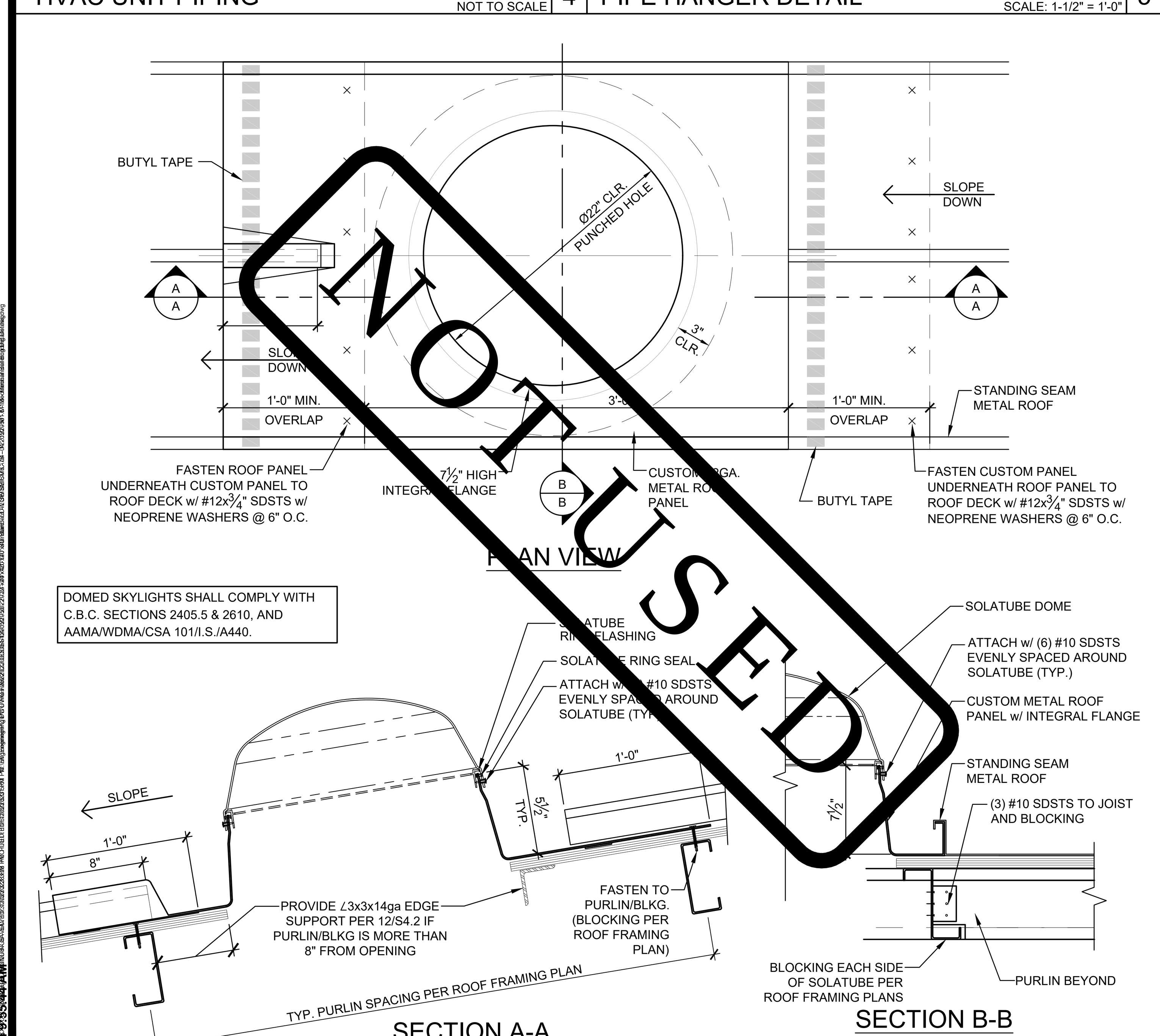

DOMED SKYLIGHTS SHALL COMPLY WITH C.B.C. SECTIONS 2405.5 & 2610, AND AAMA/WDMA/CSA 101/I.S./A440.

OPTIONAL SOLATUBE DETAILS — SCALE: 1-1/2" = 1'-0" — 15

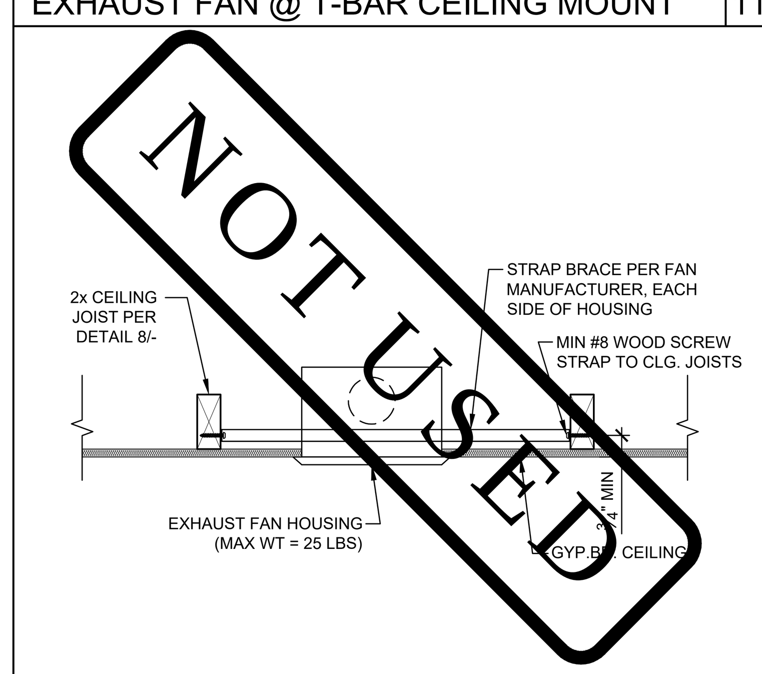

EXHAUST FAN @ GYP.BD. CEILING MOUNT — 16

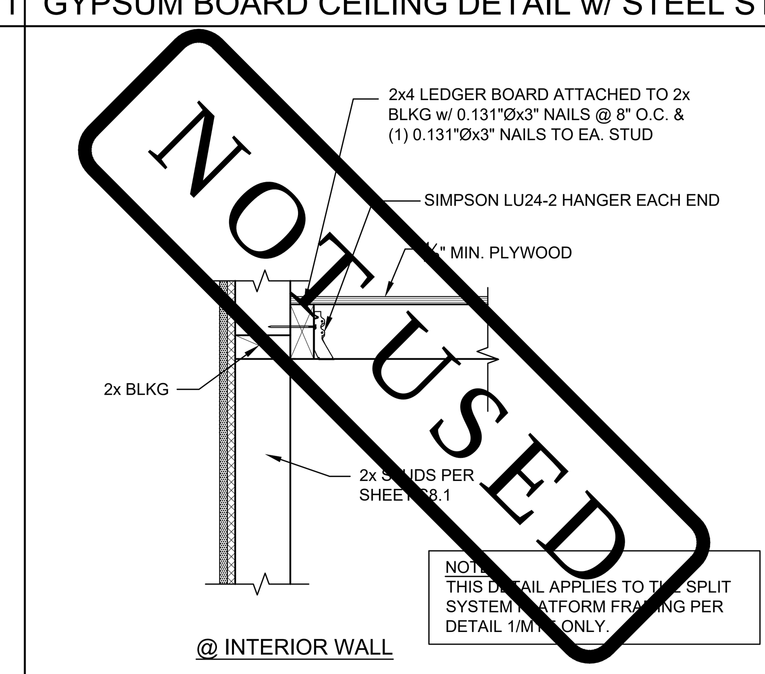

DETAIL @ WOOD STUD OPTION — SCALE: 1-1/2" = 1'-0" — 17

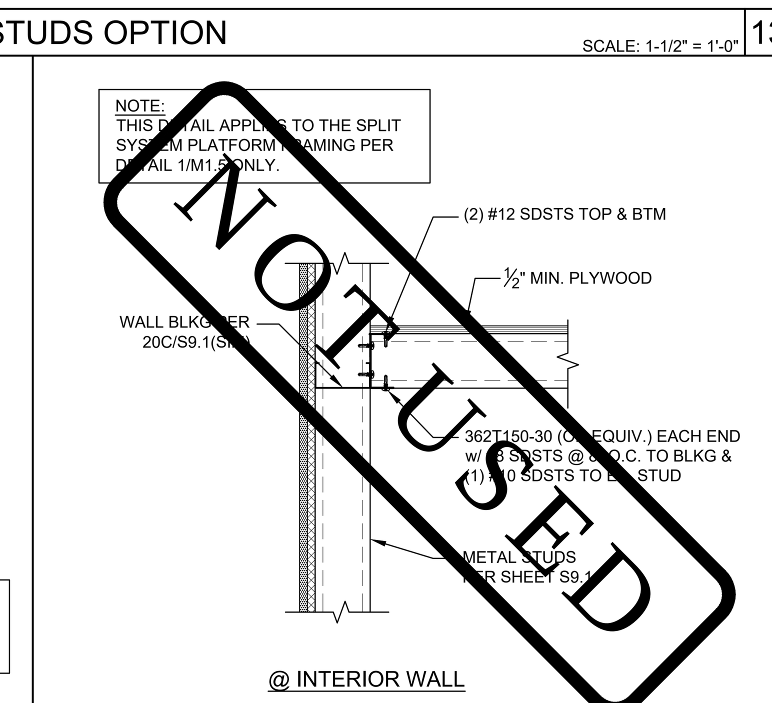

DETAIL @ STEEL STUD OPTION — SCALE: 1-1/2" = 1'-0" — 18

Autodesk Docs://3595005000 TUSD TK CLASSROOMS 2025 R22/3595005000-A-TUSD-BOHN-SITE.rvt
12/3/2024 8:55:44 AM

IDENTIFICATION STAMP
DIV. OF THE STATE ARCHITECT
APP: 02-122976 INC:
REVIEWED FOR
SS ☑ FLS ☑ ACS ☑
DATE: 03/12/2025

TRACY UNIFIED SCHOOL DISTRICT

HMC Architects

3595001000

2101 CAPITOL AVENUE, SUITE 100
SACRAMENTO, CA 95816
916 368 7990 / www.hmcarchitects.com

ISSUE

Δ	DESCRIPTION	DATE
A	ADDENDUM "A"	3/20/25

American Modular Systems
787 Spreckels Ave., Manteca, CA 95336
Phone (209) 825-1921 Fax (209) 825-7018
www.americanmodular.com

INTELLECTUAL-PROPERTY & PROPRIETARY RIGHTS STATEMENT
COPYRIGHT © AMERICAN MODULAR SYSTEMS (AMS)
AMS OWNS ALL COPYRIGHT AND OTHER INTELLECTUAL-PROPERTY AND PROPRIETARY RIGHTS IN THESE DRAWINGS, SPECIFICATIONS, AND THE MATERIAL CONTAINED HEREIN. CERTAIN ELEMENTS SHOWN IN THESE DOCUMENTS ARE REGISTERED TRADEMARKS OF AMS. ALL PATENTABLE MATERIALS CONTAINED IN THESE DOCUMENTS AND ORIGINATING WITH AMS WILL REMAIN THE SOLE PROPERTY OF AMS. THESE DRAWING, SPECIFICATIONS, AND THE MATERIAL CONTAINED HEREIN MAY NOT BE REPRODUCED, TRANSMITTED, COPIED, DISTRIBUTED, MODIFIED, OR OTHERWISE DISPOSED OF (DIRECTLY OR INDIRECTLY) AND MAY NOT BE USED (IN WHOLE OR IN PART) TO ASSIST IN THE CONSTRUCTION, DESIGN, OR OTHER MAKING OF, OR FOR THE PURPOSE OF FURNISHING ANY INFORMATION FOR THE CONSTRUCTION, DESIGN, OR OTHER MAKING OF, ANY BUILDINGS (MODULAR OR OTHERWISE), DRAWINGS, SPECIFICATIONS, PRINTS, APPARATUS, OR PARTS THEREOF, EXCEPT AS EXPRESSLY PERMITTED BY WRITTEN CONSENT OF, OR IN A WRITTEN AGREEMENT WITH, AMS. SUBMITTAL OR DISTRIBUTION TO MEET OFFICIAL REGULATORY REQUIREMENTS WILL NOT BE CONSTRUED AS PUBLICATION IN DEROGATION OF AMS'S COPYRIGHT OR OTHER INTELLECTUAL-PROPERTY OR PROPRIETARY RIGHTS.

PRE-CHECKED SET NAME
24' x 40' THRU 120' x 40'
STANDARD MODULAR BUILDING
(LOW SEISMIC)
FORM®

SITE SPECIFIC PROJECT NAME
.
.
.

APPROVED
DIV. OF THE STATE ARCHITECT
APP: 04-122050 PC
REVIEWED FOR
SS ☑ FLS ☑ ACS ☑ CG ☑
DATE: 12/11/2023

☐ 2022 CBC PRE-CHECK (PC) DOCUMENT
A SEPARATE PROJECT APPLICATION FOR CONSTRUCTION IS REQUIRED.

MANUFACTURER PROFESSIONAL OF RECORD ON PC

LICENSED ARCHITECT
RANDALL PATRICK CAVANAGH
No. C12631
Ren. 3-31-25
STATE OF CALIFORNIA

THESE DRAWINGS ARE PRELIMINARY AND NOT FOR CONSTRUCTION UNLESS STAMPED & SIGNED BY THE DESIGN PROFESSIONAL OF RECORD.

REVISIONS
1
2
3
4

DRAWN BY:	AA
SCALE:	AS NOTED
DATE:	MM/DD/YY
PROJECT NO:	XXXX-22

SHEET TITLE:
MECHANICAL
ROOF DETAILS

SHEET NUMBER:
M1.6

KEYNOTES

GENERAL NOTES

FACILITY:
JACOBSON ELEMENTARY SCHOOL
1750 W KAVANAGH AVE
TRACY, CA 95376

PROJECT:
JACOBSON ES - TK CLASSROOM

SHEET NAME:
MECHANICAL ROOF DETAILS

DATE: **04/03/24** | CLIENT PROJ NO: **3595001000**

SHEET:
M1.6
ADDENDUM "A"

PLEASE RECYCLE

THE LINE SHOWN ABOVE IS EXACTLY ONE INCH LONG AT THIS SHEETS ORIGINAL PAGE SIZE

IDENTIFICATION STAMP
DIV. OF THE STATE ARCHITECT
APP: 02-122976 INC:
REVIEWED FOR
SS ☑ FLS ☑ ACS ☑
DATE: 03/12/2025

24'x40' MINIMUM INSULATION SCHEDULE

ZONE	WOOD STUDS WALL	METAL STUDS WALL	ROOF			FLOORS (NON-CONCRETE)	CONCRETE FLOORS
			BATTS	RIGID (w/SHEATHING)	RIGID (w/o SHEATHING)		
1 & 16	R-13	R-5/R-13	R-19	R-15	R-15	R-13	R-5
2 - 5	R-13	R-5/R-13	R-19	R-5	R-5	R-13	N/A
6 -13	R-13	R-5/R-13	R-19	R-5	R-5	R-13	N/A
14 & 15	R-13	R-5/R-13	R-19	R-5	R-5	R-13	N/A

☒ 36'x40' MINIMUM INSULATION SCHEDULE

ZONE	WOOD STUDS WALL	METAL STUDS WALL	ROOF			FLOORS (NON-CONCRETE)	CONCRETE FLOORS
			BATTS	RIGID (w/SHEATHING)	RIGID (w/o SHEATHING)		
1 & 16	R-13	R-5/R-13	R-19	R-15	R-15	R-13	R-5
2 - 5	R-13	R-5/R-13	R-19	R-5	R-5	R-13	N/A
6 -13	R-13	R-5/R-13	R-19	R-5	R-5	R-13	N/A
14 & 15	R-13	R-5/R-13	R-19	R-5	R-5	R-13	N/A

48'x40' MINIMUM INSULATION SCHEDULE

ZONE	WOOD STUDS WALL	METAL STUDS WALL	ROOF			FLOORS (NON-CONCRETE)	CONCRETE FLOORS
			BATTS	RIGID (w/SHEATHING)	RIGID (w/o SHEATHING)		
1 & 16	R-13	R-5/R-13	R-19	R-15	R-15	R-13	R-5
2 - 5	R-13	R-5/R-13	R-19	R-5	R-5	R-13	N/A
6 -13	R-13	R-5/R-13	R-19	R-5	R-5	R-13	N/A
14 & 15	R-13	R-5/R-13	R-19	R-5	R-5	R-13	N/A

60'x40' MINIMUM INSULATION SCHEDULE

ZONE	WOOD STUDS WALL	METAL STUDS WALL	ROOF			FLOORS (NON-CONCRETE)	CONCRETE FLOORS
			BATTS	RIGID (w/SHEATHING)	RIGID (w/o SHEATHING)		
1 & 16	R-13	R-5/R-13	R-19	R-15	R-15	R-13	R-5
2 - 5	R-13	R-5/R-13	R-19	R-5	R-5	R-13	N/A
6 -13	R-13	R-5/R-13	R-19	R-5	R-5	R-13	N/A
14 & 15	R-13	R-5/R-13	R-19	R-5	R-5	R-13	N/A

72'x40' MINIMUM INSULATION SCHEDULE

ZONE	WOOD STUDS WALL	METAL STUDS WALL	ROOF			FLOORS (NON-CONCRETE)	CONCRETE FLOORS
			BATTS	RIGID (w/SHEATHING)	RIGID (w/o SHEATHING)		
1 & 16	R-13	R-5/R-13	R-19	R-15	R-15	R-13	R-5
2 - 5	R-13	R-5/R-13	R-19	R-5	R-5	R-13	N/A
6 -13	R-13	R-5/R-13	R-19	R-5	R-5	R-13	N/A
14 & 15	R-13	R-5/R-13	R-19	R-5	R-5	R-13	N/A

84'x40' MINIMUM INSULATION SCHEDULE

ZONE	WOOD STUDS WALL	METAL STUDS WALL	ROOF			FLOORS (NON-CONCRETE)	CONCRETE FLOORS
			BATTS	RIGID (w/SHEATHING)	RIGID (w/o SHEATHING)		
1 & 16	R-13	R-5/R-13	R-19	R-15	R-15	R-13	R-15
2 - 5	R-13	R-5/R-13	R-19	R-5	R-5	R-13	N/A
6 -13	R-13	R-5/R-13	R-19	R-5	R-5	R-13	N/A
14 & 15	R-13	R-5/R-13	R-19	R-5	R-5	R-13	N/A

96'x40' MINIMUM INSULATION SCHEDULE

ZONE	WOOD STUDS WALL	METAL STUDS WALL	ROOF			FLOORS (NON-CONCRETE)	CONCRETE FLOORS
			BATTS	RIGID (w/SHEATHING)	RIGID (w/o SHEATHING)		
1 & 16	R-13	R-5/R-13	R-19	R-15	R-15	R-13	R-5
2 - 5	R-13	R-5/R-13	R-19	R-5	R-5	R-13	N/A
6 -13	R-13	R-5/R-13	R-19	R-5	R-5	R-13	N/A
14 & 15	R-13	R-5/R-13	R-19	R-5	R-5	R-13	N/A

108'x40' MINIMUM INSULATION SCHEDULE

ZONE	WOOD STUDS WALL	METAL STUDS WALL	ROOF			FLOORS (NON-CONCRETE)	CONCRETE FLOORS
			BATTS	RIGID (w/SHEATHING)	RIGID (w/o SHEATHING)		
1 & 16	R-13	R-5/R-13	R-19	R-15	R-15	R-13	R-15
2 - 5	R-13	R-5/R-13	R-19	R-5	R-5	R-13	N/A
6 -13	R-13	R-5/R-13	R-19	R-5	R-5	R-13	N/A
14 & 15	R-13	R-5/R-13	R-19	R-5	R-5	R-13	N/A

120'x40' MINIMUM INSULATION SCHEDULE

ZONE	WOOD STUDS WALL	METAL STUDS WALL	ROOF			FLOORS (NON-CONCRETE)	CONCRETE FLOORS
			BATTS	RIGID (w/SHEATHING)	RIGID (w/o SHEATHING)		
1 & 16	R-13	R-5/R-13	R-19	R-15	R-15	R-13	R-5
2 - 5	R-13	R-5/R-13	R-19	R-5	R-5	R-13	N/A
6 -13	R-13	R-5/R-13	R-19	R-5	R-5	R-13	N/A
14 & 15	R-13	R-5/R-13	R-19	R-5	R-5	R-13	N/A

ADDITIONAL HVAC NOTES:
MANUAL OVERRIDE CONTROLS ARE A MANDATORY MEASURE UNDER ENERGY CODE SECTION 120.2(e). ALL HVAC SYSTEMS SHALL HAVE A MANUAL OVERRIDE ACCESSIBLE TO THE OCCUPANTS THAT ALLOWS THEM TO TURN ON THE HVAC SYSTEM DURING NORMAL UNOCCUPIED TIMES. THIS CAN BE A MANUAL OVERRIDE FOR UP TO 4 HOURS, OCCUPANCY SENSOR, OR A 4 HOUR MANUALLY OPERATED TIMER.

MINIMUM INSULATION SCHEDULES

SUSPENDED LAY-IN PANEL CEILING: PER DSA IR 25-2

1. CEILING SYSTEM GENERAL NOTES

1.01 CEILING SYSTEM COMPONENTS SHALL COMPLY WITH ASTM C635 AND SECTION 5.1 OF ASTM E580.

1.02 THE CEILING GRID SYSTEM MUST BE RATED HEAVY DUTY AS DEFINED BY ASTM C635.

1.03 CEILING SYSTEMS. THE FOLLOWING CEILING SYSTEM(S) IS/ARE PART OF THE SCOPE OF THIS PROJECT:

MANUFACTURER: **ARMSTONG (OR EQUAL)**

PRODUCT NAME: **PRELUDE XL AND PRELUDE XL HIGH RECYLED CONTENT(HRC) ICC**

EVALUATION REPORT TYPE AND NUMBER: **ESR#1308**

MAIN RUNNER PART, MODEL, OR CATALOG NUMBER: **7301**

CROSS RUNNER PART, MODEL, CATALOG NUMBER: **4' CROSS T # XL7341 & 2' CROSS T # XL8320**

1.04 SEISMIC WALL CLIP: BERC2 CLIP MANUFACTURER'S MODEL: 7810

1.05 CEILING PANELS SHALL NOT SUPPORT ANY LUMINARIES, AIR TERMINALS OR DEVICES.

1.06 FOR CEILING INSTALLATIONS UTILIZING ACOUSTICAL TILE PANELS OF MINERAL OR GLASS FIBER, IT IS NOT MANDATORY TO PROVIDE ¾" CLEARANCE BETWEEN THE ACOUSTICAL TILE PANELS AND THE WALL ON THE SIDES OF THE CEILING WHICH ARE FREE TO SLIP. FOR ALL OTHER CEILING PANEL TYPES, PROVIDE ¾" CLEARANCE BETWEEN THE CEILING PANEL AND THE WALL ON THE SIDES OF THE CEILING FREE TO SLIP. CLEARANCE BETWEEN CEILING GRID RUNNERS/MEMBERS AND WALLS SHALL COMPLY WITH THE DETAILS ON THESE DRAWINGS REGARDLESS OF CEILING TILE MATERIAL.

2. MATERIALS

2.01 CEILING WIRE SHALL BE CLASS 1 ZINC COATED (GALVANIZED) CARBON STEEL CONFORMING TO ASTM A641. WIRE SHALL BE #12 GAUGE (0.106" DIAMETER) WITH SOFT TEMPER AND MINIMUM ULTIMATE TENSILE STRENGTH = 70 KSI.

2.02 GALVANIZED SHEET STEEL (INCLUDING THAT USED FOR METAL STUD AND TRACK COMPRESSION STRUTS/POST) SHALL CONFORM TO ASTM A653, OR OTHER EQUIVALENT SHEET STEEL LISTED IN SECTION A3.1 OF THE NORTH AMERICAN SPECIFICATION FOR THE DESIGN OF COLD-FORMED STEEL STRUCTURAL MEMBERS, (AISI S100). MATERIAL 43 MIL (18 GAUGE) AND LIGHTER SHALL HAVE MINIMUM YIELD STRENGTH OF 33 KSI. MATERIAL 54 MIL (16 GAUGE) AND HEAVIER SHALL HAVE A MINIMUM YIELD STRENGTH OF 50 KSI.

2.03 ELECTRICAL METALLIC TUBE (EMT) SHALL BE ANSI C80.3/UL 797 CARBON STEEL WITH G90 GALVANIZING. EMT SHALL HAVE MINIMUM YIELD STRENGTH (F_Y) OF 30 KSI AND MINIMUM ULTIMATE STRENGTH (F_U) OF 48 KSI.

3. ATTACHMENT OF HANGER AND BRACING WIRES

3.01 SEPARATE ALL CEILING HANGER AND BRACING WIRES AT LEAST 6 INCHES FROM ALL UNBRACED DUCTS, PIPES, CONDUIT, ETC.

3.02 HANGER AND BRACING WIRES SHALL NOT ATTACH TO OR BEND AROUND OBSTRUCTIONS INCLUDING BUT NOT LIMITED TO PIPING, DUCTWORK, CONDUIT AND EQUIPMENT.

3.03 HANGER WIRES THAT ARE MORE THAN ONE (HORIZONTAL) IN SIX (VERTICAL) OUT OF PLUMB SHALL HAVE COUNTER-SLOPING WIRES.

3.04 SLACK SAFETY WIRES SHALL BE CONSIDERED HANGER WIRES FOR INSTALLATION AND TESTING REQUIREMENTS.

3.05 HANGER AND BRACING WIRE ANCHORAGE TO THE STRUCTURE SHALL BE INSTALLED IN SUCH A MANNER THAT THE DIRECTION OF THE ANCHORAGE ALIGNS CLOSELY WITH THE DIRECTION OF THE WIRE (E.G., BRACING WIRE CEILING CLIPS MUST BE BENT AS SHOWN IN THE DETAILS AND ROTATED AS REQUIRED TO ALIGN CLOSELY WITH THE DIRECTION OF THE WIRE, SCREW EYES IN WOOD MUST BE INSTALLED SO THEY ALIGN CLOSELY WITH THE DIRECTION OF THE WIRE, ETC.).

4. FASTENERS AND WELDING

4.01 SHEET METAL SCREWS SHALL COMPLY WITH ASTM C1513 AND ASME B18.6.3. PENETRATION OF SCREWS THROUGH JOINED MATERIAL SHALL NOT BE LESS THAN THREE EXPOSED THREADS.

4.02 N/A

4.03 N/A

4.04 IF NOT OTHERWISE SPECIFIED IN THE EVALUATION REPORT, POWER-ACTUATED FASTENERS INSTALLED IN STEEL SHALL BE INSTALLED SO THE ENTIRE POINTED END OF THE FASTENER IS DRIVEN THROUGH THE STEEL MEMBER

4.05 POWER-ACTUATED FASTENERS IN CONCRETE OR MASONRY ARE NOT PERMITTED FOR BRACING WIRES.

4.06 CONCRETE REINFORCEMENT AND PRE-STRESSING TENDONS SHALL BE LOCATED BY NON-DESTRUCTIVE MEANS PRIOR TO INSTALLING POST-INSTALLED ANCHORS.

4.07 WELDING SHALL BE IN ACCORDANCE WITH AWS D1.3 USING E60XX SERIES ELECTRODES.

5. TESTING

5.01 ALL FIELD TESTING MUST BE PERFORMED IN THE PRESENCE OF THE PROJECT INSPECTOR.

5.02 POST-INSTALLED ANCHORS IN CONCRETE USED TO SUPPORT HANGER WIRES SHALL BE TESTED AT A FREQUENCY OF 10 PERCENT. POWER-ACTUATED FASTENERS IN CONCRETE SHALL BE FIELD TESTED FOR 200 POUNDS IN TENSION. ALL OTHER POST-INSTALLED ANCHORS IN CONCRETE SHALL BE TESTED IN ACCORDANCE WITH CBC SECTION 1910A.5.

5.03 POST-INSTALLED ANCHORS IN CONCRETE USED TO ATTACH BRACING WIRES SHALL BE TESTED AT A FREQUENCY OF 50 PERCENT IN ACCORDANCE WITH CBC SECTION 1910A.5.

6. LUMINARIES

6.01 ALL LUMINARIES SHALL BE POSITIVELY ATTACHED TO THE CEILING SUSPENSION SYSTEMS BY MECHANICAL MEANS TO RESIST A HORIZONTAL FORCE EQUAL TO THE WEIGHT OF THE LUMINARIES. A MINIMUM OF TWO SCREWS OR APPROVED FASTENERS ARE REQUIRED AT EACH LUMINARIES, PER ASTM E580 SECTION 5.3.1.

6.02 SURFACE-MOUNTED LUMINARIES SHALL BE ATTACHED TO THE MAIN RUNNER WITH AT LEAST TWO POSITIVE CLAMPING DEVICES. THE CLAMPING DEVICE SHALL COMPLETELY SURROUND THE SUPPORTING CEILING RUNNER AND BE MADE OF STEEL WITH A MINIMUM THICKNESS OF #14 GAUGE. ROTATIONAL SPRING CATCHES DO NOT COMPLY. A #12 GAUGE SLACK SAFETY WIRE SHALL BE CONNECTED FROM EACH CLAMPING DEVICE TO THE STRUCTURE ABOVE. PROVIDE ADDITIONAL SUPPORTS WHEN A LUMINARY IS 8 FEET OR LONGER OR EXCEEDS 56 POUNDS. MAXIMUM SPACING BETWEEN SUPPORTS SHALL NOT EXCEED 8 FEET.

6.03 LUMINARIES WEIGHING LESS THAN OR EQUAL TO 10 POUNDS MAY BE SUPPORTED DIRECTLY ON THE CEILING RUNNERS, SHALL HAVE A MINIMUM OF ONE #12 GAUGE SLACK SAFETY WIRE CONNECTED FROM THE FIXTURE HOUSING TO THE STRUCTURE ABOVE.

6.04 LUMINARIES WEIGHING GREATER THAN 10 POUNDS BUT LESS THAN OR EQUAL TO 56 POUNDS MAY BE SUPPORTED DIRECTLY ON THE CEILING RUNNERS, BUT THEY SHALL HAVE A MINIMUM OF TWO #12GAUGE SLACK SAFETY WIRES CONNECTED FROM THE FIXTURE HOUSING AT DIAGONAL CORNERS TO THE STRUCTURE ABOVE.

EXCEPTION: ALL LUMINARIES GREATER THAN TWO BY FOUR FEET WEIGHING LESS THAN 56 POUNDS SHALL HAVE A #12 GAUGE SLACK SAFETY WIRE AT EACH CORNER.

6.05 ALL LUMINARIES WEIGHING GREATER THAN 56 POUNDS SHALL BE INDEPENDENTLY SUPPORTED BY NOT LESS THAN FOUR TAUT #12 GAUGE HANGER WIRES (ONE AT EACH CORNER) ATTACHED FROM THE FIXTURE HOUSING TO THE STRUCTURE ABOVE OR OTHER APPROVED HANGERS. THE FOUR TAUT #12 GAUGE WIRES OR OTHER APPROVED HANGERS, INCLUDING THEIR ATTACHMENT TO THE STRUCTURE ABOVE, SHALL BE CAPABLE OF SUPPORTING FOUR TIMES THE WEIGHT OF THE FIXTURE.

7. SERVICES WITHIN THE CEILING

7.01 ALL FLEXIBLE SPRINKLER HOSE FITTING MOUNTING BRACKETS, CEILING-MOUNTED AIR TERMINALS OR OTHER SERVICES SHALL BE POSITIVELY ATTACHED TO THE CEILING SUSPENSION SYSTEMS BY MECHANICAL MEANS. SCREWS OR APPROVED FASTENERS ARE REQUIRED. A MINIMUM OF TWO ATTACHMENTS ARE REQUIRED AT EACH COMPONENT.

7.02 CEILING-MOUNTED AIR TERMINALS OR OTHER SERVICES WEIGHING LESS THAN OR EQUAL TO 20 POUNDS SHALL HAVE ONE #12 GAUGE SLACK SAFETY WIRE ATTACHED FROM THE TERMINAL OR SERVICE TO THE STRUCTURE ABOVE.

7.03 FLEXIBLE SPRINKLER HOSE FITTINGS, CEILING-MOUNTED AIR TERMINALS OR OTHER SERVICES WEIGHING MORE THAN 20 POUNDS BUT LESS THAN OR EQUAL TO 56 POUNDS SHALL HAVE TWO #12 GAUGE SLACK SAFETY WIRES (AT DIAGONAL CORNERS) CONNECTED FROM THE TERMINAL OR SERVICE TO THE STRUCTURE ABOVE.

7.04 FLEXIBLE SPRINKLER HOSE FITTINGS, CEILING-MOUNTED AIR TERMINALS OR OTHER SERVICES WEIGHING MORE THAN 56 POUNDS SHALL BE SUPPORTED DIRECTLY FROM THE STRUCTURE ABOVE BY NOT LESS THAN FOUR TAUT #12 GAUGE HANGER WIRES ATTACHED FROM THE TERMINAL OR SERVICE TO THE STRUCTURE ABOVE OR OTHER APPROVED HANGERS.

8. OTHER DEVICES WITHIN THE CEILING

8.01 ALL LIGHTWEIGHT MISCELLANEOUS DEVICES, SUCH AS STROBE LIGHTS, OCCUPANCY SENSORS, SPEAKERS, EXIT SIGNS, ETC., SHALL BE ATTACHED TO THE CEILING GRID. IN ADDITION, DEVICES WEIGHING MORE THAN10 POUNDS SHALL HAVE A #12 GAUGE SLACK SAFETY WIRE ANCHORED TO THE STRUCTURE ABOVE. DEVICES WEIGHING MORE THAN 20 POUNDS SHALL BE SUPPORTED INDEPENDENTLY FROM THE STRUCTURE ABOVE.

TABLE A - HEAVY DUTY GRID COMPONENTS

MANUFACTURER	MAIN TEE	H.D. 4' CROSS TEE	H.D. 2' CROSS TEE	RUNNER SPLICE DETAIL	SEISMIC WALL CLIPS	ICBO ER REPORT
DONN/USG	DX-26	DX-424	DX-216	5C/M1.4	BERC2	ICC-ESR-1222
ARMSTRONG	7301	XL7341	XL8320	5C/M1.4	BERC2	ICC-ESR-1308
CHICAGO/ROCKFON	200.01	1274.01	1202.01	5C/M1.4	BERC2	ICC-ESR-2631

NOTES:
1. ALL GRID COMPONENTS SHALL BE BY THE SAME MANUFACTURER
2. REFER TO 'A' DETAIL 5/M1.4 FOR BERC2 CLIP DETAIL

METAL SUSPENSION SYSTEMS FOR LAY IN PANEL CEILING

American Modular Systems
787 Spreckels Ave., Manteca, CA 95336
Phone (209) 825-1921 Fax (209) 825-7018
www.americanmodular.com

INTELLECTUAL-PROPERTY & PROPRIETARY RIGHTS STATEMENT
COPYRIGHT © AMERICAN MODULAR SYSTEMS (AMS)
AMS OWNS ALL COPYRIGHT AND OTHER INTELLECTUAL-PROPERTY AND PROPRIETARY RIGHTS IN THESE DRAWINGS, SPECIFICATIONS, AND THE MATERIAL CONTAINED HEREIN. CERTAIN ELEMENTS SHOWN IN THESE DOCUMENTS ARE REGISTERED TRADEMARKS OF AMS. ALL PATENTABLE MATERIALS CONTAINED IN THESE DOCUMENTS AND ORIGINATING WITH AMS WILL REMAIN THE SOLE PROPERTY OF AMS. THESE DRAWING, SPECIFICATIONS, AND THE MATERIAL CONTAINED HEREIN MAY NOT BE REPRODUCED, TRANSMITTED, COPIED, DISTRIBUTED, MODIFIED, OR OTHERWISE DISPOSED OF (DIRECTLY OR INDIRECTLY) AND MAY NOT BE USED (IN WHOLE OR IN PART) TO ASSIST IN THE CONSTRUCTION, DESIGN, OR OTHER MAKING OF, OR FOR THE PURPOSE OF FURNISHING ANY INFORMATION FOR THE CONSTRUCTION, DESIGN, OR OTHER MAKING OF, ANY BUILDINGS (MODULAR OR OTHERWISE), DRAWINGS, SPECIFICATIONS, PRINTS, APPARATUS, OR PARTS THEREOF, EXCEPT AS EXPRESSLY PERMITTED BY WRITTEN CONSENT OF, OR IN A WRITTEN AGREEMENT WITH, AMS. SUBMITTAL OR DISTRIBUTION TO MEET OFFICIAL REGULATORY REQUIREMENTS WILL NOT BE CONSTRUED AS PUBLICATION IN DEROGATION OF AMS'S COPYRIGHT OR OTHER INTELLECTUAL-PROPERTY OR PROPRIETARY RIGHTS.

PRE-CHECKED SET NAME
24' x 40' THRU 120' x 40' STANDARD MODULAR BUILDING (LOW SEISMIC)
FORM®

SITE SPECIFIC PROJECT NAME
.
.
.

APPROVED
DIV. OF THE STATE ARCHITECT
APP: 04-122050 PC
REVIEWED FOR
SS ☑ FLS ☑ ACS ☑ CG ☑
DATE: 12/11/2023

☐ 2022 CBC PRE-CHECK (PC) DOCUMENT
A SEPARATE PROJECT APPLICATION FOR CONSTRUCTION IS REQUIRED.

MANUFACTURER PROFESSIONAL OF RECORD ON PC

THESE DRAWINGS ARE PRELIMINARY AND NOT FOR CONSTRUCTION UNLESS STAMPED & SIGNED BY THE DESIGN PROFESSIONAL OF RECORD.

REVISIONS
1
2
3
4

DRAWN BY:	AA
SCALE:	AS NOTED
DATE:	MM/DD/YY
PROJECT NO:	XXXX-22

SHEET TITLE:
CEILING NOTES & SPECIFICATIONS

SHEET NUMBER:
M1.7

PLEASE RECYCLE

TRACY UNIFIED SCHOOL DISTRICT

HMC Architects
3595001000
2101 CAPITOL AVENUE, SUITE 100
SACRAMENTO, CA 95816
916 368 7990 / www.hmcarchitects.com

ISSUE

Δ	DESCRIPTION	DATE
A	ADDENDUM "A"	3/20/25

KEYNOTES

GENERAL NOTES

FACILITY:
JACOBSON ELEMENTARY SCHOOL
1750 W KAVANAGH AVE
TRACY, CA 95376

PROJECT:
JACOBSON ES - TK CLASSROOM

SHEET NAME:
CEILING NOTES & SPECIFICATIONS

DATE: 04/03/24 CLIENT PROJ NO: 3595001000

SHEET:
M1.7
ADDENDUM "A"

Autodesk Docs://3595005000 TUSD TK CLASSROOMS 2025 R22/3595005000-A-TUSD-BOHN-SITE.rvt
12/3/2024 9:55:45 AM

THE LINE SHOWN ABOVE IS EXACTLY ONE INCH LONG AT THIS SHEETS ORIGINAL PAGE SIZE

HEATING VENTILATING AND AIR CONDITIONING (HVAC)

1. HEAT PUMP: SINGLE PACKAGE WALL-MOUNTED AIR-TO-AIR ELECTRIC HEAT PUMP UNIT SHALL BE RATED IN ACCORDANCE WITH A.R.I. STANDARD 240-77. MAXIMUM AC SIZE FOR THIS BUILDING WILL BE A 5-TON UNIT. ALL UNITS SHALL BE 230/208 VOLT, 1 PHASE SYSTEM, UL TESTED & APPROVED OR COMPARABLE, AND MEET CURRENT ENERGY STANDARDS.
   - A. THE SYSTEM SHALL MAINTAIN AN AUTOMATICALLY CONTROLLED INDOOR CLASSROOM TEMPERATURE OF 78 DEGREES F. WHEN THE OUTDOOR DRY BULB TEMPERATURE VARIES BETWEEN 100 DEGREES F. IN THE SUMMER
   - B. THE SYSTEM MUST MAINTAIN THE ABOVE TEMPERATURE WHEN THE DAMPER IS ADJUSTED TO USE APPROXIMATELY ONE-THIRD FRESH AIR.
2. DUCTWORK
   - A. CONSTRUCT ALL DUCTWORK OF GALVANIZED SHEET METAL IN ACCORDANCE WITH C.M.C., ASHRAE GUIDE EQUIPMENT VOLUME, AND SMACNA LOW VELOCITY DUCT CONSTRUCTION MANUAL, LATEST EDITIONS. ALL DUCTWORK SHALL BE INSULATED WITH 1" THICK FIBERGLASS DUCT WRAP WITH VAPOR BARRIER. PROVIDE 1" DUCT ATTENUATION AT ALL DUCTWORK WITHIN 2'-0" OF HVAC UNIT.
   - B. NON-METALLIC DUCTWORK OPTION: IN ACCESSIBLE CONCEALED PORTIONS OF DUCT SYSTEM, RIGID 1" FIBERGLASS OR INSULATED FLEX-DUCT WITH VAPOR BARRIER MAY BE SUBSTITUTED FOR SHEET METAL DUCTWORK. ALL DUCTWORK WITHIN 2'-0" OF THE HVAC UNIT AND ALL INTERFACE CONNECTIONS SHALL BE METAL. DUCTWORK AND REINFORCEMENT SHALL BE DESIGNED FOR 2" STATIC PRESSURE. REFERENCE BRANDS: OWENS-CORNING FIBERGLASS DUCTBOARD, 1" THICK, AND MICRO-AIRE TYPE 475. NON-METALLIC DUCTWORK SHALL CONFORM TO NFPA 90-A AND SMACNA CLASS 1 RATING.
   - C. DUCT INSTALLATION AND PLENUMS SHALL MEET THE REQUIREMENTS OF ENERGY CODE SECTION 120.4 AND THE MANUFACTURER'S INSTALLATION INSTRUCTIONS. (MINIMUM R=4.2) HORIZONTAL FLEX DUCT SHALL BE SUPPORTED AT A MAXIMUM 4' INTERVALS, WITH HANGING STRAPS A MINIMUM 1-1/2" WIDE. DUCTS MUST BE PULLED TIGHTS WITH A MAXIMUM SAG OF 1/2" PER FOOT OF HORIZONTAL RUN. DUCTS SHALL NOT BE KINKED OR CRUSHED. BEND/RADIUS EQUAL TO THE DUCT DIAMETER OR GREATER.
   - D. SIZES OF SUPPLY AND RETURN DUCTS SHALL BE SPECIFIED ON PLANS. HVAC CURB SUPPLY AND RETURN DUCTS SHALL BE THE SAME SIZE AND ALLIGN WITH THE HVAC UNIT.
   - E. FLEXIBLE AIR DUCTS AND CONNECTORS SHALL BE NOT MORE THAN 5 FEET IN LENGTH AND SHALL NOT BE USED IN LIEU OF RIGID ELBOWS OR FITTINGS. FLEXIBLE AIR DUCTS SHALL BE PERMITTED TO BE USED AS AN ELBOW AT A TERMINAL DEVICE PER ENERGY CODE 120.4 AND CMC 603.4.1
3. AIR DUCT INSULATION AND LININGS SHALL COMPLY WITH FLAME SPREAD LESS THAN OR EQUAL TO 25, SMOKE GENERATION LESS THAN OR EQUAL TO 50.
4. SUPPLY AIR DIFFUSERS SHALL BE 675 CFM MAXIMUM, 12" ROUND. 1" FIBERGLASS OR FLEXDUCT DUCTWORK SPECIFICALLY DESIGNED TO PROVIDE AIR THERMAL COOLING SYSTEMS. 24"X8"X1" MICRO-AIRE TYPE #475 OWENS-CORNING, KNAUF, CERTAINTEED, OR EQUAL AND 90-B: UL #131 TEST, CLASS 1 RATING WITH "SMACNA".
5. REGISTERS AND DIFFUSERS: PROVIDE THREE (MINIMUM) 4-WAY THROW AIR DIFFUSERS AS MANUFACTURED BY CARNES, TITUS, HART AND COOLEY, METALAIRE, SHOEMAKER, BARBER-COLEMAN OR KRUEGER COMMERCIAL GRADE GRILLS AND REGISTERS.
6. AIR CONDITIONING CONTROLS: PROVIDE ELECTRONIC PROGRAMMABLE THERMOSTAT. THERMOSTAT SHALL BE PROGRAMMED WITH EXPECTED OCCUPIED TIMERS. AIR HANDLER FAN WILL BE PROGRAMMED TO RUN DURING ALL OCCUPIED TIMES. PRE-OCCUPANCY PURGE SHALL BE PROGRAMMED ONE HOUR PRIOR TO THE MODULAR BUILDING BEING NORMALLY OCCUPIED.
   THERMOSTAT SHALL HAVE THE FOLLOWING FUNCTIONS:
   - C. 5 AND 2 WEEKDAY/WEEKEND PROGRAMMING DAYS WITH 4 SEPARATE TIME/TEMPERATURE SETTINGS FOR A 24-HOUR PERIOD.
   - D. KEY BOARD LOCKOUT SWITCH.
   - E. PROGRAMMABLE DISPLAY.
   - F. 2-HOUR OVERRIDE MINIMUM.
   - G. STATUS INDICATED LED'S.
   - H. BATTERY BACK-UP.
   - I. PROVIDE LOCKING CLEAR THERMOSTAT COVER WITH THERMOSTAT COVER WITH ACCESS HOLE FOR PROGRAM OVERRIDE. WHITE RODGERS IF92-371. MOUNT TOP OF BOX @ 48" A.F.F. MAX. (WHERE SEALED, SETTINGS & ADJUSTMENTS CAN BE DONE BY SERVICE PERSONNEL ONLY.)
7. THERMAL INSULATION
   - A. ROOF INSULATION: R-19 WITH 22 GA. WIRE @ 16" O.C. & R-5 OR R-15 (REFER TO INSULATION TABLES IN PAGE M1.7) TOP OF ROOF SHEATHING.
   - B. WALLS INSULATION: R-13 KRAFT FACED. (R-5 INSULATION OVER INTERIOR SIDE METAL FRAMED WALLS) 17/A5.1 AND 17/A5.3
   - C. NON-CONCRETE FLOORS INSULATION: R-13
   - D. CONCRETE FLOORS INSULATION: R-5 OR R-15 (REFER TO INSULATION TABLES IN PAGE M1.7)
   - F. BURNING CHARACTERISTICS: FLAME SPREAD LESS THAN 25 & SMOKE DEVELOPMENT IS LESS THAN 50
   - E. FLAME SPREAD AND SMOKE DEVELOPMENT SHALL CONFORM TO CALIFORNIA BUILDING CODE SEC. 720.
8. FACTORY-MADE AIR DUCTS
   - A. FACTORY-MADE AIR DUCTS SHALL BE APPROVED FOR THE USE INTENDED OR SHALL CONFORM TO THE REQUIREMENTS OF C.M.C. SECTION 601.0.
   - B. EACH PORTION OF A FACTORY-MADE AIR DUCT SYSTEM SHALL BE IDENTIFIED BY THE MANUFACTURER WITH A LABEL OR OTHER SUITABLE IDENTIFICATION INDICATING COMPLIANCE WITH C.M.C. SECTION 601.0 AND ITS CLASS DESIGNATION. THESE DUCTS SHALL BE LISTED AND SHALL BE INSTALLED IN ACCORDANCE WITH THE TERMS OF THEIR LISTING AND THE REQUIREMENTS OF C.M.C. SECTION 601.0.
   - C. DUCT SUPPORT FLEX DUCT TO BE SUPPORTED WITH 1-1/2" WIDE X26 GA. GALV. STRAP @ MAX 4'-0" O.C. ATTACH TO RAFTER WITH TWO #8 S.M.S. @ EACH END.
   - D. SUPPLY AIR PLENUM TO BE SUPPORTED WITH 1-1/2" WIDE X26 GA. GALV. STRAPS MINIMUM 2 PER PLENUM.
   - E. SUPPLY AIR BOX AND DIFFUSERS TO BE SUPPORTED WITH (2) 12 GA. HANGER WIRES TO BOX @ OPPOSITE CORNERS.
   - F. SUPPLY AIR BOX AND DIFFUSERS TO BE BRACED WITH (2) 12 GA. SLACK WIRES TO BOX @ OPPOSITE CORNERS. ATTACH SUPPLY AIR DIFFUSERS TO CEILING GRID TO RESIST A LATERAL LOAD EQUAL TO THE WEIGHT OF THE DIFFUSER AND SUPPLY AIR BOX WITH TWO #8 S.M.S.
9. FIREBLOCKING SHALL BE PROVIDED IN THE FOLLOWING LOCATIONS:
   - A. IN CONCEALED SPACES OF STUD WALLS AND PARTITIONS, INCLUDING FURRED SPACES;
   - B. AT THE CEILING AND FLOOR LEVELS;
   - C. AND AT 10-FOOT (3048MM) INTERVALS BOTH VERTICAL AND HORIZONTAL. REFERENCE 2022 CBC SECTION 718.
10. THE INTERIOR ENVIRONMENT SHALL BE ASSEMBLED WITH PRODUCTS THAT CONTRIBUTE TO A HEALTHY INDOOR AIR QUALITY (IAQ). THE FOLLOWING SHALL COMPLY TITLE 24, PART 11 ("CAL-GREEN"), SECTION 5.504.4. (SEE SHEET N1.0, SECTION 9C "INTERIOR AIR QUALITY CONTROL")
11. HVAC FILTER
   - A. FILTERS SHALL HAVE A "MINIMUM EFFICIENCY REPORTING VALUE" OF 13 WITH 2" DEPTH MIN. (MERV 13) AND SHALL BE INSTALLED PRIOR TO OCCUPANCY AND RECOMMENDATIONS FOR MAINTENANCE WITH FILTERS OF THE SAME VALUE SHALL BE INCLUDED IN THE OPERATION AND MAINTENANCE MANUAL, PER 2022 CEC SECTION 5.504.5.3
   - D. INSTALLED FILTERS SHALL BE CLEARLY LABELED BY THE MANUFACTURER INCLUDING THE MERV RATING, PER 2022 CBC SECTION 5.504.5.3.1
10. ROOF MOUNTED HVAC
   - A. A GASKET SHALL BE PLACED BETWEEN THE CURB AND THE HVAC UNIT. MASTIC SEALANT SHALL BE USED TO SEAL ALL SEAMS BETWEEN THE HVAC UNIT AND DUCTS.
13. HVAC CONTROLS
   - A. THERMOSTAT (BY OTHERS) WILL BE PROGRAMMED WHEN THE MODULAR BUILDING IS PLACED ON A SITE TO ENSURE THE MINIMUM AIR RATE WILL BE SUPPLIED TO THE SPACE AT ALL USUALLY OCCUPIED TIMES AND PROGRAMMED TO PROVIDE A PRE-OCCUPANCY PURGE ONE HOUR PRIOR TO THE MODULAR BUILDING BEING NORMALLY OCCUPIED PER ENERGY CODE 120.1(C)1.
14. UPON SITE PLACEMENT OR SITE CONSTRUCTION, THE OPERATION AND MAINTENANCE DOCUMENTATION FOR ALL MECHANICAL AND LIGHTING SYSTEMS AND CONTROLS SHALL BE PROVIDED BY THE GENERAL CONTRACTOR FOR THE PERMANENT MODULAR RELOCATABLE BUILDING AND DELIVERED TO THE OWNER.

HVAC NOTES

HEATING VENTILATING AND AIR CONDITIONING (HVAC) continued

15. THE CALIFORNIA ENERGY CODE 10-103 REQUIRES ACCEPTANCE TESTING ON ALL NEWLY INSTALLED LIGHTING CONTROLS, MECHANICAL SYSTEMS, ENVELOPES, AND PROCESS EQUIPMENT AFTER INSTALLATION AND BEFORE PROJECT COMPLETION. AN ACCEPTANCE TEST IS FUNCTIONAL PERFORMANCE TEST TO HELP ENSURE THAT NEWLY INSTALLED EQUIPMENT IS OPERATING AND IN COMPLIANCE WITH THE ENERGY CODE.
16. LIGHTING CONTROLS ACCEPTANCE TESTS MUST BE PERFORMED BY A CERTIFIED LIGHTING CONTROL ACCEPTANCE TEST TECHNICIAN (ATT). MECHANICAL SYSTEM ACCEPTANCE TESTS MUST BE PERFORMED BY CERTIFIED MECHANICAL ATT FOR PROJECTS SUBMITTED ON OR AFTER OCTOBER 1, 2021. ENVELOPE AND PROCESS EQUIPMENT ACCEPTANCE TESTS SHALL BE PERFORMED BY THE INSTALLING CONTRACTOR, ENGINEER/ARCHITECT OF RECORD OR THE OWNER'S AGENT.
17. A LISTING OF CERTIFIED ATT'S CAN BE FOUND AT: HTTPS://WWW.ENERGY.CA.GOV/PROGRAMS-AND-TOPICS/PROGRAMS/ACCEPTANCE-TEST-TECHNICIAN-CERTIFICATION-PROVIDER-PROGRAM/ACCEPTANCE. THE ACCEPTANCE TESTING PROCEDURES MUST BE REPEATED, AND DEFICIENCIES MUST BE CORRECTED BY THE BUILDER OR INSTALLING CONTRACTOR UNTIL THE CONSTRUCTION/INSTALLATION OF PROJECT INSPECTORS WILL BE COLLECTING THE FORMS TO CONFIRM THAT THE REQUIRED ACCEPTANCE TESTS HAVE BEEN COMPLETED.
18. THERMOSTAT SHALL BE PROGRAMMED TO PREVENT SUPPLEMENTARY HEATER OPERATION WHEN THE HEATING LOAD CAN BE MET BY THE HEAT PUMP ALONE. THE CUT-ON TEMPERATURE FOR COMPRESSION HEATING MUST BE HIGHER THAN THE CUT-ON TEMPERATURE FOR SUPPLEMENTARY HEATING, AND THE CUT-OFF TEMPERATURE FOR COMPRESSION HEATING MUST BE HIGHER THAN THE CUT-OFF TEMPERATURE FOR SUPPLEMENTARY HEATING PER CEC 2022 SECTION 110.2(B).

HVAC NOTES (CONTINUATION)

H2 FAN SYSTEMS

BUILDING SIZE	DESIGN OA CFM
24'x40'	365
36'x40'	547
48'x40'	365
60'x40'	456
72'x40'	547
84'x40'	365
96'x40'	365
108'x40'	365
120'x40'	365

HVAC CFM CHART

	MODEL #	DESCRIPTION	MAX. CFM	UNIT WEIGHT (LBS)	EER
SYSTEM AIR INDOOR	CAH-3	4 TON HEAT PUMP	1600	948	11
	CAH-5	5 TON HEAT PUMP	1800	948	11

HVAC CFM CHART

	MODEL #	DESCRIPTION	MAX. CFM	UNIT WEIGHT (LBS)	EER	COP	CLIMATE ZONE(S)
BARD WALL HUNG	W36HB	3 TON HEAT PUMP	1143	500	11	3.3	1-16
	W42HC	3½ TON HEAT PUMP	1140	500	11	3.3	1-16
	W48HC	4 TON HEAT PUMP	1650	505	11	3.3	1-16
	W60HC	4½ TON HEAT PUMP	1855	515	11	3.3	1-16

HVAC CFM CHART

	MODEL #	DESCRIPTION	MAX. CFM	UNIT WEIGHT (LBS)	EER	SEER	CLIMATE ZONE(S)
CARRIER ROOF MOUNT	50VT-C36---3--TP	3 TON HEAT PUMP	1200	371	12.0	14.5	1-16
	50VT-C42---3--TP	3½ TON HEAT PUMP	1400	412	12.0	14.5	1-16
	50VT-C48---3--TP	4 TON HEAT PUMP	1600	432	12.0	14.5	1-16
	50VT-C60---3--TP	4½ TON HEAT PUMP	1750	462	12.0	14.2	1-16

HVAC CFM CHART

	MODEL #	DESCRIPTION	AIR HANDLER MODEL # (INTERIOR OR ATTIC MOUNTED)	MAX. CFM	UNIT WEIGHT (LBS)	EER	SEER	CLIMATE ZONE(S)
CARRIER SPLIT DX SYSTEM	25HCE436A003	3 TON HEAT PUMP	FX4DN037	1200	157	11.5	14.0	1-16
	25HCE442A003	3½ TON HEAT PUMP	FX4DN043	1400	157	11.5	14.0	1-16
	25HCE448A003	4 TON HEAT PUMP	FX4DN049	1600	185	11.5	14.0	1-16
	25HCE460A003	4½ TON HEAT PUMP	FX4DN061	2000	201	11.5	14.0	1-16

THE CALIFORNIA ENERGY CODE SECTION 10-103 REQUIRES ACCEPTANCE TESTING ON ALL NEWLY INSTALLED LIGHTING CONTROLS, MECHANICAL SYSTEMS, ENVELOPES, AND PROCESS EQUIPMENT AFTER INSTALLATION AND BEFORE PROJECT COMPLETION. AN ACCEPTANCE TEST IS A FUNCTIONAL PERFORMANCE TEST TO HELP ENSURE THAT NEWLY INSTALLED EQUIPMENT IS OPERATING AND IN COMPLIANCE WITH ENERGY CODE.

LIGHTING CONTROLS ACCEPTANCE TESTS MUST BE PERFORMANCE BY A CERTIFIED LIGHTING CONTROLS ACCEPTANCE TEST TECHNICIAN (ATT).

MECHANICAL SYSTEM ACCEPTANCE TESTS MUST BE PERFORMED BY A CERTIFIED MECHANICAL ATT FOR PROJECTS SUBMITTED ON OR AFTER OCTOBER 1, 2021.
ENVELOPE AND PROCESS EQUIPMENT ACCEPTANCE TESTS SHALL BE PERFORMED BY THE INSTALLING CONTRACTOR, ENGINEER/ARCHITECT OF RECORD OR THE OWNER'S AGENT.

A LIST OF CERTIFIED ATT'S CAN BE FOUND AT:
HTTP://WWW.ENERGY.CA.GOV/PROGRAMS-AND-TOPICS/PROGRAMS/ACCEPTANCE-TEST-TECHNICIAN-CERTIFICATION-PROVIDER-PROGRAM/ACCEPTANCE

THE ACCEPTANCE TESTING PROCEDURES MUST BE REPEATED, AND DEFICIENCIES MUST BE CORRECTED BY THE BUILDER OR INSTALLING CONTRACTOR UNTIL THE CONSTRUCTION/INSTALLATION OF THE SPECIFIED SYSTEMS CONFORM AND PASS THE REQUIRED ACCEPTANCE CRITERIA. PROJECT INSPECTORS WILL BE COLLECTING THE FORMS TO CONFIRM THAT THE REQUIRED ACCEPTANCE TESTS HAVE BEEN COMPLETED.

HVAC SCHEDULE

	BUILDING SIZE & CLIMATE ZONE GROUP (ZONE)	# OF HVAC 3½ TON (BARD)	4 TON (BARD)	4 TON (SYSTEM AIR)	5 TON (SYTEM AIR)		BUILDING SIZE & CLIMATE ZONE GROUP (ZONE)	3½ TON (BARD)	4 TON (BARD)	4 TON (SYSTEM AIR)	5 TON (SYTEM AIR)		BUILDING SIZE & CLIMATE ZONE GROUP (ZONE)	3½ TON (BARD)	4 TON (BARD)	4 TON (SYSTEM AIR)	5 TON (SYTEM AIR)
☐	24'x40' GROUP A (1,16)	1				☐	60'x40' GROUP A (1,16)	2				☐	96'x40' GROUP A (1,16)	4			
☐	24'x40' GROUP B (2-5)	1				☐	60'x40' GROUP B (2-5)	2				☐	96'x40' GROUP B (2-5)	4			
☐	24'x40' GROUP C (6-13)	1				☐	60'x40' GROUP C (6-13)	2				☐	96'x40' GROUP C (6-13)	4			
☐	24'x40' GROUP D (14,15)	1				☐	60'x40' GROUP D (14,15)		2			☐	96'x40' GROUP D (14,15)	4			
☐	36'x40' GROUP A (1,16)	1				☐	72'x40' GROUP A (1,16)	2				☐	108'x40' GROUP A (1,16)	3			
☐	36'x40' GROUP B (2-5)	1				☐	72'x40' GROUP B (2-5)	2				☐	108'x40' GROUP B (2-5)	3			
☒	36'x40' GROUP C (6-13)			1		☐	72'x40' GROUP C (6-13)			2		☐	108'x40' GROUP C (6-13)			3	
☐	36'x40' GROUP D (14,15)			1		☐	72'x40' GROUP D (14,15)			2		☐	108'x40' GROUP D (14,15)			3	
☐	48'x40' GROUP A (1,16)	2				☐	84'x40' GROUP A (1,16)	2				☐	120'x40' GROUP A (1,16)	5			
☐	48'x40' GROUP B (2-5)	2				☐	84'x40' GROUP B (2-5)	2				☐	120'x40' GROUP B (2-5)	5			
☐	48'x40' GROUP C (6-13)	2				☐	84'x40' GROUP C (6-13)			2		☐	120'x40' GROUP C (6-13)	5			
☐	48'x40' GROUP D (14,15)	2				☐	84'x40' GROUP D (14,15)			2		☐	120'x40' GROUP D (14,15)	5			

1. LOW-PROBABILITY SYSTEM(S) ON PLAN PER CMC 1103.2 IN REGARDS TO REFRIGERANT.
2. REFRIGERANT 410B (WHERE APPLICABLE) AND COORESPONDING SAFETY GROUP ON PLAN (CMC 1103 AND TABLE 1102.3)

** SECURED w/ 22 GA WIRE @ 16" O.C.
*** R-1 MAY BE ACHEIVED w/ POLYSTYRENE OR INSULATION TAPE APLLIED TO THE TOP FLANGE OF PURLINS, TYP.

ADDITIONAL HVAC NOTES:
MANUAL OVERRIDE CONTROLS ARE A MANDATORY MEASURE UNDER ENERGY CODE SECTION 120.2(e). ALL HVAC SYSTEMS SHALL HAVE A MANUAL OVERRIDE ACCESSIBLE TO THE OCCUPANTS THAT ALLOWS THEM TO TURN ON THE HVAC SYSTEM DURING NORMAL UNOCCUPIED TIMES. THIS CAN BE A MANUAL OVERRIDE FOR UP TO 4 HOURS, OCCUPANCY SENSOR, OR A 4 HOUR MANUALLY OPERATED TIMER.

HVAC SCHEDULES

American Modular Systems
787 Spreckels Ave., Manteca, CA 95336
Phone (209) 825-1921 Fax (209) 825-7018
www.americanmodular.com

INTELLECTUAL-PROPERTY & PROPRIETARY RIGHTS STATEMENT
COPYRIGHT © AMERICAN MODULAR SYSTEMS (AMS)
AMS OWNS ALL COPYRIGHT AND OTHER INTELLECTUAL-PROPERTY AND PROPRIETARY RIGHTS IN THESE DRAWINGS, SPECIFICATIONS, AND THE MATERIAL CONTAINED HEREIN. CERTAIN ELEMENTS SHOWN IN THESE DOCUMENTS ARE REGISTERED TRADEMARKS OF AMS. ALL PATENTABLE MATERIALS CONTAINED IN THESE DOCUMENTS AND ORIGINATING WITH AMS WILL REMAIN THE SOLE PROPERTY OF AMS. THESE DRAWING, SPECIFICATIONS, AND THE MATERIAL CONTAINED HEREIN MAY NOT BE REPRODUCED, TRANSMITTED, COPIED, DISTRIBUTED, MODIFIED, OR OTHERWISE DISPOSED OF (DIRECTLY OR INDIRECTLY) AND MAY NOT BE USED (IN WHOLE OR IN PART) TO ASSIST IN THE CONSTRUCTION, DESIGN, OR OTHER MAKING OF, OR FOR THE PURPOSE OF FURNISHING ANY INFORMATION FOR THE CONSTRUCTION, DESIGN, OR OTHER MAKING OF, ANY BUILDINGS (MODULAR OR OTHERWISE), DRAWINGS, SPECIFICATIONS, PRINTS, APPARATUS, OR PARTS THEREOF, EXCEPT AS EXPRESSLY PERMITTED BY WRITTEN CONSENT OF, OR IN A WRITTEN AGREEMENT WITH, AMS. SUBMITTAL OR DISTRIBUTION TO MEET OFFICIAL REGULATORY REQUIREMENTS WILL NOT BE CONSTRUED AS PUBLICATION IN DEROGATION OF AMS'S COPYRIGHT OR OTHER INTELLECTUAL-PROPERTY OR PROPRIETARY RIGHTS.

PRE-CHECKED SET NAME
24' x 40' THRU 120' x 40'
STANDARD MODULAR BUILDING
(LOW SEISMIC)
FORM®

SITE SPECIFIC PROJECT NAME
.
.
.

APPROVED
DIV. OF THE STATE ARCHITECT
APP: 04-122050 PC
REVIEWED FOR
SS ☑ FLS ☑ ACS ☑ CG ☑
DATE: 12/11/2023

☐ 2022 CBC PRE-CHECK (PC) DOCUMENT
A SEPARATE PROJECT APPLICATION FOR CONSTRUCTION IS REQUIRED.

MANUFACTURER PROFESSIONAL OF RECORD ON PC

LICENSED ARCHITECT
RANDALL PATRICK CAVANAGH
No. C12631
Ren. 3-31-25
STATE OF CALIFORNIA

THESE DRAWINGS ARE PRELIMINARY AND NOT FOR CONSTRUCTION UNLESS STAMPED & SIGNED BY THE DESIGN PROFESSIONAL OF RECORD.

REVISIONS
1
2
3
4

DRAWN BY: AA
SCALE: AS NOTED
DATE: MM/DD/YY
PROJECT NO: XXXX-22

SHEET TITLE:
MECHANICAL NOTES & SCHEDULES

SHEET NUMBER:
M1.7A

IDENTIFICATION STAMP
DIV. OF THE STATE ARCHITECT
APP: 02-122976 INC:
REVIEWED FOR
SS ☑ FLS ☑ ACS ☑
DATE: 03/12/2025

TRACY
UNIFIED SCHOOL DISTRICT

HMC Architects
3595001000
2101 CAPITOL AVENUE, SUITE 100
SACRAMENTO, CA 95816
916 368 7990 / www.hmcarchitects.com

ISSUE

Δ	DESCRIPTION	DATE
A	ADDENDUM "A"	3/20/25

KEYNOTES

GENERAL NOTES

FACILITY:
JACOBSON ELEMENTARY SCHOOL
1750 W KAVANAGH AVE
TRACY, CA 95376

PROJECT:
JACOBSON ES - TK CLASSROOM

SHEET NAME:
MECHANICAL NOTES & SCHEDULES

DATE: 04/03/24 CLIENT PROJ NO: 3595001000

SHEET:
M1.7A
ADDENDUM "A"

PLEASE RECYCLE

Autodesk Docs://3595005000 TUSD TK CLASSROOMS 2025 R22/3595005000-A-TUSD-BOHN-SITE.rvt

THE LINE SHOWN ABOVE IS EXACTLY ONE INCH LONG AT THIS SHEETS ORIGINAL PAGE SIZE

IDENTIFICATION STAMP
DIV. OF THE STATE ARCHITECT
APP: 02-122976 INC:
REVIEWED FOR
SS ☑ FLS ☑ ACS ☑
DATE: 03/12/2025

SEE SHEET E1.0-N FOR SITE-SPECIFIC SHEET

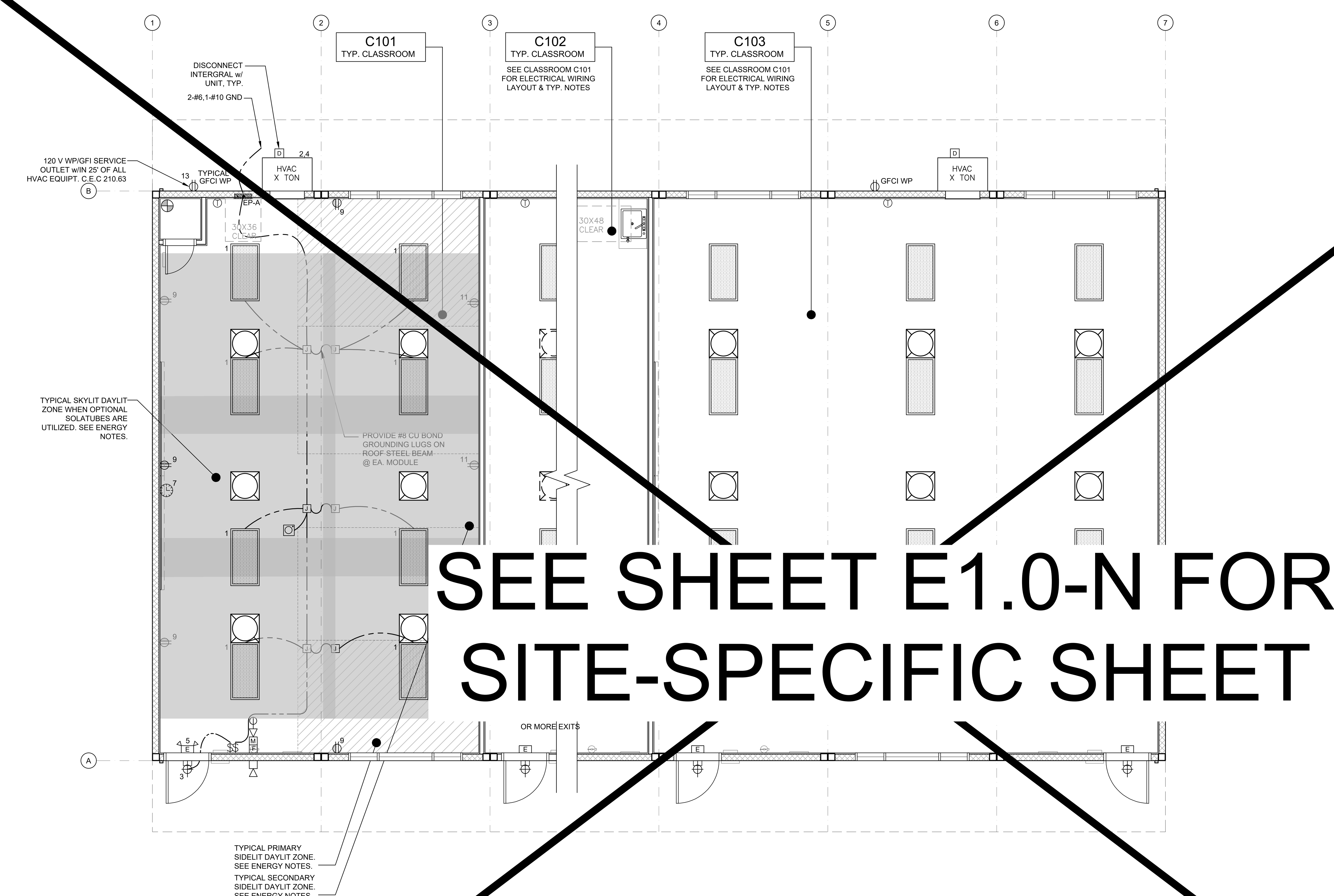

TYPICAL ELECTRICAL PLAN — SCALE: 1/4" = 1' - 0" — 1

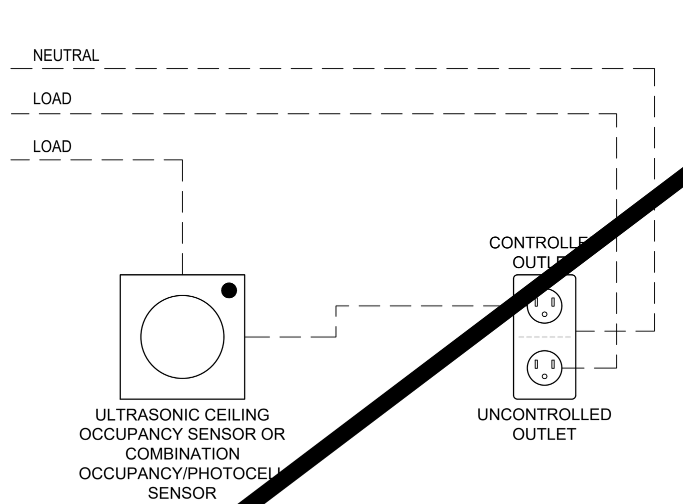

NOTE:
REQUIRED FOR OFFICES, LOBBY, AND MEETING ROOMS ONLY.

TYP. CONTROLLED/UNCONTROLLED RECEPTACLE WIRING DIAGRAM — N.T.S. — 2

ENERGY CONTROLS

1. AUTOMATIC DAYLIGHTING CONTROLS:
NOT REQUIRED IN ROOMS WHERE COMBINED INSTALLED LIGHTING POWER IN COMBINED SKYLIT & PRIMARY DAYLIT ZONES ARE <120 WATTS. INSTALLED WATTAGE IN PRIMARY SIDELIT DAY LIT ZONE IS 90 WATTS (2x 45w, AS SHOWN IN THE SHADED AREAS). THEREFORE, AUTOMATIC DAYLIGHTING CONTROLS ARE ONLY REQUIRED WHEN "SOLATUBES" ARE INSTALLED. SEE A1.1. WHEN DAYLIT CONTROLS ARE REQUIRED, PROVIDE COMBINATION OCCUPANCY/PHOTOCELL SENSOR.
2. ENERGY MANAGEMENT CONTROL SYSTEM (EMCS) CONNECTION:
PER TITLE 24 CODE, "AN EMCS MAY BE INSTALLED TO COMPLY WITH THE REQUIREMENTS OF ONE OR MORE LIGHTING CONTROLS IF IT MEETS THE MINIMUM REQUIREMENTS". PC MAY CONTAIN OCCUPANCY SENSORS AND PHOTOCELL CONTROL LIGHTING, IN THAT CASE, AN EMCS IS NOT REQUIRED FOR THIS PC.
3. SOLAR-READY ZONE REQUIREMENTS:
REQUIREMENTS & TABLE CAN BE FOUND ON SHEET A2.0
4. SUGGESTED CONTROLS DIAGRAM FOR TYPICAL DAYLIT ZONE:

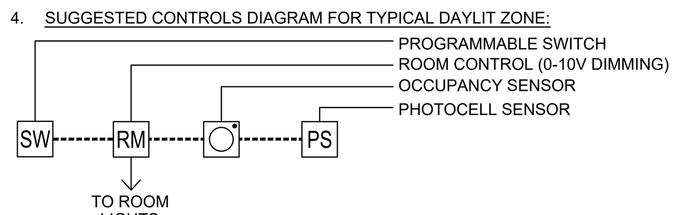

NOTE: ANT MONITORING EQUIPMENT OR ASSOCIATED SENSORS ARE SITE SPECIFIC AND ARE NOT INCLUDED IN THE BASE PC.

ENERGY NOTES

1. THE PROJECT ARCHITECT SHALL BE RESPONSIBLE FOR THE PLACEMENT OF HEAT & SMOKE DETECTORS, EVACS AND PULL STATIONS, AND COMPLETE FIRE ALARM SYSTEM WHEN THE SITE SPECIFIC PROJECT IS REQUIRED TO MEET THE PROVISIONS OF SB 575 & CBC 907.2.3.
2. ANY MONITORING EQUIPMENT OR ASSOCIATED SENSORS ARE SITE SPECIFIC AND ARE NOT INCLUDED IN THIS BASE PC.
3. PULL STATIONS ARE REQUIRED AT EVERY EXIT. AT ANY SPACE REQUIRING 2 OR MORE EXITS, PROVIDE EXIT SIGNS (CBC 1013) AND EMERGENCY EXIT ILLUMINATION (CBC 1008).
4. SEE PLANS FOR LOCATIONS OF ALL DEVICES.
5. STUB-OUT LOCATIONS FOR ELECTRICAL PANEL, FIRE ALARM, AND DATA BOXES ARE SHOWN DIAGRAMMATICAL ONLY. EXACT LOCATIONS MAY VARY +/- SEVERAL FEET. PLEASE CONTACT AMERICAN MODULAR SYSTEMS FOR EXACT LOCATIONS. POINT OF CONNECTION WILL BE AT FACE OF BUILDING.
6. STUB-UP ALL FIRE ALARM JUNCTION BOXES TO ACCESSIBLE ATTIC SPACE WITH 1/2" MIN. GALV. THIN WALL TUBING (EMT). DO NOT CONNECT FIRE ALARM CONDUIT WITH ANY OTHER ELECTRICAL CONDUIT.
7. THE LIGHTS FOR EACH ROOM OVER 250 SQ FT SHALL BE CONTROLLED BY ULTRASONIC OCCUPANCY SENSOR: WATT STOPPER W-500A, W-1000A, OR W-2000A (OR EQUAL) BASED ON THE ROOM SIZE, IN CONJUNCTION WITH BI-LEVEL SWITCHING.
8. FIXTURE MOUNTING SHALL COMPLY WITH CALIFORNIA SEISMIC REGULATIONS.
9. LIGHTING FIXTURES MAY BE INSTALLED ROTATED 90° FROM SHOWN TO MATCH T-BAR GRID LAYOUT.
10. ACCEPTANCE TESTS SHALL BE COMPLETED ON NEWLY INSTALLED OR REPLACEMENT OF LIGHTING CONTROLS BEFORE PROJECT COMPLETION PER THE CALIFORNIA ENERGY CODE SECTION 10-103. ACCEPTANCE TESTS MUST BE PERFORMED BY A CERTIFIED ACCEPTANCE TEST TECHNICIAN (ATT). THE ACCEPTANCE TESTING PROCEDURES MUST BE REPEATED, AND DEFICIENCIES CORRECTED UNTIL THE INSTALLATION OF THE SPECIFIED SYSTEMS CONFORM AND PASS THE REQUIRED ACCEPTANCE CRITERIA. COMPLETED NRCA FORMS SHALL BE SUBMITTED TO THE PROJECT INSPECTOR AND THE DISTRICT.
11. PRIMARY, SECONDARY DAYLIT AND SKYLIT ZONES SHALL BE SHOWN AT ALL SPECIFIC ROOM CONFIGURATION
12. REFER TO TS SHEET FOR PV REQUIREMENTS BY BUILDING SIZE AND CLIMATE ZONE

DEMAND RESPONSE CONTROLS
1. DEMAND RESPONSE CONTROLS ARE REQUIRED IN BUILDINGS LARGER THAN 10,000 S.F.
2. DEMAND RESPONSE CONTROLS, WHERE REQUIRED, ARE TO BE PROVIDED BY OTHERS.
3. DEMAND RESPONSE CONTROLS AND EQUIPMENT SHALL BE CAPABLE OF RECEIVING AND AUTOMATICALLY RESPONDING TO AT LEAST ONE STANDARD-BASED MESSAGING PROTOCOL WHICH ENABLES DEMAND RESPONSE AFTER RECEIVING A DEMAND SIGNAL.
4. SITE-SPECIFIC PROJECTS WHICH REQUIRE DEMAND RESPONSE CONTROLS MUST INCLUDE THE SUBMITTAL OF FORM NRCC-ELC-O1-E TO DSA (BY OTHERS).

GENERAL NOTES

- ELECTRICAL PANEL - MOUNT FLUSH WITH WALL FINISH, U.O.N.
- INCANDESCENT WALL MOUNTED INTERIOR LIGHT FIXTURE MODEL: 9850-LED, 10W MAX
- EXTERIOR LIGHT FIXTURE @ EACH DOOR, LED OR EQUAL (MAX 40W) - WHERE THERE ARE TWO OR MORE EXITS, A MINIMUM 90 MIN. BATTERY BACK-UP IS REQUIRED
- EXTERIOR SOFFIT MOUNTED LIGHT FIXTURE ENERTRON MODEL 110BSH-LED-50 LOW PROFILE CANOPY, LED OR EQUAL (MAX 16W)
- UNCONTROLLED-DUPLEX WALL CONVENIENCE OUTLET - MOUNT @ +18" A.F.F. TO CENTERLINE, U.O.N.
- CONTROLLED-DUPLEX WALL CONVENIENCE OUTLET - MOUNT @ +18" A.F.F. TO CENTERLINE, U.O.N. - TO BE CONTROLLED BY OCCUPANCY SENSOR.
- COMBO-DUPLEX WALL CONVENIENCE OUTLET - MOUNT @ +18" A.F.F. TO CENTERLINE, U.O.N.
- FOURPLEX WALL OUTLET - MOUNT @ +18" A.F.F. TO CENTER LINE - U.O.N.
- WP/GFCI: WEATHER-PROOF GROUND FAULT CIRCUIT INTERRUPT OUTLET - MOUNT @ 18" A.F.F. TO CENTERLINE - U.O.N.
- GFCI: GROUND FAULT CIRCUIT INTERRUPT OUTLET - MOUNT @ 18" A.F.F. TO CENTERLINE - U.O.N.
- $: CONTROLLED-SINGLE POLE LIGHT SWITCHES - MOUNT @ +48" A.F.F. MAX TO TOP OF BOX - HUBBELL PREMIUM, BRYANT HEAVY DUTY, OR LEVITON SPECIFICATIONS GRADE.
- $S: SINGLE POLE SOLA-TUBE SWITCH - MOUNT @ +48" A.F.F. MAX TO TOP OF BOX.
- $T: SPRING WOUND COUNTDOWN TIMER, 125-277 VAC, 50/60 Hz, DSPT, 60 MINUTE MAX, ITEM FD460MW OR EQUAL. - MOUNT @ +48" A.F.F. MAX TO TOP OF BOX.
- a: SWITCH SUBSCRIPTS - a=DEVICE CONTROLLED.
- T: THERMOSTAT - TOP OF BOX MOUNTED @ +48" A.F.F.
- J: JUNCTION BOX - SIZE / LOCATION A.F.F. / TYPE AS NOTED
- J: ELECTRICAL CROSSOVER - J-BOX - ABOVE CEILING - #1- 4"x1", #22- 4"x2"
- CLOCK/SPEAKER COMBO - MOUNT @ +90" A.F.F. TO CENTERLINE - U.O.N. - DEVICE BY OTHERS
- S: SPEAKER - OUTLET ONLY - 4" SQ. BOX WITH SINGLE DEVICE RING AND COVER - MOUNT @ +84" A.F.F. TO CENTERLINE - DEVICE BY OTHERS
- DATA/COMMUNICATION - OUTLET ONLY - 4" SQ BOX WITH SINGLE DEVICE RING AND COVER - MOUNT @ +18" A.F.F. TO CENTERLINE, U.O.N., AND PROVIDE A 3/4" CONDUIT STUBBED ABOVE CEILING - DEVICE BY OTHERS
- CATV: CATV OUTLET - OUTLET ONLY - PROVIDE (1) 4" SQ. BOX WITH SINGLE DEVICE RING AND COVER - (1) 3/4" DIA CONDUIT - STUBBED ABOVE CEILING - DEVICES BY OTHERS
- INTERCOM/TELEPHONE - OUTLET ONLY - 4" SQ. BOX WITH SINGLE DEVICE RING AND COVER - MOUNT TOP OF BOX @ +48" A.F.F. U.O.N. AND PROVIDE A 3/4" CONDUIT STUBBED ABOVE CEILING - DEVICE BY OTHERS
- S: SECURITY/INTRUSION KEY PAD - OUTLET ONLY - 4" SQ. BOX w/ SINGLE DEVICE RING AND COVER, MOUNT TOP OF BOX @ +48" A.F.F., AND ONE 3/4" CONDUIT STUBBED ABOVE CEILING - DEVICE BY OTHERS
- DC: DOOR CONTACT - PROVIDE (1) EMPTY 1/2" DIA EMT THROUGH DOOR HEADER - STUBBED ABOVE CEILING - DEVICE BY OTHERS
- M: MOTION SENSOR OUTLET - PROVIDE (1) 4" SQ. BOX WITH SINGLE DEVICE RING AND COVER AND ONE 3/4" CONDUIT STUBBED ABOVE CEILING
- ULTRASONIC OCCUPANCY SENSOR - MOUNTED TO FINISH CEILING (PROVIDE WITH COMBINATION PHOTOCELL SENSOR WHEN DAYLIT CONTROLS ARE REQUIRED)
- F: FIRE ALARM PULL STATION - OUTLET ONLY - PROVIDE (1) 4" SQ. BOX WITH SINGLE DEVICE RING AND COVER - TOP OF OPERATING HANDLE MOUNTED BETWEEN +42" TO +48" A.F.F. - DEVICE BY OTHERS
- FIRE ALARM HORN - OUTLET ONLY - 4" SQ. SINGLE GANG J-BOX WITH BLANK WEATHERPROOF COVER - MOUNTED +90" A.F.F. TO CENTERLINE - DEVICE BY OTHERS
- M: MINI HORN BOX - OUTLET ONLY - SINGLE DEVICE RING AND COVER - MOUNTED +80" A.F.F. TO CENTERLINE BUT NO GREATER THAN +96" - DEVICE BY OTHERS
- VISUAL FIRE ALARM ALARM - OUTLET ONLY - 4" SQ. BOX WITH SINGLE DEVICE RING AND COVER - MOUNT SO THAT LENS IS BETWEEN 80"-96" A.F.F. (CEILING MOUNT PER NFPA72 TABLE 6-4.4.1(b)) DEVICE BY OTHERS.
- 2'x4' LED EDGE FIT FIXTURE, MODEL: LSI, SFP24 5601K LUMENS - 45 WATTS MAX OR EQUAL
- 2'x2' LED EDGE FIT FIXTURE, MODEL: LSI, SFP22 3169 LUMENS - 30 WATTS MAX OR EQUAL
- 24 HOUR EMERGENCY LIGHTING WITH MINIMUM 90-MINUTE BATTERY BACK-UP - WHERE TWO OR MORE EXITS ARE REQUIRED
- E: EMERGENCY EXIT LIGHT, WHERE THERE ARE TWO OR MORE EXITS, AN EXIT SIGN WITH INTEGRAL EMERGENCY LIGHTING W/MINIMUM 90-MINUTE BATTERY BACK-UP IS REQUIRED.
- E: ILLUMINATED EXIT LIGHT, - WHERE THERE ARE TWO OR MORE EXITS
- EXTERIOR SOFFIT MOUNTED LIGHTING PER MODEL ABOVE WITH EMERGENCY 90 MIN. MINIMUM BATTERY BACK-UP, PROVIDE (1) BY THE STAIR LANDINGS.

STANDARD ELECTRICAL SYMBOLS

AMS
American Modular Systems
787 Spreckels Ave., Manteca, CA 95336
Phone (209) 825-1921 Fax (209) 825-7018
www.americanmodular.com

INTELLECTUAL-PROPERTY & PROPRIETARY RIGHTS STATEMENT
COPYRIGHT © AMERICAN MODULAR SYSTEMS (AMS)
AMS OWNS ALL COPYRIGHT AND OTHER INTELLECTUAL-PROPERTY AND PROPRIETARY RIGHTS IN THESE DRAWINGS, SPECIFICATIONS, AND THE MATERIAL CONTAINED HEREIN. CERTAIN ELEMENTS SHOWN IN THESE DOCUMENTS ARE REGISTERED TRADEMARKS OF AMS. ALL PATENTABLE MATERIALS CONTAINED IN THESE DOCUMENTS AND ORIGINATING WITH AMS WILL REMAIN THE SOLE PROPERTY OF AMS. THESE DRAWING, SPECIFICATIONS, AND THE MATERIAL CONTAINED HEREIN MAY NOT BE REPRODUCED, TRANSMITTED, COPIED, DISTRIBUTED, MODIFIED, OR OTHERWISE DISPOSED OF (DIRECTLY OR INDIRECTLY) AND MAY NOT BE USED (IN WHOLE OR IN PART) TO ASSIST IN THE CONSTRUCTION, DESIGN, OR OTHER MAKING OF, OR FOR THE PURPOSE OF FURNISHING ANY INFORMATION FOR THE CONSTRUCTION, DESIGN, OR OTHER MAKING OF, ANY BUILDINGS (MODULAR OR OTHERWISE), DRAWINGS, SPECIFICATIONS, PRINTS, APPARATUS, OR PARTS THEREOF, EXCEPT AS EXPRESSLY PERMITTED BY WRITTEN CONSENT OF, OR IN A WRITTEN AGREEMENT WITH, AMS. SUBMITTAL OR DISTRIBUTION TO MEET OFFICIAL REGULATORY REQUIREMENTS WILL NOT BE CONSTRUED AS PUBLICATION IN DEROGATION OF AMS'S COPYRIGHT OR OTHER INTELLECTUAL-PROPERTY OR PROPRIETARY RIGHTS.

PRE-CHECKED SET NAME
24' x 40' THRU 120' x 40' STANDARD MODULAR BUILDING (LOW SEISMIC)
FORM

SITE SPECIFIC PROJECT NAME
.
.
.

APPROVED
DIV. OF THE STATE ARCHITECT
APP: 04-122050 PC
REVIEWED FOR
SS ☑ FLS ☑ ACS ☑ CG ☑
DATE: 12/11/2023

2022 CBC PRE-CHECK (PC) DOCUMENT
A SEPARATE PROJECT APPLICATION FOR CONSTRUCTION IS REQUIRED.

MANUFACTURER PROFESSIONAL OF RECORD ON PC
LICENSED ARCHITECT RANDALL PATRICK CAVANAGH No. C12631 Ren. 3-31-25 STATE OF CALIFORNIA

THESE DRAWINGS ARE PRELIMINARY AND NOT FOR CONSTRUCTION UNLESS STAMPED & SIGNED BY THE DESIGN PROFESSIONAL OF RECORD.

REVISIONS
1
2
3
4

DRAWN BY:	AA
SCALE:	AS NOTED
DATE:	MM/DD/YY
PROJECT NO:	XXXX-22

SHEET TITLE:
TYPICAL ELECTRICAL PLAN

SHEET NUMBER:
E1.0

TRACY UNIFIED SCHOOL DISTRICT

HMC Architects
3595001000
2101 CAPITOL AVENUE, SUITE 100
SACRAMENTO, CA 95816
916 368 7990 / www.hmcarchitects.com

ISSUE

Δ	DESCRIPTION	DATE
A	ADDENDUM "A"	3/20/25

KEYNOTES

GENERAL NOTES

FACILITY:
JACOBSON ELEMENTARY SCHOOL
1750 W KAVANAGH AVE
TRACY, CA 95376

PROJECT:
JACOBSON ES - TK CLASSROOM

SHEET NAME:
TYPICAL ELECTRICAL PLAN

DATE: 04/03/24 | CLIENT PROJ NO: 3595001000

SHEET:
E1.0.
ADDENDUM "A"

PLEASE RECYCLE

Autodesk Docs://3595005000 TUSD TK CLASSROOMS 2025 R22/3595005000-A-TUSD-BOHN-SITE.rvt
12/3/2024 9:55:41 AM

THE LINE SHOWN ABOVE IS EXACTLY ONE INCH LONG AT THIS SHEETS ORIGINAL PAGE SIZE

NOT USED

SEE SHEET E1.2-N FOR SITE-SPECIFIC SHEET

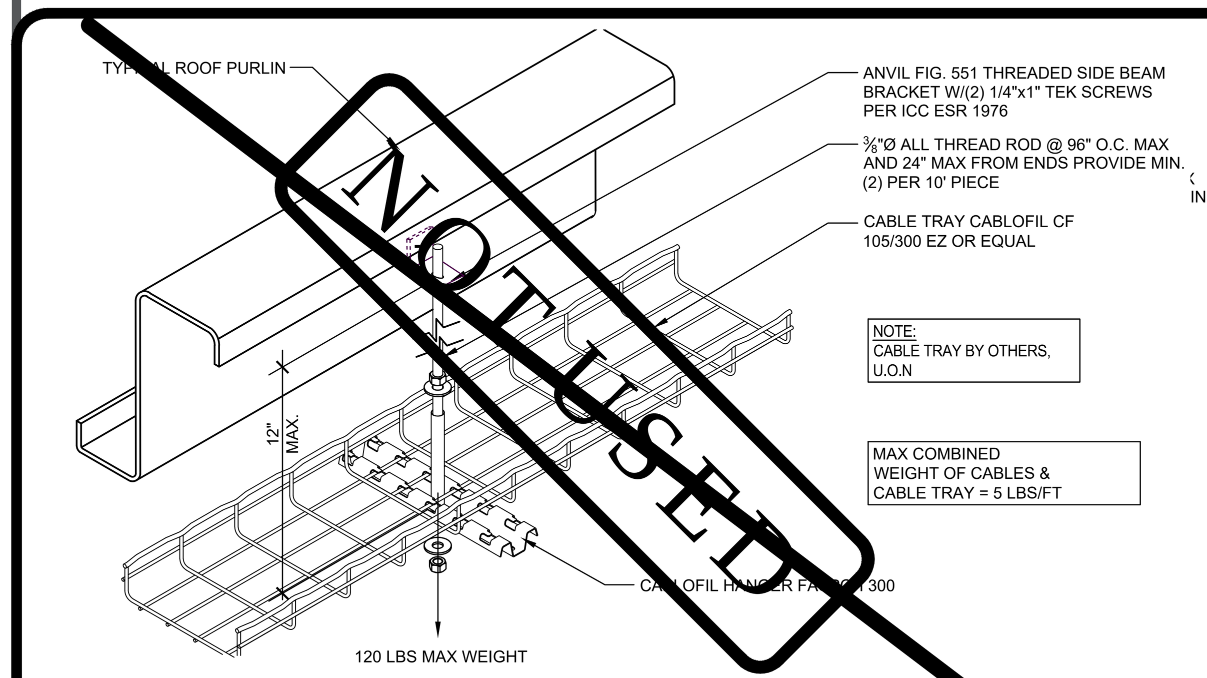

CABLE TRAY DETAIL — SCALE: N.T.S. — 1

250.52 GROUNDING ELECTRODES.

250.52(A) ELECTRODES PERMITTED FOR GROUNDING.

(1) METAL UNDERGROUND WATER PIPE. A METAL UNDERGROUND WATER PIPE IN DIRECT CONTACT WITH THE EARTH FOR 3.0 M (10 FT) OR MORE (INCLUDING ANY METAL WELL CASING BONDED TO THE PIPE) AND ELECTRICALLY CONTINUOUS (OR MADE ELECTRICALLY CONTINUOUS BY BONDING AROUND INSULATING JOINTS OR INSULATING PIPE) TO THE POINTS OF CONNECTION OF THE GROUNDING ELECTRODE CONDUCTOR AND THE BONDING CONDUCTOR(S) OR JUMPER(S), IF INSTALLED.

(2) METAL IN-GROUND SUPPORT STRUCTURE(S). ONE OR MORE METAL IN-GROUND SUPPORT STRUCTURE(S) IN DIRECT CONTACT WITH THE EARTH VERTICALLY FOR 3.0 M (10 FT) OR MORE, WITH OR WITHOUT CONCRETE ENCASEMENT. IF MULTIPLE METAL IN-GROUND SUPPORT STRUCTURES ARE PRESENT AT A BUILDING OR A STRUCTURE, IT SHALL BE PERMISSIBLE TO BOND ONLY ONE INTO THE GROUNDING ELECTRODE SYSTEM.

INFORMATIONAL NOTE: METAL IN-GROUND SUPPORT STRUCTURES INCLUDE, BUT ARE NOT LIMITED TO, PILINGS, CASINGS, AND OTHER STRUCTURAL METAL.

(3) CONCRETE-ENCASED ELECTRODE. A CONCRETE-ENCASED ELECTRODE SHALL CONSIST OF AT LEAST 6.0 M (20 FT) OF EITHER (1) OR (2):

(1) ONE OR MORE BARE OR ZINC GALVANIZED OR OTHER ELECTRICALLY CONDUCTIVE COATED STEEL REINFORCING BARS OR RODS OF NOT LESS THAN 13 MM (1⁄2 IN.) IN DIAMETER, INSTALLED IN ONE CONTINUOUS 6.0 M (20 FT) LENGTH, OR IF IN MULTIPLE PIECES CONNECTED TOGETHER BY THE USUAL STEEL TIE WIRES, EXOTHERMIC WELDING, WELDING, OR OTHER EFFECTIVE MEANS TO CREATE A 6.0 M (20 FT) OR GREATER LENGTH; OR

(2) BARE COPPER CONDUCTOR NOT SMALLER THAN 4 AWG

METALLIC COMPONENTS SHALL BE ENCASED BY AT LEAST 50 MM (2 IN.) OF CONCRETE AND SHALL BE LOCATED HORIZONTALLY WITHIN THAT PORTION OF A CONCRETE FOUNDATION OR FOOTING THAT IS IN DIRECT CONTACT WITH THE EARTH OR WITHIN VERTICAL FOUNDATIONS OR STRUCTURAL COMPONENTS OR MEMBERS THAT ARE IN DIRECT CONTACT WITH THE EARTH. IF MULTIPLE CONCRETE-ENCASED ELECTRODES ARE PRESENT AT A BUILDING OR STRUCTURE, IT SHALL BE PERMISSIBLE TO BOND ONLY ONE INTO THE GROUNDING ELECTRODE SYSTEM.

INFORMATIONAL NOTE: CONCRETE INSTALLED WITH INSULATION, VAPOR BARRIERS, FILMS OR SIMILAR ITEMS SEPARATING THE CONCRETE FROM THE EARTH IS NOT CONSIDERED TO BE IN "DIRECT CONTACT" WITH THE EARTH.

(4) GROUND RING. A GROUND RING ENCIRCLING THE BUILDING OR STRUCTURE, IN DIRECT CONTACT WITH THE EARTH. CONSISTING OF AT LEAST 6.0 M (20 FT) OF BARE COPPER CONDUCTOR NOT SMALLER THAN ...

(8) OTHER LOCAL METAL UNDERGROUND SYSTEMS OR STRUCTURES. OTHER LOCAL METAL UNDERGROUND SYSTEMS OR STRUCTURES SUCH AS PIPING SYSTEMS, UNDERGROUND TANKS, AND UNDERGROUND METAL WELL CASINGS THAT ARE NOT BONDED TO A METAL WATER PIPE.

(B) NOT PERMITTED FOR USE AS GROUNDING ELECTRODES
THE FOLLOWING SYSTEMS AND MATERIALS SHALL NOT BE USED AS GROUNDING ELECTRODES:

(1) METAL UNDERGROUND GAS PIPING SYSTEMS
(2) ALUMINUM
(3) THE STRUCTURES AND STRUCTURAL REINFORCING STEEL DESCRIBED IN 680.26(B)(1) AND (B)(2)

INFORMATIONAL NOTE:
SEE 250.104(B) FOR BONDING REQUIREMENTS OF GAS PIPING.

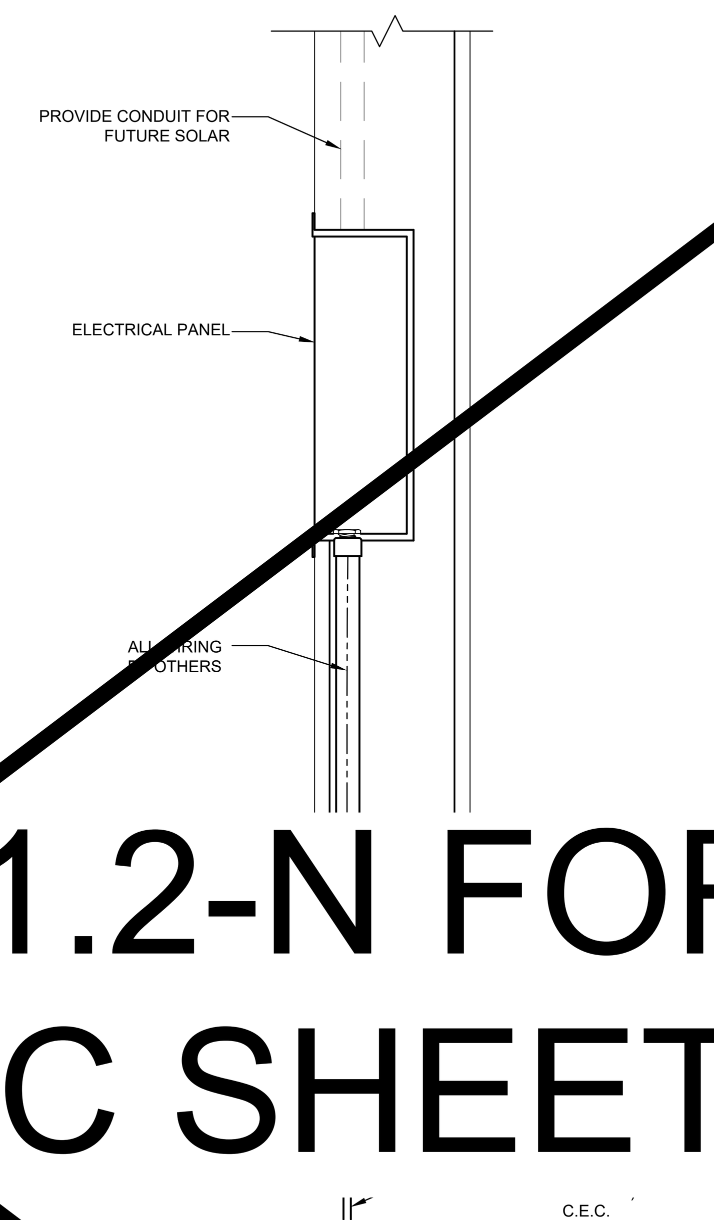

1. SIZE OF CONDUCTORS SHALL COMPLY w/CEC.A
2. BOND SEPARATE CONDUCTORS FROM GROUND ROD TO ELECTRICAL PANEL & METAL BUILDING FRAME (CEC). IN ADDITION TO THE DETAIL SHOWN ABOVE, BOND THE ELECTRICAL GROUND TO METAL WATER PIPE EMBEDDED AT LEAST 10' INTO THE SOIL IF AVAILABLE (CEC).
3. ELECTRICAL BOND MODULES TOGETHER W/#8 CU @ MODLINE. BY MANUFACTURER. CHECK RESISTANCE TO GROUND. IF RESISTANCE EXCEEDS 25 OHMS, INSTALL ADDITIONAL GROUND RODS (CEC) AS REQUIRED. GROUNDING DETAIL PER DSA IR E-1. INSPECTOR TO WITNESS GROUNDING TEST.

NOT USED — 2

ELECTRICAL PANEL CONNECTION DETAIL - UNDERFLOOR OPTION — SCALE: 1-1/2" = 1' - 0" — 3

PANEL: A S/N:	PHASE: SINGLE	VOLTS: 120/240	BUSS: 125 AMP	MAIN: 100	LOCATION: INTERIOR	FEED: BOTTOM	MOUNTING: SURFACE

OBJECT DESCRIPTION	WATT PER	NO. OF	LCL	WATTS A	WATTS B	BRK	POLE	WIRE SIZE	CKT NO	A	B	CKT NO	WIRE SIZE	POLE	BRK	WATTS A	WATTS B	LCL	NO OF	WATTS PER	OBJECT DESCRIPTION
INT. LIGHTS-LED	40	8	x	320		20	1	#12	1	X		2	#6	1	60	5760		x	/	5760	4 TON A/C HVAC UNIT
BLANK/SPARE					0				3		X	4	#6	1	60		5760	x	/	5760	4 TON A/C HVAC UNIT
EXT. LIGHTS	75	1	x	75		20	1	#12	5	X		6				0				*	F.A.C.P.
REC-CONTROLLED	180	1	x		180	20	1	#12	7		X	8					0			*	FUTURE SOLAR ELEC
REC-UNCONTROLLED	180	1	x	180		20	1	#12	9	X		10				0					BLANK/SPARE
REC-GFIC	180	1	x		180	20	1	#12	11		X	12					0				BLANK/SPARE
	LEG TOTALS			575	360											5760	5760	LEG TOTALS			

LCL=3113.75+12455=15568.75

TOTAL WATTS=15568.75 — LEG BALANCE = 1.7% — TOTAL AMPS: 64.87

NOTE:
FIRE ALARM DEDICATED CIRCUIT SHALL BE IDENTIFIED WITH A RED MARKED DISCONNECT WITH LOCK-ON CAPABILITY (NFPA 72 10.6.5.2)

LOAD PANEL CALCULATIONS

FIRE ALARM SYSTEM

1. THE FIRE ALARM SYSTEM SHALL CONFORM TO THE CALIFORNIA ELECTRICAL CODE, CALIFORNIA FIRE CODE AND THE CALIFORNIA BUILDING CODE.
2. INSTALLATION OF THE FIRE ALARM SYSTEM SHALL NOT BE STARTED UNTIL DETAILED PLANS AND SPECIFICATIONS, INCLUDING CALIFORNIA STATE FIRE MARSHAL LISTINGS FOR EACH COMPONENT OF THE SYSTEM, HAVE BEEN APPROVED BY DSA.
3. UPON COMPLETION OF THE INSTALLATION OF THE FIRE ALARM SYSTEM, A SATISFACTORY TEST OF THE ENTIRE SYSTEM SHALL BE MADE IN THE PRESENCE OF THE ENFORCING AGENCY.
4. JUNCTION BOXES - GALVANIZED SHEET METAL, SQUARE OR RECTANGULAR WITH BLANK COVERS. LOCATE ONE BOX AT REAR OF BUILDING NEAR MAIN ELECTRICAL PANEL @ +18" ABOVE FINISH FLOOR FOR FUTURE CONNECTION.
5. COVERS - INSTALL GASKETED, METAL, WATERPROOF, FINISH COVERS AT EXTERIOR LOCATIONS. INSTALL FINISH COVERS AT INTERIOR LOCATIONS.
6. THE AUTOMATIC ALARM SYSTEM SHALL BE INSTALLED, TESTED, AND MAINTAINED IN ACCORDANCE WITH THE STATE FIRE MARSHALL'S REGULATIONS (CBC SEC. 907.2.3) AND THE 2022 EDITION OF NFPA 72.
7. THE LOCATION OF AUTOMATIC DETECTORS, MANUAL STATIONS AND OTHER FIRE ALARM EQUIPMENT AND DEVICES, AS SHOWN ON PLAN, ARE FOR REFERENCE ONLY AND DO NOT CONSTITUTE SHOP DRAWINGS WHICH ARE REQUIRED FOR REVIEW AND APPROVAL.
8. ALARM-INDICATING DEVICES OF A FIRE ALARM SYSTEM INTENDED TO ALERT ALL OCCUPANTS SHALL CAUSE A LEVEL OF AUDIBILITY OF NOT LESS THAN 15 dBA ABOVE THE AVERAGE AMBIENT NOISE LEVELS OR 5dBA ABOVE THE MAXIMUM SOUND LEVEL HAVING A DURATION OF 60 SECONDS, WHICHEVER IS GREATER, MEASURED 5' ABOVE THE FLOOR. AMBIENT NOISE LEVELS MEANS THE LEVEL WHICH CAN NORMALLY BE EXPECTED WHEN THE FACILITY, BUILDING, ROOM, OR AREA IS FUNCTIONING UNDER NORMAL OPERATING OR WORKING CONDITIONS (NFPA 72, SEC. 18.4.1).
9. THE ALARM SYSTEM SHALL ACTIVATE A MEANS OF WARNING THE HEARING IMPAIRED. FLASHING VISUAL WARNINGS SHALL HAVE A FLASH RATE NOT EXCEEDING TWO FLASHES PER SECOND (2 HZ), NOR BE LESS THAN ONE FLASH EVERY SECOND (1 HZ). STROBE SIGNALING DEVICES FOR THE HEARING IMPAIRED SHALL BE STATE FIRE MARSHALL APPROVED AND LISTED (NFPA 72, SEC. 18.5.3).
10. AUTOMATIC FIRE ALARM SYSTEM SHALL TRANSMIT THE ALARM, SUPERVISORY AND TROUBLE SIGNALS TO AN APPROVED SUPERVISING STATION AS REQUIRED BY NFPA 72 CHAPTER 26. THE SUPERVISING STATION SHALL BE LISTED AS EITHER UUFX OR UUJS BY UNDERWRITERS LABORATORY OR SHALL MEET THE REQUIREMENTS OF FACTORY MUTUAL RESEARCH APPROVAL STANDARD 3011. SUPERVISION OF SYSTEM AND LEASED TELEPHONE LINES SHALL BE ARRANGED BY OWNER. IF TESTING RESULTS DETERMINE FIRE ALARM AUDIBILITY DOES NOT MEET 15db OVER AMBIENT NOISE LEVELS, ADDITIONAL FIRE ALARM SIGNALING DEVICES MAY BE REQUIRED BY THE ENFORCING AGENCY.

NOTE:
SEE SHEET M1.0 FOR ALL BRACING AND ANCHORAGE NOTES.

GENERAL NOTES

1. GROUNDING ELECTRODE CONDUCTOR SIZED PER CEC.
2. PROVIDE BONDS TO BLDG. STEEL & PANEL (#8 CU)
3. PANEL TO LISTED FOR USE AS SERVICE EQUIPMENT.
4. ALL PANELS, SWITCHES, DISCONNECTS, BREAKERS, METERS, AND OTHER ELECTRICAL ELEMENTS SHALL BE PLACED ABOVE THE ELEVATION REQUIRED BY ASCE 24-14, SECTION 7.2.
5. WHERE FLEXIBLE CONDUIT IS PASSING BETWEEN BUILDING SEPARATION JOINTS, PROVIDE SUFFICIENT LENGTH OF CONDUIT TO PERMIT DIFFERENTIAL DISPLACEMENTS BETWEEN BUILDINGS IN COMPLIANCE WITH ASCE 7 SECTION 13.6.9 & DSA IR PC-2 SECTION 1.18. ADDITIONAL CONDUIT & JOINT DETAIL SHALL BE PROVIDED BY OTHERS.

FIXTURE NOTES:

1. ALL FLUORESCENT LIGHT FIXTURES SHALL HAVE ENERGY SAVING LAMPS AND BALLASTS.
2. LUMINARIES/BALLASTS SHALL BE CERTIFIED PER CALIFORNIA BUILDING CODE, TITLE 24.
3. FLUORESCENT LIGHT FIXTURE TYPE "A" SHALL BE CONTROLLED TO PROVIDE TWO LEVELS OF LIGHTING. SWITCH (SA) SHALL CONTROL THE TWO OUTER LAMPS AND SWITCH (SB) SHALL CONTROL THE TWO INNER LAMPS.
4. ELECTRICAL SERVICE DROP AND CONNECTIONS SUPPLIED BY OTHERS.
5. MANUFACTURER TO PROVIDE STUB-OUT FROM BACK OF ELECTRICAL PANEL THROUGH THE EXTERIOR WALL OR TO BELOW FLOOR FOR RECEIVING EITHER UNDERGROUND OR OVERHEAD SERVICE & FITTING FOR GROUNDING CABLE.
6. ELECTRICAL PANEL BOARD SHALL BE RECESS MOUNTED INSIDE THE BUILDING, SIZED TO ACCOMMODATE ALL CONNECTED LOADS INCLUDING SPACES AS SHOWN. OVERCURRENT PROTECTIVE DEVICES IN THE PANEL BOARDS SHALL HAVE ADEQUATE SHORT CIRCUIT INTERRUPTING CAPACITY. ALL BUSES INCLUDING BUS SHALL BE COPPER OR ALUMINUM.
7. 2X4 FLUORESCENT FIXTURES SHALL HAVE A STEEL FRAME, LENS SHALL BE HINGED AND LOCKED IN PLACE BY TWO LOCKING DEVICES. THE LENS DIFFUSERS SHALL BE KHS, INC. #KSH-2, CAROLITE, INC. #C-12 OR PLASKOLITE, INC. #PL21A. MINIMUM LENS THICKNESS SHALL BE 0.125 INCHES.
8. FLUORESCENT BALLAST SHALL BE ENERGY SAVER WHILE MAINTAINING FULL LIGHT OUTPUT, CLASS "P" EQUIPPED WITH THERMAL PROTECTORS, GUARANTEED AGAINST FAILURE FOR (2) YEARS AND BE REPLACEABLE FROM INSIDE THE FIXTURE.
9. CLOCK - 12" DIAL CLOCK ON CLOCK OUTLET.
   A. CLOCK SHALL BE GENERAL ELECTRIC MODEL 2912 129V 60 CYCLE
   B. CLOCK OUTLET SHALL BE BRYANT #2828 OR EQUAL WITH SEPARABLE HANGING CLIP & APP'D RECEPT. THE H.V.A.C. UNIT FEEDER CIRCUIT - PANEL CIRCUIT BREAKER, FEEDER WIRE, UNIT DISCONNECT AND FUSES (WHERE USED) - IS TO BE COORDINATED WITH THE NAME PLATE DATA AT THE TIME OF MANUFACTURE. H.V.A.C. UNITS HAVING KVA RATINGS LARGER THAN THAT INDICATED ON THIS PANEL SCHEDULE WILL NOT BE ALLOWED TO BE INSTALLED ON THIS BUILDING.
   C. IF 60 DEGREES WIRE IS TO BE USED IN THIS INSTALLATION, CALCULATIONS DEMONSTRATING AMPACITY SHALL BE PROVIDED ON THE DRAWING.

GENERAL NOTES

American Modular Systems
787 Spreckels Ave., Manteca, CA 95336
Phone (209) 825-1921 Fax (209) 825-7018
www.americanmodular.com

INTELLECTUAL-PROPERTY & PROPRIETARY RIGHTS STATEMENT
COPYRIGHT © AMERICAN MODULAR SYSTEMS (AMS)
AMS OWNS ALL COPYRIGHT AND OTHER INTELLECTUAL-PROPERTY AND PROPRIETARY RIGHTS IN THESE DRAWINGS, SPECIFICATIONS, AND THE MATERIAL CONTAINED HEREIN. CERTAIN ELEMENTS SHOWN IN THESE DOCUMENTS ARE REGISTERED TRADEMARKS OF AMS. ALL PATENTABLE MATERIALS CONTAINED IN THESE DOCUMENTS AND ORIGINATING WITH AMS WILL REMAIN THE SOLE PROPERTY OF AMS. THESE DRAWING, SPECIFICATIONS, AND THE MATERIAL CONTAINED HEREIN MAY NOT BE REPRODUCED, TRANSMITTED, COPIED, DISTRIBUTED, MODIFIED, OR OTHERWISE DISPOSED OF (DIRECTLY OR INDIRECTLY) AND MAY NOT BE USED (IN WHOLE OR IN PART) TO ASSIST IN THE CONSTRUCTION, DESIGN, OR OTHER MAKING OF, OR FOR THE PURPOSE OF FURNISHING ANY INFORMATION FOR THE CONSTRUCTION, DESIGN, OR OTHER MAKING OF, ANY BUILDINGS (MODULAR OR OTHERWISE), DRAWINGS, SPECIFICATIONS, PRINTS, APPARATUS, OR PARTS THEREOF, EXCEPT AS EXPRESSLY PERMITTED BY WRITTEN CONSENT OF, OR IN A WRITTEN AGREEMENT WITH, AMS. SUBMITTAL OR DISTRIBUTION TO MEET OFFICIAL REGULATORY REQUIREMENTS WILL NOT BE CONSTRUED AS PUBLICATION IN DEROGATION OF AMS'S COPYRIGHT OR OTHER INTELLECTUAL-PROPERTY OR PROPRIETARY RIGHTS.

PRE-CHECKED SET NAME
24' x 40' THRU 120' x 40'
STANDARD MODULAR BUILDING
(LOW SEISMIC)
FORM®

SITE SPECIFIC PROJECT NAME
.
.
.

APPROVED
DIV. OF THE STATE ARCHITECT
APP: 04-122050 PC
REVIEWED FOR
SS ☑ FLS ☑ ACS ☑ CG ☑
DATE: 12/11/2023

☐ 2022 CBC PRE-CHECK (PC) DOCUMENT
A SEPARATE PROJECT APPLICATION FOR CONSTRUCTION IS REQUIRED.

MANUFACTURER PROFESSIONAL OF RECORD ON PC

LICENSED ARCHITECT
RANDALL PATRICK CAVANAGH
No. C12631
Ren. 3-31-25
STATE OF CALIFORNIA

THESE DRAWINGS ARE PRELIMINARY AND NOT FOR CONSTRUCTION UNLESS STAMPED & SIGNED BY THE DESIGN PROFESSIONAL OF RECORD.

REVISIONS
1
2
3
4

DRAWN BY:	AA
SCALE:	AS NOTED
DATE:	MM/DD/YY
PROJECT NO:	XXXX-22

SHEET TITLE:
ELECTRICAL NOTES & DETAILS

SHEET NUMBER:
E1.2

PLEASE RECYCLE

IDENTIFICATION STAMP
DIV. OF THE STATE ARCHITECT
APP: 02-122976 INC:
REVIEWED FOR
SS ☑ FLS ☑ ACS ☑
DATE: 03/12/2025

TRACY
UNIFIED SCHOOL DISTRICT

HMC Architects
3595001000
2101 CAPITOL AVENUE, SUITE 100
SACRAMENTO, CA 95816
916 368 7990 / www.hmcarchitects.com

ISSUE

Δ	DESCRIPTION	DATE
A	ADDENDUM "A"	3/20/25

KEYNOTES

GENERAL NOTES

FACILITY:
JACOBSON ELEMENTARY SCHOOL
1750 W KAVANAGH AVE
TRACY, CA 95376

PROJECT:
JACOBSON ES - TK CLASSROOM

SHEET NAME:
ELECTRICAL NOTES & DETAILS

DATE: 04/03/24 — CLIENT PROJ NO: 3595001000

SHEET:
E1.2
ADDENDUM "A"

Autodesk Docs://3595005000 TUSD TK CLASSROOMS 2025 R22/3595005000-A-TUSD-BOHN-SITE.rvt
12/3/2024 9:55:41 AM

THE LINE SHOWN ABOVE IS EXACTLY ONE INCH LONG AT THIS SHEETS ORIGINAL PAGE SIZE

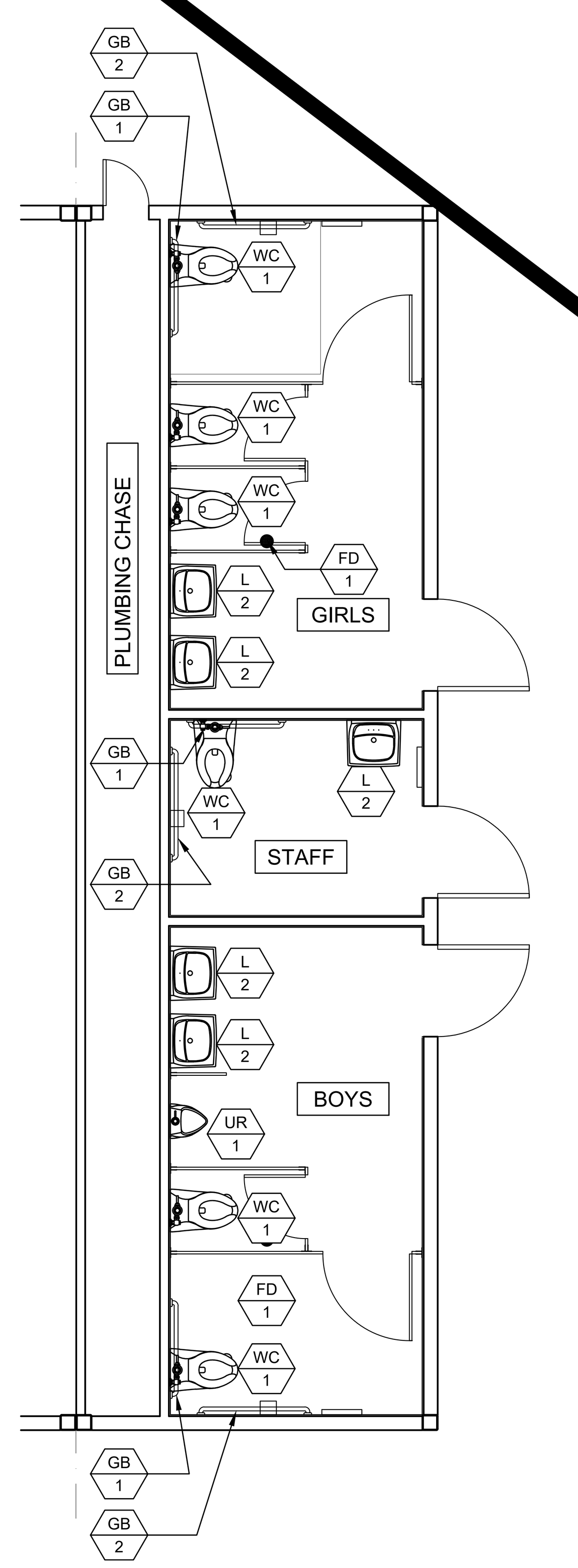

BOYS, GIRLS & STAFF R.R. PLAN
AGE RANGE: 13-ADULT
SCALE: 1/4" = 1'-0" | 1

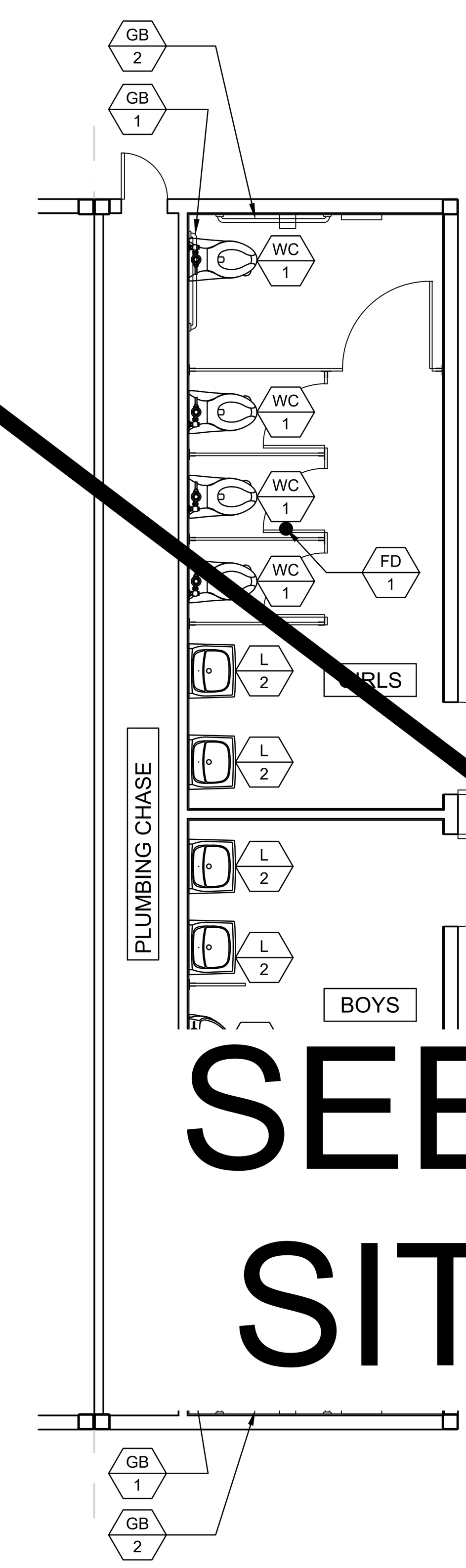

BOYS & GIRLS R.R. PLAN
AGE RANGE: 13-ADULT
SCALE: 1/4" = 1'-0" | 2

MARK	FIXTURE[1]	TYPE AT KINDERGARTEN (AGES 3-4)	TYPE AT ELEMENTARY (AGES 5-8)	TYPE AT MIDDLE SCHOOL (AGES 9-12)	TYPE AT HIGH SCHOOL (AGES 13-ADULT)	REMARKS
WC 1 ACC [2]	WALL MOUNT WATER CLOSET	CANNOT USE	CANNOT USE	KOHLER 'KINGSTON' MODEL K-4325 OR EQUAL. LOWEST AT 16" A.F.F. 17" HIGHEST TO TOP OF SEAT w/ BEMIS 1955SSCT TOILET SEAT OR EQUAL	KOHLER 'KINGSTON' MODEL K-4325 OR EQUAL. LOWEST AT 17" A.F.F. 19" HIGHEST TO TOP OF SEAT w/ BEMIS 1955SSCT TOILET SEAT OR EQUAL	FLUSH VALVE ZURN MODEL Z6000AV-HET - 1.28 G.P.F OR EQUAL. LOCATE AS SPECIFIED ON FLOOR PLANS. MOUNT ACCESSIBLE FIXTURES PER SCHEDULE 10/P2.0.
WC 2	FLOOR MOUNT TANK TYPE	AMERICAN STANDARD 4019.828 w/BEMIS 1955SSCT OR EQUAL TOILET SET	AMERICAN STANDARD 4019.82 w/2L2050T SEAT 2" HIGH MAX #3128.001 FOR BOWL #4019.228 LEFT TANK #4019.828 RIGHT TANK	KOHLER 'WELLWORTH' MODEL K-3998 OR EQUAL w/BEMIS 1955SSCT OR EQUAL TOILET SEAT	KOHLER 'WELLWORTH' MODEL K-3999 OR EQUAL w/BEMIS 1955SSCT OR EQUAL TOILET SEAT	WC/2 FIXTURE MAX FLOW RATE OF 1.28 G.P.F - LOCATE AS SPECIFIED ON FLOOR PLANS. MOUNT ACCESSIBLE FIXTURES PER SCHEDULE 10/P2.0.
WC 3 ACC OPTIONAL	FLOOR MOUNT FLUSH VALVE	KOHLER 'PRIMARY' MODEL K-96064 OR EQUAL. w/BEMIS 1955SSCT TOILET SEAT OR EQUAL	KOHLER 'PRIMARY' MODEL K-96064 OR EQUAL w/2L2050T 2" HIGH MAX TOILET SEAT OR EQUAL	FLOOR MOUNT FLUSH VALVE TYPE KOHLER 'WELLCOMME ULTRA' MODEL K-96053 OR EQUAL w/BEMIS 1955SSCT OR EQUAL TOILET SEAT	FLOOR MOUNT FLUSH VALVE TYPE KOHLER 'HIGHCLIFF ULTRA' MODEL K-96057 OR EQUAL w/BEMIS 1955SSCT OR EQUAL TOILET SEAT	FLUSH VALVE ZURN MODEL Z6000AV-HET - 1.28 G.P.F OR EQUAL. LOCATE AS SPECIFIED ON FLOOR PLANS. MOUNT ACCESSIBLE FIXTURES PER SCHEDULE 10/P2.0.
L 1	BOYS/GIRLS LAVATORY	KOHLER 'KINGSTON' MODEL K-2007-0				BOY/GIRL RESTROOM - ZURN MODEL Z86100-XL-3M - COLD WATER ONLY - SINGLE SPOUT MOUNT AS SPECIFIED IN FLOOR PLANS. MOUNT ACCESSIBLE FIXTURES PER SCHEDULE 10/P2.0 - FLOW RATE OF 0.5 G.P.M. METER FAUCETS SHALL REMAIN OPEN FOR 10 SECONDS MIN.
L 2	ADULT LAVATORY	KOHLER 'KINGSTON' MODEL K-2005-0				ADULT RESTROOM - ZURN MODEL Z7440-XL-FC HOT/COLD WATER - 4" ON CENTER HOLE. MOUNT AS SPECIFIED IN FLOOR PLANS. MOUNT ACCESSIBLE FIXTURES PER SCHEDULE 10/P2.0 - FLOW RATE OF 0.5 G.P.M.
UR 1 ACC	URINAL	WALL MOUNT TYPE KOHLER MODEL DEXTER K-5452-ET-0 OR EQUAL FLOW RATE = 0.125 gpf				FLUSH VALVE ZURN MODEL Z6003-AV (0.125gpf) OR EQUAL. MOUNT AS SPECIFIED IN FLOOR PLANS. MOUNT ACCESSIBLE FIXTURES PER SCHEDULE 10/P2.0
M 1	MIRROR	WALL MOUNT TYPE BOBRICK MODEL B165 18X30 OR EQUAL				MOUNT AS SPECIFIED IN FLOOR PLANS. MOUNT ACCESSIBLE MIRROR PER SCHEDULE 10/P2.0
GB 1	36" GRAB BARS	WALL MOUNT TYPE MOEN MODEL 8736 & 8748 (1 1/4" CONCEALED SCREW 36"& 48") OR EQUAL				18 GA. 304 STAINLESS STEEL SATIN FINISH MOUNT AS SPECIFIED IN FLOOR PLANS AND PER SCHEDULE 10/P2.0. (STRUCTURAL STRENGTH OF GRAB BARS 250# MIN.)
GB 2	48" GRAB BARS					
WH 1	WATER HEATER	RHEEM 20 GALLON ELECTRIC WATER HEATER MODEL PROE20-1-RH-POU 240 VOLT SINGLE PHASE				AVAILABLE IN 6, 10, 20 AND 30 GALLON MODELS (MAX WATER HEATER WEIGHT) PER 6/M1.4 OR 1/P2.0
ITWH 1	INSTANT-TEMP WATER HEATER	CHRONOMITE INSTANT-TEMP WATER HEATER MODEL M20L/240 INSTANT				CHRONOMITE MODEL M20L/208 OR EQUAL SEE DETAIL 7/P2.0
						ZURN 843-MI-RC OR EQUAL
						CAITLIN CBK110CP OR EQUAL
						LOCATE AS SPECIFIED ON FLOOR PLANS. PROVIDE GRATE WITH MAX 1/2" OPENINGS, MEASURED IN BOTH DIRECTIONS
						LOCATE AS SPECIFIED ON FLOOR PLANS. (FLOOR DRAIN TO BE USED ON CONCRETE ONLY.) PROVIDE GRATE WITH MAX 1/2" OPENINGS, MEASURED IN BOTH DIRECTIONS
CS 1	CLASSROOM SINK	DAYTON MODEL D12521 25"x21-1/4" SINGLE BOWL SINK OR EQUAL				FAUCET - ZURN MODEL Z2871-B4-XL W/WRIST BLADES. LOCATE AS SPECIFIED ON FLOOR PLANS. MOUNT ACCESSIBLE FIXTURES PER SCHEDULE 10/P2.0
DF 1	DRINKING FOUNTAIN	ELKAY MODEL EDFP217C WALL MOUNT WATER FOUNTAIN OR EQUAL				
HB 1	HOSE BIBB	STANDARD HOSE BIBB ARROWHEAD MODEL 353LKLF OR EQUAL				LOCATE AS SPECIFIED ON FLOOR PLANS.

SEE SHEET P1.0-N FOR SITE-SPECIFIC SHEET

NOTES:
1. ALL WATER FIXTURES MUST MEET REQUIREMENTS OF CAL-GREEN TITLE 24, PART 11, SECTION 5.303.3 "WATER CONSERVING PLUMBING FIXTURES & FITTINGS".
2. FOR OPTIONAL ACCESSIBLE FLOOR-MOUNT WATER CLOSET, SEE PLUMBING SCHEDULE MARK WC/3 (NOT SHOWN ON PLAN).
3. NOT ALL ITEMS LISTED MAY OCCUR IN THIS PROJECT.
4. THERE SHOULD BE NO SHARP OR ABRASIVE SURFACES UNDER LAVS OR SINKS.
5. REFER TO DETAIL 10/P2.0 FOR SCHEDULE OF ACCESSIBLE HEIGHTS AT FIXTURES.

PLUMBING FIXTURE SCHEDULE

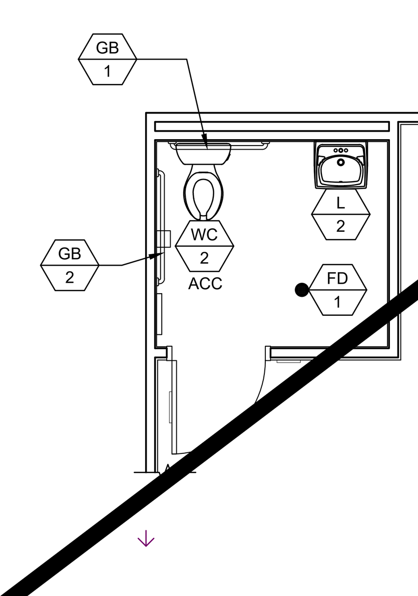

SINGLE TOILET PLAN
FRONT WALL APPROACH - AGE RANGE: 13-ADULT
SCALE: 1/4" = 1'-0" | 6

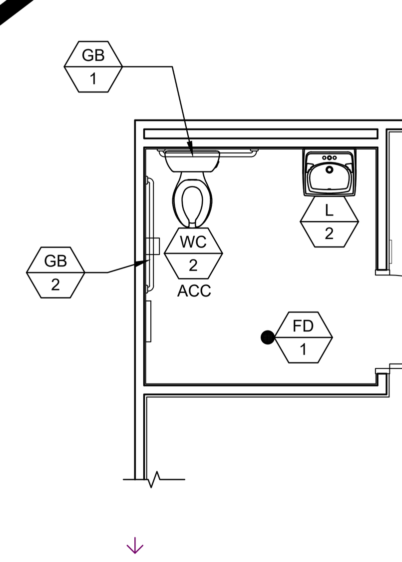

SINGLE TOILET PLAN
SIDE WALL APPROACH - AGE RANGE: 13-ADULT
SCALE: 1/4" = 1'-0" | 7

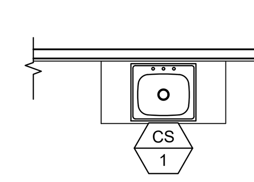

CLASSROOM SINK PLAN
SCALE: 1/4" = 1'-0" | 8

A 1 = PLUMBING FIXTURE I.D. - SEE SCHEDULE ABOVE

SYMBOLS LEGEND

PLANS SHALL MEET ENERGY CODE 120.3 FOR PIPE INSULATION. ALL WATER HEATERS SHALL HAVE R7.7 ON HOT AND COLD LINES FOR THE FIRST 8 FEET FROM WATER HEATER (TANK TYPE AND INSTANT). SECTION 609.12 REQUIRES HOT WATER PIPING FROM THE WATER HEATER TO THE FIXTURE (CONTROL VALVE) BE INSULATED TO A MINIMUM WALL THICKNESS OF NOT LESS THAN THE DIAMETER OF THE PIPE FOR A PIPE UP TO 2 INCHES (50 MM) IN DIAMETER. INSULATION WALL THICKNESS SHALL BE NOT LESS THAN 2 INCHES (51 MM) FOR A PIPE OF 2 INCHES (50 MM) OR MORE IN DIAMETER. PER PLUMBING CODE 609.12 UPDATE PLANS TO SHOW HOW THE HOT WATER PIPING IS INSULATED FROM THE WATER HEATER TO THE FIXTURE (CONTROL VALVE) TO A MINIMUM WALL THICKNESS OF NOT LESS THAN THE DIAMETER OF THE PIPE. INSTANTANEOUS WATER HEATERS WITH AN INPUT GREATER THAN 6.8 KBTU/H OR 2 KW (ALL INSTANTANEOUS ARE OVER 4KW) SHALL HAVE ISOLATION VALVES ON BOTH THE INCOMING COLD WATER SUPPLY AND THE HOT WATER PIPE LEAVING THE WATER HEATER, TO ASSIST IN THE FLUSHING OF THE HEAT EXCHANGER AND HELP PROLONG THE LIFE OF THE WATER HEATERS PER ENERGY CODE 110.3(C).

PLUMBING NOTE

MODULAR MFR. TO STUB THROUGH FLOOR ALL PLUMBING LINES. BUILDING PERIMETER POC'S SHOWN ARE FOR COORDINATION PURPOSES ONLY. ALL UNDER-FLOOR CONNECTIONS ARE BY SITE CONTRACTOR, U.O.N.

1. DIMENSIONS ARE TO FACE OF FINISH (F.O.F.) UNLESS NOTED OTHERWISE (i.e. F.O.C., ℄)
2. RESTROOM CONFIGURATION MAY VARY PER BUILDING CONFIGURATION.
3. RESTROOM MODULE OCCURS ONLY AT END OF BUILDING. SINGLE RESTROOMS MAY OCCUR IN ANY PART OF A BUILDING.
4. RESTROOM MODULE CANNOT STAND ALONE AND SHALL BE ASSEMBLED TOGETHER WITH AT LEAST ONE OTHER 12'x40' MODULE.
5. INTERIOR WALLS MAY OCCUR THROUGHOUT BUILDING. REFER TO SHEET S8.1 OR S9.1 FOR ATTACHMENTS.
6. REFER TO SCHEDULE 10/P2.0 FOR ACCESSIBLE HEIGHTS AT TOILETS.
7. REFER TO DETAILS 1, 3, 4 & 5, SHEET A7.1 FOR TOILET PARTITION ANCHORAGE BLOCKING.
8. SEWER AND WATER STUB OUTS SHALL BE LOCATED WITHIN THE ALLOWABLE AREA AS SHOWN ON FLOOR PLAN AND CONNECTIONS SHALL BE EASILY ACCESSIBLE FOR FUTURE RELOCATION. STUB OUT HEIGHT SHALL BE COORDINATED BY THE MANUFACTURER.
9. PIPING MATERIAL
   a. WATER: COPPER TYPE "L", 95/5 SOLDER.
   b. WASTE DRAIN AND VENT: ABS.
10. REFER TO SHEET M1.0 FOR TYPICAL BRACING AND ANCHORAGE NOTES.

GENERAL NOTES

American Modular Systems
787 Spreckels Ave., Manteca, CA 95336
Phone (209) 825-1921 Fax (209) 825-7018
www.americanmodular.com

INTELLECTUAL-PROPERTY & PROPRIETARY RIGHTS STATEMENT
COPYRIGHT © AMERICAN MODULAR SYSTEMS (AMS)
AMS OWNS ALL COPYRIGHT AND OTHER INTELLECTUAL-PROPERTY AND PROPRIETARY RIGHTS IN THESE DRAWINGS, SPECIFICATIONS, AND THE MATERIAL CONTAINED HEREIN. CERTAIN ELEMENTS SHOWN IN THESE DOCUMENTS ARE REGISTERED TRADEMARKS OF AMS. ALL PATENTABLE MATERIALS CONTAINED IN THESE DOCUMENTS AND ORIGINATING WITH AMS WILL REMAIN THE SOLE PROPERTY OF AMS. THESE DRAWING, SPECIFICATIONS, AND THE MATERIAL CONTAINED HEREIN MAY NOT BE REPRODUCED, TRANSMITTED, COPIED, DISTRIBUTED, MODIFIED, OR OTHERWISE DISPOSED OF (DIRECTLY OR INDIRECTLY) AND MAY NOT BE USED (IN WHOLE OR IN PART) TO ASSIST IN THE CONSTRUCTION, DESIGN, OR OTHER MAKING OF, OR FOR THE PURPOSE OF FURNISHING ANY INFORMATION FOR THE CONSTRUCTION, DESIGN, OR OTHER MAKING OF, ANY BUILDINGS (MODULAR OR OTHERWISE), DRAWINGS, SPECIFICATIONS, PRINTS, APPARATUS, OR PARTS THEREOF, EXCEPT AS EXPRESSLY PERMITTED BY WRITTEN CONSENT OF, OR IN A WRITTEN AGREEMENT WITH, AMS. SUBMITTAL OR DISTRIBUTION TO MEET OFFICIAL REGULATORY REQUIREMENTS WILL NOT BE CONSTRUED AS PUBLICATION IN DEROGATION OF AMS'S COPYRIGHT OR OTHER INTELLECTUAL-PROPERTY OR PROPRIETARY RIGHTS.

PRE-CHECKED SET NAME
24' x 40' THRU 120' x 40' STANDARD MODULAR BUILDING (LOW SEISMIC)
FORM®

SITE SPECIFIC PROJECT NAME

APPROVED
DIV. OF THE STATE ARCHITECT
APP: 04-122050 PC
REVIEWED FOR
SS ☑ FLS ☑ ACS ☑ CG ☑
DATE: 12/11/2023

☐ 2022 CBC PRE-CHECK (PC) DOCUMENT
A SEPARATE PROJECT APPLICATION FOR CONSTRUCTION IS REQUIRED.

MANUFACTURER PROFESSIONAL OF RECORD ON PC

LICENSED ARCHITECT
RANDALL PATRICK CAVANAGH
No. C12631
Ren. 3-31-25
STATE OF CALIFORNIA

THESE DRAWINGS ARE PRELIMINARY AND NOT FOR CONSTRUCTION UNLESS STAMPED & SIGNED BY THE DESIGN PROFESSIONAL OF RECORD.

REVISIONS
1
2
3
4

DRAWN BY:	AA
SCALE:	AS NOTED
DATE:	MM/DD/YY
PROJECT NO:	XXXX-22

SHEET TITLE:
RESTROOM OPTIONS PLUMBING PLAN & FIXTURE SCHEDULE

SHEET NUMBER:
P1.0

IDENTIFICATION STAMP
DIV. OF THE STATE ARCHITECT
APP: 02-122976 INC:
REVIEWED FOR
SS ☑ FLS ☑ ACS ☑
DATE: 03/12/2025

TRACY
UNIFIED SCHOOL DISTRICT

HMC Architects

3595001000

2101 CAPITOL AVENUE, SUITE 100
SACRAMENTO, CA 95816
916 368 7990 / www.hmcarchitects.com

ISSUE

Δ	DESCRIPTION	DATE
A	ADDENDUM "A"	3/20/25

KEYNOTES

GENERAL NOTES

FACILITY:
JACOBSON ELEMENTARY SCHOOL
1750 W KAVANAGH AVE
TRACY, CA 95376

PROJECT:
JACOBSON ES - TK CLASSROOM

SHEET NAME:
RESTROOM OPTIONS PLUMBING PLAN & FIXTURE SCHEDULE

DATE: 04/03/24 | CLIENT PROJ NO: 3595001000

SHEET:
P1.0
ADDENDUM "A"

PLEASE RECYCLE

Autodesk Docs://3595005000 TUSD TK CLASSROOMS 2025 R22/3595005000-A-TUSD-BOHN-SITE.rvt
12/3/2024 9:55:47 AM

THE LINE SHOWN ABOVE IS EXACTLY ONE INCH LONG AT THIS SHEETS ORIGINAL PAGE SIZE

IDENTIFICATION STAMP
DIV. OF THE STATE ARCHITECT
APP: 02-122976 INC:
REVIEWED FOR
SS ☑ FLS ☑ ACS ☑
DATE: 03/12/2025

TRACY UNIFIED SCHOOL DISTRICT

HMC Architects
3595001000
2101 CAPITOL AVENUE, SUITE 100
SACRAMENTO, CA 95816
916 368 7990 / www.hmcarchitects.com

ISSUE

Δ	DESCRIPTION	DATE
A	ADDENDUM "A"	3/20/25

WATER HEATER SUPPORT DETAIL (NOT TO SCALE) 1

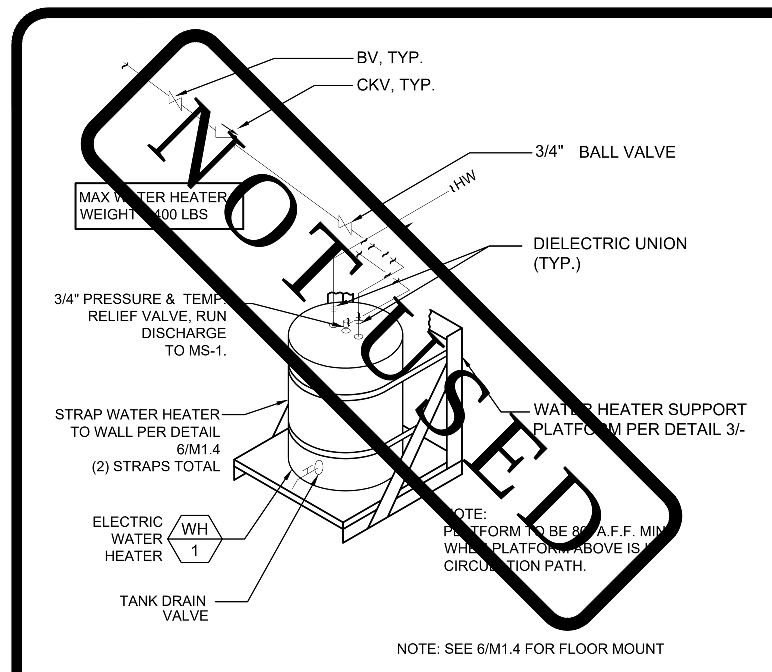

WATER HEATER PLATFORM DETAIL (NOT TO SCALE) 3

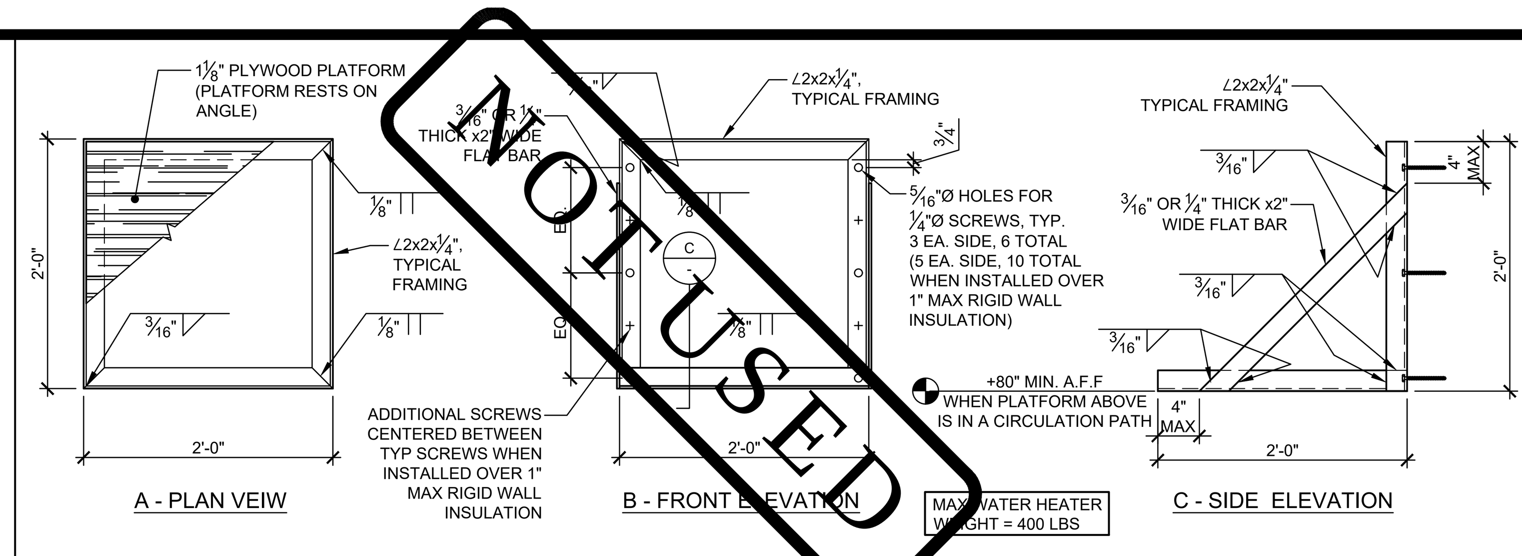

ATTACHMENT TO WOOD STUD WALL
ATTACH TO (2) 2x FLAT PER 3/S8.1 INTERNAILED w/ 0.131"Øx3" NAILS @ 12" O.C. STAGGERED w/ (3) 1/4"Ø MIN. x4" LAG SCREWS EACH SIDE (3" MIN. PENETRATION INTO WOOD FRAMING).
MAY BE ATTACHED TO EXTERIOR WALL OR INTERIOR PARTITION WALL.

ATTACHMENT TO STEEL STUD WALL
ATTACH TO 14GA CHANNEL PER 14C/S9.2 w/ (3) 1/4"Ø SDSTS EACH SIDE TYP, (5) 1/4"Ø SDSTS EACH SIDE WHEN INSTALLED OVER 1" MAX RIGID WALL INSULATION.
MAY BE ATTACHED TO EXTERIOR WALL OR INTERIOR PARTITION WALL.

HEIGHTS FOR ACCESSIBLE FEATURES IN TOILET FACILITIES

	FIXTURE & MEASUREMENT POINT	PRIMARY USERS				NOTES
		AGES 3-4	AGES 5-8	AGES 9-12	AGES 13 -ADULT	
A	TOILET OFFSET, CENTERLINE FROM FACE OF WALL	12"	12" - 15"	15" - 18"	17" - 18"	
B	TOILET SEAT HEIGHT	11" - 12"	12" - 15"	15" - 17"	17" - 19"	
C	TOILET CONTROLS (TOP OF FLUSH)	36" MAX.	36" MAX.	36" MAX.	44" MAX.	FLUSH CONTROLS SHALL BE LOCATED ON OPEN SIDE OF TOILET.
D	TOP OF GRAB BARS GRIPPING SURFACE	18" - 20"	20" - 25"	25" - 27"	33" - 36"	
E	TOILET PAPER DISPENSER OUTLET (A.F.F., TO CENTERLINE OF OUTLET OR ROLL)	14"	14" - 17"	17" - 19"	19" MIN.	CENTERLINE OF DISPENSER OUTLET SHALL BE BETWEEN 7" TO 9" IN FRONT OF THE TOILET. OUTLET OF DISPENSER MUST BE BELOW GRAB BAR. DISPENSER (INCLUDING FULL TOILET PAPER ROLL) MUST NOT ENCROACH INTO REQ'D GRAB BAR CLEARANCE.
F	TOILET SEAT COVER DISPENSER, HEIGHT TO TOP OF OUTLET	24" - 32"	30" - 32"	32" - 36"	40" MAX.	
G	URINAL HEIGHT (LIP HEIGHT)	12" - 13" SUGGESTED (17" MAX.)	13" - 15" SUGGESTED (17" MAX.)	15" - 17" SUGGESTED (17" MAX.)	17" MAX.	
H	URINAL FLUSH CONTROL HEIGHT	44" MAX.	44" MAX.	44" MAX.	44" MAX.	
I	LAV/SINK RIM HEIGHT OR COUNTER	24" - 28" SUGGESTED (31 MAX.)	31" MAX.	31" MAX.	34" MAX.	
J	LAV/SINK KNEE CLEARANCE	SIDE APPROACH	AGE 6-8, 24" MIN. (AGE 5, SIDE APPROACH)	24" MIN.	27" MIN. (29" MIN. AT APRON FOR LAVATORY)	29" MIN TO BOTTOM FRONT EDGE OF LAV; 27" MIN @ 8" DEEP
K	MIRROR (ABOVE LAVATORY, SINK OR COUNTERTOP), LOWEST POINT OF REFLECTIVE SURFACE	24" - 32" SUGGESTED (40" MAX.)	30" - 32" SUGGESTED (40" MAX.)	32" - 36" SUGGESTED (40" MAX.)	40" MAX.	MIRROR NOT LOCATED ABOVE LAVATORY OR COUNTERTOP SHALL BE MOUNTED SO THAT LOWEST EDGE OF REFLECTING SURFACE IS 35" MAX. ABOVE FINISH FLOOR.
L	DISPENSERS, DRYERS, HEIGHT TO TOP OF OUTLET, HANDLE OR OPERATING MECHANISM (WHICHEVER IS HIGHEST)	24" - 32" SUGGESTED (40" MAX.)	30" - 32" SUGGESTED (40" MAX.)	32" - 36" SUGGESTED (40" MAX.)	40" MAX	ACCESSORIES SHALL COMPLY WITH 11B-307.2
M	LO DRINKING FOUNTAIN, HEIGHT TO BUBBLER	30" MAX *	30" MAX. *	30" MAX. *	36" MAX.	KNEE CLEARANCE 27" H. AT 8" DEEP IS REQ'D IF HIGHER THAN 30" A.F.F.
N	HI DRINKING FOUNTAIN, HEIGHT TO BUBBLER	38" - 43"	38" - 43"	38" - 43"	38" - 43"	

NOTES:
1. THIS TABLE AND RELATED DIAGRAMS ILLUSTRATE THE SPECIFIC REQUIREMENTS OF CALIF. TITLE 24 (2022 C.B.C. SECTION 11B-601) AND IS SHOWN HERE ONLY AS AN AID FOR CONSTRUCTION AND INSTALLATION.
2. ACCESSORIES ARE NOT IN MANUFACTURER'S SCOPE OF WORK.
3. DIMENSIONS GIVEN ARE FROM FACE OF FINISH, UNLESS OTHERWISE NOTED.
4. NOT ALL ITEMS LISTED MAY OCCUR IN THE PROJECT.
5. HEIGHTS CHOSEN FOR CHILDREN'S WATER CLOSETS & ACCESSORIES D & E SHALL BE CONSISTENTLY APPLIED FOR THE AGE GROUP.

M* WHERE A D.F. FOR CHILDREN IS MOUNTED MAXIMUM 30" A.F.F., THE SPOUT SHALL BE MAXIMUM 3-1/2" FROM THE FRONT EDGE OF THE UNIT

ACCESSIBLE HEIGHTS TABLE 10

TRAP PRIMER DETAIL (NOT TO SCALE) 6

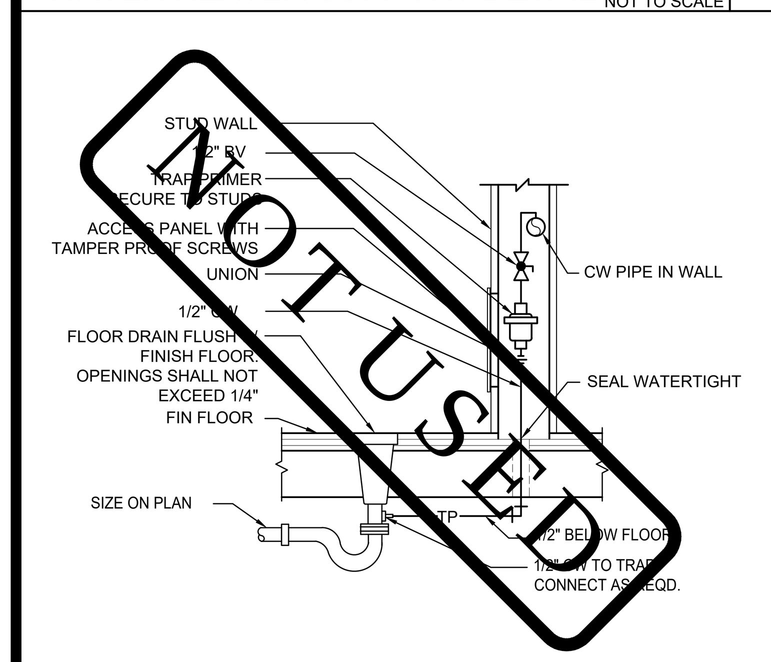

INSTANT WATER HEATER DETAIL (NOT TO SCALE) 7

NOTE:
INSULATE WATER SUPPLY AND DRAIN PIPING AT ACCESSIBLE SINKS OR LAVS WITH "TRUEBRO® LAV GUARD 2" OR "TRUEBRO® SOFT GUARD PLUS" SHIELDS
IWH SHALL NOT BE LOCATED IN THE REQUIRED TOE CLEARANCE.
REFERANCE DETAIL 8 AND/OR 17 (AS APPLIES)

NOTE:
THERE SHALL BE NO SHARP OR ABRASIVE EDGES IN PROXIMITY TO REQUIRED CLEARANCES

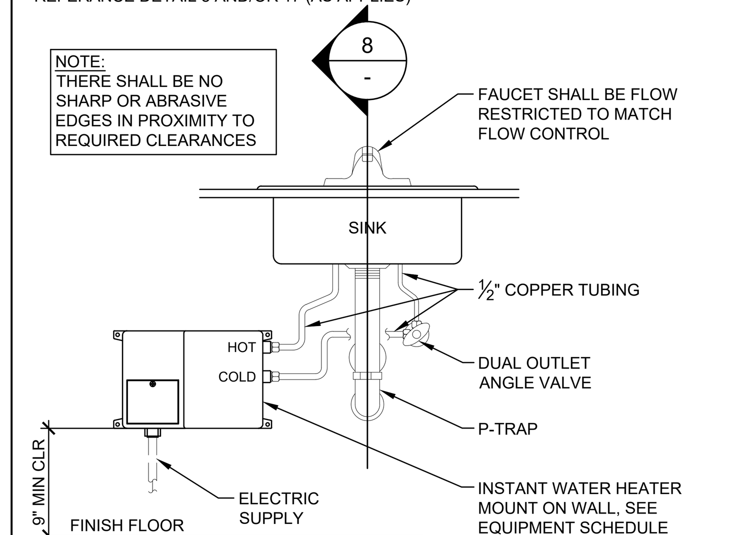

ACCESSIBLE SINK CABINET (NOT TO SCALE) 8

DIM 'A'	DIM 'B'	DIM 'C'	DIM 'D'
17"	8"	11"	17"
18"	9"	12"	18"
19"	10"	13"	19"
20"	11"	14"	20"
21"	12"	15"	21"
22"	13"	16"	22"
23"	14"	17"	23"
24"	15"	18"	24"
25"	16"	19"	25"

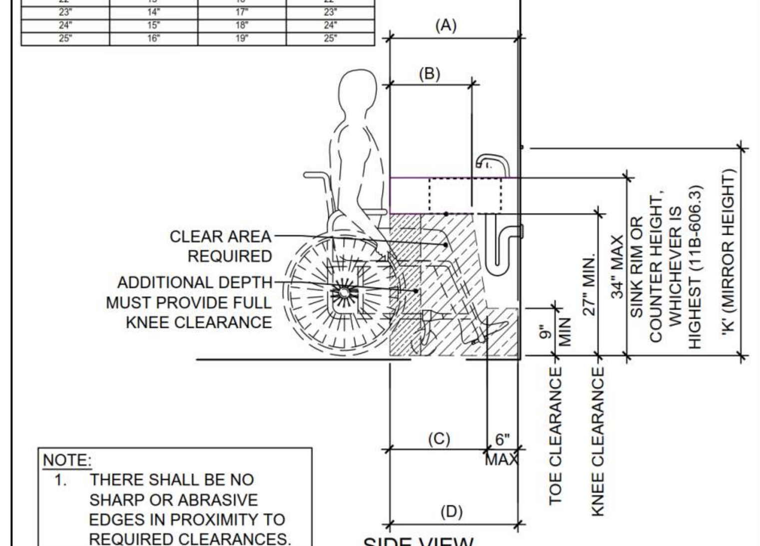

NOTE:
1. THERE SHALL BE NO SHARP OR ABRASIVE EDGES IN PROXIMITY TO REQUIRED CLEARANCES.

HI-LO DRINKING FOUNTAIN (NOT TO SCALE) 11

NOTE:
ALL DRINKING FOUNTAINS SHALL BE LOCATED COMPLETELY WITHIN ALCOVES, BETWEEN WING WALLS, OR OTHERWISE POSITIONED SO AS NOT TO ENCROACH INTO PEDESTRIAN WAYS (PER C.B.C. SECTION 11B-602.9), AND SHALL BE ACCESSIBLE PER 11B-206.5, SHALL BE APPROACHABLE PER SECTION 11B-305.6 AND HAVE MANEUVERING CLEARANCES PER SECTION 11B-305.7.
THE ACCESSIBLE D.F. SHALL HAVE 30"X48" CLEAR FLOOR SPACE, WITH KNEE AND TOE CLEARANCE POSITIONED FOR FORWARD APPROACH MIN. 17" UNDER AND CENTERED ON THE UNIT. (11B-602.2, 11B-306)

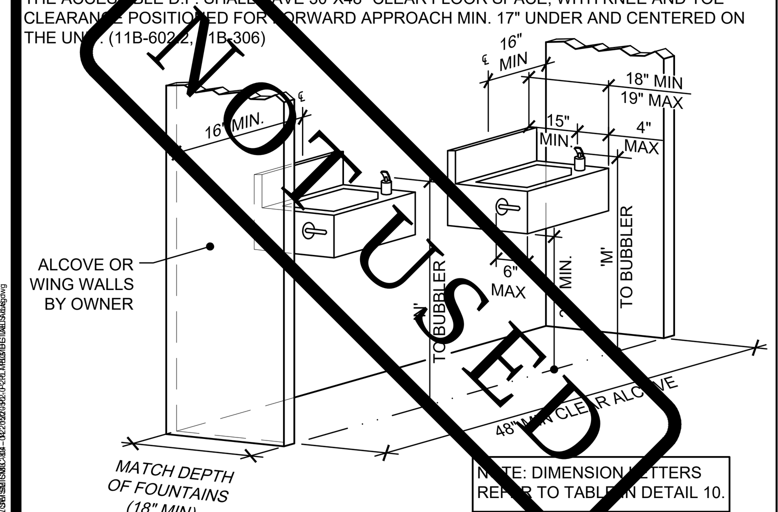

ACCESSIBLE CABINET DETAIL (NOT TO SCALE) 12

NOTES:
1. MODIFY BASE AS SHOWN FOR ADULT WHEELCHAIR ACCESS.
2. CABINET IS FOR ADULT USE ONLY.
3. ALL EXTERIOR SURFACES TO BE PLASTIC LAMINATE.
4. CABINET DOORS ARE NOT ALLOWED @ SINKS.
5. THERE SHALL BE NO SHARP OR ABRASIVE SURFACES BELOW COUNTER

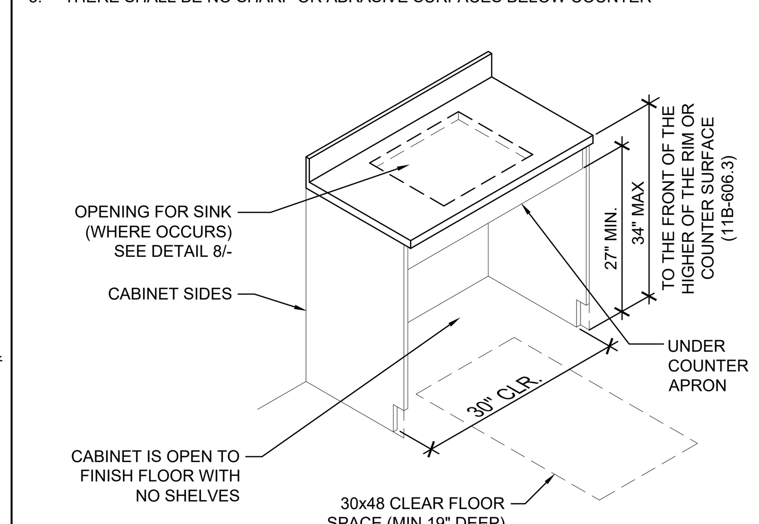

ACCESSIBLE TOILET AND ACCESSORIES (ADULT) (SCALE: 1/2" = 1'-0") 14

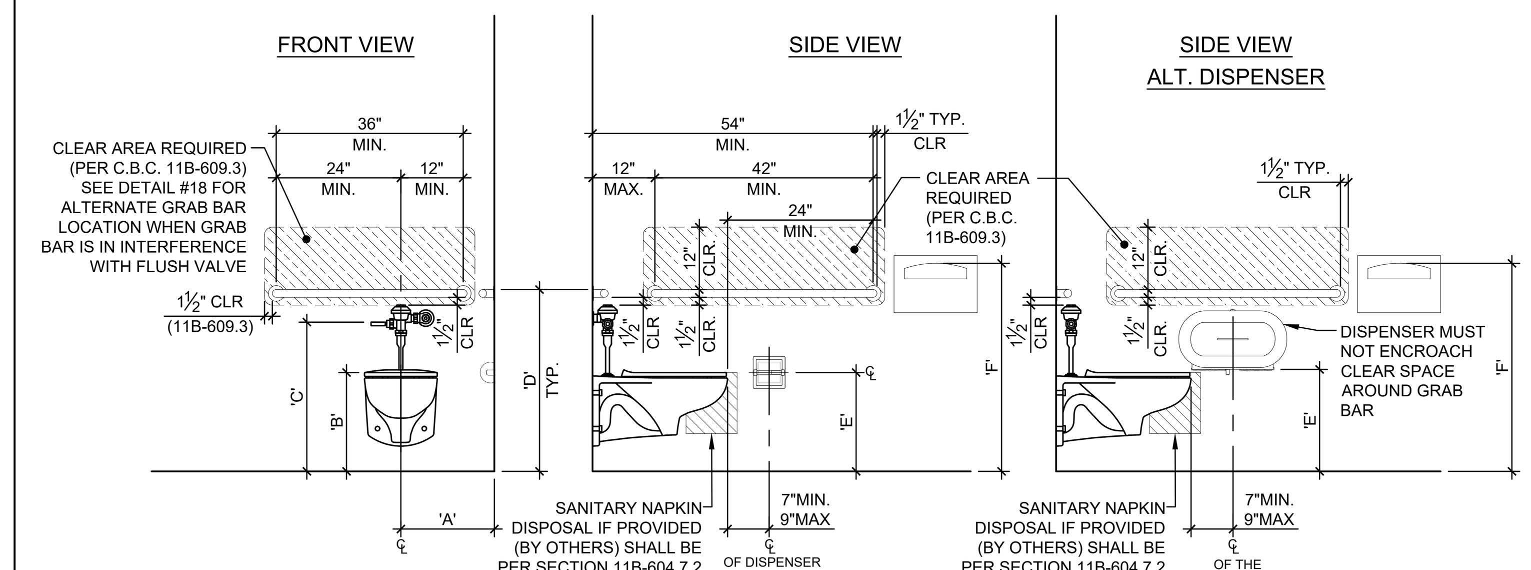

NOTE: DIMENSION LETTERS REFER TO TABLE IN DETAIL 10.

ACCESSIBLE URINAL (SCALE: 1/2" = 1'-0") 15

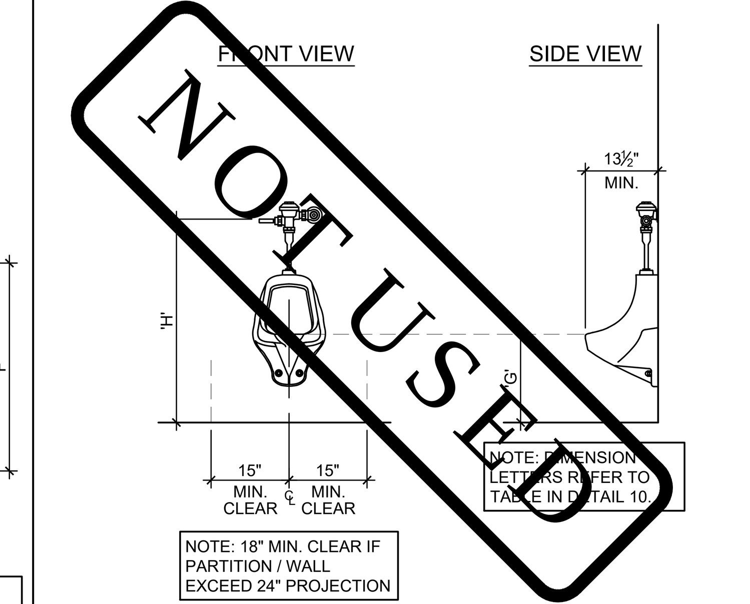

LAVATORY & ACCESSORIES (SCALE: 1/2" = 1'-0") 17

DIM 'A'	DIM 'B'	DIM 'C'	DIM 'D'
17"	8"	11"	17"
18"	9"	12"	18"
19"	10"	13"	19"
20"	11"	14"	20"
21"	12"	15"	21"
22"	13"	16"	22"
23"	14"	17"	23"
24"	15"	18"	24"
25"	16"	19"	25"

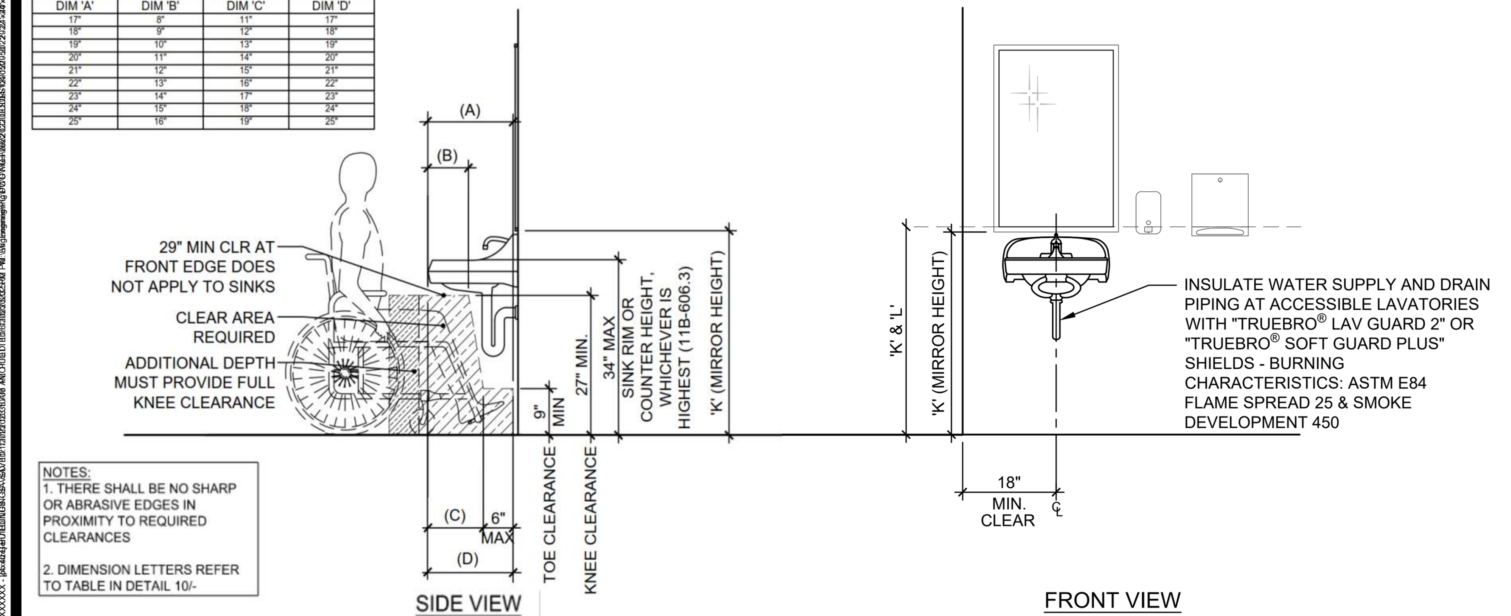

NOTES:
1. THERE SHALL BE NO SHARP OR ABRASIVE EDGES IN PROXIMITY TO REQUIRED CLEARANCES
2. DIMENSION LETTERS REFER TO TABLE IN DETAIL 10/-

ALTERNATE GRAB BAR SHIFT DETAIL (SCALE: 1/2" = 1'-0") 18

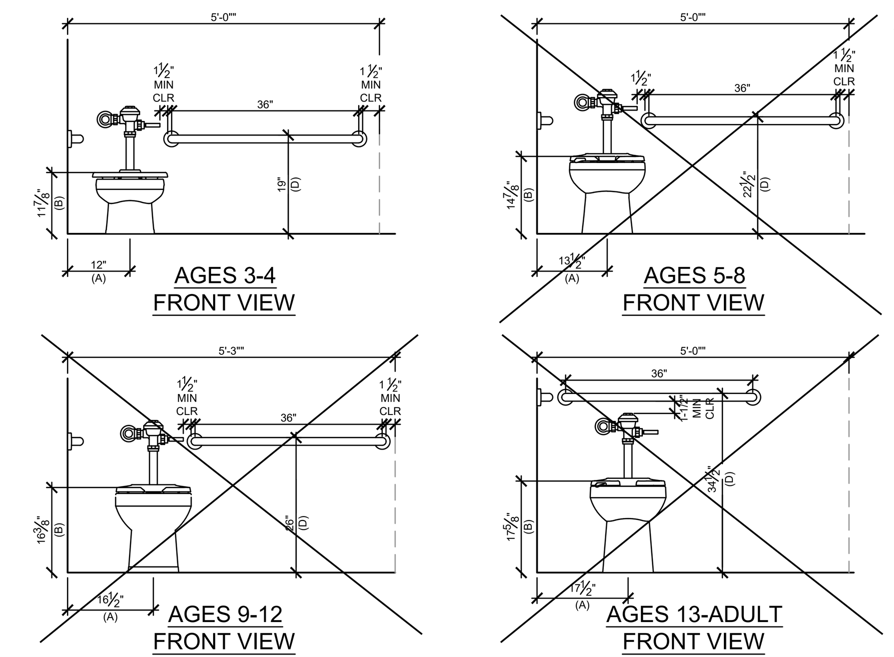

WHERE AN ADMINISTRATIVE AUTHORITY REQUIRES FLUSH CONTROLS FOR FLUSH VALVES TO BE LOCATED IN A POSITION THAT CONFLICTS WITH THE LOCATION OF THE REAR GRAB BAR, THEN THE REAR GRAB BAR SHALL BE PERMITTED TO BE SPLIT OR SHIFTED TO THE OPEN SIDE OF THE TOILET AREA.

(PER CBC 11B-604.5.2 EXCEPTION 2)

NOTES:
1. DIMENSION LETTERS REFER TO TABLE IN DETAIL 10.
2. AT LOCATIONS WHERE GRAB BAR MAY BE LOWER IT MUST CLEAR THE FLUSH VALVE HANDLE AS SHOWN

PLUMBING NOTES 19

1. DWV PIPING SHALL BE ABS PLASTIC.
2. COLD WATER SUPPLY SHALL BE TYPE L COPPER.
3. MIN SLOPE 1/4" PER FOOT MAY SLOPE 4" CI AT 1/8" PER FOOT VENTS SHALL TERMINATE NOT LESS THAN 10 FEET FROM OR AT LEAST 3 FT. ABOVE ANY WINDOW, DOOR, AIR INTAKE OR VENT SHAFT, NOR LESS THAN 3FT. IN EVERY DIRECTION FROM ANY LOT LINE; ALLEY AND STREET EXCEPTED; EXTEND 6" ABOVE THE ROOF.
4. 11B-602.6 WATER FLOW: IF THE SPOUT IS LOCATED LESS THAN 3 INCHES FROM THE FRONT OF THE UNIT, THE ANGLE OF THE STREAM SHALL BE 30 DEGREES MAXIMUM. WHERE LOCATED BETWEEN 3 INCHES AND 5 INCHES FROM THE FRONT OF THE UNIT, THE ANGLE OF THE STREAM SHALL BE 15 DEGREES MAXIMUM RELATIVE TO THE FRONT FACE (ORIENTATION OF WALL SURFACE).

AMS American Modular Systems
787 Spreckels Ave., Manteca, CA 95336
Phone (209) 825-1921 Fax (209) 825-7018
www.americanmodular.com

INTELLECTUAL-PROPERTY & PROPRIETARY RIGHTS STATEMENT
COPYRIGHT © AMERICAN MODULAR SYSTEMS (AMS)
AMS OWNS ALL COPYRIGHT AND OTHER INTELLECTUAL-PROPERTY AND PROPRIETARY RIGHTS IN THESE DRAWINGS, SPECIFICATIONS, AND THE MATERIAL CONTAINED HEREIN. CERTAIN ELEMENTS SHOWN IN THESE DOCUMENTS ARE REGISTERED TRADEMARKS OF AMS. ALL PATENTABLE MATERIALS CONTAINED IN THESE DOCUMENTS AND ORIGINATING WITH AMS WILL REMAIN THE SOLE PROPERTY OF AMS. THESE DRAWING, SPECIFICATIONS, AND THE MATERIAL CONTAINED HEREIN MAY NOT BE REPRODUCED, TRANSMITTED, COPIED, DISTRIBUTED, MODIFIED, OR OTHERWISE DISPOSED OF (DIRECTLY OR INDIRECTLY) AND MAY NOT BE USED (IN WHOLE OR IN PART) TO ASSIST IN THE CONSTRUCTION, DESIGN, OR OTHER MAKING OF, OR FOR THE PURPOSE OF FURNISHING ANY INFORMATION FOR THE CONSTRUCTION, DESIGN, OR OTHER MAKING OF, ANY BUILDINGS (MODULAR OR OTHERWISE), DRAWINGS, SPECIFICATIONS, PRINTS, APPARATUS, OR PARTS THEREOF, EXCEPT AS EXPRESSLY PERMITTED BY WRITTEN CONSENT OF, OR IN A WRITTEN AGREEMENT WITH, AMS. SUBMITTAL OR DISTRIBUTION TO MEET OFFICIAL REGULATORY REQUIREMENTS WILL NOT BE CONSTRUED AS PUBLICATION IN DEROGATION OF AMS'S COPYRIGHT OR OTHER INTELLECTUAL-PROPERTY OR PROPRIETARY RIGHTS.

PRE-CHECKED SET NAME
24' x 40' THRU 120' x 40' STANDARD MODULAR BUILDING (LOW SEISMIC)
FORM

SITE SPECIFIC PROJECT NAME
.
.
.

APPROVED
DIV. OF THE STATE ARCHITECT
APP: 04-122050 PC
REVIEWED FOR
SS ☑ FLS ☑ ACS ☑ CG ☑
DATE: 12/11/2023

2022 CBC PRE-CHECK (PC) DOCUMENT
A SEPARATE PROJECT APPLICATION FOR CONSTRUCTION IS REQUIRED.

MANUFACTURER PROFESSIONAL OF RECORD ON PC

THESE DRAWINGS ARE PRELIMINARY AND NOT FOR CONSTRUCTION UNLESS STAMPED & SIGNED BY THE DESIGN PROFESSIONAL OF RECORD.

REVISIONS
1
2
3
4

DRAWN BY:	AA
SCALE:	AS NOTED
DATE:	MM/DD/YY
PROJECT NO:	XXXX-22

SHEET TITLE:
PLUMBING DETAILS & ACCESSIBLE DETAILS

SHEET NUMBER:
P2.0

KEYNOTES

GENERAL NOTES

FACILITY:
JACOBSON ELEMENTARY SCHOOL
1750 W KAVANAGH AVE
TRACY, CA 95376

PROJECT:
JACOBSON ES - TK CLASSROOM

SHEET NAME:
PLUMBING DETAILS & ACCESSIBLE DETAILS

DATE: **04/03/24** CLIENT PROJ NO: **3595001000**

SHEET:
P2.0
ADDENDUM "A"

PLEASE RECYCLE

Autodesk Docs://3595005000 TUSD TK CLASSROOMS 2025 R22/3595005000-A-TUSD-BOHN-SITE.rvt

THE LINE SHOWN ABOVE IS 1" WHEN PLOTTED ON ORIGINAL 22X34 SHEET. OTHERWISE, LARGE SCALE.

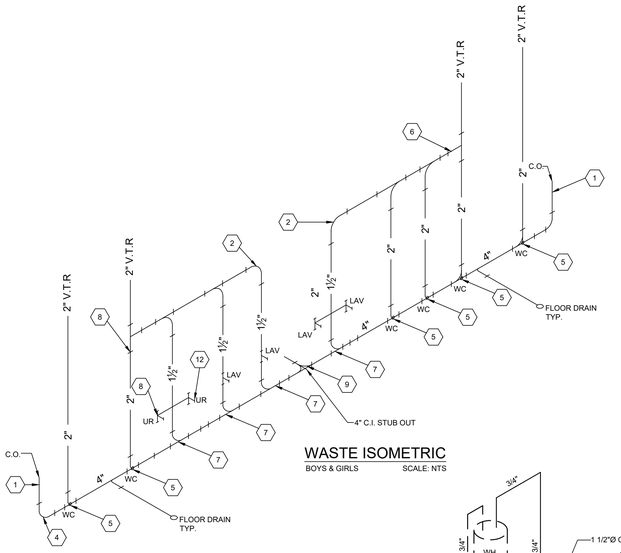

WASTE ISOMETRIC
BOYS & GIRLS SCALE: NTS

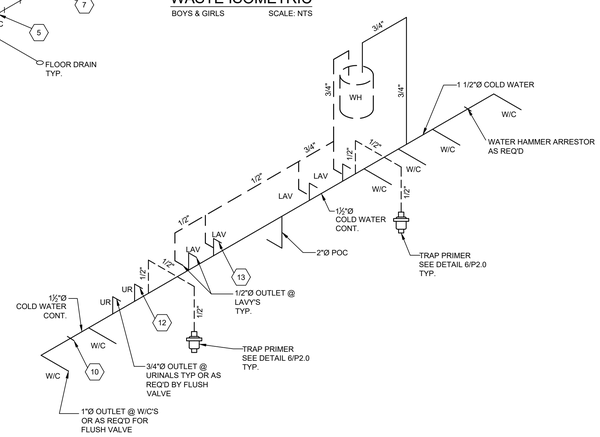

WATER SUPPLY ISOMETRIC
BOYS & GIRLS SCALE: NTS

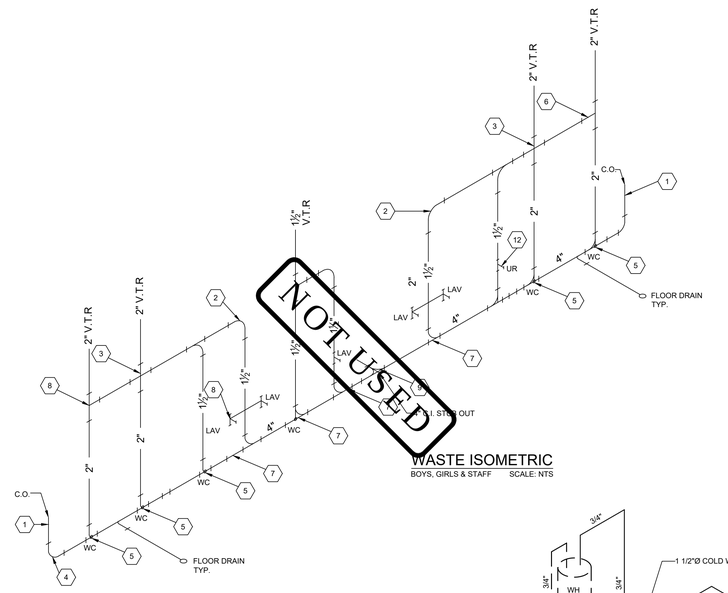

WASTE ISOMETRIC
BOYS, GIRLS & STAFF SCALE: NTS

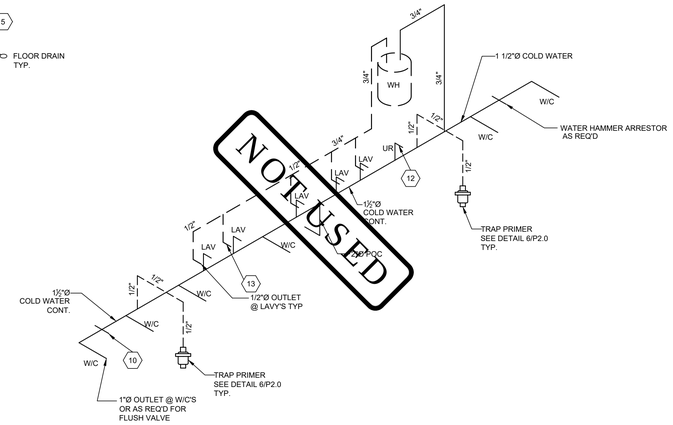

WATER SUPPLY ISOMETRIC
BOYS, GIRLS & STAFF SCALE: NTS

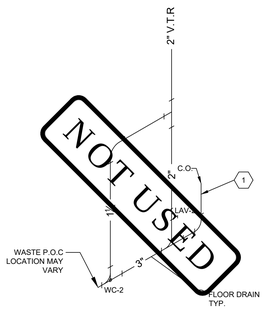

WASTE ISOMETRIC
SINGLE TOILET OPTION SCALE: NTS

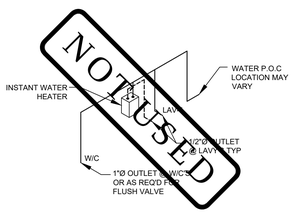

WATER SUPPLY ISOMETRIC
SINGLE TOILET OPTION SCALE: NTS

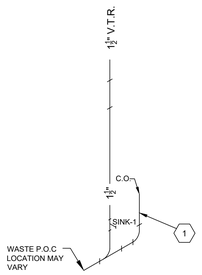

WASTE ISOMETRIC
CLASSROOM SINK OPTION SCALE:NTS

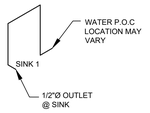

WATER SUPPLY ISOMETRIC
CLASSROOM SINK OPTION SCALE: NTS

KEY NOTES

#	
1	4" CLEAN OUT
2	VENT 90
3	VENT CROSS
4	4" QUARTER BEND
5	SMITH#0600 CARRIER
6	2" SANITARY TAP TEE
7	4x4x2 COMBINATION WYE 1/8 BEND
8	2x2x1 1/2 SANITARY TEE
9	4" DOUBLE COMBINATION
10	2"x16" LONG CU AIR CHAMBER
11	1" CW STUB AT WATER CLOSETS
12	3/4" CW STUB AT URINALS
13	1/2 CW STUB AT LAVATORIES

IDENTIFICATION STAMP
DIV. OF THE STATE ARCHITECT
APP: 02-122976 INC:
REVIEWED FOR
SS ☑ FLS ☑ ACS ☑
DATE: 03/12/2025

TRACY
UNIFIED SCHOOL DISTRICT

HMC Architects

3595001000

2101 CAPITOL AVENUE, SUITE 100
SACRAMENTO, CA 95816
916 368 7990 / www.hmcarchitects.com

ISSUE

Δ	DESCRIPTION	DATE
1	ADDENDUM "A"	3/20/25

AMS®
American Modular Systems
787 Spreckels Ave., Manteca, CA 95336
Phone (209) 825-1921 Fax (209) 825-7018
www.americanmodular.com

INTELLECTUAL-PROPERTY & PROPRIETARY RIGHTS STATEMENT
COPYRIGHT © AMERICAN MODULAR SYSTEMS (AMS)
AMS OWNS ALL COPYRIGHT AND OTHER INTELLECTUAL-PROPERTY AND PROPRIETARY RIGHTS IN THESE DRAWINGS, SPECIFICATIONS, AND THE MATERIAL CONTAINED HEREIN. CERTAIN ELEMENTS SHOWN IN THESE DOCUMENTS ARE REGISTERED TRADEMARKS OF AMS. ALL PATENTABLE MATERIALS CONTAINED IN THESE DOCUMENTS AND ORIGINATING WITH AMS ARE THE PROPERTY OF AMS. THESE DRAWINGS, SPECIFICATIONS, DRAWINGS, AND THE MATERIAL CONTAINED HEREIN MAY NOT BE REPRODUCED, TRANSMITTED, COPIED, DISTRIBUTED, MODIFIED, OR OTHERWISE DISPOSED OF (DIRECTLY OR INDIRECTLY) AND MAY NOT BE USED (IN WHOLE OR IN PART) TO ASSIST IN THE CONSTRUCTION, DESIGN, OR OTHER MAKING OF, OR FOR THE PURPOSE OF FURNISHING ANY INFORMATION FOR THE CONSTRUCTION, DESIGN, OR OTHER MAKING OF, ANY BUILDINGS (MODULAR OR OTHERWISE), DRAWINGS, SPECIFICATIONS, PRINTS, APPARATUS, OR PARTS THEREOF, EXCEPT AS EXPRESSLY PERMITTED BY WRITTEN CONSENT OF, OR IN A WRITTEN AGREEMENT WITH, AMS. SUBMITTAL OR DISTRIBUTION TO MEET OFFICIAL REGULATORY REQUIREMENTS WILL NOT BE CONSTRUED AS PUBLICATION IN DEROGATION OF AMS'S COPYRIGHT OR OTHER INTELLECTUAL-PROPERTY OR PROPRIETARY RIGHTS.

PRE-CHECKED SET NAME
24' x 40' THRU 120' x 40'
STANDARD MODULAR BUILDING
(LOW SEISMIC)
FORM®

SITE SPECIFIC PROJECT NAME

APPROVED
DIV. OF THE STATE ARCHITECT
APP: 04-122059 PC
REVIEWED FOR
SS ☑ FLS ☑ ACS ☑ CG ☑
DATE: 12/11/2023

☐ 2022 CBC PRE-CHECK (PC) DOCUMENT
A SEPARATE PERMIT APPLICATION DOCUMENTATION IS REQUIRED.

MANUFACTURER PROFESSIONAL OF RECORD ON PC

LICENSED ARCHITECT
PATRICK CONNELLY
No. C12631
Ren. 3-31-25
STATE OF CALIFORNIA

THESE DRAWINGS ARE PRELIMINARY AND NOT FOR CONSTRUCTION UNLESS STAMPED & SIGNED BY THE DESIGN PROFESSIONAL OF RECORD.

REVISIONS
1
2
3
4

DRAWN BY:	AA
SCALE:	AS NOTED
DATE:	MM/DD/YY
PROJECT NO:	XXXX-22

SHEET TITLE:
PLUMBING
ISOMETRICS DRAWINGS

SHEET NUMBER:
P3.0

KEYNOTES

GENERAL NOTES

FACILITY:
JACOBSON ELEMENTARY SCHOOL
1750 W KAVANAGH AVE
TRACY, CA 95376

PROJECT:
JACOBSON ES - TK CLASSROOM

SHEET NAME:
PLUMBING ISOMETRICS DRAWINGS

DATE: **04/03/24** CLIENT PROJ NO: **3595001000**

SHEET:
P3.0
ADDENDUM "A"

PLEASE RECYCLE

Autodesk Docs://3595005000 TUSD TK CLASSROOMS 2025 R22/3595005000-A-TUSD-BOHN-SITE.rvt
12/3/2024 8:55:47 AM