OXNARD SCHOOL DISTRICT

1051 South "A" Street • Oxnard, California 93030 • (805) 385-1501

BOARD OF TRUSTEES

Veronica Robles-Solis, President
Brian Melanephy, Clerk
Monica Madrigal Lopez, Member
Rose Gonzales, Member
Cynthia Salas, Member

ADMINISTRATION

Anabolena DeGenna, Ed.D.
Superintendent
Vacant
Assistant Superintendent,
Business & Fiscal Services
Aracely Fox, Ed.D.
Assistant Superintendent,
Educational Services
Scott Carroll, Ed.D.
Acting Assistant Superintendent,
Human Resources

AGENDA
REGULAR BOARD MEETING
Wednesday, March 19, 2025

5:00 PM - Open Meeting
7:00 PM - Return to Regular Board Meeting

***NOTE:** In accordance with requirements of the Americans with Disabilities Act and related federal regulations, individuals who require special accommodation, including but not limited to an American Sign Language interpreter, accessible seating or documentation in accessible formats, should contact the Superintendent's office at least two days before the meeting date.

Persons wishing to address the Board of Trustees on any agenda item may do so by completing a Speaker Request Form and submitting the form to the Assistant Superintendent of Educational Services. The speaker should indicate on the card whether they wish to speak during Public Comment or when a specific agenda item is considered.

Watch the meeting live: osdtv.oxnardsd.org

Broadcasted by Charter Spectrum, Channel 20 &
Frontier Communications, Channel 37

Note: No new items will be considered after 10:00 p.m. in accordance with Board Bylaws, BB 9323 – Meeting Conduct

Section A: PRELIMINARY

A.1. Call to Order and Roll Call (5:00 PM)
The President of the Board will call the meeting to order. A roll call of the Board will be conducted.

ROLL CALL VOTE:

Salas___ , Gonzales ___ , Madrigal Lopez ___, Melanephy ___, Robles-Solis ___

A.2. Pledge of Allegiance to the Flag
Javier Tapia, Principal, Driffill School, will introduce Madelyn Leann Driscol, 8th grade student in Mr. Mahoney 's class at Driffill, who will lead the audience in the Pledge of Allegiance.

A.3. District's Vision and Mission Statement
The District's Mission and Vision Statement will be read in English and Spanish by Ayleen Guadalupe Ceja Vargas, 4th grade student in Ms. Palacios's class at Driffill School.

A.4. Presentation by Driffill School
Javier Tapia, Principal, Driffill School, will provide a short presentation to the Board regarding Driffill. Tokens of appreciation will be presented to the students that participated in the Board Meeting.

A.5. Adoption of Agenda (Superintendent)
Moved:
Seconded:
Vote:

ROLL CALL VOTE:

Salas___ , Gonzales ___ , Madrigal Lopez ___, Melanephy ___, Robles-Solis ___

A.6. Update on Use of Pesticides (DeGenna/Hubbard)
The Superintendent and Chief Information Officer will provide an update on the use of pesticides in the district.

A.7. Closed Session – Public Participation/Comment (Limit three minutes per person per topic)
Persons wishing to address the Board of Trustees on any agenda item identified in the Closed Session agenda may do so by completing a "Speaker Request Form" and submitting the form to the Assistant Superintendent of Educational Services. Public Comment shall be limited to fifteen (15) minutes per subject with a maximum of three (3) minutes per speaker. The Board will now convene in closed session to consider the items listed under Closed Session.

A.8. Closed Session
1. Pursuant to Section 54956.9 of Government Code:
   Conference with Legal Counsel
   - Existing Litigation:
   - Oxnard School District et al. Central District No. CV-04304-JAK-FFM

- D.J. v. Oxnard SD, et al., Case #2024-CUOE029274
- S.T. v. Oxnard SD, et al., Case #2023-CUOE015904
- YV v. Oxnard SD, Case #GHC0058142
- OAH Case #2024100850

- Anticipated Litigation:
- Significant exposure to litigation pursuant to paragraph (2) or (3) of subdivision (d) of Section 54956.9: 2 cases

2. Pursuant to Sections 54957.6 and 3549.1 of the Government Code:
   Conference with Labor Negotiator:
   Agency Negotiators: OSD Assistant Superintendent, Human Resources, and Garcia Hernandez & Sawhney, LLP
   Association(s): OEA, CSEA, OSSA; and All Unrepresented Personnel-Administrators, Classified Management, Confidential

3. Pursuant to Section 54957 of the Government Code the Board will consider personnel matters, including:
   - Public Employee(s) Discipline/Dismissal/Release

A.9. Reconvene to Open Session (7:00 PM)

A.10. Report Out of Closed Session
The Board will report on any action taken in Closed Session or take action on any item considered in Closed Session, including expulsion of students.

Section B: PUBLIC COMMENT/HEARINGS

B.1. Public Comment (3 minutes per speaker) / Comentarios del Público (3 minutos por cada ponente)
Members of the public may address the Board on any matter within the Board's jurisdiction at this time or at the time that a specific agenda item is being considered. Comments should be limited to three (3) minutes. Please know this meeting is being video-recorded and televised. The Board particularly invites comments from parents of students in the District. If you would like to donate your (3) minutes of public speaking time, you must be present during public comments.

Los miembros del público podrán dirigirse a la Mesa Directiva sobre cualquier asunto que corresponda a la jurisdicción de la Mesa Directiva en este periodo o cuando este punto figure en el orden del día y sea analizado. Los comentarios deben limitarse a tres (3) minutos. Tenga presente que esta reunión está siendo grabada y televisada. La Mesa Directiva invita en particular a los padres y alumnos del distrito a que presenten sus comentarios. Si gusta donar sus tres (3) minutos de comentario, debe estar presente durante la presentación de comentarios.

Section C: CONSENT AGENDA
(All matters specified as Consent Agenda are considered by the Board to be routine and will be acted upon in one motion. There will be no discussion of these items prior to the time the Board votes on the motion unless members of the Board request specific items be discussed and/or removed from the Consent Agenda.)

Board Discussion:

Moved:
Seconded:
Vote:

ROLL CALL VOTE:

Salas ___, Gonzales ___, Madrigal Lopez ___, Melanephy ___, Robles-Solis ___

It is recommended that the Board approve the following consent agenda items:

C.1. Designation of the Oxnard School District's California Schools Employee Benefits Organization (CSEBO) Representative and Alternate (Carroll)
It is the recommendation of the Assistant Superintendent, Human Resources that the Board of Trustees approve the designations of Dr. Scott Carroll, Assistant Superintendent, Human Resources and Joanne Pelino, School Psychologist, as Representatives to the CSEBO Board, and Patty Nuñez, Director of Fiscal Services and Angelique Pagliano, School Psychologist, as Alternates.

C.2. Establishment and Increase in Hours of Positions (Caroll/Fuentes)
It is the recommendation of the Assistant Superintendent of Human Resources and the Director of Classified Human Resources that the Board of Trustees approve the establishment and increase in hours of positions, as presented.

C.3. Personnel Actions (Carroll/Fuentes)
It is the recommendation of the Assistant Superintendent of Human Resources and the Director of Classified Human Resources that the Board of Trustees approve the Personnel Actions, as presented.

C.4. Approval of Change Order #008 to Construction Service Agreement #22-238 - Viola Constructors for the Driffill Elementary School New Transitional Kindergarten Project (Hubbard/CFW)
It is the recommendation of the Chief Information Officer, in conjunction with Caldwell Flores Winters, that the Board of Trustees approve Change Order #008 with Viola Constructors, for the Driffill Elementary School New Transitional Kindergarten Project, to install a new pedestrian gate at the Southwest corner of Room 800 and new Audio-Visual systems for the new classrooms, in the amount of $47,768.93, to be paid out of Master Construct and Implementation Funds.

Section C: APPROVAL OF AGREEMENTS
It is recommended that the Board approve the following agreements:

C.5. Approval of Agreement #24-198 – Shoonya Digital Inc. (Fox)
It is the recommendation of the Assistant Superintendent, Educational Services, that the Board of Trustees approve Agreement #24-198 with Shoonya Digital Inc., to facilitate the setup, demonstration, and implementation of foundational literacy and numeracy skill-building for TK in both English and Spanish, including providing professional development support to teachers and staff, product onboarding, initial setup, unlimited technical assistance, and ongoing product updates throughout the term, March 28, 2025 through March 27, 2026, in the amount of $3,000.00, to be paid out of LCFF funds.

C.6. Approval of Agreement #24-199 – AlphaBEST Education, Inc. (Fox/Shea)
It is the recommendation of the Director, Enrichment & Specialized Programs, and the Assistant Superintendent, Educational Services, that the Board of Trustees approve Agreement #24-199 with AlphaBEST Education, Inc., to provide a pilot Transitional Kindergarten/Kindergarten (TK/K) after-school enrichment program at Brekke, McKinna and Rose Avenue that offers daily enrichment activities, physical games, story time, and hands-on activity stations tailored to early learners at three to five sites within the Oxnard School District, April 22, 2025 through June 30, 2025, in the amount not to exceed $104,000.00, to be paid out of Expanded Learning Opportunities Program Funds.

C.7. Approval of Agreement #24-200 – Mindset Academy by SWEAT III (Fox/Anguiano)
It is the recommendation of the Principal, Chavez School, and the Assistant Superintendent, Educational Services, that the Board of Trustees approve Agreement #24-200 with Mindset Academy by SWEAT III, for group workshops on SEL, PBIS, student voice, and character development for staff, parents, and students, March 31, 2025 through June 30, 2025, in the amount not to exceed $9,400.00, to be paid out of Title III Funds.

C.8. Approval of Agreement #24-201 – Mindset Academy by SWEAT III (Fox/Shea)
It is the recommendation of the Director, Enrichment & Specialized Programs, and the Assistant Superintendent, Educational Services, that the Board of Trustees approve Agreement #24-201 with Mindset Academy by SWEAT III, to provide a series of workshops to students in the Elm School After School Program that feature interactive discussions, role-playing scenarios, and activities aimed at empowering youth voices, strengthening character-building principles, and promoting reflective practices, March 20, 2025 - June 30, 2025, in the amount not to exceed $14,200.00, to be paid out of Expanded Learning Opportunities Program Funds.

C.9. Approval of Agreement #24-206 – Prismatic Magic LLC (Fox/Shea)
It is the recommendation of the Director, Enrichment & Specialized Programs, and the Assistant Superintendent, Educational Services, that the Board of Trustees approve Agreement #24-206 with Prismatic Magic, LLC, to present a Laser Safari Program for students in the Oxnard School District during Spring Camp at eight school site locations, April 8 – 17, 2025, in the amount not to exceed $7,992.00, to be paid out of Expanded Learning Opportunities Program Funds.

C.10. Approval of Agreement #24-209 – CDW-G (DeGenna/Hubbard)
It is the recommendation of the Chief Information Officer and the Superintendent that the Board of Trustees approve Agreement #24-209 with CDWG, to provide engineering, consulting, and maintenance services to the district's Information Technology department, March 20, 2025 through June 30, 2025, in the amount not to exceed $11,620.00 to be paid out of Unrestricted General Funds.

C.11. Approval of Agreement #24-212 – Midwestern University (Carroll)
It is the recommendation of the Assistant Superintendent, Human Resources, that the Board of Trustees approve Agreement #24-212 with Midwestern University, to provide university students, referred to as "unpaid interns," supervised clinical experience in speech-language pathology, providing them with the opportunity to gain hands-on experience in a public school environment, March 20, 2025 through March 19, 2028, at no cost to Oxnard School District.

C.12. Approval of Agreement #25-03 – Spectrum Enterprise – Network Connections - E-Rate (DeGenna/Hubbard)

It is the recommendation of the Chief Information Officer and the Superintendent that the Board of Trustees approve Agreement #25-03 with Spectrum Enterprise, to provide point-to-point network connections, Option 8, between various locations within the Oxnard School District, July 1, 2025 through June 30, 2026, in the amount not to exceed $44,340.00, to be paid out of E-Rate Funds ($39,906.00) and the General Fund ($4,434.00).

C.13. Approval of Agreement #25-04 with CDW-G - Infrastructure Modernization Project – E-Rate (DeGenna/Hubbard)

It is the recommendation of the Chief Information Officer and the Superintendent that the Board of Trustees approve Agreement #25-04 with CDW-G, for Infrastructure Modernization, including LAN Fiber Replacement and UPS Installation at all school sites, and Cabinet Upgrades for the Data Center, July 1, 2025 – December 30, 2025, in the amount not to exceed $1,405,514.26, to be paid out of E-Rate Funds ($1,116,374.50) and the General Fund ($289,139.76).

Section C: RATIFICATION OF AGREEMENTS

It is recommended that the Board ratify the following agreements:

C.14. Ratification of Agreement #24-210 Nigro & Nigro, PC – School Facility Program Performance Audit Services (Nuñez)

It is the recommendation of the Director of Fiscal Services that the Board of Trustees ratify Agreement #24-210 with Nigro & Nigro, PC, to perform the School Facility Program Performance Audit Services for Brekke, Elm, Harrington, Lemonwood, McAuliffe, McKinna, Ramona, and Ritchen, July 1, 2024 through June 30, 2025, in the amount not to Exceed: $90,000.00, to be paid out of the General Fund.

Section D: ACTION ITEMS

(Votes of Individual Board Members must be publicly reported.)

D.1. Approval of Employment Agreement - Assistant Superintendent, Human Resources (DeGenna)

It is the recommendation of the Superintendent that the Board of Trustees approve the employment agreement for Dr. L. Scott Carroll, Assistant Superintendent, Human Resources, March 6, 2025 - June 30, 2028, in the amount of $211,640.00 per year.

Board Discussion:
Moved:
Seconded:
Vote:

ROLL CALL VOTE:

Salas ___, Gonzales ___, Madrigal Lopez ___, Melanephy ___, Robles-Solis ___

D.2. Approval of Agreement #25-02 – AT & T Business - Mobile Hotspots and Data Services - E-Rate (DeGenna/Hubbard)

It is the recommendation of the Chief Information Officer and the Superintendent that the Board of Trustees approve Agreement #25-02 with AT & T Business, to provide Mobile Hotspots and Data Services to OSD families and staff, July 1, 2025 through June 30, 2026, in the amount not to exceed $203,550.00, to be paid out of E-Rate Funds ($177,000.00) and the General Fund

($26,550.00).

Board Discussion:
Moved:
Seconded:
Vote:

ROLL CALL VOTE:

Salas ___, Gonzales ___, Madrigal Lopez ___, Melanephy ___, Robles-Solis ___

D.3. Consideration of the Adoption of Resolution No. 24-17 Authorizing and Directing the Conveyance of a Right of Way Easement to the City of Oxnard (Hubbard)
It is the recommendation of the Chief Information Officer that the Board adopt Resolution No. 24-17 Authorizing the Conveyance of a Right of Way Easement to the City of Oxnard and related documents and actions.

Board Discussion:
Moved:
Seconded:
Vote:

ROLL CALL VOTE:

Salas ___, Gonzales ___, Madrigal Lopez ___, Melanephy ___, Robles-Solis ___

D.4. Approval of Agreement #25-01 with Durham School Services for Pupil Transportation Services (Hubbard/Galván)
It is the recommendation of the Director of Transportation and the Chief Information Officer that the Board of Trustees approve Agreement #25-01 with Durham School Services, to provide pupil transportation services, July 1, 2025 through June 30, 2027, in the amount not to exceed $14,000,000.00 for the 2-year term, to be paid out of the General Fund.

Board Discussion:
Moved:
Seconded:
Vote:

ROLL CALL VOTE:

Salas ___, Gonzales ___, Madrigal Lopez ___, Melanephy ___, Robles-Solis ___

D.5. Approval of Oxnard School District 2024-2025 Second Interim Financial Report (Period Ending January 31, 2025) (Núñez)
It is the recommendation of the Director of Fiscal Services that the Board of Trustees approve the Oxnard School District 2024-25 Second Interim Report (Period Ending January 31, 2025), as presented.

Board Discussion:
Moved:

Seconded:
Vote:

ROLL CALL VOTE:

Salas ___, Gonzales ___, Madrigal Lopez ___, Melanephy ___, Robles-Solis ___

D.6. Approval of Agreement #24-211, Nigro & Nigro, PC – District's Measure I Building Bond Audit Services for Fiscal Years 2024-25 and 2025-26 (Nuñez)
It is the recommendation of the Director of Fiscal Services that the Board of Trustees approve Agreement #24-211 with Nigro & Nigro, PC, to perform the District's Measure I Building Fund Bond Audits for fiscal years 2024-25 and 2025-26, in the amount not to exceed $10,000.00 per year, to be paid out of the General Fund.

Board Discussion:
Moved:
Seconded:
Vote:

ROLL CALL VOTE:

Salas ___, Gonzales ___, Madrigal Lopez ___, Melanephy ___, Robles-Solis ___

Section E: APPROVAL OF MINUTES

E.1. Approval of Minutes (DeGenna)
It is the recommendation of the Superintendent that the Board of Trustees approve the minutes of Board meetings, as presented:

- January 15, 2025 Regular Board Meeting

Board Discussion:
Moved:
Seconded:
Vote:

ROLL CALL VOTE:

Salas ___, Gonzales ___, Madrigal Lopez ___, Melanephy ___, Robles-Solis ___

Section F: BOARD POLICIES
(These are presented for discussion or study. Action may be taken at the discretion of the Board.)

F.1. First Reading - 1312.3 BP and AR (Revisions): Uniform Complaint Procedures (Carroll)
It is the recommendation of the Assistant Superintendent, Human Resources that the Board of Trustees review the revisions to 1312.3 BP and AR Uniform Complaint Procedures, as presented for First Reading. The revised policies will be presented for Second Reading and Adoption at the April 2, 2025 Regular Board meeting.

F.2. First Reading - 1312.4 AR, E(1), and E(2) (Revisions): Williams Uniform Complaint Procedures (Carroll)

It is the recommendation of the Assistant Superintendent, Human Resources that the Board of Trustees review the revisions to 1312.4 AR, E(1), and E(2) Williams Uniform Complaint Procedures, as presented for First Reading. The revised policies will be presented for Second Reading and Adoption at the April 2, 2025 Regular Board meeting.

F.3. Second Reading and Adoption - BP/AR 6158 Independent Study (Fox/Nocero)
It is the recommendation of the Assistant Superintendent of Educational Services, and Director of Pupil Services that the Board of Trustees approve and adopt the revisions to BP/AR 6158 Independent Study, as presented for Second Reading.

Board Discussion:
Moved:
Seconded:
Vote:

ROLL CALL VOTE:

Salas ___, Gonzales ___, Madrigal Lopez ___, Melanephy ___, Robles-Solis ___

Section G: CONCLUSION

G.1. Superintendent's Report (3 minutes)
A brief report will be presented concerning noteworthy activities of district staff, matters of general interest to the Board, and pertinent and timely state and federal legislation.

G.2. Trustees' Announcements (3 minutes each speaker)
The trustees' report is provided for the purpose of making announcements, providing conference and visitation summaries, coordinating meeting dates, identifying board representation on committees, and providing other information of general interest.

G.3. ADJOURNMENT
Moved:
Seconded:
Vote:

ROLL CALL VOTE:

Salas ___, Gonzales ___, Madrigal Lopez ___, Melanephy ___, Robles-Solis ___

Anabolena DeGenna, Ed. D.
District Superintendent and Secretary to the Board of Trustees

This notice is posted in conformance with the provisions of Chapter 9 of the Government Code, in the front of the Educational Services Center; 1051 South A Street, Oxnard, California by 5:00 p.m. on Friday, March 14, 2025.

OSD BOARD AGENDA ITEM

Name of Contributor: Dr. Anabolena DeGenna **Date of Meeting:** March 19, 2025

Agenda Section: Section A: Preliminary

Update on Use of Pesticides (DeGenna/Hubbard)

The Superintendent and Chief Information Officer will provide an update on the use of pesticides in the district.

FISCAL IMPACT:
N/A

RECOMMENDATION:
None - Information Only.

OSD BOARD AGENDA ITEM

Name of Contributor: Dr. Anabolena DeGenna **Date of Meeting:** March 19, 2025

Agenda Section: Section A: Preliminary

Closed Session – Public Participation/Comment (Limit three minutes per person per topic)

Persons wishing to address the Board of Trustees on any agenda item identified in the Closed Session agenda may do so by completing a "Speaker Request Form" and submitting the form to the Assistant Superintendent of Educational Services. Public Comment shall be limited to fifteen (15) minutes per subject with a maximum of three (3) minutes per speaker.

The Board will now convene in Closed Session to consider the items listed under Closed Session.

FISCAL IMPACT:
N/A

RECOMMENDATION:
N/A

OSD BOARD AGENDA ITEM

Name of Contributor: Dr. Anabolena DeGenna **Date of Meeting:** March 19, 2025

Agenda Section: Section A: Preliminary

Closed Session

---

1. Pursuant to Section 54956.9 of Government Code:
   Conference with Legal Counsel
   - Existing Litigation:
   - Oxnard School District et al. Central District No. CV-04304-JAK-FFM
   - D.J. v. Oxnard SD, et al., Case #2024-CUOE029274
   - S.T. v. Oxnard SD, et al., Case #2023-CUOE015904
   - YV v. Oxnard SD, Case #GHC0058142
   - OAH Case #2024100850
   - Anticipated Litigation:
   - Significant exposure to litigation pursuant to paragraph (2) or (3) of subdivision (d) of Section 54956.9: 2 cases

2. Pursuant to Sections 54957.6 and 3549.1 of the Government Code:
   Conference with Labor Negotiator:
   Agency Negotiators: OSD Assistant Superintendent, Human Resources, and
   Garcia Hernandez & Sawhney, LLP
   Association(s): OEA, CSEA, OSSA; and All Unrepresented Personnel-
   Administrators, Classified Management, Confidential

3. Pursuant to Section 54957 of the Government Code the Board will consider personnel matters, including:
   - Public Employee(s) Discipline/Dismissal/Release

FISCAL IMPACT:
N/A

RECOMMENDATION:
N/A

OSD BOARD AGENDA ITEM

Name of Contributor: Dr. Anabolena DeGenna **Date of Meeting:** March 19, 2025

Agenda Section: Section A: Preliminary

Reconvene to Open Session (7:00 PM)

Reconvene to Open Session (7:00 PM)

FISCAL IMPACT:
N/A

RECOMMENDATION:
N/A

OSD BOARD AGENDA ITEM

Name of Contributor: Dr. Anabolena DeGenna **Date of Meeting:** March 19, 2025

Agenda Section: Section A: Preliminary

Report Out of Closed Session

The Board will report on any action taken in Closed Session or take action on any item considered in Closed Session, including expulsion of students.

FISCAL IMPACT:
N/A

RECOMMENDATION:
N/A

OSD BOARD AGENDA ITEM

Name of Contributor: Dr. Anabolena DeGenna **Date of Meeting:** March 19, 2025

Agenda Section: Section B: Hearing

Public Comment (3 minutes per speaker)/Comentarios del Público (3 minutos por cada ponente)

Members of the public may address the Board on any matter within the Board's jurisdiction at this time or at the time that a specific agenda item is being considered. Comments should be limited to three (3) minutes. Please know this meeting is being video-recorded and televised. The Board particularly invites comments from parents of students in the District. If you would like to donate your (3) minutes of public speaking time, you must be present during public comments.

Los miembros del público podrán dirigirse a la Mesa Directiva sobre cualquier asunto que corresponda a la jurisdicción de la Mesa Directiva en este periodo o cuando este punto figure en el orden del día y sea analizado. Los comentarios deben limitarse a tres (3) minutos. Tenga presente que esta reunión está siendo grabada y televisada. La Mesa Directiva invita en particular a los padres y alumnos del distrito a que presenten sus comentarios. Si gusta donar sus tres (3) minutos de comentario, debe estar presente durante la presentación de comentarios.

FISCAL IMPACT:
N/A

RECOMMENDATION:
N/A

OSD BOARD AGENDA ITEM

Name of Contributor: Dr. Scott Carroll **Date of Meeting:** March 19, 2025

Agenda Section: Section C: Consent Agenda

Designation of the Oxnard School District's California Schools Employee Benefits Organization (CSEBO) Representative and Alternate (Carroll)

The California Schools Employee Benefits Organization (CSEBO) provides self-insured medical, dental, and vision benefits to Ventura County school employees. As a non-profit entity, CSEBO operates under the same regulations as its member school districts and aims to make affordable healthcare coverage a priority.

CSEBO is not an insurance company; rather, it is a self-insured program created by its member school districts to collectively pool health benefits, reduce rates, and share risk. Insurance claims are administered by Anthem Blue Cross, Kaiser Permanente, Delta Dental, and Vision Service Plan (VSP).

CSEBO is governed by a Board of Directors, consisting of two representatives and two alternates from each member school district. The Board meets bi-monthly at the Ventura County Office of Education to oversee operations, approve the budget, renewal rates, premiums, plan offerings, and expenditures.

The CSEBO Representative and Alternate Designee form is being presented to designate Dr. Scott Carroll, Assistant Superintendent, Human Resources and Joanne Pelino, School Psychologist, as Representatives to the CSEBO Board and Patty Nuñez, Director of Fiscal Services, and Angelique Pagliano, School Psychologist, as Alternates.

FISCAL IMPACT:
N/A

RECOMMENDATION:
It is the recommendation of the Assistant Superintendent, Human Resources that the Board of Trustees approve the designations to the CSEBO Board as outlined above, via execution of the attached form.

ADDITIONAL MATERIALS:

Attached: 2025 CSEBO Rep & Alternate Designees 03.19.2025 (one page)

CSEBO

California Schools Employee Benefits Organization

The Governing Board of Oxnard SD hereby Designates the following as its Representatives and Alternate Representatives to the Board of Directors of the California Schools Employee Benefits Organization (CSEBO).

Effective Date 3/20/25

REPRESENTATIVE

Name Joanna Pelino *and*

Title School Psychologist

Address 1051 South A Street

City Oxnard Zip Code 93030

Phone # 805-385-1501

FAX #

Email jpelino@oxnardsd.org

ALTERNATE

Name Anglique Pagliano

Title School Psychologist

Address 1051 South A Street

City Oxnard Zip Code 93030

Phone 805-385-1501

FAX #

Email apagliano@oxnardsd.org

REPRESENTATIVE

Name Scott Carroll *and*

Title Assistant Superintendent, HR

Address 1051 South A Street

City Oxnard Zip Code 93030

Phone # 805-385-1501

FAX #

Email scarroll@oxnardsd.org

ALTERNATE

Name Patty Nunez

Title Director, Budget and Finance

Address 1051 South A Street

City Oxnard Zip Code 93030

Phone 805-385-1501

FAX #

Email pnunez@oxnardsd.org

The "REPS" are authorized to and shall act as the District's agents in all matters related to CSEBO business

President Signature, Governing Board Date

Superintendent Signature Date

Joanna Pelino 2/27/2025

Representative Signature Date

Angelique Pagliano

Alternate Signature Date

2/24/25

Representative Signature Date

Patricia Nunez 2/24/2025

Alternate Signature Date

Revised: 8/29/19

OSD BOARD AGENDA ITEM

Name of Contributor: Dr. Scott Carroll **Date of Meeting:** March 19, 2025

Agenda Section: Section C: Consent Agenda

Establishment and Increase in Hours of Positions (Carroll/Fuentes)

Establishment

An eight hour 246-day Paraeducator Special Education position number 12947 to be established at Enrichment and Specialized Programs. This position will be established to assist with the needs of the After School Program.

An eight hour 246-day Paraeducator Special Education position number 12948 to be established at Enrichment and Specialized Programs. This position will be established to assist with the needs of the After School Program.

An eight hour 246-day Paraeducator Special Education position number 12949 to be established at Enrichment and Specialized Programs. This position will be established to assist with the needs of the After School Program.

An eight hour 246-day Paraeducator Special Education position number 12950 to be established at Enrichment and Specialized Programs. This position will be established to assist with the needs of the After School Program.

An eight hour 246-day Paraeducator Special Education position number 12951 to be established at Enrichment and Specialized Programs. This position will be established to assist with the needs of the After School Program.

Increase in Hours

A five hour and forty-five 183 days Paraeducator Special Education position 12881 to be increased to an eight hour at Special Education. This position will be increased in hours to provide additional support.

A five hour and forty-five 183 days Paraeducator Special Education position 12882 to be increased to an eight hour at Special Education. This position will be increased in hours to provide additional support.

A five hour and forty-five 183 days Paraeducator Special Education position 12883 to be increased to an eight hour at Special Education. This position will be increased in hours to provide additional support.

FISCAL IMPACT:
Cost for 5 Paraeducator Special Education positions $484,540 ELOP funds. (Establish positions)
Cost for 3 Paraeducator Special Education positions $93,834.03 SPED funds (Increase in Hours positions)

RECOMMENDATION:
It is the recommendation of the Assistant Superintendent of Human Resources and the Director of Classified Human Resources that the Board of Trustees approve the establishment and increase in hours of positions as presented.

OSD BOARD AGENDA ITEM

Name of Contributor: Dr. Scott Carroll **Date of Meeting:** March 19, 2025

Agenda Section: Section C: Consent Agenda

Personnel Actions (Carroll/Fuentes)

The attached are recommended Personnel Actions presented to the Board of Trustees for consideration. The salary placement for the individuals employed will be in accordance with the salary regulations of the District. Personnel Actions include: New hires, transfers, pay changes, layoffs, recall from layoffs, resignations, retirements, authorizations and leaves of absence.

FISCAL IMPACT:
N/A

RECOMMENDATION:
It is the recommendation of the Assistant Superintendent of Human Resources and the Director of Classified Human Resources that the Board of Trustees approve the Personnel Actions as presented.

ADDITIONAL MATERIALS:

Attached: Classified Personnel Actions 3192025 (1 Page)
Certificated Personnel Actions 3192025 (1 Page)

New Hires

Contreras, Luis	Custodian, McAuliffe School 4 hrs./246 days	02/24/2025
Maldonado, Brenda	Office Assistant II, Frank School 5.75 hrs./203 days	02/20/2025
Pascua, Laila T	Health Care Technician, Pupil Services 8hrs./183 days	03/17/2025
Pereyra, Raymond	Campus Assistant, Lemonwood School 5.75 hrs./180 days	02/24/2025
Ramirez, Mayra	Child Nutrition Worker, Itinerant 5 hrs./185 days	02/24/2025

Exempt

Martinez, Daniel J	AVID Tutor (Substitute)	02/21/2025

Limited Term/Substitutes

Gomez, Gloria O	Campus Assistant (Substitute)	10/25/2024

Promotion

Chavez, Nina	Paraeducator – Special Education, Pupil Services 5.75 hrs./183 days Campus Assistant, Curren School 5.75 hrs./180 days	03/10/2025

Transfers

Vargas, Nancy S	Child Nutrition Worker, Itinerant 5.5 hrs./185 days	02/24/2025

Leaves of Absence

Cruz, Paloma	Attendance Accounting Technician, Lemonwood School 8 hrs./210days	04/30/2025

Probation Release

13087	Paraeducator – Special Education, 5.75 hrs./183 days	02/27/2025
13048	Music Instructor 8 hrs./183 days	02/27/2025

Resignations

Ortiz-Alcantar, Aurora	Paraeducator – Special Education, Chavez School 5.75 hrs./183 days	02/18/2025

CERTIFICATED PERSONNEL ACTIONS

Listed below are recommended Certificated Personnel Actions presented to the Board of Trustees for consideration. The salaries for the individuals employed will be determined, in accordance with the salary regulations of the District.

New Hires

Booth, Nancy	Substitute Teacher	2024/2025 School Year
Calderon, Joshua	Substitute Teacher	2024/2025 School Year
Cardenas, Ricardo	Substitute Teacher	2024/2025 School Year
Chapman, Mitchell	Substitute Teacher	2024/2025 School Year
Cortez, Lorena	Substitute Teacher	2024/2025 School Year
Estrada, Sonia	Substitute Teacher	2024/2025 School Year
Herrera, Alberto	Substitute Teacher	2024/2025 School Year
Jin, Xin	Substitute Teacher	2024/2025 School Year
Laubacher, Diana	Substitute Teacher	2024/2025 School Year
Macias-Mota, Gabriela	Substitute Teacher	2024/2025 School Year
Martinez, Julia	Substitute Teacher	2024/2025 School Year
McDonald, Andy	Substitute Teacher	2024/2025 School Year
Mota, Jennifer	Substitute Teacher	2024/2025 School Year
Padilla, Steven Anthony	Substitute Teacher	2024/2025 School Year
Reyes, Esteban	Substitute Teacher	2024/2025 School Year
Reyes, Marleen	Substitute Teacher	2024/2025 School Year

Termination

12261	Teacher	June 18, 2025
12680	Teacher	June 18, 2025

Resignation

12179	Manager, Pupil Services	June 30, 2025
12734	Manager, Special Education	June 30, 2025

OSD BOARD AGENDA ITEM

Name of Contributor: Dr. Anabolena DeGenna **Date of Meeting:** March 19, 2025

Agenda Section: Section C: Facilities Agreement

Approval of Change Order #008 to Construction Service Agreement #22-238 - Viola Constructors for the Driffill Elementary School New Transitional Kindergarten Project (Hubbard/CFW)

The Board of Trustees approved the Enhanced Master Construct Program that focuses on increasing the number of K-8 school facilities and replacing older schools, portable classrooms, and support facilities with permanent K-5 & K-8 schools; all with the 21st Century Learning Environments that meet adopted Board specifications and program requirements.

On October 26, 2022, the State Allocation Board approved an apportionment of $7 million from the California Preschool, Transitional Kindergarten, Full-Day Kindergarten grant program for new classrooms at Driffill Elementary School.

On May 17, 2023, the Board entered into an agreement with Viola Constructors to serve as the Lease-Leaseback Contractor for the project.

This Change Order is requested to provide funds to install a new pedestrian gate at the Southwest corner of Room 800 per site request and for the installation of the new Audio-Visual systems for the new classrooms per District request.

FISCAL IMPACT:
$47,768.93 – Master Construct and Implementation Funds

RECOMMENDATION:
It is the recommendation of the Chief Information Officer, in conjunction with Caldwell Flores Winters, that the Board of Trustees approve Change Order #008 with Viola Constructors.

ADDITIONAL MATERIALS:

Attached: Change Order #8 (2 Pages)
Proposal CE #016 (5 Pages)
Proposal CE #019 (18 Pages)
Agreement #22-238, Viola Inc. (6 Pages)

CHANGE ORDER

Date: 03-19-2025 **CHANGE ORDER NO. 008**

PROJECT: **Driffill Elementary School ECDC**
O.S.D. BID No. **N/A**
O.S.D. Agreement No. 22-238

OWNER: **Oxnard School District**
1051 South A Street
Oxnard, CA. 93030

ARCHITECT: **Flewelling & Moody**
99 South Lake Ave. #300
Pasadena, CA 91101

CONTRACTOR: **Viola Constructors**
5811 Olivas Park Dr. #204
Ventura, CA 93003
Attn: Mr. Michael Viola

Architects Proj. No.: 3057.0000
D.S.A. File No.: 56-22
D.S.A. App. No.: 03-123351

CONFORMANCE WITH CONTRACT DOCUMENTS, PROJECT MANUAL, DRAWINGS AND SPECIFICATION. All Change Order work shall be in strict conformance with the Contract Documents, Project Manual, Drawings, and Specifications as they pertain to work of a similar nature.

ORIGINAL CONTRACT SUM.....**$ 3,462,000.00**

NET CHANGE - ALL PREVIOUS CHANGE ORDERS.....**$ 76,188.32**

ADJUSTED CONTRACT SUM.....**$ 3,538,188.32**

NET CHANGE **$ 47,768.93**

Total Change Orders to Date: ..... **$ 123,957.25**

ADJUSTED CONTRACT SUM THROUGH CHANGE ORDER NO. 008..... **$ 3,585,957.25**

Anticipated Commencement Date..... **November 01, 2023**
Actual Commencement Date: ..... November 01, 2023
Original Completion Date: ..... August 30, 2024
Original Contract Time: ..... 307 Calendar Days
Time Extension for all Previous Change Orders: ..... Zero Days
Time Extension for this Change Order: ..... Zero Days
Adjusted Completion Date: ..... August 30, 2024

Percentage ..... **Zero Percent (0%)**

Item	Description	Unforeseen Condition (UFO)	Additional Scope (AS)	Design Clarification (DC)	Code Requirement
1.	PCO #8 – Add fence and gate at SW corner of PS Building.		$10,233.05		
2.	PCO #9 – Added AV and monitor installation per District request		$37,535.88		
3.					
4.					
5.					
6.					
	Totals				

Total Change Order No. 008 …… $47,768.93

NOT VALID UNTIL SIGNED BY THE ARCHITECT, CONTRACTOR AND ASST. SUPT. BUSINESS SERVICES OR PURCHASING DIRECTOR

APPROVAL (REQUIRED):

ARCHITECT:_____ **DATE:**_____

CONTRACTOR:_____ **DATE:**_____

_____

BUSINESS AND FISCAL SERVICES: **DATE:**_____

APPROVAL (REQUIRED):

BOARD APPROVAL **DATE:**_____

DEPUTY SUPT./PURCHASING DIRECTOR:_____ **DATE:**_____

DSA APPROVAL – N/A **DATE:**_____

PCO #008

Viola Incorporated
5811 Olivas Park Dr, Suite 204
Ventura, California 93003
Phone: (805) 487-3871
Fax: (805) 487-3870

Project: 23-29 - Driffill New PK, TK and Kindergarten Classroom
910 South E Street
Oxnard , California 93030

Prime Contract Potential Change Order #008: CE #016 - Additional chain-link gate at NW corner of bldg 10 per RFI 026 | CE #017 - Extend chain-link fence per RFI 028 | CE #018 - Added fence and gate at SW corner of bldg 10

TO:	Oxnard School District 1051 South A Street Oxnard, California 93030	**FROM:**	Viola Inc. 5811 Olivas Park Dr. Ste 204 Ventura, California 93003
PCO NUMBER/REVISION:	008 / 0	**CONTRACT:**	1 - Driffill New PK, TK and Kindergarten Classroom
REQUEST RECEIVED FROM:	Ralph Coolman **(Magnum Fence and Security, Inc.)**	**CREATED BY:**	Patrick Waid **(Viola Inc.)**
STATUS:	Pending - In Review	**CREATED DATE:**	2/17/2025
REFERENCE:	CEs 016, 017, 018	**PRIME CONTRACT CHANGE ORDER:**	None
FIELD CHANGE:	Yes	**CHANGE ORDER REQUEST:**	None
LOCATION:	Driffill Elementary School	**ACCOUNTING METHOD:**	Amount Based
SCHEDULE IMPACT:	0 days	**PAID IN FULL:**	No
EXECUTED:	No	**SIGNED CHANGE ORDER RECEIVED DATE:**	
		TOTAL AMOUNT:	$10,233.05

POTENTIAL CHANGE ORDER TITLE: CE #016 - Additional chain-link gate at NW corner of bldg 10 per RFI 026 | CE #017 - Extend chain-link fence per RFI 028 | CE #018 - Added fence and gate at SW corner of bldg 10

CHANGE REASON: Client Request

POTENTIAL CHANGE ORDER DESCRIPTION: *(The Contract Is Changed As Follows)*
CE #016 - Additional chain-link gate at NW corner of bldg 10 per RFI 026
Install chain link gate at Driffill Principal request per RFI 026

CE #017 - Extend chain-link fence per RFI 028
Add fence post extensions at west playground fence per RFI 028

CE #018 - Added fence and gate at SW corner of bldg 10
Added chain link fence and gate per District request at SW corner of bldg 10.

ATTACHMENTS:
Viola Driffell Extra Gate and Fence.pdf , Viola Driffell 4ft Fence post extension.pdf , Driffil added chain link and gate.pdf

#	Budget Code	Description	Amount
1	32-31-00.S Fences and Gates.Commitment	Added gate at bldg 10 per RFI 026	$3,060.24
2	32-31-00.S Fences and Gates.Commitment	--Add fence post extensions per RFI 028	$759.01
3	32-31-00.S Fences and Gates.Commitment	Added fence and gate at SW corner bldg 10	$5,526.00
		Subtotal:	**$9,345.25**
		Fee (6.00%):	$560.72
		Insurance (2.50%):	$233.63
		Bond (1.00%):	$93.45
		Grand Total:	**$10,233.05**

PCO #008

In Process

Jun Tanaka (Flewelling & Moody)

SIGNATURE **DATE**

Oxnard School District
1051 South A Street
Oxnard, California 93030

SIGNATURE **DATE**

Viola Inc.
5811 Olivas Park Dr. Ste 204
Ventura, California 93003

DocuSigned by:
Patrick Waid
AB0FAE16E6E4413...
2/17/2025

SIGNATURE **DATE**

Docusign Envelope ID: 7DAFC87C-F12E-48C3-AA6D-358DCB7766ED

Magnum Fence and Security Inc.

Lic # 719567

1070 N. Ventura Ave Ventura, CA 93001 (805) 641 3656

PROPOSAL

Date: February 14, 2025

Pat Waid
Viola Constructors
Pwaid@violainc.com, C 805 207 4971
Cc Mike Ellis, Melanie Calibosa

RE: Driffel School Extra Fence and Gate

Pat:

Thank you for the opportunity to quote on installing a section of fence and a single swing gate between new building 10 and existing building 2.

Magnum Fence to install approximately 15ft of 6ft tall chainlink fence with a 3ft wide x 6ft tall chainlink gate. Fence to follow project specifications.

1. Prevailing wages to be paid to workers. Magnum Fence DIR number is 1000010033.
2. All material to be galvanized and heavy-duty.
3. All posts to be 2 7/8-inch OD heavy wall
4. Top rail to be 1 7/8-inch OD heavy wall.
5. Chainlink to be 9 gauge with a 2 inch mesh and all selvages knuckled over
6. We core drill into the concrete for the fence post footers. Footers to be 1ft x 3ft.
7. Gate to have a 1 7/8-inch OD heavy wall frame. Chainlink filler to match rest of fence. And hardware to be standard chainlink hardware.

Installed price including labor, material, and taxes: $5,526.00

Please let me know if you have any questions

Regards,
Ralph J. Coolman
Ralph J. Coolman

Quote good for 30 days. Work to be completed in a workmanship like manner following standard industry practices. Notify crew of any underground utilities

In Process

Docusign Envelope ID: 7DAFC87C-F12E-48C3-AA6D-358DCB7766ED

Magnum Fence and Security Inc.

Lic # 719567

1070 N. Ventura Ave Ventura, CA 93001 (805) 641 3656

CHANGE ORDER

Date: December 13, 2024

Mike Ellis
Viola Constructors
P 805 207 4803, mellis@violainc.com
Cc: Patrick Waid, pwaid@violainc.com

Re: Driffel School 4ft Fence Post Extensions

Mike:

Due to the height increase of the asphalt, the existing fence post along the hall way are too short. We manufactured extensions that will attach to the existing post. That allowed us to re-install the loop caps, chainlink and top rail.

Unit	Item	Amount	Extended
1	Extensions Material	$50.00	$50.00
0.5	Fabrication Time per day	$500.00	$250.00
	Material Sub Total		$300.00
	Sales Tax	7.75%	$23.25
	Material		$323.25
4	Labor. Includes inserting and sealing/painting the seams	$84.19	$336.76
	Total of Material and Labor		$660.01
	Mark Up	15%	$99.00
	Total		$759.01

Please let me know if you have any questions

Regards,
Ralph J. Coolman
Ralph J. Coolman

In Process

Docusign Envelope ID: 7DAFC87C-F12E-48C3-AA6D-358DCB7766ED

Magnum Fence and Security, Inc.
1070 N. Ventura Ave
Ventura CA 93001
Lic # 719567

Change Order

Install 6ft tall chainlink fence between building and welded wire fence behind building 12 per Mike Ellis

Qty	Item	$/Unit	Extended
2	2 7/8 x LG40 X 9	81.07	162.14
2	2 3/8 x LG40 X 9	54.86	109.72
2	2 7/8 ball caps	2.42	4.84
2	2 3/8 ball caps	1.93	3.86
8	ft 6ft tall 2 inch mesh 9 guage chainlink	4.60	36.77
4	6ft tension bar	5.53	22.12
2	2 7/8 heavy brace band with nuts/bolts	3.38	6.76
2	2 3/8 heavy brace bands with nuts/bolts	3.01	6.02
10	2 7/8 heavy tension bands with nuts bolt	3.39	33.90
10	2 3/8 heavy tension bands with nuts bolts	3.05	30.50
8	ft of 1 5/8 top rail	3.57	28.54
4	1 5/8 rail ends	2.32	9.28
8	ft tension wire	0.33	2.64
15	bags concrete	5.00	75.00
1	Anchor Cement	22.00	22.00
1	fabricated gate with hinges and fork latch	732.00	732.00
	Material Subtotal		1,286.09
	Sales Tax	7.750%	99.67
	Material Total		1,385.76
1	core drill one fence post hole	65.00	65.00
12	Hours for crewmember, Ironworkers rate. Two crew members includes workers comp and taxes	84.19	1,010.32
1	truck and tools	200.00	200.00
	Labor Total		1,275.32
	Total of Material and Labor		2,661.08
	Markup	15%	399.16
	Grand Total		3,060.24

PCO #009

Viola Incorporated
5811 Olivas Park Dr, Suite 204
Ventura, California 93003
Phone: (805) 487-3871
Fax: (805) 487-3870

Project: 23-29 - Driffill New PK, TK and Kindergarten Classroom
910 South E Street
Oxnard , California 93030

Prime Contract Potential Change Order #009: CE #019 - Added AV and Monitor installation requested by District

TO:	Oxnard School District 1051 South A Street Oxnard, California 93030	**FROM:**	Viola Inc. 5811 Olivas Park Dr. Ste 204 Ventura, California 93003
PCO NUMBER/REVISION:	009 / 0	**CONTRACT:**	1 - Driffill New PK, TK and Kindergarten Classroom
REQUEST RECEIVED FROM:	Tiffany Clendening **(Smith Mechanical - Electrical - Plumbing)**	**CREATED BY:**	Patrick Waid **(Viola Inc.)**
STATUS:	Pending - In Review	**CREATED DATE:**	2/20/2025
REFERENCE:	CE 019	**PRIME CONTRACT CHANGE ORDER:**	None
FIELD CHANGE:	Yes	**CHANGE ORDER REQUEST:**	None
LOCATION:	Driffill Elementary School	**ACCOUNTING METHOD:**	Amount Based
SCHEDULE IMPACT:	0 days	**PAID IN FULL:**	No
EXECUTED:	No	**SIGNED CHANGE ORDER RECEIVED DATE:**	
		TOTAL AMOUNT:	$37,535.88

POTENTIAL CHANGE ORDER TITLE: CE #019 - Added AV and Monitor installation requested by District

CHANGE REASON: Client Request

POTENTIAL CHANGE ORDER DESCRIPTION: *(The Contract Is Changed As Follows)*
CE #019 - Added AV and Monitor installation requested by District
Installation of District provided Audio-Visual equipment on a Time and Materials basis.

ATTACHMENTS:
Back-up_TM Sheets for AV CO-Smith MEP.pdf , _M&T pricing Driffill AV TnM.pdf , _005R1 - AV Equipment.pdf

#	Budget Code	Description	Amount
1	26-00-00.S Electrical.Commitment	AV and Monitor installation	$24,927.36
2	06-10-53.S Miscellaneous Rough Carpentry.Commitment	added supervision	$9,278.11
		Subtotal:	**$34,205.47**
		Fee (6.00%):	$2,052.33
		Insurance (2.50%):	$906.44
		Bond (1.00%):	$371.64
		Grand Total:	**$37,535.88**

Jun Tanaka (Flewelling & Moody)

SIGNATURE **DATE**

Oxnard School District
1051 South A Street
Oxnard, California 93030

SIGNATURE **DATE**

Viola Inc.
5811 Olivas Park Dr. Ste 204
Ventura, California 93003

DocuSigned by:
Patrick Waid
AB0FAE16E6E4413...
2/20/2025

SIGNATURE **DATE**

In Process

T&M SIGN-IN SHEET: Smith/PacificCom

Approved Gerald Schober.
12/18/24

VIOLA inc 1946 CONSTRUCTORS CSL 193390 75 Years of Success

PROJECT: 23-29 Driffill **DATE:** 17 Dec 24

FACILITATOR: Viola Inc. **TIME:** 6:00a

LOCATION: All Bldgs. Provide power for A.V. as directed on site

PRINT NAME	COMPANY	TRADE	TIME IN	TIME OUT	PHONE #	EMAIL
Michael Ellis	Viola / M&T	G.C.S.	6:00a		805 207 4803	mells@violainc.com
Cole Albrecht	SMITH M.E.P.	Electrical	6:00am	2:30PM	CA	
Daven Warren	SMITH M.E.P.	Electrical	6:00am	2:30PM	DW	
Isaac Aldana	Pacificom	Electrical	7:00	3:30p	IA	
DANIEL MARTINEZ	PACIFICOM	LV	0700	3:30P	DM	

Docusign Envelope ID: 8BED3ADE-2F7E-4B84-831F-79FF6FD4EA52

12/18/24

T&M SIGN-IN SHEET: Smith/PacificCom

VIOLA inc 1946
CONSTRUCTORS
CSL 193390
75 Years of Success

PROJECT: 23-29 Driffill **DATE:** 18 Dec 24

FACILITATOR: Viola Inc. **TIME:** 6:00a

LOCATION: All Bldgs Provide Power/AV as directed
Trim Cabling, Termination, M

PRINT NAME	COMPANY	TRADE	TIME IN	TIME OUT	PHONE #	EMAIL
Michael Ellis	Viola / M&T	QCS	6:00a	2:30p	805 207 4803	mellis@violainc.com
DANIEL MARTINEZ	PACIFICOM	LV	0600	1400	(805) 419 1434	
Isaac Aldana	Pacificom	LV	600	2:00		

Docusign Envelope ID: 8BED3ADE-2F7E-4B84-831F-79FF6FD4EA52

12/19/24

T&M SIGN-IN SHEET: Smith/PacificCom

VIOLA inc 1946 CONSTRUCTORS CSL 193390 75 Years of Success

PROJECT: 23-29 Driffill **DATE:** 19 Dec 24

FACILITATOR: Viola Inc. **TIME:** 6:00a

LOCATION: Rm 1004, Rm 1003

PRINT NAME	COMPANY	TRADE	TIME IN	TIME OUT	PHONE #	EMAIL
Michael Ellis	Viola M&T	GCSup	6 00 a	2 30 p	805 207 4803	
Isaac Albarran	Pacificom	LV	6:00	1400		
DANIEL MARTINEZ	PACIFICOM	LV	0600	1400		

Docusign Envelope ID: 8BED3ADE-2F7E-4B84-831F-79FF6FD4EA52

T&M SIGN-IN SHEET: Smith/PacificCom

12/20/24

VIOLA inc 1946
CONSTRUCTORS
CSL 193390
75 Years of Success

PROJECT: 23-29 Driffill **DATE:** 20 Dec 24

FACILITATOR: Viola Inc. **TIME:** 6:00 am

LOCATION: 1004, 1003,

PRINT NAME	COMPANY	TRADE	TIME IN	TIME OUT	PHONE #	EMAIL
michael Ellis	Viola/M&T	SupGC	6:00	230	805 201 4803	mellis@violainc.com
DANIEL MARTINEZ	PACIFICOM	LV	0600	1400		
MATT VACCA	PACIFICOM	LV	0600	1400		
Isaac Aldana	Pacificom	LV	6:00	2:00		
Cruise Vello	Pacificom	LV	7:00	11:00		

Docusign Envelope ID: 8BED3ADE-2F7E-4B84-831F-79FF6FD4EA52

T&M SIGN-IN SHEET: Smith/PacificCom

12/23/24

VIOLA inc 1946 CONSTRUCTORS CSL 193390 75 Years of Success

PROJECT: 23-29 Driffill **DATE:** 23 DEC 24

FACILITATOR: Viola Inc. **TIME:** 6.00 a

LOCATION: 1001, 1002

PRINT NAME	COMPANY	TRADE	TIME IN	TIME OUT	PHONE #	EMAIL
Michael Ellis	Viola/M&T	GCSup	6.00	230	805 701 4803	mellis@violainc.com
DANIEL MARTINEZ	PACIFICOM	LV	0600	1400		
Isaac Alberna	Pacificom	LV	6:00	2:00		

Docusign Envelope ID: 8BED3ADE-2F7E-4B84-831F-79FF6FD4EA52

T&M SIGN-IN SHEET: Smith/PacificCom

12/30/24

VIOLA inc 1946
CONSTRUCTORS
CSL 193390
75 Years of Success

PROJECT: 23-29 Driffill **DATE:** 24 Dec 24

FACILITATOR: Viola Inc. **TIME:** 6·00a

LOCATION: 903, 904

PRINT NAME	COMPANY	TRADE	TIME IN	TIME OUT	PHONE #	EMAIL
Michael Ellis	Viola / M&T	G.C. Sup	6.00	230	805 207 4803	mellis@viola
DANIEL MARTINEZ	PACIFICOM	LV	0600	1200		
Isaac Alvarez	Pacificom	LV	6:00	12:00		

Docusign Envelope ID: 8BED3ADE-2F7E-4B84-831F-79FF6FD4EA52

T&M SIGN-IN SHEET: Smith/PacificCom

12/30/24

VIOLA inc 1946 CONSTRUCTORS CSL 193390 75 Years of Success

PROJECT: 23-29 Driffill **DATE:** 26 Dec 24

FACILITATOR: Viola Inc. **TIME:** 6:00 a

LOCATION: New Mods 9's, 10's 903, 904, 1001, 1002

PRINT NAME	COMPANY	TRADE	TIME IN	TIME OUT	PHONE #	EMAIL
Michael Ellis	Viola M&T	GCSup	6:00	2:30	805 207 4803	mellis@violainc.com
Isaac Abana	Pacificom	LV	6:00	2:00		
DANIEL MARTINEZ	PACIFICOM	LV	0600	1400		

Docusign Envelope ID: 8BED3ADE-2F7E-4B84-831F-79FF6FD4EA52

JOB WALK SIGN-IN SHEET

12/30/24

VIOLA inc 1946 CONSTRUCTORS CSL 193390 75 Years of Success

PROJECT: 23-29 Driffill **DATE:** 27 Dec 24

FACILITATOR: Viola Inc. **TIME:** 6.00 a

LOCATION: 300's cabling set up waiting on Monitors

PRINT NAME	COMPANY	TRADE	TIME IN	TIME OUT	PHONE #	EMAIL
Michael Ellis	Viola/ M&T	GC Sup	600	230	805 207 4803	mellis@violainc.com
Daniel Martinez	Pacificom	LV	0600	1400		
Isaac Aldana	Pacificom	LV	6:00	2:00		

Docusign Envelope ID: 8BED3ADE-2F7E-4B84-831F-79FF6FD4EA52

T&M SIGN-IN SHEET: Smith/PacificCom

12/30/24

VIOLA inc 1946 CONSTRUCTORS CSL 193390 75 Years of Success

PROJECT: 23-29 Driffill **DATE:** 30 Dec24

FACILITATOR: Viola Inc. **TIME:** 6.00 a

LOCATION: Data / Mon etc. 804, 803

PRINT NAME	COMPANY	TRADE	TIME IN	TIME OUT	PHONE #	EMAIL
Michael Ellis	Viola Inc.	GCSP	6.00a	2:30	805 207 4803	mellis@violainc
MATT VACCA	PACIFICOM	LV	6:00	2:00		
Isaac Albana	Pacificom	LV	6:00	2:00		

Docusign Envelope ID: 8BED3ADE-2F7E-4B84-831F-79FF6FD4EA52

12/31/24

JOB WALK SIGN-IN SHEET

VIOLA inc 1946 CONSTRUCTORS CSL 193390 75 Years of Success

PROJECT: 23-29 Driffill **DATE:** 31 Dec 24

FACILITATOR: Viola Inc. **TIME:** 6:00 a

LOCATION: Swapped IDF Racks, Test Fiber all locations

PRINT NAME	COMPANY	TRADE	TIME IN	TIME OUT	PHONE #	EMAIL
Michael Ellis	Viola/M&T	GC Sup	6:00	1200	805 207 4805	mellis@violainc.com
MATT VACCA	PACIFICOM	LV	6:00	1200		
ISAAC ALDANA	PACIFIC COM	LV	6:00	1200		

Docusign Envelope ID: 8BED3ADE-2F7E-4B84-831F-79FF6FD4EA52

01/08/25

JOB WALK SIGN-IN SHEET

VIOLA inc 1946
CONSTRUCTORS
CSL 193390
75 Years of Success

PROJECT: 23-29 Driffill **DATE:** 8 Jan 25

FACILITATOR: Viola Inc. **TIME:** 6:00 a

LOCATION: Monitors

PRINT NAME	COMPANY	TRADE	TIME IN	TIME OUT	PHONE #	EMAIL
Michael Ellis	Viola M&T	GC Sup	6:00	230	805 204-4803	
Daniel Martinez	Pacificom	LV	0700			
Isaac Aldaron	Pacificom	LV	7:30			

Docusign Envelope ID: 8BED3ADE-2F7E-4B84-831F-79FF6FD4EA52

JOB WALK SIGN-IN SHEET

VIOLA inc 1946 CONSTRUCTORS CSL 193390 75 Years of Success

PROJECT: 23-29 Driffill **DATE:** 11 Jan 25

FACILITATOR: Viola Inc. **TIME:** 7:00 a

LOCATION: All (N) mods. Grounding / Elec Test.

PRINT NAME	COMPANY	TRADE	TIME IN	TIME OUT	PHONE #	EMAIL
Michael Ellis	Viola/M&T	~~GC~~ Sup.	7:00	10:00		
DANIEL MARTINEZ	PACIFICOM	LV	7:00	10:00		
MATT VACCA	PACIFICOM	LV	7:00	10:00		
Devon Warren	Smith	EL	7:00	10:00		
Omar Almaguer	Smith	EL	7:00	10:00		
Ricky	OSD	Tech				
Joe W Enviroplex	E.P.	Elec				
Electrical etc						
For Lisa						
Has been						
Involved						

The whole Job!

Docusign Envelope ID: 8BED3ADE-2F7E-4B84-831F-79FF6FD4EA52

Docusign Envelope ID: 8BED3ADE-2F7E-4B84-831F-79FF6FD4EA52

JOB WALK SIGN-IN SHEET

VIOLA inc 1946 CONSTRUCTORS CSL 193390 75 Years of Success

PROJECT: 23-29 Driffill Elementary **DATE:** 29 Jan 25

FACILITATOR: Viola Inc. **TIME:** 6:30 – 3:00

LOCATION: Bld 8 Monitors

All monitors Installed @ Bldg 8 MCS 1/29/25

PRINT NAME	COMPANY	TRADE	PHONE #	EMAIL
Michael Ellis	Viola Inc	Supt	605 207 403	
Jason Evans	Pacificom	Comm	425 432 4654	
Matt Vacca	Pacificom	"	805 432 3661	
M Ke Vacca	Pacificom	Comm	—	
Andrew Salazar	Pacificom	Comm	—	

Docusign Envelope ID: 8BED3ADE-2F7E-4B84-831F-79FF6FD4EA52

Work Order Proposal

M&T Concrete Inc.

P.O. Box 5624
Oxnard, CA 93031
Phone: 805.487.3871
Fax: 805.487.3870

Work order #

Project: Driffill ES Modular AV/Monitor installation

Date: 2/20/25

Location: Driffill ES

Field Directive #

Description of change:

District supplied AV components and monitors were installed at Driffill ES PK K modular classrooms by Smith and Pacificom
M&T supervision and coordination provided by site Superintendent Mike Ellis

Persons	Trade Classification	Hours	Pay Rate	Total Cost
	Project Superintendent	56	$106.88	$5,985.28
		0	$0.00	$0.00
		0		$0.00
		0		$0.00
		0		$0.00
				$0.00

Own or Rental Equipment Used	Hours	Hour Rate	Total Cost
tool truck	56	$37.19	$2,082.64
generator	0	$0.00	$0.00
			$0.00
			$0.00

Material Used	Quantity	Unit Rate	Total Cost
			$0.00
			$0.00
			$0.00
			$0.00
			$0.00
			$0.00
			$0.00

Subtotal	**$8,067.92**
Overhead and Profit 15%	**$1,210.19**
Total Cost	**$9,278.11**

Contractor Representative Date | Owner Representative Date

In Process

Extra Work Proposal

Labor and Material Breakdown

acco engineered systems

Job # : 60110001 Date : 2/19/2025

Job Name : Driffill Elementary School Extra Work Proposal # : 005R1

Description of work: AV Equipment

Installation of AV devices as requested by owner.

Pricing Breakdown:

Electrical-Field		$	4,097.12
Subcontracts		$	19,156.51
Jobsite Expenses		$	60.00
Sales Tax	9.25%	$	27.75
TOTAL COST		$	23,341.38
+ Overhead	15%	$	627.73
+ Subcontracts Overhead/Fee	5%	$	957.83
Total Extra Work Proposal Price		**$**	**24,927.36**

In Process

Time extension required because of labor added by this change is 4.0 workdays

This proposal includes 32 straight time field hours, - overtime field hours, - double time field hours, & - shift work field hours.

ACCO is:

Proceeding with this work: X Waiting for authorization: _____

This price does not include any cutting or patching of drywall, electrical, painting, or other general construction. The cost of this change includes only those direct costs which can be identified at this time. There are no impact or ripple costs and no delay costs included in this proposal. Should it be determined at a later date that we are experiencing impact cost because of multiple changes, delays, or causes beyond our control, we will submit those costs at that time.

Submitted by: Tiffany Clendening Date: 2/19/2025

Project Manager

Approved by: _____ Date: _____

Signature

Extra Work Proposal Breakdown

EWP #: 005R1

Job #: 60110001

Job Name: Driffill Elementary School

Date: 2/19/2025

ELECTRICAL - FIELD INSTALL	HRS (ST)	HRS(OT)	HRS(DT)	HRS(SHIFT)	LABOR RATE	LABOR $	MATERIAL $ / OTHER $	TOTAL $
Added Electrical Work	32.0				$ 118.66	$ 3,797.12	$ 300.00	$ 4,097.12
Electrical Field Totals:	32.0	0.0	0.0	0.0		$ 3,797.12	$ 300.00	**$ 4,097.12**

SUBCONTRACTS	TOTAL $
AV Install	$ 19,156.51
Subcontract Total:	**$ 19,156.51**

Jobsite Expenses	# PAGES	RENTAL $	TOTAL $
Truck Charge			$ 60.00
Jobsite Expense Total:		$ -	**$ 60.00**

In Process

Docusign Envelope ID: 8BED3ADE-2F7E-4B84-831F-79FF6FD4EA52

PacifiCom

Pacific Coast Sound and Communications
330 N. Wood Road, Suite L • Camarillo, CA 93010
(805) 987-1351 • (805) 647-2823 • Fax (805) 987-1353
www.pacificomusa.com • License #529914 (C7/C10)

February 19, 2025 **INVOICE** 22401

Smith MEP **1340 W. Betteravia Road** **Santa Maria CA 93455**	**Tiffany Clendening**	**PROJECT:** **Driffill Elementary School - 5 New Classrooms** **Driffill Elementary School** **910 South E Street** **Oxnard CA 93030**
EMAIL BILLING ADDRESS:	accoinvoices@accoes.com	**PURCHASE ORDER NUMBER** 60110001
		SALES ORDER: **5943**

DESCRIPTION OF WORK

Install owner provided audio/video equipment. Labor includes moving furniture, moving monitors from Rose Ave School and being onsite to check for electrical safety.

CHANGE ORDER BILLING ONLY:

LABOR	$18,630.00
MATERIALS	$481.93
SALES TAX	$44.58
FREIGHT	$0.00

In Progress

AMOUNT FOR THIS BILLING: $19,156.51

NOTE: Our bank requires that all joint checks be signature quaranteed from your financial institution.

TERMS: Payable upon receipt. Service charge 1.5% per month on unpaid balance after 30 days. (18% per annum).

Oxnard School District

PURCHASE ORDER
NO: P24-02589
DATE 11/02/2023

Phone: (805) 385-1501 x2412 or 2413 Fax: (805) 385-1507

SHIP TO:
Facilities
1055 S C STREET
Oxnard, CA 93030-7442

Vendor Phone: FAX:
VIOLA INC.
P.O. BOX 5624
OXNARD, CA 93031-5624

BILL TO:
Accounts Payable
accountspayable@oxnardsd.org
1051 South A Street
Oxnard, CA 93030-7442

Customer Acct #:

ORDER LOCATION	Emailed	Faxed	Mailed	VENDOR #	REQUISITIONER	REQUISITION #
630 - Facilities				006117/1	Lisa Franz	R24-02845

DATE REQUIRED	F.O.B.	TERMS OF PAYMENT	SHIP VIA	BUYER	RPQ #

ITEM	QTY	UNIT	DESCRIPTION	UNIT COST	EXTENSION
1	1	EACH	PROVIDE LEASE-LEASEBACK CONSTRUCTION SERVICES FOR THE DRIFFILL ELEMENTARY SCHOOL ECDC PROJECT PER AMENDMENT #001 TO AGREEMENT #22-238 APPROVED BY THE BOARD OF TRUSTEES ON 10/18/2023	3,462,000.00	$3,462,000.00
			ACCOUNT DISTRIBUTION	**AMOUNT**	
			(094036) 350- 6250- 7700- 0- 0000- 8500- 038- 600- CPTK- 0	$3,462,000.00	

IMPORTANT INSTRUCTIONS TO VENDOR

1. Itemized INVOICES in Duplicate.
2. Enclose PACKING LIST with ALL shipments.
3. No deviation in PRICE or SUBSTITUTION in kind permitted.
4. All deliveries F.O.B. Destination unless otherwise specified. If freight is to be charged, prepay, and add to invoice.
5. THE LAW REQUIRES MATERIAL SAFETY DATA SHEETS FOR PRODUCTS ON THIS ORDER. PLEASE ENCLOSE WITH INVOICE.
6. Purchase order number must appear on packing slip.
7. Charges for the purchase in excess of 10% must be verified before delivery.

Order Sub-Total	$3,462,000.00
Sales Tax	.00
Shipping	.00
Adjustment	.00
Order Total	**$3,462,000.00**

**** End of Order ****

AUTHORIZED BY: Lisa A. Franz

FILE

AMENDMENT NO. 001 to CONSTRUCTION SERVICES AGREEMENT #22-238

The Lease Leaseback Agreement ("Agreement") entered on May 17th, 2023, by and between the Oxnard School District ("District") and Viola Inc., ("Contractor"), is hereby amended by the parties as set forth in this Amendment No. 001 to Construction Services Agreement #22-238 that is incorporated herein for all purposes.

RECITALS

WHEREAS, The District retained LLB Contractor to provide preconstruction and construction services for the Driffill Elementary School ECDC Project for the District's Master Construct and Implementation Program;

WHEREAS, the District operates Driffill Elementary School located at 910 South E Street, Oxnard, CA 93030 (hereinafter referred to as the "School Facility"); and

WHEREAS, the District desires to construct new facilities and improvements at the School Facility identified in the Site Lease; and

WHEREAS, the LLB Contractor has completed the preconstruction work for the Project and the construction documents were submitted to the Division of the State Architect ("DSA") for their review;

WHEREAS, DSA has reviewed the Project plans and has stamp-approved the construction plans;

WHEREAS, the District has determined that upon DSA Stamped Approval to pursue the improvements to the School Facility through the lease-leaseback method of project delivery pursuant to California Education Code §17406 and as amended per AB 2316 which permits the governing board of the District, without advertising for bids, to lease to Contractor property owned by the District if the instrument by which property is leased requires the lessee to construct, or provide for the construction, on the leased property, of a facility for the use of the District during the term of the lease, and provides that title to that facility shall vest in the District at the expiration of the lease; and

WHEREAS, the Board of Trustees has taken certain actions to approve the construction of this School Facility;

WHEREAS, upon final consideration of a Guaranteed Maximum Price (GMP) which has been determined thru an open book and best value subcontractor bid process, based on those bids, the District requires amending the Lease Leaseback documents of Viola Inc. to construct thru the completion and occupancy of the new Driffill ECDC Project.

WHEREAS, the Board recognizes that the timing of the various components of work that must all be approved by DSA before Acceptance of this GMP and allowing the Contractor to proceed withconstruction;

NOW THEREFORE, for the good and valuable consideration, the Parties agree to the following amended terms to Agreement:

AMENDMENT

The Parties agree to revise the following language to SECTION 1 of the Agreement:

H. Site. The term "Site" as used in this Agreement shall mean those certain parcels of real property and improvements thereon (if any) more particularly described in **Exhibit B** attached hereto to the Site Lease.

The Parties agree to add the following language to SECTION 5 of the Agreement:

The "GMP" for the Project shall be **Three Million Four Hundred Sixty-Two Thousand Dollars and No Cents ($3,462,000.00)**. The GMP consists of Sublease Payments in the amount of **$18,815.00** per month for 10 months for a total lease value of **One Hundred Eighty-Eight Thousand One Hundred Fifty Dollars and No Cents ($188,150.00)** pursuant to terms and payment schedule as amended and set forth in the Sublease.

The GMP is based upon the DSA approved plans and specifications to exist after this Agreement is entered into between Contractor and the District, and more fully described and referenced in the Scope of Work to be set forth in **Exhibit A** attached hereto.

The Parties agree to add the following language to SECTION 5 of the Agreement:

SECTION 12. PERSONNEL ASSIGNMENT

A. Contractor shall assign **Patrick Waid** as Project Manager/~~Superintendent~~ for the Project. So long as **Patrick Waid** remains in the employ of Contractor, such person shall not be changed or substituted from the Project or cease to be fully committed to the Project except as provided in this Section. In the event Contractor deems it necessary, Contractor shall replace the manager and/or the superintendent for the Project with a replacement with like qualifications and experience, subject to the prior written consent of the District, which consent shall not be unreasonably withheld. Any violation of the terms of paragraph A of this Section 12 shall entitle the District to terminate this Agreement for breach, pursuant to the provisions of the General Conditions.

But not assigned exclusively to this project. MTV

APPROVED:

Viola Inc.	**Oxnard School District:**
Michael T. Viola	Lisa A. Franz
Signature	*Signature*
Michael T. Viola, President / CEO	Lisa A. Franz, Director, Purchasing
Typed Name/Title	*Typed Name/Title*
October 25, 2023	10-30-2023
Date	*Date*

AMENDMENT NO. 001 to CONSTRUCTION SERVICES AGREEMENT #22-238

EXHIBIT A

Scope of Work

DRAWINGS

Plan Sheets Prepared by Flewelling Moody, Architects Project No 3057.0000, DSA No 123351, DSA Approval August 31, 2023.

PROJECT DESCRIPTION

On October 26, 2022, the State Allocation Board approved an apportionment of $7 million from the California Preschool, Transitional Kindergarten, Full-Day Kindergarten grant program for new classrooms at Driffill elementary school.

On January 19, 2023 the Board entered into an Agreement for Architectural Services with Flewelling & Moody, Architects for architectural services relating to the Driffill Elementary School New Transitional Kindergarten Facilities.

Pursuant to District direction, CFW, Inc., on February 3, 2023 issued an RFP/Q to lease-leaseback contractors to provide a prequalified proposal for construction services of ten new modular classrooms. Viola Inc. provided a GMP of $3,462,000 for all associated site work and foundations prior to the delivery of the 10 modular classroom buildings.

GENERAL INFORMATION (1 SHEET)

T0.01	TITLE SHEET

CIVIL (11 SHEETS)

C1.01	COVER SHEET
C1.02	GENERAL NOTES
C2.01	EROSION CONTROL PLAN
C2.02	EROSION CONTROL DETAILS
C3.01	GRADING AND PAVING PLAN
C3.02	GRADING AND PAVING PLAN
C3.03	SITE SECTIONS
C4.01	UTILITY PLAN
C5.01	DETAILS
C5.02	DETAILS
C5.03	SUMP PUMP DETAILS

LANDSCAPE (7 SHEETS)

L1.01	LANDSCAPE CONSTRUCTION PLAN
L1.02	LANDSCAPE CONSTRUCTION DETAILS
L2.01	PLANTING PLAN
L2.02	PLANTING PLAN
L2.03	PLANTING PLAN
L3.01	IRRIGATION PLAN
L4.01	LANDSCAPE DETAILS

ARCHITECTURAL (6 SHEETS)

A1.01	OVERALL SITE PLAN
A1.01FA	FIRE ACCESS SITE PLAN
A1.02	ENLARGED DEMOLITION SITE PLAN
A1.03	ENLARGED RECONSTRUCTION SITE PLAN
A1.04	SITE DETAILS
A1.05	TYPICAL DETAILS

ELECTRICAL (12 SHEETS)

E-0.01	NOTES AND SYMBOLS
E-0.03	SINGLE LINE DIAGRAMS AND PANELS SCHEDULES
E-0.04	FIRE ALARM RISER DIAGRAM AND PANEL SCHEDULES
E-0.05	FIRE ALARM CALCULATIONS AND DETAILS
E-1.00	ELECTRICAL SITE PLAN
E-1.01	ENLARGED ELECTRICAL SITE PLAN
E-1.02	FIRE ALARM SITE PLAN
E-1.03	DATA/COMM SITE PLAN
E-1.04	GROUNDING SITE PLAN
E-2.00	ENLARGED FIRE ALARM PLAN & DATA/COMM PLAN
E-3.00	ELECTRICAL SPECIFICATIONS
E-4.00	FIRE ALARM SPECIFICATIONS

SCOPE OF WORK

THE PROJECT SCOPE CONSISTS OF THE FOLLOWING WORK:

1. NEW CONSTRUCTION OF (5) 72'-0" x 40'-0" MODULAR BUILDINGS (PC# 02-120100) WITH TOTAL OF (2) PRESCHOOL (PS) BUILDINGS, (2) TRANSITIONAL KINDERGARTEN (TK) BUILDINGS, AND (1) KINDERGARTEN (K) BUILDING WHICH INCLUDES STUDENT RESTROOMS, STAFF RESTROOMS AND HI-LO DRINKING FOUNTAINS
2. NEW PS PLAYGROUND AND K/TK PLAYGROUND
3. NEW PLAY STRUCTURE WITH RUBBERIZED SURFACING
4. SITE WORK INCLUDES:
   a. RE-GRADING OF SITE WITH NEW ASPHALT PAVING
   b. NEW CONCRETE WALKWAY
   c. NEW FENCES AND GATES

MANUFACTURER (9 SHEETS)

SITE SPECIFIC SHEETS (72'x40' BUILDING):

ARCHITECTURAL	
BA1.02	(5) 72'x40' FLOOR PLAN
BA1.03	INTERIOR ELEVATIONS & DETAILS
BA1.04	RR FLOOR PLAN & INTERIOR ELEVATIONS
BA1A.2	(5) 72'x40' ROOF PLAN
BA1A.3	(5) 72'x40' EXTERIOR ELEVATIONS
MECHANICAL	
BA2B.1	(5) 72'x40' MECHANICAL & REFLECTED CEILING PLAN
ELECTRICAL & LIGHTING	
BA3.2	(5) 72'x40' ELECTRICAL POWER & SIGNAL PLAN
BA3.3	(5) 72'x40' LIGHTING PLAN
STRUCTURAL	
BS1C.2A	(5) 72'x40' FOUNDATION PLAN

PC DRAWINGS (39 SHEETS) A# 02-120100 PC

A0	COVER SHEET, BUILDING CODES & C.B.C. DATA, SHEET INDEX
A1	FLOOR PLAN, INTERIOR ELEVATIONS
A1.0	FLOOR PLAN OPTIONS
A1.01	FLOOR PLAN OPTIONS
A1N	MATERIAL SPECIFICATIONS & NOTES
A1A.1	SHED ROOF PLAN & EXTERIOR ELEVATIONS
A1R	ROOFING ATTACHMENT
A2.0	HVAC EQUIPMENT & NOTES
A2B	"ROOF MOUNT HVAC UNIT" MECHANICAL & REFLECTED CEILING PLANS
AGB	GREEN BUILDING STANDARDS AND SOLAR READY REQUIREMENTS
EN1	ENERGY COMPLIANCE
EN2	ENERGY COMPLIANCE
EN3	ENERGY COMPLIANCE
EN4	ENERGY COMPLIANCE
EN5	ENERGY COMPLIANCE
EN6	ENERGY COMPLIANCE
EN7	ENERGY COMPLIANCE
EN8	ENERGY COMPLIANCE
A3	ELECTRICAL POWER PLAN, SIGNAL PLAN, DETAILS, ELECTRICAL NOTES
A3.1	LIGHTING PLAN, NOTES
A3.10	ELECTRICAL & LIGHTING PLANS FOR TOILET ROOM OPTIONS
A4A.1.R	SHED ROOF SECTIONS AND DETAILS (2X6 EXTERIOR WALLS)
A4B	STUCCO MATERIAL SPECIFICATIONS
A4B.1	TYPICAL STUCCO FINISH DETAILS
A4S	OPTIONAL SIDEWALL OVERHANG DETAIL
A4H	INTERIOR WALL CONNECTION DETAILS
A5	MISCELLANEOUS DETAILS
A6.2	DETERIORATION PROTECTION
S1	FOOTING DETAILS & NOTES
S1C(H)	CONCRETE FOUNDATION PLAN, NO CRAWL SPACE, FOOTING DETAILS & NOTES
S1C.1(H)	CONCRETE FOUNDATION PLAN WITH CRAWL SPACE, FOOTING DETAILS
S1C.2	MISCELLANEOUS FOOTING DETAILS
S2A(H)	SHED ROOF, CEILING, FLOOR FRAMING PLANS, STRUCTURAL STEEL PROPERTIES, NOTES
S3FA	FASTENING SCHEDULE & NOTES
S3A	SHED ROOF LONGITUDINAL BUILDING SECTION, WALL FRAMING ELEVATIONS
S4	STRUCTURAL CONNECTION DETAILS
S4.1	OPTIONAL STRUCTURAL DETAILS
S4.2	MISCELLANEOUS STRUCTURAL DETAILS
S4.3	METAL SOFFIT PANELS, REMOVABLE CASSETTE

TOTAL SHEETS: 85 SHEETS

OSD BOARD AGENDA ITEM

Name of Contributor: Dr. Aracely Fox **Date of Meeting:** March 19, 2025

Agenda Section: Section C: Support Services Agreement

Approval of Agreement #24-198 – Shoonya Digital Inc. (Fox)

Shoonya Digital Inc. will facilitate the setup, demonstration, and implementation of foundational literacy and numeracy skill-building for TK in both English and Spanish. This includes providing professional development support to teachers and staff, product onboarding, initial setup, and unlimited technical assistance, along with ongoing product updates throughout the term.

Term of Agreement: March 28, 2025 through March 27, 2026

FISCAL IMPACT:
$3,000.00 – LCFF

RECOMMENDATION:
It is the recommendation of the Assistant Superintendent, Educational Services, that the Board of Trustees approve Agreement #24-198 with Shoonya Digital Inc.

ADDITIONAL MATERIALS:

Attached: Agreement #24-198, Shoonya Digital Inc. (4 Pages)
Proposal (4 Pages)

Oxnard School District

Short-Term Services Agreement

Use ONLY for low cost, low risk, short-term services – No Sub-Contractors

Requisition Number

Purchase Order Number

24-198

Contract Number

This Services Agreement (the "Agreement") is made and entered into March 19, 2025 by and between the OXNARD SCHOOL DISTRICT (the "Local Educational Agency" or District") and Shoonya Digital Inc., (hereinafter referred to as "Provider"). District and Provider may be referred to herein individually as a "Party" and collectively as the "Parties."

Shoonya Digital Inc.	323-360-1755
Provider	Telephone Number
5540 Cathedral Oaks Rd.	rashi.bahri@shoonyadigital.com
Street Address	E-mail Address
Santa Barbara, CA 93111	
City, State, Zip code	Tax Identification or Social Security Number

Services

Provide virtual professional development support on the implementation of foundational literacy and numeracy skill-building for TK teachers.

Description of Services (if more space is needed, attach pages labeled as ATTACHMENT A, which is incorporated herein in full)

March 28, 2025 through March 27, 2026	TBD	N/A
Date(s) of Service	Hour(s) of Service	Location

Fees

Compensation for Services	$ 3,000.00
Other Ancillary Cost, as applicable	$
Total not to Exceed	$ 3,000.00

☑ W-9 received

Payment. District will pay Provider within 30 days after receipt of an invoice, in form and content acceptable to District, and reflecting charges for District approved costs and services performed by Provider and not previously invoiced.

Conditions. Provider will have no obligation to provide services until District returns a signed copy of this Agreement.

Nature of Relationship. The parties agree the relationship created by this Agreement is that of independent contractor. Provider understands and agrees that the Provider, officers, agents, or employees of Provider are not entitled to any benefits normally offered or conveyed to District employees, including but not limited to coverage under the California Workers' Compensation Insurance laws.

Binding Effect. This Agreement shall inure to the benefit and shall be binding upon all of the parties to this Agreement, and their respective successors in interest or assigns.

Termination or Amendment. This Agreement may be terminated or amended in writing at any time by mutual written consent of all of the parties to this Agreement, and may be terminated by either party for any reason by giving the other party 30 days advance written notice.

Compliance with Laws. Provider hereby agrees that Provider, and each of its officers, agents, and employees (each a "Provider Party) shall obey all local, state, and federal laws and regulations in the performance of this Agreement, including but not limited to each of the following laws and regulations, as and if applicable:

- Provider shall be responsible for the safety of its employees and shall comply with California Code of Regulations Title 8, section 3205, COVID-19 Prevention.

- Provider shall ensure that each Provider Party who is on-site supporting school functions is compliant with all the following laws, if and as applicable:
  - Fingerprinting / criminal background investigations (see paragraph titled "Fingerprinting, below);
  - Public Health Department Orders and Guidance or other related mandates related to COVID-19, so long as such Orders and Guidance are in effect during the Term of this Agreement;
  - Tuberculosis Clearance (Education Code § 49406)

Non-Discrimination and Equal Employment Opportunity. Provider represents and agrees that it does not and shall not discriminate against any employee or applicant for employment, company, individual or group of individuals, because of ancestry, age, color, disability (physical and mental, including HIV and AIDS), genetic information, gender identity, gender expression, marital status, medical condition, military or veteran status, national origin, race, religion, sex/gender, and sexual orientation.

Confidentiality. Provider agrees to maintain the confidentiality of all District and District-related data, information, and records including but not limited to student identifiable information and employee personnel information pursuant to all California and Federal statutory laws relating to privacy, confidentiality, and information security including but not limited to California Education Code sections 49060 – 49085 and the Family Educational Rights and Privacy Act (FERPA), that currently exist or exist at any time during the term of this Agreement. All such records and information shall be considered confidential and kept confidential by Provider and Provider's officers, agents, employees, participants, vendors, or customers.

Fingerprinting. Provider shall ensure that Provider and any employee who interacts with students, outside of the immediate supervision and control of the student's parent or guardian or a school employee, has a current valid criminal records summary as described in California *Education Code* section 44237. If any services will be provided on-site, or through an app or other electronic method that might allow any interaction between any student and Provider shall, prior to commencing any service hereunder, provide the District a Fingerprinting/ Criminal Background Check investigation Certificate, in form and substance satisfactory to the District. While this Agreement is in effect, Provider shall immediately provide any arrest and conviction information it receives concerning any person providing Services hereunder to the District.

Food Vendors. Ventura County Environmental Health Facilities Permit: https://vcrma.org/consumer-food-protection

❑ Mobile Food Facility permit ❑ Temporary Food Facility permit ❑ Exempt – must show documentation

Date checked by school official: _____initials: _____

Indemnification. To the fullest extent permitted by law, Provider agrees to defend, indemnify, and hold harmless District, its governing board, officers, administrators, managers, agents, employees, successors, assigns, independent contractors and/or volunteers from and against any and all claims, demands, monetary or other losses, loss of use, damages and expenses, including but not limited to, reasonable legal fees and costs, or other obligations or claims arising out of any liability or damage to person or property resulting from bodily injury, illness, communicable disease, virus, pandemic, or any other loss, sustained or claimed to have been sustained arising out of activities of the Provider or those of any of its officers, agents, employees, participants, vendors, or customers of Provider, whether such act or omission is authorized by this Agreement or not. Provider also agrees to pay for any and all damage to the real and personal property of the District, or loss or theft of such property, or damage to the Property done or caused by such persons. District assumes no responsibility whatsoever for any property placed on District premises by Provider, Provider's agents, employees, participants, vendors, or customers. The provisions of this Indemnification do not apply to any damage or losses caused solely by the intentional misconduct of the District or any of its governing board, officers, administrators, managers, agents, employees and/or volunteers.

This Indemnification shall survive termination of this Agreement, for any reason whatsoever, and binds each party's legal representatives, successors, and assigns.

Insurance. Provider, at its own cost and expense, shall procure and maintain during the term of this Agreement, policies of insurance for the following types of coverage:

a. Commercial General Liability Insurance. Provider shall procure and maintain, during the term of this Agreement, not less than the following General Liability Insurance coverage in the amounts of $1,000,000 per occurrence and $2,000,000 aggregate.

   Commercial General Liability insurance shall include products/completed operations, property damage, and personal and advertising injury coverage.

b. Automobile Liability. Provider shall procure and maintain, during the full term of this Agreement following Automobile Liability Insurance including non-owned and leased automobiles, as applicable with the following coverage limits:

Personal vehicles:	$500,000.00 combined single limit or
	$100,000.00 per person / $300,000.00 per accident
Commercial vehicles:	$1,000,000.00 per accident for bodily injury and property damage

c. Workers' Compensation Insurance. Provider shall procure and maintain, during the term of this Agreement, Workers' Compensation Insurance, as required by California law, on all of its employees engaged in work related to the performance of this Agreement. Provider shall procure and maintain Employers' Liability insurance coverage of $1,000,000. Absent proof of Workers' Compensation Insurance, Provider will submit a fully executed Certification of Exemption from Workers' Compensation Insurance, which District in its sole discretion may accept or reject.

d. Other Coverage as Dictated by the District. If any employee of Provider interacts with students, outside of the immediate supervision and control of the student's parent or guardian or a certificated school employee, Provider shall procure and maintain, during the term of this Agreement, Abuse and Molestation coverage in the amounts of $2,000,000 per occurrence and $4,000,000 aggregate.

If professional services are offered, Provider shall procure and maintain, during the term of this Agreement, Professional Liability (Errors and Omissions) insurance coverage in the amounts of $1,000,000 per occurrence and $2,000,000 aggregate.

e. Provider's insurance is primary and will not seek contribution from any other insurance available to the District. Provider further hereby waives any and all rights of subrogation that it may have against the District.

f. Certificates of Insurance. Provider shall provide certificates of insurance to the District as evidence of the insurance coverage required herein, not less than 15 days prior to commencing the proposed activity, and at any other time upon the request of the District. Certificates of insurance will be deemed invalid if proper endorsements are not attached. Certificates of such insurance shall be filed with the District on or before commencement of the services under this Agreement.

g. Endorsements. Provider's Commercial General Liability insurance and Commercial Automobile Liability coverage and Abuse and Molestation coverage shall name the District, its governing board, officers, agents, employees, and/or volunteers as additional insureds. All endorsements specifying additional insureds for any of the Insurance Policies shall be as indicated below or an equivalent endorsement reasonably acceptable to the District.

1) General Liability: CG 20 26 10 01
2) Primary, non-contributory: CG 20 01 04 13
3) Waiver of subrogation: CG 24 04 05 09
4) Commercial Automobile Liability: CA 20 48 10 13

h. Acceptability of Insurers. Insurance is to be placed with insurers with a current A.M. Best's rating of no less than A: VII, unless otherwise acceptable to the District.

i. Insurance written on a "claims made" basis is to be renewed by the Provider for a period of three (3) years following termination of this Agreement. Such insurance must have the same coverage and limits as the policy that was in effect during the term of this agreement and will cover the Provider for all claims made. If coverage is canceled or non-renewed, and not replaced with another claims-made policy form with a Retroactive Date prior to the contract effective date, the Consultant must purchase "extended reporting" coverage for a minimum of three (3) years after completion of the Services.

j. Failure to Procure Insurance**.** Failure on the part of Provider to procure or maintain required insurance shall constitute a material breach of contract under which the District may immediately terminate this Agreement

Governing Law and Venues. This Agreement shall be interpreted in accordance with the laws of the State of California. If any action is brought to interpret or enforce any term of this Agreement, the action shall be brought in state or federal court situated in the County of Ventura, State of California.

Dispute Resolution. If any dispute arises out of or in connection with the Agreement, representatives of the Parties with authority to settle the dispute shall communicate, in person, electronically, or in writing within 30 days of written notice, in a good faith effort to resolve the dispute.

The parties agree that, in the event of any unresolved dispute under the agreement in which the amount sought is $5,000.00 or less, any litigation to resolve the dispute shall be brought in the Ventura County Small Claims Court.

If the unresolved amount in dispute exceeds $5,000.00, the parties agree that they will first submit the matter to a mutually agreed upon mediator. Notwithstanding the following section, Attorneys Fees, the cost of the mediator shall be borne equally by the parties.

Attorney Fees. In the event of any action or proceeding to interpret or enforce the terms of this Agreement, the prevailing party, as determined by the court or mediator, shall be entitled to recover its reasonable attorney fees and costs incurred in connection with such actions or proceeding.

Nature of Agreement. This Agreement represents the entire agreement between the parties hereto with respect to the subject matter hereof and supersedes any and all other agreements and communications however characterized, written or oral, between or on behalf of the parties hereto with respect to the subject matter hereof. This Agreement may only be modified by a written instrument signed by authorized representatives of each of the parties hereto.

Counterpart Execution. This Agreement may be executed in any number of counterparts which, when taken together, shall constitute one and the same instrument. Executed counterparts of this Agreement may be delivered by PDF email or electronic facsimile transmission and shall have the same legal effect as an "ink-signed" original.

Signature Authority. Provider represents and warrants that Provider has all requisite power and authority to conduct its business and to execute, deliver, and perform this Agreement.

Acknowledgement and Agreement

I have read this Agreement and agree to its terms

Provider Authorized Signer	Signature	Date

Oxnard School District

Melissa Reyes		
Director, Purchasing	Signature	Date

Purchase Quote

Jan 27, 2025

Shoonya Digital Inc
5540 Cathedral Oaks
Santa Barbara, CA 93111
United States
www.shoonyadigital.com

Quote No.: 2025012701

Prepared for: Dr. Aracely Fox
Associate Superintendent
Oxnard School District
11051 South A Street,
Oxnard, CA 93030

Service Term: March 2025 - March 2026

Service or Product	Fee (USD)
Setup, demo, & implementation per district* *(This includes unlimited virtual presentations to teachers and staff, product onboarding, and setup. It also includes unlimited access to tech support and continuous product updates throughout the term.)*	$3,000
	$3,000

Purchase Order Number

Please provide us with a Purchase Order Number if applicable:
(You may put in N/A if you do not use a PO system)

Questions or concerns? Please contact us at support@shoonyadigital.com

**This is a one time fee per school site for training and implementation of the software as well as year-long support.*

Promptly at the beginning of each Service Term, Shoonya Digital will invoice, and Customer will pay the Total Fee listed for such Service Term. If Customer uses a Service for more than the Number of Students included in the Fee for such Service as set forth above, then Customer will pay Shoonya Digital Inc. an annual overage fee of $10.00 per additional student ("Overage Fee"). In no event will use of a Service for less than the Number of Students set forth above reduce or negate the amount of the Fee owed or paid to Shoonya Digital Inc. Shoonya Digital Inc will have the right to invoice Customers for any Overage Fee at any time if the applicable Number of Students is exceeded.

SPECIAL TERMS:

Market conditions, addition of product features or other factors may require price adjustments from time to time. While Shoonya Digital Inc will not make price adjustments during a term, it reserves the right to increase or decrease prices at the beginning of a new term.

GENERAL TERMS:

This Purchase Quote ("Quote") is made effective as of the last date of signature below ("Effective Date") by and between Shoonya Digital Inc, a corporation ("Shoonya"), and the customer identified herein ("Customer"), and shall be governed pursuant to the terms and conditions of the Shoonya. Standard Terms and Conditions ("Standard Terms") available at https://shoonyadigital.com/terms-of-service/ or at such alternate location as may be provided in the future, the Shoonya Privacy Policy ("Privacy Policy") available at https://shoonyadigital.com/privacy/ or such other location as may be provided in the future, and any other agreement executed by and between Shoonya and Customer in connection herewith (collectively, with this Order and any addendum or exhibit hereto, the "Agreement"), which by this reference are incorporated as if fully set forth herein. Unless otherwise stated in this Order, all terms defined elsewhere in the Agreement shall have the same meaning in this Order.

The Agreement sets forth the terms and conditions by which Shoonya will make the services or products identified in this Order (each specific product or service, a "Service") available to the Customer. The Services Customer is subscribing to are listed in the table on the previous page. Customer will have access only to the Services listed in the table. The Agreement constitutes the entire understanding between Customer and Shoonya and is the final and entire expression of their agreement. The Agreement supersedes any and all prior written or oral discussions, proposals, RFPs, emails or other communications, and the parties expressly disclaim any reliance on any of the foregoing. Under no circumstances will the terms, conditions or provisions of any purchase order or other administrative document issued by Customer modify, alter or expand the rights, duties or obligations of the parties, regardless of any failure of Shoonya to separately object to such terms, provisions or conditions. In the event of any conflict between or terms of documents constituting the Agreement, the following order of priority will govern, except where the specific terms of a document provide otherwise: (i) the applicable Order and any addendum or exhibit thereto; (ii) the Privacy Policy; and (iii) the Standard Terms.

This Order may be executed in counterparts, may be executed using electronic signatures, and may be delivered by electronic means. If so executed and/or delivered, the Agreement will be equally binding as an original copy of the Agreement executed in ink by both parties.

THE PARTIES ACKNOWLEDGE THAT THEY HAVE READ THE AGREEMENT INCLUDING THIS ORDER AND ALL DOCUMENTS REFERENCED ABOVE, UNDERSTAND IT AND AGREE TO BE BOUND BY ITS TERMS, AND THE PERSON SIGNING ON BEHALF OF EACH HAS BEEN AUTHORIZED TO DO SO. THE PERSON SIGNING BELOW FOR CUSTOMER REPRESENTS THAT HE OR SHE HAS THE AUTHORITY TO BIND SUCH ENTITY TO THIS AGREEMENT, INCLUDING ALL TERMS AND CONDITIONS INCORPORATED HEREIN.

AGREED

Signature _____ Date _____

Name _____

Shoonya©

The world's most culturally inclusive language learning app._s

About Us

Shoonya Kids is an award-winning game-based platform for Pre-K to 2nd graders designed to support foundational literacy and numeracy skill-building for ELLs. Available in English, Spanish, and more languages, Shoonya supports multilingual learners through interactive activities and culturally responsive content.

"Shoonya's multicultural and multilingual interactive digital platform is the state-of-the-art in beginning language(s) and multiliteracy development! It embeds equity, access and language play all at once!"

Dr. Barbara Flores, Former CABE President

Shoonya in Schools

Schools are using Shoonya Kids for:

- **Supplemental learning:** Rotations and independent stations for 20 minutes daily.
- **Skill-building:** Foundational literacy and numeracy for Pre-K to 2nd grade.
- English Language Learners and Dual Language Learners in **English & Spanish.**
- **Enrichment programs**: Summer learning and Expanded Learning Opportunity Programs.
- Supporting language skills through **cultural enrichment and real-world connections.**

Foundational Skill Building

Shoonya Kids aligns with **Common Core State Standards** and the **National Association of Young Children's Education Developmentally Appropriate Practice** (DAP) framework.

Animations

Print Concepts: upper & lower case alphabet and number recognition

Exploratory Games

Speaking & Listening: written and spoken word recognition

Tracing Letters & Numbers

Print Concepts: upper & lower case alphabet and number recognition

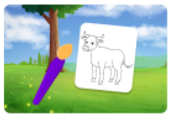

Coloring

Speaking & Listening: understand text read aloud

Puzzles

Print Concepts: phonics and word recognition.

Memory Games

Word Recognition: high frequency word recognition.

Shoonya©

Partnerships & Pricing

Implementation

Our app is designed to support instruction in TK and Kindergarten classrooms and is built with diversity, equity, and inclusion in mind.

Shoonya Kids comes with the following additional supports:

Set-Up

We will work closely with the technology department to ensure that our app is integrated seamlessly into classrooms. We also provide a half-hour demo to teachers to share how best to use the app to support the curriculum and engage students.

Customer Service

We take pride in our exceptional customer service and support. Our team is available to answer any questions and troubleshoot any issues.

Access to New Features and Updates

As part of our commitment to continuous improvement, we regularly release new features and updates to improve the app's functionality and effectiveness. You will have access to all new features and updates as they become available.

Pricing

Shoonya Kids provides unlimited access to all app features for teachers and students by offering an annual license priced based on a school's enrollment. Below is an outline of pricing, details about pricing, and what is included.

$20 annually per child, per license. All licenses have complete access to the entire Shoonya Kids library of content and languages.
$3000 one-time fee per district for set up, demo, and implementation.

We believe that Shoonya Kids is an excellent addition to elementary school classrooms' early literacy and numeracy curriculum. We look forward to the opportunity to work with you and your students. Thank you for considering our app!

OSD BOARD AGENDA ITEM

Name of Contributor: Dr. Aracely Fox **Date of Meeting:** March 19, 2025

Agenda Section: Section C: Enrichment Agreement

Approval of Agreement #24-199 – AlphaBEST Education, Inc. (Fox/Shea)

AlphaBEST Education, Inc. will provide a pilot Transitional Kindergarten/Kindergarten (TK/K) after-school enrichment program at Brekke, McKinna and Rose Avenue Schools. This initiative offers daily enrichment activities, physical games, story time, and hands-on activity stations tailored to early learners. The program is staffed with qualified personnel trained in CPR, First Aid, child development, and classroom management.

Term of Agreement: April 22, 2025 through June 30, 2025

FISCAL IMPACT:
Not to Exceed $104,000.00 – Expanded Learning Opportunities Program

RECOMMENDATION:
It is the recommendation of the Director, Enrichment & Specialized Programs, and the Assistant Superintendent, Educational Services, that the Board of Trustees approve Agreement #24-199 with AlphaBEST Education, Inc.

ADDITIONAL MATERIALS:

Attached: Agreement #24-199, AlphaBest Education, Inc. (83 Pages)
Proposal (6 Pages)

OXNARD SCHOOL DISTRICT

AGREEMENT # 24-199

AGREEMENT FOR AFTER SCHOOL PROGRAMS SERVICES

THIS AGREEMENT FOR AFTER SCHOOL PROGRAMS SERVICES (this "Agreement") is entered into as of the below-referenced Effective Date by and between the Oxnard School District, a California public school district ("District") and the below-referenced service provider ("Service Provider"). In this Agreement, District and Service Provider are sometimes individually referred to as "Party" and collectively referred to as the "Parties."

Effective Date:	April 22, 2025 - June 30, 2025
Service Provider:	AlphaBEST Education, Inc.
Address:	620 N. Patterson Ave, Winston-Salem, NC 27101
	Authorized Representative: Dawn Hosni
	Representative's Email: dhosni@alphabest.org
Type of Service:	_____ Lead Agency
	X Enrichment Agency

RECITALS

A. District is a California public school district that serves preschool to eighth grade students in the City of Oxnard, County of Ventura, State of California at one preschool, ten TK-5 schools, four TK-8 schools, three K-8 schools, and three 6-8 schools. District offers after-school programs to its grade level students for the 180 school days and 30 non-school days within each fiscal year (July 1 to June 30).

B. For District's after-school program, the "Lead Agency" is responsible for providing daily after-school programming for the 180 school days and 30 non-school days within each fiscal year as required by funding; works with the program from school dismissal until closing time; and provides management, oversight, and coordination of all afterschool programs, including recruitment, enrollment, and programming provided by Enrichment Agencies.

C. For District's after school program, an "Enrichment Agency" is responsible for providing specific types of enrichment programs (*e.g.*, arts, robotics, or sports) in accordance with its area of expertise, and may provide such enrichment activities for a limited period of time (such as Tuesday and Thursday afternoons, or on non-school days during winter, spring, or summer breaks, during the full fiscal year). Further, each and every Enrichment Agency shall adhere to the management, oversight, and coordination rules and regulations of the Lead Agency.

D. District has sought the performance of the Services (defined below) for Lead Agency and Enrichment Agencies, as defined and described particularly on Exhibit A-0, Exhibit A-1, Exhibit A-2, and Exhibit A-3.

E. Following submission of a proposal for the performance of the Services, Service Provider was selected by District to perform the Services as a Lead Agency or Enrichment Agency, as indicated above.

F. The California Department of Education has awarded District a grant through the Expanded Learning Opportunities ("ELOP") Program, After School Education and Safety ("ASES") Program, and/or the 21st Century Community Learning Centers ("21st CCLC") Program for academic school year 2024-2025 commencing 04/22/2025 and ending 6/30/2025 (collectively, the "Grant"). The Grant may also apply to additional academic school years.

G. The purpose of the Grant is to fund local after school education and enrichment programs. The District intends to use the Grant, in part, to retain Service Provider to perform the Services.

H. The Parties desire to memorialize the selection of Service Provider for performance of the Services and desire that the terms of that performance be as particularly defined and described herein.

NOW, THEREFORE, in consideration of the mutual promises and covenants made by the Parties and contained here and other consideration, the value and adequacy of which are hereby acknowledged, the Parties agree as follows:

OPERATIVE PROVISIONS

1. Incorporation of Recitals and Exhibits. The Recitals set forth above and all Exhibits attached to this Agreement, as hereafter amended, are incorporated by this reference as if fully set forth herein. This Agreement, all exhibits, and the RFP, including all RFP forms and all contract forms, are collectively referred to as the "Contract."

2. Term of Agreement. Subject to earlier termination as provided below, this Agreement shall remain in effect from 04/22/2025 to and including 6/30/2025 (the "Term"). This Agreement may be extended for two additional one (1)-year terms only by a written amendment, signed by the Parties, prior to the expiration of the Term.

3. Performance of the Services; Time for Performance. Service Provider shall provide the services set forth in Service Provider's proposal (as accepted by District and attached to the Contract), Exhibit A-0 (as applicable to Service Provider as a Lead Agency or Enrichment Agency as indicated in the preamble above), Exhibit A-1, and Exhibit A-3 during the Term pursuant to the schedule specified Exhibit A-0 (the "Primary Services"). Service Provider may also agree to provide additional services, at District's request and only with District's prior written authorization (the "Additional Services"). Any such Additional Services shall be completed in accordance with Exhibit A-2 during the Term pursuant to the schedule specified in Exhibit A-0. For purposes of this Agreement, the Primary Services and Additional Services shall collectively be referred to as the "Services." If Service Provider fails to complete the Services pursuant to the schedule specified in Exhibit A-0 or such other schedule that the Parties memorialize in a writing signed by duly authorized representatives of each Party, then Service Provider shall be deemed to be in Default

as provided below. Notwithstanding anything to the contrary in this Agreement or the Contract, Service Provider expressly understands and agrees that this Agreement and the Contract are subject to the Grant and that if the Grant is reduced or revoked, then the District shall have the right to terminate this Agreement and the Contract with no further liability to Service Provider.

4. Compensation and Method of Payment.

a. Subject to any limitations set forth below or elsewhere in this Agreement, District agrees to pay Service Provider the amounts specified below for the Services.

i. The total compensation for the Primary Services, including reimbursement for actual expenses, through reimbursement for supplemental ELOP Program, ASES Program, and/or 21st CCLC Program funded grant activities and/or universal grant monies as outlined in Exhibit A-0 shall not exceed the following amount:

Dollars $104,000.00

ii. The total compensation for the Additional Services, including reimbursement for actual expenses, through reimbursement for supplemental ELOP Program, ASES Program, and/or 21st CCLC Program funded grant activities and/or universal grant monies as outlined in Exhibit A-0 shall not exceed the following amount:

N/A Dollars $

Notwithstanding the generality of the foregoing, if Service Provider renders any Additional Services without District's prior written authorization, District shall not be obligated to pay for such services.

iii. Unless the District Superintendent or designee provides advance written authorization of a higher amount, the hourly rate for any subcontractor of Service Provider shall not exceed the following amount:

N/A Dollars $ per hour

iv. If the amount of the Grant is modified in a manner that will affect Service Provider's provision of the Services, in District's sole discretion, then the Parties agree to amend the costs accordingly through written amendment.

b. Each month by the 20th, Service Provider shall furnish to District an original invoice for all work performed and expenses incurred during the preceding month. The invoice shall detail charges by the following categories: labor (by sub-category), travel, materials, equipment, supplies, and subcontracts. Subcontractor charges, if any, shall be detailed by the following categories: labor, travel, materials, equipment, and supplies. All invoices must comply with the requirements set forth in Exhibit B. District shall independently review each invoice submitted by the Service Provider to determine whether the work performed and expenses incurred comply with the provisions of this Agreement, inclusive of Exhibit B. In the event that no charges

or expenses are disputed, the invoice shall be approved and paid according to the terms set forth in subsection c. In the event any charges or expenses are disputed by District, then District shall return the original invoice to Service Provider for correction and resubmission.

c. Except as to any charges for work performed or expenses incurred by Service Provider which are disputed by District, District will use its best efforts to cause Service Provider to be paid within forty-five (45) calendar days of receipt of Service Provider's correct and undisputed invoice.

d. Payment to Service Provider for work performed pursuant to this Agreement shall not be deemed to waive any defects in work performed by Service Provider.

5. Quarterly Review and Adjustment of Scope of Work. District may, in its sole and absolute discretion, (a) conduct a quarterly performance review of the Services, including, but not limited to, enrollment numbers, alignment with District goals and priorities, compliance with assurances, and other reasonable evaluation indicators, and (b) based on such assessment, require Service Provider to adjust and/or decrease the frequency of its services by a specified amount within thirty (30) calendar days or another timeframe established by District in its sole discretion, in which event District will simultaneously reduce Service Provider's compensation *pro rata* with no liability to Service Provider for such reduction.

6. Termination. This Agreement may be terminated as follows.

a. **Mutual Agreement**. The Parties may, at any time, mutually agree in writing to terminate this Agreement.

b. **Termination by Service Provider for Cause**. Service Provider may, upon thirty (30) calendar days written notice to District, (i) terminate this Agreement or suspend work under this Agreement for a reasonable period of time, and (ii) recover from District payment for all work executed if: (A) Service Provider's work under this Agreement is stopped for a period of six (6) months or more pursuant to an order of any court of competent jurisdiction or any public authority (but not for a school closure event as set forth in paragraph 7 of this Agreement), and through no act or fault of Service Provider or of anyone employed by Service Provider or acting on Service Provider's behalf, (B) District fails to pay Service Provider within sixty (60) calendar days after its maturity and presentation any sum awarded by final arbitration or a court of competent jurisdiction, or (C) Service Provider delivers District written notice of any alleged material breach of this Agreement by District and District fails to cure such alleged breach within sixty (60) calendar days, provided, however, that the timeline for cure shall be extended for an additional period if District is diligently pursuing such cure in good faith and an additional time period for the cure is reasonably warranted.

c. **Termination by District for Non-Appropriation of Funds**. District shall have the right to terminate this Agreement at any time due to non-appropriation of funds.

d. **Termination by District for Convenience**. District shall have the right to terminate this Agreement for convenience by giving Service Provider at least ninety (90) calendar days written notice.

e. **Termination by District for Cause**. District may terminate this Agreement for cause upon thirty (30) calendar days' written notice to Service Provider. For the purposes of this subparagraph, "cause" shall include, but not be limited to, (i) Service Provider filing for bankruptcy, being adjudged bankrupt, or being subject to involuntary bankruptcy proceedings; (ii) Service Provider making a general assignment for the benefit of Service Provider's creditors; (iii) the appointment of a receiver due to Service Provider's insolvency; (iv) the levy of an attachment of execution upon Service Provider's property; (v) the persistent or repeated failure or refusal of Service Provider to properly staff the after-school programs or otherwise violate any provisions of Exhibits A-0 to A-3; (vi) the material violation of any applicable law or District regulation or policy; (vii) any act or omission by any Service Provider or its subcontractor personnel that constitutes gross negligence or willful misconduct, endangers or is likely to endanger the safety, health, or wellbeing of any District student or staff, or represents a repeated default by Service Provider personnel (*e.g.*, repeated late arrivals to school sites or repeated violations of the Standards for Performance); and (viii) any other material breach of the Contract by Service Provider, Service Provider's employees, Service Provider's subcontractors or anyone acting on Service Provider's behalf, including, but not limited to, the breach of any covenant, representation or warranty in this Agreement, and the violation of any provision of the RFP (including continuing disclosure obligations). Any failure on the part of District to give notice of the Service Provider's default shall not be deemed to result in a waiver of District's legal rights or any rights arising out of any provision of this Agreement. District may, but is not obligated to, provide Service Provider an opportunity to cure any default. Notwithstanding the thirty (30) calendar days' advance written notice specified herein, District reserves the right to *immediately* suspend the Services of Service Provider if the circumstances reasonably warrant (*e.g.*, due to imminent safety and health issues). Moreover, Service Provider shall be liable to District for any excess cost occasioned to District by termination for cause. The foregoing provisions for termination of this Agreement are in addition to, and not in limitation of, the rights of District under any other provisions of the Contract. Service Provider shall not be deemed to be in default if its failure to perform any Services or comply with any provisions of this Agreement results solely from the gross negligence or willful misconduct of District.

f. **Effect of Termination or Expiration of Agreement**. Upon termination or expiration of the Term, this Agreement, and the entire Contract, shall terminate; Service Provider shall cease providing the Services; Service Provider shall vacate the District premises, leaving them in a neat and orderly condition; and Service Provider and District shall comply with any remaining obligations under the Contract, as applicable (*e.g.*, payment of any sums still due and owing,). Service Provider acknowledges and agrees that certain obligations shall survive the termination or expiration of the Contract, including, but not limited to, Service Provider's indemnity obligations, confidentiality obligations, and obligations regarding delivery and maintenance of reports and records.

7. School Closures. If District, or any one or more schools within District, are closed due to any lawful reason including in response to governmental orders or advisories, or to protect the

health, safety and welfare of students and employees, or by reason of any emergency (including, but not limited to, a wildfire, mudslide, or earthquake), and District notifies Service Provider that it does not need to provide the Services or any portion of the Services, then District shall not be charged or required to pay for the Services, staffing, overhead, or any other related costs for the closed school site(s) during the applicable closure period. Additionally, if any school site is required to rely on remote learning in lieu of or in addition to student attendance at the time of commencement of classes or any time during the school year, then District shall have the right to notify Service Provider of the revised service needs, and the Service Provider shall, to the maximum extent reasonably practicable, provide the Services via remote learning or via a hybrid of in-person and remote learning, in which event District shall not be charged or required to pay for any additional costs of the remote or hybrid learning and, if the Services are reduced, then District shall only be billed for the Services provided and adjusted actual costs for reduced services received. District shall also furnish Service Provider written notice of school reopening plans, including phases and any interruptions in reopening schedules, and Service Provider agrees to furnish the Services as needed by District with cost reductions as reasonably warranted. Service Provider agrees to cooperate with District in cost reduction and utilization changes, including, but not limited to, working with Service Provider on partial, phased, or full reopening plans to provide such services as District shall need under those plans. Notwithstanding the generality of the foregoing clauses within this section, District may, in its sole and absolute discretion, elect to continue to pay for the Services despite the closure of one or more school sites if, for example, District receives emergency funds from the State or other sources for such purposes.

8. Service Provider's Representations and Warranties. In addition to any other representations and warranties set forth elsewhere in the Contract, Service Provider hereby represents and warrants to District that:

a. Service Provider is currently authorized and qualified to conduct business in the State and the County, and Service Provider will remain in good standing in the State, the County and, as applicable, the Internal Revenue Service, Franchise Tax Board, and Attorney General, for the entire term of the Contract.

b. Service Provider has carefully examined the Contract; is familiar with the Services; and has the expertise, personnel, and resources to timely and properly conduct the Services.

c. Service Provider has the right, power, and authority to enter into the Contract, including this Agreement and all contract documents, and to perform its obligations hereunder and under the Contract.

d. This Agreement constitutes the legal, valid, and binding obligation of Service Provider enforceable against Service Provider in accordance with its terms, except to the extent that such enforcement may be limited by applicable bankruptcy, insolvency, moratorium, and other principles relating to or limiting the rights of contracting parties generally. This Agreement does not violate any provision of any material agreement or document to which Service Provider is a party or by which Service Provider is bound.

e. There are no lawsuits, claims, suits, proceedings, or investigations pending or, to Service Provider's knowledge, threatened against Service Provider arising out of or concerning Contractor's performance under this Agreement. There are no suits, actions, or proceedings pending, or to Service Provider's knowledge, threatened against Service Provider which question the legality or propriety of the transactions contemplated hereunder.

All representations and warranties of Service Provider are made as of the Effective Date and shall survive the term of the Contract for a period of three (3) years. Service Provider shall be in material default if Service Provider is unable to make the representations and warranties hereunder as of the Effective Date.

9. Ownership of Documents; Use of Documents by District. All curriculum, models, designs, drawings, photographs, studies, surveys, reports, data, notes, computer files, files, fliers, and other documents prepared, developed or discovered by Service Provider in the course of providing any of the Services pursuant to this Agreement (collectively and individually, the "Documents") shall become the sole property of District and may be used, reused or otherwise disposed of by District without the permission of the Service Provider. Upon completion, expiration or termination of this Agreement, Service Provider shall turn over to District all such Documents. If and to the extent that District utilizes for any purpose not related to this Agreement any Documents, Service Provider's guarantees and warrants related to Standards of Performance as set forth in paragraph 13 of this Agreement shall not extend to such use of the Documents.

10. Service Provider's Books and Records.

a. For purposes of this Agreement, the term "Records" means any and all books and records relating to Service Provider's performance of Services at each and every school site within the District, including, but not limited to, all:

i. student outreach materials (such as flyers and other promotional materials); student enrollment records; daily student attendance records; daily sign in and sign out sheets; early release policy, early release requests, and other early release records; physician notes for student absences, activity restrictions, *etc*.;

ii. employee records for Service Provider personnel working in the Program, including proof of TB clearance, first aid and CPR certification, and satisfaction of all training requirements, evidence that the staff person meets the minimum qualification for providing services to District (*e.g*., proof of meeting qualifications as a paraeducator as defined by District), hiring date and (if applicable) termination date, job description, school site assignment, dates of service at District school sites, payroll records, and employment files (including disciplinary records);

iii. food service reimbursable snack logs and Q meal summary electronic reports for nutrition provided to students attending the programs;

iv. ledgers, books of account, invoices, vouchers, canceled checks, and other records evidencing or relating to work, services, expenditures, and disbursements charged to District under this Agreement (which Service Provider shall maintain in accordance with generally accepted accounting principles and

with sufficient detail to permit an accurate evaluation of the Services provided by Service Provider pursuant to this Agreement); and

v. evidence of any grants, matching funds, in-kind donations, or other financial contributions to the Program that were provided through or on account of Service Provider.

b. District's fiscal year is July 1 to June 30. By July 15 of each year, Service Provider shall deliver to District true and correct copies of all Records for the prior fiscal year (e.g., by July provide copies of all Records for 2024-2025). Service Provider shall upload true and correct electronic copies of the Records to a secure portal as directed by District.

c. Service Provider shall maintain any and all Records for a minimum of five (5) years after termination or expiration of this Agreement, or longer if required by law.

d. Any and all such Records shall be made available for inspection, audit and copying, at any time during regular business hours, upon request by District or its designated representative. Copies of such Records shall be provided directly to District for inspection, audit and copying when it is practical to do so; otherwise, unless an alternative is mutually agreed upon, such Records shall be made available at Service Provider's address indicated for receipt of notices in this Agreement or via electronic delivery.

e. District has the right to acquire custody of such Records by written request if Service Provider decides to dissolve or terminate its business. Service Provider shall deliver or cause to be delivered all such Records to District within sixty (60) workdays of receipt of the request.

11. Independent Contractor. Service Provider is and shall at all times remain a wholly independent contractor and not an officer, employee, or agent of District.

a. The personnel performing the Services under this Agreement on behalf of Service Provider shall at all times be under Service Provider's exclusive direction and control. Service Provider, its agents or employees shall not at any time or in any manner represent that Service Provider or any of Service Provider's officers, employees, or agents are in any manner officials, officers, employees, or agents of District. Neither Service Provider, nor any of Service Provider's officers, employees, or agents, shall, by virtue of Services rendered under this Agreement, obtain any rights to retirement, health care or any other benefits which may otherwise accrue to District's employees. Service Provider will be responsible for payment of all Service Provider's employees' wages, payroll taxes, employee benefits, workers' compensation, and any amounts due for federal and state income taxes and social security taxes since these taxes will not be withheld from payment under this Agreement.

b. Service Provider shall have no authority to bind District in any manner, or to incur any obligation, debt, or liability of any kind on behalf of or against District, whether by contract or otherwise, unless such authority is expressly conferred in writing by District, or under this Agreement.

12. Penal Code sections 667.5 and 1192.7. If Service Provider becomes aware that any person employed by or volunteering with Service Provider in connection with the Services has been arrested or convicted of a violent or serious felony listed in Penal Code Section 667.5(c) or 1192.7(c), then Service Provider must immediately remove said employee or volunteer from the performance of the Services, prevent the employee or volunteer from interacting with District students, and notify District. District retains the right to prohibit any such employee from participating in the program or having access to students or the program site.

13. Standards of Performance. Service Provider represents and warrants that it has the qualifications, experience, resources, and facilities necessary to properly perform the Services required under this Agreement in a thorough, competent, and professional manner. Service Provider shall at all times faithfully, competently and to the best of its ability, experience, and talent, perform all Services described herein. In meeting its obligations under this Agreement, Service Provider shall employ, at a minimum, generally accepted standards and practices utilized by persons engaged in providing services similar to those required of Service Provider under this Agreement.

14. Confidential Information, Generally. All information gained during performance of the Services and all Documents or other work product produced by Service Provider in performance of this Agreement shall be considered confidential, but only to the extent such information is not considered a public record for purposes of federal or state law. Service Provider shall not release or disclose any such information, Documents or work product to persons or entities other than District without prior written authorization from the Superintendent of District, except as may be required by law.

a. Service Provider shall promptly notify District if it is served with any summons, complaint, subpoena or other discovery request, court order or other request from any Party regarding this Agreement or the work performed hereunder.

b. District retains the right, but has no obligation, to represent Service Provider or be present at any deposition, hearing, or similar proceeding. Service Provider agrees to cooperate fully with District and to provide District with the opportunity to review any response to discovery requests provided by Service Provider; provided that this does not imply or mean the right by District to control, direct, or rewrite said response.

15. Student Privacy Laws.

a. In relation to the performance of the Services, Service Provider may receive or obtain access to confidential student data ("Confidential Student Data") that is governed by privacy laws under federal or state law, including, but not limited to, the Health Insurance Portability and Accountability Act of 1996 (Pub. L. 104-191) ("HIPAA"); the Family Educational Rights and Privacy Act of 1974 (20 USC § 1232g and 34 CFR Part 99) ("FERPA"); the Protection of Pupil Rights Amendment (20 USC § 1232h) ("PPRA"); the Children's Online Privacy Protection Act of 1998 (15 USC §§ 6501, *et seq*.) ("COPPA"); California Education Code Section 49073-49079.7; the Student Online Personal Information Privacy Act (Cal. Business and Prof. Code §§ 22584, *et seq.*) ("SOPIPA"); the Early Learning Personal Information Protection Act (Cal. Business and

Prof. Code §§ 22586, *et seq*.) ("ELPIPA") (collectively, the "Student Privacy Laws"). Service Provider agrees to abide by the Student Privacy Laws in connection with all Confidential Student Data.

b. Service Provider shall strictly comply with the Student Privacy Laws. Without limiting the generality of the foregoing, Service Provider shall perform the following duties in regards to any Confidential Student Data that Service Provider obtains in the performance of the Contract: (i) not disclose the information to any other party without the consent of the parent/guardian or an eligible student; (ii) use the data for no other purpose than the performance of the services contemplated under the Contract; (iii) permit District access to any relevant records for the purpose of completing authorized audits; (iv) require all of Service Provider's officers, directors, administrators, employees, subcontractors, and agents to comply with all provisions of the Student Privacy Laws; (v) designate in writing a single authorized representative who shall be responsible for requesting, receiving, transmitting and, as permitted under the Contract and applicable law, destroying Confidential Student Data; (vi) maintain all Confidential Student Data in a secure computer and not copying, reproducing or transmitting data except as necessary to perform under the Contract; and (vii) destroy or return all personally identifiable information obtained under the Contract when it is no longer needed for the purpose for which it was obtained no later than thirty (30) calendar days after it is no longer required. Failure to properly destroy or return Confidential Student Data shall preclude Service Provider from accessing personally identifiable student information for at least five (5) years as provided in 34 C.F.R. Section 99.31(a)(6)(iv), which shall be grounds for District to terminate this Agreement for cause and seek any and all remedies available to District at law or in equity.

c. In the event that Service Provider operates a website, online service, mobile application or similar medium, Service Provider shall comply with the requirements of SOPIPA (Cal. Business and Prof. Code §§ 22584, *et seq*.) by (a) not knowingly engaging in advertising targeted to District students or their parents or guardians, creating profiles of students or their parents or guardians, selling information about students or their parents or guardians, or disclosing any personally identifiable information without proper prior consent; (b) storing, processing and protecting District data pursuant to commercial best practices, including encrypting data; (c) promptly deleting District data, including, but not limited to, student, parent and guardian data, upon District's request; and (d) not storing District data outside of the United States.

16. Conflict of Interest; Disclosure of Interest. Service Provider covenants that neither it, nor any of its officers or employees, has or shall acquire any interest, directly or indirectly, which would conflict in any manner with the interests of District or which would in any way hinder Service Provider's performance of Services under this Agreement. Service Provider further covenants that in the performance of this Agreement, no person having any such interest shall be employed by it as an officer, employee, agent, or subcontractor without the express written consent of the District.

a. Service Provider agrees to at all times avoid conflicts of interest or the appearance of any conflicts of interest with the interests of District in the performance of this Agreement.

b. Board Bylaws Sections 9270 and 9270-E, as hereinafter amended or renumbered, require that a Service Provider that qualifies as a "designated employee" must disclose certain financial interests by filing financial interest disclosures. By its initials below, Service Provider represents that it has received and reviewed a copy of the Board's Bylaws Sections 9270 and 9270-E (available on the District's website at https://www.oxnardsd.org/domain/12) and that it does not qualify as a "designated employee."

_____ (Initials)

c. Service Provider agrees to notify the Superintendent, in writing, if Service Provider believes that it is a "designated employee" and should be filing financial interest disclosures but has not been required to do so by the District.

_____ (Initials)

17. Compliance with Applicable Laws. Service Provider hereby agrees that Service Provider, and its officers, owners, agents, employees, and subcontractors, shall keep themselves informed of and comply with all applicable federal, state, and local laws, statutes, codes, ordinances, regulations, and rules in the performance of the Contract, including, but not limited to, minimum wage laws and laws prohibiting discrimination. Service Provider shall be responsible for the safety of its employees and shall comply with all applicable regulations of the California Division of Occupational Safety and Health (Cal OSHA), including, but not limited to, California Code of Regulations Title 8, section 3203, Injury and Illness Prevention Program, and section 3205, COVID-19 Prevention. Service Provider shall ensure that workers in school settings who are on-site supporting school functions are compliant with applicable Public Health Department Orders and Guidance, and other mandates related to COVID-19, so long as such orders and guidance remain in effect. Service Provider and its officers, owners, agents, employees, and subcontractors shall secure and maintain in force for the Term, at their sole cost and expense and at no cost to District, any and all licenses, permits and authorizations necessary to perform the Services. Neither District, nor any elected or appointed boards, officers, officials, employees, or agents of District, shall be liable, at law or in equity, as a result of any failure of Service Provider to comply with this section. Without limiting the generality of the foregoing, Service Provider shall comply with any applicable fingerprinting requirements as set forth in the Education Code of the State of California.

_____ (Initials)

18. Undocumented Workers. Service Provider hereby promises and agrees to comply with all of the provisions of the Federal Immigration and Nationality Act, 8 U.S.C.A. Sections 1101, et seq., as amended, and in connection therewith, shall not employ undocumented workers, defined herein the same as in 8 U.S.C.A. Section 1324a(h)(3). Should Service Provider so employ such individuals for the performance of work and/or Services covered by this Agreement, and should any liability or sanctions be imposed against District for such employment, Service Provider hereby agrees to and shall reimburse District for the cost of all such liabilities or sanctions imposed, together with any and all costs, including attorneys' fees, incurred by District.

19. Non-Discrimination. Service Provider shall abide by the applicable provisions of the United States Civil Rights Act of 1964 and other provisions of law prohibiting discrimination and

shall not discriminate, in any way, against any person on the basis of race, color, religious creed, national origin, ancestry, sex, age, physical handicap, medical condition or marital status in connection with or related to the performance of this Agreement.

20. Assignment. The expertise and experience of Service Provider are material considerations for this Agreement. District has an interest in the qualifications of and capability of the persons and entities that will fulfill the duties and obligations imposed upon Service Provider under this Agreement. In recognition of that interest, Service Provider shall not assign or transfer this Agreement or any portion of this Agreement or the performance of any of Service Provider's duties or obligations under this Agreement without the prior written consent of the Board of Trustees of District. Any attempted assignment shall be ineffective, null and void, and shall constitute a material breach of this Agreement entitling District to any and all remedies at law or in equity, including summary termination of this Agreement.

21. Subcontracting. Notwithstanding the above, Service Provider may utilize subcontractors in the performance of its duties pursuant to this Agreement, but only with the prior written consent of District. Service Provider shall be as fully responsible to District for the acts and omissions of its subcontractors, and of persons either directly or indirectly employed by Service Provider, as if Service Provider performed the acts and omissions directly.

22. Continuity of Personnel. Service Provider shall make every reasonable effort to maintain the stability and continuity of Service Provider's staff and subcontractors, if any, assigned to perform the Services required under this Agreement.

a. Service Provider shall ensure that District has a current list of all personnel and subcontractors providing Services under this Agreement.

b. Service Provider shall notify District of any changes in Service Provider's staff and subcontractors, if any, assigned to perform the Services required under this Agreement, prior to and during any such performance. The list notice shall include the following information: (i) all full or part-time staff positions by title, including volunteer positions whose direct services are required to provide the Services described herein; (ii) a brief description of the functions of each such position and the hours each position works each week or, for part-time positions, each day or month, as appropriate; (iii) the professional degree, if applicable, and experience required for each position; and (iv) the name of the person responsible for fulfilling the terms of this Agreement.

c. Service Provider shall maintain a database of prospective employees in order to avoid a gap in filling intended positions.

d. Notwithstanding the generality of the foregoing, all Service Provider personnel assigned to perform under the Contract shall be subject to the continuous approval of District. District may refuse to accept any Service Provider personnel assigned to the Contract in the event that such persons fail to meet the necessary performance standards or for any other reasonable basis. Upon the request of District, Service Provider shall immediately terminate the assignment of any Service Provider personnel to the District's after-school program.

23. Assumption of Responsibility. In accordance with Service Provider's obligations under paragraphs 11, 13, 21, and 22 herein, Service Provider assumes all responsibility for the care, custody, and control of students participating in any activity, whether on-site or off-site, offered in connection with the Services.

24. Service Provider's Indemnification of District.

a. To the fullest extent permitted by California law, Service Provider, on behalf of itself and its officers, agents, employees, board members, owners, shareholders, subcontractors, volunteers and agents (collectively, "Indemnifying Party"), shall at its sole expense indemnify, protect, defend and hold harmless District, its officers, agents, employees, elected board members, and volunteers (collectively, "Indemnified Party") from and against any liability (including liability for claims, suits, actions, arbitration proceedings, administrative proceedings, regulatory proceedings, losses, expenses or costs of any kind, whether actual, alleged or threatened, including attorneys' fees and costs, court costs, interest, defense costs, and expert witness fees) of any kind, nature, and description, including, but not limited to, which arise out of or relate to any one or more of the following (each a "Claim" and collectively the "Claims"): (i) Indemnifying Party's breach of any representation or warranty in the Contract; (ii) Indemnifying Party's breach of any material provision of the Contract; (iii) Indemnifying Party's violation of any applicable law; (iv) employment and labor claims concerning Indemnifying Party's employees, agents, and/or subcontractors; (v) intentional misrepresentation or fraud by Indemnifying Party; (vi) bodily injury, including, but not limited to, illness, communicable disease, virus, or pandemic in connection with Indemnifying Party's provision of the Services; (v) personal injury (including, but not limited to, injuries related to or derived from alleged sexual misconduct, sexual abuse, or molestation, and any claims or allegations of wrongful death) in connection with Indemnifying Party's provision of the Services, (vi) any damage to and destruction of real property in connection with Indemnifying Party's provision of the Services; (vii) any damage to and destruction of personal property in connection with Indemnifying Party's provision of the Services, (viii) Service Provider's furnishing to District of any copyrighted or patented material under the Contract and claims that such materials infringe upon a third party's intellectual property rights. For avoidance of doubt, Service Provider's liability under this paragraph includes any and all liability arising out of or in any way attributable to the performance of this Agreement by Service Provider or by any individual or entity for which Service Provider is legally liable, including, but not limited to, its officers, agents, employees, and subcontractors.

b. Indemnifying Party's indemnity, defense, protection and hold harmless obligations under this paragraph 24 shall apply whether or not the applicable Claim: (i) is a third party claim or a direct claim; (ii) has any merit; (iii) arises from an act or omission authorized under the Contract; or (iv) is caused or alleged to have been caused by the negligence of the Indemnified Party, provided, however, that Indemnifying Party shall not be liable for damages or losses caused by sole gross negligence or sole willful misconduct of the Indemnified Party.

c. Indemnifying Party's obligations under this paragraph 24 shall not be limited by Service Provider's insurance requirements under the Contract.

d. The Indemnified Party shall promptly notify the Indemnifying Party of any Claim for which indemnification is sought, following actual knowledge of such Claim. However, the failure to give such notice shall not relieve the Indemnifying Party of its obligations hereunder except to the extent that Indemnifying Party is materially and irrevocably prejudiced by such failure. In the event that any third party Claim is brought, the Indemnifying Party shall have the right and option to undertake and control the defense of such action with counsel of its choice, except that (i) the Indemnified Party at its own expense may participate and appear on an equal footing with the Indemnifying Party in the defense of any such Claim; (ii) the Indemnified Party, at Indemnifying Party's expense, may undertake and control of such defense in the event of the material failure of the Indemnifying Party to undertake and control the same; and (iii) the Indemnified Party may control with counsel of its choice the defense of any third party Claim when an adverse judgment would establish a precedent that would be materially damaging to the continuing business interests of Indemnified Party as a public agency (*e*.g., a Claim involving public contracting rules). A Party shall not consent to judgment or concede or settle or compromise any Claim without the prior written approval of the other Party (which approval shall not be unreasonably withheld, delayed, or conditioned).

e. No Party shall be entitled to any form of implied or equitable indemnification at any time, whether based upon a theory of contract, torts, strict liability or otherwise, and each Party expressly disclaims any right to implied or equitable indemnification.

f. Service Provider agrees to obtain executed indemnity Agreements with provisions identical to those set forth here in this section from each and every subcontractor or any other person or entity involved by, for, with or on behalf of Service Provider in the performance of this Agreement. In the event Service Provider fails to obtain such indemnity obligations from others as required here, Service Provider agrees to be fully responsible according to the terms of this section. Failure of District to monitor compliance with these requirements imposes no additional obligations on District and will in no way act as a waiver of any rights hereunder. This obligation to indemnify and defend District as set forth here is binding on the successors, assigns or heirs of Service Provider and shall survive the termination of this Agreement.

g. The provisions of this paragraph 24 shall survive the termination or expiration of the Contract and remain in full force and effect.

On behalf of Service Provider, I certify that I have read and understood the foregoing indemnity, defense, and hold harmless obligations under this paragraph 24 and that Service Provider agrees to be bound by such obligations.

_____ (Initials)

25. District's Indemnification of Lead Agency.

a. To the fullest extent permitted by California law, District shall indemnify, protect, defend and hold harmless Lead Agency and any and all of its officials, city council members, employees and agents from and against any liability (including liability for claims, suits, actions, arbitration proceedings, administrative proceedings, regulatory proceedings, losses, expenses or costs of any kind, whether actual, alleged, or threatened, including

attorneys' fees and costs, court costs, interest, defense costs, and expert witness fees) of any kind, nature, and description, including, but not limited to, personal injury (including but not limited to, injuries related to or derived from alleged sexual misconduct, sexual abuse, or molestation), death, damage to property (real or personal), to the extent the liability arises out of or is in any way attributed to the performance of this Agreement by District or District's officers, agents, employees or is in any way directly attributable to the alleged existence of dangerous conditions on District real property during the operation of the program contemplated hereunder. The provisions of this indemnification do not apply to any damages or losses caused by the sole negligence or willful misconduct of Lead Agency, its officials, elected council members, employees, agents, or program participants.

b. This obligation to indemnify and defend Lead Agency is binding on successors, assigns or heirs of District and shall survive termination of this Agreement.

c. Should the acts or omissions of both Lead Agency and District contribute to any injury or damage, then their responsibility for the injury or damage will be divided between them in proportion to their respective contributions to the injury or damage. ssss

26. Enrichment Agency's Indemnification of Lead Agency. To the fullest extent permitted by California law, Enrichment Agency shall indemnify, protect, defend and hold harmless Lead Agency and Lead Agency's officials, city council members, employees and agents from and against any liability (including liability for claims, suits, actions, arbitration proceedings, administrative proceedings, regulatory proceedings, losses, expenses or costs of any kind, whether actual, alleged, or threatened, including attorneys' fees and costs, court costs, interest, defense costs, and expert witness fees) of any kind, nature, and description, including, but not limited to, personal injury (including but not limited to, injuries related to or derived from alleged sexual misconduct, sexual abuse, or molestation), death, damage to property (real or personal), to the extent the liability arises out of or is in any way attributed to the performance of this Agreement by Enrichment Agency or by any individual or entity for which the Enrichment Agency is legally liable, including, but not limited to, any Enrichment Agency officers, agents, employees or subcontractors or that rises out of or is in any way directly attributed to officers, agents, employees or subcontractors of Enrichment Agency or that arises out of or is in any way directly attributable to the alleged existence of dangerous conditions on District property during the operation of the program contemplated hereunder (if such conditions are caused by the acts or omissions of Enrichment Agency or any individual or entity for which Enrichment Agency is legally liable). Except as specifically provided in this Agreement, in no event shall Enrichment Agency be liable for any special, consequential, indirect, or incidental damages, including but not limited to lost profits, arising out of or in connection with this Agreement. This obligation to indemnify and defend Lead Agency is binding on successors, assigns or heirs of Enrichment Agency and shall survive termination of this Agreement.

27. Limitation of Liability. District assumes no responsibility whatsoever for any of Service Provider's personal property placed on District premises. Except as specifically provided in the Contract, in no event shall District be liable in contract or tort for any special, consequential, indirect, or incidental damages arising out of or in connection with the Contract.

28. False Claims. Notwithstanding anything to the contrary in the Contract, Service Provider may be liable to District under the False Claims Act (California Government Code Sections 12650, *et seq*.) for any and all false claims that Service Provider presents or makes to District in connection with the Contract. Service Provider's liability under the False Claims Act, if any, shall include three times the amount of damages that District sustains because of the false claim and the costs of a civil action brought to recover any penalties and/or damages, and the then-current and applicable civil penalty for each violation.

29. Insurance. Service Provider shall provide insurance coverage for the Services as set forth on Exhibit C.

30. Notices. All notices required or permitted to be given under this Agreement shall be in writing and shall be personally delivered, or sent by telecopier or certified mail, postage prepaid and return receipt requested, addressed as follows:

To District: Oxnard School District
1501 South A Street
Oxnard, CA 93030 Attention:
Dr. Ginger Shea Phone:
805-385-1501 ext. 2324 Email:
gshea@oxnardsd.org

To Service Provider: [NAME] AlphaBEST Education, Inc.
[STREET ADDRESS] 620 N. Patterson Ave.
[CITY, STATE, ZIP] Winston-Salem, NC 27101
Attention: [NAME] Dawn Hosni
Phone: [PHONE] 480-815-7014
Email: [EMAIL] dhosni@alphabest.org

Notice shall be deemed effective on the date personally delivered with a copy sent via email or, if mailed, three (3) business days after deposit of the same in the custody of the United States Postal Service.

31. Excusable Delays. Service Provider shall not be liable for damages, including liquidated damages, if any, caused by delay in performance or failure to perform due to causes beyond the control of Service Provider. Such causes include, but are not limited to, acts of God, acts of the public enemy, acts of federal, state, or local governments, acts of District, court orders, fires, floods, strikes, embargoes, pandemics, epidemics, governmentally mandated quarantines, and unusually severe weather. The term and price of this Agreement shall be equitably adjusted for any delays due to such causes.

32. Authority to Execute. The person or persons executing this Agreement on behalf of Service Provider represents and warrants that he/she/they has/have the authority to so execute this Agreement and to bind Service Provider to the performance of its obligations hereunder.

33. Administration. The Assistant Superintendent of Educational Services, or such person's designee, shall be in charge of administering this Agreement on behalf of the District. The Administrator has completed Exhibit D.

34. Binding Effect. This Agreement shall be binding upon the heirs, executors, administrators, successors and assigns of the Parties.

35. Entire Agreement. This Agreement and the exhibits and documents incorporated herein constitute the entire agreement and understanding between the Parties in connection with the matters covered herein. This Agreement supersedes any prior understanding or agreement, oral or written, of the Parties with respect to said matters.

36. Amendment. No amendment to or modification of this Agreement shall be valid or binding unless made in writing by Service Provider and by District. The Parties agree that this requirement for written modifications cannot be waived and that any attempted waiver shall be void.

37. Waiver. Waiver by any Party to this Agreement of any term, condition, or covenant of this Agreement shall not constitute a waiver of any other term, condition, or covenant. Waiver by any Party of any breach of the provisions of this Agreement shall not constitute a waiver of any other provision or a waiver of any subsequent breach or violation of any provision of this Agreement. Acceptance by District of any work or services by Service Provider shall not constitute a waiver of any of the provisions of this Agreement.

38. Governing Law; Jurisdiction. The Contract, including this Agreement, shall be construed in accordance with the laws of the State for all substantive and procedural matters, without regard to principles of conflicts of law. Venue for any legal action or proceeding relating to the Contract shall lie exclusively in the County. The venue for any arbitration, mediation or other action or proceeding related to enforcement or interpretation of the Contract shall be the County of Ventura. In the event of any litigation related to the Contract, the Parties irrevocably submit themselves to the jurisdiction of the Superior Court of Ventura County. Each Party hereby waives and expressly agrees not to assert, in any manner whatsoever, any claim or allegation that it is not personally subject to the jurisdiction of the aforementioned court. The Parties further agree to waive any claim or allegation that the suit, action, or proceeding is either brought in an inconvenient forum or that the venue is improper.

39. Dispute Resolution. It is the Parties' intention to avoid the cost of litigation and to attempt to resolve any problems arising out of or related to the Contract amicably. To that end, the Parties agree to attempt to settle any and all disputes arising out of or related to the Contract by neutral, non-binding mediation, as a condition precedent to the commencement of arbitration, litigation, or any other similar proceeding. Either Party may request mediation, provided that the request shall be in writing and delivered to the other Party in accordance with the notice provisions set forth in this Agreement. The Parties agree to act in good faith to attempt to resolve any dispute by mediation. A Party shall not be entitled to attorneys' fees in any lawsuit, arbitration, or other proceeding related to or arising under the Contract if that Party refused or failed to participate in mediation in good faith pursuant to this paragraph. The Parties further agree to act in good faith to identify a

mutually acceptable mediator. If a mediator cannot be agreed upon by the Parties, each Party shall designate a mediator and those mediators shall select a third mediator who shall act as the neutral mediator of the Parties' dispute. If the dispute or claim is resolved successfully through the mediation, the resolution shall be documented by a written agreement executed by the Parties. If the mediation does not successfully resolve the dispute or claim, the mediator shall provide written notice to the Parties reflecting the same, and the Parties may then proceed to seek an alternative form of resolution of the dispute or claim, in accordance with the remaining terms of the Contract and other rights and remedies afforded to them by law. Notwithstanding the foregoing, nothing set forth in this paragraph shall require mediation prior to commencing an action in equity seeking injunctive relief or prior to District taking action to protect the health or safety of its students or staff. All applicable statutes of limitation shall be tolled while the mediation procedures specified herein are pending, and the Parties agree to take all action, including the execution of stipulations or tolling agreements, necessary to effectuate the intent of this provision.

40. Severability. If any term, condition, or covenant of this Agreement is declared or determined by any court of competent jurisdiction to be invalid, void, or unenforceable, the remaining provisions of this Agreement shall not be affected thereby, and the Agreement shall be read and construed without the invalid, void, or unenforceable provision(s).

IN WITNESS WHEREOF, District and Service Provider have executed and delivered this agreement for Service Provider services as of the date first written above.

"**District**"

Oxnard School District,
a California public school district

By: _____
Melissa Reyes, Director of Purchasing

"**Service Provider**"

_____,
_____

By: _____
_____

EXHIBIT A-0
SCOPE OF SERVICES

PART I: LEAD AGENCY

A. Definition of Lead Agency. The "Lead Agency" is responsible for providing daily after-school programming for the 180 schools days and 30 non-school days within each academic school year of the Contract as required by funding. The Lead Agency works with the program from school dismissal until closing time. The Lead Agency provides management, oversight, and coordination of all after-school programs, including recruitment, enrollment, and programming provided by Enrichment Agencies.

B. Lead Agency Responsibilities. The Lead Agency will perform the Services in accordance with the Contract and specifically agrees to perform the Services in accordance with the following requirements.

1. Enrollment.

a. Provide staffing to support program enrollment activities, including, but not limited to, school-site coordination, classroom and school-wide presentations/recruitment activities, documentation of active participants and maintenance of wait lists, communication with school site administration and families on up-to-date acceptance and wait lists.
b. Provide ongoing enrollment support for enrichment bursts and special events, including, but not limited to, recruitment activities, open house, showcases, back to school nights, *etc*.
c. Prior to students participating in the Program, obtain signed copies of all enrollment forms required by the District and any additional forms required by the Lead Agency and provide copies of all such enrollment forms to the District. The District's current required enrollment forms are included as Attachment A.

2. Five-Day Week and Enrichment Burst Program Attendance.

a. For daily five-day week program, elementary students should participate every day the program operates.
b. For daily five-day week program, intermediate students should participate a minimum of nine hours and three days per week.
c. For enrichment bursts, students should participate according to the schedule for the activity.
d. The Lead Agency will make good faith efforts to maintain consistency of attendance with the intent to reduce the turnover in enrollment.
e. The Lead Agency will take daily attendance to ensure student safety and attendance.

f. Early release waivers will be used for all students recurring late start or early program release (*e.g.*, late start for tutoring and early release for catechism or sports).

g. Students who leave the program early with an excused reason (*e.g.*, sick, doctor's appointment) shall have it noted on the sign out sheet and have back up documentation filed with each month's attendance.

h. The Lead Agency shall agree to meet the minimum attendance required by the ELOP, ASES, and 21st CCLC Grants, as applicable.

i. The Lead Agency shall maintain enrollment documents for the daily five day a week program and enrichment bursts.

3. **Assurances.** The Lead Agency assures, warrants to the District, and agrees that in the performance of the Contract, the Lead Agency shall:

a. Provide an academic and enrichment after school program in each grant funded school and ensure there are comprehensive and holistic program offerings available for all program participants;

b. Plan the program through a collaborative process that includes parents, youth, representatives of participating school sites, governmental agencies, local law enforcement, community organizations and the private sector;

c. Staff all activities not to exceed a 10:1 ratio for all TK and K students and 20:1 ratio for Grades 1-8;

d. Provide payroll services for Lead Agency employees;

e. Operate each program from the end of the school day until 6:00 p.m. or a minimum of 3 hours, whichever is later, every regular school day;

f. When agreed upon and coordinated between Lead Agency and District, provide a program for non-school calendar days (*i.e.*, weekends, days, vacations);

g. Lead Agency will provide services for 30 non-school days for a minimum of 9 hours per day;

h. Provide program assessment results to District for the annual evaluation. Evaluation tools such as Quality Self-Assessment Tool (QSAT) or other measures of program evaluation as suggested by the California Department of Education – After School Division and/or California After-School Network. Documentation needs to happen quarterly for the Federal Program Monitoring Process (FPM);

i. Assist and maintain organized information for FPM at each site, and submit documentation to the District quarterly;

j. Ensure all food offered to students conforms to the nutrition standards as established by the U.S. Department of Agriculture (low fat content, calories, no candy or soda). Reimbursable Snack Logs will be submitted to District Food Services to ensure proper documentation for the State and Federal Food Program. Reporting also includes electronic input of total snacks served in Q – Food Services module.

4. Non-School-Day Activities.

a. 30 non-school days are required by the ELOP Program.
b. Program shall be open for a minimum of 9 hours.
c. Transportation shall be provided if program offered off site.
d. Field trips and/or any off-site activities shall follow all guidelines of a field trip as outlined in Exhibit A-1.
e. 2024-2025 Non-School-Day Schedules (subject to change)
   i. Summer: July 1-26, 2024 (pack out on July 29, 2024)
   ii. Winter Break: January 6-10, 2025
   iii. Spring Break: April 7-18, 2025

5. Trainings.

a. Lead Agency shall ensure that each and every staff person of the Lead Agency (not including those of any Enrichment Agency), as a prerequisite to and precondition of such staff person providing services to the District, has been trained in the following topics:

   i. Mandated reporting
   ii. Anti-harassment
   iii. Sexual misconduct prevention
   iv. Bullying prevention
   v. Discrimination prevention
   vi. Suicide awareness and reporting
   vii. Classroom management
   viii. Social and emotional supports
   ix. Quality standards for expanded learning
   x. Emergency preparedness

   For avoidance of doubt, no Lead Agency staff person shall provide any services to the District unless and until such staff person has been trained in the foregoing topics.

b. Additionally, Lead Agency shall ensure that each and every staff person of the Lead Agency (not including those of any Enrichment Agency), as a prerequisite to and precondition of such staff person providing services to the District, has been certified in:

   i. First aid, automated external defibrillator [AED], and CPR, including epinephrine administration (American Red Cross equivalent)

For avoidance of doubt, no Lead Agency staff person shall provide any services to the District unless and until such staff person has been certified in first aid, AED, and CPR.

c. Lead Agency shall ensure that all staff attend:

i. Five (5) all staff trainings on the following dates (which are subject to change): August 12 & 13, 2024; October 14, 2024; November 1, 2024; January 10, 2025 and March 3, 2025.

ii. Quarterly professional development provided by District and Lead Agency on the topics such as team building, emergency procedures, positive behavior intervention support, English learner strategies, social and emotional awareness and learning, school safety, Common Core State Standards, grade level pedagogy, communication skills and other topics to align the after-school program with the regular day throughout the course of the academic school year.

iii. Site team meetings 1 hour every two weeks.

6. Professional Development.

a. Lead Agency – Management Only:

i. Attend Region 8 Program Directors and Network Meetings on a quarterly basis.

b. Lead Agency – All Staff (inclusive of owners, managers, and site-level staff):

i. Participate in quarterly professional development provided by District and Lead Agency on the topics of Positive Behavior Intervention Support, English Learner Strategies, technology, Depth of Knowledge and inquiry strategies, Common Core State Standards, Smarter Balanced Assessment Consortium, communication skills and other topics to align the after-school program with the regular day throughout the course of the academic school year.

7. Curriculum and Activity Design.

a. The Lead Agency is responsible for developing all activities, including curriculum, consumable and non-consumable materials, and timelines, all in alignment with District goals, priorities, and applicable grant requirements. The Lead Agency must send its syllabi to the District in advance on a monthly basis.

b. When agreed upon in writing in advance, the District may provide the Lead Agency with curriculum training that meets the needs of the District. If the District will provide the training, then it will be as follows.

Participate in monthly trainings to receive lessons and materials for the upcoming month. Meetings will be a minimum of two hours. Lead Agency and District will coordinate trainings.

i. Professional Development – Math staff, Literacy

Participate in two full day trainings before the start of school conducted by District-approved provider as per agreement with District.

Participate in monthly trainings to receive lessons and materials for the upcoming month. Training will be two hours.

ii. Professional Development – Literacy
Participate in two full day trainings before the start of school conducted by District-approved provider as per agreement with District.

Participate in monthly trainings to receive lessons and materials for the upcoming month. Training will be two hours.

iii. Professional Development – Arts/Special Enrichment staff

Participate in monthly trainings offered by District, District-approved provider, and/or Service Provider. Training will be between 2 and 4 hours a session.

Provide enrichment that meets the goals as stated in the District After School Education and Safety Program Plan.

iv. Professional Development – Physical Fitness/Recreation Staff

Participate in monthly trainings as offered by the Service Provider.

Training topics include, but are not limited to, physical fitness, self-esteem, and nutrition.

PART II: ENRICHMENT AGENCY

A. Enrichment Agency. Each "Enrichment Agency" will provide specific types of enrichment programs (e.g., arts, robotics, or sports) in accordance with its area of expertise. An Enrichment

Agency may provide such enrichment activities for a limited period of time (such as Tuesday and Thursday afternoons, or on non-school days during winter, spring, or summer breaks, during the full fiscal year).

B. Enrichment Agency Responsibilities. The Enrichment Agency will perform the Services in accordance with the Contract and specifically agrees to perform the Services in accordance with the following requirements.

1. Enrollment.

a. Provide ongoing enrollment support for enrichment bursts and special events, including, but not limited to, recruitment activities, open house, showcases, back to school nights, *etc*.

b. Prior to students participating in the Program, obtain signed copies of all enrollment forms required by the District and any additional forms required by the Lead Agency and provide copies of all such enrollment forms to the District. The District's current enrollment forms are included as Attachment A.

2. Five-Day Week and Enrichment Burst Program Attendance.

a. For daily five-day week program, elementary students should participate every day the program operates.

b. For daily five-day week program, intermediate students should participate a minimum of nine hours and three days per week.

c. For enrichment bursts, students should participate according to the schedule for the activity.

d. The Enrichment Agency will make good faith efforts to maintain consistency of attendance with the intent to reduce the turnover in enrollment.

e. The Enrichment Agency will take daily attendance to ensure student safety and attendance.

f. Early release waivers will be used for all students recurring late start or early program release (*e.g.*, late start for tutoring and early release for catechism or sports).

g. Students who leave the program early with an excused reason (*e.g.*, sick, doctor's appointment) shall have it noted on the sign out sheet and have back up documentation filed with each month's attendance.

h. The Enrichment Agency shall agree to meet the minimum attendance required by the ELOP, ASES, and 21st CCLC Grants, as applicable.

i. The Enrichment Agency shall maintain enrollment documents for the enrichment bursts.

3. Assurances. The Enrichment Agency assures, warrants to the District, and agrees that in the performance of the Contract, the Enrichment Agency shall:

a. Provide an academic and enrichment after school program in each grant funded school and ensure there are comprehensive and holistic program offerings available for all program participants;
b. Plan the program through a collaborative process that includes parents, youth, representatives of participating school sites, governmental agencies, local law enforcement, community organizations and the private sector;
c. Staff all activities not to exceed a 10:1 ratio for all T-K and K students and 20:1 ratio for Grades 1-8;
d. Provide payroll services for Enrichment Agency employees;
e. Operate each program from the end of the school day until 6:00 p.m. or a minimum of 3 hours, whichever is later, every regular school day;
f. When agreed upon and coordinated between Enrichment Agency and District, provide a program for non-school calendar days (*i.e.*, weekends, days, vacations);
g. Enrichment Agency may provide services for 30 non-school days for a minimum of 9 hours per day;
h. Provide program assessment results to District for the annual evaluation. Evaluation tools such as Quality Self-Assessment Tool (QSAT) or other measures of program evaluation as suggested by the California Department of Education – After School Division and/or California After-School Network. Documentation needs to happen quarterly for the Federal Program Monitoring Process (FPM);
i. Assist and maintain organized information for FPM at each site, and submit documentation to the District quarterly;
j. Ensure all food offered to students conforms to the nutrition standards as established by the U.S. Department of Agriculture (low fat content, calories, no candy or soda). Reimbursable Snack Logs will be submitted to District Food Services to ensure proper documentation for the State and Federal Food Program. Reporting also includes electronic input of total snacks served in Q – Food Services module.

~~4. Non-School Day Activities.~~

~~a. 30 non-School Days are required by the ELOP Program.~~
~~b. Program shall be open for a minimum of 9 hours.~~
~~c. Transportation shall be provided if program offered off site.~~
~~d. Field trips and/or any off-site activities shall follow all guidelines of a field trip as outlined in Exhibit A-1.~~
~~e. 2024-2025 Non-School-Day Schedules (subject to change)~~
~~i. Summer: July 1-26, 2024 (pack out on July 29, 2024)~~
~~ii. Winter Break: January 6-10, 2025~~
~~iii. Spring Break: April 7-18, 2025~~

5. Trainings.

a. Enrichment Agency shall ensure each and every staff person, as a prerequisite to and precondition of such staff person providing services to the District, has been trained in the following topics:

i. Mandated reporting
ii. Anti-harassment
iii. Sexual misconduct prevention
iv. Bullying prevention
v. Discrimination prevention
vi. Suicide awareness and reporting
vii. Classroom management
viii. Social and emotional supports
ix. Quality standards for expanded earning
x. Emergency preparedness

All Enrichment Agency staff providing services to the District must take the District's training courses, which are available through an online training management system, for each of the above topics.

For avoidance of doubt, no Enrichment Agency staff person (including volunteers) shall provide any services to the District unless and until such staff person has been trained in the foregoing topics.

b. Additionally, Enrichment Agency shall ensure that each and every staff person, as a prerequisite to and precondition of such staff person providing services to the District, has been certified in:

i. First aid, AED and CPR, including epinephrine administration, equivalent to American Red Cross

For avoidance of doubt, no Enrichment Agency staff person shall provide any services to the District unless and until such staff person has been certified in first aid, AED and CPR.

c. Enrichment Agency shall ensure that all staff attend:

~~i. Five (5) all staff trainings on the following dates (which are subject to change): August 12 & 13, 2024; October 14, 2024; November 1, 2024; January 10, 2025 and March 3, 2025.~~

ii. Quarterly professional development provided by District, Lead Agency, and Enrichment Agency on the topics such as team building, emergency procedures, positive behavior intervention support, English learner strategies, social and emotional awareness and learning, school safety, Common Core State Standards, grade

level pedagogy, communication skills and other topics to align the after-school program with the regular day throughout the course of the academic school year.

iii. Site team meetings 1 hour every two weeks.

6. Curriculum and Activity Design.

a. The Enrichment Agency is responsible for developing all its enrichment activities, including curriculum, consumable and non-consumable material, and timelines, all in alignment with District goals, priorities, and applicable grant requirements. The Enrichment Agency must send its syllabi to the District in advance on a monthly basis.

b. When agreed upon in writing in advance, the District may provide the Enrichment Agency with curriculum training that meets the needs of the District.

PART III: HUMAN RESOURCES (HR)/RISK MANAGEMENT

The Lead Agency and each Enrichment Agency must comply with the following risk management requirements.

A. Provide background clearance through the police department and TB clearance pursuant to Education Code sections 8483.4, 8484.75 and 49406(a) and provide monthly reports of all employees who have received clearance for employment.
B. Provide a copy of insurance documents, which verify coverage for District.
C. Clear outside contractors and events through the District HR Department. This shall occur at least 30 days prior to service or event.
D. Clear all activities and enrichment courses, including flyers and advertisements, through District Risk Management Department and District Administration to ensure proper safety procedures are in place according to District timelines. This shall occur at least 30 days prior to service or event.
E. Clear all fundraisers through District Risk Management Department and District Administration to ensure compliance with Board Policies. This shall occur at least 30 days prior to service or event.
F. Participate in school-wide emergency drills and learn the protective procedures at each school site.

PART IV: MISCELLANEOUS SERVICE PROVIDER RESPONSIBILITIES

The Lead Agency and each Enrichment Agency must comply with the following responsibilities:

A. Report attendance and activities weekly by Wednesday of each week for the previous week.
B. Work with District to establish and maintain partnerships with community agencies.

C. Provide student learning and enrichment materials above and beyond materials already purchased by District.
D. Participate in collaboration activities with other participating organizations.
E. Vacate learning areas within each school in the same or better conditions as they were found.
F. Include the Common Core State Standards and strategies for English Learners and Special Education students in lessons.
G. Include feedback from the after-school administrator and site principal when evaluating employees.
H. Meet weekly with District administrator.
I. Provide documentation of matching funds.
J. Operate the Program in accordance with the conditions set forth in this Exhibit A-0, Exhibit A-1, and Exhibit A-3.
K. Operate the Program in accordance with the conditions set forth in Exhibit A-2, if applicable.
L. Report any unsafe physical conditions of the facilities or grounds in the after-school activity areas to the District program administration immediately.
M. Comply with all applicable District Board of Trustee policies, including, but not limited to, the District's policies regarding tobacco-free schools, firearms on school grounds, drug and alcohol-free workplace, and dress and grooming.

PART V: DISTRICT RESPONSIBILITIES

The District agrees to:

A. Provide consistent, adequate, and safe space for after school groups and activities after school each day in the schools with Core Grants (including classrooms, cafeteria, restrooms, and playground);
B. Provide a District administrator to coordinate and collaborate with the Lead Agency's and Enrichment Agency's program coordinator;
C. Provide a staff member to help create an academic link between the after-school program and the regular school day—reporting language arts and math assessment results to the after-school program and reporting the after-school results to the regular classroom teachers;
D. Provide professional development to aid in the aligning the after-school program with the regular school day (math, literacy, arts/special enrichment, and physical fitness and nutrition);
E. Provide consistent access to campus classrooms and necessary facilities;
F. Provide daily nutritional snack and/or meal through the federal free and reduced lunch program;
G. Provide daily custodial services;
H. Submit required attendance, fiscal and evaluation reports to the State of California;
I. Provide office space/station with access to phone, computer, printer, and internet access;
J. Provide Access to Q to mark attendance;

K. Notwithstanding Lead Agency's and Enrichment Agency's obligations contained in Exhibit A-3, administer medication to students participating in Program in compliance with federal and California law;
L. Perform those actions set forth in Exhibit A-3.

PART VI: TANGIBLE WORK PRODUCTS

As part of the Services, Lead Agency and Enrichment Agency will prepare and deliver the following tangible work products to District:

A. Certificates of insurance and additional insured endorsements for 2024-2025, as described in Exhibit C, or a letter evidencing participation in an alternative risk management program, including participation with other public agencies in mutual, cooperative, or risk management programs available through joint exercise of powers agencies, to the extent that such alternative risk management program affords reasonable coverage for the risks contemplated hereunder giving consideration to similar programs or plans adopted by public entities in the State of California;
B. Evidence that employees meet the qualifications of a paraeducator as defined by District;
C. Monthly employee list certifying all employees have cleared TB and fingerprint screenings and complied with all training requirements;
D. Weekly attendance and activity reports;
E. Food Service Reimbursable Snack Logs and Q Meal Summary electronic report which meet the requirements of the federal free and reduced lunch program;
F. Evidence that Lead Agency and Enrichment Agency employees and volunteers have complied with the professional development and training requirements required by this Agreement.
G. Copies of all enrollment forms for each student participating in the Program.

PART VIII: PERSONNEL

Lead Agency and Enrichment Agency shall provide a staff roster prior to the commencement of Services and anytime that there is an update in staff.

PART IX: SUBCONTRACTORS

Lead Agency and Enrichment Agency will utilize the following subcontractors to accomplish the Services (check one):

☐ None.

☐ See attached list.

PART X: AMENDMENTS

The Scope of Services, including services, work product, and personnel, are subject to change by mutual agreement. In the absence of mutual agreement regarding the need to change any aspects of performance, Lead Agency and Enrichment Agency shall comply with the Scope of Services as indicated above.

EXHIBIT A-1

For the purposes of this Exhibit A-1, Lead Agency and Enrichment Agency are referred to as "Service Provider," and the below obligations shall apply and pertain individually to each and every Lead Agency and to each and every Enrichment Agency providing services to the District under the Contract. Service Provider agrees to operate the after- school program (the "Program") in accordance with the following general provisions:

1. Field Trips. Service Provider may offer Program field trips, provided that Service Provider obtains advance authorization from District, obtains advance written parent/guardian authorization, and complies with transportation policies approved by District. Service Provider shall use the District's then-current permission, release, and waiver forms. The District's presently existing forms are included as Attachment A. All field trip transportation requires advance authorization by the District.

2. Parent/Guardian Visits: To the extent allowed by applicable law, Service Provider shall provide for reasonable parent/guardian access to District facilities being used by Service Provider during the Program. Service Provider shall ensure that parent/guardian visits are in accordance with any applicable court orders.

3. Late Pick Up Policy: Service Provider shall develop a reasonable late pick-up policy. The policy must be in writing and approved in advance by District. If Service Provider fails to provide a late pick-up policy, the following policy shall apply. If a student has not been picked up by an authorized adult within ten (10) minutes after the Program closing time, Service Provider's staff shall call the emergency contacts for that student. If Service Provider's staff person has not been able to reach the student's authorized adult within twenty (20) minutes past closing time, Service Provider shall contact the Program director, the police, and social services for assistance. Service Provider is fully responsible for properly implementing the policy. Irrespective of whether Service Provider develops and implements an approved late pick-up policy or adopts the policy set forth herein, Service Provider warrants that at least two (2) staff persons will remain present at closing time to supervise the students until the last child is in the custody of an authorized adult, or, if necessary, the police and social services. For avoidance of doubt, (a) the Lead Agency shall maintain primary responsibility for compliance with the late pick up policy, (b) a Lead Agency staff person shall remain on-site to comply with the late pick up policy, and (c) the Lead Agency may require an Enrichment Agency staff person to remain on site as the second staff person.

4. Reportable Incidents:

   a. Service Provider shall immediately notify the District by telephone of any heath- or safety-related issues, including, but not limited to, the death of a child from any cause; any injury to a child that requires medical treatment; any unusual

incident or child absence that threatens the physical or emotional health or safety of a child; any suspected child abuse or neglect; epidemic outbreaks, poisonings; fires or explosions that occur in or on the premises; exposure to toxic substances; an arrest of the Service Provider's employee; any issues involving criminal background clearances for employees; any building safety issues. The Service Provider shall provide a written report of the incident to the District within 24 hours of the event.

b. If Service Provider becomes aware of circumstances indicating the actuality or possibility of mandated reporting (including but not limited to, allegations of physical, emotional, or sexual abuse, or allegations of neglect), involving any student in the Program, then Service Provider shall comply with all mandated reporting requirements under California law. Service Provider shall inform District immediately by telephone and shall also provide a written report of the circumstances to District within twenty-four (24) hours of becoming aware of the circumstances. Service Provider assures District that all Service Provider staff members, including volunteers, are familiar with child and dependent adult abuse reporting obligations and procedures under California law.

5. Disasters/Emergencies:

a. Service Provider shall develop a reasonable disaster/emergency policy. The policy must be in writing and approved in advance by District. If Service Provider fails to provide a reasonable disaster/emergency policy, the District's emergency/disaster policy shall apply. Service Provider is fully responsible for properly implementing the policy, including but not limited to ensuring that all staff members at each site are appropriately trained in the policy, maintaining at least two (2) staff members at each site who are CPR trained, and confirming that staff members are properly instructed to access disaster preparedness kits.

b. Additionally, Service Provider acknowledges, understands, and agrees that in the event of any natural, manmade, or war-caused disaster or emergency, District's employees are declared "disaster service workers" tasked with performing such disaster service activities as may be assigned to them by their superiors or by law. Further, Service Provider acknowledges, understands, and agrees that any such disaster or emergency occurs during the Program, the Service Provider's on-site staff shall be required to remain on the premises to assist District employees and any other disaster service workers in the protection of lives and property until such time that the Service Provider's staff is relieved from duty by the District or replaced by another Service Provider staff person.

6. Unauthorized Persons: In the event that Service Provider's staff discovers that any unauthorized person (including but not limited to minors who are not enrolled in the Program and not otherwise entitled to be on District property; unauthorized adults, including parents who are forbidden by court order from accessing students;

and any other trespassers) is on District's property during the operation of the Program, Service Provider's staff shall take immediate action to ensure the safety of all Program students, including, as necessary, seeking assistance from local authorities. Service Provider's staff shall immediately notify program management at District of the incident and provide a written report of the incident to District within twenty-four (24) hours.

7. District Facilities and Equipment: Service Provider's use of District facilities and equipment shall be limited to those uses reasonably necessary for the operation of the Program. Service Provider shall use District's facilities and equipment with care, leaving each space clean and organized at the end of each Program day. Service Provider shall not permit any third parties not affiliated with the Program to use District's facilities and equipment. Service Provider shall, at its own cost and expense, replace or repair any District facilities or equipment damaged by Program staff or participants, or third parties that Service Provider permitted to use the facilities or equipment. Service Provider shall not make or allow any alterations, installations, additions, maintenance, or improvements in or to District facilities without District's prior written consent, which may be withheld in District's sole discretion. If District approves a request, Service Provider may perform the work at its sole cost and expense and the improvement, maintenance or other agreed-upon service on District property shall immediately become the property of District.

EXHIBIT A-2
SPORTS – HEALTH AND SAFETY

For the purposes of this Exhibit A-2, Lead Agency and Enrichment Agency are referred to as "Service Provider," and the below obligations shall apply and pertain individually to each and every Lead Agency and to each and every Enrichment Agency providing services to the District under the Contract. Service Provider agrees to operate any and all sports within the Program in accordance with the following provisions.

1. General Requirements for Service Provider's Program Coaches.

a. Satisfaction of Program staff requirements. Service Provider agrees that its coaches, paid and unpaid, shall satisfy the requirements for all Program staff, including, but not limited to, requirements pertaining to employee qualifications, experience, and background checks.

b. Additional requirements. Service Provider further agrees that, prior to coaching a Program sport, its coaches shall have training that includes development of coaching philosophies consistent with District goals; basic knowledge of sport psychology, pedagogy, physiology, and management; training in CPR, AED, and first aid; and general information about statewide rules and regulations regarding, at minimum, eligibility, equity, and discrimination. Moreover, as set forth in more detail below, Service Provider's coaches shall receive training in specific health and safety issues, including, but not limited to, concussion, sudden cardiac arrest, heat illness, methicillin-resistant staph aureus, performance enhancement drugs, and event emergencies. Service Provider shall have satisfied these requirements if Service Provider provides its coaches with the information provided in the exhibits to this Agreement and any additional information provided by District to Service Provider.

2. General Requirements for Student Eligibility in Program Sports.

a. Medical clearance. Service Provider shall ensure that, prior to trying out for, practicing for, and participating in a Program sport, every student obtains a medical clearance from a health care provider (i.e., a medical doctor [MD], doctor of osteopathy [DO], nurse practitioner [NP] or physician assistant [PA]) who is fully licensed in the State of California. The medical clearance shall be pursuant to a physical exam with medical history, which includes, but is not limited to, review of any previous heat illness, cardiac disease, sickle cell trait, medication and supplement use, and type of training activities. Service Provider may provide students with or otherwise require students to utilize the Preparticipation Physical Evaluation form and accompanying Clearance form, prepared by the California Interscholastic Federation ("CIF"), and attached hereto as Exhibit A-2(i) (or any updated forms). Within 48 hours of collecting any medical clearance, Service Provider shall provide such medical clearance form(s) to District. For avoidance of doubt, Service Provider shall not be responsible for the accuracy, sufficiency, or completeness of any medical clearance document(s) required by District pursuant to this section. However, Service Provider shall ensure that such medical clearance forms are completed by health care providers who designate themselves as an MD, DO, NP, or PA.

b. Adherence to recommendations. Service Provider agrees to require its coaches to review and abide by any and all medical restrictions and recommendations listed in each student's medical clearance form. Service Provider acknowledges that a student's medical clearance may be rescinded or altered by the health care provider due to changed conditions, in which event Service Provider agrees to be bound by the revised restrictions or recommendations.

c. Current illness or injury. For the health and safety of all Program participants, Service Provider shall permit any student who is reasonably known or observed to have an active febrile or gastrointestinal illness to participate in Program sports until such time the affected student has recovered from the illness and provided Service Provider with a written medical clearance. Service Provider shall not permit any student who is reasonably known or observed to have an injury (except minor injuries, such as minor cuts or abrasions) to participate in Program sports without written medical clearance.

d. Sign In and Sign Out Sheet. Service Provider must provide a sign-in and sign-out sheet for all Program sports activities, including tryouts, practices, and games, that includes, at minimum, the date, student's name, time of sign-in and time of sign-out, and name of authorized adult who signed out the student. All students and/or guardians must use the sheet to sign in and out of all Program sports.

e. Off-site Sports Activities. Service Provider may offer off-site sports activities, provided that Service Provider obtains advance authorization from District, obtains advance written parent/guardian authorization, and complies with transportation policies approved by District. Service Provider shall use its own permission, release, and waiver forms, provided that such forms shall provide for a release of claims against District by providing for a release of "any involved municipalities or public entities and their respective agents and employees."

3. Concussions.

Service Provider agrees to adhere to the following standards regarding concussions and serious head injuries.

a. Coaches – requirements prior to coaching

i. As a prerequisite to coaching any Program sport, Service Provider's coaches shall receive training on concussions and provide proof of such training to Service Provider. The training can be completed through the free, online course "Concussions in Sports" (or any updated course) which is available through the National Federation of State High School Associations website. As proof of training, Service Provider's coaches shall download and print their certificate at the completion of the course, and, provide a copy of the certification to Service Provider.

ii. Service Provider's coaches shall receive concussion training at least once a year.

iii. Service Provider shall retain a copy of all certifications for a period of at least three (3) years, and, upon District's request, provide a copy to District.

b. Students – requirements prior to participation.

i. As a prerequisite to a student beginning practice or competition in any Program sports activity, the student and the student's parent or guardian shall review and sign a concussion and head injury information sheet. Service Provider shall provide the concussion and head injury information sheet, the form and content of which shall be subject to District's prior approval. Service Provider may use the "Concussion Information Sheet" prepared by CIF, which is attached hereto in English and Spanish as Exhibits A-2(ii) and A-2(iii), respectively (or any updated forms).

ii. Students and student parents/guardians shall complete a new concussion and head injury information sheet each year.

iii. Service Provider shall make two (2) copies of each signed concussion information sheet. Service Provider shall return the first copy to the student's parent or guardian. Service Provider shall retain the second copy for a period of at least three (3) years, and, upon District's request, provide the copies to District.

c. Coaches – requirements if student may have sustained concussion.

i. Service Provider shall immediately remove from competition, whether in practice or a game, any student who is suspected of sustaining a concussion or head injury, and seek emergency medical attention for the student.

ii. Service Provider shall follow all other medical procedures in this Agreement, including, but not limited to, contacting the student's parent or guardian, and completing the requisite incident forms.

d. Students – requirements for participation after suspected concussion.

i. A student who has been removed from play due to a suspected concussion or head injury may not participate in any Program sports until the student has (A) been evaluated by a health care provider who is fully licensed in the State of California and trained in the evaluation and management of concussions, and (B) received written medical clearance to return to play from that health care provider. Service Provider may request that students use the Acute Concussion Evaluation form, attached hereto as Exhibit A-2(iv).

ii. In no event shall a student return to practice or competition in a Program sport on the same day that the student was suspected of sustaining or having a concussion or other head injury.

iii. Subsequent to the student's suspected head injury, Service Provider agrees to enforce the health care provider's recommendations and restrictions regarding the student's participation in Program activities, and to continue to monitor the student for any further signs or symptoms of a concussion or other head injury.

iv. Service Provider agrees to maintain copies of any written medical clearances pertaining to a suspected concussion or other head injury for a period of at least three (3) years, and, upon District's request, provide the copies to District.

4. Sudden Cardiac Arrest ("SCA").

Service Provider agrees to adhere to the following standards regarding SCA, which is the sudden and unexpected loss of heart function and among the leading causes of death for student athletes.

a. Coaches – requirements prior to coaching

i. As a prerequisite to coaching any Program sport, Service Provider's coaches shall receive training on SCA and provide proof of such training to Service Provider. The training can be completed through the free, online course "Cardiac Wise" (or any updated course), which is available through the CIF website. As proof of training, Service Provider's coaches shall download and print their certificate at the completion of the course, and, provide a copy of the certification to Service Provider.

ii. Service Provider's coaches shall receive SCA training at least once a year.

iii. Service Provider shall retain a copy of all certifications for a period of at least three (3) years, and, upon District's request, provide the copies to District.

b. Students – requirements prior to participation.

i. As a prerequisite to a student beginning practice or competition in any Program sport, the student and the student's parent or guardian shall review and sign an SCA information sheet. Service Provider shall provide the SCA information sheet, the form and content of which shall be subject to District's prior approval. Service Provider may use the SCA information sheet "Keep Their Heart in the Game – a sudden cardiac arrest information sheet for athletes and parents/guardians" prepared by CIF, a sample of which is attached as Exhibit A-2(v) (or any updated form).

ii. Students and student parents/guardians shall complete a new concussion and head injury information sheet each year.

iii. Service Provider shall make two (2) copies of each signed information sheet. Service Provider shall return the first copy to the student's parent or guardian. Service

Provider shall retain the second copy for a period of at least three (3) years, and, upon District's request, provide the copies to District.

c. Coaches – requirements if student faints.

i. Service Provider shall immediately remove from competition, whether in practice or a game, any student who exhibits fainting, which is the main warning sign of a potential heart condition. Service Provider shall then seek emergency medical attention for the student.

ii. Service Provider shall follow all other medical procedures in this Agreement, including, but not limited to, contacting the student's parent or guardian, and completing the requisite incident forms.

d. Students – requirements for participation after suspected SCA event.

i. A student who has been removed from play due to a suspected SCA event may not participate in any Program sports until the student has (A) been evaluated by a health care provider who is fully licensed in the State of California and trained in the evaluation and management of SCA, and (B) received written clearance to return to play from that health care provider.

ii. In no event shall a student return to practice or competition on the same day that the student was suspected of having an SCA event.

iii. Service Provider agrees to enforce the health care provider's recommendations and restrictions regarding the student's participation in Program activities, and to continue to monitor the student for any further signs or symptoms of SCA.

iv. Service Provider agrees to maintain copies of any written medical clearances, and, upon District's request, provide the copies to District.

5. Heat Illness.

Service Provider agrees to adhere to the following standards regarding heat illness.

a. Coaches – education about heat illness prevention. Service Provider agrees to require its coaches to obtain training about the prevention of heat illness in students participating in athletics at least once a year. The training may be completed through the free, online course "A Guide to Heat Acclimatization and Heat Illness Prevention" (or any updated course), which is available through the CIF website.

b. Preventative measures. Service Provider's coaches shall endeavor to decrease the likelihood of Program students suffering heat illness by taking preventative measures, including, but not limited to:

i. educating students participating in Program sports to arrive at practice or competition well-hydrated;

ii. instructing students to stay hydrated in between practices;

iii. educating students to avoid drinks which dehydrate the body (*e.g.*, drinks containing stimulants such as ephedrine or high amounts of caffeine);

iv. providing water or sports drinks to students during practice and competition, and providing students with water breaks at least every thirty (30) to forty-five (45) minutes;

v. allowing adequate rest breaks in the shade, and allowing students to remove unnecessary equipment during rest breaks;

vi. if applicable, gradually increasing the intensity and duration of exercise over a seven (7) to fourteen (14) day period in order to give students time to acclimate to practicing in the heat; and

vii. if applicable, introducing protective equipment in phases in order to give students time to acclimate (*e.g.,* start with helmet, progress to helmet and shoulder pads, and finally progress to full uniform).

6. Methicillin-Resistant Staph Aureus (MRSA).

Service Provider agrees to adhere to the following standards regarding MRSA (a type of staph infection that is resistant to many common antibiotics, and which, if left untreated, can be serious or deadly).

a. Coaches – education about MRSA. Service Provider shall take reasonable steps to ensure that its coaches are aware of the warning signs, risks, and treatment of MRSA. At minimum, Service Provider shall provide its coaches with a copy of the Sports Medicine Alert for Coaches about MRSA, prepared by CIF, and attached hereto as Exhibit A-2(vi), or any updated alert or information sheet.

b. Coaches – preventative measures. Service Provider shall require its coaches to adopt precautionary measures to decrease the risk of spreading MRSA, including, but not limited to, recommending that students shower with soap (at home or otherwise) as soon as possible after practices and competitions; instructing students not to share equipment, clothing, towels, or personal grooming items; recommending that students wash their uniforms or sportswear after each use; requiring students to cover all wounds, cuts, and abrasions, especially during practice and competition; and ensuring that all Program sports equipment surfaces (*e.g.*, benches, mats) are cleaned and disinfected on a daily basis, using supplies provided by District.

c. Coaches – duty to inform students and parents/guardians. Service Provider shall take reasonable steps to inform students participating in Program sports and their parents or guardians about the risks of MRSA, including, but not limited to, providing the students and their parents or guardians with the Sports Medicine Alert for Students, Parents and Guardians about MRSA, prepared by CIF, and attached hereto as Exhibit A-2(vii), or any updated alert or information sheet at least once a year.

7. Performance Enhancement Drugs.

Service Provider agrees to adhere to the following standards regarding performance enhancement drugs.

a. Service Provider development and implementation of policy. Service Provider shall adopt a policy prohibiting the use and abuse of steroids or other performance enhancement drugs, which policy is subject to District approval. Service Provider may adopt District's policy or use the Steroids Policy Form prepared by CIF and attached hereto as Exhibit A-2(viii) (or any updated form) as a reference in developing its own policy, the form and content of which shall be subject to District's prior approval.

b. Student and parent/guardian agreement about policy. The policy shall require that all students participating in Program sports and their parents or guardians to agree in writing that the student will not use performance enhancement drugs except with the written prescription of a licensed physician in order to treat a medical condition.

c. Annual update. Students and student parents/guardians shall complete a new performance enhancement drug agreement each year. Service Provider agrees to train its coaches on its District-approved performance enhancement drug policy at least once a year.

d. Copies of agreement. Service Provider shall make two (2) copies of each agreement about the drug enhancement policy. Service Provider shall return the first copy to the student's parent or guardian. Service Provider shall retain the second copy for a period of at least three (3) years, and, upon District's request, provide the copies to District.

e. Applicability. At District's discretion, the requirements of this section, or any portion thereof, may be made applicable only to District's intermediate students (and thereby exempt in whole or part District's elementary students).

8. Event Emergency Guidelines.

a. Adoption of policy. Service Provider shall adopt an event emergency guideline protocol for all sporting events. The protocol shall be subject to District approval, which shall not be unreasonably withheld. Service Provider may adopt District's event emergency protocol or use the Event Emergency Guidelines prepared by CIF and attached hereto as Exhibit A-2(ix) (or any updated guidelines) as a reference in developing its own guidelines for District approval. The event emergency guideline protocol shall address, at minimum, and include protocols regarding specific threats, including, but not limited to, injuries, medical emergencies, fire, earthquake, severe weather, active shooters, other weapons, suspicious behavior, personnel harassment, missing child, abduction, controlled substances, assaults, and bomb threats.

b. Training regarding policy. Prior to implementing any Program sports activities, Service Provider must take reasonable steps to ensure that its coaches are informed about and well-versed in the District-approved event emergency policy.

c. Biennial review. If the Program is a multi-year program, Service Provider and District shall review and update the policy at least every two (2) years.

EXHIBIT A-3
ADMINISTRATION OF EPINEPHRINE AUTO-INJECTORS AND PROVISION OF EMERGENCY ASSISTANCE

For the purposes of this Exhibit A-3, Lead Agency and Enrichment Agency are referred to as "Service Provider," and the below obligations shall apply and pertain individually to each and every Lead Agency and to each and every Enrichment Agency providing services to the District under the Contract. Service Provider and District agree to operate the Program in accordance with the following requirements. Service Provider shall not administer any medication not explicitly set forth herein.

1. Requirements for Administration of Epinephrine (Epi-pen).

a. Obligation to Administer Epinephrine; Authorized Individuals.

Pursuant to Education Code section 49414, District shall provide emergency epinephrine and auto-injectors to school nurses or trained personnel who have volunteered to provide emergency medical aid to persons suffering or reasonably believed to be suffering from an anaphylactic reaction (*i.e.*, potentially life-threatening hypersensitivity to a substance). Service Provider shall designate those employees and/or volunteers that have volunteered to provide emergency medical aid to persons suffering or reasonably believed to be suffering from an anaphylactic reaction and provide District with a list of those individuals prior to the provision of any Services under this Agreement. Service Provider shall at all times maintain a designated employee and/or volunteer at all Program sites. Service Provider shall only allow its employees and/or volunteers who have received proper training as set forth below to administer an epinephrine auto-injector to a person suffering, or reasonably believed to be suffering, from an anaphylactic reaction if a District nurse is not onsite and when a physician is not immediately available. Any employee and/or volunteer of Service Provider that administers an epinephrine auto-injector to a person suffering, or reasonably believed to be suffering, from an anaphylactic reaction shall initiate emergency medical services or other appropriate medical follow up in accordance with the training materials that District retains onsite.

b. Training of Voluntary Service Provider Employees and Volunteers.

District shall provide all designated Service Provider employees and/or volunteers epinephrine training. All epinephrine training must be provided by a licensed physician or nurse and in compliance with the CDE's *Training Standards for the Administration of Epinephrine Auto-Injectors*, available online at http://www.cde.ca.gov/ls/he/hn/epiadmin.asp. The training shall cover at a minimum the information listed in the CDE's *Training Standards for the Administration of Epinephrine Auto-Injectors*, which includes (a) techniques for recognizing symptoms of anaphylaxis, (b) standards and procedures for the storage and emergency use of epinephrine auto-injectors, (c) emergency follow-up procedures, including calling 911 phone number and contacting, if possible, the student's parent/guardian and physician, and (d) instruction and certification in cardiopulmonary resuscitation. District warrants that it will provide training that complies with CDE guidelines and requirements. In the event of a conflict between the training

requirements set forth herein and in the CDE training standards, the requirements in the CDE training standards shall control. District shall retain all training materials at Program sites.

2. Epinephrine Prescriptions.

For each school site, District shall obtain from an authorizing physician and surgeon an epinephrine auto-injectors prescription that, at a minimum, includes for elementary schools, one regular epinephrine auto-injector and one junior epinephrine auto-injector, and for junior high schools and middle schools, if there are no pupils who require a junior epinephrine auto-injector, one regular epinephrine auto-injector. District shall be responsible for stocking the epinephrine auto-injector, restocking it if it is used and providing access to those employees and/or volunteers of Service Provider that have volunteered to provide emergency medical aid to persons suffering or reasonably believed to be suffering from an anaphylactic reaction. Service Provider shall promptly notify District no more than forty-eight (48) hours after any administration of an epinephrine auto-injector.

3. Requirements for the Provision of Emergency Assistance.

Service Provider shall at all times maintain an employee and/or volunteer at all Program sites to provide emergency assistance to any Program participant who is injured or suddenly becomes ill. Service Provider shall provide the necessary training in cardiopulmonary resuscitation (CPR), automated external defibrillator (AED) and first aid to its employees and/or volunteers who have volunteered to provide emergency assistance. Service Provider shall designate those employees and/or volunteers that have volunteered to provide emergency assistance and provide District with a list of those individuals prior to the provision of any Services under this Agreement. Service Provider shall only allow its employees and/or volunteers who have received proper certification to provide emergency assistance. For purposes of this Agreement, "emergency assistance" shall include the provision of CPR in the event of cardiac arrest; use of an AED to analyze a person's heart rhythm and deliver an electrical shock to restore heartbeat; and the provision of other forms of first aid to respond to common first aid emergencies, including burns, cuts, and head, neck and back injuries. Any employee and/or volunteer of Service Provider that provides emergency assistance shall initiate emergency medical services or other appropriate medical follow up in accordance with their training.

4. Copies of Documents.

Service Provider shall maintain a copy of all health care documents and provide a copy of same to District.

EXHIBIT B
COMPENSATION

For purposes of this Exhibit B, Lead Agency and Enrichment Agency are referred to as "Service Provider," and the below obligations shall apply and pertain individually to each and every Lead Agency and to each and every Enrichment Agency providing services to the District under the Contract.

I. The total compensation for Primary Services, including reimbursement for actual expenses, shall not exceed the amount set forth in the Agreement.

II. The total compensation for Additional Services, including reimbursement for actual expenses, shall not exceed the amount set forth in the Agreement.

III. Service Provider may utilize subcontractors as indicated in this Agreement. The hourly rate for any subcontractor is not to exceed the amount set forth in the Agreement.

IV. Within the grant amount, District will compensate Service Provider for Services performed upon submission of a valid invoice. Each invoice is to include:

A. Cover sheet with amount of current invoice, and totals subtracted from overall contract;
B. Monthly expenditure reports, including salaries for employees, supplies, trainings, and administrative costs, itemized by school site;
C. Monthly activity reports for each school, including trainings, lesson plans and examples of student work (Digital Format);
D. Certification that all employees, agents and contractors that will have contact with students and for whom a certification has not been previously provided: (1) have been properly fingerprinted, (2) have satisfied TB clearance, (3) are certified in first aid, AED, and CPR (including epinephrine administration), and (4) have been trained in mandated reporting; anti-harassment; sexual misconduct prevention; bullying prevention; discrimination prevention; suicide awareness and reporting; classroom management; social and emotional supports; quality standards for expanded learning; and emergency preparedness.
E. Line items for:
   1. All personnel, describing: the name of each staff person and the site where the staff person worked, the work performed, the days in the program and number of hours worked, and the hourly rate;
   2. All supplies properly charged to the Services;
   3. All travel properly charged to the Services;
   4. All equipment properly charged to the Services;
   5. All materials properly charged to the Services;
   6. All subcontractor labor, supplies, equipment, materials, and travel properly charged to the Services.
F. Calculation of matching funds.

V. Notwithstanding anything to the contrary in this Exhibit or the Contract, equipment, supplies or other materials whose current market value exceeds $500 per item must be purchased through the District and will remain an asset of the District in accordance with Education Code section 35168.

END OF EXHIBIT B

EXHIBIT C
INSURANCE

For purposes of this Exhibit C, Lead Agency and Enrichment Agency are referred to as "Service Provider," and the below obligations shall apply and pertain individually to each and every Lead Agency and to each and every Enrichment Agency providing services to the District under the Contract.

I. Insurance Requirements. Service Provider shall, at its sole cost and expense, provide and maintain insurance, acceptable to District, in full force and effect throughout the term of the Contract, against claims for injury to persons or damages to property which may arise from or in connection with the performance of work hereunder by Service Provider, its agents, representatives or employees. Service Provider and any and all subcontractors and vendors hired by Service Provider in connection with the Services described in the Contract shall provide the following scope and limits of insurance:

A. Scope and Limits of Insurance:

1. Commercial General Liability Insurance coverage in the amounts of Two Million Dollars ($2,000,000) per occurrence and Four Million Dollars ($4,000,000) in aggregate.

   Commercial General Liability insurance shall include products/completed operations, property damage, and personal and advertising injury coverage.

2. Automobile Liability Insurance, including owned, non-owned, and hired automobiles, as applicable, with coverage limits of One Million Dollars ($1,000,000) per accident for bodily injury and property damage.

   If Provider transports students or contracts to transport students, Automobile Liability Insurance shall be in the amount of Twenty Million Dollars ($20,000,000) per accident for bodily injury and property damage.

3. Workers' Compensation Insurance, as required by California law, on all of its employees engaged in work related to the performance of this Agreement. Provider shall procure and maintain Employers' Liability insurance coverage of $1,000,000 per accident or disease.

4. Professional Liability/Errors and Omissions Insurance in an amounts of One Million Dollars ($1,000,000) per occurrence and Two Million Dollars ($2,000,000) in aggregate.

5. Coverage for Abuse and Molestation or Child Sexual Assault in the amounts of Two Million Dollars ($2,000,000) per occurrence and Four Million Dollars ($4,000,000) in aggregate.

6. If the Contract is renewed beyond the initial term, then the District shall have the right to increase the foregoing minimum insurance amounts as set forth in the amendment to the Contract that extends the term; provided, however, that the Service Provider shall not be obligated to renew the term.

II. Other Provisions. Insurance policies required by the Contract shall contain the following provisions:

A. All Policies. Each insurance policy required by the Contract shall be endorsed and state the coverage shall not be suspended, voided, cancelled by the insurer or either party to the Contract, or reduced in coverage or in limits except after 30 days' prior written notice by certified mail, return receipt requested, has been given to the District.

B. Service Provider's and any and all subcontractors' insurance is primary and will not seek contribution from any other insurance available to the District. Service Provider further hereby waives any and all rights of subrogation that it may have against the District. Any insurance or self-insurance maintained by the District shall be excess of the Provider's insurance and shall not contribute with it. This requirement shall also apply to any excess or umbrella liability policies of the Service Provider. Required endorsements are listed below.

C. Service Provider's and any and all Service Provider subcontractor's Commercial General Liability insurance; Commercial Automobile Insurance; Liability Excess, Umbrella and/or Reinsurance; and Abuse and Molestation coverage shall name the District, its governing board, officers, administrators, managers, agents, employees, and/or volunteers as additional insureds. All endorsements specifying additional insureds or other requirements for any of the Insurance Policies shall be as indicated below or an equivalent endorsement reasonably acceptable to the District:

1. General Liability: CG 20 26 10 01
2. Primary, Non-Contributory: CG 20 01 04 13
3. Waiver of Subrogation: CG 24 04 05 09
4. Automobile Liability: CA 20 48 10 13

D. If any of the required policies provide coverage on a "claims made" basis:

1. The retroactive date must be shown on the certificate and must be before the date of the contract or the beginning of the Services.
2. Insurance must be maintained, and evidence of insurance must be provided for at least five (5) years after completion of the Services.
3. If coverage is canceled or non-renewed, and not replaced with another claims-made policy form with a retroactive date prior to the contract effective date, the Provider must purchase "extended reporting" coverage for a minimum of five (5) years after completion of the Services.

E. Acceptability of Insurers. Insurance is to be placed with insurers authorized to conduct business in the State of California and with a current A.M. Best's rating of no less than A: VII, unless otherwise acceptable to the District.

III. Other Requirements:

A. Service Provider and any and all subcontractors working for Service Provider shall provide certificates of insurance to the LEA as evidence of the insurance coverage required herein, not less than Fifteen (15) days prior to commencing work for the District, and at any other time upon the request of the District. Certificates of insurance will be deemed invalid if proper endorsements are not attached. Certificates of such insurance shall be filed with the District on or before commencement of the services under the Contract.

B. The Provider may use Umbrella or Excess Policies to provide the liability limits as required in the Contract. This form of insurance will be acceptable provided that all of the Primary and Umbrella or Excess Policies shall provide all of the insurance coverages herein required, including, but not limited to, additional insured endorsements, primary and non-contributory, additional insured, deductibles, indemnity, and defense requirements. The Umbrella or Excess policies shall be provided on a true "following form" or broader coverage basis, with coverage at least as broad as provided on the underlying Commercial General Liability insurance. No insurance policies maintained by the District, whether primary or excess, and which also apply to a loss covered hereunder, shall be called upon to contribute to a loss until the Service Provider's primary and excess liability policies are exhausted.

C. If the Service Provider or Service Provider's subcontractor(s) maintains broader coverage and/or higher limits than the minimums shown above, the District requires and shall be entitled to the broader coverage and/or higher limits maintained by the Service Provider. Any available insurance proceeds in excess of the specified minimum limits of insurance and coverage shall be available to the District.

D. Any self-insured retention(s) applicable to the insurance and/or coverage required by the foregoing provisions of the Contract must be declared to and approved by the District. Service Provider shall be responsible to pay that self-insured retention and the District shall not be responsible to pay these costs. In the event that Service Provider's self-insured retentions collectively total more than $50,000.00, the District reserves the right to request proof of Service Provider's financial solvency in relation to remittance thereof or require Service Provider to post a bond guaranteeing payment of the deductible, or both.

E. The procuring of any required policy or policies of insurance shall not be construed to limit Service Provider's or subcontractor's liability hereunder nor to fulfill the indemnification provisions and requirements of the Contract.

F. Failure on the part of the Service Provider, or any of its subcontractors, to procure or maintain required insurance shall constitute a material breach of contract under which the District may immediately terminate the Contract.

END OF EXHIBIT C

☐ Not Project Related

☐ Project #

EXHIBIT D
CONFLICT OF INTEREST CHECK

District Board Bylaw 9270 requires that the Superintendent or a designee make a determination, on a case-by-case basis, whether disclosure will be required from an independent contractor to comply with the District's Conflict of Interest Code.

Independent contractors are required to file disclosures when, pursuant to a contract with the District, the independent contractor will make certain specified government decisions or will perform the same or substantially the same duties for the District as a staff person would.

The services to be performed by Service Provider under the Agreement to which this Exhibit D is attached [] constitute **[X]** do not constitute governmental decisions or staff services within the meaning of the Conflict of Interest Code. Therefore, the Service Provider who will provide Services under the Agreement, [] is **[X]** is not subject to disclosure obligations.

Date: _____

By: _____
Lisa Franz, Director of Purchasing

Extracurricular Event or Activity
Assumption of Risk Form

Student name (Please print) _____

Birth date _____

Parent or legal guardian (Please print) _____

Student address _____

School/Local Educational Agency _____

Event or Activity Advisor (Staff) _____

Voluntary Extracurricular Event or Activity

- ❑ school-related athletics
- ❑ school-related club activities
- ❑ school-related cultural activities
- ❑ school-related performing arts activities
- ❑ school-related social activities
- ❑ School-related community activities
- ❑ Other: _____

I authorize my son/daughter, named above, to participate in the indicated voluntary extracurricular event or activity. I understand and acknowledge that voluntary extracurricular activities, by their very nature, pose the potential risk of serious injury and/or illness to the individuals who participate in such voluntary extracurricular events or activities.

This voluntary extracurricular event or activity, by its very nature, may pose some inherent risk of a participant being seriously injured, before, during, and/or after the activity or event, including transportation whether provided by the local educational agency (LEA) or not. These injuries may include, but are not limited to, the following:

1. Sprains and strains
2. Fractured bones
3. Lacerations, abrasions, and avulsions
4. Unconsciousness
5. Paralysis
6. Disfigurement
7. Loss of eyesight
8. Head injuries or concussion
9. Heat illness
10. Sudden cardiac arrest
11. Death
12. Exposure to infectious diseases

I understand and acknowledge that participation in voluntary extracurricular events or activities is completely elective and voluntary and is not required by the LEA/School for completion of promotion or graduation requirements. I also understand that, if I do not consent to my son's/daughter's participation in the voluntary extracurricular event or activity, he/she may be offered an alternative event or activity and possible credit for promotion or graduation may or may not be offered.

I understand that all participants are to abide by and accept all rules and requirements governing conduct and safety in the voluntary extracurricular event or activity. To the extent permitted by the Education Code or other applicable statutes, regulations, policies and procedures, any participant determined to be in violation of safety requirements, behavior standards or other prohibited conduct may be removed from this voluntary extracurricular event or activity.

I understand and acknowledge that in order to participate in these activities, I and my son/daughter agree to assume liability and responsibility for any and all potential risks that may be associated with participation in voluntary extracurricular events or activities.

I also understand that the LEA/School, due to the COVID-19 virus or other potential infectious diseases, has undertaken a plan to facilitate a safe environment for educational programs in addition to extracurricular, co-curricular and sport/athletic events or activities. In doing so, I further understand that the LEA/School has adopted plans designed to meet the requirements and recommendations of state agencies, health advisors and other responsible bodies. However, I also understand and acknowledge that despite the LEA's and School's efforts, the risk of infection from the COVID-19 virus, or others, cannot be eliminated at this time, and that my son/daughter may be exposed as a result. I also understand and acknowledge that in participating in this voluntary extracurricular event or activity, my son/daughter will increase his/her interaction with students and staff, and the corresponding risk of contact and infection, and that this may include functions involving other people and/or facilities other than the LEA's. These other students, instructors, assistants, and facilities are potentially operating under a different COVID-19 safety plan, further increasing the risk of exposure of my son/daughter. Finally, I understand, acknowledge, and agree that despite reasonable care and steps by the LEA/School, that the virus presents serious challenges to prevention and control, and reasonable efforts by the LEA/School does not assure that my son/daughter may not be infected, and that the infection may not be brought home. Despite all the above I am freely and voluntarily signing this "Extracurricular Event or Activity, Assumption of Risk Form" to enable and authorize my son/daughter to participate and releasing and discharging the LEA/School and its/their governing board, officers, agents, employees and/or volunteers from any liability for my son/daughter becoming infected in his/her participation in the event or activity.

I agree to, and do hereby release and hold the LEA/School and its governing board, officers, agents, employees and/or volunteers harmless for any and all claims; demands; causes of action; liability; damages; expenses; or loss of any sort, including bodily injury or death; because of or arising out of acts or omissions with respect to the voluntary extracurricular event or activity, including programs or procedures of the LEA/School for students and participation in such events or activities

I acknowledge that I have carefully read this "Extracurricular Event or Activity, Assumption of Risk Form" and that I understand and agree to its terms.

_____ _____
Signature (Student) Date

_____ _____
Signature (Parent or legal guardian) Date

_____ _____
Primary telephone Alternate telephone

Evento o Actividad Extracurricular
Formulario de Asunción de Riesgo

Nombre de estudiante (letra molde)	Fecha de nacimiento
Padre o tutor legal (Por favor imprima)	Dirección del estudiante
Escuela/Agencia Educativa Local	Asesor de eventos o actividades (personal)

Evento o actividad extracurricular voluntaria

- ❑ Atletismo relacionado con la escuela
- ❑ Actividades del club relacionadas con la escuela
- ❑ Actividades culturales relacionadas con la escuela
- ❑ Actividades de artes escénicas relacionadas con la escuela
- ❑ Actividades sociales relacionadas con la escuela
- ❑ Actividades comunitarias relacionadas con la escuela
- ❑ Otro: _____

Autorizo a mi hijo(a), nombrado anteriormente, a participar en el evento o actividad extracurricular. Entiendo y reconozco que las actividades, por su propia naturaleza, representan el riesgo potencial de lesiones y/o enfermedades graves para las personas que participan en dichos eventos o actividades.

Este evento o actividad, por su propia naturaleza, puede representar algún riesgo inherente de que un participante sufra lesiones graves, antes, durante y/o después de la actividad o evento, incluido el transporte, ya sea proporcionado por la agencia educativa local (LEA) o no. Estas lesiones pueden incluir, pero no se limitan a las siguientes:

1. Esguinces y distensiones
2. Quebraduras
3. Laceraciones, abrasiones y avulsiones
4. Inconsciencia
5. Parálisis
6. Desfiguración
7. Pérdida de la vista
8. Lesiones en la cabeza o conmoción cerebral
9. Enfermedades causadas por el calor
10. Paro cardíaco repentino
11. Muerte
12. Exposición a enfermedades infecciosas

Entiendo y reconozco que la participación en estos eventos o actividades es completamente electiva y voluntaria y no es requerida por la LEA o la escuela para completar los requisitos de promoción o graduación. También entiendo que, si no doy mi consentimiento para la participación de mi hijo(a) en el evento o actividad, se le puede ofrecer un evento o actividad alternativa y se le puede ofrecer o no un posible crédito para la graduación.

Entiendo que todos los participantes deben cumplir y aceptar todas las reglas y requisitos que rigen la conducta y la seguridad en el evento o actividad. En la medida permitida por el Código de Educación u otros estatutos, reglamentos, políticas y procedimientos aplicables, cualquier participante que se determine que viola los requisitos de seguridad, las normas de comportamiento u otra conducta prohibida puede ser eliminado de este evento o actividad.

Entiendo y reconozco que para participar en estas actividades, mi hijo(a) y yo aceptamos asumir la responsabilidad por todos y cada uno de los riesgos potenciales que puedan estar asociados con la participación en eventos o actividades.

También entiendo que la LEA/Escuela, debido al virus COVID-19 u otras enfermedades infecciosas potenciales, ha emprendido un plan para facilitar un entorno seguro para los programas educativos, además de eventos o actividades extracurriculares, cocurriculares y deportivos/atléticos. Al hacerlo, entiendo además que la LEA / Escuela ha adoptado planes diseñados para cumplir con los requisitos y recomendaciones de las agencias estatales, asesores de salud y otros organismos responsables. Sin embargo, también entiendo y reconozco que a pesar de los esfuerzos de la LEA y la escuela, el riesgo de infección por el virus COVID-19, u otras infecciones, no se puede eliminar en este momento, y que mi hijo(a) puede estar expuesto como resultado. También entiendo y reconozco que al participar en este evento o actividad extracurricular voluntaria, mi hijo(a) aumentará su interacción con los estudiantes y el personal, y el riesgo correspondiente de contacto e infección, y que esto puede incluir funciones que involucren a otras personas y/o instalaciones que no sean las LEA. Estos otros estudiantes, instructores, asistentes e instalaciones están operando probablemente bajo un plan de seguridad COVID-19 diferente, lo que aumenta aún más el riesgo de exposición de mi hijo(a). Finalmente, entiendo, reconozco y estoy de acuerdo en que, a pesar del cuidado razonable y los pasos de la LEA /Escuela, que el virus presenta serios desafíos para la prevención y el control, y los esfuerzos razonables de la LEA/Escuela no aseguran que mi hijo(a) no esté infectado y que la infección no se pueda llevar a casa. A pesar de todo lo anterior, estoy firmando libre y voluntariamente este formulario para permitir y autorizar a mi hijo(a) a participar y liberar y descargar a la LEA/Escuela y su junta directiva, funcionarios, agentes, empleados y/o voluntarios de cualquier responsabilidad si mi hijo(a) llegara a infectarse por su participación en el evento o actividad.

Acepto, y por la presente libero y eximo de responsabilidad a la LEA/Escuela y su junta directiva, funcionarios, agentes, empleados y/o voluntarios por cualquier reclamo; Demandas; causas de acción; responsabilidad; daños y perjuicios; expensas; o pérdida de cualquier tipo, incluidas lesiones corporales o muerte; debido a o que surjan de actos u omisiones con respecto al evento o actividad, incluidos los programas o procedimientos de la LEA/Escuela para estudiantes y la participación en dichos eventos o actividades

Reconozco que he leído cuidadosamente este formulario y que entiendo y acepto sus términos.

Firma (Estudiante)	Fecha
Firma (Padre o Tutor Legal)	Fecha
Teléfono principal	Teléfono alternativo

Oxnard School District

Concussion Information Sheet

A concussion is a brain injury and all brain injuries are serious. They are caused by a bump, blow, or jolt to the head, or by a blow to another part of the body with the force transmitted to the head. They can range from mild to severe and can disrupt the way the brain normally works. Even though most concussions are mild, **all concussions are potentially serious and may result in complications including prolonged brain damage and death if not recognized and managed properly.** In other words, even a "ding" or a bump on the head can be serious. You cannot see a concussion and most sports concussions occur without loss of consciousness. Signs and symptoms of concussion may show up right after the injury or can take hours or days to fully appear. If your child reports any symptoms of concussion, or if you notice the symptoms or signs of concussion yourself, seek medical attention right away.

Symptoms may include one or more of the following:	
• Headaches • "Pressure in head" • Nausea or vomiting • Neck pain • Balance problems or dizziness • Blurred, double, or fuzzy vision • Sensitivity to light or noise • Feeling sluggish or slowed down • Feeling foggy or groggy • Drowsiness • Change in sleep patterns	• Amnesia • "Don't feel right" • Fatigue or low energy • Sadness • Nervousness or anxiety • Irritability • More emotional • Confusion • Concentration or memory problems (forgetting game plays) • Repeating the same question/comment

Signs observed by teammates, parents and coaches include:
• Appears dazed • Vacant facial expression • Confused about assignment • Forgets plays • Is unsure of game, score, or opponent • Moves clumsily or displays incoordination • Answers questions slowly • Slurred speech • Shows behavior or personality changes • Can't recall events prior to hit • Can't recall events after hit • Seizures or convulsions • Any change in typical behavior or personality • Loses consciousness

What can happen if my child keeps on playing with a concussion or returns to soon?

Athletes with the signs and symptoms of concussion should be removed from play immediately. Continuing to play with the signs and symptoms of a concussion leaves the young athlete especially vulnerable to greater injury. There is an increased risk of significant damage from a concussion for a period of time after that concussion occurs, particularly if the athlete suffers another concussion before completely recovering from the first one. This can lead to prolonged recovery, or even to severe brain swelling (second impact syndrome) with devastating and even fatal consequences. It is well known that adolescent or teenage athletes will often under report symptoms of injuries. And concussions are no different. As a result, education of administrators, coaches, parents and students is the key for student-athlete's safety.

If you think your child has suffered a concussion

Any athlete even suspected of suffering a concussion should be removed from the game or practice immediately. No athlete may return to activity after an apparent head injury or concussion, regardless of how mild it seems or how quickly symptoms clear, without medical clearance. Close observation of the athlete should continue for several hours. California Education Code section 49475 and CIF Bylaw 313 now require implementation of long and well-established return to play concussion guidelines that have been recommended for several years.

You should also inform your child's coach if you think that your child may have a concussion. Remember it is better to miss one game than miss the whole season. And when in doubt, the athlete sits out.

Return to Play (RTP)

Concussion symptoms should be completely gone before returning to full practice or competition. A RTP progression involves a gradual, step-wise increase in physical effort, sports-specific activities and the risk for contact. If symptoms occur with activity, the progression should be stopped. If there are no symptoms the next day, exercise can be restarted at the previous stage.

RTP after concussion should occur only with medical clearance from a medical doctor trained in the evaluation and management of concussions, and a step-wise progression program monitored by an athletic trainer, coach, or other identified school administrator. Please see cifstate.org for a graduated return to play plan. Return to play (i.e., full practice and competition) must be no sooner than 7 days after the concussion diagnosis has been made by a physician.

For current and up-to-date information on concussions you can go to:
http://www.cdc.gov/ConcussionInYouthSports/

_____	_____	_____
Student-athlete Name Printed	Student-athlete Signature	Date
_____	_____	_____
Parent or Legal Guardian Printed	Parent or Legal Guardian Signature	Date

Legal References:
California Education Code section 49475,
California Interscholastic Federation Bylaw 313

Adapted from the Center for Disease Control and Prevention and the CIF

Oxnard School District

Información acerca de las concusiones cerebrales

Una concusión es una herida cerebral y todas las heridas cerebrales son graves. Dichas heridas son causadas por un golpe ligero, un golpe fuerte a la cabeza, un movimiento repentino de la cabeza o por un golpe fuerte a otra parte del cuerpo con fuerza que se trasmite a la cabeza. Las heridas varían entre ligeras o graves y pueden interrumpir la manera en la que el cerebro funciona. Aunque la mayoría de las concusiones cerebrales son ligeras, **todas las concusiones cerebrales tienen el potencial de ser graves y si no se reconocen y tratan correctamente podrían tener como resultado complicaciones incluyendo daño cerebral prolongado o la muerte.** Eso quiere decir que cualquier "golpecito" a la cabeza podría ser grave. Las concusiones cerebrales no son visibles y en su mayoría las concusiones cerebrales que ocurren durante los deportes no ocasionan la perdida de conciencia. Las señales y síntomas de una concusión cerebral podrían aparecer inmediatamente después de una herida o después de horas o días. Si su hijo(a) reporta cualquier síntoma de una concusión cerebral, o si se da cuenta de los síntomas de una concusión cerebral, por favor consiga atención médica sin demora.

Los siguientes son algunos de los síntomas de una concusión:	
• Dolor de cabeza	• Amnesia
• "Presión en la cabeza"	• "No se siente bien"
• Nausea o vómito	• Fatiga o energía baja
• Dolor de cuello	• Tristeza
• Problemas de equilibrio o mareos	• Nervios o ansiedad
• Visión borrosa o visión doble	• Irritabilidad
• Sensibilidad a la luz o ruido	• Más sensible
• Decaído	• Confundido
• Adormecido	• Problemas con concentración o memoria (por ejemplo: olvidar las jugadas)
• Mareado	• Repetir la misma pregunta o comentario
• Cambios en los hábitos de dormir	

Los siguientes síntomas son observados por compañeros, padres y entrenadores:
• Parece desorientado
• Tiene una expresión facial vacía
• Está confundido acerca de la tarea o actividad
• Se olvida de las jugadas
• Está confundido sobre el juego, los puntos o el oponente
• Se mueve torpemente o muestra una falta de coordinación
• Contesta las preguntas lentamente
• Arrastra las palabras
• Muestra cambios de comportamiento o personalidad
• No puede recordar los eventos que sucedieron antes de la colisión
• No puede recordar los eventos que sucedieron después de la colisión
• Ataques o convulsiones
• Cualquier cambio en el comportamiento típico o personalidad
• Perdida de la conciencia

¿Qué puede pasar si mi hijo(a) sigue jugando con una concusión cerebral o regresa a jugar antes de que este recuperado?

Los deportistas con señales o síntomas de una concusión cerebral deben dejar de jugar inmediatamente. Continuar jugando con las señales o síntomas de una concusión pone al deportista en riesgo de sufrir una herida más grave. La probabilidad de que se sufra daño significativo de una concusión aumenta cuando ha pasado un periodo de tiempo largo después de que sucedió la concusión, sobre todo si el deportista sufre otra concusión antes de recuperarse completamente de la primera. Eso puede traer como consecuencia una recuperación más prolongada o incluso una hinchazón cerebral (síndrome de segundo impacto) con consecuencias devastadoras o fatales. Es bien conocido que los deportistas adolescentes no reportan mucho los síntomas de sus heridas. Eso es el caso también con las concusiones cerebrales. Por lo mismo es importante que los administradores, entrenadores, padres y estudiantes estén bien informados, el cual es clave para la seguridad de los estudiantes deportistas.

Si cree que su hijo(a) ha sufrido una concusión

En cualquier situación donde se sospecha que un deportista tiene una concusión, es importante sacar a este estudiante del juego o entrenamiento inmediatamente. Ningún deportista puede volver a participar en la actividad después de sufrir una herida de cabeza o concusión cerebral sin el permiso de un doctor, no importa si la herida parece ser ligera o los síntomas desaparecen rápidamente. Se debe de observar cuidadosamente el mejoramiento del deportista por varias horas. Código Educativo de California sección 49475 y estatuto 313 de la Federación Interescolar de California (CIF por sus siglas en inglés) requiere la implementación de las siguientes normas para regresar a jugar un deporte después de sufrir una concusión, las cuales se han recomendado por muchos años.

También debe informar al entrenador(a) de su hijo(a) si piensa que ha sufrido una concusión cerebral. Recuerde que es mejor faltar un partido que faltar toda la temporada. Si existe alguna duda de que el deportista sufrió una concusión cerebral o no, se tomará precauciones y no podrá jugar.

Volver a Jugar

Síntomas de concusión cerebral deben ser desaparecido por completo antes de volver a la práctica completa o la competencia. Un volver a jugar la progresión implica un aumento gradual, paso a paso en el esfuerzo físico, las actividades de los deportes específicos y el riesgo para el contacto. Si se presentan síntomas con la actividad, la progresión se debe parar. Si no hay síntomas al día siguiente, el ejercicio puede iniciarse de nuevo en la etapa anterior.

Volver a jugar después de la concusión cerebral debe ocurrir sólo con autorización médica de un médico entrenado en la evaluación y la gestión de las concusiones cerebrales. Volver a jugar debe ser supervisado por un entrenador, entrenador atlético o administrador identificado por la escuela. Por favor, consulte cifstate.org para un retorno gradual a jugar el plan. Retorno a la práctica completa y la competencia debe ser no antes de 7 días después del diagnóstico concusión ha sido hecha por un médico.

Si desea información actual acerca de las concusiones cerebrales por favor visiten el sitio en Internet:
http://www.cdc.gov/ConcussionInYouthSports/

Nombre del estudiante deportista	Firma del estudiante deportista	Fecha
Nombre del padre, madre o tutor	Firma del padre, madre o tutor	Fecha

Adaptado del Centro de Control de Enfermedades y Federación Interescolar de California

FIELD TRIP OR EXCURSION AUTHORIZATION AND MEDICAL TREATMENT AUTHORIZATION

❑ In-state **(Minor)** ❑ Out-of-state

Completion of this form is required for all field trips / excursions.

Name of Student _____ Date of Birth (for emergency purposes) _____

Student Address _____ Name of School _____

Class/ Program _____ Teacher _____

Date(s) of Field Trip/Excursion _____ Location of Field Trip/Excursion _____

Transportation Provider _____

1. **I hereby give permission** for my child or ward (named above) to participate in this Field Trip or Excursion.
2. **Regarding special assistance/accommodations:** Is special assistance/accommodation necessary for your child or ward to participate in this Field Trip or Excursion?

   ❑ No ❑ Yes. Please explain _____
3. **Regarding administration of medication:** All medications must be prescribed, **including** over-the-counter medications. Is your child or ward required to take medication during the course of this Field Trip or Excursion?

   ❑ No ❑Yes **Parent/Guardian must contact the school office** to obtain form SFA-5010, "Authorization for Any Medication Taken during School Hours," form SFA-5030, "Authorization For Medications Taken During School Hours, School Activities and Field Trips" or form SFA-5040, "Extended Field Trip or Excursion Medication Authorization" (which must be signed by parent/guardian and child or ward's physician).
4. **If you have health insurance, please list:**

   Health Insurance Company _____ Policy Number _____ Group Number _____
5. **Please list additional emergency contacts, should the parent/guardian be unavailable:**

   Emergency Contact _____ Telephone _____

   Emergency Contact _____ Telephone _____
6. **Conduct**: I fully understand that all participants are to abide by and accept all rules and requirements governing conduct during the Field Trip or Excursion. To the extent permitted by the Education Code, any participant determined to be in violation of behavior standards will be sent home at their own or their parent/guardian's expense.
7. **Waiver of Claims for Liability:** I understand that California Education Code, Section 35330 provides:

   "All persons making the field trip or excursion shall be deemed to have waived all claims against the district, a charter school, or the State of California for injury, accident, illness, or death occurring during or by reason of the field trip or excursion. All adults taking out-of-state field trips or excursions and all parents or guardians of pupils taking out-of-state field trips or excursions shall sign a statement waiving all claims."

   In providing consent for my child or ward to attend and participate in this Field Trip or Excursion, I waive all claims against the district for injury, accident, illness, or death occurring during or by reason of this Field Trip or Excursion.

   I understand that the District does not require my child or ward to participate in the Field Trip or Excursion and I make this request voluntarily because I desire my child or ward to participate in the Field Trip or Excursion. I also understand that, if I do not consent to my child or ward's participation, my child or ward will be involved in alternative supervised activities, for which my child or ward will receive full credit.
8. **In the event of illness or injury**, I hereby consent to whatever transportation, x-ray, examination, anesthetic, medical, dental, or surgical diagnosis or treatment and hospital care from a licensed physician as deemed necessary for the safety and welfare of my child or ward. It is understood that the resulting expenses will be the responsibility of the child or ward's parent(s)/guardian(s).
9. **I have carefully read this authorization and fully understand its contents and voluntarily consent to its terms and conditions.**

Signature of Parent/Guardian _____ Date _____

Home telephone _____ Work telephone _____ Mobile telephone or pager _____

AUTORIZACIÓN PARA PASEO EDUCATIVO Y EXCURSIÓN Y AUTORIZACIÓN PARA TRATAMIENTO MEDICO

(Menor de Edad)

❑ Dentro del Estado ❑ Fuera Del Estado

Es un requisito completen esta forma para todos las paseos educativos o excursiones.

Nombre del Estudiante

Feche de Nacimiento (para los propósitos de emergencia)

Dirección del Estudiante

Nombre de la Escuela

Clase/Programa

Maestro

Fecha(s) de Paseo Educativo/ la Excursión

Ubicación del Paseo Educativo / la Excursión

Proveedor de Transporte Escolar

1. **Por medio de la presente autorizó que mi hijo(a) o menor de edad (nombre escrito anteriormente) para participar en este paseo educativo o excursión.**
2. **Con respecto a la asistencia especial o modificaciones**: ¿Es necesario que se le facilite asistencia especial o modificaciones a su hijo(a) o menor de edad para que participe en este paseo educativo o excursión?

   ❑ No ❑ Si Explique por favor. _____
3. **Con respecto a la administración de medicamento**: Todos los medicamentos deben ser recetados, **incluyendo** los medicamentos sin receta. ¿Es requisito que su hijo(a) o menor de edad tome medicamento durante el curso de este paseo educativo o excursión?

   ❑ No ❑ Si **El padre o tutor legal debe comunicarse con su escuela** para obtener la solicitud SFA-5010S, "Autorización para tomar cualquier medicamento durante el horario escolar," forma SFA-5030S, "Autorización Para Cualquier Medicamento Tomado Durante Horas Escolares, Actividades Escolares, Y Paseo," o la forma SFA-5040S, "Extensión de la solicitud de autorización para tomar medicamento durante el paseo educativo y la excursión" (el cual debe ser firmado por el padre o tutor legal o el médico del niño(a) o menor de edad).
4. **Si usted tiene seguro médico, por favor regístrelo:**

   Compañía de Seguro Médico | Número de Póliza | Número de Grupo
5. **Por favor enumere los nombres de contacto de emergencia adicional, si el padre/tutor no están disponible:**

   Contacto de emergencia | Teléfono

   Contacto de emergencia | Teléfono
6. **Conducta:** Yo comprendo cabalmente que todos los participantes deben de acatar y aceptar todas las reglas y los requisitos que rigen la conducta durante el Paseo Educativo o la Excursión. Hasta cierto punto permitido por el Código de Educación, cualquier participante que se determine estar en violación de las normas de conducta será enviado a casa a gasto propio del participante o gasto de sus padres o tutores legales.
7. **Renuncia de reclamaciones:** Comprendo que el artículo 35330 del Código Educativo de California establece la siguiente información:

   "Todas las personas participantes en los paseos educativos o las excursiones considerarán renunciar a todos los derechos (reclamaciones) en contra del distrito, una escuela autónoma, o el Estado de California por motivo de una lesión, un accidente, una enfermedad o fallecimiento ocurrido durante ó a causa del paseo educativo o la excursión. Todos los adultos que realicen paseos educativos o excursiones fuera del estado y todos los padres de familia o tutores legales de los alumnos que participen en paseos educativos o excursiones fuera del estado firmarán una declaración renunciando a todos los derechos."

   Al proveerle consentimiento a mi hijo(a) o al menor de edad para asistir y participar en este paseo educativo o excursión, yo renuncio a todas las reclamaciones en contra del distrito por motivo de una lesión, un accidente, una enfermedad, o fallecimiento ocurrido durante o por consecuencia de este paseo educativo o excursión.

   Yo comprendo que el distrito no requiere la participación de mi hijo(a) o del menor de edad en este paseo educativo o excursión y yo presento esta petición voluntariamente, debido a que deseo que mi hijo(a) o el menor de edad participe en el paseo educativo o excursión. Igualmente, comprendo que, si no autorizo la participación de mi hijo(a) o del menor de edad, éste participará en actividades alternativas, por las cuales mi hijo(a) o el menor de edad recibirá créditos completos.
8. **En caso de una enfermedad o una lesión**, por la presente doy consentimiento de cualquier transporte, radiografías, examen, anestesia, diagnostico quirúrgico médico, dental o tratamiento y cuidado de hospital por parte de un médico acreditado considerado necesario para la seguridad y el bienestar de mi hijo o del menor de edad. Queda entendido que los gastos generados serán la responsabilidad del (de los) padre(s) / del (de los) tutor(es) del menor de edad.
9. **He leído cuidadosamente esta solicitud, comprendo cabalmente su contexto y voluntariamente acepto los términos y su proceso.**

Firma de los Padres/Tutor

Fecha

Teléfono de Casa | Teléfono de Trabajo | Teléfono de celular o bíper

OXNARD SCHOOL DISTRICT

Parent/Student CIF Heat Illness Information Sheet

Why am I getting this information sheet?

You are receiving this information sheet about Heat Illness because of California state law AB 2800 (effective January 1, 2019), now Education Code § 35179 and CIF Bylaws 22.B.(9) and 503.K (Approved Federated Council January 31, 2019):

1. The law requires a student athlete who has been removed from practice or play after displaying signs and symptoms associated with heat illness must receive a written note from a licensed health care provider before returning to practice.
2. Before an athlete can start the season and begin practice in a sport, a Heat Illness information sheet must be signed and returned to the school by the athlete and the parent or guardian.

Every 2 years all coaches are required to receive training about concussions (AB 1451), heat illness (AB 2800) as well as certification in First Aid training, CPR, and AEDs (life-saving electrical devices that can be used during CPR).

What is Heat Illness and how would I recognize it?

Exercise produces heat within the body and can increase the player's body temperature. Add to this a hot or humid day and any barriers to heat loss such as padding and equipment, and the temperature of the individual can become dangerously high.

Heat Illness occurs when metabolically produced heat combines with that gained from the environment to exceed the heat and large sweat losses. Young athletes should be pre-screened at their pre-participation physical exam form education/supplement use, cardiac disease, history of sickle cell trait, and previous heat injury. Athletes with any of these factors should be supervised closely during strenuous activities in a hot climate. Fatal heat stroke occurs most frequently among obese high school middle lineman.

Much of one's body heat is eliminated by sweat. Once this water leaves the body, it must be replaced. Along with water loss, many other minerals are lost in the sweat. Most of the commercial drinks now available contain these minerals, such as Gatorade, etc., but just plain water is all that is really required because the athlete will replace the lost minerals with his/her normal diet.

PREVENTION: There are several steps which can be taken to prevent heat illness from occurring:

ADEQUATE HYDRATION: The athlete should arrive at practice well-hydrated to reduce the risk of dehydration. The color of the urine can provide a quick guess at how hydrated the athlete. If the urine is dark like apple juice means the athlete is dehydrated. If the urine is light like lemonade in color means the athlete seems adequately hydrated.

Water or sports drinks should be readily available to athletes during practice and should be served ideally chilled in containers that allow adequate volumes of fluid to be ingested.

Water breaks should be given at least every 30-45 minutes and should be long enough to allow athletes to ingest adequate volumes of fluid.

Athletes should be instructed to continue fluid replacement in between practice sessions.

GRADUAL ACCLIMATIZATION: Intensity and duration of exercise should be gradually increased over a period of 7-14 days to give athletes' time to build fitness levels and become accustomed to practicing in the heat. Protective equipment should be introduced in phases (start with helmet, progress to helmet and shoulder pads, and finally fully uniform).

HEAT EXHAUSTION: Inability to continue exercise due to heat-induced symptoms. Occurs with an elevated body-core temperature between 97- and 104-degrees Fahrenheit.

• Dizziness, lightheadedness, weakness	• Profuse sweating
• Headache	• Cool, clammy skin
• Nausea	• Hyperventilation
• Diarrhea, urge to defecate	• Decreased urine output
• Pallor, chills	

TREATMENT: Stop exercise, move player to a cool place, remove excess clothing, give fluids if conscious, COOL BODY: fans, cold water, ice towels, or ice packs. Fluid replacement should occur as soon as possible. The athlete should be referred to a hospital emergency if recovery is not rapid. When in doubt, CALL 911. Athletes with heat exhaustion should be assessed by a physician as soon as possible in all cases.

HEAT STROKE: Dysfunction or shutdown of body systems due to elevated body temperature which cannot be controlled. This occurs with a body-core temperature greater than 107 degrees Fahrenheit.

WARNING SYMPTOMS:

This is a MEDICAL EMERGENCY. Death may result if not treated properly and rapidly.

Treatment: Stop exercise, Call 911, remove from heat, remove clothing, immerse athlete in cold water for aggressive, rapid cooling (if immersion is not possible, cool the athlete as described for heat exhaustion), monitor vital signs until paramedics arrive.

Signs observed by teammates, parents and coaches include:	
• Dizziness	• Weakness
• Drowsiness, loss of consciousness	• Hot and wet or dry skin
• Seizures	• Rapid heartbeat, low blood pressure
• Staggering, disorientation	• Hyperventilation
• Behavioral/cognitive changes (confusion, irritability, aggressiveness, hysteria, emotional instability)	• Vomiting, diarrhea

Final Thoughts for Parents and Guardians:

Heat stress should be considered when planning and preparing for any sports activity. Summer and fall sports are conducted in very hot and humid weather in many parts of the California. Many of the heat problems have been associated with football, due to added equipment which acts as a barrier to heat dissipation. Several heatstroke deaths continue to occur each season in the United States. There is no excuse for heatstroke deaths if the proper precautions are taken.

You should also feel comfortable talking to the coaches or athletic trainer about possible heat illness signs and symptoms that you may be seeing in your child.

I acknowledge that I have received and read the CIF Heat Illness Information Sheet.

Student-Athlete Name - *Printed*	Student-Athlete - *Signature*	Date
Parent Or Legal Guardian Name - *Printed*	Parent or Legal Guardian - *Signature*	Date

DISTRITO ESCOLAR DE OXNARD

Hoja de información CIF para padres/estudiantes referente a la insolación

¿Por qué me han enviado esta información?

Usted ha recibido esta hoja informativa referente a la insolación debido a lo indicado por la Ley AB 2800 de California (efectiva el 1° de enero del 2019), el cual ahora es parte del Código de Educación § 35179 y de los reglamentos CIF 22.B.(9) y 503.K (aprobados por el Concilio Federal el 31 de enero del 2019):

1. La ley requiere que cualquier atleta estudiante que haya sido excluido de las prácticas o de algún partido debido a que ha mostrado señales y síntomas relacionados con la insolación (infarto de calor), debe recibir una nota escrita de un proveedor acreditado de cuidados médicos antes de regresar a las prácticas de atletismo.
2. Antes que un atleta pueda comenzar la temporada y comience las prácticas deportivas, los padres o tutores legales deben firmar y entregar a la escuela una Hoja de información sobre la insolación.

Cada dos años todos los entrenadores tienen el requisito de recibir entrenamiento sobre sobre las contusiones cerebrales (AB 1451), la insolación (AB 2800) al igual que una certificación de entrenamiento sobre primeros auxilios, resucitación cardiopulmonar (CPR, en inglés) y los instrumentos eléctricos (AEDs, en inglés) que se pueden utilizar para salvar la vida durante una resucitación cardiopulmonar (CPR).

¿Qué es la insolación y como puedo identificar los síntomas?

El ejercicio produce calor dentro del cuerpo y puede incrementar la temperatura del cuerpo del atleta. Si a esto se agregan un día caluroso o húmedo, más las barreras que impiden la disipación del calor como el equipo de amortiguación en el uniforme deportivo, la temperatura corporal del individuo puede aumentar peligrosamente.

La insolación ocurre cuando el calor producido por el metabolismo corporal se combina con el calor que proviene del medioambiente, lo que ocasiona calor excesivo y grandes pérdidas de sudor. Previo a su participación, los atletas jóvenes deben ser evaluados durante su examen médico para diagnosticar enfermedades cardiacas, historial de células falciformes (sickle cell trait, en inglés) y traumas previos debido al calor. Los atletas que presenten cualquiera de estos casos deben ser supervisados cuidadosamente durante las actividades estrenuas realizadas en climas calientes. El infarto fatal debido al calor ocurre más frecuentemente entre los atletas obesos de preparatoria que juegan la posición de defensas medios.

La mayoría del calor corporal es eliminado por medio del sudor. El líquido debe ser reemplazado después que ha salido del cuerpo. Junto con la perdida de agua, el cuerpo pierde muchos otros minerales por medio del sudor. La mayoría de las bebidas comerciales disponibles, tales como Gatorade, etc., contienen estos minerales; sin embargo, lo que realmente se necesita es solamente agua debido a que el atleta recuperará los minerales perdidos por medio de su dieta regular.

PREVENCIÓN: Existen varios pasos que deben seguirse para prevenir un infarto debido al calor:

LA HIDRATACIÓN APROPIADA: El atleta debe llegar a sus prácticas deportivas bien hidratado para reducir el riesgo de deshidratación. El color de la orina puede mostrar fácilmente el nivel de hidratación del atleta. Si la orina es obscura parecido al jugo de manzana, eso significa el atleta está deshidratado. Si la orina es clara como el color de la limonada, eso significa que el atleta está propiamente hidratado.

En las prácticas debe haber agua y bebidas deportivas fácilmente disponibles para los atletas y de preferencia deben servirse frías y en envases que permitan la ingestión de líquidos en volúmenes apropiados.

También debe haber recesos para beber agua por lo menos cada 30 o 45 minutos y los recesos deben ser suficientemente largos para ingerir volúmenes apropiados de líquidos.

A los atletas se les debe instruir que deben continuar remplazando los líquidos antes y después de las sesiones de práctica.

LA ACLIMATACIÓN GRADUAL: La intensidad y la duración del ejercicio debe incrementarse gradualmente durante un periodo de 7 a 14 días para que el atleta pueda alcanzar niveles apropiados de aptitud física y su cuerpo se acostumbre a practicar en el calor. El equipo protector debe introducirse de manera gradual (comenzando con el casco, después el casco y las hombreras, y finalmente el uniforme completo).

EL AGOTAMIENTO DEBIDO AL CALOR: Es la inhabilidad de continuar ejercitando debido a los síntomas producidos por el calor. Esto ocurre cuando la temperatura básica del cuerpo se encuentra entre los 97 y los 104 grados Fahrenheit.

• Vértigo, mareo, debilidad	• Sudor abundante
• Dolor de cabeza	• Piel viscosa y fría
• Náusea	• Hiperventilación
• Diarrea, urgencia para defecar	• Reducción en la producción de orina
• Palidez, escalofríos	

TRATAMIENTO: Dejar de ejercitar, acudir a un lugar frío, quitar la ropa excesiva, beber líquidos si la persona está consiente, ENFRIAR EL CUERPO: con ventiladores, agua fría, toallas heladas, o esponjas húmedas congeladas (ice packs). Debe comenzar la recuperación de líquidos tan pronto como sea posible. Si su recuperación no ese rápida, el atleta debe ser llevado a la sala de emergencias del hospital. Si existen dudas, LLAME AL 911. En todos los casos, los atletas que sufren agotamiento debido al calor deben ser evaluados por un médico tan pronto como sea posible.

INFARTO DEBIDO AL CALOR: Es el mal funcionamiento o paralización de los sistemas corporales debido a la alta temperatura del cuerpo la cual está fuera de control. Esto ocurre cuando la temperatura básica del cuerpo es mayor a los 107 grados Fahrenheit.

SÍNTOMAS DE ALARMA:

Los siguientes síntomas representan una EMERGENCIA MÉDICA. Podría ocasionar la muerte si no se ofrece tratamiento médico inmediato y apropiado.

Tratamiento: dejar de ejercitar, llamar al 911, alejar del calor, desvestirse, sumergir al atleta en agua fría para un enfriamiento rápido y eficaz (si no es posible sumergir al atleta, enfriar al atleta siguiendo el tratamiento para el agotamiento debido al calor), vigilando los signos vitales hasta que lleguen los paramédicos.

Los síntomas que han sido observados por los jugadores, padres y entrenadores incluyen:	
• Mareos (vértigo)	• Debilidad
• Letargo (adormecimiento), quedar inconsciente	• Piel caliente, húmeda o seca
• Convulsiones (ataques epilépticos)	• Pulso rápido, baja presión sanguínea
• Tambaleo, tropiezos, desorientación	• Hiperventilación
• Cambios cognitivos y de comportamiento (confusión, irritabilidad, agresividad, histeria, inestabilidad emocional)	• Vómito, diarrea

Consejos finales para los padres y tutores legales:

Cada vez que planee y prepare cualquier actividad deportiva usted debe tomar en cuenta el estrés que será producido por el calor. En varias regiones de California, los deportes de verano y otoño a menudo se realizan en climas muy calientes y húmedos. Muchos de los problemas ocasionados por el calor se relacionan con el futbol Americano, debido al equipo adicional que los atletas deben vestir y el cual actúa como una barrera que impide la disipación del calor. Durante cada temporada deportiva en los Estados Unidos continúan sucediendo varias muertes debido a los infartos por el calor. Si se toman las precauciones apropiadas, no existe ninguna excusa para permitir que suceda una muerte debido a infarto por el calor.

Usted debe tener la confianza de hablar con los entrenadores o manejadores de atletismo referente a los posibles síntomas de insolación y sobre los síntomas que tal vez usted observa en su hijo.

Yo confirmo que he recibido y leído La Hoja de información CIF referente a la insolación.

Nombre del estudiante/atleta – *Letra de molde*	Firma del estudiante/atleta	Fecha
Nombre de padre/madre/tutor legal - *Letra de molde*	Firma de padre/madre/tutor legal	Fecha

OXNARD SCHOOL DISTRICT

Prescription Opioids: What You Need to Know

Prescription opioids can be used to help relieve moderate-to-severe pain and are often prescribed following a surgery or injury, or for certain health conditions. These medications can be an important part of treatment but also come with serious risks. It is important to work with your health care provider to make sure you are getting the safest, most effective care.

Prescription opioids carry serious risks of addiction and overdose, especially with prolonged use. An opioid overdose, often marked by slowed breathing, can cause sudden death. The use of prescription opioids can have a number of side effects as well, even when taken as directed.

Side effects may include one or more of the following:

- Tolerance - meaning you might need to take more of a medication for the same pain relief
- Physical dependence—meaning you have symptoms of withdrawal when a medication is stopped
- Increased sensitivity to pain
- Constipation
- Nausea, vomiting, and dry mouth
- Sleepiness and dizziness
- Confusion
- Depression
- Low levels of testosterone that can result in lower sex drive, energy, and strength
- Itching and sweating

Risks are greater with the following:

- History of drug misuse, substance use disorder, or overdose
- Mental health conditions (such as depression or anxiety)
- Sleep apnea
- Older age (65 years or older)
- Pregnancy

Unless specifically advised by your health care provider, medications to avoid include:

- Benzodiazepines (such as Xanax or Valium)
- Muscle relaxants (such as Soma or Flexeril)
- Hypnotics (such as Ambien or Lunesta)
- Other prescription opioids
- In addition, avoid alcohol while taking prescription opioids.

KNOW YOUR OPTIONS

Talk to your health care provider about ways to manage your pain that do not involve prescription opioids. Some of these options may actually work better and have fewer risks and side effects. Options may include:

- Pain relievers such as acetaminophen, ibuprofen, and naproxen
- Some medications that are also used for depression or seizures
- Physical therapy and exercise
- Cognitive behavioral therapy, a psychological, goal-directed approach, in which patients learn how to modify physical, behavioral, and emotional triggers of pain and stress.

IF YOU ARE PRESCRIBED OPIOIDS FOR PAIN:

- Never take opioids in greater amounts or more often than prescribed.
- Follow up with your primary health care provider within.
  - Work together to create a plan on how to manage your pain.
  - Talk about ways to help manage your pain that don't involve prescription opioids.
  - Talk about any and all concerns and side effects.
- Help prevent misuse and abuse.
  - Never sell or share prescription opioids.
  - Never use another person's prescription opioids.
- Store prescription opioids in a secure place and out of reach of others (this may include visitors, children, friends, and family).
- Safely dispose of unused prescription opioids: Find your community drug take-back program or your pharmacy mail-back program, or lush them down the toilet, following guidance from the Food and Drug Administration:

  www.fda.gov/Drugs/ResourcesForYou
- Visit www.cdc.gov/drugoverdose to learn about the risks of opioid abuse and overdose.
- If you believe you may be struggling with addiction, tell your health care provider and ask for guidance or call SAMHSA's National Helpline at 1-800-662-HELP.

LEARN MORE:
www.cdc.gov/drugoverdose/prescribing/guideline.html

_____	_____	_____
Student-athlete Name Printed	Student-athlete Signature	Date
_____	_____	_____
Parent or Legal Guardian Printed	Parent or Legal Guardian Signature	Date

Legal References:
California Education Code section 49476

Adapted from the Center for Disease Control and Prevention and the American Hospital Association

DISTRITO ESCOLAR DE OXNARD

Opioides recetados: lo que necesita saber

Los opioides recetados son medicamentos que sirven para aliviar el dolor moderado a intenso y suelen ser recetados luego de una cirugía o de sufrir una lesión, o ante ciertos problemas de salud. Estos medicamentos pueden ser una parte importante del tratamiento, aunque también implican riesgos graves. Es importante comunicarse con su proveedor de atención médica para asegurarse que está obteniendo la atención más segura y eficaz.

Los riesgos más graves de los opioides recetados son la adicción y la sobredosis, especialmente con el uso prolongado. Una sobredosis con opioides puede reducir la frecuencia respiratoria y provocar la muerte repentina. Los opioides recetados pueden tener efectos secundarios, incluso si se toman según las indicaciones.

Los efectos secundarios pueden incluir uno o más de los siguientes:

- Tolerancia: la necesidad de tomar más medicamentos para lograr la misma reducción del dolor
- Dependencia física: aparición de síntomas de abstinencia al interrumpir el consumo
- Mayor sensibilidad al dolor
- Estreñimiento: es el efecto secundario más común
- Náuseas, vómitos y sequedad de boca
- Somnolencia y mareo
- Confusión
- Depresión
- Bajos niveles de testosterona, que pueden resultar en un menor impulso sexual, energía y fuerza
- Comezón y sudor

Los riesgos son mayores con lo siguiente:

- Tiene antecedentes de abuso de drogas, trastorno de consumo de sustancias o sobredosis
- Tiene una condición de salud mental, (como depresión o ansiedad)
- Tiene apnea del sueño
- Tiene 65 años o más
- Está embarazada

A menos que su proveedor de atención médica lo indique específicamente, los medicamentos que debe evitar incluyen:

- Benzodiacepinas (como Xanax o Valium)
- Relajantes musculares (como Soma o Flexeril)
- Pastillas para dormir (como Ambien o Lunesta)
- Otros opioides recetados
- Adicionalmente, evite el consumo de alcohol mientras esté tomando opioides recetados.

SEPA CUÁLES SON SUS OPCIONES

Hable con su proveedor de atención médica acerca de las maneras de controlar el dolor sin tener que usar opioides. Algunas de esas opciones podrían dar mejores resultados y presentar menores riegos y efectos secundarios. Las opciones podrían ser las siguientes:

- Otros analgésicos, como acetaminofeno (Tylenol), ibuprofeno (Advil, Motrin) o naproxeno
- Algunos medicamentos que también se emplean contra la depresión y las convulsiones.
- Fisioterapia y ejercicios
- Terapia cognitiva conductual, un enfoque psicológico dirigido por objetivos donde los pacientes aprenden a modificar las causas físicas, conductuales y emocionales del dolor y el estrés.

SI LE RECETAN OPIOIDES PARA EL DOLOR:

- Nunca tome opioides en más cantidades o más seguido que lo indicado.
- Haga un seguimiento con su proveedor de atención médica.
    - Establezcan juntos un plan para tratar el dolor.
    - Analicen posibilidades para tratar el dolor, las cuales no incluyan opioides recetados.
    - Hable de sus inquietudes y de los efectos secundarios.
- Ayude a evitar el mal uso y el abuso.
    - Nunca venda ni comparta opioides recetados.
    - Nunca use los opioides recetados de otra persona.
- Guarde los opioides recetados en un lugar seguro y lejos del alcance de otras personas. (Esto puede incluir visitas, niños, amigos y familiares).
- Deshágase de manera segura de los opioides recetados que le sobren. Encuentre el programa de devolución de medicamentos de su comunidad o el programa de devolución de medicamentos de su farmacia o tírelos en el inodoro, siguiendo las instrucciones de la Administración de Alimentos y Medicamentos: www.fda.gov/Drugs/ResourcesForYou.
- Visite www.cdc.gov/drugoverdose para conocer los riesgos del abuso y la sobredosis de opioides
- Si cree que puede estar luchando contra la adicción, infórmeselo a su proveedor de atención médica y solicite orientación o llame a la línea de ayuda nacional de SAMHSA al 1-800-662-HELP.

APRENDE MÁS:
www.cdc.gov/drugoverdose/prescribing/guideline.html

Nombre del Estudiante Deportista	Firma del Estudiante Deportista	Fecha
Nombre del Padre o Tutor Legal	Firma del Padre o Tutor Legal	Fecha

Referencias legales:
Sección del Código de Educación de California 49476

Adaptado de los Centros para el Control y Prevención de Enfermedades (CDC, por sus siglas en inglés) y La Asociación de Hospital Americano

OXNARD SCHOOL DISTRICT

Parent/Student CIF Steroid Information Sheet and Acknowledgement

"As a condition of membership in the CIF, all member school shall adopt policies prohibiting the use and abuse of androgenic/anabolic steroids. All member school shall have participating student athletes and their parents, legal guardian/caregiver agree that the athlete will not use steroids without the written prescription of a fully-licensed physical (as recognized by the AMA) to treat a medical condition." (CIF Bylaw 503.I)

Our School District Policy (BP 5131.63):

The Governing Board recognizes that the use of steroids and other performance-enhancing supplements presents a serious health and safety hazard. As part of the district's drug prevention and intervention efforts, the Superintendent or designee and staff shall make every reasonable effort to prevent students from using steroids or other performance-enhancing supplements.

Students in grades 7-12 shall receive a lesson on the effects of steroids as part of their health, physical education, or drug education program.

Students participating in interscholastic athletics are prohibited from using steroids and dietary supplements banned by the U.S. Anti-Doping Agency as well as the substance synephrine. (Education Code 49030)

Before participating in interscholastic athletics, a student athlete and his/her parent/guardian shall sign a statement that the student athlete pledges not to use androgenic/anabolic steroids and dietary supplements banned by the U.S. Anti-Doping Agency and the substance synephrine, unless the student has a written prescription from a licensed health care practitioner to treat a medical condition.

A student who is found to have violated the agreement or this policy shall be restricted from participating in athletics and shall be subject to disciplinary procedures including, but not limited to, suspension or expulsion in accordance with law, Board policy, and administrative regulation.

Coaches shall educate students about the district's prohibition and the dangers of using steroids and other performance-enhancing supplements.

The Superintendent or designee shall ensure that district schools do not accept sponsorships or donations from supplement manufacturers that offer muscle-building supplements to students.

Acknowledgement

By signing below, both the participating student-athlete and the parents, legal guardians/caregiver hereby agree that the student-athlete named herein, shall not use androgenic/anabolic steroids without the written prescription of a fully-licensed physician (as recognized by the AMA) to treat a medical condition. We also recognize that under CIF bylaw 202, there could be penalties for false or fraudulent information. We also understand that the [insert name of school] policy regarding the use of illegal drugs will be enforced for any violations of these rules.

I acknowledge that I have received and read the CIF Steroid Information Sheet.

Student-Athlete Name - *Printed*	Student-Athlete - *Signature*	Date
Parent or Legal Guardian Name - *Printed*	Parent or Legal Guardian - *Signature*	Date

DISTRITO ESCOLAR DE OXNARD

Hoja CIF de información y compromiso de los padres y estudiantes sobre los esteroides

"Como condición de membresía en el CIF, todas las escuelas que son miembros deberán adoptar normas que prohíban el uso y abuso de los esteroides androgénicos/anabólicos. Todas estas escuelas deberán confirmar que los estudiantes atletas participantes y sus padres, el tutor legal/cuidador están de acuerdo que el atleta no usará esteroides anabólicos sin la receta prescrita por medio de un examen físico con licencia plena (como lo reconoce la Asociación Médica Americana, AMA) para tratar una condición médica". (Estatuto CIF 503.I)

Nuestra norma del distrito escolar (BP 5131.63):

La Mesa Directiva Gobernante reconoce que el uso de esteroides y otros suplementos para mejorar el rendimiento físico representa un grave peligro para la salud y la seguridad. Como parte de los esfuerzos distritales de prevención e intervención del uso de drogas, el superintendente o la persona designada y el personal deberán hacer todos los esfuerzos razonables para evitar que los estudiantes usen esteroides u otros suplementos para mejorar el rendimiento físico.

Como parte de sus programas de salud, educación física o educación sobre las drogas, los estudiantes en los grados 7 al 12 recibirán una lección sobre los efectos de los esteroides.

Los estudiantes que participan en el atletismo escolar tienen prohibido el uso de esteroides y suplementos dietéticos prohibidos por la Agencia Antidopaje de los Estados Unidos, incluyendo la sustancia sinefrina (synephrine, en inglés). (Código de Educación 49030).

Antes de participar en el atletismo escolar, un estudiante atleta y su padre/madre/tutor legal deberán firmar una declaración donde el estudiante atleta se compromete a no usar esteroides androgénicos/anabólicos y/o suplementos dietéticos prohibidos por la Agencia Antidopaje de los Estados Unidos, incluyendo la sustancia Sinefrina (Synephrine, en inglés), a menos que el estudiante haya recibido una receta médica escrita por un profesional de la salud que posea autorización para tratar condiciones médicas.

Cualquier estudiante que haya violado el acuerdo o esta norma no podrá participar en el atletismo escolar y estará sujeto a los procedimientos disciplinarios los cuales incluyen, entre otros, la suspensión o expulsión de acuerdo con la ley, las normas de la Mesa Directiva y los reglamentos administrativos.

Los entrenadores deben educar a los estudiantes sobre las prohibiciones del distrito y los peligros del uso de esteroides y otros suplementos para mejorar el rendimiento físico.

El Superintendente o la persona designada se asegurarán que las escuelas del distrito no acepten patrocinios o donaciones de fabricantes de suplementos que ofrezcan suplementos de desarrollo muscular a los estudiantes.

Compromiso

Al firmar este documento, el estudiante atleta participante junto con sus padres, tutores legales/cuidadores están de acuerdo que el estudiante atleta mencionado en este documento no utilizará esteroides androgénicos/anabólicos sin una prescripción escrita por un médico que posea autorización plena para tratar condiciones médicas (tal como lo reconoce la Asociación Médica Americana, AMA). También reconocemos que según el reglamento CIF 202, podrían existir penalidades por el uso de información falsa o fraudulenta. Además comprendemos que la escuela [insert name of school] seguirá las normas referentes al uso ilegal de drogas en caso de que ocurran violaciones a estos reglamentos.

Yo confirmo que he recibido y leído la Hoja de información CIF referente a los esteroides.

Nombre del estudiante/atleta – *Letra de molde*	Firma del estudiante/atleta	Fecha
Nombre de padre/madre/tutor legal - *Letra de molde*	Firma de padre/madre/tutor legal	Fecha

Oxnard School District

Sudden Cardiac Arrest Information Sheet

Sudden cardiac arrest (SCA) is when the heart stops beating, suddenly and unexpectedly. When this happens blood stops flowing to the brain and other vital organs. SCA is NOT a heart attack. A heart attack is caused by a blockage that stops the flow of blood to the heart. SCA is a malfunction in the heart's electrical system, causing the victim to collapse. The malfunction is caused by a congenital or genetic defect in the heart's structure.

Recognize the Warning Signs and Risk Factors of Sudden Cardiac Arrest.

Tell your coach and consult your health care provider if these conditions are present in your student athlete:

Potential indicators that SCA may occur:

- ❑ Fainting or seizure, especially during or right after exercise;
- ❑ Fainting repeatedly or with excitement or startle;
- ❑ Excessive shortness of breath during exercise;
- ❑ Racing or fluttering heart palpitations or irregular heartbeat;
- ❑ Repeated dizziness or lightheadedness;
- ❑ Chest pain or discomfort with exercise;
- ❑ Excessive, unexpected fatigue during or after exercise.

Factors that increase the Risk of SCA:

- ❑ Known structural heart abnormality, repaired or unrepaired;
- ❑ Family members with unexplained fainting, seizures, drowning or near drowning, or car accidents;
- ❑ Family history of known heart abnormalities or sudden death before age 50;
- ❑ Specific family history of Long QT Syndrome, Brugada Syndrome, Hypertrophic Cardiomyopathy, or Arrhythmogenic Right Ventricular Dysplasia (ARVD);
- ❑ Use of drugs, such as cocaine, inhalants, "recreactional" drugs, excessive energy drinks or performance-enhancing supplements.

How Common is Sudden Cardiac Arrest in the United States?

As the leading cause of death in the U.S., there are more than 300,000 cardiac arrests outside hospitals each year, with nine out of 10 resulting in death. Thousands of sudden cardiac arrests occur among youth, as it is the #2 cause of death under 25 and the #1 killer of student athletes during exercise.

Who is at Risk for Sudden Cardiac Arrest?

SCA is more likely to occur during exercise or physical activity, so student athletes are at greater risk. While a heart condition may have no warning signs, studies show that many young people do have symptoms but neglect to tell an adult. This may be because they are embarrassed, they do not want to jeopardize their playing time, they mistakenly think they are out of shape and need to train harder, or they simply ignore the symptoms, assuming they will "just go away." Additionally, some health history factors increase the risk of SCA.

What Should You do if your Student Athlete is Experiencing any of these Symptoms?

We need to let student-athletes know that if they experience any SCA-related symptoms it is crucial to alert an adult and get follow-up care as soon as possible with a primary care physician. If the athlete has any of the SCA risk factors, these should also be discussed with a doctor to determine if further testing is needed. Wait for your doctor's feedback before returning to play, and alert your coach, trainer and school nurse about any diagnosed conditions.

Return to Play (RTP)

The California Interscholastic Federation (CIF) amended its bylaws to include language that adds SCA training to coach certification and practice and game protocol that empowers coaches to remove from play a student-athlete who exhibits fainting. A student athlete who has been removed from play after displaying signs or symptoms associated with SCA may not return to play until he or she is evaluated and cleared by a licensed health care provider (medical doctor or doctor of osteopathy). Parents, guardians and caregivers are urged to dialogue with student athletes about their heart health.

Acknowledgment

I have reviewed and understand the symptoms and warning signs of SCA and the new CIF protocol to incorporate SCA prevention strategies into my student's sports program

_____	_____	_____
Student-athlete Name Printed	Student-athlete Signature	Date
_____	_____	_____
Parent or Legal Guardian Printed	Parent or Legal Guardian Signature	Date

Legal References:
California Interscholastic Federation Bylaw 503

Adapted from the Center for Disease Control and Prevention and the CIF

Oxnard School District

Una ficha informativa acerca del Paro Cardíaco Repentino

El Paro Cardíaco Repentino (PCR) sucede cuando el corazón súbita e inesperadamente deja de latir. Cuando esto sucede, se detiene el flujo sanguíneo hacia el cerebro y otros órganos vitales. El PCR no es un paro cardíaco. Un paro cardíaco es causado por una obstrucción que detiene el flujo sanguíneo hacia el corazón. El PCR es una falla en el sistema eléctrico del corazón que hace que la víctima se colapse. Un defecto genético o congénito en la estructura del corazón es la causa de la falla.

Reconozca los factores de riesgo y los signos de advertencia delParo CardíacoRepentino.

Dígale al entrenador y consulte a su médico si su atleta adolescente padece estos síntomas:

Posibles indicadores de que podría suceder un PCR:

- ❑ Colapso o convulsiones, especialmente justo después de ejercitarse;
- ❑ Colapso frecuente, o por emoción o susto;
- ❑ Falta excesiva de aliento durante el ejercicio;
- ❑ Taquicardia o palpitaciones, o ritmo cardíaco irregular;
- ❑ Mareo o aturdimiento frecuente;
- ❑ Dolor o malestar en el pecho al ejercitarse;
- ❑ Fatiga excesiva e inesperada durante o después del ejercicio.

Factores que incrementan el riesgo de que suceda un PCR:

- ❑ La presencia de una anormalidad estructural del corazón, reparada o no reparada;
- ❑ Familiares que han sufrido sin explicación, colapsos, convulsiones, un accidente automovilístico, que se han ahogado o han estado a punto de ahogarse;
- ❑ Un historial clínico familiar de anormalidades cardíacas conocidas o muerte repentina antes de los 50 años;
- ❑ Un historial clínico familiar específico con casos del síndrome del QT largo, síndrome Brugada, miocardiopatía hipertrófica o displasia arritmogénica del ventrículo derecho (DAVD);
- ❑ El consumo de enervantes tales como cocaína, inhalantes, drogas "recreativas," bebidas de energía en exceso, y sustancias o suplementos para mejorar el rendimiento.

¿Qué tan común es el PCR en los Estados Unido?

Porser la principalcausa de muerte en los EE. UU.cada año suceden más de 300,000 paroscardíacoslejos de los hospitales, de los que nueve de cada diezson mortales. Miles de jóvenesson víctimas de los paroscardíacosrepentinos porser la segunda causa de muerte en menores de 25 añosyla principal razón por la que mueren los atletas adolescentes durante el ejercicio.

¿Quién corre el riesgo de sufrir un paro cardíaco repentino?

Los atletas adolescentes corren más riesgo de sufrir un paro cardíaco repentino debido a que tiende a suceder durante el ejercicio o la actividad física. Aunque una enfermedad cardíaca no siempre demuestra signos de advertencia, los estudios demuestran que muchos jóvenes sí tienen síntomas pero no se lo dicen a un adulto. Esto puede ser porque les da pena, no quieren que los saquen de un partido, creen erróneamente que les falta condición física y solamente necesitan entrenar más, o simplemente ignoran los síntomas y suponen que "desaparecerán." Algunos factores de antecedentes clínicos también aumentan el riesgo de que suceda un PCR.

¿Qué debe hacer si su atleta adolescente padece alguno de estos síntomas?

Debemos informarles a los atletas adolescentes que si padecen cualquier síntoma del PCR, es de suma importancia avisarle a un adulto y consultar con un médico de cabecera lo antes posible. Si el atleta presenta cualquiera de los factores que incrementan el riesgo de que suceda un PCR, deberá consultar a un médico para ver la posibilidad de que se le hagan más pruebas. Espere la respuesta del médico antes de que su adolescente vuelva a jugar y además, avise a su entrenador y a la enfermera escolar de cualquier afección diagnosticada.

Volver a Jugar

Federación Interescolar de California (CIF) enmendó sus estatutos para poder incluir lenguaje que incluye capacitación acerca del PCR como requisito en la certificación de entrenadores deportivos. Además, esto ayuda a incluirla en el protocolo de entrenamiento y juego para que los entrenadores tengan la autoridad de sacar del juego a un atleta adolescente que se colapse. El atleta adolescente que haya sido suspendido de un juego después de mostrar signos o síntomas asociados con un PCR, no puede volver a jugar hasta que un médico certificado le haya evaluado y aprobado (medical doctor or doctor of osteopathy). Se les insta a los padres, tutores y cuidadores a que hablen con sus atletas adolescentes acerca de la salud del corazón. Igualmente.

He leído y entendido los síntomas y los signos de advertencia del PCR y el nuevo protocolo de la CIF para incluir medidas para prevenir que suceda un PCR dentro del programa deportivo de mi estudiante

Nombre Del Atleta Adolescente	Firma Del Atleta Adolescente	Fecha
Nombre Del Padre/ Tutor	Firma Del Padre/ Tutor	Fecha

Referencia legal:
Federación Interescolar de California Por Ley 503

PREPARTICIPATION PHYSICAL EVALUATION
HISTORY FORM

(Note: This form is to be filled out by the patient and parent prior to seeing the physician. The physician should keep this form in the chart.)

Date of Exam _____

Name _____ Date of birth _____

Sex _____ Age _____ Grade _____ School _____ Sport(s) _____

Medicines and Allergies: Please list all of the prescription and over-the-counter medicines and supplements (herbal and nutritional) that you are currently taking

_____

_____

_____

Do you have any allergies? ☐ Yes ☐ No If yes, please identify specific allergy below.
☐ Medicines ☐ Pollens ☐ Food ☐ Stinging Insects

Explain "Yes" answers below. Circle questions you don't know the answers to.

GENERAL QUESTIONS	Yes	No
1. Has a doctor ever denied or restricted your participation in sports for any reason?		
2. Do you have any ongoing medical conditions? If so, please identify below: ☐ Asthma ☐ Anemia ☐ Diabetes ☐ Infections Other: _____		
3. Have you ever spent the night in the hospital?		
4. Have you ever had surgery?		
HEART HEALTH QUESTIONS ABOUT YOU	**Yes**	**No**
5. Have you ever passed out or nearly passed out DURING or AFTER exercise?		
6. Have you ever had discomfort, pain, tightness, or pressure in your chest during exercise?		
7. Does your heart ever race or skip beats (irregular beats) during exercise?		
8. Has a doctor ever told you that you have any heart problems? If so, check all that apply: ☐ High blood pressure ☐ A heart murmur ☐ High cholesterol ☐ A heart infection ☐ Kawasaki disease Other: _____		
9. Has a doctor ever ordered a test for your heart? (For example, ECG/EKG, echocardiogram)		
10. Do you get lightheaded or feel more short of breath than expected during exercise?		
11. Have you ever had an unexplained seizure?		
12. Do you get more tired or short of breath more quickly than your friends during exercise?		
HEART HEALTH QUESTIONS ABOUT YOUR FAMILY	**Yes**	**No**
13. Has any family member or relative died of heart problems or had an unexpected or unexplained sudden death before age 50 (including drowning, unexplained car accident, or sudden infant death syndrome)?		
14. Does anyone in your family have hypertrophic cardiomyopathy, Marfan syndrome, arrhythmogenic right ventricular cardiomyopathy, long QT syndrome, short QT syndrome, Brugada syndrome, or catecholaminergic polymorphic ventricular tachycardia?		
15. Does anyone in your family have a heart problem, pacemaker, or implanted defibrillator?		
16. Has anyone in your family had unexplained fainting, unexplained seizures, or near drowning?		
BONE AND JOINT QUESTIONS	**Yes**	**No**
17. Have you ever had an injury to a bone, muscle, ligament, or tendon that caused you to miss a practice or a game?		
18. Have you ever had any broken or fractured bones or dislocated joints?		
19. Have you ever had an injury that required x-rays, MRI, CT scan, injections, therapy, a brace, a cast, or crutches?		
20. Have you ever had a stress fracture?		
21. Have you ever been told that you have or have you had an x-ray for neck instability or atlantoaxial instability? (Down syndrome or dwarfism)		
22. Do you regularly use a brace, orthotics, or other assistive device?		
23. Do you have a bone, muscle, or joint injury that bothers you?		
24. Do any of your joints become painful, swollen, feel warm, or look red?		
25. Do you have any history of juvenile arthritis or connective tissue disease?		

MEDICAL QUESTIONS	Yes	No
26. Do you cough, wheeze, or have difficulty breathing during or after exercise?		
27. Have you ever used an inhaler or taken asthma medicine?		
28. Is there anyone in your family who has asthma?		
29. Were you born without or are you missing a kidney, an eye, a testicle (males), your spleen, or any other organ?		
30. Do you have groin pain or a painful bulge or hernia in the groin area?		
31. Have you had infectious mononucleosis (mono) within the last month?		
32. Do you have any rashes, pressure sores, or other skin problems?		
33. Have you had a herpes or MRSA skin infection?		
34. Have you ever had a head injury or concussion?		
35. Have you ever had a hit or blow to the head that caused confusion, prolonged headache, or memory problems?		
36. Do you have a history of seizure disorder?		
37. Do you have headaches with exercise?		
38. Have you ever had numbness, tingling, or weakness in your arms or legs after being hit or falling?		
39. Have you ever been unable to move your arms or legs after being hit or falling?		
40. Have you ever become ill while exercising in the heat?		
41. Do you get frequent muscle cramps when exercising?		
42. Do you or someone in your family have sickle cell trait or disease?		
43. Have you had any problems with your eyes or vision?		
44. Have you had any eye injuries?		
45. Do you wear glasses or contact lenses?		
46. Do you wear protective eyewear, such as goggles or a face shield?		
47. Do you worry about your weight?		
48. Are you trying to or has anyone recommended that you gain or lose weight?		
49. Are you on a special diet or do you avoid certain types of foods?		
50. Have you ever had an eating disorder?		
51. Do you have any concerns that you would like to discuss with a doctor?		
FEMALES ONLY		
52. Have you ever had a menstrual period?		
53. How old were you when you had your first menstrual period?		
54. How many periods have you had in the last 12 months?		

Explain "yes" answers here

_____

_____

_____

_____

_____

_____

_____

_____

_____

I hereby state that, to the best of my knowledge, my answers to the above questions are complete and correct.

Signature of athlete _____ Signature of parent/guardian _____ Date _____

©2010 American Academy of Family Physicians, American Academy of Pediatrics, American College of Sports Medicine, American Medical Society for Sports Medicine, American Orthopaedic Society for Sports Medicine, and American Osteopathic Academy of Sports Medicine. Permission is granted to reprint for noncommercial, educational purposes with acknowledgment.

Preparticipation Physical Evaluation

THE ATHLETE WITH SPECIAL NEEDS: SUPPLEMENTAL HISTORY FORM

Date of Exam _____

Name _____ Date of birth _____

Sex _____ Age _____ Grade _____ School _____ Sport(s) _____

1. Type of disability	
2. Date of disability	
3. Classification (if available)	
4. Cause of disability (birth, disease, accident/trauma, other)	
5. List the sports you are interested in playing	

	Yes	No
6. Do you regularly use a brace, assistive device, or prosthetic?		
7. Do you use any special brace or assistive device for sports?		
8. Do you have any rashes, pressure sores, or any other skin problems?		
9. Do you have a hearing loss? Do you use a hearing aid?		
10. Do you have a visual impairment?		
11. Do you use any special devices for bowel or bladder function?		
12. Do you have burning or discomfort when urinating?		
13. Have you had autonomic dysreflexia?		
14. Have you ever been diagnosed with a heat-related (hyperthermia) or cold-related (hypothermia) illness?		
15. Do you have muscle spasticity?		
16. Do you have frequent seizures that cannot be controlled by medication?		

Explain "yes" answers here

_____

_____

_____

_____

_____

Please indicate if you have ever had any of the following.

	Yes	No
Atlantoaxial instability		
X-ray evaluation for atlantoaxial instability		
Dislocated joints (more than one)		
Easy bleeding		
Enlarged spleen		
Hepatitis		
Osteopenia or osteoporosis		
Difficulty controlling bowel		
Difficulty controlling bladder		
Numbness or tingling in arms or hands		
Numbness or tingling in legs or feet		
Weakness in arms or hands		
Weakness in legs or feet		
Recent change in coordination		
Recent change in ability to walk		
Spina bifida		
Latex allergy		

Explain "yes" answers here

_____

_____

_____

_____

_____

I hereby state that, to the best of my knowledge, my answers to the above questions are complete and correct.

Signature of athlete _____ Signature of parent/guardian _____ Date _____

©2010 American Academy of Family Physicians, American Academy of Pediatrics, American College of Sports Medicine, American Medical Society for Sports Medicine, American Orthopaedic Society for Sports Medicine, and American Osteopathic Academy of Sports Medicine. Permission is granted to reprint for noncommercial, educational purposes with acknowledgment.

Preparticipation Physical Evaluation
PHYSICAL EXAMINATION FORM

Name _____ Date of birth _____

PHYSICIAN REMINDERS

1. Consider additional questions on more sensitive issues
   - Do you feel stressed out or under a lot of pressure?
   - Do you ever feel sad, hopeless, depressed, or anxious?
   - Do you feel safe at your home or residence?
   - Have you ever tried cigarettes, chewing tobacco, snuff, or dip?
   - During the past 30 days, did you use chewing tobacco, snuff, or dip?
   - Do you drink alcohol or use any other drugs?
   - Have you ever taken anabolic steroids or used any other performance supplement?
   - Have you ever taken any supplements to help you gain or lose weight or improve your performance?
   - Do you wear a seat belt, use a helmet, and use condoms?
2. Consider reviewing questions on cardiovascular symptoms (questions 5–14).

EXAMINATION		
Height Weight ☐ Male ☐ Female		
BP / (/) Pulse Vision R 20/ L 20/ Corrected ☐ Y ☐ N		
MEDICAL	**NORMAL**	**ABNORMAL FINDINGS**
Appearance • Marfan stigmata (kyphoscoliosis, high-arched palate, pectus excavatum, arachnodactyly, arm span > height, hyperlaxity, myopia, MVP, aortic insufficiency)		
Eyes/ears/nose/throat • Pupils equal • Hearing		
Lymph nodes		
Heart[a] • Murmurs (auscultation standing, supine, +/- Valsalva) • Location of point of maximal impulse (PMI)		
Pulses • Simultaneous femoral and radial pulses		
Lungs		
Abdomen		
Genitourinary (males only)[b]		
Skin • HSV, lesions suggestive of MRSA, tinea corporis		
Neurologic[c]		
MUSCULOSKELETAL		
Neck		
Back		
Shoulder/arm		
Elbow/forearm		
Wrist/hand/fingers		
Hip/thigh		
Knee		
Leg/ankle		
Foot/toes		
Functional • Duck-walk, single leg hop		

[a]Consider ECG, echocardiogram, and referral to cardiology for abnormal cardiac history or exam.
[b]Consider GU exam if in private setting. Having third party present is recommended.
[c]Consider cognitive evaluation or baseline neuropsychiatric testing if a history of significant concussion.

☐ Cleared for all sports without restriction

☐ Cleared for all sports without restriction with recommendations for further evaluation or treatment for _____

_____

☐ Not cleared

- ☐ Pending further evaluation
- ☐ For any sports
- ☐ For certain sports _____

Reason _____

Recommendations _____

_____

I have examined the above-named student and completed the preparticipation physical evaluation. The athlete does not present apparent clinical contraindications to practice and participate in the sport(s) as outlined above. A copy of the physical exam is on record in my office and can be made available to the school at the request of the parents. If conditions arise after the athlete has been cleared for participation, the physician may rescind the clearance until the problem is resolved and the potential consequences are completely explained to the athlete (and parents/guardians).

Name of physician (print/type) _____ Date _____

Address _____ Phone _____

Signature of physician _____, MD or DO

©2010 American Academy of Family Physicians, American Academy of Pediatrics, American College of Sports Medicine, American Medical Society for Sports Medicine, American Orthopaedic Society for Sports Medicine, and American Osteopathic Academy of Sports Medicine. Permission is granted to reprint for noncommercial, educational purposes with acknowledgment.

PREPARTICIPATION PHYSICAL EVALUATION
CLEARANCE FORM

Name _____ Sex ☐ M ☐ F Age _____ Date of birth _____

☐ Cleared for all sports without restriction

☐ Cleared for all sports without restriction with recommendations for further evaluation or treatment for _____

_____

☐ Not cleared

- ☐ Pending further evaluation
- ☐ For any sports
- ☐ For certain sports _____

Reason _____

Recommendations _____

_____

_____

_____

_____

_____

I have examined the above-named student and completed the preparticipation physical evaluation. The athlete does not present apparent clinical contraindications to practice and participate in the sport(s) as outlined above. A copy of the physical exam is on record in my office and can be made available to the school at the request of the parents. If conditions arise after the athlete has been cleared for participation, the physician may rescind the clearance until the problem is resolved and the potential consequences are completely explained to the athlete (and parents/guardians).

Name of physician (print/type) _____ Date _____

Address _____ Phone _____

Signature of physician _____, MD or DO

EMERGENCY INFORMATION

Allergies _____

_____

_____

_____

_____

_____

Other information _____

_____

_____

_____

_____

_____

_____

_____

_____

_____

_____

©2010 American Academy of Family Physicians, American Academy of Pediatrics, American College of Sports Medicine, American Medical Society for Sports Medicine, American Orthopaedic Society for Sports Medicine, and American Osteopathic Academy of Sports Medicine. Permission is granted to reprint for noncommercial, educational purposes with acknowledgment.

Preparticipación Evaluación Física

Forma de Historia Médica

(Nota: Este formulario debe ser llenado por el paciente y los padres antes de ver al médico. El médico debe mantener esta forma en el gráfico.)

Fecha de Examen Médico _____

Nombre _____ Fecha de Nacimiento _____

Sexo _____ Edad _____ Grado _____ Escuela _____ Deporte(s) _____

Medicinas y Alergias: Escribe una lista de todas las medicinas de receta y suplementos (herbales y nutricionales) que estás tomando

¿Tienes alergias? ☐ Sí ☐ No Si tienes alergias, indica la alergia
☐ Medicinas ☐ Pólen ☐ Comidas ☐ Insectos especifica

Explica las respuestas de "Sí" abajo.

Preguntas Generales	Sí	No
1. ¿Ha sido restringido por un médico para participar en deportes por algúna razón?		
2. ¿Tienes problemas médicos continuamente? Si sí, indica abajo: ☐ Asma ☐ Anemia ☐ Diabetes ☐ Infecciones ☐ Otro: _____		
3. ¿Has pasado la noche en un hospital?		
4. ¿ Has tenido alguna cirugía?		
Preguntas de la salud de tu corazón	**Sí**	**No**
5. ¿Alguna vez has desmayado o casi desmayado durante o después del ejercicio?		
6. ¿Has sentido dolores, o presión en tu pecho mientras haces ejercicios?		
7. ¿Su corazón siempre corre o salta latidos (latidos irregulares) durante el ejercicio?		
8. ¿Ha dicho tu médico que tienes problemas médicos con tu corazón? Si Sí, chequea todo que aplica: ☐ Alta presión sanguínea ☐ soplo cardíaco ☐ Colesterol alto ☐ Infección del corazón ☐ Enfermedad de Kawasaki Otro: _____		
9. ¿Ha pedido un médico un examen médico de tu corazón?		
10. ¿Te sientes mareado o tienes dificultad respirando durante el ejercicio?		
11. ¿Has tenido un incautación inexplicable?		
12. ¿Te sientes más cansado o tienes más dificultad de respirar que tus amigos cuando haces ejercicios?		
Preguntas de la salud de los corazones du tu familia	**Sí**	**No**
13. ¿Ha fallecido un miembro de la familia de problemas del corazón o de una muerte inexplicable antes de la edad de 50 años? (incluyendo ahogo, un accidente de coche inexplicable, o síndrome de muerte súbita infantil)		
14. ¿Hay alguien en su familia que tiene miocardiopatía hipertrófica, síndrome de Marfan, la miocardiopatía arritmogénica del ventrículo derecho, síndrome de QT largo, síndrome de QT corto, síndrome de Brugada o taquicardia ventricular polimórfica catecolaminérgica?		
15. ¿Tiene alguién en tu familia un problema del corazón, usa un marca pasos o un desfibrilador implantado?		
16. ?Tiene alguien en tu familia desmayos inexplicables, incautaciones inexplicables o casi ahogo?		
Preguntas de huesos y articulaciones	**Sí**	**No**
17. ¿Ha tenido una lesión en un hueso, músculo, ligamento o tendón que le hizo perder un entrenamiento o un partido?		
18. ¿Alguna vez te has quebrado o fracturado un hueso o dislocado una articulación o coyuntura?		
19. ¿Ha tenido una lesión que requiera radiografías, resonancia magnética, CT, inyecciones, terapia, un aparato ortopédico, un yeso o muletas?		
20. ¿Alguna vez has tenido una fractura de estrés?		
21. ¿Te han dicho alguna vez que tiene o ha tenido una radiografía para la inestabilidad del cuello o la inestabilidad atlantoaxial? (Síndrome de Down o enanismo)		
22. ¿Utiliza regularmente un aparato ortopédico, ortopédicos, u otro dispositivo de ayuda?		
23. ¿Tiene un hueso, músculo o lesión de la articulación que le molesta?		
24. ¿Alguna de sus articulaciones se vuelven dolorosas, hinchadas, se sienten calientes, o se ven de color rojo?		
25. ¿Tiene antecedentes de artritis juvenil o enfermedad del tejido conectivo?		

Preguntas Médicas	Sí	No
26. ¿Tose, sibilancias o tiene dificultad para respirar durante o después del ejercicio?		
27. ¿Alguna vez has utilizado un inhalador o tomado medicamentos para el asma?		
28. ¿Hay alguien en su familia que tiene asma?		
29. ¿Nació sin o le falta un riñón, un ojo, un testículo (varones), el bazo, o cualquier otro órgano?		
30. ¿Tiene dolor en la ingle o un bulto doloroso o hernia en la ingle?		
31. ¿Ha tenido mononucleosis infecciosa (mono) en el último mes?		
32. ¿Tienes algunas erupciones, úlceras por presión, u otros problemas de la piel?		
33. ¿Ha tenido un herpes o infección de la piel MRSA?		
34. ¿Ha tenido una lesión en la cabeza o una conmoción cerebral?		
35. ¿Alguna vez has tenido un golpe en la cabeza que causó confusión, dolor de cabeza prolongado o problemas de memoria?		
36. ¿Tiene antecedentes de trastornos convulsivos?		
37. ¿Tiene dolores de cabeza con el ejercicio?		
38. ¿Alguna vez ha tenido entumecimiento, hormigueo o debilidad en los brazos o piernas después de golpearse o caerse?		
39. ¿Alguna vez has sido incapaz de mover sus brazos o piernas después de golpearse o caer?		
40. ¿Alguna vez se enferma durante el ejercicio en el calor?		
41. ¿Usted tiene calambres musculares frecuentes al hacer ejercicio?		
42. ¿Usted o alguien en su familia tiene el rasgo de células falciformes o la enfermedad?		
43. ¿Ha tenido problemas con sus ojos o visión?		
44. ¿Ha tenido lesiones en los ojos?		
45. ¿Usted usa anteojos o lentes de contacto?		
46. ¿Usa gafas de protección, o anteojos de seguridad?		
47. ¿Le preocupa su peso?		
48. ¿Estás tratando de o ha recomendado alguien que usted gana o pierde peso?		
49. ¿Está usted en una dieta especial o usted evita ciertos tipos de alimentos?		
50. ¿Alguna vez ha tenido un trastorno alimentario?		
51. ¿Tiene usted alguna preocupación que le gustaría discutir con un médico?		
Sólo mujeres	**Sí**	**No**
52. ¿Alguna vez ha tenido un período menstrual?		
53. ¿Qué edad tenía cuando tuvo su primer período menstrual?		
54. ¿Cuántos periodos ha tenido en los últimos 12 meses?		

Explique respuestas "sí" aquí

_____

Al Mejor de mis conocimientos, mis respuestas son completas y correctas.

Firma del atleta _____ Firma del padre/guardián _____ Fecha _____

© 2010 Academia Americana de Médicos de Familia, Academia Americana de Pediatría, el Colegio Americano de Medicina del Deporte, Sociedad Médica Estadounidense de Medicina Deportiva, la Sociedad Americana Ortopédica de Medicina Deportiva y Americana de Osteopatía de la Academia de Medicina del Deporte. Se concede permiso para reproducir para fines no comerciales, educativos con acuse de recibo.

Preparticipación Evaluación Física

EL ATLETA CON NECESIDADES ESPECIALES: FORMULARIO DE HISTORIA SUPLEMENTARIO

Fecha de Examen Médico _____

Nombre _____ Fecha de Nacimiento _____

Sexo _____ Edad _____ Grado _____ Escuela _____ Deporte(s) _____

1. Tipo de discapacidad		
2. Fecha de discapacidad		
3. Clasificación (Si posible)		
4. Causa de la discapacidad (nacimiento, enfermedad, accidente / trauma, otros)		
5. Enumerar los deportes que usted está interesado en jugar		
	Sí	No
6. ¿Utiliza regularmente un aparato ortopédico, dispositivo de ayuda, o prótesis?		
7. ¿Utiliza algún corsé especial o dispositivo de ayuda para los deportes?		
8. ¿Tienes algunas erupciones, úlceras por presión, o cualesquier otros problemas de la piel?		
9. ¿Tiene una pérdida auditiva? ¿Utiliza un audífono?		
10. ¿Tiene una discapacidad visual?		
11. ¿Utiliza dispositivos especiales para la función intestinal o de la vejiga?		
12. ¿Usted tiene ardor o molestias al orinar?		
13. ¿Ha tenido la disreflexia autonómica?		
14. ¿Alguna vez ha sido diagnosticado con una enfermedad del calor (hipertermia) o (hipotermia) enfermedades relacionadas con el frío?		
15. ¿Tiene la espasticidad muscular?		
16. ¿Tiene convulsiones frecuentes que no pueden ser controladas con medicación?		

Explique respuestas "sí" aquí

_____

_____

_____

_____

_____

	Sí	No
Inestabilidad atlantoaxial		
Evaluación de rayos X para la inestabilidad atlantoaxial		
Articulaciones dislocadas (más de una)		
Sangrado fácil		
Agrandamiento del bazo		
Hepatitis		
La osteopenia u osteoporosis		
Dificultad para controlar los intestinos		
Dificultad para controlar la vejiga		
El entumecimiento u hormigueo en los brazos o las manos		
El entumecimiento u hormigueo en las piernas o los pies		
Debilidad en los brazos o las manos		
Debilidad en las piernas o los pies		
El cambio reciente en la coordinación		
El cambio reciente en la capacidad para caminar		
Espina bifida		
La alergia al látex		

Por favor, indique si alguna vez ha tenido alguna de las siguientes.

Explique respuestas "sí" aquí

_____

_____

_____

_____

_____

Al Mejor de mis conocimientos, mis respuestas son completas y correctas.

Firma del atleta _____ Firma del padre/guardián _____ Fecha _____

© 2010 Academia Americana de Médicos de Familia, Academia Americana de Pediatría, el Colegio Americano de Medicina del Deporte, Sociedad Médica Estadounidense de Medicina Deportiva, la Sociedad Americana Ortopédica de Medicina Deportiva y Americana de Osteopatía de la Academia de Medicina del Deporte. Se concede permiso para reproducir para fines no comerciales, educativos con acuse de recibo.

Preparticipation Physical Evaluation
PHYSICAL EXAMINATION FORM

Name _____ Date of birth _____

PHYSICIAN REMINDERS

1. Consider additional questions on more sensitive issues
   - Do you feel stressed out or under a lot of pressure?
   - Do you ever feel sad, hopeless, depressed, or anxious?
   - Do you feel safe at your home or residence?
   - Have you ever tried cigarettes, chewing tobacco, snuff, or dip?
   - During the past 30 days, did you use chewing tobacco, snuff, or dip?
   - Do you drink alcohol or use any other drugs?
   - Have you ever taken anabolic steroids or used any other performance supplement?
   - Have you ever taken any supplements to help you gain or lose weight or improve your performance?
   - Do you wear a seat belt, use a helmet, and use condoms?
2. Consider reviewing questions on cardiovascular symptoms (questions 5–14).

EXAMINATION		
Height Weight ☐ Male ☐ Female		
BP / (/) Pulse Vision R 20/ L 20/ Corrected ☐ Y ☐ N		
MEDICAL	**NORMAL**	**ABNORMAL FINDINGS**
Appearance • Marfan stigmata (kyphoscoliosis, high-arched palate, pectus excavatum, arachnodactyly, arm span > height, hyperlaxity, myopia, MVP, aortic insufficiency)		
Eyes/ears/nose/throat • Pupils equal • Hearing		
Lymph nodes		
Heart[a] • Murmurs (auscultation standing, supine, +/- Valsalva) • Location of point of maximal impulse (PMI)		
Pulses • Simultaneous femoral and radial pulses		
Lungs		
Abdomen		
Genitourinary (males only)[b]		
Skin • HSV, lesions suggestive of MRSA, tinea corporis		
Neurologic[c]		
MUSCULOSKELETAL		
Neck		
Back		
Shoulder/arm		
Elbow/forearm		
Wrist/hand/fingers		
Hip/thigh		
Knee		
Leg/ankle		
Foot/toes		
Functional • Duck-walk, single leg hop		

[a]Consider ECG, echocardiogram, and referral to cardiology for abnormal cardiac history or exam.
[b]Consider GU exam if in private setting. Having third party present is recommended.
[c]Consider cognitive evaluation or baseline neuropsychiatric testing if a history of significant concussion.

☐ Cleared for all sports without restriction

☐ Cleared for all sports without restriction with recommendations for further evaluation or treatment for _____

_____

☐ Not cleared

- ☐ Pending further evaluation
- ☐ For any sports
- ☐ For certain sports _____

Reason _____

Recommendations _____

_____

I have examined the above-named student and completed the preparticipation physical evaluation. The athlete does not present apparent clinical contraindications to practice and participate in the sport(s) as outlined above. A copy of the physical exam is on record in my office and can be made available to the school at the request of the parents. If conditions arise after the athlete has been cleared for participation, the physician may rescind the clearance until the problem is resolved and the potential consequences are completely explained to the athlete (and parents/guardians).

Name of physician (print/type) _____ Date _____

Address _____ Phone _____

Signature of physician _____, MD or DO

©2010 American Academy of Family Physicians, American Academy of Pediatrics, American College of Sports Medicine, American Medical Society for Sports Medicine, American Orthopaedic Society for Sports Medicine, and American Osteopathic Academy of Sports Medicine. Permission is granted to reprint for noncommercial, educational purposes with acknowledgment.

Preparticipation Physical Evaluation
CLEARANCE FORM

Name _____ Sex ☐ M ☐ F Age _____ Date of birth _____

☐ Cleared for all sports without restriction

☐ Cleared for all sports without restriction with recommendations for further evaluation or treatment for _____

☐ Not cleared

- ☐ Pending further evaluation
- ☐ For any sports
- ☐ For certain sports _____

Reason _____

Recommendations _____

I have examined the above-named student and completed the preparticipation physical evaluation. The athlete does not present apparent clinical contraindications to practice and participate in the sport(s) as outlined above. A copy of the physical exam is on record in my office and can be made available to the school at the request of the parents. If conditions arise after the athlete has been cleared for participation, the physician may rescind the clearance until the problem is resolved and the potential consequences are completely explained to the athlete (and parents/guardians).

Name of physician (print/type) _____ Date _____

Address _____ Phone _____

Signature of physician _____, MD or DO

EMERGENCY INFORMATION

Allergies _____

Other information _____

©2010 American Academy of Family Physicians, American Academy of Pediatrics, American College of Sports Medicine, American Medical Society for Sports Medicine, American Orthopaedic Society for Sports Medicine, and American Osteopathic Academy of Sports Medicine. Permission is granted to reprint for noncommercial, educational purposes with acknowledgment.

VCSSFA

Ventura County Schools Self Funding Authority

School Athletics
Physical Contact Acknowledgement

Student name _____ Birth date _____

Parent or legal guardian (Please print) _____ Student address _____

School _____ Sport/Activity _____ Coach/Instructor _____

Athletics and sports often require highly technical physical movements. In order to prepare student athletes to compete to the best of their ability, Coaches may come into physical contact with student athletes. This physical contact is for instructional purposes to guide student athletes in proper positioning and movements.

Examples of situations of instructional potential physical contact include, but are not limited to:

- Batting stances in baseball and softball,
- Competitive Cheer stunts,
- Diving practices,
- Football tackling techniques,
- Golf and tennis swings,
- Starting block positions in track,
- Water polo practices,
- Wrestling positions and moves.

By signing this Physical Contact Acknowledgement, you are recognizing you understand there is potential instructional physical contact between the coach and student athlete, and it is acceptable to you.

Signature (Student) _____ Date _____

Signature (Parent or legal guardian) _____ Date _____

Home telephone _____ Work telephone _____ Mobile telephone or pager _____

Approved 10/17/2017

AlphaBEST EDUCATION

Powering imaginations. Securing futures.

ALPHABEST PROPOSAL FOR OXNARD SCHOOL DISTRICT

Connect the students in your district to a world of endless possibilities through innovative before and after school programs driven by wonder and curiosity.

February 7, 2025

Dr. Ginger Shea
Director of Enrichment & Specialized Programs
Oxnard School District
1051 South A Street
Oxnard, CA 93030

Dear Dr. Shea,

Thank you for the opportunity to meet with you and your team last week to discuss AlphaBEST Education's proposal for piloting a Transitional Kindergarten/Kindergarten (TK/K) program this school year. We greatly appreciated the chance to share our vision for enriching early education in Oxnard School District.

As mentioned during our call, AlphaBEST offers a robust TK/K enrichment curriculum, complemented by the resources and expertise of Kaplan Early Learning Company, our parent organization.

Our proposal outlines AlphaBEST's partnerships with leading curriculum providers, including Social-Emotional Learning (SEL) content from Second Step and an exclusive collaboration with Kids Included Together (KIT). This partnership equips our staff with proven strategies for inclusion and behavior support, ensuring that all children receive the highest quality care and education.

We would be honored to bring our exceptional program to the families of Oxnard School District. AlphaBEST is fully prepared to staff and operate the program beginning in early April, including support during spring break and beyond.

Our proposal highlights AlphaBEST's track record of delivering – and often exceeding – the standards of excellence that schools and families deserve. Thank you for your time and consideration. We look forward to answering any questions and providing any additional information to support your decision.

Best Regards,
Dawn Hosni, Chief Development Officer
Office: 480.815.7014
dhosni@alphabest.org

CORPORATE HEADQUARTERS
AlphaBEST Education, Inc.
620 N. Patterson Ave.
Winston-Salem, NC 27101
Office: 480.815.7014

CALIFORNIA OFFICE
40548 La Costa Circle East
Palm Desert, CA 92211
Office: 480.815.7014

Why AlphaBEST?

1 > PROGRAM OVERVIEW:

AlphaBEST will provide world-class TK/K appropriate enrichment, snacks, physical activities and games, story time, and activity stations on a daily basis to TK and K students.

Examples of the enrichment we provide can be found on the next page.

2 > HIGH QUALITY TEAMS:

Once awarded, we will begin to recruit from the local area and commit to being fully staffed with qualified, bilingual background checked staff on day one of the contract.

The Oxnard program pilot will be staffed with an on-site supervisor, per site, and two (2) staff per group of 20 students. An Area Manager will oversee operations with support from our California-based Regional Manager. Our staff are trained in CPR and First Aid and, at a minimum, compete state mandated training hours each year. Additionally, we provide a diverse range of training programs around:

- **Child growth and development**
- **Staff and site management**
- **Communication**
- **Enrichment curriculum**
- **Classroom management**
- **Health and safety**

Our learning management system includes hundreds of online courses on various general learning subjects, along with 36 Out-of-school Time Certificate Series Courses.

3 > INCLUSIVE PRACTICES:

Our Creating Connected Communities tiered system of supports promotes belonging and strengthens social-emotional skills for all students. School and community connectedness is a powerful protective factor for youth. AlphaBEST uses a tiered system to promote meaningful connections for students, families, and staff. Training and ongoing support is provided to our staff through our partnership with KIT, Kids Included Together. IT is the leading national organization for teaching inclusive practices to youth serving organizations.

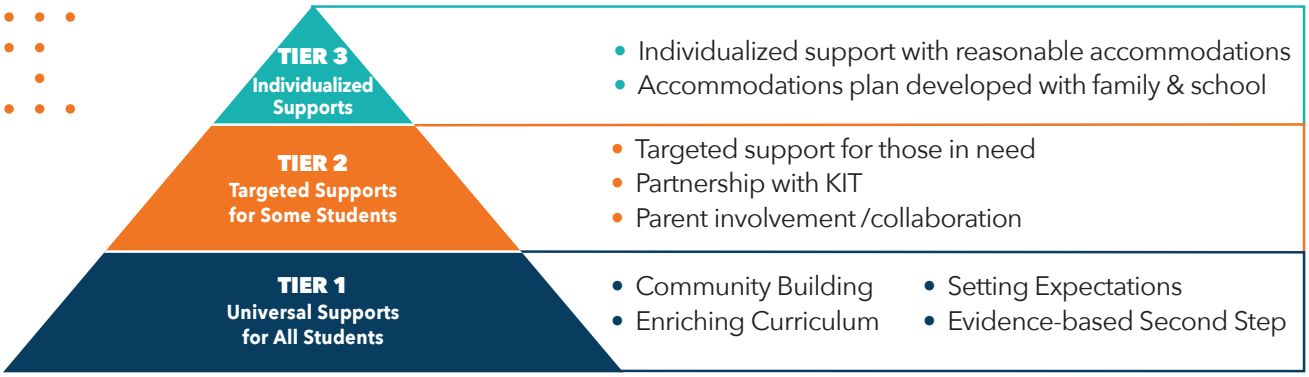

How Wonder Works

ENRICHMENT CLASSES:
for TK/K Students

AlphaBEST EDUCATION

Innovators of After School!

TK-K Options

BEE A CODER! *(TK-K)*

Go on a STEM adventure with BEEBOT, the programmable robot that introduces early learners to coding skills as they design routes for BeeBot to travel on specialized, thematic floor mats. This course will culminate with a BeeBot parade where students dress up their Bees and program a parade route!

BUILDING UP STEAM! *(TK-K)*

LEGO STEAM PARK builds on every child's natural curiosity and desire to explore and investigate the world of early science, technology,engineering, art and math through creative play, observing and describing, problem solving, and collaboration. This course culminates with a guided reflection where students share what they learned.

ACTION MATS *(TK-K)*

ACTION MATS curriculum focuses on physical activities to explore agility, balance, spatial awareness, coordination, dexterity, and thought processing speed. The mats can be used as part of a standalone lesson or used as a "wake up, shake up" session – stimulating children's physical and cognitive abilities before classroom learning.

LETTERS ALIVE® ZOO KEEPER EDITION *(TK-K)*

An award winning supplemental reading kit that incorporates evidence-based best practices to teach letters, letter sounds, word building, and sentence building. The lessons and activities are presented within a zoo theme, which includes animals and ties science with literacy instruction. Using augmented reality, zoo animals literally jump off the screen to engage our youngest learners.

Financial Information

PROGRAM OPTIONS AND FEES

The following fees are based on the following assumptions:

- **3-5 schools**
- **1-2 groups of 20 students each**
- **Total of 5 groups of 20 students**
- **Performance dates: 4/22 - 6/18**

Fee:
$10,400 per month per school for each group of 20 students

ALPHABEST OXNARD SCHOOL BUDGET
ANNUAL BUDGET AND EXPENSE SUMMARY

BUDGET ASSUMPTIONS:
3-5 Schools 4 hours per day, after school - approximate. Varies per site. 5 total groups of 20 students each Performance dates: 4/22 - 6/18

Total Fee for Pilot Program
$104,000.00

Project Income			
TK/K	$	104,000.00	
	$	104,000.00	
LABOR COSTS			
Labor Costs	$	66,825.00	
Benefits	$	8,840.00	
Recruiting & Training	$	1,000.00	
Total Labor Costs	$	76,665.00	74%
OPERATING EXPENSES			
Curriculum Development	$	4,160.00	
Program Materials - Consumable & Durable	$	13,936.00	
Overhead (office space, insurance, customer service, etc.)	$	6,240.00	
Total Operating Expenses:	$	24,336.00	23%
Net from Operations:	$	2,999.00	3%

OSD BOARD AGENDA ITEM

Name of Contributor: Dr. Aracely Fox **Date of Meeting:** March 19, 2025

Agenda Section: Section C: Support Services Agreement

Approval of Agreement #24-200 – Mindset Academy by SWEAT III (Fox/Anguiano)

Mindset Academy by SWEAT III offers group workshops on SEL, PBIS, student voice, and character development. It provides tools and strategies for staff, parents, and students through assemblies and workshops. These sessions focus on mindset development, student engagement, and emotional intelligence, with a total of four days of service.

Term of Agreement: March 31, 2025 through June 30, 2025

FISCAL IMPACT:
Not to exceed $9,400.00 – Title III Funds

RECOMMENDATION:
It is the recommendation of the Principal, Chavez School, and the Assistant Superintendent, Educational Services, that the Board of Trustees approve Agreement #24-200 with Mindset Academy by SWEAT III.

ADDITIONAL MATERIALS:

Attached: Agreement #24-200, Mindset Academy by SWEAT III (4 Pages)
Proposal (1 Page)

Oxnard School District

Short-Term Services Agreement

Use ONLY for low cost, low risk, short-term services – No Sub-Contractors

Requisition Number

Purchase Order Number

24-200

Contract Number

This Services Agreement (the "Agreement") is made and entered into March 19, 2025 by and between the OXNARD SCHOOL DISTRICT (the "Local Educational Agency" or District") and Mindset Academy by SWEAT III, (hereinafter referred to as "Provider"). District and Provider may be referred to herein individually as a "Party" and collectively as the "Parties."

Mindset Academy by SWEAT III	916-718-6560
Provider	Telephone Number
408 4th Street	onamission@gmail.com
Street Address	E-mail Address
West Sacramento, CA 95605	
City, State, Zip code	Tax Identification or Social Security Number

Services

Provide workshops and tools for staff, parents, and students to enhance mindset, engagement, and emotional intelligence.

Description of Services (if more space is needed, attach pages labeled as ATTACHMENT A, which is incorporated herein in full)

March 31, 2025 through June 30, 2025	TBD	Chavez School
Date(s) of Service	Hour(s) of Service	Location

Fees

Compensation for Services	$ 9,400.00
Other Ancillary Cost, as applicable	$ 0.00
Total not to Exceed	$ 9,400.00

☑ W-9 received

Payment. District will pay Provider within 30 days after receipt of an invoice, in form and content acceptable to District, and reflecting charges for District approved costs and services performed by Provider and not previously invoiced.

Conditions. Provider will have no obligation to provide services until District returns a signed copy of this Agreement.

Nature of Relationship. The parties agree the relationship created by this Agreement is that of independent contractor. Provider understands and agrees that the Provider, officers, agents, or employees of Provider are not entitled to any benefits normally offered or conveyed to District employees, including but not limited to coverage under the California Workers' Compensation Insurance laws.

Binding Effect. This Agreement shall inure to the benefit and shall be binding upon all of the parties to this Agreement, and their respective successors in interest or assigns.

Termination or Amendment. This Agreement may be terminated or amended in writing at any time by mutual written consent of all of the parties to this Agreement, and may be terminated by either party for any reason by giving the other party 30 days advance written notice.

Compliance with Laws. Provider hereby agrees that Provider, and each of its officers, agents, and employees (each a "Provider Party) shall obey all local, state, and federal laws and regulations in the performance of this Agreement, including but not limited to each of the following laws and regulations, as and if applicable:

- Provider shall be responsible for the safety of its employees and shall comply with California Code of Regulations Title 8, section 3205, COVID-19 Prevention.

- Provider shall ensure that each Provider Party who is on-site supporting school functions is compliant with all the following laws, if and as applicable:
  - Fingerprinting / criminal background investigations (see paragraph titled "Fingerprinting, below);
  - Public Health Department Orders and Guidance or other related mandates related to COVID-19, so long as such Orders and Guidance are in effect during the Term of this Agreement;
  - Tuberculosis Clearance (Education Code § 49406)

Non-Discrimination and Equal Employment Opportunity. Provider represents and agrees that it does not and shall not discriminate against any employee or applicant for employment, company, individual or group of individuals, because of ancestry, age, color, disability (physical and mental, including HIV and AIDS), genetic information, gender identity, gender expression, marital status, medical condition, military or veteran status, national origin, race, religion, sex/gender, and sexual orientation.

Confidentiality. Provider agrees to maintain the confidentiality of all District and District-related data, information, and records including but not limited to student identifiable information and employee personnel information pursuant to all California and Federal statutory laws relating to privacy, confidentiality, and information security including but not limited to California Education Code sections 49060 – 49085 and the Family Educational Rights and Privacy Act (FERPA), that currently exist or exist at any time during the term of this Agreement. All such records and information shall be considered confidential and kept confidential by Provider and Provider's officers, agents, employees, participants, vendors, or customers.

Fingerprinting. Provider shall ensure that Provider and any employee who interacts with students, outside of the immediate supervision and control of the student's parent or guardian or a school employee, has a current valid criminal records summary as described in California *Education Code* section 44237. If any services will be provided on-site, or through an app or other electronic method that might allow any interaction between any student and Provider shall, prior to commencing any service hereunder, provide the District a Fingerprinting/ Criminal Background Check investigation Certificate, in form and substance satisfactory to the District. While this Agreement is in effect, Provider shall immediately provide any arrest and conviction information it receives concerning any person providing Services hereunder to the District.

Food Vendors. Ventura County Environmental Health Facilities Permit: https://vcrma.org/consumer-food-protection

❑ Mobile Food Facility permit ❑ Temporary Food Facility permit ❑ Exempt – must show documentation

Date checked by school official: _____initials: _____

Indemnification. To the fullest extent permitted by law, Provider agrees to defend, indemnify, and hold harmless District, its governing board, officers, administrators, managers, agents, employees, successors, assigns, independent contractors and/or volunteers from and against any and all claims, demands, monetary or other losses, loss of use, damages and expenses, including but not limited to, reasonable legal fees and costs, or other obligations or claims arising out of any liability or damage to person or property resulting from bodily injury, illness, communicable disease, virus, pandemic, or any other loss, sustained or claimed to have been sustained arising out of activities of the Provider or those of any of its officers, agents, employees, participants, vendors, or customers of Provider, whether such act or omission is authorized by this Agreement or not. Provider also agrees to pay for any and all damage to the real and personal property of the District, or loss or theft of such property, or damage to the Property done or caused by such persons. District assumes no responsibility whatsoever for any property placed on District premises by Provider, Provider's agents, employees, participants, vendors, or customers. The provisions of this Indemnification do not apply to any damage or losses caused solely by the intentional misconduct of the District or any of its governing board, officers, administrators, managers, agents, employees and/or volunteers.

This Indemnification shall survive termination of this Agreement, for any reason whatsoever, and binds each party's legal representatives, successors, and assigns.

Insurance. Provider, at its own cost and expense, shall procure and maintain during the term of this Agreement, policies of insurance for the following types of coverage:

a. Commercial General Liability Insurance. Provider shall procure and maintain, during the term of this Agreement, not less than the following General Liability Insurance coverage in the amounts of $1,000,000 per occurrence and $2,000,000 aggregate.

   Commercial General Liability insurance shall include products/completed operations, property damage, and personal and advertising injury coverage.

b. Automobile Liability. Provider shall procure and maintain, during the full term of this Agreement following Automobile Liability Insurance including non-owned and leased automobiles, as applicable with the following coverage limits:

Personal vehicles:	$500,000.00 combined single limit or
	$100,000.00 per person / $300,000.00 per accident
Commercial vehicles:	$1,000,000.00 per accident for bodily injury and property damage

c. Workers' Compensation Insurance. Provider shall procure and maintain, during the term of this Agreement, Workers' Compensation Insurance, as required by California law, on all of its employees engaged in work related to the performance of this Agreement. Provider shall procure and maintain Employers' Liability insurance coverage of $1,000,000. Absent proof of Workers' Compensation Insurance, Provider will submit a fully executed Certification of Exemption from Workers' Compensation Insurance, which District in its sole discretion may accept or reject.

d. Other Coverage as Dictated by the District. If any employee of Provider interacts with students, outside of the immediate supervision and control of the student's parent or guardian or a certificated school employee, Provider shall procure and maintain, during the term of this Agreement, Abuse and Molestation coverage in the amounts of $2,000,000 per occurrence and $4,000,000 aggregate.

If professional services are offered, Provider shall procure and maintain, during the term of this Agreement, Professional Liability (Errors and Omissions) insurance coverage in the amounts of $1,000,000 per occurrence and $2,000,000 aggregate.

e. Provider's insurance is primary and will not seek contribution from any other insurance available to the District. Provider further hereby waives any and all rights of subrogation that it may have against the District.

f. Certificates of Insurance. Provider shall provide certificates of insurance to the District as evidence of the insurance coverage required herein, not less than 15 days prior to commencing the proposed activity, and at any other time upon the request of the District. Certificates of insurance will be deemed invalid if proper endorsements are not attached. Certificates of such insurance shall be filed with the District on or before commencement of the services under this Agreement.

g. Endorsements. Provider's Commercial General Liability insurance and Commercial Automobile Liability coverage and Abuse and Molestation coverage shall name the District, its governing board, officers, agents, employees, and/or volunteers as additional insureds. All endorsements specifying additional insureds for any of the Insurance Policies shall be as indicated below or an equivalent endorsement reasonably acceptable to the District.

1) General Liability: CG 20 26 10 01
2) Primary, non-contributory: CG 20 01 04 13
3) Waiver of subrogation: CG 24 04 05 09
4) Commercial Automobile Liability: CA 20 48 10 13

h. Acceptability of Insurers. Insurance is to be placed with insurers with a current A.M. Best's rating of no less than A: VII, unless otherwise acceptable to the District.

i. Insurance written on a "claims made" basis is to be renewed by the Provider for a period of three (3) years following termination of this Agreement. Such insurance must have the same coverage and limits as the policy that was in effect during the term of this agreement and will cover the Provider for all claims made. If coverage is canceled or non-renewed, and not replaced with another claims-made policy form with a Retroactive Date prior to the contract effective date, the Consultant must purchase "extended reporting" coverage for a minimum of three (3) years after completion of the Services.

j. Failure to Procure Insurance**.** Failure on the part of Provider to procure or maintain required insurance shall constitute a material breach of contract under which the District may immediately terminate this Agreement

Governing Law and Venues. This Agreement shall be interpreted in accordance with the laws of the State of California. If any action is brought to interpret or enforce any term of this Agreement, the action shall be brought in state or federal court situated in the County of Ventura, State of California.

Dispute Resolution. If any dispute arises out of or in connection with the Agreement, representatives of the Parties with authority to settle the dispute shall communicate, in person, electronically, or in writing within 30 days of written notice, in a good faith effort to resolve the dispute.

The parties agree that, in the event of any unresolved dispute under the agreement in which the amount sought is $5,000.00 or less, any litigation to resolve the dispute shall be brought in the Ventura County Small Claims Court.

If the unresolved amount in dispute exceeds $5,000.00, the parties agree that they will first submit the matter to a mutually agreed upon mediator. Notwithstanding the following section, Attorneys Fees, the cost of the mediator shall be borne equally by the parties.

Attorney Fees. In the event of any action or proceeding to interpret or enforce the terms of this Agreement, the prevailing party, as determined by the court or mediator, shall be entitled to recover its reasonable attorney fees and costs incurred in connection with such actions or proceeding.

Nature of Agreement. This Agreement represents the entire agreement between the parties hereto with respect to the subject matter hereof and supersedes any and all other agreements and communications however characterized, written or oral, between or on behalf of the parties hereto with respect to the subject matter hereof. This Agreement may only be modified by a written instrument signed by authorized representatives of each of the parties hereto.

Counterpart Execution. This Agreement may be executed in any number of counterparts which, when taken together, shall constitute one and the same instrument. Executed counterparts of this Agreement may be delivered by PDF email or electronic facsimile transmission and shall have the same legal effect as an "ink-signed" original.

Signature Authority. Provider represents and warrants that Provider has all requisite power and authority to conduct its business and to execute, deliver, and perform this Agreement.

Acknowledgement and Agreement

I have read this Agreement and agree to its terms

Provider Authorized Signer	Signature	Date

Oxnard School District

Melissa Reyes		
Director, Purchasing	Signature	Date

Memorandum of Understanding Between MINDSET ACADEMY by SWEAT III and Cesar E. Chavez Elementary School

This agreement specifies the expectations of the partnership between Cesar E. Chavez Elementary School and MINDSET ACADEMY by SWEAT III 826 Lighthouse Dr. West Sacramento, CA 95605. The partnership takes effect upon approval through June 2025

Student Assembly/ Mindset Academy Workshops

The focus of these sessions will be mindset development, student engagement and emotional intelligence.

- SEL
- PBIS
- STUDENT VOICE
- CHARACTER DEVELOPMENT

Parent Workshops

- Goal Setting
- SEL, Parent Engagement
- SEL in the home
- Student and Parent collaboration

Mindset Academy by SWEAT III will provide training and student development through an assembly and workshops

Responsibilities of Contractor:

Mindset Academy by SWEAT III

- Facilitate Training
- Workshop/ Assembly for students
- Provide tools and strategies for staff, parents and students
- 4 days
- Materials and Travel

Responsibilities of Cesar E. Chavez Elementary School

- Secure the amount of $9,400.00
- Will be invoiced in the amount of $9,400.00

Services will be provided upon approval through June 2025

Signatures:

_____ Date: 1/15/25

Mindset Academy Program Representative

_____ Date:_____

(Site/School) Representative

_____ Date:_____

(Site/School) Representative

OSD BOARD AGENDA ITEM

Name of Contributor: Dr. Aracely Fox **Date of Meeting:** March 19, 2025

Agenda Section: Section C: Support Services Agreement

Approval of Agreement #24-201 – Mindset Academy by SWEAT III (Fox/Shea)

Mindset Academy by SWEAT III will offer a series of workshops that combine large group activities with targeted small group mentorship, ensuring a balance of overall engagement and individualized attention. Each session will feature interactive discussions, role-playing scenarios, and activities aimed at empowering youth voices, strengthening character-building principles, and promoting reflective practices. The proposed schedule will address essential SEL topics such as mindset development, self-awareness, social awareness, decision-making, and celebrating personal growth. These services will be offered at the Elm School After School Program.

Term of Agreement: March 20, 2025 - June 30, 2025

FISCAL IMPACT:
Not to Exceed: $14,200.00 – Expanded Learning Opportunities Program

RECOMMENDATION:
It is the recommendation of the Director, Enrichment & Specialized Programs, and the Assistant Superintendent, Educational Services, that the Board of Trustees approve Agreement #24-201 with Mindset Academy by SWEAT III.

ADDITIONAL MATERIALS:

Attached: Agreement #24-201, Mindset Academy by SWEAT III (4 Pages)
Proposal (1 Page)

Oxnard School District

Short-Term Services Agreement

Use ONLY for low cost, low risk, short-term services – No Sub-Contractors

Requisition Number

Purchase Order Number

24-201

Contract Number

This Services Agreement (the "Agreement") is made and entered into March 19, 2025 by and between the OXNARD SCHOOL DISTRICT (the "Local Educational Agency" or District") and Mindset Academy by SWEAT III, (hereinafter referred to as "Provider"). District and Provider may be referred to herein individually as a "Party" and collectively as the "Parties."

Mindset Academy by SWEAT III	916-718-6560
Provider	Telephone Number
408 4th Street	onamission@gmail.com
Street Address	E-mail Address
West Sacramento, CA 95605	
City, State, Zip code	Tax Identification or Social Security Number

Services

Intervention Support Training and workshops focusing on student engagement, and social and emotional development.

Description of Services (if more space is needed, attach pages labeled as ATTACHMENT A, which is incorporated herein in full)

March 20, 2025 through June 30, 2025	TBD	Elm School
Date(s) of Service	Hour(s) of Service	Location

Fees

Compensation for Services	$ 14,200.00
Other Ancillary Cost, as applicable	$ 0.00
Total not to Exceed	$ 14,200.00

☑ W-9 received

Payment. District will pay Provider within 30 days after receipt of an invoice, in form and content acceptable to District, and reflecting charges for District approved costs and services performed by Provider and not previously invoiced.

Conditions. Provider will have no obligation to provide services until District returns a signed copy of this Agreement.

Nature of Relationship. The parties agree the relationship created by this Agreement is that of independent contractor. Provider understands and agrees that the Provider, officers, agents, or employees of Provider are not entitled to any benefits normally offered or conveyed to District employees, including but not limited to coverage under the California Workers' Compensation Insurance laws.

Binding Effect. This Agreement shall inure to the benefit and shall be binding upon all of the parties to this Agreement, and their respective successors in interest or assigns.

Termination or Amendment. This Agreement may be terminated or amended in writing at any time by mutual written consent of all of the parties to this Agreement, and may be terminated by either party for any reason by giving the other party 30 days advance written notice.

Compliance with Laws. Provider hereby agrees that Provider, and each of its officers, agents, and employees (each a "Provider Party) shall obey all local, state, and federal laws and regulations in the performance of this Agreement, including but not limited to each of the following laws and regulations, as and if applicable:

- Provider shall be responsible for the safety of its employees and shall comply with California Code of Regulations Title 8, section 3205, COVID-19 Prevention.

- Provider shall ensure that each Provider Party who is on-site supporting school functions is compliant with all the following laws, if and as applicable:
  - Fingerprinting / criminal background investigations (see paragraph titled "Fingerprinting, below);
  - Public Health Department Orders and Guidance or other related mandates related to COVID-19, so long as such Orders and Guidance are in effect during the Term of this Agreement;
  - Tuberculosis Clearance (Education Code § 49406)

Non-Discrimination and Equal Employment Opportunity. Provider represents and agrees that it does not and shall not discriminate against any employee or applicant for employment, company, individual or group of individuals, because of ancestry, age, color, disability (physical and mental, including HIV and AIDS), genetic information, gender identity, gender expression, marital status, medical condition, military or veteran status, national origin, race, religion, sex/gender, and sexual orientation.

Confidentiality. Provider agrees to maintain the confidentiality of all District and District-related data, information, and records including but not limited to student identifiable information and employee personnel information pursuant to all California and Federal statutory laws relating to privacy, confidentiality, and information security including but not limited to California Education Code sections 49060 – 49085 and the Family Educational Rights and Privacy Act (FERPA), that currently exist or exist at any time during the term of this Agreement. All such records and information shall be considered confidential and kept confidential by Provider and Provider's officers, agents, employees, participants, vendors, or customers.

Fingerprinting. Provider shall ensure that Provider and any employee who interacts with students, outside of the immediate supervision and control of the student's parent or guardian or a school employee, has a current valid criminal records summary as described in California *Education Code* section 44237. If any services will be provided on-site, or through an app or other electronic method that might allow any interaction between any student and Provider shall, prior to commencing any service hereunder, provide the District a Fingerprinting/ Criminal Background Check investigation Certificate, in form and substance satisfactory to the District. While this Agreement is in effect, Provider shall immediately provide any arrest and conviction information it receives concerning any person providing Services hereunder to the District.

Food Vendors. Ventura County Environmental Health Facilities Permit: https://vcrma.org/consumer-food-protection

❑ Mobile Food Facility permit ❑ Temporary Food Facility permit ❑ Exempt – must show documentation

Date checked by school official: _____initials: _____

Indemnification. To the fullest extent permitted by law, Provider agrees to defend, indemnify, and hold harmless District, its governing board, officers, administrators, managers, agents, employees, successors, assigns, independent contractors and/or volunteers from and against any and all claims, demands, monetary or other losses, loss of use, damages and expenses, including but not limited to, reasonable legal fees and costs, or other obligations or claims arising out of any liability or damage to person or property resulting from bodily injury, illness, communicable disease, virus, pandemic, or any other loss, sustained or claimed to have been sustained arising out of activities of the Provider or those of any of its officers, agents, employees, participants, vendors, or customers of Provider, whether such act or omission is authorized by this Agreement or not. Provider also agrees to pay for any and all damage to the real and personal property of the District, or loss or theft of such property, or damage to the Property done or caused by such persons. District assumes no responsibility whatsoever for any property placed on District premises by Provider, Provider's agents, employees, participants, vendors, or customers. The provisions of this Indemnification do not apply to any damage or losses caused solely by the intentional misconduct of the District or any of its governing board, officers, administrators, managers, agents, employees and/or volunteers.

This Indemnification shall survive termination of this Agreement, for any reason whatsoever, and binds each party's legal representatives, successors, and assigns.

Insurance. Provider, at its own cost and expense, shall procure and maintain during the term of this Agreement, policies of insurance for the following types of coverage:

a. Commercial General Liability Insurance. Provider shall procure and maintain, during the term of this Agreement, not less than the following General Liability Insurance coverage in the amounts of $1,000,000 per occurrence and $2,000,000 aggregate.

   Commercial General Liability insurance shall include products/completed operations, property damage, and personal and advertising injury coverage.

b. Automobile Liability. Provider shall procure and maintain, during the full term of this Agreement following Automobile Liability Insurance including non-owned and leased automobiles, as applicable with the following coverage limits:

Personal vehicles:	$500,000.00 combined single limit or
	$100,000.00 per person / $300,000.00 per accident
Commercial vehicles:	$1,000,000.00 per accident for bodily injury and property damage

c. Workers' Compensation Insurance. Provider shall procure and maintain, during the term of this Agreement, Workers' Compensation Insurance, as required by California law, on all of its employees engaged in work related to the performance of this Agreement. Provider shall procure and maintain Employers' Liability insurance coverage of $1,000,000. Absent proof of Workers' Compensation Insurance, Provider will submit a fully executed Certification of Exemption from Workers' Compensation Insurance, which District in its sole discretion may accept or reject.

d. Other Coverage as Dictated by the District. If any employee of Provider interacts with students, outside of the immediate supervision and control of the student's parent or guardian or a certificated school employee, Provider shall procure and maintain, during the term of this Agreement, Abuse and Molestation coverage in the amounts of $2,000,000 per occurrence and $4,000,000 aggregate.

If professional services are offered, Provider shall procure and maintain, during the term of this Agreement, Professional Liability (Errors and Omissions) insurance coverage in the amounts of $1,000,000 per occurrence and $2,000,000 aggregate.

e. Provider's insurance is primary and will not seek contribution from any other insurance available to the District. Provider further hereby waives any and all rights of subrogation that it may have against the District.

f. Certificates of Insurance. Provider shall provide certificates of insurance to the District as evidence of the insurance coverage required herein, not less than 15 days prior to commencing the proposed activity, and at any other time upon the request of the District. Certificates of insurance will be deemed invalid if proper endorsements are not attached. Certificates of such insurance shall be filed with the District on or before commencement of the services under this Agreement.

g. Endorsements. Provider's Commercial General Liability insurance and Commercial Automobile Liability coverage and Abuse and Molestation coverage shall name the District, its governing board, officers, agents, employees, and/or volunteers as additional insureds. All endorsements specifying additional insureds for any of the Insurance Policies shall be as indicated below or an equivalent endorsement reasonably acceptable to the District.

1) General Liability: CG 20 26 10 01
2) Primary, non-contributory: CG 20 01 04 13
3) Waiver of subrogation: CG 24 04 05 09
4) Commercial Automobile Liability: CA 20 48 10 13

h. Acceptability of Insurers. Insurance is to be placed with insurers with a current A.M. Best's rating of no less than A: VII, unless otherwise acceptable to the District.

i. Insurance written on a "claims made" basis is to be renewed by the Provider for a period of three (3) years following termination of this Agreement. Such insurance must have the same coverage and limits as the policy that was in effect during the term of this agreement and will cover the Provider for all claims made. If coverage is canceled or non-renewed, and not replaced with another claims-made policy form with a Retroactive Date prior to the contract effective date, the Consultant must purchase "extended reporting" coverage for a minimum of three (3) years after completion of the Services.

j. Failure to Procure Insurance**.** Failure on the part of Provider to procure or maintain required insurance shall constitute a material breach of contract under which the District may immediately terminate this Agreement

Governing Law and Venues. This Agreement shall be interpreted in accordance with the laws of the State of California. If any action is brought to interpret or enforce any term of this Agreement, the action shall be brought in state or federal court situated in the County of Ventura, State of California.

Dispute Resolution. If any dispute arises out of or in connection with the Agreement, representatives of the Parties with authority to settle the dispute shall communicate, in person, electronically, or in writing within 30 days of written notice, in a good faith effort to resolve the dispute.

The parties agree that, in the event of any unresolved dispute under the agreement in which the amount sought is $5,000.00 or less, any litigation to resolve the dispute shall be brought in the Ventura County Small Claims Court.

If the unresolved amount in dispute exceeds $5,000.00, the parties agree that they will first submit the matter to a mutually agreed upon mediator. Notwithstanding the following section, Attorneys Fees, the cost of the mediator shall be borne equally by the parties.

Attorney Fees. In the event of any action or proceeding to interpret or enforce the terms of this Agreement, the prevailing party, as determined by the court or mediator, shall be entitled to recover its reasonable attorney fees and costs incurred in connection with such actions or proceeding.

Nature of Agreement. This Agreement represents the entire agreement between the parties hereto with respect to the subject matter hereof and supersedes any and all other agreements and communications however characterized, written or oral, between or on behalf of the parties hereto with respect to the subject matter hereof. This Agreement may only be modified by a written instrument signed by authorized representatives of each of the parties hereto.

Counterpart Execution. This Agreement may be executed in any number of counterparts which, when taken together, shall constitute one and the same instrument. Executed counterparts of this Agreement may be delivered by PDF email or electronic facsimile transmission and shall have the same legal effect as an "ink-signed" original.

Signature Authority. Provider represents and warrants that Provider has all requisite power and authority to conduct its business and to execute, deliver, and perform this Agreement.

Acknowledgement and Agreement

I have read this Agreement and agree to its terms

Provider Authorized Signer	Signature	Date

Oxnard School District

Melissa Reyes		
Director, Purchasing	Signature	Date

Memorandum of Understanding Between MINDSET ACADEMY by SWEAT III and
Elm Elementary School (After School Programs)

This agreement specifies the expectations of the partnership between Elm Elementary School and MINDSET ACADEMY by SWEAT III 826 Lighthouse Dr. West Sacramento, CA 95605. The partnership takes effect upon approval through June 2025

Student Engagement, Social and emotional development workshops
The focus of these sessions will be mindset development, student engagement and emotional intelligence.

- SEL
- Self-awareness, Self-management, Social-awareness, Relationship Skills, Responsible decision – making
- YOUTH VOICE
- CHARACTER DEVELOPMENT

Workshop Goals & Objectives

Services Provided to Elm Elementary School

- **5 days of service**
- **1 head coach**
- **2 assistant coaches**
- **Small group mentorship sessions**
- **Large group structured activities * 4th – 5th Grade**
- **All materials included**
- **All equipment included**
- **Travel Included**
-

Responsibilities of Contractor:
Mindset Academy by SWEAT III

- Facilitate Training
- Workshop/ Assembly for students
- Provide tools and strategies for students
- Materials and Travel
- workshop series
- SEL, Mind Setting, Character Development

Responsibilities of Elm Elementary School District

- Secure the amount of $14,200.00
- Will be invoiced in 1 amount of $14,200.00
  Services will be provided upon approval through June 2025

Signature

_____ Date: 1/13/25
Program Representative

_____ Date:_____
(Site/School) Representative

_____ Date:_____
(Site/School) Representative

OSD BOARD AGENDA ITEM

Name of Contributor: Dr. Aracely Fox **Date of Meeting:** March 19, 2025

Agenda Section: Section C: Enrichment Agreement

Approval of Agreement #24-206 – Prismatic Magic LLC (Fox/Shea)

Prismatic Magic will present a Laser Safari Program for students in the Oxnard School District during Spring Camp at eight school site locations.

Term of Agreement: April 8 – 17, 2025

FISCAL IMPACT:
Not to Exceed $7,992.00 – Expanded Learning Opportunities Program

RECOMMENDATION:
It is the recommendation of the Director, Enrichment & Specialized Programs, and the Assistant Superintendent, Educational Services, that the Board of Trustees approve Agreement #24-206 with Prismatic Magic, LLC.

ADDITIONAL MATERIALS:

Attached: Agreement #24-206, Prismatic Magic LLC (15 Pages)
Proposal (1 Page)

SERVICES AGREEMENT

Requisition Number

Purchase Order Number

24-206

Contract Number

This Services Agreement (the "Agreement") is made and entered into this 19th day of March, 2025 by and between Oxnard School District (hereinafter referred to as "District") and Prismatic Magic LLC, (hereinafter referred to as "Provider.")

PROVIDER.

Prismatic Magic LLC	866-952-7376
Provider	Telephone Number
PO Box 11678	866-779-7726
Street Address	Fax Number
Fort Worth, TX 76110	raleigh@prismaticmagic.com
City, State, Zip code	E-mail Address
Tax Identification or Social Security Number	License Number (if applicable)

A. District desires to engage Provider services as more particularly described on "Statement of Work" which is attached hereto and incorporated herein by this reference ("Services").

B. Provider has the necessary qualifications by reason of training, experience, preparation and organization, and is agreeable to performing and providing such Services, upon and subject to the terms and conditions as set forth below in this Agreement.

NOW THEREFORE, for valuable consideration, the receipt and sufficiency of which are hereby acknowledged, the parties hereto hereby agree as follows:

1. **CONDITIONS**. Provider will have no obligation to provide services until District returns a signed copy of this Agreement.

2. **NATURE OF RELATIONSHIP**. The parties agree the relationship created by this Agreement is that of independent contractor. In performing all of the Services, Provider shall be, and at all times is, acting and performing as an independent contractor with District, and not as a partner, coventurer, agent, or employee of District, and nothing contained herein shall be construed to be inconsistent with this relationship or status. Provider is not granted any right or authority to assume or to create any obligation or responsibility, express or implied, on behalf of or in the name of District or to bind the District in any manner. Except for any materials, procedures, or subject matter agreed upon between Provider and District, Provider shall have complete control over the manner and method of performing the Services.

Provider understands and agrees to independent contractor status. Provider understands and agrees that the filing and acceptance of this Agreement creates a rebuttable presumption and that the Provider, officers, agents, employees, or subcontractors of Provider are not entitled to coverage under the California Workers' Compensation Insurance laws, Unemployment Insurance, Health Insurance, Pension Plans, or any other benefits normally offered or conveyed to District employees. Provider will be responsible for payment of all Provider employee wages, payroll taxes, employee benefits, and any amounts due for federal and state income taxes and Social Security taxes. These taxes will not be withheld from payments under this agreement.

3. **NON-EXCLUSIVITY.**

   a. During the term of this agreement Provider may, independent of Provider's relationship with the District, without breaching this Agreement or any duty owed to the District, act in any capacity, and may render services for any other entity.

   b. During the term of this Agreement the District may, independent of its relationship with the Provider, without breaching this Agreement or any duty owed to the Provider contract with other individuals and entities to render the same or similar services to the District.

4. **SERVICES**. Provider shall provide District with the services, which are described on the "Statement of Work" (the "Work" or "Service") attached hereto and incorporated herein by this reference. The Statement of Work shall contain a timetable for completion of the Work or if the Work is an ongoing service, the Statement of Work shall set forth the mutually agreed schedule for providing such services. Provider shall use its best efforts to complete all phases of the Work according to such timetable. In the event that there is any delay in completion of the Work arising as a result of a problem within the control of District, Provider and District shall cooperate with each other to work around such delay. However, District shall not be responsible for any additional cost or expense to Provider as a result of such delay unless specifically agreed to in writing by the District. In addition to the specifications and/or requirements contained in the Statement of Work and any warranty given by Provider hereunder, the Statement of Work may set forth those performance criteria agreed between District and Provider whereby the District can evaluate whether Provider has satisfactorily completed the Work ("Performance Criteria").

   Provider, at Provider's sole cost and expense, shall furnish all tools, equipment, apparatus, facilities, transportation, labor, and material necessary to meet its obligations under this Agreement. No substitutions of materials or service from those specified in this section shall be made without the prior written consent of the District.

5. **TIME OF PERFORMANCE**. The term of this Agreement shall commence on April 8, 20 25, and terminate on April 17, 20 25. All work and services contracted for under the terms of this Agreement shall be undertaken and completed in such sequence as to assure their full completion in accordance with the terms and conditions set forth in this Agreement.

   [**Note:** California *Education Code* section 17596 limits continuing contracts; contracts for work or services, or for apparatus or equipment, not to exceed five years; for materials or supplies, not to exceed three years.]

6. **PAYMENT AND EXPENSES**. All payments due to Provider are set forth in the "Schedule of Fees" attached hereto and incorporated herein by this reference.

   Provider shall send District periodic statements indicating Provider's fees and costs incurred and their basis and any current balance owed. If no Provider's fees or costs are incurred for a particular time period,

or if they are minimal, the statement may be held by the Provider and combined with that for the following time period unless a statement is requested by the District.

All payments due Provider are set forth in "Schedule of Fees" and shall be paid by the District within 30 days of receipt of a proper, undisputed invoice from Provider, which invoice shall set forth in reasonable detail the services performed. The District reserves the right, in its sole and absolute discretion, to reject any invoice that is not submitted in compliance with the District's standards and procedures. In the event that any portion of an invoice submitted by a Provider to the District is disputed, the District shall only be required to pay the undisputed portion of such invoice at that time, and the parties shall meet to try to resolve any disputed portion of any invoice.

The rates set forth in "Schedule of Fees" are not set by law, but are negotiable between Provider and District.

7. **ASSIGNMENT AND SUBCONTRACTORS**. Provider shall not assign, sublet, or transfer this Agreement or any rights under or interest in this Agreement without the prior written consent of the District, which may be withheld by the District in its sole and absolute discretion for any reason. Nothing contained herein shall prevent Provider from employing independent associates, subcontractors, and sub-consultants as Provider may deem appropriate to assist in the performance of services herein, subject to the prior written approval of the District. Any attempted assignment, sublease, or transfer in violation of this Agreement shall be null and void, and of no force and affect. Any attempted assignment, sublet, or transfer in violation of this Agreement shall be grounds for the District, in its sole discretion, to terminate the Agreement

8. **TERMINATION OR AMENDMENT**. This Agreement may be terminated or amended in writing at any time by mutual written consent of all of the parties to this Agreement, and may be terminated by either party for any reason by giving the other party 60 days advance written notice. In the event of cancellation prior to completion of the specified services, all finished or unfinished projects, documents, data, studies, and reports prepared by the Provider under this agreement shall, at the option of the District, become District property. The Provider shall be entitled to receive just and equitable compensation for any satisfactory work completed on such items prior to termination of the Agreement.

   The parties to this Agreement shall be excused from performance thereunder during the time and to the extent they are prevented from obtaining, delivering, or performing due to act(s) of God. Satisfactory evidence thereof to the other party is required, provided that it is satisfactorily established that the non-performance is not due to the fault or neglect of the party not performing.

9. **NOTICE**. Any notices required or permitted to be given under this Agreement shall be deemed fulfilled by written notice, demand or request personally served on (with proof of service endorsed thereon, or mailed to, or hereinafter provided) the party entitled thereto or on its successors and assigns, and may be given by:

   a. Personal delivery;

   b. Overnight commercial courier;

   c. Certified or registered prepaid U.S. mail, return receipt requested; or

   d. Electronic mail or electronic facsimile transmission; provided that if given electronically, an additional copy shall also be delivered by a, b, or c, above.

If mailed, such notice, demand, or request shall be mailed certified or registered mail, return receipt requested, and deposited in the United States mail addressed to such party at its address set forth below or to such address as either party hereto shall direct by like written notice and shall be deemed to have been made on the third (3rd) day following posting; or if sent by a nationally recognized overnight express carrier, prepaid, such notice shall be deemed to have been made on the next business day following deposit with such carrier. For the purposes herein, notices shall be sent to the District and the Provider as follows:

Oxnard School District	Prismatic Magic LLC
District	Provider
Attn: Ginger Shea	Attn: Raleigh Ames
1051 South A Street	PO Box 11678
Street	Street
Oxnard, CA 93030	Fort Worth, TX 76110
City, State, Zip Code	City, State, Zip Code

10. **WARRANTY**. Provider hereby warrants to District that the Work shall be performed in a professional and workmanlike manner consistent with the highest industry standards. For a period of one (1) year following completion of the Work, Provider shall correct or make arrangements to correct any breach of the warranty for the Work within ten (10) business days of notice from District of same.

11. **ADDITIONAL WORK**. If changes in the work seem merited by the Provider or the District, and informal consultations with the other party indicate that a change is warranted, it shall be processed by the District in the following manner:

    a. A letter outlining the changes shall be forwarded to the District by the Provider with a statement of estimated changes in fee and/or time schedule.

    b. A written amendment to this Agreement shall be prepared by the District and executed by all of the parties before any performance of such services or the District shall not be required to pay for the increased cost incurred for the changes in the scope of work.

    Any such amendment to the Agreement shall not render ineffective or invalidate unaffected portions of this Agreement.

12. **COMPLIANCE WITH LAWS**. Provider hereby agrees that Provider, officers, agents, employees, and subcontractors of Provider shall obey all local, state, and federal laws and regulations in the performance of this Agreement, including, but not limited to minimum wages laws and/or prohibitions against discrimination. Without limiting the generality of the foregoing, Provider shall complete the conflict of interest certification on **Exhibit C**.

    Provider, officers, agents, employees and/or subcontractors of Provider shall secure and maintain in force for the full term of this Agreement, at Provider's sole cost and expense, such licenses and permits as are required by law, in connection with the furnishing of all the Services, materials, or supplies necessary for completion of the Services described.

13. **NON-DISCRIMINATION AND EQUAL EMPLOYMENT OPPORTUNITY**
Provider represents and agrees that it does not and shall not discriminate against any employee or applicant for employment, company, individual or group of individuals, because of ancestry, age, color, disability (physical and mental, including HIV and AIDS), genetic information, gender identity, gender expression, marital status, medical condition, military or veteran status, national origin, race, religion, sex/gender, and sexual orientation.

14. **INDEMNIFICATION**. To the fullest extent permitted by law, Provider agrees to defend, indemnify, and hold harmless District, its governing board, officers, agents, employees, successors, assigns, independent contractors and/or volunteers from and against any and all claims, demands, monetary or other losses, loss of use, damages and expenses,, including but not limited to, legal fees and costs, or other obligations or claims arising out of any liability or damage to person or property resulting from bodily injury, illness, communicable disease, virus, pandemic, or any other loss, sustained or claimed to have been sustained arising out of activities of the Provider or those of any of its officers, agents, employees, participants, vendors, customers or subcontractors of Provider, whether such act or omission is authorized by this Agreement or not. Provider also agrees to pay for any and all damage to the real and personal property of the District, or loss or theft of such property, or damage to the Property done or caused by such persons. District assumes no responsibility whatsoever for any property placed on District premises by Provider, Provider's agents, employees, participants, vendors, customers or subcontractors. Provider further hereby waives any and all rights of subrogation that it may have against the District. The provisions of this Indemnification do not apply to any damage or losses caused solely by the negligence of the District or any of its governing board, officers, agents, employees and/or volunteers.

15. **INSURANCE**. Provider, at its own cost and expense, shall procure and maintain during the term of this Agreement, policies of insurance for the following types of coverage:

a. Commercial General Liability Insurance. Provider shall procure and maintain, during the term of this Agreement, the following General Liability Insurance coverage:

	Each Occurrence	Aggregate
Individual, Sole Proprietorship, Partnership, Corporation,	$ 1,000,000.00	$ 2,000,000.00

Commercial General Liability insurance shall include products/completed operations, property damage, and personal and advertising injury coverage.

Any and all subcontractors hired by Provider in connection with the Services described in this Agreement shall maintain such insurance unless the Provider's insurance covers the subcontractor and its employees.

b. Automobile Liability. Provider shall procure and maintain, during the full term of this Agreement, Automobile Liability Insurance, including non-owned and hired automobiles, as applicable with the following coverage limits:

Personal vehicles: $ 500,000.00 combined single limit or

$100,000.00 per person / $300,000.00 per accident

c. Workers' Compensation Insurance. Provider shall procure and maintain, during the term of this Agreement, Workers' Compensation Insurance, as required by California law, on all of its employees engaged in work related to the performance of this Agreement. Provider shall procure and maintain Employers' Liability insurance coverage of $1,000,000.

In the case of any such work which is subcontracted, Provider shall require all subcontractors to provide Workers' Compensation Insurance and Employers' Liability insurance for all of the subcontractor's employees to be engaged in such work unless such employees are covered by the protection afforded by the Provider's Workers' Compensation Insurance.

Absent proof of Workers' Compensation Insurance, Provider will submit a statement requesting a waiver from this requirement and indicating the reason Workers' Compensation Insurance is not required.

d. Errors and Omissions Insurance. Provider shall procure and maintain, during the term of this Agreement, Professional Liability/Errors and Omissions Insurance in an amount of the following

Accountants, attorneys, education consultants, nurses, therapists	$1,000,000.00

e. Other Coverage as Dictated by the District. Provider shall procure and maintain, during the term of this Agreement, the following other Insurance coverage:

	Each Occurrence	Aggregate
☐ Abuse and Molestation	$ 2,000,000.00	$4,000,000.00
☐ Pollution Liability	$ 1,000,000.00	$ 2,000,000.00
☐ Cyber Liability	$ 5,000,000.00	
☐ Other: _____	$ _____	$ _____

f. If the Provider or Provider's subcontractor(s) maintains broader coverage and/or higher limits than the minimums shown above, the District requires and shall be entitled to the broader coverage and/or higher limits maintained by the Provider. Any available insurance proceeds in excess of the specified minimum limits of insurance and coverage shall be available to the District.

g. Provider's and any and all subcontractors' insurance is primary and will not seek contribution from any other insurance available to the district.

h. Certificates of Insurance. Provider and any and all subcontractors working for Provider shall provide certificates of insurance to the District as evidence of the insurance coverage required herein, not less than Fifteen (15) days prior to commencing work for the District, and at any other time upon the request of the District. Certificates of insurance will be deemed invalid if proper endorsements are not attached. Certificates of such insurance shall be filed with the District on or before commencement of the services under this Agreement.

i. Endorsements. Provider's and any and all Provider subcontractor's Commercial General Liability insurance; Commercial Automobile Insurance; Liability Excess, Umbrella and/or Reinsurance; and Abuse and Molestation coverage shall name the District, its governing board, officers, agents, employees, and/or volunteers as additional insureds. All endorsements specifying additional insureds for any of the Insurance Policies shall be as indicated below or an equivalent endorsement reasonably acceptable to the District.

1) General Liability

❑ Facilities Rental or Lease: CG 20 11 10 01;

■ Most Other services: CG 20 26 10 01.

2) Primary, Non-Contributory

■ CG 20 01 01 13

3) Waiver of Subrogation

■ CG 24 04 05 09

4) Commercial Automobile Liability

■ CA 20 48 10 13

j. Provider's and any and all Provider subcontractor's Commercial General Liability insurance shall provide a list of endorsements and exclusions.

k. Deductibles. Any deductible(s) or self-insured retention(s) applicable to the insurance and/or coverage required by the foregoing provisions of this agreement must be declared to and approved by the District. Provider shall be responsible to pay that deductible or self-insured retention and the District shall not be responsible to pay these costs. In the event that Provider's deductibles or self-insured retentions collectively total more than $50,000.00, District reserves the right to request proof of Provider's financial solvency in relation to remittance thereof or require Provider to post a bond guaranteeing payment of the deductible, or both.

l. Acceptability of Insurers. Insurance is to be placed with insurers with a current A.M. Best's rating of no less than A: VII, unless otherwise acceptable to the District.

m. Insurance written on a "claims made" basis is to be renewed by the Provider and all Provider subcontractors for a period of five (5) years following termination of this Agreement. Such insurance

must have the same coverage and limits as the policy that was in effect during the term of this agreement, and will cover the provider for all claims made.

n. Failure to Procure Insurance**.** Failure on the part of Provider, or any of its subcontractors, to procure or maintain required insurance shall constitute a material breach of contract under which the District may immediately terminate this Agreement.

16. **SAFETY AND SECURITY**. Provider shall be responsible for ascertaining from the District all of the rules and regulations pertaining to safety, security, and driving on school grounds, particularly when children are present.

Without limiting the generality of the foregoing, Provider shall comply with any applicable fingerprinting/ criminal background investigation and tuberculosis clearance requirements of the California Education Code and shall provide the certifications on **Exhibit C** prior to performance of any Services.

a. On Site Services; Student Data Access. If services require Provider to access any District facility, transport or interact in any manner (including through an app or other electronic means) with District students, or access student data, Provider and any and all subcontractors are required to comply with Education Code section 45125.1, Fingerprint certification requirements. Provider must provide proof that fingerprint certification requirements have been fulfilled prior to commencing any services for the District under this Agreement.

Provider shall certify in writing to the school district that neither the Provider nor any of its employees, agents, representatives or subcontractors who are required to submit or have their fingerprints submitted to the Department of Justice and who may interact with any District student outside the direct supervision and control of a District employee or that student's parent or legal guardian have been convicted of a felony.

b. Other Services. If Provider will not provide any services on site or have access to any student data or interact with any District student in connection with the Services, then, Provider and its subcontractors are not required to comply with Education Code section 45125.1 background check requirements. However, Provider must still complete **Exhibit C** to specify that these requirements are not applicable.

c. Tuberculosis Risk Assessment requirements (Education Code section 49406). Providers who may have more than limited contact with District students (including any Providers who provide in person tutoring or who provide any transportation services to students) are required to cause to be on file with the District a certificate from an examining physician showing that Provider, employees and/or sub providers of Provider have been examined and found free from active tuberculosis.

17. **GOVERNING LAW AND VENUES**. Provider hereby acknowledges and agrees that District is a public entity, which is subject to certain requirements and limitations. This Agreement and the obligations of District hereunder are subject to all applicable federal, state and local laws, rules, and regulations, as currently written or as they may be amended from time to time.

This Agreement shall be interpreted in accordance with the laws of the State of California. If any action is brought to interpret or enforce any term of this Agreement, the action shall be brought in state or federal court situated in the County of Ventura, State of California. Provider hereby waives and expressly agrees not to assert, in any way, any claim or allegation that it is not personally subject to the jurisdiction of the courts named above. Provider further agree to waive any claim or allegation that the suit, action, or proceeding is either brought in an inconvenient forum or that the related venue is improper."

18. **DISPUTE RESOLUTION.**

a. The parties agree that, in the event of any dispute under the agreement in which the amount sought is $5,000.00 or less, any litigation to resolve the dispute shall be brought in the Ventura County Small Claims Court.

b. If the amount in dispute exceeds $5,000.00, the parties agree that they will first submit the matter to a mutually agreed upon mediator. Notwithstanding section 19, Attorneys Fees, the cost of the mediator shall be borne equally by the parties.

c. If the mediator is unable to resolve the dispute, then the parties shall submit the matter to binding arbitration in Ventura County or other mutually agreed location pursuant to the rules of the American Arbitration Association (AAA), as amended or as augmented in this Agreement (the "Rules"). The parties acknowledge that one of the purposes of utilizing arbitration is to avoid lengthy and expensive discovery and allow for prompt resolution of the dispute.

Arbitration shall be initiated as provided by the Rules, although the written notice to the other party initiating arbitration shall also include a description of the claim(s) asserted and the facts upon which the claim(s) are based. Arbitration shall be final and binding upon the parties and shall be the exclusive remedy for all claims subject hereto, including any award of attorneys' fees and costs. Either party may bring an action in court to compel arbitration under this Agreement and to enforce an arbitration award.

All disputes shall be decided by a single arbitrator. The arbitrator shall be selected by mutual agreement of the parties within 30 days of the effective date of the notice initiating the arbitration. If the parties cannot agree on an arbitrator, then the complaining party shall notify the AAA and request selection of an arbitrator in accordance with the Rules. The arbitrator shall have only such authority to award equitable relief, damages, costs, and fees as a court would have for the particular claim(s) asserted. In no event shall the arbitrator award punitive damages of any kind.

The arbitrator shall have the power to limit or deny a request for documents or a deposition if the arbitrator determines that the request exceeds those matters, which are directly relevant to the claims in controversy. The document demand and response shall conform to Code of Civil Procedure section 2031. The deposition notice shall conform to Code of Civil Procedure section 2025. The parties may make a motion for protective order or motion to compel before the arbitrator with regard to the discovery, as provided in Code of Civil Procedure sections 2025 and 2031.

19. **ATTORNEYS FEES.** In the event of any action or proceeding to interpret or enforce the terms of this Agreement, the prevailing party, as determined by the court or arbitrator, shall be entitled to recover its reasonable attorney fees and costs incurred in connection with such actions or proceeding

20. **DOCUMENT RETENTION.** After Provider's services to District conclude, Provider shall, upon the District's request, deliver all documents for all matter in which Provider has provided services to the District, along with any property of the District in Provider's possession and/or control. If the District does not request District's document(s) for a particular service, Provider will retain document(s) for a period of two (2) years after the service has ended. If District does not request delivery of the document(s) for the service before the end of the two (2) year period, Provider will have no further obligation to retain the document(s) and may, at Provider's discretion, destroy it without further notice to the District. At any point during the two (2) year period, District may request delivery of the document(s).

Exceptions: Attorney work-product and medical records shall not be destroyed by provider without the prior written consent of the District.

21. **NATURE OF AGREEMENT.** This Agreement constitutes a binding expression of the understanding of the parties with respect to the services to be provided hereunder and is the sole contract between the parties with respect to the subject matter thereof. There are no collateral understandings or representations or agreements other than those contained herein. This Agreement represents the entire agreement between the parties hereto with respect to the subject matter hereof and supersedes any and all other agreements and communications however characterized, written or oral, between or on behalf of the parties hereto with respect to the subject matter hereof. This Agreement may only be modified by a written instrument signed by authorized representatives of each of the parties hereto; provided that the District may not be bound by any term or condition incorporated by reference (including references to any link, website or electronic document) into any document prepared by or provided to District by Provider, including any license, purchase order or other instrument.

For the avoidance of any doubt, Provider is hereby informed that any and all terms or conditions of use of any web-based service or application must be presented in PDF format to the Board of Trustees and may not be unilaterally altered by Provider during the Term of this Agreement.

THE BODY OF THIS AGREEMENT MAY NOT BE EDITED OR ALTERED BY PROVIDER.

22. **BINDING EFFECT**. This Agreement shall inure to the benefit and shall be binding upon all of the parties to this Agreement, and their respective successors in interest or assigns.

23. **WAIVER.** No claim or right arising out of a breach of this Agreement can be discharged in whole or in part by a waiver or renunciation of the claim or right unless such waiver is in writing.

24. **SEVERABILITY.** It is intended that each paragraph of this Agreement shall be treated as separate and divisible, and in the event that any paragraphs are deemed unenforceable, the remainder shall continue to be in full force and effect so long as the primary purpose of this Agreement is unaffected.

25. **PARAGRAPH HEADINGS.** The headings of paragraphs hereof are inserted only for the purpose of convenient reference. Such headings shall not be deemed to govern, limit, modify or in any other manner affect the scope, meaning or intent of the provisions of this Agreement or any part or portion thereof, nor shall they otherwise be given any legal effect whatsoever.

26. **AUTHORITY.** Provider represents and warrants that Provider has all requisite power and authority to conduct its business and to execute, deliver, and perform this Agreement. Each party warrants that the individuals who have signed this Agreement have the legal power, right, and authority to make this Agreement and to bind each respective party.

27. **COUNTERPART EXECUTION: ELECTRONIC DELIVERY.** This Agreement may be executed in any number of counterparts which, when taken together, shall constitute one and the same instrument. Executed counterparts of this Agreement may be delivered by PDF email or electronic facsimile transmission, and shall have the same legal effect as an "ink-signed" original.

IN WITNESS WHEREOF, the parties have executed this agreement as of the date first written above. By signing below, Provider certifies that it has not altered any provision of the body of this Agreement.

OXNARD SCHOOL DISTRICT	
District	Provider
By:	
Signature	Signature
Melissa Reyes	
Name	Name
Director, Purchasing	
Title	Title

24-206

Contract Number

STATEMENT OF WORK

DESCRIPTION OF WORK:

Provide a Laser Safari Program for students of the Oxnard School District during Spring Camp at 8 school site locations.

WORK SCHEDULE:

N/A

SCHEDULE OF FEES

FEES:

Compensation for Services	$ 7,992.00
Actual and Necessary Travel Expenses	$ 0.00
Other Expenses	$ 0.00
Total Amount not to Exceed	$ 7,992.00
Deposit	$ 0.00
Balance Due after Completion of Services	$ 0.00

Proper invoicing is required. Receipts for expenses are required. Canceled checks are not accepted as receipts.

PAYMENT SCHEDULE:

Invoices to be submitted monthly to accountspayable@oxnardsd.org, gshea@oxnardsd.org, and jorejel@oxnardsd.org. Net 30 terms.

ADDITIONAL COSTS OF EXPENSES:

N/A

EXHIBIT C
REQUIRED CERTIFICATIONS

Services Agreement Dated: March 19, 2025

Provider: Prismatic Magic LLC

I. Fingerprinting/Criminal Background Certification (Education Code Section 45125.1)

Provider and its subconsultant's and their employees, agents and representatives (each, a "Provider Party") are required to submit fingerprints to the California Department of Justice (CDOJ) if they may interact with any student outside of the immediate supervision and control of the student's parent or guardian or a District employee in connection with the Services. Provider certifies to the Superintendent and the Board of Trustees of the District that it is, or prior to providing any Service under this Agreement will be, in compliance with the requirements of Education Code section 45125.1, as follows (Provider to check one box):

- ☒ Provider will ensure that any Provider Party who: (a) might access a District facility and/or interact with a District pupil in any manner (including through an educational app or cloud-based system) outside of the immediate supervision and control of the student's parent or guardian or a District employee OR (b) who was identified by District as a person requiring clearance pursuant to §45125.1(c) has, prior to providing any Service, submitted fingerprints to the CDOJ and that Provider has received from the CDOJ a valid criminal records summary as described in §44237 for said Provider Party. Provider will not allow any person who has been convicted of a violent felony listed in Penal Code section 667.5(c) or a serious felony listed in Penal Code §1192(c) to provide any Service. Provider will not allow any such Provider Party to perform any Service until Provider ascertains that the CDOJ has cleared that person and a record compliant with Education Code § 45125.1 is on file with Provider.
- ☐ The fingerprinting requirements **do not apply** because the Services are being provided on an emergency or exceptional situation as contemplated under section § 45125.1(b).
- ☐ The fingerprinting requirements **do not apply** because Provider Parties will have no opportunity to interact with a District students in any manner because: (i) no school-site Services or Services concerning student records will be provided; and/or (ii) the Services will be provided at a school site while students are not present (vacant, under construction etc.).

By signing below I certify, under penalty of perjury, that: (i) I am an authorized representative of Provider qualified to provide this Certification; (ii) the information above concerning compliance with Education Code Section 45125.1 is accurate and complete as of the date hereof; and (iii) during the term, I will immediately inform District if any CDOJ report is changed or updated with respect to Provider Party. Documents provided by the CDOJ will be retained by Provider and available for inspection by District or its representative(s) upon request.

_____
Name/ Title of Authorized Representative

_____
Signature/ Date

II. Tuberculosis Risk Assessments Certification (Education Code Section 49406). With respect to Education Code § 49406, I do hereby ***certify, represent and warrant*** to District's Superintendent and Board of Trustees as follows (Provider to check the applicable statement below):

- ☐ Provider Parties, any subconsultants, and any respective employees, representatives or agents will, in connection with the provision of Services under this Agreement, have ***only limited or no contact*** with any District student(s).
- ☒ Provider Parties may, in connection with the provision of Services, have more than limited contact with District students. Therefore, the Provider has for each such Provider Party: (A) obtained and filed proof on completion of the required TB risk assessment(s) and (B) if deemed necessary by a physician/surgeon, obtained and filed copies of their TB examination(s), all in compliance with the provisions of Education Code § 49406. Provider will maintain a current list of all such Provider Parties and will provide a copy to District upon request.

By signing below I certify, under penalty of perjury, that I am an authorized representative of Provider qualified to provide this Certification, that the information above concerning compliance with Education Code § 49406 is accurate and complete as of the date hereof, and that, during the Term, I and all Provider Parties will satisfy all applicable tuberculosis clearance requirements before having more than limited contact with District students.

_____
Name/ Title of Authorized Representative

_____
Signature/ Date

III. Conflict of Interest Certification

The Provider represents and warrants that he/she/it presently has no interest, and shall not acquire any interest, direct or indirect, financial or otherwise, which conflicts in any manner with District or with the performance of the Services. Provider understands that District will not engage any person having such conflict of interest to perform the Services. Provider agrees that if any facts come to its attention which raises any questions as to the applicability of conflict of interest laws, it shall immediately inform the District's designated representative and provide all information needed for resolution of this question.

Provider Initials: _____

PRISMATIC MAGIC
Educational Laser Assemblies

PRICE QUOTE ONLY

Prismatic Magic Admin. Office
PO BOX 11678
Fort Worth, TX 76110-0678
(866) 952-7376

Date: February 4, 2025

Client
Oxnard School District
1051 South A Street
Oxnard CA 93030

DATE	PROGRAM and SHOW TIME(S)	FEE
April 8 - 17, 2025	LASER SAFARI PROGRAM 1 PERFORMANCE AT 8 LOCATIONS	$ 7,992.00 $ -
	TOTAL:	$ 7,992.00

PRISMATIC MAGIC SIGNATURE:_____

THANK YOU!

OSD BOARD AGENDA ITEM

Name of Contributor: Dr. Anabolena DeGenna **Date of Meeting:** March 19, 2025

Agenda Section: Section C: Support Services Agreement

Approval of Agreement #24-209 – CDW-G (DeGenna/Hubbard)

CDW-G will provide the district's Information Technology department with engineering, consulting, and maintenance services, focusing on small installation projects and maintenance services.

Term of Agreement: March 20, 2025 through June 30, 2025

FISCAL IMPACT:
Not to Exceed: $11,620.00 – Unrestricted General Funds

RECOMMENDATION:
It is the recommendation of the Chief Information Officer, and the Superintendent, that the Board of Trustees approve Agreement #24-209 with CDWG.

ADDITIONAL MATERIALS:

Attached: Agreement #24-209, CDWG (4 Pages)
Statement of Work (6 Pages)

Oxnard School District

Short-Term Services Agreement

Use ONLY for low cost, low risk, short-term services – No Sub-Contractors

Requisition Number

Purchase Order Number

24-209

Contract Number

This Services Agreement (the "Agreement") is made and entered into March 19,2025 by and between the OXNARD SCHOOL DISTRICT (the "Local Educational Agency" or District") and CDWG, (hereinafter referred to as "Provider"). District and Provider may be referred to herein individually as a "Party" and collectively as the "Parties."

CDWG	818-254-1711
Provider	Telephone Number
101 N. Brand Boulevard, Suite 550	jjg@cdwg.com
Street Address	E-mail Address
Glendale, CA 91203	
City, State, Zip code	Tax Identification or Social Security Number

Services

Provide engineering, consulting, and maintenance services per the attached Statement of Work.

Description of Services (if more space is needed, attach pages labeled as ATTACHMENT A, which is incorporated herein in full)

March 20, 2025 through June 30, 2025	TBD	TBD
Date(s) of Service	Hour(s) of Service	Location

Fees

Compensation for Services	$ 11,620.00
Other Ancillary Cost, as applicable	$ 0.00
Total not to Exceed	$ 11,620.00

☑ W-9 received

Payment. District will pay Provider within 30 days after receipt of an invoice, in form and content acceptable to District, and reflecting charges for District approved costs and services performed by Provider and not previously invoiced.

Conditions. Provider will have no obligation to provide services until District returns a signed copy of this Agreement.

Nature of Relationship. The parties agree the relationship created by this Agreement is that of independent contractor. Provider understands and agrees that the Provider, officers, agents, or employees of Provider are not entitled to any benefits normally offered or conveyed to District employees, including but not limited to coverage under the California Workers' Compensation Insurance laws.

Binding Effect. This Agreement shall inure to the benefit and shall be binding upon all of the parties to this Agreement, and their respective successors in interest or assigns.

Termination or Amendment. This Agreement may be terminated or amended in writing at any time by mutual written consent of all of the parties to this Agreement, and may be terminated by either party for any reason by giving the other party 30 days advance written notice.

Compliance with Laws. Provider hereby agrees that Provider, and each of its officers, agents, and employees (each a "Provider Party) shall obey all local, state, and federal laws and regulations in the performance of this Agreement, including but not limited to each of the following laws and regulations, as and if applicable:

- Provider shall be responsible for the safety of its employees and shall comply with California Code of Regulations Title 8, section 3205, COVID-19 Prevention.

- Provider shall ensure that each Provider Party who is on-site supporting school functions is compliant with all the following laws, if and as applicable:
  - Fingerprinting / criminal background investigations (see paragraph titled "Fingerprinting, below);
  - Public Health Department Orders and Guidance or other related mandates related to COVID-19, so long as such Orders and Guidance are in effect during the Term of this Agreement;
  - Tuberculosis Clearance (Education Code § 49406)

Non-Discrimination and Equal Employment Opportunity. Provider represents and agrees that it does not and shall not discriminate against any employee or applicant for employment, company, individual or group of individuals, because of ancestry, age, color, disability (physical and mental, including HIV and AIDS), genetic information, gender identity, gender expression, marital status, medical condition, military or veteran status, national origin, race, religion, sex/gender, and sexual orientation.

Confidentiality. Provider agrees to maintain the confidentiality of all District and District-related data, information, and records including but not limited to student identifiable information and employee personnel information pursuant to all California and Federal statutory laws relating to privacy, confidentiality, and information security including but not limited to California Education Code sections 49060 – 49085 and the Family Educational Rights and Privacy Act (FERPA), that currently exist or exist at any time during the term of this Agreement. All such records and information shall be considered confidential and kept confidential by Provider and Provider's officers, agents, employees, participants, vendors, or customers.

Fingerprinting. Provider shall ensure that Provider and any employee who interacts with students, outside of the immediate supervision and control of the student's parent or guardian or a school employee, has a current valid criminal records summary as described in California *Education Code* section 44237. If any services will be provided on-site, or through an app or other electronic method that might allow any interaction between any student and Provider shall, prior to commencing any service hereunder, provide the District a Fingerprinting/ Criminal Background Check investigation Certificate, in form and substance satisfactory to the District. While this Agreement is in effect, Provider shall immediately provide any arrest and conviction information it receives concerning any person providing Services hereunder to the District.

Food Vendors. Ventura County Environmental Health Facilities Permit: https://vcrma.org/consumer-food-protection

❑ Mobile Food Facility permit ❑ Temporary Food Facility permit ❑ Exempt – must show documentation

Date checked by school official: _____initials: _____

Indemnification. To the fullest extent permitted by law, Provider agrees to defend, indemnify, and hold harmless District, its governing board, officers, administrators, managers, agents, employees, successors, assigns, independent contractors and/or volunteers from and against any and all claims, demands, monetary or other losses, loss of use, damages and expenses, including but not limited to, reasonable legal fees and costs, or other obligations or claims arising out of any liability or damage to person or property resulting from bodily injury, illness, communicable disease, virus, pandemic, or any other loss, sustained or claimed to have been sustained arising out of activities of the Provider or those of any of its officers, agents, employees, participants, vendors, or customers of Provider, whether such act or omission is authorized by this Agreement or not. Provider also agrees to pay for any and all damage to the real and personal property of the District, or loss or theft of such property, or damage to the Property done or caused by such persons. District assumes no responsibility whatsoever for any property placed on District premises by Provider, Provider's agents, employees, participants, vendors, or customers. The provisions of this Indemnification do not apply to any damage or losses caused solely by the intentional misconduct of the District or any of its governing board, officers, administrators, managers, agents, employees and/or volunteers.

This Indemnification shall survive termination of this Agreement, for any reason whatsoever, and binds each party's legal representatives, successors, and assigns.

Insurance. Provider, at its own cost and expense, shall procure and maintain during the term of this Agreement, policies of insurance for the following types of coverage:

a. Commercial General Liability Insurance. Provider shall procure and maintain, during the term of this Agreement, not less than the following General Liability Insurance coverage in the amounts of $1,000,000 per occurrence and $2,000,000 aggregate.

   Commercial General Liability insurance shall include products/completed operations, property damage, and personal and advertising injury coverage.

b. Automobile Liability. Provider shall procure and maintain, during the full term of this Agreement following Automobile Liability Insurance including non-owned and leased automobiles, as applicable with the following coverage limits:

Personal vehicles:	$500,000.00 combined single limit or
	$100,000.00 per person / $300,000.00 per accident
Commercial vehicles:	$1,000,000.00 per accident for bodily injury and property damage

c. Workers' Compensation Insurance. Provider shall procure and maintain, during the term of this Agreement, Workers' Compensation Insurance, as required by California law, on all of its employees engaged in work related to the performance of this Agreement. Provider shall procure and maintain Employers' Liability insurance coverage of $1,000,000. Absent proof of Workers' Compensation Insurance, Provider will submit a fully executed Certification of Exemption from Workers' Compensation Insurance, which District in its sole discretion may accept or reject.

d. Other Coverage as Dictated by the District. If any employee of Provider interacts with students, outside of the immediate supervision and control of the student's parent or guardian or a certificated school employee, Provider shall procure and maintain, during the term of this Agreement, Abuse and Molestation coverage in the amounts of $2,000,000 per occurrence and $4,000,000 aggregate.

If professional services are offered, Provider shall procure and maintain, during the term of this Agreement, Professional Liability (Errors and Omissions) insurance coverage in the amounts of $1,000,000 per occurrence and $2,000,000 aggregate.

e. Provider's insurance is primary and will not seek contribution from any other insurance available to the District. Provider further hereby waives any and all rights of subrogation that it may have against the District.

f. Certificates of Insurance. Provider shall provide certificates of insurance to the District as evidence of the insurance coverage required herein, not less than 15 days prior to commencing the proposed activity, and at any other time upon the request of the District. Certificates of insurance will be deemed invalid if proper endorsements are not attached. Certificates of such insurance shall be filed with the District on or before commencement of the services under this Agreement.

g. Endorsements. Provider's Commercial General Liability insurance and Commercial Automobile Liability coverage and Abuse and Molestation coverage shall name the District, its governing board, officers, agents, employees, and/or volunteers as additional insureds. All endorsements specifying additional insureds for any of the Insurance Policies shall be as indicated below or an equivalent endorsement reasonably acceptable to the District.

1) General Liability: CG 20 26 10 01
2) Primary, non-contributory: CG 20 01 04 13
3) Waiver of subrogation: CG 24 04 05 09
4) Commercial Automobile Liability: CA 20 48 10 13

h. Acceptability of Insurers. Insurance is to be placed with insurers with a current A.M. Best's rating of no less than A: VII, unless otherwise acceptable to the District.

i. Insurance written on a "claims made" basis is to be renewed by the Provider for a period of three (3) years following termination of this Agreement. Such insurance must have the same coverage and limits as the policy that was in effect during the term of this agreement and will cover the Provider for all claims made. If coverage is canceled or non-renewed, and not replaced with another claims-made policy form with a Retroactive Date prior to the contract effective date, the Consultant must purchase "extended reporting" coverage for a minimum of three (3) years after completion of the Services.

j. Failure to Procure Insurance**.** Failure on the part of Provider to procure or maintain required insurance shall constitute a material breach of contract under which the District may immediately terminate this Agreement

Governing Law and Venues. This Agreement shall be interpreted in accordance with the laws of the State of California. If any action is brought to interpret or enforce any term of this Agreement, the action shall be brought in state or federal court situated in the County of Ventura, State of California.

Dispute Resolution. If any dispute arises out of or in connection with the Agreement, representatives of the Parties with authority to settle the dispute shall communicate, in person, electronically, or in writing within 30 days of written notice, in a good faith effort to resolve the dispute.

The parties agree that, in the event of any unresolved dispute under the agreement in which the amount sought is $5,000.00 or less, any litigation to resolve the dispute shall be brought in the Ventura County Small Claims Court.

If the unresolved amount in dispute exceeds $5,000.00, the parties agree that they will first submit the matter to a mutually agreed upon mediator. Notwithstanding the following section, Attorneys Fees, the cost of the mediator shall be borne equally by the parties.

Attorney Fees. In the event of any action or proceeding to interpret or enforce the terms of this Agreement, the prevailing party, as determined by the court or mediator, shall be entitled to recover its reasonable attorney fees and costs incurred in connection with such actions or proceeding.

Nature of Agreement. This Agreement represents the entire agreement between the parties hereto with respect to the subject matter hereof and supersedes any and all other agreements and communications however characterized, written or oral, between or on behalf of the parties hereto with respect to the subject matter hereof. This Agreement may only be modified by a written instrument signed by authorized representatives of each of the parties hereto.

Counterpart Execution. This Agreement may be executed in any number of counterparts which, when taken together, shall constitute one and the same instrument. Executed counterparts of this Agreement may be delivered by PDF email or electronic facsimile transmission and shall have the same legal effect as an "ink-signed" original.

Signature Authority. Provider represents and warrants that Provider has all requisite power and authority to conduct its business and to execute, deliver, and perform this Agreement.

Acknowledgement and Agreement

I have read this Agreement and agree to its terms

Provider Authorized Signer	Signature	Date

Oxnard School District

Melissa Reyes		
Director, Purchasing	Signature	Date

STATEMENT OF WORK

Project Name:	Ad Hoc Statement of Work	**Seller Representative:** Jon Gentile 818.254.1711 jjg@cdwg,com
Customer Name:	Oxnard School District	
CDW Affiliate:	CDW Government LLC	
SOW Effective Date:	March 20, 2025	**Solution Architect:** JJ Joson
Version:	02	

This statement of work ("**Statement of Work**" or "**SOW**") is made and entered into this March 20, 2025 (the "**SOW Effective Date**") by and between the undersigned, CDW Government LLC ("**Provider**", "**Seller**" and "**we**") and Oxnard School District ("**Customer**" and "**you**").

PROJECT DESCRIPTION

PROJECT SCOPE

This SOW can be used for small installation projects or scheduled maintenance for up to, but not to exceed 24 hours per call. This SOW is valid for a 12-month period from the date of signature and cannot exceed $ 11,620.00 in a calendar year without a new SOW or Change Order.

Subject to the other provisions of this SOW, Seller will perform the following services:

1. Unscheduled and/or Break/Fix engineering and consulting services

Services not specified in this SOW are considered out of scope and will be addressed with a separate SOW.

PROJECT SCHEDULING

Customer and Seller, who will jointly manage this project, will together develop timelines for an anticipated schedule ("Anticipated Schedule") based on Seller's project management methodology. Any dates, deadlines, timelines or schedules contained in the Anticipated Schedule, in this SOW or otherwise, are estimates only, and the Parties will not rely on them for purposes other than initial planning.

TOTAL FEES

The total fees due and payable under this SOW ("**Total Fees**") include both fees for Seller's performance of work ("**Services Fees**") and any other related costs and fees specified in the Expenses section ("**Expenses**"). Unless otherwise specified, taxes will be invoiced but are not included in any Total Fee numbers or calculations provided herein.

Seller will invoice for the Total Fees.

SERVICES FEES

Services Fees will be calculated on a TIME AND MATERIALS basis.

The invoiced amount of Services Fees will equal the rate applicable for a unit of a service or resource ("**Unit Rate**") multiplied by the number of units being provided ("**Billable Units**") for each unit type provided by Seller (see Table 1).

Table 1 – Services Fees

Consultant	Hourly Rate
Technician	$145
Associate Consulting Engineer or Associate Consultant or Analyst	$180
Senior Associate Consulting Engineer or Senior Associate Consultant or Senior Analyst	$205
Consulting Engineer or Consultant	$230
Senior Consulting Engineer or Senior Consultant	$255
Manager or Managing Consultant	$265
Principal Consulting Engineer or Principal Consultant or Technical Lead or Business Consultant or Senior Manager	$280
Enterprise Consulting Architect or Enterprise Architect	$295
Director	$325
Technical Architect	$350
Managing Director	$400
Incident Responder/Forensic Analyst	$425
Project Coordinator or Associate Project Manager	$175
Project Manager or Technical Project Manager	$225
Senior Project Manager or Senior Technical Project Manager or Engagement Manager	$240
Program Manager	$255

The rates presented in Table 1 apply to *scheduled* Services that are performed during Standard Business Hours (meaning 8:00 a.m. to 5:00 p.m. local time, Monday through Friday, excluding holidays). When Seller invoices for scheduled Services that are not performed during Standard Business Hours, Services Fees will be calculated at 150% of the Unit Rates. For any unscheduled (i.e., emergency) Services performed at any time of the day, Services Fees will be calculated at 200% of the Unit Rates.

Any non-Hourly Units will be measured in one (1) unit increments when Services are performed remotely or at any Customer-Designated Location(s) (as defined below).

Any Hourly Units will be measured in one (1) hour increments with a minimum of one (1) hour billed each day Services are performed remotely and four (4) hours billed each day Services are performed at any Customer-Designated Location(s). When Hourly Seller personnel must travel more than two (2) hours a day to work at any Customer-Designated Location(s),

there will be a minimum of eight (8) hours billed for each day (less travel time that is invoiced pursuant to the "Expenses" section below).

Upon notice, Seller may adjust the rates above, provided that the rates will remain fixed for at least six (6) months after the SOW Effective Date and then again for at least six (6) months after any subsequent adjustment.

The rates above only apply to Services specified in this SOW.

EXPENSES

When Seller's personnel are located more than 40 miles from the Customer-Designated location, travel charges will apply. Seller will invoice Customer for the time Seller's personnel spend traveling to and/or from the Customer-Designated Location(s) (or otherwise, as necessary) at a rate of $125/hour. Seller will make efforts to schedule appropriate personnel from Seller's offices located nearest to the Customer-Designated Location(s) in order to minimize such expenses. Seller's ability to do so may depend on various factors (e.g., specialized project skills needed, personnel availability, and changes to, or challenges inherent in, the Anticipated Schedule).

Seller will invoice Customer for Seller's reasonable, direct costs incurred in performance of the Services. Direct expenses include, but may not be limited to: airfare, lodging, mileage, meals, shipping, lift rentals, photo copies, tolls and parking. Seller will charge actual costs for these expenses. Any projected expenses set forth in this SOW are estimates only.

Two (2) weeks' advance notice from Customer is required for any necessary travel by Seller personnel.

CUSTOMER-DESIGNATED LOCATIONS

Seller will provide Services benefiting the locations specified on the attached Exhibit ("**Customer-Designated Locations**").

PROJECT-SPECIFIC TERMS

1. Customer is responsible for providing all physical and communications access, privileges, environmental conditions, properly functioning hardware and software, qualified personnel, project details, material information, decisions/directions, and personnel and stakeholder interviews that are reasonably necessary to assist and accommodate Seller's performance of the Services ("**Customer Components**").
2. Seller is not responsible for delays in performance directly caused by the unavailability of the Customer Components and will have the right to invoice Customer, with prior written notice, for time Seller personnel is thereby idled or to reassign Seller personnel to work unrelated to this SOW and the services hereunder.
3. Customer will provide in advance and in writing, and Seller will follow, all applicable Customer safety and security rules and procedures.
4. Customer will secure and maintain the confidentiality of all Seller personnel information.
5. When Services are performed at a Customer-Designated Location, the site will be secure; Seller is not responsible for lost or stolen equipment.
6. This SOW can be terminated by either party without cause upon at least fourteen (14) days' advance written notice.
7. Customer shall ultimately be responsible for making any final decisions with respect to any recommendation or potential solutions provided by Seller under this SOW.
8. Seller shall not be responsible for providing the Customer any Work Product under this SOW.

SOW TERMS AND CONDITIONS

CONTACT PERSON(S)

Each Party will appoint a person to act as that Party's point of contact ("**Contact Person**") as the time for performance nears and will communicate that person's name and information to the other Party's Contact Person.

The Customer Contact Person is authorized to approve materials and Services provided by Seller, and Seller may rely on the decisions and approvals made by the Customer Contact Person. The Customer Contact Person will manage all communications with Seller, and when Services are performed at a Customer-Designated Location, the Customer Contact Person will be present or available. The Parties' Contact Persons shall be authorized to approve changes in personnel and associated rates for Services under this SOW.

PAYMENT TERMS

Except as otherwise agreed by the Parties, customer will pay invoices containing amounts authorized by this SOW within thirty (30) days of receipt. Any objections to an invoice must be made to the Seller Contact Person within fifteen (15) days after the invoice date.

EXPIRATION AND TERMINATION

This SOW expires and will be of no force or effect unless it is signed by Customer, transferred in its entirety to Seller so that it is received within thirty (30) days from the date written on its cover page, and then signed by Seller, except as otherwise agreed by Seller.

MISCELLANEOUS

This SOW shall be governed by Seller's "Terms and Conditions of Product Sales and Service Projects", accessed via the "Terms & Conditions" link at www.cdwg.com, except that it shall be governed instead by a written agreement, if any, between Customer and Seller covering Customer's purchase of products and services from Seller (the "**Agreement**"). If there is a conflict between this SOW and the Agreement, then the Agreement will control, except as expressly amended in this SOW by specific reference to the Agreement. References in the Agreement to a SOW or a Work Order apply to this SOW. This SOW may be signed in separate counterparts, each of which shall be deemed an original and all of which together will be deemed to be one original. Electronic signatures on this SOW (or copies of signatures sent via electronic means) are the equivalent of handwritten signatures. This SOW is the proprietary and confidential information of Seller.

SIGNATURES

In acknowledgement that the parties below have read and understood this Statement of Work and agree to be bound by it, each party has caused this Statement of Work to be signed and transferred by its respective authorized representative.

CDW Government LLC

By: _____
signature

Name: _____

Title: _____

Date: _____

Mailing Address:

230 N. Milwaukee Ave.

Vernon Hills, IL 60061

❑ A purchase order for payment hereunder is attached.

❑ A purchase order is not required for payment hereunder.

❑ The following PSM has given approval:

JJ Joson

Oxnard School District

By: _____
signature

Name: _____

Title: _____

Date: _____

Mailing Address:

Street: _____

City/ST/ZIP: _____

Billing Contact:

Street: _____

City/ST/ZIP: _____

EXHIBIT A..

CUSTOMER-DESIGNATED LOCATIONS

Seller will provide Services benefiting the following locations ("**Customer-Designated Locations**").

Table 2 – Customer-Designated Locations

Location(s)	Service(s)		
Oxnard School District 1051 South A Street Oxnard, CA 93030	☐ Assessment ☐ Configuration ☐ Design	☐ Implementation ☐ Project Management ☐ Staff Augmentation	☑ Support ☐ Training ☑ Custom Work

OSD BOARD AGENDA ITEM

Name of Contributor: Dr. Scott Carroll **Date of Meeting:** March 19, 2025

Agenda Section: Section C: Academic Agreement

Approval of Agreement #24-212 – Midwestern University (Carroll)

The District will provide university students, referred to as "unpaid interns," supervised clinical experience in speech-language pathology, providing them with the opportunity to gain hands-on experience in a public school environment.

Term of Agreement: March 20, 2025 through March 19, 2028

FISCAL IMPACT:
No Fiscal Impact

RECOMMENDATION:
It is recommended by the Assistant Superintendent, Human Resources that the Board of Trustees approve Agreement #24-212 with Midwestern University.

ADDITIONAL MATERIALS:
Attached: Agreement #24-212, Midwestern University (5 Pages)

OXNARD SCHOOL DISTRICT
Memorandum of Understanding and Agreement with the Named University to Provide for Unpaid Internship Placements for University Students

This Memorandum of Understanding ("Agreement") is made by and between the Oxnard School District ("District") and **Midwestern University**, an Illinois not-for-profit corporation registered as an Arizona foreign corporation, with campuses located in Downers Grove, Illinois and in Glendale, Arizona ("University"), who may be referred to collectively as the parties. This Agreement describes and confirms the expectations and responsibilities of the Parties regarding the Internship Program through which University students ("Unpaid Interns") will gain experience in the public-school setting. This Agreement applies to unpaid service-learning placements for University-enrolled students; it does not apply to student teacher placements that are part of a credentialing program.

TERM OF THE AGREEMENT

This Agreement shall remain in effect for a term of **three (3) years** beginning **March 20, 2025** and ending **March 19, 2028**, unless terminated sooner. Either party may terminate this Agreement on 30 days' written notice to the other party; provided, however, that credentialed candidates shall be allowed to conclude any ongoing assignments. Performance under this Agreement shall be reviewed annually, and the parties may agree to annual extensions after expiration of the initial term.

UNIVERSITY RESPONSIBILITIES

1. University will work collaboratively with the District's HR department, school site administration, and staff in the assignment of the Unpaid Intern.
2. University will confer regularly with District and site administration and District-employed mentor/liaison through meetings, telephone calls, and/or e-mail.
3. University will immediately notify appropriate District and site administration if University administration has knowledge of or suspects any professional or ethical violations by an Unpaid Intern in the school. University and District agree they will cooperate in any investigation concerning the reported violation.
4. University will guarantee that Unpaid Interns and have appropriate tuberculosis and fingerprinting clearance, including subsequent arrest notification service.
5. University will instruct Unpaid Interns in state laws regarding child abuse reporting, sexual harassment, and professional conduct.
6. University supervisors will work with District-employed mentor/liaison in order to discuss Unpaid Interns' performances in the District's classrooms.
7. University will be responsible for ensuring that Unpaid Interns have appropriate insurance coverage.

UNPAID INTERN RESPONSIBILITIES

1. Provide the District with the following documentation:

- a copy of the letter from the University assigning the student to the District,
- a background check/ fingerprint clearance report,
- a negative tuberculosis risk assessment and/or test result, and

2. Comply with all applicable terms and provisions of this Agreement while serving as an Unpaid Intern.
3. Comply with the District's policies and procedures, and applicable state and federal laws and regulations while serving as an Unpaid Intern.
4. Provide services to District pupils only under the direct supervision of District staff.
5. Maintain the confidentiality of pupil information. No Unpaid Intern will have access to or have the right to receive any District pupil records, except to the extent necessary in the regular course of assisting in providing services to pupils as part of the internship program. The discussion, transmission, or narration in any form by Unpaid Interns of any individually identifiable pupil information, educational, medical or otherwise, which is obtained in the course of the internship program is forbidden except as a necessary part of the practical internship experience. Otherwise, Unpaid Interns shall use de-identified information only (and not personally identifiable pupil information) in any discussions about the internship experience with University, its employees, agents or others.

DISTRICT RESPONSIBILITIES

The District and the University shall comply with the applicable provisions of the Family Educational Rights and Privacy Act ("FERPA") and shall take all measures necessary to ensure the confidentiality of any and all information in its possession regarding the Unpaid Interns participating in an unpaid service-learning placement at District. Notwithstanding the foregoing, it is expressly agreed and understood that the University remains solely responsible for maintaining all education records and reports relating to its students, and shall comply with all applicable statutes, rules and regulations respecting the maintenance of and release of information from such records. The University acknowledges and agrees that the District will have no responsibility regarding such records and will accordingly refer all requests regarding such information to the University.

STATUS OF UNIVERSITY, LOCAL EDUCATIONAL AGENCY, AND UNIVERSITY STUDENTS

The parties expressly understand and agree that all University students serving as Unpaid Interns in District schools pursuant to this Agreement are doing so for educational purposes only, and Unpaid Interns are not considered employees or volunteers of either University or District for any purpose, including, but not limited to, compensation for services, welfare and pension benefits, or workers' compensation insurance. It is the responsibility of University to provide written notice to its student participants of the provisions of this Section. The provisions of this Section shall survive the termination or expiration of this Agreement.

LIABILITY INSURANCE & WORKERS' COMPENSATION

The parties shall maintain a "claims-made" policy of general liability and professional liability insurance in amounts not less than $1 million per claim/occurrence and $3 million in the annual aggregate, with extended reporting period of three (3) years, covering itself, its employees and for

University, its Unpaid Interns. University shall name the District as an additional named insured under such its general liability insurance. The parties shall provide excess insurance coverage in amounts not less than $5 million per claim/occurrence and $5 million in the annual aggregate.

Further, University shall provide written notice that should any of the above-described policies be cancelled before the expiration thereof, notice will be delivered in accordance with the policy provisions. University also agrees to maintain statutory Workers' Compensation coverage on any individuals considered as employees of University and instructors working at District (if any) pursuant to this Agreement, if required by law, at all times during the course of this Agreement.

The parties shall provide certificates evidencing all coverage referred to in this Section within thirty days of execution of this Agreement and thereafter, on an annual basis. If the coverage is on a claims-made basis, the parties hereby agree that not less than thirty (30) days prior to the effective date of termination of either party's current insurance coverage or termination of this Agreement, that party shall either purchase three (3) year tail coverage per claim or provide proof of continuous coverage in the above stated amounts for all claims arising out of incidents occurring prior to termination of either party's current coverage or prior to termination of this Agreement, as applicable, and provide each other with a certificate of insurance evidencing such coverage.

NO WORKERS' COMPENSATION LIABILITY

The Parties agree that the District is not to assume, nor shall it assume by this Agreement any liability under the California Workers' Compensation Insurance and Safety Act for, by or on behalf of any Unpaid Intern or University employees (if any) while they are on the premises of the District or while performing any duty whatsoever under the terms of the Agreement or while going to or from any of the internship placement sites. University shall provide written notice to each Unpaid Intern regarding the lack of coverage of Workers' Compensation insurance by either party.

INDEMNIFICATION

University shall defend, indemnify and hold District and its officials, employees and agents, harmless from and against any and all liability, loss, expense, attorneys' fees, or claims for injury or damages arising out of the performance of this Agreement, but only in proportion to and to the extent such liability, loss, expense, attorneys' fees, or claims for injury or damages are caused by or result from the negligent acts or omissions of University, its officials, agents, or employees.

District shall defend, indemnify and hold University, its officials, employees and agents, harmless from and against any and all liability, loss, expense, attorneys' fees, or claims for injury or damage arising out of the performance of this Agreement but only in proportion to and to the extent such liability, loss, expense, attorneys' fees, or claims for injury or damages are caused by or result from the negligent acts or omissions of District, its officials, agents, or employees.

ADDITIONAL PROVISIONS

1. Nothing contained in this Agreement shall be deemed or construed to create a joint venture, partnership, principal-agent or employment relationship between the parties and neither party shall have the authority to bind the other party for any purpose.
2. This Agreement and the rights and obligations of the parties shall be governed and construed by the laws of the State of California. Any lawsuit concerning or arising out of this Agreement shall be venued in the county in which the District is located.
3. This Agreement supersedes all prior and contemporaneous agreements and understandings

between the parties, both oral and written, with respect to its subject matter and constitutes the complete agreement and understanding between the parties, unless modified in a writing executed by both parties.

4. In the event of a dispute between the parties arising from this Agreement, the parties agree to mediate the dispute before initiating litigation. The Parties agree that with regard to any dispute or claim related to this Agreement, prior to the initiation of a lawsuit or other legal action, they shall and must, in good faith, submit the claim or dispute to mediation with any mutually agreeable neutral. The costs of the neutral will be split equally between the Parties. The prevailing party shall be entitled to recovery from the losing party the prevailing party's reasonable expenses (fees and costs) incurred in the lawsuit or legal action as allowed by law.
5. If any provision of this Agreement is determined to be invalid or unenforceable, that provision shall be amended to achieve as nearly as possible the same effect as the original provision, and the remainder of this Agreement shall remain in full force and effect.
6. No delay or failure by either party to act in the event of a breach or default hereunder shall be construed as a waiver of that or any succeeding breach or a waiver of the provision itself.
7. This Agreement may be executed in any number of counterparts, each of which shall be an original as against any party whose signature appears and all of which together shall constitute one and the same instrument.

Signed and entered into by the parties on this **19th day of March 2025**.

Oxnard School District	**Midwestern University**
By: _____	_____
Signature	Signature
Melissa Reyes	Matthew J. Sweeney, CPA, CFA
Name	Name
Director, Purchasing	Sr. Vice President and CFO
Title	Title
1051 S A Street	_____
Street	Date
Oxnard, CA 93030	_____
City, State, Zip Code	Signature
mvreyes@oxnardsd.org	Jared Chamberlain, Ph.D.
E-mail Address	Name
805.385.1501 ext. 2410	Dean, College of Health Sciences, Glendale
Telephone	Title

Midwestern University Notice:
Office of the General Counsel
19555 N. 59th Avenue
Glendale, AZ 85308

With a copy to:
Lori Swarz, Paralegal
Email: lswarz@midwestern.edu
Phone (623) 572-3745

OSD BOARD AGENDA ITEM

Name of Contributor: Dr. Anabolena DeGenna **Date of Meeting:** March 19, 2025

Agenda Section: Section C: Support Services Agreement

Approval of Agreement #25-03 – Spectrum Enterprise – Network Connections - E-Rate (DeGenna/Hubbard)

Spectrum Enterprise will provide point-to-point network connections, Option 8, between various locations within the Oxnard School District.

Terms of Agreement: July 1, 2025 through June 30, 2026

FISCAL IMPACT:

Not to Exceed: $44,340.00 - $39,906.00 – E-Rate Funding
$4,434.00 – General Funding

RECOMMENDATION:

It is the recommendation of the Chief Information Officer, and the Superintendent that the Board of Trustees approve Agreement #25-03 with Spectrum Enterprise.

ADDITIONAL MATERIALS:

Attached: #25-03 Agreement - Spectrum Enterprise - E-Rate - Network Connections (4 pages)
Proposal (22 Pages)

Oxnard School District

Short-Term Services Agreement

Use ONLY for low cost, low risk, short-term services – No Sub-Contractors

Requisition Number

Purchase Order Number

25-03

Contract Number

This Services Agreement (the "Agreement") is made and entered into March 19,2025 by and between the OXNARD SCHOOL DISTRICT (the "Local Educational Agency" or District") and Spectrum Enterprise, (hereinafter referred to as "Provider"). District and Provider may be referred to herein individually as a "Party" and collectively as the "Parties."

Spectrum Enterprise	562-677-0311
Provider	Telephone Number
17777 Center Court Dr.	mark.kim@charter.com
Street Address	E-mail Address
Cerritos, CA 90703	
City, State, Zip code	Tax Identification or Social Security Number

Services

Provide point-to-point network connections, Option 8, between various location within the Oxnard School District.

Description of Services (if more space is needed, attach pages labeled as ATTACHMENT A, which is incorporated herein in full)

July 1, 2025 through June 30, 2026	TBD	TBD
Date(s) of Service	Hour(s) of Service	Location

Fees

Compensation for Services	$ 44,340.00
Other Ancillary Cost, as applicable	$ 0.00
Total not to Exceed	$ 44,340.00

☑ W-9 received

Payment. District will pay Provider within 30 days after receipt of an invoice, in form and content acceptable to District, and reflecting charges for District approved costs and services performed by Provider and not previously invoiced.

Conditions. Provider will have no obligation to provide services until District returns a signed copy of this Agreement.

Nature of Relationship. The parties agree the relationship created by this Agreement is that of independent contractor. Provider understands and agrees that the Provider, officers, agents, or employees of Provider are not entitled to any benefits normally offered or conveyed to District employees, including but not limited to coverage under the California Workers' Compensation Insurance laws.

Binding Effect. This Agreement shall inure to the benefit and shall be binding upon all of the parties to this Agreement, and their respective successors in interest or assigns.

Termination or Amendment. This Agreement may be terminated or amended in writing at any time by mutual written consent of all of the parties to this Agreement, and may be terminated by either party for any reason by giving the other party 30 days advance written notice.

Compliance with Laws. Provider hereby agrees that Provider, and each of its officers, agents, and employees (each a "Provider Party) shall obey all local, state, and federal laws and regulations in the performance of this Agreement, including but not limited to each of the following laws and regulations, as and if applicable:

- Provider shall be responsible for the safety of its employees and shall comply with California Code of Regulations Title 8, section 3205, COVID-19 Prevention.

- Provider shall ensure that each Provider Party who is on-site supporting school functions is compliant with all the following laws, if and as applicable:
  - Fingerprinting / criminal background investigations (see paragraph titled "Fingerprinting, below);
  - Public Health Department Orders and Guidance or other related mandates related to COVID-19, so long as such Orders and Guidance are in effect during the Term of this Agreement;
  - Tuberculosis Clearance (Education Code § 49406)

Non-Discrimination and Equal Employment Opportunity. Provider represents and agrees that it does not and shall not discriminate against any employee or applicant for employment, company, individual or group of individuals, because of ancestry, age, color, disability (physical and mental, including HIV and AIDS), genetic information, gender identity, gender expression, marital status, medical condition, military or veteran status, national origin, race, religion, sex/gender, and sexual orientation.

Confidentiality. Provider agrees to maintain the confidentiality of all District and District-related data, information, and records including but not limited to student identifiable information and employee personnel information pursuant to all California and Federal statutory laws relating to privacy, confidentiality, and information security including but not limited to California Education Code sections 49060 – 49085 and the Family Educational Rights and Privacy Act (FERPA), that currently exist or exist at any time during the term of this Agreement. All such records and information shall be considered confidential and kept confidential by Provider and Provider's officers, agents, employees, participants, vendors, or customers.

Fingerprinting. Provider shall ensure that Provider and any employee who interacts with students, outside of the immediate supervision and control of the student's parent or guardian or a school employee, has a current valid criminal records summary as described in California *Education Code* section 44237. If any services will be provided on-site, or through an app or other electronic method that might allow any interaction between any student and Provider shall, prior to commencing any service hereunder, provide the District a Fingerprinting/ Criminal Background Check investigation Certificate, in form and substance satisfactory to the District. While this Agreement is in effect, Provider shall immediately provide any arrest and conviction information it receives concerning any person providing Services hereunder to the District.

Food Vendors. Ventura County Environmental Health Facilities Permit: https://vcrma.org/consumer-food-protection

❑ Mobile Food Facility permit ❑ Temporary Food Facility permit ❑ Exempt – must show documentation

Date checked by school official: _____initials: _____

Indemnification. To the fullest extent permitted by law, Provider agrees to defend, indemnify, and hold harmless District, its governing board, officers, administrators, managers, agents, employees, successors, assigns, independent contractors and/or volunteers from and against any and all claims, demands, monetary or other losses, loss of use, damages and expenses, including but not limited to, reasonable legal fees and costs, or other obligations or claims arising out of any liability or damage to person or property resulting from bodily injury, illness, communicable disease, virus, pandemic, or any other loss, sustained or claimed to have been sustained arising out of activities of the Provider or those of any of its officers, agents, employees, participants, vendors, or customers of Provider, whether such act or omission is authorized by this Agreement or not. Provider also agrees to pay for any and all damage to the real and personal property of the District, or loss or theft of such property, or damage to the Property done or caused by such persons. District assumes no responsibility whatsoever for any property placed on District premises by Provider, Provider's agents, employees, participants, vendors, or customers. The provisions of this Indemnification do not apply to any damage or losses caused solely by the intentional misconduct of the District or any of its governing board, officers, administrators, managers, agents, employees and/or volunteers.

This Indemnification shall survive termination of this Agreement, for any reason whatsoever, and binds each party's legal representatives, successors, and assigns.

Insurance. Provider, at its own cost and expense, shall procure and maintain during the term of this Agreement, policies of insurance for the following types of coverage:

a. Commercial General Liability Insurance. Provider shall procure and maintain, during the term of this Agreement, not less than the following General Liability Insurance coverage in the amounts of $1,000,000 per occurrence and $2,000,000 aggregate.

   Commercial General Liability insurance shall include products/completed operations, property damage, and personal and advertising injury coverage.

b. Automobile Liability. Provider shall procure and maintain, during the full term of this Agreement following Automobile Liability Insurance including non-owned and leased automobiles, as applicable with the following coverage limits:

Personal vehicles:	$500,000.00 combined single limit or
	$100,000.00 per person / $300,000.00 per accident
Commercial vehicles:	$1,000,000.00 per accident for bodily injury and property damage

c. Workers' Compensation Insurance. Provider shall procure and maintain, during the term of this Agreement, Workers' Compensation Insurance, as required by California law, on all of its employees engaged in work related to the performance of this Agreement. Provider shall procure and maintain Employers' Liability insurance coverage of $1,000,000. Absent proof of Workers' Compensation Insurance, Provider will submit a fully executed Certification of Exemption from Workers' Compensation Insurance, which District in its sole discretion may accept or reject.

d. Other Coverage as Dictated by the District. If any employee of Provider interacts with students, outside of the immediate supervision and control of the student's parent or guardian or a certificated school employee, Provider shall procure and maintain, during the term of this Agreement, Abuse and Molestation coverage in the amounts of $2,000,000 per occurrence and $4,000,000 aggregate.

If professional services are offered, Provider shall procure and maintain, during the term of this Agreement, Professional Liability (Errors and Omissions) insurance coverage in the amounts of $1,000,000 per occurrence and $2,000,000 aggregate.

e. Provider's insurance is primary and will not seek contribution from any other insurance available to the District. Provider further hereby waives any and all rights of subrogation that it may have against the District.

f. Certificates of Insurance. Provider shall provide certificates of insurance to the District as evidence of the insurance coverage required herein, not less than 15 days prior to commencing the proposed activity, and at any other time upon the request of the District. Certificates of insurance will be deemed invalid if proper endorsements are not attached. Certificates of such insurance shall be filed with the District on or before commencement of the services under this Agreement.

g. Endorsements. Provider's Commercial General Liability insurance and Commercial Automobile Liability coverage and Abuse and Molestation coverage shall name the District, its governing board, officers, agents, employees, and/or volunteers as additional insureds. All endorsements specifying additional insureds for any of the Insurance Policies shall be as indicated below or an equivalent endorsement reasonably acceptable to the District.

1) General Liability: CG 20 26 10 01
2) Primary, non-contributory: CG 20 01 04 13
3) Waiver of subrogation: CG 24 04 05 09
4) Commercial Automobile Liability: CA 20 48 10 13

h. Acceptability of Insurers. Insurance is to be placed with insurers with a current A.M. Best's rating of no less than A: VII, unless otherwise acceptable to the District.

i. Insurance written on a "claims made" basis is to be renewed by the Provider for a period of three (3) years following termination of this Agreement. Such insurance must have the same coverage and limits as the policy that was in effect during the term of this agreement and will cover the Provider for all claims made. If coverage is canceled or non-renewed, and not replaced with another claims-made policy form with a Retroactive Date prior to the contract effective date, the Consultant must purchase "extended reporting" coverage for a minimum of three (3) years after completion of the Services.

j. Failure to Procure Insurance**.** Failure on the part of Provider to procure or maintain required insurance shall constitute a material breach of contract under which the District may immediately terminate this Agreement

Governing Law and Venues. This Agreement shall be interpreted in accordance with the laws of the State of California. If any action is brought to interpret or enforce any term of this Agreement, the action shall be brought in state or federal court situated in the County of Ventura, State of California.

Dispute Resolution. If any dispute arises out of or in connection with the Agreement, representatives of the Parties with authority to settle the dispute shall communicate, in person, electronically, or in writing within 30 days of written notice, in a good faith effort to resolve the dispute.

The parties agree that, in the event of any unresolved dispute under the agreement in which the amount sought is $5,000.00 or less, any litigation to resolve the dispute shall be brought in the Ventura County Small Claims Court.

If the unresolved amount in dispute exceeds $5,000.00, the parties agree that they will first submit the matter to a mutually agreed upon mediator. Notwithstanding the following section, Attorneys Fees, the cost of the mediator shall be borne equally by the parties.

Attorney Fees. In the event of any action or proceeding to interpret or enforce the terms of this Agreement, the prevailing party, as determined by the court or mediator, shall be entitled to recover its reasonable attorney fees and costs incurred in connection with such actions or proceeding.

Nature of Agreement. This Agreement represents the entire agreement between the parties hereto with respect to the subject matter hereof and supersedes any and all other agreements and communications however characterized, written or oral, between or on behalf of the parties hereto with respect to the subject matter hereof. This Agreement may only be modified by a written instrument signed by authorized representatives of each of the parties hereto.

Counterpart Execution. This Agreement may be executed in any number of counterparts which, when taken together, shall constitute one and the same instrument. Executed counterparts of this Agreement may be delivered by PDF email or electronic facsimile transmission and shall have the same legal effect as an "ink-signed" original.

Signature Authority. Provider represents and warrants that Provider has all requisite power and authority to conduct its business and to execute, deliver, and perform this Agreement.

Acknowledgement and Agreement

I have read this Agreement and agree to its terms

Provider Authorized Signer	Signature	Date

Oxnard School District

Melissa Reyes		
Director, Purchasing	Signature	Date

Spectrum Enterprise

Proposal for Oxnard School District

Form 470 Application Number: 250008238

Presented To:
David Hubbard
Chief Information Officer
1051 S. A St.
Oxnard, CA 93030
dhubbard@oxnardsd.org

Presented By:
Mark Kim
Major Account Manager - Gov/Ed
17777 Center Court Drive
Cerritos, CA 90703
562-677-0311
mark.kim@charter.com

January 13, 2025

David Hubbard
Chief Information Officer
Oxnard School District
1051 S. A St.
Oxnard, CA 93030
dhubbard@oxnardsd.org

Dear David:

Spectrum Enterprise[1] ("Spectrum") is pleased to submit the enclosed response to your Form 470. Our response demonstrates Spectrum's ability to provide network solutions that will enable Oxnard School District to satisfy its technology needs.

Maintaining our partnership ensures Oxnard School District will continue to benefit from a strong telecommunications foundation and maximizes your ability to create new opportunities and drive innovation without incurring the extra costs associated with service transitions and unknown fees. Spectrum provides advanced broadband services to more than 16,000 schools and libraries representing over 2,500 school districts across the country, making us one of the top service providers within the E-Rate program.

Thank you for the opportunity to respond to your Form 470. Mark Kim is leading Spectrum's effort. Please do not hesitate to contact Mark at 562-677-0311 or mark.kim@charter.com.

Sincerely,

DocuSigned by:
David Brown
F5E211496B4D477...

David Brown
Director, Sales Vertical Accounts

[1] Spectrum Enterprise is a commercial brand of Charter Communications, Inc. The legal entity submitting this proposal is Charter Communications Operating, LLC, a subsidiary of Charter Communications, Inc.

TABLE OF CONTENTS

Terms of Offer 4
Terms and Abbreviations 5
Executive Summary 6
Spectrum Service Proposal 8
Appendix 16

TERMS OF OFFER

This proposal alone shall not be considered an acceptance of an offer by Oxnard School District ("Customer") or otherwise be sufficient to create a binding contract between Oxnard School District and Spectrum.

Spectrum's bid is based upon services being delivered under the terms of the Spectrum Enterprise Service Agreement which incorporates the Spectrum Commercial Terms of Service (available at https://enterprise.spectrum.com/legal/terms-and-conditions.html or any successor URL) plus any related attachments, Service Level Agreements and applicable Service Order(s) (collectively, the "Agreement").

Spectrum remains open to negotiating the Agreement, and once a mutually negotiated contract is entered into by the parties, it shall supersede and replace any terms and conditions of the Form 470.

In the event only a portion of Spectrum's proposal is accepted, Spectrum reserves the right to further negotiate the terms of such partial acceptance prior to final bid award acceptance by Spectrum.

In the event of a bid award to Spectrum by Oxnard School District based on this proposal, if the full Agreement is not executed by the applicable Federal Communications Commission ("FCC") submission deadline due to delays in negotiation, and the parties have not terminated such negotiations, then for purposes of FCC rules and related Universal Service Administrative Company ("USAC") requirements, an agreement incorporating the terms of the Spectrum Enterprise Service Agreement and the bid locations, services, bandwidth capacities, and pricing contained in this proposal will be deemed to exist.

The terms of this proposal are confidential and should not be disclosed directly or indirectly to any third party, except as may be required by law.

The qualifications stated herein apply to all parts, provisions, and documents of the Form 470 and Spectrum's response, regardless of whether an explicit exception or qualification is taken thereto by Spectrum.

TERMS AND ABBREVIATIONS

Technology evolves at a rapid pace and Spectrum stays on the cutting edge of that evolution. The terms used to describe specific technologies or services are sometimes cumbersome and become abbreviated for colloquial use. We have provided a list of the terms used throughout this proposal and their corresponding abbreviations for your convenience. Capitalized terms used but not defined herein shall have the meanings assigned in the Agreement.

GENERAL TERMS	ABBREVIATION
INFORMATION TECHNOLOGY	IT

SERVICE PROPOSAL TERMS	ABBREVIATION
MONTHLY RECURRING CHARGE	MRC
ONE-TIME CHARGE	OTC
QUANTITY	QTY
INTERNET PROTOCOL	IP

ETHERNET SERVICES TERMS	ABBREVIATION
CUSTOMER PREMISE EQUIPMENT	CPE
ETHERNET PRIVATE LINE	EPL
ETHERNET PRIVATE LOCAL AREA NETWORK	EP-LAN
ETHERNET VIRTUAL PRIVATE LINE	EVPL
METRO ETHERNET FORUM	MEF
USER-TO-NETWORK INTERFACE	UNI
WIDE AREA NETWORK	WAN

EXECUTIVE SUMMARY

Spectrum is pleased to provide this response illustrating our ability to provide Oxnard School District with network solutions. We take pride in being an innovative resource for businesses, schools and communities. Our reliable and economical service is a natural fit with your mission.

Bring Advanced and Affordable Technology to Your Schools and Libraries

Advanced network solutions and computing technologies in the classroom have become vital to education. Unfortunately, today's challenging economic environment has put education and technology budgets under tremendous pressure. It is a challenge for schools to get access to affordable technologies that help drive greater student achievements.

The Federal Government created the E-Rate program to help fund communications services for schools and libraries. This program offers 20-90 percent off standard retail rates on qualified communications services to eligible schools and libraries.

Spectrum's Solution

Since 1998, Spectrum has worked with thousands of E-Rate accounts. Our experience in this area provides E-Rate specialists who understand:

- rules and regulations to participate in the program, and
- billing and standard discounts

Federally funded E-Rate discounts have made today's technology more affordable.

Get Powerful Services with the Financial Benefits of E-Rate

Research shows that technology use is a top-five indicator of better discipline, better attendance, and increases in college enrollment. Educational organizations are leveraging E-Rate by partnering with Spectrum to reduce cost and implement technology for greater student achievement.

Unsurpassed Expertise and Customer Support

A network of specially trained, industry experts support Spectrum. We have around-the-clock, U.S. based business support centers and knowledgeable, locally based technicians who are specifically trained to help with your unique needs. Our dedicated work ethic, shared knowledge, and proprietary systems allow us to ensure that the solutions we are proposing to Oxnard School District will match your specific and discrete needs.

When you collaborate with Spectrum for network solutions, we assign an account team who will support your services:

- **Account Manager:** a dedicated, market expert who is available for consultation.
- **Sales Engineering:** trained technical experts who customize designs based on your requirements.
- **E-Rate Specialists:** experienced with E-Rate rules and regulations and are billing and standard discounts experts

- **Project Management:** customer focused experts who manage your build and communicate with you every step of the way.
- **Client Services:** your point of contact; responsible for providing you with accurate billing and consultation on future growth.
- **Enterprise Network Operations Center ("ENOC") and Enterprise Technical Support ("ETS"):** 24/7 facilities that work together to continuously monitor the network and provide a resource for technical support.

Customers have direct access to our Government Subsidized Programs ("GSP") department which specializes in government-funded programs for eligible customers.

To support E-Rate program participation, Spectrum:

- Provides to the Customer an ("FCC") Form 471 Funding Recommendation Letter after the FCC Form 470 and awarded Agreement review.
- Reviews FCC Form 471 for possible errors and omissions and distributes to the customer accompanying Receipt Acknowledgement Letter ("RAL") Modification recommendation necessary to maximize eligible funding.
- Monitors Service Provider Invoicing ("SPI") submissions and SPI discount application (FCC Form 474), and
- Will be available to address program questions or concerns via email.

Renewal Plan

As your incumbent provider, we have developed this proposal with the benefit of our experience and have based it on our knowledgeable understanding of your requirements. Our combination of technology services and proposed cost, based on actual experience with Oxnard School District, provides an incredible value. By choosing once again to collaborate with Spectrum, you will be choosing a vendor with the proven infrastructure and experienced team currently in place to support the program. It is Spectrum's objective to maintain our partnership with you while continuing to focus on responsiveness, transparency, and continuity of services. It is with that focus we have developed our proposal response to the Form 470.

SPECTRUM SERVICE PROPOSAL

Spectrum's proposal, including pricing, is subject to the following contingencies:

- Final engineering, design and site visits; and
- Acceptance of and entering into the Agreement (as may be negotiated by the parties as stated in the Terms of Offer section above), which shall govern the contractual relationship between the parties and the provision of the services under such contract.

Investment for Spectrum Services

Service Location	A or Z Location	Service	Bandwidth / Product Description	Initial Order Term (Months)	QTY	MRC	OTC
Option 1							
1051 S A St, Oxnard, CA 93030	A	Ethernet EPL	1 Gbps	1	1	$1,850.00	$0.00
3101 Dunkirk Dr, Oxnard, CA 93035	Z	Ethernet EPL	1 Gbps	1	1	$1,850.00	$0.00
1051 S A St, Oxnard, CA 93030	A	Ethernet EPL	1 Gbps	1	1	$1,850.00	$0.00
570 Airport Way, Camarillo, CA 93010	Z	Ethernet EPL	1 Gbps	1	1	$1,850.00	$0.00
Option 2							
1051 S A St, Oxnard, CA 93030	A	Ethernet EPL	2 Gbps	1	1	$2,400.00	$0.00
3101 Dunkirk Dr, Oxnard, CA 93035	Z	Ethernet EPL	2 Gbps	1	1	$2,400.00	$0.00
1051 S A St, Oxnard, CA 93030	A	Ethernet EPL	2 Gbps	1	1	$2,400.00	$0.00
570 Airport Way, Camarillo, CA 93010	Z	Ethernet EPL	2 Gbps	1	1	$2,400.00	$0.00
Option 3							
1051 S A St, Oxnard, CA 93030	A	Ethernet EPL	5 Gbps	1	1	$3,400.00	$0.00
3101 Dunkirk Dr, Oxnard, CA 93035	Z	Ethernet EPL	5 Gbps	1	1	$3,400.00	$0.00
1051 S A St, Oxnard, CA 93030	A	Ethernet EPL	5 Gbps	1	1	$3,400.00	$0.00

570 Airport Way, Camarillo, CA 93010	Z	Ethernet EPL	5 Gbps	1	1	$3,400.00	$0.00
Option 4							
1051 S A St, Oxnard, CA 93030	A	Ethernet EPL	10 Gbps	1	1	$5,050.00	$0.00
3101 Dunkirk Dr, Oxnard, CA 93035	Z	Ethernet EPL	10 Gbps	1	1	$5,050.00	$0.00
1051 S A St, Oxnard, CA 93030	A	Ethernet EPL	10 Gbps	1	1	$5,050.00	$0.00
570 Airport Way, Camarillo, CA 93010	Z	Ethernet EPL	10 Gbps	1	1	$5,050.00	$0.00
Option 5							
1051 S A St, Oxnard, CA 93030	A	Ethernet EPL	1 Gbps	12	1	$325.00	$0.00
3101 Dunkirk Dr, Oxnard, CA 93035	Z	Ethernet EPL	1 Gbps	12	1	$325.00	$0.00
1051 S A St, Oxnard, CA 93030	A	Ethernet EPL	1 Gbps	12	1	$325.00	$0.00
570 Airport Way, Camarillo, CA 93010	Z	Ethernet EPL	1 Gbps	12	1	$325.00	$0.00
Option 6							
1051 S A St, Oxnard, CA 93030	A	Ethernet EPL	2 Gbps	12	1	$536.50	$0.00
3101 Dunkirk Dr, Oxnard, CA 93035	Z	Ethernet EPL	2 Gbps	12	1	$536.50	$0.00
1051 S A St, Oxnard, CA 93030	A	Ethernet EPL	2 Gbps	12	1	$536.50	$0.00
570 Airport Way, Camarillo, CA 93010	Z	Ethernet EPL	2 Gbps	12	1	$536.50	$0.00
Option 7							
1051 S A St, Oxnard, CA 93030	A	Ethernet EPL	5 Gbps	12	1	$895.00	$0.00
3101 Dunkirk Dr, Oxnard, CA 93035	Z	Ethernet EPL	5 Gbps	12	1	$895.00	$0.00
1051 S A St, Oxnard, CA 93030	A	Ethernet EPL	5 Gbps	12	1	$895.00	$0.00
570 Airport Way, Camarillo, CA 93010	Z	Ethernet EPL	5 Gbps	12	1	$895.00	$0.00

Option 8							
1051 S A St, Oxnard, CA 93030	A	Ethernet EPL	10 Gbps	12	1	$895.00	$0.00
3101 Dunkirk Dr, Oxnard, CA 93035	Z	Ethernet EPL	10 Gbps	12	1	$895.00	$0.00
1051 S A St, Oxnard, CA 93030	A	Ethernet EPL	10 Gbps	12	1	$895.00	$0.00
570 Airport Way, Camarillo, CA 93010	Z	Ethernet EPL	10 Gbps	12	1	$895.00	$0.00
Option 9							
1051 S A St, Oxnard, CA 93030	A	Ethernet EPL	1 Gbps	36	1	$325.00	$0.00
3101 Dunkirk Dr, Oxnard, CA 93035	Z	Ethernet EPL	1 Gbps	36	1	$325.00	$0.00
1051 S A St, Oxnard, CA 93030	A	Ethernet EPL	1 Gbps	36	1	$325.00	$0.00
570 Airport Way, Camarillo, CA 93010	Z	Ethernet EPL	1 Gbps	36	1	$325.00	$0.00
Option 10							
1051 S A St, Oxnard, CA 93030	A	Ethernet EPL	2 Gbps	36	1	$530.00	$0.00
3101 Dunkirk Dr, Oxnard, CA 93035	Z	Ethernet EPL	2 Gbps	36	1	$530.00	$0.00
1051 S A St, Oxnard, CA 93030	A	Ethernet EPL	2 Gbps	36	1	$530.00	$0.00
570 Airport Way, Camarillo, CA 93010	Z	Ethernet EPL	2 Gbps	36	1	$530.00	$0.00
Option 11							
1051 S A St, Oxnard, CA 93030	A	Ethernet EPL	5 Gbps	36	1	$530.00	$0.00
3101 Dunkirk Dr, Oxnard, CA 93035	Z	Ethernet EPL	5 Gbps	36	1	$530.00	$0.00
1051 S A St, Oxnard, CA 93030	A	Ethernet EPL	5 Gbps	36	1	$530.00	$0.00
570 Airport Way, Camarillo, CA 93010	Z	Ethernet EPL	5 Gbps	36	1	$530.00	$0.00
Option 12							

1051 S A St, Oxnard, CA 93030	A	Ethernet EPL	10 Gbps	36	1	$530.00	$0.00
3101 Dunkirk Dr, Oxnard, CA 93035	Z	Ethernet EPL	10 Gbps	36	1	$530.00	$0.00
1051 S A St, Oxnard, CA 93030	A	Ethernet EPL	10 Gbps	36	1	$530.00	$0.00
570 Airport Way, Camarillo, CA 93010	Z	Ethernet EPL	10 Gbps	36	1	$530.00	$0.00
Option 13							
1051 S A St, Oxnard, CA 93030	A	Ethernet EPL	1 Gbps	60	1	$325.00	$0.00
3101 Dunkirk Dr, Oxnard, CA 93035	Z	Ethernet EPL	1 Gbps	60	1	$325.00	$0.00
1051 S A St, Oxnard, CA 93030	A	Ethernet EPL	1 Gbps	60	1	$325.00	$0.00
570 Airport Way, Camarillo, CA 93010	Z	Ethernet EPL	1 Gbps	60	1	$325.00	$0.00
Option 14							
1051 S A St, Oxnard, CA 93030	A	Ethernet EPL	2 Gbps	60	1	$530.00	$0.00
3101 Dunkirk Dr, Oxnard, CA 93035	Z	Ethernet EPL	2 Gbps	60	1	$530.00	$0.00
1051 S A St, Oxnard, CA 93030	A	Ethernet EPL	2 Gbps	60	1	$530.00	$0.00
570 Airport Way, Camarillo, CA 93010	Z	Ethernet EPL	2 Gbps	60	1	$530.00	$0.00
Option 15							
1051 S A St, Oxnard, CA 93030	A	Ethernet EPL	5 Gbps	60	1	$451.00	$0.00
3101 Dunkirk Dr, Oxnard, CA 93035	Z	Ethernet EPL	5 Gbps	60	1	$451.00	$0.00
1051 S A St, Oxnard, CA 93030	A	Ethernet EPL	5 Gbps	60	1	$451.00	$0.00
570 Airport Way, Camarillo, CA 93010	Z	Ethernet EPL	5 Gbps	60	1	$451.00	$0.00
Option 16							
1051 S A St, Oxnard, CA 93030	A	Ethernet EPL	10 Gbps	60	1	$451.00	$0.00

3101 Dunkirk Dr, Oxnard, CA 93035	Z	Ethernet EPL	10 Gbps	60	1	$451.00	$0.00
1051 S A St, Oxnard, CA 93030	A	Ethernet EPL	10 Gbps	60	1	$451.00	$0.00
570 Airport Way, Camarillo, CA 93010	Z	Ethernet EPL	10 Gbps	60	1	$451.00	$0.00

The above pricing is inclusive of all Services and Service Location(s) shown within each option above ("all-in" pricing). For purposes of clarity, Customer may select any of the options outlined above so long as Customer selects all Service Locations and all Services within such option. Any other pricing options or requests will require further financial review and approval in order to provide revised pricing options.

Pricing is provided only for the sites shown in the Service Proposal. Pricing for additional sites shall be determined upon Spectrum's receipt of site information for the new service location, evaluation of the requested services, performance of surveys, and other information that may be required.

Pricing shown above is exclusive of taxes, fees and surcharges. The MRCs and OTCs are subject to taxes, fees and surcharges as described in Section 7(b) (Taxes, Surcharges and Fees) of the Agreement.

E-Rate Funding Contingency

Customer's Service Order shall incorporate the following clause as it relates to funding:

Customer may submit this Service Order and the Agreement to the Schools and Libraries Division of the Universal Service Administrative Company, (i.e., the entity appointed by the Federal Communications Commission to administer the Universal Service Program with respect to Schools and Libraries (E-Rate) funding) as part of any application seeking a federal subsidy or funding.

Customer is responsible for notifying Spectrum of its election of either the Service Provider Invoice (SPI) or Billed Entity Applicant Reimbursement (BEAR) discount method by May 15th prior to the applicable funding year. Customer must complete and return an E-Rate Discount Election Form to Spectrum prior to such date, or Customer will be deemed to have chosen the BEAR discount method for the funding year.

Upon Spectrum's receipt of appropriate notice that Customer is an approved E-Rate program participant for a Service, Spectrum will invoice Customer for the Service in accordance with E-Rate guidelines and/or rules. If Spectrum invoices Customer for a Service pursuant to any E-Rate program rates, discounts or credits in advance of receiving such notice and Customer's request for E-Rate program funding is denied, limited or reduced, Spectrum will invoice Customer and Customer will pay the difference between such invoiced amount(s) and the actual amount of the charges for the Service as described in this Service Order. Notwithstanding anything herein to the contrary, Customer's obligations under this Service Order shall remain in full force and effect in the event Customer withdraws or is removed from the E-Rate program, receives E-Rate program funding that is less than Customer's requested funding amount, or is denied E-Rate program funding for any Service described in this Service Order. For the avoidance

of doubt, Customer is solely responsible for all charges for services, as described in this Service Order, that were installed prior to the E-Rate program funding year start date.

Contract Extension

Spectrum agrees to include the following clause in applicable Service Orders:

Customer shall have the option to renew this Service Order for up to two (2) additional consecutive twelve (12) month terms (each, a "Renewal Term" and collectively with the Initial Order Term, the "Order Term"), at the same MRC set forth in this Service Order, by providing notice of such renewal to Spectrum at least thirty (30) days prior to expiration of the then-current Order Term (i.e. either the Initial Order Term or a Renewal Term, as applicable). If Customer does not exercise its option to renew the Service Order for an available Renewal Term in accordance with the foregoing, then upon reaching the end of the then-current Order Term the Service Order shall automatically renew for successive one-month terms (each, a "Monthly Renewal Term"). Thereafter, either Spectrum or Customer may terminate the Service Order by providing notice of termination to the other Party at least thirty (30) days in advance of, and to be effective as of, the expiration of a Monthly Renewal Term.

Upgrade Path

Spectrum agrees to include the following clause in applicable Service Orders:

Customer shall have the option to add Services or, if applicable, increase speed and bandwidth during the Order Term of the Service Order, provided Spectrum is able to accommodate Customer's request. Customer will notify Spectrum of its desired additional Services or increased speed and bandwidth and shall be responsible for the corresponding increase in MRCs for such additional Services or increased speed and bandwidth, as well as construction and installation costs (if applicable). Added services may be coterminous with the Initial Order Term of the original Service Order if the parties agree upon appropriate MRCs and any OTCs to account for the decreased Initial Order Term for such additional Services. Spectrum agrees to include language within individual Service Orders that set forth the specific upgrade options available to the Customer during the Order Term.

California Teleconnect Funding Contingency

Customer's Service Order shall incorporate the following clause as it relates to funding:

If state funding for the California Teleconnect Fund ("CTF") is exhausted, or if Customer fails to qualify for CTF discounts, Customer will be back-billed for CTF discounts advanced by Spectrum. Furthermore, if Customer fails to receive E-Rate discounts from the Universal Service Administrative Company ("USAC"), Customer will be back-billed for all such discounts advanced by Spectrum. Customer is required to comply with all federal E-Rate and CTF rules. Spectrum reserves the right to suspend both CTF and E-Rate discounts to Customer in the event that Customer (i) fails to abide by all federal E-Rate and CTF rules, or (ii) withdraws its request for E-Rate and/or CTF funding.

Non-Appropriation

Upon request, Customer's Service Order will incorporate the following clause as it relates to funding:

Non-Appropriation. Notwithstanding anything to the contrary in the Service Agreement, if funds are not appropriated for a fiscal year for Services provided under this Service Order at a given Service Location (a "Non-Appropriation"), Customer shall have the right to terminate, without liability, such Services at the Service Location ("Non-Appropriated Services") as of the end of the funded fiscal year (or such shorter funded term, if applicable). The foregoing termination right is conditioned upon the following: Customer shall (a) provide Spectrum with at least thirty (30) days written notice of termination prior to the start of such fiscal year (or within five (5) days following budget approval, if budget approval occurs less than 30 days prior to or following the start of such fiscal year); (b) describe in the termination notice how such Non-Appropriation did not result from the act or failure to act by Customer in the course of establishing its proposed budget or in satisfying budget filing requirements; (c) pay Spectrum all amounts due for Non-Appropriated Services through the date of termination; (d) for the Non-Appropriated Services, pay Spectrum upon receipt of invoice all construction and installation expenses incurred by Spectrum, OTCs, and any expenses incurred by Spectrum related to the Non-Appropriation, including, without limitation, any applicable third-party termination charges; and (e) return to Spectrum or permit Spectrum to remove, in Spectrum's discretion, the Spectrum Equipment in the same condition as when received, ordinary wear and tear excepted. Customer shall be responsible for reimbursing Spectrum for the repair or replacement of any Spectrum Equipment not returned in accordance with this paragraph.

Capitalized terms used but not defined herein shall have their respective meaning assigned in the Service Agreement.

Service Activation

So long as Customer properly performs all necessary site preparation and provides Spectrum with all required consents, Spectrum shall endeavor to meet the July 1 service activation date for USAC funding. However, due to time constraints which are required for construction, design, permits, and various other factors, Spectrum may not be able to meet the USAC funding date. Therefore, Spectrum encourages new customers to file for funding at the earliest availability within USAC's guidelines and obtain a Funding Commitment Decision Letter, to allow Spectrum as much time as possible to meet the July 1 service activation date. Additionally, it may be in the best interest of Spectrum's new customers to file through USAC for temporary funding for their current provider for a period sufficient to cover Spectrum's implementation timeline. Spectrum's implementation goal is 90 to 120 days after full execution of the Agreement and applicable Service Order by the parties. However, upon award an updated timeline will be provided after a project team has been assigned.

USAC Filing Information

Charter Communications Operating, LLC is in good standing with the FCC and USAC, and its USAC identifiers are as follows:

Service Provider Identification Number ("SPIN"): 143050436

Funding Request Number ("FRN"): 002526580

Spectrum complies with all applicable FCC lowest corresponding price (LCP) rules with respect to the Agreement.

Eligibility of products and services for E-Rate School Program discounts is determined by the FCC and administered by the Schools and Libraries Division of USAC. Customer is responsible for understanding USAC rules and eligibility of services for E-Rate funding.

USAC Invoice Options

Spectrum will provide discounts via the Form 474 (SPI Form) as long as funding has been approved through the E-Rate program, in which case discounts will be applied to the billing account via credit adjustments. Alternatively, funding may be obtained by filing a Form 472 (BEAR Form). Spectrum will only invoice USAC via SPI Form 474 once funding has been committed and both the Form 486 and Receipt of Service Confirmation Form have been filed with USAC.

Compliance with Law and General Statement

Regarding any terms and conditions in Customer's Form 470, Spectrum complies with all applicable laws and regulations. See Spectrum's Terms of Offer section and this Service Proposal section for additional information.

Spectrum does not currently conduct business with or use equipment or services provided or manufactured by entities identified on the Covered List published by the Public Safety and Homeland Security Bureau on the FCC's website.

APPENDIX

- Ethernet Services for K-12 Education
- Ethernet Service Level Agreement

PRODUCT BRIEF

Ethernet Services for K-12 education

Transform your network with high-performance Ethernet

Remote and hybrid learning, 1:1 learning initiatives, smart networked infrastructure, cloud-based administrative systems and bandwidth-intensive video streaming and esports are all accelerating the transformation of wide area networks (WANs). As the WAN evolves, modern networking solutions, such as Ethernet, deliver the enhanced performance and security that K-12 schools and districts demand.

K-12 schools and districts are modernizing their networks with new technologies, deploying cloud-first strategies, embracing multi-cloud connectivity and enabling hybrid networking to bring their IT strategy to life.

With speeds up to 100 Gbps, our Ethernet Services provide secure, reliable connectivity to power cloud-based applications. Spectrum Enterprise® is a nationwide network partner that can connect your locations, empowering you to leverage bandwidth-intensive applications and fortify continuity of operations plans. Backed by an end-to-end service-level agreement (SLA) all the way into your facility, our Ethernet Services simplify your network infrastructure.

Partner with an experienced provider that can put your school district's network modernization on the fast track. Committed to your success, our expert network engineers work with you to design a tailored solution. We provide you with a dedicated project manager to oversee a seamless installation with 24/7/365 support, and a client services manager will ensure any issue resolution. Furthermore, our portal gives you the network visibility required to ensure a positive experience for your organization.

Product highlights

Superior performance

Accelerate the capabilities of your mission-critical applications with SLA-backed services and integrate your network with public and private clouds.

National reach

Easily add new locations with our dense metro fiber coverage and nationwide reach supported by more than 230,000 fiber-route miles.

Inherently secure

Rely on a private native Ethernet network to connect your locations and use additional VLANs to further isolate traffic.

Simple management

Reduce IT complexity with end-to-end support from a network partner you can trust to design and manage your high-performing network.

Spectrum Enterprise is recognized as a top U.S. Ethernet services provider by leading industry analyst firms.[1]

Award-winning Ethernet Services

VERTICAL SYSTEMS GROUP YEAR-END 2022 U.S. CARRIER ETHERNET SERVICES LEADERBOARD

VERTICAL SYSTEMS GROUP YEAR-END 2021 U.S. CARRIER ETHERNET SERVICES LEADERBOARD

VERTICAL SYSTEMS GROUP YEAR-END 2020 U.S. CARRIER ETHERNET SERVICES LEADERBOARD

FROST & SULLIVAN 2021 BEST PRACTICES AWARD UNITED STATES BUSINESS CARRIER ETHERNET SERVICES CUSTOMER VALUE LEADERSHIP

FROST & SULLIVAN 2019 BEST PRACTICES AWARD UNITED STATES BUSINESS CARRIER ETHERNET SERVICES GROWTH EXCELLENCE FROST RADAR AWARD

MEF AWARDS 2019 Enterprise Application Manufacturing

MEF AWARDS 2018 Retail Service Provider North America

Scalable, secure connections linking your users, locations and the cloud

Spectrum Enterprise Ethernet Services

Private WAN connectivity protects network locations from external threats, like DDoS attacks, while supporting low latency and high-bandwidth applications.

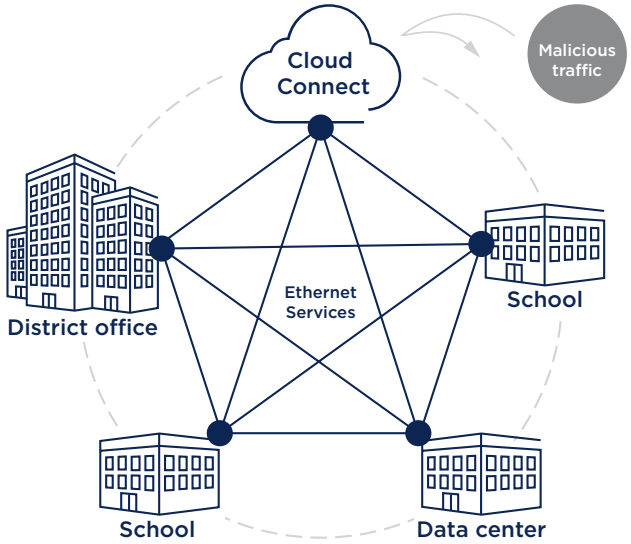

Take your performance further with additional services

Cloud Connect

Extend your network with fast, secure and dependable private Ethernet connections to public cloud service providers.

Fiber Internet Access

Achieve dedicated internet connectivity with symmetrical upload and download speeds and bandwidth up to 100 Gbps.

Managed WiFi

Meet student, educator and staff demands for reliable connections to the internet with ubiquitous coverage across your campus and 24/7/365 support.

Managed Router Service

Efficiently route Ethernet, internet and other network traffic with a variety of protocols and improve bandwidth utilization without investing in hardware or day-to-day management.

1. "2022 U.S. Carrier Ethernet LEADERBOARD," February 16, 2023.

Learn more
enterprise.spectrum.com/Ethernet

About Spectrum Enterprise
Spectrum Enterprise, a part of Charter Communications, Inc., is a national provider of scalable, fiber technology solutions serving many of America's largest businesses and communications service providers. The broad Spectrum Enterprise portfolio includes networking and managed services solutions: Internet access, Ethernet access and networks, Voice and TV solutions. The Spectrum Enterprise team of experts works closely with clients to achieve greater business success by providing solutions designed to meet their evolving needs. For more information, visit enterprise.spectrum.com.

©2023 Charter Communications. All rights reserved. Spectrum Enterprise is a trademark of Charter Communications. All other logos, marks, designs, and otherwise are the trademarks and intellectual property of their respective third-party owners. Not all products, pricing and services are available in all areas. Pricing and actual speeds may vary. Restrictions may apply. Subject to change without notice.

Spectrum Enterprise

Ethernet Service Level Agreement

This Service Level Agreement ("SLA") for fiber-based Spectrum Enterprise ("Spectrum") Ethernet Service and Spectrum Cloud Connect Service (individually the "Service" and collectively the "Services") is a part of, and hereby incorporated by reference into the Spectrum Enterprise Service Agreement (including the terms and conditions, attachments, and Service Orders described therein, the "Service Agreement"). To the extent any provision of this SLA conflicts with the Service Agreement, this SLA shall control. Performance tier goals for the Services ("SLA Targets") are set forth in the tables below. Capitalized words used but not defined herein shall have the meanings assigned to them in the Service Agreement.

I. Priority Classifications and Definitions

Priority classifications for Service Disruptions and Service Degradations are described as follows:

Priority	Criteria
Priority 1	• Service Disruption resulting in a total loss of Service; or • Service Degradation to the point where Customer is unable to use the Service • Each a "Priority 1 Outage"
Priority 2	• Service Degradation where Customer is able to use the Service
Priority 3	• A service issue that does not impact the Service; or • A single non-circuit specific quality of Service inquiry

As used in this SLA, the following terms have the meanings assigned below:

"Service Disruption" is defined as an outage, disruption, or degradation, other than an Excluded Disruption, that interferes with the ability of a Spectrum network to transmit and receive network traffic between Customer's Service Locations. The Service Disruption period begins on the earlier of (i) when Spectrum opens a trouble ticket in connection with a Service Disruption that Spectrum detects and verifies, or (ii) when Customer reports a Service Disruption by contacting Enterprise Technical Support, and Spectrum validates that the Service is affected and creates a corresponding trouble ticket. The Service Disruption ends when the affected Service has been restored.

"Service Degradation" means a degradation of the Service, such as failure of the Service to achieve the SLA Targets for Latency/Frame Delay, Jitter/Frame Delay Variation, or Packet Delivery.

"Excluded Disruptions" means (i) planned outages, (ii) routine or urgent maintenance, (iii) time when Spectrum is unable to gain access to Customer's Service Location to troubleshoot, repair or replace equipment or the Service, (iv) service problems resulting from acts or omissions of Customer or Customer's representatives or agents, (v) Customer equipment failures, (vi) Service issues for Cloud Connect Service beyond the Peering Point (vi) Customer does not release the Service for testing, and (viii) Force Majeure Events.

©2017-2024 Charter Communications. All Rights Reserved. Not all products, pricing and services are available in all areas. Pricing and actual speeds may vary. Restrictions may apply. Subject to change without notice.

II. SLA Targets for Ethernet and Cloud Connect Services

Spectrum Ethernet Services and Cloud Connect Peering Point SLA Targets [1]			
Performance Tier	**Metro** **0 - 155 miles[3]**	**Regional** **> 155 - 746 miles[3]**	**National[2]** **> 746 miles[3]**
Service Availability	100%	100%	100%
MTTR	4 hrs.	4 hrs.	4 hrs.
Latency	≤ 10ms	≤ 25ms	≤ 60ms
Packet Delivery	≥ 99.99%	≥ 99.99%	≥ 99.99%
Jitter	≤ 1ms	≤ 4ms	≤ 8ms

[1] Measured as described below.
[2] Notwithstanding the table above, for Ethernet Service Locations that require use of a third party service provider to deliver the Services, the SLA Targets shall be those reflected in the National column regardless of fiber route distance.
[3] Refers to the length of the actual fiber route.

Ethernet Service SLA Targets are measured end to end (i.e. from any two applicable Customer edge devices or network interface devices ("NID") at the Service Location) at the individual circuit or Service level, and any applicable credits are issued only for the affected circuit or Service (the "Affected Service").

The Cloud Connect Service SLA Target for Service Availability is measured between Spectrum's NID located at Customer's Service Location and the point of physical handoff of the Service to the cloud service provider's cloud peering point ("Peering Point").

III. SLA Calculations

1. Service Availability

"Service Availability" is calculated as the total number of minutes in a calendar month, less the number of minutes in the calendar month that the Service is unavailable due to a Priority 1 Outage ("Downtime"), with such difference divided by the total number of minutes in the calendar month, and expressed as a percentage.

Service Availability per calendar month is calculated as follows:

$$\textbf{Service Availability} = \frac{\textbf{Total number of minutes in the calendar month – Downtime}}{\textbf{Total number of minutes in a calendar month}} \times 100$$

2. Mean Time to Restore (MTTR)

The MTTR SLA Target is applicable to Priority 1 Outages and is measured each calendar month as the average time for Spectrum to restore Priority 1 Outages, calculated as the cumulative length of time it takes Spectrum to restore a Service following a Priority 1 Outage divided by the corresponding number of trouble tickets for Priority 1 Outages opened during the respective calendar month for the Service.

MTTR per calendar month is calculated as follows:

$$\textbf{Mean Time to Restore} = \frac{\textbf{Cumulative length of time to restore Priority 1 Outage(s) per Service in the calendar month}}{\textbf{Total number of Priority 1 Outage trouble tickets per Service in the calendar month}}$$

3. Latency/Frame Delay

Latency or Frame Delay is the average roundtrip network delay, measured every five (5) minutes during a calendar month (except during an Excluded Disruption), to adequately determine a consistent average monthly performance level for frame delay for each Service. The roundtrip delay is expressed in milliseconds (ms).

©2017-2024 Charter Communications. All Rights Reserved. Not all products, pricing and services are available in all areas. Pricing and actual speeds may vary. Restrictions may apply. Subject to change without notice.

Latency/Frame Delay is calculated as follows:

Latency or Frame Delay Average (ms) =	$\frac{\textbf{Sum of the roundtrip delay measurements for a Service in the calendar month}}{\textbf{Total number of measurements for a Service in the calendar month}}$

4. Packet Delivery

Packet Delivery is defined as the percentage of frames that are successfully received compared to the total frames that are sent in a calendar month (except during an Excluded Disruption). The percentage calculation is based on frames that are transmitted from a network origination point and received at a network destination point.

Packet Delivery is calculated as follows:

Packet Delivery (%) =	$\frac{\textbf{Number of frames delivered in the calendar month}}{\textbf{Total frames sent in the calendar month}}$	**X 100**

5. Jitter/Frame Delay Variation

Jitter or Frame Delay Variation is defined as the variation in delay for two consecutive frames that are transmitted (one way) from a network origination point and received at a network destination point. Spectrum measures a sample set of frames every five (5) minutes during a calendar month (except during an Excluded Disruption), and determines the average delay between consecutive frames within each sample set. The monthly Jitter/Frame Delay Variation is calculated as the average of all of the frame delay variation measurements during such calendar month and is expressed in milliseconds (ms).

Jitter or Frame Delay Variation is calculated as follows:

Jitter or Frame Delay Variation Average (ms) =	$\frac{\textbf{Sum of the Frame Delay Variation measurements for a Service in the calendar month}}{\textbf{Total number of measurements for a Service in the calendar month}}$

IV. Remedies

1. Service Credits

If a Service fails to satisfy the SLA Targets during any calendar month and Customer is in compliance with the terms of the Service Agreement and this SLA, then Customer may request credit equal to the corresponding percentage of the monthly recurring charges ("MRC") for the Affected Service as set forth in the tables below. Any credit to be applied will be offset against any amounts due from Customer to Spectrum in the billing cycle following the date Spectrum makes its credit determination. Credit requests must be submitted to Spectrum within thirty (30) days of the calendar month in which the SLA Target was missed. Spectrum will exercise commercially reasonable efforts to respond to such credit requests within 30 days of receipt thereof.

Service Availability Credits		
Downtime		**Credit**
> 0	< 1 hour	10% of MRC
≥ 1 hour	< 2 hours	20% of MRC
≥ 2 hours	< 4 hours	30% of MRC
≥ 4 hours	< 8 hours	40% of MRC
≥ 8 hours	< 12 hours	50% of MRC
≥ 12 hours	< 16 hours	80% of MRC
≥ 16 hours		100%

©2017-2024 Charter Communications. All Rights Reserved. Not all products, pricing and services are available in all areas. Pricing and actual speeds may vary. Restrictions may apply. Subject to change without notice.

Mean Time To Restore ("MTTR") Credits		Latency/Frame Delay (Roundtrip) Credit	Jitter/Frame Delay Variation Credit	Packet Delivery Credit
MTTR > 4 hours < 8 hours	40% of MRC	50% of MRC	50% of MRC	50% of MRC
MTTR ≥ 8 hours	50% of MRC			

All SLA Targets are monthly measurements, and Customer may request only one credit per SLA Target per month for the Affected Service. Should one event impact more than one SLA hereunder, Customer shall receive the single highest of the qualifying credits only. Service Credits hereunder shall not be cumulative per Service. The aggregate credit amount due to Customer in any month will not exceed 100% of the MRC for the Affected Service. Except as set forth below, the credits described in this SLA shall constitute Customer's sole and exclusive remedy, and Spectrum's sole and exclusive liability, with respect to any missed SLA Targets.

2. Chronic Priority 1 Outages

If Customer experiences and reports three (3) separate Priority 1 Outages where the Downtime exceeds four (4) hours during each Priority 1 Outage within three (3) consecutive calendar months, then Customer may terminate the Affected Service without charge or liability by providing at least thirty (30) days written notice to Spectrum; provided, however, that (i) Customer may only terminate the Affected Service; (ii) Customer must exercise its right to terminate the Affected Service by providing written notice to Spectrum within thirty (30) days after the event giving rise to Customer's termination right; (iii) Customer shall have paid Spectrum all amounts due at the time of such termination for all Services provided by Spectrum pursuant to the Service Agreement, and (iv) the foregoing termination right provides the sole and exclusive remedy of Customer and the sole and exclusive liability of Spectrum for chronic Priority 1 Outages and Customer shall not be eligible for any additional credits.

V. Network Maintenance

Maintenance Notice:
Customer understands that from time to time Spectrum will perform network maintenance for network improvements and preventive maintenance. In some cases Spectrum will need to perform urgent network maintenance, which will usually be conducted within the routine maintenance windows. Spectrum will use reasonable efforts to provide advance notice of the approximate time, duration, and reason for any urgent maintenance outside of the routine maintenance windows.

Maintenance Windows:
Routine maintenance may be performed Monday – Friday 12 a.m. – 6 a.m. local time.

©2017-2024 Charter Communications. All Rights Reserved. Not all products, pricing and services are available in all areas. Pricing and actual speeds may vary. Restrictions may apply. Subject to change without notice.

OSD BOARD AGENDA ITEM

Name of Contributor: Dr. Anabolena DeGenna **Date of Meeting:** March 19, 2025

Agenda Section: Section C: Support Services Agreement

Approval of Agreement #25-04 with CDW-G - Infrastructure Modernization Project – E-Rate (DeGenna/Hubbard)

RFPs were solicited per E-Rate Bid #24-03 for Infrastructure Modernization, which includes LAN Fiber Replacement and UPS Installation at all school sites, and Cabinet Upgrades for the Data Center. The project ensures compliance with E-Rate procurement rules, California prevailing wage laws, and district requirements. Proposals were received and evaluated against the criteria outlined in the bid request. The responsive and responsible vendor identified through the evaluation process was CDWG.

Terms of Agreement: July 1, 2025 – December 30, 2025

FISCAL IMPACT:

Not to Exceed $1,405,514.26 = $1,116,374.50 – E-Rate Funds
$289,139.76 – General Funds

RECOMMENDATION:

It is the recommendation of the Chief Information Officer and the Superintendent, that the Board of Trustees approve Agreement #25-04 with CDW-G.

ADDITIONAL MATERIALS:

Attached: Agreement #25-04, CDW-G - Infrastructure Modernization (15 Pages)
Proposal (171 Pages)

SERVICES AGREEMENT

Requisition Number

Purchase Order Number

25-04

Contract Number

This Services Agreement (the "Agreement") is made and entered into this 19th day of March, 2025 by and between Oxnard School District (hereinafter referred to as "District") and CDW-G, (hereinafter referred to as "Provider.")

PROVIDER.

CDW-G	818-254-1711
Provider	Telephone Number
230 N. Milwaukee Ave.	312-705-7648
Street Address	Fax Number
Vernon Hills, CA 60061	jjg@cdwg.com
City, State, Zip code	E-mail Address
Tax Identification or Social Security Number	License Number (if applicable)

A. District desires to engage Provider services as more particularly described on "Statement of Work" which is attached hereto and incorporated herein by this reference ("Services").

B. Provider has the necessary qualifications by reason of training, experience, preparation and organization, and is agreeable to performing and providing such Services, upon and subject to the terms and conditions as set forth below in this Agreement.

NOW THEREFORE, for valuable consideration, the receipt and sufficiency of which are hereby acknowledged, the parties hereto hereby agree as follows:

1. **CONDITIONS**. Provider will have no obligation to provide services until District returns a signed copy of this Agreement.

2. **NATURE OF RELATIONSHIP**. The parties agree the relationship created by this Agreement is that of independent contractor. In performing all of the Services, Provider shall be, and at all times is, acting and performing as an independent contractor with District, and not as a partner, coventurer, agent, or employee of District, and nothing contained herein shall be construed to be inconsistent with this relationship or status. Provider is not granted any right or authority to assume or to create any obligation or responsibility, express or implied, on behalf of or in the name of District or to bind the District in any manner. Except for any materials, procedures, or subject matter agreed upon between Provider and District, Provider shall have complete control over the manner and method of performing the Services.

Provider understands and agrees to independent contractor status. Provider understands and agrees that the filing and acceptance of this Agreement creates a rebuttable presumption and that the Provider, officers, agents, employees, or subcontractors of Provider are not entitled to coverage under the California Workers' Compensation Insurance laws, Unemployment Insurance, Health Insurance, Pension Plans, or any other benefits normally offered or conveyed to District employees. Provider will be responsible for payment of all Provider employee wages, payroll taxes, employee benefits, and any amounts due for federal and state income taxes and Social Security taxes. These taxes will not be withheld from payments under this agreement.

3. **NON-EXCLUSIVITY.**

   a. During the term of this agreement Provider may, independent of Provider's relationship with the District, without breaching this Agreement or any duty owed to the District, act in any capacity, and may render services for any other entity.

   b. During the term of this Agreement the District may, independent of its relationship with the Provider, without breaching this Agreement or any duty owed to the Provider contract with other individuals and entities to render the same or similar services to the District.

4. **SERVICES**. Provider shall provide District with the services, which are described on the "Statement of Work" (the "Work" or "Service") attached hereto and incorporated herein by this reference. The Statement of Work shall contain a timetable for completion of the Work or if the Work is an ongoing service, the Statement of Work shall set forth the mutually agreed schedule for providing such services. Provider shall use its best efforts to complete all phases of the Work according to such timetable. In the event that there is any delay in completion of the Work arising as a result of a problem within the control of District, Provider and District shall cooperate with each other to work around such delay. However, District shall not be responsible for any additional cost or expense to Provider as a result of such delay unless specifically agreed to in writing by the District. In addition to the specifications and/or requirements contained in the Statement of Work and any warranty given by Provider hereunder, the Statement of Work may set forth those performance criteria agreed between District and Provider whereby the District can evaluate whether Provider has satisfactorily completed the Work ("Performance Criteria").

   Provider, at Provider's sole cost and expense, shall furnish all tools, equipment, apparatus, facilities, transportation, labor, and material necessary to meet its obligations under this Agreement. No substitutions of materials or service from those specified in this section shall be made without the prior written consent of the District.

5. **TIME OF PERFORMANCE**. The term of this Agreement shall commence on July 1, 20 25, and terminate on December 30, 20 25. All work and services contracted for under the terms of this Agreement shall be undertaken and completed in such sequence as to assure their full completion in accordance with the terms and conditions set forth in this Agreement.

   [**Note:** California *Education Code* section 17596 limits continuing contracts; contracts for work or services, or for apparatus or equipment, not to exceed five years; for materials or supplies, not to exceed three years.]

6. **PAYMENT AND EXPENSES**. All payments due to Provider are set forth in the "Schedule of Fees" attached hereto and incorporated herein by this reference.

   Provider shall send District periodic statements indicating Provider's fees and costs incurred and their basis and any current balance owed. If no Provider's fees or costs are incurred for a particular time period,

or if they are minimal, the statement may be held by the Provider and combined with that for the following time period unless a statement is requested by the District.

All payments due Provider are set forth in "Schedule of Fees" and shall be paid by the District within 30 days of receipt of a proper, undisputed invoice from Provider, which invoice shall set forth in reasonable detail the services performed. The District reserves the right, in its sole and absolute discretion, to reject any invoice that is not submitted in compliance with the District's standards and procedures. In the event that any portion of an invoice submitted by a Provider to the District is disputed, the District shall only be required to pay the undisputed portion of such invoice at that time, and the parties shall meet to try to resolve any disputed portion of any invoice.

The rates set forth in "Schedule of Fees" are not set by law, but are negotiable between Provider and District.

7. **ASSIGNMENT AND SUBCONTRACTORS**. Provider shall not assign, sublet, or transfer this Agreement or any rights under or interest in this Agreement without the prior written consent of the District, which may be withheld by the District in its sole and absolute discretion for any reason. Nothing contained herein shall prevent Provider from employing independent associates, subcontractors, and sub-consultants as Provider may deem appropriate to assist in the performance of services herein, subject to the prior written approval of the District. Any attempted assignment, sublease, or transfer in violation of this Agreement shall be null and void, and of no force and affect. Any attempted assignment, sublet, or transfer in violation of this Agreement shall be grounds for the District, in its sole discretion, to terminate the Agreement

8. **TERMINATION OR AMENDMENT**. This Agreement may be terminated or amended in writing at any time by mutual written consent of all of the parties to this Agreement, and may be terminated by either party for any reason by giving the other party 60 days advance written notice. In the event of cancellation prior to completion of the specified services, all finished or unfinished projects, documents, data, studies, and reports prepared by the Provider under this agreement shall, at the option of the District, become District property. The Provider shall be entitled to receive just and equitable compensation for any satisfactory work completed on such items prior to termination of the Agreement.

   The parties to this Agreement shall be excused from performance thereunder during the time and to the extent they are prevented from obtaining, delivering, or performing due to act(s) of God. Satisfactory evidence thereof to the other party is required, provided that it is satisfactorily established that the non-performance is not due to the fault or neglect of the party not performing.

9. **NOTICE**. Any notices required or permitted to be given under this Agreement shall be deemed fulfilled by written notice, demand or request personally served on (with proof of service endorsed thereon, or mailed to, or hereinafter provided) the party entitled thereto or on its successors and assigns, and may be given by:

   a. Personal delivery;

   b. Overnight commercial courier;

   c. Certified or registered prepaid U.S. mail, return receipt requested; or

   d. Electronic mail or electronic facsimile transmission; provided that if given electronically, an additional copy shall also be delivered by a, b, or c, above.

If mailed, such notice, demand, or request shall be mailed certified or registered mail, return receipt requested, and deposited in the United States mail addressed to such party at its address set forth below or to such address as either party hereto shall direct by like written notice and shall be deemed to have been made on the third (3rd) day following posting; or if sent by a nationally recognized overnight express carrier, prepaid, such notice shall be deemed to have been made on the next business day following deposit with such carrier. For the purposes herein, notices shall be sent to the District and the Provider as follows:

Oxnard School District	CDW-G
District	Provider
Attn: David Hubbard	Attn: Jon Gentile
1051 South A Street	230 N. Milwaukee Ave.
Street	Street
Oxnard, CA 93030	Vernon Hills, CA 60061
City, State, Zip Code	City, State, Zip Code

10. **WARRANTY**. Provider hereby warrants to District that the Work shall be performed in a professional and workmanlike manner consistent with the highest industry standards. For a period of one (1) year following completion of the Work, Provider shall correct or make arrangements to correct any breach of the warranty for the Work within ten (10) business days of notice from District of same.

11. **ADDITIONAL WORK**. If changes in the work seem merited by the Provider or the District, and informal consultations with the other party indicate that a change is warranted, it shall be processed by the District in the following manner:

    a. A letter outlining the changes shall be forwarded to the District by the Provider with a statement of estimated changes in fee and/or time schedule.

    b. A written amendment to this Agreement shall be prepared by the District and executed by all of the parties before any performance of such services or the District shall not be required to pay for the increased cost incurred for the changes in the scope of work.

    Any such amendment to the Agreement shall not render ineffective or invalidate unaffected portions of this Agreement.

12. **COMPLIANCE WITH LAWS**. Provider hereby agrees that Provider, officers, agents, employees, and subcontractors of Provider shall obey all local, state, and federal laws and regulations in the performance of this Agreement, including, but not limited to minimum wages laws and/or prohibitions against discrimination. Without limiting the generality of the foregoing, Provider shall complete the conflict of interest certification on **Exhibit C**.

    Provider, officers, agents, employees and/or subcontractors of Provider shall secure and maintain in force for the full term of this Agreement, at Provider's sole cost and expense, such licenses and permits as are required by law, in connection with the furnishing of all the Services, materials, or supplies necessary for completion of the Services described.

13. **NON-DISCRIMINATION AND EQUAL EMPLOYMENT OPPORTUNITY**

Provider represents and agrees that it does not and shall not discriminate against any employee or applicant for employment, company, individual or group of individuals, because of ancestry, age, color, disability (physical and mental, including HIV and AIDS), genetic information, gender identity, gender expression, marital status, medical condition, military or veteran status, national origin, race, religion, sex/gender, and sexual orientation.

14. **INDEMNIFICATION**. To the fullest extent permitted by law, Provider agrees to defend, indemnify, and hold harmless District, its governing board, officers, agents, employees, successors, assigns, independent contractors and/or volunteers from and against any and all claims, demands, monetary or other losses, loss of use, damages and expenses,, including but not limited to, legal fees and costs, or other obligations or claims arising out of any liability or damage to person or property resulting from bodily injury, illness, communicable disease, virus, pandemic, or any other loss, sustained or claimed to have been sustained arising out of activities of the Provider or those of any of its officers, agents, employees, participants, vendors, customers or subcontractors of Provider, whether such act or omission is authorized by this Agreement or not. Provider also agrees to pay for any and all damage to the real and personal property of the District, or loss or theft of such property, or damage to the Property done or caused by such persons. District assumes no responsibility whatsoever for any property placed on District premises by Provider, Provider's agents, employees, participants, vendors, customers or subcontractors. Provider further hereby waives any and all rights of subrogation that it may have against the District. The provisions of this Indemnification do not apply to any damage or losses caused solely by the negligence of the District or any of its governing board, officers, agents, employees and/or volunteers.

15. **INSURANCE**. Provider, at its own cost and expense, shall procure and maintain during the term of this Agreement, policies of insurance for the following types of coverage:

a. Commercial General Liability Insurance. Provider shall procure and maintain, during the term of this Agreement, the following General Liability Insurance coverage: [delete those not applicable]

	Each Occurrence	Aggregate
Individual, Sole Proprietorship, Partnership, Corporation, or Other	$ 1,000,000.00	$ 2,000,000.00

Commercial General Liability insurance shall include products/completed operations, property damage, and personal and advertising injury coverage.

Any and all subcontractors hired by Provider in connection with the Services described in this Agreement shall maintain such insurance unless the Provider's insurance covers the subcontractor and its employees.

b. Automobile Liability. Provider shall procure and maintain, during the full term of this Agreement, Automobile Liability Insurance, including non-owned and hired automobiles, as applicable with the following coverage limits:

Personal vehicles: $ 500,000.00 combined single limit or

$100,000.00 per person / $300,000.00 per accident

c. Workers' Compensation Insurance. Provider shall procure and maintain, during the term of this Agreement, Workers' Compensation Insurance, as required by California law, on all of its employees engaged in work related to the performance of this Agreement. Provider shall procure and maintain Employers' Liability insurance coverage of $1,000,000.

In the case of any such work which is subcontracted, Provider shall require all subcontractors to provide Workers' Compensation Insurance and Employers' Liability insurance for all of the subcontractor's employees to be engaged in such work unless such employees are covered by the protection afforded by the Provider's Workers' Compensation Insurance.

Absent proof of Workers' Compensation Insurance, Provider will submit a statement requesting a waiver from this requirement and indicating the reason Workers' Compensation Insurance is not required.

d. Errors and Omissions Insurance. Provider shall procure and maintain, during the term of this Agreement, Professional Liability/Errors and Omissions Insurance in an amount of the following:

Accountants, attorneys, education consultants, nurses, therapists $1,000,000.00

e. Other Coverage as Dictated by the District. Provider shall procure and maintain, during the term of this Agreement, the following other Insurance coverage:

	Each Occurrence	Aggregate
☐ Abuse and Molestation	$ 2,000,000.00	$4,000,000.00
☐ Pollution Liability	$ 1,000,000.00	$ 2,000,000.00
☐ Cyber Liability	$ 5,000,000.00	
☐ Other: _____	$ _____	$ _____

f. If the Provider or Provider's subcontractor(s) maintains broader coverage and/or higher limits than the minimums shown above, the District requires and shall be entitled to the broader coverage and/or higher limits maintained by the Provider. Any available insurance proceeds in excess of the specified minimum limits of insurance and coverage shall be available to the District.

g. Provider's and any and all subcontractors' insurance is primary and will not seek contribution from any other insurance available to the district.

h. Certificates of Insurance. Provider and any and all subcontractors working for Provider shall provide certificates of insurance to the District as evidence of the insurance coverage required herein, not less than Fifteen (15) days prior to commencing work for the District, and at any other time upon the request of the District. Certificates of insurance will be deemed invalid if proper endorsements are not attached. Certificates of such insurance shall be filed with the District on or before commencement of the services under this Agreement.

i. Endorsements. Provider's and any and all Provider subcontractor's Commercial General Liability insurance; Commercial Automobile Insurance; Liability Excess, Umbrella and/or Reinsurance; and Abuse and Molestation coverage shall name the District, its governing board, officers, agents, employees, and/or volunteers as additional insureds. All endorsements specifying additional insureds for any of the Insurance Policies shall be as indicated below or an equivalent endorsement reasonably acceptable to the District.

1) General Liability

❑ Facilities Rental or Lease: CG 20 11 10 01;

■ Most Other services: CG 20 26 10 01.

2) Primary, Non-Contributory

■ CG 20 01 01 13

3) Waiver of Subrogation

■ CG 24 04 05 09

4) Commercial Automobile Liability

■ CA 20 48 10 13

j. Provider's and any and all Provider subcontractor's Commercial General Liability insurance shall provide a list of endorsements and exclusions.

k. Deductibles. Any deductible(s) or self-insured retention(s) applicable to the insurance and/or coverage required by the foregoing provisions of this agreement must be declared to and approved by the District. Provider shall be responsible to pay that deductible or self-insured retention and the District shall not be responsible to pay these costs. In the event that Provider's deductibles or self-insured retentions collectively total more than $50,000.00, District reserves the right to request proof of Provider's financial solvency in relation to remittance thereof or require Provider to post a bond guaranteeing payment of the deductible, or both.

l. Acceptability of Insurers. Insurance is to be placed with insurers with a current A.M. Best's rating of no less than A: VII, unless otherwise acceptable to the District.

m. Insurance written on a "claims made" basis is to be renewed by the Provider and all Provider subcontractors for a period of five (5) years following termination of this Agreement. Such insurance

must have the same coverage and limits as the policy that was in effect during the term of this agreement, and will cover the provider for all claims made.

n. Failure to Procure Insurance**.** Failure on the part of Provider, or any of its subcontractors, to procure or maintain required insurance shall constitute a material breach of contract under which the District may immediately terminate this Agreement.

16. **SAFETY AND SECURITY**. Provider shall be responsible for ascertaining from the District all of the rules and regulations pertaining to safety, security, and driving on school grounds, particularly when children are present.

Without limiting the generality of the foregoing, Provider shall comply with any applicable fingerprinting/ criminal background investigation and tuberculosis clearance requirements of the California Education Code and shall provide the certifications on **Exhibit C** prior to performance of any Services.

a. On Site Services; Student Data Access. If services require Provider to access any District facility, transport or interact in any manner (including through an app or other electronic means) with District students, or access student data, Provider and any and all subcontractors are required to comply with Education Code section 45125.1, Fingerprint certification requirements. Provider must provide proof that fingerprint certification requirements have been fulfilled prior to commencing any services for the District under this Agreement.

Provider shall certify in writing to the school district that neither the Provider nor any of its employees, agents, representatives or subcontractors who are required to submit or have their fingerprints submitted to the Department of Justice and who may interact with any District student outside the direct supervision and control of a District employee or that student's parent or legal guardian have been convicted of a felony.

b. Other Services. If Provider will not provide any services on site or have access to any student data or interact with any District student in connection with the Services, then, Provider and its subcontractors are not required to comply with Education Code section 45125.1 background check requirements. However, Provider must still complete **Exhibit C** to specify that these requirements are not applicable.

c. Tuberculosis Risk Assessment requirements (Education Code section 49406). Providers who may have more than limited contact with District students (including any Providers who provide in person tutoring or who provide any transportation services to students) are required to cause to be on file with the District a certificate from an examining physician showing that Provider, employees and/or sub providers of Provider have been examined and found free from active tuberculosis.

17. **GOVERNING LAW AND VENUES**. Provider hereby acknowledges and agrees that District is a public entity, which is subject to certain requirements and limitations. This Agreement and the obligations of District hereunder are subject to all applicable federal, state and local laws, rules, and regulations, as currently written or as they may be amended from time to time.

This Agreement shall be interpreted in accordance with the laws of the State of California. If any action is brought to interpret or enforce any term of this Agreement, the action shall be brought in state or federal court situated in the County of Ventura, State of California. Provider hereby waives and expressly agrees not to assert, in any way, any claim or allegation that it is not personally subject to the jurisdiction of the courts named above. Provider further agree to waive any claim or allegation that the suit, action, or proceeding is either brought in an inconvenient forum or that the related venue is improper."

18. **DISPUTE RESOLUTION.**

a. The parties agree that, in the event of any dispute under the agreement in which the amount sought is $5,000.00 or less, any litigation to resolve the dispute shall be brought in the Ventura County Small Claims Court.

b. If the amount in dispute exceeds $5,000.00, the parties agree that they will first submit the matter to a mutually agreed upon mediator. Notwithstanding section 19, Attorneys Fees, the cost of the mediator shall be borne equally by the parties.

c. If the mediator is unable to resolve the dispute, then the parties shall submit the matter to binding arbitration in Ventura County or other mutually agreed location pursuant to the rules of the American Arbitration Association (AAA), as amended or as augmented in this Agreement (the "Rules"). The parties acknowledge that one of the purposes of utilizing arbitration is to avoid lengthy and expensive discovery and allow for prompt resolution of the dispute.

Arbitration shall be initiated as provided by the Rules, although the written notice to the other party initiating arbitration shall also include a description of the claim(s) asserted and the facts upon which the claim(s) are based. Arbitration shall be final and binding upon the parties and shall be the exclusive remedy for all claims subject hereto, including any award of attorneys' fees and costs. Either party may bring an action in court to compel arbitration under this Agreement and to enforce an arbitration award.

All disputes shall be decided by a single arbitrator. The arbitrator shall be selected by mutual agreement of the parties within 30 days of the effective date of the notice initiating the arbitration. If the parties cannot agree on an arbitrator, then the complaining party shall notify the AAA and request selection of an arbitrator in accordance with the Rules. The arbitrator shall have only such authority to award equitable relief, damages, costs, and fees as a court would have for the particular claim(s) asserted. In no event shall the arbitrator award punitive damages of any kind.

The arbitrator shall have the power to limit or deny a request for documents or a deposition if the arbitrator determines that the request exceeds those matters, which are directly relevant to the claims in controversy. The document demand and response shall conform to Code of Civil Procedure section 2031. The deposition notice shall conform to Code of Civil Procedure section 2025. The parties may make a motion for protective order or motion to compel before the arbitrator with regard to the discovery, as provided in Code of Civil Procedure sections 2025 and 2031.

19. **ATTORNEYS FEES.** In the event of any action or proceeding to interpret or enforce the terms of this Agreement, the prevailing party, as determined by the court or arbitrator, shall be entitled to recover its reasonable attorney fees and costs incurred in connection with such actions or proceeding

20. **DOCUMENT RETENTION.** After Provider's services to District conclude, Provider shall, upon the District's request, deliver all documents for all matter in which Provider has provided services to the District, along with any property of the District in Provider's possession and/or control. If the District does not request District's document(s) for a particular service, Provider will retain document(s) for a period of two (2) years after the service has ended. If District does not request delivery of the document(s) for the service before the end of the two (2) year period, Provider will have no further obligation to retain the document(s) and may, at Provider's discretion, destroy it without further notice to the District. At any point during the two (2) year period, District may request delivery of the document(s).

Exceptions: Attorney work-product and medical records shall not be destroyed by provider without the prior written consent of the District.

21. **NATURE OF AGREEMENT.** This Agreement constitutes a binding expression of the understanding of the parties with respect to the services to be provided hereunder and is the sole contract between the parties with respect to the subject matter thereof. There are no collateral understandings or representations or agreements other than those contained herein. This Agreement represents the entire agreement between the parties hereto with respect to the subject matter hereof and supersedes any and all other agreements and communications however characterized, written or oral, between or on behalf of the parties hereto with respect to the subject matter hereof. This Agreement may only be modified by a written instrument signed by authorized representatives of each of the parties hereto; provided that the District may not be bound by any term or condition incorporated by reference (including references to any link, website or electronic document) into any document prepared by or provided to District by Provider, including any license, purchase order or other instrument.

    For the avoidance of any doubt, Provider is hereby informed that any and all terms or conditions of use of any web-based service or application must be presented in PDF format to the Board of Trustees and may not be unilaterally altered by Provider during the Term of this Agreement.

    THE BODY OF THIS AGREEMENT MAY NOT BE EDITED OR ALTERED BY PROVIDER.

22. **BINDING EFFECT**. This Agreement shall inure to the benefit and shall be binding upon all of the parties to this Agreement, and their respective successors in interest or assigns.

23. **WAIVER.** No claim or right arising out of a breach of this Agreement can be discharged in whole or in part by a waiver or renunciation of the claim or right unless such waiver is in writing.

24. **SEVERABILITY.** It is intended that each paragraph of this Agreement shall be treated as separate and divisible, and in the event that any paragraphs are deemed unenforceable, the remainder shall continue to be in full force and effect so long as the primary purpose of this Agreement is unaffected.

25. **PARAGRAPH HEADINGS.** The headings of paragraphs hereof are inserted only for the purpose of convenient reference. Such headings shall not be deemed to govern, limit, modify or in any other manner affect the scope, meaning or intent of the provisions of this Agreement or any part or portion thereof, nor shall they otherwise be given any legal effect whatsoever.

26. **AUTHORITY.** Provider represents and warrants that Provider has all requisite power and authority to conduct its business and to execute, deliver, and perform this Agreement. Each party warrants that the individuals who have signed this Agreement have the legal power, right, and authority to make this Agreement and to bind each respective party.

27. **COUNTERPART EXECUTION: ELECTRONIC DELIVERY.** This Agreement may be executed in any number of counterparts which, when taken together, shall constitute one and the same instrument. Executed counterparts of this Agreement may be delivered by PDF email or electronic facsimile transmission, and shall have the same legal effect as an "ink-signed" original.

IN WITNESS WHEREOF, the parties have executed this agreement as of the date first written above. By signing below, Provider certifies that it has not altered any provision of the body of this Agreement.

	District	Provider
	OXNARD SCHOOL DISTRICT	
By:	Signature	Signature
	Melissa Reyes	
	Name	Name
	Director, Purchasing	
	Title	Title

25-04

Contract Number

STATEMENT OF WORK

DESCRIPTION OF WORK:

SEE ATTACHED BID PROPOSAL

WORK SCHEDULE:

*AS REQUIRED PER ATTACHED PROPOSAL

SCHEDULE OF FEES

FEES:

Compensation for Services	$ 1,405,514.26
Actual and Necessary Travel Expenses	$ 0.00
Other Expenses	$ 0.00
Total Amount not to Exceed	$ 1,405,514.26
Deposit	$ _____
Balance Due after Completion of Services	$ _____

Proper invoicing is required. Receipts for expenses are required. Canceled checks are not accepted as receipts.

PAYMENT SCHEDULE:

Invoices to be submitted monthly to accountspayable@oxnardsd.org and msandoval@oxnardsd.org. Net 30 terms.

ADDITIONAL COSTS OF EXPENSES:

N/A

EXHIBIT C
REQUIRED CERTIFICATIONS

Services Agreement Dated: March 19, **20** 25

Provider: CDW-G

I. Fingerprinting/Criminal Background Certification (Education Code Section 45125.1)

Provider and its subconsultant's and their employees, agents and representatives (each, a "Provider Party") are required to submit fingerprints to the California Department of Justice (CDOJ) if they may interact with any student outside of the immediate supervision and control of the student's parent or guardian or a District employee in connection with the Services. Provider certifies to the Superintendent and the Board of Trustees of the District that it is, or prior to providing any Service under this Agreement will be, in compliance with the requirements of Education Code section 45125.1, as follows (Provider to check one box):

☐ Provider will ensure that any Provider Party who: (a) might access a District facility and/or interact with a District pupil in any manner (including through an educational app or cloud-based system) outside of the immediate supervision and control of the student's parent or guardian or a District employee OR (b) who was identified by District as a person requiring clearance pursuant to §45125.1(c) has, prior to providing any Service, submitted fingerprints to the CDOJ and that Provider has received from the CDOJ a valid criminal records summary as described in §44237 for said Provider Party. Provider will not allow any person who has been convicted of a violent felony listed in Penal Code section 667.5(c) or a serious felony listed in Penal Code §1192(c) to provide any Service. Provider will not allow any such Provider Party to perform any Service until Provider ascertains that the CDOJ has cleared that person and a record compliant with Education Code § 45125.1 is on file with Provider.

☐ The fingerprinting requirements **do not apply** because the Services are being provided on an emergency or exceptional situation as contemplated under section § 45125.1(b).

☒ The fingerprinting requirements **do not apply** because Provider Parties will have no opportunity to interact with a District students in any manner because: (i) no school-site Services or Services concerning student records will be provided; and/or (ii) the Services will be provided at a school site while students are not present (vacant, under construction etc.).

By signing below I certify, under penalty of perjury, that: (i) I am an authorized representative of Provider qualified to provide this Certification; (ii) the information above concerning compliance with Education Code Section 45125.1 is accurate and complete as of the date hereof; and (iii) during the term, I will immediately inform District if any CDOJ report is changed or updated with respect to Provider Party. Documents provided by the CDOJ will be retained by Provider and available for inspection by District or its representative(s) upon request.

_____
Name/ Title of Authorized Representative

_____
Signature/ Date

II. Tuberculosis Risk Assessments Certification (Education Code Section 49406). With respect to Education Code § 49406, I do hereby ***certify, represent and warrant*** to District's Superintendent and Board of Trustees as follows (Provider to check the applicable statement below):

☒ Provider Parties, any subconsultants, and any respective employees, representatives or agents will, in connection with the provision of Services under this Agreement, have ***only limited or no contact*** with any District student(s).

☐ Provider Parties may, in connection with the provision of Services, have more than limited contact with District students. Therefore, the Provider has for each such Provider Party: (A) obtained and filed proof on completion of the required TB risk assessment(s) and (B) if deemed necessary by a physician/surgeon, obtained and filed copies of their TB examination(s), all in compliance with the provisions of Education Code § 49406. Provider will maintain a current list of all such Provider Parties and will provide a copy to District upon request.

By signing below I certify, under penalty of perjury, that I am an authorized representative of Provider qualified to provide this Certification, that the information above concerning compliance with Education Code § 49406 is accurate and complete as of the date hereof, and that, during the Term, I and all Provider Parties will satisfy all applicable tuberculosis clearance requirements before having more than limited contact with District students.

_____
Name/ Title of Authorized Representative

_____
Signature/ Date

III. Conflict of Interest Certification

The Provider represents and warrants that he/she/it presently has no interest, and shall not acquire any interest, direct or indirect, financial or otherwise, which conflicts in any manner with District or with the performance of the Services. Provider understands that District will not engage any person having such conflict of interest to perform the Services. Provider agrees that if any facts come to its attention which raises any questions as to the applicability of conflict of interest laws, it shall immediately inform the District's designated representative and provide all information needed for resolution of this question.

Provider Initials: _____

Oxnard School District

FY25 E-Rate USETPA Mini-Bid Request
Infrastructure Modernization Project
3/3/2025
Funding Year 2025-2026
Digital Copy

CDW Government LLC
230 N. Milwaukee Ave.
Vernon Hills, IL 60061

One CDW Way
230 N. Milwaukee Ave.
Vernon Hills, IL 60061
Toll-free: 800.800.4239
Web: cdwg.com

3/3/2025

Oxnard School District
1051 South A Street
Oxnard, CA, 93030

RE: CDW Government's Response to Oxnard School District's OSD-Modernization

Dear David Hubbard,

Oxnard School District is seeking to identify a reliable and experienced IT partner capable of managing your E-Rate initiative. Our response demonstrates CDW Government's unique ability to contribute to the overall success of this initiative.

CDW Government LLC (CDW•G) is a global systems integrator, impacting 75 million students across 34 countries. With over 30 years of experience, we are a trusted partner to more than 15,000 school districts nationwide. Benefits of partnering with us include:

- **History of Success**: CDW•G is a leading E-Rate provider with extensive experience and expertise in supporting K-12 customers since 1998. To date we have managed more than 19,550 E-Rate projects for schools and libraries nationwide.
- **Strong Partnerships**: We maintain strong relationships with more than 1,000 vendor partners to provide the best products, services, and support to our customers, including leading networking partners well-versed in Internal Connections (IC).
- **In-House Expertise:** We can support you on your E-Rate journey from beginning to end with our dedicated in-house resources and technical experts. Our E-Rate teams ensure contract compliance and expert handling of specialized E-Rate invoicing, as well as offer expert advice. Additionally, our presales IT specialists, can provide you with invaluable, ongoing consult.
- **Dedicated Account Team**: With CDW•G, you are supported by a highly trained and experienced account team, including a dedicated account manager, who serves as your primary point of contact, and is responsible for coordinating all your needs.

Please contact your Client Executive, **Jon Gentile**, at **(866) 467-9989 or jjg@cdwg.com** with any questions. We thank you for the opportunity to participate in the 470 response process and are confident you will find our response advantageous from both a strategic and budgetary standpoint.

Sincerely,

Justin Schwier

Justin Schwier
Manager, Proposals
CDW Government LLC

Bid Documents and Forms

Oxnard School District

E-Rate Mini-Bid Request

Infrastructure Modernization Project

1. Objective

The Oxnard School District seeks competitive mini-bids from USETPA-approved vendors for network infrastructure modernization at designated sites.

This E-Rate-eligible project includes:

- **LAN Fiber Replacement** – Upgrading fiber between IDF and MDF locations.
- **UPS Replacement** – Installing UPS units to ensure continuous power.
- **IDF/MDF Cabinet Replacement** – Replacing outdated cabinets for improved organization and scalability.

All work must comply with E-Rate procurement rules, California Public Contract Codes, and prevailing wage laws.

2. Scope of Work

The selected vendor will provide the following services, organized for clarity and efficiency:

1. Fiber Replacement

- Replace LAN fiber connections between IDF and MDF at specific sites, as detailed in the accompanying Technical Datasheet.
- All fiber runs from IDF to MDF must be direct connections. If direct connections are not feasible, the district will determine whether to maintain existing routing or establish alternative solutions.
- Leave adequate slack at termination points, enclosures, and maintenance locations per industry best practices to allow for future repairs, re-terminations, and adjustments.
- Ensure all fiber installations adhere to manufacturer bend radius requirements to prevent signal loss and cable damage.
- Install conduit as needed to protect fiber runs, ensure proper routing, and comply with industry standards and district requirements.
- Provide pricing for 3-pair (6-strand) and 6-pair (12-strand) single-mode fiber options with LC connectors.
- Test, document, and certify all fiber connections to ensure compliance with standards, verifying that all fibers are clean and that unused fibers are properly protected
- Deliver certification reports upon completion.
- Ensure proper fiber labeling in each IDF and MDF using durable labels that are compliant with district practices.

- Provide single-mode fiber patch cords, Ethernet patch cables, and equipment to ensure proper cable management, ventilation, and functionality.
- Supply 10GB SFP modules compatible with Extreme Switches model X460G2-48p-10G4 and site core switch X465-24XE.

2. UPS Replacement

- Provide and install UPS units for MDF and IDF locations, with specifications tailored to site-specific power consumption data provided in the attached Technical Datasheet.
- Ensure a minimum 30-minute runtime per IDF and MDF locations. UPS pricing must include any extended battery packs or modules required to meet this runtime.
- Offer pricing for both Lithium-Ion and Lead-Acid options.
- Include network management capabilities for remote monitoring and alerts.
- Ensure compatibility with cabinets of 30-inch depth.
- Provide pricing for Power Distribution Units (PDUs) as required, based on locations specified in the Technical Datasheet.

3. Cabinet Replacement

- Replace cabinets at designated MDF and IDF locations, ensuring compliance with the following criteria:
    - **Color:** Black.
    - **Doors:** Glass front door with easy access; back access preferred to be front-accessible.
    - **Depth:** Minimum 30 inches of usable or workable depth to accommodate equipment adequately. The district reserves the right to select the appropriate type for vertical cabinets or other configurations based on site-specific needs and equipment requirements.
    - **Height:** Customized per location, as specified in the Technical Datasheet.
    - **Cable management features (horizontal and vertical).**
    - **Adequate ventilation and weight capacity** for current and future equipment.
- Include contingency plans and pricing for potential electrical outlet relocations to accommodate new cabinet replacements.
- Ensure that electrical connections in the Data Center are adequately integrated with the district's power generator, including any necessary electrical work.
- Ensure proper backing is installed per industry standards to securely support cabinets, maintain structural integrity, and accommodate the weight of installed equipment.
- The district reserves the right to adjust cabinet locations to meet site-specific needs.

4. Installation & Cleanup

- Deliver, install, and configure all equipment.
- Remove and properly dispose of outdated equipment in compliance with district policies.
- Provide as-built documentation for each school detailing all work performed, including installed equipment, configurations, and locations.

- Label all installed equipment with district-provided asset tags and submit a detailed inventory report that includes serial numbers, asset tag numbers, and installation locations.
- Perform and submit fiber optic certification test results, including Optical Time-Domain Reflectometer (OTDR) and power meter testing, verifying continuity, loss, distance, and performance per industry standards.
- Ensure fiber distances are documented for each run and included in the final as-built documentation.
- Submit final test results and verification of system functionality for all installed equipment.
- Provide warranty and support documentation for all installed equipment.
- Deliver training materials and user guides for district staff, if applicable.
- Ensure all work is coordinated to minimize downtime and avoid interruptions during school hours and is completed before the specified project completion date.

3. Proposal Submission Requirements

Vendor Qualifications

Vendors must comply with:

- California Public Contract Code (§20111 & §20118)
- California Prevailing Wage Laws (Labor Code §1771)
- DIR Public Works Contractor Registration
- E-Rate Compliance (SPIN, FCC Green Light Status, LCP Adherence)
- C7 (Low Voltage) and/or C10 (Electrical) License (or subcontract with a C10 contractor)
- General Liability & Workers' Compensation Insurance
- Three references from K-12 projects in California

Checklist for Submission

Vendors must submit:

- Itemized pricing per school site, with materials and labor separated:
    - Lead-Acid vs. Lithium-Ion UPS pricing
    - 3-Pair vs. 6-Pair Fiber pricing
    - Material & Labor costs as separate line items
- Warranty and support details.
- Fiber and UPS specifications & manufacturer datasheets.
- Projected installation timeline (aligned with E-Rate funding).
- Signed E-Rate Supplemental Terms & Conditions Agreement.
- Non-Collusion Affidavit & Worker’s Compensation Certificate.

Proposals Due: March 3, 2025, at 4:00 PM PST
Submit via Email Only to Michelle Sandoval (msandoval@oxnardsd.org)

Subject Line: "E-Rate Mini-Bid #24-03 Submission"

4. Technical Specifications

Uninterruptible Power Supply (UPS)

Approved Models (or equivalent):

- **Lithium-Ion Models:** GXT5LI-1000LVRT2UXLN, GXT5LI-1500LVRT2UXLN, GXT5LI-2000LVRT2UXLN
- **Lead-Acid Models:** GXT5-1000LVRT2UXLN, GXT5-1500LVRT2UXLN, GXT5-2000LVRT2UXLN
- 30-minute minimum runtime, rack-mounted
- Remote monitoring capabilities

Fiber Optic Connections

- Single-mode fiber, LC connectors
- Pricing for 3-pair and 6-pair configurations
- Outdoor-rated OSP cable, where applicable

Cabinets

- 30-inch depth, black, glass front doors
- Fully front-accessible swing-frame designs preferred
- Adequate ventilation, cable management

5. Timeline

- **Mini-Bid Release Date:** February 13, 2025
- **Optional Site Walk:** February 19, 2025, at 10 AM PST Location: Oxnard School District – Vendors interested in participating must contact Michelle Sandoval at msandoval@oxnardsd.org to confirm attendance.
- **Vendor Questions Due:** February 21, 2025, at 4:00 PM PST
- **District Response to Vendor Questions:** February 24, 2025 – All submitted questions will be compiled, and responses will be provided to all vendors.
- **Proposal Submission Deadline:** March 3, 2025, at 4:00 PM PST
- **Vendor Selection Notification:** March 5, 2025
- **Project Start Date:** July 1, 2025
- **Project Completion Date:** August 8, 2025

The district reserves the right to make the final decision on design changes, revisions, and any modifications necessary to meet site-specific needs and ensure compliance with project requirements. All work must be completed with minimal to no downtime or disruption during school hours, especially in classrooms with instructional curriculum, including potential summer

school sessions at some locations. Datacenter work is critical to district operations and must be planned accordingly. While some downtime is unavoidable during equipment cutovers, all efforts must be made to schedule work after hours or on weekends to allow sufficient time for transitioning equipment and restoring services efficiently. Work may need to be completed after hours or on weekends as necessary to accommodate instructional schedules.

6. Evaluation Criteria

Proposals will be evaluated based on:

- **Cost (30%)** – Best overall value while maintaining quality.
- **Ability to Provide a Consolidated Quote (20%)** – Vendors who can streamline all components into a single proposal to simplify procurement.
- **Completeness of Quote (20%)** – Ensuring all required details, pricing breakdowns, and necessary documents are included.
- **Experience with Oxnard School District (20%)** – Vendors will be scored based on their prior experience successfully completing projects with the Oxnard School District.
- **Projected Timeline Adherence (10%)** – Vendor's ability to meet the project schedule while minimizing disruptions to district operations.

7. E-Rate Compliance Requirements

Vendors must comply with all E-Rate regulations, including:

- SPIN & FCC Registration
- Green Light Status with the FCC
- Lowest Corresponding Price (LCP) Compliance
- Prevailing Wage & Certified Payroll Reporting (California Labor Code §1771)
- No invoicing before July 1, 2025
- Retention of records for 10 years

Failure to meet these requirements may result in disqualification.

8. Contact Information

For questions, contact:

Michelle Sandoval – Administrative Assistant
Email: msandoval@oxnardsd.org

Subject: Fw: Mini Bid Q & A
Date: Monday, February 24, 2025 at 8:40:44 AM Pacific Standard Time
From: Landon Scism
To: Jon Gentile, Mike Duck (Sr) (mduck@convergednetworks.com), Angela Gadient
CC: Jonathan French, David Rudnick, Krista Lora

EXTERNAL EMAIL

Oxnard School District has the Q&A for their upcoming wiring/ fiber optic replacement and UPS and Cabinet Replacements. *(Extra points in the evaluation are being awarded to vendors that can complete the entire project.)

Thank you in advance for your time. If I don't answer the phone, please leave a message and phone number and I will return the call ASAP. Or leave me a text message at 910-377-1234 for faster call backs.

Landon Scism, Senior Administrator, CGCIO
US Educational Technology Purchasing Alliance
landon@usetpa.org
(910) 377-1234 (text only)

4438 Glenscape Ln SE
Southport, NC 28461
(919) 391-9558 (office direct)

3100 Dick Pond Rd, Ste E
Myrtle Beach, SC 29588
(843) 968-1005 (alternate office, Voice Mail only)

From: Alvarado, Jorge <jalvarado@oxnardsd.org>
Sent: Friday, February 21, 2025 7:50 PM
To: Landon Scism <Landon@usetpa.org>
Cc: Leon, Ricardo <rleon@oxnardsd.org>; Castellon Topete, Oscar <otopete@oxnardsd.org>; Sandoval, Michelle <msandoval@oxnardsd.org>
Subject: Mini Bid Q & A

Hi Landon,

Here are the answers to the questions asked and due today. Please share the answers with all prospective bidders on Monday to meet our timeline. Please cc'd Michelle Sandoval (msandoval@oxnardsd.org) when sending answers to all bidders.

1. **The minibid references a non-collusion affidavit that is to be turned in with proposals—can OSD please provide a copy of the reference non-collusion affidavit?**

The affidavit can be found in Non-Collusion Affidavit

2. **Will OSD be supplying a location to receive/store/stage all of the new cabinets and UPS units, or is the receiving/storage/staging of the new cabinets and UPS units the responsibility of the bidder?**

The bidder awarded the project is responsible for receiving, storing, and staging the new cabinets and UPS units.

3. **Will the bidder awarded the project be bringing all of the old UPS gear removed as part of the scope back to the District Office to stage for OSD's eWaste provider?**

The bidder awarded the project is responsible for removing all old UPS gear and bringing it back to the District Office to stage for OSD's eWaste provider. The bidder must also provide a list of serial numbers and asset tags for all removed UPS equipment.

4. **Will OSD be supplying trash bins at the District Office to dispose of all of the old cabinets, etc. as part of the scope? Or is this the responsibility of the bidder awarded this project? And if it is the responsibility of the bidder, will OSD provide a space at the District Office to drop a trash bin for the duration of the project?**

The Oxnard School District will not provide trash bins to dispose of old equipment. However, the District will designate a location at the District Office where the awarded bidder can place a trash bin to dispose of old equipment during the project.

5. **Is it within the scope of this project to provide and replace all of the existing copper CAT6 patch cables and fiber optic cables with new at each IDF and MDF location?**

Yes. The scope includes providing and replacing all existing copper CAT6 patch cables and fiber optic cables at each IDF and MDF location, except at Rose Avenue School and the data center. At the data center, only the fiber optic cables will be replaced; copper CAT6 patch cables are not included in the scope for this location.

6. **At each location where it is within the scope to provide and install a new wall-mounted cabinet, will bidder be responsible additionally to provide and install a ¾" fire-rated backboard (pre-painted white)?**

Yes. The awarded bidder will be responsible for providing and installing a ¾" fire-rated backboard (pre-painted white) at each location where a new wall-mounted cabinet is installed.

Thank you,

Jorge Alvarado
ITS-Oxnard School District
P | (805) 385-1501 - Ext: 2100
E | jalvarado@oxnardsd.org

References

Conejo Valley Unified School District

750 Mitchell Road, Newbury Park, CA 91320

Henry Ortiz, Director of Technology, 805-498-4557 x7561, hortiz@conejousd.org

FY22/FY23 E-Rate Juniper Wireless and Agg/Edge Switching Upgrade

Covina-Valley Unified School District

519 East Badillo Street, Covina, CA 91723

Matt Chiappone, Director of 21st Century Learning and TSS, 626-974-7000 x 800028, mchiappone@c-vusd.org

FY24 E-Rate Juniper Wireless Upgrade

Montebello Unified School District

123 South Montebello Boulevard, Montebello, CA 90640

Jonathan Chalberg, Senior Network Engineer, 323-887-7900 x2409, chalberg_jonathan@montebello.k12.ca.us

FY23 E-Rate Juniper Firewall and Core/Agg Switching Upgrade

"NONCOLLUSION AFFIDAVIT"

State of California]

County of Ventura] ss.

]

Justin Schwier, being first duly
sworn, deposes (Name)

and says that he or she is
Manager-Proposals
(Title)

of
CDW Government LLC
(Name of Company)

the party marking the foregoing bid that the bid is not made in the interest of, or on behalf of, any undisclosed person, partnership, company, association, organization, or corporation; that the proposal is genuine and not collusive or sham; that the proposer has not directly or indirectly induced or solicited any other proposer to put in a false or sham proposal, and has not directly or indirectly colluded, conspired, connived, or agreed with any proposer or anyone else to put in a sham proposal, or that anyone shall refrain from bidding; that the proposer has not in any manner, directly or indirectly, sought by agreement, communication, or conference with anyone to fix the proposal price of the proposer or any other proposer, or to fix any overhead, profit, or cost element of the proposal price, or of that of any other proposer, or to secure any advantage against the public body awarding the contract of anyone interested in the proposed contract; that all statements contained in the proposal are true; and, further, that the proposer has not, directly or indirectly, submitted his or her proposal price or any breakdown thereof, or the contents thereof, or divulged information or data relative thereto, or paid, and will not pay, any fee to any corporation, partnership, company, association, organization, proposal depository, or to any member or agent thereof to effectuate a collusive or sham proposal."

I declare under penalty of perjury that the foregoing is true and correct.

Executed on March 3rd, 20 25 at
California.

Justin Schwier
Signature

Manager-Proposals
Title

Attach Notary Certificate

DESCRIPTION OF ATTACHED DOCUMENT

Title or Type of Document: Jurat/NONCULLUSION AFFIDAVIT

Document Date: 03/03/2025

Number of Pages (including notarial certificate): 2

State of Florida
County of Broward

Sworn to (or affirmed) and subscribed before me by means of online notarization, this 03/03/2025 by Justin Schwier. ___ Personally Known OR ___ ✔ Produced Identification

Type of Identification Produced: Illinois Driver License.

NATASHA TERA THOMAS
Notary Public - State of Florida
Commission # HH 622135
Expires on February 11, 2029

Natasha Tera Thomas

Notarized remotely online using communication technology via Proof.

Designation of Subcontractors

Empire Cabling Incorporated

5158 Goldman Avenue, Unit F, Moorpark, CA 93021 C-7 833422

DIR 1000015851

Joe Greico, joeg@empirecabling.com, 805-390-1730

Valley Wide Air Corporation

3231 Grande Vista Drive, Newbury Park, CA 91302 B/C-10/C-20 637610

DIR 1000035426

Mike Mamroth, mike@vwac.com, 818-266-8683

Estimated Implementation Timeline

Month One (As early as 7/1/25, pending PCDL issuance from USAC to OSD)

- OSD provides purchase order and signed SOW to CDW
- CDW places orders for product and finalizes respective SOWs with subcontractors
- Subcontractors place order(s) for materials as needed
- Kickoff call with CDW Project Manager, other CDW stakeholders, OSD stakeholders, and stakeholders from both subcontractors
- Refining of project plan, project schedule, and project team roles

Month Two

- Materials and product arrive and crews are assigned and scheduled for work
- Fiber cabling/UPS replacement/cabinet replacement are done on a site-by-site basis throughout the month
- In parallel, tasks within the datacenter will be taking place in a non-disruptive manner until such a time where there is a migration which will occur off-hours over a weekend most likely

Month Three

- Fiber cabling/UPS replacement/cabinet replacement continue to be done on a site-by-site basis throughout the month
- In parallel, tasks within the datacenter will continue to be taking place in a non-disruptive manner until such a time where there is a migration which will occur off-hours over a weekend most likely

Month Three

- Fiber cabling/UPS replacement/cabinet replacement continue to be done on a site-by-site basis throughout the month
- In parallel, tasks within the datacenter will continue to be taking place in a non-disruptive manner until such a time where there is a migration which will occur off-hours over a weekend most likely
- All work is concluded and required documentation delivered
- Project closure meeting

CERTIFICATE OF LIABILITY INSURANCE

DATE(MM/DD/YYYY) 10/01/2024

THIS CERTIFICATE IS ISSUED AS A MATTER OF INFORMATION ONLY AND CONFERS NO RIGHTS UPON THE CERTIFICATE HOLDER. THIS CERTIFICATE DOES NOT AFFIRMATIVELY OR NEGATIVELY AMEND, EXTEND OR ALTER THE COVERAGE AFFORDED BY THE POLICIES BELOW. THIS CERTIFICATE OF INSURANCE DOES NOT CONSTITUTE A CONTRACT BETWEEN THE ISSUING INSURER(S), AUTHORIZED REPRESENTATIVE OR PRODUCER, AND THE CERTIFICATE HOLDER.

IMPORTANT: If the certificate holder is an ADDITIONAL INSURED, the policy(ies) must have ADDITIONAL INSURED provisions or be endorsed. If SUBROGATION IS WAIVED, subject to the terms and conditions of the policy, certain policies may require an endorsement. A statement on this certificate does not confer rights to the certificate holder in lieu of such endorsement(s).

PRODUCER
Aon Risk Services Central, Inc.
Chicago IL Office
200 East Randolph
Chicago IL 60601 USA

CONTACT NAME:
PHONE (A/C. No. Ext): (866) 283-7122 **FAX (A/C. No.):** (800) 363-0105
E-MAIL ADDRESS:

INSURER(S) AFFORDING COVERAGE		NAIC #
INSURER A:	The Phoenix Insurance Company	25623
INSURER B:	The Charter Oak Fire Insurance Company	25615
INSURER C:	Travelers Property Cas Co of America	25674
INSURER D:	Travelers Commercial Casualty Co	40282
INSURER E:	Lloyd's Syndicate No. 3623	AA1120055
INSURER F:		

INSURED
CDW Government LLC
230 North Milwaukee Ave
Vernon Hills IL 60061 USA

COVERAGES **CERTIFICATE NUMBER:** 570108690491 **REVISION NUMBER:**

THIS IS TO CERTIFY THAT THE POLICIES OF INSURANCE LISTED BELOW HAVE BEEN ISSUED TO THE INSURED NAMED ABOVE FOR THE POLICY PERIOD INDICATED. NOTWITHSTANDING ANY REQUIREMENT, TERM OR CONDITION OF ANY CONTRACT OR OTHER DOCUMENT WITH RESPECT TO WHICH THIS CERTIFICATE MAY BE ISSUED OR MAY PERTAIN, THE INSURANCE AFFORDED BY THE POLICIES DESCRIBED HEREIN IS SUBJECT TO ALL THE TERMS, EXCLUSIONS AND CONDITIONS OF SUCH POLICIES. LIMITS SHOWN MAY HAVE BEEN REDUCED BY PAID CLAIMS.

Limits shown are as requested

INSR LTR	TYPE OF INSURANCE	ADDL INSD	SUBR WVD	POLICY NUMBER	POLICY EFF (MM/DD/YYYY)	POLICY EXP (MM/DD/YYYY)	LIMITS	
A	X **COMMERCIAL GENERAL LIABILITY** CLAIMS-MADE X OCCUR GEN'L AGGREGATE LIMIT APPLIES PER: POLICY X PRO-JECT LOC OTHER:			H6605D53096APHX24 see addendum	10/01/2024	10/01/2025	EACH OCCURRENCE DAMAGE TO RENTED PREMISES (Ea occurrence) MED EXP (Any one person) PERSONAL & ADV INJURY GENERAL AGGREGATE PRODUCTS - COMP/OP AGG	$1,000,000 $1,000,000 $10,000 $1,000,000 $2,000,000 $2,000,000
B	**AUTOMOBILE LIABILITY** X ANY AUTO OWNED AUTOS ONLY HIRED AUTOS ONLY SCHEDULED AUTOS NON-OWNED AUTOS ONLY			BA-6N190234-24-I3-G	10/01/2024	10/01/2025	COMBINED SINGLE LIMIT (Ea accident) BODILY INJURY (Per person) BODILY INJURY (Per accident) PROPERTY DAMAGE (Per accident)	$1,000,000
C	X **UMBRELLA LIAB** X OCCUR **EXCESS LIAB** CLAIMS-MADE DED X RETENTION			CUP6J53867924I3 SIR applies per policy terms & conditions	10/01/2024	10/01/2025	EACH OCCURRENCE AGGREGATE Retained Limit	$5,000,000 $5,000,000 $10,000
D C	**WORKERS COMPENSATION AND EMPLOYERS' LIABILITY** ANY PROPRIETOR / PARTNER / EXECUTIVE OFFICER/MEMBER EXCLUDED? Y / N: N **(Mandatory in NH)** If yes, describe under DESCRIPTION OF OPERATIONS below	N / A		UB8P79604A2451K AOS UB8P8306872451R AZ, MA, WI	10/01/2024 10/01/2024	10/01/2025 10/01/2025	X PER STATUTE OTH-ER E.L. EACH ACCIDENT E.L. DISEASE-EA EMPLOYEE E.L. DISEASE-POLICY LIMIT	 $1,000,000 $1,000,000 $1,000,000
E	E&O - Miscellaneous Professional-Primary			W19A8C241001 Claims Made-cyber/network SIR applies per policy terms & conditions	10/01/2024	10/01/2025	Each Claim Aggregate	$5,000,000 $5,000,000

DESCRIPTION OF OPERATIONS / LOCATIONS / VEHICLES (ACORD 101, Additional Remarks Schedule, may be attached if more space is required)

Oxnard School District is included as Additional Insured in accordance with the policy provisions of the General Liability policy. General Liability policy evidenced herein is Primary and Non-Contributory to other insurance available to Additional Insured, but only in accordance with the policy's provisions. A Waiver of Subrogation is granted in favor of Certificate Holder in accordance with the policy provisions of the General Liability, Automobile Liability, Umbrella Liability, E&O and Workers' Compensation policies. Should General Liability, Automobile Liability and Workers' Compensation policies be cancelled before the expiration date thereof, the policy provisions of each policy will govern how notice of cancellation may be delivered to certificate holders in accordance with the policy provisions of each policy. The General Liability Policy does

CERTIFICATE HOLDER

Oxnard School District
1051 S. A St.
Oxnard CA 93030-7442 USA

CANCELLATION

SHOULD ANY OF THE ABOVE DESCRIBED POLICIES BE CANCELLED BEFORE THE EXPIRATION DATE THEREOF, NOTICE WILL BE DELIVERED IN ACCORDANCE WITH THE POLICY PROVISIONS.

AUTHORIZED REPRESENTATIVE

Aon Risk Services Central, Inc.

Holder Identifier :

Certificate No : 570108690491

©1988-2015 ACORD CORPORATION. All rights reserved.

ADDITIONAL REMARKS SCHEDULE

AGENCY	NAMED INSURED
Aon Risk Services Central, Inc.	CDW Government LLC
POLICY NUMBER: See Certificate Number: 570108690491	
CARRIER: See Certificate Number: 570108690491 / NAIC CODE:	EFFECTIVE DATE:

ADDITIONAL REMARKS

THIS ADDITIONAL REMARKS FORM IS A SCHEDULE TO ACORD FORM,

FORM NUMBER: ACORD 25 **FORM TITLE:** Certificate of Liability Insurance

Additional Description of Operations / Locations / Vehicles:

not exclude Sexual Abuse and Molestation.

© 2008 ACORD CORPORATION. All rights reserved.
The ACORD name and logo are registered marks of ACORD

AGENCY CUSTOMER ID: 10227766

LOC #:

ADDITIONAL REMARKS SCHEDULE

AGENCY	NAMED INSURED
Aon Risk Services Central, Inc.	CDW Government LLC
POLICY NUMBER: See Certificate Number: 570108690491	
CARRIER: See Certificate Number: 570108690491 — NAIC CODE:	EFFECTIVE DATE:

ADDITIONAL REMARKS

THIS ADDITIONAL REMARKS FORM IS A SCHEDULE TO ACORD FORM,
FORM NUMBER: ACORD 25 **FORM TITLE:** Certificate of Liability Insurance

Commercial General Liability

Commercial General Liability

Policy# H6605D53096APHX24

State and Insurer(s) Affording Coverage

California	Travelers Property Casualty Company of America	NAIC# 25674
All Other	The Phoenix Insurance Company	NAIC# 25623

© 2008 ACORD CORPORATION. All rights reserved.
The ACORD name and logo are registered marks of ACORD

THIS ENDORSEMENT CHANGES THE POLICY. PLEASE READ IT CAREFULLY.

XTEND ENDORSEMENT FOR TECHNOLOGY

This endorsement modifies insurance provided under the following:

COMMERCIAL GENERAL LIABILITY COVERAGE PART

GENERAL DESCRIPTION OF COVERAGE – This endorsement broadens coverage. However, coverage for any injury, damage or medical expenses described in any of the provisions of this endorsement may be excluded or limited by another endorsement to this Coverage Part, and these coverage broadening provisions do not apply to the extent that coverage is excluded or limited by such an endorsement. The following listing is a general coverage description only. Read all the provisions of this endorsement and the rest of your policy carefully to determine rights, duties, and what is and is not covered.

A. Non-Owned Watercraft – 75 Feet Long Or Less

B. Who Is An Insured – Unnamed Subsidiaries

C. Who Is An Insured – Employees – Supervisory Positions

D. Who Is An Insured – Newly Acquired Or Formed Limited Liability Companies

E. Who Is An Insured – Liability For Conduct Of Unnamed Partnerships Or Joint Ventures

F. Blanket Additional Insured – Persons Or Organizations For Your Ongoing Operations As Required By Written Contract Or Agreement

G. Blanket Additional Insured – Broad Form Vendors

H. Blanket Additional Insured – Controlling Interest

I. Blanket Additional Insured – Mortgagees, Assignees, Successors Or Receivers

J. Blanket Additional Insured – Governmental Entities – Permits Or Authorizations Relating To Premises

K. Blanket Additional Insured – Governmental Entities – Permits Or Authorizations Relating To Operations

L. Medical Payments – Increased Limit

M. Blanket Waiver Of Subrogation

N. Contractual Liability – Railroads

O. Damage To Premises Rented To You

PROVISIONS

A. NON-OWNED WATERCRAFT – 75 FEET LONG OR LESS

1. The following replaces Paragraph **(2)** of Exclusion **g.**, **Aircraft, Auto Or Watercraft**, in Paragraph **2.** of **SECTION I – COVERAGES – COVERAGE A – BODILY INJURY AND PROPERTY DAMAGE LIABILITY**:

(2) A watercraft you do not own that is:

(a) 75 feet long or less; and

(b) Not being used to carry any person or property for a charge;

2. The following replaces Paragraph **2.e.** of **SECTION II – WHO IS AN INSURED**:

e. Any person or organization that, with your express or implied consent, either uses or is responsible for the use of a watercraft that you do not own that is:

(1) 75 feet long or less; and

(2) Not being used to carry any person or property for a charge.

B. WHO IS AN INSURED – UNNAMED SUBSIDIARIES

The following is added to **SECTION II – WHO IS AN INSURED**:

Any of your subsidiaries, other than a partnership or joint venture, that is not shown as a Named Insured in the Declarations is a Named Insured if:

a. You are the sole owner of, or maintain an ownership interest of more than 50% in, such subsidiary on the first day of the policy period; and

b. Such subsidiary is not an insured under similar other insurance.

© 2017 The Travelers Indemnity Company. All rights reserved.
Includes copyrighted material of Insurance Services Office, Inc. with its permission.

No such subsidiary is an insured for "bodily injury" or "property damage" that occurred, or "personal and advertising injury" caused by an offense committed:

a. Before you maintained an ownership interest of more than 50% in such subsidiary; or

b. After the date, if any, during the policy period that you no longer maintain an ownership interest of more than 50% in such subsidiary.

For purposes of Paragraph **1.** of Section **II** – Who Is An Insured, each such subsidiary will be deemed to be designated in the Declarations as:

a. A limited liability company;

b. An organization other than a partnership, joint venture or limited liability company; or

c. A trust;

as indicated in its name or the documents that govern its structure.

C. WHO IS AN INSURED – EMPLOYEES – SUPERVISORY POSITIONS

The following is added to Paragraph **2.a.(1)** of **SECTION II – WHO IS AN INSURED**:

Paragraphs **(1)(a)**, **(b)** and **(c)** above do not apply to "bodily injury" to a co-"employee" while in the course of the co-"employee's" employment by you arising out of work by any of your "employees" who hold a supervisory position.

D. WHO IS AN INSURED – NEWLY ACQUIRED OR FORMED LIMITED LIABILITY COMPANIES

The following replaces Paragraph **3.** of **SECTION II – WHO IS AN INSURED**:

3. Any organization you newly acquire or form, other than a partnership or joint venture, and of which you are the sole owner or in which you maintain an ownership interest of more than 50%, will qualify as a Named Insured if there is no other similar insurance available to that organization. However:

a. Coverage under this provision is afforded only:

(1) Until the 180th day after you acquire or form the organization or the end of the policy period, whichever is earlier, if you do not report such organization in writing to us within 180 days after you acquire or form it; or

(2) Until the end of the policy period, when that date is later than 180 days after you acquire or form such organization, if you report such organization in writing to us within 180 days after you acquire or form it;

b. Coverage **A** does not apply to "bodily injury" or "property damage" that occurred before you acquired or formed the organization; and

c. Coverage **B** does not apply to "personal and advertising injury" arising out of an offense committed before you acquired or formed the organization.

For the purposes of Paragraph **1.** of Section **II** – Who Is An Insured, each such organization will be deemed to be designated in the Declarations as:

a. A limited liability company;

b. An organization, other than a partnership, joint venture or limited liability company; or

c. A trust;

as indicated in its name or the documents that govern its structure.

E. WHO IS AN INSURED – LIABILITY FOR CONDUCT OF UNNAMED PARTNERSHIPS OR JOINT VENTURES

The following replaces the last paragraph of **SECTION II – WHO IS AN INSURED**:

No person or organization is an insured with respect to the conduct of any current or past partnership or joint venture that is not shown as a Named Insured in the Declarations. This paragraph does not apply to any such partnership or joint venture that otherwise qualifies as an insured under Section **II** – Who Is An Insured.

F. BLANKET ADDITIONAL INSURED – PERSONS OR ORGANIZATIONS FOR YOUR ONGOING OPERATIONS AS REQUIRED BY WRITTEN CONTRACT OR AGREEMENT

The following is added to **SECTION II – WHO IS AN INSURED**:

Any person or organization that is not otherwise an insured under this Coverage Part and that you have agreed in a written contract or agreement to include as an additional insured on this Coverage Part is an insured, but only with respect to liability for "bodily injury" or "property damage" that:

a. Occurs subsequent to the signing of that contract or agreement; and

b. Is caused, in whole or in part, by your acts or omissions in the performance of your ongoing operations to which that contract or

© 2017 The Travelers Indemnity Company. All rights reserved.
Includes copyrighted material of Insurance Services Office, Inc. with its permission.

agreement applies or the acts or omissions of any person or organization performing such operations on your behalf.

The limits of insurance provided to such insured will be the minimum limits that you agreed to provide in the written contract or agreement, or the limits shown in the Declarations, whichever are less.

G. BLANKET ADDITIONAL INSURED – BROAD FORM VENDORS

The following is added to **SECTION II – WHO IS AN INSURED**:

Any person or organization that is a vendor and that you have agreed in a written contract or agreement to include as an additional insured on this Coverage Part is an insured, but only with respect to liability for "bodily injury" or "property damage" that:

a. Occurs subsequent to the signing of that contract or agreement; and

b. Arises out of "your products" that are distributed or sold in the regular course of such vendor's business.

The insurance provided to such vendor is subject to the following provisions:

a. The limits of insurance provided to such vendor will be the minimum limits that you agreed to provide in the written contract or agreement, or the limits shown in the Declarations, whichever are less.

b. The insurance provided to such vendor does not apply to:

(1) Any express warranty not authorized by you or any distribution or sale for a purpose not authorized by you;

(2) Any change in "your products" made by such vendor;

(3) Repackaging, unless unpacked solely for the purpose of inspection, demonstration, testing, or the substitution of parts under instructions from the manufacturer, and then repackaged in the original container;

(4) Any failure to make such inspections, adjustments, tests or servicing as vendors agree to perform or normally undertake to perform in the regular course of business, in connection with the distribution or sale of "your products";

(5) Demonstration, installation, servicing or repair operations, except such operations performed at such vendor's premises in connection with the sale of "your products"; or

(6) "Your products" that, after distribution or sale by you, have been labeled or relabeled or used as a container, part or ingredient of any other thing or substance by or on behalf of such vendor.

Coverage under this provision does not apply to:

a. Any person or organization from whom you have acquired "your products", or any ingredient, part or container entering into, accompanying or containing such products; or

b. Any vendor for which coverage as an additional insured specifically is scheduled by endorsement.

H. BLANKET ADDITIONAL INSURED – CONTROLLING INTEREST

1. The following is added to **SECTION II – WHO IS AN INSURED**:

Any person or organization that has financial control of you is an insured with respect to liability for "bodily injury", "property damage" or "personal and advertising injury" that arises out of:

a. Such financial control; or

b. Such person's or organization's ownership, maintenance or use of premises leased to or occupied by you.

The insurance provided to such person or organization does not apply to structural alterations, new construction or demolition operations performed by or on behalf of such person or organization.

2. The following is added to Paragraph **4.** of **SECTION II – WHO IS AN INSURED**:

This paragraph does not apply to any premises owner, manager or lessor that has financial control of you.

I. BLANKET ADDITIONAL INSURED – MORTGAGEES, ASSIGNEES, SUCCESSORS OR RECEIVERS

The following is added to **SECTION II – WHO IS AN INSURED**:

Any person or organization that is a mortgagee, assignee, successor or receiver and that you have agreed in a written contract or agreement to include as an additional insured on this Coverage Part is an insured, but only with respect to its

© 2017 The Travelers Indemnity Company. All rights reserved.
Includes copyrighted material of Insurance Services Office, Inc. with its permission.

liability as mortgagee, assignee, successor or receiver for "bodily injury", "property damage" or "personal and advertising injury" that:

a. Is "bodily injury" or "property damage" that occurs, or is "personal and advertising injury" caused by an offense that is committed, subsequent to the signing of that contract or agreement; and

b. Arises out of the ownership, maintenance or use of the premises for which that mortgagee, assignee, successor or receiver is required under that contract or agreement to be included as an additional insured on this Coverage Part.

The insurance provided to such mortgagee, assignee, successor or receiver is subject to the following provisions:

a. The limits of insurance provided to such mortgagee, assignee, successor or receiver will be the minimum limits that you agreed to provide in the written contract or agreement, or the limits shown in the Declarations, whichever are less.

b. The insurance provided to such person or organization does not apply to:

(1) Any "bodily injury" or "property damage" that occurs, or any "personal and advertising injury" caused by an offense that is committed, after such contract or agreement is no longer in effect; or

(2) Any "bodily injury", "property damage" or "personal and advertising injury" arising out of any structural alterations, new construction or demolition operations performed by or on behalf of such mortgagee, assignee, successor or receiver.

J. BLANKET ADDITIONAL INSURED – GOVERNMENTAL ENTITIES – PERMITS OR AUTHORIZATIONS RELATING TO PREMISES

The following is added to **SECTION II – WHO IS AN INSURED**:

Any governmental entity that has issued a permit or authorization with respect to premises owned or occupied by, or rented or loaned to, you and that you are required by any ordinance, law, building code or written contract or agreement to include as an additional insured on this Coverage Part is an insured, but only with respect to liability for "bodily injury", "property damage" or "personal and advertising injury" arising out of the existence, ownership, use, maintenance, repair, construction, erection or removal of any of the following for which that governmental entity has issued such permit or authorization: advertising signs, awnings, canopies, cellar entrances, coal holes, driveways, manholes, marquees, hoist away openings, sidewalk vaults, elevators, street banners or decorations.

K. BLANKET ADDITIONAL INSURED – GOVERNMENTAL ENTITIES – PERMITS OR AUTHORIZATIONS RELATING TO OPERATIONS

The following is added to **SECTION II – WHO IS AN INSURED**:

Any governmental entity that has issued a permit or authorization with respect to operations performed by you or on your behalf and that you are required by any ordinance, law, building code or written contract or agreement to include as an additional insured on this Coverage Part is an insured, but only with respect to liability for "bodily injury", "property damage" or "personal and advertising injury" arising out of such operations.

The insurance provided to such governmental entity does not apply to:

a. Any "bodily injury", "property damage" or "personal and advertising injury" arising out of operations performed for the governmental entity; or

b. Any "bodily injury" or "property damage" included in the "products-completed operations hazard".

L. MEDICAL PAYMENTS – INCREASED LIMIT

The following replaces Paragraph **7.** of **SECTION III – LIMITS OF INSURANCE**:

7. Subject to Paragraph **5.** above, the Medical Expense Limit is the most we will pay under Coverage **C** for all medical expenses because of "bodily injury" sustained by any one person, and will be the higher of:

a. $10,000; or

b. The amount shown in the Declarations of this Coverage Part for Medical Expense Limit.

M. BLANKET WAIVER OF SUBROGATION

The following is added to Paragraph **8.**, **Transfer Of Rights Of Recovery Against Others To Us,** of **SECTION IV – COMMERCIAL GENERAL LIABILITY CONDITIONS**:

If the insured has agreed in a contract or agreement to waive that insured's right of recovery against any person or organization, we

© 2017 The Travelers Indemnity Company. All rights reserved.
Includes copyrighted material of Insurance Services Office, Inc. with its permission.

waive our right of recovery against such person or organization, but only for payments we make because of:

a. "Bodily injury" or "property damage" that occurs; or

b. "Personal and advertising injury" caused by an offense that is committed;

subsequent to the execution of the contract or agreement.

N. CONTRACTUAL LIABILITY – RAILROADS

1. The following replaces Paragraph **c.** of the definition of "insured contract" in the **DEFINITIONS** Section:

c. Any easement or license agreement;

2. Paragraph **f.(1)** of the definition of "insured contract" in the **DEFINITIONS** Section is deleted.

O. DAMAGE TO PREMISES RENTED TO YOU

The following replaces the definition of "premises damage" in the **DEFINITIONS** Section:

"Premises damage" means "property damage" to:

a. Any premises while rented to you or temporarily occupied by you with permission of the owner; or

b. The contents of any premises while such premises is rented to you, if you rent such premises for a period of seven or fewer consecutive days.

© 2017 The Travelers Indemnity Company. All rights reserved.
Includes copyrighted material of Insurance Services Office, Inc. with its permission.

Pricing Offer and E-Rate Purchase Agreement

Upon award, to facilitate contract execution with our countersignature, please sign the enclosed E-Rate agreement and send to jjg@cdwg.com and 470award@cdwg.com.

Before the Services are to be performed, CDW•G will provide a Statement of Work (SOW) detailing the exact scoping and pricing of the services to be provided, which will be executed by both parties prior to the start of services. The SOW will reflect the terms and conditions as negotiated between the parties during the bidding and contracting process.

- ~~We have prepared four different offers for Oxnard School District:~~
  - ~~Option 1 includes VRLA (lead acid) UPS units with Proline-branded Extreme-compatible transceivers – $1,606,985.33~~
    - ~~Quote PHVB628 (page 33-62) includes a site-by-site breakdown while quote PHWN278 (page 63-68) is condensed to a single line for each part number~~
  - ~~Option 2 includes VRLA (lead acid) UPS units with Extreme-branded transceivers – $1,795,714.66~~
    - ~~Quote PHVR685 (page 69-98) includes a site-by-site breakdown while quote PHWN486 (page 99-104) is condensed to a single line for each part number~~
  - ~~Option 3 includes lithium-ion UPS units with Proline-branded Extreme-compatible transceivers – $1,734,68.53~~
    - ~~Quote PHVX609 (page 105-133) includes a site-by-site breakdown while quote PHWN592 (page 134-139) is condensed to a single line for each part number~~
  - ~~Option 4 includes lithium-ion UPS units with Extreme-branded transceivers – $1,922,663.11~~
    - ~~Quote PHVX612 (page 140-167) includes a site-by-site breakdown while quote PHWP232 (page 168-173) is condensed to a single line for each part number~~
  - ~~SOW that goes with each of the four options is detailed on pages 174-188~~
- ~~All four options include 6-pair fiber pricing, however the district could elect to downgrade to 3-pair fiber across the proposal for a deduction of $49,250.00 (site-by-site breakdown of that deduction can be provided upon request)~~
- Within the statement of work, there are two milestones for each site, which are also included on two individual lines per site in the site-by-site breakdown quotes, one due at Project Kickoff (material) and due upon Completion of Work (labor)
- ~~Only the following MDF/IDFs required an EBC for additional runtime to hit an estimated runtime of 30 minutes: BREK-MDF, ELM-300, ESC-IDF-4, HARR-300-MDF, LEMO-1STFLR, and LEMO-2NDFLR~~
  - ~~That said, these all were above 20 minutes estimated runtime, so OSD may choose to opt to not procure any EBCs, we can discuss estimated runtimes post-submittal~~
- No contingency/allowance is currently included for potential electrical outlet relocations or additional, these will be handled on an as needed basis based on the discussion during the Optional Site Walk

This E-Rate Customer Purchase Agreement (this "Agreement") is entered into the date the contract is signed, and effective on April 1, 2025 ("Effective Date") and is made by and between CDW Government LLC an Illinois limited liability corporation with an office at 230 N. Milwaukee Ave., Vernon Hills, Illinois 60061 ("Seller"), and Oxnard School District a non-profit school or library eligible for Universal Service funding, as defined below.

E-Rate Contract Number	140315	**Spin #**	143005588
E-Rate Funding Year	**2025**	**FCC Registration #**	0012123287
Customer	Oxnard School District 1051 S A ST Oxnard, CA, 93030	**Seller**	CDW Government LLC 230 N. Milwaukee Avenue Vernon Hills, IL 60061
Effective Date	April 1, 2025	**Quoted Items (see exhibit 1)**	

1. DEFINITIONS

As used in the Agreement, the following terms shall have the meanings set forth below:

A. "Universal Service Administrative Co." or "USAC" – The not for profit organization designated by the U.S. Federal Communications Commission ("FCC") to administer and ensure compliance with the Universal Services Fund.

B. "SLP" - The Schools and Libraries Program of the Universal Service Fund, which includes the E-Rate Program and that is administered by USAC under the direction of the FCC.

C. "E-Rate" – The education rate funding program that is a part of SLP that provides discounts to keep students and library patrons connected to broadband and voice services and which is one of the programs that form the Universal Service Program.

D. "Funding Commitment Decision Letter" or "FCDL" – A letter that a Customer receives from USAC which indicates the applicable discount amount for a specific funding year.

E. "Products" – E-Rate eligible products or services that include computer related hardware but are not limited to caching servers, routers, switches, wireless access points, installation, and warranty maintenance and other items which are eligible for E-Rate discounts in accordance with the rules issued by USAC.

F. "Funding Year" – The specific calendar period, as defined by the SLP, during which the Customer is approved for funding or discounts on Products. FY 2025 is in reference to the program year.

2. TERMS AND CONDITIONS

All orders submitted to Seller by Customer for Products under this Agreement are subject to, where applicable, the terms and conditions on the current USETPA 121003 IT Equipment and Services (2108001), and/or, the https://www.cdwg.com/content/cdwg/en/terms-conditions/sales-and-service-projects.html, unless otherwise stated herein.

3. PURCHASE AUTHORIZATIONS

A. E-Rate Status

i. Customer represents and warrants that it qualifies as eligible under the SLP to receive E-Rate funding.

ii. CUSTOMER FURTHER ACKNOWLEDGES AND AGREES THAT THIS AGREEMENT, WHEN EXECUTED, CONSTITUTES A CONTRACT AS REQUIRED BY FCC.

B. E-Rate Purchases

i. Customer represents and warrants that all purchases made under this Agreement shall be for its own use and that it is eligible to receive E-Rate funding as specified by USAC.

ii. IN ACCORDANCE WITH FCC REQUIREMENTS, THE CUSTOMER SHALL SUBMIT A COMPLETED AND SIGNED FCC FORM 486 TO USAC The Form 486 shall be approved by USAC prior to order placement with Seller. See Payment Terms for details.

4. ORDERING AND ASSISTANCE

A. Ordering

Purchase orders shall be submitted through electronic means (email, electronic data interchange (EDI), etc.) directly to Customer's dedicated account manager. Alternatively, if a copy must be sent via mail, common courier, etc., please reach out to your account manager for the appropriate mailing address.

B. Other Requirements

i. All purchase orders shall include 1) a contact name; 2) phone number; 3) purchase order number; 4) CDW Part Number and OEM Part Number; 5) Product description; 6) original and discounted Product price 7) percentage Customer owes and percentage SLP owes (if applicable) 8) ship to location; 9) bill to location; 10) BEAR or SPI Order; and 11) FCC Form 471 and Funding Request Number (FRN) number for each part number. SEPARATE PURCHASE ORDERS SHALL BE SUBMITTED FOR PRODUCTS THAT ARE NOT ELIGIBLE FOR E-RATE FUNDING. ALL ORDERS SHALL BE SUBJECT TO ACCEPTANCE BY SELLER.

ii. If the Customer is unable to commit the full purchase order amount, any balance remaining that was not funded or approved for payment by USAC will be the responsibility of the Customer. The Customer must add the following language to its purchase order:

"The total cost of this purchase order is $_____. The E-Rate portion is $_____, and is committed by USAC. If there is any reduction or denial of payment with the E-Rate portion, Oxnard School District accepts full responsibility for the cost of this purchase, $_____."

iii. Should Customer choose to add Product or make substitutions to the Products originally sought, following USAC's funding decision, Customer agrees it will be responsible for the amounts owed for the added or substituted Products in excess of its committed funding from USAC.

iv. Customer must complete installation of Products ordered pursuant to this Agreement within thirty (30) days of delivery. In the event Customer, or a third party hired by Customer to complete the installation, fails to install the Products within the timeframe provided herein, the Parties acknowledge and agree that Customer will begin to accrue interest on the amounts owed for such Products in an amount of one and one-half percent (1.5%) per month, or the maximum rate permitted by applicable law.

C. Assistance with Order

i. Customer may call 1-800-328-4239 to get assistance on any purchase order. Any terms or conditions stated in or on the Customer's purchase order which are inconsistent with or in addition to the terms and conditions in this Agreement or the Product Sales Terms and Conditions shall not be valid, are considered null and void and shall not be applicable to or binding on Seller.

ii. FOR PRODUCTS WHICH ARE DISCONTINUED AFTER A CUSTOMER ORDER HAS BEEN ACCEPTED BY SELLER BUT BEFORE THE PRODUCT HAS SHIPPED, SELLER WILL MAKE REASONABLE EFFORTS TO OFFER A COMPARABLE OR BETTER PRODUCT AT THE SAME OR LESSER PRICE, IF AVAILABLE, UPON SLP'S APPROVAL OF THE PRODUCT SUBSTITUTION. ANY INCREASE IN PRICE THAT CANNOT BE ABSORBED BY THE SELLER WILL BE THE RESPONSIBILITY OF Oxnard School District.

5. PRICE AND PAYMENT TERMS

i. Payment terms are subject to continuing credit approval by Seller. Seller may change credit or payment terms at any time when, in Seller's opinion, Customer's financial condition, previous payment record, or the nature of Customer's relationship with Seller so warrants.

ii. Seller may discontinue performance under this Agreement (i) if Customer fails to pay any sum when due under this Agreement or any other agreement with Seller until payment is received or (ii) if Customer is in violation of applicable laws and regulations.

A. Price

The Price shall be as set forth on the Customer's quote from Seller and which is in the form attached hereto as Exhibit I, and as amended from time to time. All prices are exclusive of federal, state, local, or other taxes, which shall be the responsibility of the Customer.

Payment Terms

i. All payments, regardless of method, shall be submitted to "Accounts Receivable," please contact your account manager for payment method options.

ii. CUSTOMER MAY EITHER WAIT TO PLACE AN ORDER PRIOR TO OR AFTER RECEIPT OF ITS FCDL. IN THE EVENT THAT CUSTOMER PLACES AN ORDER PRIOR TO RECEIPT OF THE FCDL, CUSTOMER SHALL BE RESPONSIBLE FOR PAYMENT OF THE ENTIRE PURCHASE PRICE WITHOUT REGARD TO SLP FUNDING.

iii. Customer must choose one of the following payment methods. However, Customers that choose to order Products prior to receiving their FCDL must follow the BEAR payment method.

☐ **Form 474 Service Provider Invoice (SPI) Method**
Seller will invoice the Customer for the Product price, as set forth on the Product quote, net of the FCDL amount. Customer shall be responsible for making payment within thirty (30) days from date of invoice. There must be an approved FCC Form 486 prior to placing the SPI order.

☐ **Form 472 Billed Entity Applicant Reimbursement (BEAR) Method**
Seller will invoice Customer, upon Product shipment, for the total purchase price without regard to any SLP funding applied to that purchase price for the Products. Customer shall pay the invoiced amount within thirty (30) days from the date of invoice.

iv. Seller accepts BEAR orders beginning April 1 before the beginning of the Funding Year. Seller accepts SPI orders beginning July 1 of the Funding Year when Customer has received its FCDL and completed the FCC Form 486, Seller DOES NOT accept SPI orders before July 1 of the Funding Year, or prior to the Form 486 approval by USAC.

6. NON-ASSIGNABILITY AGREEMENT

Customer shall not assign or otherwise transfer its rights or delegate its obligations under this Agreement without Seller's advance written consent. Any attempted assignment, transfer or delegation without such consent shall be void.

The term of this Agreement shall commence on April 1, 2025 ("Effective Date") and be valid through the later of the Funding Year 2025 or 9/30/2026.

i. Seller may terminate this Agreement at any time for any reason upon thirty (30) days prior written notice to the Customer.

Customer may terminate this Agreement or withdraw an order upon written notice to Seller if: (a) funds are not appropriated to Customer under this program, or (b) Customer's School Board rejects this Agreement

("Termination Notice"). In the event that Customer terminates this Agreement due to non-appropriation of funds, or termination for convenience, then Seller may immediately cease performance. However, the Customer shall remain liable for any Products that have shipped or services, already provided, or have been subscribed or purchased prior to Seller's receipt of the Termination Notice. Customer shall also be responsible for any of Seller's out-of-pocket costs arising as a result of any such termination.

ii. In the event Customer receives an extension of funding from SLP, Customer will notify Seller in writing and the parties may agree to execute an amendment to extend this Agreement.

7. NOTICES

All notices and other communications required or permitted under this Agreement shall be served in person or sent by U.S. mail, Federal Express, or equivalent carrier to the party's address listed above

8. GENERAL

If any term or provision herein is determined to be illegal or unenforceable, the validity or enforceability of the remainder of the terms or provisions herein will remain in full force and effect.

9. ENTIRE AGREEMENT

This Agreement constitutes the entire agreement between Seller and Customer and supersedes and replaces any and all previous and contemporaneous communications, representations or agreements between the parties, whether oral or written, regarding transactions hereunder. No provision of this Agreement may be waived or modified except by an amendment signed by an authorized representative of each party.

10. GOVERNING LAW

This Agreement will be governed by the laws of CA, without regard to conflicts of law rules. Any litigation will be brought exclusively in a federal or state court located in the state or commonwealth where Customer's location identified above, and the parties consent to the jurisdiction of the federal and state courts located therein, submit to the jurisdiction thereof. The parties further consent to the exercise of personal jurisdiction.

11. DOCUMENT RETENTION

All documents related to this Agreement will be kept on file by both parties for a period of ten (10) years after the project completion in accordance with the rules of the SLP.

IN WITNESS WHEREOF, the parties hereto have executed this Agreement the day and year first above written.

CDW Government LLC	**Oxnard School District**
_____	_____
(Authorized Signature)	*(Authorized Signature)*
_____	_____
Printed Name	*Printed Name*
Title: _____	Title: _____
Date: _____	Date: _____

**** Upon award, to facilitate contract execution with our countersignature, please sign the enclosed E-Rate agreement and send to jjg@cdwg.com and 470award@cdwg.com**

EXHIBIT I – Pricing Offer

Thank you for choosing CDW. We have received your quote.

Hardware Software Services IT Solutions Brands Research Hub

QUOTE CONFIRMATION

DAVID HUBBARD,

Thank you for considering CDW•G for your technology needs. The details of your quote are below. **If you are an eProcurement or single sign on customer, please log into your system to access the CDW site.** You can search for your quote to retrieve and transfer back into your system for processing.

For all other customers, click below to convert your quote to an order.

Convert Quote to Order

QUOTE #	QUOTE DATE	QUOTE REFERENCE	CUSTOMER #	GRAND TOTAL
PJCH321	3/6/2025	PHVX609 Q3 LITH PRO COND SPLIT	1274981	$1,405,514.26

QUOTE DETAILS

ITEM	QTY	CDW#	UNIT PRICE	EXT. PRICE
Proline Extreme Networks 10302 Compatible TAA Compliant 10GBase-LR SFP+ Tra Mfg. Part#: 10302-PRO UNSPSC: 43201553 Contract: USETPA 121003 IT Equipment and Services (2108001)	216	3982983	$175.00	$37,800.00
Vertiv Liebert GXT5 Lithium-Ion N Online UPS 1000VA 1000W 120V Rack Tower Mfg. Part#: GXT5LI-1000LVRT2UXLN Contract: USETPA 121003 IT Equipment and Services (2108001)	100	7047090	$1,800.00	$180,000.00
Vertiv Liebert GXT5 Lithium-Ion N Online UPS 1500VA 1350W 120V Rack Tower Mfg. Part#: GXT5LI-1500LVRT2UXLN Contract: USETPA 121003 IT Equipment and Services (2108001)	19	6953824	$2,300.00	$43,700.00
Vertiv Liebert GXT5 Lithium-Ion N Online UPS 2000VA 1800W 120V Rack Tower Mfg. Part#: GXT5LI-2000LVRT2UXLN Contract: USETPA 121003 IT Equipment and Services (2108001)	32	6954900	$2,650.00	$84,800.00
Vertiv Liebert External Battery Cabinet for Liebert GXT5 LIO UPS 48V Mfg. Part#: VEBCLI-48VRT1U Contract: USETPA 121003 IT Equipment and Services (2108001)	10	7047068	$1,400.00	$14,000.00
Vertiv Liebert Mounting Bracket for GXT5 UPS - 4-Piece Design Mfg. Part#: 2POSTRMKIT Contract: USETPA 121003 IT Equipment and Services (2108001)	161	5721875	$140.00	$22,540.00
Vertiv Geist rPDU JRN102-102D20TL5 10-Outlets PDU Mfg. Part#: 11269VH Contract: USETPA 121003 IT Equipment and Services (2108001)	32	7238644	$130.00	$4,160.00

QUOTE DETAILS (CONT.)				
Vertiv Geist PDU VP9562 - Basic - 1U 15A 120V Mfg. Part#: VP9562 UNSPSC: 39121017 Contract: USETPA 121003 IT Equipment and Services (2108001)	2	5187620	$100.00	$200.00
Liebert Vertiv EXSV 20kVA 208V 37.5Ah Tower UPS Mfg. Part#: EXSV-20KN Contract: USETPA 121003 IT Equipment and Services (2108001)	1	7872930	$16,150.00	$16,150.00
Liebert Vertiv 37.5Ah 1-String VRLA External Battery Cabinet for EXSV Tower Mfg. Part#: EXSV-EBC1 Contract: USETPA 121003 IT Equipment and Services (2108001)	1	7872920	$8,650.00	$8,650.00
EXS 208V WMBC TMAG 3 BREAKER Mfg. Part#: WMBC208-EXS20K3BTK Contract: USETPA 121003 IT Equipment and Services (2108001)	1	8273850	$3,700.00	$3,700.00
VERTIV STARTUP 7X24 EXSV-MOD15-40KVA Mfg. Part#: SUEXSV10-40U7 Contract: USETPA 121003 IT Equipment and Services (2108001)	1	7947784	$1,700.00	$1,700.00
Vertiv Geist PDU VP8865 - Unit Monitoring - 0U 30A 120 208V Mfg. Part#: VP8865 UNSPSC: 39121017 Contract: USETPA 121003 IT Equipment and Services (2108001)	8	5187611	$1,000.00	$8,000.00
APC by Schneider Electric Standard Power Cord Mfg. Part#: AP8712SX590 UNSPSC: 26121636 Contract: USETPA 121003 IT Equipment and Services (2108001)	1	4506184	$135.00	$135.00
APC by Schneider Electric NetShelter Standard Power Cord Mfg. Part#: AP8712SX340 UNSPSC: 26121636 Contract: USETPA 121003 IT Equipment and Services (2108001)	1	4506190	$135.00	$135.00
APC power cable - 2 ft Mfg. Part#: AP8702S-NAX590 UNSPSC: 26121636 Contract: USETPA 121003 IT Equipment and Services (2108001)	7	4193031	$65.00	$455.00
APC power cable - 4 ft Mfg. Part#: AP8704S-NAX590 UNSPSC: 26121636 Contract: USETPA 121003 IT Equipment and Services (2108001)	2	4188752	$105.00	$210.00
APC power cable - 6 ft Mfg. Part#: AP8706S-NAX590 UNSPSC: 26121636 Contract: USETPA 121003 IT Equipment and Services (2108001)	1	4193040	$132.00	$132.00
APC power cable - 2 ft Mfg. Part#: AP8702S-NAX340 UNSPSC: 26121636	7	4191514	$65.00	$455.00

QUOTE DETAILS (CONT.)

Contract: USETPA 121003 IT Equipment and Services (2108001)

APC power cable - 4 ft Mfg. Part#: AP8704S-NAX340 UNSPSC: 26121636 Contract: USETPA 121003 IT Equipment and Services (2108001)	2	4188755	$93.00	$186.00
APC power cable - 6 ft Mfg. Part#: AP8706S-NAX340 UNSPSC: 26121636 Contract: USETPA 121003 IT Equipment and Services (2108001)	1	4191515	$132.00	$132.00
APC by Schneider Electric Power Cord Kit (6 ea), Locking, C13 to C14, 0.6m, Mfg. Part#: AP8702S-NA UNSPSC: 26121636 Contract: USETPA 121003 IT Equipment and Services (2108001)	4	3056190	$56.00	$224.00
APC by Schneider Electric Power Cord Kit (6 ea), Locking, C13 to C14, 1.2m, Mfg. Part#: AP8704S-NA UNSPSC: 26121636 Contract: USETPA 121003 IT Equipment and Services (2108001)	3	3048987	$93.00	$279.00
APC by Schneider Electric Power Cord Kit (6 ea), Locking, C13 to C14, 1.8m, Mfg. Part#: AP8706S-NA UNSPSC: 26121636 Contract: USETPA 121003 IT Equipment and Services (2108001)	1	3068504	$127.00	$127.00
CPI CONFIGURED ZETAFRAME CABINET Mfg. Part#: TSZ1541321 Contract: USETPA 121003 IT Equipment and Services (2108001)	4	8276297	$5,000.00	$20,000.00
CPI FLOOR SEAL KIT F ZETAFRAME CAB Mfg. Part#: 39996-703 Contract: USETPA 121003 IT Equipment and Services (2108001)	4	8276301	$110.00	$440.00
CPI FLOOR SEAL KIT F ZETAFRAME CAB Mfg. Part#: 39997-716 Contract: USETPA 121003 IT Equipment and Services (2108001)	1	8276298	$115.00	$115.00
CPI CABLE PATHWAY ELEVATION KIT Mfg. Part#: 60508-706 Contract: USETPA 121003 IT Equipment and Services (2108001)	2	8276296	$50.00	$100.00
CPI CABLE PATHWAY ELEVATION KIT Mfg. Part#: 60508-708 Contract: USETPA 121003 IT Equipment and Services (2108001)	2	8276302	$55.00	$110.00
CPI CABLE RUNWAY LADDER RACK Mfg. Part#: 10250-718 UNSPSC: 39131709 Contract: USETPA 121003 IT Equipment and Services (2108001)	3	312718	$150.00	$450.00

QUOTE DETAILS (CONT.)				
CPI - cable raceway joint coupler Mfg. Part#: 11301-701 UNSPSC: 39131709 Contract: USETPA 121003 IT Equipment and Services (2108001)	2	412251	$12.00	$24.00
CPI - mount angle assembly Mfg. Part#: 11421-718 UNSPSC: 31162313 Contract: USETPA 121003 IT Equipment and Services (2108001)	2	411297	$35.00	$70.00
CPI - cable radius drop Mfg. Part#: 14304-718 UNSPSC: 39131709 Contract: USETPA 121003 IT Equipment and Services (2108001)	4	4881273	$45.00	$180.00
CPI - Small - cable runway radius drop Mfg. Part#: 14305-701 Contract: USETPA 121003 IT Equipment and Services (2108001)	4	7044376	$40.00	$160.00
CPI Solid Rear Panel - filler panel - 2U Mfg. Part#: 34538-002 UNSPSC: 43211612 Contract: USETPA 121003 IT Equipment and Services (2108001)	1	1995151	$525.00	$525.00
CPI Snap-In Filler Panel - filler panel - 1U Mfg. Part#: 34537-001 UNSPSC: 24102001 Contract: USETPA 121003 IT Equipment and Services (2108001)	6	960409	$60.00	$360.00
CPI Standard Busbar - rack grounding bar Mfg. Part#: 10622-012 UNSPSC: 24102001 Contract: USETPA 121003 IT Equipment and Services (2108001)	1	554494	$165.00	$165.00
Chatsworth Ground Wire - ground cable - 98 ft Mfg. Part#: 40159-001 UNSPSC: 46182103 Contract: USETPA 121003 IT Equipment and Services (2108001)	1	2135589	$325.00	$325.00
CPI - cable compression lug Mfg. Part#: 40162-901 UNSPSC: 39121405 Contract: USETPA 121003 IT Equipment and Services (2108001)	4	1841506	$8.00	$32.00
CPI C-TYPE - cable compression tap Mfg. Part#: 40163-001 Contract: USETPA 121003 IT Equipment and Services (2108001)	4	8276300	$4.00	$16.00
CPI CABLE RUNWAY GROUNDING KIT Mfg. Part#: 40164-001 UNSPSC: 39131709 Contract: USETPA 121003 IT Equipment and Services (2108001)	3	840344	$35.00	$105.00
CPI Aisle Containment - rack cooling system aisle containment sliding door	1	7284447	$4,100.00	$4,100.00

QUOTE DETAILS (CONT.)

Mfg. Part#: 32780-701 Contract: USETPA 121003 IT Equipment and Services (2108001)				
CPI Aisle Containment - Single Door - rack door template Mfg. Part#: 32875-702 Contract: USETPA 121003 IT Equipment and Services (2108001)	1	7284450	$60.00	$60.00
CPI HOT AISLE CONTAINMENT CUST Mfg. Part#: 33000-701 Contract: USETPA 121003 IT Equipment and Services (2108001)	1	8276305	$5,050.00	$5,050.00
NEW CONFIG SERVICE PART# PLACEHOLDER Mfg. Part#: CFG PLACEHOLDER CDW Amplified Services for Fiber, UPS, and Rack Implementation (See attached CSOW for details) -- Project Kickoff, Eligible Sites -- USETPA 121003 IT Equipment and Services Contract: MARKET	1	4852591	$280,244.88	$280,244.88
NEW CONFIG SERVICE PART# PLACEHOLDER Mfg. Part#: CFG PLACEHOLDER CDW Amplified Services for Fiber, UPS, and Rack Implementation (See attached CSOW for details) -- Completion of Work, Eligible Sites -- USETPA 121003 IT Equipment and Services Contract: MARKET	1	4852591	$566,076.62	$566,076.62
Proline Extreme Networks 10302 Compatible TAA Compliant 10GBase-LR SFP+ Tra Mfg. Part#: 10302-PRO UNSPSC: 43201553 Ineligible Sites (Education Service Center, Operations Service Center, and Warehouse) Contract: USETPA 121003 IT Equipment and Services (2108001)	6	3982983	$175.00	$1,050.00
Vertiv Liebert GXT5 Lithium-Ion N Online UPS 1000VA 1000W 120V Rack Tower Mfg. Part#: GXT5LI-1000LVRT2UXLN Ineligible Sites (Education Service Center, Operations Service Center, and Warehouse) Contract: USETPA 121003 IT Equipment and Services (2108001)	9	7047090	$1,800.00	$16,200.00
Vertiv Liebert GXT5 Lithium-Ion N Online UPS 1500VA 1350W 120V Rack Tower Mfg. Part#: GXT5LI-1500LVRT2UXLN Ineligible Sites (Education Service Center, Operations Service Center, and Warehouse) Contract: USETPA 121003 IT Equipment and Services (2108001)	1	6953824	$2,300.00	$2,300.00
Vertiv Liebert GXT5 Lithium-Ion N Online UPS 2000VA 1800W 120V Rack Tower Mfg. Part#: GXT5LI-2000LVRT2UXLN Ineligible Sites (Education Service Center, Operations Service Center, and Warehouse) Contract: USETPA 121003 IT Equipment and Services (2108001)	1	6954900	$2,650.00	$2,650.00

QUOTE DETAILS (CONT.)				
Vertiv Liebert External Battery Cabinet for Liebert GXT5 LIO UPS 48V Mfg. Part#: VEBCLI-48VRT1U Ineligible Sites (Education Service Center, Operations Service Center, and Warehouse) Contract: USETPA 121003 IT Equipment and Services (2108001)	1	7047068	$1,400.00	$1,400.00
Vertiv Liebert Mounting Bracket for GXT5 UPS - 4-Piece Design Mfg. Part#: 2POSTRMKIT Ineligible Sites (Education Service Center, Operations Service Center, and Warehouse) Contract: USETPA 121003 IT Equipment and Services (2108001)	12	5721875	$140.00	$1,680.00
Vertiv Geist rPDU JRN102-102D20TL5 10-Outlets PDU Mfg. Part#: 11269VH Ineligible Sites (Education Service Center, Operations Service Center, and Warehouse) Contract: USETPA 121003 IT Equipment and Services (2108001)	1	7238644	$130.00	$130.00
NEW CONFIG SERVICE PART# PLACEHOLDER Mfg. Part#: CFG PLACEHOLDER CDW Amplified Services for Fiber, UPS, and Rack Implementation (See attached CSOW for details) -- Project Kickoff, Ineligible Sites (Education Service Center, Operations Service Center, and Warehouse) -- USETPA 121003 IT Equipment and Services Contract: MARKET	1	4852591	$10,604.05	$10,604.05
NEW CONFIG SERVICE PART# PLACEHOLDER Mfg. Part#: CFG PLACEHOLDER CDW Amplified Services for Fiber, UPS, and Rack Implementation (See attached CSOW for details) -- Completion of Work, Ineligible Sites (Education Service Center, Operations Service Center, and Warehouse) -- USETPA 121003 IT Equipment and Services Contract: MARKET	1	4852591	$17,997.45	$17,997.45

SUBTOTAL	$1,360,590.00
SHIPPING	$0.00
SALES TAX	$44,924.26
GRAND TOTAL	**$1,405,514.26**

PURCHASER BILLING INFO	DELIVER TO
Billing Address: OXNARD SCHOOL DISTRICT ACCTS PAYABLE 1051 S A ST OXNARD, CA 93030-7442 **Phone:** (805) 483-7226 **Payment Terms:** ERATE QUOTES ONLY	**Shipping Address:** OXNARD SCHOOL DISTRICT WAREHOUSE 514 WOOLEY RD OXNARD, CA 93030-7442 **Shipping Method:**
	Please remit payments to:

CDW Government
75 Remittance Drive
Suite 1515
Chicago, IL 60675-1515

Sales Contact Info

Pat Hein | (866) 642-8073 | pathei@cdwg.com

Need Help?

My Account | Support | Call 800.800.4239

About Us | Privacy Policy | Terms and Conditions

This order is subject to CDW's Terms and Conditions of Sales and Service Projects at
http://www.cdwg.com/content/terms-conditions/product-sales.aspx
For more information, contact a CDW account manager.

© 2025 CDW•G LLC, 200 N. Milwaukee Avenue, Vernon Hills, IL 60061 | 800.808.4239

STATEMENT OF WORK

Project Name:	E-Rate FY25 Fiber, UPS, and Rack Implementation	**Seller Representative:** Jon Gentile +1 (818) 2541711 jjg@cdwg.com
Customer Name:	OXNARD SCHOOL DISTRICT	
CDW Affiliate:	CDW Government LLC	
Subcontractor:	Valley Wide Air Corporation & Empire Cabling, Inc.	**Solution Architect:**
Date:	February 28, 2025	
Drafted By	Liz Minarich	

This statement of work ("**Statement of Work**" or "**SOW**") is made and entered into on the last date that this SOW is fully executed as set forth below ("**SOW Effective Date**") by and between the undersigned, CDW Government LLC ("**Provider**," and "**Seller**,") and OXNARD SCHOOL DISTRICT ("**Customer**," and "**Client**,").

This SOW shall be governed by that certain USETPA Contract #121003, Awarded Vendor Agreement between US Educational Technology Purchasing Alliance and between CDW Government LLC having an effective date of September 24, 2021(the "**Agreement**") If there is a conflict between this SOW and the Agreement, then the Agreement will control, except as expressly amended in this SOW by specific reference to the Agreement.

PROJECT DESCRIPTION

PROJECT SCOPE

INCLUSIONS

BREKKE ELEMENTARY SCHOOL

- Provide and install one (1) 12F singlemode I/O fiber optic cable link from the MDF out to each of the two (2) IDFs per the minibid breakdown terminated LC/LC at both ends.
- Provide and install two (2) Corning CCH-01U fiber panels with singlemode LC adapter panels at IDFs.
- Provide and install one (1) Corning CCH-04U fiber panel with singlemode LC adapter panels at the MDF.
- Provide and install (32) singlemode LC terminations.
- Provide and install new fiber optic 1M or 2M singlemode LC/LC patch cables for connections at the MDF & IDFs.
- Install three (3) Seller-provided UPS units per the minibid breakdown.
- Install two (2) Seller-provided PDU units per the minibid breakdown.

CESAR CHAVEZ SCHOOL

- Provide and install one (1) 12F singlemode I/O fiber optic cable link from the MDF out to each of the four (4) IDFs per the minibid breakdown terminated LC/LC at both ends.
- Provide and install four (4) Corning CCH-01U fiber panels with singlemode LC adapter panels at IDFs.
- Provide and install one (1) Corning CCH-04U fiber panel with singlemode LC adapter panels at the MDF.
- Provide and install (64) singlemode LC terminations.

- Provide and install new fiber optic 1M or 2M singlemode LC/LC patch cables for connections at the MDF & IDFs.
- Install five (5) Seller-provided UPS units per the minibid breakdown.
- Install two (2) Seller-provided PDU units per the minibid breakdown.

CURREN SCHOOL

- Provide and install one (1) 12F singlemode I/O fiber optic cable link from the MDF out to each of the seven (7) IDFs per the minibid breakdown terminated LC/LC at both ends.
- Provide and install seven (7) Corning CCH-01U fiber panels with singlemode LC adapter panels at IDFs.
- Provide and install one (1) Corning CCH-04U fiber panel with singlemode LC adapter panels at the MDF.
- Provide and install (112) singlemode LC terminations.
- Provide and install new fiber optic 1M or 2M singlemode LC/LC patch cables for connections at the MDF & IDFs.
- Install eight (8) Seller-provided UPS units per the minibid breakdown.
- Install three (3) Seller-provided PDU units per the minibid breakdown.

DRIFFILL SCHOOL

- Provide and install one (1) 12F singlemode I/O fiber optic cable link from the MDF out to each of the nine (9) IDFs per the minibid breakdown terminated LC/LC at both ends.
- Provide and install nine (9) Corning CCH-01U fiber panels with singlemode LC adapter panels at IDFs.
- Provide and install one (1) Corning CCH-04U fiber panel with singlemode LC adapter panels at the MDF.
- Provide and install (144) singlemode LC terminations.
- Provide and install new fiber optic 1M or 2M singlemode LC/LC patch cables for connections at the MDF & IDFs.
- Install (13) Seller-provided UPS units per the minibid breakdown.
- Install one (1) Seller-provided PDU units per the minibid breakdown.

ELM ELEMENTARY SCHOOL

- Install four (4) Seller-provided UPS units per the minibid breakdown.
- Install one (1) Seller-provided PDU unit per the minibid breakdown.

R.J. FRANK ACADEMY

- Provide and install one (1) 12F singlemode I/O fiber optic cable link from the MDF out to each of the (11) IDFs per the minibid breakdown terminated LC/LC at both ends.
- Provide and install (11) Corning CCH-01U fiber panels with singlemode LC adapter panels at IDFs.
- Provide and install one (1) Corning CCH-04U fiber panel with singlemode LC adapter panels at the MDF.
- Provide and install (176) singlemode LC terminations.
- Provide and install new fiber optic 1M or 2M singlemode LC/LC patch cables for connections at the MDF & IDFs.
- Install (12) Seller-provided UPS units per the minibid breakdown.
- Install one (1) Seller-provided PDU units per the minibid breakdown.

FREMONT ACADEMY

- Provide and install one (1) 12F singlemode I/O fiber optic cable link from the MDF out to each of the (10) IDFs per the minibid breakdown terminated LC/LC at both ends.
- Provide and install (10) Corning CCH-01U fiber panels with singlemode LC adapter panels at IDFs.
- Provide and install one (1) Corning CCH-04U fiber panel with singlemode LC adapter panels at the MDF.
- Provide and install (160) singlemode LC terminations.
- Provide and install new fiber optic 1M or 2M singlemode LC/LC patch cables for connections at the MDF & IDFs.
- Install (11) Seller-provided UPS units per the minibid breakdown.
- Install one (1) Seller-provided PDU units per the minibid breakdown.

HARRINGTON ELEMENTARY SCHOOL

- Provide and install one (1) 12F singlemode I/O fiber optic cable link from the MDF out to each of the three (3) IDFs per the minibid breakdown terminated LC/LC at both ends.
- Provide and install three (3) Corning CCH-01U fiber panels with singlemode LC adapter panels at IDFs.
- Provide and install one (1) Corning CCH-04U fiber panel with singlemode LC adapter panels at the MDF.
- Provide and install (48) singlemode LC terminations.
- Provide and install new fiber optic 1M or 2M singlemode LC/LC patch cables for connections at the MDF & IDFs.
- Install eight (8) Seller-provided UPS units per the minibid breakdown.
- Install one (1) Seller-provided PDU units per the minibid breakdown.

KAMALA SCHOOL

- Provide and install one (1) 12F singlemode I/O fiber optic cable link from the MDF out to each of the eight (8) IDFs per the minibid breakdown terminated LC/LC at both ends.
- Provide and install eight (8) Corning CCH-01U fiber panels with singlemode LC adapter panels at IDFs.
- Provide and install one (1) Corning CCH-04U fiber panel with singlemode LC adapter panels at the MDF.
- Provide and install (128) singlemode LC terminations.
- Provide and install new fiber optic 1M or 2M singlemode LC/LC patch cables for connections at the MDF & IDFs.
- Install nine (9) Seller-provided UPS units per the minibid breakdown.
- Install two (2) Seller-provided PDU units per the minibid breakdown.

LEMONWOOD SCHOOL

- Provide and install one (1) 12F singlemode I/O fiber optic cable link from the MDF out to each of the one (1) IDF per the minibid breakdown terminated LC/LC at both ends.
- Provide and install one (1) Corning CCH-01U fiber panels with singlemode LC adapter panels at IDFs.
- Provide and install one (1) Corning CCH-01U fiber panel with singlemode LC adapter panels at the MDF.
- Provide and install (16) singlemode LC terminations.
- Provide and install new fiber optic 1M or 2M singlemode LC/LC patch cables for connections at the MDF & IDFs.
- Install six (6) Seller-provided UPS units per the minibid breakdown.
- Install three (3) Seller-provided PDU units per the minibid breakdown.

DR. MANUEL. M. LOPEZ SCHOOL

- Provide and install one (1) 12F singlemode I/O fiber optic cable link from the MDF out to each of the six (6) IDFs per the minibid breakdown terminated LC/LC at both ends.
- Provide and install six (6) Corning CCH-01U fiber panels with singlemode LC adapter panels at IDFs.
- Provide and install one (1) Corning CCH-04U fiber panel with singlemode LC adapter panels at the MDF.
- Provide and install (96) singlemode LC terminations.
- Provide and install new fiber optic 1M or 2M singlemode LC/LC patch cables for connections at the MDF & IDFs.
- Install seven (7) Seller-provided UPS units per the minibid breakdown.
- Install two (2) Seller-provided PDU units per the minibid breakdown.

MARINA WEST ELEMENTARY SCHOOL

- Provide and install one (1) 12F singlemode I/O fiber optic cable link from the MDF out to each of the six (6) IDFs per the minibid breakdown terminated LC/LC at both ends.
- Provide and install (11) Corning CCH-01U fiber panels with singlemode LC adapter panels at IDFs.
- Provide and install one (1) Corning CCH-04U fiber panel with singlemode LC adapter panels at the MDF.
- Provide and install (96) singlemode LC terminations.
- Provide and install new fiber optic 1M or 2M singlemode LC/LC patch cables for connections at the MDF & IDFs.
- Install seven (7) Seller-provided UPS units per the minibid breakdown.
- Install one (1) Seller-provided PDU units per the minibid breakdown.

MARSHALL SCHOOL

- Provide and install one (1) 12F singlemode I/O fiber optic cable link from the MDF out to each of the eight (8) IDFs per the minibid breakdown terminated LC/LC at both ends.
- Provide and install eight (8) Corning CCH-01U fiber panels with singlemode LC adapter panels at IDFs.
- Provide and install one (1) Corning CCH-04U fiber panel with singlemode LC adapter panels at the MDF.
- Provide and install (128) singlemode LC terminations.
- Provide and install new fiber optic 1M or 2M singlemode LC/LC patch cables for connections at the MDF & IDFs.
- Install nine (9) Seller-provided UPS units per the minibid breakdown.
- Install one (1) Seller-provided PDU units per the minibid breakdown.

CHRISTA MCAULIFFE SCHOOL

- Provide and install one (1) 12F singlemode I/O fiber optic cable link from the MDF out to each of the five (5) IDFs per the minibid breakdown terminated LC/LC at both ends.
- Provide and install five (5) Corning CCH-01U fiber panels with singlemode LC adapter panels at IDFs.
- Provide and install one (1) Corning CCH-04U fiber panel with singlemode LC adapter panels at the MDF.
- Provide and install (80) singlemode LC terminations.
- Provide and install new fiber optic 1M or 2M singlemode LC/LC patch cables for connections at the MDF & IDFs.
- Install six (6) Seller-provided UPS units per the minibid breakdown.
- Install one (1) Seller-provided PDU units per the minibid breakdown.

MCKINNA ELEMENTARY SCHOOL

- Install six (6) Seller-provided UPS units per the minibid breakdown.
- Install three (3) Seller-provided PDU unit per the minibid breakdown.

RAMONA ELEMENTARY SCHOOL

- Provide and install one (1) 12F singlemode I/O fiber optic cable link from the MDF out to each of the seven (7) IDFs per the minibid breakdown terminated LC/LC at both ends.
- Provide and install seven (7) Corning CCH-01U fiber panels with singlemode LC adapter panels at IDFs.
- Provide and install one (1) Corning CCH-04U fiber panel with singlemode LC adapter panels at the MDF.
- Provide and install (112) singlemode LC terminations.
- Provide and install new fiber optic 1M or 2M singlemode LC/LC patch cables for connections at the MDF & IDFs.
- Install eight (8) Seller-provided UPS units per the minibid breakdown.
- Install one (1) Seller-provided PDU units per the minibid breakdown.

RITCHEN ELEMENTARY SCHOOL

- Provide and install one (1) 12F singlemode I/O fiber optic cable link from the MDF out to each of the four (4) IDFs per the minibid breakdown terminated LC/LC at both ends.
- Provide and install four (4) Corning CCH-01U fiber panels with singlemode LC adapter panels at IDFs.
- Provide and install one (1) Corning CCH-04U fiber panel with singlemode LC adapter panels at the MDF.
- Provide and install (64) singlemode LC terminations.
- Provide and install new fiber optic 1M or 2M singlemode LC/LC patch cables for connections at the MDF & IDFs.
- Install five (5) Seller-provided UPS units per the minibid breakdown.
- Install two (2) Seller-provided PDU units per the minibid breakdown.

ROSE AVENUE ELEMENTARY

- Install five (5) Seller-provided UPS units per the minibid breakdown.
- Install two (2) Seller-provided PDU unit per the minibid breakdown.

SIERRA LINDA ELEMENTARY SCHOOL

- Provide and install one (1) 12F singlemode I/O fiber optic cable link from the MDF out to each of the seven (7) IDFs per the minibid breakdown terminated LC/LC at both ends.
- Provide and install seven (7) Corning CCH-01U fiber panels with singlemode LC adapter panels at IDFs.
- Provide and install one (1) Corning CCH-04U fiber panel with singlemode LC adapter panels at the MDF.
- Provide and install (112) singlemode LC terminations.
- Provide and install new fiber optic 1M or 2M singlemode LC/LC patch cables for connections at the MDF & IDFs.
- Install eight (8) Seller-provided UPS units per the minibid breakdown.
- Install two (2) Seller-provided PDU units per the minibid breakdown.

SORIA SCHOOL

- Provide and install one (1) 12F singlemode I/O fiber optic cable link from the MDF out to each of the six (6) IDFs per the minibid breakdown terminated LC/LC at both ends.
- Provide and install six (6) Corning CCH-01U fiber panels with singlemode LC adapter panels at IDFs.
- Provide and install one (1) Corning CCH-04U fiber panel with singlemode LC adapter panels at the MDF.
- Provide and install (96) singlemode LC terminations.
- Provide and install new fiber optic 1M or 2M singlemode LC/LC patch cables for connections at the MDF & IDFs.
- Install seven (7) Seller-provided UPS units per the minibid breakdown.
- Install two (2) Seller-provided PDU units per the minibid breakdown.

SAN MIGUEL PRESCHOOL

- Provide and install one (1) 12F singlemode I/O fiber optic cable link from the MDF out to each of the four (4) IDFs per the minibid breakdown terminated LC/LC at both ends.
- Provide and install four (4) Corning CCH-01U fiber panels with singlemode LC adapter panels at IDFs.
- Provide and install one (1) Corning CCH-04U fiber panel with singlemode LC adapter panels at the MDF.
- Provide and install (64) singlemode LC terminations
- Provide and install new fiber optic 1M or 2M singlemode LC/LC patch cables for connections at the MDF & IDFs.
- Install four (4) Seller-provided UPS units per the minibid breakdown.

DATACENTER

DECOM

- Remove and properly dispose of exiting UPS systems as per jobwalk.
- Remove and properly dispose of existing PDUs as requested.

ELECTRICAL

- Install one (1) new UPS system with one (1) additional external battery cabinet.
- Install one (1) wall mounted maintenance bypass cabinet for new UPS system.
- Provide and install one (1) 120/208v 3-phase dedicated circuit to new UPS Maintenance Bypass Cabinet (MBC) from utility generator backed up distribution panel located in server room as per jobwalk.
- Provide and install one (1) 120/208v dedicated circuit from new MBC to new UPS system power input.
- Provide and install one (1) 120/208v dedicated circuit from new UPS system output circuit to MBC.
- Provide and install one (1) 120/208v dedicated circuit from new MBC to new UPS distribution panel.
- Provide and install one (1) UPS power distribution panel “UPS1-D1” 120/208v 3-phase with 42 branch circuits.
- Provide and install eight (8) dedicated 30A 120/208v 3-phase circuits to four (4) existing server/equipment racks for new metered PDUs.
- Install eight (8) new meter PDUs as per jobwalk.
- Assist with factory for start-up of new UPS system.
- Remove and properly dispose of one (1) existing Cummin ATS display.
- Provide and install one (1) new Cummins ATS display.

- Provide programming for new Cummins ATS display.
- Check and test ATS for proper operation and provide report with cost for any repairs needed.

LADDER RACKING AND FIBER CROSS CONNECTS

- Provide and install 12” wide ladder rack for fiber cables.
- Provide and install one (1) 24 strand Single-Mode (SM) fiber cable with LC/LC ends including patch panels on both sides between new Rack 1 and Rack 2.
- Provide and install one (1) 24 strand Single-Mode (SM) fiber cable with LC/LC ends including patch panels on both sides between new Rack 1 and Rack 3.
- Provide and install one (1) 24 strand Single-Mode (SM) fiber cable with LC/LC ends including patch panels on both sides between new Rack 1 and Rack 4.
- Provide and install one (1) 24 strand Multi-Mode (MM) fiber cable with LC/LC ends including patch panels on both sides between new Rack 1 and Rack 2.
- Provide and install one (1) 24 strand Multi-Mode (MM) fiber cable with LC/LC ends including patch panels on both sides between new Rack 1 and Rack 3.
- Provide and install one (1) 24 strand Multi-Mode (MM) cable with LC/LC ends including patch panels on both sides between new Rack 1 and Rack 4.

HOT ROW CONTAINMENT SYSTEM

- Install one (1) hot row containment above server racks to lid above as per sketch.
- Install one (1) containment access door as per sketch.

EDUCATION SERVICE CENTER (DISTRICT OFFICE) – INELIGIBLE

- Install eight (8) Seller-provided UPS units per the minibid breakdown.
- Install one (1) Seller-provided PDU units per the minibid breakdown.

OPERATIONS SERVICE CENTER (FACILITIES) – INELIGIBLE

- Provide and install one (1) 12F singlemode I/O fiber optic cable link from the MDF out to each of the two (2) IDFs per the minibid breakdown terminated LC/LC at both ends.
- Provide and install two (2) Corning CCH-01U fiber panels with singlemode LC adapter panels at IDFs.
- Provide and install one (1) Corning CCH-04U fiber panel with singlemode LC adapter panels at the MDF.
- Provide and install (32) singlemode LC terminations.
- Provide and install new fiber optic 1M or 2M singlemode LC/LC patch cables for connections at the MDF & IDFss.
- Install two (2) Seller-provided UPS units per the minibid breakdown.

WAREHOUSE – INELIGIBLE

- Provide and install one (1) 12F singlemode I/O fiber optic cable link from the MDF out to each of the one (1) IDFs per the minibid breakdown terminated LC/LC at both ends.
- Provide and install one (1) Corning CCH-01U fiber panels with singlemode LC adapter panels at IDFs.
- Provide and install one (1) Corning CCH-04U fiber panel with singlemode LC adapter panels at the MDF.
- Provide and install (32) singlemode LC terminations.
- Provide and install new fiber optic 1M or 2M singlemode LC/LC patch cables for connections at the MDF & IDFs.
- Install one (1) Seller-provided UPS units per the minibid breakdown.

PROJECT ASSUMPTIONS

ALL SITES EXCEPT ‘DATACENTER’

1. All work will be from 6AM–6PM Monday through Friday during school breaks or 3PM-11:30PM Monday through Friday while school is in session.
2. Any weekend or holiday work required will be an additional labor charge.

3. Partner will be given timely access to all work areas or issued contractor keys to avoid standby or wait time.
4. Use all existing conduit pathways, any new conduit work if needed would be an additional charge.
5. Partner will remove the existing UPS gear from IDFs and MDFs, provide a list of serial numbers and asset tags for all removed UPS equipment, and relocated removed UPS gear to the Education Service Center (District Office) to stage for Customer's eWaste Provider.
6. Partner will supply a storage container, and a trash container, to be placed at the Education Service Center (District Office) for the purposes of this project. Customer is to designate a location at the Education Service Center (District Office) where both the storage container and trash container can be placed.

DATACENTER

1. After-hour labor is included (excluding holidays and holiday weekends).
2. Prevailing wage.
3. Leave jobsite clean and free of debris as related to SOW listed above.

OUT OF SCOPE

DATACENTER

1. Permits, plan check and drawings.
2. Any/All data wire for networking or monitoring and related work other than listed in scope above.
3. Any/All build DDC/ABS connections/programming and related work other than listed in scope above.
4. Any/All fire alarm/smoke detectors and related work other than listed in scope above.
5. All and any drywall, patching and painting other than listing in scope above.
6. All Structural Engineering stamp set of plans.
7. Structural Engineering Recommendation.
8. Holiday or Holiday Weekend Labor.
9. Any/All fire sprinkler work and related work.
10. Any/All Preventative Maintenance Contracts.
11. Any/All existing building issues related to this project.

Services not specified in this SOW are considered out of scope and will be addressed with a separate SOW or Change Order.

GENERAL RESPONSIBILITIES AND ASSUMPTIONS

- Customer is responsible for providing all access that is reasonably necessary to assist and accommodate Seller's performance of the Services.
- Customer will provide in advance and in writing and Seller will follow, all applicable Customer's facility's safety and security rules and procedures.
- Customer is responsible for security at all Customer-Designated Locations; Seller is not responsible for lost or stolen equipment, other than solely as a result of Seller's gross negligence and willful misconduct.
- Customer acknowledges that in order to efficiently and effectively perform the Services CDW may need to collect information from Customer's systems by using software tools developed or used by CDW ("Tools"). In some cases, these Tools will need to be loaded onto the Customer's systems to gather necessary information, and CDW may also use them to make changes in the Customer's systems consistent with the agreed upon scope. Tools will be used only for purposes of performing the Services and will be removed or automatically deleted when CDW has completed use of them. Customer hereby consents to CDW's use of the Tools as set forth in this paragraph.
- Upon completion of the Services, Customer is responsible for disabling or deleting all CDW coworker access credentials and completing any other necessary steps to ensure that access to all of Customer's environments has been permanently terminated for all CDW coworkers and contractors that were part of this engagement.
- This SOW can be terminated by either party without cause upon at least fourteen (14) days' advance written notice.

PROJECT MANAGEMENT

Seller will assign a project management resource to perform the following activities during the project:

1. **Kickoff Meeting**
   - Coordinate and facilitate kickoff meeting
   - Review SOW including project objectives, schedule, and logistics
   - Identify and confirm project participants
   - Discuss project prerequisites
   - Create and distribute escalation and contact lists
2. **Project Schedule or Plan**
   - Create a project plan that details the schedule and resources assigned to the project. The schedule should align with the estimated project duration as established in the Project Scheduling section.
   - Monitor project scope and expectations
   - Identify and manage project risks
   - Monitor the status and progress of the project and the quality of items provided
   - Communicate at regular intervals as agreed upon
   - Ensure project timelines, dependencies, budgets, and closure are met within the project lifecycle
3. **Status Meetings and Reports**
   - Status meetings will be conducted on a regular cadence schedule to proactively identify any issues that may arise in order to mitigate risk
   - Scheduling will be based on agreement with stakeholders, the estimated project duration, and budget available
   - Seller and Customer will discuss action items, tasks completed, tasks outstanding, risks, issues, key decisions, and conduct a budget review
   - The project management resource will document and distribute meeting notes and/or action items for all meetings, and will act as the main POC to Customer, if requested
4. **Change Management**
   - When a change to a project occurs, the Seller's project change control process will be utilized
   - The project management resource will facilitate any necessary change order(s) and administrative task(s) as necessary
5. **Project Closure**
   - Once verbal scope completion is confirmed, a written Project Closure Acceptance will be provided for client to formally acknowledge
   - If desired, the project team will meet to recap, answer any questions, and address project transition activities and next steps

CONTACT PERSONS

Each Party will appoint a person to act as that Party's point of contact ("**Contact Person**") as the time for performance nears and will communicate that person's name and information to the other Party's Contact Person.

Customer Contact Person is authorized to approve materials and Services provided by Seller, and Seller may rely on the decisions and approvals made by the Customer Contact Person (except that Seller understands that Customer may require a different person to sign any Change Orders amending this SOW). The Customer Contact Person will manage all communications with Seller, and when Services are performed at a Customer-Designated Location, the Customer Contact

Person will be present or available. The Parties' Contact Persons shall be authorized to approve changes in personnel and associated rates for Services under this SOW.

CHANGE MANAGEMENT

This SOW may be modified or amended only in a writing signed by both Customer and Seller, generally in the form provided by Seller ("**Change Order**"). Services not specified in this SOW are considered out of scope and will be addressed with a separate SOW or Change Order.

In the event of a conflict between the terms and conditions set forth in a fully executed Change Order and those set forth in this SOW or a prior fully executed Change Order, the terms and conditions of the most recent fully executed Change Order shall prevail.

PROJECT SCHEDULING

Customer and Seller, who will jointly manage this project, will together develop timelines for an anticipated schedule ("**Anticipated Schedule**") based on Seller's project management methodology. Any dates, deadlines, timelines or schedules contained in the Anticipated Schedule, in this SOW or otherwise, are estimates only, and the Parties will not rely on them for purposes other than initial planning.

The following scheduling scenarios that trigger delays and durations to extend beyond what's been planned may require a Change Order:

- Site preparation, such as power, cabling, physical access, system access, hardware/software issues, etc. must be completed in a timely manner.
- Project tasks delegated to Customer PMs/Engineers/Techs/Management/Resources must be completed in a timely manner. For example, in the event a project 's prioritization is demoted, and Customer resources are reallocated causing the project's schedule to extend on account of experiencing interruptions to its momentum requiring complete stop(s) and start(s).
- External projects/dependencies that may have significant impact on the timeline, schedule and deliverables. It is Seller's assumption that every reasonable attempt will be made to mitigate such situations.

TOTAL FEES

The total fees due and payable under this SOW ("**Total Fees**") include both fees for Seller's performance of work ("**Services Fees**") and any other related costs and fees specified in the Expenses section ("**Expenses**").

Seller will invoice for Total Fees. Customer will pay invoices containing amounts authorized by this SOW in accordance with the terms of the Agreement. Unless otherwise specified, taxes will be invoiced but are not included in any numbers or calculations provided herein. The pricing included in this SOW expires and will be of no force or effect unless it is signed by Customer and Seller within thirty (30) days from the Date listed on the SOW, except as otherwise agreed by Seller. Any objections to an invoice must be communicated to the Seller Contact Person within fifteen (15) days after receipt of the invoice.

This SOW may include multiple types of Services Fees; please reference below Services Fees section(s) for further details.

SERVICES FEES

Services Fees hereunder are FIXED FEES, meaning that the amount invoiced for the Services will be $874,923.00.

The invoiced amount of Services Fees will equal the amount of fees applicable to each completed project milestone (see Table below).

Milestone	Percentage	Fee
Project Kickoff – Brekke Elementary School	0.40%	$3,504.00
Completion of Work – Brekke Elementary School	0.90%	$7,841.00
Project Kickoff – Cesar Chavez School	1.02%	$8,919.00
Completion of Work – Cesar Chavez School	1.99%	$17,368.00
Project Kickoff – Curren School	1.72%	$15,076.00
Completion of Work – Curren School	3.46%	$30,301.00
Project Kickoff – Driffill School	2.21%	$19,328.00
Completion of Work – Driffill School	4.46%	$39,004.00
Project Kickoff – Elm Elementary School	0.01%	$81.00
Completion of Work – Elm Elementary School	0.07%	$641.00
Project Kickoff – R.J. Frank Academy	2.75%	$24,058.00
Completion of Work – R.J. Frank Academy	5.47%	$47,815.00
Project Kickoff – Fremont Academy	2.62%	$22,949.00
Completion of Work – Fremont Academy	5.08%	$44,475.00
Project Kickoff – Harrington Elementary School	1.00%	$8,773.00
Completion of Work – Harrington Elementary School	1.75%	$15,348.00
Project Kickoff – Kamala School	2.07%	$18,134.00
Completion of Work – Kamala School	4.05%	$35,421.00
Project Kickoff – Lemonwood School	0.31%	$2,672.00
Completion of Work – Lemonwood School	0.59%	$5,144.00
Project Kickoff – Dr. Manuel M. Lopez School	1.59%	$13,936.00
Completion of Work – Dr. Manuel M. Lopez School	3.07%	$26,886.00
Project Kickoff – Marina West Elementary School	1.67%	$14,570.00
Completion of Work – Marina West Elementary School	3.14%	$27,442.00
Project Kickoff – Marshall School	2.07%	$18,118.00
Completion of Work – Marshall School	4.04%	$35,384.00
Project Kickoff – Christa McAuliffe School	1.24%	$10,862.00
Completion of Work – Christa McAuliffe School	2.48%	$21,728.00
Project Kickoff – McKinna Elementary School	0.01%	$81.00
Completion of Work – McKinna Elementary School	0.09%	$748.00

Milestone	Percentage	Fee
Project Kickoff – Ramona Elementary School	1.50%	$13,094.00
Completion of Work – Ramona Elementary School	3.25%	$28,446.00
Project Kickoff – Ritchen Elementary School	1.94%	$7,958.00
Completion of Work – Ritchen Elementary School	0.01%	$16,967.00
Project Kickoff – Rose Avenue Elementary	0.07%	$81.00
Completion of Work – Rose Avenue Elementary	1.94%	$641.00
Project Kickoff – Sierra Linda Elementary School	3.66%	$17,009.00
Completion of Work – Sierra Linda Elementary School	1.59%	$32,044.00
Project Kickoff – Soria School	3.07%	$13,936.00
Completion of Work – Soria School	1.11%	$26,886.00
Project Kickoff – San Miguel Preschool	2.08%	$9,681.00
Completion of Work – San Miguel Preschool	4.28%	$18,220.00
Project Kickoff – Datacenter	9.99%	$37,424.88
Completion of Work – Datacenter	0.40%	$87,326.62
Project Kickoff – Education Service Center (District Office) – Ineligible	0.52%	$3,497.00
Completion of Work – Education Service Center (District Office) – Ineligible	0.54%	$4,578.00
Project Kickoff – Operations Service Center (Facilities) – Ineligible	1.02%	$4,722.00
Completion of Work – Operation Service Center (Facilities) – Ineligible	0.27%	$8,910.00
Project Kickoff – Warehouse – Ineligible	0.52%	$2,385.05
Completion of Work – Warehouse – Ineligible	1.94%	$4,509.45
Totals	**100%**	**$874,923.00**

EXPENSES

Neither travel time nor direct expenses will be billed for this project.

TRAVEL NOTICE

Two (2) weeks' advance notice from Customer is required for any necessary travel by Seller personnel.

CUSTOMER-DESIGNATED LOCATIONS

Seller will provide Services benefiting the following locations ("**Customer-Designated Locations**")

Location	Address
Brekke Elementary School	1400 Martin Luther King Junior Drive, Oxnard, CA 93030
Cesar Chavez School	301 North Marquita Street, Oxnard, CA 93030
Curren School	1101 North F Street, Oxnard, CA 93030
Driffill School	901 South E Street, Oxnard, CA 93030
Elm Elementary School	450 East Elm Street, Oxnard, CA 93033
R.J. Frank Academy	701 North Juanita Avenue, Oxnard, CA 93030
Fremont Academy	1130 North M Street, Oxnard, CA 93030
Harrington Elementary School	451 East Olive Street, Oxnard, CA 93033
Kamala School	634 West Kamala Street, Oxnard, CA 93033
Lemonwood School	2001 San Mateo Place, Oxnard, CA 93033
Dr. Manuel M. Lopez School	647 West Hill Street, Oxnard, CA 93033
Marina West Elementary School	2501 Carob Street, Oxnard, CA 93035
Marshall School	2900 Thurgood Marshall Drive, Oxnard, CA 93035
Christa McAuliffe School	3300 West Via Marina Avenue, Oxnard, CA 93035
McKinna Elementary School	1600 South North Street, Oxnard, CA 93033
Ramona Elementary School	804 Cooper Road, Oxnard, CA 93030
Ritchen Elementary School	2200 Cabrillo Way, Oxnard, CA 93030
Rose Avenue Elementary	220 South Driskill Street, Oxnard, CA 93030
Sierra Linda Elementary School	2201 Jasmine Street, Oxnard, CA 93036
Soria School	3101 Dunkirk Drive, Oxnard, CA 93035
San Miguel Preschool	2400 South J Street, Oxnard, CA 93033
Oxnard School District - Datacenter	1051 South A Street, Oxnard, CA 93030
Oxnard School District - Education Service Center (District Office) - Ineligible	1051 South A Street, Oxnard, CA 93030
Oxnard School District - Operations Service Center (Facilities) - Ineligible	1055 South C Street, Oxnard, CA 93030
Oxnard School District - Warehouse - Ineligible	514 West Wooley Road, Oxnard, CA 93030
Oxnard School District C/O Valley Wide Air Corporation	3231 Grande Vista Drive, Newbury Park, CA 91302
Oxnard School District C/O Empire Cabling Incorporated	5158 Goldman Avenue, Unit F, Moorpark, CA 93021

SIGNATURES

In acknowledgement that the parties below have read and understood this Statement of Work and agree to be bound by it, each party has caused this Statement of Work to be signed and transferred by its respective authorized representative.

This SOW and any Change Order may be signed in separate counterparts, each of which shall be deemed an original and all of which together will be deemed to be one original. Electronic signatures on this SOW or on any Change Order (or copies of signatures sent via electronic means) are the equivalent of handwritten signatures.

CDW Government LLC	**OXNARD SCHOOL DISTRICT**
By: _____	By: _____
Name: Dario Bertocchi	Name: _____
Title: VP Contracting Operations	Title: _____
Date: _____	Date: _____
Mailing Address:	Mailing Address:
200 N. Milwaukee Ave.	1051 S A ST, ACCTS PAYABLE
Vernon Hills, IL 60061	OXNARD, CA 93030-7442

CDW Government Overview

QUICK FACTS

HQ	Vernon Hills, IL
2024 Net Sales	$21B
Coworkers	15,100
U.S. Offices	43
Customers	250,000+
Fortune 500 Rank	189

CDW Government LLC (CDW•G) is the wholly owned subsidiary of CDW LLC, a leading multi-brand technology solutions provider to corporate and public sector customers in the U.S., U.K., and Canada. Founded in 1984, CDW currently employs 15,100 coworkers worldwide. Our broad array of offerings ranges from discrete hardware and software products to integrated IT solutions. We provide our products and solutions through our sales and service delivery teams, who are broken down by segment, and further organized into geographic regions. We have an expansive network of offices near major cities and a large team of customer-facing coworkers - including field sellers, technology specialists, and advanced delivery engineers - across the country.

Products and Partnerships	Total E-Rate Solutions
More than 100,000 products from more than 1,000 vendors including leading networking OEMs such as: APC, Cisco, Cradlepoint, Extreme, Fortinet, HP Aruba, IBM, Juniper, Kajeet, Leibert, Palo Alto, Rukus, and more.	▪ **Category One** ○ Bus Wi-Fi ○ Wireless Hot Spots ▪ **Category Two** ○ Internal Connections ○ Basic Maintenance of Internal Connections ○ Managed Internal Broadband Services

Our sustainable growth and continued financial stability serve to assure Oxnard School District that we are here to stay and can support you through the life of this contract and beyond. Of note, CDW is number four on CRN's 2023 Solution Provider 500 list that ranks the top integrators, service providers, and IT consultants in North America by services revenue.

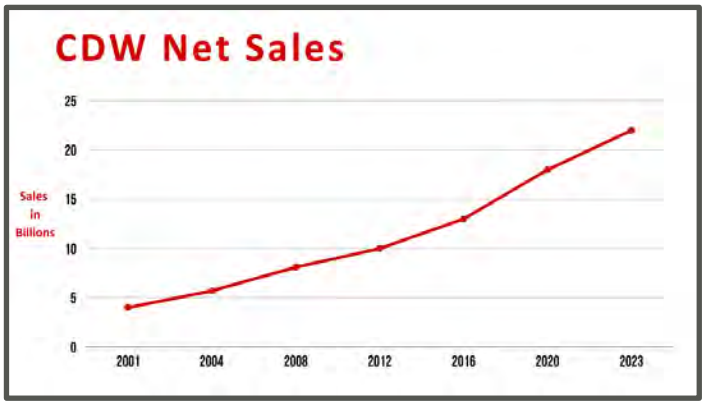

K-12 Education Expertise

CDW•G helps schools leverage technology to achieve great educational outcomes. With more than 200 government and education contracts, we are one of the nation's largest direct-response providers of multi-brand technology products and services. For more than 30 years, we have closely monitored emerging technologies to ensure our solutions are at the forefront of innovation. We proactively expand our offerings and certifications to support your evolving needs. We invest in the solutions that matter most to you, like classroom transformation, device ecosystem, cybersecurity, AI, and school safety.

We are a trusted technology partner to more than 15,000 K-12 schools.

Resources - Education Strategy Team

Education Strategists work with you to understand your district's vision and goals to create customized solutions that improve teaching and learning.

Classroom Modernization Specialists, focused on audiovisual solutions and classroom design, can support you through trainings, consultative calls, webinars, and more.

We guide customers through decisions on the platforms that run your districts and drive transformation. We have dedicated in-house technical resources aligned to K-12 solution areas to help you better understand and integrate technology into your educational goals. Our K-12 Education Strategy Team – comprised of former leaders in education – support districts in implementing digitally-enhanced education and can help you develop a vision for lasting change.

We are a premier provider of Chromebooks to K-12 schools in the U.S.

In 2023, CDW•G deployed 1 out of every 3 Chromebooks into K-12 classrooms in the U.S. for a total of 2.5 million devices. We can support your full device lifecycle management needs and have experience handling complex deployments for the largest school districts in the country, even in adverse conditions.

A Partner You Can Trust – Even in Adverse Conditions

During a time of significant supply chain constraints, CDW•G delivered. One of the largest school districts in the country, Chicago Public Schools (CPS), relies on CDW Education to provide their students with Chromebooks. Like so many other districts across the nation, CPS needed to pivot to distance learning with the onset of COVID-19. To serve the needs of nearly 330,000 students, CPS required 1,000s of Chromebooks. Despite worldwide shortages, CDW•G was able to deliver 20,000 devices over four months on-site and on-time.

A Powerful E-Rate Partner

We have nearly 30 years of experience delivering successful outcomes for E-Rate funded projects. Participating in E-Rate since our founding in 1998, we are the largest Category 2 provider nationwide, delivering two-times the amount of Category 2 E-Rate projects than our next closest competitor. Since the E-Rate Modernization in 2015, we have been awarded over 19,550 E-Rate projects totalling over $790M in total equipment delivered to schools throughout the United States.

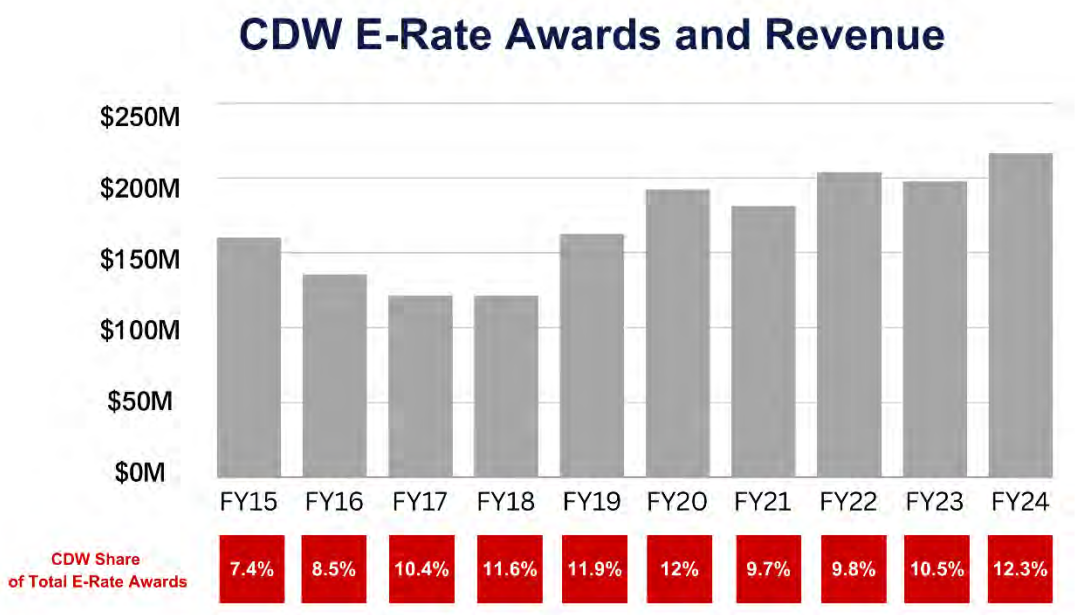

Proven Management Approach

Due to our streamlined and best-practice system of checks and balances, **we have never lost funding for a school,** as substantiated by countless audits. Our dedicated internal K-12 and E-Rate resources help ensure accurate invoicing and contract compliance, as well as provide knowledgeable resources and guidance as you navigate your E-Rate journey.

- **E-Rate Program Management Team** offers knowledge, assistance, and advisement, as well as ensures contract compliance.
- **E-Rate Funding Team** ensures expert handling of both BEAR and SPI E-Rate invoicing by accounts receivable specialists.
- **K-12 Education Strategists** focus on helping you implement solutions attuned to your needs, with realistic budget constraints in mind, often in conjunction with E-Rate funding initiatives.

Strengths, Best Practices, and Value

By aligning with CDW•G, your organization can take advantage of our strengths, best practices, and value-added services.

Inventory Access and In-House Services

A significant advantage we offer Oxnard School District is our ability to deliver the right products, at the right value, right when you need them. CDW has two large, strategically located distribution and configuration centers that ensure speed and accuracy throughout the procurement process. In addition, to supplement our direct purchasing model, CDW has strong affiliations with principal channel distributors, enabling us to quickly obtain competitively priced, non-stocked items.

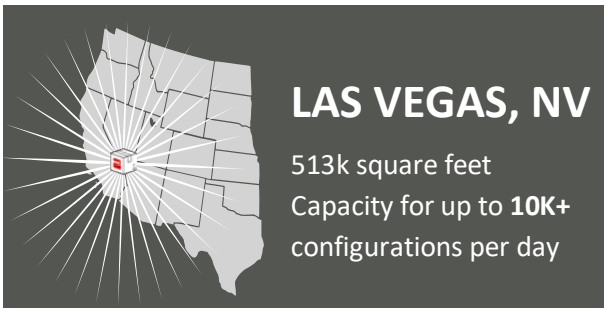

LAS VEGAS, NV

513k square feet
Capacity for up to **10K+** configurations per day

VERNON HILLS, IL

450k square feet
Capacity for up to **10K+** configurations per day

ISO 9001 Quality | ISO 14001 Environment | ISO 20243 Risk Management
ISO 27001 Information Security | ISO 2800 Secure Supply Chain

Support Resources for Oxnard School District

When you work with CDW•G, you have access to expertise that is not available within your organization. Our team of technology experts and dedicated account managers will tailor a piece of equipment or an entire network to deliver the most effective and sustainable results.

Account Management Resources	
Jon Gentile Client Executive (866) 467-9989 jjg@cdwg.com	**Justin Davenport** Executive Account Manager (866) 246-8136 justdav@cdwg.com
Pat Hein Executive Account Manager (866) 642-8073 pathei@cdwg.com	**Tyler Emde** Account Manager Associate (877) 863-2765 tyleemd@cdw.com

E-Rate Program Management and Funding Solutions Team

Our **E-Rate Program Management** team offers eligible entities their knowledge, assistance, and advisement on E-Rate matters, including program compliance and adherence. The team prepares contract deliverable reports and makes modifications, as necessary, including price reductions, additions, discontinued products, replacements, and version changes. They ensure that price and supply agreements are in place from award through completion and that the E-Rate bidding, ordering, invoicing, and funding are all seamless and easy for you to complete.

E-Rate Resources	
Yolanda Blomquist Program Manager – E-Rate 630-531-5478 yolanda.blomquist@cdwg.com	**Jeff Hagen** Manager, Program Management – K12 813-462-4055 jeff.hagen@cdwg.com

Our **Funding Solutions** team, and dedicated Education Funding Solutions Manager, can help E-Rate applicants understand compliance with rules and regulations throughout the process. They advise on the appropriate engagement after Form 470 filings and work with our operations teams to ensure E-Rate ordering, invoicing, and delivery are compliant.

Additionally, our E-Rate Manager assists applicants with PIA reviews, preparation of Bulk Upload Attachments, and product eligibility reviews as part of the Form 471 process.

Additional E-Rate Resources
Dave LeNard, Business Development Manager, E-Rate **Amy Passow,** Senior Manager, Education Funding Solutions **Deb Orts,** Contract Analyst **Kim Klaus,** Account Receivable Consultant

FCC FRN E-Rate Display System Status

The below screen shot is from **January 30th, 2025**. CDW•G remains in **Green Light Status**.

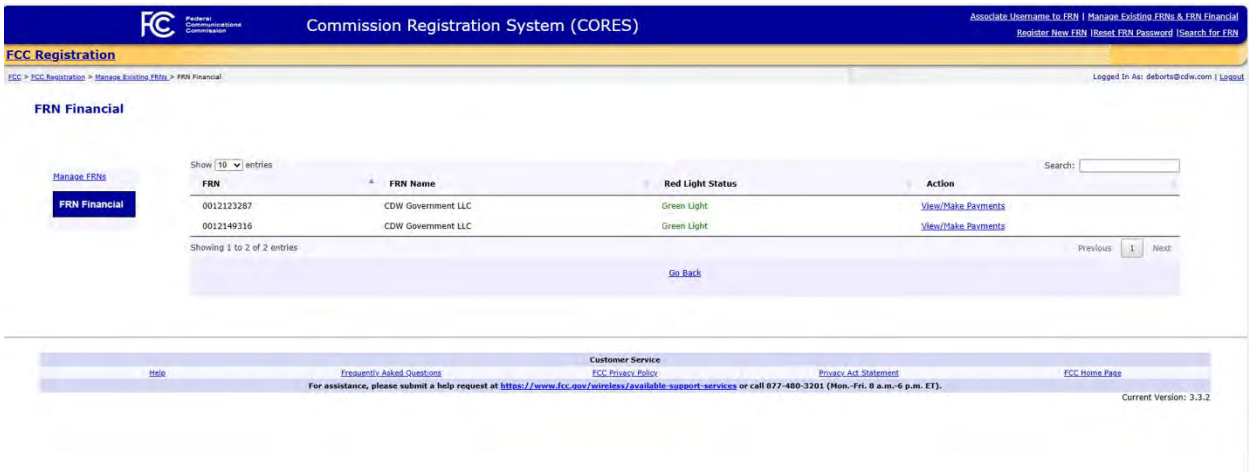

Upon request, CDW•G can provide an updated screenshot.

Spin #143005588

FCC Registration #0012123287

Helpful Hints for Preparing Form 471

Things to consider when preparing your funding request (Form 471):

- Enter only one manufacturer part number per line item (do not bundle part numbers)
  - All software should be requested under IC, Software
- Even when bundled with warranty support from manufacturer for purchase, as long as warranty cannot be purchased on its own
- If you live in a state that has applicable taxes, such as AR, NC, CA, AZ, WA, make sure to include those taxes on your FCC Form 471.
- If warranty can be purchased separately, then it should be separated for funding request, and warranty funding requested under Basic Maintenance
- Warranty only part numbers should be requested under Basic Maintenance
  - List months of service, should only be for coverage July 1 – June 30 (Funding Year)
  - List hardware supported part number
  - List site where hardware sits

CDW•G can complete Bulk Submission Forms if chosen as the service provider for your funding request. Please email E-Rate@cdw.com for assistance.

Additionally, **please note** - upon award, to facilitate contract execution with our countersignature, please sign the enclosed E-Rate agreement and send to **jjg@cdwg.com** and 470award@cdwg.com. Please see “E-Rate Order Process” information on the following page for further details.

E-Rate Order Process

1. **Ordering:** Purchase orders shall be submitted through electronic means (email, EDI, etc.) directly to Customer's dedicated account manager. Alternatively, if a copy must be sent via mail, common courier, etc., please reach out to your account manager for the appropriate mailing address.

2. **Required Information:** All orders must include:
   a. Contact name, Phone number
   b. Purchase order number
   c. Part number, Product description
   d. Pre-discount and discounted product price
   e. Percentage Customer owes and percentage SLD owes (SPI – Form 474 Method)
   f. Ship to location, Bill to location
   g. FCC Form 471 Number (also known as Application Number)
   h. FRN for each part number
   i. Billing method (BEAR – Form 472 or SPI – Form 474)
   j. "Net 30 Terms"

   SEPARATE PURCHASE ORDERS SHOULD BE SUBMITTED FOR PRODUCTS THAT ARE NOT ELIGIBLE FOR E- RATE FUNDING. ALL ORDERS ARE SUBJECT TO ACCEPTANCE BY SELLER. PO TOTAL SHOULD REFLECT FULL PURCHASE PRICE OF ORDER.

3. **Assistance With Order:** Customer may call 1-800-328-4239 for assistance on any purchase order. Any terms or conditions stated in or on the Customer's purchase order which are not consistent with or in addition to the terms and conditions in this Agreement or the Product Sales Terms and Conditions shall be null and void and shall not be applicable hereto or binding on Seller.

   IN THE CASE OF CHANGES TO PRODUCTS AFTER A CUSTOMER ORDER HAS BEEN ACCEPTED BUT BEFORE THE PRODUCT HAS SHIPPED, SELLER WILL MAKE REASONABLE EFFORTS TO MAKE AVAILABLE TO THE CUSTOMER A COMPARABLE

OR BETTER PRODUCT AT THE SAME OR LESSER PRICE WHEN OR IF AVAILABLE, UPON APPROVAL FROM SLD ON PRODUCT SUBSTITUTION.

4. **Price and Payment Terms**

a. **Price**

Price shall be as stated in the quotation attached hereto as Exhibit I by CDW-G account manager. Prices are exclusive of federal, state, local, or other taxes, which shall be the responsibility of the Customer. Any taxes will be listed separately on the invoice.

b. **Payment Terms (Customer must choose one)**

i. **Form 474 Service Provider Invoice (SPI) Method**

- Seller will invoice Customer for their portion of the Products upon shipment of Product and Customer shall pay the invoiced amount (discounted amount owed by Customer) within thirty (30) days from date of invoice

ii. **Form 472 BEAR Method**

- Seller will invoice Customer for pre-discount portion of the Products upon shipment of Product and Customer shall pay the invoiced amount (full amount owed by Customer) within thirty (30) days from the date of invoice.

5. **Payment Method:** In adherence to Federal E-Rate compliance regulations, CDW-G's quoted price is all-inclusive of any and all discounts, if applicable. No further discounts will be applied during time of invoice. All payments for both methods shall be submitted to the address presented below WHERE APPLICABLE:

ACH PAYMENT INFORMATION:	CHECK PAYMENT INFORMATION:
E-mail Remittance To: gachremittance@cdw.com	CDW Government
THE NORTHERN TRUST	75 Remittance Drive Suite 1515
50 SOUTH LASALLE STREET	Chicago, IL 60675-1515
CHICAGO, IL 60675	
ROUTING NO.: 071000152	
ACCOUNT NAME: CDW GOVERNMENT	
ACCOUNT NO.: 91057	

i. Payment terms are subject to continuing credit approval by Seller. Seller may change credit or payment terms at any time when, in Seller's opinion, Customer's financial condition, previous payment record, or the nature of Customer's relationship with Seller so warrants.

ii. Seller may discontinue performance under this Agreement (i) if Customer fails to pay any sum when due under this Agreement or any other agreement with Seller until payment is received or (ii) if Customer is in violation of applicable regulations.

NOTWITHSTANDING ANYTHING TO THE CONTRARY, CUSTOMER IS RESPONSIBLE FOR PAYMENT OF 100% THE PRICE OF PRODUCTS IN THE CASE WHERE CUSTOMER PLACES ORDER FOR PRODUCTS SLD DISALLOWS CUSTOMER'S REQUEST FOR DISCOUNT AND REFUSES PAYMENT TO SELLER OF THE DISCOUNT AMOUNT FOR PRODUCTS. IF SLD DISALLOWS CUSTOMER'S REQUEST FOR DISCOUNT CUSTOMER IS IN NO WAY REQUIRED TO PLACE ORDER FOR PRODUCTS.

Appendix

Proline 10302-PRO (Comparable/compatible to Extreme 10302) --- Page 201-206
Proline FAQ Documentation and Warranty --- Page 207-213
Fiber Material Cutsheet and Warranty --- Page 214-218
Vertiv GXT5 VRLA (Lead Acid) UPS Cutsheet and Warranty --- Page 219-232
Vertiv GXT5LI Lithium-ion UPS Cutsheet and Warranty --- Page 233-246
Vertiv EXS V-Models Three Phase Datacenter UPS Cutsheet and Warranty --- Page 247-262
Vertiv Geist rPDU VP8665 Datacenter PDU Cutsheet and Warranty --- Page 263-265
Proposed Datacenter Layout --- Page 266
Proposed Datacenter Fiber Interconnect Diagram --- Page 267
Proposed Datacenter Hot Aisle Containment/Rack/UPS Layout Rendering --- Page 268
CPI ZetaFrame Cabinets, Hot Aisle Containment, and Accessories for Datacenter Cutsheets --- Page 269-303
CPI Cube-IT Wallmount Enclosure Cutsheets --- Page 304-306
CPI Thinline II Vertical Wallmount Enclosure Cutsheet --- Page 307
CPI Cub-IT Floor-Supported/Wallmount Enclosure Cutsheet --- Page 308

10302-PRO

Extreme Networks® 10302 Compatible TAA Compliant 10GBase-LR SFP+ Transceiver (SMF, 1310nm, 10km, DOM, 0 to 70C, LC)

Features

- SFF-8432 and SFF-8472 Compliance
- Uncooled DFB transmitter and PIN receiver
- Duplex LC Connector
- Commercial Temperature 0 to 70 Celsius
- Single-mode Fiber
- Hot Pluggable
- Excellent ESD Protection
- Metal with Lower EMI
- RoHS Compliant and Lead Free

Applications:

- 10GBase-LR Ethernet
- 8x/10x Fibre Channel
- Access, Datacenter and Enterprise
- Mobile Fronthaul CPRI/OBSAI

Product Description

This Extreme Networks® 10302 compatible SFP+ transceiver provides 10GBase-LR throughput up to 10km over single-mode fiber (SMF) using a wavelength of 1310nm via an LC connector. It is guaranteed to be 100% compatible with the equivalent Extreme Networks® transceiver. This easy to install, hot swappable transceiver has been programmed, uniquely serialized and data-traffic and application tested to ensure that it will initialize and perform identically. Digital optical monitoring (DOM) support is also present to allow access to real-time operating parameters. This transceiver is Trade Agreements Act (TAA) compliant. We stand behind the quality of our products and proudly offer a limited lifetime warranty.

Proline's transceivers are RoHS compliant and lead-free.

TAA refers to the Trade Agreements Act (19 U.S.C. & 2501-2581), which is intended to foster fair and open international trade. TAA requires that the U.S. Government may acquire only "U.S. – made or designated country end products.

Rev. 031924

Absolute Maximum Ratings

Parameter	Symbol	Min.	Max.	Unit
Maximum Supply Voltage	Vcc	-0.5	4.0	V
Storage Temperature	TS	-40	85	°C
Operating Case Temperature	Tc	0	70	°C
Operating Humidity	RH	5	85	%
Receiver Power	R_{MAX}		0.5	dBm
Maximum Bitrate	B_{max}		11.3	Gbps

Electrical Characteristics (TOP=25°C, Vcc=3.3Volts)

Parameter	Symbol	Min.	Typ.	Max.	Unit	Notes
Power Supply Voltage	Vcc	3.15	3.30	3.43	V	
Power Supply Current	Icc			303	mA	
Power Consumption	P_{DISS}			1	W	
Transmitter						
Differential data input swing	Vin,pp	120		850	mV	
Input differential impedance	Zin	80	100	120	Ω	
Receiver						
Differential data output swing	Vout, pp	300		850	mV	
Output differential impedance	Zin	80	100	120	Ω	

Optical Characteristics

Parameter	Symbol	Min.	Typ.	Max.	Unit	Notes
Transmitter						
Optical Power (average)	P_{AVE}	-8.2		0.5	dBm	1
Optical Modulation amplitude (OMA)	POMA	-5.2			dBm	
Optical Extinction Ratio	ER	3.5			dB	
Optical Wavelength	Tλ	1260	1310	1355	nm	
Insertion loss	IL		0.6			
Receiver						
Receiver Sensitivity (average)	R_{AVE}			-14.4	dBm	3
Receiver Sensitivity (OMA)	R_{OMA}			-12.6		2
Receiver overload	P_{max}	0.5			dBm	4
Receiver wavelength	Rλ	1260		1565	nm	

Notes:

1. Coupled into a Single-mode fibre
2. Per IEEE 802.3ae specification
3. Average power, back-to-back, @10.31Gbps, BER $1E^{-12}$, PRBS 2^{31}-1.
4. Exceeding the Receiver overload can physically damage the module. Please use appropriate attenuation.

Pin Descriptions

Pin	Symbol	Name/Descriptions	Ref.
1	VeeT	Transmitter Ground (Common with Receiver Ground).	1
2	TX Fault	Transmitter Fault. LVTTL-O	2
3	TX Disable	Transmitter Disable. Laser output disabled on high or open. LVTT-I.	3
4	SDA	2-Wire Serial Interface Data Line (Same as MOD-DEF2 in INF-8074i). LVTTL-I/O.	
5	SCL	2-Wire Serial Interface Data Line (Same as MOD-DEF2 in INF-8074i). LVTTL-I.	
6	MOD_ABS	Module Absent, Connect to VeeT or VeeR in Module.	4
7	RS0	Rate Select 0. Not used	5
8	LOS	Loss of Signal indication. Logic 0 indicates normal operation. LVTTL-O.	2
9	RS1	Rate Select 1. Not used	5
10	VeeR	Receiver Ground (Common with Transmitter Ground).	1
11	VeeR	Receiver Ground (Common with Transmitter Ground).	1
12	RD-	Receiver Inverted DATA out. AC Coupled. CML-O.	
13	RD+	Receiver Non-inverted DATA out. AC Coupled. CML-O.	
14	VeeR	Receiver Ground (Common with Transmitter Ground).	1
15	VccR	Receiver Power Supply.	
16	VccT	Transmitter Power Supply.	
17	VeeT	Transmitter Ground (Common with Receiver Ground).	1
18	TD+	Transmitter Non-Inverted DATA in. AC Coupled. CML-I.	
19	TD-	Transmitter Inverted DATA in. AC Coupled. CML-O.	
20	VeeT	Transmitter Ground (Common with Receiver Ground).	1

Notes:

1. The module signal ground contacts, VeeR and VeeT, should be isolated from the module case.
2. This contact is an open collector/drain output and should be pulled up to the Vcc_Host with resister in the range 4.7KΩ to 10KΩ. Pull ups can be connected to one or several power supplies, however the host board design shall ensure that no module contract has voltage exceeding module VccT/R +0.5.V.
3. Tx_Disable is an input contact with a 4.7KΩ to 10KΩ pull-up resistor to VccT inside module.
4. Mod_ABS is connected to VeeT or VeeR in the SFP+ module. The host may pull the contract up to

Vcc_Host with a resistor in the range from 4.7KΩ to 10KΩ. Mod_ABS is asserted “High” when the SFP+ module is physically absent from a host slot.

5. Internally pulled down per SFF-8431

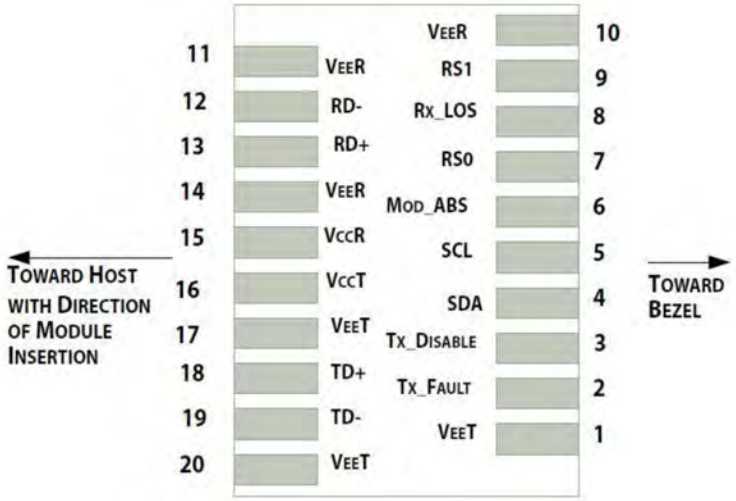

Pin-out of connector Block on Host board

Recommended Circuit Schematic

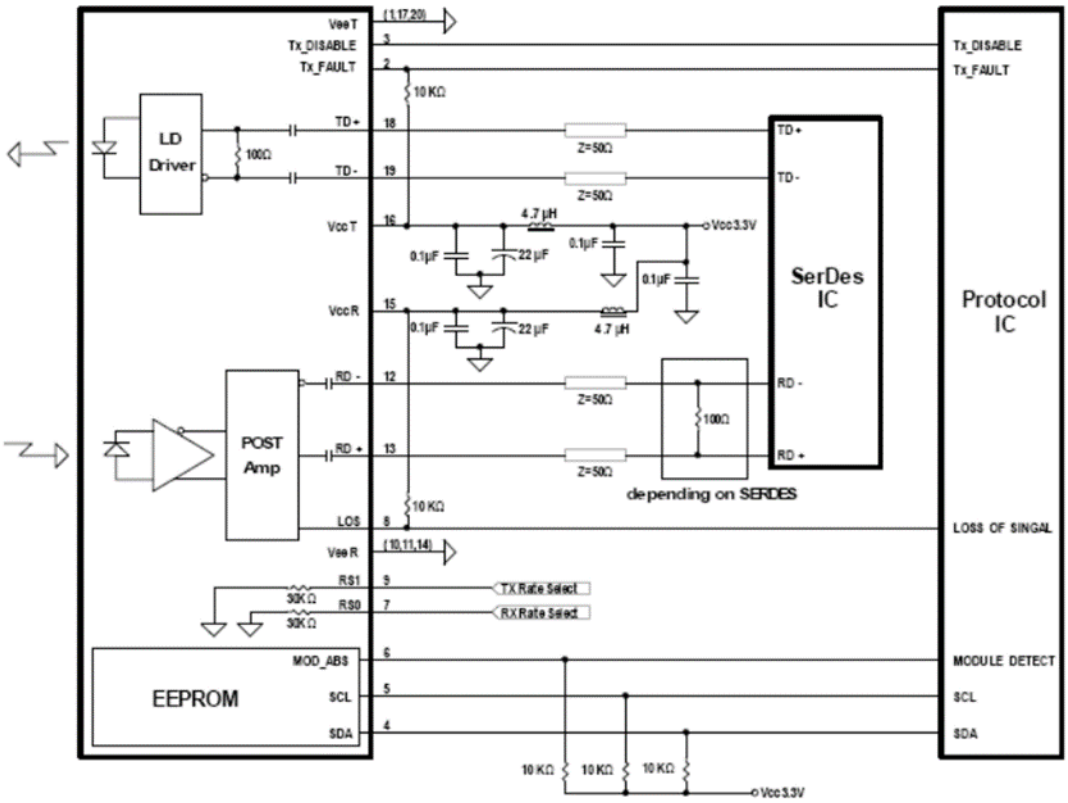

Mechanical Specifications

Small Form Factor Pluggable (SFP) transceivers are compatible with the dimensions defined by the SFP Multi-Sourcing Agreement (MSA).

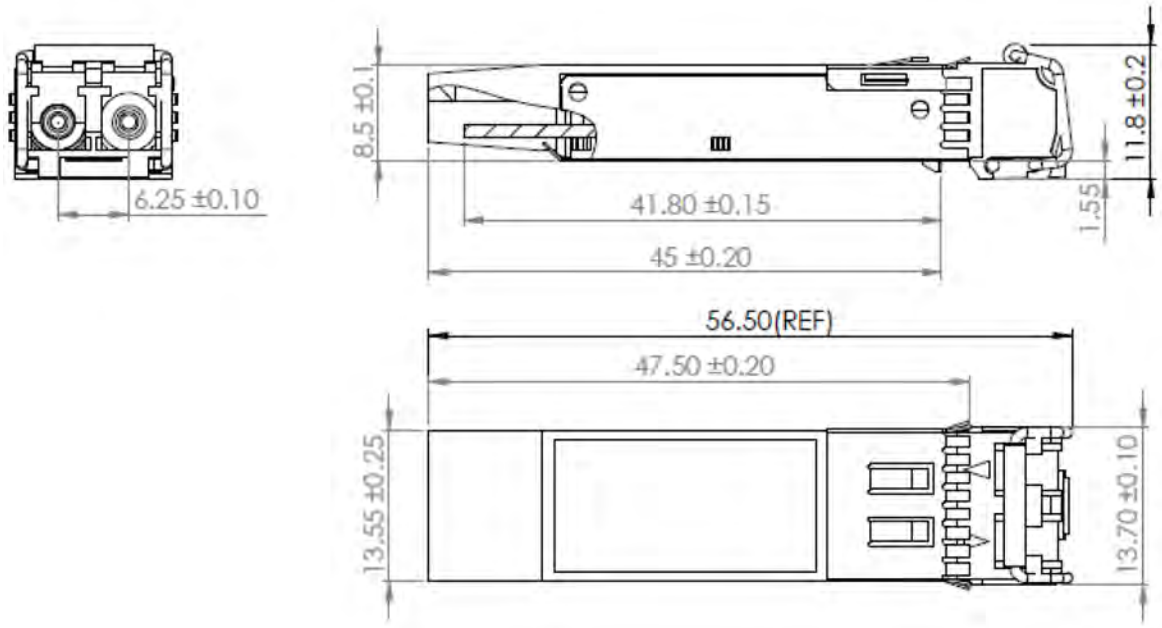

EEPROM Information

EEPROM memory map specific data field description is as below:

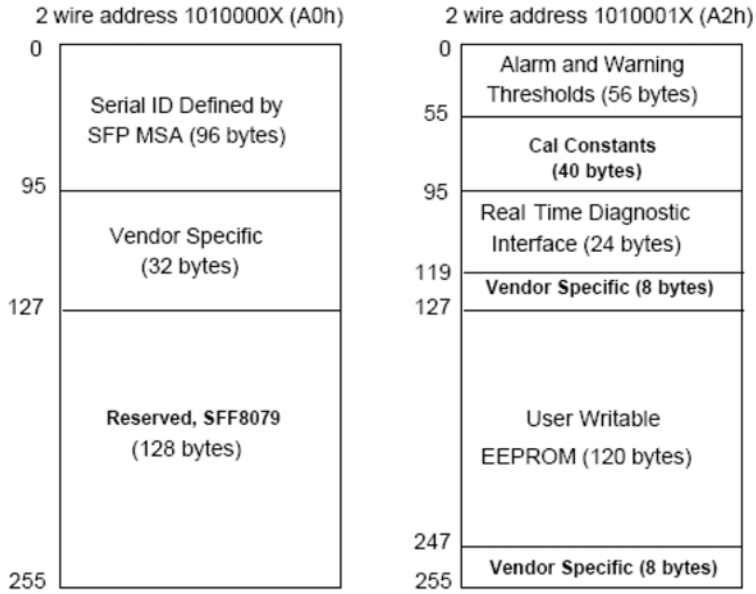

About Us:

Proline Options is one of North America's leading providers of transceivers and high speed cabling. With a reputation for quality, tested products that cover the connectivity spectrum, Proline Options has a solution for you regardless of the specification.

At Proline Options, every product is tested in its intended application - never batch or spec tested only. We run bandwidth, distance and IOS network tests. We have documented an impressive 0.03% failure rate over the last 10 years. To continue this rate of success we invest millions annually in our own on-site testing lab.

Tel: 855.933.3223
Email: sales@prolineoptions.com
Email: techsupport@prolineoptions.com
Web: https://www.prolineoptions.com

proline
OPTIONS

Sold exclusively by CDW

FAQ

Third-Party Optic Suppliers

1) What are the most frequently reported quality issues from other third-party suppliers?

Based on studies, quality issues most frequently found are related to reliability, compatibility, and interoperability. Coding is reported as the biggest issue with optics reading as the wrong part and receiving messages of "unsupported data". This can cause network delays and system reboots, taking up critical time and possibly needing a system engineer to triage.

We understand the importance of quality and take measured steps in our manufacturing and testing processes. Our optics are coded and tested in its intended environment so that it functions 100% the same as an OEM version. Compatibility is key to ensure a seamless connection with no downtime.

Known coding issues from some third-party suppliers:

Sample products tested include common transceiver types such as SFP LX, QSFP LR4, SFP+ DWDM and a variety of DACs and AOCs.

Feedback for these parts in **Cisco** and other **OEM systems** is read as:

Transceivers –

Wrong part number shown in the EEPROM
- Consequence: Certain features may not be supported, and additional configuration may be required.

No "PID" displays
- Consequence: The switch may not recognize the part and can lead to disabled ports

Displays "Non-Cisco" (Or other OEM)
- Consequence: When a part shows as a non-Cisco part or other non-OEM part it may render the port unusable and a replacement or recoded transceiver is needed.

Receive "UNSUPPORTED" message upon inserting in any switch ports
- Consequence: If the switch reads the part as non-compatible it may not be usable. Recoding or a replacement transceiver is again required.

DACs and AOCs –

Wrong part number shown in the EEPROM
- Consequence: Certain features may not be supported, and additional configuration may be required.

No "PID" displays
- Consequence: The switch may not recognize the part and can lead to disabled ports

No DOM reporting available on AOCs in multiple platforms
- Consequence: The lack of reporting may limit troubleshooting and monitoring capabilities

Module SPROM display 0 meters
- Consequence: The lack of detail may cause issues with troubleshooting and monitoring capabilities

2) What happens if a part is not coded correctly?

Miscoding a transceiver can have a number of unintended and costly side effects. Sometimes the effects are minor, such as a nice to have feature not being supported. Other times, the OEM switch won't recognize the part as even compatible, thus rendering the port unusable until the transceiver is swapped out or recoded.

A rare but potentially devastating case is that the EEPROM can be missing password protection, leading to data corruption if an OEM switch accidentally overwrites part of the pre-installed coding. In turn, this breaks the transceiver, requiring replacement before that port is usable again. Any power surges or failures requires your infrastructure's hardware to reboot, meaning poorly coded transceivers all run the risk of bringing down mission critical networks in this way or worse.

All of these headaches are avoided by understanding end user needs and coding a product that avoids these pitfalls, which is exactly the value that our vast end user experience allows us to add to our transceivers that sets us a cut above other competitors.

3) What happens when a part fails?

When a part fails or when you experience incompatibility issues - time, money, and resources are spent to find a resolution. With many other suppliers, this means losing several days waiting for a reply, each time a reply is needed.

Even if the problem is identified, if the part is the issue (mis-shipped, defective, miscoded, or incompatible), you now add transit delays too. Each step of the way, you're the one losing time, incurring financial costs, and missing opportunities.

We stand by our 99.98% reliability rating, but in the rare instance of a failure, we will ship a replacement part to you same day as to minimize any operational delays.

4) What do you do differently to resolve part failures?

Because we are globally based with headquarters in the U.S. and UK, we can respond far faster and more thoroughly to customers who are located worldwide. Whether it's a coding solution, a part correction, or something else, our expert team dives into the issue headfirst with you, resolving it to your satisfaction. We explore the issue with you from a technical perspective, standing behind our product and at your side until your new deployment is fully successful.

Our world-class customer support and technical teams are available 24hrs a day, 7 days a week, and 365 days a year. With your mission-critical projects at stake, our global field engineers can be deployed on-site to help you resolve any issues. We are real people committed to quality and exceptional customer service (should there be any issues with our products).

5) How do you ensure higher compatibility rates than that of your competition?

Over 20 years we've been working directly with customers to ensure compatibility in over 400 network systems with the industry's highest reliability rating of 99.98%. Every unit is individually tested for performance and compatibility in one of our world-class lab facilities with the latest networking equipment.

Other third-party suppliers buy 'pre-coded' hardware from manufacturers. These manufacturers specialize in manufacturing the device, and not on programing for compatibility. As they don't interface with the end-client, they are not best equipped to code to your needs. We are different, in that we don't rely on the manufacturer's pre-coded parts, we code them ourselves in-house to our clients' exact specifications. We don't just make the part--we make the part work.

6) Do your transceivers support DOM functionality?

Yes, absolutely! Digital optical monitoring (DOM) is usually built into transceiver hardware in modern times, but even so, the coding must be correct to be usable if the OEM supports it. We ensure our transceivers are coded to support the full spectrum of functionality offered in current and legacy OEM switches, including DOM functionality.

7) How do you ensure that I'm getting the correct part for my system?

Sampling, testing, and coding are in our DNA. We have a state-of-the-art lab and testing facility in which we're able to install our transceivers directly into OEM switches to verify that both our hardware and software are fully successful before we ship.

Coupling this with our proprietary part serialization and tracking system, the Data Traveler System™, and we're able to quickly guarantee that we're sending out a product that not only meets but exceeds your expectations every single time.

8) Do your transceivers support all functions available on my cutting-edge OEM switches?

Yes, they most certainly do. We define success differently than the competition. We understand that basic compatibility and passing traffic tests are just the start of what makes a transceiver great, and it shows in how we leverage our two decades of experience to carefully filter, select, and code our products for full compatibility and high efficiency.

9) Will using third-party transceivers invalidate my warranty with the vendor OEM?

Absolutely not. This is a common misconception of third-party optics from any brand that we're happy to dispel. OEMs must abide legally by the U.S. Sherman Anti-Trust Act, which prohibits them from invalidating your warranty or their support should you use a third-party component with their hardware, nor can they exclusively "tie in" upgrades to their own brand only. In parallel, there are a number of corresponding multi-national laws that protect against OEM anti-competition behavior such as Articles 101 and 102 of the Treaty on the Functioning of the European Union (TFEU), the UK Competition Act of 1998, and the UK Enterprise Act of 2002, and India's Competition Act.

This means that third-party transceivers are capable of supporting the full gamut of features offered, provided they are expertly coded to OEM specifications, while also still carrying your OEM warranty and support period.

Why Proline?

Proline Options is one of North America's leading providers of transceivers and high speed cabling. With a reputation for quality, tested products that cover the connectivity spectrum, Proline Options has a solution for you regardless of the specification.

This document will explain what quality control steps we take that are different from our competitors and allow us to make custom solutions that no one else can.

- LIFETIME WARRANTY
- OPTICAL & COPPER SOLUTIONS
- CUSTOMIZATION AVAILABLE

Programming

Our in-house coding facility programs all of our parts to standard OEM specs as well as creating unique, one-of-a-kind coding for customized networking solutions.

With over 20 years of coding knowledge and experience Proline has refined a database of compatible programming that is unrivalled. With that being said Proline is constantly researching firmware upgrades and implementing them to maintain an up to date database. Each and every step of this unique programming process is 100% tracked within our proprietary Data Traveler system.

Testing

Every Proline part is tested in the exact environment that the part is intended to be used in. Each module is tested in the same platform at the intended data rate and at the full distance of the module's capabilities.

There are no shortcuts taken in testing as all modules are connected to a complementing part over the full length fiber. Traffic is then passed over the module and all pertinent details are captured and added to the Data Traveler System for rapid retrieval.

Because we program and test every unit we can guarantee 100% compatibility and equivalent functionality to all OEM parts. All of our products are backed with a lifetime warranty with Technical Support and Advanced Next Business Day replacement.

Custom Solutions

We are breaking barriers in competitive multi-OEM environments. From data centers to corporate and financial institutions, end users rarely partner with a single-system OEM today.

The use of Prolines proprietary DAC cables allows you to seamlessly connect from Arista to Cisco, Cisco to Juniper, Juniper to HP or any other mix of OEM configurations – meaning we offer borderless connectivity. Our multi-OEM DACs are available in all lengths, both passive and active, and also in custom lengths to suit your needs.

The hybrid or multicode Proline DAC solution offers assurance that multi-vendor connections are plug and play.

Our experts are here to help, contact us now:

sales@prolineoptions.com

Daniel Goehring | dGoehring@prolineoptions.com
P: 872-228-2878

Proline Options Lifetime Warranty

Proline Options provides a non-transferable serviceable lifetime warranty to the purchaser of a Proline Options hardware product purchased from CDW.

Proline Options warrants to the original end customer of its products specified below that its products are free from defects in material and workmanship affecting form, fit, and function. All such products sold will work in the application specified at the time of purchase and will meet the datasheet specifications as found on Proline Options Web site or otherwise provided by Proline Options. Any claim alleging that any product fails to conform to the foregoing may be made only by the customer who purchased such product and only while such customer owns such product and while the product remains within the serviceable lifetime period. Proline Options, at its option, will repair, replace, or provide a credit or refund of either the original purchase price or fair market value, whichever is lower, of any product that is determined by Proline Options to be defective. Some systems that use Proline Options products may be allowed to operate outside of the system manufacturer's published settings and Proline Options does not cover failure in these circumstances. This warranty covers only defects arising under normal use and do not include malfunctions or failures resulting from misuse, abuse, neglect, alteration, problems with electrical power, usage not in accordance with product instructions, acts of nature, or improper installation or improper operation or repairs made by anyone other than Proline Options or a Proline Options authorized third-party service provider. Proline Options reserves the right to substitute functionally equivalent new or serviceable used parts.

Except as listed below, all Proline parts including transceivers designed to reach less than 80 kilometers will carry a 10 year serviceable lifetime from the date of purchase from CDW. With respect to all transceivers that are designed to reach 80 kilometers or further, or for any custom made Proline part, the serviceable lifetime is 3 years.

With respect to non-Proline Options-branded products, any warranty is provided by the original manufacturer and not by Proline Options. These products may only be returned in

accordance with the return policy in effect for the original manufacturer. The warranties and technical support may vary from product to product.

This constitutes Proline Options entire liability which will never exceed the price paid.

Limitations. THE PRODUCTS ARE NOT AUTHORIZED FOR USE AS CRITICAL COMPONENTS IN LIFE SUPPORT DEVICES OR SYSTEMS. EXCEPT AS SET FORTH HEREIN, Proline Options MAKES NO WARRANTIES, EXPRESSED OR IMPLIED, AND Proline Options DISCLAIMS AND NEGATES ALL OTHER WARRANTIES, INCLUDING, WITHOUT LIMITATION, IMPLIED WARRANTIES OF MERCHANTABILITY, FITNESS FOR A PARTICULAR PURPOSE, CONFORMITY TO MODELS OR SAMPLES, OR ANY WARRANTIES OR INDEMNITIES AGAINST INTELLECTUAL PROPERTY INFRINGEMENT.

SOME STATES DO NOT ALLOW LIMITATIONS ON IMPLIED WARRANTIES, SO THESE LIMITATIONS MAY NOT APPLY TO YOU. IN NO EVENT SHALL Proline Options BE LIABLE FOR ANY INDIRECT, SPECIAL, INCIDENTAL, OR CONSEQUENTIAL DAMAGES. ALL DISPUTES ARISING OUT OF OR RELATED TO THE LIMITED WARRANTIES SET FORTH HEREIN (CUSTOMER DISPUTES) SHALL BE GOVERNED BY THE LAWS OF THE STATE OF CALIFORNIA. CLAIMS AGAINST Proline Options FOR SHORTAGES SHALL BE DEEMED WAIVED IF NOT MADE WITHIN THREE (3) BUSINESS DAYS AFTER RECEIPT OF THE SHIPMENT.

Single Unit Distribution

OFNR/OFNP

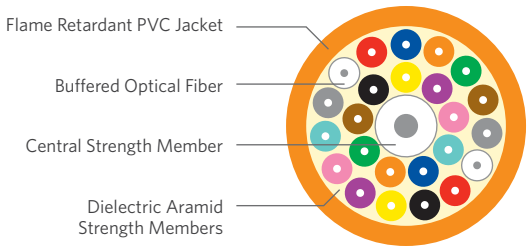

PRODUCT DESCRIPTION

FIRST MANUFACTURER IN THE INDUSTRY to offer products that contribute toward LEED!

These Superior Essex premises distribution optical fiber cables are constructed using a single unit, single jacket RoHS-compliant design with fiber counts from 6 through 24. The design consists of flexible 900 µm tight buffered industry standard 250 µm fibers (900/250/125 µm) and is suitable for use with standard connectors, like the SC, ST, and FC, and small-form-factor connectors like the LC. Dielectric aramid yarns are applied for strength while maintaining flexibility. The 18 and 24-fiber cable designs have a flexible glass reinforced central strength element for added durability and performance. A durable, flame resistant outer jacket is applied over the cable core using appropriate OFNR or OFNP rated materials.

APPLICATIONS

- Intrabuilding backbones
- Conduit pathways
- Service entrance to communication closets
- "Behind-the-shelf" connections

FEATURES	BENEFITS
UL® Certified Environmental Product Declaration (EPD)	Contributes toward 1 LEED point under the Material and Resources credit (MRc)
Health Product Declaration™ (HPD™)	Contributes toward 1 LEED point under the MRc
Marked in feet and meters	Meets commercial, government and international requirements for length markings
BrakeBox® payout control system	Adjustable tension control on reel prevents over spin and entangling of cable

SPECIFICATIONS

6-12 Fiber Configuration	Flexible 900 µm tight buffered fibers, dielectric aramid yarns and overall jacket
18-24 Fiber Configuration	Band marked flexible 900 µm tight buffered fibers, dielectric aramid yarns, overall jacket and central strength element
Jacket	OFNR: Flame retardant (FR) PVC OFNP: FR, low smoke PVC
Performance Compliance	UL 1651 CSA C22.2 No. 232 UL 1666 NFPA 262 Telcordia® GR-409, Issue 1 Telcordia GR-409, Issue 2 ANSI/ICEA S-83-596 ANSI/TIA-568.3-D
NRTL Programs	UL, c(UL) Listed OFNR UL, c(UL) Listed OFNP
Sustainability	UL Certified EPD HPD USGBC® Member RoHS-compliant/RoHS 2-compliant REACH-compliant

ENVIRONMENTAL SPECIFICATIONS

	Riser	Plenum
Operation	-20°C to +75°C	0°C to +75°C
Storage/Shipping	-40°C to +75°C	-40°C to +75°C
Installation	-20°C to +65°C	0°C to +65°C

SUSTAINABILITY LEADERSHIP

UL and the related logo are registered trademarks of UL LLC. Health Product Declaration, HPD and the related logo are trademarks of Health Product Declaration Collaborative. Telcordia is a registered trademark of Ericsson Inc. USGBC and the related logo are registered trademarks of U.S. Green Building Council.

SUPERIOR ESSEX
800.551.8948
SuperiorEssex.com

*All information, content, data, specifications, packaging and part numbers detailed herein are subject to change. For the most up-to-date information, please visit SuperiorEssex.com. Purchase of this product is subject exclusively to the then current **Superior Essex International LP Terms and Conditions of Sale for Communications Cable, Wire and Connectivity Products**, which can be found on our website, SuperiorEssex.com, or provided to you upon request.*

PART NUMBERS AND PHYSICAL CHARACTERISTICS

Listing	Part Number[1]	Fiber Count	Nominal Diameter in (mm)	Nominal Weight lbs/kft (kg/km)	Maximum Tensile Loading Install lbs (N)	Maximum Tensile Loading Long Term lbs (N)	Minimum Bend Radius Install in (mm)	Minimum Bend Radius Long Term in (mm)	Package
Single Mode									
OFNR	43006x1zz	6	0.20 (5.0)	17 (25)	150 (660)	45 (200)	3.0 (75)	2.0 (50)	*use key*
OFNR	43008x1zz	8	0.24 (6.0)	20 (30)	150 (660)	45 (200)	3.5 (90)	2.4 (60)	*use key*
OFNR	43012x1zz	12	0.26 (6.5)	25 (37)	150 (660)	45 (200)	3.8 (98)	2.6 (65)	*use key*
OFNR	43018xK01*	18	0.30 (7.5)	35 (51)	300 (1,320)	90 (400)	4.4 (113)	3.0 (75)	Plywood reel
OFNR	43024xK01*	24	0.33 (8.5)	44 (66)	300 (1,320)	90 (400)	5.0 (128)	3.3 (85)	Plywood reel
OFNP	44006x1zz	6	0.20 (5.0)	17 (25)	100 (440)	30 (130)	3.0 (75)	2.0 (50)	*use key*
OFNP	44008x1zz	8	0.21 (5.4)	19 (28)	100 (440)	30 (130)	3.2 (81)	2.1 (54)	*use key*
OFNP	44012x1zz	12	0.24 (6.2)	24 (35)	100 (440)	30 (130)	3.7 (93)	2.4 (62)	*use key*
OFNP	44018xK01*	18	0.28 (7.0)	33 (49)	150 (660)	45 (200)	4.1 (105)	2.8 (70)	Plywood reel
OFNP	44024xK01	24	0.31 (7.8)	42 (62)	150 (660)	45 (200)	4.6 (117)	3.1 (78)	Plywood reel
Multimode									
OFNR	43006yGzz	6	0.20 (5.0)	17 (25)	150 (660)	45 (200)	3.0 (75)	2.0 (50)	*use key*
OFNR	43008yGzz	8	0.24 (6.0)	20 (30)	150 (660)	45 (200)	3.5 (90)	2.4 (60)	*use key*
OFNR	43012yGzz	12	0.26 (6.5)	25 (37)	150 (660)	45 (200)	3.8 (98)	2.6 (65)	*use key*
OFNR	43018yK01	18	0.30 (7.5)	35 (51)	300 (1,320)	90 (400)	4.4 (113)	3.0 (75)	Plywood reel
OFNR	43024yK01	24	0.33 (8.5)	44 (66)	300 (1,320)	90 (400)	5.0 (128)	3.3 (85)	Plywood reel
OFNP	44006yGzz	6	0.20 (5.0)	17 (25)	100 (440)	30 (130)	3.0 (75)	2.0 (50)	*use key*
OFNP	44008yGzz	8	0.21 (5.4)	19 (28)	100 (440)	30 (130)	3.2 (81)	2.1 (54)	*use key*
OFNP	44012yGzz	12	0.24 (6.2)	24 (35)	100 (440)	30 (130)	3.7 (93)	2.4 (62)	*use key*
OFNP	44018yK01	18	0.28 (7.0)	33 (49)	150 (660)	45 (200)	4.1 (105)	2.8 (70)	Plywood reel
OFNP	44024yK01	24	0.31 (7.8)	42 (62)	150 (660)	45 (200)	4.6 (117)	3.1 (78)	Plywood reel

**Only available with TeraFlex® Bend Resistant single mode optical fiber types.*

SINGLE MODE OPTICAL FIBER TYPES

	TeraFlex® Bend Resistant		
	G.657.A1	G.657.A2	G.657.B3
[1]Replace "x" with:	K	J	L
Standard Jacket Colors*	Yellow		

MULTIMODE OPTICAL FIBER TYPES

	TeraGain® 62.5/125	TeraFlex Bend Resistant Laser Optimized 50/125	
		10G/300	10G/550
[1]Replace "y" with:	6	N	P
Standard Jacket Colors*	Orange	Aqua	

**Other jacket colors available upon request.*
See "Optical Fiber Specifications" in the "Technical Info" section for detailed fiber type specifications.

PACKAGING

	Cut to Length Plywood Reel	1,000 ft BrakeBox®	1,500 ft BrakeBox	2,000 ft BrakeBox
[1]Replace "zz" with:	01	BB	BD	BC
Fiber Counts:	All	6 - 12	6 - 12	6

*All information, content, data, specifications, packaging and part numbers detailed herein are subject to change. For the most up-to-date information, please visit SuperiorEssex.com. Purchase of this product is subject exclusively to the then current **Superior Essex International LP Terms and Conditions of Sale for Communications Cable, Wire and Connectivity Products**, which can be found on our website, SuperiorEssex.com, or provided to you upon request.*

PERFORMALINK® WARRANTY

Revised 04/01/24

TERMS AND CONDITIONS

WARRANTY

The PerformaLink® Warranty provides that any indoor Superior Essex Category 5e, 6 and 6A premises copper cables and premises fiber optic network installations will conform substantially to the ANSI/TIA-568 series industry specifications in force at the time of purchase for a period of (i) twenty-five (25) years from the delivery date if the approved connectivity manufacturer is Legrand/ Ortronics, or (ii) twenty (20) years from the delivery date for any other approved connectivity manufacturer (the "PerformaLink® Warranty").

The same warranty will also be provided for CMP/ CMX and CMP/Indoor Outdoor* rated copper premises products (copper cables having FEP, PVDF, or similar jacket materials approved by Superior Essex) even if exposed to water or moisture (see exclusion #5) so long as Technical Guideline TG114 *Installation of CMP/ CMX & CMP/Indoor Outdoor Rated Cables in Conduit* special installation instructions are followed to avoid the ingress of water via the cable end and to avoid cable jacket damage. Superior Essex retains the sole right to determine whether a cable is covered by the extended warranty. Please see product data sheet to see if special installation instructions apply.

**These cables are not intended as a substitute for Outside Plant (OSP) cables nor for direct burial.*

SCOPE

The PerformaLink® Warranty covers the Cabling Subsystem(s) of the network as defined by the ANSI/ TIA-568, which includes the qualifying premises cable and connecting hardware portion of the Cabling Subsystem(s) (the Permanent Link and/or Modular Plug Terminated Link). The PerformaLink® Warranty does not cover other elements of the cabling, such as patch cords and workstation cords. The PerformaLink® Warranty does not cover inter-building premises cables.

QUALIFICATION

To qualify for the PerformaLink® Warranty, customer must meet the following conditions:

1. The connectivity components used in the network must be supplied by one or more of the approved connectivity manufacturers; AND each component must be manufactured, tested, and independently verified by UL, ITS/ETL, or any approved independent testing agency to meet the ANSI/TIA-568 series industry standard in force at the time of purchase. The approved connectivity manufacturers are subject to change at any time. Please contact Superior Essex at *warranties@spsx.com* for an up-to-date list. The companies currently recognized as approved connectivity manufacturers are:

Approved Connectivity:

- 3M
- AllenTel
- Belden IBDN
- Bel Stewart
- Corning
- Hellermann Tyton
- Hubbell
- Legrand/Ortronics
- Leviton
- Molex
- OFS
- Panduit
- Platinum Tools
- Sentinel
- Siemon
- Sumitomo Electric
- Superior Modular (OCC)
- Systimax/ CommScope
- TE Connectivity
- Uniprise/ CommScope
- US Conec Ltd.

All information, content, data, specifications, packaging and part numbers detailed herein are subject to change. For the most up to date information, please visit SuperiorEssexCommunications.com.

PERFORMALINK® WARRANTY

Revised 04/01/24

2. The network system must be designed and installed by "BICSI Certified" or Superior Essex approved designers and installers;

3. For CMP/CMX and CMP/Indoor Outdoor* rated copper premises products, Technical Guideline TG114 *Installation of CMP/CMX & CMP/Indoor Outdoor Rated Cables in Conduit* special installation instructions must be followed to avoid the ingress of water via the cable end. Please see product data sheet to see if special installation instructions apply;

4. Each link in the network must be field tested in accordance with the ANSI/TIA-568 series industry standard in force at the time of purchase; AND the installed network links must have passed all ANSI/TIA-568 requirements;

5. The PerformaLink® Warranty application form must be properly completed and submitted to Superior Essex within 10 days of installation completion;

6. Copies of all test results must be submitted along with the completed, signed warranty application and the Bill of Materials (BOM) to Superior Essex. These documents must be kept on file by the customer for submission to Superior Essex in the event of a warranty claim. Data must be submitted in the original native file format of the tester (see below) used in the installation and submitted electronically with the warranty application form. Text or spreadsheet files will not be accepted. All test results must include the individual frequency measurements (for example in a Fluke, "Store Plot Data" must be enabled). Minimum testing for copper systems includes Wire Map, Length, Insertion Loss, Near End Crosstalk, Return Loss, PS NEXT, ACRF, and PS ACRF. Minimum testing for fiber optic links includes Insertion Loss and Length;

7. Field testers acceptable to certify warranty coverage installations shall be Level IIe, III, or IIIe compliant copper testers per TIA-1152 and capable of meeting the requirements of TIA-526-14 for multimode fiber optic testing and TIA-526-7 for single mode fiber optic testing. Utilized test equipment must have valid certificate of calibration at time of testing. The acceptable field testers are subject to change at any time. Please contact Superior Essex at *warranties@spsx.com* for an up-to-date list; and

8. Superior Essex has issued a registered warranty certificate to the customer for the PerformaLink® Warranty.

The PerformaLink® Warranty will be void unless the system is maintained in accordance with industry standards and no changes are made after warranty issuance and acceptance date, unless Superior Essex grants written consent.

WARRANTY EXCLUSIONS

The PerformaLink® Warranty does not cover:

1. The installation and maintenance of any other non-performing portions of the Cabling Subsystem(s);

2. Products not specifically designated as being eligible for the PerformaLink® Warranty coverage;

3. Products not supplied directly by Superior Essex or obtained through unapproved channels;

4. Products which were falsely represented as being in compliance with the PerformaLink® Warranty registration requirements and procedures;

5. Products that are exposed to moisture, liquids (such as paint), or water except as outlined under the Warranty section for CMP/CMX and CMP/ Indoor Outdoor* rated copper premises products;

6. Defects resulting from environmental or third-party materials, including but not limited to work areas, patching or equipment cords, or from moves, additions and changes by parties other than a Certified Contractor;

All information, content, data, specifications, packaging and part numbers detailed herein are subject to change. For the most up to date information, please visit SuperiorEssexCommunications.com.

PERFORMALINK® WARRANTY

Revised 04/01/24

7. Defects resulting from a noncompliant or improper system design, installation, use, repair, or any system alterations, misuse, neglect, accident or abuse; or

8. Damage caused by persons, machinery, foreign objects, animals, chemicals, acts of God, or by other means that are beyond normal use.

ADMINISTRATION

Warranty applications will be approved or disapproved with a response sent to the applicant. Warranty applications and supporting documentation may be sent using one of the following below:

1. PerformaLink® Warranty
   Superior Essex
   5770 Powers Ferry Road, Suite 400,
   Atlanta, GA 30327

2. E-mail: *warranties@spsx.com*

CLAIMS, EXCLUSIVE REMEDIES AND DISCLAIMERS

The validity of any warranty claim shall be determined by Superior Essex in its sole discretion. A claim will be reviewed for validity only if all of the following are satisfied:

1. Reported in writing to Superior Essex within ten (10) days of date of nonconformity discovery;

2. All installation records are provided to Superior Essex including original network installation design prints, valid original warranty certificate, test results at time of installation (showing compliance to all applicable ANSI/TIA-568 requirements as identified in Qualifications section, Item 6), and test results with evidence of failure;

3. Copies of all original receipts for materials and labor from the date of initial installation are provided to Superior Essex; and

4. Superior Essex has full and open access to inspect and evaluate the products and installation site.

If a warranty claim is determined by Superior Essex in its sole discretion to be valid, as customer's sole and exclusive remedy, Superior Essex will, at its option and using Certified Contractor(s) of its choosing, replace or repair the non-compliant qualifying components of the Cabling Subsystem(s) and cover reasonable cost of labor to affect necessary work. If the customer provides a quote from a Certified Contractor of its choosing, Superior Essex, in its sole discretion, may alternatively elect to allow such Certified Contractor to affect the warranty repair and reimburse the customer for reasonable and customary labor costs, provided prior written approval is obtained from Superior Essex for proposed materials and labor. If the cause of any error is determined to be improper installation, maintenance or third-party repair, the customer may be referred back to the appropriate contractor or third party for support. The remedies of the customer for non-compliant products shall be strictly limited to those provided herein to the exclusion of any and all other remedies including, without limitation, claims for incidental or consequential damages.

EXCEPT WITH RESPECT TO THE SPECIFIC WARRANTIES SET FORTH HEREIN, SUPERIOR ESSEX MAKES NO OTHER WARRANTIES WHATSOEVER, EXPRESS OR IMPLIED, REGARDING THE PRODUCTS, INSTALLATION OR PERFORMANCE OF ITS OBLIGATIONS HEREUNDER, AND SPECIFICALLY DISCLAIMS ANY WARRANTIES OF MERCHANTABILITY OR FITNESS FOR A PARTICULAR PURPOSE.

All information, content, data, specifications, packaging and part numbers detailed herein are subject to change. For the most up to date information, please visit SuperiorEssexCommunications.com.

Vertiv™ Liebert® GXT5 UPS

500 - 3000VA 120V

Intelligent and Efficient UPS for Protection of Your Mission-Critical Applications

Intelligent and Efficient UPS for Protection of Your Mission-Critical Applications

The Vertiv™ Liebert® GXT5 UPS is an online double conversion UPS solution which offers premium power outage protection and continuous power conditioning in a compact and flexible rack/tower form factor.

The Liebert® GXT5 single-phase UPS operates with high power efficiency, making it ideally suited to protect critical infrastructure in both centralized and edge network applications.

Scalable runtime options with matching external battery cabinets offer additional flexibility when extended uninterrupted power is required. Plus, the Liebert GXT5 provides battery health status and replacement date prediction for intelligent battery health management.

The UPS system is easy to deploy and maintain due to its user-friendly LCD interface and remote management capabilities supported by the Vertiv RDU101 communications card which makes the Liebert GXT5 compatible with Vertiv infrastructure management solutions such as LIFE™ Services, environmental sensors, Vertiv Power Insight, and more.

With market leading efficiency and unity power factor operation, the Liebert GXT5 will meet your critical application needs. And you can rest assured that your business is protected with this Vertiv solution that includes a standard, three-year advanced exchange product warranty.

What's in the box

- UPS
- Tower stand
- 4-Post Rack Mounting Kit
- USB Cable
- Quick Start Guide
- Safety Manual
- Vertiv™ Power Insight management software (free download from Vertiv.com)

Liebert® GXT5 Features

Leading UPS Technology

- High output power factor = up to 1.0
- Full-color graphic LCD with gravity sensing orientation
- Individually controllable output power sockets
- External battery cabinets with auto-detection
- Battery health status and replacement date prediction
- Remote management, update, and configuration capabilities
- Optimized thermal management and variable speed fan

Efficient and Green Product

- High efficiency in online mode
- Energy Star 2.0 certified
- Even higher efficiency (up to 98%) in Active ECO mode
- Programmable outlets for power cycling hung equipment and optimum battery usage
- Compliance with Restriction of Hazardous Substances (RoHS) directive and the Registration, Evaluation, Authorization and Restriction of Chemicals (REACH) regulation

Solutions Wide

- Compact rack/tower design
- Broad range of services and extended warranty
- Easy to install, configure and operate
- Vertiv™ RDU101 network communications card with advanced features
- Compatibility with environmental sensors
- Integrated dry-contacts with selectable definition
- Free Vertiv Power Insight management software
- Serial port for out-of-band management with Avocent® serial consoles
- Automatic internal bypass and external maintenance bypass options

Vertiv™ Liebert® GXT5 Features

High power factor (0.9-1.0)
More usable power enables more connected loads saving space and costs.

Efficiency (up to 95%) in online mode
Energy Star Certified
High energy efficiency saves on energy costs and reduces heat dissipation from the UPS.

Efficiency (up to 98%) in Active ECO mode
Superior protection with maximum efficiency.

Colored graphic LCD with gravity sensitive orientation
User-friendly interface provides insight to UPS status for easy installation, configuration and operation.

Compact rack/tower design
Space-saving UPS provides rack space optimization and flexible installation.

Battery cabinets with auto-detection
Be confident the UPS is set up correctly to report available runtime when used with external battery cabinets.

Product warranty
Comprehensive coverage through a standard three-year advanced exchange warranty.

500-1500VA – 120V Rack/Tower

External Battery Connector
Scalable runtime solution supported for extended outage protection

4 x Individually Controllable Receptacle
Manage load on battery and control unauthorized access to UPS receptacle

Communications
SNMP, Serial, Dry contact, Local USB
Local and remote configuration and UPS Management

NEMA 5/15P input with over current protection
Simple installation and power on with connected input cord

2000VA – 120V Rack/Tower

External Battery Connector
Scalable runtime solution supported for extended outage protection

NEMA L5-20R
Support larger devices or rack PDU

4x Individually Controllable Receptacle, 2x Always on Receptacles
Manage load on battery and control unauthorized access to UPS receptacle

Communications
SNMP, Serial, Dry contact, Local USB
Local and remote configuration and UPS Management

NEMA L5-20P input with over current protection
Includes NEMA 5-20 Adapter Cable for non-locking receptacles

3000VA – 120V Rack/Tower

External Battery Connector
Scalable runtime solution supported for extended outage protection

NEMA L5-30R
Support larger devices or rack PDU

4x Individually Controllable Receptacle, 2x Always on Receptacles
Manage load on battery and control unauthorized access to UPS receptacle

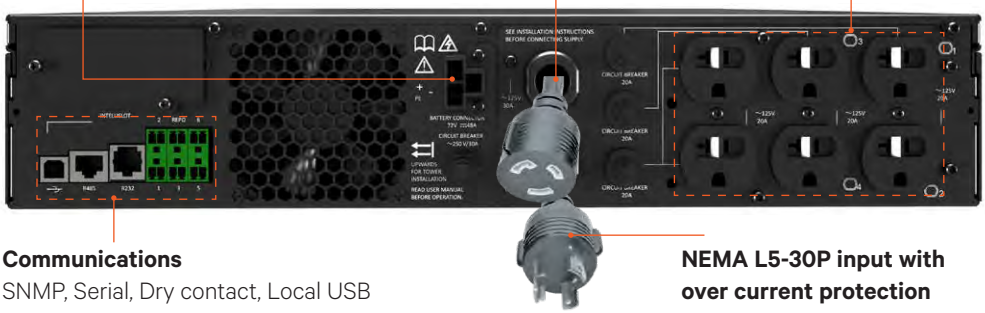

Communications
SNMP, Serial, Dry contact, Local USB
Local and remote configuration and UPS Management

NEMA L5-30P input with over current protection
Simple installation and power on with connected input cord

How You Benefit from the Vertiv™ Liebert® GXT5 UPS

Designed for high availability

- The higher power factor (0.9 - 1.0) ensures the connection of more loads and IT equipment
- With individually controlled output receptacles, you can manage power to individual devices without impacting other critical network equipment operation
- Minimum downtime of the device provided by hot-swappable, user-replaceable battery modules which can be changed during operation
- LIFE™ Services helps to enhance uptime, as well as operational efficiency with continuous remote monitoring, expert analysis, and proactive response
- Automatic self-test

User-friendly installation and operation

- Easy-to-read, gravity-sensing graphical color display
- Intuitive user interface for local configuration and management
- Support for the Vertiv™ suite of remote management tools (Vertiv™ Power Insight, RDU101 network interface card, and serial connectivity support)
- Auto-detection of external battery cabinets enables faster deployment and accurate runtime information
- Remote UPS firmware upgrade capability ensures the UPS has the latest features and enhancements

Longer service life and runtime of the batteries

- Extended runtimes provided by the addition of external battery cabinets
- Improved battery care by temperature-compensated battery charging
- Intelligent battery health management ensures a longer service life (optimized battery maintenance and replacement when needed)

Optimized energy and capacity management

- Active ECO operating mode with up to 98% efficiency
- Efficiency in online double conversion mode up to 95%
- Energy Star 2.0 certified
- Four individually programmable output receptacles can be use to extend runtime for the most critical loads and smart disconnection of the less critical ones

Seamless connectivity

- Four onboard, user-definable dry contact I/O for integration of support management systems
- Supports SNMP, web, and environmental sensors with the optional RDU101 communications card
- Serial connection for integration of Avocent® ACS product or direct serial management and control of the UPS

Power Assurance Package: Comprehensive Service Support for Critical Systems

- **Five-year protection plan** with 100% parts coverage and 24x7 emergency service
- **On-site installation and startup** of UPS and internal batteries (excludes hard-wired applications); configuration of new UPS and accessories; and if purchased, safe removal and disposal of legacy UPS and batteries
- **On-site service support** available 24x7 (within 150 miles of regional service center) and includes 100% labor and travel coverage
- **100% parts coverage** for UPS and includes internal batteries, POD (power output distribution), and web card
- **24x7 access** to customer resolution center and online access to Customer Services Network

Key benefits:

- Hassle-free management of multi-site rollouts
- Frees up time-strapped IT staff by managing and tracking UPS health, maintenance and service
- Reduces the worry of critical equipment downtime
- Ensures rapid recovery in the event of failure (within 24-48 hours)
- Frees you from the responsibility of handling and documenting the disposal of legacy UPS and batteries

Remote Diagnostic Services for Rapid Response

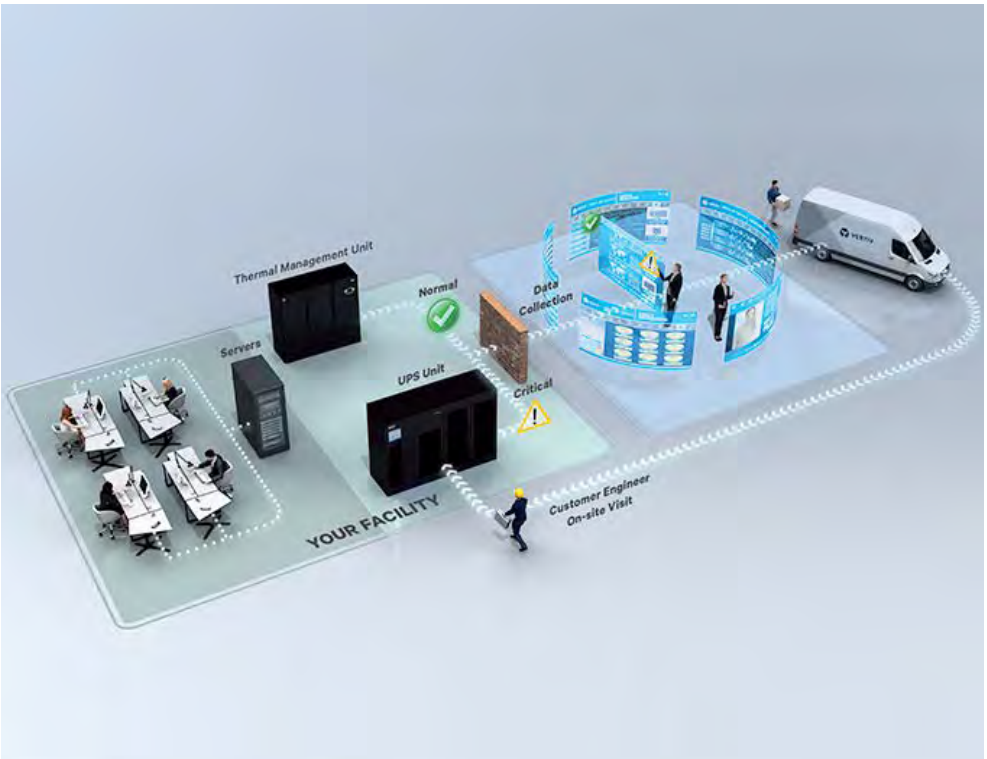

Uptime assurance

- Continuous monitoring for early detection of trends and operating anomalies
- Analysis and interpretation of alarm and status messages

Rapid incident response

- Automatic transmission of data for analysis
- Concurrent diagnosis and dispatch of engineer to site
- Shipment of parts for corrective maintenance

Increased insight and ease of management

- Notification of operating conditions that may impact system health
- Periodic trend and analysis reports
- Integration of remote and on-site services to ensure business continuity

Refer to page 11 for service offerings' SKUs

Technical Specifications

Standard Models Models with RDU101 Network Card	Liebert® GXT5-500LVRT2UXL Liebert® GXT5-500LVRT2UXLN	Liebert® GXT5-750LVRT2UXL Liebert® GXT5-750LVRT2UXLN	Liebert® GXT5-1000LVRT2UXL Liebert® GXT5-1000LVRT2UXLN	Liebert® GXT5-1500LVRT2UXL Liebert® GXT5-1500LVRT2UXLN	Liebert® GXT5-2000LVRT2UXL Liebert® GXT5-2000LVRT2UXLN	Liebert® GXT5-3000LVRT2UXL Liebert® GXT5-3000LVRT2UXLN
Ratings (VA/W)	500VA/500W	750VA/750W	1000VA/1000W	1500VA/1350W	2000VA/1800W	3000VA/2700W
Dimensions, inches (mm)						
Unit W x D X H	16.9 x 15.7 x 3.4 (430 x 400 x 85)	16.9 x 15.7 x 3.4 (430 x 400 x 85)	16.9 x 15.7 x 3.4 (430 x 400 x 85)	16.9 x 18.5 x 3.4 (430 x 470 x 85)	16.9 x 18.5 x 3.4 (430 x 470 x 85)	16.9 x 21.3 x 3.4 (430 x 540 x 85)
Weight, pounds (kg)						
Unit	37 (16.8)	37 (16.8)	37 (16.8)	46.2 (21)	47.5 (21.6)	66(30)
Input AC Parameters						
Range	Typical 120V Range: 60-150V	Typical 120V Range: 60-150V	Typical 120V Range: 60-150V	Typical 120V Range: 60-150V	Typical 120V Range: 60-150V	Typical 120V Range: 60-150V
Frequency	40-70Hz; Auto Sensing	40-70Hz; Auto Sensing	40-70Hz; Auto Sensing	40-70Hz; Auto Sensing	40-70Hz; Auto Sensing	40-70Hz; Auto Sensing
Input Power Cord	10 ft. attached w/ NEMA 5-15P plug	10 ft. attached w/ NEMA 5-15P plug	10 ft. attached w/ NEMA 5-15P plug	10 ft. attached w/ NEMA 5-15P A plug	NEMA L5-20P or 5-20P plug (5-20P adapter included)	10 ft. attached w/ NEMA L5-30P plug
Output AC Parameters						
Output Receptacles	5-15R × 6	5-15R × 6	5-15R × 6	5-15R × 6	L5-20R+5-20R × 6	L5-30R+5-20R × 6
Typical 120V User selectable output	110/115/120/125VAC (user-configurable); ±3%	110/115/120/125VAC (user-configurable); ±3%	110/115/120/125VAC (user-configurable); ±3%	110/115/120VAC (user-configurable); ±3%	110/115/120VAC (user-configurable); ±3%	110/115/120VAC (user-configurable); ±3%
Waveform	Sine wave	Sine wave	Sine wave	Sine wave	Sine wave	Sine wave
Utility (AC) Mode Overload	>200% for 250ms; 150- 200% for 50 seconds; 125-150% for 60 seconds; 105-125% for 60 seconds	>200% for 250ms; 150- 200% for 50 seconds; 125- 150% for 60 seconds; 105-125% for 60 seconds	>200% for 250ms; 150- 200% for 50 seconds; 125- 150% for 60 seconds; 105-125% for 60 seconds	>200% for 250ms; 150- 200% for 2 seconds; 125- 150% for 50 seconds; 105-125% for 60 seconds	>200% for 250ms; 150- 200% for 2 seconds; 125- 150% for 50 seconds; 105-125% for 60 seconds	>200% for 250ms; 150- 200% for 2 seconds; 125- 150% for 10 seconds; 105-125% for 15 seconds
Battery						
Type	Valve-regulated, non-spillable, lead acid	Valve-regulated, non-spillable, lead acid	Valve-regulated, non-spillable, lead acid	Valve-regulated, non-spillable, lead acid	Valve-regulated, non-spillable, lead acid	Valve-regulated, non-spillable, lead acid
Backup Time (100% Load)	17.9	10.4	6.7	6.7	4	4
Backup Time (50% Load)	40.4	25.5	17.9	18.8	12.3	12.6
+1 External Battery Cabinet (100% Load)	76.3	45.4	32.6	32.4	22	22.2
+1 External Battery Cabinet (50% Load)	147.8	102.4	76.5	79.7	53.6	54.6
Environmental Requirements						
Operating Temperature, °F (°C)	+32 to +104 (0 to 40)	+32 to +104 (0 to 40)	+32 to +104 (0 to 40)	+32 to +104 (0 to 40)	+32 to +104 (0 to 40)	+32 to +104 (0 to 40)
Storage Temperature, °F (°C)	-4 to +140 (-20 to 60) contain batteries will be from -15 to 40°C.	-4 to +140 (-20 to 60) contain batteries will be from -15 to 40°C.	-4 to +140 (-20 to 60) contain batteries will be from -15 to 40°C.	-4 to +140 (-20 to 60) contain batteries will be from -15 to 40°C.	-4 to +140 (-20 to 60) contain batteries will be from -15 to 40°C.	-4 to +140 (-20 to 60) contain batteries will be from -15 to 40°C.
Relative Humidity	0% to 95%, non-condensing	0% to 95%, non-condensing	0% to 95%, non-condensing	0% to 95%, non-condensing	0% to 95%, non-condensing	0% to 95%, non-condensing
Operating Elevation	10,000 ft. (3,000m)	10,000 ft. (3,000m)	10,000 ft. (3,000m)	10,000 ft. (3,000m)	10,000 ft. (3,000m)	10,000 ft. (3,000m)
Storage Elevation	50,000 ft. (15,000m)	50,000 ft. (15,000m)	50,000 ft. (15,000m)	50,000 ft. (15,000m)	50,000 ft. (15,000m)	50,000 ft. (15,000m)
Audible Noise	<46dBA max @ 3 ft. (1m) front and sides < 43dBA, at 3 ft. (1m) rear	<46dBA max @ 3 ft. (1m) front and sides < 43dBA, at 3 ft. (1m) rear	<46dBA max @ 3 ft. (1m) front and sides < 43dBA, at 3 ft. (1m) rear	< 46dBA at 3 ft. (1m) front and side < 45dBA at 3 ft. (1m) rear	<48dBA max @ 3 ft. (1m) front and side <48dBA max @ 3 ft. (1m) rear	<48dBA max @ 3 ft. (1m) front and side <48dBA max @ 3 ft. (1m) rear
Agency						
Surge Immunity	ANSI C62.41 Category B	ANSI C62.41 Category B	ANSI C62.41 Category B	ANSI C62.41 Category B	ANSI C62.41 Category B	ANSI C62.41 Category B
Transportation	ISTA Procedure 1A	ISTA Procedure 1A	ISTA Procedure 1A	ISTA Procedure 1A	ISTA Procedure 1A	ISTA Procedure 1A
Safety	UL 1778 4th Edition and CSA 22.2 No 107.3	UL 1778 4th Edition and CSA 22.2 No 107.3	UL 1778 4th Edition and CSA 22.2 No 107.3	UL 1778 4th Edition and CSA 22.2 No 107.3	UL 1778 4th Edition and CSA 22.2 No 107.3	UL 1778 4th Edition and CSA 22.2 No 107.3
Emissions	FCC Part 15 (Class A) - CISPR22 Class A (RFI)	FCC Part 15 (Class A) - CISPR22 Class A (RFI)	FCC Part 15 (Class A) - CISPR22 Class A (RFI)	FCC Part 15 (Class A) - CISPR22 Class A (RFI)	FCC Part 15 (Class A) - CISPR22 Class A (RFI)	FCC Part 15 (Class A) - CISPR22 Class A (RFI)
Environmental	WEEE and ROHS2 REACH	WEEE and ROHS2 REACH	WEEE and ROHS2 REACH	WEEE and ROHS2 REACH	WEEE and ROHS2 REACH	WEEE and ROHS2 REACH
Warranty						
	Std. 3 year; Opt. 2 year	Std. 3 year; Opt. 2 year	Std. 3 year; Opt. 2 year	Std. 3 year; Opt. 2 year	Std. 3 year; Opt. 2 year	Std. 3 year; Opt. 2 year
Protection Plan						
Equipment Protection Plan	$500,000					

Vertiv™ VR Rack
Supports a wide variety of equipment and gives you the flexibility you need with easy installation

Vertiv™ Geist™ rPDU
Reliably distributes power to the rack, supporting dynamic data center operations and DCIM

Vertiv™ SwitchAir™
Prevents overheating of network switches by directing cool air to switch intakes, keeping hot exhaust air out

Vertiv™ ACS Console
Enables integrated remote monitoring, out-of-band management, and IoT connectivity

Vertiv™ KVM Switch
Enables single-point access for switching between multiple computers

Vertiv™ Rack Cooling
Provides energy-efficient cooling close to the IT equipment and UPS units

Vertiv™ Liebert® GXT5
Helps protect mission-critical equipment from all power disturbances due to blackouts, brownouts, sags, surges or noise interference

Accessories

Racks and enclosures: Support a wide variety of equipment with the Vertiv™ VR Rack including servers, storage, switches, routers, PDUs, UPS units, console port servers, and KVM switches.

Rails and mounting hardware: Install equipment with a four-post rail kit and hardware for mounting in a 19- or 23-inch rack or choose a two-post telecom rack for front- or mid-chassis, wall, or Zero U configuration.

Rack mount PDUs: For basic or intelligent power distribution that helps prevent overloaded circuits in the data center, choose from products such as upgradable PDUs, inline power meters, transfer switches, and monitoring sensors.

Extended battery modules: Enable scalable runtime for support during extended power outage situations by adding reliable power and protection to new or existing deployments.

Environmental sensor: Maintain knowledge of remote environments with temperature, humidity and leak detection, or monitor available dry-contact sensors for security access control or smoke detection.

Available Accessories for the Vertiv™ Liebert® GXT5 UPS

External battery cabinets and replacement battery kits

UPS	External battery cabinets	Replacement battery kits
GXT5-500LVRT2UXL	GXT5-EBC36VRT2U	GXT5-36VBATKIT
GXT5-750LVRT2UXL	GXT5-EBC36VRT2U	GXT5-36VBATKIT
GXT5-1000LVRT2UXL	GXT5-EBC36VRT2U	GXT5-36VBATKIT
GXT5-1500LVRT2UXL	GXT5-EBC48VRT2U	GXT5-48VBATKIT
GXT5-2000LVRT2UXL	GXT5-EBC48VRT2U	GXT5-48VBATKIT
GXT5-3000LVRT2UXL	GXT5-EBC72VRT2U	GXT5-72VBATKIT

Network communications and environmental sensors

Network Communications	RDU101	Intellislot web card for SNMP and web management. Supports environmental sensors.
	IS-RELAY	Intellislot Interface Kit for Relay Contacts
Environmental Sensors	SN-Z01	Integrated cable with single temperature sensor
	SN-Z02	Integrated cable with three temperature sensors
	SN-Z03	Integrated cable with three temperature and one humidity sensors
	SN-T	Modular with single temperature sensor
	SN-TH	Modular with single temperature and single humidity sensor
	SN-2D	Modular with two door contact inputs
	SN-3C	Modular with three dry contact inputs
	SN-L20	Modular leak zone sensor with 20 foot cable (Liebert RDU-S only)
UPS manageability options	Vertiv™ Power Insight Software Management	Vertiv™ Power Insight is a complimentary web-based software designed to monitor up to 100 Vertiv™ UPSs and rPDUs

Liebert® MicroPOD - Maintenance bypass and output distribution

The Liebert® MicroPOD (Power Output Distribution) is a maintenance bypass option for UPS products, 3 kVA and below. It allows removal of the UPS without powering down the connected equipment. The 2U POD's can be installed on the floor or mounted to a Liebert® GXT5 UPS using the included mounting brackets.

UPS VA rating	POD model number	Output receptacles	Plug to utility
500-1500VA UPS	MP2-115HW	Hard Wired	Hardwired
	MP2-115A	8 x 5-15R	5-15P
2000VA UPS	MP2-120HW	Hard Wired	Hardwired
	MP2-120C	8 x 5-15/20R	5-20P
	MP2-120E	4 x 5-15/20R; 1 x L5-20R	5-20P
3000VA UPS	MP2-130HW	Hard Wired	Hardwired
	MP2-130C	8 x 5-15/20R	L5-30P
	MP2-130E	2 x 5-15/20R; 1 x L5-30R; 4 x 5-15/20R	L5-30P
	MP2-130P	4 x 5-15R; 2 x L5-20R	L5-30P

2POSTRMKIT

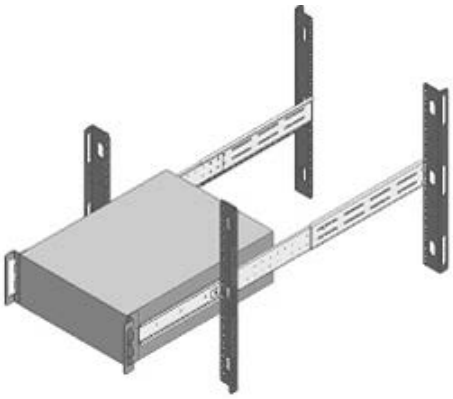

Rack Slide Kits for all Liebert® GXT5 Rack Tower Models (RMKIT 18-32)

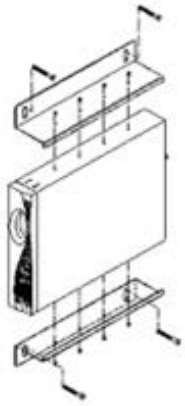

Wall Mount Bracket Kit for Liebert® GXT5 500VA – 3000VA models WMBKT2U and WBMKT2U-SS

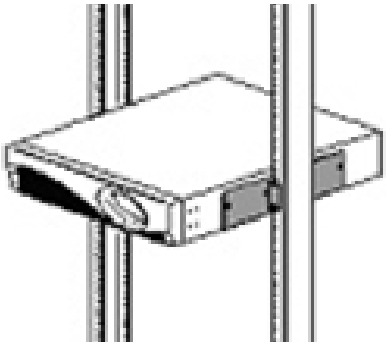

2UTELECOMRKIT

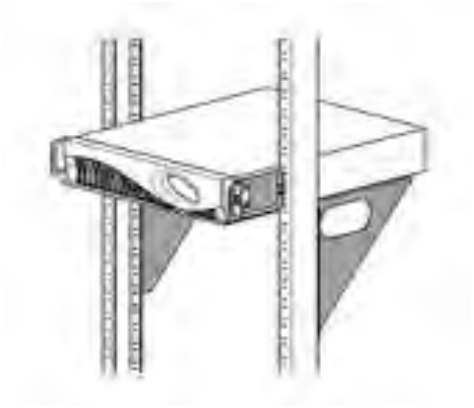

Rack Shelves - Center mount shown RS600 / RS800

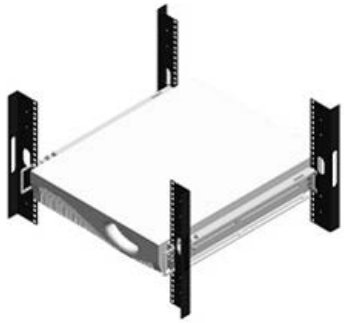

Standard Kit included inside the UPS box 201193G1L

Mounting Kit Options

Application	Model Supported	Style	Model	Description
2 Post rack	Liebert® GXT5 UPS family (500VA to 10kVA)	Shelf	RS500	Flush-mount shelf for 19" rack wide
		Shelf	RS600	Center-mount shelf for 19" rack wide
		Shelf	RS700	Flush-mount shelf for 23" rack wide
		Shelf	RS800	Center-mount shelf for 23" rack wide
	Liebert® GXT5 up to 3kVA	Bracket	2UTELECOMRKIT	Only center-mount bracket for 19" rack wide
		Bracket	2POSTRMKIT	Front flush/ center-mount bracket - 4-piece design
Wall Mount	Liebert® GXT5 up to 3kVA	Bracket	WMBKT2U	Wall mount bracket holds (1) GXT5 2U or (1) PSI5 2U product, steel painted black
		Bracket	WMBKT2USS	Wall mount bracket holds (1) GXT5 2U or (1) PSI5 2U product, stainless steel
4 Post rack	Entire Liebert® GXT5 UPS family (500VA to 10kVA)	Bracket	RMKIT18-32	Cabinet/racks with 18" - 32" deep support rails - Telescopic rail

Note: RS600 and RS800 kits include adapter brackets for installation of up to (2) Liebert® GXT5 2U model

Liebert® GXT5 UPS - Power Assurance Services

Power Assurance Package

Bundled Start-up Service AND 5-Year On-site Emergency Response	Standard	With LIFE™ Services	With Removal	With LIFE™ and Removal
Equipment Model / Type	**Part Number**	**Part Number**	**Part Number**	**Part Number**
Liebert® GXT5 UP TO 3 KVA	PAPGXT-1K3K	PAPGXT-1K3KLF	PAPGXT-1K3KRMV	PAPGXT-1K3KRLF
External Battery Cabinet (36V or 48V or 72V)	PAPGXT-BATT	N/A	PAPGXT-BATTRMV	N/A

Power Startup Services

Startup Service Only	Standard	With Removal
Equipment Model / Type	**Part Number**	**Part Number**
Liebert® GXT5 UP TO 3 KVA	SUGXT-1K3K	SUGXT-1K3KRMV
External Battery Cabinet (36V or 48V or 72V)	SUGXT-EXTBTCB	SUGXT-EXTBTCBRMV

Power Emergency Services

5-Year On-site Emergency Coverage - Only	Standard	With LIFE Services
Equipment Model / Type	**Part Number**	**Part Number**
Liebert® GXT5 UP TO 1 KVA	PEPGXT-1K5YR	PEPGXT-1KLF
Liebert GXT5 1.5 kVA	PEPGXT-15005YR	PEPGXT-1500LF
Liebert GXT5 2.0 kVA	PEPGXT-20005YR	PEPGXT-2000LF
Liebert GXT5 3.0 kVA	PEPGXT-30005YR	PEPGXT-3000LF
External Battery Cabinet 36V	PEPGXT-36VBAT5YR	N/A
External Battery Cabinet 48V	PEPGXT-48VBAT5YR	N/A
External Battery Cabinet 72V	PEPGXT-72VBAT5YR	N/A

Power Assurance Package - Summary

- Includes all below "Power Start-up Services" and "Power Emergency Services" support
- One Preventative Maintenance visit after 3rd year (5-10kVA UPS only)

Power Startup Services - Summary

- Installation includes mounting and start-up of new UPS or EBC (excludes hard-wired applications)
- Services performed by Vertiv factory trained technician
- Services performed 7 X 24, excluding national holidays within the 48 contiguous states and Hawaii
- Removal and disposal of existing UPS or EBC equipment, if selected

Power Emergency Services - Summary

- On Site Service Support
- Full-service five (5) year contract term commencing upon the start-up date
- 100% parts coverage, including internal batteries, POD and web card
- 100% labor and travel coverage 7 days/week, 24 hours/day
- 24-Hour Customer Resolution Center via 1-800-LIEBERT
- Access to Customer Services Network portal

LIFE™ Services includes above plus:

- Continuous Monitoring, Expert Analysis, and Proactive Response

Note: LIFE Services requires an RDU101 card, which is included on all 5000VA to 10000VA models.

Please refer to the Scopes of Work for full and additional details.

Vertiv.com | **Vertiv Headquarters,** 505 N Cleveland Ave, Westerville, OH 43082, USA

© 2023 Vertiv Group Corp. All rights reserved. Vertiv™ and the Vertiv logo are trademarks or registered trademarks of Vertiv Group Corp. All other names and logos referred to are trade names, trademarks or registered trademarks of their respective owners. While every precaution has been taken to ensure accuracy and completeness here, Vertiv Group Corp. assumes no responsibility, and disclaims all liability, for damages resulting from use of this information or for any errors or omissions. Specifications, rebates and other promotional offers are subject to change at Vertiv's sole discretion upon notice.

SL-70414 (R04/23)

LIEBERT® GXT5 UPS PRODUCTS 3-YEAR LIMITED WARRANTY

Thank you for your purchase of this Product.

Please read this Warranty carefully. This Warranty sets forth Vertiv's responsibility in the unlikely event of defect and tells you how to obtain performance under this Warranty.

Warrantor

Vertiv Corporation (referred to herein as "Vertiv") offers the following **Three-Year Limited Warranty Against Defects in Material and Workmanship ("Warranty")** for applicable Product.

Products Covered

Liebert GXT5 UPS Products

Terms of Warranty

As provided herein, Vertiv warrants that during the Warranty Period (as defined below) the Product:

- is free of defects in material and workmanship; and
- conforms to the descriptions contained in any applicable certified drawings for such Product, to Vertiv's final invoices, and to applicable Vertiv Product brochures and manuals current as of the date of Product shipment ("Descriptions")

Warranty Period

A period of three (3) years from date of product shipment to end user, which period shall expire no later than thirty-nine (39) months from the Product shipment date. Product shipment date is determined only from the bill of lading. If any part or portion of the Vertiv Product fails to conform to the Warranty within the Warranty Period, Vertiv, at its option, will furnish new or factory remanufactured Products for repair or replacement of that failed portion or part. REPAIR OR REPLACEMENT OF A DEFECTIVE PRODUCT OR PART THEREOF DOES NOT EXTEND OR RESTART THE ORIGINAL WARRANTY PERIOD. Vertiv does not control the use of any Product and, accordingly, materials classified as "Descriptions" are NOT WARRANTIES OF PERFORMANCE and NOT WARRANTIES OF FITNESS FOR A PARTICULAR PURPOSE.

Who is covered

This Warranty extends to the original end-user (the "User") and only within the fifty states of the USA and Canada. This Warranty is not transferable or assignable without the prior written permission of Vertiv. This Warranty is given ONLY to purchasers who buy for commercial or industrial use in the ordinary course of business. Vertiv assigns to User any warranties which are made by manufacturers and suppliers of components of, or accessories to, the Vertiv Product and which are assignable, but Vertiv makes NO REPRESENTATIONS as to the effectiveness or extent of such warranties, assumes NO RESPONSIBILITY for any matters which may be warranted by such manufacturers or suppliers and extends no coverage under this Warranty to such components or accessories.

Warranty Claims Procedure and Services

Within thirty (30) days after User's discovery of a defect, User must contact Vertiv at (800) 222-5877 and provide all material information relating to such alleged defect.

Vertiv, in its sole discretion, shall either repair or replace defective Products. For Products to be repaired, Vertiv will issue a RETURN MATERIALS AUTHORIZATION ("RMA") number. The RMA number must appear on the packing slip, proof of purchase, AND ON THE OUTSIDE OF EACH SHIPPING CARTON for any authorized returned Product. Vertiv will designate a shipping address ("Ship To Address") that must be used for each authorized returned Product. Vertiv shall pay all freight charges to the designated Ship To Address for each authorized returned Product. Unauthorized returns or collect shipments will be refused.

Items Not Covered

THIS WARRANTY DOES NOT COVER DAMAGE OR DEFECT CAUSED BY misuse, improper application, wrong or inadequate electrical current or connection, negligence, inappropriate on site operating conditions, repair by non-Vertiv designated personnel, accident in transit, tampering, alterations, a change in location or operating use, exposure to the elements, Acts of God, theft or installation contrary to Vertiv's recommendations or specifications, or in any event if the Vertiv serial number has been altered, defaced, or removed.

THIS WARRANTY DOES NOT COVER unauthorized shipping costs, Product installation/removal costs, travel costs, external circuit breaker resetting or maintenance or service items and further, except as may be provided herein, does NOT include labor costs or transportation, arising from the replacement of the Vertiv Product or any part thereof or charges to remove or reinstall same at any premises of User, nor for site inspections that determine no corrective action was required nor any other services not expressly provided for by the terms of the Warranty. Consumables, including but not limited to air filters, are not covered by this Warranty.

THIS WARRANTY IS VOID UPON THE FOLLOWING: (1) the Product having been stored in an unsuitable environment after Product shipment, and/or (2) if the Product contains an internal battery, User allows such battery to discharge below the minimum battery voltage cutoff point or if the User does not start recharging a discharged, or partially discharged, battery within forty-eight (48) hours of the discharge period. No salesperson, employee or agent of Vertiv is authorized to add to or vary the terms of this Warranty. Vertiv retains the right to cancel the Warranty, subject to reinstatement at Vertiv's sole discretion, for late- or non-payment of the Product purchase price and any other amounts due. Warranty terms may only be modified, if at all, if in writing and signed by a Vertiv officer.

Other Limitations

THIS LIMITED WARRANTY IS IN LIEU OF AND EXCLUDES ALL OTHER WARRANTIES, EXPRESS OR IMPLIED, INCLUDING MERCHANTABILITY AND FITNESS FOR A PARTICULAR PURPOSE. USER'S SOLE AND EXCLUSIVE REMEDY IS REPAIR OR REPLACEMENT OF THE VERTIV PRODUCT AS SET FORTH HEREIN. IF USER'S REMEDY IS DEEMED TO FAIL OF ITS ESSENTIAL PURPOSE BY A COURT OF COMPETENT JURISDICTION, VERTIV'S RESPONSIBILITY FOR PROPERTY LOSS OR DAMAGE SHALL NOT EXCEED THE NET PRODUCT PURCHASE PRICE. IN NO EVENT SHALL VERTIV ASSUME ANY LIABILITY FOR INDIRECT, SPECIAL, INCIDENTAL, CONSEQUENTIAL OR EXEMPLARY DAMAGES OF ANY KIND WHATSOEVER, INCLUDING WITHOUT LIMITATION LOST PROFITS, BUSINESS INTERRUPTION OR LOSS OF DATA, WHETHER ANY CLAIM IS BASED UPON THEORIES OF CONTRACT, NEGLIGENCE, STRICT LIABILITY, TORT, OR OTHERWISE. THE PRODUCTS LISTED IN THIS WARRANTY ARE NOT FOR USE IN CONNECTION WITH ANY NUCLEAR, MEDICAL, LIFE-SUPPORT AND RELATED APPLICATIONS.

Vertiv.com | **Vertiv Headquarters,** 1050 Dearborn Drive, Columbus, OH, 43085, USA

© 2019 Vertiv Group Corp. All rights reserved. Vertiv and the Vertiv logo are trademarks or registered trademarks of Vertiv Group Corp. All other names and logos referred to are trade names, trademarks or registered trademarks of their respective owners. While every precaution has been taken to ensure accuracy and completeness herein, Vertiv Group Corp. assumes no responsibility, and disclaims all liability, for damages resulting from use of this information or for any errors or omissions. Specifications are subject to change without notice.

Vertiv™ Liebert® GXT5 Lithium-Ion UPS

1000 - 3000VA 120V

Rack/Tower

Intelligent and Efficient Double Conversion Online UPS Offers the Highest Level of Power Protection

LIB
Lithium-ion
Batteries

The Vertiv™ Liebert® GXT5 Lithium-Ion UPS provides the highest level of power protection for your business critical IT applications.

High Performance Online Power Protection

The Liebert® GXT5 Lithium-Ion double conversion online UPS provides both the highest level of power conditioning and battery backup for business critical IT equipment such as business network gear and servers ensuring your mission-critical applications are protected in the event of an unanticipated loss of power or an unprecedented power surge.

The Liebert GXT5 Lithium-Ion UPS protects against the widest range of power fluctuations and automatically switches to battery backup when power loss is detected. With a 0.9 or better output power factor (PF) and no transfer time to operation on battery, you can ensure your most critical assets are protected.

Protects Against

Outages | Sags | Surges | Spikes | Transient | Under-Voltage | Over-Voltage

The rack/tower convertible design of the Liebert GXT5 Lithium-Ion UPS makes it ideal for edge or distributed IT applications where floor space is at a premium. It is a true low-maintenance, set-it and forget-it solution ideal for remote locations with limited onsite technical resources.

Vertiv Liebert GXT5 Lithium-Ion Overview

- 1000VA, 1500VA, 2000VA, & 3000VA UPSs in a rack/tower convertible form factor
- Standard 5-year warranty provides peace of mind that your investment is protected against potentially costly equipment failures
- Achieve the lowest total cost of ownership over the lifetime of the UPS with fewer battery replacements and up to 10 years of useable life
- Hot-swappable, user-replaceable batteries increase the useable life of the UPS by allowing you to easily replace the batteries without disrupting power to connected equipment
- Internal batteries offer industry-leading runtime (up to 14 minutes at full load) to protect critical equipment during an unexpected power loss
- Lithium-Ion battery technology offers better performance in high temperature environments, supports up to 10 times more discharge cycles, and delivers faster recharge times compared to VRLA batteries

Why should you choose Lithium-Ion Technology?

LONGER LIFE

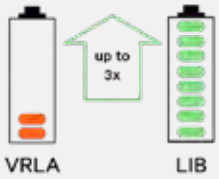

LOWEST TCO

SMALLER AND LIGHTER

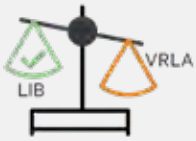

LONGER RUNTIME

ENVIRONMENTALLY FRIENDLY

FAST BATTERY RECHARGE

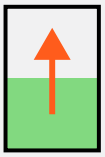

5-Year Warranty

RoHS 2002/95/EC

Lithium-Ion technology delivers up to 3 times the life expectancy of lead-acid batteries and lowers the total cost of ownership by nearly half

Lithium-Ion Outperforms VRLA when compared...

Battery Feature	VRLA Battery	Lithium-Ion Battery	Lithium-Ion Benefit
Standard battery life	3-5 years	8-10 years	Up to 3 times longer life
Typical cycle life	200-260	2000	Up to 10x more discharge/recharge cycles
Battery recharge time (@ 90%)	3-6 hours	<2 hours	Fast recovery time safeguards your critical IT equipment in the event of multiple outages
Battery weight	10.9 kg	5.9 kg	45% lighter making it ideal for small spaces and wall-mount racks
Warranty	2 or 3 years	5 years	Worry free operation so you can set-it and forget-it

Visit the TCO calculator at vertiv.com -> Products & Services -> UPS -> GXT5 Lithium -> Models to calculate the cost savings for your installation.

Build Your Total Infrastructure Solution with Vertiv

Discover expert designed IT infrastructure solutions with proven success in diverse environments and countless applications.

Vertiv™ Geist™ rPDU
Reliable power distribution with outlet level remote monitoring and management providing the highest level of power visibility and control.

Vertiv™ VR Rack
Self-contained 42U server rack designed to simplify equipment installation and provides an additional 6cm of useable depth.

Cable and Air Flow Management
Included accessories ensure proper cable management and airflow to keep your equipment cool.

Software and IT Management
Monitor the entire system either locally or remotely to ensure you are alerted of out-of-range conditions that could result in costly downtime.

Vertiv™ VRC
Keep critical IT equipment cool with a dedicated high-efficiency rack-mount cooling system with scalable capacity.

Vertiv™ Liebert® GXT5 Lithium-Ion UPS
Protect mission critical equipment in the event of power loss or extreme power fluctuations.

Visit Vertiv.com or contact a Vertiv Sales Representative today to find out how Vertiv can help you configure an all-in-one infrastructure solution.

High Performance

0.9 (or Better) Output Power Factor (PF): Provides more useable power enabling you to connect more equipment saving you money and space.

Increased Runtime: Internal batteries offer up to 14 minutes of runtime at full load.

Programmable Outlet Group: Extend run time when on battery power by power-cycling connected equipment and shedding less critical loads.

Battery Backed Outlets: Up to 7 battery backed outlets ensuring critical equipment is protected.

Advanced Warning Status: Receive early audible and visual alarms warning you of system status to alert you to an input voltage, output overload, low battery, or battery replacement condition.

Wide Input Voltage Range: Prolong battery life by allowing the UPS to maximize the use of the utility power before transferring to battery.

Superior Battery Technology

LIB
Lithium-ion
Batteries

Fewer Battery Replacements: Lithium-Ion batteries require fewer battery replacements and last on average up to 3 times as long as traditional VRLA batteries reducing maintenance, labor, and replacement costs (lower TCO).

More Discharge Cycles: Lithium-Ion batteries deliver up to 10 times more charge / discharge cycles than VRLA batteries.

Fast Recharge: Lithium-Ion batteries recharge twice as fast as traditional VRLA batteries getting you back to 90% in as little as 2 hours.

Hot-Swappable, User-Replaceable Batteries: Increase product life and reliability with batteries that can be easily replaced without disrupting power to connected equipment.

Safe and Reliable: Safest Lithium-Ion (LiFePO4) battery chemistry and integrated battery management system (BMS) ensure safe and reliable operation.

Environmentally Friendly: Significantly reduce battery disposal and recycling with lower replacement rates.

Enhanced Manageability

LCD Display: User-friendly full-color LCD interface with gravity sensing orientation simplified installation and configuration while also providing instant at-a-glance status and insights.

Free Power Management Software:

- Vertiv™ Power Insight – Add the Vertiv™ Liebert® RDU101 card for web/SNMP manageability
- Vertiv™ Power Assist – Monitor UPS conditions through a local USB connection
- Vertiv™ Intelligence Director – Together with Vertiv™ Geist™ rPDU one single IP Address to monitor and manage up to 50 devices

Remote Monitoring and Management: Add an optional Vertiv™ Liebert® IntelliSlot™ RDU101 communication card to enable remote monitoring / management (web based, SNMP, BACnet, MODBUS and relay contacts) and environmental monitoring via external sensors.

Remote Emergency Power Off: Remotely shutdown the UPS during an emergency.

Vertiv™ Liebert® GXT5 Lithium-Ion Features

High power factor (0.9-1.0)
More usable power enables more connected loads saving space and costs.

Efficiency (up to 95%) in online mode
Energy Star 2.0 certification. Higher efficiency means an optimized energy management and lower heat dissipation, for energy savings and improved reliability.

Efficiency (up to 98%) in Active ECO mode
Superior protection with maximum efficiency.

Colored graphic LCD with gravity sensitive orientation
User-friendly interface provides insight to UPS status for easy installation, configuration and operation.

Compact rack/tower design
Space-saving UPS provides rack space optimization and flexible installation.

Battery cabinets with auto-detection
Be confident the UPS is set up correctly to report available runtime when used with external battery cabinets.

Product warranty
Comprehensive coverage through a standard five-year advanced exchange warranty.

1000-1500VA – 120V Rack/Tower

External Battery Connector
Scalable runtime solution supported for extended outage protection (up to 8 External Battery Cabinets)

4 x Individually Controllable Receptacle
Manage load on battery and control unauthorized access to UPS receptacle

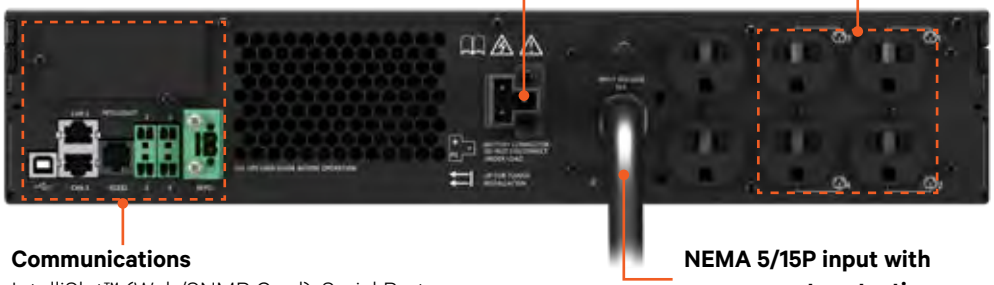

Communications
IntelliSlot™ (Web/SNMP Card), Serial Port, Dry Contacts, USB Port for Local and Remote Configuration and UPS Management

NEMA 5/15P input with over current protection
Simple installation and power on with connected input cord

2000VA – 120V Rack/Tower

External Battery Connector
Scalable runtime solution supported for extended outage protection (up to 8 External Battery Cabinets)

NEMA L5-20R
Support larger devices or rack PDU

4x Individually Controllable Receptacle, 2x Always on Receptacles
Manage load on battery and control unauthorized access to UPS receptacle

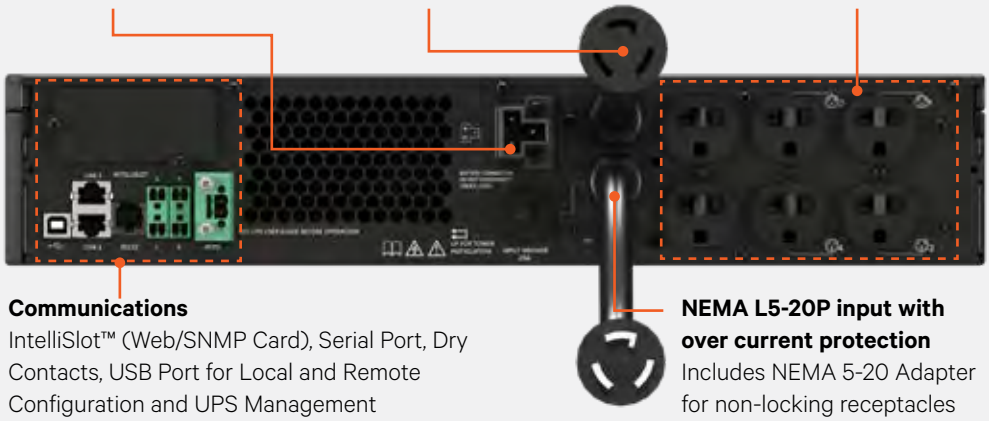

Communications
IntelliSlot™ (Web/SNMP Card), Serial Port, Dry Contacts, USB Port for Local and Remote Configuration and UPS Management

NEMA L5-20P input with over current protection
Includes NEMA 5-20 Adapter for non-locking receptacles

3000VA – 120V Rack/Tower

External Battery Connector
Scalable runtime solution supported for extended outage protection (up to 8 External Battery Cabinets)

NEMA L5-30R
Support larger devices or rack PDU

4x Individually Controllable Receptacle, 2x Always on Receptacles
Manage load on battery and control unauthorized access to UPS receptacle

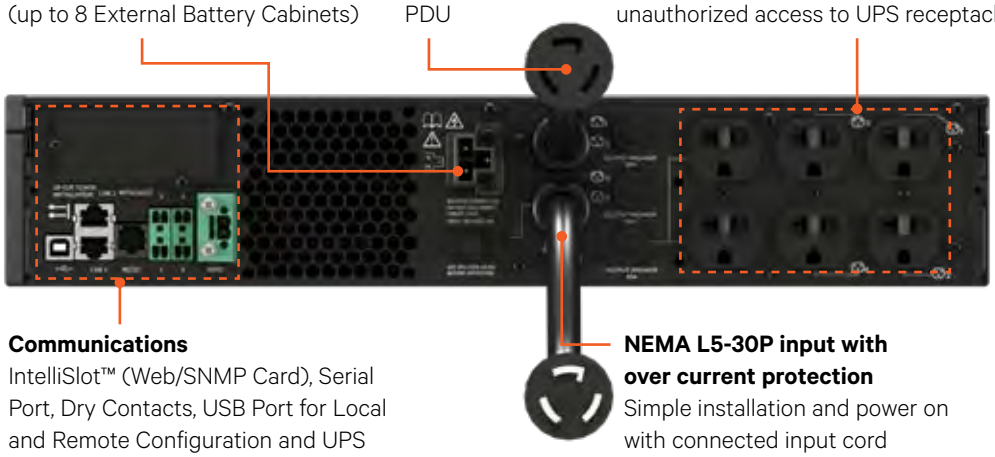

Communications
IntelliSlot™ (Web/SNMP Card), Serial Port, Dry Contacts, USB Port for Local and Remote Configuration and UPS Management

NEMA L5-30P input with over current protection
Simple installation and power on with connected input cord

Technical Specifications | 1000 VA - 3000 VA, 120V, Rack/Tower Convertible

Standard Models Models with RDU101 Network Card	GXT5LI-1000LVRT2UXL GXT5LI-1000LVRT2UXLN	GXT5LI-1500LVRT2UXL GXT5LI-1500LVRT2UXLN	GXT5LI-2000LVRT2UXL GXT5LI-2000LVRT2UXLN	GXT5LI-3000LVRT2UXL GXT5LI-3000LVRT2UXLN
Form Factor	2U Rack/Tower	2U Rack/Tower	2U Rack/Tower	2U Rack/Tower
Power Rating	1000VA / 1000W	1500VA / 1350W	2000VA / 1800W	3000VA / 2700W
Dimensions, W X D X H, IN (MM)				
Unit	16.9 x 17.3 x 3.4 (430 x 446 x 85)	16.9 x 18.7 x 3.4 (430 x 476 x 85)	16.9 x 18.7 x 3.4 (430 x 476 x 85)	16.9 x 21.5 x 3.4 (430 x 546 x 85)
Shipping	22.4 x 23.5 x 9.5 (570 x 597 x 242)	22.4 x 23.5 x 9.5 (570 x 597 x 242)	22.4 x 23.5 x 9.5 (570 x 597 x 242)	22.4 x 28.2 x 9.5 (570 x 717 x 242)
Weight, LB (KG)				
Unit	37.5lbs (17kg)	39.7lbs (18kg)	39.7lbs (18kg)	48.5lbs (22kg)
Shipping	47.6lbs (21.6kg)	52.9lbs (24kg)	52.9lbs (24kg)	59.7lbs (27.1kg)
Input/Output AC Parameters				
Input Plug	NEMA 5-15P	NEMA 5-15P	NEMA L5-20P	NEMA L5-30P
Input Cord	10ft (3m) Atttached	10ft (3m) Attached)	10ft (3m) Attached L5-20 To 5-20P Adapter	10ft (3m Attached)
Total Receptacles	(6) NEMA 5-15R	(6) NEMA 5-15R	(1) NEMA L5-20R, (6) NEMA 5-15/20R	(1) NEMA L5-30R, (6) NEMA 5-15/20R
Programmable Receptacles	(4) NEMA 5-15R	(4) NEMA 5-15R	(4) NEMA 5-15/20R	(4) NEMA 5-15/20R
Nominal Voltage Setting	120VAC Default; 100/110/115/120V/125VAC (User-Configurable)	120VAC Default; 100/110/115/120V/125VAC (User-Configurable)	120VAC Default; 100/110/115/120V/125VAC (User-Configurable)	120VAC Default; 100/110/115/120V/125VAC (User-Configurable)
Voltage Range Without Battery Operation	Nominal (Full Load): 102 - 150 VAC; Maximum: 60 - 150 VAC	Nominal (Full Load): 102 - 150 VAC; Maximum: 60 - 150 VAC	Nominal (Full Load): 102 - 150 VAC; Maximum: 60 - 150 VAC	Nominal (Full Load): 102 - 150 VAC; Maximum: 60 - 150 VAC
Frequency Range	40~70Hz	40~70Hz	40~70Hz	40~70Hz
Surge Protection	ANSI C62.41, Category B	ANSI C62.41, Category B	ANSI C62.41, Category B	ANSI C62.41, Category B
Transfer Time	0 ms	0 ms	0 ms	0 ms
Battery Waveform	Pure Sine Wave	Pure Sine Wave	Pure Sine Wave	Pure Sine Wave
Battery Parameters				
Type	Lithium-Ion (LiFePO4)	Lithium-Ion (LiFePO4)	Lithium-Ion (LiFePO4)	Lithium-Ion (LiFePO4)
Recharge Time (from full discharge)	< 2 hrs to 90%	< 2 hrs to 90%	< 2 hrs to 90%	< 2 hrs to 90%
Full-Load Runtime	13 min	14 min	10.5 min	6.5 min
Half-Load Runtime	28 min	28 min	22.5 min	15 min
External Battery Cabinet	VEBCLI-48VRT1U	VEBCLI-48VRT1U	VEBCLI-48VRT1U	VEBCLI-48VRT1U
Environmental				
Operating Temperature,°F (°C)	32°F to 104°F (0°C to 40°C) (10% Derating at 50°C)	32°F to 104°F (0°C to 40°C) (10% Derating at 50°C)	32°F to 104°F (0°C to 40°C) (10% Derating at 50°C)	32°F to 104°F (0°C to 40°C) (10% Derating at 50°C)
Storage Temperature °F (°C)	-4° to 140° (-20° to 60°)	-4° to 140° (-20° to 60°)	-4° to 140° (-20° to 60°)	-4° to 140° (-20° to 60°)
Relative Humidity	0% – 95%, non-condensing	0% – 95%, non-condensing	0% – 95%, non-condensing	0% – 95%, non-condensing
Operating Altitude, ft (m)	0 to 10,000 (0 to 3,000) w/o Derating (15% Derating at 4000m)	0 to 10,000 (0 to 3,000) w/o Derating (15% Derating at 4000m)	0 to 10,000 (0 to 3,000) w/o Derating (15% Derating at 4000m)	0 to 10,000 (0 to 3,000) w/o Derating (15% Derating at 4000m)
Audible Noise	< 48 dB	< 48 dB	< 48 dB	< 48 dB
Certifications				
Safety	UL 1642 (Li-Ion Battery Cells), UL 1973 (Li-Ion Battery Pack w/UPS), UL 1778, CSA 22.2 No. 107.3	UL 1642 (Li-Ion Battery Cells), UL 1973 (Li-Ion Battery Pack w/UPS), UL 1778, CSA 22.2 No. 107.3	UL 1642 (Li-Ion Battery Cells), UL 1973 (Li-Ion Battery Pack w/UPS), UL 1778, CSA 22.2 No. 107.3	UL 1642 (Li-Ion Battery Cells), UL 1973 (Li-Ion Battery Pack w/UPS), UL 1778, CSA 22.2 No. 107.3
Agency	UL 1778, c-UL, NOM, FCC Part 15, Class A	UL 1778, c-UL, NOM, FCC Part 15, Class A	UL 1778, c-UL, NOM, FCC Part 15, Class A	UL 1778, c-UL, NOM, FCC Part 15, Class A
Environmental	RoHS2 / REACH / WEEE	RoHS2 / REACH / WEEE	RoHS2 / REACH / WEEE	RoHS2 / REACH / WEEE
Network Surge	IEC 61000-4-5, ANSI C62.41, Category B	IEC 61000-4-5, ANSI C62.41, Category B	IEC 61000-4-5, ANSI C62.41, Category B	IEC 61000-4-5, ANSI C62.41, Category B
Transportation	ISTA Procedure 2A	ISTA Procedure 2A	ISTA Procedure 2A	ISTA Procedure 2A
Warranty	5 years on UPS and Battery	5 years on UPS and Battery	5 years on UPS and Battery	5 years on UPS and Battery
Equipment Protection Plan	Up To $500,000 (For Covered Equipment)	Up To $500,000 (For Covered Equipment)	Up To $500,000 (For Covered Equipment)	Up To $500,000 (For Covered Equipment)

Optional Accessories

External battery cabinets and replacement battery kits

UPS	External battery cabinets*	Internal Replacement Battery Kits
GXT5LI-1000LVRT2UXL	VEBCLI-48VRT1U	GXT5LI-48VBATKIT1
GXT5LI-1500LVRT2UXL	VEBCLI-48VRT1U	GXT5LI-48VBATKIT2
GXT5LI-2000LVRT2UXL	VEBCLI-48VRT1U	GXT5LI-48VBATKIT2
GXT5LI-3000LVRT2UXL	VEBCLI-48VRT1U	GXT5LI-48VBATKIT2

*EBCs are hot-swappable, user-replaceble to allow for the full EBC to be replaced, as needed. Up to 8 EBCs can be used per UPS..

Network communications and environmental sensors

Network Communications	RDU101	Intellislot™ web card for SNMP and web management. Supports environmental sensors.
	IS-RELAY	Intellislot™ Interface Kit for Relay Contacts
Environmental Sensors	SN-Z01	Integrated cable with single temperature sensor
	SN-Z02	Integrated cable with three temperature sensors
	SN-Z03	Integrated cable with three temperature and one humidity sensors
	SN-T	Modular with single temperature sensor
	SN-TH	Modular with single temperature and single humidity sensor
	SN-2D	Modular with two door contact inputs
	SN-3C	Modular with three dry contact inputs
UPS manageability options	Vertiv™ Power Insight Software Management	Vertiv™ Power Insight is a complimentary web-based software designed to monitor up to 100 Vertiv™ UPSs and rPDUs

MicroPOD - Maintenance bypass and output distribution

The Vertiv™ Liebert® MicroPOD (Power Output Distribution) is a maintenance bypass option for UPS products, 3 kVA and below. It allows removal of the UPS without powering down the connected equipment. The 2U POD's can be installed on the floor or mounted to a Liebert® GXT5 UPS using the included mounting brackets.

UPS VA rating	POD model number	Output receptacles	Plug to utility
500-1500VA UPS	MP2-115HW	Hard Wired	Hardwired
	MP2-115A	8 x 5-15R	5-15P
2000VA UPS	MP2-120HW	Hard Wired	Hardwired
	MP2-120C	8 x 5-15/20R	5-20P
	MP2-120E	4 x 5-15/20R; 1 x L5-20R	5-20P
3000VA UPS	MP2-130HW	Hard Wired	Hardwired
	MP2-130C	8 x 5-15/20R	L5-30P
	MP2-130E	2 x 5-15/20R; 1 x L5-30R; 4 x 5-15/20R	L5-30P
	MP2-130P	4 x 5-15R; 2 x L5-20R	L5-30P

2POSTRMKIT

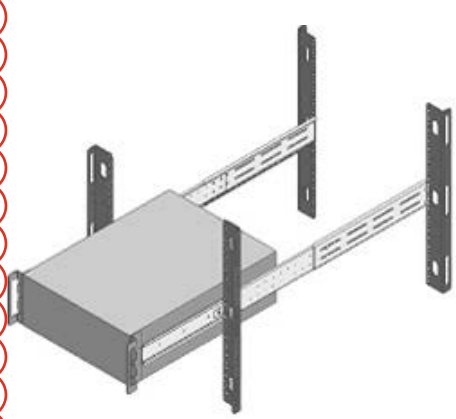

Rack Slide Kits for all Liebert® GXT5 Rack Tower Models (RMKIT 18-32)

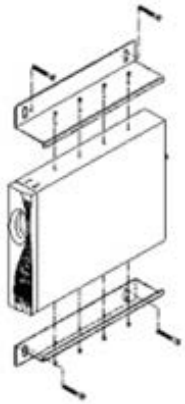

Wall Mount Bracket Kit for Liebert® GXT5 500VA – 3000VA models WMBKT2U and WBMKT2U-SS

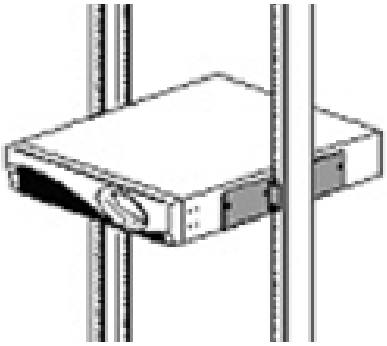

2UTELECOMRKIT

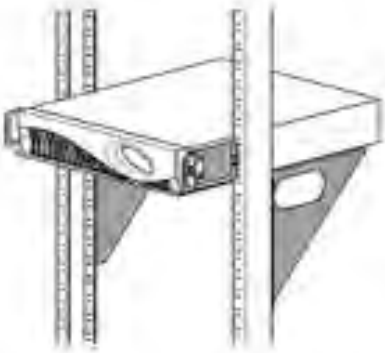

Rack Shelves - Center mount shown RS600 / RS800

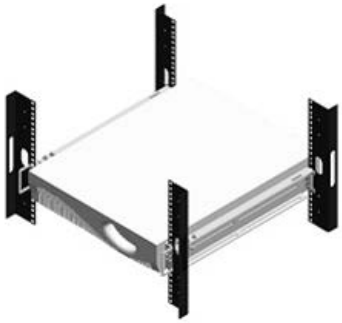

Standard Kit included inside the UPS box 201193G1L

Mounting Kit Options

Application	Model Supported	Style	Model	Description
2 Post - Telecom Rack	Entire Liebert GXT5 UPS family (500VA to 10kVA)	Shelf	RS500	Flush-mount shelf for 19" rack wide
		Shelf	RS600	Center-mount shelf for 19" rack wide
		Shelf	RS700	Flush-mount shelf for 23" rack wide
		Shelf	RS800	Center-mount shelf for 23" rack wide
	Liebert® GXT5 up to 3kVA	Bracket	2UTELECOMRKIT	Only center-mount bracket for 19" rack wide
		Bracket	2POSTRMKIT	Front flush/ center-mount bracket - 4-piece design
Wall Mount	Liebert GXT5 up to 3kVA	Bracket	WMBKT2U	Wall mount bracket holds (1) Liebert® GXT5 2U or (1) Liebert® PSI5 2U product, steel painted black
		Bracket	WMBKT2USS	Wall mount bracket holds (1) Liebert GXT5 2U or (1) Liebert PSI5 2U product, stainless steel
4 Post Rack	Entire Liebert GXT5 UPS family (500VA to 10kVA)	Bracket	RMKIT18-32	Cabinet/racks with 18" - 32" deep support rails - Telescopic rail

Note: RS600 and RS800 kits include adapter brackets for installation of up to (2) Liebert® GXT5 2U model

Power Assurance Package: Comprehensive Service Support for Critical Systems

- **Five-year protection plan** with 100% parts coverage and 24x7 emergency service
- **On-site installation and startup** of UPS and internal batteries (excludes hard-wired applications); configuration of new UPS and accessories; and if purchased, safe removal and disposal of legacy UPS and batteries
- **On-site service support** available 24x7 (within 150 miles of regional service center) and includes 100% labor and travel coverage
- **100% parts coverage** for UPS includes POD (power output distribution), web card, and battery defects
- **24x7 access** to customer resolution center and online access to Customer Services Network

Key benefits:

- Hassle-free management of multi-site rollouts
- Frees up IT staff from maintaining and servicing UPS equipmentReduces the worry of critical equipment downtime
- Ensures rapid recovery in the event of failure (within 24-48 hours)
- Frees you from the responsibility of handling and documenting the disposal of legacy UPS and batteries

Vertiv™ LIFE™ Remote Diagnostic Services for Rapid Response

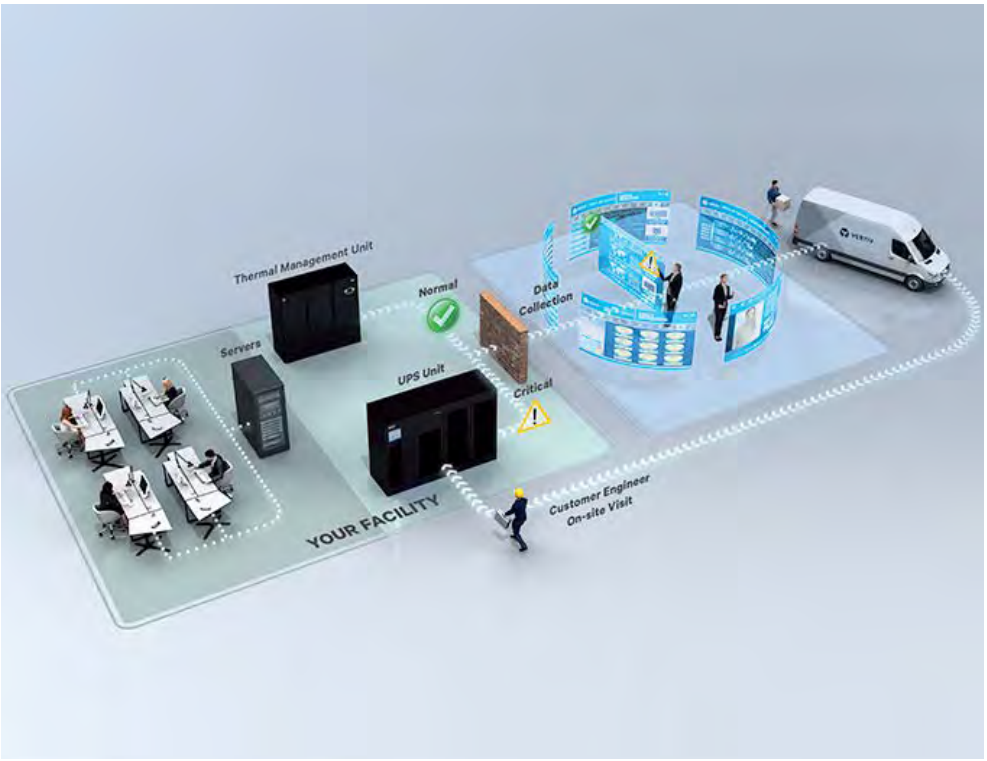

Refer to page 11 for service SKUs

Uptime assurance

- Continuous monitoring for early detection of trends and operating anomalies
- Analysis and interpretation of alarm and status messages

Rapid incident response

- Automatic transmission of data for analysis
- Concurrent diagnosis and dispatch of engineer to site
- Shipment of parts for corrective maintenance

Increased insight and ease of management

- Notification of operating conditions that may impact system health
- Periodic trend and analysis reports
- Integration of remote and on-site services to ensure business continuity

Vertiv™ Liebert® GXT5 Lithium-Ion UPS - Power Assurance Services

Power Assurance Package

Bundled Start-up Service AND 5-Year On-site Emergency Response	Standard	With LIFE™ Services	With Removal	With LIFE™ and Removal
Equipment Model / Type	**Part Number**	**Part Number**	**Part Number**	**Part Number**
Liebert® GXT5 LI UP TO 3 KVA	PAPGXTLI-1K3K	PAPGXTLI-1K3KLF	PAPGXTLI-1K3KRMV	PAPGXTLI-1K3KRLF
External Battery Cabinets (48V)	PAPGXTLI-48VBATT	N/A	PAPGXTLI-48VBATTRMV	N/A

Power Startup Services

Startup Service Only	Standard	With Removal
Equipment Model / Type	**Part Number**	**Part Number**
Liebert GXT5 LI UP TO 3 KVA	SUGXT-1K3K	SUGXT-1K3KRMV
External Battery Cabinet (48V)	SUGXT-EXTBTCB	SUGXT-EXTBTCBRMV

Power Emergency Services

5-Year On-site Emergency Coverage - Only	Standard	With LIFE Services
Equipment Model / Type	**Part Number**	**Part Number**
Liebert® GXT5 LI 1-3 KVA	PEPGXTLI-1K3K5YR	PEPGXTLI-1K3KLF
Lithium-Ion External Battery Cabinet 48V	PEPGXTLI-48VBAT5YR	N/A

Power Assurance Package - Summary

- Includes all below "Power Start-up Services" and "Power Emergency Services" support

Power Startup Services - Summary

- Installation includes mounting and start-up of new UPS or EBC (excludes hard-wired applications)
- Services performed by Vertiv factory trained technician
- Services performed 7 X 24, excluding national holidays within the 48 contiguous states and Hawaii
- Removal and disposal of existing UPS or EBC equipment, if selected

Power Emergency Services - Summary

- On Site Service Support
- Full-service five (5) year contract term commencing upon the start-up date
- 100% parts coverage, including POD, web card and battery defects
- 100% labor and travel coverage 7 days/week, 24 hours/day
- 24-Hour Customer Resolution Center via 1-800-LIEBERT
- Access to Customer Services Network portal

Vertiv™ LIFE™ Services includes above plus:

- Continuous Monitoring, Alarm Notification, Expert Analysis, and Proactive Response

Note: LIFE™ Services requires an RDU101 card.

Please refer to the Scopes of Work for full and additional details.

Vertiv.com | **Vertiv Headquarters,** 505 N Cleveland Ave, Westerville, OH 43082, USA

© 2025 Vertiv Group Corp. All rights reserved. Vertiv™ and the Vertiv logo are trademarks or registered trademarks of Vertiv Group Corp. All other names and logos referred to are trade names, trademarks or registered trademarks of their respective owners. While every precaution has been taken to ensure accuracy and completeness here, Vertiv Group Corp. assumes no responsibility, and disclaims all liability, for damages resulting from use of this information or for any errors or omissions. Specifications, rebates and other promotional offers are subject to change at Vertiv's sole discretion upon notice.

SL-70925 (R08/25)

5-Year Limited Warranty

For Liebert® Lithium-Ion UPS Products

Thank you for your purchase of this Product.

Please read this Warranty carefully. This Warranty sets forth Vertiv's responsibility in the unlikely event of defect and tells you how to obtain performance under this Warranty.

Warrantor

Vertiv Corporation (referred to herein as "Vertiv") offers the following **Five-Year Limited Warranty Against Defects in Material and Workmanship ("Warranty")** for applicable Product.

Products Covered

- Vertiv Liebert PSI5 Lithium-Ion UPS Products
- Vertiv Liebert GXT5 Lithium-Ion UPS Products
- Vertiv Liebert Power-UPS Lithium UPS Products
- Vertiv MPL Lithium-Ion Battery Cabinet Products

Terms of Warranty

As provided herein, Vertiv warrants that during the Warranty Period (as defined below) the Product:

- is free of defects in material and workmanship; and
- conforms to the descriptions contained in any applicable certified drawings for such Product, to Vertiv's final invoices, and to applicable Vertiv Product brochures and manuals current as of the date of Product shipment ("Descriptions")

Warranty Period

A period of five (5) years from date of product shipment to end user, which period shall expire no later than sixty-three (63) months from the Product shipment date. Product shipment date is determined only from the bill of lading. If any part or portion of the Vertiv Product fails to conform to the Warranty within the Warranty Period, Vertiv, at its option, will furnish new or factory remanufactured Products for repair or replacement of that failed portion or part. REPAIR OR REPLACEMENT OF A DEFECTIVE PRODUCT OR PART THEREOF DOES NOT EXTEND OR RESTART THE ORIGINAL WARRANTY PERIOD. Vertiv does not control the use of any Product and, accordingly, materials classified as "Descriptions" are NOT WARRANTIES OF PERFORMANCE and NOT WARRANTIES OF FITNESS FOR A PARTICULAR PURPOSE.

Who is Covered

This Warranty extends to the original end-user (the "User") and only within the fifty states of the USA and Canada. This Warranty is not transferable or assignable without the prior written permission of Vertiv. This Warranty is given ONLY to purchasers who buy for commercial or industrial use in the ordinary course of business. Vertiv assigns to User any warranties which are made by manufacturers and suppliers of components of, or accessories to, the Vertiv Product and which are assignable, but Vertiv makes NO REPRESENTATIONS as to the effectiveness or extent of such warranties, assumes NO RESPONSIBILITY for any matters which may be warranted by such manufacturers or suppliers and extends no coverage under this Warranty to such components or accessories.

Warranty Claims Procedure and Services

Within thirty (30) days after User's discovery of a defect, User must contact Vertiv at (800) 222-5877 and provide all material information relating to such alleged defect.

Vertiv, in its sole discretion, shall either repair or replace defective Products. For Products to be repaired, Vertiv will issue a RETURN MATERIALS AUTHORIZATION ("RMA") number. The RMA number must appear on the packing slip, proof of purchase, AND ON THE OUTSIDE OF EACH SHIPPING CARTON for any authorized returned Product. Vertiv will designate a shipping address ("Ship To Address") that must be used for each authorized returned Product. Vertiv shall pay all freight charges to the designated Ship To Address for each authorized returned Product. Unauthorized returns or collect shipments will be refused.

Items Not Covered

THIS WARRANTY DOES NOT COVER DAMAGE OR DEFECT CAUSED BY misuse, improper application, wrong or inadequate electrical current or connection, negligence, inappropriate on site operating conditions, repair by non-Vertiv designated personnel, accident in transit, tampering, alterations, a change in location or operating use, exposure to the elements, Acts of God, theft or installation contrary to Vertiv's recommendations or specifications, or in any event if the Vertiv serial number has been altered, defaced, or removed.

THIS WARRANTY DOES NOT COVER unauthorized shipping costs, Product installation/removal costs, travel costs, external circuit breaker resetting or maintenance or service items and further, except as may be provided herein, does NOT include labor costs or transportation, arising from the replacement of the Vertiv Product or any part thereof or charges to remove or reinstall same at any premises of User, nor for site inspections that determine no corrective action was required nor any other services not expressly provided for by the terms of the Warranty. Consumables, including but not limited to air filters, are not covered by this Warranty.

THIS WARRANTY IS VOID UPON THE FOLLOWING: (1) the Product having been stored in an unsuitable environment after Product shipment, and/or (2) if the Product contains an internal battery, User allows such battery to discharge below the minimum battery voltage cutoff point or if the User does not start recharging a discharged, or partially discharged, battery within forty-eight (48) hours of the discharge period. No salesperson, employee or agent of Vertiv is authorized to add to or vary the terms of this Warranty. Vertiv retains the right to cancel the Warranty, subject to reinstatement at Vertiv's sole discretion, for late- or non-payment of the Product purchase price and any other amounts due. Warranty terms may only be modified, if at all, if in writing and signed by a Vertiv officer.

Other Limitations

THIS LIMITED WARRANTY IS IN LIEU OF AND EXCLUDES ALL OTHER WARRANTIES, EXPRESS OR IMPLIED, INCLUDING MERCHANTABILITY AND FITNESS FOR A PARTICULAR PURPOSE. USER'S SOLE AND EXCLUSIVE REMEDY IS REPAIR OR REPLACEMENT OF THE VERTIV PRODUCT AS SET FORTH HEREIN. IF USER'S REMEDY IS DEEMED TO FAIL OF ITS ESSENTIAL PURPOSE BY A COURT OF COMPETENT JURISDICTION, VERTIV'S RESPONSIBILITY FOR PROPERTY LOSS OR DAMAGE SHALL NOT EXCEED THE NET PRODUCT PURCHASE PRICE. IN NO EVENT SHALL VERTIV ASSUME ANY LIABILITY FOR INDIRECT, SPECIAL, INCIDENTAL, CONSEQUENTIAL OR EXEMPLARY DAMAGES OF ANY KIND WHATSOEVER, INCLUDING WITHOUT LIMITATION LOST PROFITS, BUSINESS INTERRUPTION OR LOSS OF DATA, WHETHER ANY CLAIM IS BASED UPON THEORIES OF CONTRACT, NEGLIGENCE, STRICT LIABILITY, TORT, OR OTHERWISE. THE PRODUCTS LISTED IN THIS WARRANTY ARE NOT FOR USE IN CONNECTION WITH ANY NUCLEAR, MEDICAL, LIFE-SUPPORT AND RELATED APPLICATIONS.

Vertiv.com | Vertiv Headquarters, 505 N Cleveland Ave, Westerville, OH, 43082, USA

© 2023 Vertiv Group Corp. All rights reserved. Vertiv™ and the Vertiv logo are trademarks or registered trademarks of Vertiv Group Corp. All other names and logos referred to are trade names, trademarks or registered trademarks of their respective owners. While every precaution has been taken to ensure accuracy and completeness here, Vertiv Group Corp. assumes no responsibility, and disclaims all liability, for damages resulting from use of this information or for any errors or omissions.

Vertiv™ Liebert® EXS Three Phase UPS

V-Models 15, 20, 30 and 40kVA
208/220V Tower

Online Double Conversion UPS offers the Highest level of Power Protection

Equipment Protection Plan

RoHS 2002/95/EC

ENERGY STAR

vmware PARTNER

Highlights

The Vertiv™ Liebert® EXS UPS V-Model is an on-line, three-phase (in/out), 208/220V integrated UPS, optimized with a flexible design.

Key Benefits

- Standard configurations offer a reliable and economical power solution in 15, 20, 30 and 40kVA capacities.
- Integrated solution supports faster deployments
- Easy to install and maintain owing to front access design
- Diverse applications scenarios: In-Row, Room and against the wall
- Maximum efficiency and eco mode saves energy
- Flexible UPS, power distribution and battery arrangements to meet capacity and runtime demands
- High power factor delivers more usable power
- Integrated maintenance by-pass option ensures greater availability
- Top and rear entry only cable access; Front and top only service access
- Intelligent monitoring and management offers improved visibility and control

Offers reliable, high-quality AC Power to a Variety of IT Systems:

- Small data rooms
- IT closets, servers and storage
- Branch, small-midsize IT systems
- Medical/lab testing equipment
- High Availability
- VoIP
- ISDN and frame relay applications
- Storage systems
- Security systems

Consider the Liebert® EXS UPS V-Model for Room and Row 3-phase applications including IT Edge.

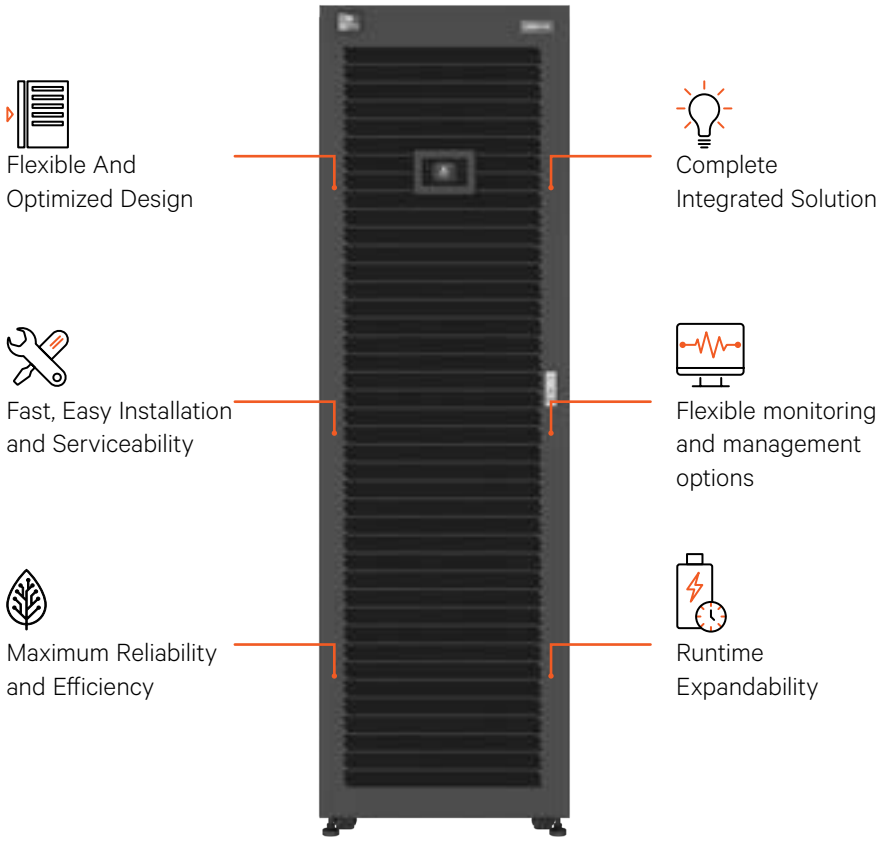

High Availability

Reliable performance and high availability are derived through a proven on-line, double conversion, transformer-free design.

- Integrated Maintenance Bypass ensures critical loads operate even during service
- Short circuit withstand rating up to 30kA
- Temperature compensating battery charger prolongs battery life

What's In The Box?

- UPS
- Quick Installation Guide
- Vertiv™ Power Insight Management Software (free download from Vertiv.com)
- IS-Unity DP Communication Card
- Safety Instructions
- WEE Recycling Sheet (ISO 14001 Compliance)

Why choose Vertiv™ Liebert® EXS UPS V-Model?

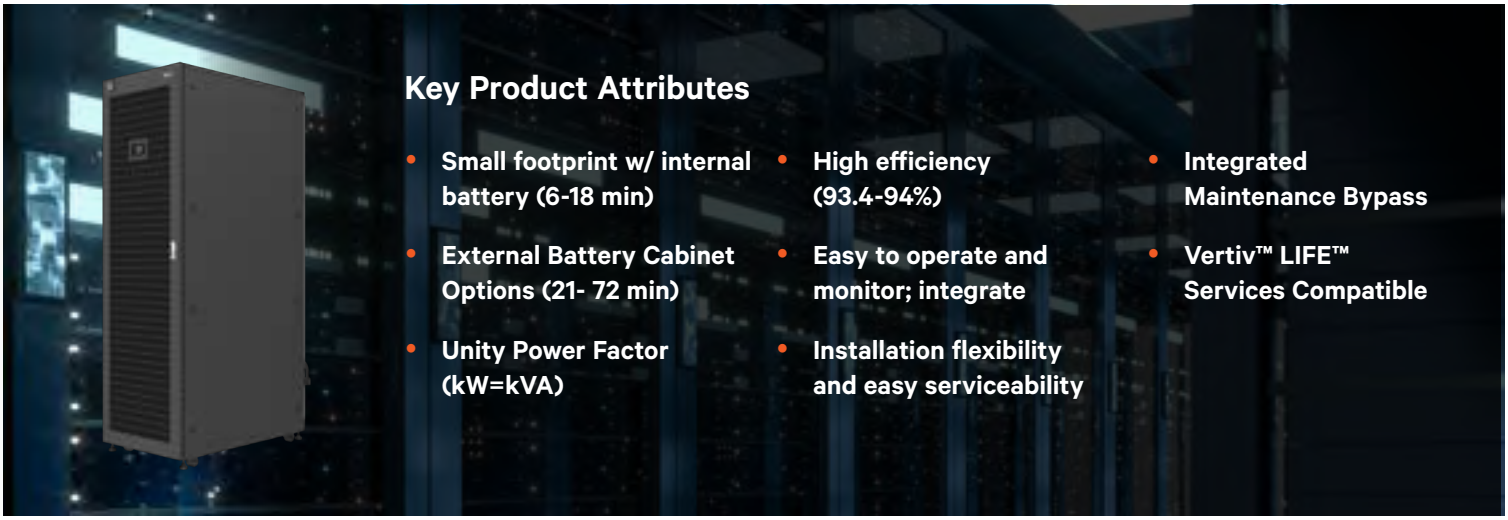

Key Product Attributes

- Small footprint w/ internal battery (6-18 min)
- External Battery Cabinet Options (21- 72 min)
- Unity Power Factor (kW=kVA)
- High efficiency (93.4-94%)
- Easy to operate and monitor; integrate
- Installation flexibility and easy serviceability
- Integrated Maintenance Bypass
- Vertiv™ LIFE™ Services Compatible

Key Applications and Market Verticals for Liebert® EXS UPS V-Model

Banking

- Highly reliable back-up for banks, financial services and Insurance companies
- IT branches- support server room computers, ATMS and other onsite equipment
- Protect critical processes and customer data in case of an outage

Retail

- Highly reliable back-up for retail stores back offices and ecommerce operations
- Maintain uptime for critical daily business operations
- Protect inventory log data in case of an outage

Healthcare

- Provides maximum equipment uptime to non-life critical medical equipment
- Maintain access to critical electronic health records for continuous patient care
- Support back up operations and critical data at Urgent Cares, local pharmacies (e.g., CVS, Walgreens etc.)

Manufacturing And Light Industrial

- Deliver efficient back-up power to small medium mfg.production lines
- Reliable back up power for testing environments of manufacturing operations to avoid interruptions and maintain quality
- Reduce downtime and support monitoring systems to maintain processes
- Ideal for room-based applications in electrical rooms of industrial facilities

Seamlessly Integrate Aesthetic Design into Your Infrastructure

- Ideal for **In-Row** server rack applications
- Suitable to be installed **adjacent to the wall**
- Suitable to be installed against the wall using **optional** top fan kit
- The **top fan option** is to allow the UPS to vent out through the top, instead of the rear. This allows the unit to be placed directly against the wall, limiting the amount of required footprint needed for the unit to operate

Against the wall

In-row

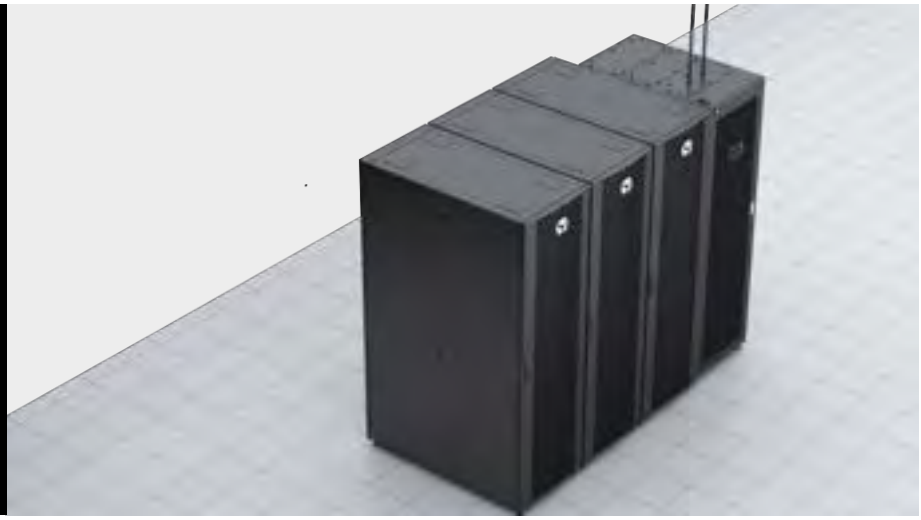

Simplified installation and easy serviceability

- IPower modules slide in for simplified installation
- Clearance at top of the cabinet is 24in.
- At the front 3ft. Clearance is needed
- Front door opening is more than 180 (deg).
- Serviceability has been made easier with its easy front access design eliminating all side and rear service clearances requirement
- For maintenance and repair Vertiv world class services team and multiple services options enables hassle free experience

1. **Input output connections**
2. **Integrated Maintenance Bypass; Available Circuit Breakers Section:**
   - Rectifier input breaker (RIB)
   - Maintenance-isolation breaker (MIB)
   - Bypass-input breaker (BIB)
   - Maintenance-bypass breaker (MBB)
3. **Dry Contacts input/output**
4. **Vertiv™ Liebert® Intellislot™ Ports**
5. **Power Module**
6. **Battery Trays**

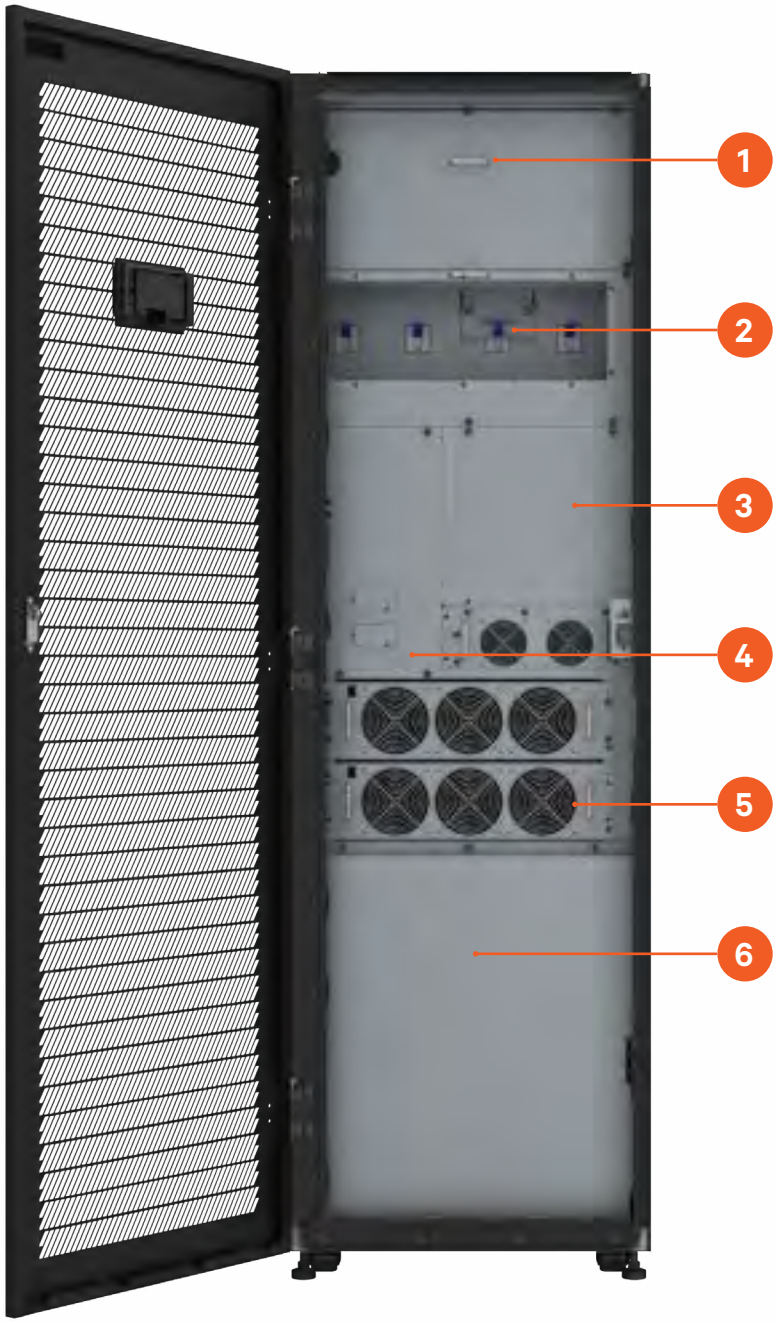

Robust and Reliable Design for Optimal Performances

The Liebert® EXS UPS V-Model is a transformer-free UPS offering exceptional features for mission-critical applications. With best-in-class efficiency of up to 93.4%, double conversion mode and upto 98.7% in ECO mode. Hence, Liebert EXS UPS ensures **remarkable operational cost savings,** reducing both the Total Cost of Ownership (TCO) and environmental impact giving the confidence of getting the most out of the power source, and saving on energy bills.

The Liebert EXS UPS V-Model has a unity output power factor and high- power density, which provides the **highest possible active power** in a room and row-based design unit applicable to any network closet. This means critical devices have necessary reliable power and protection without sacrificing valuable space, making it perfect for installations where space is limited.

Maximum Uptime

Liebert EXS UPS comes with internal batteries having a long life span of 8-10 years. With **optimized internal runtime** and with the capability of additional runtime obtained by optional external battery cabinets, the Liebert EXS UPS V-Model offers absolute reliability and delivers continuous power protection, ensuring that critical devices remain powered in the event of an outage, preventing any loss of data or productivity.

These benefits make the Liebert EXS UPS V-Model ideal for a wide range of **mission-critical applications,** including IT installations, transportation, healthcare, retail, and government facilities

Tolerates High Ambient Temperatures

Internal components and circuitry of Liebert EXS UPS V-Model are designed to seamlessly operate up to 40 °C without any capacity impact and further can sustain high ambient temperature up to 50 °C with auto-derating.

Integrated Autonomy

The Liebert EXS UPS V-Model comes equipped with internal battery, maintenance bypass, and optional receptacle distribution in one, simple package. Liebert EXS provides an **optimized integrated autonomy** which results in back up times in a compact footprint.

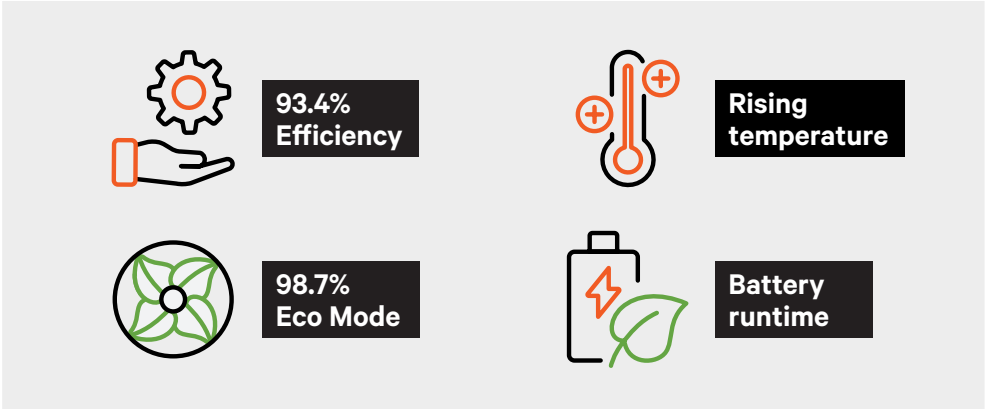

Vertiv™ Liebert® EXS UPS V-Model

Vertiv™ Liebert® EXS V-Model External Battery Cabinet

Vertiv™ Liebert® EXS UPS V-Model 15 to 40 kVA Features

High power factor (1.0)

More usable power enables more connected loads saving space and costs.

Factory Installed Network Card

Vertiv™ Liebert® IS-UNITY DP card enables Remote Management

Internal Battery Cabinets with auto-detection

Be confident the UPS is set up correctly to report available runtime when used with available optional external battery cabinets.

Product warranty

Standard 1 year warranty along with extended warranty options and service contracts.

Internal Maintenance Bypass

Facilitates UPS maintenance if needed, without having to shutdown the connected equipment.

Efficiency (up to 93.4%) in online mode

Energy Star 2.0 certification. Higher efficiency means an optimized energy management and lower heat dissipation, for energy savings and improved reliability.

Compact Design

Space saving UPS footprint provides space optimization and flexible installation in room/row configuration.

Vertiv™ Liebert® EXS UPS V-Model

Vertiv™ Liebert® EXS V-Model External Battery Cabinet

Liebert® EXS UPS V-Model Models SKU's

Model Numbers "With NO Top Fan Kit along with Corresponding External Battery Cabinets SKU's" *[UPS can take only up to 1 EBC]*	**EXSV-15KN** • EXSV-EBC1 • EXSV-EBC2	**EXSV-20KN** • EXSV-EBC1 • EXSV-EBC2	**EXSV-30KN** • EXSV-EBCXR1 • EXSV-EBCXR2	**EXSV-40KN** • EXSV-EBCXR1 • EXSV-EBCXR2
	EXSV-15KXRN • EXSV-EBCXR1 • EXSV-EBCXR2	EXSV-20KXRN • EXSV-EBCXR1 • EXSV-EBCXR2		
Model Numbers "With (Optional)Top Fan Kit along with Corresponding External Battery Cabinets SKU's" *[UPS can take only up to 1 EBC]*	**EXSV-15KTN** • EXSV-EBC1 • EXSV-EBC2	**EXSV-20KTN** • EXSV-EBC1 • EXSV-EBC2	**EXSV-30KTN** • EXSV-EBCXR1 • EXSV-EBCXR2	**EXSV-40KTN** • EXSV-EBCXR1 • EXSV-EBCXR2
	EXSV-15KXRN • EXSV-EBCXR1 • EXSV-EBCXR2	**EXSV-20KXRN** • EXSV-EBCXR1 • EXSV-EBCXR2		
Ratings	15kVA/15kW	20kVA/20kW	30kVA/30kW	40kVA/40kW
UPS Dimensions	600x1000x2000 (mm)			

Liebert® EXS UPS V-Model Pre-Configured SKUs-"With no top fan kit"

Preconfigured sku	Rating	Description	Runtime (mins)	
			Full load	Half Load
EXSV-15KN	15kVA/15kW	Liebert® EXS 15kVA UPS (V-Model) with internal VRLA battery and IS-UNITY-DP network Communication Card	15	32
EXSV-EBC1		Liebert EXS External Battery Cabinet, 37.5Ah, 1 String VRLA	41	94
EXSV-EBC2		Liebert EXS External Battery Cabinet, 37.5Ah, 2 String VRLA	71	159
EXSV-15KXRN		Liebert EXS 15kVA UPS (V-Model) with internal VRLA extended runtime battery (larger battery) and IS-UNITY-DP network Communication Card	18	49
EXSV-EBCXR1		Liebert EXS External Battery Cabinet, 50Ah, 1 String VRLA	59	133
EXSV-EBCXR2		Liebert EXS External Battery Cabinet, 50Ah, 2 String VRLA	100	221
EXSV-20KN	20kVA/20kW	Liebert EXS 20kVA UPS (V-Model) with internal VRLA battery and IS-UNITY-DP network Communication Card	11	31
EXSV-EBC1		Liebert EXS External Battery Cabinet, 37.5Ah, 1 String VRLA	28	69
EXSV-EBC2		Liebert EXS External Battery Cabinet, 37.5Ah, 2 String VRLA	51	117
EXSV-20KXRN		Liebert EXS 20kVA UPS (V-Model) with internal VRLA extended runtime battery (larger battery) and IS-UNITY-DP network Communication Card	13	36
EXSV-EBCXR1		Liebert EXS External Battery Cabinet, 50Ah, 1 String VRLA	41	96
EXSV-EBCXR2		Liebert EXS External Battery Cabinet, 50Ah, 2 String VRLA	71	162
EXSV-30KN	30kVA/30kW	Liebert EXS 30kVA UPS (V-Model) with internal VRLA battery and IS-UNITY-DP network Communication Card	10	26
EXSV-EBCXR1		Liebert EXS External Battery Cabinet, 50Ah, 1 String VRLA	30	69
EXSV-EBCXR2		Liebert EXS External Battery Cabinet, 50Ah, 2 String VRLA	51	112
EXSV-40KN	40kVA/kW	Liebert EXS 40kVA UPS (V-Model) with internal VRLA battery and IS-UNITY-DP network Communication Card	6	18
EXSV-EBCXR1		Liebert EXS External Battery Cabinet, 50Ah, 1 String VRLA	21	49
EXSV-EBCXR2		Liebert EXS External Battery Cabinet, 50Ah, 2 String VRLA	36	81

Vertiv™ Liebert® EXS UPS V-Model Pre-Configured SKUs-"With Top Fan Kit"

Preconfigured sku	Rating	Description	Runtime (mins)	
			Full load	Half Load
EXSV-15KTN	15kVA/15kW	Liebert® EXS 15kVA UPS (V-Model) with internal VRLA battery, top fan venting, and IS-UNITY-DP network Communication Card	15	32
EXSV-EBC1		Liebert EXS External Battery Cabinet, 37.5Ah, 1 String VRLA	41	94
EXSV-EBC2		Liebert EXS External Battery Cabinet, 37.5Ah, 2 String VRLA	71	159
EXSV-15KXRTN		Liebert EXS 15kVA UPS (V-Model) with internal VRLA extended runtime battery (larger battery), top fan venting, and IS-UNITY-DP network Communication Card	18	49
EXSV-EBCXR1		Liebert EXS External Battery Cabinet, 50Ah, 1 String VRLA	59	133
EXSV-EBCXR2		Liebert EXS External Battery Cabinet, 50Ah, 2 String VRLA	100	221
EXSV-20KTN	20kVA/20kW	Liebert EXS 20kVA UPS (V-Model) with internal VRLA battery, top fan venting, and IS-UNITY-DP network Communication Card	11	31
EXSV-EBC1		Liebert EXS External Battery Cabinet, 37.5Ah, 1 String VRLA	28	69
EXSV-EBC2		Liebert EXS External Battery Cabinet, 37.5Ah, 2 String VRLA	51	117
EXSV-20KXRTN		Liebert EXS 20kVA UPS (40kVA Frame) with internal VRLA extended runtime battery (larger battery), top fan venting, and IS-UNITY-DP network Communication Card	13	36
EXSV-EBCXR1		Liebert EXS External Battery Cabinet, 50Ah, 1 String VRLA	41	96
EXSV-EBCXR2		Liebert EXS External Battery Cabinet, 50Ah, 2 String VRLA	71	162
EXSV-30KTN	30kVA/30kW	Liebert EXS 30kVA UPS (V-Model) with internal VRLA battery, top fan venting, and IS-UNITY-DP network Communication Card	10	26
EXSV-EBCXR1		Liebert EXS External Battery Cabinet, 50Ah, 1 String VRLA	30	69
EXSV-EBCXR2		Liebert EXS External Battery Cabinet, 50Ah, 2 String VRLA	51	112
EXSV-40KTN	40kVA/kW	Liebert EXS 40kVA UPS (40kVA Frame) with internal VRLA battery, top fan venting, and IS-UNITY-DP network Communication Card	6	18
EXSV-EBCXR1		Liebert EXS External Battery Cabinet, 50Ah, 1 String VRLA	21	49
EXSV-EBCXR2		Liebert EXS External Battery Cabinet, 50Ah, 2 String VRLA	36	81

Liebert® EXS UPS V-Model Series Pre-Configured SKUs-Wire Sizing Guide

EXSV-Model UPS Ratings (kVA)	Corresponding SKU's	Recommended Wire Size	Recommended Breaker Size	Recommended Lugs	Number of wires
15	EXSV-15KN EXSV-15KXRN EXSV-15KTN EXSV-15KXRTN	3 AWG	70A	Thomas and Betts: 256-30695-257	5 (L-L-L-N-G)
20	EXSV-20KN EXSV-20KXRN EXSV-20KTN EXSV-20KXRTN	2 AWG	90A	Thomas and Betts: 256-30695-257	5 (L-L-L-N-G)
30	EXSV-30KN EXSV-30KTN	3/0 AWG	150A	Thomas and Betts: 54211	5 (L-L-L-N-G)
40	EXSV-40KN EXSV-40KTN	4/0 AWG	175A	Thomas and Betts: 54212	5 (L-L-L-N-G)
EXSV-Model External Battery Cabinets	EXSV-EBC1 EXSV-EBC2 EXSV-EBCXR1 EXSV-EBCXR2	4/0 AWG		Thomas and Betts: 54212	3 (L-L-G)

Power Distribution

Fast, simple and flexible power distribution is accomplished using either a straight hardwired approach or by applying various optional distribution PODs (power output distribution) for quick and easy receptacle deployments. In addition, users can mix and match power distribution assemblies.

Distribution Options	Qty of Receptacles	Part Number
Hardwire	-	Does Not Apply
L21-30R	2	PD3-001
L21-20R	2	PD3-009
L6-30R	6	PD3-002
L6-20R	6	PD3-006
L5-30R	6	PD3-003
L5-20R	6	PD3-005
IEC60309 4W+G	1	PD3-011
IEC60309 3W+G	1	PD3-004

Network communications and environmental sensors (Standard on all models of Liebert® EXS UPS)

Network Communications	IS-Unity DP	Intellislot™ web card for SNMP and web management. Supports environmental sensors.
	IS-RELAY	Intellislot™ Interface Kit for Relay Contacts
Environmental Sensors (Compatible with optional Liebert® network card IS-UNITY DP)	SN-Z01	Integrated cable with single temperature sensor
	SN-Z02	Integrated cable with three temperature sensors
	SN-Z03	Integrated cable with three temperature and one humidity sensors
	SN-T	Modular with single temperature sensor
	SN-2D	Modular with two door contact inputs
	SN-3C	Modular with three dry contact inputs
	SN-L20	Modular leak zone sensor with 20 -foot cable
UPS manageability options	Vertiv™ Power Insight Software Management	Vertiv™ Power Insight is a complimentary web-based software designed to monitor up to 100 Vertiv™ UPSs and Vertiv™ rPDUs

Intelligent Communications

Vertiv connects and protects your network with core-to-edge solutions and unmatched expertise. For maximum visibility and effective monitoring in one view, pair your Vertiv™ UPS with a software solution.

Vertiv™ Environet™ Alert

Vertiv™ Environet™ Alert provides industry companies with critical facility monitoring software that is affordable and easy to use. This solution delivers superior monitoring, alerting, trending and data organization. Get monitoring, alerting and trending at a price that's right for your business.

Vertiv™ Power Insight

Vertiv™ Power Insight is a complimentary web-based software designed for users with a distributed infrastructure that need a way to manage multiple devices. It is a simple to install, easy to use solution that provides a single interface for up to 100 UPSs or rPDUs. Visit the product page to download.

Service and Support

We get you started and keep you going. Only Vertiv Services can provide the degree of the support required to ensure the availability needed for critical systems. Several programs are available to meet the needs of your operation.

LIFE™ Remote Diagnostic Services for Rapid Response

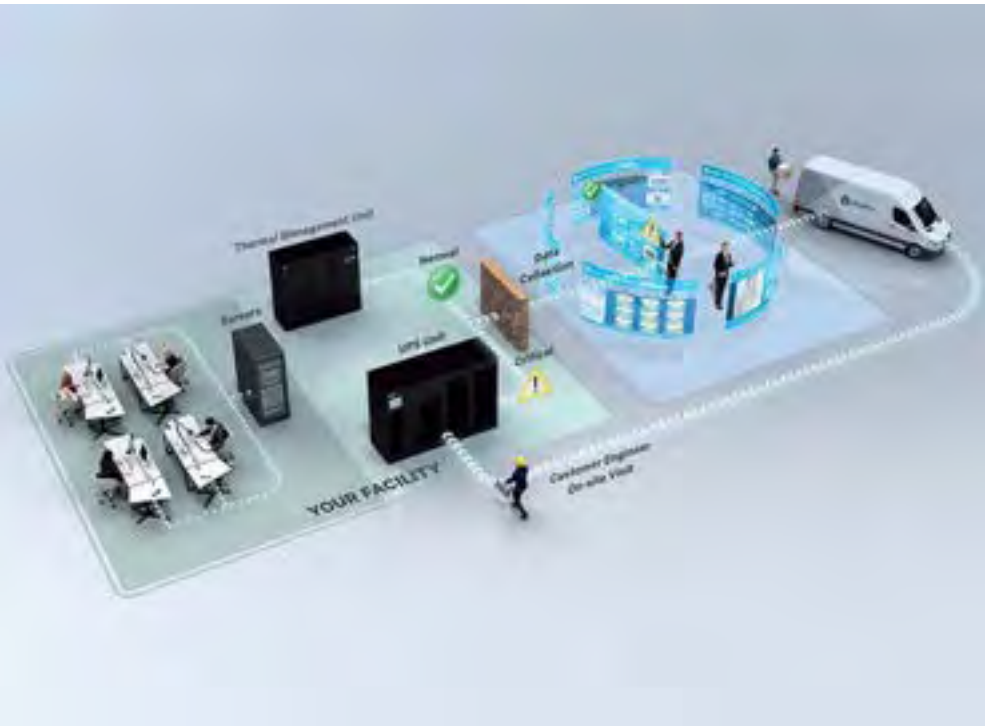

Refer to page for service SKUs

This UPS can monitor:

- Capacity
- Temperature
- Humidity
- Access
- Leaks

IS-UNITY-DP - Supports remote and local environmental monitoring. Compatible with the Vertiv™ Platform. Connect to IT networks and building management systems (BACNET/MODBUS).

Uptime assurance

- Continuous monitoring for early detection of trends and operating anomalies
- Analysis and interpretation of alarm and status messages

Rapid incident response

- Automatic transmission of data for analysis
- Concurrent diagnosis and dispatch of engineer to site
- Shipment of parts for corrective maintenance

Increased insight and ease of management

- Notification of operating conditions that may impact system health
- Periodic trend and analysis reports
- Integration of remote and on-site services to ensure business continuity

Liebert® EXS UPS V-Model 15-40kVA Services and Extended Warranties

Power Startup Services - Summary

- Installation includes mounting and start-up of new UPS or EBC (excludes hard-wired applications) .
- Services performed by Vertiv factory trained technician
- Services performed 7 X 24, excluding national holidays within the 48 contiguous states and Hawaii
- Removal and disposal of existing UPS or EBC equipment, if selected

Startups SKU's- Required

Equipment Model / Type	Part Number	Description
Liebert® EXS UPS V-Model 15kVA 20kVA, 30kVA and 40kVA	SUEXSV10-40U7	Startup 7x24 EXS V-Model 15-40kVA
	SUEXSV10U-40UM	Startup M-F EXS V-Model 15-40kVA

Extended Warranties for Liebert® EXS UPS V-Model

Extended Warranties	Parts and Labor Warranty	Warranty Premier	Warranty Premier+
Equipment Model / Type	**Part Number**	**Part Number**	
Liebert® EXS 15 and 20kVA			
12 Months	12MTHWARPARTSLABACPEXSV20	12MTHWARPREFACP1PMEXSV20	12MTHWARPREMACP1PMEXSV20
18 Months	18MTHWARPARTSLABACPEXSV20		
24 Months		24MTHWARPREFACP1PMEXSV20	24MTHWARPREMACP1PMEXSV20
Liebert® EXS 30 and 40kVA			
12 Months	12MTHWARPARTSLABACPEXSV40	12MTHWARPREFACP1PMEXSV40	12MTHWARPREMACP1PMEXSV40
18 Months	18MTHWARPARTSLABACPEXSV40		
24 Months		24MTHWARPREFACP1PMEXSV40	24MTHWARPREMACP1PMEXSV40

Extended Warranties

Parts and Labor Warranty

Parts Included
All parts included except EOL components and consumables

Labor Included
The cost of labor is included

Warranty Premier

Parts Included
All parts included except EOL components and consumables

Labor Included
The cost of labor is included

Preventive Maintenance
PM (8x5) Visit(s) within Warranty Extension to ensure continuous and optimal equipment performance

Warranty Premier+

Parts Included
All parts included except EOL components and consumables

Labor Included
The cost of labor is included

Preventive Maintenance
PM (7x24) Visit(s) within Warranty Extension to ensure continuous and optimal equipment performance

Response Time
If an anomaly occurs, CE visit is granted within known and established amount of time

Vertiv™ Liebert® EXS UPS V-Model 15-40 kVA Service Contracts

Service Contracts	PM Only 8x5	PM Only 24x7	Basic 1PM24x7	Essential 1PM8X5	Preferred 1PM24X7
Equipment Model / Type	Part Number	Part Number	Part Number	Part Number	Part Number
Liebert® EXS 15 and 20kVA	MUEXSV208-15PF1	MUEXSV208-15P71	MUEXSV208-15BA1	MUEXSV208-15ES1	MUEXSV208-15PR1
Liebert EXS 30 and 40kVA	MUEXSV208-40PF1	MUEXSV208-40P71	MUEXSV208-40BA1	MUEXSV208-40ES1	MUEXSV208-40PR1

Labor Warranty Supplement

(AC Power Equipment Labor Warranty)

1WARACPLAB-B

Service Contracts	PM Only 8x5	PM Only 24x7	Basic	Essential	Preferred
On-Site Service:					
• Includes 1 Preventive Maintenance Service, scheduled by the customer between 8am-5pm, Monday-Friday (excluding national holidays)	✓			✓	
• Includes 1 Preventive Maintenance Service, scheduled by the customer at the customer's convenience 24x7 (excluding national holidays).		✓			✓
• Includes a Performance Evaluation inspection performed immediately after the completion of an emergency visit.			✓		
Customer Support:					
Includes access to the Customer Resolution Center (1-800-543-2378) and the Vertiv Customer Services Network Online Internet portal.	✓	✓	✓	✓	✓
Service Professional:					
Performed by Vertiv factory-trained and authorized technician equipped with Vertiv Proprietary tools and software. Vertiv CE's and Vertiv Partners are the only approved OEM service providers for Vertiv products.	✓	✓	✓	✓	✓
Response Time:					
Guaranteed 4-hour on-site emergency response, 7 days/week, 24 hours/day, within 150 miles of a Vertiv's Service City.			✓	✓	✓
Parts:					
Includes parts coverage.			✓	✓	✓
Labor and Travel:					
Includes 100% labor and travel coverage 7 days/week, 24 hours/day, within the 48 contiguous states and Hawaii.			✓	✓	✓
Internal Battery Coverage:					
Includes parts, labor, disposal and battery jars as required - up to 1 string of battery jars per year, not accumulated over contract term				✓	✓
Battery Recycling:					
Includes battery recycling as required, with documentation meeting EPA requirements				✓	✓

Battery Runtimes in Minutes- (37.5 Ah) Battery Runtimes in Minutes- (37.5 Ah)

Applicable model numbers: EXSV-EBC1; EXSV-EBC2

UPS Model	Battery String Qty.	100%	90%	80%	70%	60%	50%	40%	30%	20%	10%
		15 kW	**13.5 kW**	**12 kW**	**11.25kW**	**9 kW**	**7.5 kW**	**6 kW**	**4.5 kW**	**3.75 kW**	**1.5 kW**
15kVA	1	12	14	17.5	20.5	25	32	44	65	108	244.5
	2	41.5	47.5	58	66	77	94.5	122	170	267	577
		100%	90%	80%	70%	60%	50%	40%	30%	20%	10%
		20 kW	**18 kW**	**16 kW**	**15 kW**	**12 kW**	**10 kW**	**8 kW**	**6 kW**	**5 kW**	**2 kW**
20kVA	1	11.5	13.5	16	19.5	25.5	31.5	41	57	90.5	204.5
	2	28	32.5	38	45.5	58	69.5	88	122	193.5	428.5

Battery Runtimes in Minutes- (50 Ah)

Applicable model numbers: EXSV-EBCXR1; EXSV-EBCXR2

UPS Model	Battery String Qty.	100%	90%	80%	70%	60%	50%	40%	30%	20%	10%
		15 kW	**13.5 kW**	**12 kW**	**11.25kW**	**9 kW**	**7.5 kW**	**6 kW**	**4.5 kW**	**3.75 kW**	**1.5 kW**
15kVA	1	18	21	26.5	31	37.5	48.5	65.5	94.5	151	342
	2	59.5	67.5	81	92	107.5	133	171.5	235.5	369	782.5
		100%	90%	80%	70%	60%	50%	40%	30%	20%	10%
		20 kW	**18 kW**	**16 kW**	**15 kW**	**12 kW**	**10 kW**	**8 kW**	**6 kW**	**5 kW**	**2 kW**
20kVA	1	13	15.5	18.5	22	29	36.5	48.5	70.5	113	257.5
	2	41.5	47.5	55	64.5	81	96.5	123.5	171.5	269	594.5
		100%	90%	80%	70%	60%	50%	40%	30%	20%	10%
		30 kW	**27kW**	**24 kW**	**22.5 kW**	**18 kW**	**15 kW**	**12 kW**	**9 kW**	**7.5 kW**	**3 kW**
30kVA	1	11.5	13.5	16	19.5	25.5	31.5	41	57	90.5	204.5
	2	28	32.5	38	45.5	58	69.5	88	122	193.5	428.5
		100%	90%	80%	70%	60%	50%	40%	30%	20%	10%
		40 kW	**38 kW**	**32 kW**	**30 kW**	**24 kW**	**20 kW**	**16 kW**	**12 kW**	**10 kW**	**4 kW**
40kVA	1	6.5	8	9.5	11.5	14	18.5	25	38	58	128.5
	2	21.5	24.5	28.5	33	39.5	49	64	93	140	291.5

UPS Specifications

Power Rating kVA/kW (PF=1)

		15	20	30	40
General Specifications	UPS Technology	On-Line Double Conversion			
Input AC Specification	Input Voltage	208/120, 220/127VAC, 60Hz 3-phase, 4-wire plus ground			
	Frequency Range	40-70Hz			
Output AC Specifications	Voltage	208/120, 220/127VAC, 60Hz 3-phase, 3- or 4-wire plus ground			
	Power Factor	1.0 (Unity)			
	Power Output Distribution Ports	2	2	2	2
Battery Specifications	Battery Technology	Valve-regulated lead acid battery			
Communications	Options	(2) Intellislot™ Ports			
	Card Compatibility	IS-UNITY-DP, IS-UNITY-SNMP, IS-UNITY-LIFE, IS-485EXI, IS-RELAY			
	Protocols Available	MODBUS-IP, MODBUS-485, BACNET-IP, BACNET-MSTP, SNMP, HTTP, LIFE™ Services, Relay Contacts			
Environmental Sensors Options	Liebert® SN Series	Temperature, Humidity, Temperature/Humidity Combination, Contact Closure			
Physical Data UPS	Dimensions, W x D x H in (mm)*	23.6 39.3x78.7 (600x1000x2000)			
	Total Unit Weight lb (kg)	Standard Runtime: 1212 (550) Extended Run Time: 1455 (660)	Standard Runtime: 1212 (550) Extended Run Time: 1455 (660)	1521 (690)	1543 (700)
	Battery Weight lb (kg)	Standard: 527 (239) Extended: 762.6 (346)	Standard: 527 (239) Extended: 762.6 (346)	762.6 (346)	762.6 (346)
Environmental	Operating Temperature	32-104°F (0-40°C), 68°F to 77°F (20°C to 25°C) for optimum battery life			
	Relative Humidity	5% to 95% non-condensing			
	Operating Altitude	Sea level to 4,921 ft (1,500 m) without derating {Derate Output power by 1% per 328ft (100mm) up to 10,000 ft(3000m)}			
	Acoustical Noise	<55dB			
Agency/Certification/ Conformance	cULus (UL 1778 5th Edition, CSA No.22.2 107.3. Meets current requirements for safe high performance UPS operation. ENERGY STAR qualified.				
Standard Warranty	1 year				

* Note: Power Distribution option adds 6.2 (157mm) to the cabinet depth (D)

Vertiv.com | **Vertiv Headquarters,** 505 N Cleveland Ave, Westerville, OH 43082, USA

© 2024 Vertiv Group Corp. All rights reserved. Vertiv™ and the Vertiv logo are trademarks or registered trademarks of Vertiv Group Corp. All other names and logos referred to are trade names, trademarks or registered trademarks of their respective owners. While every precaution has been taken to ensure accuracy and completeness here, Vertiv Group Corp. assumes no responsibility, and disclaims all liability, for damages resulting from use of this information or for any errors or omissions. Specifications, rebates and other promotional offers are subject to change at Vertiv's sole discretion upon notice.

SL-71163 (04/24)

Vertiv™ Geist™ rPDU

OVERVIEW

Upgradeable Unit Level EC Monitored rPDUs provide reliable power distribution to critical IT equipment while delivering a comprehensive view of input level power usage via remote network access. Includes environmental monitoring capabilities to obtain real-time environmental metrics. Upgrade the hot-swappable monitoring device on select units to leverage new technologies and accommodate changing business needs.

Benefits

- Reliable power distribution with local and remote power monitoring options offer quick access to critical power usage information to evaluate energy usage trends and maximize uptime.
- Environmental monitoring capabilities with the addition of optional environmental sensors ensure users have critical infrastructure data at their fingertips to prevent climate-related equipment failure and system downtime.
- Fault-Tolerant Daisy Chaining with RSTP simplifies intelligent rPDU connectivity and ensures data is reported even when a breakin the network chain occurs. Supports up to 40 rPDUs.
- Every unit is 100% tested for reliability and functionality.

Part #: VP8865

Model Number: MN03E4W1-44MB19-3TL21A0B10-S
Category: Monitored
Sub Category: Unit Level EC
Power Configuration: 30A, 120/208V WYE, 8.6kW
Physical Configuration: 72in / 1829mm, Vertical

Product Summary: rPDU, Monitored Unit Level EC, 30A, 120/208V WYE, 8.6kW, Vertical, (36) IEC C13, (6) IEC C19, (2) NEMA 5-20R, 10ft power cord with L21-30P, Black Powder Coat.

Monitoring: Input and per Phase power monitoring with Circuit/Breaker current monitoring. Environmental monitoring via optional remote sensors. Daisy chain Ethernet connectivity. Local high visibility LED display.

Plug Form:

L21-30P

Receptacle:

IEC C13
(Quantity: 36)

IEC C19
(Quantity: 6)

NEMA 5-20R
(Quantity: 2)

Chassis Color Options:

To discuss color options, contact your local sales representative.

Product Specification and Options

System Features

© Vertiv Group Corp. All rights reserved. Vertiv™, and the Vertiv logo are trademarks or registered trademarks of Vertiv Group Corp. All other names and logos referred to are trade names, trademarks or registered trademarks of their respective owners. While every precaution has been taken to ensure accuracy and completeness here, Vertiv Group Corp. assumes no responsibility, and disclaims all liability, for damages resulting from use of this information or for any errors or omissions. Specifications, rebates and other promo offers are subject to change at Vertiv's sole discretion upon notice.

Monitoring	Input and per Phase power monitoring with Circuit/Breaker current monitoring. Environmental monitoring via optional remote sensors. Daisy chain Ethernet connectivity. Local high visibility LED display.
Monitoring Level 1	Aggregate - Total Unit Monitoring (kWh, W, VA, PF) Power Measurements Compliant with ANSI C12.1 and IEC 62053-21 at 1% Accuracy Class Requirements
Monitoring Level 2	Phase (A, B, C) Monitoring (kWh, W, VA, PF, V, A) Power Measurements Compliant with ANSI C12.1 and IEC 62053-21 at 1% Accuracy Class Requirements
Monitoring Level 3	Circuit / Breaker Monitoring (A) Circuit/Breaker Current Measurements Independently Tested and Verified at 2% Accuracy
Quantity Of Inputs	1
Voltage	100-120/200-240V WYE
Current	30A x 3 Phase WYE
VA per Input (Load Capacity)	8.6kW (208V)
Over Current Protection	(3) 20A Double Pole Magnetic Breakers
Switch	Breaker/Switch Combination
Scrolling / Rotatable Digital Display	Yes
Power Cable Wire Gauge	10/5
Power Cable Length	10ft / 3m
Power Entry Location	Bottom End
Plug Type	NEMA L21-30P Twistlock
Combined Total Receptacle/Socket Quantity	44
Receptacle/Socket Type #1	IEC C13
- Quantity on Face	36
- Quantity per Breaker and Phase Combination	12
- Voltage per Receptacle/Socket	208V
Receptacle/Socket Type #2	IEC C19
- Quantity on Face	6
- Quantity per Breaker and Phase Combination	2
- Style	Individual
- Voltage per Receptacle/Socket	208V
Receptacle/Socket Type #3	NEMA 5-20R
- Quantity on Face	2
- Quantity A Phase Only	2
- Style	Duplex
- Voltage per Receptacle/Socket	120V
Internal RMS Voltage Sensor	Yes
Internal RMS Current Sensor	Yes
Network Connection	Dual 10/100/1000Mbps Ethernet
Network Protocols Supported and Data Access Formats	HTTP, HTTPS (TLS 1.2), SMTP, SMTPS (TLS 1.2), ICMP, DHCP, IPv4, IPv6, Syslog, SNMP v1/v2c/v3, JSON, JSON API, RSTP

© Vertiv Group Corp. All rights reserved. Vertiv™, and the Vertiv logo are trademarks or registered trademarks of Vertiv Group Corp. All other names and logos referred to are trade names, trademarks or registered trademarks of their respective owners. While every precaution has been taken to ensure accuracy and completeness here, Vertiv Group Corp. assumes no responsibility, and disclaims all liability, for damages resulting from use of this information or for any errors or omissions. Specifications, rebates and other promo offers are subject to change at Vertiv's sole discretion upon notice.

Data Access Formats	CSV datalog, JSON API, JSON datalog
USB Support	Yes
IP Reset Button	Yes
Hard Reboot Button	Yes
Serial Connection	RS232 via RJ45
Remote Sensor RJ Connection Jacks	1 (Supports up to 16 Sensors)
Maximum Operating Temperature	60C / 140F
Heavy Steel - Powder Coat Finish	Black
7938 Vertical Mounting Bracket Kit	Yes
Toolless Mounting Hardware - Center to Center Spacing	61.25in and 64.75in
Country of Origin	USA, TAA Compliant and Buy American Act COTS Compliant
Product Warranty	5-year limited warranty if registered within 120 days of purchase, otherwise warranty defaults to 3 years
Certification/Agency Approvals	FCC Part 15 Class A Conformance
Certification/Agency Approvals	RoHS Compliant
Certification/Agency Approvals	UL & c-UL Listed 62368-1
Chassis Dimensions (LxWxD)	72in x 2in x 2in
Shipped Weight	17lbs (7.71kg)

© Vertiv Group Corp. All rights reserved. Vertiv™, and the Vertiv logo are trademarks or registered trademarks of Vertiv Group Corp. All other names and logos referred to are trade names, trademarks or registered trademarks of their respective owners. While every precaution has been taken to ensure accuracy and completeness here, Vertiv Group Corp. assumes no responsibility, and disclaims all liability, for damages resulting from use of this information or for any errors or omissions. Specifications, rebates and other promo offers are subject to change at Vertiv's sole discretion upon notice.

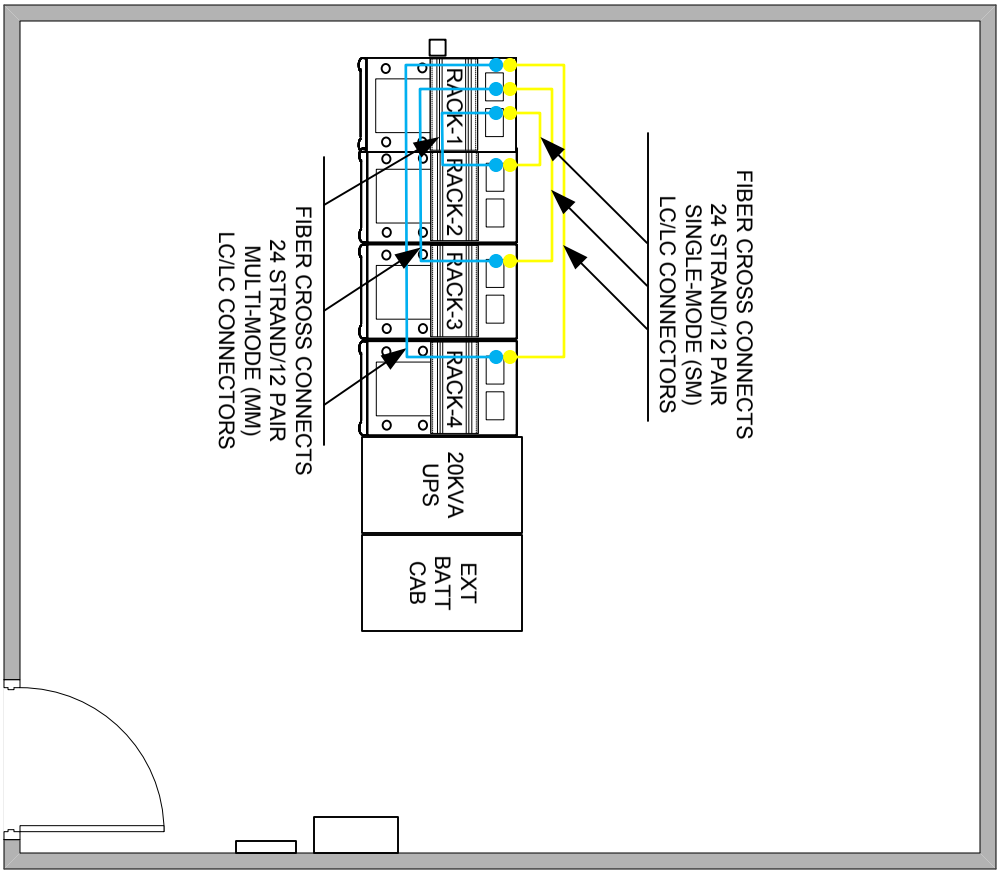

OXNARD USD
1051 S A STREET
OXNARD, CA 93030

PROJECTED START DATE	PROJECTED COMPLETION DATE
TBA	TBA

VWA JOB PM	JOB NO.	APPROVED	DRAWN
MIKE	TBA		MM

REVISIONS

NO.	DATE	DESCRIPTION
1	10/29/23	LAYOUT
2	2/24/25	REVISED LAYOUT

ValleyWideAir &Power
3231 GRANDE VISTA DRIVE
NEWBURY PARK, CA 91302

Ph: (818) 991-2227
E-mail: info@vwac.com

Lic. # 637610

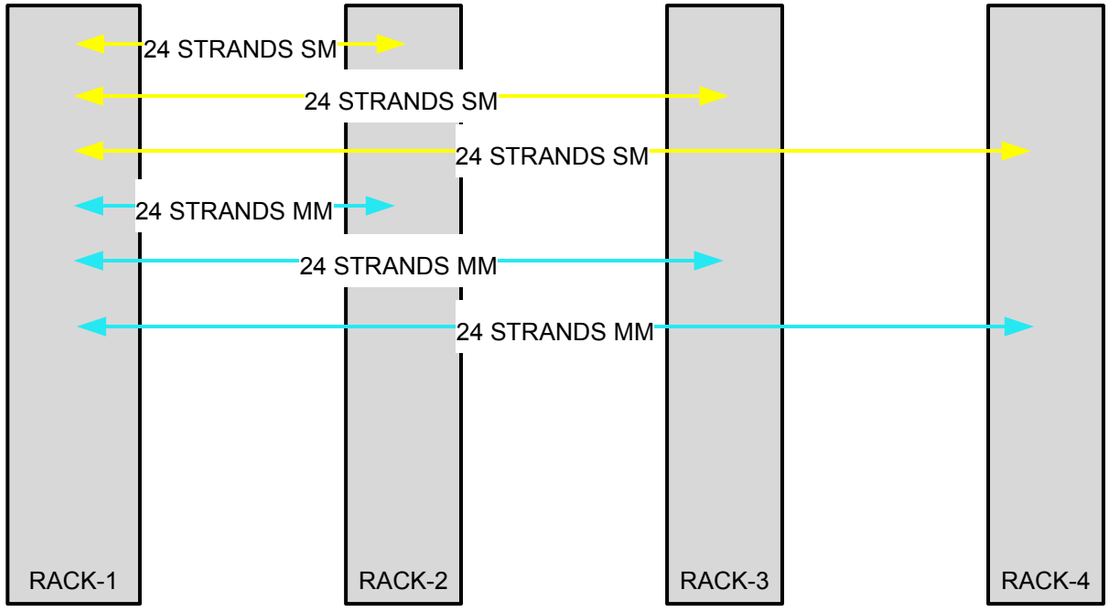

FIBER CROSS CONNECTS
24 STRAND/12 PAIR
SINGLE-MODE (SM)
LC/LC CONNECTORS

24 STRAND/12 PAIR
MULTI-MODE (MM)
LC/LC CONNECTORS

ValleyWideAir & Power
3231 GRANDE VISTA DRIVE
NEWBURY PARK, CA 91302
Ph: (818) 991-2227
E-mail: info@vwac.com
Lic. # 637610

REVISIONS

NO.	DATE	DESCRIPTION
1	10/29/23	LAYOUT
2	2/24/25	REVISED LAYOUT

APPROVED

DRAWN MM

OXNARD USD
1051 S A STREET
OXNARD, CA 93030

PROJECTED COMPLETION DATE TBA

JOB NO. TBA

PROJECTED START DATE TBA

VWA JOB PM MIKE

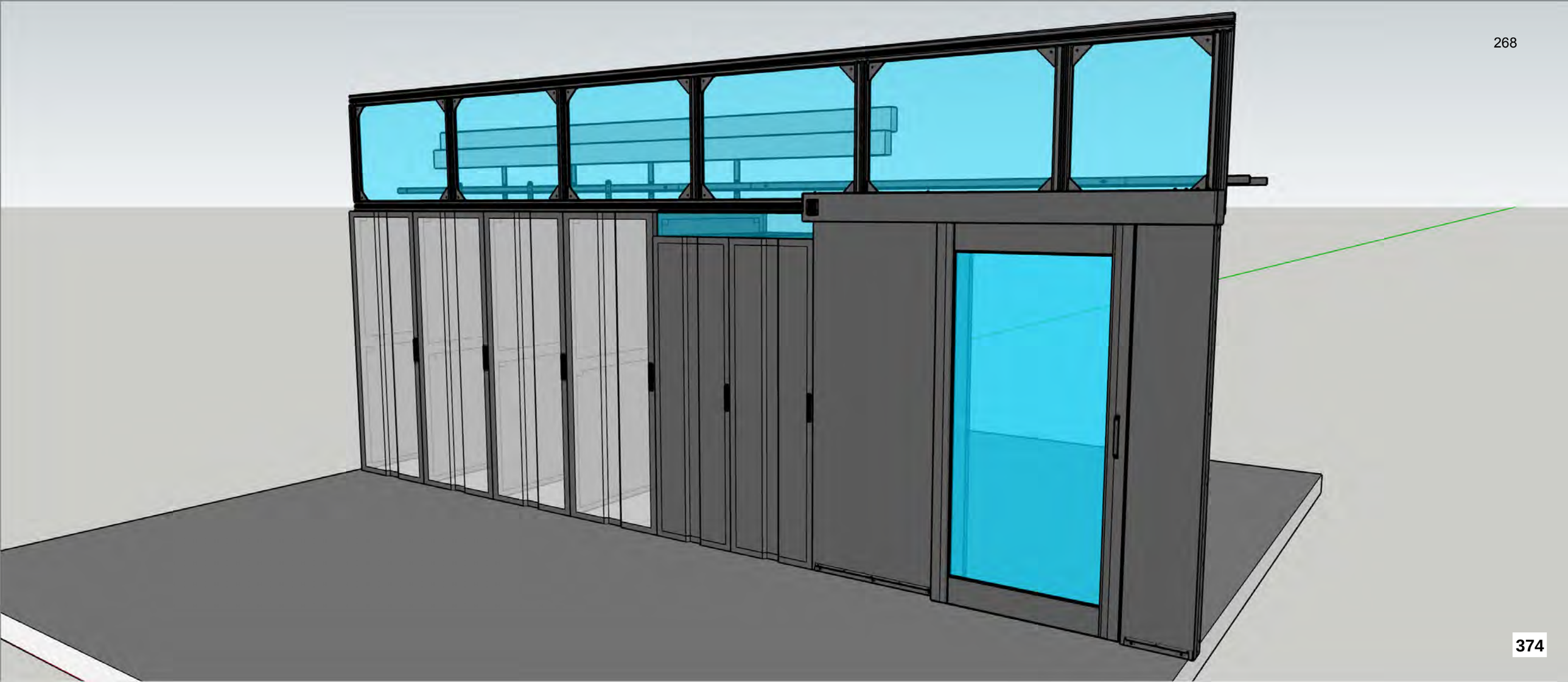

ZetaFrame™ Cabinet

TSZ1541321

Created: December 17, 2024

DESCRIPTION

ZF,6SL,SQ,800WX1200DX45H,ZPM/DPM,BK

SPECIFICATIONS

- ZETAFRAME CABINET, 45U X 800W X 1200D
- BLACK
- TWO PAIR 19"EIA SQUARE PUNCHED RAILS WITH FOUR (4) BRUSH-SEALED CABLE OPENINGS
- TOP PANEL WITH TWO (2) FULL-DEPTH BRUSH-SEALED CABLE OPENINGS
- CASTER ONLY KIT – RIGID IN FRONT, SWIVEL IN REAR
- LEVELER ONLY KIT
- ZETAFRAME PERFORATED METAL DOOR -INSTALL FRONT
- SINGLE-POINT KEYED LOCK -INSTALL FRONT
- DOUBLE PERFORATED METAL DOOR -INSTALL REAR
- THREE-POINT KEYED LOCK -INSTALL REAR
- SOLID SIDE PANEL -INSTALL LEFT
- SOLID SIDE PANEL -INSTALL RIGHT
- AIR DAM KIT
- (4) SHORT FINGER VERTICAL CABLE MANAGER WITH HINGED COVER - INSTALL: FRONT-LEFT RAIL - FRONT-RIGHT RAIL - REAR-LEFT RAIL - REAR-RIGHT RAIL
- (2) CABLE LASHING PANEL, 2.75"W (70MM) WITH CABLE BUNDLE SWIVELS - INSTALL: REAR-LEFT - REAR-RIGHT
- (1) CABLE LASHING PANEL, 7.0"W (178MM) WITH CABLE BUNDLE SWIVELS - INSTALL: REAR-LEFT
- (2) FULL-HEIGHT DUAL PDU BRACKET FOR 2.2"W (56MM) PDU -INSTALL: REAR-LEFT - REAR-RIGHT
- COMMON PARTS KIT, ZF, UL
- PACKAGING KIT

Measurement	Value (Metric)	Value (Imperial)
Height	2098.29 mm	82.61 in
Width	799.19 mm	31.46 in
Depth	1196.85 mm	47.12 in
Weight	208.77 kg	460.25 lb

©2017 Chatsworth Products, Inc. All rights reserved. All trademarks belong to their respective companies.
All products quoted are subject to availability based on the estimated manufacturing capacity and shipping dates should be considered estimates only. For large volumes requiring logistics coordination, Chatsworth Products, Inc. (CPI) reserves the right to negotiate scheduled shipment quantities and intervals. While every effort has been made to ensure the accuracy of all information, CPI does not accept liability for any errors or omissions and reserves the right to change information and descriptions of listed services and products. CPI sales are conducted in partnership with a global network of distributors, contractors and resellers. For budgetary purposes, CPI has provided Suggested Resale USD MSRP pricing. To obtain a purchase price quote and product availability please locate the CPI partner near you. All pricing is subject to change. CPI reserves the right to make adjustments to pricing and product offerings for reasons including, but not limited to, changing market conditions, product discontinuations, product unavailability and price changes.

CHATSWORTH PRODUCTS

THIS DRAWING CONTAINS PROPRIETARY AND CONFIDENTIAL INFORMATION AND IS PROTECTED BY U.S. AND INTERNATIONAL LAW. UNAUTHORIZED REPRODUCTION, DISCLOSURE OR USE OF THE DRAWING OR THE INFORMATION THEREIN IS EXPRESSLY FORBIDDEN EXCEPT AS AGREED TO IN WRITING BY CHATSWORTH PRODUCTS,INC.

CONFIDENTIAL AND PROPRIETARY

REVISION				
ISS	DESCRIPTION	DATE	APPROVED	
			CHK	ENG

QUOTE DESCRIPTION:
- ZETAFRAME CABINET, 45U X 800W X 1200D
- BLACK
- TWO PAIR 19"EIA SQUARE PUNCHED RAILS WITH FOUR (4) BRUSH-SEALED CABLE OPENINGS
- TOP PANEL WITH TWO (2) FULL-DEPTH BRUSH-SEALED CABLE OPENINGS
- CASTER ONLY KIT – RIGID IN FRONT, SWIVEL IN REAR
- LEVELER ONLY KIT
- ZETAFRAME PERFORATED METAL DOOR -INSTALL FRONT
- SINGLE-POINT KEYED LOCK -INSTALL FRONT
- DOUBLE PERFORATED METAL DOOR -INSTALL REAR
- THREE-POINT KEYED LOCK -INSTALL REAR
- SOLID SIDE PANEL -INSTALL LEFT
- SOLID SIDE PANEL -INSTALL RIGHT
- AIR DAM KIT
- (4) SHORT FINGER VERTICAL CABLE MANAGER WITH HINGED COVER - INSTALL: FRONT-LEFT RAIL - FRONT-RIGHT RAIL - REAR-LEFT RAIL - REAR-RIGHT RAIL
- (2) CABLE LASHING PANEL, 2.75"W (70MM) WITH CABLE BUNDLE SWIVELS - INSTALL: REAR-LEFT - REAR-RIGHT
- (1) CABLE LASHING PANEL, 7.0"W (178MM) WITH CABLE BUNDLE SWIVELS - INSTALL: REAR-LEFT
- (2) FULL-HEIGHT DUAL PDU BRACKET FOR 2.2"W (56MM) PDU -INSTALL: REAR-LEFT - REAR-RIGHT
- COMMON PARTS KIT, ZF, UL
- PACKAGING KIT

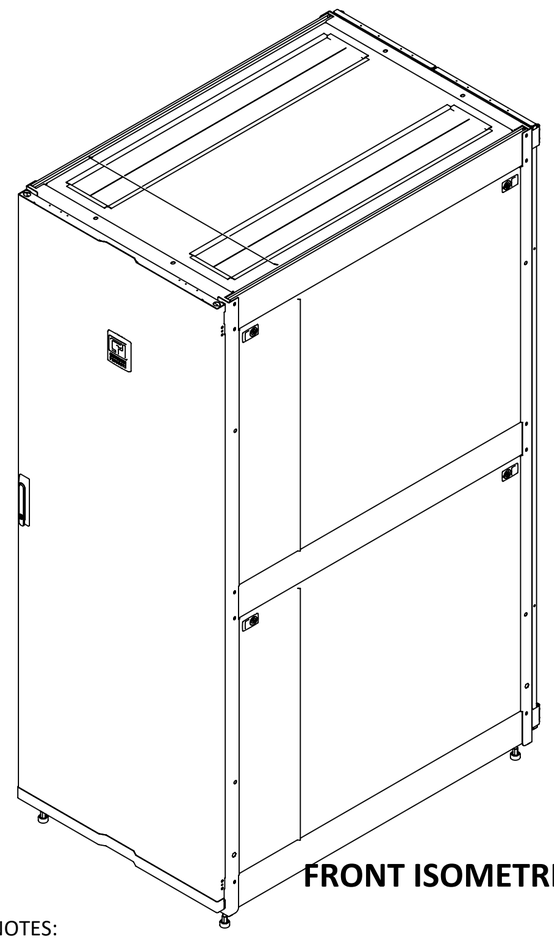

FRONT ISOMETRIC VIEW

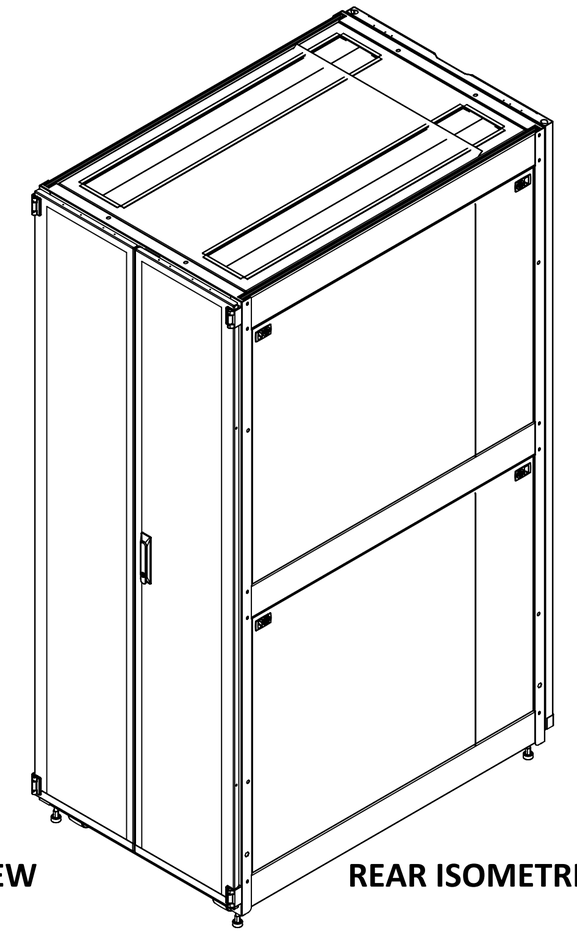

REAR ISOMETRIC VIEW

NOTES:
1. THIS DRAWING GENERATED PER SELECTIONS MADE THROUGH CPI LIVE CONFIGURATOR
2. ENGINEERING DOCUMENTATION REVIEWED UPON RECIEPT OF ORDER
3. DRAWING IMAGES IN THIS PACKAGE ARE CONCEPTUAL AND ARE NOT EXPECTED TO PROVIDE AN EXACT REPRESENTATION OF THE COMPLETED CPI PRODUCT
4. WHILE EVERY EFFORT HAS BEEN MADE TO ENSURE THE ACCURACY OF THE PRODUCTS CPI DOES NOT ACCEPT LIABILITY FOR ANY ERRORS OR OMISSIONS AND RESERVES THE RIGHT TO CHANGE INFORMATION AND DESCRIPTIONS OF LISTED SERVICES AND PRODUCTS
5. OVERALL DIMENSIONS ARE NOT TO EXCEED ±0.125 [±3.18]

SEE SHEET 2 & 3 FOR ADDITIONAL DRAWING VIEWS

UNLESS OTHERWISE SPECIFIED ALL DIMENSIONS SHOWN ARE IN INCHES [MILLIMETERS] MILLIMETERS ARE REFERENCE ONLY SPECIFIED TOLERANCES ON .XX[.X] ±.03[±0.8] .XXX[.XX] ±.030[±0.80] ANGLE ±1° THIRD ANGLE SEE NOTE 5	APPROVALS	DATE
	DR:	
	CHKR:	
	MECH ENG:	
ITEM TO CONFORM TO 0FC-754002 CORPORATE COSMETIC SPEC	ELEC ENG:	
MATERIAL	FINISH	

CHATSWORTH PRODUCTS, INC.

ZF,6SL,BK
800WX1200DX45H
SQ,ZPM/DPM

DWG SIZE **C** | **MIS-TSZ1541321** | ISS

SCALE **1:12.8571** | SHEET 1 OF 3

THIS DRAWING CONTAINS PROPRIETARY AND CONFIDENTIAL INFORMATION AND IS PROTECTED BY U.S. AND INTERNATIONAL LAW. UNAUTHORIZED REPRODUCTION, DISCLOSURE OR USE OF THE DRAWING OR THE INFORMATION THEREIN IS EXPRESSLY FORBIDDEN EXCEPT AS AGREED TO IN WRITING BY CHATSWORTH PRODUCTS,INC.

CONFIDENTIAL AND PROPRIETARY

REVISION				
ISS	DESCRIPTION	DATE	APPROVED	
			CHK	ENG
	SEE SHEET 1			

TOP VIEW

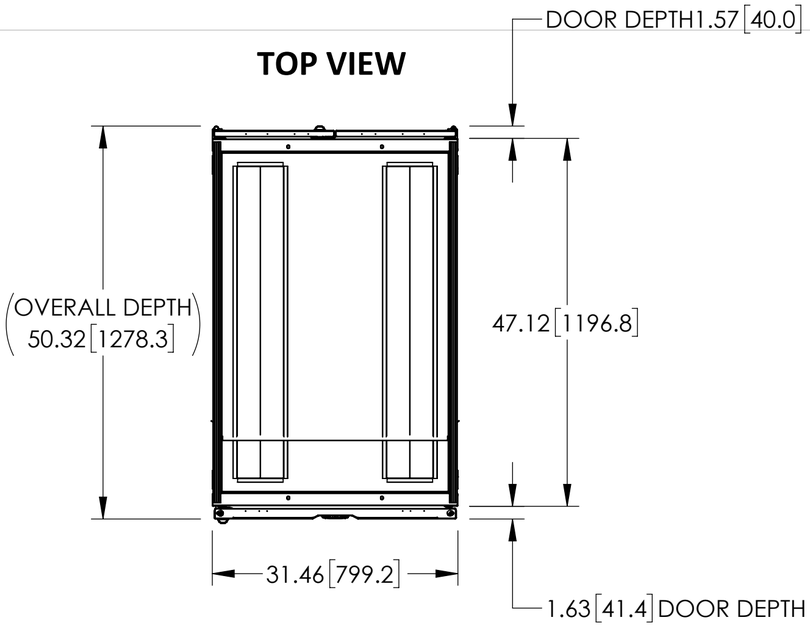

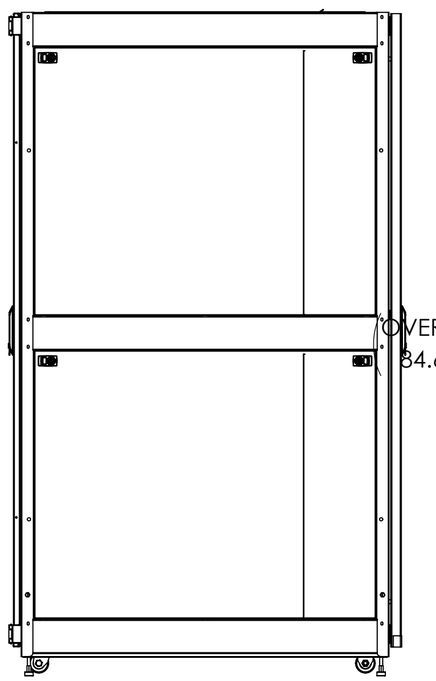

LEFT VIEW

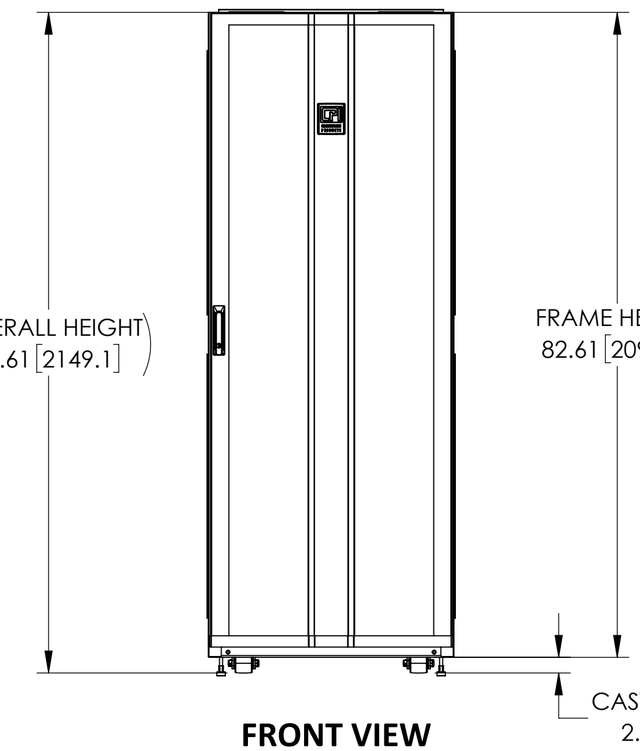

FRONT VIEW

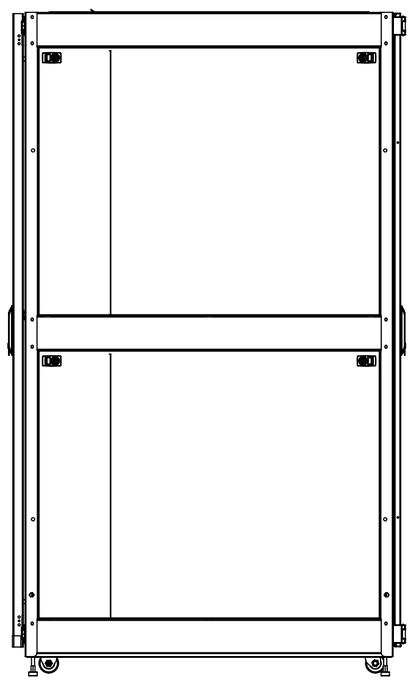

RIGHT VIEW

CHATSWORTH PRODUCTS, INC.

ZF,6SL,BK
800WX1200DX45H
SQ,ZPM/DPM

DWG SIZE	C	MIS-TSZ1541321	ISS
SCALE	1:15	SHEET 2 OF 3	

THIS DRAWING CONTAINS PROPRIETARY AND CONFIDENTIAL INFORMATION AND IS PROTECTED BY U.S. AND INTERNATIONAL LAW. UNAUTHORIZED REPRODUCTION, DISCLOSURE OR USE OF THE DRAWING OR THE INFORMATION THEREIN IS EXPRESSLY FORBIDDEN EXCEPT AS AGREED TO IN WRITING BY CHATSWORTH PRODUCTS,INC.

CONFIDENTIAL AND PROPRIETARY

REVISION

ISS	DESCRIPTION	DATE	APPROVED	
			CHK	ENG
	SEE SHEET 1			

SECTION A-A

TOP VIEW

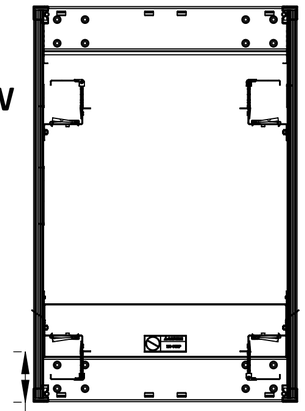

RAIL TO RAIL
29.00 [736.6]

FRONT RAIL SETBACK
6.00 [152.4]

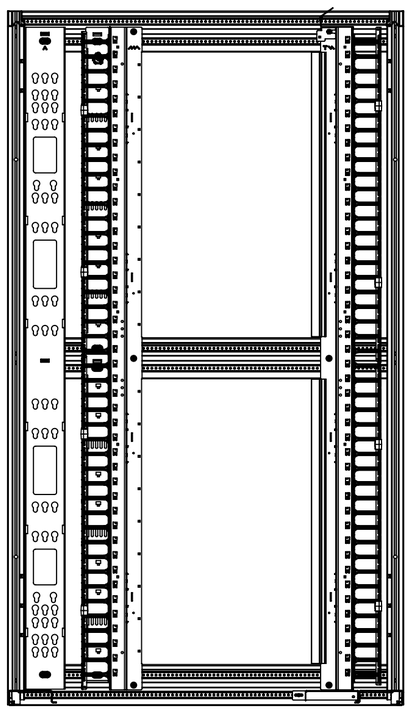

SECTION B-B

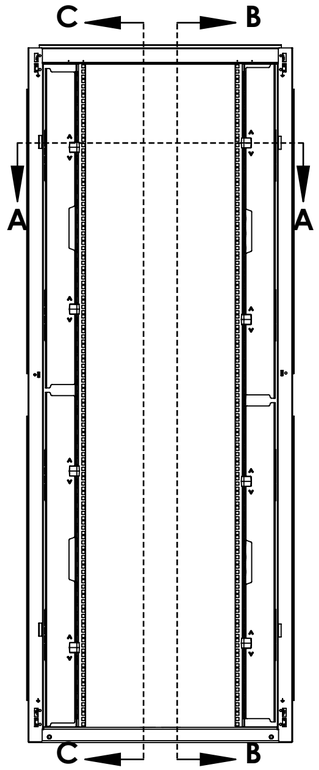

FRONT VIEW

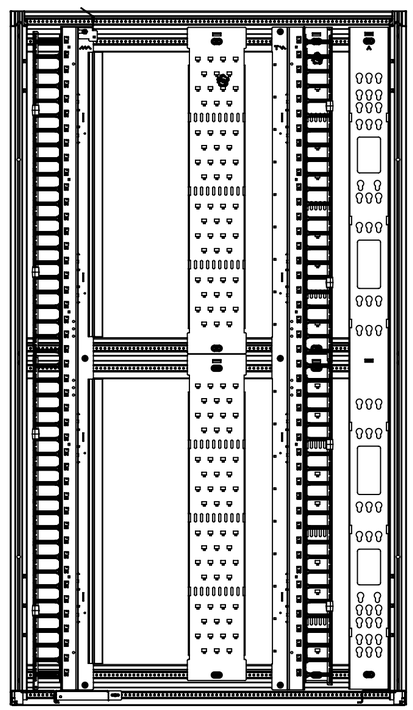

SECTION C-C

CHATSWORTH PRODUCTS, INC.

ZF,6SL,BK
800WX1200DX45H
SQ,ZPM/DPM

DWG SIZE	C	MIS-TSZ1541321	ISS
SCALE 1:13.9286	SHEET 3 OF 3		

CHATSWORTH PRODUCTS

Product Cut Sheet

Overview

Place at the bottom of cabinets to seal the space between the bottom of the cabinet and the floor when leveling feet or casters are in use. Ideal for aisle containment applications.

Compatible with ZetaFrame® Cabinet

- Blocks bypass airflow underneath cabinets to prevent leakage from the contained aisle
- Fits snug against cabinets and the floor
- Includes sheet steel covers
- Front and Side Seals are ordered separately
- Use one front seal kit on each cabinet; select to match the overall width of the cabinet
- Use one side seal kit on each cabinet row; select to match the depth of the cabinet/frame

Description

Place at the bottom of cabinets to seal the space between the bottom of the cabinet and the floor when leveling feet or casters are in use. Ideal for aisle containment applications. Compatible with ZetaFrame® Cabinet

Thermal Management

Floor Seal Kit

39996-703

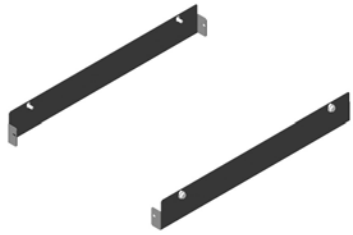

Specifications

Height:
3.8" (96.52 mm)

Width:
31.5" (800.1 mm)

Depth:
2.1" (53.34 mm)

Certifications:
UL-USCA; CSA; ROHS; NEMA

Color:
Black

Country of Origin:
US

Material:
Steel

Size:
For 31.5"W (800 mm) Cabinet

Type:
Floor Seal Kit, Front and Rear

sales@chatsworth.com
800-834-4969

CHATSWORTH PRODUCTS

Product Cut Sheet

Overview

Place at the bottom of cabinets to seal the space between the bottom of the cabinet and the floor when leveling feet or casters are in use. Ideal for aisle containment applications.

Compatible with ZetaFrame® Cabinet

- Blocks bypass airflow underneath cabinets to prevent leakage from the contained aisle
- Fits snug against cabinets and the floor
- Includes sheet steel covers
- Front and Side Seals are ordered separately
- Use one front seal kit on each cabinet; select to match the overall width of the cabinet
- Use one side seal kit on each cabinet row; select to match the depth of the cabinet/frame

Thermal Management
Floor Seal Kit

39997-716

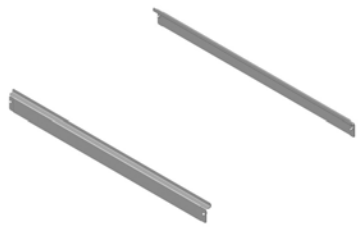

Specifications

Height:
2.4" (60.96 mm)

Width:
0.5" (12.7 mm)

Depth:
43.1" (1094.74 mm)

Certifications:
UL-USCA; CSA; ROHS; NEMA

Color:
Black

Country of Origin:
US

Material:
Steel

Size:
For 47.2"D (1200 mm) Cabinet

Type:
Floor Seal Kit, Sides

Description

Place at the bottom of cabinets to seal the space between the bottom of the cabinet and the floor when leveling feet or casters are in use. Ideal for aisle containment applications. Compatible with ZetaFrame® Cabinet

sales@chatsworth.com
800-834-4969

CHATSWORTH PRODUCTS

Product Cut Sheet

Overview

Supports CPI Cable Runway or Wire Mesh Cable Tray above a continuous row of ZetaFrame Cabinet, providing additional space between the tops of the cabinets and the cable runway and trays.

- Three ranges of incremental elevation
- Two Tier version supports two levels of cable runway or wire mesh cable tray
- Recommended pathway support span is 5' (1.5 m)
- Attaches to top track of ZetaFrame Cabinet frame. Position pathway front-to-rear on track
- Kit includes (1) pair of elevation brackets, all hardware to attach the brackets to the cabinet, and all required hardware to attach Cable Runway to elevation brackets
- Use Part Clamp (P/N 64010060-050; ordered separately) to attach Pemsa Rejiband Wire Mesh Cable Tray

Support Products

Cable Pathway Elevation Kit For ZetaFrame® Cabinet

60508-706

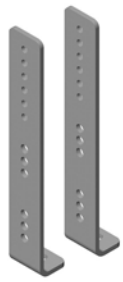

Specifications

Height:
9.2" (233.68 mm)

Width:
1.3" (33.02 mm)

Depth:
1.5" (38.1 mm)

Certifications:
UL-USCA; CSA; ROHS; NEMA

Color:
Black

Country of Origin:
US

Material:
Aluminum

Type:
1 Tier; 4"-6"H (100 mm-150 mm)

Description

Supports CPI Cable Runway or Wire Mesh Cable Tray above a continuous row of ZetaFrame Cabinet, providing additional space between the tops of the cabinets and the cable runway and trays.

sales@chatsworth.com
800-834-4969

CHATSWORTH PRODUCTS

Product Cut Sheet

Overview

Supports CPI Cable Runway or Wire Mesh Cable Tray above a continuous row of ZetaFrame Cabinet, providing additional space between the tops of the cabinets and the cable runway and trays.

- Three ranges of incremental elevation
- Two Tier version supports two levels of cable runway or wire mesh cable tray
- Recommended pathway support span is 5' (1.5 m)
- Attaches to top track of ZetaFrame Cabinet frame. Position pathway front-to-rear on track
- Kit includes (1) pair of elevation brackets, all hardware to attach the brackets to the cabinet, and all required hardware to attach Cable Runway to elevation brackets
- Use Part Clamp (P/N 64010060-050; ordered separately) to attach Pemsa Rejiband Wire Mesh Cable Tray

Support Products

Cable Pathway Elevation Kit For ZetaFrame® Cabinet

60508-708

Specifications

Height:
15.2" (386.08 mm)

Width:
1.3" (33.02 mm)

Depth:
1.5" (38.1 mm)

Certifications:
UL-USCA; CSA; ROHS; NEMA

Color:
Black

Country of Origin:
US

Material:
Aluminum

Type:
1 Tier; 10"-12"H (250 mm-300 mm)

Description

Supports CPI Cable Runway or Wire Mesh Cable Tray above a continuous row of ZetaFrame Cabinet, providing additional space between the tops of the cabinets and the cable runway and trays.

sales@chatsworth.com
800-834-4969

CHATSWORTH PRODUCTS

Product Cut Sheet

Overview

Our most popular cable runway is designed for value conscious customers. The Universal Cable Runway offers the industry standard features you've come to expect. With the runway supported every 5' (1.5 m), maximum load with minimal deflection is 132 lb/ft (59.9 kg).

Key Features and Benefits

- Made of 3/8" x 1-1/2" x .065" (9.53 mm x 38 mm x 1.65 mm) wall rectangular steel tubing
- Cross members welded at 12" (300 mm) intervals
- Individually boxed to prevent scratches and damage
- Standard length is 9'-11 1/2"/119.5" (3035 mm)
- U.L. classified for suitability as an equipment grounding conductor (must remove paint from side stringers or use grounding strap)
- Installation Best Practices includes Runway Elevation Kit

Ladder Rack

Universal Cable Runway

10250-718

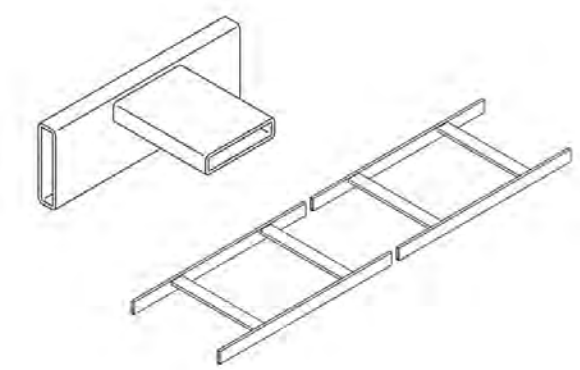

Specifications

Description

Our most popular cable runway is designed for value conscious customers. The Universal Cable Runway offers the industry standard features you've come to expect.

sales@chatsworth.com
800-834-4969

©Chatsworth Products, Inc. All rights reserved. All trademarks belong to their respective companies. 12/2024

With the runway supported every 5' (1.5 m), maximum load with minimal deflection is 132 lb/ft (59.9 kg).

Height:
1.5" (38.1 mm)

Width:
18" (457.2 mm)

Length:
119.5" (3035.00 mm)

Buy Online:
false

Country of Origin:
U,C,E

Finish/ Color:
Black

Material:
Steel Tube

OSHPD:
Y

Parcel/LTL:
LTL

Quantity:
EA

RoHS:
Y

Ship Depth:
120

Ship From Zip:
28562-5447; 91311-5206

Ship Height:
2

Ship Length:
120

Ship Width:
19

Shipping Weight:
25

UL:
UL

sales@chatsworth.com

800-834-4969

©Chatsworth Products, Inc. All rights reserved. All trademarks belong to their respective companies. 12/2024

CHATSWORTH PRODUCTS

Product Cut Sheet

Overview

Connect two sections of runway end-to-end. Fits both solid and tubular steel 1-1/2" x 3/8" and 2" x 3/8" (38.1 mm x 9.53 mm and 50.8 x 9.53 mm).

Kit consists of:

- (4) slice plates
- (2) 3/8-16 trimmed head bolts
- (2) 3/8-16 hex nuts
- (2) 3/8" split lock washers

Junction Products

Butt-Splice Kit

11301-701

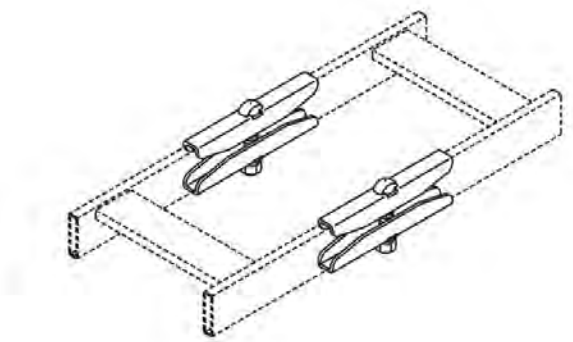

Specifications

Description

Connect two sections of runway end-to-end. Fits both solid and tubular steel 1-1/2" x 3/8" and 2" x 3/8" (38.1 mm x 9.53 mm and 50.8 x 9.53 mm).

sales@chatsworth.com

800-834-4969

©Chatsworth Products, Inc. All rights reserved. All trademarks belong to their respective companies. 12/2024

Height:
1.5" (38.1 mm)

Width:
0.38" (9.652 mm)

Length:
5" (127 mm)

Buy Online:
false

Country of Origin:
U

Finish/ Color:
Black

Material:
Steel

Parcel/LTL:
Parcel

Quantity:
EA

RoHS:
Y

Ship Depth:
15

Ship From Zip:
28562-5447

Ship Height:
7

Ship Length:
15

Ship Width:
8

Shipping Weight:
1

Type:
For 1-1/2" Side Stringers

sales@chatsworth.com

800-834-4969

©Chatsworth Products, Inc. All rights reserved. All trademarks belong to their respective companies. 12/2024

CHATSWORTH PRODUCTS

Product Cut Sheet

Overview

2" x 2" x .105" (50 mm x 50 mm x 2.67 mm) steel support angle is designed for wall-mounting specific widths of Cable Runway.

Kit consists of:

- (1) wall angle
- (2) 5/16-18 x 2-1/4" J-bolts
- (2) 5/16-18 hex nuts
- (2) 5/16 lock washers

Support Products

Wall Angle Support Kit Cable Runway

11421-718

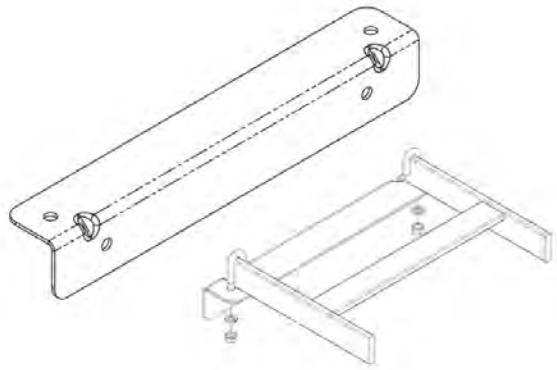

Specifications

Description

2" x 2" x .105" (50 mm x 50 mm x 2.67 mm) steel support angle is designed for wall-mounting specific widths of Cable Runway.

sales@chatsworth.com

800-834-4969

Height:
2" (50.8 mm)

Width:
20" (508 mm)

Depth:
2" (50.8 mm)

Buy Online:
false

Country of Origin:
U

Finish/ Color:
Black

Material:
Steel

Parcel/LTL:
Parcel

Quantity:
EA

RoHS:
Y

Ship Depth:
6

Ship From Zip:
28562-5447

Ship Height:
24

Ship Length:
6

Ship Width:
8

Shipping Weight:
3

Size:
For Use With 18" (460 mm) Runway

sales@chatsworth.com

800-834-4969

CHATSWORTH PRODUCTS

Product Cut Sheet

Overview

CPI's patent-pending Tool-less Cross Member Radius Drop supports and guides cable loads as they enter and exit the runway, allowing cables to maintain proper bend radius. The Tool-less Cross Member Radius Drop is designed for compatibility with 1.5" x 3/8" (38.1 mm x 9.53 mm) Stringers and installs without the need for tools, mounting directly to the sides of the runway.

Key Features and Benefits

- Tool-less Cross Member Radius Drops may be positioned over or between the Runway Cross Members
- Use Saf-T-Grips or cable ties, along with the tie-down slots to fully deploy the cable support solutions
- Provides 3" (76.2 mm) bend radius
- Includes 1.4"H (36 mm), 1" (25 mm) diameter ABS cable spools to separate and guide cables
- Compatible with Universal, TELCO, UL Classified and Adjustable Cable Runway
- Sold individually
- Manufactured from steel; spools are plastic

Bends, Drops and Dividers

Tool-less Cross Member Radius Drop

14304-718

Specifications

Height: 5.3" (38 mm)	**Width:** 18" (457 mm)
Depth: 6.1" (155 mm)	**Length:** 6.1' (155 mm)
Certifications: ROHS	**Country of Origin:** US
Finish/ Color: Black	**Quantity:** EA

Description

sales@chatsworth.com
800-834-4969

CPI's patent-pending Tool-less Cross Member Radius Drop supports and guides cable loads as they enter and exit the runway, allowing cables to maintain proper bend radius.

sales@chatsworth.com

800-834-4969

CHATSWORTH PRODUCTS

Product Cut Sheet

Overview

CPI's patent-pending Tool-less Stringer Radius Drop features simple, tool-less installation.

Key Features and Benefits

- Use Saf-T-Grips or cable ties along with the tie-down slots to fully deploy the cable support solutions
- Provides 3" (76.2 mm) bend radius
- Supplied with 1.4"H (36 mm), 1" (25 mm) diameter, ABS cable spools to separate and guide cables
- Unique design slips over the Runway Stringers that are 1-1/2"H x 3/8"W (38 mm x 9.53 mm)
- Compatible with Universal, TELCO, UL Classified and Adjustable Cable Runway
- Solid individually

Description

CPI's patent-pending Tool-less Stringer Radius Drop features simple, tool-less installation.

Bends, Drops and Dividers

Tool-less Stringer Radius Drop

14305-701

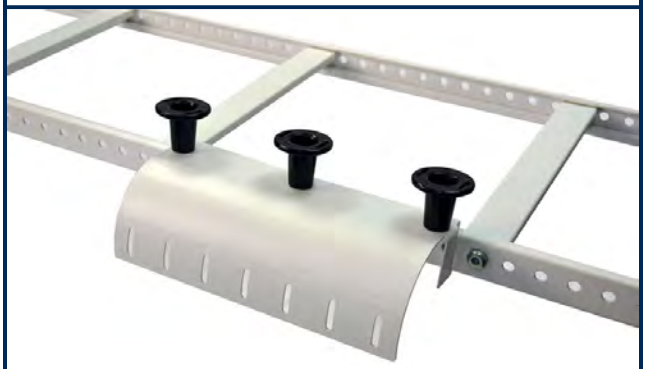

Specifications

Height: 4.6" (117 mm)	**Width:** 5.5" (305 mm)
Depth: 4.6" (117 mm)	**Length:** 4.6' (117 mm)
Certifications: ROHS	**Country of Origin:** US
Finish/ Color: Black	**Quantity:** EA

sales@chatsworth.com

800-834-4969

CHATSWORTH PRODUCTS

Product Cut Sheet

Overview

Snap-In Filler Panel by Chatsworth Products (CPI) greatly reduces bypass airflow and blocks recirculation of hot exhaust air from the back of equipment to the front of equipment, helping to improve on cooling costs.

Advantages:

- Complete Sealing - Reduces bypass airflow in between equipment by sealing unused rack-mount spaces (U) in cabinets
- Tool-less Installation - Snaps into square-punched or tapped mounting holes on equipment rails. Integrated finger grips provide easy installation and removal
- Two Options - Available for square punched or tapped equipment mounting rails

Key Features:

- Design reduces gaps between stacked filler panels
- Quick installation with tool-less design
- Integrated finger grips provide easy installation and removal
- Standard Black and Glacier White finish are available
- Available in multi-packs for large installations

Thermal Management

Snap-In Filler Panel

34538-002

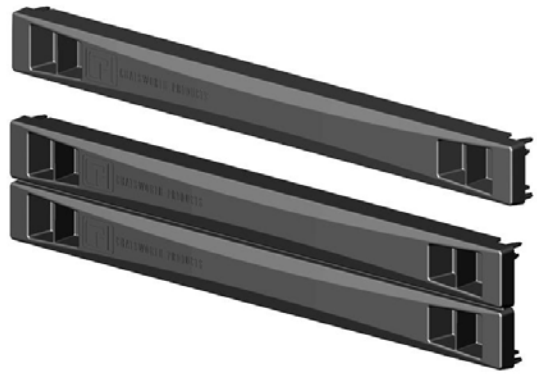

Specifications

Height:
3.5" (88.9 mm) 2U

Width:
19" (482.6 mm)

Depth:
0.9" (22.86 mm)

Certifications:
ROHS

Country of Origin:
CH

Data or Cut Sheet for Series:
http://www.chatsworth.com/UploadedFil

Finish/ Color:
Black

Material:
Plastic

Quantity:
(50) Panels

RoHS:
Y

Seismic:
N

Type:
Square-Punched Rails

sales@chatsworth.com
800-834-4969

Description

Snap-In Filler Panel by Chatsworth Products (CPI) greatly reduces bypass airflow and blocks recirculation of hot exhaust air from the back of equipment to the front of equipment, helping to improve on cooling costs.

sales@chatsworth.com

800-834-4969

CHATSWORTH PRODUCTS

Product Cut Sheet

Overview

Snap-In Filler Panel by Chatsworth Products (CPI) greatly reduces bypass airflow and blocks recirculation of hot exhaust air from the back of equipment to the front of equipment, helping to improve on cooling costs.

Advantages:

- Complete Sealing - Reduces bypass airflow in between equipment by sealing unused rack-mount spaces (U) in cabinets
- Tool-less Installation - Snaps into square-punched or tapped mounting holes on equipment rails. Integrated finger grips provide easy installation and removal
- Two Options - Available for square punched or tapped equipment mounting rails

Key Features:

- Design reduces gaps between stacked filler panels
- Quick installation with tool-less design
- Integrated finger grips provide easy installation and removal
- Standard Black and Glacier White finish are available
- Available in multi-packs for large installations

Thermal Management

Snap-In Filler Panel

34537-001

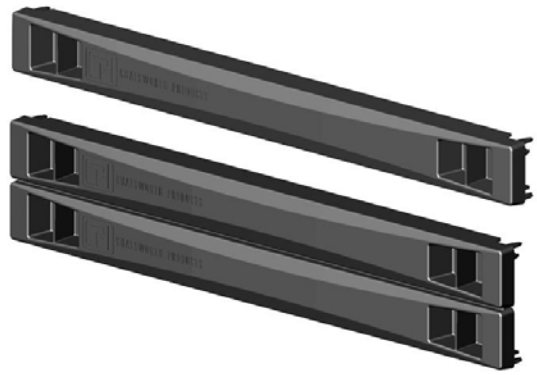

Specifications

Height:
1.7" (43.18 mm) 1U

Width:
19" (482.6 MM)

Depth:
0.9" (22.86 MM)

Certifications:
ROHS

Country of Origin:
CH

Finish/ Color:
Black

Material:
Plastic

Quantity:
(6) Panels

RoHS:
Y

Seismic:
N

Type:
Square-Punched Rails

sales@chatsworth.com
800-834-4969

Description

Snap-In Filler Panel by Chatsworth Products (CPI) greatly reduces bypass airflow and blocks recirculation of hot exhaust air from the back of equipment to the front of equipment, helping to improve on cooling costs.

sales@chatsworth.com

800-834-4969

CHATSWORTH PRODUCTS

Product Cut Sheet

Overview

CPI Standard Busbars are insulated ground bus mounting plates specifically designed for commercial applications. The Hard-Drawn Electrolytic Tough Pitch 110 Alloy solid copper bonding bars are 1/4" (6.4 mm) thick and stand off 2.75" (70 mm) from the backboard or wall. The 10" (254 mm) Busbar accepts 1/4" (6.4 mm) single bolt lugs. The 12" (304.8 mm) and 20" (508 mm) Busbars provide connection for nine or 17 lugs respectively, accepting lugs with either 3/4", 1" or 1-3/4" (19 mm, 25.4 mm or 44.5 mm) centers. Any lug with 3/8" (9.5 mm) bolts may be used.

- Each Busbar assembly consists of:
  - 1 Busbar
  - 2 insulators
  - 2 stand-off brackets
  - 4 stainless steel bolts
  - 4 lock washers
  - 4 flat washers
- All Busbars ship individually and preassembled
- Other configurations available on request
- UL® Listed

Commercial Applications

Standard Busbars

10622-012

Specifications

Description

CPI Standard Busbars are insulated ground bus mounting plates specifically designed for commercial applications.

sales@chatsworth.com
800-834-4969

Height:
4" (100 mm)

Width:
12" (300 mm)

Depth:
0.25" (6.4 mm)

Buy Online:
false

Country of Origin:
U

Finish/ Color:
Copper

Material:
Copper

Parcel/LTL:
Parcel

Quantity:
EA

RoHS:
Y

Ship Depth:
3

Ship From Zip:
60030-1664

Ship Height:
13

Ship Length:
3

Ship Width:
7

Shipping Weight:
5

Type:
Standard Busbar

UL:
UL

sales@chatsworth.com

800-834-4969

CHATSWORTH PRODUCTS

Product Cut Sheet

Overview

Use Ground Wire to create custom-length bonding jumpers to CPI Racks, Cabinets and Cable Runway to Bonding Busbars.

- Ground Wire is a #6 AWG, 133-strand, green insulated conductor with a (MTW) yellow helical stripe jacket
- Sold in a 100' (30 m) length on a spool
- High strand count requires specific Compression Lugs
- UL® Listed

Bonding Straps & Jumpers

Ground Wire

40159-001

Specifications

Description

Use Ground Wire to create custom-length bonding jumpers to CPI Racks, Cabinets and Cable Runway to Bonding Busbars.

sales@chatsworth.com

800-834-4969

Height:
12" (304.8 mm)

Width:
2.75" (69.85 mm)

Length:
1200" (30480 mm)

Buy Online:
false

Country of Origin:
U

Finish/ Color:
Green

Material:
#6AWG Stranded Copper

Parcel/LTL:
Parcel

Quantity:
EA

RoHS:
Y

Ship Depth:
6

Ship From Zip:
60030-1664

Ship Height:
4

Ship Length:
6

Ship Width:
10

Shipping Weight:
14

Type:
Ground Wire

UL:
UL

sales@chatsworth.com

800-834-4969

CHATSWORTH PRODUCTS

Product Cut Sheet

Overview

Compression Lugs connect electrical wires to copper or tinned copper conductors.

- Manufactured from electroplated tinned copper conductors
- Available individually or in bulk quantities in three styles; Two-hole, Slotted, and 90º Slotted
- Other configurations available

Compression Lugs and Connectors

Compression Lugs

40162-901

Description

Connect copper or tinned copper conductors to Busbars, racks, cabinets or Cable Runway.

Specifications

sales@chatsworth.com

800-834-4969

Buy Online:
false

Cable Size:
#6

Country of Origin:
U

Finish/ Color:
Blue

Hole Size:
.250" (6.4 mm)

Hole Spacing:
.625" (15.9 mm)

Lug Style:
Two-Hole Lug

Material:
Tinned Copper

Pack Of:
1

Parcel/LTL:
Parcel

Quantity:
1

RoHS:
Y

Ship Depth:
8

Ship From Zip:
60030-1664

Ship Height:
4

Ship Length:
8

Ship Width:
6

Shipping Weight:
0.1

UL:
UL

sales@chatsworth.com

800-834-4969

CHATSWORTH PRODUCTS

Product Cut Sheet

Overview

C-Type Compression Taps connect two copper conductors with the use of a hydraulic crimping tool.

- Available individually or in bulk packages
- Other sizes available on request
- UL Listed

Compression Lugs and Connectors

C-Type Compression Taps

40163-001

Description

C-Type Compression Taps connect two copper conductors with the use of a hydraulic crimping tool.

Specifications

Country of Origin: U	**Finish/ Color:** Copper
Material: Copper	**Pack Of:** 1
Quantity: 1	**RoHS:** Y
Run: #4 Stranded, #6 Solid Run	**Tap:** #6 Stranded, #6 Solid Run
Type: #6 Stranded/#6 Solid	**UL:** UL

sales@chatsworth.com

800-834-4969

CHATSWORTH PRODUCTS

Product Cut Sheet

Overview

Cable Runway Bonding Strap Kits provide a bonding pathway between cable runway lengths when fastened together across splices. Installation requires drilling 5/16" (127 mm) holes. Bonding Straps consist of an 8"L (200 mm) #6 AWG green insulated stranded copper conductor with a helical yellow stripe attached at both ends to two-hole compression lugs with 1/4" (6.4 mm) bolt holes spaced on 5/8" (15.9 mm) centers.

- Overall length of 11" (280 mm)
- Available individually or in packs of 25
- Constructed of UL® Listed components, File E515394, Category KDER (US), KDER7 (Canada) - Bonding and Grounding Equipment
- Other configurations available on request

Kit consists of:

- (4) stainless steel cap screws, #1/4-20 x 3/4"L (19 mm)
- (4) flat washers, 1/4" (6.4 mm)
- (4) lock washers, 1/4" (6.4 mm)
- (4) nuts, 1/4" (6.4 mm)

Description

Bonding Straps & Jumpers

Cable Runway Bonding Strap Kit

40164-001

Specifications

Country of Origin: U	**Finish/ Color:** Green
Material: Green Insulated Copper	**Pack Of:** 1
Quantity: Single	**RoHS:** Y
Ship Depth: 3	**Ship From Zip:** 60030-1664
Ship Height: 13	**Ship Length:** 3
Ship Width: 7	**Shipping Weight:** 0.3
UL: UL	

sales@chatsworth.com
800-834-4969

Cable Runway Bonding Strap Kits provide a bonding pathway between cable runway lengths when fastened together across splices.

sales@chatsworth.com

800-834-4969

CHATSWORTH PRODUCTS

Product Cut Sheet

Overview

Aisle Containment Doors are used on the ends of two adjacent
rows of cabinets. The doors are part of a complete Aisle Containment Solution that captures cold air or vents hot air from
an enclosed aisle.

- Encloses the end of an aisle between adjacent cabinet rows
- Compatible with F-Series TeraFrame® Cabinets and GF-Series GlobalFrame® Cabinets or CPI's Frame Supported Exhaust Duct
- Fits snug against cabinets/frame
- Sliding action minimizes clearance requirements
- Door frames feature an integrated interior handle, full height vertical edge seals, height adjustable brush floor seals and a magnetic door seal
- Automatic close system ensures maximum performance by minimizing airflow disruptions and includes a speed control damper for safe operation
- Detents open feature for easy access during extended service periods
- No threshold under the door when opened
- Low profile design conceals floor installation hardware
- Door frames are anodized aluminum with a large, full-height, transparent polycarbonate window
- Door track is aluminum extrusion; end panels, cover and brackets are steel
- One size, assembly is 88.5" (2248 mm) high by 106.9" (2715 mm) wide by 5.5" (140 mm) deep with an 82" (2083 mm) high by 42" (1067 mm) wide door opening
- Spans 48" (1200 mm) to 72" (1800 mm) wide aisles (two to three tiles)
- Not compatible with cabinets/frames less than 42" (1050 mm deep on seven tile, 168" (4200 mm) pitch

Door

Aisle Containment Door Assembly

32780-701

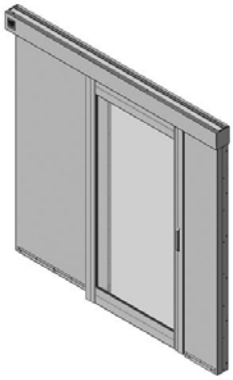

Specifications

Height: 2248" (88.5 mm)	**Width:** 87.8" (2231 mm)
Depth: 5.4" (137 mm)	**Application or Use:** Door
Country of Origin: U	**Door Style:** Single Door, Opens to Left
Finish/ Color: Black	**Type:** Painted Door Frames

sales@chatsworth.com
800-834-4969

- End panels are painted glacier white or black; option for paint matched door frames available

Description

Use with all CPI containment solutions. The door assembly encloses the end of an aisle between adjacent cabinet rows. Available in single- and double-door assemblies.

sales@chatsworth.com

800-834-4969

CHATSWORTH PRODUCTS

Product Cut Sheet

Overview

- Provides a pattern for marking and drilling the floor when installing Aisle Containment Doors
- Select to match door style: single or double doors
- Reusable, only one required per site

Door

Floor Mounting Template for Aisle Containment

32875-702

Description

Provides a pattern for marking and drilling the floor when installing Aisle Containment Doors. Reusable, only one required.

Specifications

Height:
0.5" (13 mm)

Width:
7.8" (198 mm)

Length:
85.9" (2183 mm)

Application or Use:
Door

Country of Origin:
U

Door Style:
Single Door

Finish/ Color:
Black

sales@chatsworth.com
800-834-4969

CHATSWORTH PRODUCTS

Product Cut Sheet

Overview

Build To Spec (BTS) includes all of the components needed to construct a ceiling-supported or cabinet-supported duct system to capture and direct airflow in the contained aisle. This solution integrates with perimeter cooling, provides immediate improved cooling efficiency and is compatible with economization methods. Field fabrication accommodates site differences and existing conditions.

Key Features and Benefits

- Field-fabricated containment system accommodates site differences and existing conditions
- Compatible with a mix of cabinets – different heights, widths and depths in the same row
- Elevated, single-piece duct allows cabinets to be removed, omitted or replaced as required
- Translucent panels and transparent door panels allow light to enter the contained aisle
- Doors close automatically to maintain containment and reduce recovery time
- A complete solution maximizes performance with baffles to seal around and within cabinets and the contained aisle
- Durable construction and maintenance-free design provide many years of use

Build To Spec BTS Kit

Build To Spec (BTS) Kit

33000-701

Specifications

Height:
48" (1219.2 mm)

Width:
96" (2438.4 mm)

Depth:
94" (2387.6 mm)

Length:
94" (2388 mm)

Country of Origin:
U

Finish/ Color:
Black

Material:
Steel, Aluminum, Polycarbonate

Quantity:
EA

RoHS:
Y

sales@chatsworth.com
800-834-4969

Description

The Build To Spec Hot Aisle Containment Solution is a field-fabricated containment system used over a hot aisle as part of a closed hot air return. It is ideal for retrofit applications over a mix of cabinets of varying height, width and depth.

sales@chatsworth.com

800-834-4969

Implementation Plan

Tasks for First Two Weeks (Sample Version)

Upon award, your Account Management Team will remain in constant contact with key employee(s) at each location to implement the contract and ensure total satisfaction. CDW•G will make this process as seamless as possible and will follow the work plan that has been developed. In addition, if requested, CDW•G will facilitate any necessary meetings via teleconference, videoconference, or in person, pending appointment, at your location or ours, to ensure that the process meets your expectations.

While there can be challenges to implementing a project of any scale, CDW•G tries to minimize potential problems upfront. We will need Oxnard School District to provide the following in a timely manner in order to facilitate the implementation process:

- Updated contact information for all key personnel
- Information regarding product forecasts
- Standardized product list
- List of authorized users and restrictions
- Imaging specifications
- Specific reporting requirements
- Permission for CDW•G to be listed on manufacturer agreements.

During the implementation process, any problems or concerns should be directed to your account manager for immediate resolution. The following implementation plan demonstrates how CDWG will work with you to successfully implement this project.

Task	Week 1	Week 2
Account Management Set Up		
• **Introduce key customer contacts to CDW•G Account Team** • **Introductory letter/phone contact/ site visit**	X	
• **Gather/confirm general customer information** • **Contacts: phone, email, fax** • **Oxnard School District's locations and addresses**	X	
• **Outline customer's procedures and requirements, i.e.** ○ **Frequency of contact/schedule**	X	

○ Turnaround expectations (quotes) ○ Reporting		
• Conduct walkthrough or webinar: Account Center		X
CDW•G Capabilities and Support		
• Make contact with Account Specialists, as needed		X
• Review technical support options	X	
• Review customer service processes (i.e., returns)	X	
Customer Financial Arrangements		
• Complete forms for credit approval	X	
• Complete financing application		X
Product Specific Needs and Services		
• Arrange conference call(s) with manufacturer(s)	X	
• Develop product forecasts	X	
• Process and test image(s)		X
• Customize asset tag/schedule asset tagging		X
• Input customer installation/configuration specifications		X
Procurement and Management Systems		
• Standardize products through your Account Center • Create bundles		X
• Set up purchase authorizations and controls		X
• Establish account linking		X
• Set up software license tracking system		X
• Implement asset tracking system		X
• Investigate or link with e-procurement programs and third parties		X
• Utilize EDI for invoicing and/or ordering functions		X
Pricing		
• Have CDW•G listed on all manufacturer contracts		X
• Enter pricing information into contract management system		X
Optional Systems/Services		
• Finalize staging agreement		X
• Finalize minority/disabled small business partnership		X
• Arrange for onsite services		X
• Select appropriate training programs		X
• Set up Employee Purchase Program		X

K-12 Funding and Other Resources

We know your need for vendor support does not stop at deployment completion. Maintaining technology program innovativeness and alignment with your education goals is a continuous and daunting task. In fact, in a year, your program will look very different. You need a vendor that does more than meet your RFP's technology requirements; you need a vendor partner that shares a passion for education and continued development. Our teams, and our partners, are dedicated to supporting the full scope of Oxnard School District's technology and all your program goals. Following are highlights of the value-adds we offer our education customers.

Get Ed Funding Overview

CDW•G sponsors **GetEdFunding.com**, a free grant-finding resource, providing access to billions of dollars' worth of educational funding opportunities. Through sponsoring this resource, CDW•G's mission is to help educators and institutions discover the funds they need to supplement tight budgets to achieve your goals and take learning to the next level.

Monitored daily, **GetEdFunding.com** can reduce the energy your teachers are spending to search for programs and money. You can finetune your search based on key concepts and 21st century skills and themes. Once you are registered on the site, you can save the grants of greatest interest to return to later. The funding opportunities listed are already available and applicable to standard learning paths. For example, there are more than 60 STEM specific programs currently available for application. Please reach out to your account manager for more information.

OSD BOARD AGENDA ITEM

Name of Contributor: Dr. Anabolena DeGenna **Date of Meeting:** March 19, 2025

Agenda Section: Section C: Support Services Agreement

Ratification of Agreement #24-210 Nigro & Nigro, PC – School Facility Program Performance Audit Services (Nuñez)

Nigro & Nigro, PC will perform the School Facility Program Performance Audit Services at the following school site locations.

50/72538-00-017 – Brekke School
57/72538-00-029 – Elm School
57/72538-00-027 – Harrington School
57/72538-00-028 – Lemonwood School
50/72538-00-018 – McAuliffe School
50/72538-00-022 – McKinna School
57/72538-00-030 – McKinna School
50/72538-00-024 – Ramona School
50/72538-00-016 – Ritchen School

Dates of Service: July 1, 2024 through June 30, 2025

FISCAL IMPACT:
Not to Exceed: $90,000.00 – General Funds

RECOMMENDATION:
It is the recommendation of the Director of Fiscal Services that the Board of Trustees ratify Agreement #24-210 with Nigro & Nigro, PC.

ADDITIONAL MATERIALS:

Attached: Agreement #24-210, Nigro & Nigro 2024-2025 SFPA (4 Pages)
Letter of Engagement (BREKKE-017) (4 Pages)
Letter of Engagement (ELM-029) (4 Pages)
Letter of Engagement (HARRINGTON-027) (4 Pages)
Letter of Engagement (LEMONWOOD-028) (4 Pages)
Letter of Engagement (MCAULIFFE-018) (4 Pages)
Letter of Engagement (MCKINNA-022) (4 Pages)
Letter of Engagement (MCKINNA-030) (4 Pages)
Letter of Engagement (RAMONA-024) (4 Pages)
Letter of Engagement (RITCHEN-016) (4 Pages)

Oxnard School District

Short-Term Services Agreement

Use ONLY for low cost, low risk, short-term services – No Sub-Contractors

Requisition Number

Purchase Order Number

24-210

Contract Number

This Services Agreement (the "Agreement") is made and entered into March 19,2025 by and between the OXNARD SCHOOL DISTRICT (the "Local Educational Agency" or District") and Nigro & Nigro PC, (hereinafter referred to as "Provider"). District and Provider may be referred to herein individually as a "Party" and collectively as the "Parties."

Nigro & Nigro PC	951-698-8783
Provider	Telephone Number
25220 Hancock Ave., Ste. 400	pgienn@nncpas.com
Street Address	E-mail Address
Murrieta, CA 92562-0903	
City, State, Zip code	Tax Identification or Social Security Number

Services

Provide School Facility Program Performance Audits for nine (9) school sites.

Description of Services (if more space is needed, attach pages labeled as ATTACHMENT A, which is incorporated herein in full)

July 1, 2024 through June 30, 2025	TBD	TBD
Date(s) of Service	Hour(s) of Service	Location

Fees

Compensation for Services	$ 90,000.00
Other Ancillary Cost, as applicable	$ 0.00
Total not to Exceed	$ 90,000.00

☑ W-9 received

Payment. District will pay Provider within 30 days after receipt of an invoice, in form and content acceptable to District, and reflecting charges for District approved costs and services performed by Provider and not previously invoiced.

Conditions. Provider will have no obligation to provide services until District returns a signed copy of this Agreement.

Nature of Relationship. The parties agree the relationship created by this Agreement is that of independent contractor. Provider understands and agrees that the Provider, officers, agents, or employees of Provider are not entitled to any benefits normally offered or conveyed to District employees, including but not limited to coverage under the California Workers' Compensation Insurance laws.

Binding Effect. This Agreement shall inure to the benefit and shall be binding upon all of the parties to this Agreement, and their respective successors in interest or assigns.

Termination or Amendment. This Agreement may be terminated or amended in writing at any time by mutual written consent of all of the parties to this Agreement, and may be terminated by either party for any reason by giving the other party 30 days advance written notice.

Compliance with Laws. Provider hereby agrees that Provider, and each of its officers, agents, and employees (each a "Provider Party) shall obey all local, state, and federal laws and regulations in the performance of this Agreement, including but not limited to each of the following laws and regulations, as and if applicable:

- Provider shall be responsible for the safety of its employees and shall comply with California Code of Regulations Title 8, section 3205, COVID-19 Prevention.

- Provider shall ensure that each Provider Party who is on-site supporting school functions is compliant with all the following laws, if and as applicable:
  - Fingerprinting / criminal background investigations (see paragraph titled "Fingerprinting, below);
  - Public Health Department Orders and Guidance or other related mandates related to COVID-19, so long as such Orders and Guidance are in effect during the Term of this Agreement;
  - Tuberculosis Clearance (Education Code § 49406)

Non-Discrimination and Equal Employment Opportunity. Provider represents and agrees that it does not and shall not discriminate against any employee or applicant for employment, company, individual or group of individuals, because of ancestry, age, color, disability (physical and mental, including HIV and AIDS), genetic information, gender identity, gender expression, marital status, medical condition, military or veteran status, national origin, race, religion, sex/gender, and sexual orientation.

Confidentiality. Provider agrees to maintain the confidentiality of all District and District-related data, information, and records including but not limited to student identifiable information and employee personnel information pursuant to all California and Federal statutory laws relating to privacy, confidentiality, and information security including but not limited to California Education Code sections 49060 – 49085 and the Family Educational Rights and Privacy Act (FERPA), that currently exist or exist at any time during the term of this Agreement. All such records and information shall be considered confidential and kept confidential by Provider and Provider's officers, agents, employees, participants, vendors, or customers.

Fingerprinting. Provider shall ensure that Provider and any employee who interacts with students, outside of the immediate supervision and control of the student's parent or guardian or a school employee, has a current valid criminal records summary as described in California *Education Code* section 44237. If any services will be provided on-site, or through an app or other electronic method that might allow any interaction between any student and Provider shall, prior to commencing any service hereunder, provide the District a Fingerprinting/ Criminal Background Check investigation Certificate, in form and substance satisfactory to the District. While this Agreement is in effect, Provider shall immediately provide any arrest and conviction information it receives concerning any person providing Services hereunder to the District.

Food Vendors. Ventura County Environmental Health Facilities Permit: https://vcrma.org/consumer-food-protection

❑ Mobile Food Facility permit ❑ Temporary Food Facility permit ❑ Exempt – must show documentation

Date checked by school official: _____initials: _____

Indemnification. To the fullest extent permitted by law, Provider agrees to defend, indemnify, and hold harmless District, its governing board, officers, administrators, managers, agents, employees, successors, assigns, independent contractors and/or volunteers from and against any and all claims, demands, monetary or other losses, loss of use, damages and expenses, including but not limited to, reasonable legal fees and costs, or other obligations or claims arising out of any liability or damage to person or property resulting from bodily injury, illness, communicable disease, virus, pandemic, or any other loss, sustained or claimed to have been sustained arising out of activities of the Provider or those of any of its officers, agents, employees, participants, vendors, or customers of Provider, whether such act or omission is authorized by this Agreement or not. Provider also agrees to pay for any and all damage to the real and personal property of the District, or loss or theft of such property, or damage to the Property done or caused by such persons. District assumes no responsibility whatsoever for any property placed on District premises by Provider, Provider's agents, employees, participants, vendors, or customers. The provisions of this Indemnification do not apply to any damage or losses caused solely by the intentional misconduct of the District or any of its governing board, officers, administrators, managers, agents, employees and/or volunteers.

This Indemnification shall survive termination of this Agreement, for any reason whatsoever, and binds each party's legal representatives, successors, and assigns.

Insurance. Provider, at its own cost and expense, shall procure and maintain during the term of this Agreement, policies of insurance for the following types of coverage:

a. Commercial General Liability Insurance. Provider shall procure and maintain, during the term of this Agreement, not less than the following General Liability Insurance coverage in the amounts of $1,000,000 per occurrence and $2,000,000 aggregate.

   Commercial General Liability insurance shall include products/completed operations, property damage, and personal and advertising injury coverage.

b. Automobile Liability. Provider shall procure and maintain, during the full term of this Agreement following Automobile Liability Insurance including non-owned and leased automobiles, as applicable with the following coverage limits:

Personal vehicles:	$500,000.00 combined single limit or
	$100,000.00 per person / $300,000.00 per accident
Commercial vehicles:	$1,000,000.00 per accident for bodily injury and property damage

c. Workers' Compensation Insurance. Provider shall procure and maintain, during the term of this Agreement, Workers' Compensation Insurance, as required by California law, on all of its employees engaged in work related to the performance of this Agreement. Provider shall procure and maintain Employers' Liability insurance coverage of $1,000,000. Absent proof of Workers' Compensation Insurance, Provider will submit a fully executed Certification of Exemption from Workers' Compensation Insurance, which District in its sole discretion may accept or reject.

d. Other Coverage as Dictated by the District. If any employee of Provider interacts with students, outside of the immediate supervision and control of the student's parent or guardian or a certificated school employee, Provider shall procure and maintain, during the term of this Agreement, Abuse and Molestation coverage in the amounts of $2,000,000 per occurrence and $4,000,000 aggregate.

If professional services are offered, Provider shall procure and maintain, during the term of this Agreement, Professional Liability (Errors and Omissions) insurance coverage in the amounts of $1,000,000 per occurrence and $2,000,000 aggregate.

e. Provider's insurance is primary and will not seek contribution from any other insurance available to the District. Provider further hereby waives any and all rights of subrogation that it may have against the District.

f. Certificates of Insurance. Provider shall provide certificates of insurance to the District as evidence of the insurance coverage required herein, not less than 15 days prior to commencing the proposed activity, and at any other time upon the request of the District. Certificates of insurance will be deemed invalid if proper endorsements are not attached. Certificates of such insurance shall be filed with the District on or before commencement of the services under this Agreement.

g. Endorsements. Provider's Commercial General Liability insurance and Commercial Automobile Liability coverage and Abuse and Molestation coverage shall name the District, its governing board, officers, agents, employees, and/or volunteers as additional insureds. All endorsements specifying additional insureds for any of the Insurance Policies shall be as indicated below or an equivalent endorsement reasonably acceptable to the District.

1) General Liability: CG 20 26 10 01
2) Primary, non-contributory: CG 20 01 04 13
3) Waiver of subrogation: CG 24 04 05 09
4) Commercial Automobile Liability: CA 20 48 10 13

h. Acceptability of Insurers. Insurance is to be placed with insurers with a current A.M. Best's rating of no less than A: VII, unless otherwise acceptable to the District.

i. Insurance written on a "claims made" basis is to be renewed by the Provider for a period of three (3) years following termination of this Agreement. Such insurance must have the same coverage and limits as the policy that was in effect during the term of this agreement and will cover the Provider for all claims made. If coverage is canceled or non-renewed, and not replaced with another claims-made policy form with a Retroactive Date prior to the contract effective date, the Consultant must purchase "extended reporting" coverage for a minimum of three (3) years after completion of the Services.

j. Failure to Procure Insurance**.** Failure on the part of Provider to procure or maintain required insurance shall constitute a material breach of contract under which the District may immediately terminate this Agreement

Governing Law and Venues. This Agreement shall be interpreted in accordance with the laws of the State of California. If any action is brought to interpret or enforce any term of this Agreement, the action shall be brought in state or federal court situated in the County of Ventura, State of California.

Dispute Resolution. If any dispute arises out of or in connection with the Agreement, representatives of the Parties with authority to settle the dispute shall communicate, in person, electronically, or in writing within 30 days of written notice, in a good faith effort to resolve the dispute.

The parties agree that, in the event of any unresolved dispute under the agreement in which the amount sought is $5,000.00 or less, any litigation to resolve the dispute shall be brought in the Ventura County Small Claims Court.

If the unresolved amount in dispute exceeds $5,000.00, the parties agree that they will first submit the matter to a mutually agreed upon mediator. Notwithstanding the following section, Attorneys Fees, the cost of the mediator shall be borne equally by the parties.

Attorney Fees. In the event of any action or proceeding to interpret or enforce the terms of this Agreement, the prevailing party, as determined by the court or mediator, shall be entitled to recover its reasonable attorney fees and costs incurred in connection with such actions or proceeding.

Nature of Agreement. This Agreement represents the entire agreement between the parties hereto with respect to the subject matter hereof and supersedes any and all other agreements and communications however characterized, written or oral, between or on behalf of the parties hereto with respect to the subject matter hereof. This Agreement may only be modified by a written instrument signed by authorized representatives of each of the parties hereto.

Counterpart Execution. This Agreement may be executed in any number of counterparts which, when taken together, shall constitute one and the same instrument. Executed counterparts of this Agreement may be delivered by PDF email or electronic facsimile transmission and shall have the same legal effect as an "ink-signed" original.

Signature Authority. Provider represents and warrants that Provider has all requisite power and authority to conduct its business and to execute, deliver, and perform this Agreement.

Acknowledgement and Agreement

I have read this Agreement and agree to its terms

Provider Authorized Signer	Signature	Date

Oxnard School District

Melissa Reyes		
Director, Purchasing	Signature	Date

NIGRO & NIGRO PC

A Professional Accountancy Corporation

July 2, 2024

To the Governing Board and Management of
Oxnard School District
Oxnard, California

We are pleased to confirm our understanding of the services we are providing for Oxnard School District. We will conduct a performance audit to ensure that school facility program (SFP) bonds and savings, if applicable, have been appropriately spent according to State guidelines for Project No. 50/72538-00-017 – Brekke Elementary School.

Objective

The objective of our performance audit is the expression of an opinion about whether the District complied with the State's requirements with regards to the use of school facility program (SFP) bonds.

We will conduct our audit in accordance with auditing standards generally accepted in the United States of America and the standards for performance audits contained in *Government Auditing Standards*, issued by the Comptroller General of the United States, California Education Code section 41024, and the *2023-24 Guide for Annual Audits of K-12 Local Education Agencies and State Compliance Reporting, Appendix B*. Our audit will include tests of the accounting records of Oxnard School District and other procedures we consider necessary to enable us to express an opinion on whether the District complied with State requirements regarding the use of school facility program (SFP) bonds. If our opinion is other than unqualified, we will fully discuss the reasons with you in advance. If, for any reason, we are unable to complete the audit or form an opinion, we may disclaim an opinion or not issue a report.

Audit Procedures

An audit includes examining, on a test basis, evidence supporting the SAB 50-06 reports. Therefore, our audit will involve judgment about the number of transactions to be examined and the areas to be tested. Also, we will plan and perform the audit to obtain reasonable rather than absolute assurance about whether the District complied with the State's requirements with regards to the use of school facility program (SFP) bonds, whether from errors, fraudulent financial reporting, misappropriation of assets, or violations of laws or governmental regulations that are attributable to the entity or to acts by management or employees acting on behalf of the entity. An audit is not designed, though, to detect immaterial misstatements or violations of laws or governmental regulations that do not have a direct and material effect on the financial statements. However, because of the concept of reasonable assurance and because we will not perform a detailed examination of all transactions, there is a risk that material misstatements may exist and not be detected by us. We will inform you of any material errors, fraudulent financial reporting or misappropriation of assets that come to our attention. In addition, we will inform you of any violations of laws or governmental regulations that come to our attention, unless clearly inconsequential. Our responsibility as auditors is, of course, limited to the

Jeff Nigro, CPA, CFE | Elizabeth Nigro, CPA | Shannon Bishop, CPA | Peter Glenn, CPA, CFE | Paul J. Kaymark, CPA | Jessica Berry, CPA | Angelika Vartikyan, CPA

MURRIETA OFFICE 25220 Hancock Avenue, Suite 400, Murrieta, CA 92562 • P: (951) 698-8783 • F: (951) 699-1064
WALNUT CREEK OFFICE 2121 N. California Blvd. Suite 290, Walnut Creek, CA 94596 • P: (844) 557-3111 • F: (844) 557-3444
www.nncpas.com • Licensed by the California Board of Accountancy

period covered by our audit and does not extend to any later periods for which we are not engaged as auditors.

As part of obtaining reasonable assurance about whether the District complied with the State's requirements with regards to the use of school facility program (SFP) bonds, we will perform tests of the District's compliance with applicable laws and regulations and the provisions of contracts and agreements. However, the objective of our audit will not be to provide an opinion on overall compliance, and we will not express such an opinion. Management maintains the responsibility for identifying and ensuring that the District complies with applicable laws, regulations, contracts, and other agreements.

An audit includes obtaining an understanding of internal control sufficient to plan the audit and to determine the nature, timing, and extent of audit procedures to be performed. An audit is not designed to provide assurance on internal control or to identify deficiencies in internal control. However, during the audit, we will communicate internal control-related matters to management and those charged with governance as required by professional standards.

In connection with this engagement, we may communicate with you or others via email transmission. As emails can be intercepted and read, disclosed, or otherwise used or communicated by an unintended third party, or may not be delivered to each of the parties to whom they are directed and only to such parties, we cannot guarantee or warrant that emails from us will be properly delivered and read only by the addressee. Therefore, we specifically disclaim and waive any liability or responsibility whatsoever for interception or unintentional disclosure of emails transmitted by us in connection with the performance of this engagement. In that regard, you agree that we shall have no liability for any loss or damage to any person or entity resulting from the use of email transmissions, including any consequential, incidental, direct, indirect, or special damages, such as loss of revenues or anticipated profits, or disclosure or communication of confidential or proprietary information.

Management Responsibilities

We understand that you will make all financial records and related information available to us for our audit and that you are responsible for the accuracy and completeness of that information. The management of Oxnard School District has the responsibility for the proper recording of transactions in the books of account, for establishing and maintaining effective internal controls, including monitoring ongoing activities, for the safeguarding of assets, for ensuring compliance with applicable laws and regulations, and for the preparation and substantial accuracy of the financial statements, in accordance with generally accepted accounting principles. Although we may advise you about appropriate accounting principles and their application, the selection and method of application are the sole responsibility of the management. As part of our engagement, we may also propose standard, adjusting, or correcting journal entries on your financial statements. Management, however, has final responsibility for reviewing the proposed entries and understanding the nature and impact of the proposed entries to the financial statements.

By your signature below, you acknowledge that you are responsible for the design and implementation of programs and controls to prevent and detect fraud, and for informing us about all known or suspected fraud affecting the government that involves management, employees who have significant roles in internal control, and others where the fraud could have a material effect on the financial statements. You are also responsible for informing us of your knowledge of any allegations of fraud or suspected fraud affecting the government that have been received in communications from

employees, former employees, regulators, or others. In addition, you are responsible for identifying and ensuring that the entity complies with applicable laws and regulations and for taking timely and appropriate actions to remedy any fraud, illegal acts, or violations of contracts and agreements. You agree that you will confirm to us in your management representation letter your understanding of your responsibilities as defined in this letter.

Other

Jeff Nigro, CPA, CFE is the engagement partner for the audit services specified in this letter. His responsibilities include supervising Nigro & Nigro's services performed as part of this engagement and signing or authorizing another qualified firm representative to sign the audit report.

It is our policy to keep records related to this engagement for seven (7) years. However, Nigro & Nigro does not keep any original client records, so we will return those to you at the completion of the services rendered under this engagement. When records are returned to you, it is your responsibility to retain and protect your records for possible future use, including potential examination by any government or regulatory agencies. By your signature below, you acknowledge and agree that upon the expiration of the seven-year period Nigro & Nigro shall be free to destroy our records related to this engagement.

Our audit fees for this work will be $10,000. If a savings audit is required, our fees will be an *additional* $5,000. In addition to such payment for auditing services, the auditor shall be reimbursed for such travel and mileage as may be necessary. Travel costs will include, but not be limited to, reasonable lodging, tolls, parking, and meals. Mileage on vehicles will be billed at the standard IRS rate. Our invoices for these fees will be rendered each month as work progresses and are payable upon presentation. In accordance with our firm policies, work may be suspended if your account becomes 90 days or more overdue and may not be resumed until your account is paid in full.

In the event that circumstances make it necessary to perform additional work or to expend inordinate amounts of time because of (1) incompleteness of records, (2) poor working conditions, (3) abnormal errors, (4) misappropriation of funds, (5) lack of cooperation on part of the District personnel, or (6) other circumstances disclosed by our audit, it is agreed that such additional work may be subject to either special Agreement or Agreements upon a fee basis to be mutually agreed upon by all parties or may be based on our hourly rates. Before additional fees or Agreements may be instituted, the appropriate District personnel shall be informed in writing of any deficiency or difficulties as listed above. The District will have ten (10) working days to correct or implement plans to correct said deficiency, where possible. For those deficiencies that cannot be easily corrected, the District and Nigro & Nigro agree to make amendments to the Agreement to correct the deficiency and appropriately compensate us.

If a dispute arises among the parties hereto, the parties agree to first try in good faith to settle the dispute by mediation administered by the American Arbitration Association under its Rules for Professional Accounting and Related Services Disputes before resorting to litigation. The costs of any mediation proceeding shall be shared equally by all parties.

Client and accountant both agree that any dispute over fees charged by the accountant to the client will be submitted for resolution by arbitration in accordance with the Rules for Professional Accounting and Related Services Disputes of the American Arbitration Association. Such arbitration shall be binding and final. IN AGREEING TO ARBITRATION, WE BOTH ACKNOWLEDGE THAT, IN THE EVENT OF

A DISPUTE OVER FEES CHARGED BY THE ACCOUNTANT, EACH OF US IS GIVING UP THE RIGHT TO HAVE THE DISPUTE DECIDED IN A COURT OF LAW BEFORE A JUDGE OR JURY AND INSTEAD WE ARE ACCEPTING THE USE OF ARBITRATION FOR RESOLUTION.

We appreciate the opportunity to be of service to Oxnard School District and believe this letter accurately summarizes the significant terms of our engagement. If you have any questions, please let us know. If you agree with the terms of our engagement as described in this letter, please sign below, and return it to us.

Very truly yours,

Nigro & Nigro, PC

Nigro & Nigro, PC

RESPONSE:
This letter correctly sets forth the understanding of Oxnard School District.

APPROVED:

Oxnard School District
Valerie Mitchell, Assistant Superintendent, Business Services

7-5-24
Date

NIGRO & NIGRO PC
A Professional Accountancy Corporation

July 2, 2024

To the Governing Board and Management of
Oxnard School District
Oxnard, California

We are pleased to confirm our understanding of the services we are providing for Oxnard School District. We will conduct a performance audit to ensure that school facility program (SFP) bonds and savings, if applicable, have been appropriately spent according to State guidelines for Project No. 57/72538-00-029 – Elm Street Elementary School.

Objective

The objective of our performance audit is the expression of an opinion about whether the District complied with the State's requirements with regards to the use of school facility program (SFP) bonds.

We will conduct our audit in accordance with auditing standards generally accepted in the United States of America and the standards for performance audits contained in *Government Auditing Standards*, issued by the Comptroller General of the United States, California Education Code section 41024, and the *2023-24 Guide for Annual Audits of K-12 Local Education Agencies and State Compliance Reporting, Appendix B*. Our audit will include tests of the accounting records of Oxnard School District and other procedures we consider necessary to enable us to express an opinion on whether the District complied with State requirements regarding the use of school facility program (SFP) bonds. If our opinion is other than unqualified, we will fully discuss the reasons with you in advance. If, for any reason, we are unable to complete the audit or form an opinion, we may disclaim an opinion or not issue a report.

Audit Procedures

An audit includes examining, on a test basis, evidence supporting the SAB 50-06 reports. Therefore, our audit will involve judgment about the number of transactions to be examined and the areas to be tested. Also, we will plan and perform the audit to obtain reasonable rather than absolute assurance about whether the District complied with the State's requirements with regards to the use of school facility program (SFP) bonds, whether from errors, fraudulent financial reporting, misappropriation of assets, or violations of laws or governmental regulations that are attributable to the entity or to acts by management or employees acting on behalf of the entity. An audit is not designed, though, to detect immaterial misstatements or violations of laws or governmental regulations that do not have a direct and material effect on the financial statements. However, because of the concept of reasonable assurance and because we will not perform a detailed examination of all transactions, there is a risk that material misstatements may exist and not be detected by us. We will inform you of any material errors, fraudulent financial reporting or misappropriation of assets that come to our attention. In addition, we will inform you of any violations of laws or governmental regulations that come to our attention, unless clearly inconsequential. Our responsibility as auditors is, of course, limited to the

Jeff Nigro, CPA, CFE | Elizabeth Nigro, CPA | Shannon Bishop, CPA | Peter Glenn, CPA, CFE | Paul J. Kaymark, CPA | Jessica Berry, CPA | Angelika Vartikyan, CPA
MURRIETA OFFICE 25220 Hancock Avenue, Suite 400, Murrieta, CA 92562 • P: (951) 698-8783 • F: (951) 699-1064
WALNUT CREEK OFFICE 2121 N. California Blvd. Suite 290, Walnut Creek, CA 94596 • P: (844) 557-3111 • F: (844) 557-3444
www.nncpas.com • Licensed by the California Board of Accountancy

period covered by our audit and does not extend to any later periods for which we are not engaged as auditors.

As part of obtaining reasonable assurance about whether the District complied with the State's requirements with regards to the use of school facility program (SFP) bonds, we will perform tests of the District's compliance with applicable laws and regulations and the provisions of contracts and agreements. However, the objective of our audit will not be to provide an opinion on overall compliance, and we will not express such an opinion. Management maintains the responsibility for identifying and ensuring that the District complies with applicable laws, regulations, contracts, and other agreements.

An audit includes obtaining an understanding of internal control sufficient to plan the audit and to determine the nature, timing, and extent of audit procedures to be performed. An audit is not designed to provide assurance on internal control or to identify deficiencies in internal control. However, during the audit, we will communicate internal control-related matters to management and those charged with governance as required by professional standards.

In connection with this engagement, we may communicate with you or others via email transmission. As emails can be intercepted and read, disclosed, or otherwise used or communicated by an unintended third party, or may not be delivered to each of the parties to whom they are directed and only to such parties, we cannot guarantee or warrant that emails from us will be properly delivered and read only by the addressee. Therefore, we specifically disclaim and waive any liability or responsibility whatsoever for interception or unintentional disclosure of emails transmitted by us in connection with the performance of this engagement. In that regard, you agree that we shall have no liability for any loss or damage to any person or entity resulting from the use of email transmissions, including any consequential, incidental, direct, indirect, or special damages, such as loss of revenues or anticipated profits, or disclosure or communication of confidential or proprietary information.

Management Responsibilities

We understand that you will make all financial records and related information available to us for our audit and that you are responsible for the accuracy and completeness of that information. The management of Oxnard School District has the responsibility for the proper recording of transactions in the books of account, for establishing and maintaining effective internal controls, including monitoring ongoing activities, for the safeguarding of assets, for ensuring compliance with applicable laws and regulations, and for the preparation and substantial accuracy of the financial statements, in accordance with generally accepted accounting principles. Although we may advise you about appropriate accounting principles and their application, the selection and method of application are the sole responsibility of the management. As part of our engagement, we may also propose standard, adjusting, or correcting journal entries on your financial statements. Management, however, has final responsibility for reviewing the proposed entries and understanding the nature and impact of the proposed entries to the financial statements.

By your signature below, you acknowledge that you are responsible for the design and implementation of programs and controls to prevent and detect fraud, and for informing us about all known or suspected fraud affecting the government that involves management, employees who have significant roles in internal control, and others where the fraud could have a material effect on the financial statements. You are also responsible for informing us of your knowledge of any allegations of fraud or suspected fraud affecting the government that have been received in communications from

employees, former employees, regulators, or others. In addition, you are responsible for identifying and ensuring that the entity complies with applicable laws and regulations and for taking timely and appropriate actions to remedy any fraud, illegal acts, or violations of contracts and agreements. You agree that you will confirm to us in your management representation letter your understanding of your responsibilities as defined in this letter.

Other

Jeff Nigro, CPA, CFE is the engagement partner for the audit services specified in this letter. His responsibilities include supervising Nigro & Nigro's services performed as part of this engagement and signing or authorizing another qualified firm representative to sign the audit report.

It is our policy to keep records related to this engagement for seven (7) years. However, Nigro & Nigro does not keep any original client records, so we will return those to you at the completion of the services rendered under this engagement. When records are returned to you, it is your responsibility to retain and protect your records for possible future use, including potential examination by any government or regulatory agencies. By your signature below, you acknowledge and agree that upon the expiration of the seven-year period Nigro & Nigro shall be free to destroy our records related to this engagement.

Our audit fees for this work will be $10,000. If a savings audit is required, our fees will be an *additional* $5,000. In addition to such payment for auditing services, the auditor shall be reimbursed for such travel and mileage as may be necessary. Travel costs will include, but not be limited to, reasonable lodging, tolls, parking, and meals. Mileage on vehicles will be billed at the standard IRS rate. Our invoices for these fees will be rendered each month as work progresses and are payable upon presentation. In accordance with our firm policies, work may be suspended if your account becomes 90 days or more overdue and may not be resumed until your account is paid in full.

In the event that circumstances make it necessary to perform additional work or to expend inordinate amounts of time because of (1) incompleteness of records, (2) poor working conditions, (3) abnormal errors, (4) misappropriation of funds, (5) lack of cooperation on part of the District personnel, or (6) other circumstances disclosed by our audit, it is agreed that such additional work may be subject to either special Agreement or Agreements upon a fee basis to be mutually agreed upon by all parties or may be based on our hourly rates. Before additional fees or Agreements may be instituted, the appropriate District personnel shall be informed in writing of any deficiency or difficulties as listed above. The District will have ten (10) working days to correct or implement plans to correct said deficiency, where possible. For those deficiencies that cannot be easily corrected, the District and Nigro & Nigro agree to make amendments to the Agreement to correct the deficiency and appropriately compensate us.

If a dispute arises among the parties hereto, the parties agree to first try in good faith to settle the dispute by mediation administered by the American Arbitration Association under its Rules for Professional Accounting and Related Services Disputes before resorting to litigation. The costs of any mediation proceeding shall be shared equally by all parties.

Client and accountant both agree that any dispute over fees charged by the accountant to the client will be submitted for resolution by arbitration in accordance with the Rules for Professional Accounting and Related Services Disputes of the American Arbitration Association. Such arbitration shall be binding and final. IN AGREEING TO ARBITRATION, WE BOTH ACKNOWLEDGE THAT, IN THE EVENT OF

A DISPUTE OVER FEES CHARGED BY THE ACCOUNTANT, EACH OF US IS GIVING UP THE RIGHT TO HAVE THE DISPUTE DECIDED IN A COURT OF LAW BEFORE A JUDGE OR JURY AND INSTEAD WE ARE ACCEPTING THE USE OF ARBITRATION FOR RESOLUTION.

We appreciate the opportunity to be of service to Oxnard School District and believe this letter accurately summarizes the significant terms of our engagement. If you have any questions, please let us know. If you agree with the terms of our engagement as described in this letter, please sign below, and return it to us.

Very truly yours,

Nigro & Nigro, PC

Nigro & Nigro, PC

RESPONSE:
This letter correctly sets forth the understanding of Oxnard School District.

APPROVED:

Oxnard School District
Valerie Mitchell, Assistant Superintendent, Business Services

7-5-24
Date

NIGRO & NIGRO PC
A Professional Accountancy Corporation

July 2, 2024

To the Governing Board and Management of
Oxnard School District
Oxnard, California

We are pleased to confirm our understanding of the services we are providing for Oxnard School District. We will conduct a performance audit to ensure that school facility program (SFP) bonds and savings, if applicable, have been appropriately spent according to State guidelines for Project No. 57/72538-00-027 – Harrington Elementary School.

Objective
The objective of our performance audit is the expression of an opinion about whether the District complied with the State's requirements with regards to the use of school facility program (SFP) bonds.

We will conduct our audit in accordance with auditing standards generally accepted in the United States of America and the standards for performance audits contained in *Government Auditing Standards*, issued by the Comptroller General of the United States, California Education Code section 41024, and the *2023-24 Guide for Annual Audits of K-12 Local Education Agencies and State Compliance Reporting, Appendix B*. Our audit will include tests of the accounting records of Oxnard School District and other procedures we consider necessary to enable us to express an opinion on whether the District complied with State requirements regarding the use of school facility program (SFP) bonds. If our opinion is other than unqualified, we will fully discuss the reasons with you in advance. If, for any reason, we are unable to complete the audit or form an opinion, we may disclaim an opinion or not issue a report.

Audit Procedures
An audit includes examining, on a test basis, evidence supporting the SAB 50-06 reports. Therefore, our audit will involve judgment about the number of transactions to be examined and the areas to be tested. Also, we will plan and perform the audit to obtain reasonable rather than absolute assurance about whether the District complied with the State's requirements with regards to the use of school facility program (SFP) bonds, whether from errors, fraudulent financial reporting, misappropriation of assets, or violations of laws or governmental regulations that are attributable to the entity or to acts by management or employees acting on behalf of the entity. An audit is not designed, though, to detect immaterial misstatements or violations of laws or governmental regulations that do not have a direct and material effect on the financial statements. However, because of the concept of reasonable assurance and because we will not perform a detailed examination of all transactions, there is a risk that material misstatements may exist and not be detected by us. We will inform you of any material errors, fraudulent financial reporting or misappropriation of assets that come to our attention. In addition, we will inform you of any violations of laws or governmental regulations that come to our attention, unless clearly inconsequential. Our responsibility as auditors is, of course, limited to the

Jeff Nigro, CPA, CFE | Elizabeth Nigro, CPA | Shannon Bishop, CPA | Peter Glenn, CPA, CFE | Paul J. Kaymark, CPA | Jessica Berry, CPA | Angelika Vartikyan, CPA
MURRIETA OFFICE 25220 Hancock Avenue, Suite 400, Murrieta, CA 92562 • P: (951) 698-8783 • F: (951) 699-1064
WALNUT CREEK OFFICE 2121 N. California Blvd. Suite 290, Walnut Creek, CA 94596 • P: (844) 557-3111 • F: (844) 557-3444
www.nncpas.com • Licensed by the California Board of Accountancy

period covered by our audit and does not extend to any later periods for which we are not engaged as auditors.

As part of obtaining reasonable assurance about whether the District complied with the State's requirements with regards to the use of school facility program (SFP) bonds, we will perform tests of the District's compliance with applicable laws and regulations and the provisions of contracts and agreements. However, the objective of our audit will not be to provide an opinion on overall compliance, and we will not express such an opinion. Management maintains the responsibility for identifying and ensuring that the District complies with applicable laws, regulations, contracts, and other agreements.

An audit includes obtaining an understanding of internal control sufficient to plan the audit and to determine the nature, timing, and extent of audit procedures to be performed. An audit is not designed to provide assurance on internal control or to identify deficiencies in internal control. However, during the audit, we will communicate internal control-related matters to management and those charged with governance as required by professional standards.

In connection with this engagement, we may communicate with you or others via email transmission. As emails can be intercepted and read, disclosed, or otherwise used or communicated by an unintended third party, or may not be delivered to each of the parties to whom they are directed and only to such parties, we cannot guarantee or warrant that emails from us will be properly delivered and read only by the addressee. Therefore, we specifically disclaim and waive any liability or responsibility whatsoever for interception or unintentional disclosure of emails transmitted by us in connection with the performance of this engagement. In that regard, you agree that we shall have no liability for any loss or damage to any person or entity resulting from the use of email transmissions, including any consequential, incidental, direct, indirect, or special damages, such as loss of revenues or anticipated profits, or disclosure or communication of confidential or proprietary information.

Management Responsibilities

We understand that you will make all financial records and related information available to us for our audit and that you are responsible for the accuracy and completeness of that information. The management of Oxnard School District has the responsibility for the proper recording of transactions in the books of account, for establishing and maintaining effective internal controls, including monitoring ongoing activities, for the safeguarding of assets, for ensuring compliance with applicable laws and regulations, and for the preparation and substantial accuracy of the financial statements, in accordance with generally accepted accounting principles. Although we may advise you about appropriate accounting principles and their application, the selection and method of application are the sole responsibility of the management. As part of our engagement, we may also propose standard, adjusting, or correcting journal entries on your financial statements. Management, however, has final responsibility for reviewing the proposed entries and understanding the nature and impact of the proposed entries to the financial statements.

By your signature below, you acknowledge that you are responsible for the design and implementation of programs and controls to prevent and detect fraud, and for informing us about all known or suspected fraud affecting the government that involves management, employees who have significant roles in internal control, and others where the fraud could have a material effect on the financial statements. You are also responsible for informing us of your knowledge of any allegations of fraud or suspected fraud affecting the government that have been received in communications from

employees, former employees, regulators, or others. In addition, you are responsible for identifying and ensuring that the entity complies with applicable laws and regulations and for taking timely and appropriate actions to remedy any fraud, illegal acts, or violations of contracts and agreements. You agree that you will confirm to us in your management representation letter your understanding of your responsibilities as defined in this letter.

Other

Jeff Nigro, CPA, CFE is the engagement partner for the audit services specified in this letter. His responsibilities include supervising Nigro & Nigro's services performed as part of this engagement and signing or authorizing another qualified firm representative to sign the audit report.

It is our policy to keep records related to this engagement for seven (7) years. However, Nigro & Nigro does not keep any original client records, so we will return those to you at the completion of the services rendered under this engagement. When records are returned to you, it is your responsibility to retain and protect your records for possible future use, including potential examination by any government or regulatory agencies. By your signature below, you acknowledge and agree that upon the expiration of the seven-year period Nigro & Nigro shall be free to destroy our records related to this engagement.

Our audit fees for this work will be $10,000. If a savings audit is required, our fees will be an *additional* $5,000. In addition to such payment for auditing services, the auditor shall be reimbursed for such travel and mileage as may be necessary. Travel costs will include, but not be limited to, reasonable lodging, tolls, parking, and meals. Mileage on vehicles will be billed at the standard IRS rate. Our invoices for these fees will be rendered each month as work progresses and are payable upon presentation. In accordance with our firm policies, work may be suspended if your account becomes 90 days or more overdue and may not be resumed until your account is paid in full.

In the event that circumstances make it necessary to perform additional work or to expend inordinate amounts of time because of (1) incompleteness of records, (2) poor working conditions, (3) abnormal errors, (4) misappropriation of funds, (5) lack of cooperation on part of the District personnel, or (6) other circumstances disclosed by our audit, it is agreed that such additional work may be subject to either special Agreement or Agreements upon a fee basis to be mutually agreed upon by all parties or may be based on our hourly rates. Before additional fees or Agreements may be instituted, the appropriate District personnel shall be informed in writing of any deficiency or difficulties as listed above. The District will have ten (10) working days to correct or implement plans to correct said deficiency, where possible. For those deficiencies that cannot be easily corrected, the District and Nigro & Nigro agree to make amendments to the Agreement to correct the deficiency and appropriately compensate us.

If a dispute arises among the parties hereto, the parties agree to first try in good faith to settle the dispute by mediation administered by the American Arbitration Association under its Rules for Professional Accounting and Related Services Disputes before resorting to litigation. The costs of any mediation proceeding shall be shared equally by all parties.

Client and accountant both agree that any dispute over fees charged by the accountant to the client will be submitted for resolution by arbitration in accordance with the Rules for Professional Accounting and Related Services Disputes of the American Arbitration Association. Such arbitration shall be binding and final. IN AGREEING TO ARBITRATION, WE BOTH ACKNOWLEDGE THAT, IN THE EVENT OF

A DISPUTE OVER FEES CHARGED BY THE ACCOUNTANT, EACH OF US IS GIVING UP THE RIGHT TO HAVE THE DISPUTE DECIDED IN A COURT OF LAW BEFORE A JUDGE OR JURY AND INSTEAD WE ARE ACCEPTING THE USE OF ARBITRATION FOR RESOLUTION.

We appreciate the opportunity to be of service to Oxnard School District and believe this letter accurately summarizes the significant terms of our engagement. If you have any questions, please let us know. If you agree with the terms of our engagement as described in this letter, please sign below, and return it to us.

Very truly yours,

Nigro & Nigro, PC

Nigro & Nigro, PC

RESPONSE:
This letter correctly sets forth the understanding of Oxnard School District.

APPROVED:

_____
Oxnard School District
Valerie Mitchell, Assistant Superintendent, Business Services

_____
Date

NIGRO & NIGRO PC

A Professional Accountancy Corporation

July 2, 2024

To the Governing Board and Management of
Oxnard School District
Oxnard, California

We are pleased to confirm our understanding of the services we are providing for Oxnard School District. We will conduct a performance audit to ensure that school facility program (SFP) bonds and savings, if applicable, have been appropriately spent according to State guidelines for Project No. 57/72538-00-028 – Lemonwood Elementary School.

Objective

The objective of our performance audit is the expression of an opinion about whether the District complied with the State's requirements with regards to the use of school facility program (SFP) bonds.

We will conduct our audit in accordance with auditing standards generally accepted in the United States of America and the standards for performance audits contained in *Government Auditing Standards*, issued by the Comptroller General of the United States, California Education Code section 41024, and the *2023-24 Guide for Annual Audits of K-12 Local Education Agencies and State Compliance Reporting, Appendix B*. Our audit will include tests of the accounting records of Oxnard School District and other procedures we consider necessary to enable us to express an opinion on whether the District complied with State requirements regarding the use of school facility program (SFP) bonds. If our opinion is other than unqualified, we will fully discuss the reasons with you in advance. If, for any reason, we are unable to complete the audit or form an opinion, we may disclaim an opinion or not issue a report.

Audit Procedures

An audit includes examining, on a test basis, evidence supporting the SAB 50-06 reports. Therefore, our audit will involve judgment about the number of transactions to be examined and the areas to be tested. Also, we will plan and perform the audit to obtain reasonable rather than absolute assurance about whether the District complied with the State's requirements with regards to the use of school facility program (SFP) bonds, whether from errors, fraudulent financial reporting, misappropriation of assets, or violations of laws or governmental regulations that are attributable to the entity or to acts by management or employees acting on behalf of the entity. An audit is not designed, though, to detect immaterial misstatements or violations of laws or governmental regulations that do not have a direct and material effect on the financial statements. However, because of the concept of reasonable assurance and because we will not perform a detailed examination of all transactions, there is a risk that material misstatements may exist and not be detected by us. We will inform you of any material errors, fraudulent financial reporting or misappropriation of assets that come to our attention. In addition, we will inform you of any violations of laws or governmental regulations that come to our attention, unless clearly inconsequential. Our responsibility as auditors is, of course, limited to the

Jeff Nigro, CPA, CFE | Elizabeth Nigro, CPA | Shannon Bishop, CPA | Peter Glenn, CPA, CFE | Paul J. Kaymark, CPA | Jessica Berry, CPA | Angelika Vartikyan, CPA

MURRIETA OFFICE 25220 Hancock Avenue, Suite 400, Murrieta, CA 92562 • P: (951) 698-8783 • F: (951) 699-1064
WALNUT CREEK OFFICE 2121 N. California Blvd. Suite 290, Walnut Creek, CA 94596 • P: (844) 557-3111 • F: (844) 557-3444
www.nncpas.com • *Licensed by the California Board of Accountancy*

period covered by our audit and does not extend to any later periods for which we are not engaged as auditors.

As part of obtaining reasonable assurance about whether the District complied with the State's requirements with regards to the use of school facility program (SFP) bonds, we will perform tests of the District's compliance with applicable laws and regulations and the provisions of contracts and agreements. However, the objective of our audit will not be to provide an opinion on overall compliance, and we will not express such an opinion. Management maintains the responsibility for identifying and ensuring that the District complies with applicable laws, regulations, contracts, and other agreements.

An audit includes obtaining an understanding of internal control sufficient to plan the audit and to determine the nature, timing, and extent of audit procedures to be performed. An audit is not designed to provide assurance on internal control or to identify deficiencies in internal control. However, during the audit, we will communicate internal control-related matters to management and those charged with governance as required by professional standards.

In connection with this engagement, we may communicate with you or others via email transmission. As emails can be intercepted and read, disclosed, or otherwise used or communicated by an unintended third party, or may not be delivered to each of the parties to whom they are directed and only to such parties, we cannot guarantee or warrant that emails from us will be properly delivered and read only by the addressee. Therefore, we specifically disclaim and waive any liability or responsibility whatsoever for interception or unintentional disclosure of emails transmitted by us in connection with the performance of this engagement. In that regard, you agree that we shall have no liability for any loss or damage to any person or entity resulting from the use of email transmissions, including any consequential, incidental, direct, indirect, or special damages, such as loss of revenues or anticipated profits, or disclosure or communication of confidential or proprietary information.

Management Responsibilities

We understand that you will make all financial records and related information available to us for our audit and that you are responsible for the accuracy and completeness of that information. The management of Oxnard School District has the responsibility for the proper recording of transactions in the books of account, for establishing and maintaining effective internal controls, including monitoring ongoing activities, for the safeguarding of assets, for ensuring compliance with applicable laws and regulations, and for the preparation and substantial accuracy of the financial statements, in accordance with generally accepted accounting principles. Although we may advise you about appropriate accounting principles and their application, the selection and method of application are the sole responsibility of the management. As part of our engagement, we may also propose standard, adjusting, or correcting journal entries on your financial statements. Management, however, has final responsibility for reviewing the proposed entries and understanding the nature and impact of the proposed entries to the financial statements.

By your signature below, you acknowledge that you are responsible for the design and implementation of programs and controls to prevent and detect fraud, and for informing us about all known or suspected fraud affecting the government that involves management, employees who have significant roles in internal control, and others where the fraud could have a material effect on the financial statements. You are also responsible for informing us of your knowledge of any allegations of fraud or suspected fraud affecting the government that have been received in communications from

employees, former employees, regulators, or others. In addition, you are responsible for identifying and ensuring that the entity complies with applicable laws and regulations and for taking timely and appropriate actions to remedy any fraud, illegal acts, or violations of contracts and agreements. You agree that you will confirm to us in your management representation letter your understanding of your responsibilities as defined in this letter.

Other

Jeff Nigro, CPA, CFE is the engagement partner for the audit services specified in this letter. His responsibilities include supervising Nigro & Nigro's services performed as part of this engagement and signing or authorizing another qualified firm representative to sign the audit report.

It is our policy to keep records related to this engagement for seven (7) years. However, Nigro & Nigro does not keep any original client records, so we will return those to you at the completion of the services rendered under this engagement. When records are returned to you, it is your responsibility to retain and protect your records for possible future use, including potential examination by any government or regulatory agencies. By your signature below, you acknowledge and agree that upon the expiration of the seven-year period Nigro & Nigro shall be free to destroy our records related to this engagement.

Our audit fees for this work will be $10,000. If a savings audit is required, our fees will be an *additional* $5,000. In addition to such payment for auditing services, the auditor shall be reimbursed for such travel and mileage as may be necessary. Travel costs will include, but not be limited to, reasonable lodging, tolls, parking, and meals. Mileage on vehicles will be billed at the standard IRS rate. Our invoices for these fees will be rendered each month as work progresses and are payable upon presentation. In accordance with our firm policies, work may be suspended if your account becomes 90 days or more overdue and may not be resumed until your account is paid in full.

In the event that circumstances make it necessary to perform additional work or to expend inordinate amounts of time because of (1) incompleteness of records, (2) poor working conditions, (3) abnormal errors, (4) misappropriation of funds, (5) lack of cooperation on part of the District personnel, or (6) other circumstances disclosed by our audit, it is agreed that such additional work may be subject to either special Agreement or Agreements upon a fee basis to be mutually agreed upon by all parties or may be based on our hourly rates. Before additional fees or Agreements may be instituted, the appropriate District personnel shall be informed in writing of any deficiency or difficulties as listed above. The District will have ten (10) working days to correct or implement plans to correct said deficiency, where possible. For those deficiencies that cannot be easily corrected, the District and Nigro & Nigro agree to make amendments to the Agreement to correct the deficiency and appropriately compensate us.

If a dispute arises among the parties hereto, the parties agree to first try in good faith to settle the dispute by mediation administered by the American Arbitration Association under its Rules for Professional Accounting and Related Services Disputes before resorting to litigation. The costs of any mediation proceeding shall be shared equally by all parties.

Client and accountant both agree that any dispute over fees charged by the accountant to the client will be submitted for resolution by arbitration in accordance with the Rules for Professional Accounting and Related Services Disputes of the American Arbitration Association. Such arbitration shall be binding and final. IN AGREEING TO ARBITRATION, WE BOTH ACKNOWLEDGE THAT, IN THE EVENT OF

A DISPUTE OVER FEES CHARGED BY THE ACCOUNTANT, EACH OF US IS GIVING UP THE RIGHT TO HAVE THE DISPUTE DECIDED IN A COURT OF LAW BEFORE A JUDGE OR JURY AND INSTEAD WE ARE ACCEPTING THE USE OF ARBITRATION FOR RESOLUTION.

We appreciate the opportunity to be of service to Oxnard School District and believe this letter accurately summarizes the significant terms of our engagement. If you have any questions, please let us know. If you agree with the terms of our engagement as described in this letter, please sign below, and return it to us.

Very truly yours,

Nigro & Nigro, PC

Nigro & Nigro, PC

RESPONSE:
This letter correctly sets forth the understanding of Oxnard School District.

APPROVED:

Oxnard School District
Valerie Mitchell, Assistant Superintendent, Business Services

7-5-24
Date

NIGRO & NIGRO PC
A Professional Accountancy Corporation

July 2, 2024

To the Governing Board and Management of
Oxnard School District
Oxnard, California

We are pleased to confirm our understanding of the services we are providing for Oxnard School District. We will conduct a performance audit to ensure that school facility program (SFP) bonds and savings, if applicable, have been appropriately spent according to State guidelines for Project No. 50/72538-00-018 – McAuliffe Elementary School.

Objective

The objective of our performance audit is the expression of an opinion about whether the District complied with the State's requirements with regards to the use of school facility program (SFP) bonds.

We will conduct our audit in accordance with auditing standards generally accepted in the United States of America and the standards for performance audits contained in *Government Auditing Standards*, issued by the Comptroller General of the United States, California Education Code section 41024, and the *2023-24 Guide for Annual Audits of K-12 Local Education Agencies and State Compliance Reporting, Appendix B*. Our audit will include tests of the accounting records of Oxnard School District and other procedures we consider necessary to enable us to express an opinion on whether the District complied with State requirements regarding the use of school facility program (SFP) bonds. If our opinion is other than unqualified, we will fully discuss the reasons with you in advance. If, for any reason, we are unable to complete the audit or form an opinion, we may disclaim an opinion or not issue a report.

Audit Procedures

An audit includes examining, on a test basis, evidence supporting the SAB 50-06 reports. Therefore, our audit will involve judgment about the number of transactions to be examined and the areas to be tested. Also, we will plan and perform the audit to obtain reasonable rather than absolute assurance about whether the District complied with the State's requirements with regards to the use of school facility program (SFP) bonds, whether from errors, fraudulent financial reporting, misappropriation of assets, or violations of laws or governmental regulations that are attributable to the entity or to acts by management or employees acting on behalf of the entity. An audit is not designed, though, to detect immaterial misstatements or violations of laws or governmental regulations that do not have a direct and material effect on the financial statements. However, because of the concept of reasonable assurance and because we will not perform a detailed examination of all transactions, there is a risk that material misstatements may exist and not be detected by us. We will inform you of any material errors, fraudulent financial reporting or misappropriation of assets that come to our attention. In addition, we will inform you of any violations of laws or governmental regulations that come to our attention, unless clearly inconsequential. Our responsibility as auditors is, of course, limited to the

Jeff Nigro, CPA, CFE | Elizabeth Nigro, CPA | Shannon Bishop, CPA | Peter Glenn, CPA, CFE | Paul J. Kaymark, CPA | Jessica Berry, CPA | Angelika Vartikyan, CPA

MURRIETA OFFICE 25220 Hancock Avenue, Suite 400, Murrieta, CA 92562 • P: (951) 698-8783 • F: (951) 699-1064
WALNUT CREEK OFFICE 2121 N. California Blvd. Suite 290, Walnut Creek, CA 94596 • P: (844) 557-3111 • F: (844) 557-3444
www.nncpas.com • *Licensed by the California Board of Accountancy*

period covered by our audit and does not extend to any later periods for which we are not engaged as auditors.

As part of obtaining reasonable assurance about whether the District complied with the State's requirements with regards to the use of school facility program (SFP) bonds, we will perform tests of the District's compliance with applicable laws and regulations and the provisions of contracts and agreements. However, the objective of our audit will not be to provide an opinion on overall compliance, and we will not express such an opinion. Management maintains the responsibility for identifying and ensuring that the District complies with applicable laws, regulations, contracts, and other agreements.

An audit includes obtaining an understanding of internal control sufficient to plan the audit and to determine the nature, timing, and extent of audit procedures to be performed. An audit is not designed to provide assurance on internal control or to identify deficiencies in internal control. However, during the audit, we will communicate internal control-related matters to management and those charged with governance as required by professional standards.

In connection with this engagement, we may communicate with you or others via email transmission. As emails can be intercepted and read, disclosed, or otherwise used or communicated by an unintended third party, or may not be delivered to each of the parties to whom they are directed and only to such parties, we cannot guarantee or warrant that emails from us will be properly delivered and read only by the addressee. Therefore, we specifically disclaim and waive any liability or responsibility whatsoever for interception or unintentional disclosure of emails transmitted by us in connection with the performance of this engagement. In that regard, you agree that we shall have no liability for any loss or damage to any person or entity resulting from the use of email transmissions, including any consequential, incidental, direct, indirect, or special damages, such as loss of revenues or anticipated profits, or disclosure or communication of confidential or proprietary information.

Management Responsibilities

We understand that you will make all financial records and related information available to us for our audit and that you are responsible for the accuracy and completeness of that information. The management of Oxnard School District has the responsibility for the proper recording of transactions in the books of account, for establishing and maintaining effective internal controls, including monitoring ongoing activities, for the safeguarding of assets, for ensuring compliance with applicable laws and regulations, and for the preparation and substantial accuracy of the financial statements, in accordance with generally accepted accounting principles. Although we may advise you about appropriate accounting principles and their application, the selection and method of application are the sole responsibility of the management. As part of our engagement, we may also propose standard, adjusting, or correcting journal entries on your financial statements. Management, however, has final responsibility for reviewing the proposed entries and understanding the nature and impact of the proposed entries to the financial statements.

By your signature below, you acknowledge that you are responsible for the design and implementation of programs and controls to prevent and detect fraud, and for informing us about all known or suspected fraud affecting the government that involves management, employees who have significant roles in internal control, and others where the fraud could have a material effect on the financial statements. You are also responsible for informing us of your knowledge of any allegations of fraud or suspected fraud affecting the government that have been received in communications from

employees, former employees, regulators, or others. In addition, you are responsible for identifying and ensuring that the entity complies with applicable laws and regulations and for taking timely and appropriate actions to remedy any fraud, illegal acts, or violations of contracts and agreements. You agree that you will confirm to us in your management representation letter your understanding of your responsibilities as defined in this letter.

Other

Jeff Nigro, CPA, CFE is the engagement partner for the audit services specified in this letter. His responsibilities include supervising Nigro & Nigro's services performed as part of this engagement and signing or authorizing another qualified firm representative to sign the audit report.

It is our policy to keep records related to this engagement for seven (7) years. However, Nigro & Nigro does not keep any original client records, so we will return those to you at the completion of the services rendered under this engagement. When records are returned to you, it is your responsibility to retain and protect your records for possible future use, including potential examination by any government or regulatory agencies. By your signature below, you acknowledge and agree that upon the expiration of the seven-year period Nigro & Nigro shall be free to destroy our records related to this engagement.

Our audit fees for this work will be $10,000. If a savings audit is required, our fees will be an *additional* $5,000. In addition to such payment for auditing services, the auditor shall be reimbursed for such travel and mileage as may be necessary. Travel costs will include, but not be limited to, reasonable lodging, tolls, parking, and meals. Mileage on vehicles will be billed at the standard IRS rate. Our invoices for these fees will be rendered each month as work progresses and are payable upon presentation. In accordance with our firm policies, work may be suspended if your account becomes 90 days or more overdue and may not be resumed until your account is paid in full.

In the event that circumstances make it necessary to perform additional work or to expend inordinate amounts of time because of (1) incompleteness of records, (2) poor working conditions, (3) abnormal errors, (4) misappropriation of funds, (5) lack of cooperation on part of the District personnel, or (6) other circumstances disclosed by our audit, it is agreed that such additional work may be subject to either special Agreement or Agreements upon a fee basis to be mutually agreed upon by all parties or may be based on our hourly rates. Before additional fees or Agreements may be instituted, the appropriate District personnel shall be informed in writing of any deficiency or difficulties as listed above. The District will have ten (10) working days to correct or implement plans to correct said deficiency, where possible. For those deficiencies that cannot be easily corrected, the District and Nigro & Nigro agree to make amendments to the Agreement to correct the deficiency and appropriately compensate us.

If a dispute arises among the parties hereto, the parties agree to first try in good faith to settle the dispute by mediation administered by the American Arbitration Association under its Rules for Professional Accounting and Related Services Disputes before resorting to litigation. The costs of any mediation proceeding shall be shared equally by all parties.

Client and accountant both agree that any dispute over fees charged by the accountant to the client will be submitted for resolution by arbitration in accordance with the Rules for Professional Accounting and Related Services Disputes of the American Arbitration Association. Such arbitration shall be binding and final. IN AGREEING TO ARBITRATION, WE BOTH ACKNOWLEDGE THAT, IN THE EVENT OF

A DISPUTE OVER FEES CHARGED BY THE ACCOUNTANT, EACH OF US IS GIVING UP THE RIGHT TO HAVE THE DISPUTE DECIDED IN A COURT OF LAW BEFORE A JUDGE OR JURY AND INSTEAD WE ARE ACCEPTING THE USE OF ARBITRATION FOR RESOLUTION.

We appreciate the opportunity to be of service to Oxnard School District and believe this letter accurately summarizes the significant terms of our engagement. If you have any questions, please let us know. If you agree with the terms of our engagement as described in this letter, please sign below, and return it to us.

Very truly yours,

Nigro & Nigro, PC

Nigro & Nigro, PC

RESPONSE:
This letter correctly sets forth the understanding of Oxnard School District.

APPROVED:

Oxnard School District

Valerie Mitchell, Assistant Superintendent, Business Services

7-5-24

Date

NIGRO & NIGRO PC
A Professional Accountancy Corporation

July 2, 2024

To the Governing Board and Management of
Oxnard School District
Oxnard, California

We are pleased to confirm our understanding of the services we are providing for Oxnard School District. We will conduct a performance audit to ensure that school facility program (SFP) bonds and savings, if applicable, have been appropriately spent according to State guidelines for Project No. 50/72538-00-022 – McKinna Elementary School.

Objective
The objective of our performance audit is the expression of an opinion about whether the District complied with the State's requirements with regards to the use of school facility program (SFP) bonds.

We will conduct our audit in accordance with auditing standards generally accepted in the United States of America and the standards for performance audits contained in *Government Auditing Standards*, issued by the Comptroller General of the United States, California Education Code section 41024, and the *2023-24 Guide for Annual Audits of K-12 Local Education Agencies and State Compliance Reporting, Appendix B*. Our audit will include tests of the accounting records of Oxnard School District and other procedures we consider necessary to enable us to express an opinion on whether the District complied with State requirements regarding the use of school facility program (SFP) bonds. If our opinion is other than unqualified, we will fully discuss the reasons with you in advance. If, for any reason, we are unable to complete the audit or form an opinion, we may disclaim an opinion or not issue a report.

Audit Procedures
An audit includes examining, on a test basis, evidence supporting the SAB 50-06 reports. Therefore, our audit will involve judgment about the number of transactions to be examined and the areas to be tested. Also, we will plan and perform the audit to obtain reasonable rather than absolute assurance about whether the District complied with the State's requirements with regards to the use of school facility program (SFP) bonds, whether from errors, fraudulent financial reporting, misappropriation of assets, or violations of laws or governmental regulations that are attributable to the entity or to acts by management or employees acting on behalf of the entity. An audit is not designed, though, to detect immaterial misstatements or violations of laws or governmental regulations that do not have a direct and material effect on the financial statements. However, because of the concept of reasonable assurance and because we will not perform a detailed examination of all transactions, there is a risk that material misstatements may exist and not be detected by us. We will inform you of any material errors, fraudulent financial reporting or misappropriation of assets that come to our attention. In addition, we will inform you of any violations of laws or governmental regulations that come to our attention, unless clearly inconsequential. Our responsibility as auditors is, of course, limited to the

Jeff Nigro, CPA, CFE | Elizabeth Nigro, CPA | Shannon Bishop, CPA | Peter Glenn, CPA, CFE | Paul J. Kaymark, CPA | Jessica Berry, CPA | Angelika Vartikyan, CPA
MURRIETA OFFICE 25220 Hancock Avenue, Suite 400, Murrieta, CA 92562 • P: (951) 698-8783 • F: (951) 699-1064
WALNUT CREEK OFFICE 2121 N. California Blvd. Suite 290, Walnut Creek, CA 94596 • P: (844) 557-3111 • F: (844) 557-3444
www.nncpas.com • Licensed by the California Board of Accountancy

period covered by our audit and does not extend to any later periods for which we are not engaged as auditors.

As part of obtaining reasonable assurance about whether the District complied with the State's requirements with regards to the use of school facility program (SFP) bonds, we will perform tests of the District's compliance with applicable laws and regulations and the provisions of contracts and agreements. However, the objective of our audit will not be to provide an opinion on overall compliance, and we will not express such an opinion. Management maintains the responsibility for identifying and ensuring that the District complies with applicable laws, regulations, contracts, and other agreements.

An audit includes obtaining an understanding of internal control sufficient to plan the audit and to determine the nature, timing, and extent of audit procedures to be performed. An audit is not designed to provide assurance on internal control or to identify deficiencies in internal control. However, during the audit, we will communicate internal control-related matters to management and those charged with governance as required by professional standards.

In connection with this engagement, we may communicate with you or others via email transmission. As emails can be intercepted and read, disclosed, or otherwise used or communicated by an unintended third party, or may not be delivered to each of the parties to whom they are directed and only to such parties, we cannot guarantee or warrant that emails from us will be properly delivered and read only by the addressee. Therefore, we specifically disclaim and waive any liability or responsibility whatsoever for interception or unintentional disclosure of emails transmitted by us in connection with the performance of this engagement. In that regard, you agree that we shall have no liability for any loss or damage to any person or entity resulting from the use of email transmissions, including any consequential, incidental, direct, indirect, or special damages, such as loss of revenues or anticipated profits, or disclosure or communication of confidential or proprietary information.

Management Responsibilities

We understand that you will make all financial records and related information available to us for our audit and that you are responsible for the accuracy and completeness of that information. The management of Oxnard School District has the responsibility for the proper recording of transactions in the books of account, for establishing and maintaining effective internal controls, including monitoring ongoing activities, for the safeguarding of assets, for ensuring compliance with applicable laws and regulations, and for the preparation and substantial accuracy of the financial statements, in accordance with generally accepted accounting principles. Although we may advise you about appropriate accounting principles and their application, the selection and method of application are the sole responsibility of the management. As part of our engagement, we may also propose standard, adjusting, or correcting journal entries on your financial statements. Management, however, has final responsibility for reviewing the proposed entries and understanding the nature and impact of the proposed entries to the financial statements.

By your signature below, you acknowledge that you are responsible for the design and implementation of programs and controls to prevent and detect fraud, and for informing us about all known or suspected fraud affecting the government that involves management, employees who have significant roles in internal control, and others where the fraud could have a material effect on the financial statements. You are also responsible for informing us of your knowledge of any allegations of fraud or suspected fraud affecting the government that have been received in communications from

employees, former employees, regulators, or others. In addition, you are responsible for identifying and ensuring that the entity complies with applicable laws and regulations and for taking timely and appropriate actions to remedy any fraud, illegal acts, or violations of contracts and agreements. You agree that you will confirm to us in your management representation letter your understanding of your responsibilities as defined in this letter.

Other

Jeff Nigro, CPA, CFE is the engagement partner for the audit services specified in this letter. His responsibilities include supervising Nigro & Nigro's services performed as part of this engagement and signing or authorizing another qualified firm representative to sign the audit report.

It is our policy to keep records related to this engagement for seven (7) years. However, Nigro & Nigro does not keep any original client records, so we will return those to you at the completion of the services rendered under this engagement. When records are returned to you, it is your responsibility to retain and protect your records for possible future use, including potential examination by any government or regulatory agencies. By your signature below, you acknowledge and agree that upon the expiration of the seven-year period Nigro & Nigro shall be free to destroy our records related to this engagement.

Our audit fees for this work will be $10,000. If a savings audit is required, our fees will be an *additional* $5,000. In addition to such payment for auditing services, the auditor shall be reimbursed for such travel and mileage as may be necessary. Travel costs will include, but not be limited to, reasonable lodging, tolls, parking, and meals. Mileage on vehicles will be billed at the standard IRS rate. Our invoices for these fees will be rendered each month as work progresses and are payable upon presentation. In accordance with our firm policies, work may be suspended if your account becomes 90 days or more overdue and may not be resumed until your account is paid in full.

In the event that circumstances make it necessary to perform additional work or to expend inordinate amounts of time because of (1) incompleteness of records, (2) poor working conditions, (3) abnormal errors, (4) misappropriation of funds, (5) lack of cooperation on part of the District personnel, or (6) other circumstances disclosed by our audit, it is agreed that such additional work may be subject to either special Agreement or Agreements upon a fee basis to be mutually agreed upon by all parties or may be based on our hourly rates. Before additional fees or Agreements may be instituted, the appropriate District personnel shall be informed in writing of any deficiency or difficulties as listed above. The District will have ten (10) working days to correct or implement plans to correct said deficiency, where possible. For those deficiencies that cannot be easily corrected, the District and Nigro & Nigro agree to make amendments to the Agreement to correct the deficiency and appropriately compensate us.

If a dispute arises among the parties hereto, the parties agree to first try in good faith to settle the dispute by mediation administered by the American Arbitration Association under its Rules for Professional Accounting and Related Services Disputes before resorting to litigation. The costs of any mediation proceeding shall be shared equally by all parties.

Client and accountant both agree that any dispute over fees charged by the accountant to the client will be submitted for resolution by arbitration in accordance with the Rules for Professional Accounting and Related Services Disputes of the American Arbitration Association. Such arbitration shall be binding and final. IN AGREEING TO ARBITRATION, WE BOTH ACKNOWLEDGE THAT, IN THE EVENT OF

A DISPUTE OVER FEES CHARGED BY THE ACCOUNTANT, EACH OF US IS GIVING UP THE RIGHT TO HAVE THE DISPUTE DECIDED IN A COURT OF LAW BEFORE A JUDGE OR JURY AND INSTEAD WE ARE ACCEPTING THE USE OF ARBITRATION FOR RESOLUTION.

We appreciate the opportunity to be of service to Oxnard School District and believe this letter accurately summarizes the significant terms of our engagement. If you have any questions, please let us know. If you agree with the terms of our engagement as described in this letter, please sign below, and return it to us.

Very truly yours,

Nigro & Nigro, PC

Nigro & Nigro, PC

RESPONSE:
This letter correctly sets forth the understanding of Oxnard School District.

APPROVED:

Oxnard School District
Valerie Mitchell, Assistant Superintendent, Business Services

7-5-24
Date

NIGRO & NIGRO PC
A Professional Accountancy Corporation

July 2, 2024

To the Governing Board and Management of
Oxnard School District
Oxnard, California

We are pleased to confirm our understanding of the services we are providing for Oxnard School District. We will conduct a performance audit to ensure that school facility program (SFP) bonds and savings, if applicable, have been appropriately spent according to State guidelines for Project No. 57/72538-00-030 – McKinna Elementary School.

Objective

The objective of our performance audit is the expression of an opinion about whether the District complied with the State's requirements with regards to the use of school facility program (SFP) bonds.

We will conduct our audit in accordance with auditing standards generally accepted in the United States of America and the standards for performance audits contained in *Government Auditing Standards*, issued by the Comptroller General of the United States, California Education Code section 41024, and the *2023-24 Guide for Annual Audits of K-12 Local Education Agencies and State Compliance Reporting, Appendix B*. Our audit will include tests of the accounting records of Oxnard School District and other procedures we consider necessary to enable us to express an opinion on whether the District complied with State requirements regarding the use of school facility program (SFP) bonds. If our opinion is other than unqualified, we will fully discuss the reasons with you in advance. If, for any reason, we are unable to complete the audit or form an opinion, we may disclaim an opinion or not issue a report.

Audit Procedures

An audit includes examining, on a test basis, evidence supporting the SAB 50-06 reports. Therefore, our audit will involve judgment about the number of transactions to be examined and the areas to be tested. Also, we will plan and perform the audit to obtain reasonable rather than absolute assurance about whether the District complied with the State's requirements with regards to the use of school facility program (SFP) bonds, whether from errors, fraudulent financial reporting, misappropriation of assets, or violations of laws or governmental regulations that are attributable to the entity or to acts by management or employees acting on behalf of the entity. An audit is not designed, though, to detect immaterial misstatements or violations of laws or governmental regulations that do not have a direct and material effect on the financial statements. However, because of the concept of reasonable assurance and because we will not perform a detailed examination of all transactions, there is a risk that material misstatements may exist and not be detected by us. We will inform you of any material errors, fraudulent financial reporting or misappropriation of assets that come to our attention. In addition, we will inform you of any violations of laws or governmental regulations that come to our attention, unless clearly inconsequential. Our responsibility as auditors is, of course, limited to the

Jeff Nigro, CPA, CFE | Elizabeth Nigro, CPA | Shannon Bishop, CPA | Peter Glenn, CPA, CFE | Paul J. Kaymark, CPA | Jessica Berry, CPA | Angelika Vartikyan, CPA

MURRIETA OFFICE 25220 Hancock Avenue, Suite 400, Murrieta, CA 92562 • P: (951) 698-8783 • F: (951) 699-1064
WALNUT CREEK OFFICE 2121 N. California Blvd. Suite 290, Walnut Creek, CA 94596 • P: (844) 557-3111 • F: (844) 557-3444
www.nncpas.com • *Licensed by the California Board of Accountancy*

period covered by our audit and does not extend to any later periods for which we are not engaged as auditors.

As part of obtaining reasonable assurance about whether the District complied with the State's requirements with regards to the use of school facility program (SFP) bonds, we will perform tests of the District's compliance with applicable laws and regulations and the provisions of contracts and agreements. However, the objective of our audit will not be to provide an opinion on overall compliance, and we will not express such an opinion. Management maintains the responsibility for identifying and ensuring that the District complies with applicable laws, regulations, contracts, and other agreements.

An audit includes obtaining an understanding of internal control sufficient to plan the audit and to determine the nature, timing, and extent of audit procedures to be performed. An audit is not designed to provide assurance on internal control or to identify deficiencies in internal control. However, during the audit, we will communicate internal control-related matters to management and those charged with governance as required by professional standards.

In connection with this engagement, we may communicate with you or others via email transmission. As emails can be intercepted and read, disclosed, or otherwise used or communicated by an unintended third party, or may not be delivered to each of the parties to whom they are directed and only to such parties, we cannot guarantee or warrant that emails from us will be properly delivered and read only by the addressee. Therefore, we specifically disclaim and waive any liability or responsibility whatsoever for interception or unintentional disclosure of emails transmitted by us in connection with the performance of this engagement. In that regard, you agree that we shall have no liability for any loss or damage to any person or entity resulting from the use of email transmissions, including any consequential, incidental, direct, indirect, or special damages, such as loss of revenues or anticipated profits, or disclosure or communication of confidential or proprietary information.

Management Responsibilities

We understand that you will make all financial records and related information available to us for our audit and that you are responsible for the accuracy and completeness of that information. The management of Oxnard School District has the responsibility for the proper recording of transactions in the books of account, for establishing and maintaining effective internal controls, including monitoring ongoing activities, for the safeguarding of assets, for ensuring compliance with applicable laws and regulations, and for the preparation and substantial accuracy of the financial statements, in accordance with generally accepted accounting principles. Although we may advise you about appropriate accounting principles and their application, the selection and method of application are the sole responsibility of the management. As part of our engagement, we may also propose standard, adjusting, or correcting journal entries on your financial statements. Management, however, has final responsibility for reviewing the proposed entries and understanding the nature and impact of the proposed entries to the financial statements.

By your signature below, you acknowledge that you are responsible for the design and implementation of programs and controls to prevent and detect fraud, and for informing us about all known or suspected fraud affecting the government that involves management, employees who have significant roles in internal control, and others where the fraud could have a material effect on the financial statements. You are also responsible for informing us of your knowledge of any allegations of fraud or suspected fraud affecting the government that have been received in communications from

employees, former employees, regulators, or others. In addition, you are responsible for identifying and ensuring that the entity complies with applicable laws and regulations and for taking timely and appropriate actions to remedy any fraud, illegal acts, or violations of contracts and agreements. You agree that you will confirm to us in your management representation letter your understanding of your responsibilities as defined in this letter.

Other

Jeff Nigro, CPA, CFE is the engagement partner for the audit services specified in this letter. His responsibilities include supervising Nigro & Nigro's services performed as part of this engagement and signing or authorizing another qualified firm representative to sign the audit report.

It is our policy to keep records related to this engagement for seven (7) years. However, Nigro & Nigro does not keep any original client records, so we will return those to you at the completion of the services rendered under this engagement. When records are returned to you, it is your responsibility to retain and protect your records for possible future use, including potential examination by any government or regulatory agencies. By your signature below, you acknowledge and agree that upon the expiration of the seven-year period Nigro & Nigro shall be free to destroy our records related to this engagement.

Our audit fees for this work will be $10,000. If a savings audit is required, our fees will be an *additional* $5,000. In addition to such payment for auditing services, the auditor shall be reimbursed for such travel and mileage as may be necessary. Travel costs will include, but not be limited to, reasonable lodging, tolls, parking, and meals. Mileage on vehicles will be billed at the standard IRS rate. Our invoices for these fees will be rendered each month as work progresses and are payable upon presentation. In accordance with our firm policies, work may be suspended if your account becomes 90 days or more overdue and may not be resumed until your account is paid in full.

In the event that circumstances make it necessary to perform additional work or to expend inordinate amounts of time because of (1) incompleteness of records, (2) poor working conditions, (3) abnormal errors, (4) misappropriation of funds, (5) lack of cooperation on part of the District personnel, or (6) other circumstances disclosed by our audit, it is agreed that such additional work may be subject to either special Agreement or Agreements upon a fee basis to be mutually agreed upon by all parties or may be based on our hourly rates. Before additional fees or Agreements may be instituted, the appropriate District personnel shall be informed in writing of any deficiency or difficulties as listed above. The District will have ten (10) working days to correct or implement plans to correct said deficiency, where possible. For those deficiencies that cannot be easily corrected, the District and Nigro & Nigro agree to make amendments to the Agreement to correct the deficiency and appropriately compensate us.

If a dispute arises among the parties hereto, the parties agree to first try in good faith to settle the dispute by mediation administered by the American Arbitration Association under its Rules for Professional Accounting and Related Services Disputes before resorting to litigation. The costs of any mediation proceeding shall be shared equally by all parties.

Client and accountant both agree that any dispute over fees charged by the accountant to the client will be submitted for resolution by arbitration in accordance with the Rules for Professional Accounting and Related Services Disputes of the American Arbitration Association. Such arbitration shall be binding and final. IN AGREEING TO ARBITRATION, WE BOTH ACKNOWLEDGE THAT, IN THE EVENT OF

A DISPUTE OVER FEES CHARGED BY THE ACCOUNTANT, EACH OF US IS GIVING UP THE RIGHT TO HAVE THE DISPUTE DECIDED IN A COURT OF LAW BEFORE A JUDGE OR JURY AND INSTEAD WE ARE ACCEPTING THE USE OF ARBITRATION FOR RESOLUTION.

We appreciate the opportunity to be of service to Oxnard School District and believe this letter accurately summarizes the significant terms of our engagement. If you have any questions, please let us know. If you agree with the terms of our engagement as described in this letter, please sign below, and return it to us.

Very truly yours,

Nigro & Nigro, PC

Nigro & Nigro, PC

RESPONSE:
This letter correctly sets forth the understanding of Oxnard School District.

APPROVED:

Oxnard School District
Valerie Mitchell, Assistant Superintendent, Business Services

7-5-24
Date

NIGRO & NIGRO PC
A Professional Accountancy Corporation

July 2, 2024

To the Governing Board and Management of
Oxnard School District
Oxnard, California

We are pleased to confirm our understanding of the services we are providing for Oxnard School District. We will conduct a performance audit to ensure that school facility program (SFP) bonds and savings, if applicable, have been appropriately spent according to State guidelines for Project No. 50/72538-00-024 – Ramona Elementary School.

Objective

The objective of our performance audit is the expression of an opinion about whether the District complied with the State's requirements with regards to the use of school facility program (SFP) bonds.

We will conduct our audit in accordance with auditing standards generally accepted in the United States of America and the standards for performance audits contained in *Government Auditing Standards*, issued by the Comptroller General of the United States, California Education Code section 41024, and the *2023-24 Guide for Annual Audits of K-12 Local Education Agencies and State Compliance Reporting, Appendix B*. Our audit will include tests of the accounting records of Oxnard School District and other procedures we consider necessary to enable us to express an opinion on whether the District complied with State requirements regarding the use of school facility program (SFP) bonds. If our opinion is other than unqualified, we will fully discuss the reasons with you in advance. If, for any reason, we are unable to complete the audit or form an opinion, we may disclaim an opinion or not issue a report.

Audit Procedures

An audit includes examining, on a test basis, evidence supporting the SAB 50-06 reports. Therefore, our audit will involve judgment about the number of transactions to be examined and the areas to be tested. Also, we will plan and perform the audit to obtain reasonable rather than absolute assurance about whether the District complied with the State's requirements with regards to the use of school facility program (SFP) bonds, whether from errors, fraudulent financial reporting, misappropriation of assets, or violations of laws or governmental regulations that are attributable to the entity or to acts by management or employees acting on behalf of the entity. An audit is not designed, though, to detect immaterial misstatements or violations of laws or governmental regulations that do not have a direct and material effect on the financial statements. However, because of the concept of reasonable assurance and because we will not perform a detailed examination of all transactions, there is a risk that material misstatements may exist and not be detected by us. We will inform you of any material errors, fraudulent financial reporting or misappropriation of assets that come to our attention. In addition, we will inform you of any violations of laws or governmental regulations that come to our attention, unless clearly inconsequential. Our responsibility as auditors is, of course, limited to the

Jeff Nigro, CPA, CFE | Elizabeth Nigro, CPA | Shannon Bishop, CPA | Peter Glenn, CPA, CFE | Paul J. Kaymark, CPA | Jessica Berry, CPA | Angelika Vartikyan, CPA

MURRIETA OFFICE 25220 Hancock Avenue, Suite 400, Murrieta, CA 92562 • P: (951) 698-8783 • F: (951) 699-1064
WALNUT CREEK OFFICE 2121 N. California Blvd. Suite 290, Walnut Creek, CA 94596 • P: (844) 557-3111 • F: (844) 557-3444
www.nncpas.com • Licensed by the California Board of Accountancy

period covered by our audit and does not extend to any later periods for which we are not engaged as auditors.

As part of obtaining reasonable assurance about whether the District complied with the State's requirements with regards to the use of school facility program (SFP) bonds, we will perform tests of the District's compliance with applicable laws and regulations and the provisions of contracts and agreements. However, the objective of our audit will not be to provide an opinion on overall compliance, and we will not express such an opinion. Management maintains the responsibility for identifying and ensuring that the District complies with applicable laws, regulations, contracts, and other agreements.

An audit includes obtaining an understanding of internal control sufficient to plan the audit and to determine the nature, timing, and extent of audit procedures to be performed. An audit is not designed to provide assurance on internal control or to identify deficiencies in internal control. However, during the audit, we will communicate internal control-related matters to management and those charged with governance as required by professional standards.

In connection with this engagement, we may communicate with you or others via email transmission. As emails can be intercepted and read, disclosed, or otherwise used or communicated by an unintended third party, or may not be delivered to each of the parties to whom they are directed and only to such parties, we cannot guarantee or warrant that emails from us will be properly delivered and read only by the addressee. Therefore, we specifically disclaim and waive any liability or responsibility whatsoever for interception or unintentional disclosure of emails transmitted by us in connection with the performance of this engagement. In that regard, you agree that we shall have no liability for any loss or damage to any person or entity resulting from the use of email transmissions, including any consequential, incidental, direct, indirect, or special damages, such as loss of revenues or anticipated profits, or disclosure or communication of confidential or proprietary information.

Management Responsibilities

We understand that you will make all financial records and related information available to us for our audit and that you are responsible for the accuracy and completeness of that information. The management of Oxnard School District has the responsibility for the proper recording of transactions in the books of account, for establishing and maintaining effective internal controls, including monitoring ongoing activities, for the safeguarding of assets, for ensuring compliance with applicable laws and regulations, and for the preparation and substantial accuracy of the financial statements, in accordance with generally accepted accounting principles. Although we may advise you about appropriate accounting principles and their application, the selection and method of application are the sole responsibility of the management. As part of our engagement, we may also propose standard, adjusting, or correcting journal entries on your financial statements. Management, however, has final responsibility for reviewing the proposed entries and understanding the nature and impact of the proposed entries to the financial statements.

By your signature below, you acknowledge that you are responsible for the design and implementation of programs and controls to prevent and detect fraud, and for informing us about all known or suspected fraud affecting the government that involves management, employees who have significant roles in internal control, and others where the fraud could have a material effect on the financial statements. You are also responsible for informing us of your knowledge of any allegations of fraud or suspected fraud affecting the government that have been received in communications from

employees, former employees, regulators, or others. In addition, you are responsible for identifying and ensuring that the entity complies with applicable laws and regulations and for taking timely and appropriate actions to remedy any fraud, illegal acts, or violations of contracts and agreements. You agree that you will confirm to us in your management representation letter your understanding of your responsibilities as defined in this letter.

Other

Jeff Nigro, CPA, CFE is the engagement partner for the audit services specified in this letter. His responsibilities include supervising Nigro & Nigro's services performed as part of this engagement and signing or authorizing another qualified firm representative to sign the audit report.

It is our policy to keep records related to this engagement for seven (7) years. However, Nigro & Nigro does not keep any original client records, so we will return those to you at the completion of the services rendered under this engagement. When records are returned to you, it is your responsibility to retain and protect your records for possible future use, including potential examination by any government or regulatory agencies. By your signature below, you acknowledge and agree that upon the expiration of the seven-year period Nigro & Nigro shall be free to destroy our records related to this engagement.

Our audit fees for this work will be $10,000. If a savings audit is required, our fees will be an *additional* $5,000. In addition to such payment for auditing services, the auditor shall be reimbursed for such travel and mileage as may be necessary. Travel costs will include, but not be limited to, reasonable lodging, tolls, parking, and meals. Mileage on vehicles will be billed at the standard IRS rate. Our invoices for these fees will be rendered each month as work progresses and are payable upon presentation. In accordance with our firm policies, work may be suspended if your account becomes 90 days or more overdue and may not be resumed until your account is paid in full.

In the event that circumstances make it necessary to perform additional work or to expend inordinate amounts of time because of (1) incompleteness of records, (2) poor working conditions, (3) abnormal errors, (4) misappropriation of funds, (5) lack of cooperation on part of the District personnel, or (6) other circumstances disclosed by our audit, it is agreed that such additional work may be subject to either special Agreement or Agreements upon a fee basis to be mutually agreed upon by all parties or may be based on our hourly rates. Before additional fees or Agreements may be instituted, the appropriate District personnel shall be informed in writing of any deficiency or difficulties as listed above. The District will have ten (10) working days to correct or implement plans to correct said deficiency, where possible. For those deficiencies that cannot be easily corrected, the District and Nigro & Nigro agree to make amendments to the Agreement to correct the deficiency and appropriately compensate us.

If a dispute arises among the parties hereto, the parties agree to first try in good faith to settle the dispute by mediation administered by the American Arbitration Association under its Rules for Professional Accounting and Related Services Disputes before resorting to litigation. The costs of any mediation proceeding shall be shared equally by all parties.

Client and accountant both agree that any dispute over fees charged by the accountant to the client will be submitted for resolution by arbitration in accordance with the Rules for Professional Accounting and Related Services Disputes of the American Arbitration Association. Such arbitration shall be binding and final. IN AGREEING TO ARBITRATION, WE BOTH ACKNOWLEDGE THAT, IN THE EVENT OF

A DISPUTE OVER FEES CHARGED BY THE ACCOUNTANT, EACH OF US IS GIVING UP THE RIGHT TO HAVE THE DISPUTE DECIDED IN A COURT OF LAW BEFORE A JUDGE OR JURY AND INSTEAD WE ARE ACCEPTING THE USE OF ARBITRATION FOR RESOLUTION.

We appreciate the opportunity to be of service to Oxnard School District and believe this letter accurately summarizes the significant terms of our engagement. If you have any questions, please let us know. If you agree with the terms of our engagement as described in this letter, please sign below, and return it to us.

Very truly yours,

Nigro & Nigro, PC

Nigro & Nigro, PC

RESPONSE:
This letter correctly sets forth the understanding of Oxnard School District.

APPROVED:

Oxnard School District
Valerie Mitchell, Assistant Superintendent, Business Services

7-5-24
Date

NIGRO & NIGRO PC

A Professional Accountancy Corporation

July 2, 2024

To the Governing Board and Management of
Oxnard School District
Oxnard, California

We are pleased to confirm our understanding of the services we are providing for Oxnard School District. We will conduct a performance audit to ensure that school facility program (SFP) bonds and savings, if applicable, have been appropriately spent according to State guidelines for Project No. 50/72538-00-016 – Ritchen Elementary School.

Objective

The objective of our performance audit is the expression of an opinion about whether the District complied with the State's requirements with regards to the use of school facility program (SFP) bonds.

We will conduct our audit in accordance with auditing standards generally accepted in the United States of America and the standards for performance audits contained in *Government Auditing Standards*, issued by the Comptroller General of the United States, California Education Code section 41024, and the *2023-24 Guide for Annual Audits of K-12 Local Education Agencies and State Compliance Reporting, Appendix B*. Our audit will include tests of the accounting records of Oxnard School District and other procedures we consider necessary to enable us to express an opinion on whether the District complied with State requirements regarding the use of school facility program (SFP) bonds. If our opinion is other than unqualified, we will fully discuss the reasons with you in advance. If, for any reason, we are unable to complete the audit or form an opinion, we may disclaim an opinion or not issue a report.

Audit Procedures

An audit includes examining, on a test basis, evidence supporting the SAB 50-06 reports. Therefore, our audit will involve judgment about the number of transactions to be examined and the areas to be tested. Also, we will plan and perform the audit to obtain reasonable rather than absolute assurance about whether the District complied with the State's requirements with regards to the use of school facility program (SFP) bonds, whether from errors, fraudulent financial reporting, misappropriation of assets, or violations of laws or governmental regulations that are attributable to the entity or to acts by management or employees acting on behalf of the entity. An audit is not designed, though, to detect immaterial misstatements or violations of laws or governmental regulations that do not have a direct and material effect on the financial statements. However, because of the concept of reasonable assurance and because we will not perform a detailed examination of all transactions, there is a risk that material misstatements may exist and not be detected by us. We will inform you of any material errors, fraudulent financial reporting or misappropriation of assets that come to our attention. In addition, we will inform you of any violations of laws or governmental regulations that come to our attention, unless clearly inconsequential. Our responsibility as auditors is, of course, limited to the

Jeff Nigro, CPA, CFE | Elizabeth Nigro, CPA | Shannon Bishop, CPA | Peter Glenn, CPA, CFE | Paul J. Kaymark, CPA | Jessica Berry, CPA | Angelika Vartikyan, CPA

MURRIETA OFFICE 25220 Hancock Avenue, Suite 400, Murrieta, CA 92562 • P: (951) 698-8783 • F: (951) 699-1064
WALNUT CREEK OFFICE 2121 N. California Blvd. Suite 290, Walnut Creek, CA 94596 • P: (844) 557-3111 • F: (844) 557-3444
www.nncpas.com • *Licensed by the California Board of Accountancy*

period covered by our audit and does not extend to any later periods for which we are not engaged as auditors.

As part of obtaining reasonable assurance about whether the District complied with the State's requirements with regards to the use of school facility program (SFP) bonds, we will perform tests of the District's compliance with applicable laws and regulations and the provisions of contracts and agreements. However, the objective of our audit will not be to provide an opinion on overall compliance, and we will not express such an opinion. Management maintains the responsibility for identifying and ensuring that the District complies with applicable laws, regulations, contracts, and other agreements.

An audit includes obtaining an understanding of internal control sufficient to plan the audit and to determine the nature, timing, and extent of audit procedures to be performed. An audit is not designed to provide assurance on internal control or to identify deficiencies in internal control. However, during the audit, we will communicate internal control-related matters to management and those charged with governance as required by professional standards.

In connection with this engagement, we may communicate with you or others via email transmission. As emails can be intercepted and read, disclosed, or otherwise used or communicated by an unintended third party, or may not be delivered to each of the parties to whom they are directed and only to such parties, we cannot guarantee or warrant that emails from us will be properly delivered and read only by the addressee. Therefore, we specifically disclaim and waive any liability or responsibility whatsoever for interception or unintentional disclosure of emails transmitted by us in connection with the performance of this engagement. In that regard, you agree that we shall have no liability for any loss or damage to any person or entity resulting from the use of email transmissions, including any consequential, incidental, direct, indirect, or special damages, such as loss of revenues or anticipated profits, or disclosure or communication of confidential or proprietary information.

Management Responsibilities

We understand that you will make all financial records and related information available to us for our audit and that you are responsible for the accuracy and completeness of that information. The management of Oxnard School District has the responsibility for the proper recording of transactions in the books of account, for establishing and maintaining effective internal controls, including monitoring ongoing activities, for the safeguarding of assets, for ensuring compliance with applicable laws and regulations, and for the preparation and substantial accuracy of the financial statements, in accordance with generally accepted accounting principles. Although we may advise you about appropriate accounting principles and their application, the selection and method of application are the sole responsibility of the management. As part of our engagement, we may also propose standard, adjusting, or correcting journal entries on your financial statements. Management, however, has final responsibility for reviewing the proposed entries and understanding the nature and impact of the proposed entries to the financial statements.

By your signature below, you acknowledge that you are responsible for the design and implementation of programs and controls to prevent and detect fraud, and for informing us about all known or suspected fraud affecting the government that involves management, employees who have significant roles in internal control, and others where the fraud could have a material effect on the financial statements. You are also responsible for informing us of your knowledge of any allegations of fraud or suspected fraud affecting the government that have been received in communications from

employees, former employees, regulators, or others. In addition, you are responsible for identifying and ensuring that the entity complies with applicable laws and regulations and for taking timely and appropriate actions to remedy any fraud, illegal acts, or violations of contracts and agreements. You agree that you will confirm to us in your management representation letter your understanding of your responsibilities as defined in this letter.

Other

Jeff Nigro, CPA, CFE is the engagement partner for the audit services specified in this letter. His responsibilities include supervising Nigro & Nigro's services performed as part of this engagement and signing or authorizing another qualified firm representative to sign the audit report.

It is our policy to keep records related to this engagement for seven (7) years. However, Nigro & Nigro does not keep any original client records, so we will return those to you at the completion of the services rendered under this engagement. When records are returned to you, it is your responsibility to retain and protect your records for possible future use, including potential examination by any government or regulatory agencies. By your signature below, you acknowledge and agree that upon the expiration of the seven-year period Nigro & Nigro shall be free to destroy our records related to this engagement.

Our audit fees for this work will be $10,000. If a savings audit is required, our fees will be an *additional* $5,000. In addition to such payment for auditing services, the auditor shall be reimbursed for such travel and mileage as may be necessary. Travel costs will include, but not be limited to, reasonable lodging, tolls, parking, and meals. Mileage on vehicles will be billed at the standard IRS rate. Our invoices for these fees will be rendered each month as work progresses and are payable upon presentation. In accordance with our firm policies, work may be suspended if your account becomes 90 days or more overdue and may not be resumed until your account is paid in full.

In the event that circumstances make it necessary to perform additional work or to expend inordinate amounts of time because of (1) incompleteness of records, (2) poor working conditions, (3) abnormal errors, (4) misappropriation of funds, (5) lack of cooperation on part of the District personnel, or (6) other circumstances disclosed by our audit, it is agreed that such additional work may be subject to either special Agreement or Agreements upon a fee basis to be mutually agreed upon by all parties or may be based on our hourly rates. Before additional fees or Agreements may be instituted, the appropriate District personnel shall be informed in writing of any deficiency or difficulties as listed above. The District will have ten (10) working days to correct or implement plans to correct said deficiency, where possible. For those deficiencies that cannot be easily corrected, the District and Nigro & Nigro agree to make amendments to the Agreement to correct the deficiency and appropriately compensate us.

If a dispute arises among the parties hereto, the parties agree to first try in good faith to settle the dispute by mediation administered by the American Arbitration Association under its Rules for Professional Accounting and Related Services Disputes before resorting to litigation. The costs of any mediation proceeding shall be shared equally by all parties.

Client and accountant both agree that any dispute over fees charged by the accountant to the client will be submitted for resolution by arbitration in accordance with the Rules for Professional Accounting and Related Services Disputes of the American Arbitration Association. Such arbitration shall be binding and final. IN AGREEING TO ARBITRATION, WE BOTH ACKNOWLEDGE THAT, IN THE EVENT OF

A DISPUTE OVER FEES CHARGED BY THE ACCOUNTANT, EACH OF US IS GIVING UP THE RIGHT TO HAVE THE DISPUTE DECIDED IN A COURT OF LAW BEFORE A JUDGE OR JURY AND INSTEAD WE ARE ACCEPTING THE USE OF ARBITRATION FOR RESOLUTION.

We appreciate the opportunity to be of service to Oxnard School District and believe this letter accurately summarizes the significant terms of our engagement. If you have any questions, please let us know. If you agree with the terms of our engagement as described in this letter, please sign below, and return it to us.

Very truly yours,

Nigro & Nigro, PC

Nigro & Nigro, PC

RESPONSE:
This letter correctly sets forth the understanding of Oxnard School District.

APPROVED:

Oxnard School District
Valerie Mitchell, Assistant Superintendent, Business Services

7-5-24
Date

OSD BOARD AGENDA ITEM

Name of Contributor: Dr. Anabolena DeGenna **Date of Meeting:** March 19, 2025

Agenda Section: Section D: Action Items

Approval of Employment Agreement - Assistant Superintendent, Human Resources (DeGenna)

On March 5, 2025, the Board of Trustees unanimously voted to appoint Dr. L. Scott Carroll to the position of Assistant Superintendent, Human Resources, pending contract approval. The Employment Agreement between the Oxnard School District and Dr. L. Scott Carroll, Assistant Superintendent, Human Resources, is presented for the Board's consideration. The term of the agreement is for March 6, 2025 - June 30, 2028.

FISCAL IMPACT:
$211,640.00 annually

RECOMMENDATION:
It is the recommendation of the Superintendent that the Board of Trustees approve the employment agreement for Dr. L. Scott Carroll, Assistant Superintendent, Human Resources, as presented.

ADDITIONAL MATERIALS:
Attached: Employment Agreement (11 pages)

EMPLOYMENT AGREEMENT FOR
ASSISTANT SUPERINTENDENT OF HUMAN RESOURCES

This Agreement is entered into the 19th day of March 2025, by and between the Board of Trustees ("Board") of, and on behalf of, the Oxnard School District ("District"), and Dr. L. Scott Carroll ("Assistant Superintendent") and constitutes a bilateral and binding Contract between the parties.

NOW THEREFORE, in consideration of the provisions and mutual promises contained herein, the District and the Assistant Superintendent agree to the following:

1. TERM OF AGREEMENT: The District hereby employs the Assistant Superintendent and the Assistant Superintendent agrees to be employed as the District's Assistant Superintendent for a term commencing March 6, 2025 and ending June 30, 2028 subject to the terms and conditions set forth herein.

2. DUTIES AND RESPONSIBILITIES

2.1 The Assistant Superintendent shall faithfully perform the duties and responsibilities of the Assistant Superintendent of Human Resources as imposed by the laws of the state of California and as further described in the District's job description. (Exhibit A, attached hereto and incorporated herein by reference). Such duties shall be performed under the supervision and direction of the District Superintendent.

2.2 All powers and duties that may lawfully be delegated to the Assistant Superintendent are to be performed and executed by the Assistant Superintendent in accordance with the policies adopted by the Board and subject to those powers specifically vested in the Board by the California Education Code.

2.3 The Assistant Superintendent shall devote his productive time, ability and attention to the business of the District and shall be available twenty-four hours a day for that purpose, except as otherwise provided below.

2.4 The Assistant Superintendent shall have a work year consisting of 245 workdays plus 16 legal and school holidays.

2.5 The Assistant Superintendent shall also perform such other duties that are consistent with his qualifications as may be assigned to him from time to time.

3. OUTSIDE PROFESSIONAL ACTIVITIES: The Assistant Superintendent may utilize accrued, unused vacation entitlements to undertake consultative work, speaking engagements, writing, lecturing, or other professional duties and obligations. Outside professional activities may be performed for consideration provided they do not interfere with or conflict with the Assistant Superintendent 's performance of his duties under this Agreement.

4. SALARY:

4.1 The salary of the Assistant Superintendent shall be two hundred eleven thousand six hundred and forty dollars ($211,640.00) per year for the term of this Agreement, payable on the last working day of each calendar month.

4.2 The Board reserves the right to increase the annual salary of the Assistant Superintendent. Increases in the annual base salary shall be merit-based and shall be dependent upon the Assistant Superintendent accomplishing or satisfying predetermined goals and objectives. The District Superintendent shall develop these goals and objectives with the assistance and input of the Assistant Superintendent by September 30 for the initial term and by July 1st, of each year of this Agreement, if the Agreement is extended. The Superintendent shall endeavor to perform an assessment by March 1st of each year to determine whether the goals and objectives have been satisfied. The evaluation shall be completed by no later than June 30th of each year. The evaluation shall be presented to the Board annually in a written report and shall specifically reference the performance responsibilities as delineated in the job description. The Board shall then decide whether salary increases are warranted.

5. HEALTH BENEFITS:

5.1 In addition to the compensation and benefits described in Articles 4 and 6, the Assistant Superintendent shall be provided with group health and welfare benefits currently available to certificated management. Group health and welfare benefits may be amended, changed, or modified by approval or resolution of the Board.

6. OTHER BENEFITS:

6.1 The Assistant Superintendent shall be entitled to the doctoral and bilingual stipends and longevity earned by certificated managers in the District.

7. SICK LEAVE: The Assistant Superintendent shall receive twelve (12) days paid sick leave per year.

8. VACATION:

8.1 The Assistant Superintendent shall be entitled to twenty-five (25) working days annual vacation with pay, for each year of service pursuant to this Agreement, supplemented by longevity vacation days provided District management personnel. The twenty-five (25) vacation days shall be credited to the Assistant Superintendent at the beginning of each school year. The Assistant Superintendent may accrue up to thirty (30) days of unused vacation to carry over into the next school year. When combined with next year's allotment, the total shall not exceed thirty (30) days. Any days in excess of thirty (30) days will be cashed out at the Assistant Superintendent 's daily rate of pay and will be paid after June 30th of each year of this Agreement.

8.2 In addition, the Assistant Superintendent is entitled to the same holidays granted management employees.

8.3 In the event of termination of this Agreement, the Assistant Superintendent shall be compensated for accrued and unused vacation, not to exceed thirty (30) days, at the then current daily rate of compensation (salary) or portion thereof.

9. EXPENSES: In accordance with its policies, the District shall reimburse the Assistant Superintendent for all actual reasonable and necessary expenses related to operation and activities of the Board and/or its members and the performance of the Assistant Superintendent duties, including but not limited to expenses related to conferences, seminars, and travel. The Assistant Superintendent shall submit receipts, invoices and an itemized list of expenses in support of a reimbursement request.

10. TRANSPORTATION: The Assistant Superintendent shall also be reimbursed for all his actual and necessary business mileage, as may be deemed necessary by the Superintendent, for miles driven during job-related activities outside of Ventura County at the standard District rate as the Board may establish.

11. PROFESSIONAL GROWTH

11.1 The District encourages the Assistant Superintendent to endeavor to continue his professional growth by all available means including attendance at professional meetings at the local, state and national level, seminars and courses offered by public or private institutions, and informal meetings with other persons whose particular skills or backgrounds would serve to improve the capacity of the Assistant Superintendent to perform his professional duties. The Assistant Superintendent shall request permission from the Superintendent for his attendance at out-of-state meetings and periodically report to the

Superintendent his appraisal of the meetings. All out-of- state travel must be approved by the Board of Trustees.

11.2 The District shall provide a reasonable amount of time for the Assistant Superintendent to participate in such professional growth activities.

11.3 The Assistant Superintendent shall provide the District with a record of his participation in any activities held outside the County and a copy of receipts for the costs involved.

11.4 The Assistant Superintendent shall be reimbursed according to the procedures and parameters set forth in the District's policies and procedures, for necessary expenses incurred for those activities described in Article 10.

11.5 The District shall pay the Assistant Superintendent 's annual dues to two (2) professional organizations of the Assistant Superintendent 's choice.

12. PROFESSIONAL LIABILITY

12.1 The District agrees that it shall defend, hold harmless and indemnify the Assistant Superintendent from any demands, claims, actions, suits, or legal proceedings brought against the Assistant Superintendent for any incident arising out of the course and scope of his employment, provided, however, that if the District is providing a defense for the Assistant Superintendent on a matter which the Board deems in the best interest of the District to settle, the Assistant Superintendent agrees to assume full responsibility for his own defense should he pursue the matter.

12.2 The provisions of Article 12 shall not apply to any action brought against the Assistant Superintendent for a breach of or dispute arising out of this Agreement, by either party, any willful and wanton conduct giving rise to civil or criminal liability, or any violation of federal, state, county, or local laws or regulations.

13. GOALS AND OBJECTIVES: Within six months of the effective date of this Agreement, the Assistant Superintendent and the District Superintendent shall jointly develop Goals and Objectives for the performance of the Assistant Superintendent. These goals and objectives shall be among the criteria by which the Assistant Superintendent is evaluated pursuant to Article 14 below.

14. REPORTING AND EVALUATION

14.1 The Superintendent shall evaluate and assess, in writing, the performance of the Assistant Superintendent at least once each year during the term of this Agreement. Said evaluations shall be conducted in accordance with District policies and procedures.

14.2 The evaluation shall be presented to the Board annually in a written report and shall specifically reference the performance responsibilities as delineated in the job description. The evaluation is recognized as a confidential document and shall be duly protected as such.

15. REPRESENTATION AND WARRANTIES

15.1 Each party agrees that as a material inducement by the District to enter into this Agreement, the Assistant Superintendent has made certain representations and warranties regarding his abilities, fitness and expertise and that these representations and warranties shall survive the execution of this Agreement.

15.2 The Assistant Superintendent represents and warrants that the oral and written information he has submitted to the District regarding his qualifications, educational achievements, and degrees is true and correct.

15.3 The Assistant Superintendent represents and warrants that he has the full authority and right to enter into this Agreement without creating liability against himself and/or the District to any persons or entity not a party to this Agreement.

16. TERMINATION OF EMPLOYMENT

16.1 Termination by Mutual Consent. This Agreement may be terminated, during the term of the Agreement, by mutual agreement of the parties, evidenced by a separate agreement, in writing, which supersedes this Agreement.

16.2 Termination for Cause

16.2.1 The District reserves the right to unilaterally terminate this Agreement for cause and without the consent of the Assistant Superintendent. Cause, under this Agreement is defined as any of the following:

16.2.1.1 The failure or inability of the Assistant Superintendent to perform any substantial duties required under this Agreement, including failure to meet the written Goals and Objectives.

16.2.1.2 The commission by the Assistant Superintendent of any act of dishonesty, fraud, misrepresentation, or other acts of moral turpitude.

16.2.1.3 A substantial breach of any covenant or condition of this Agreement by the Assistant Superintendent, or a substantial breach of any representation or warranty made by the Assistant Superintendent in this Agreement.

16.2.1.4 The commission or omission of any act by the Assistant Superintendent which could constitute a permissible "for cause" termination under federal or California law.

16.2.1.5 Should the District terminate this Agreement for cause, as defined above, the District shall give written notice to the Assistant Superintendent, and shall specify the grounds for termination, and shall specify the effective date. Any termination by the District shall be without prejudice to any other remedy entitled to the District in law or equity or any other ground for termination stated in this Agreement. Any termination by the District for cause shall be without prejudice to the Assistant Superintendent's right to challenge said decision in Superior Court pursuant to a breach of contract theory.

16.3 Termination At Will

16.3.1 The District reserves the right to terminate this Agreement "at will," without alleging or demonstrating cause and without the consent of the Assistant Superintendent. Any such termination shall be in writing and shall specify the effective date of the termination.

16.3.2 Each of the parties agree that as a condition precedent to the District's right to terminate this Agreement "at will" the District shall pay a maximum cash settlement, concurrently with the termination of the Assistant Superintendent, of an amount equal to twelve (12) months' salary, or the salary due on the remainder of the contract term, whichever is less, including health benefits only. The parties agree such payment is a fair, just and reasonable liquidated damage for the emotional distress or other compensable damages associated with separation under the circumstances existing at the time of the execution of this Agreement.

16.3.3 The Assistant Superintendent agrees that the liquidated damages

described in Article 16.3.2 constitute his sole and exclusive remedy for any "at will" termination of this Agreement by the

District, and that he waives and relinquishes any other damage and assigns the benefits only to all right, title, and interest to any such damage to the District.

16.3.4 The parties also agree that in consideration for the receipt of the liquidated damages described in Article 16.3.2, the Assistant Superintendent shall:

16.3.4.1 Waive, release and discharge the District, the Board and each member of the Board against any and all liability arising out of the termination of this Agreement.

16.3.4.2 Indemnify and hold harmless the District, the Board and each member of the Board from any and all further damages, including all court costs and attorney fees arising from such termination.

16.3.4.3 Waive any and all rights under section 1542 of the California Civil Code and further waive any comparable principle of law, whether by statute or decision. In making such waiver, the Assistant Superintendent expressly understands that section 1542 provides, in part:

"A general release does not extend to claims which the creditor does not know or suspect to exist in his favor at the time of executing the release which, if known by him must have materially affected his settlement with the debtor."

16.3.5 The Assistant Superintendent reserves the right to unilaterally terminate the Agreement by delivering written notice to the District. The effective date of the termination shall be specified by the Assistant Superintendent but shall not exceed thirty days beyond the date of notice unless otherwise approved by the Board.

16.3.6 The District shall not be required to pay the liquidated damages described in Article 16.3.2 in the event that the Assistant Superintendent exercises his right to unilaterally terminate this Agreement.

16.3.7 Should the Assistant Superintendent voluntarily seek employment elsewhere during the term of this Agreement by accepting an interview for other employment, he shall indicate to the Superintendent in writing, his intention to do so.

16.3.8 Abuse of Office Provisions. In accordance with Government Code

section 53243, et seq., and as a separate contractual obligation, should the Assistant Superintendent receive a paid leave of absence or cash settlement if this Agreement is terminated with or without cause, such paid leave or cash settlement shall be fully reimbursed to the District by the Assistant Superintendent if the Assistant Superintendent is convicted of a crime involving an abuse of the Assistant Superintendent's office or position. In addition, if the District funds the criminal defense of the Assistant Superintendent against charges involving abuse of office or position and the Assistant Superintendent is then convicted of such charges, the Assistant Superintendent shall fully reimburse the District all funds expended for the Assistant Superintendent's criminal defense.

17. RENEWAL OF AGREEMENT. The District may, but is not required to, notify the Assistant Superintendent of its intent to continue to employ the Assistant Superintendent beyond the term of this Agreement.

18. SAVINGS CLAUSE. If, during the time it is in effect, any specific provision or clause of this Agreement is declared illegal or void under federal, state, or local law or regulation, the remainder of the Agreement not effected by such ruling shall remain in full force and effect.

19. AMENDMENT. Any amendment to this Agreement must be in writing and signed by the parties.

20. APPLICABLE LAWS. The interpretation and enforcement of this Agreement shall be governed by applicable laws of the State of California, the rules and regulations of the State Board of Education, and the lawful rules and regulations of the Oxnard School District. By this reference the laws, rules, regulations and policies are hereby made a part of this Agreement as though fully set forth at this point.

21. VENUE. If a dispute arises under this Agreement, the parties agree that venue shall be proper in a Superior Court within the County of Ventura.

22. ENTIRE AGREEMENT. This document is the full and complete agreement between the parties hereto, and it can be changed or modified only by a writing, signed by all parties or their successors in interest to this Agreement.

23. COUNTERPARTS. The District and the Assistant Superintendent may execute this document in separate counterparts. Should that occur, the Agreement is as valid and binding as if it were executed on a single copy.

IN WITNESS HEREIN we affix our signatures to this Agreement as the full and complete understanding of the relationships between the parties.

The Board duly approved the terms and conditions of this Agreement and the Board President is authorized to execute this Agreement on behalf of the Board of Trustees.

For the Board of Trustees:

By:_____
Veronica Robles-Solis, Board President

I hereby accept this contract of employment and agree to comply with the conditions thereof and to fulfill all of the duties of employment as Assistant Superintendent of Human Resources of the Oxnard School District.

Date of Acceptance: _____, 2025 _____

Dr. L. Scott Carroll

OSD BOARD AGENDA ITEM

Name of Contributor: Dr. Anabolena DeGenna **Date of Meeting:** March 19, 2025

Agenda Section: Section D: Action Items

Approval of Agreement #25-02 – AT & T Business - Mobile Hotspots and Data Services - E-Rate (DeGenna/Hubbard)

RFP's were solicited per RFP #24-02 for – Mobile Hotspots and Data Services pursuant to Public Contract Code 20110. Proposals were received and opened on January 17, 2025. All bids were evaluated against criteria outlined in RFP #24-02 and the responsive and responsible bidder was identified as AT & T Business.

Terms of Agreement: July 1, 2025 through June 30, 2026

FISCAL IMPACT:

Not to Exceed: $203,550.00 = $177,000.00 – E-Rate Funding
$26,550.00 – General Funding

RECOMMENDATION:

It is the recommendation of the Chief Information Officer, and the Superintendent that the Board of Trustees approve Agreement #25-02 with AT & T Business.

ADDITIONAL MATERIALS:

Attached: Agreement #25-02, AT & T Business - E-Rate (4 Pages)
Proposal (39 Pages)

Oxnard School District

Short-Term Services Agreement

Use ONLY for low cost, low risk, short-term services – No Sub-Contractors

Requisition Number

Purchase Order Number

25-02

Contract Number

This Services Agreement (the "Agreement") is made and entered into March 19,2025 by and between the OXNARD SCHOOL DISTRICT (the "Local Educational Agency" or District") and AT & T Business, (hereinafter referred to as "Provider"). District and Provider may be referred to herein individually as a "Party" and collectively as the "Parties."

AT & T Business	805-403-8251
Provider	Telephone Number
12911 Park Plaza	chanta.peak@att.com
Street Address	E-mail Address
Cerritos, CA 90703	
City, State, Zip code	Tax Identification or Social Security Number

Services

Designated provider for Student Hotspots and Data Services funded through the E-Rate program.

Description of Services (if more space is needed, attach pages labeled as ATTACHMENT A, which is incorporated herein in full)

July 1, 2025 through June 30, 2026	TBD	TBD
Date(s) of Service	Hour(s) of Service	Location

Fees

Compensation for Services	$ 203,550.00
Other Ancillary Cost, as applicable	$ 0.00
Total not to Exceed	$ 203,550.00

☑ W-9 received

Payment. District will pay Provider within 30 days after receipt of an invoice, in form and content acceptable to District, and reflecting charges for District approved costs and services performed by Provider and not previously invoiced.

Conditions. Provider will have no obligation to provide services until District returns a signed copy of this Agreement.

Nature of Relationship. The parties agree the relationship created by this Agreement is that of independent contractor. Provider understands and agrees that the Provider, officers, agents, or employees of Provider are not entitled to any benefits normally offered or conveyed to District employees, including but not limited to coverage under the California Workers' Compensation Insurance laws.

Binding Effect. This Agreement shall inure to the benefit and shall be binding upon all of the parties to this Agreement, and their respective successors in interest or assigns.

Termination or Amendment. This Agreement may be terminated or amended in writing at any time by mutual written consent of all of the parties to this Agreement, and may be terminated by either party for any reason by giving the other party 30 days advance written notice.

Compliance with Laws. Provider hereby agrees that Provider, and each of its officers, agents, and employees (each a "Provider Party) shall obey all local, state, and federal laws and regulations in the performance of this Agreement, including but not limited to each of the following laws and regulations, as and if applicable:

- Provider shall be responsible for the safety of its employees and shall comply with California Code of Regulations Title 8, section 3205, COVID-19 Prevention.

- Provider shall ensure that each Provider Party who is on-site supporting school functions is compliant with all the following laws, if and as applicable:
  - Fingerprinting / criminal background investigations (see paragraph titled "Fingerprinting, below);
  - Public Health Department Orders and Guidance or other related mandates related to COVID-19, so long as such Orders and Guidance are in effect during the Term of this Agreement;
  - Tuberculosis Clearance (Education Code § 49406)

Non-Discrimination and Equal Employment Opportunity. Provider represents and agrees that it does not and shall not discriminate against any employee or applicant for employment, company, individual or group of individuals, because of ancestry, age, color, disability (physical and mental, including HIV and AIDS), genetic information, gender identity, gender expression, marital status, medical condition, military or veteran status, national origin, race, religion, sex/gender, and sexual orientation.

Confidentiality. Provider agrees to maintain the confidentiality of all District and District-related data, information, and records including but not limited to student identifiable information and employee personnel information pursuant to all California and Federal statutory laws relating to privacy, confidentiality, and information security including but not limited to California Education Code sections 49060 – 49085 and the Family Educational Rights and Privacy Act (FERPA), that currently exist or exist at any time during the term of this Agreement. All such records and information shall be considered confidential and kept confidential by Provider and Provider's officers, agents, employees, participants, vendors, or customers.

Fingerprinting. Provider shall ensure that Provider and any employee who interacts with students, outside of the immediate supervision and control of the student's parent or guardian or a school employee, has a current valid criminal records summary as described in California *Education Code* section 44237. If any services will be provided on-site, or through an app or other electronic method that might allow any interaction between any student and Provider shall, prior to commencing any service hereunder, provide the District a Fingerprinting/ Criminal Background Check investigation Certificate, in form and substance satisfactory to the District. While this Agreement is in effect, Provider shall immediately provide any arrest and conviction information it receives concerning any person providing Services hereunder to the District.

Food Vendors. Ventura County Environmental Health Facilities Permit: https://vcrma.org/consumer-food-protection

❑ Mobile Food Facility permit ❑ Temporary Food Facility permit ❑ Exempt – must show documentation

Date checked by school official: _____initials: _____

Indemnification. To the fullest extent permitted by law, Provider agrees to defend, indemnify, and hold harmless District, its governing board, officers, administrators, managers, agents, employees, successors, assigns, independent contractors and/or volunteers from and against any and all claims, demands, monetary or other losses, loss of use, damages and expenses, including but not limited to, reasonable legal fees and costs, or other obligations or claims arising out of any liability or damage to person or property resulting from bodily injury, illness, communicable disease, virus, pandemic, or any other loss, sustained or claimed to have been sustained arising out of activities of the Provider or those of any of its officers, agents, employees, participants, vendors, or customers of Provider, whether such act or omission is authorized by this Agreement or not. Provider also agrees to pay for any and all damage to the real and personal property of the District, or loss or theft of such property, or damage to the Property done or caused by such persons. District assumes no responsibility whatsoever for any property placed on District premises by Provider, Provider's agents, employees, participants, vendors, or customers. The provisions of this Indemnification do not apply to any damage or losses caused solely by the intentional misconduct of the District or any of its governing board, officers, administrators, managers, agents, employees and/or volunteers.

This Indemnification shall survive termination of this Agreement, for any reason whatsoever, and binds each party's legal representatives, successors, and assigns.

Insurance. Provider, at its own cost and expense, shall procure and maintain during the term of this Agreement, policies of insurance for the following types of coverage:

a. Commercial General Liability Insurance. Provider shall procure and maintain, during the term of this Agreement, not less than the following General Liability Insurance coverage in the amounts of $1,000,000 per occurrence and $2,000,000 aggregate.

   Commercial General Liability insurance shall include products/completed operations, property damage, and personal and advertising injury coverage.

b. Automobile Liability. Provider shall procure and maintain, during the full term of this Agreement following Automobile Liability Insurance including non-owned and leased automobiles, as applicable with the following coverage limits:

Personal vehicles:	$500,000.00 combined single limit or
	$100,000.00 per person / $300,000.00 per accident
Commercial vehicles:	$1,000,000.00 per accident for bodily injury and property damage

c. Workers' Compensation Insurance. Provider shall procure and maintain, during the term of this Agreement, Workers' Compensation Insurance, as required by California law, on all of its employees engaged in work related to the performance of this Agreement. Provider shall procure and maintain Employers' Liability insurance coverage of $1,000,000. Absent proof of Workers' Compensation Insurance, Provider will submit a fully executed Certification of Exemption from Workers' Compensation Insurance, which District in its sole discretion may accept or reject.

d. Other Coverage as Dictated by the District. If any employee of Provider interacts with students, outside of the immediate supervision and control of the student's parent or guardian or a certificated school employee, Provider shall procure and maintain, during the term of this Agreement, Abuse and Molestation coverage in the amounts of $2,000,000 per occurrence and $4,000,000 aggregate.

If professional services are offered, Provider shall procure and maintain, during the term of this Agreement, Professional Liability (Errors and Omissions) insurance coverage in the amounts of $1,000,000 per occurrence and $2,000,000 aggregate.

e. Provider's insurance is primary and will not seek contribution from any other insurance available to the District. Provider further hereby waives any and all rights of subrogation that it may have against the District.

f. Certificates of Insurance. Provider shall provide certificates of insurance to the District as evidence of the insurance coverage required herein, not less than 15 days prior to commencing the proposed activity, and at any other time upon the request of the District. Certificates of insurance will be deemed invalid if proper endorsements are not attached. Certificates of such insurance shall be filed with the District on or before commencement of the services under this Agreement.

g. Endorsements. Provider's Commercial General Liability insurance and Commercial Automobile Liability coverage and Abuse and Molestation coverage shall name the District, its governing board, officers, agents, employees, and/or volunteers as additional insureds. All endorsements specifying additional insureds for any of the Insurance Policies shall be as indicated below or an equivalent endorsement reasonably acceptable to the District.

1) General Liability: CG 20 26 10 01
2) Primary, non-contributory: CG 20 01 04 13
3) Waiver of subrogation: CG 24 04 05 09
4) Commercial Automobile Liability: CA 20 48 10 13

h. Acceptability of Insurers. Insurance is to be placed with insurers with a current A.M. Best's rating of no less than A: VII, unless otherwise acceptable to the District.

i. Insurance written on a "claims made" basis is to be renewed by the Provider for a period of three (3) years following termination of this Agreement. Such insurance must have the same coverage and limits as the policy that was in effect during the term of this agreement and will cover the Provider for all claims made. If coverage is canceled or non-renewed, and not replaced with another claims-made policy form with a Retroactive Date prior to the contract effective date, the Consultant must purchase "extended reporting" coverage for a minimum of three (3) years after completion of the Services.

j. Failure to Procure Insurance**.** Failure on the part of Provider to procure or maintain required insurance shall constitute a material breach of contract under which the District may immediately terminate this Agreement

Governing Law and Venues. This Agreement shall be interpreted in accordance with the laws of the State of California. If any action is brought to interpret or enforce any term of this Agreement, the action shall be brought in state or federal court situated in the County of Ventura, State of California.

Dispute Resolution. If any dispute arises out of or in connection with the Agreement, representatives of the Parties with authority to settle the dispute shall communicate, in person, electronically, or in writing within 30 days of written notice, in a good faith effort to resolve the dispute.

The parties agree that, in the event of any unresolved dispute under the agreement in which the amount sought is $5,000.00 or less, any litigation to resolve the dispute shall be brought in the Ventura County Small Claims Court.

If the unresolved amount in dispute exceeds $5,000.00, the parties agree that they will first submit the matter to a mutually agreed upon mediator. Notwithstanding the following section, Attorneys Fees, the cost of the mediator shall be borne equally by the parties.

Attorney Fees. In the event of any action or proceeding to interpret or enforce the terms of this Agreement, the prevailing party, as determined by the court or mediator, shall be entitled to recover its reasonable attorney fees and costs incurred in connection with such actions or proceeding.

Nature of Agreement. This Agreement represents the entire agreement between the parties hereto with respect to the subject matter hereof and supersedes any and all other agreements and communications however characterized, written or oral, between or on behalf of the parties hereto with respect to the subject matter hereof. This Agreement may only be modified by a written instrument signed by authorized representatives of each of the parties hereto.

Counterpart Execution. This Agreement may be executed in any number of counterparts which, when taken together, shall constitute one and the same instrument. Executed counterparts of this Agreement may be delivered by PDF email or electronic facsimile transmission and shall have the same legal effect as an "ink-signed" original.

Signature Authority. Provider represents and warrants that Provider has all requisite power and authority to conduct its business and to execute, deliver, and perform this Agreement.

Acknowledgement and Agreement

I have read this Agreement and agree to its terms

Provider Authorized Signer	Signature	Date

Oxnard School District

Melissa Reyes		
Director, Purchasing	Signature	Date

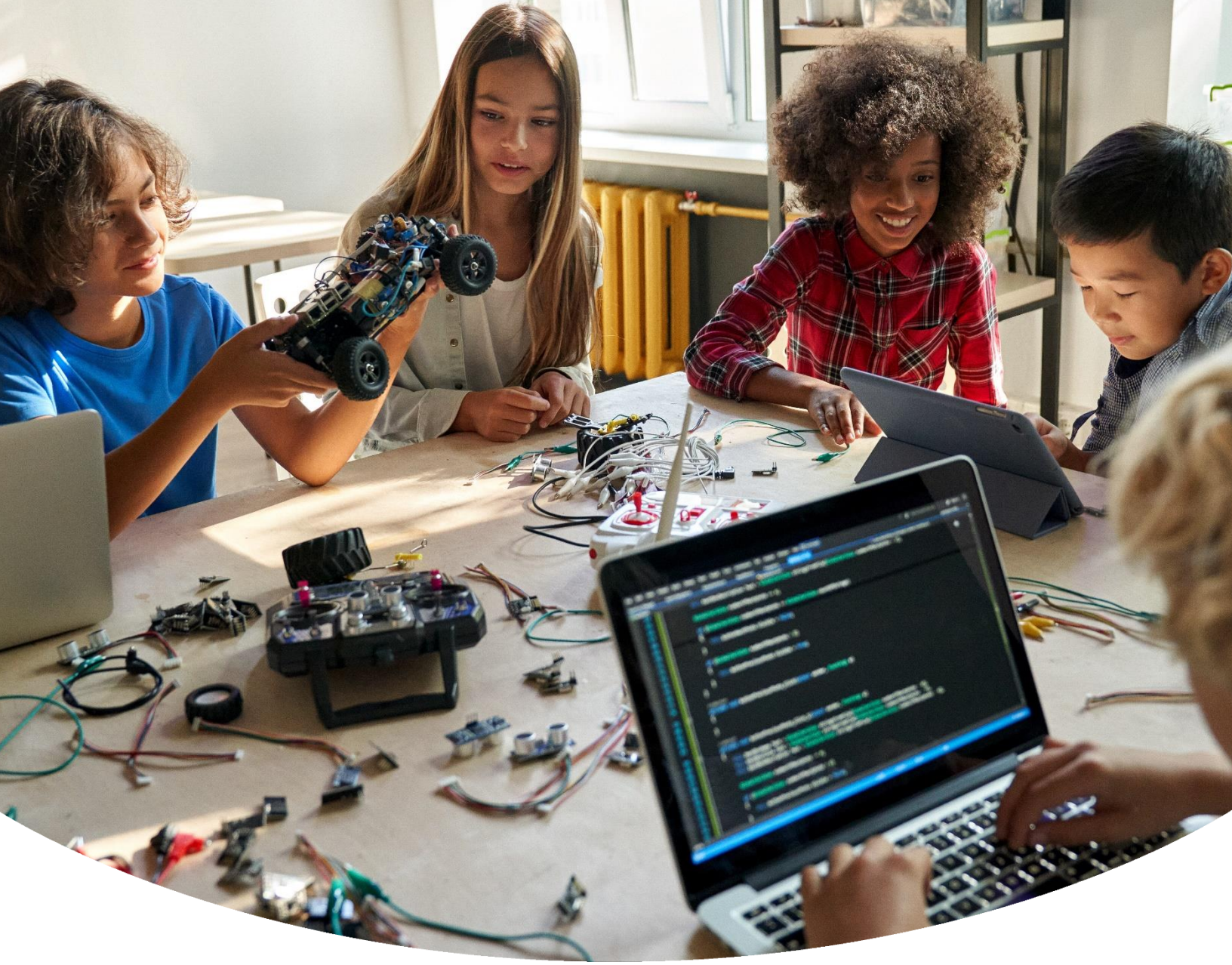

AT&T Response to Oxnard School District RFP for Wireless Hotspot Services

January 17, 2025

AT&T Business

AT&T Business

Chanta Peak
12911 Park Plaza
Cerritos, CA 90703

Cell: 805-403-8251
Email: chanta.peak@att.com

January 17, 2024

Michelle Sandoval
Executive Administrative Assistant
Oxnard School District
1051 S A Street
Oxnard, CA 93030

Dear Michelle Sandoval:

In response to the Oxnard School District E-Rate Form 470 #25008101 and RFP for wireless data services, we are submitting the attached proposal for an AT&T solution that addresses your requirements.

AT&T is an experienced provider of E-Rate-qualified services. As one of the largest telecommunications providers in the U.S., we serve millions of customers, including K-12 education systems, government agencies, global, national, and regional companies. Our Service Provider Identification Number (SPIN) information is as follows:

- AT&T Mobility, d/b/a New Cingular Wireless Services, Inc. - Consolidated SPIN 143025240

As you evaluate the responses, it is important to consider the benefits the organization can provide to Oxnard School District now and in the future. AT&T provides the strength, stability, and experience to ensure that we will be with you for the long run. You will receive outstanding customer support from a dedicated Account Team that provides a single point of contact for your services. In the following proposal, we describe the solution and summarize its benefits. More than any other provider, AT&T has the proven expertise, technology, financial strength, quality of service, and commitment to excellence that sets us apart in an increasingly competitive marketplace and economy

We are confident in the strength of this offer and in our capabilities to deliver and support it. We look forward to working with you.

Sincerely,

Chanta Peak

AT&T Sales Manager

Next Level Network - A new standard for networking

An AT&T Response to the Oxnard School District RFP for Wireless Hotspot Services

January 17, 2025

Chanta Peak
Sales Manager
AT&T
12911 Park Plaza
Cerritos, CA 90703
Office: +1 805.403.8251
Chanta.Peak@att.com

AT&T Business

Table of Contents

Table of Contents 4

Executive Summary 5

Introduction 5

Solution Pricing 2

1) Project Overview 13
2) Scope of Work 14
3) Eligibility and Compliance 15
4) Technical Specifications 15
5) Service Level Agreements (SLAs) 16
6) Budget Constraints 17
7) Proposal Evaluation Criteria 17
8) Timelines 19
9) Submission Guidelines 19

E-RATE SUPPLEMENTAL TERMS AND CONDITIONS 19

1) E-RATE CONTINGENCY 20
2) SERVICE PROVIDER REQUIREMENTS 21
3) SERVICE PROVIDER ACKNOWLEDGEMENTS 25
4) STARTING SERVICES/ADVANCE INSTALLATION 26

Category 1 Services 26

Early Funding Conditions 27

Category 1 27

Category 2 28

5) INVOICING 29
6) FCC/USAC AUDITS 30
7) PROCUREMENT OF ADDITIONAL GOODS AND/OR SERVICES AND AGREEMENT TERM 30

Executive Summary

Introduction

In response to Oxnard School District Form 470 bid #25008101, I'm pleased to present an AT&T solution tailored to meet your requirements and may qualify for E-Rate funding. The solution includes the following components:

- **AT&T E-Rate Specific 4G LTE / 5G Wireless Data Plan(s)** is an internet connectivity service that enables school districts and libraries to provide highly secure mobile internet access for students and patrons. Monthly usage reports per line provisioned in a machine readable format, proactive notification for lines of service not in use for 60 days, and automatic disconnection for lines of service with no use after 90 days pursuant to E-Rate program rules.
- **Enterprise Traffic Protector (ETP)** is included as part of the E-Rate Wireless Data Plan which filters outbound Internet traffic identifying the content category of the domain being requested to those domains pre-set Acceptable Use Policies. This can help participants maintain Child Internet Protection Act (CIPA) compliance.
- **Optional - AccessMyLAN (AML)** is an enhanced content filter which can be purchased at an additional cost. Service includes (i) a multi-tenant private APN or VPN configuration provided by AT&T and (ii) a server software agent, network-based remote access platform and administrator web console. Administrator controls restrictions on what and/or when a device can access the network, Includes robust report capabilities.
- **5G/LTE Hotspot Equipment** AT&T has hotspot devices which are fully compatible with our advanced 5G/LTE network and meet all E-Rate specifications for device eligibility. You may also use existing, compatible equipment (Bring Your Own Device, "BYOD").

Features and Benefits

The solution gives you the following:

- **Wireless service** is a set of mobile solutions, devices, applications, and plans that empower collaboration, helping you maximize academic outcomes and educational innovation, streamline operations, and improve responsiveness for your students or library patrons.

The solution has these key features:

- **The Nation's Most Reliable 4G/5G Network*** provides nationwide 4G/5G coverage over low-band (sub-6GHz) spectrum with theoretical peak speeds of 400 Mbps for more than 290 million people in 18,000 cities and towns. In addition, we're expanding our standards-based mobile 4G/5G+ mmWave network into key metros with services live in parts of 50 cities and over 70 venues. *Based on nationwide GWS test data. GWS conducts paid drive tests for AT&T and uses the data in its analysis. AT&T 4G/5G requires compatible rate plan and device. 4G/5G is not available everywhere. Go to www.att.com/4G/5Gforyou for details

Low-band Spectrum uses the < 1 GHz spectrum range, which may include generally available unlicensed spectrum and low-power wide area network (LPWAN) spectrum to provide significant signal range and propagation. Low-band spectrum lacks the capacity of mid-band and high-band spectrum. This spectrum is best used for voice, text, and an LPWAN.

Mid-band Spectrum uses 1-6 GHz spectrum to provide coverage and capacity ideal for today's connectivity needs. As a result, common applications might include using licensed (operator) spectrum, C-band, and/or shared/unlicensed spectrum on AT&Ts wireless network.

Enhanced Security uses closed, dedicated tunnels to the mobile network and strong over-the-air encryption as part of the 3GPP 4G/5G standard. In addition, 4G/5G devices use the latest encryption schemes to help enhance security. So, these subscriber identity privacy capabilities help ensure that devices connect to the correct network, reducing the risk of eavesdropping, and helping to provide more secure and reliable performance and user control than 4G/5G.

Nationwide Coverage: Check the coverage in your area at www.att.com/maps/wireless-coverage

- **Select Rate Plans for E-Rate** to provide the connectivity you need for remote and virtual education. AT&T complies with all Universal Service Administration Company (USAC) guidelines and FCC Rules, including those around the Lowest Corresponding Price, usage reports, proactive notification for non-use and service termination.
- **Mobile Applications** comprise a catalog of pre-existing and customizable enterprise-grade mobile applications including applications that can be used by K-12 schools and libraries to help comply with the Children's Internet Protection Act (CIPA) when seeking funding under the E-Rate program. K-12 schools and libraries are solely responsible for determining whether use of these products and/or network architecture satisfies their CIPA requirements under the E-Rate program. Details of the options are outlined in the appropriate section below.
- **E-Rate Compliant 5G WiFi Hotspot Device** Our hotspot devices are fully compatible with our advanced 5G/LTE network and meet all E-Rate specifications for device eligibility.

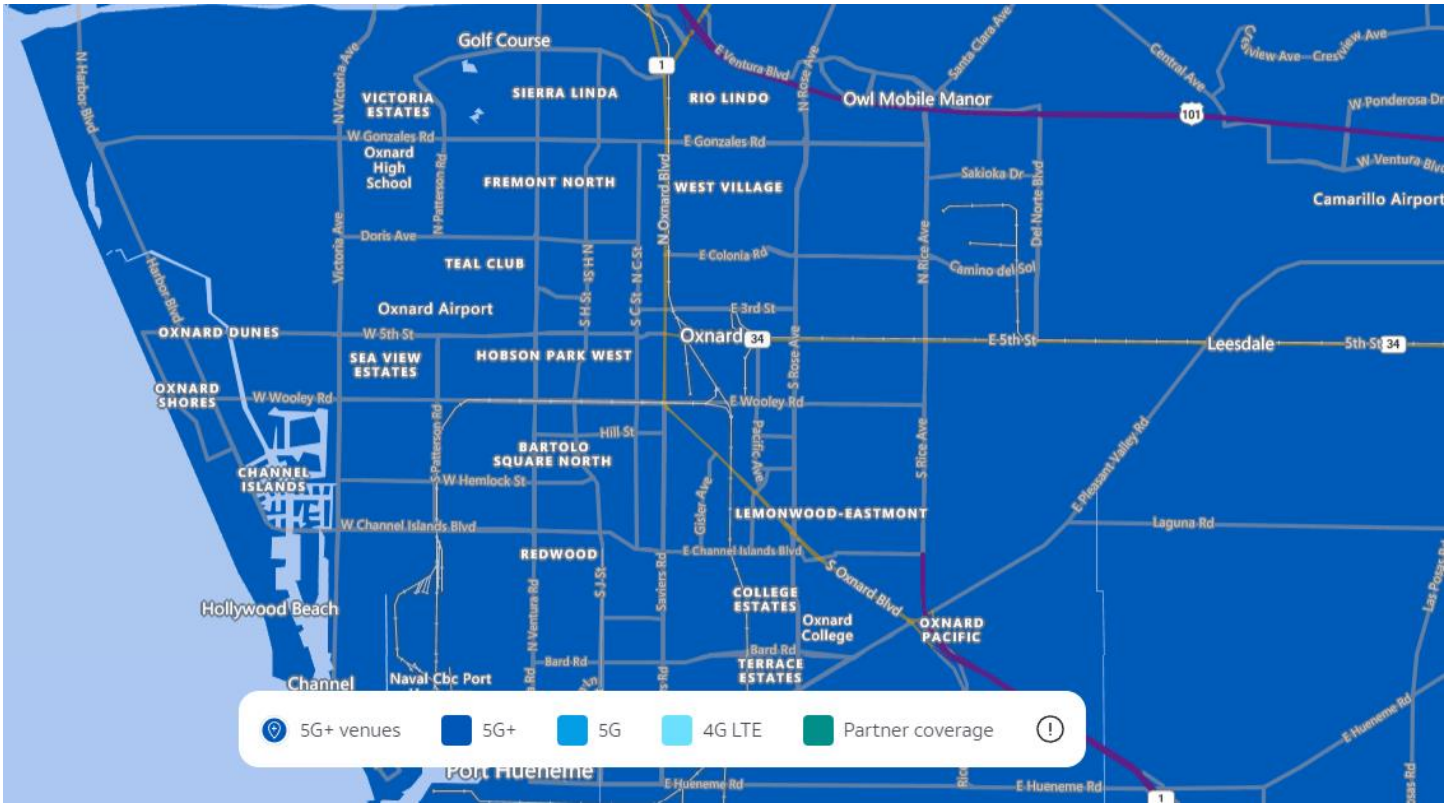

Oxnard, CA and surrounding area. This map displays approximate outdoor coverage (excluding bodies of water). See www.att.com/maps/wireless-coverage for details.

This page may be blank or include blank space.

Advantages of AT&T

Working with AT&T gives you the following advantages:

- **E-Rate Experience**—AT&T has participated in the E-Rate program for schools and libraries since the program's inception in 1998, and we're one of the program's largest service providers. We're proud to bring our technology, expertise, E-Rate knowledge, and education experience to your school or library, helping expand affordable access to advanced telecommunication services. AT&T has specific document/record retention (RIM) policies that require AT&T to retain records pertaining to E-Rate customers for 20 years, exceeding minimum requirements. For more information about AT&T and its participation in the E-Rate program, go to corp.att.com/erate.
- **Service and Support**—We offer you easy access to assistance, whether through online tools or by phone. You also get support and guidance from highly trained staff with years of networking experience. Our account teams, who work closely with you, are focused on the education industry and are well versed in the issues and challenges that today's educators face.
- **Performance**—You expect communication services that work, and we can deliver. We've made substantial investments each year to improve our technology infrastructure so that we can provide superior performance.
- **Complete Solutions**—AT&T offers a wide range of solutions. We can work with a variety of products and technologies and can assess your needs to recommend potential solutions.
- **Community Focus**—At AT&T, we're proud of our strong record of corporate citizenship. Annually, we contribute millions of dollars through corporate, foundation, and employee giving to support education and community programs.

You also have a mobility account team focused on local support:

Name	Title	Phone Number	Email
Chanta Peak	Sales Manager	805-403-8251	Chanta.peak@att.com
Griselda Castillo	Client Support Specialist	310-384-4495	Griselda.castillo@att.com
Elizabeth Admire	Client Support Specialist	714-330-3575	Beth.admire@att.com

AT&T connected LEARNING℠

We're investing in connectivity and technology, digital literacy, and digital learning solutions to **help connect today's learners with success**—in and out of the classroom. It's part of our **$2 billion commitment to help bridge the digital divide**.

Learn more at att.com/connectedlearning.

FCC Registration. AT&T Mobility, d/b/a New Cingular Wireless Services, Inc. will provide the services hereunder. Evidence of AT&T Mobility, d/b/a New Cingular Wireless Services, Inc.'s most recent Service Provider Annual Certification Form can be found at the following link: Spin Contact Search (usac.org) Proof of AT&T's "green-light" status is attached hereto. AT&T Mobility, d/b/a New Cingular Wireless Services, Inc.'s

Solution Pricing

Pricing for AT&T E-Rate Wi-Fi Hotspot Offer term: 12 months

Any renewal or extension options would be exercisable only via mutual written consent

Product		Monthly Unit Cost* 12-36 Month Terms	Quantity	Monthly Recurring Total
Data Plan	E-Rate Unlimited Hotspot Data Plan (5G / 4G LTE)[1]	$10.00	1,000	$10,000.00
	E-Rate 10GB Hotspot Data Plan (5G / 4G LTE)[2]	$10.00	0	Alternative Plan Option
Content Filtering	Enterprise Traffic Protector (E-Rate Plan Bundle)	*Included*	1,000	*Included*
	AccessMyLAN[3]	$6.00	0	*Additional Option*
			Sum Total:[4]	**$ 10,000.00**

[1] After 50GB of data usage in a bill cycle, then for the remainder of the bill cycle, AT&T may temporarily slow data speeds if the network is busy & data speeds are up to a max of 3 Mbps.

[2] There are no overages; after 10GB of data usage in a bill cycle, data speeds are slowed to a max of 256 kbps for the remainder of the bill cycle

[3] Content filtering option with added costs (ineligible for E-Rate funding).

[4] Administrative & Regulatory Recovery Fees are waived. Government Fees & Taxes and/or surcharges may apply.

Estimated Taxes and Fees, if not exempt, may be budgeted at approximately $1.50 per subscriber per month.

Product		One-Time Unit Cost[5]	Quantity	One-Time Total
Equipment Options	5G Wi-Fi Hotspot Device - 12 Month Contract Term	$57.00	1,000	$57,000.00
	5G Wi-Fi Hotspot Device - 24 Month Contract Term	$55.00	0	n/a
	5G Wi-Fi Hotspot Device - 36 Month Contract Term	$50.00	0	n/a
			Sum Total:[6]	**$ 57,000.00**

[5] Pricing for an E-Rate compliant hotspot purchased on a 1 yr term. Involuntary terminations from non-usage do not incur termination fees.

[6] Government Fees & Taxes and/or surcharges may apply.

Taxes and fees may be estimated at $30.00 per device

Hotspot Devices – Existing Equipment: Customer AT&T will use due care, but AT&T does not assume responsibility for interactions with pre-existing systems or equipment not purchased from AT&T. Customer provided equipment (Bring Your Own Device, "BYOD") must meet regulatory and/or industry standards (e.g., FCC and PTCRB) and receive AT&T technical approval for the network.

None of the products and services proposed in response utilize any equipment or services provided by a company that the FCC has designated as a national security threat to the integrity of the communication network or the communications supply chain. AT&T is compliant with

© 2025 AT&T Intellectual Property. AT&T and globe logo are registered trademarks and service marks of AT&T Intellectual Property and/or AT&T affiliated companies. All other marks are the property of their respective owners.

the 2019 Protecting Against National Security Threats Order and the FCC rules implementing this Act within the E-Rate program as first outlined in November, 2020 in DA 20-1418, the current Eligible Services List *Eligible Services List - Universal Service Administrative Company (usac.org)*.

© 2025 AT&T Intellectual Property. AT&T and globe logo are registered trademarks and service marks of AT&T Intellectual Property and/or AT&T affiliated companies. All other marks are the property of their respective owners.

Product	Service Provider Identification Number (SPIN)	AT&T Affiliate Name
AT&T E-Rate Specific Wireless Data Plan	143025240	AT&T Mobility, d/b/a New Cingular Wireless Services, Inc.
5G Hotspot Equipment		

This response to your request is not a contract offer and does not take the place of a signed contract. If you select AT&T for this service, please let us know so we can provide you the appropriate contract documents. Neither party is obligated for the selected services unless and until mutually agreed contract documents are signed by both parties. The Pricing proposed herein is based upon the specific product/service mix and locations outlined in this proposal and assumes use of AT&T contract documents and an E-Rate Rider as part of any final, negotiated contract between the parties, unless otherwise stated herein. Any changes or variations in the proposed terms and conditions, the products/services, length of term, locations, and/or design described herein may result in different pricing. Prices quoted do not include applicable taxes, surcharges, or fees. In accordance with the tariffs or other applicable service agreement terms, Customer is responsible for payment of such charges.

This space intentionally left blank.

© 2025 AT&T Intellectual Property. AT&T and globe logo are registered trademarks and service marks of AT&T Intellectual Property and/or AT&T affiliated companies. All other marks are the property of their respective owners.

Optional Services

AT&T is presenting this additional product information to alert you to other important services that can be very useful to Oxnard School District goals and overall security concerns. These services are optional and are not contingent on the purchase of any E-Rate eligible services from AT&T.

PLEASE NOTE: AT&T is not making any determinations, representations, or warranties regarding the E-Rate eligibility of these additional products and services. The eligibility of these products and services for E-Rate funding is solely determined by USAC and/or the FCC based on the applicants E-Rate discount request. Among the products and services are:

- Wide Area Network Solutions:

AT&T Dedicated Ethernet (ADE) is a highly secure 2-location dedicated Ethernet connection for bandwidth-heavy applications like VoIP, video, and data center consolidation. This fiber-based, point-to-point solution is fast & highly secure with up to 99.999% availability with SLAs.

AT&T Switched Ethernet Service is a transport service that uses industry-standard Ethernet technology to transport traffic among two or more locations. AT&T Switched Ethernet Service uses native Ethernet interfaces to transport data without using protocol conversion or special equipment.

- **AT&T Dedicated Internet** is an internet access service that combines a dedicated connection with symmetrical bandwidth (same download and upload speeds) and provides reliable, high-performance connectivity. AT&T Dedicated Internet offers the fastest speeds available (up to 1Tbps), world class Service Level Agreements (SLAs) with 100% uptime guarantees, and outage protection down to the customer edge router with 24/7 monitoring.

Wireline voice services can expand the capabilities of your AT&T Dedicated Internet (ADI) access—add Voice over IP with AT&T IP Flexible Reach service.

- **FirstNet** wireless services are designed to improve public safety communications, coordination, and response times, leading to safer and more secure communities. This can be crucial during times of crisis. For more information, visit firstnet.com.
- **AT&T Cybersecurity** can help protect your network from constantly evolving threats. Our cybersecurity professionals have helped schools, districts, and libraries with limited IT resources get the security features they need at a price that meets their budget.

For further information on our solutions and pricing, contact your AT&T representative.

.

© 2025 AT&T Intellectual Property. AT&T and globe logo are registered trademarks and service marks of AT&T Intellectual Property and/or AT&T affiliated companies. All other marks are the property of their respective owners.

AT&T's General Response to

Oxnard School District's RFP for

WiFi HotSpots and Wireless Service

RFP #24-02

("AT&T's General Response")

AT&T Mobility, LLC is submitting this Response pursuant to the terms and conditions of (a) the NASPO Valuepoint Master Agreement 149 effective as of December 3, 2019 as amended ("NAPSO 4 Master Agreement") and the corresponding State of California Participating Addendum effective October 4, 2022 (the "State of California NASPO PA"); (b) corresponding Pricing Schedule/SOW(s); (c) the attached AT&T E-Rate Rider (d) any related transactional documents (collectively, the "Proposed Contract Documents", copies of which are attached to this Response); and (e) the responses, answers, clarifications and supplemental terms and conditions set forth in and/or incorporated into this Response, including the E-Rate Response Supplement to RFP. Using or adopting, as appropriate, the terms of the pre-existing Agreement in place between the parties will simplify the contracting process and avoid having to negotiate new terms and conditions for this transaction. Oxnard School District may be referred to as the "Customer" within this Response.

The pricing submitted in this Response assumes use of the Proposed Contract Documents as the basis of any final, negotiated contract between the parties.

AT&T takes a general exception to all the terms and conditions contained in the RFP. This applies whether or not such exception is identified in the Response in the section of the RFP to which the exception corresponds. AT&T takes such a general exception primarily because the RFP does not contain the product-related contractual terms and conditions necessary for AT&T to properly deliver the products and services described in the Response. AT&T may have also taken specific exceptions to certain RFP provisions but has not made a final, complete comment on every such provision. Please note that AT&T's General Response, and the general exception above, applies in all instances, including those where specific comments/exceptions have been made and those where such comments/exceptions have not been made. The absence of any individual response to a specific section of the RFP cannot be considered a waiver of any objection or an agreement to that section's provisions. Similarly, the inclusion of any specific comment/exception does not remove the applicability of this general exception.

© 2025 AT&T Intellectual Property. AT&T and globe logo are registered trademarks and service marks of AT&T Intellectual Property and/or AT&T affiliated companies. All other marks are the property of their respective owners.

Note that included within this “AT&T’s General Response” section of the Response, in the interest of efficiency, are statements that apply to provisions throughout the RFP and should be read as applicable to any and all such related provisions. In that regard, note that:

- AT&T clarifies that only the physical response materials become Customer property. Any other pre-existing or newly developed intellectual property of AT&T, its suppliers or its third parties, provided in this Response or which is used or developed during the project remains the intellectual property of AT&T or its suppliers. AT&T would be willing to negotiate with Customer regarding rights to use that intellectual property.

- The information and pricing contained in this proposal is valid for a period of 90 days from the date written on the proposal cover page, or until the E-Rate filing window closes for the upcoming E-Rate Funding year, whichever occurs later, unless rescinded or extended in writing by AT&T.

- The Response is a direct reflection of the entire scope of work as presented here, as of the date of submission. Acceptance of only part of the quote may require mutual agreement/adjustment to the final configuration, subsequent pricing and implementation schedule.

- Regarding any proposed waiver of informalities and irregularities, AT&T agrees, except to the extent the waiver of informalities or irregularities portions of this provision as used here and throughout this Response implies AT&T waives rights to protest the award decision. To that end, AT&T reserves all protest rights afforded bidders/respondents participating in the contracting process.

- Any purchase orders issued for services as provided under any contract that results from the RFP must clearly provide that the purchase is made via the mutually agreed contract and not subject to the preprinted terms of that purchase order form.

- Any third-party software used with the services will be governed by the written terms and conditions of the third-party software supplier’s software license documentation applicable to such software.

- Title to software remains with AT&T or its supplier and such software used with the services will be governed by the corresponding software license agreement to the extent not in conflict with law or any final contract between AT&T and Customer.

© 2025 AT&T Intellectual Property. AT&T and globe logo are registered trademarks and service marks of AT&T Intellectual Property and/or AT&T affiliated companies. All other marks are the property of their respective owners.

- To the extent any portion of this project may be funded in whole or in part with grants, loans or payments from government funding sources other than Customer, AT&T and Customer will need to reach mutual agreement on AT&T's participation.

- The information and pricing submitted with this Response is subject to change on account of any error or omission in the information provided by Customer or upon further investigation(s) as to the exact requirements of any order. For the price(s) quoted herein, AT&T will provide the items of equipment and services specifically listed in its Response. Work which is not shown or described in the Response will require mutual agreement/adjustment to the final configuration, subsequent pricing and Implementation schedule.

- This Response is ©2025 AT&T Intellectual Property. All rights reserved. AT&T, AT&T logo, and all other marks contained herein are trademarks of AT&T Intellectual Property and/or AT&T affiliated companies. This Response is AT&T Proprietary and, except to the extent required by law, confidential.

- This Response is conditioned upon negotiation of mutually acceptable terms and conditions.

- Pricing proposed herein is based upon the specific product and locations outlined in this Response. Any changes or variations in the proposed terms and conditions, the products/services/quantities, length of term, locations, and/or design described herein may result in different pricing. Prices quoted do not include applicable taxes, surcharges, or fees. In accordance with the tariffs or other applicable service agreement terms, Customer is responsible for payment of such charges.

- Subsidiaries and affiliates of AT&T Inc. provide products and services under the AT&T brand. AT&T Mobility, LLC is an AT&T company, is the proposer for itself and on behalf of its service-providing affiliates.

Notwithstanding anything to the contrary set forth in the RFP, neither AT&T nor Customer is under any obligation with respect to the RFP until both parties have agreed upon and executed a mutually acceptable final contract.

It is AT&T's goal to provide the best communications services at the best value for all of our customers using the highest ethical and legal standards. Given the long and successful history of AT&T, we are confident, if AT&T is selected, this will be a successful contracting process, leading to a successful project performance.

© 2025 AT&T Intellectual Property. AT&T and globe logo are registered trademarks and service marks of AT&T Intellectual Property and/or AT&T affiliated companies. All other marks are the property of their respective owners.

E-RATE RESPONSE SUPPLEMENT TO RFP ("E-Rate Response Supplement")

As noted in AT&T's response to Oxnard School District, this *E-Rate Response Supplement to RFP* supplements the response as it relates to certain E-Rate related topics. In some places, the below refers to the AT&T E-Rate Rider, which is part of the Proposed Contract Documents in AT&T's response.

- Experience. The AT&T family of companies ("AT&T") has been participating in the E-Rate program for schools and libraries since the program's inception and can provide a wide range of E-Rate-eligible services to assure your schools and libraries are connected. For example, AT&T can provide the following under the E-Rate program: Fiber Broadband, LAN, Ethernet, MPLS, Internet access and eligible infrastructure components. AT&T is proud to bring its telecommunications expertise and knowledge of the E-Rate program to you, helping to provide eligible K-12 schools and public libraries with affordable access to advanced telecommunications services.

- ATT COMPLIANCE WITH FCC RULES. AT&T will follow all Service Provider requirements for the USF Schools and Libraries Program as set forth on the USAC website and FCC rules.

- SPIN and FCC REGISTRATION. AT&T Mobility, LLC will provide the services hereunder. Evidence of AT&T Mobility, LLC's most recent Service Provider Annual Certification Form can be found at the following link: Spin Contact Search (usac.org) Proof of AT&T's "green-light" status is attached hereto. AT&T Mobility, LLC's Service Provider Identification Number ("SPIN") is 143025240, and its Federal Communications Commission Registration Number is 0004979233

- E-Rate Compliance Training. AT&T has a policy that all individuals who perform, or who directly supervise anyone who performs, activities related to the E-Rate program are required to complete annual E-Rate Compliance training. AT&T E-Rate Training material is based on FCC/USAC E-Rate program rules and information primarily from the SLD website @ http://www.universalservice.org/sl/.

- INVOICING (SPI and BEAR billing). AT&T can accommodate both SPI and BEAR billing methods to provide E-Rate discounts and agrees to adhere to the E-Rate rules applicable to each method. *(See Section 10 of the AT&T E-Rate Rider).*

- Commencement of Work. See Section 6 of the AT&T E-Rate Rider for options for timing of commencement of work (Customer will select an option in Section 6).

© 2025 AT&T Intellectual Property. AT&T and globe logo are registered trademarks and service marks of AT&T Intellectual Property and/or AT&T affiliated companies. All other marks are the property of their respective owners.

- Service Implementation and Customer Initiated Change Requests. AT&T shall implement the proposed solution in accordance with the locations and quantities specified in the E-Rate 470 and any related RFP. TIMELY INFORMATION AND DOCUMENTATION. AT&T will provide timely information and documentation, in response to reasonable requests, in accordance with the USF Schools and Libraries Program as set forth on the USAC website and FCC Rules.

- Invoice Pre-Approval. AT&T will comply with all applicable E-Rate rules, but E-Rate rules do not require AT&T to pre-submit invoice copies for Applicant approval prior to filing.
- LOWEST CORRESPONDING PRICE. AT&T complies with all USAC guidelines and FCC Rules, including those around the Lowest Corresponding Price.

- National Security Threats. AT&T is compliant with the 2019 Protecting Against National Security Threats Order and the FCC rules implementing this Act within the E-Rate program as first outlined in November 2020 in DA 20-1418, the 2021 Eligible Services List. Eligible Services List - Universal Service Administrative Company (usac.org).

- RECORD RETENTION. AT&T will follow all FCC rules (47 CFR 54.516 Audits and Inspections) around document retention, audits and inspections. Any additional record retention and audit requirements will be as set forth in the Proposed Contract Documents.

- Program Integrity Assurance ("PIA") Review. AT&T will comply with applicable E-Rate rules and respond to E-Rate PIA reviews with details requested by the reviewer to the extent we are able to do so.

- CALIFORNIA TELECONNECT FUND PARTICIPATION. For Customers that may receive services in California, the AT&T family of companies has been participating in the California Telecommunications Fund (CTF) Program since the program's inception. Evidence of AT&T's eligibility can be found at the following website: California Teleconnect Fund

- OKLAHOMA UNIVERSAL SERVICE FUND. For Customers that may receive services in Oklahoma, AT&T participates as a Service Provider in the Oklahoma Universal Service Fund (OUSF) program and follows all rules and regulations per Oklahoma Corporation Commission Website @ Oklahoma Universal Service Fund.

The RFP contains several provisions and references related to the Federal Schools and Libraries Program, commonly known as "E-Rate" or the "E-Rate Program". Please review the E-Rate Rider in full and refer to the E-Rate Rider for additional information about the contract terms that will apply with regard to the E-Rate Program.

© 2025 AT&T Intellectual Property. AT&T and globe logo are registered trademarks and service marks of AT&T Intellectual Property and/or AT&T affiliated companies. All other marks are the property of their respective owners.

https://salesone.web.att.com/site/?appl=winpop&ajax=false&rtype=file&popApplCd=eportals&docID=54375&portal_id=310

Proposal Validity Period—The information and pricing contained in this Proposal is valid for a period of 90 days from the date written on the proposal cover page, or until the E-Rate filing window closes for the upcoming E-Rate Funding year, whichever occurs later, unless rescinded or extended in writing by AT&T.

Proposal Pricing—Pricing proposed herein is based upon the specific product/service/equipment mix and locations outlined in this proposal and is subject to AT&T's proposed terms and conditions for those products and services and the AT&T E-Rate Rider unless otherwise stated herein. Any changes or variations in the proposed terms and conditions, the products/services, length of term, locations, and/or design described herein may result in different pricing. Prices quoted do not include applicable taxes, surcharges, or fees. In accordance with the tariffs or other applicable service agreement terms, Customer is responsible for payment of such charges.

Providers of Service—Subsidiaries and affiliates of AT&T Inc. provide products and services under the AT&T brand.

Software—Any software used with the products and services provided in connection with this Proposal will be governed by the written terms and conditions applicable to such software. Title to software remains with AT&T or its supplier. Customer must comply with all such terms and conditions, and they will take precedence over any agreement between the parties as relates to such software.

Disclaimer—For purposes of this Proposal, the identification of certain services as "eligible" or "non-eligible" for E-Rate funding is not dispositive, nor does it guarantee that this or any other services in this Proposal will be deemed eligible for such funding. Any conclusions regarding the eligibility of services for E-Rate funding must be based on several factors, many of which have yet to be determined relative to the proposed services and equipment described herein. Such factors will include, without limitation, the ultimate design configuration of the network, the specific products and services provisioned to operate the network, the type of customer, and whether the services are used for eligible educational purposes at eligible locations. In its proposal, AT&T will take guidance from the "Eligible Services List" and the specific sections on product and service eligibility on the Universal Service Administrative Company ("USAC") website www.usac.org/e-rate. This site provides a current listing of eligible products and services, as well as conditionally eligible and ineligible services. This guidance notwithstanding, the final determination of eligibility will be made by the USAC after a review of the customer's E-Rate application for this proposal. If AT&T is awarded the bid for this project, AT&T will provide assistance on the E-Rate application solely on matters relative to the functionality of

© 2025 AT&T Intellectual Property. AT&T and globe logo are registered trademarks and service marks of AT&T Intellectual Property and/or AT&T affiliated companies. All other marks are the property of their respective owners.

the services and products which comprise the network. Nevertheless, the responsibility for the E-Rate application is with the customer. AT&T is not responsible for the outcome of the USAC's decision on these matters.

End User Equipment—E-Rate recipients must cost allocate any non-ancillary ineligible components that are bundled with eligible products or services. Cost allocations are the responsibility of E-Rate Applicants. For additional information, reference USAC website at www.usac.org/e-rate and Cost Allocation Guidelines for Services at www.usac.org/e-rate/applicant-process/before-you-begin/eligible-services-overview/cost-allocations-for-services/.

AT&T Response:

This response to your request is not a contract offer and does not take the place of a signed contract. If you select AT&T for this service, please let us know so we can provide you the appropriate contract documents. Neither party is obligated for the selected services unless and until mutually agreed contract documents are signed by both parties. The Pricing proposed herein is based upon the specific product/service mix and locations outlined in this proposal and assumes use of AT&T contract documents and an E-Rate Rider as part of any final, negotiated contract between the parties, unless otherwise stated herein. Any changes or variations in the proposed terms and conditions, the products/services, length of term, locations, and/or design described herein may result in different pricing. Prices quoted do not include applicable taxes, surcharges, or fees. In accordance with the tariffs or other applicable service agreement terms, Customer is responsible for payment of such charges.

© 2025 AT&T Intellectual Property. AT&T and globe logo are registered trademarks and service marks of AT&T Intellectual Property and/or AT&T affiliated companies. All other marks are the property of their respective owners.

Request for Proposal (RFP)

RFP #24-02

Provision of Mobile Hotspots and Data Services under E-Rate for Oxnard School District

Date Issued:	**November 21, 2024**	
Date Advertised:	**November 21, 2024**	**November 29, 2024**
Deadline for Questions:	**December 6, 2024 by 4 p.m. PT**	
Proposals Due:	**December 22, 2024 by 4 p.m. PT**	

Deliver Proposals by email to: Attn.: Michelle Sandoval

Email: msandoval@oxnardsd.org

Anticipated Award date:	**April 7, 2025 at 4 p.m. PT**
Start of Service:	**July 1, 2025 at 4 p.m. PT**

1) Project Overview

The Oxnard School District is issuing this RFP to procure 1,000 mobile hotspots and associated data services. The aim is to close the "homework gap" by providing internet access to students without connectivity at home. Funded through the E-Rate program, this project promotes digital equity and ensures access to essential online resources for students, staff, and library patrons.

© 2025 AT&T Intellectual Property. AT&T and globe logo are registered trademarks and service marks of AT&T Intellectual Property and/or AT&T affiliated companies. All other marks are the property of their respective owners.

2) Scope of Work

Number of Hotspots Required: 1,000

Technology or Brand Preferences: Devices optimized for educational use, featuring reliable security, ease of management, CIPA-compliant content filtering, and compatibility with district technology.

Duration of Service: Minimum 1-year, with potential extensions up to 2 years.

Data Plan Specifications:

- Unlimited 4G LTE or higher data.

AT&T Response:

AT&T has read and understands.

- Flexible usage throttling for educational content.
- Data management tools for effective use.

AT&T Response:

Our online Premier platform provides

Premier Business Center—an educational center that provides up-to-the-minute information about the latest wireless products, plans, and special offers.

Premier Online Care—a robust suite of features and services to help telecom managers (TCM) and authorized Corporate Responsibility Users (CRU) manage their wireless accounts, run reports, and view and pay bills online.

Premier Online Store—a customized portal for your wireless purchasing and program management activities

Premier eBill—an online support solution for you to efficiently view, analyze, dispute, and pay bills

In addition, we offer Enterprise on Demand (EOD)—A Unique Wireless Program for Customers with Very Large Wireless Data Deployments. EOD provides a comprehensive online environment for ordering and real-time activation, online trouble ticket management and reporting—everything you need to manage a large-scale, mission-critical wireless data solution.

© 2025 AT&T Intellectual Property. AT&T and globe logo are registered trademarks and service marks of AT&T Intellectual Property and/or AT&T affiliated companies. All other marks are the property of their respective owners.

3) Eligibility and Compliance

E-Rate Eligibility: Vendor must be an approved E-Rate vendor with an active SPIN.

AT&T Response:

AT&T Mobility, d/b/a New Cingular SLD SPIN specific to Wireless Services in this RFP is 143025240.

CIPA Compliance: Solutions must comply with CIPA, featuring cloud-based filtering and IP traffic monitoring.

AT&T Response:

AT&T has multiple options for content filtering that can be used by K-12 schools and libraries to help comply with the Children's Internet Protection Act (CIPA) when seeking funding under the E-Rate program. K-12 schools and libraries are solely responsible for determining whether use of these products (e.g. Enterprise Traffic Protector) and/or network architecture (e.g., a custom Access Point Name [APN] directing to a third party in use by the customer) satisfies their CIPA requirements under the E-Rate program. Custom APNs would necessitate design with a Mobility Technical Engineer.

Enterprise Traffic Protector (ETP) is included as part of the E-Rate Wireless Data Plan which filters outbound Internet traffic identifying the content category of the domain being requested to those domains pre-set Acceptable Use Policies. This can help participants maintain Child Internet Protection Act (CIPA) compliance.

Optional - AccessMyLAN (AML) is an enhanced content filter which can be purchased at an additional cost. Service includes (i) a multi-tenant private APN or VPN configuration provided by AT&T and (ii) a server software agent, network-based remote access platform and administrator web console. Administrator controls restrictions on what and/or when a device can access the network, including robust report capabilities. Customers may initiate a data throttle, time-of-day restrictions, or a data stop within their administrator web console.

4) Technical Specifications

Minimum Technical Requirements:

- Network Capability: 4G LTE with 5G compatibility preferred.

© 2025 AT&T Intellectual Property. AT&T and globe logo are registered trademarks and service marks of AT&T Intellectual Property and/or AT&T affiliated companies. All other marks are the property of their respective owners.

- Battery Life: Minimum 8-10 hours per charge.
- Security: Data encryption, password protection, device-level security.
- Accessories: Protective case, USB cable/wall charger, and user manual.
- Compatibility: Support for 802.11 b/g/n/ac standards iPadOS and ChromeOS platforms.

AT&T Response:

Pursuant to our interpretation of the E-Rate program rules regarding Wi-Fi Hotspots, protective cases are not included.

5) Service Level Agreements (SLAs)

AT&T Response:

AT&T is bidding its standard Service Level Agreements (SLAs) for its products and services which are available for review at: http://serviceguidenew.att.com/

Please select the appropriate service, then navigate to the Service Level Agreement section of that Service Guide.

Expected Uptime: At least 99.5% uptime.

Support and Maintenance:

AT&T Response:

Due to the many factors outside AT&T's control, AT&T is unable to make this performance commitment with reference to events outside AT&T's reasonable control. AT&T shall not be liable for any equipment failure due to a cause beyond AT&T's reasonable control or for any equipment failure which occurs as a result of the presence and/or activities of ***Oxnard School District*** or any third-party contractors hired by ***Oxnard School District***.

- 24/7 technical support.
- Zero-cost replacements for defective units.
- Fast response times for support requests.

© 2025 AT&T Intellectual Property. AT&T and globe logo are registered trademarks and service marks of AT&T Intellectual Property and/or AT&T affiliated companies. All other marks are the property of their respective owners.

AT&T Response:

Service and Support—We offer you easy access to assistance, whether through online tools or by phone. You also get support and guidance from highly trained staff with years of networking experience. Our account teams, who work closely with you, are focused on the education industry and are well versed in the issues and challenges that today's educators face.

Authorized contacts who have authority to make changes or access the account within the District may call Customer Care support (including toll free) 800-331-0500.

6) Budget Constraints

Estimated Budget: Funded through E-Rate, with itemized invoicing for eligible expenses.

AT&T Response:

AT&T's identification of certain services as "eligible" or "non-eligible" for Universal Service ("E-Rate") funding is not dispositive. Any conclusions regarding the eligibility of services for E-Rate funding are based on several factors, many of which are not within AT&T's reasonable control. AT&T will take guidance from the "Eligible Services List" and the specific sections on product and service eligibility on the Schools and Libraries Division ("SLD") of the Universal Service Administrative Company ("USAC") website: https://www.usac.org/e-rate/. This site provides a current listing of eligible products and services, as well as conditionally eligible and ineligible services. This guidance notwithstanding, the final determination of eligibility will be made by the SLD, and AT&T does not represent or guarantee the eligibility of any service or product.

AT&T is experienced with CTF and works through its Regulatory Department to ensure its contracts are timely filed with the CPUC and includes the eligible CTF products/services. Please note that the final determination of a customer's CTF eligibility is made by the CPUC and that it is the Customer's responsibility for the outcome of the CPUC's decision on these matters. AT&T abides by all CTF requirements. Evidence of AT&T's eligibility can be found at the following website: California Teleconnect Fund.

AT&T Services eligible for CTF discounts can be found at:
https://www.corp.att.com/erate/california-teleconnect-fund-program/.

Cost-Sharing: District may cover non-E-Rate eligible expenses, with itemized invoicing.

7) Proposal Evaluation Criteria

- Cost Effectiveness: Comprehensive cost of package, including data plans and devices.

© 2025 AT&T Intellectual Property. AT&T and globe logo are registered trademarks and service marks of AT&T Intellectual Property and/or AT&T affiliated companies. All other marks are the property of their respective owners.

- Technical Capability: Compliance with specifications and user management features.
- Vendor Experience: Proven experience with K-12 implementations and ERate projects.
- References: At least three references from similar projects.

AT&T Response:

Fresno Unified School District
Don Soyinthisane
Executive Director - Information Technology
2309 Tulare Street Fresno, CA 93721
Phone: 559.457.2576
Email: don.soyinthisane@fresnounified.org

Canby School District
Bret Adkins
Chief Technology Officer
1130 S Ivy St, Canby, OR 97013
Phone: 503-266-0010
Email: bret.adkins@canby.k12.or.us

Palmdale School District
Jim Smith
Manager of Information Services
39139 10th St E, Palmdale, CA 93550
Phone: 661.789.6561
Email: jmsmith@palmdalesd.org

- Customer Support and SLA Compliance: Availability and comprehensiveness of support.

AT&T Response:

AT&T is bidding its standard Service Level Agreements (SLAs) for its products and services which are available for review at: http://serviceguidenew.att.com/

Please select the appropriate service, then navigate to the Service Level Agreement section of that Service Guide.

© 2025 AT&T Intellectual Property. AT&T and globe logo are registered trademarks and service marks of AT&T Intellectual Property and/or AT&T affiliated companies. All other marks are the property of their respective owners.

8) Timelines

RFP Release Date: November 21, 2024

Deadline for Vendor Questions: December 6, 2024

Proposal Submission Deadline: December 22, 2024

Anticipated Award Date: April 7, 2025

Start of Service: July 1, 2025

9) Submission Guidelines

Submission Process:

Submit proposals electronically to msandoval@oxnardsd.org.

Required Proposal Format:

- Executive Summary
- Company Background
- Scope of Services
- Cost Plan
- SLA
- Compliance Documentation

E-RATE SUPPLEMENTAL TERMS AND CONDITIONS

Signed copy to be returned with proposal and/or bid response (“Proposal’) in response to this Solicitation (“RFP/RFB/RFQ”).

The Telecommunications Act of 1996 established a fund by which Schools and Libraries (“Applicant” or “Applicants”) across the Country could access discounts on eligible telecommunications products and services. The program is commonly known as the

E-rate Program. The eligibility for discounts on internet access, telecommunications products and services, internal connection products, services and maintenance is determined by the Federal Communications Commission (“FCC”). Funding is made available upon application approval by the Universal Service Administrative Company (“USAC”), which was established by

© 2025 AT&T Intellectual Property. AT&T and globe logo are registered trademarks and service marks of AT&T Intellectual Property and/or AT&T affiliated companies. All other marks are the property of their respective owners.

the Act. The amount of discount is based on the numbers of students eligible to receive free and reduced-price meals.

1) E-RATE CONTINGENCY

The project herein [is/may be] contingent upon the approval of funding from the Universal Service Fund's Schools and Libraries Program, otherwise known as E-rate.

Even after award of Agreement(s) and/or E-rate funding approval is approved, the Applicant may or may not proceed with the project, in whole or in part. Execution of the project, in whole or in part, is solely at the discretion of the Applicant.

AT&T Response:

With respect to purchases made via this proposal being contingent on E-Rate funding, AT&T responds as follows: The E-Rate rules require that, at the time Applicants apply for E-Rate funding, they must have a binding contract in place, unless the services are month-to-month or tariff.

https://www.usac.org/e-rate/service-providers/step-3-winning-the-bid/

Accordingly, AT&T proposes the following language be included in the definitive agreement for non-appropriations and E-Rate funding termination right. While AT&T does not agree to make this contract "contingent", AT&T would agree to the inclusion of a right to terminate the agreement if E-Rate funding is denied. Such non-appropriation and termination right would be subject to the following:

SERVICES WILL NOT COMMENCE UNTIL AT&T RECEIVES NOTIFICATION THAT E-RATE FUNDS HAVE BEEN COMMITTED; IF E-RATE FUNDING FOR SERVICES IS DENIED, AGREEMENT WILL TERMINATE AS TO THOSE SERVICES UNLESS AND UNTIL A NEW AGREEMENT (REPLACING THIS AGREEMENT) IS EXECUTED.

A. Scope: Customer agrees to use best efforts to obtain funding from the USAC/SLD. AT&T will not begin work related to the Services and/or equipment (including, without limitation, construction, installation or activation activities) until after AT&T receives Customer's notification to proceed with the order, and verification of funding approval, and, for Internal Connections (IC), a verification of Form 486 approval by the USAC/SLD. AT&T will commence Service(s) as soon as is practical following the receipt of the appropriate documentation.

B. Funding Denial Agreement Termination: If a funding request is denied by the USAC/SLD, the Agreement, with respect to such Service(s), shall terminate sixty (60) days from the date of the

© 2025 AT&T Intellectual Property. AT&T and globe logo are registered trademarks and service marks of AT&T Intellectual Property and/or AT&T affiliated companies. All other marks are the property of their respective owners.

FCDL in which E-Rate funding is denied or on the 30th day following the final appeal of such denial, and Customer will not incur termination liability. In the event Services are to be provided pursuant to a multi-year arrangement (whether by contract or tariff), this termination right applies only to the first year of the multi-year agreement. This provision does not apply to Services that were initially approved for funding and subsequently deemed ineligible by USAC after commencement of Service.

2) SERVICE PROVIDER REQUIREMENTS

The Applicant expects Service Providers to make themselves thoroughly familiar with any rules or regulations regarding the E-rate program.

a. Service Providers are required to be in full compliance with all current rules and requirements and future rules and requirements issued by the FCC and USAC throughout the agreement period of any Agreement entered into as a result of this RFP/RFB/RFQ.

AT&T Response:

AT&T will follow all Service Provider requirements for the USF Schools and Libraries Program as set forth on the USAC website and FCC rules.

The AT&T family of companies has been participating in the E-Rate program for schools and libraries since the program's inception. AT&T has a policy that all individuals who perform, or who directly supervise anyone who performs, activities related to the E-Rate program are required to complete annual E-Rate Compliance training. Further, individuals who are newly assigned to E-Rate activities are required to complete online E-Rate Compliance training prior to engaging in such activities. AT&T E-Rate Training material is based on FCC/USAC E-Rate program rules and information primarily from the SLD website @ http://www.universalservice.org/sl/. In addition, AT&T maintains a team of Regional E-Rate Subject Matter Specialists who provide E-rate Sales and Compliance direction to E-Rate Sellers and our Operational Support teams. Further, there are other AT&T staff members in Compliance, Legal and Regulatory organizations who provide supplemental E-rate guidance as required.

b. Service Providers are responsible for providing a valid Service Provider Identification Number ("SPIN"). More information about obtaining a SPIN may be found at this website: https://www.usac.org/e-rate/service-providers/step-1-obtain-a-spin/

© 2025 AT&T Intellectual Property. AT&T and globe logo are registered trademarks and service marks of AT&T Intellectual Property and/or AT&T affiliated companies. All other marks are the property of their respective owners.

AT&T Response:

AT&T Mobility, d/b/a New Cingular SLD SPIN specific to Wireless Services in this RFP is 143025240.

c. Service Providers are responsible for providing a valid Federal

Communications Commission Registration Number ("FRN") at the time the Proposal is submitted. More information about obtaining an FRN may be found at this website: https://fjallfoss.fcc.gov/coresWeb/publicHome.do

AT&T Response:

The Federal Communications Commission Registration Number ("FCCRN") for AT&T Mobility, d/b/a New Cingular Wireless Services, Inc is 0004979233.

d. Service Providers are responsible for providing evidence of FCC Green Light Status at the time the proposal is submitted. Any potential Service Provider found to be in Red Light Status must provide an explanation of the steps it is undertaking to be removed to Red Light Status and the expected timeframe for resolution. A Service Provider's sustained Red-Light Status may be grounds for termination of the Agreement as it could prohibit the Service Provider from providing E-rate discounts in a timely manner which would cause harm to the Applicant. More information about FCC Red and Green Light Status may be found at this website: http://www.fcc.gov/debt_collection/welcome.html

AT&T Response:

Proof of AT&T's green-light status is attached hereto.

e. Products and services must be delivered before billing and E-rate discounting can commence. At no time may the Service Provider invoice before July 1, 2024.

AT&T Response:

AT&T will not begin work related to the Services and/or equipment (including, without limitation, construction, installation or activation activities) until after AT&T receives Oxnard School District notification to proceed with the order without funding approval or verification in writing from the Oxnard School District to proceed based on funding approval by the USAC/SLD, whichever occurs first. AT&T will commence Service(s) as soon as is practical following the

© 2025 AT&T Intellectual Property. AT&T and globe logo are registered trademarks and service marks of AT&T Intellectual Property and/or AT&T affiliated companies. All other marks are the property of their respective owners.

receipt of the appropriate documentation. Please see the attached E-Rate Rider for more information.

AT&T will be glad to coordinate all its activities on the site with Oxnard School District, and will endeavor to meet all mutually agreed implementation dates; however, AT&T shall not be liable for any problems caused by force majeure, delays due to any fault of Oxnard School District, and/or any contractor or subcontractor employed by Oxnard School District, or network delays, or for problems resulting from causes beyond the reasonable control of AT&T.

f. Prices must be held firm for the duration of the associated E-rate Funding Year(s) or until all work associated with the project is complete (including any Agreement and USAC-approved extensions).

AT&T Response:

The prices provided in this response are consistent with the AT&T E-Rate Pricing Policy which was developed by AT&T for compliance with E-Rate pricing regulations.

The information and pricing contained in this proposal is valid for a period of 90 days from the date written on the proposal cover page or until the E-Rate filing window closes for the upcoming E-Rate Funding year, whichever occurs later, unless rescinded or extended in writing by AT&T.

See AT&T's General Response. Notwithstanding anything contained in this RFP and associated attachments and exhibits to the contrary, all terms and conditions relating to pricing, invoicing and payment shall be as provided in the Proposed Contract Documents. In addition, terms and conditions in the applicable Pricing Schedule(s) may apply.

g. Goods and services provided shall be clearly designated as "E-rate Eligible." Non-eligible goods and services shall be clearly called out as 100% noneligible or shall be "cost allocated" to show the percentage of eligible costs per USAC guidelines.

AT&T Response:

AT&T understands, however, AT&T's identification of certain services as "eligible" or "non-eligible" for Universal Service ("E-Rate") funding is not dispositive. Any conclusions regarding the eligibility of services for E-Rate funding are based on several factors, many of which are not within AT&T's reasonable control. AT&T will take guidance from the "Eligible Services List" and the specific sections on product and service eligibility on the Schools and Libraries Division ("SLD") of the Universal Service Administrative Company ("USAC") website:

© 2025 AT&T Intellectual Property. AT&T and globe logo are registered trademarks and service marks of AT&T Intellectual Property and/or AT&T affiliated companies. All other marks are the property of their respective owners.

https://www.usac.org/e-rate/. This site provides a current listing of eligible products and services, as well as conditionally eligible and ineligible services. This guidance notwithstanding, the final determination of eligibility will be made by the SLD, and AT&T does not represent or guarantee the eligibility of any service or product.

h. **For Category 2 equipment or services, within one (1) week of notification of award, the awarded Service Provider must provide the Applicant a bill of materials using a completed and most current and appropriate version of USACs "Bulk Upload Template" (formerly known as the Item 21 attachment) located at https://www.usac.org/e-rate/applicant-process/applying-for-discounts/fcc-**

f orm-471-filing/. Subsequent schedules of values and invoices must match the Bulk Upload Template and approved Funding Request Line Items or subsequent approved service substitutions. If the service provider's proposal consisted of pricing per eligible location, a summary sheet and summary Bulk Upload Template must be provided to describe the cumulative amount for all sites.

AT&T's Response to this section entitled "Category 2 Services" in its entirety:

The products and/or services requested in this section entitled "*Category 2 Services*" are not applicable to AT&T's offering. For avoidance of doubt, AT&T is not proposing Category 2 services in this Response. (h-n)

i. In the event of questions during an E-rate pre-commitment review, post-commitment review, and/or audit inquiry, the awarded Service Provider is expected to reply within 3 days to questions associated with its proposal.

j. The awarded Service Provider is required to send copies of all forms and invoices to the Applicant prior to invoicing USAC for pre-approval. Failure to comply with this requirement may result in the Applicant placing the vendor on an "Invoice Check" with the USAC:

https://www.usac.org/e-rate/applicant-process/invoicing/invoice-check/.

k. Service providers must comply with the FCC rules for Lowest Corresponding Price ("LCP"). Further details on LCP may be obtained at USAC's website: https://www.usac.org/e-rate/service-providers/step-2-responding-to-bids/lowestc orresponding-price/.

l. Service providers must not propose any equipment or services produced or provided by companies, their parents, affiliates, and subsidiaries, found to pose a national security threat to the integrity of communications networks or the communications supply chain as

© 2025 AT&T Intellectual Property. AT&T and globe logo are registered trademarks and service marks of AT&T Intellectual Property and/or AT&T affiliated companies. All other marks are the property of their respective owners.

required by FCC rules. See https://www.usac.org/about/reports-orders/supply-chain/. Any proposed solution including Covered Equipment or Services as defined by the FCC will be disqualified. If, after award of the project it is found Covered Equipment or Services are included, the award and/or Agreement will be considered to be null and void. See https://www.fcc.gov/supplychain for further information on FCC requirements.

m. SPAM and/or robotic responses will not be considered valid Proposals and will be disqualified from consideration.

n. Any Service Provider proposals identifying contingency fees such as allocations for change orders, tariffs, or other speculative fees not specifically called out for in the scope and/or terms of the RFP/RFB/RFQ will automatically be included in the Proposal price and subject to evaluation unless otherwise specified in the RFP/RFB/RFQ. Contingency fees not preapproved by the Applicant will not be allowed.

3) SERVICE PROVIDER ACKNOWLEDGEMENTS

a. The Service Provider acknowledges that no change in the products and/or services specified in its proposal will be allowed without prior written approval from the Applicant and a USAC service substitution approval with the exception of a Global Service Substitutions. See https://www.usac.org/e-rate/applicant-process/before-youre-done/service-substitu tions/.

b. The Service Provider acknowledges that all pricing and technology infrastructure information in its Proposal shall be considered as public and non-confidential pursuant to §54.504 (2)(i)(ii).

AT&T Response:

AT&T cannot agree to this section as written. AT&T respectfully requests that information in this document be held confidential by the ***Customer***, to the extent allowed under applicable law and that AT&T be notified of any request to disclose such information and be allowed to participate in any action or take action necessary to protect the information from disclosure.

c. The Service Provider acknowledges that its offer is considered to be the lowest corresponding price pursuant to § 54.511(b). Service Providers found not to be providing Lowest Corresponding Price (LCP) may be required to repay any identified overcharges to USAC. The Service Provider acknowledges that LCP is solely the service provider's responsibility, and it will not hold the Applicant liable, or seek reimbursement from any applicant, for any appeals, commitment adjustments or funding recoveries.

© 2025 AT&T Intellectual Property. AT&T and globe logo are registered trademarks and service marks of AT&T Intellectual Property and/or AT&T affiliated companies. All other marks are the property of their respective owners.

AT&T Response:

The prices provided in this response are consistent with the AT&T E-Rate Pricing Policy which was developed by AT&T for compliance with E-Rate pricing regulations.

d. The Service Provider attests that its offer does not violate the FCC's Supply Chain certifications included in the FCC Form 473. Supply Chain requirements and certifications can be viewed at USAC's Website: https://www.usac.org/about/reports-orders/supply-chain/.

AT&T Response:

AT&T is compliant with the 2019 Protecting Against National Security Threats Order and the FCC rules implementing this Act within the E-rate program as first outlined in November 2020 in DA 20-1418, the 2021 Eligible Services List. Eligible Services List - Universal Service Administrative Company (usac.org).

e. This offer is in full compliance with USAC's Free Services Advisory https://www.usac.org/e-rate/applicant-process/competitive-bidding/free-services- advisory/. There are no free services offered that would predicate an artificial discount and preclude the applicant from paying its proportionate nondiscounted share of costs. The Service Provider agrees to provide substantiating documentation to support this assertion should the applicant, USAC, or the FCC request it.

AT&T Response:

AT&T will follow all Service Provider requirements for the USF Schools and Libraries Program as set forth on the USAC website and FCC rules.

4) STARTING SERVICES/ADVANCE INSTALLATION

Category 1 Services

The annual E-rate Funding Year begins on July 1 and expires on June 30 of each calendar year. Regardless of the Agreement's "effective date," E-rate eligible goods and/or services requested in this RFP/RFB/RFQ shall be delivered no earlier than the start of the 2025 funding year (July 1, 2025). If Category 1 services

© 2025 AT&T Intellectual Property. AT&T and globe logo are registered trademarks and service marks of AT&T Intellectual Property and/or AT&T affiliated companies. All other marks are the property of their respective owners.

(Telecommunication Services and Internet access) will begin on or shortly after July 1 of a funding year, the service provider, in some cases, may need to undertake some construction and installation work prior to the beginning of that funding year. Within the limitations indicated below, the infrastructure costs of a service provider can be deemed to be delivered at the same time that the associated Category 1 services begin. That is, if services begin on July 1, then the delivery of service provider infrastructure necessary for those services can be considered as also delivered on July 1. However, NO INVOICING can take place prior to July 1 of the associated Funding Year.

AT&T Response:

AT&T will not begin work related to the Services and/or equipment (including, without limitation, construction, installation or activation activities) until after AT&T receives Oxnard School District notification to proceed with the order without funding approval or verification in writing from the Oxnard School District to proceed based on funding approval by the USAC/SLD, whichever occurs first. AT&T will commence Service(s) as soon as is practical following the receipt of the appropriate documentation. Please see the attached E-Rate Rider for more information.

AT&T will be glad to coordinate all its activities on the site with Oxnard School District, and will endeavor to meet all mutually agreed implementation dates; however, AT&T shall not be liable for any problems caused by force majeure, delays due to any fault of Oxnard School District, and/or any contractor or subcontractor employed by Oxnard School District, or network delays, or for problems resulting from causes beyond the reasonable control of AT&T.

Early Funding Conditions

Category 1

There are four conditions that must be met in order for USAC to provide support in a funding year for Category 1 infrastructure costs incurred prior to that funding year.

- Initiation of installation cannot take place before selection of the service provider pursuant to a posted Form 470 and in any event no earlier than six months prior to July 1 of the funding year.
- The Category 1 service must depend on the installation of the infrastructure.
- The underlying Category 1 service cannot have a service start date prior to July 1 of the funding year.

© 2025 AT&T Intellectual Property. AT&T and globe logo are registered trademarks and service marks of AT&T Intellectual Property and/or AT&T affiliated companies. All other marks are the property of their respective owners.

- No invoices can be submitted to USAC for reimbursement prior to July 1 of the funding year.

For more information, please refer to the FCC Order involving the Nassau County Board of Cooperative Educational Services (DA 02-3365 , released December 6, 2002). This FCC decision only applies to Priority/ Category 1 services (telecommunications services and Internet access).

The complete text can be found at the following URL:

https://www.usac.org/e-rate/applicant-process/starting-services/advance-installation/

Category 2

AT&T's Response to this section entitled "Category 2 Services" in its entirety:

The products and/or services requested in this section entitled "*Category 2 Services*" are not applicable to AT&T's offering. For avoidance of doubt, AT&T is not proposing Category 2 services in this Response.

There are two conditions that allow USAC to provide support in a funding year for Category 2 Internal Connections (equipment and services) incurred prior to that funding year.

- Applicants may seek support for Category 2 eligible services purchased on or after April 1, three months prior to the start of funding year on July 1. This will provide schools with the flexibility to purchase equipment in preparation for the summer recess and provide the maximum amount of time during the summer to install these critical networks.
- No invoices can be submitted to USAC for reimbursement prior to July 1 of the funding year.

For more information, please refer to the FCC Report and Order and Further Notice of Proposed Rulemaking (FCC 14-99 , released July 23, 2014).

It is important to note NO FCC FORM 474 INVOICING can take place before the Funding Commitment Decision Letter is issued, the FCC Form 486 is approved, and/or prior to July 1 of the funding year.

© 2025 AT&T Intellectual Property. AT&T and globe logo are registered trademarks and service marks of AT&T Intellectual Property and/or AT&T affiliated companies. All other marks are the property of their respective owners.

5) INVOICING

a. The Service Provider agrees to bill and receive a portion of the payment for the provisions of goods and services described herein directly from USAC via the FCC Form 474 Service Provider Invoice (SPI). The Applicant will only be responsible for paying its non-discounted share of costs and does not intend to use the BEAR process (FCC Form 472). The maximum percentage the Applicant will be liable for is the pre-discount amount minus the funded amount as shown on the FCC Form 471 Funding Request Number ("FRN") and associated FRN Line Items and any identified ineligible costs. Upon the successful receipt or posting of a Funding Commitment Decision Letter from USAC and submission, certification and USAC approval of FCC Form 486, the Applicant shall pay only the discounted amount beginning with the billing cycle immediately following said approval.

Alternatively, should the Applicant decide that it is in the best interest of the Applicant to file an FCC Form 472, the Applicant will inform the Service Provider of its intent.

b. The Service Provider agrees that it will not invoice USAC for equipment or services that have not been delivered to and accepted by the Applicant and installed. If equipment is being drop-shipped to the Applicant and the Applicant is responsible for installing the equipment, the Service Provider may not invoice USAC until equipment is received and accepted by the Applicant.

c. All Service Provider invoicing to USAC must be completed within 120 days from the last day of service. Should the Service Provider fail to invoice USAC in a timely manner, the Applicant will only be responsible for paying its non-discounted share.

AT&T Response:

Customer will be responsible to pay all amounts not paid for through the E-Rate program, unless the non-payment is solely a result of AT&T's violation of E-Rate rules. Customer will also be responsible for the timely filing of the Form 486 with USAC and providing such other documentation that may be required to enable AT&T to timely invoice USAC for the discounted portion of the Customer bill. If AT&T is solely responsible for failing to timely request payment from USAC and the parties are unable to obtain an extension of the deadline, Customer will not be liable for any portion of the bill that becomes uncollectible from the SLD as a result. Customer will agree to assist and fully cooperate with AT&T in pursuing all extensions and/or USAC appeals.

© 2025 AT&T Intellectual Property. AT&T and globe logo are registered trademarks and service marks of AT&T Intellectual Property and/or AT&T affiliated companies. All other marks are the property of their respective owners.

6) FCC/USAC AUDITS

The E-rate program requires that all records be retained for at least ten (10) years from the last date of service provided on a particular funding request. The Service Provider hereby agrees to retain all books, records, and other documents relative to any Agreement resulting from this RFP/RFB/RFQ for ten (10) years after final payment. The Applicant, its authorized agents, and/or auditors reserves the right to perform or have performed an audit of the records of the Service Provider and therefore shall have full access to and the right to examine any of said materials within a reasonable period of time during said period.

AT&T Response:

AT&T will follow all Service Provider requirements for the USF Schools and Libraries Program as set forth on the USAC website and FCC rules (47 CFR 54.516 Audits and Inspections) around document retention, audits and inspections. Any additional record retention and audit requirements will be as set forth in the Proposed Contract Documents.

7) PROCUREMENT OF ADDITIONAL GOODS AND/OR SERVICES AND AGREEMENT TERM

During the term of any Agreement resulting from this RFP/RFB/RFQ, the Applicant may elect to procure additional or like goods and/or services offered by the Service Provider. Such services shall be negotiated and obtained via an official amendment to this Agreement and approval by the Applicant's Governing Board. All terms, conditions, warranties, obligations, maintenance and support of said goods or services shall have a coterminous expiration date with the original date of this Agreement. The Applicant shall not enter into a separate Agreement for said goods or services. Service Providers must state in their proposal that they acknowledge, accept and are in agreement with coterminous expiration conditions.

AT&T Response:

AT&T’s proposal hereunder is a direct reflection of the scope of work as presented here, as of the date of submission. Changes /modifications made after submission will require mutual agreement/adjustment to the new scope and performance requirements. For the prices quoted AT&T will provide services for the listed sites. Any additional services will be provided at additional cost.

Any increases in bandwidth or the addition of sites must adhere to E-Rate program regulations. AT&T shall not be held accountable for Customer-initiated network upgrades or site additions that do not comply with E-Rate program guidelines. The following link directs to the Universal

© 2025 AT&T Intellectual Property. AT&T and globe logo are registered trademarks and service marks of AT&T Intellectual Property and/or AT&T affiliated companies. All other marks are the property of their respective owners.

Service Administration Company (USAC) website, which contains a comprehensive set of E-Rate program rules: E-Rate - Universal Service Administrative Company (usac.org).

See AT&T's General Response. Notwithstanding anything contained in this RFP to the contrary, all terms and conditions relating to amendments/changes shall be as set forth in the Proposed Contract Documents. In addition, terms and conditions in the applicable Pricing Schedule(s) may apply.

For clarification, any supplement to or modification of any provision of the Unified Agreement or changes in scope during the term of the contract must be in writing, mutually agreed and signed by authorized representatives of both parties.

I, the undersigned, as an authorized agent of AT&T Mobility LLC

(Service Provider Name), hereby certify that I have read the E-rate Supplemental Terms and Conditions, am fully compliant and intend to cooperate with the E-rate process as outlined above. ***** subject to the exceptions, clarifications and responses specified in AT&T's Proposal Response ***.**

Signature: Chanta Peak **Title**: Sales Manager

Phone Number: 805.403.8251 **Email**: Chanta.Peak@att.com

Service Provider Name: AT&T Mobility LLC

Service Provider FCC Registration Number: 0004979233

Service Provider Identification Number: 143025240

© 2025 AT&T Intellectual Property. AT&T and globe logo are registered trademarks and service marks of AT&T Intellectual Property and/or AT&T affiliated companies. All other marks are the property of their respective owners.

OSD BOARD AGENDA ITEM

Name of Contributor: Dr. Anabolena DeGenna **Date of Meeting:** March 19, 2025

Agenda Section: Section D: Action Items

Consideration of the Adoption of Resolution No. 24-17 Authorizing and Directing the Conveyance of a Right of Way Easement to the City of Oxnard (Hubbard)

The City of Oxnard ("City") has approached the Oxnard School District (the "District") to request a Permanent Public Sidewalk and Public Utility Easement (the "Right of Way Easement") for the construction, reconstruction, operation, repair and maintenance of a public sidewalk along with public utilities and appurtenances, including but not limited to curbs, gutters, sidewalks, handicap ramps and drainage (collectively, the "Public Improvements").

In connection with the request, the City informed the District that it is performing street repair projects to comply with certain federal and State of California requirements concerning the Americans with Disabilities Act (the "Act"). According to the City (i) the Act mandates standards and safety enhancements for sidewalk and curb ramp construction, and (ii) the City also informed the District that the State requires the City to comply with the ADA standards (collectively, the "City Project"). The City Project includes certain improvements to be performed at the intersection of Cooper Road and Bonita Avenue.

The Right of Way Easement requested by the City consists of a roughly triangular area, approximately 908 square feet in size, on the northwest corner of the Ramona Elementary School, which is located at the address commonly known as 804 Cooper Road and is owned and operated by the District (the "District Property"). The City has offered to pay the District the sum of $1,271 in exchange for the Right of Way Easement, all as provided in the Easement Contract attached to this Resolution. Pursuant to the Easement Contract, the City commits to coordinate with the District on the schedule and timing of all construction activities in and around the District Property.

After appropriate public notice as required by Education Code Section 17561, this Board will consider adoption of the Resolution authorizing and directing the execution of the Easement Contract and the Easement Deed dedicating and conveying the Right of Way Easement to the City, all as described and depicted on the Grant Deed attached to the Resolution.

FISCAL IMPACT:
The City of Oxnard will pay the District $1,271.00 in exchange for the Right of Way Easement.

RECOMMENDATION:
It is the recommendation of the Chief Information Officer that the Board adopt Resolution No. 24-17 Authorizing the Conveyance of a Right of Way Easement to the City of Oxnard and related documents and actions.

ADDITIONAL MATERIALS:

Attached: Resolution No. 24-17 (2 pages)

Right of Way Contract - Sidewalk Easement, including Exhibits A and B thereto (9 pages; Attachment 1 to Resolution)

Notice of Intent (1 page)

RESOLUTION NO. 24-17

RESOLUTION OF THE BOARD OF TRUSTEES OF THE OXNARD SCHOOL DISTRICT AUTHORIZING AND DIRECTING THE CONVEYANCE OF A RIGHT OF WAY EASEMENT TO THE CITY OF OXNARD

WHEREAS, the Oxnard School District ("District") is the owner of certain real property located at *804 Cooper Road, Oxnard*, County of Ventura, State of California, and more commonly known as the *Ramona Elementary School* ("Property"); and

WHEREAS, the City of Oxnard ("City") has, in connection with certain public improvements being carried on by City, which include certain public improvements to certain streets and sidewalks around the Property, requested that the District transfer and convey to City in exchange for a payment in the amount of **$1,271**, a portion of land currently owned by District and located at 804 Cooper Road, Oxnard, California to be used by the City as a right of way for public streets and public utility purposes (the "Right of Way Easement") by means of Right of Way Contract – Sidewalk Easement, attached hereto as **Attachment 1** (the "Contract"), and an Easement Deed, attached to the Contract as **Exhibit B** (the "Easement");

WHEREAS, the California Education Code, commencing with Section 17556, authorizes District to, by a two-thirds (2/3) vote of this Board of Trustees ("Board"), dedicate or convey to the City, any real property belonging to the district, either in fee or any lesser estate or interest therein, in accordance with the provisions of Sections 17556 to 17561; and

WHEREAS, in compliance with Education Code section 17561, the District posted copies of a notice of intent to convey (the "Notice") at three public places within the District, and on the District's website, not less than 10 days before today's meeting informing the public of the District's intent to convey the Right of Way Easement to the City; and

WHEREAS, prior to the request for said conveyance, the City informed the District that the City might, at no cost to District, need to relocate certain City and/or District improvements, which might include the relocation of a portion of the fence surrounding the Ramona Elementary School, and that such relocations would only be performed if required to advance and complete the City's project in connection with which the Right of Way Easement is being acquired by the City; and

WHEREAS, the grant of the Right of Way Easement, as described and depicted on **Attachment 1** hereto, is in the best interests of the District because it provides improvements and continuing upgrades of streets, roads, sidewalks and other public improvements of benefit to the community and the Property.

NOW THEREFORE, THE BOARD OF TRUSTEES OF THE OXNARD SCHOOL DISTRICT DOES HEREBY RESOLVE, DETERMINE AND ORDER AS FOLLOWS:

1. Recitals. The foregoing recitals are true and correct.

2. Authorization. This Board hereby determines that the District has complied with the requirements necessary to grant and convey the Right of Way and authorizes and directs the Board President, the District Superintendent, and the Chief Information Officer, each acting alone, to execute and deliver the Contract and the Easement Deed for the Right of Way, substantially as described and depicted on **Attachment 1**. This Board also authorizes and directs the Board President, the District Superintendent, the Chief Information Officer, and the District's staff to take, or cause to be taken, every action necessary to complete the conveyance and dedication of the Right of Way to the City of Oxnard, including without limitation causing to be prepared, executed or delivered any other documents, certification or documents required in connection with the Right of Way Easement, the Contract and all other matters contemplated and authorized under this Resolution.

3. Ratification. All actions previously taken by or at the request of the District in connection with the Right of Way Easement, the Contract, the relocation of any portion of the fence around the Property and all related matters, including any inspections, documents, discussions, meetings with the City representatives concerning the Right of Way or Easements or actions required to be taken by the District or the Board are hereby ratified and confirmed.

APPROVED, PASSED AND ADOPTED by the Board of Trustees of the Oxnard School District, County of Ventura, California on March 19, 2025 by at least a two-thirds (2/3) vote, as follows:

AYES:

NOES:

ABSENT:

ABSTAIN:

_____
President, Oxnard School District
Board of Trustees

Attest:

_____
Oxnard School District
Superintendent

RIGHT OF WAY CONTRACT –SIDEWALK EASEMENT

APN: 201-0-132-010
Owner: Oxnard School District
Project: City of Oxnard—Sidewalk Improvements

THIS CONTRACT ("Contract") covering property located in the City of Oxnard, State of California and identified as Assessor's Parcel Number 201-0-132-010 has been made and entered into by and between Oxnard School District (hereinafter called "Grantor") and City of Oxnard (hereinafter called "City").

In consideration of which, and the other considerations hereinafter set forth, it is mutually agreed as follows:

1. City is to construct certain roadway and sidewalk improvements at the corner of Bonita Avenue and Cooper Road in the City of Oxnard.. To complete these improvements the City requires an easement on the property located at 804 Cooper Road, which is owned by Grantor and is used as the Ramona Elementary School. The improvements to be constructed by City are generally shown on attached Exhibit A. All improvements will be constructed by City at no cost to Grantor.

2. Grantor agrees to execute and provide to City the easement document attached hereto as Exhibit B.

3. City will coordinate with Grantor on schedule and timing of construction activities in and around the area of Ramona Elementary School.

4. The parties to this Contract have herein set forth the whole of their agreement. The performance of this Contract constitutes the entire consideration for the Grantor providing the easement.

5. The City shall pay the Grantor the sum of **$1,271**. Said sum shall be paid within sixty days of the date of City acceptance and execution of this Contract.

6. This Contract may be executed in counterparts, each of which so executed shall irrespective of the date of its execution and delivery be deemed an original, and all such counterparts together shall constitute one and the same document.

7. This Contract is subject to and conditioned upon approval by the City of Oxnard and Oxnard School District. This Contract is not binding until executed by the appropriate City and School District official(s) acting in their authorized capacity.

8. This Contract shall be binding upon and inure to the benefit of the heirs, devisees, executors, administrators, legal representatives, successors and assigns of the Grantor.

9. The parties to this Contract shall, pursuant to Section 21.7(a) of Title 49, Code of Federal Regulations, comply with all elements of Title VI of the Civil Rights Act of 1964. This requirement under Title VI and the Code of Federal Regulations is to complete the USDOT Non-Discrimination Assurance requiring compliance with Title VI of the Civil Rights Act of 1964, 49 C.F.R. Parts 21 and 28 C.F.R. Section 50.3.

   Further, no person in the United States shall, on the grounds of race, color, or national origin, be excluded from participation in, be denied the benefits of, or be otherwise subjected to discrimination under any program or activity that is the subject of this right of entry.

No Obligation Other Than Those Set Forth Herein Will be Recognized

GRANTOR:
Oxnard School District

By: _____ Date: _____

City of Oxnard

By: _____ Date: _____
Name:
Title:

EXHIBIT A

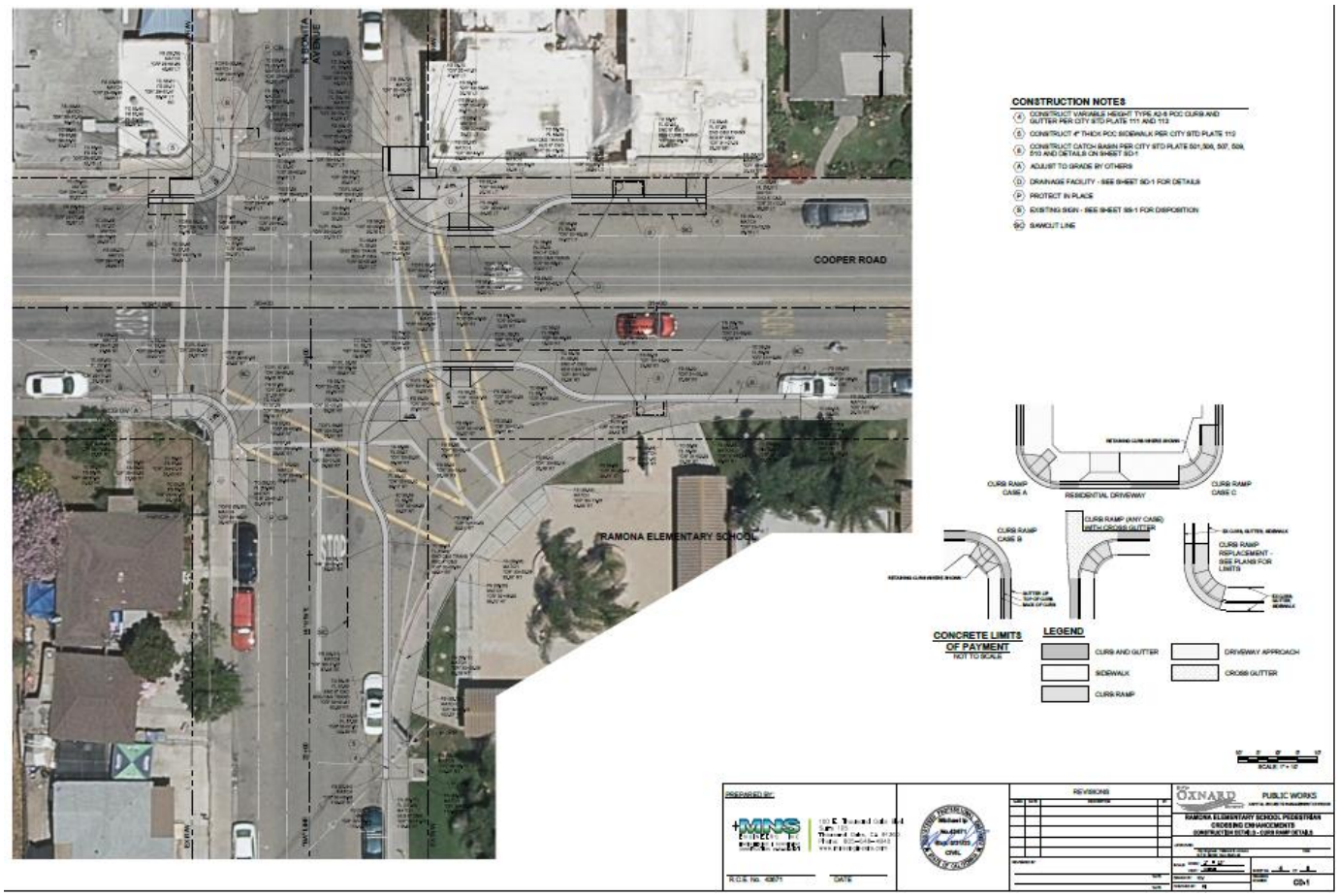
COOPER ROAD
RAMONA ELEMENTARY SCHOOL
CONSTRUCTION NOTES
CONCRETE LIMITS OF PAYMENT
NOT TO SCALE
LEGEND
CURB AND GUTTER
SIDEWALK
CURB RAMP
DRIVEWAY APPROACH
CROSS GUTTER
PUBLIC WORKS
CD-1

Exhibit B

(Copy of Easement Deed)

Recording requested by:

Hamner, Jewell & Associates
Government Real Estate Services

When recorded, mail to:

City of Oxnard
Attn: City Clerk
305 W. Third Street
Oxnard, CA 93030

Exempt from the $75 Building and Jobs Act Fee per Gov't Code §27388.1(2)(D) Public Agency
No Documentary Transfer
Tax per R&T Code § 11922
No Recording Fee per Government Code § 27383

APN: 201-0-132-010

EASEMENT DEED

(To the City of Oxnard)

For valuable consideration, receipt of which is hereby acknowledged,

OXNARD SCHOOL DISTRICT (hereinafter referred to as "Grantor"),

hereby grants to the City of Oxnard, its successors and assigns (hereinafter referred to as "Grantee"),

A Permanent Public Sidewalk and Public Utility Easement for the present and future construction, reconstruction, operation, repair, maintenance of a public sidewalk along with public utilities and appurtenances, including but not limited to curbs, gutters, sidewalks, handicap ramps, drainage, with such accessory parts and structures, as Grantee or its successors in interest, from time to time, deem necessary to install over, upon, under, through, along and across that certain real property situated in the County of Ventura, State of California, legally described in Exhibit "A" and depicted in Exhibit "B", each attached hereto and made a part hereof (the "Easement Area").

The easement granted herein includes the right to construct and maintain a public sidewalk and handicap ramp and the right to plant and maintain vegetation within the Easement Area. Additionally, Grantor does hereby further grant to Grantee, its successors and assigns, the necessary rights of entry to and from the Easement Area for future construction, reconstruction, operations, repair, maintenance, streetscaping or landscaping.

GRANTOR:
Oxnard School District

By: _____
Name:
Title:

ACKNOWLEDGMENT

A notary public or other officer completing this certificate verifies only the identity of the individual who signed the document to which this certificate is attached, and not the truthfulness, accuracy, or validity of that document.

State of California
County of _____

On _____ before me, _____, Notary

Public, personally appeared _____,
who proved to me on the basis of satisfactory evidence to be the person(s) whose name(s) is/are subscribed to the within instrument and acknowledged to me that he/she/they executed the same in his/her/their authorized capacity(ies), and that by his/her/their signature(s) on the instrument the person(s), or the entity upon behalf of which the person(s) acted, executed the instrument.

I certify under PENALTY OF PERJURY under the laws of the State of California that the foregoing paragraph is true and correct.

WITNESS my hand and official seal.

Signature _____ (Seal)

CERTIFICATE OF ACCEPTANCE
(California Government Code Section 27281)

This is to certify that the interest in real property conveyed by the Easement Deed dated _____ from Oxnard School District to the City of Oxnard, a municipal corporation and governmental agency, is hereby accepted, and pursuant to City Council Resolution No. 1939, recorded in book 1591, Official Records of Ventura County at page 273 , the City Council consents to recordation thereof by its duly authorized officer.

In Witness Whereof, I have hereunto set my hand this ___ day of _____, 20__.

CITY OF OXNARD, a municipal corporation

By_____
Name:
Title:

ATTEST:

By _____
Name:
Title:

EXHIBIT "A"

LEGAL DESCRIPTION

SIDEWALK EASEMENT

That portion of Parcel A in the City of Oxnard, County of Ventura, State of California, as shown on the Map of Swift Subdivision filed in Book 16, Pages 85 through 86, of Miscellaneous Records (Maps) in the office of the County Recorder of said County, lying northwesterly of the following described line:

Commencing at the northwest corner of said Parcel A; thence the along north line of said Parcel A, South 90°00'00" East 50.87 feet to the Point of Beginning, said point also being the beginning of a non-tangent curve, concave southeasterly and having a radius of 85.00 feet, a radial line to said point bear bears North 19°59'21" West; thence, leaving said north line along said curve,

Southwesterly through a central angle of 50°07'16" a curve length of 74.36 feet to the west line of said Parcel A.

Containing an area of 908 square feet, more or less.

12/19/2023

James F. Fallon. P.L.S. 7807

LEGAL: 0658-25ex01_lgl_esmt.docx
EXHIBIT: 0658-25ex01_esmt.dwg
CLOSURE: 0658-25ex01_esmt_clsr.docx

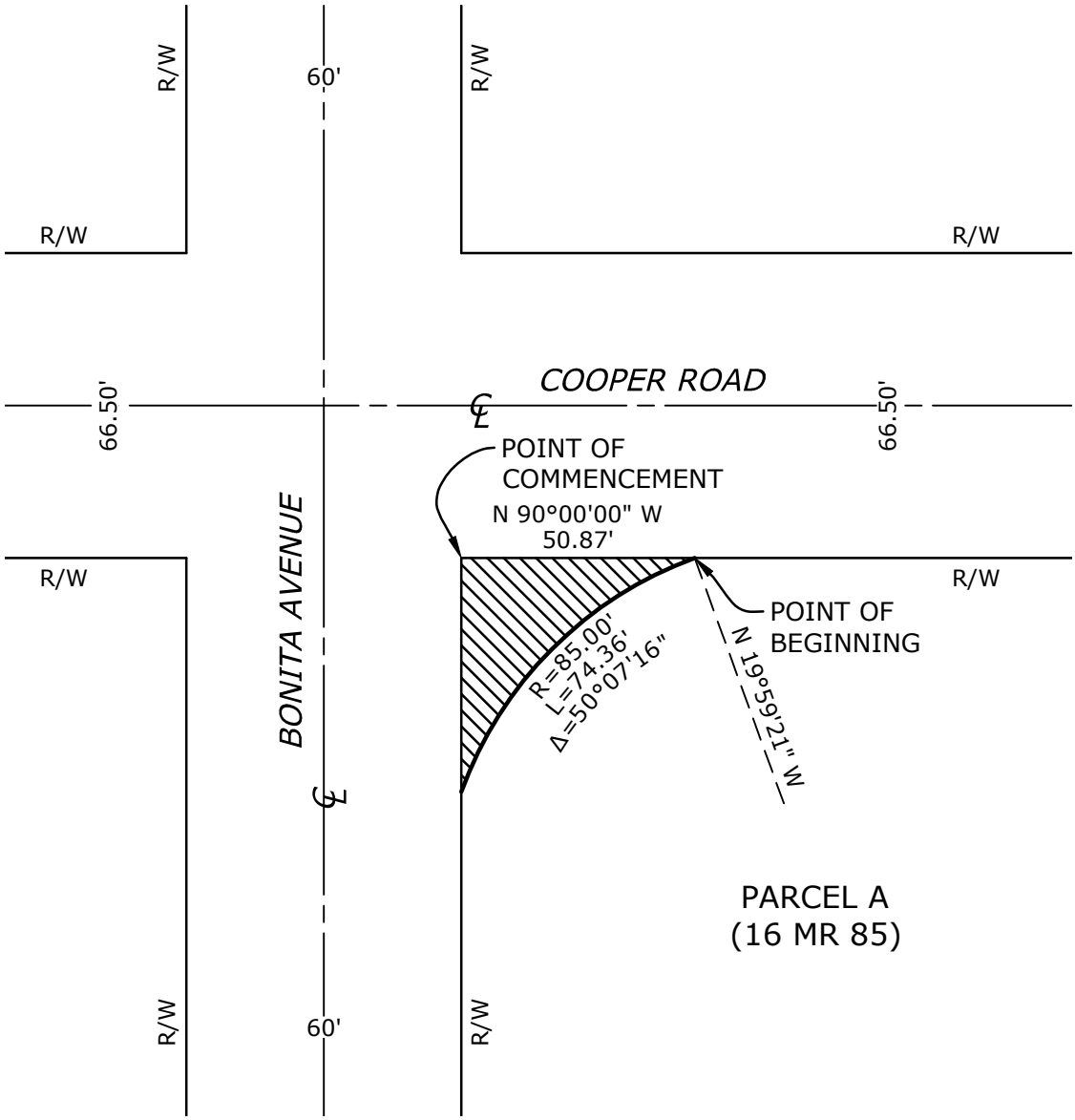

PROFESSIONAL LAND SURVEYOR
JAMES P. FALLON
NO 7807
STATE OF CALIFORNIA

12/19/23

N
W E
S

EASEMENT AREA: 908 SQ. FT. ±

SCALE: 1"=40'

0 40 80

EXHIBIT "B"
SIDEWALK EASEMENT
OXNARD, CA

Encompass Consultant Group

WO 0658-25 0658-25esmt.dwg

SHEET 1 OF 1

N:\projects\0658\25 Ramona Elem Easement\geo\cad\0658-25ex01_esmt.dwg

OXNARD SCHOOL DISTRICT

1051 South "A" Street ♦ Oxnard, California 93030 ♦ 805/385-1501 ♦ www.oxnardsd.org

NOTICE OF INTENT
TO CONVEY AND DEDICATE REAL PROPERTY
TO THE CITY OF OXNARD FOR RIGHT OF WAY PURPOSES

NOTICE IS HEREBY GIVEN that the Oxnard School District (the "District") intends to convey and dedicate certain real property to the City of Oxnard (the "City") for right of way and sidewalk improvement purposes.

The dedication of land is required by the City in connection with certain street and sidewalk improvements to be performed by the City at the corner of Bonita Avenue and Cooper Road ("Public Improvements"). The City has informed the District that the Public Improvements are required to enhance safety enhancement at that corner, to widen the sidewalk at that intersection, and to improve access, health, safety and traffic issues around the Ramona Elementary School site.

If approved, it is anticipated that the instrument(s) accomplishing the right of way dedication and easement will be recorded as soon as the documents are approved and finalized by the City.

The proposed dedication of land for right of way purposes will be considered by the Board of Trustees of the Oxnard School District at its **regularly scheduled public meeting on March 19, 2025**. The meeting will be held commencing at **5:00 p.m.** in the Board Room located **at 1051 South A Street, Oxnard, California 93030**.

The public is invited to attend the meeting and to provide comments in connection with the anticipated dedication of District real property to the City.

Questions and/or comments should be directed to David Hubbard, Chief Information Officer (805) 385-1501, ext. 2501 or delivered to the District's administrative office located at 1051 South A Street, Oxnard, CA 93030.

OSD BOARD AGENDA ITEM

Name of Contributor: Dr. Anabolena DeGenna **Date of Meeting:** March 19, 2025

Agenda Section: Section D: Action Items

Approval of Agreement #25-01 with Durham School Services for Pupil Transportation Services (Hubbard/Galván)

RFP's were solicited per RFP #24-01 for Pupil Transportation services pursuant to Public Contract Code 20110. Proposals were received and opened on February 24, 2025 at 11:00 AM. All bids were evaluated against criteria outlined in RFP #24-01 and the winning bidder was identified. It is requested that the Board of Trustees approve Agreement #25-01 with Durham School Services as the responsive and responsible bidder.

Term of Agreement: July 1, 2025 through June 30, 2027

FISCAL IMPACT:
Not to Exceed: $14,000,000.00 (2 years) – General Fund

RECOMMENDATION:
It is the recommendation of the Director of Transportation, and the Chief Information Officer, that the Board of Trustees approve Agreement #25-01 with Durham School Services.

ADDITIONAL MATERIALS:

Attached: Schedule of Fees - Driver Time (1 page)
Schedule of Fees - Live Hours (1 Page)
#25-01 Agreement- Durham School Services (15 pages)

Option #1 - 5.75 Hour Base Rate - Billable hours based on total driver time

SCHEDULE OF FEES

It is agreed that effective July 1, 2025 through June 30, 2026 the rates shall be as stated below:

BUS TYPE AND CAPACITY	FLAT RATE (UP TO 5.75 HR/75 MILES)	RATE PER OVER HOUR	RATE PER OVER MILE
Type A or B (18-20 ambulatory passengers)	$620.29	$67.50	N/A
Type C (30-46 ambulatory passengers with minimum 2 wheelchair positions)	$697.18	$67.50	N/A
Type D (78-84 ambulatory with undercarriage storage)	$710.20	$67.50	N/A

FIELD TRIPS

BUS TYPE A OR B $ 71.75 PER HOUR

BUS TYPE C $ 71.75 PER HOUR

BUS TYPE D $ 71.75 PER HOUR

It is agreed that effective July 1, 2026 through June 30, 2027 the rates shall be as stated below:

BUS TYPE AND CAPACITY	FLAT RATE (UP TO 5.75 HR/75 MILES)	RATE PER OVER HOUR	RATE PER OVER MILE
Type A or B (18-20 ambulatory passengers)	$638.90	$69.53	N/A
Type C (30-46 ambulatory passengers with minimum 2 wheelchair positions)	$718.10	$69.53	N/A
Type D (78-84 ambulatory with undercarriage storage)	$731.51	$69.53	N/A

BUS TYPE A OR B $ 73.90 PER HOUR

BUS TYPE C $ 73.90 PER HOUR

BUS TYPE D $ 73.90 PER HOUR

IN WITNESS WHEREOF, the parties hereto have executed this Schedule of Rates as of the dates written below.

[PROVIDER LEGAL NAME]

By: Durham School Services, L.P.

Name: Ken Pittman

Title: Business Development, Director

Date: 2/20/2025

OXNARD SCHOOL DISTRICT

By: _____

Name: _____

Title: _____

Date: _____

SCHEDULE OF FEES

It is agreed that effective July 1, 2025 through June 30, 2026 the rates shall be as stated below:

BUS TYPE AND CAPACITY	FLAT RATE (UP TO 5.75 HR/75 MILES)	RATE PER OVER HOUR	RATE PER OVER MILE
Type A or B (18-20 ambulatory passengers)	$660.40	$67.50	N/A
Type C (30-46 ambulatory passengers with minimum 2 wheelchair positions)	$737.29	$67.50	N/A
Type D (78-84 ambulatory with undercarriage storage)	$750.31	$67.50	N/A

FIELD TRIPS

BUS TYPE A OR B $ 71.75 PER HOUR

BUS TYPE C $ 71.75 PER HOUR

BUS TYPE D $ 71.75 PER HOUR

It is agreed that effective July 1, 2026 through June 30, 2027 the rates shall be as stated below:

BUS TYPE AND CAPACITY	FLAT RATE (UP TO 5.75 HR/75 MILES)	RATE PER OVER HOUR	RATE PER OVER MILE
Type A or B (18-20 ambulatory passengers)	$680.21	$69.53	N/A
Type C (30-46 ambulatory passengers with minimum 2 wheelchair positions)	$759.41	$69.53	N/A
Type D (78-84 ambulatory with undercarriage storage)	$772.82	$69.53	N/A

BUS TYPE A OR B $ 73.90 PER HOUR

BUS TYPE C $ 73.90 PER HOUR

BUS TYPE D $ 73.90 PER HOUR

IN WITNESS WHEREOF, the parties hereto have executed this Schedule of Rates as of the dates written below.

[PROVIDER LEGAL NAME]

By: Durham School Services, L.P.

Name: Ken Pittman

Title: Business Development, Director

Date: 2/20/2025

OXNARD SCHOOL DISTRICT

By: _____

Name: _____

Title: _____

Date: _____

OSD AGREEMENT #25-01

PUPIL TRANSPORTATION SERVICES AGREEMENT

This Pupil Transportation Services Agreement ("Agreement") is made and entered into this 19th day of March, 2025 by and between OXNARD SCHOOL DISTRICT ("District") and Durham School Services (the "Provider"). District and the Provider are collectively sometimes referred to as the "Parties" and, each, a "Party."

PROVIDER INFORMATION:

Durham School Services Bidder/Provider Legal Name	702-335-6111 Telephone Number
2601 Navistar Drive Street Address	Fax Number
Lisle, IL. 60532 City, State, Zip code	kpittman@durhamschoolservices.com E-mail Address
Tax Identification Number [NOTE: If Social Security Number is used, indicate that the number will be provided separately to District upon receipt of Notice of Award.]	License Number (if applicable)

Whereas, District issued the Request for Proposals or RFP described below seeking bids for pupil transportation services in accordance with applicable laws; and

Whereas, Provider, sometimes referred to herein and in the Contract Documents (defined below) as bidder, submitted a Bid and Proposal dated February 24, 2025 (the "Proposal") and, based on said Proposal, was subsequently awarded the Contract for the Services, all as described and provided herein.

NOW THEREFORE, for valuable consideration, the receipt and sufficiency of which are hereby acknowledged, the Parties agree as follows:

1. **TERM OF AGREEMENT**. Services under this Agreement shall commence on the later of (i) July 1, 2025 or (ii) the date upon which the District's Board of Trustees ("Board") awards this Agreement to the successful bidder ("Commencement Date"). This Agreement will remain in effect for two (2) year(s), from the Commencement Date to June 30, 2027 (the "Initial Term"). The Initial Term shall be for a minimum of one year. This Agreement will not renew automatically but may be extended at the discretion of the District upon written notice to Provider at least sixty (60) days prior to the expiration of the term then in effect. The Initial Term, plus any extension or renewal year(s) are individually and collectively referred to herein as the "Term." As provided under Education Code section 39803(a), this Agreement may not be extended beyond its 5th year.

   Agreed-upon rates, as specified on the Schedule of Fees, attached hereto, must remain in effect each applicable year of the Initial Term and, if changed in connection with an extension,

throughout the extension period. Such extensions must be reflected in an Amendment or other writing signed by both Parties.

2. **SERVICES; SCOPE OF WORK**. District requires pupil transportation services for its special education students and its other programs. These programs, and their respective transportation needs, are further described below. Contractor agrees to provide a sufficient number of school buses to perform all of Contractor's obligations under the Contract. Sufficient, as used in this RFP, means as many as required by District to accommodate all programs operated by District as set forth in this Contract:

REQUEST FOR PROPOSAL NO. 24-01 - RFP for Pupil Transportation Services

, as more particularly described on Exhibit A to Transportation Agreement, attached hereto and incorporated herein by reference ("Scope of Work" or "Services"). Provider shall perform the Scope of Work in exact accordance with the Contract Documents and the Provider's Proposal upon which the Board based the contract award, including completing all routes, providing all necessary vehicles, and complying with the transportation schedule(s) approved by District, subject to direction of District as to transportation services and vehicles needed, schedules and route changes, as well as closure interruption and the need for transportation services and vehicles. Provider shall not add buses or routes except as authorized in writing in advance by District and shall be liable to District for any damages arising from any failure to fully comply with this obligation. Provider shall not be excused with respect to any failure to so comply by any act or omission of District unless Provider files a written protest within ONE working day of the time of such alleged District act or omission specifying how such act or omission is preventing Provider from fulfilling such specified obligation(s). Barring such protest(s), each Service shall be undertaken and completed in such sequence as to assure full completion of all Services in accordance with this Agreement and the District approved schedules and routes.

Provider's failure or refusal to strictly and faithfully perform the transportation services specified herein, subject to any changes to routes or schedules later required by District, shall constitute a material violation of this Agreement. Following such violation, District may, at its option: (i) perform or cause to be performed the Services the Provider failed to perform and discount the costs of such Services from then outstanding or future Provider invoices; and/or (ii) terminate this Agreement effective on the date specified on the District's notice to provider, all as further specified in Section 10 hereof.

3. **CONTRACT DOCUMENTS**. This Agreement consists of and incorporates the following Contract Documents, each of which is a component parts of the contract as if herein set out in full or attached hereto:
   - Invitation to Submit Bid Proposals
   - Instructions to Bidders
   - Terms and Conditions/ District Requirements
   - Proposal Form /Price Schedules
   - School Bus Inventory and Property Summary
   - Non-Collusion Affidavit
   - Proposal Questionnaire
   - Form of Bid Bond

- Criminal background check/Fingerprinting Certificate
- Certificate Regarding Worker's Compensation
- COI & Endorsements in Compliance with Insurance Requirements
- This Agreement for Pupil Transportation Services

Provider shall perform all work and services, and satisfy all terms and conditions, of each of the above Contract Documents in the same manner as if fully spelled out herein.

4. ROUTING AND SCHEDULING; PERFORMANCE; CHANGES.

a. All changes to routes, schedules, and stops must be pre-approved by District; provided that:

i. District will be responsible for any additional cost if such changes result in additional routes or time; and Provider shall ensure that any decreases in costs arising from any changes are passed on to the District. To give full effect to these obligations, Provider shall notify District, within 3 business days of receipt of District request for changes, whether such changes require a reduction or an increase in staffing levels, vehicles, scheduled stops or any other changes. Said notice shall clearly describe the impact on costs for each impacted Service (no change, increase, decrease). Except for changes or additions to routes, which shall be implemented as provided in paragraph 4.a.ii, below, District will notify Provider whether and to proceed with all or selected changes and the date on which the changes shall be implemented. The charges under the Agreement shall be adjusted proportionately commencing with the billing cycle in which the changes are implemented.

ii. District shall notify Provider of desired changes or additions to routes no later than 5:00 p.m. on Wednesdays. Provider shall implement those changes by the following Monday after receipt of written notification.

iii. If Provider wishes to change a route, it shall give not less than sixty (60) days prior written notice to District and shall not make any change until District approves the change in writing, except under emergency situations when reasonable notice shall be given to obtain District's prior written consent.

b. Provider shall maintain maximum vehicle and driver utilization insofar as feasibility and safety permits. Provider shall be solely responsible for assuring the safety and reliability of vehicle and driver utilization for Services provided under this Agreement.

c. Prior to assigning any person to provide any Service under this Agreement, Provider shall ensure that said person (i) satisfies all applicable requirements of law, including but not limited to the criminal background check and tuberculosis testing requirements; and (ii) receives orientation on appropriate interaction and communication with parents and District staff, appropriate techniques for pupil management, and how to handle relations with the school sites and the general public

d. District reserves the right to request replacement of any person who, in the opinion of District is not suitable to operate a bus or provide Services hereunder, or who has repeatedly violated any requirement imposed by this Contract or any federal, state, local, or District regulation. Therefore, if Provider receives notice from the District Representative that the conduct of a

driver is unsatisfactory, Provider shall remove said person and not allow him or her to provide any future Service under this Agreement.

e. All transportation vehicles utilized in connection with the Services shall be clean, in good state of repair, in conformance with all applicable law and requirements and reasonably satisfactory to District.

f. Provider agrees to work with District in assessing its transportation needs and identifying areas of cost and services reduction and also agrees to assist in reducing where possible District's transportation costs.

g. District and Provider may agree to establish performance criteria whereby District can evaluate whether Provider has satisfactorily completed the Work ("Performance Criteria").

5. **PAYMENT AND EXPENSES**. District shall pay Provider, as full consideration for the faithful performance of this Agreement, subject to any additions or deductions as provided in the proposal documents, the amounts calculated at the rates set forth on the Proposal Form/ Schedule of Fees. Payments for Services satisfactory to District will be made promptly after the end of each month during the Term.

a. Invoices shall include, but not be limited to: Contractor name, Contractor address, invoice date, invoice number, purchase order number, period of service, date service was rendered, brief description of services provided, number of hours of service, hourly rate, any deductions applicable and total payment requested. Contractor is required to invoice the District within (10) school days following the first of each month for services rendered the prior month.

b. After first deducting any disputed amounts, the balance due the Contractor will be paid- within 30 days and the Parties shall meet to try to resolve any dispute. Provider shall furnish to District full and complete information on Services disputed, including a break-down of actual costs incurred by Provider for each item on the invoice. District shall not be responsible for payment for services not provided, for vehicles not used, for drivers, staff and routes not needed, for changed routes, overhead and for transportation services which are directed by District to be removed or changed in accordance with the provisions of this Agreement.

c. Any rate increases associated with any proposed extensions to this Agreement shall be negotiated in good faith by both Parties. The Parties agree to implement minimum rate change in accordance with the Consumer Price Index (Los Angeles Area)- All Urban Consumers, All Items for the 12-months ending in March, as such percent change is determined by the District. Notwithstanding the foregoing, the Parties agree that no annual increase or decrease may exceed five percent (5%) without prior Board approval. In the event of a general price decrease, District may reject any request for extension (or the bid award, if applicable) unless the decrease is passed on to District. Furthermore, Provider may only request a rate increase in excess of CPI if such request is based on increased costs that directly impact performance of the Services, such as increased costs related to replacing or modifying equipment used for the Services to comply with newly implemented federal, state

or local laws or regulations. All rates are subject to negotiation between the Provider and District, per California Education Code, Section 39880.

In connection with any rate adjustment, District may, at its discretion, review Provider's performance and costs (including actual driver services, vehicles actually used and logs of the time used) to determine conformance with District direction as to transportation services, adjustments to routes, schedule and utilization.

6. **SCHOOL CLOSURE(S); REOPENING**. In the event all or any District schools are closed for any lawful reason, including in response to governmental orders or advisories, or to protect the health, safety and welfare of students and employees, or due to any emergency, and Provider is so notified, District shall not be charged or required to pay for any transportation services, staffing and contractors, overhead, transportation vehicle availability, or any other related costs during the closure period. In addition, if District is either required to rely on remote learning in lieu of student attendance at the time of commencement of classes or any time during the school year, District shall notify Provider of its service needs, and shall not be charged or required to pay for transportation services, staffing and contractors, overhead, transportation vehicle availability, or any other related costs it does not need or utilize. If District has reduced transportation services needs (due to implementation of a remote learning and in-school instruction or any other reason), District may reduce and modify the schedule, routes and vehicle requirements without charges for services not required or vehicles not utilized. Provider shall only bill for transportation services provided, drivers and staff used, and adjusted actual costs for reduced services. District agrees to furnish notice to Provider of school reopening plans, including phases and any interruptions in reopening schedules, and Provider agrees to furnish transportation services as needed with cost reductions for unused vehicles, changes in routes, frequency or other modifications requested by District for its school(s). Provider agrees to cooperate with District in cost reduction and utilization changes, including but not limited to working with District on partial, phased, or full reopening plans to provide such services as District shall need under those plans.

7. **NATURE OF RELATIONSHIP**

The Parties agree the relationship created by this Agreement is that of independent contractor. In performing the Services, Provider is and shall remain, and perform as, an independent contractor of District, and not as a partner, coventurer, agent, or employee of District, and nothing contained herein shall be construed to be inconsistent with this relationship or status. Provider is not granted any right or authority to assume or to create any obligation or responsibility, express or implied, on behalf of or in the name of District or to bind District in any manner. Except for procedures or subject matter agreed upon between Provider and District, Provider shall have complete control over the manner and method of performing the Services.

Provider understands and agrees to independent contractor status. More specifically, Provider understands and agrees that Provider and its officers, agents, employees, subcontractors, affiliates and representatives are not entitled to any wages, insurance coverages, pension plans or any other benefits offered or conveyed by District to its employees. Provider is responsible for payment of all Provider employee wages, payroll taxes, employee benefits, and any amounts due for federal and state income taxes and Social Security taxes. No taxes will be withheld from

payments under this agreement and Provider will receive a standard IRS 1099-MISC Form annually during the Term.

8. NON-EXCLUSIVITY.

a. During the Term hereof, the Provider may, independent of Provider's relationship with District and without being deemed as breaching any duty owed to District, act in any capacity for and render services to any other person or entity.

b. District may, independent of its relationship with the Provider and without being deemed as breaching any duty owed to the Provider, contract with other individuals and entities to render the same or similar services to District.

9. ASSIGNMENT AND SUBCONTRACTORS. Provider shall not assign, sublet, or transfer this Agreement or any rights under or interest in this Agreement without the prior written consent of District, which may be withheld by District in its sole and absolute discretion. Nothing contained herein shall prevent Provider from employing independent associates, subcontractors, and sub-consultants as Provider may deem appropriate to assist in the performance of Services herein, subject to the prior written approval of District. Any attempted assignment, sublease, or transfer in violation of this Agreement shall be null and void, and of no force and affect. Any attempted assignment, sublet, or transfer in violation of this Agreement shall be grounds for District, in its sole discretion, to terminate the Agreement.

10. TERMINATION OR AMENDMENT. This Agreement may be terminated or amended in writing at any time by mutual written consent of both Parties to this Agreement.

Provider may not terminate this agreement during the Initial Term or any extension term except for non-payment of undisputed invoices. Such termination requires a minimum of sixty (60) days prior written notice to District; provided that, if within thirty (30) days of the date of the notice, District cures the violation by paying the undisputed invoices or notifying Provider of the reason for non-payment and initiating disputed Services negotiation, Provider shall withdraw the notice of termination and Services shall continue in accordance with this Agreement as if the notice of termination had not been given. Provider may not stop providing Services until the termination date specified on the notice and its only remedy upon termination shall be payment for undisputed Services rendered up to the termination date.

District may terminate for any reason or no reason by giving Provider at least thirty (30) days advance written notice. Upon such termination, District will pay Provider for all undisputed Services rendered up to the termination date and such payment shall be the Provider's sole remedy.

The Parties shall be excused from performance thereunder during the time and to the extent they are prevented from obtaining, delivering, or performing due to act(s) of God or as otherwise provided in this Agreement. Satisfactory evidence thereof to the other party is required, provided that it is satisfactorily established that the non-performance is not due to the fault or neglect of the party not performing.

11. **NOTICE**. Any notices, demands or request required or permitted to be given under this Agreement (each, a "notice") shall be by in writing and sent to the party's authorized representative (with proof of service, mailing or delivery), via (i) personal delivery, (ii) overnight commercial courier, (iii) certified or registered prepaid U.S. mail (return receipt requested), or (iv) electronic mail or electronic facsimile transmission; provided that if given electronically, an additional copy shall also be delivered by (i), (ii), or (iii), above. If notice is sent via U.S. mail, it must be mailed certified or registered mail, return receipt requested, and shall be deemed to have been given on the third (3rd) day following posting. If notice is sent by a nationally recognized overnight express carrier, prepaid, such notice shall be deemed to have been made on the next business day following deposit with such carrier. Notices shall be sent to District and the Provider at the address for mailing indicated on the signature page, unless notice changing the delivery address or the person authorized to receive the notice is given.

12. **WARRANTY**. Provider hereby warrants to District that the Work shall be performed in a professional and workmanlike manner consistent with the highest industry standards. On written notice from District of any breach or failure to do so, Provider shall immediately act to rectify any performance shortfall and conform to the highest industry standards in performance.

13. **ADDITIONAL WORK**. If the Parties, following informal consultations, determine that changes to the Services are needed, such changes shall be processed as follows:

    a. Provider will send District a letter outlining the changes, including a statement of estimated changes in fee and/or time schedule.

    b. A written amendment to this Agreement and the Scope of Work shall be prepared by District and must be executed by both Parties before any performance of such additional services or District shall not be required to pay for the increased cost incurred for the changes to the Scope of Work.

    Any such amendment to the Agreement shall not render ineffective or invalidate unaffected portions of this Agreement.

14. **COMPLIANCE WITH LAWS; HEALTH AND SAFETY AND OTHER LEGAL REQUIREMENTS**

    In the furnishing of the transportation services under this Agreement, Provider agrees to comply with and observe all laws, guidance, policies and regulations applicable to student transportation and the operations of Provider relating to pupil transportation, including applicable provisions of the California Education Code, California Vehicle Code, California Code of Regulations, Federal Code of Regulations and all other applicable laws, rules, regulations, and public health orders as prescribed by the United States Government, State Department of Public Health, County Department of Public Health, State of California and District. Provider will, without additional cost to District, review, follow and implement safety and health measures as part of school closures, reopening or operations planning, including, but not limited to, social distancing, masks, sanitization of buses and vehicles, criminal background check s, vaccination, tuberculosis checks and other student safety laws and requirements. Without limiting the generality of the foregoing, Provider agrees that:

a. Provider and its officers, agents, employees, and subcontractors shall obey all local, state, and federal laws and regulations in the performance of this Agreement, including, but not limited to minimum wages laws and/or prohibitions against discrimination.

b. Provider and its officers, agents, employees, and subcontractors shall secure and maintain in force for the full term of this Agreement, at Provider's sole cost and expense, such licenses and permits as are required by law, in connection with the furnishing of all the Services, materials, or supplies necessary including (District check all required licenses, permits, certificates and endorsements):

1) School Bus

- ■ California Commercial Driver License,
- ■ School Bus Endorsement,
- ■ Passenger Endorsement,
- ■ CDE T-01 Training Verification,
- ■ Health Certificate.

2) School Pupil Activity Bus (SPAB),

- ❑ California Commercial Driver License,
- ❑ Passenger Endorsement,
- ❑ CDE T-01 Training Verification,
- ❑ Health Certificate.

c. Provider shall be responsible for all costs of clean up and/or removal of spilled regulated substances as a result of Provider's services or operations performed under this Agreement, including, but not limited to:

- ■ Hazardous and toxic substances,
- ■ Hazardous waste,
- ■ Universal waste.

15. NON-DISCRIMINATION AND EQUAL EMPLOYMENT OPPORTUNITY. Provider represents and agrees that it does not and shall not discriminate against any employee or applicant for employment, company, individual or group of individuals, because of ancestry, age, color, disability (physical and mental, including HIV and AIDS), genetic information, gender identity, gender expression, marital status, medical condition, military or veteran status, national origin, race, religion, sex/gender, and sexual orientation.

17. INDEMNIFICATION. To the fullest extent permitted by law, Provider agrees to defend, indemnify, and hold harmless District, its governing board, officers, agents, employees, successors, assigns, independent contractors and/or volunteers from and against any and all claims, demands, monetary or other losses, loss of use, damages and expenses, including but not limited to, legal fees and costs, or other obligations or claims arising out of any liability or

damage to person or property resulting from bodily injury, illness, communicable disease, virus, pandemic, or any other loss, sustained or claimed to have been sustained arising out of activities of the Provider or those of any of its officers, agents, employees, participants, vendors, customers or subcontractors of Provider, whether such act or omission is authorized by this Agreement or not. Provider also agrees to pay for any and all damage to the real and personal property of District, or loss or theft of such property, or damage to the Property done or caused by such persons. District assumes no responsibility whatsoever for any property placed on District premises by Provider, Provider's agents, employees, participants, vendors, customers or subcontractors. Provider further hereby waives any and all rights of subrogation that it may have against District. The provisions of this Indemnification do not apply to any damage or losses caused solely by the intentional acts of District or any of its governing board, officers, agents, employees and/or volunteers.

18. INSURANCE. Provider, at its own cost and expense, shall procure and maintain during the term of this Agreement, policies of insurance for the following types of coverage:

a. Commercial General Liability Insurance. Provider shall procure and maintain, during the term of this Agreement, the following General Liability Insurance coverage:

	Each Occurrence	Aggregate
Student Transportation	$ 5,000,000	$ 10,000,000

Commercial General Liability insurance shall include products/completed operations, property damage, and personal and advertising injury coverage.

Any and all subcontractors hired by Provider in connection with the Services described in this Agreement shall maintain such insurance unless the Provider's insurance covers the subcontractor and its employees.

b. Automobile Liability. Provider shall procure, and maintain during the full term of this Agreement, Automobile Liability Insurance, including non-owned and hired automobiles, as applicable with the following coverage limits:

Student Transportation: $55,000,000 combined single limit

Buses and vehicles: $55,000,000 combined single limit

c. Workers' Compensation Insurance. Provider shall procure and maintain, during the term of this Agreement, Workers' Compensation Insurance, as required by California law, on all of its employees engaged in work related to the performance of this Agreement. Provider shall procure and maintain Employers' Liability insurance coverage of $1,000,000.

In the case of any such work which is subcontracted, Provider shall require all subcontractors to provide Workers' Compensation Insurance and Employers' Liability insurance for all of the subcontractor's employees to be engaged in such work unless such employees are covered by the protection afforded by the Provider's Workers' Compensation Insurance.

d. Other Insurance Coverage. Provider shall procure and maintain, during the term of this Agreement, the following Other Insurance Coverage:

	Each Occurrence	Aggregate
Abuse and Molestation	$ 10,000,000	$ 25,000,000
Motor Carrier Coverage	5,000,000	10,000,000

e. If the Provider or Provider's subcontractor(s) maintains broader coverage and/or higher limits than the minimums shown above, District requires and shall be entitled to the broader coverage and/or higher limits maintained by the Provider. Any available insurance proceeds in excess of the specified minimum limits of insurance and coverage shall be available to District.

f. Provider's and any and all subcontractors' insurance is primary and will not seek contribution from any other insurance available to District.

g. Certificates of Insurance. Provider and any and all subcontractors working for Provider shall provide certificates of insurance to District as evidence of the insurance coverage required herein, not less than Fifteen (15) days prior to commencing work for District, and at any other time upon the request of District. Certificates of insurance will be deemed invalid if proper endorsements are not attached. Certificates of such insurance shall be filed with District on or before commencement of the services under this Agreement.

h. Endorsements. Provider's and any and all Provider subcontractor's Commercial General Liability insurance; Commercial Automobile Insurance; Liability Excess, Umbrella and/or Reinsurance; and Abuse and Molestation coverage shall name District, its governing board, officers, agents, employees, and/or volunteers as additional insureds. All endorsements specifying additional insureds for any of the Insurance Policies shall be as indicated below or an equivalent endorsement reasonably acceptable to District.

1) General Liability
   - Student Transportation Services: CG 20 26 10 01.

2) Primary, Non-Contributory
   - CG 20 01 01 13

3) Waiver of Subrogation
   - CG 24 04 05 09

4) Commercial Automobile Liability
   - California 20 48 10 13

i. Provider's and any and all Provider subcontractor's Commercial General Liability insurance shall provide a list of endorsements and exclusions.

j. Deductibles. Any deductible(s) or self-insured retention(s) applicable to the insurance and/or coverage required by the foregoing provisions of this agreement must be declared to and approved by District. Provider shall be responsible to pay that deductible or self-insured retention and District shall not be responsible to pay these costs. In the event that Provider's deductibles or self-insured retentions collectively total more than $50,000.00, District

reserves the right to request proof of Provider's financial solvency in relation to remittance thereof or require Provider to post a bond guaranteeing payment of the deductible, or both.

k. Acceptability of Insurers. Insurance is to be placed with insurers with a current A.M. Best's rating of no less than A: VII, unless otherwise acceptable to District.

l. Insurance written on a "claims made" basis is to be renewed by the Provider and all Provider subcontractors for a period of five (5) years following termination of this Agreement. Such insurance must have the same coverage and limits as the policy that was in effect during the term of this agreement and will cover the provider for all claims made.

m. Failure to Procure Insurance**.** Failure on the part of Provider, or any of its subcontractors, to procure or maintain required insurance shall constitute a material breach of contract under which District may immediately terminate this Agreement.

19. SAFETY AND SECURITY. Provider shall be responsible for ascertaining from District all of the rules and regulations pertaining to safety, security, and driving on school grounds, particularly when children are present.

Provider must comply with Education Code section 45125.1 regarding fingerprinting requirements.

a. Provider and any and all subcontractors are required to comply with Education Code section 45125.1, Fingerprint certification requirements. Provider must provide proof that fingerprint certification requirements have been fulfilled prior to commencing any services for District under this Agreement.

   Provider shall certify in writing to District that neither the Provider nor any of its employees who are required to submit or have their fingerprints submitted to the Department of Justice and who may come in contact with students have been convicted of a felony.

b. Transportation Providers are required to comply with Education Code section 49406, Tuberculosis Risk Assessment requirements. Provider must cause to be on file with District a certificate from the examining physician showing the Provider, employees and/or sub providers of Provider have been examined and found free from active tuberculosis.

20. GOVERNING LAW AND VENUES. Provider hereby acknowledges and agrees that District is a public entity, which is subject to certain requirements and limitations. This Agreement and the obligations of District hereunder are subject to all applicable federal, state and local laws, rules, and regulations, as currently written or as they may be amended from time to time.

This Agreement shall be interpreted in accordance with the laws of the State of California. If any action is brought to interpret or enforce any term of this Agreement, the action shall be brought in state or federal court situated in the County of Ventura, State of California. Provider hereby waives and expressly agrees not to assert, in any way, any claim or allegation that it is not personally subject to the jurisdiction of the courts named above. Provider further agrees to waive any claim or allegation that the suit, action, or proceeding is either brought in an inconvenient forum or that the related venue is improper.

21. DISPUTE RESOLUTION.

a. The parties agree that, in the event of any dispute under the agreement in which the amount sought is $5,000.00 or less, any litigation to resolve the dispute shall be brought in the Ventura County Small Claims Court.

b. If the amount in dispute exceeds $5,000.00, the parties agree that they will first submit the matter to a mutually agreed upon mediator. Notwithstanding section 22, Attorneys Fees, the cost of the mediator shall be borne equally by the parties.

c. If the mediator is unable to resolve the dispute, then the parties shall submit the matter to binding arbitration in Ventura County or other mutually agreed location pursuant to the rules of the American Arbitration Association (AAA), as amended or as augmented in this Agreement (the "Rules"). The parties acknowledge that one of the purposes of utilizing arbitration is to avoid lengthy and expensive discovery and allow for prompt resolution of the dispute.

Arbitration shall be initiated as provided by the Rules, although the written notice to the other party initiating arbitration shall also include a description of the claim(s) asserted and the facts upon which the claim(s) are based. Arbitration shall be final and binding upon the parties and shall be the exclusive remedy for all claims subject hereto, including any award of attorneys' fees and costs. Either party may bring an action in court to compel arbitration under this Agreement and to enforce an arbitration award.

All disputes shall be decided by a single arbitrator. The arbitrator shall be selected by mutual agreement of the parties within 30 days of the effective date of the notice initiating the arbitration. If the parties cannot agree on an arbitrator, then the complaining party shall notify the AAA and request selection of an arbitrator in accordance with the Rules. The arbitrator shall have only such authority to award equitable relief, damages, costs, and fees as a court would have for the particular claim(s) asserted. In no event shall the arbitrator award punitive damages of any kind. The Arbitration shall be completed, and a decision rendered within ninety (90) days of the appointment of an Arbitrator.

The arbitrator shall have the power to limit or deny a request for documents or a deposition if the arbitrator determines that the request exceeds those matters, which are directly relevant to the claims in controversy. Any document demand and response shall conform to Code of Civil Procedure sections 2031.010 et seq. The deposition notice shall conform to Code of Civil Procedure sections 2025.020 et seq. The parties may make a motion for protective order or motion to compel before the arbitrator with regard to the discovery, as provided in Code of Civil Procedure sections 2025.020 et seq. and 2031.010 et seq.

22. ATTORNEYS FEES. In the event of any action or proceeding to interpret or enforce the terms of this Agreement, the prevailing party, as determined by the court or arbitrator, shall be entitled to recover its reasonable attorney fees and costs incurred in connection with such actions or proceeding.

23. DOCUMENT RETENTION. After Provider's services to District conclude, Provider shall, upon District's request, deliver all documents for all matter in which Provider has provided services to District, along with any property of District in Provider's possession and/or control.

If District does not request District's document(s) for a particular service, Provider will retain document(s) for a period of two (2) years after the service has ended. If District does not request delivery of the document(s) for the service before the end of the two (2) year period, Provider will have no further obligation to retain the document(s) and may, at Provider's discretion, destroy it without further notice to District. At any point during the two (2) year period, District may request delivery of the document(s).

Exceptions: Attorney work-product and medical records shall not be destroyed by provider without the prior written consent of District.

24. **NATURE OF AGREEMENT.** This Agreement constitutes a binding expression of the understanding of the parties with respect to the services to be provided hereunder and is the sole contract between the parties with respect to the subject matter thereof. There are no collateral understandings or representations or agreements other than those contained herein. This Agreement represents the entire agreement between the parties hereto with respect to the subject matter hereof and supersedes any and all other agreements and communications however characterized, written or oral, between or on behalf of the parties hereto with respect to the subject matter hereof. This Agreement may only be modified by a written instrument signed by authorized representatives of each of the parties hereto.

25. **BINDING EFFECT**. This Agreement shall inure to the benefit and shall be binding upon all of the parties to this Agreement, and their respective successors in interest or assigns.

26. **WAIVER.** No claim or right arising out of a breach of this Agreement can be discharged in whole or in part by a waiver or renunciation of the claim or right unless such waiver is in writing.

27. **SEVERABILITY.** It is intended that each paragraph of this Agreement shall be treated as separate and divisible, and in the event that any paragraphs are deemed unenforceable, the remainder shall continue to be in full force and effect so long as the primary purpose of this Agreement is unaffected.

28. **PARAGRAPH HEADINGS.** The headings of paragraphs hereof are inserted only for the purpose of convenient reference. Such headings shall not be deemed to govern, limit, modify or in any other manner affect the scope, meaning or intent of the provisions of this Agreement or any part or portion thereof, nor shall they otherwise be given any legal effect whatsoever.

29. **AUTHORITY.** Provider represents and warrants that Provider has all requisite power and authority to conduct its business and to execute, deliver, and perform this Agreement. Each party warrants that the individuals who have signed this Agreement have the legal power, right, and authority to make this Agreement and to bind each respective party.

30. **PERFORMANCE CONDITIONS**. Provider will have no obligation to provide services until District returns a signed copy of this Agreement.

31. **COUNTERPART EXECUTION: ELECTRONIC DELIVERY.** This Agreement may be executed in any number of counterparts which, when taken together, shall constitute one and the

same instrument. Executed counterparts of this Agreement may be delivered by PDF email or electronic facsimile transmission and shall have the same legal effect as an "ink-signed" original.

IN WITNESS WHEREOF, the parties have executed this agreement as of the date first written above.

OXNARD SCHOOL DISTRICT	Durham School Services
Local Educational Agency	Provider Legal Name
By: _____	_____
Signature	Signature of Provider Representative
Melissa Reyes	
Name	Name
Director, Purchasing	
Title	Title

ADDRESS FOR NOTICE

_____	_____
Name/Title (if different from above)	Name/Title (if different from above)
_____	_____
Street/ Suite	Street/ Suite
_____	_____
City, State, Zip Code	City, State, Zip Code
_____	_____
E-mail Address	E-mail Address
_____	_____
Telephone	Telephone

PROVIDER ADDITIONAL INFORMATION.
[This information can be provided separately to the District]

_____	_____
Provider Legal Name	State or Country of Formation
_____	_____
US Tax Identification or Social Security Number	License Number(s) (if applicable)

STATEMENT OF WORK
2025 OSD TRANSPORTATION SERVICES AGREEMENT

DESCRIPTION OF WORK:

Contractor will provide (i) home-to-school transportation services for both general and special education students to augment the transportation services provided by District with its own forces; (ii) field trip transportation, as requested by District during the Term; and (iii) extended transportation services for certain non-regular school days, such as Spring Camp, STEM Camp and Special Education extended school year, during the Term. The Contractor shall furnish, operate, and maintain sufficient buses for the transportation of pupils and other persons at such times, dates and places, within or outside the District's boundaries, as may be specified by the District, all in accordance with the terms and provisions of the RFP #24-01 – Pupil Transportation Services, the Addenda, if any, issued by District, the schedules and routes provided by District, and the Contractor's Bid Proposal, dated February 24, 2025, which is incorporated into this Agreement to the extent not inconsistent with the other Contract Documents.

WORK SCHEDULE:

OSD BOARD AGENDA ITEM

Name of Contributor: Dr. Anabolena DeGenna **Date of Meeting:** March 19, 2025

Agenda Section: Section D: Action Items

Approval of Oxnard School District 2024-2025 Second Interim Financial Report (Period Ending January 31, 2025) (Núñez)

The Oxnard School District's 2024-25 Second Interim Financial Report is presented for approval, reflecting a positive certification of the district's financial health. This report is based on year-to-date revenue and expenditures as of January 31, 2025, in accordance with legal requirements.

The district has maintained a 10.0% reserve, following the Board's direction, which exceeds the minimum 3.0% reserve required for economic uncertainty. Projections indicate the district will continue to maintain a 10.0% reserve and a positive cash balance for the 2025-26 and 2026-27 fiscal years.

FISCAL IMPACT:
N/A

RECOMMENDATION:
It is the recommendation of the Director of Fiscal Services that the Board approve the Oxnard School District 2024-25 Second Interim Report (Period Ending January 31, 2025).

ADDITIONAL MATERIALS:

Attached: 2024-2025 Second Interim Report Presentation (11 pages)
2024-2025 Second Interim Financial Report (132 pages)

Second Interim Budget 2024-25 Fiscal Year

Patty Núñez
Director of Fiscal Services

March 19, 2025

Budget Cycle:

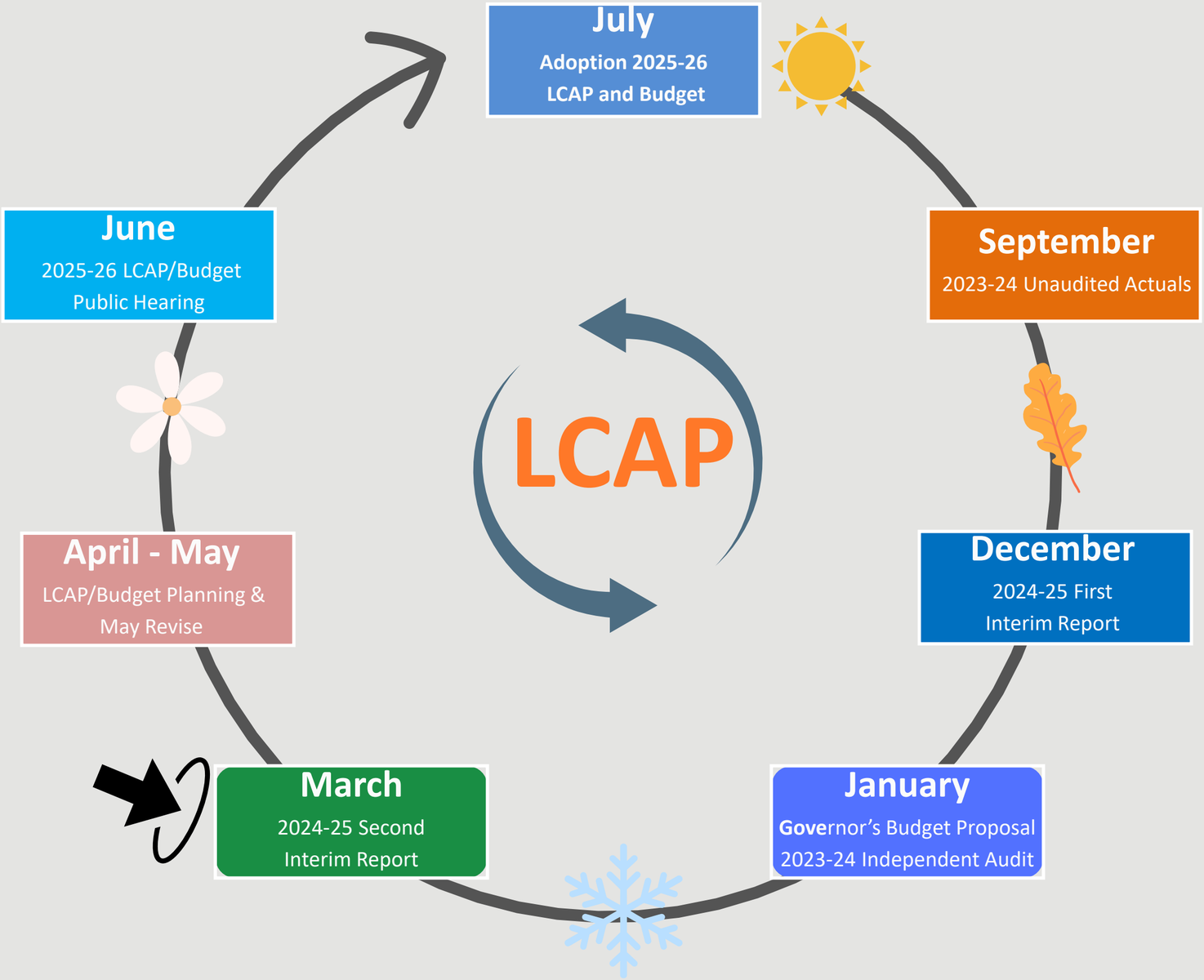

Purpose of Interim Budget Reports:

- Required by Ed Code (Section 42130)
- Provide an expenditure plan for the governing board's consideration and approval.
- Provide certification of Financial Status to VCOE.
- Provide evidence of LCAP and Strategic alignment to Budget.

Summary of Changes - Revenues

Object	2024-25 First Interim	2024-25 Second Interim	Difference	Explanation
8010-8099 LCFF Sources	194,839,570	194,899,130	59,560	Adjustment to LCFF Calculation
8100-8299 Federal Revenue	13,331,058	13,742,011	410,953	Increase due to updated allocations to Federal IDEA, Title I, II, III & IV.
8300-8599 Other State Revenue	39,813,316	40,234,971	421,655	Increase due to updated allocations for Teacher Residency Grant & Special Ed Early Intervention Grant
8600-8799 Other Local Revenue	21,015,641	21,564,704	549,063	Local increase in revenue received for sale of equipment, donations, and Medi-Cal
Total Revenues	268,999,585	270,440,816	**1,441,231**	**Total Increase in Revenue**

Summary of Changes - Expenditures

Object	2024-25 First Interim	2024-25 Second Interim	Difference	Explanation
1000-1999 **Certificated Salaries**	115,871,240	115,084,783	(786,457)	Decrease due to savings from unfilled certificated and classified positions, along with related benefit costs.
2000-2999 **Classified Salaries**	48,855,490	48,044,438	(811,052)	
3000-3999 **Employee Benefits**	65,939,893	65,683,356	(256,537)	
4000-4999 **Materials & Supplies**	14,505,058	14,885,579	380,521	Increase in budgeted expenditures that correlates to increased revenues
5000-5999 **Services & Other Operating**	76,529,808	79,439,517	2,909,709	Increase in SpEd, ELOP services, Teacher Residency Grant, Medi-Cal correlating to increased revenues.
6000-6999 **Capital Outlay**	2,017,956	3,797,756	1,779,800	Increase in expenditures is due to equipment in RRM and planned acquisition of buses for the Transportation Department.
7100-7699 **Other Outgo**	1,972,630	2,142,271	169,641	Updated projected costs for VCOE Excess Costs related to Special Education
Total Expenditures	325,692,075	329,077,700	**3,385,625**	**Total Increase in Expenditures**

Multi-Year Projections

Multiyear projections are required by Assembly Bill (AB) 1200 and AB 2756

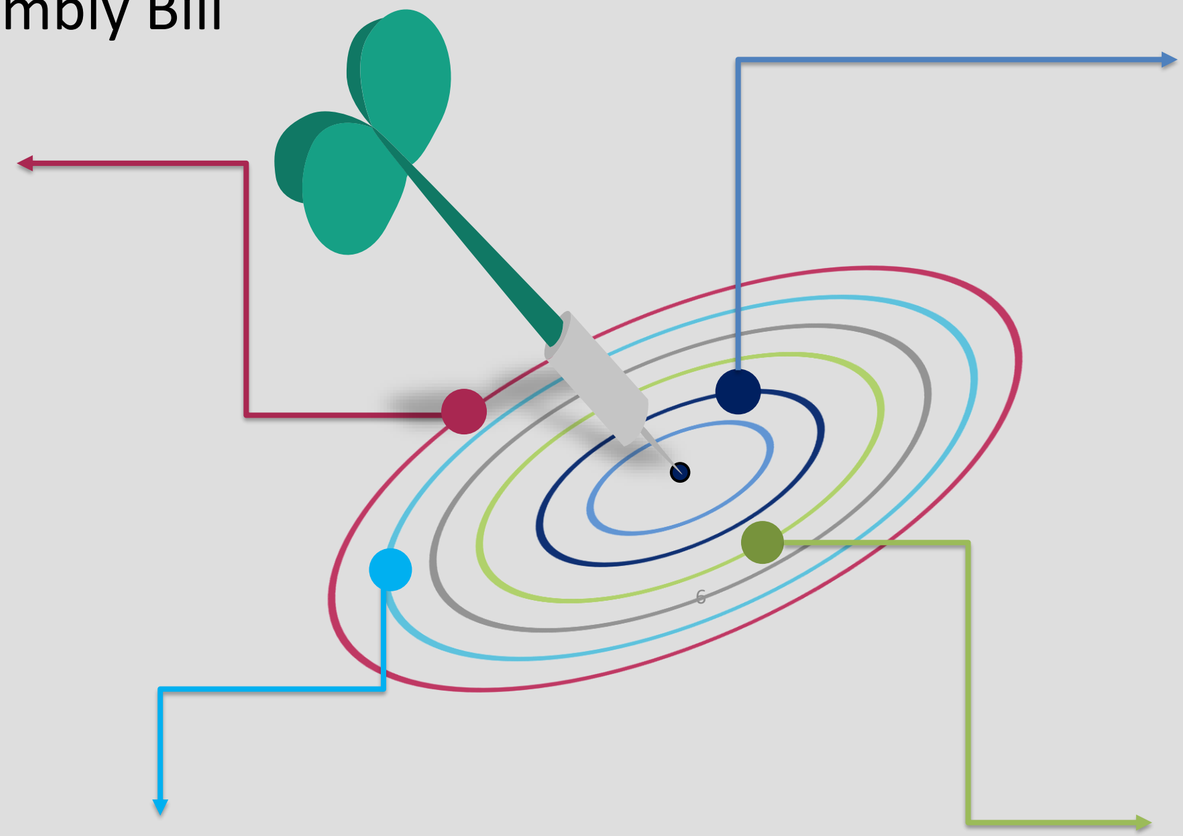

Projections are made using the most reliable information available at the time.

Projections include both state-wide and local planning factors

Projections will change any time assumptions change

Assumptions/Planning Factors

Factor		2024-25	2025-26	2026-27
Statutory COLA		1.07%	2.43%	3.52%
California Lottery	Unrestricted per ADA	$191	$191	$191
	Restricted per ADA	$82	$82	$82
Mandated Block Grant	Per ADA	$38.21	$39.33	$40.54
Enrollment		13,003	12,568	12,182
Estimated ADA		12,306.50	11,939.80	11,602.88
Estimated Funded ADA		13,189.73	12,661.30	12,305.79
Unduplicated Pupil Count		11,863	11,532	11,176
Unduplicated Pupil Percentage		91.19%	91.71%	91.69%
STRS		19.10%	19.10%	19.10%
PERS		27.05%	27.60%	28.00%
Step & Column Costs		1.3%	1.3%	1.3%
Salary Negotiations (OEA)		In negotiations	In negotiations	In negotiations
Salary Negotiations (CSEA)		In negotiations	In negotiations	In negotiations
Salary Negotiations (OSSA)		In negotiations	In negotiations	In negotiations

Multi-Year Financial Projections

Components	2024-25 Second Interim	2025-26 Projections	2026-27 Projections
Beginning Fund Balance	146,947,418	88,310,533	67,483,145
+ Revenues	270,440,816	268,064,672	270,461,897
- Expenditures	329,077,700	288,892,060	283,161,004
Net Increase/(Decrease) in Fund Balance	(58,636,884)	(20,827,388)	(12,699,108)
= Ending Fund Balance	88,310,533	67,483,145	54,784,038
Components of Ending Fund Balance			
Reserve for Economic Uncertainty %	**10%**	**10%**	**10%**
Reserve for Economic Uncertainty	32,907,770	28,889,206	28,316,100
Non-Spendable	120,000	120,000	120,000
Commitments	3,768,550	3,768,550	0
Financial Stability Reserve	21,991,154	7,410,038	185,926
Legally Restricted	29,523,060	27,295,351	26,162,011
Unappropriated	0	0	0

Next Steps

March

External Auditors- spring audits

April

April - May
2025-26 LCAP and Budget Development

May

Governor's May Revise:
May 21, 2025

Mid May – June
LCAP & Budget Updates Following May Revise

June

Public Hearing for LCAP and Budget begins – June 4

June

LCAP and Budget Adoption Meeting June 18

July 1
2025/26 Fiscal Year begins

Summary:

- Projecting deficit spending in current year and two subsequent years.

- Expected as district is spending down categorical balances
  - Future deficits will need to be addressed through planned expenditure reductions.

- Our budget exceeds the state-mandated 3% reserve level, with a reserve at 10% for current year and two subsequent years.

- Based on the revisions to the budget, the district is certifying a **Positive Certification**, which affirms the district's ability to meet its financial obligations for the current and two subsequent years.

- Staff recommends that the Board of Trustees approve the Second Interim Report as presented.

Thank you

2024-25
Second Interim
(period ending January 31, 2025)

Board Meeting of
March 19, 2025

Prepared by:
Patricia Núñez, Director of Fiscal Services

Vision:

Changing the World!
Inspired, Accomplished, Multilingual Global Citizens - In School and Beyond
In Oxnard School District, we nurture self-confident and empowered multilingual global citizens, strong in their multiple identities and potential, who achieve inspired levels of individual, community, and social accomplishment in school and beyond in their endeavors.

Mission:

IGNITE • TRANSFORM • NURTURE • EMBRACE

- IGNITE students' passions for learning and empower them to achieve brilliance.
- TRANSFORM our classroom and school expectations, relationships, and practices to more fully align with our values.
- NURTURE caring communities that develop students' full identities, linguistic/cultural/academic excellence, social-emotional health, and life potential.
- EMBRACE high-leverage services and approaches that translate our values into action.

INDEX

Second Interim Report Narrative	1
LCFF Calculator	7
District Enrollment History Graph	12
District Certification of Interim Report	13
Table of Contents	15
Average Daily Attendance Report (Form AI)	16
Cashflow Worksheet	17
General Fund (Form 01I)	21
Student Activity Fund (Form 08I)	46
Child Development Fund (Form 12I)	51
Cafeteria Fund (Form 13I)	56
Deferred Maintenance Fund (Form 14I)	61
Building Fund (Form 21I)	65
Capital Facilities Fund (Form 25I)	70
County School Facilities Fund (Form 35I)	75
Bond Interest & Redemption Fund (Form 51I)	80
Retiree Benefit Fund (Form 71I)	84
General Fund Multiyear Projections – Unrestricted (Form MYPI)	87
General Fund Multiyear Projections – Restricted (Form MYPI)	89
General Fund Multiyear Projections – Unrestricted/Restricted (Form MYPI)	91
School District Criteria & Standards Review (Form 01CSI)	93
Technical Review Checks	126

March 19, 2025

Dear Members of the Board of Trustees,

Attached for your review and approval is the Oxnard school District's Second Interim Budget. The 2024-25 Second Interim Financial Report provides an updated analysis of the Oxnard School District's financial position as of January 31, 2025 reflecting the most current data on enrollment, average daily attendance (ADA), staffing, salary negotiations, and funding projections.

This report ensures transparency and accountability, highlighting changes in revenue and expenses since the last budget review. It includes updated funding estimates from federal, state, and local sources, as well as adjustments for savings from unfilled positions, helping to guide financial planning through the end of the fiscal year. Additionally, future cost factors—such as the Cost-of-Living Adjustment (COLA), pension contributions, and salary step and column costs—have been factored in based on guidance from School Services of California and Ventura County Office of Education.

Our top priority is to ensure financial stability while supporting the needs of our students, staff, and community. This report offers a clear and strategic financial overview to help guide decision-making for the remainder of the 2024-25 school year and beyond.

As part of the budget certification process, the District's Board of Trustees must determine one of the following financial certifications:

- **Positive Certification:** The District can meet its financial obligations for the current and next two fiscal years.
- **Qualified Certification:** The District may face challenges in meeting financial obligations for the current and next two fiscal years.
- **Negative Certification:** The District will not be able to meet its financial obligations for the current and next two fiscal years.

Based on the financial information presented, we are reporting a Positive Certification for the 2024-25 fiscal year and the following two years.

CHANGES SINCE FIRST INTERIM

Revenues				
Object	2024-25 First Interim	2024-25 Second Interim	Difference	Explanation
8010-8099 LCFF Sources	194,839,570	194,899,130	59,560	Adjustment to LCFF Calculation
8100-8299 Federal Revenue	13,331,058	13,742,011	410,953	Increase due to updated allocations to Federal IDEA, Title I, II, III & IV.
8300-8599 Other State Revenue	39,813,316	40,234,971	421,655	Increase due to updated allocation for Teacher Residency Grant & Special Ed Early Intervention Grant
8600-8799 Other Local Revenue	21,015,641	21,564,704	549,063	Local increase in revenue received for sale of equipment, donations & Medi-Cal
Total Revenue:	268,999,585	270,440,816	**$1,441,231**	**Total Increase in Revenue**

Object	2024-25 First Interim	2024-25 Second Interim	Difference	Explanation
1000-1999 Certificated Salaries	115,871,240	115,084,783	(786,457)	Decrease due to savings from unfilled certificated and classified positions, along with related benefit costs.
2000-2999 Classified Salaries	48,855,490	48,044,438	(811,052)	
3000-3999 Employee Benefits	65,939,893	65,683,356	(256,537)	
4000-4999 Materials & Supplies	14,505,058	14,885,579	380,521	Increase in budgeted expenditures that correlates to increased revenues
5000-5999 Services & Other Operating	76,529,808	79,439,517	2,909,709	Increase in SpEd, ELOP services, Teacher Residency Grant, Medi-Cal correlating to increased revenues.
6000-6999 Capital Outlay	2,017,956	3,797,756	1,779,800	Increase in expenditures is due to equipment in RRM and planned acquisition of buses for the Transportation Department.
7100-7699 Other Outgo	1,972,630	2,142,271	169,641	Updated projected costs for VCOE Excess Costs related to Special Education
Total Expenditures:	325,692,075	329,077,700	**3,385,625**	**Total increase in expenditures**

PLANNING FACTORS USED FOR SECOND INTERIM

The Ventura County Office of Education (VCOE), School Services of California (SSC), and other external agencies provide guidance on the criteria and assumptions school districts should follow when preparing their interim reports.

Planning Factors				
Factor		2024-25	2025-26	2026-27
Statutory COLA		1.07%	2.43%	3.52%
California Lottery	Unrestricted per ADA	$191	$191	$191
	Restricted per ADA	$82	$82	$82
Mandated Block Grant	Per ADA	$38.21	$39.14	$40.52
CalSTRS Employer Rate		19.10%	19.10%	19.10%
CalPERS Employer Rate		27.05%	27.40%	27.50%

Local Planning Factors

In addition to the planning factors provided VCOE and SSC guidance, the district must consider local factors that impact the budget and future projections. The following local assumptions were used to prepare Oxnard Multi-Year Projections.

Local Assumptions			
Planning Factor	2024-25	2025-26	2026-27
Estimated Enrollment	13,003	12,568	12,182
Estimated ADA (average daily attendance)	12,306.50	11,939.80	11,602.88
Estimated Funded ADA (average daily attendance)	13,189.73	12,661.30	12,305.79
Unduplicated Pupil Count	11,863	11,532	11,176
Unduplicated Pupil Percentage	91.19%	91.71%	91.69%
Step & Column Costs	1.30%	1.30%	1.30%
Salary Negotiations (OEA)	In Negotiations	In Negotiations	In Negotiations
Salary Negotiations (CSEA)	In Negotiations	In Negotiations	In Negotiations
Salary Negotiations (OSSA)	In Negotiations	In Negotiations	In Negotiations

MULTI-YEAR FINANCIAL PROJECTIONS

The 2024-25 Multi-Year Projection (MYP) for the Second Interim Report reflects that the district will be able to maintain 10% in Reserve for Economic Uncertainties through 2026-27

Components	**2024-25 Second Interim**	**2025-26 Projections**	**2026-27 Projections**
Revenues	270,440,816	268,064,672	270,461,897
Expenditures	329,077,700	288,892,060	283,161,004
Net Increase/(Decrease) in Fund Balance	(58,636,884)	(20,827,388)	(12,699,108)
Beginning Fund Balance	146,947,417	88,310,533	67,483,145
Ending Fund Balance	88,310,533	67,483,145	54,784,038
Components of Ending Fund Balance			
Reserve for Economic Uncertainty %	10%	10%	10%
Reserve for Economic Uncertainty	32,907,770	28,889,206	28,316,100
Non-Spendable (Stores & Cash in Banks)	120,000	120,000	120,000
Commitments	3,768,550	3,768,550	0
Financial Stability Reserve	21,991,154	7,410,038	185,926
Legally Restricted	29,523,060	27,295,351	26,162,011
Unappropriated	0	0	0

Despite projected deficit spending over the next three years due to the use of one-time funds, Oxnard School District remains financially stable, maintaining reserves well above the state's 3% requirement. However, ongoing fiscal challenges—such as declining enrollment, rising costs, and the depletion of one-time funding—necessitate careful financial planning. Addressing future deficits will require a focus on reducing expenditures, including aligning staffing levels with projected enrollment declines. To sustain long-term stability and protect the quality of education for Oxnard School District's students, the district must continue monitoring expenditures and exploring cost-saving measures.

Conclusion:

Based on the information in this Second Interim Report, it is recommended that the Board of Trustees approve a positive certification, confirming that Oxnard School District can meet its financial obligations for the current and next two years.

Other Funds

Besides the General Fund, Oxnard School District manages restricted and special-purpose funds for facilities, debt service, and capital projects, ensuring financial oversight and compliance. The following is a very brief statement on each funds and projecting ending fund balance at the end of the year.

Student Activity Special Revenue Fund (Form 08) - Accounts for district-controlled student activity revenues and expenditures, ensuring funds raised through student organizations, fundraisers, and donations are properly tracked and used for student-related purposes.
Projected ending fund balance: $188,812

Child Development Fund (Fund 12) – Used to support State Preschool.
Projected ending fund balance: $356,196

Cafeteria Fund (Form 13) -Accounts for nutrition services, including federal and state meal reimbursements for school breakfast and lunch programs. This fund ensures that cafeteria operations remain financially self-sustaining.
Projected ending fund balance: $11,546,992

Deferred Maintenance Fund (Form 14) - Supports major repairs and maintenance of school facilities, including roofing, plumbing, HVAC, and electrical systems.
Projecting ending fund balance: $1,599,284

Building Fund (Form 21) - The 2022 General Obligation (G.O) Bond (Measure I) project expenditures are included as reflected in the Board-Approved Master Construct and Implementation Plan.
Projecting ending fund balance: $36,162,68

Capital Facilities Funds (Form 25) - Revenues in this fund are dependent on collection of developer fees from new construction to support school facilities impacted by growth.
Projecting ending fund balance: $8,549,044

County School Facilities Fund (Form 35) - Used to account for state-funded school construction projects, including from the State School Facilities Program (SFP) for modernization, new construction and other capital projects.
Projecting ending fund balance: $10,543,759

Bond Interest and Redemption Funds (Form 51) - Maintained by the Ventura County Office of Education for Bond debt service for the 1988, 1997, 2012, 2016 and 2022 general obligation bonds.
Projecting ending fund balance: $19,433,656

Retiree Benefits Fund (Form 71) – Established in 2004 as a Retiree Benefits Trust Fund, this fund ensures the district can meet the long-term costs of retiree benefits across all programs and funds. It collects pay-as-you-go revenues from the General Fund to fund future retiree benefits. Payments for retiree health benefits, including contributions to the California Schools Employee Benefits Organization (CSEBO) and Self-Insured Schools of California (SISC), are made from this fund.
Projecting ending fund balance: $12,267,706

FCMAT
FISCAL CRISIS & MANAGEMENT ASSISTANCE TEAM

Oxnard (72538) - 2024-25 Second Interim	1/25/2025			
	2023-24	**2024-25**	**2025-26**	**2026-27**
General Assumptions				
COLA & Augmentation	*8.22%*	*1.07%*	*2.43%*	*3.52%*
Base Grant Proration Factor	*0.00%*	*0.00%*	*0.00%*	*0.00%*
Add-on, ERT & MSA Proration Factor	*0.00%*	*0.00%*	*0.00%*	*0.00%*
Student Assumptions:				
Enrollment Count	*13,434*	*13,038*	*12,603*	*12,217*
Unduplicated Pupil Count (UPC)	*12,245*	*11,889*	*11,558*	*11,202*
Unduplicated Pupil Percentage (UPP)	*90.98%*	*91.21%*	*91.34%*	*91.52%*
Current Year LCFF Average Daily Attendance (ADA)	*12,607.45*	*12,338.31*	*11,971.61*	*11,634.69*
Funded LCFF ADA	*14,059.05*	*13,189.73*	*12,661.30*	*12,305.79*
LCFF ADA Funding Method	*3PY Average*	*3PY Average*	*3PY Average*	*3PY Average*
Current Year Necessary Small School (NSS) ADA	-	-	-	-
Funded NSS ADA	-	-	-	-
NSS ADA Funding Method(s)				
LCFF Entitlement Summary				
Base Grant	$141,650,300	$134,324,732	$132,068,335	$132,896,375
Grade Span Adjustment	6,154,672	5,814,923	5,781,277	5,757,814
Adjusted Base Grant	$147,804,972	$140,139,655	$137,849,612	$138,654,189
Supplemental Grant	26,894,593	25,564,277	25,182,366	25,379,263
Concentration Grant	34,567,149	32,983,970	32,561,457	32,913,731
Total Base, Supplemental and Concentration Grant	$209,266,714	$198,687,902	$195,593,435	$196,947,183
Allowance: Necessary Small School	-	-	-	-
Add-on: Targeted Instructional Improvement Block Grant	500,077	500,077	500,077	500,077
Add-on: Home-to-School Transportation	1,308,805	1,322,809	1,354,953	1,402,647
Add-on: Small School District Bus Replacement Program	-	-	-	-
Add-on: Economic Recovery Target	-	-	-	-
Add-on: Transitional Kindergarten	1,135,869	1,388,342	1,434,286	1,491,060
Total Allowance and Add-On Amounts	$2,944,751	$3,211,228	$3,289,316	$3,393,784
Total LCFF Entitlement Before Adjustments (excludes Additional State Aid)	**$212,211,465**	**$201,899,130**	**$198,882,751**	**$200,340,967**
Miscellaneous Adjustments	-	-	-	-
Total LCFF Entitlement (excludes Additional State Aid)	**$ 212,211,465**	**$ 201,899,130**	**$ 198,882,751**	**$ 200,340,967**
LCFF Entitlement Per ADA (excludes Categorical MSA)	$ 15,094	$ 15,307	$ 15,708	$ 16,280

FCMAT
FISCAL CRISIS & MANAGEMENT ASSISTANCE TEAM

Oxnard (72538) - 2024-25 Second Interim	1/25/2025			
	2023-24	**2024-25**	**2025-26**	**2026-27**
LCFF Sources Summary				
Funding Source Summary				
Local Revenue and In-Lieu of Property Taxes *(net for school districts)*	$ *31,518,784*	$ *34,465,850*	$ *34,465,850*	$ *34,465,850*
Education Protection Account Entitlement *(includes $200/minimum per AD*	$ 21,010,138	$ 24,190,689	$ 23,782,906	$ 23,923,664
Net State Aid *(excludes Additional State Aid)*	$ 159,682,543	$ 143,242,591	$ 140,633,995	$ 141,951,453
Additional State Aid	$ -	$ -	$ -	$ -
Total Funding Sources	**$ 212,211,465**	**$ 201,899,130**	**$ 198,882,751**	**$ 200,340,967**
Funding Source by Resource-Object				
State Aid (Resource Code 0000, Object Code 8011)	$ 159,682,543	$ 143,242,591	$ 140,633,995	$ 141,951,453
EPA, Current Year (Resource 1400, Object Code 8012) (P-2 plus Current Year Accrual)	$ 21,010,138	$ 24,190,689	$ 23,782,906	$ 23,923,664
EPA, Prior Year Adjustment (Resource 1400, Object Code 8019) (P-A less Prior Year Accrual)	$ 93,153	$ -	$ -	$ -
Property Taxes (Object 8021 to 8089)	$ 31,518,784	$ 34,465,850	$ 34,465,850	$ 34,465,850
In-Lieu of Property Taxes (Object Code 8096)	-	-	-	-
Entitlement and Source Reconciliation				
Basic Aid/Excess Tax District Status	Non-Basic Aid	Non-Basic Aid	Non-Basic Aid	Non-Basic Aid
Total LCFF Entitlement	$ 212,211,465	$ 201,899,130	$ 198,882,751	$ 200,340,967
Additional State Aid	$ -	$ -	$ -	$ -
Additional EPA Minimum Entitlement (excess to LCFF Entitlement)	$ -	$ -	$ -	$ -
Excess Taxes before Minimum State Aid	$ -	$ -	$ -	$ -
Total Funding Sources	$ 212,211,465	$ 201,899,130	$ 198,882,751	$ 200,340,967
LCAP Percentage to Increase or Improve Services Calculation				
Base Grant (*Excludes add-ons for TIIG & Transportation)*	$ 148,940,841	$ 141,527,997	$ 139,283,898	$ 140,145,249
Supplemental and Concentration Grant funding in the LCAP year	$ 61,461,742	$ 58,548,247	$ 57,743,823	$ 58,292,994
Projected Additional 15% Concentration Grant funding in the LCAP year	$ 7,977,035	$ 7,611,686	$ 7,514,182	$ 7,595,476
Percentage to Increase or Improve Services	41.27%	41.37%	41.46%	41.59%

FCMAT
FISCAL CRISIS & MANAGEMENT ASSISTANCE TEAM

Oxnard (72538) - 2024-25 Second Interim	1/25/2025			
	2023-24	**2024-25**	**2025-26**	**2026-27**
PER-ADA FUNDING LEVELS				
Base, Supplemental and Concentration Rate per ADA				
Grades TK-3	$ 15,504.75	$ 15,692.04	$ 16,085.96	$ 16,670.05
Grades 4-6	$ 14,255.99	$ 14,428.80	$ 14,790.51	$ 15,327.75
Grades 7-8	$ 14,677.91	$ 14,855.55	$ 15,228.95	$ 15,782.29
Base Grants				
Grades TK-3	$ 9,919	$ 10,025	$ 10,269	$ 10,630
Grades 4-6	$ 10,069	$ 10,177	$ 10,424	$ 10,791
Grades 7-8	$ 10,367	$ 10,478	$ 10,733	$ 11,111
Grade Span Adjustment				
Grades TK-3	$ 1,032	$ 1,043	$ 1,068	$ 1,106
Supplemental Grant	20%	20%	20%	20%
Maximum - 1.00 ADA, 100% UPP				
Grades TK-3	$ 2,190	$ 2,214	$ 2,267	$ 2,347
Grades 4-6	$ 2,014	$ 2,035	$ 2,085	$ 2,158
Grades 7-8	$ 2,073	$ 2,096	$ 2,147	$ 2,222
Actual - 1.00 ADA, Local UPP as follows:	*90.98%*	*91.21%*	*91.34%*	*91.52%*
Grades TK-3	$ 1,993	$ 2,019	$ 2,071	$ 2,148
Grades 4-6	$ 1,832	$ 1,856	$ 1,904	$ 1,975
Grades 7-8	$ 1,886	$ 1,911	$ 1,961	$ 2,034
Concentration Grant (>55% population)	65%	65%	65%	65%
Maximum - 1.00 ADA, 100% UPP				
Grades TK-3	$ 7,118	$ 7,194	$ 7,369	$ 7,628
Grades 4-6	$ 6,545	$ 6,615	$ 6,776	$ 7,014
Grades 7-8	$ 6,739	$ 6,811	$ 6,976	$ 7,222
Actual - 1.00 ADA, Local UPP >55% as follows:	*35.9800%*	*36.2100%*	*36.3400%*	*36.5200%*
Grades TK-3	$ 2,561	$ 2,605	$ 2,678	$ 2,786
Grades 4-6	$ 2,355	$ 2,395	$ 2,462	$ 2,562
Grades 7-8	$ 2,425	$ 2,466	$ 2,535	$ 2,638

Oxnard (72538) - 2024-25 Second Interim		1/25/2025		
DETAILED ADA CALCULATION	**2023-24**	**2024-25**	**2025-26**	**2026-27**
Third Prior Year ADA for the Hold Harmless (adjusted for current year charter shift)	2020-21 ADA	2021-22 ADA	2022-23 ADA	2023-24 ADA
Grades TK-3	6,512.97	5,738.43	5,620.48	5,347.04
Grades 4-6	5,166.20	4,835.86	4,345.27	4,261.65
Grades 7-8	3,504.47	3,317.48	3,040.58	2,966.95
LCFF Subtotal	15,183.64	13,891.77	13,006.33	12,575.64
NSS	-	-	-	-
Combined Subtotal	15,183.64	13,891.77	13,006.33	12,575.64
Second Prior Year ADA for the Hold Harmless (adjusted for current year charter shift)	2021-22 ADA	2022-23 ADA	2023-24 ADA	2024-25 ADA
Grades TK-3	5,738.43	5,620.48	5,347.04	5,252.40
Grades 4-6	4,835.86	4,345.27	4,261.65	4,117.99
Grades 7-8	3,317.48	3,040.58	2,966.95	2,936.11
LCFF Subtotal	13,891.77	13,006.33	12,575.64	12,306.50
NSS	-	-	-	-
Combined Subtotal	13,891.77	13,006.33	12,575.64	12,306.50
Prior Year ADA for the Hold Harmless (adjusted for current year charter shift)	2022-23 ADA	2023-24 ADA	2024-25 ADA	2025-26 ADA
Grades TK-3	5,620.48	5,347.04	5,252.40	4,998.87
Grades 4-6	4,345.27	4,261.65	4,117.99	4,052.15
Grades 7-8	3,040.58	2,966.95	2,936.11	2,888.78
LCFF Subtotal	13,006.33	12,575.64	12,306.50	11,939.80
NSS	-	-	-	-
Combined Subtotal	13,006.33	12,575.64	12,306.50	11,939.80
Prior 3-Year Average ADA (if charter shift percentage > -50%, adjusted for +/- current year charter shift) - Effective beginning in 2022-23				
Grades TK-3	5,957.29	5,568.65	5,406.64	5,199.44
Grades 4-6	4,782.44	4,480.93	4,241.64	4,143.93
Grades 7-8	3,287.51	3,108.34	2,981.21	2,930.61
LCFF Subtotal	14,027.24	13,157.92	12,629.49	12,273.98
NSS	-	-	-	-
Combined Subtotal	14,027.24	13,157.92	12,629.49	12,273.98
Current Year ADA				
Grades TK-3	5,347.04	5,252.40	4,998.87	4,754.58
Grades 4-6	4,261.65	4,117.99	4,052.15	3,998.91
Grades 7-8	2,966.95	2,936.11	2,888.78	2,849.39
LCFF Subtotal	12,575.64	12,306.50	11,939.80	11,602.88
Combined Subtotal	12,575.64	12,306.50	11,939.80	11,602.88
Change in LCFF ADA (excludes NSS ADA)	(430.69)	(269.14)	(366.70)	(336.92)
	Decline	Decline	Decline	Decline

Oxnard (72538) - 2024-25 Second Interim		1/25/2025		
DETAILED ADA CALCULATION	**2023-24**	**2024-25**	**2025-26**	**2026-27**
Funded LCFF ADA (greater of current year, prior year or 3-prior year average)				
Grades TK-3	5,957.29	5,568.65	5,406.64	5,199.44
Grades 4-6	4,782.44	4,480.93	4,241.64	4,143.93
Grades 7-8	3,287.51	3,108.34	2,981.21	2,930.61
Subtotal	14,027.24	13,157.92	12,629.49	12,273.98
	3PY Average	*3PY Average*	*3PY Average*	*3PY Average*
Funded NSS ADA				
Grades TK-3	-	-	-	-
Grades 4-6	-	-	-	-
Grades 7-8	-	-	-	-
Subtotal	-	-	-	-
NPS, CDS, & COE Operated				
Grades TK-3	6.54	6.54	6.54	6.54
Grades 4-6	9.76	9.76	9.76	9.76
Grades 7-8	15.51	15.51	15.51	15.51
Subtotal	31.81	31.81	31.81	31.81
ACTUAL ADA ***(Current Year Only)***				
Grades TK-3	5,353.58	5,258.94	5,005.41	4,761.12
Grades 4-6	4,271.41	4,127.75	4,061.91	4,008.67
Grades 7-8	2,982.46	2,951.62	2,904.29	2,864.90
Total Actual ADA	12,607.45	12,338.31	11,971.61	11,634.69
TOTAL FUNDED ADA, LCFF & NSS				
Grades TK-3	5,963.83	5,575.19	5,413.18	5,205.98
Grades 4-6	4,792.20	4,490.69	4,251.40	4,153.69
Grades 7-8	3,303.02	3,123.85	2,996.72	2,946.12
Total Funded ADA	**14,059.05**	**13,189.73**	**12,661.30**	**12,305.79**
Funded Difference (Funded ADA less Actual ADA)	*1,451.60*	*851.42*	*689.69*	*671.10*
FUNDED ADA for the Transitional Kindergarten Add-on				
Current Year TK ADA	373.15	451.20	455.04	456.96

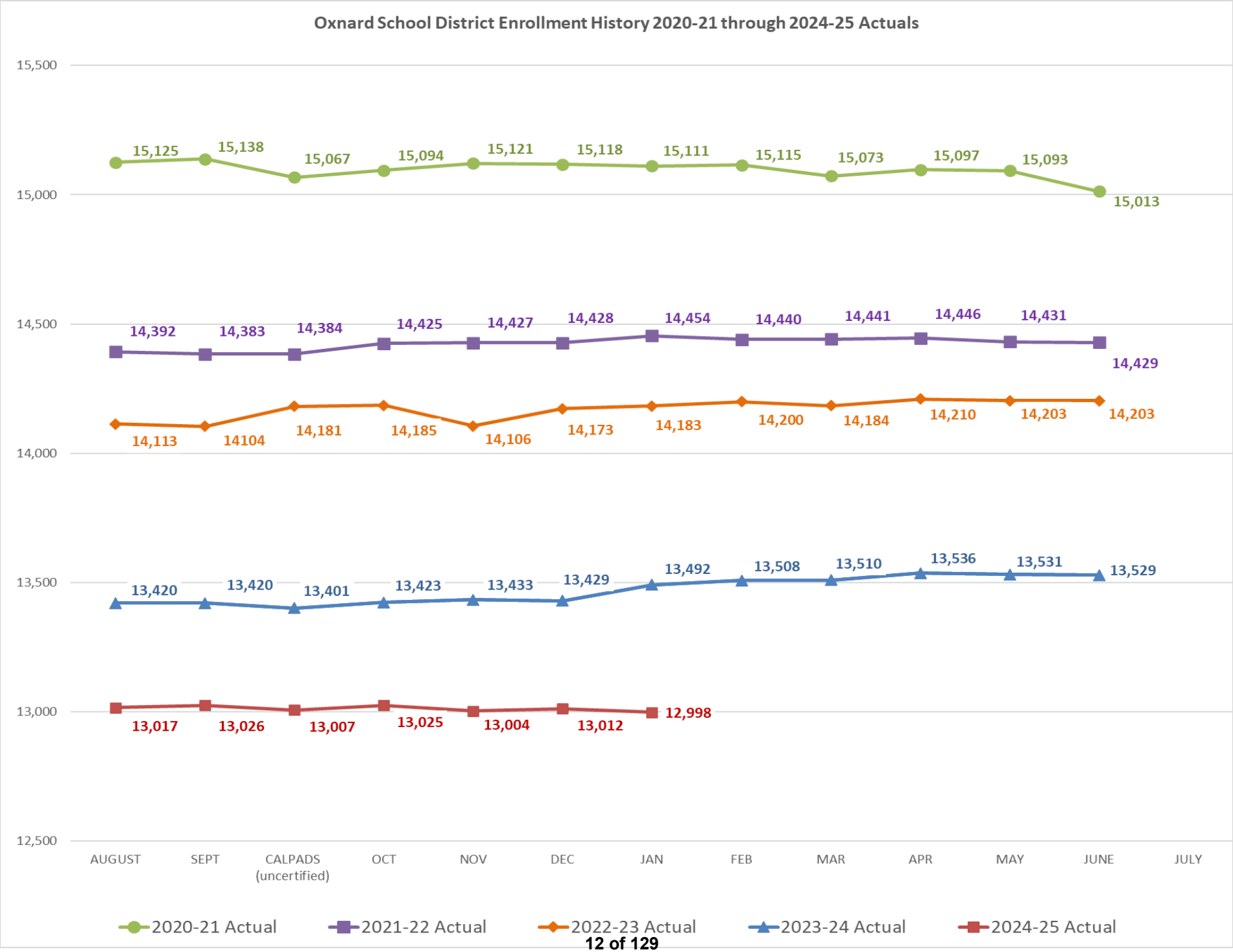
Oxnard School District Enrollment History 2020-21 through 2024-25 Actuals
15,500
15,000
14,500
14,000
13,500
13,000
12,500
15,125
15,138
15,067
15,094
15,121
15,118
15,111
15,115
15,073
15,097
15,093
15,013
14,392
14,383
14,384
14,425
14,427
14,428
14,454
14,440
14,441
14,446
14,431
14,429
14,113
14104
14,181
14,185
14,106
14,173
14,183
14,200
14,184
14,210
14,203
14,203
13,420
13,420
13,401
13,423
13,433
13,429
13,492
13,508
13,510
13,536
13,531
13,529
13,017
13,026
13,007
13,025
13,004
13,012
12,998
AUGUST
SEPT
CALPADS (uncertified)
OCT
NOV
DEC
JAN
FEB
MAR
APR
MAY
JUNE
JULY
2020-21 Actual
2021-22 Actual
2022-23 Actual
2023-24 Actual
2024-25 Actual

NOTICE OF CRITERIA AND STANDARDS REVIEW. This interim report was based upon and reviewed using the state-adopted Criteria and Standards. (Pursuant to Education Code (EC) sections 33129 and 42130)

Signed: _____ Date: _____

District Superintendent or Designee

NOTICE OF INTERIM REVIEW. All action shall be taken on this report during a regular or authorized special meeting of the governing board.

To the County Superintendent of Schools:

This interim report and certification of financial condition are hereby filed by the governing board of the school district. (Pursuant to EC Section 42131)

Meeting Date: March 19, 2025 Signed: _____

President of the Governing Board

CERTIFICATION OF FINANCIAL CONDITION

X POSITIVE CERTIFICATION

As President of the Governing Board of this school district, I certify that based upon current projections this district will meet its financial obligations for the current fiscal year and subsequent two fiscal years.

_____ QUALIFIED CERTIFICATION

As President of the Governing Board of this school district, I certify that based upon current projections this district may not meet its financial obligations for the current fiscal year or two subsequent fiscal years.

_____ NEGATIVE CERTIFICATION

As President of the Governing Board of this school district, I certify that based upon current projections this district will be unable to meet its financial obligations for the remainder of the current fiscal year or for the subsequent fiscal year.

Contact person for additional information on the interim report:

Name: Patricia Núñez Telephone: 805-385-1501 x2455

Title: Director of Fiscal Services E-mail: pnunez@oxnardsdorg

Criteria and Standards Review Summary

The following summary is automatically completed based on data provided in the Criteria and Standards Review form (Form 01CSI). Criteria and standards that are "Not Met," and supplemental information and additional fiscal indicators that are "Yes," may indicate areas of potential concern, which could affect the interim report certification, and should be carefully reviewed.

CRITERIA AND STANDARDS			Met	Not Met
1	Average Daily Attendance	Projected funded ADA for any of the current or two subsequent fiscal years has not changed by more than two percent since first interim.	X	
2	Enrollment	Projected enrollment for any of the current or two subsequent fiscal years has not changed by more than two percent since first interim.	X	
3	ADA to Enrollment	Projected second period (P-2) ADA to enrollment ratio for the current and two subsequent fiscal years is consistent with historical ratios.		X
4	Local Control Funding Formula (LCFF) Revenue	Projected LCFF revenue for any of the current or two subsequent fiscal years has not changed by more than two percent since first interim.	X	
5	Salaries and Benefits	Projected ratio of total unrestricted salaries and benefits to total unrestricted general fund expenditures has not changed by more than the standard for the current and two subsequent fiscal years.		X
6a	Other Revenues	Projected operating revenues (federal, other state, other local) for the current and two subsequent fiscal years have not changed by more than five percent since first interim.	X	
6b	Other Expenditures	Projected operating expenditures (books and supplies, services and other expenditures) for the current and two subsequent fiscal years have not changed by more than five percent since first interim.	X	
7	Ongoing and Major Maintenance Account	If applicable, changes occurring since first interim meet the required contribution to the ongoing and major maintenance account (i.e., restricted maintenance account).	X	
8	Deficit Spending	Unrestricted deficit spending, if any, has not exceeded the standard in any of the current or two subsequent fiscal years.		X
9a	Fund Balance	Projected general fund balance will be positive at the end of the current and two subsequent fiscal years.	X	
9b	Cash Balance	Projected general fund cash balance will be positive at the end of the current fiscal year.	X	
10	Reserves	Available reserves (e.g., reserve for economic uncertainties, unassigned/unappropriated amounts) meet minimum requirements for the current and two subsequent fiscal years.	X	

SUPPLEMENTAL INFORMATION			No	Yes
S1	Contingent Liabilities	Have any known or contingent liabilities (e.g., financial or program audits, litigation, state compliance reviews) occurred since first interim that may impact the budget?	X	
S2	Using One-time Revenues to Fund Ongoing Expenditures	Are there ongoing general fund expenditures funded with one-time revenues that have changed since first interim by more than five percent?	X	
S3	Temporary Interfund Borrowings	Are there projected temporary borrowings between funds?	X	
S4	Contingent Revenues	Are any projected revenues for any of the current or two subsequent fiscal years contingent on reauthorization by the local government, special legislation, or other definitive act (e.g., parcel taxes, forest reserves)?	X	
S5	Contributions	Have contributions from unrestricted to restricted resources, or transfers to or from the general fund to cover operating deficits, changed since first interim by more than $20,000 and more than 5% for any of the current or two subsequent fiscal years?		X
S6	Long-term Commitments	Does the district have long-term (multiyear) commitments or debt agreements?		X
		• If yes, have annual payments for the current or two subsequent fiscal years increased over prior year's (2023-24) annual payment?		X
		• If yes, will funding sources used to pay long-term commitments decrease or expire prior to the end of the commitment period, or are they one-time sources?	X	
S7a	Postemployment Benefits Other than Pensions	Does the district provide postemployment benefits other than pensions (OPEB)?		X
		• If yes, have there been changes since first interim in OPEB liabilities?	X	
S7b	Other Self-insurance Benefits	Does the district operate any self-insurance programs (e.g., workers' compensation)?	X	
		• If yes, have there been changes since first interim in self-insurance liabilities?	n/a	
S8	Status of Labor Agreements	As of second interim projections, are salary and benefit negotiations still unsettled for:		
		• Certificated? (Section S8A, Line 1b)		X
		• Classified? (Section S8B, Line 1b)		X
		• Management/supervisor/confidential? (Section S8C, Line 1b)		X
S8	Labor Agreement Budget Revisions	For negotiations settled since first interim, per Government Code Section 3547.5(c), are budget revisions still needed to meet the costs of the collective bargaining agreement(s) for:		
		• Certificated? (Section S8A, Line 3)	n/a	
		• Classified? (Section S8B, Line 3)	n/a	
S9	Status of Other Funds	Are any funds other than the general fund projected to have a negative fund balance at the end of the current fiscal year?	X	

ADDITIONAL FISCAL INDICATORS			No	Yes
A1	Negative Cash Flow	Do cash flow projections show that the district will end the current fiscal year with a negative cash balance in the general fund?	X	
A2	Independent Position Control	Is personnel position control independent from the payroll system?	X	
A3	Declining Enrollment	Is enrollment decreasing in both the prior and current fiscal years?		X
A4	New Charter Schools Impacting District Enrollment	Are any new charter schools operating in district boundaries that are impacting the district's enrollment, either in the prior or current fiscal year?	X	
A5	Salary Increases Exceed COLA	Has the district entered into a bargaining agreement where any of the current or subsequent fiscal years of the agreement would result in salary increases that are expected to exceed the projected state funded cost-of-living adjustment?	X	
A6	Uncapped Health Benefits	Does the district provide uncapped (100% employer paid) health benefits for current or retired employees?		X
A7	Independent Financial System	Is the district's financial system independent from the county office system?	X	
A8	Fiscal Distress Reports	Does the district have any reports that indicate fiscal distress? If yes, provide copies to the COE, pursuant to EC 42127.6(a).	X	
A9	Change of CBO or Superintendent	Have there been personnel changes in the superintendent or chief business official (CBO) positions within the last 12 months?		X

G = General Ledger Data; S = Supplemental Data

Form	Description	Data Supplied For: 2024-25 Original Budget	2024-25 Board Approved Operating Budget	2024-25 Actuals to Date	2024-25 Projected Totals
01I	General Fund/County School Service Fund	GS	GS	GS	GS
08I	Student Activity Special Revenue Fund	G	G	G	G
09I	Charter Schools Special Revenue Fund				
10I	Special Education Pass-Through Fund				
11I	Adult Education Fund				
12I	Child Development Fund	G	G	G	G
13I	Cafeteria Special Revenue Fund	G	G	G	G
14I	Deferred Maintenance Fund	G	G	G	G
15I	Pupil Transportation Equipment Fund				
17I	Special Reserve Fund for Other Than Capital Outlay Projects				
18I	School Bus Emissions Reduction Fund				
19I	Foundation Special Revenue Fund				
20I	Special Reserve Fund for Postemployment Benefits				
21I	Building Fund	G	G	G	G
25I	Capital Facilities Fund	G	G	G	G
30I	State School Building Lease-Purchase Fund				
35I	County School Facilities Fund	G	G	G	G
40I	Special Reserve Fund for Capital Outlay Projects				
49I	Capital Project Fund for Blended Component Units				
51I	Bond Interest and Redemption Fund	G	G	G	G
52I	Debt Service Fund for Blended Component Units				
53I	Tax Override Fund				
56I	Debt Service Fund				
57I	Foundation Permanent Fund				
61I	Cafeteria Enterprise Fund				
62I	Charter Schools Enterprise Fund				
63I	Other Enterprise Fund				
66I	Warehouse Revolving Fund				
67I	Self-Insurance Fund				
71I	Retiree Benefit Fund	G	G	G	G
73I	Foundation Private-Purpose Trust Fund				
76I	Warrant/Pass-Through Fund				
95I	Student Body Fund				
AI	Average Daily Attendance	S	S		S
CASH	Cashflow Worksheet				S
CI	Interim Certification				S
ESMOE	Every Student Succeeds Act Maintenance of Effort				G
ICR	Indirect Cost Rate Worksheet				
MYPI	Multiyear Projections - General Fund				GS
SIAI	Summary of Interfund Activities - Projected Year Totals				G
01CSI	Criteria and Standards Review				S

Description	ESTIMATED FUNDED ADA Original Budget (A)	ESTIMATED FUNDED ADA Board Approved Operating Budget (B)	ESTIMATED P-2 REPORT ADA Projected Year Totals (C)	ESTIMATED FUNDED ADA Projected Year Totals (D)	DIFFERENCE (Col. D - B) (E)	PERCENTAGE DIFFERENCE (Col. E / B) (F)
A. DISTRICT						
1. Total District Regular ADA Includes Opportunity Classes, Home & Hospital, Special Day Class, Continuation Education, Special Education NPS/LCI and Extended Year, and Community Day School (includes Necessary Small School ADA)	13,157.92	13,157.92	12,306.50	13,157.92	0.00	0.0%
2. Total Basic Aid Choice/Court Ordered Voluntary Pupil Transfer Regular ADA Includes Opportunity Classes, Home & Hospital, Special Day Class, Continuation Education, Special Education NPS/LCI and Extended Year, and Community Day School (ADA not included in Line A1 above)					0.00	
3. Total Basic Aid Open Enrollment Regular ADA Includes Opportunity Classes, Home & Hospital, Special Day Class, Continuation Education, Special Education NPS/LCI and Extended Year, and Community Day School (ADA not included in Line A1 above)					0.00	
4. Total, District Regular ADA (Sum of Lines A1 through A3)	13,157.92	13,157.92	12,306.50	13,157.92	0.00	0.0%
5. District Funded County Program ADA						
a. County Community Schools					0.00	
b. Special Education-Special Day Class					0.00	
c. Special Education-NPS/LCI					0.00	
d. Special Education Extended Year					0.00	
e. Other County Operated Programs: Opportunity Schools and Full Day Opportunity Classes, Specialized Secondary Schools	30.43	31.81	31.81	31.81	0.00	0.0%
f. County School Tuition Fund (Out of State Tuition) [EC 2000 and 46380]					0.00	
g. Total, District Funded County Program ADA (Sum of Lines A5a through A5f)	30.43	31.81	31.81	31.81	0.00	0.0%
6. TOTAL DISTRICT ADA (Sum of Line A4 and Line A5g)	13,188.35	13,189.73	12,338.31	13,189.73	0.00	0.0%
7. Adults in Correctional Facilities					0.00	
8. Charter School ADA (Enter Charter School ADA using Tab C. Charter School ADA)						

Description	Object	Beginning Balances (Ref. Only)	July	August	September	October	November	December	January	February
ACTUALS THROUGH THE MONTH OF (Enter Month Name):	JUNE									
A. BEGINNING CASH			146,181,111.12	133,868,133.07	124,311,366.64	122,263,150.09	122,608,792.81	121,720,996.09	141,266,356.20	140,485,125.96
B. RECEIPTS										
LCFF/Revenue Limit Sources										
Principal Apportionment	8010-8019		7,858,646.00	7,858,646.00	20,591,830.00	14,145,562.00	14,145,562.00	20,591,829.00	14,145,562.00	11,061,241.00
Property Taxes	8020-8079		98,692.92	732,062.18				16,531,991.85	2,614,574.58	96,710.28
Miscellaneous Funds	8080-8099								(7,000,000.00)	
Federal Revenue	8100-8299		796,067.00	1,373,073.00	(2,048,286.05)	1,881,874.00	1,570,195.38	11,583.00	4,330,885.04	180,783.00
Other State Revenue	8300-8599		1,555,351.00	1,555,351.00	3,129,728.02	2,802,130.76	3,965,412.47	3,088,613.44	3,515,123.65	2,891,731.46
Other Local Revenue	8600-8799		2,211,090.00	822,811.77	1,778,803.33	3,926,079.71	1,195,668.54	1,191,348.84	3,812,156.24	2,446,982.98
Interfund Transfers In	8900-8929									
All Other Financing Sources	8930-8979									
TOTAL RECEIPTS			12,519,846.92	12,341,943.95	23,452,075.30	22,755,646.47	20,876,838.39	41,415,366.13	21,418,301.51	16,677,448.72
C. DISBURSEMENTS										
Certificated Salaries	1000-1999		266,434.61	10,723,244.05	10,387,840.84	9,814,935.36	10,007,112.91	10,511,423.27	9,950,546.09	9,810,036.86
Classified Salaries	2000-2999		1,571,953.10	4,407,407.32	4,131,237.19	3,905,492.96	3,955,415.34	3,907,582.20	3,900,597.96	3,951,271.50
Employee Benefits	3000-3999		2,279,699.60	5,635,493.74	5,467,546.36	5,394,611.16	5,465,506.60	5,444,266.30	5,466,443.82	5,442,331.33
Books and Supplies	4000-4999		126,605.82	867,514.95	370,474.09	726,610.07	527,986.80	405,094.38	496,553.91	529,599.06
Services	5000-5999		9,411,091.85	2,848,210.94	3,376,051.20	4,254,768.28	3,777,355.89	7,821,195.49	3,565,473.09	3,780,660.39
Capital Outlay	6000-6999		(.01)	505,772.89	22,391.25	14,240.74	15,946.79	465,285.49	28,417.17	171,665.98
Other Outgo	7000-7499		23,660.00	23,660.00	114,255.00	42,588.00	42,588.00	42,588.00	42,588.00	35,689.00

Description	Object	Beginning Balances (Ref. Only)	July	August	September	October	November	December	January	February
Interfund Transfers Out	7600-7629									
All Other Financing Uses	7630-7699									
TOTAL DISBURSEMENTS			13,679,444.97	25,011,303.89	23,869,795.93	24,153,246.57	23,791,912.33	28,597,435.13	23,450,620.04	23,721,254.12
D. BALANCE SHEET ITEMS										
Assets and Deferred Outflows										
Cash Not In Treasury	9111-9199									
Accounts Receivable	9200-9299	21,953,090.58	2,673,264.58	2,570,219.66	3,238,201.46	711,451.69	943,522.75	5,984,611.50	311,264.52	1,286,835.88
Due From Other Funds	9310	301,447.84			337,368.53					
Stores	9320	219,779.45	27,160.87	64,446.71	(52,696.10)	16,536.11	(31,038.92)	10,389.58	(43,818.36)	8,653.39
Prepaid Expenditures	9330									
Other Current Assets	9340									
Lease Receivable	9380									
Deferred Outflows of Resources	9490									
SUBTOTAL		22,474,317.87	2,700,425.45	2,634,666.37	3,522,873.89	727,987.80	912,483.83	5,995,001.08	267,446.16	1,295,489.27
Liabilities and Deferred Inflows										
Accounts Payable	9500-9599	12,464,184.51	13,853,805.45	(477,927.14)	825,295.79	(765,955.50)	(1,114,793.39)	(732,428.03)	(983,642.13)	(683,015.14)
Due To Other Funds	9610	3,707,614.57			3,707,614.57					
Current Loans	9640									
Unearned Revenues	9650	869,758.97			620,459.45	(249,299.52)				
Deferred Inflows of Resources	9690									
SUBTOTAL		17,041,558.05	13,853,805.45	(477,927.14)	5,153,369.81	(1,015,255.02)	(1,114,793.39)	(732,428.03)	(983,642.13)	(683,015.14)
Nonoperating										
Suspense Clearing	9910									
TOTAL BALANCE SHEET ITEMS		5,432,759.82	(11,153,380.00)	3,112,593.51	(1,630,495.92)	1,743,242.82	2,027,277.22	6,727,429.11	1,251,088.29	1,978,504.41
E. NET INCREASE/DECREASE (B - C + D)			(12,312,978.05)	(9,556,766.43)	(2,048,216.55)	345,642.72	(887,796.72)	19,545,360.11	(781,230.24)	(5,065,300.99)
F. ENDING CASH (A + E)			133,868,133.07	124,311,366.64	122,263,150.09	122,608,792.81	121,720,996.09	141,266,356.20	140,485,125.96	135,419,824.97
G. ENDING CASH, PLUS CASH ACCRUALS AND ADJUSTMENTS										

Description	Object	March	April	May	June	Accruals	Adjustments	TOTAL	BUDGET
ACTUALS THROUGH THE MONTH OF (Enter Month Name):	JUNE								
A. BEGINNING CASH		135,419,824.97	124,958,775.83	110,514,652.76	107,533,050.32				
B. RECEIPTS									
LCFF/Revenue Limit Sources									
Principal Apportionment	8010-8019	16,710,318.40	11,061,241.40	11,061,241.40	16,710,318.40	1,491,282.40		167,433,280.00	167,433,280.00
Property Taxes	8020-8079		0.00	14,391,818.19				34,465,850.00	34,465,850.00
Miscellaneous Funds	8080-8099		0.00					(7,000,000.00)	(7,000,000.00)
Federal Revenue	8100-8299	0.00	1,402,501.57	0.00	0.00	4,243,335.06		13,742,011.00	13,742,011.00
Other State Revenue	8300-8599	3,739,510.50	2,809,809.00	2,809,809.00	3,722,814.17	4,649,586.53		40,234,971.00	40,234,971.00
Other Local Revenue	8600-8799	1,366,053.32	1,566,053.32	1,366,053.32	1,559,283.65	(1,677,681.02)		21,564,704.00	21,564,704.00
Interfund Transfers In	8900-8929							0.00	0.00
All Other Financing Sources	8930-8979							0.00	0.00
TOTAL RECEIPTS		21,815,882.22	16,839,605.29	29,628,921.91	21,992,416.22	8,706,522.97	0.00	270,440,816.00	270,440,816.00
C. DISBURSEMENTS									
Certificated Salaries	1000-1999	10,669,862.33	10,669,862.33	10,669,862.35	11,603,622.00	0.00		115,084,783.00	115,084,783.00
Classified Salaries	2000-2999	4,122,327.00	4,122,327.00	4,122,057.43	5,946,769.00			48,044,438.00	48,044,438.00
Employee Benefits	3000-3999	5,660,488.67	5,660,488.67	5,660,488.75	8,105,991.00			65,683,356.00	65,683,356.00
Books and Supplies	4000-4999	2,556,937.00	2,556,937.00	2,556,937.00	2,371,936.65	792,392.27		14,885,579.00	14,885,579.00
Services	5000-5999	9,395,138.75	9,395,138.75	9,395,138.75	8,895,138.26	3,524,155.36		79,439,517.00	79,439,517.00
Capital Outlay	6000-6999	540,000.00	540,000.00	540,000.00	540,000.00	414,035.70		3,797,756.00	3,797,756.00
Other Outgo	7000-7499	1,028,892.00	35,689.00	532,290.00	35,689.00	142,095.00		2,142,271.00	2,142,271.00
Interfund Transfers Out	7600-7629							0.00	0.00
All Other Financing Uses	7630-7699							0.00	0.00

Description	Object	March	April	May	June	Accruals	Adjustments	TOTAL	BUDGET
TOTAL DISBURSEMENTS		33,973,645.75	32,980,442.75	33,476,774.28	37,499,145.91	4,872,678.33	0.00	329,077,700.00	329,077,700.00
D. BALANCE SHEET ITEMS									
Assets and Deferred Outflows									
Cash Not In Treasury	9111-9199							0.00	
Accounts Receivable	9200-9299	1,688,061.00	1,688,061.00	857,596.54	0.00			21,953,090.58	
Due From Other Funds	9310				(35,920.69)	(35,920.69)		265,527.15	
Stores	9320	8,653.39	8,653.39	8,653.39	8,653.39	137,622.01		171,868.85	
Prepaid Expenditures	9330							0.00	
Other Current Assets	9340							0.00	
Lease Receivable	9380							0.00	
Deferred Outflows of Resources	9490							0.00	
SUBTOTAL		1,696,714.39	1,696,714.39	866,249.93	(27,267.30)	101,701.32	0.00	22,390,486.58	
Liabilities and Deferred Inflows									
Accounts Payable	9500-9599				143,759.30		0.00	10,065,099.21	
Due To Other Funds	9610							3,707,614.57	
Current Loans	9640							0.00	
Unearned Revenues	9650					498,599.04		869,758.97	
Deferred Inflows of Resources	9690							0.00	
SUBTOTAL		0.00	0.00	0.00	143,759.30	498,599.04	0.00	14,642,472.75	
Nonoperating									
Suspense Clearing	9910							0.00	
TOTAL BALANCE SHEET ITEMS		1,696,714.39	1,696,714.39	866,249.93	(171,026.60)	(396,897.72)	0.00	7,748,013.83	
E. NET INCREASE/DECREASE (B - C + D)		(10,461,049.14)	(14,444,123.07)	(2,981,602.44)	(15,677,756.29)	3,436,946.92	0.00	(50,888,870.17)	(58,636,884.00)
F. ENDING CASH (A + E)		124,958,775.83	110,514,652.76	107,533,050.32	91,855,294.03				
G. ENDING CASH, PLUS CASH ACCRUALS AND ADJUSTMENTS								95,292,240.95	

Description	Resource Codes	Object Codes	Original Budget (A)	Board Approved Operating Budget (B)	Actuals To Date (C)	Projected Year Totals (D)	Difference (Col B & D) (E)	% Diff Column B & D (F)
A. REVENUES								
1) LCFF Sources		8010-8099	194,795,986.00	194,839,570.00	112,314,958.53	194,899,130.00	59,560.00	0.0%
2) Federal Revenue		8100-8299	0.00	0.00	0.00	0.00	0.00	0.0%
3) Other State Revenue		8300-8599	4,805,248.00	6,018,305.00	3,484,030.29	6,318,305.00	300,000.00	5.0%
4) Other Local Revenue		8600-8799	3,338,849.00	4,875,473.00	4,431,196.54	5,124,534.00	249,061.00	5.1%
5) TOTAL, REVENUES			202,940,083.00	205,733,348.00	120,230,185.36	206,341,969.00		
B. EXPENDITURES								
1) Certificated Salaries		1000-1999	87,842,823.00	97,742,395.00	46,618,584.25	92,932,426.00	4,809,969.00	4.9%
2) Classified Salaries		2000-2999	32,957,416.00	33,351,658.00	14,434,808.69	32,891,446.00	460,212.00	1.4%
3) Employee Benefits		3000-3999	47,416,356.00	50,054,861.00	24,709,345.61	48,861,687.00	1,193,174.00	2.4%
4) Books and Supplies		4000-4999	5,698,695.00	8,891,694.00	2,157,585.51	9,549,718.00	(658,024.00)	-7.4%
5) Services and Other Operating Expenditures		5000-5999	25,025,048.00	26,672,675.00	17,288,357.29	27,053,884.00	(381,209.00)	-1.4%
6) Capital Outlay		6000-6999	857,586.00	1,425,970.00	992,964.25	2,472,859.00	(1,046,889.00)	-73.4%
7) Other Outgo (excluding Transfers of Indirect Costs)		7100-7299 7400-7499	500,000.00	473,203.00	260,260.00	473,203.00	0.00	0.0%
8) Other Outgo - Transfers of Indirect Costs		7300-7399	(2,131,252.00)	(3,153,725.00)	(3,275.77)	(3,306,968.00)	153,243.00	-4.9%
9) TOTAL, EXPENDITURES			198,166,672.00	215,458,731.00	106,458,629.83	210,928,255.00		
C. EXCESS (DEFICIENCY) OF REVENUES OVER EXPENDITURES BEFORE OTHER FINANCING SOURCES AND USES (A5 - B9)			4,773,411.00	(9,725,383.00)	13,771,555.53	(4,586,286.00)		
D. OTHER FINANCING SOURCES/USES								
1) Interfund Transfers								
a) Transfers In		8900-8929	0.00	0.00	0.00	0.00	0.00	0.0%
b) Transfers Out		7600-7629	0.00	0.00	0.00	0.00	0.00	0.0%
2) Other Sources/Uses								
a) Sources		8930-8979	0.00	0.00	0.00	0.00	0.00	0.0%
b) Uses		7630-7699	0.00	0.00	0.00	0.00	0.00	0.0%
3) Contributions		8980-8999	(29,879,311.00)	(19,522,241.00)	(11,539.89)	(22,268,838.00)	(2,746,597.00)	14.1%
4) TOTAL, OTHER FINANCING SOURCES/USES			(29,879,311.00)	(19,522,241.00)	(11,539.89)	(22,268,838.00)		
E. NET INCREASE (DECREASE) IN FUND BALANCE (C + D4)			(25,105,900.00)	(29,247,624.00)	13,760,015.64	(26,855,124.00)		
F. FUND BALANCE, RESERVES								
1) Beginning Fund Balance								
a) As of July 1 - Unaudited		9791	58,602,186.00	85,642,597.00		85,642,597.00	0.00	0.0%
b) Audit Adjustments		9793	0.00	0.00		0.00	0.00	0.0%
c) As of July 1 - Audited (F1a + F1b)			58,602,186.00	85,642,597.00		85,642,597.00		
d) Other Restatements		9795	0.00	0.00		0.00	0.00	0.0%
e) Adjusted Beginning Balance (F1c + F1d)			58,602,186.00	85,642,597.00		85,642,597.00		
2) Ending Balance, June 30 (E + F1e)			33,496,286.00	56,394,973.00		58,787,473.00		
Components of Ending Fund Balance								
a) Nonspendable								
Revolving Cash		9711	120,000.00	20,000.00		20,000.00		
Stores		9712	0.00	100,000.00		100,000.00		
Prepaid Items		9713	0.00	0.00		0.00		
All Others		9719	0.00	0.00		0.00		

Description	Resource Codes	Object Codes	Original Budget (A)	Board Approved Operating Budget (B)	Actuals To Date (C)	Projected Year Totals (D)	Difference (Col B & D) (E)	% Diff Column B & D (F)
b) Restricted		9740	0.00	0.00		0.00		
c) Committed								
Stabilization Arrangements		9750	0.00	0.00		0.00		
Other Commitments		9760	3,768,550.00	3,768,550.00		3,768,550.00		
Student Transportation Bus Replace	0000	9760	*1,000,000.00*					
Technology Device Refresh	0000	9760	*1,000,000.00*					
Instructional Materials Adoptions	0000	9760	*1,000,000.00*					
Building Maintenance One-time Funds	0000	9760	*768,550.00*					
Building Maintenance One-time Funds	0000	9760		*768,550.00*				
Instructional Materials Adoptions	0000	9760		*1,000,000.00*				
Student Transportation Bus Replace	0000	9760		*1,000,000.00*				
Technology Device Refresh	0000	9760		*1,000,000.00*				
Student Transportation Bus Replace	0000	9760				*1,000,000.00*		
Technology Device Refresh	0000	9760				*1,000,000.00*		
Instructional Materials Adoptions	0000	9760				*1,000,000.00*		
Building Maintenance One-time Funds	0000	9760				*768,550.00*		
d) Assigned								
Other Assignments		9780	0.00	19,937,215.00		21,991,154.00		
Financial Stability Reserve	0000	9780		*19,937,215.00*				
Financial Stability Reserve	0000	9780				*21,991,154.00*		
e) Unassigned/Unappropriated								
Reserve for Economic Uncertainties		9789	29,607,736.00	32,569,208.00		32,907,769.00		
Unassigned/Unappropriated Amount		9790	0.00	0.00		0.00		
LCFF SOURCES								
Principal Apportionment								
State Aid - Current Year		8011	126,105,551.00	143,183,031.00	86,445,102.00	143,242,591.00	59,560.00	0.0%
Education Protection Account State Aid - Current Year		8012	44,171,651.00	24,190,689.00	12,892,535.00	24,190,689.00	0.00	0.0%
State Aid - Prior Years		8019	0.00	0.00	0.00	0.00	0.00	0.0%
Tax Relief Subventions								
Homeowners' Exemptions		8021	160,902.00	153,774.00	0.00	153,774.00	0.00	0.0%
Timber Yield Tax		8022	0.00	0.00	0.00	0.00	0.00	0.0%
Other Subventions/In-Lieu Taxes		8029	0.00	0.00	0.00	0.00	0.00	0.0%
County & District Taxes								
Secured Roll Taxes		8041	27,337,753.00	30,396,923.00	16,100,302.33	30,396,923.00	0.00	0.0%
Unsecured Roll Taxes		8042	579,277.00	645,198.00	505,778.01	645,198.00	0.00	0.0%
Prior Years' Taxes		8043	95,597.00	111,891.00	0.00	111,891.00	0.00	0.0%
Supplemental Taxes		8044	785,442.00	739,204.00	617,124.72	739,204.00	0.00	0.0%
Education Revenue Augmentation Fund (ERAF)		8045	1,327,274.00	273,148.00	1,266,451.10	273,148.00	0.00	0.0%
Community Redevelopment Funds (SB 617/699/1992)		8047	1,232,539.00	2,145,712.00	1,487,665.37	2,145,712.00	0.00	0.0%
Penalties and Interest from Delinquent Taxes		8048	0.00	0.00	0.00	0.00	0.00	0.0%
Miscellaneous Funds (EC 41604)								

Description	Resource Codes	Object Codes	Original Budget (A)	Board Approved Operating Budget (B)	Actuals To Date (C)	Projected Year Totals (D)	Difference (Col B & D) (E)	% Diff Column B & D (F)
Royalties and Bonuses		8081	0.00	0.00	0.00	0.00	0.00	0.0%
Other In-Lieu Taxes		8082	0.00	0.00	0.00	0.00	0.00	0.0%
Less: Non-LCFF (50%) Adjustment		8089	0.00	0.00	0.00	0.00	0.00	0.0%
Subtotal, LCFF Sources			201,795,986.00	201,839,570.00	119,314,958.53	201,899,130.00	59,560.00	0.0%
LCFF Transfers								
Unrestricted LCFF Transfers - Current Year	0000	8091	(7,000,000.00)	(7,000,000.00)	(7,000,000.00)	(7,000,000.00)	0.00	0.0%
All Other LCFF Transfers - Current Year	All Other	8091	0.00	0.00	0.00	0.00	0.00	0.0%
Transfers to Charter Schools in Lieu of Property Taxes		8096	0.00	0.00	0.00	0.00	0.00	0.0%
Property Taxes Transfers		8097	0.00	0.00	0.00	0.00	0.00	0.0%
LCFF/Revenue Limit Transfers - Prior Years		8099	0.00	0.00	0.00	0.00	0.00	0.0%
TOTAL, LCFF SOURCES			194,795,986.00	194,839,570.00	112,314,958.53	194,899,130.00	59,560.00	0.0%
FEDERAL REVENUE								
Maintenance and Operations		8110	0.00	0.00	0.00	0.00	0.00	0.0%
Special Education Entitlement		8181	0.00	0.00	0.00	0.00		
Special Education Discretionary Grants		8182	0.00	0.00	0.00	0.00		
Child Nutrition Programs		8220	0.00	0.00	0.00	0.00		
Donated Food Commodities		8221	0.00	0.00	0.00	0.00		
Forest Reserve Funds		8260	0.00	0.00	0.00	0.00	0.00	0.0%
Flood Control Funds		8270	0.00	0.00	0.00	0.00	0.00	0.0%
Wildlife Reserve Funds		8280	0.00	0.00	0.00	0.00	0.00	0.0%
FEMA		8281	0.00	0.00	0.00	0.00	0.00	0.0%
Interagency Contracts Between LEAs		8285	0.00	0.00	0.00	0.00	0.00	0.0%
Pass-Through Revenues from Federal Sources		8287	0.00	0.00	0.00	0.00		
Title I, Part A, Basic	3010	8290						
Title I, Part D, Local Delinquent Programs	3025	8290						
Title II, Part A, Supporting Effective Instruction	4035	8290						
Title III, Immigrant Student Program	4201	8290						
Title III, English Learner Program	4203	8290						
Public Charter Schools Grant Program (PCSGP)	4610	8290						
Every Student Succeeds Act	3040, 3060, 3061, 3110, 3150, 3155, 3182, 4037, 4123, 4124, 4126, 4127, 4128, 5630	8290						
Career and Technical Education	3500-3599	8290						
All Other Federal Revenue	All Other	8290	0.00	0.00	0.00	0.00	0.00	0.0%
TOTAL, FEDERAL REVENUE			0.00	0.00	0.00	0.00	0.00	0.0%
OTHER STATE REVENUE								
Other State Apportionments								
ROC/P Entitlement Prior Years	6360	8319						
Special Education Master Plan								

Description	Resource Codes	Object Codes	Original Budget (A)	Board Approved Operating Budget (B)	Actuals To Date (C)	Projected Year Totals (D)	Difference (Col B & D) (E)	% Diff Column B & D (F)
Current Year	6500	8311						
Prior Years	6500	8319						
All Other State Apportionments - Current Year	All Other	8311	0.00	0.00	0.00	0.00	0.00	0.0%
All Other State Apportionments - Prior Years	All Other	8319	0.00	0.00	0.00	0.00	0.00	0.0%
Child Nutrition Programs		8520	0.00	0.00	0.00	0.00		
Mandated Costs Reimbursements		8550	480,515.00	480,515.00	480,515.00	480,515.00	0.00	0.0%
Lottery - Unrestricted and Instructional Materials		8560	2,324,733.00	2,601,802.00	780,939.85	2,601,802.00	0.00	0.0%
Tax Relief Subventions								
Restricted Levies - Other								
Homeowners' Exemptions		8575	0.00	0.00	0.00	0.00		
Other Subventions/In-Lieu Taxes		8576	0.00	0.00	0.00	0.00		
Pass-Through Revenues from State Sources		8587	0.00	0.00	0.00	0.00	0.00	0.0%
After School Education and Safety (ASES)	6010	8590						
Charter School Facility Grant	6030	8590						
Career Technical Education Incentive Grant Program	6387	8590						
Drug/Alcohol/Tobacco Funds	6650, 6690, 6695	8590						
California Clean Energy Jobs Act	6230	8590						
Specialized Secondary	7370	8590						
American Indian Early Childhood Education	7210	8590						
All Other State Revenue	All Other	8590	2,000,000.00	2,935,988.00	2,222,575.44	3,235,988.00	300,000.00	10.2%
TOTAL, OTHER STATE REVENUE			4,805,248.00	6,018,305.00	3,484,030.29	6,318,305.00	300,000.00	5.0%
OTHER LOCAL REVENUE								
Other Local Revenue								
County and District Taxes								
Other Restricted Levies								
Secured Roll		8615	0.00	0.00	0.00	0.00		
Unsecured Roll		8616	0.00	0.00	0.00	0.00		
Prior Years' Taxes		8617	0.00	0.00	0.00	0.00		
Supplemental Taxes		8618	0.00	0.00	0.00	0.00		
Non-Ad Valorem Taxes								
Parcel Taxes		8621	0.00	0.00	0.00	0.00	0.00	0.0%
Other		8622	0.00	0.00	0.00	0.00	0.00	0.0%
Community Redevelopment Funds Not Subject to LCFF Deduction		8625	0.00	0.00	0.00	0.00		
Penalties and Interest from Delinquent Non-LCFF Taxes		8629	0.00	0.00	0.00	0.00		
Sales								
Sale of Equipment/Supplies		8631	95,000.00	1,000.00	0.00	1,000.00	0.00	0.0%
Sale of Publications		8632	0.00	0.00	0.00	0.00	0.00	0.0%
Food Service Sales		8634	0.00	0.00	0.00	0.00	0.00	0.0%
All Other Sales		8639	0.00	0.00	0.00	0.00	0.00	0.0%
Leases and Rentals		8650	220,000.00	220,000.00	74,663.24	220,000.00	0.00	0.0%
Interest		8660	2,000,000.00	2,000,000.00	794,683.45	2,000,000.00	0.00	0.0%
Net Increase (Decrease) in the Fair Value of Investments		8662	0.00	0.00	0.00	0.00	0.00	0.0%

Description	Resource Codes	Object Codes	Original Budget (A)	Board Approved Operating Budget (B)	Actuals To Date (C)	Projected Year Totals (D)	Difference (Col B & D) (E)	% Diff Column B & D (F)
Fees and Contracts								
Adult Education Fees		8671	0.00	0.00	0.00	0.00	0.00	0.0%
Non-Resident Students		8672	0.00	0.00	0.00	0.00	0.00	0.0%
Transportation Fees From Individuals		8675	0.00	0.00	0.00	0.00	0.00	0.0%
Interagency Services		8677	0.00	0.00	0.00	0.00	0.00	0.0%
Mitigation/Developer Fees		8681	0.00	0.00	0.00	0.00	0.00	0.0%
All Other Fees and Contracts		8689	0.00	0.00	0.00	0.00	0.00	0.0%
Other Local Revenue								
Plus: Misc Funds Non-LCFF (50%) Adjustment		8691	0.00	0.00	0.00	0.00	0.00	0.0%
Pass-Through Revenues From Local Sources		8697	0.00	0.00	0.00	0.00		
All Other Local Revenue		8699	1,023,849.00	2,654,473.00	3,561,849.85	2,903,534.00	249,061.00	9.4%
Tuition		8710	0.00	0.00	0.00	0.00	0.00	0.0%
All Other Transfers In		8781-8783	0.00	0.00	0.00	0.00	0.00	0.0%
Transfers Of Apportionments								
Special Education SELPA Transfers								
From Districts or Charter Schools	6500	8791						
From County Offices	6500	8792						
From JPAs	6500	8793						
ROC/P Transfers								
From Districts or Charter Schools	6360	8791						
From County Offices	6360	8792						
From JPAs	6360	8793						
Other Transfers of Apportionments								
From Districts or Charter Schools	All Other	8791	0.00	0.00	0.00	0.00	0.00	0.0%
From County Offices	All Other	8792	0.00	0.00	0.00	0.00	0.00	0.0%
From JPAs	All Other	8793	0.00	0.00	0.00	0.00	0.00	0.0%
All Other Transfers In from All Others		8799	0.00	0.00	0.00	0.00	0.00	0.0%
TOTAL, OTHER LOCAL REVENUE			3,338,849.00	4,875,473.00	4,431,196.54	5,124,534.00	249,061.00	5.1%
TOTAL, REVENUES			202,940,083.00	205,733,348.00	120,230,185.36	206,341,969.00	608,621.00	0.3%
CERTIFICATED SALARIES								
Certificated Teachers' Salaries		1100	65,106,613.00	73,704,071.00	33,254,229.81	72,524,455.00	1,179,616.00	1.6%
Certificated Pupil Support Salaries		1200	14,018,139.00	14,387,648.00	7,917,811.75	10,968,795.00	3,418,853.00	23.8%
Certificated Supervisors' and Administrators' Salaries		1300	7,420,027.00	8,046,390.00	4,581,527.95	7,874,553.00	171,837.00	2.1%
Other Certificated Salaries		1900	1,298,044.00	1,604,286.00	865,014.74	1,564,623.00	39,663.00	2.5%
TOTAL, CERTIFICATED SALARIES			87,842,823.00	97,742,395.00	46,618,584.25	92,932,426.00	4,809,969.00	4.9%
CLASSIFIED SALARIES								
Classified Instructional Salaries		2100	8,087,970.00	8,331,913.00	771,001.92	8,180,417.00	151,496.00	1.8%
Classified Support Salaries		2200	5,726,734.00	5,860,016.00	3,168,699.30	5,749,109.00	110,907.00	1.9%
Classified Supervisors' and Administrators' Salaries		2300	2,001,603.00	2,217,819.00	1,311,443.78	2,170,775.00	47,044.00	2.1%
Clerical, Technical and Office Salaries		2400	11,173,345.00	10,953,369.00	6,085,155.38	10,882,629.00	70,740.00	0.6%
Other Classified Salaries		2900	5,967,764.00	5,988,541.00	3,098,508.31	5,908,516.00	80,025.00	1.3%
TOTAL, CLASSIFIED SALARIES			32,957,416.00	33,351,658.00	14,434,808.69	32,891,446.00	460,212.00	1.4%
EMPLOYEE BENEFITS								
STRS		3101-3102	15,948,669.00	17,718,712.00	8,301,717.77	16,942,241.00	776,471.00	4.4%
PERS		3201-3202	9,725,709.00	9,838,223.00	4,162,513.66	9,717,645.00	120,578.00	1.2%

Description	Resource Codes	Object Codes	Original Budget (A)	Board Approved Operating Budget (B)	Actuals To Date (C)	Projected Year Totals (D)	Difference (Col B & D) (E)	% Diff Column B & D (F)
OASDI/Medicare/Alternative		3301-3302	3,862,673.00	4,047,478.00	1,832,910.73	3,935,613.00	111,865.00	2.8%
Health and Welfare Benefits		3401-3402	11,565,571.00	12,069,572.00	6,524,011.92	12,048,972.00	20,600.00	0.2%
Unemployment Insurance		3501-3502	59,041.00	63,920.00	29,581.67	61,214.00	2,706.00	4.2%
Workers' Compensation		3601-3602	2,245,702.00	2,267,320.00	1,051,690.26	2,166,169.00	101,151.00	4.5%
OPEB, Allocated		3701-3702	2,900,482.00	2,666,178.00	1,423,459.36	2,606,375.00	59,803.00	2.2%
OPEB, Active Employees		3751-3752	0.00	0.00	0.00	0.00	0.00	0.0%
Other Employee Benefits		3901-3902	1,108,509.00	1,383,458.00	1,383,460.24	1,383,458.00	0.00	0.0%
TOTAL, EMPLOYEE BENEFITS			47,416,356.00	50,054,861.00	24,709,345.61	48,861,687.00	1,193,174.00	2.4%
BOOKS AND SUPPLIES								
Approved Textbooks and Core Curricula Materials		4100	1,700,000.00	1,700,000.00	0.00	1,700,000.00	0.00	0.0%
Books and Other Reference Materials		4200	593,226.00	641,357.00	128,301.91	481,082.00	160,275.00	25.0%
Materials and Supplies		4300	3,164,919.00	3,796,426.00	1,583,262.46	4,478,329.00	(681,903.00)	-18.0%
Noncapitalized Equipment		4400	240,550.00	2,753,911.00	446,021.14	2,890,307.00	(136,396.00)	-5.0%
Food		4700	0.00	0.00	0.00	0.00	0.00	0.0%
TOTAL, BOOKS AND SUPPLIES			5,698,695.00	8,891,694.00	2,157,585.51	9,549,718.00	(658,024.00)	-7.4%
SERVICES AND OTHER OPERATING EXPENDITURES								
Subagreements for Services		5100	5,067,000.00	5,100,000.00	2,214,112.70	5,570,730.00	(470,730.00)	-9.2%
Travel and Conferences		5200	618,318.00	769,474.00	390,159.36	765,296.00	4,178.00	0.5%
Dues and Memberships		5300	137,384.00	148,158.00	123,809.19	108,527.00	39,631.00	26.7%
Insurance		5400-5450	3,180,000.00	3,974,251.00	3,974,917.00	3,975,051.00	(800.00)	0.0%
Operations and Housekeeping Services		5500	3,057,600.00	3,118,267.00	2,480,480.68	3,118,267.00	0.00	0.0%
Rentals, Leases, Repairs, and Noncapitalized Improvements		5600	641,202.00	553,625.00	320,118.52	764,692.00	(211,067.00)	-38.1%
Transfers of Direct Costs		5710	(131,153.00)	(236,658.00)	(147,453.36)	(299,475.00)	62,817.00	-26.5%
Transfers of Direct Costs - Interfund		5750	52,043.00	43.00	(254.09)	543.00	(500.00)	-1,162.8%
Professional/Consulting Services and Operating Expenditures		5800	11,672,337.00	12,497,434.00	7,334,977.92	12,212,657.00	284,777.00	2.3%
Communications		5900	730,317.00	748,081.00	597,489.37	837,596.00	(89,515.00)	-12.0%
TOTAL, SERVICES AND OTHER OPERATING EXPENDITURES			25,025,048.00	26,672,675.00	17,288,357.29	27,053,884.00	(381,209.00)	-1.4%
CAPITAL OUTLAY								
Land		6100	0.00	0.00	0.00	0.00	0.00	0.0%
Land Improvements		6170	0.00	0.00	0.00	0.00	0.00	0.0%
Buildings and Improvements of Buildings		6200	0.00	0.00	0.00	0.00	0.00	0.0%
Books and Media for New School Libraries or Major Expansion of School Libraries		6300	0.00	0.00	0.00	0.00	0.00	0.0%
Equipment		6400	857,586.00	975,970.00	992,964.25	2,022,859.00	(1,046,889.00)	-107.3%
Equipment Replacement		6500	0.00	450,000.00	0.00	450,000.00	0.00	0.0%
Lease Assets		6600	0.00	0.00	0.00	0.00	0.00	0.0%
Subscription Assets		6700	0.00	0.00	0.00	0.00	0.00	0.0%
TOTAL, CAPITAL OUTLAY			857,586.00	1,425,970.00	992,964.25	2,472,859.00	(1,046,889.00)	-73.4%
OTHER OUTGO (excluding Transfers of Indirect Costs)								
Tuition								
Tuition for Instruction Under Interdistrict Attendance Agreements		7110	0.00	0.00	0.00	0.00	0.00	0.0%
State Special Schools		7130	0.00	0.00	0.00	0.00	0.00	0.0%

Description	Resource Codes	Object Codes	Original Budget (A)	Board Approved Operating Budget (B)	Actuals To Date (C)	Projected Year Totals (D)	Difference (Col B & D) (E)	% Diff Column B & D (F)
Tuition, Excess Costs, and/or Deficit Payments								
Payments to Districts or Charter Schools		7141	0.00	0.00	0.00	0.00	0.00	0.0%
Payments to County Offices		7142	500,000.00	473,203.00	260,260.00	473,203.00	0.00	0.0%
Payments to JPAs		7143	0.00	0.00	0.00	0.00	0.00	0.0%
Transfers of Pass-Through Revenues								
To Districts or Charter Schools		7211	0.00	0.00	0.00	0.00	0.00	0.0%
To County Offices		7212	0.00	0.00	0.00	0.00	0.00	0.0%
To JPAs		7213	0.00	0.00	0.00	0.00	0.00	0.0%
Special Education SELPA Transfers of Apportionments								
To Districts or Charter Schools	6500	7221						
To County Offices	6500	7222						
To JPAs	6500	7223						
ROC/P Transfers of Apportionments								
To Districts or Charter Schools	6360	7221						
To County Offices	6360	7222						
To JPAs	6360	7223						
Other Transfers of Apportionments	All Other	7221-7223	0.00	0.00	0.00	0.00	0.00	0.0%
All Other Transfers		7281-7283	0.00	0.00	0.00	0.00	0.00	0.0%
All Other Transfers Out to All Others		7299	0.00	0.00	0.00	0.00	0.00	0.0%
Debt Service								
Debt Service - Interest		7438	0.00	0.00	0.00	0.00	0.00	0.0%
Other Debt Service - Principal		7439	0.00	0.00	0.00	0.00	0.00	0.0%
TOTAL, OTHER OUTGO (excluding Transfers of Indirect Costs)			500,000.00	473,203.00	260,260.00	473,203.00	0.00	0.0%
OTHER OUTGO - TRANSFERS OF INDIRECT COSTS								
Transfers of Indirect Costs		7310	(1,768,151.00)	(2,765,852.00)	(3,275.77)	(2,962,071.00)	196,219.00	-7.1%
Transfers of Indirect Costs - Interfund		7350	(363,101.00)	(387,873.00)	0.00	(344,897.00)	(42,976.00)	11.1%
TOTAL, OTHER OUTGO - TRANSFERS OF INDIRECT COSTS			(2,131,252.00)	(3,153,725.00)	(3,275.77)	(3,306,968.00)	153,243.00	-4.9%
TOTAL, EXPENDITURES			198,166,672.00	215,458,731.00	106,458,629.83	210,928,255.00	4,530,476.00	2.1%
INTERFUND TRANSFERS								
INTERFUND TRANSFERS IN								
From: Special Reserve Fund		8912	0.00	0.00	0.00	0.00	0.00	0.0%
From: Bond Interest and Redemption Fund		8914	0.00	0.00	0.00	0.00	0.00	0.0%
Other Authorized Interfund Transfers In		8919	0.00	0.00	0.00	0.00	0.00	0.0%
(a) TOTAL, INTERFUND TRANSFERS IN			0.00	0.00	0.00	0.00	0.00	0.0%
INTERFUND TRANSFERS OUT								
To: Child Development Fund		7611	0.00	0.00	0.00	0.00	0.00	0.0%
To: Special Reserve Fund		7612	0.00	0.00	0.00	0.00	0.00	0.0%
To: State School Building Fund/ County School Facilities Fund		7613	0.00	0.00	0.00	0.00	0.00	0.0%
To: Cafeteria Fund		7616	0.00	0.00	0.00	0.00	0.00	0.0%
Other Authorized Interfund Transfers Out		7619	0.00	0.00	0.00	0.00	0.00	0.0%
(b) TOTAL, INTERFUND TRANSFERS OUT			0.00	0.00	0.00	0.00	0.00	0.0%
OTHER SOURCES/USES								
SOURCES								

Description	Resource Codes	Object Codes	Original Budget (A)	Board Approved Operating Budget (B)	Actuals To Date (C)	Projected Year Totals (D)	Difference (Col B & D) (E)	% Diff Column B & D (F)
State Apportionments								
Emergency Apportionments		8931	0.00	0.00	0.00	0.00	0.00	0.0%
Proceeds								
Proceeds from Disposal of Capital Assets		8953	0.00	0.00	0.00	0.00	0.00	0.0%
Other Sources								
Transfers from Funds of Lapsed/Reorganized LEAs		8965	0.00	0.00	0.00	0.00	0.00	0.0%
Long-Term Debt Proceeds								
Proceeds from Certificates of Participation		8971	0.00	0.00	0.00	0.00	0.00	0.0%
Proceeds from Leases		8972	0.00	0.00	0.00	0.00	0.00	0.0%
Proceeds from Lease Revenue Bonds		8973	0.00	0.00	0.00	0.00	0.00	0.0%
Proceeds from SBITAs		8974	0.00	0.00	0.00	0.00	0.00	0.0%
All Other Financing Sources		8979	0.00	0.00	0.00	0.00	0.00	0.0%
(c) TOTAL, SOURCES			0.00	0.00	0.00	0.00	0.00	0.0%
USES								
Transfers of Funds from Lapsed/Reorganized LEAs		7651	0.00	0.00	0.00	0.00	0.00	0.0%
All Other Financing Uses		7699	0.00	0.00	0.00	0.00	0.00	0.0%
(d) TOTAL, USES			0.00	0.00	0.00	0.00	0.00	0.0%
CONTRIBUTIONS								
Contributions from Unrestricted Revenues		8980	(29,879,311.00)	(19,522,241.00)	(11,539.89)	(22,268,838.00)	(2,746,597.00)	14.1%
Contributions from Restricted Revenues		8990	0.00	0.00	0.00	0.00	0.00	0.0%
(e) TOTAL, CONTRIBUTIONS			(29,879,311.00)	(19,522,241.00)	(11,539.89)	(22,268,838.00)	(2,746,597.00)	14.1%
TOTAL, OTHER FINANCING SOURCES/USES (a - b + c - d + e)			(29,879,311.00)	(19,522,241.00)	(11,539.89)	(22,268,838.00)	(2,746,597.00)	14.1%

Description	Resource Codes	Object Codes	Original Budget (A)	Board Approved Operating Budget (B)	Actuals To Date (C)	Projected Year Totals (D)	Difference (Col B & D) (E)	% Diff Column B & D (F)
A. REVENUES								
1) LCFF Sources		8010-8099	0.00	0.00	0.00	0.00	0.00	0.0%
2) Federal Revenue		8100-8299	11,168,273.00	13,331,058.00	7,915,391.37	13,742,011.00	410,953.00	3.1%
3) Other State Revenue		8300-8599	34,633,277.00	33,795,011.00	16,127,680.05	33,916,666.00	121,655.00	0.4%
4) Other Local Revenue		8600-8799	14,768,006.00	16,140,168.00	10,506,761.89	16,440,170.00	300,002.00	1.9%
5) TOTAL, REVENUES			60,569,556.00	63,266,237.00	34,549,833.31	64,098,847.00		
B. EXPENDITURES								
1) Certificated Salaries		1000-1999	22,747,900.00	18,128,845.00	15,042,952.88	22,152,357.00	(4,023,512.00)	-22.2%
2) Classified Salaries		2000-2999	13,244,455.00	15,503,832.00	11,344,877.38	15,152,992.00	350,840.00	2.3%
3) Employee Benefits		3000-3999	16,092,405.00	15,885,032.00	10,444,221.97	16,821,669.00	(936,637.00)	-5.9%
4) Books and Supplies		4000-4999	7,422,816.00	5,613,364.00	1,363,254.51	5,335,861.00	277,503.00	4.9%
5) Services and Other Operating Expenditures		5000-5999	34,162,662.00	49,857,133.00	17,765,789.45	52,385,633.00	(2,528,500.00)	-5.1%
6) Capital Outlay		6000-6999	585,000.00	591,986.00	59,090.07	1,324,897.00	(732,911.00)	-123.8%
7) Other Outgo (excluding Transfers of Indirect Costs)		7100-7299 7400-7499	1,887,300.00	1,887,300.00	71,667.00	2,013,965.00	(126,665.00)	-6.7%
8) Other Outgo - Transfers of Indirect Costs		7300-7399	1,768,151.00	2,765,852.00	3,275.77	2,962,071.00	(196,219.00)	-7.1%
9) TOTAL, EXPENDITURES			97,910,689.00	110,233,344.00	56,095,129.03	118,149,445.00		
C. EXCESS (DEFICIENCY) OF REVENUES OVER EXPENDITURES BEFORE OTHER FINANCING SOURCES AND USES (A5 - B9)			(37,341,133.00)	(46,967,107.00)	(21,545,295.72)	(54,050,598.00)		
D. OTHER FINANCING SOURCES/USES								
1) Interfund Transfers								
a) Transfers In		8900-8929	0.00	0.00	0.00	0.00	0.00	0.0%
b) Transfers Out		7600-7629	0.00	0.00	0.00	0.00	0.00	0.0%
2) Other Sources/Uses								
a) Sources		8930-8979	0.00	0.00	0.00	0.00	0.00	0.0%
b) Uses		7630-7699	0.00	0.00	0.00	0.00	0.00	0.0%
3) Contributions		8980-8999	29,879,311.00	19,522,241.00	11,539.89	22,268,838.00	2,746,597.00	14.1%
4) TOTAL, OTHER FINANCING SOURCES/USES			29,879,311.00	19,522,241.00	11,539.89	22,268,838.00		
E. NET INCREASE (DECREASE) IN FUND BALANCE (C + D4)			(7,461,822.00)	(27,444,866.00)	(21,533,755.83)	(31,781,760.00)		
F. FUND BALANCE, RESERVES								
1) Beginning Fund Balance								
a) As of July 1 - Unaudited		9791	59,660,190.00	61,304,820.00		61,304,820.00	0.00	0.0%
b) Audit Adjustments		9793	0.00	0.00		0.00	0.00	0.0%
c) As of July 1 - Audited (F1a + F1b)			59,660,190.00	61,304,820.00		61,304,820.00		
d) Other Restatements		9795	0.00	0.00		0.00	0.00	0.0%
e) Adjusted Beginning Balance (F1c + F1d)			59,660,190.00	61,304,820.00		61,304,820.00		
2) Ending Balance, June 30 (E + F1e)			52,198,368.00	33,859,954.00		29,523,060.00		
Components of Ending Fund Balance								
a) Nonspendable								
Revolving Cash		9711	0.00	0.00		0.00		
Stores		9712	0.00	0.00		0.00		
Prepaid Items		9713	0.00	0.00		0.00		
All Others		9719	0.00	0.00		0.00		

Description	Resource Codes	Object Codes	Original Budget (A)	Board Approved Operating Budget (B)	Actuals To Date (C)	Projected Year Totals (D)	Difference (Col B & D) (E)	% Diff Column B & D (F)
b) Restricted		9740	52,198,368.00	33,859,954.00		29,523,060.00		
c) Committed								
Stabilization Arrangements		9750	0.00	0.00		0.00		
Other Commitments		9760	0.00	0.00		0.00		
d) Assigned								
Other Assignments		9780	0.00	0.00		0.00		
e) Unassigned/Unappropriated								
Reserve for Economic Uncertainties		9789	0.00	0.00		0.00		
Unassigned/Unappropriated Amount		9790	0.00	0.00		0.00		
LCFF SOURCES								
Principal Apportionment								
State Aid - Current Year		8011	0.00	0.00	0.00	0.00		
Education Protection Account State Aid - Current Year		8012	0.00	0.00	0.00	0.00		
State Aid - Prior Years		8019	0.00	0.00	0.00	0.00		
Tax Relief Subventions								
Homeowners' Exemptions		8021	0.00	0.00	0.00	0.00		
Timber Yield Tax		8022	0.00	0.00	0.00	0.00		
Other Subventions/In-Lieu Taxes		8029	0.00	0.00	0.00	0.00		
County & District Taxes								
Secured Roll Taxes		8041	0.00	0.00	0.00	0.00		
Unsecured Roll Taxes		8042	0.00	0.00	0.00	0.00		
Prior Years' Taxes		8043	0.00	0.00	0.00	0.00		
Supplemental Taxes		8044	0.00	0.00	0.00	0.00		
Education Revenue Augmentation Fund (ERAF)		8045	0.00	0.00	0.00	0.00		
Community Redevelopment Funds (SB 617/699/1992)		8047	0.00	0.00	0.00	0.00		
Penalties and Interest from Delinquent Taxes		8048	0.00	0.00	0.00	0.00		
Miscellaneous Funds (EC 41604)								
Royalties and Bonuses		8081	0.00	0.00	0.00	0.00		
Other In-Lieu Taxes		8082	0.00	0.00	0.00	0.00		
Less: Non-LCFF								
(50%) Adjustment		8089	0.00	0.00	0.00	0.00		
Subtotal, LCFF Sources			0.00	0.00	0.00	0.00		
LCFF Transfers								
Unrestricted LCFF								
Transfers - Current Year	0000	8091						
All Other LCFF Transfers - Current Year	All Other	8091	0.00	0.00	0.00	0.00	0.00	0.0%
Transfers to Charter Schools in Lieu of Property Taxes		8096	0.00	0.00	0.00	0.00		
Property Taxes Transfers		8097	0.00	0.00	0.00	0.00	0.00	0.0%
LCFF/Revenue Limit Transfers - Prior Years		8099	0.00	0.00	0.00	0.00	0.00	0.0%
TOTAL, LCFF SOURCES			0.00	0.00	0.00	0.00	0.00	0.0%
FEDERAL REVENUE								
Maintenance and Operations		8110	0.00	0.00	0.00	0.00	0.00	0.0%
Special Education Entitlement		8181	3,172,505.00	3,014,666.00	.04	3,014,666.00	0.00	0.0%

Description	Resource Codes	Object Codes	Original Budget (A)	Board Approved Operating Budget (B)	Actuals To Date (C)	Projected Year Totals (D)	Difference (Col B & D) (E)	% Diff Column B & D (F)
Special Education Discretionary Grants		8182	166,674.00	166,674.00	0.00	334,363.00	167,689.00	100.6%
Child Nutrition Programs		8220	0.00	0.00	0.00	0.00	0.00	0.0%
Donated Food Commodities		8221	0.00	0.00	0.00	0.00	0.00	0.0%
Forest Reserve Funds		8260	0.00	0.00	0.00	0.00		
Flood Control Funds		8270	0.00	0.00	0.00	0.00		
Wildlife Reserve Funds		8280	0.00	0.00	0.00	0.00		
FEMA		8281	0.00	0.00	0.00	0.00	0.00	0.0%
Interagency Contracts Between LEAs		8285	0.00	0.00	0.00	0.00	0.00	0.0%
Pass-Through Revenues from Federal Sources		8287	0.00	0.00	0.00	0.00	0.00	0.0%
Title I, Part A, Basic	3010	8290	4,340,797.00	6,183,380.00	5,313,575.62	6,334,779.00	151,399.00	2.4%
Title I, Part D, Local Delinquent Programs	3025	8290	0.00	0.00	0.00	0.00	0.00	0.0%
Title II, Part A, Supporting Effective Instruction	4035	8290	474,317.00	582,880.00	389,826.87	594,559.00	11,679.00	2.0%
Title III, Immigrant Student Program	4201	8290	37,405.00	79,669.00	17,658.55	79,669.00	0.00	0.0%
Title III, English Learner Program	4203	8290	1,221,072.00	994,502.00	344,476.47	1,012,606.00	18,104.00	1.8%
Public Charter Schools Grant Program (PCSGP)	4610	8290	0.00	0.00	0.00	0.00	0.00	0.0%
Every Student Succeeds Act	3040, 3060, 3061, 3110, 3150, 3155, 3182, 4037, 4123, 4124, 4126, 4127, 4128, 5630	8290	764,570.00	1,043,215.00	661,608.39	1,043,495.00	280.00	0.0%
Career and Technical Education	3500-3599	8290	0.00	0.00	0.00	0.00	0.00	0.0%
All Other Federal Revenue	All Other	8290	990,933.00	1,266,072.00	1,188,245.43	1,327,874.00	61,802.00	4.9%
TOTAL, FEDERAL REVENUE			11,168,273.00	13,331,058.00	7,915,391.37	13,742,011.00	410,953.00	3.1%
OTHER STATE REVENUE								
Other State Apportionments								
ROC/P Entitlement								
Prior Years	6360	8319	0.00	0.00	0.00	0.00	0.00	0.0%
Special Education Master Plan								
Current Year	6500	8311	0.00	0.00	0.00	0.00	0.00	0.0%
Prior Years	6500	8319	0.00	0.00	0.00	0.00	0.00	0.0%
All Other State Apportionments - Current Year	All Other	8311	438,849.00	458,971.00	252,433.00	458,971.00	0.00	0.0%
All Other State Apportionments - Prior Years	All Other	8319	0.00	0.00	0.00	0.00	0.00	0.0%
Child Nutrition Programs		8520	0.00	0.00	0.00	0.00	0.00	0.0%
Mandated Costs Reimbursements		8550	0.00	0.00	0.00	0.00		
Lottery - Unrestricted and Instructional Materials		8560	945,781.00	1,117,004.00	116,318.08	1,117,004.00	0.00	0.0%
Tax Relief Subventions								
Restricted Levies - Other								
Homeowners' Exemptions		8575	0.00	0.00	0.00	0.00	0.00	0.0%
Other Subventions/In-Lieu Taxes		8576	0.00	0.00	0.00	0.00	0.00	0.0%
Pass-Through Revenues from State Sources		8587	0.00	0.00	0.00	0.00	0.00	0.0%
After School Education and Safety (ASES)	6010	8590	3,681,717.00	3,681,717.00	0.00	3,681,717.00	0.00	0.0%
Charter School Facility Grant	6030	8590	0.00	0.00	0.00	0.00	0.00	0.0%

Description	Resource Codes	Object Codes	Original Budget (A)	Board Approved Operating Budget (B)	Actuals To Date (C)	Projected Year Totals (D)	Difference (Col B & D) (E)	% Diff Column B & D (F)
Career Technical Education Incentive Grant Program	6387	8590	0.00	0.00	0.00	0.00	0.00	0.0%
Drug/Alcohol/Tobacco Funds	6650, 6690, 6695	8590	0.00	0.00	0.00	0.00	0.00	0.0%
California Clean Energy Jobs Act	6230	8590	0.00	0.00	0.00	0.00	0.00	0.0%
Specialized Secondary	7370	8590	0.00	0.00	0.00	0.00	0.00	0.0%
American Indian Early Childhood Education	7210	8590	0.00	0.00	0.00	0.00	0.00	0.0%
All Other State Revenue	All Other	8590	29,566,930.00	28,537,319.00	15,758,928.97	28,658,974.00	121,655.00	0.4%
TOTAL, OTHER STATE REVENUE			34,633,277.00	33,795,011.00	16,127,680.05	33,916,666.00	121,655.00	0.4%
OTHER LOCAL REVENUE								
Other Local Revenue								
County and District Taxes								
Other Restricted Levies								
Secured Roll		8615	0.00	0.00	0.00	0.00	0.00	0.0%
Unsecured Roll		8616	0.00	0.00	0.00	0.00	0.00	0.0%
Prior Years' Taxes		8617	0.00	0.00	0.00	0.00	0.00	0.0%
Supplemental Taxes		8618	0.00	0.00	0.00	0.00	0.00	0.0%
Non-Ad Valorem Taxes								
Parcel Taxes		8621	0.00	0.00	0.00	0.00	0.00	0.0%
Other		8622	0.00	0.00	0.00	0.00	0.00	0.0%
Community Redevelopment Funds Not Subject to LCFF Deduction		8625	0.00	0.00	0.00	0.00	0.00	0.0%
Penalties and Interest from Delinquent Non-LCFF Taxes		8629	0.00	0.00	0.00	0.00	0.00	0.0%
Sales								
Sale of Equipment/Supplies		8631	0.00	90,000.00	0.00	90,000.00	0.00	0.0%
Sale of Publications		8632	0.00	0.00	0.00	0.00	0.00	0.0%
Food Service Sales		8634	0.00	0.00	0.00	0.00	0.00	0.0%
All Other Sales		8639	0.00	0.00	0.00	0.00	0.00	0.0%
Leases and Rentals		8650	0.00	0.00	0.00	0.00	0.00	0.0%
Interest		8660	0.00	0.00	0.00	0.00	0.00	0.0%
Net Increase (Decrease) in the Fair Value of Investments		8662	0.00	0.00	0.00	0.00	0.00	0.0%
Fees and Contracts								
Adult Education Fees		8671	0.00	0.00	0.00	0.00		
Non-Resident Students		8672	0.00	0.00	0.00	0.00		
Transportation Fees From Individuals		8675	0.00	0.00	0.00	0.00	0.00	0.0%
Interagency Services		8677	0.00	0.00	49,298.69	0.00	0.00	0.0%
Mitigation/Developer Fees		8681	0.00	0.00	0.00	0.00	0.00	0.0%
All Other Fees and Contracts		8689	0.00	0.00	0.00	0.00	0.00	0.0%
Other Local Revenue								
Plus: Misc Funds Non-LCFF (50%) Adjustment		8691	0.00	0.00	0.00	0.00		
Pass-Through Revenues From Local Sources		8697	0.00	0.00	0.00	0.00	0.00	0.0%
All Other Local Revenue		8699	2,396,817.00	3,678,979.00	3,966,968.20	4,811,336.00	1,132,357.00	30.8%
Tuition		8710	0.00	0.00	0.00	0.00	0.00	0.0%
All Other Transfers In		8781-8783	0.00	0.00	0.00	0.00	0.00	0.0%
Transfers Of Apportionments								
Special Education SELPA Transfers								

Description	Resource Codes	Object Codes	Original Budget (A)	Board Approved Operating Budget (B)	Actuals To Date (C)	Projected Year Totals (D)	Difference (Col B & D) (E)	% Diff Column B & D (F)
From Districts or Charter Schools	6500	8791	0.00	0.00	0.00	0.00	0.00	0.0%
From County Offices	6500	8792	12,371,189.00	12,371,189.00	6,490,495.00	11,538,834.00	(832,355.00)	-6.7%
From JPAs	6500	8793	0.00	0.00	0.00	0.00	0.00	0.0%
ROC/P Transfers								
From Districts or Charter Schools	6360	8791	0.00	0.00	0.00	0.00	0.00	0.0%
From County Offices	6360	8792	0.00	0.00	0.00	0.00	0.00	0.0%
From JPAs	6360	8793	0.00	0.00	0.00	0.00	0.00	0.0%
Other Transfers of Apportionments								
From Districts or Charter Schools	All Other	8791	0.00	0.00	0.00	0.00	0.00	0.0%
From County Offices	All Other	8792	0.00	0.00	0.00	0.00	0.00	0.0%
From JPAs	All Other	8793	0.00	0.00	0.00	0.00	0.00	0.0%
All Other Transfers In from All Others		8799	0.00	0.00	0.00	0.00	0.00	0.0%
TOTAL, OTHER LOCAL REVENUE			14,768,006.00	16,140,168.00	10,506,761.89	16,440,170.00	300,002.00	1.9%
TOTAL, REVENUES			60,569,556.00	63,266,237.00	34,549,833.31	64,098,847.00	832,610.00	1.3%
CERTIFICATED SALARIES								
Certificated Teachers' Salaries		1100	16,849,881.00	11,419,974.00	10,990,739.73	11,450,442.00	(30,468.00)	-0.3%
Certificated Pupil Support Salaries		1200	1,820,529.00	2,333,451.00	1,276,019.76	5,804,455.00	(3,471,004.00)	-148.7%
Certificated Supervisors' and Administrators' Salaries		1300	2,126,446.00	2,256,702.00	1,654,544.49	2,761,016.00	(504,314.00)	-22.3%
Other Certificated Salaries		1900	1,951,044.00	2,118,718.00	1,121,648.90	2,136,444.00	(17,726.00)	-0.8%
TOTAL, CERTIFICATED SALARIES			22,747,900.00	18,128,845.00	15,042,952.88	22,152,357.00	(4,023,512.00)	-22.2%
CLASSIFIED SALARIES								
Classified Instructional Salaries		2100	3,878,375.00	4,331,915.00	5,928,969.88	4,662,158.00	(330,243.00)	-7.6%
Classified Support Salaries		2200	5,423,559.00	5,876,489.00	3,179,668.74	5,906,033.00	(29,544.00)	-0.5%
Classified Supervisors' and Administrators' Salaries		2300	717,137.00	728,020.00	390,273.37	662,688.00	65,332.00	9.0%
Clerical, Technical and Office Salaries		2400	2,327,459.00	3,232,459.00	1,213,933.14	2,499,418.00	733,041.00	22.7%
Other Classified Salaries		2900	897,925.00	1,334,949.00	632,032.25	1,422,695.00	(87,746.00)	-6.6%
TOTAL, CLASSIFIED SALARIES			13,244,455.00	15,503,832.00	11,344,877.38	15,152,992.00	350,840.00	2.3%
EMPLOYEE BENEFITS								
STRS		3101-3102	4,085,320.00	3,162,756.00	2,651,737.35	4,028,014.00	(865,258.00)	-27.4%
PERS		3201-3202	3,924,501.00	4,459,615.00	3,163,900.36	4,505,647.00	(46,032.00)	-1.0%
OASDI/Medicare/Alternative		3301-3302	1,364,551.00	1,434,222.00	1,118,185.32	1,525,504.00	(91,282.00)	-6.4%
Health and Welfare Benefits		3401-3402	4,929,194.00	5,328,237.00	2,592,443.68	5,204,377.00	123,860.00	2.3%
Unemployment Insurance		3501-3502	17,441.00	16,082.00	12,851.77	18,059.00	(1,977.00)	-12.3%
Workers' Compensation		3601-3602	667,547.00	576,998.00	454,832.58	642,784.00	(65,786.00)	-11.4%
OPEB, Allocated		3701-3702	1,103,851.00	907,122.00	450,270.91	897,284.00	9,838.00	1.1%
OPEB, Active Employees		3751-3752	0.00	0.00	0.00	0.00	0.00	0.0%
Other Employee Benefits		3901-3902	0.00	0.00	0.00	0.00	0.00	0.0%
TOTAL, EMPLOYEE BENEFITS			16,092,405.00	15,885,032.00	10,444,221.97	16,821,669.00	(936,637.00)	-5.9%
BOOKS AND SUPPLIES								
Approved Textbooks and Core Curricula Materials		4100	600,000.00	550,000.00	134,677.75	550,000.00	0.00	0.0%
Books and Other Reference Materials		4200	335,328.00	317,592.00	32,117.63	305,477.00	12,115.00	3.8%
Materials and Supplies		4300	3,510,181.00	4,174,146.00	987,206.80	3,802,969.00	371,177.00	8.9%
Noncapitalized Equipment		4400	2,977,307.00	571,626.00	209,252.33	677,415.00	(105,789.00)	-18.5%
Food		4700	0.00	0.00	0.00	0.00	0.00	0.0%
TOTAL, BOOKS AND SUPPLIES			7,422,816.00	5,613,364.00	1,363,254.51	5,335,861.00	277,503.00	4.9%

Description	Resource Codes	Object Codes	Original Budget (A)	Board Approved Operating Budget (B)	Actuals To Date (C)	Projected Year Totals (D)	Difference (Col B & D) (E)	% Diff Column B & D (F)
SERVICES AND OTHER OPERATING EXPENDITURES								
Subagreements for Services		5100	24,679,500.00	33,331,974.00	10,048,213.95	36,343,093.00	(3,011,119.00)	-9.0%
Travel and Conferences		5200	693,536.00	682,839.00	237,272.60	684,423.00	(1,584.00)	-0.2%
Dues and Memberships		5300	7,510.00	8,800.00	1,589.00	13,100.00	(4,300.00)	-48.9%
Insurance		5400-5450	0.00	0.00	0.00	0.00	0.00	0.0%
Operations and Housekeeping Services		5500	1,315,250.00	1,476,833.00	81,157.18	1,548,833.00	(72,000.00)	-4.9%
Rentals, Leases, Repairs, and Noncapitalized Improvements		5600	378,521.00	409,507.00	269,921.51	435,407.00	(25,900.00)	-6.3%
Transfers of Direct Costs		5710	131,153.00	236,658.00	147,453.36	299,475.00	(62,817.00)	-26.5%
Transfers of Direct Costs - Interfund		5750	170.00	200,170.00	135,320.70	226,203.00	(26,033.00)	-13.0%
Professional/Consulting Services and Operating Expenditures		5800	6,934,519.00	13,478,617.00	6,821,935.24	12,797,667.00	680,950.00	5.1%
Communications		5900	22,503.00	31,735.00	22,925.91	37,432.00	(5,697.00)	-18.0%
TOTAL, SERVICES AND OTHER OPERATING EXPENDITURES			34,162,662.00	49,857,133.00	17,765,789.45	52,385,633.00	(2,528,500.00)	-5.1%
CAPITAL OUTLAY								
Land		6100	0.00	0.00	0.00	0.00	0.00	0.0%
Land Improvements		6170	0.00	0.00	0.00	0.00	0.00	0.0%
Buildings and Improvements of Buildings		6200	500,000.00	385,000.00	15,000.00	948,800.00	(563,800.00)	-146.4%
Books and Media for New School Libraries or Major Expansion of School Libraries		6300	0.00	0.00	0.00	0.00	0.00	0.0%
Equipment		6400	85,000.00	206,986.00	44,090.07	362,897.00	(155,911.00)	-75.3%
Equipment Replacement		6500	0.00	0.00	0.00	13,200.00	(13,200.00)	New
Lease Assets		6600	0.00	0.00	0.00	0.00	0.00	0.0%
Subscription Assets		6700	0.00	0.00	0.00	0.00	0.00	0.0%
TOTAL, CAPITAL OUTLAY			585,000.00	591,986.00	59,090.07	1,324,897.00	(732,911.00)	-123.8%
OTHER OUTGO (excluding Transfers of Indirect Costs)								
Tuition								
Tuition for Instruction Under Interdistrict								
Attendance Agreements		7110	0.00	0.00	0.00	0.00	0.00	0.0%
State Special Schools		7130	0.00	0.00	0.00	0.00	0.00	0.0%
Tuition, Excess Costs, and/or Deficit Payments								
Payments to Districts or Charter Schools		7141	0.00	0.00	0.00	0.00	0.00	0.0%
Payments to County Offices		7142	1,887,300.00	1,887,300.00	71,667.00	2,013,965.00	(126,665.00)	-6.7%
Payments to JPAs		7143	0.00	0.00	0.00	0.00	0.00	0.0%
Transfers of Pass-Through Revenues								
To Districts or Charter Schools		7211	0.00	0.00	0.00	0.00	0.00	0.0%
To County Offices		7212	0.00	0.00	0.00	0.00	0.00	0.0%
To JPAs		7213	0.00	0.00	0.00	0.00	0.00	0.0%
Special Education SELPA Transfers of Apportionments								
To Districts or Charter Schools	6500	7221	0.00	0.00	0.00	0.00	0.00	0.0%
To County Offices	6500	7222	0.00	0.00	0.00	0.00	0.00	0.0%
To JPAs	6500	7223	0.00	0.00	0.00	0.00	0.00	0.0%
ROC/P Transfers of Apportionments								
To Districts or Charter Schools	6360	7221	0.00	0.00	0.00	0.00	0.00	0.0%
To County Offices	6360	7222	0.00	0.00	0.00	0.00	0.00	0.0%

Description	Resource Codes	Object Codes	Original Budget (A)	Board Approved Operating Budget (B)	Actuals To Date (C)	Projected Year Totals (D)	Difference (Col B & D) (E)	% Diff Column B & D (F)
To JPAs	6360	7223	0.00	0.00	0.00	0.00	0.00	0.0%
Other Transfers of Apportionments	All Other	7221-7223	0.00	0.00	0.00	0.00	0.00	0.0%
All Other Transfers		7281-7283	0.00	0.00	0.00	0.00	0.00	0.0%
All Other Transfers Out to All Others		7299	0.00	0.00	0.00	0.00	0.00	0.0%
Debt Service								
Debt Service - Interest		7438	0.00	0.00	0.00	0.00	0.00	0.0%
Other Debt Service - Principal		7439	0.00	0.00	0.00	0.00	0.00	0.0%
TOTAL, OTHER OUTGO (excluding Transfers of Indirect Costs)			1,887,300.00	1,887,300.00	71,667.00	2,013,965.00	(126,665.00)	-6.7%
OTHER OUTGO - TRANSFERS OF INDIRECT COSTS								
Transfers of Indirect Costs		7310	1,768,151.00	2,765,852.00	3,275.77	2,962,071.00	(196,219.00)	-7.1%
Transfers of Indirect Costs - Interfund		7350	0.00	0.00	0.00	0.00	0.00	0.0%
TOTAL, OTHER OUTGO - TRANSFERS OF INDIRECT COSTS			1,768,151.00	2,765,852.00	3,275.77	2,962,071.00	(196,219.00)	-7.1%
TOTAL, EXPENDITURES			97,910,689.00	110,233,344.00	56,095,129.03	118,149,445.00	(7,916,101.00)	-7.2%
INTERFUND TRANSFERS								
INTERFUND TRANSFERS IN								
From: Special Reserve Fund		8912	0.00	0.00	0.00	0.00	0.00	0.0%
From: Bond Interest and Redemption Fund		8914	0.00	0.00	0.00	0.00		
Other Authorized Interfund Transfers In		8919	0.00	0.00	0.00	0.00	0.00	0.0%
(a) TOTAL, INTERFUND TRANSFERS IN			0.00	0.00	0.00	0.00	0.00	0.0%
INTERFUND TRANSFERS OUT								
To: Child Development Fund		7611	0.00	0.00	0.00	0.00	0.00	0.0%
To: Special Reserve Fund		7612	0.00	0.00	0.00	0.00	0.00	0.0%
To: State School Building Fund/ County School Facilities Fund		7613	0.00	0.00	0.00	0.00	0.00	0.0%
To: Cafeteria Fund		7616	0.00	0.00	0.00	0.00	0.00	0.0%
Other Authorized Interfund Transfers Out		7619	0.00	0.00	0.00	0.00	0.00	0.0%
(b) TOTAL, INTERFUND TRANSFERS OUT			0.00	0.00	0.00	0.00	0.00	0.0%
OTHER SOURCES/USES								
SOURCES								
State Apportionments								
Emergency Apportionments		8931	0.00	0.00	0.00	0.00		
Proceeds								
Proceeds from Disposal of Capital Assets		8953	0.00	0.00	0.00	0.00	0.00	0.0%
Other Sources								
Transfers from Funds of Lapsed/Reorganized LEAs		8965	0.00	0.00	0.00	0.00	0.00	0.0%
Long-Term Debt Proceeds								
Proceeds from Certificates of Participation		8971	0.00	0.00	0.00	0.00	0.00	0.0%
Proceeds from Leases		8972	0.00	0.00	0.00	0.00	0.00	0.0%
Proceeds from Lease Revenue Bonds		8973	0.00	0.00	0.00	0.00	0.00	0.0%
Proceeds from SBITAs		8974	0.00	0.00	0.00	0.00	0.00	0.0%
All Other Financing Sources		8979	0.00	0.00	0.00	0.00	0.00	0.0%
(c) TOTAL, SOURCES			0.00	0.00	0.00	0.00	0.00	0.0%
USES								

Description	Resource Codes	Object Codes	Original Budget (A)	Board Approved Operating Budget (B)	Actuals To Date (C)	Projected Year Totals (D)	Difference (Col B & D) (E)	% Diff Column B & D (F)
Transfers of Funds from Lapsed/Reorganized LEAs		7651	0.00	0.00	0.00	0.00	0.00	0.0%
All Other Financing Uses		7699	0.00	0.00	0.00	0.00	0.00	0.0%
(d) TOTAL, USES			0.00	0.00	0.00	0.00	0.00	0.0%
CONTRIBUTIONS								
Contributions from Unrestricted Revenues		8980	29,879,311.00	19,522,241.00	11,539.89	22,268,838.00	2,746,597.00	14.1%
Contributions from Restricted Revenues		8990	0.00	0.00	0.00	0.00	0.00	0.0%
(e) TOTAL, CONTRIBUTIONS			29,879,311.00	19,522,241.00	11,539.89	22,268,838.00	2,746,597.00	14.1%
TOTAL, OTHER FINANCING SOURCES/USES (a - b + c - d + e)			29,879,311.00	19,522,241.00	11,539.89	22,268,838.00	(2,746,597.00)	-14.1%

Description	Resource Codes	Object Codes	Original Budget (A)	Board Approved Operating Budget (B)	Actuals To Date (C)	Projected Year Totals (D)	Difference (Col B & D) (E)	% Diff Column B & D (F)
A. REVENUES								
1) LCFF Sources		8010-8099	194,795,986.00	194,839,570.00	112,314,958.53	194,899,130.00	59,560.00	0.0%
2) Federal Revenue		8100-8299	11,168,273.00	13,331,058.00	7,915,391.37	13,742,011.00	410,953.00	3.1%
3) Other State Revenue		8300-8599	39,438,525.00	39,813,316.00	19,611,710.34	40,234,971.00	421,655.00	1.1%
4) Other Local Revenue		8600-8799	18,106,855.00	21,015,641.00	14,937,958.43	21,564,704.00	549,063.00	2.6%
5) TOTAL, REVENUES			263,509,639.00	268,999,585.00	154,780,018.67	270,440,816.00		
B. EXPENDITURES								
1) Certificated Salaries		1000-1999	110,590,723.00	115,871,240.00	61,661,537.13	115,084,783.00	786,457.00	0.7%
2) Classified Salaries		2000-2999	46,201,871.00	48,855,490.00	25,779,686.07	48,044,438.00	811,052.00	1.7%
3) Employee Benefits		3000-3999	63,508,761.00	65,939,893.00	35,153,567.58	65,683,356.00	256,537.00	0.4%
4) Books and Supplies		4000-4999	13,121,511.00	14,505,058.00	3,520,840.02	14,885,579.00	(380,521.00)	-2.6%
5) Services and Other Operating Expenditures		5000-5999	59,187,710.00	76,529,808.00	35,054,146.74	79,439,517.00	(2,909,709.00)	-3.8%
6) Capital Outlay		6000-6999	1,442,586.00	2,017,956.00	1,052,054.32	3,797,756.00	(1,779,800.00)	-88.2%
7) Other Outgo (excluding Transfers of Indirect Costs)		7100-7299 7400-7499	2,387,300.00	2,360,503.00	331,927.00	2,487,168.00	(126,665.00)	-5.4%
8) Other Outgo - Transfers of Indirect Costs		7300-7399	(363,101.00)	(387,873.00)	0.00	(344,897.00)	(42,976.00)	11.1%
9) TOTAL, EXPENDITURES			296,077,361.00	325,692,075.00	162,553,758.86	329,077,700.00		
C. EXCESS (DEFICIENCY) OF REVENUES OVER EXPENDITURES BEFORE OTHER FINANCING SOURCES AND USES (A5 - B9)			(32,567,722.00)	(56,692,490.00)	(7,773,740.19)	(58,636,884.00)		
D. OTHER FINANCING SOURCES/USES								
1) Interfund Transfers								
a) Transfers In		8900-8929	0.00	0.00	0.00	0.00	0.00	0.0%
b) Transfers Out		7600-7629	0.00	0.00	0.00	0.00	0.00	0.0%
2) Other Sources/Uses								
a) Sources		8930-8979	0.00	0.00	0.00	0.00	0.00	0.0%
b) Uses		7630-7699	0.00	0.00	0.00	0.00	0.00	0.0%
3) Contributions		8980-8999	0.00	0.00	0.00	0.00	0.00	0.0%
4) TOTAL, OTHER FINANCING SOURCES/USES			0.00	0.00	0.00	0.00		
E. NET INCREASE (DECREASE) IN FUND BALANCE (C + D4)			(32,567,722.00)	(56,692,490.00)	(7,773,740.19)	(58,636,884.00)		
F. FUND BALANCE, RESERVES								
1) Beginning Fund Balance								
a) As of July 1 - Unaudited		9791	118,262,376.00	146,947,417.00		146,947,417.00	0.00	0.0%
b) Audit Adjustments		9793	0.00	0.00		0.00	0.00	0.0%
c) As of July 1 - Audited (F1a + F1b)			118,262,376.00	146,947,417.00		146,947,417.00		
d) Other Restatements		9795	0.00	0.00		0.00	0.00	0.0%
e) Adjusted Beginning Balance (F1c + F1d)			118,262,376.00	146,947,417.00		146,947,417.00		
2) Ending Balance, June 30 (E + F1e)			85,694,654.00	90,254,927.00		88,310,533.00		
Components of Ending Fund Balance								
a) Nonspendable								
Revolving Cash		9711	120,000.00	20,000.00		20,000.00		
Stores		9712	0.00	100,000.00		100,000.00		
Prepaid Items		9713	0.00	0.00		0.00		
All Others		9719	0.00	0.00		0.00		

Description	Resource Codes	Object Codes	Original Budget (A)	Board Approved Operating Budget (B)	Actuals To Date (C)	Projected Year Totals (D)	Difference (Col B & D) (E)	% Diff Column B & D (F)
b) Restricted		9740	52,198,368.00	33,859,954.00		29,523,060.00		
c) Committed								
Stabilization Arrangements		9750	0.00	0.00		0.00		
Other Commitments		9760	3,768,550.00	3,768,550.00		3,768,550.00		
Student Transportation Bus Replace	0000	9760	*1,000,000.00*					
Technology Device Refresh	0000	9760	*1,000,000.00*					
Instructional Materials Adoptions	0000	9760	*1,000,000.00*					
Building Maintenance One-time Funds	0000	9760	*768,550.00*					
Building Maintenance One-time Funds	0000	9760		*768,550.00*				
Instructional Materials Adoptions	0000	9760		*1,000,000.00*				
Student Transportation Bus Replace	0000	9760		*1,000,000.00*				
Technology Device Refresh	0000	9760		*1,000,000.00*				
Student Transportation Bus Replace	0000	9760				*1,000,000.00*		
Technology Device Refresh	0000	9760				*1,000,000.00*		
Instructional Materials Adoptions	0000	9760				*1,000,000.00*		
Building Maintenance One-time Funds	0000	9760				*768,550.00*		
d) Assigned								
Other Assignments		9780	0.00	19,937,215.00		21,991,154.00		
Financial Stability Reserve	0000	9780		*19,937,215.00*				
Financial Stability Reserve	0000	9780				*21,991,154.00*		
e) Unassigned/Unappropriated								
Reserve for Economic Uncertainties		9789	29,607,736.00	32,569,208.00		32,907,769.00		
Unassigned/Unappropriated Amount		9790	0.00	0.00		0.00		
LCFF SOURCES								
Principal Apportionment								
State Aid - Current Year		8011	126,105,551.00	143,183,031.00	86,445,102.00	143,242,591.00	59,560.00	0.0%
Education Protection Account State Aid - Current Year		8012	44,171,651.00	24,190,689.00	12,892,535.00	24,190,689.00	0.00	0.0%
State Aid - Prior Years		8019	0.00	0.00	0.00	0.00	0.00	0.0%
Tax Relief Subventions								
Homeowners' Exemptions		8021	160,902.00	153,774.00	0.00	153,774.00	0.00	0.0%
Timber Yield Tax		8022	0.00	0.00	0.00	0.00	0.00	0.0%
Other Subventions/In-Lieu Taxes		8029	0.00	0.00	0.00	0.00	0.00	0.0%
County & District Taxes								
Secured Roll Taxes		8041	27,337,753.00	30,396,923.00	16,100,302.33	30,396,923.00	0.00	0.0%
Unsecured Roll Taxes		8042	579,277.00	645,198.00	505,778.01	645,198.00	0.00	0.0%
Prior Years' Taxes		8043	95,597.00	111,891.00	0.00	111,891.00	0.00	0.0%
Supplemental Taxes		8044	785,442.00	739,204.00	617,124.72	739,204.00	0.00	0.0%
Education Revenue Augmentation Fund (ERAF)		8045	1,327,274.00	273,148.00	1,266,451.10	273,148.00	0.00	0.0%
Community Redevelopment Funds (SB 617/699/1992)		8047	1,232,539.00	2,145,712.00	1,487,665.37	2,145,712.00	0.00	0.0%
Penalties and Interest from Delinquent Taxes		8048	0.00	0.00	0.00	0.00	0.00	0.0%
Miscellaneous Funds (EC 41604)								

Description	Resource Codes	Object Codes	Original Budget (A)	Board Approved Operating Budget (B)	Actuals To Date (C)	Projected Year Totals (D)	Difference (Col B & D) (E)	% Diff Column B & D (F)
Royalties and Bonuses		8081	0.00	0.00	0.00	0.00	0.00	0.0%
Other In-Lieu Taxes		8082	0.00	0.00	0.00	0.00	0.00	0.0%
Less: Non-LCFF (50%) Adjustment		8089	0.00	0.00	0.00	0.00	0.00	0.0%
Subtotal, LCFF Sources			201,795,986.00	201,839,570.00	119,314,958.53	201,899,130.00	59,560.00	0.0%
LCFF Transfers								
Unrestricted LCFF Transfers - Current Year	0000	8091	(7,000,000.00)	(7,000,000.00)	(7,000,000.00)	(7,000,000.00)	0.00	0.0%
All Other LCFF Transfers - Current Year	All Other	8091	0.00	0.00	0.00	0.00	0.00	0.0%
Transfers to Charter Schools in Lieu of Property Taxes		8096	0.00	0.00	0.00	0.00	0.00	0.0%
Property Taxes Transfers		8097	0.00	0.00	0.00	0.00	0.00	0.0%
LCFF/Revenue Limit Transfers - Prior Years		8099	0.00	0.00	0.00	0.00	0.00	0.0%
TOTAL, LCFF SOURCES			194,795,986.00	194,839,570.00	112,314,958.53	194,899,130.00	59,560.00	0.0%
FEDERAL REVENUE								
Maintenance and Operations		8110	0.00	0.00	0.00	0.00	0.00	0.0%
Special Education Entitlement		8181	3,172,505.00	3,014,666.00	.04	3,014,666.00	0.00	0.0%
Special Education Discretionary Grants		8182	166,674.00	166,674.00	0.00	334,363.00	167,689.00	100.6%
Child Nutrition Programs		8220	0.00	0.00	0.00	0.00	0.00	0.0%
Donated Food Commodities		8221	0.00	0.00	0.00	0.00	0.00	0.0%
Forest Reserve Funds		8260	0.00	0.00	0.00	0.00	0.00	0.0%
Flood Control Funds		8270	0.00	0.00	0.00	0.00	0.00	0.0%
Wildlife Reserve Funds		8280	0.00	0.00	0.00	0.00	0.00	0.0%
FEMA		8281	0.00	0.00	0.00	0.00	0.00	0.0%
Interagency Contracts Between LEAs		8285	0.00	0.00	0.00	0.00	0.00	0.0%
Pass-Through Revenues from Federal Sources		8287	0.00	0.00	0.00	0.00	0.00	0.0%
Title I, Part A, Basic	3010	8290	4,340,797.00	6,183,380.00	5,313,575.62	6,334,779.00	151,399.00	2.4%
Title I, Part D, Local Delinquent Programs	3025	8290	0.00	0.00	0.00	0.00	0.00	0.0%
Title II, Part A, Supporting Effective Instruction	4035	8290	474,317.00	582,880.00	389,826.87	594,559.00	11,679.00	2.0%
Title III, Immigrant Student Program	4201	8290	37,405.00	79,669.00	17,658.55	79,669.00	0.00	0.0%
Title III, English Learner Program	4203	8290	1,221,072.00	994,502.00	344,476.47	1,012,606.00	18,104.00	1.8%
Public Charter Schools Grant Program (PCSGP)	4610	8290	0.00	0.00	0.00	0.00	0.00	0.0%
Every Student Succeeds Act	3040, 3060, 3061, 3110, 3150, 3155, 3182, 4037, 4123, 4124, 4126, 4127, 4128, 5630	8290	764,570.00	1,043,215.00	661,608.39	1,043,495.00	280.00	0.0%
Career and Technical Education	3500-3599	8290	0.00	0.00	0.00	0.00	0.00	0.0%
All Other Federal Revenue	All Other	8290	990,933.00	1,266,072.00	1,188,245.43	1,327,874.00	61,802.00	4.9%
TOTAL, FEDERAL REVENUE			11,168,273.00	13,331,058.00	7,915,391.37	13,742,011.00	410,953.00	3.1%
OTHER STATE REVENUE								
Other State Apportionments								
ROC/P Entitlement Prior Years	6360	8319	0.00	0.00	0.00	0.00	0.00	0.0%
Special Education Master Plan								

Description	Resource Codes	Object Codes	Original Budget (A)	Board Approved Operating Budget (B)	Actuals To Date (C)	Projected Year Totals (D)	Difference (Col B & D) (E)	% Diff Column B & D (F)
Current Year	6500	8311	0.00	0.00	0.00	0.00	0.00	0.0%
Prior Years	6500	8319	0.00	0.00	0.00	0.00	0.00	0.0%
All Other State Apportionments - Current Year	All Other	8311	438,849.00	458,971.00	252,433.00	458,971.00	0.00	0.0%
All Other State Apportionments - Prior Years	All Other	8319	0.00	0.00	0.00	0.00	0.00	0.0%
Child Nutrition Programs		8520	0.00	0.00	0.00	0.00	0.00	0.0%
Mandated Costs Reimbursements		8550	480,515.00	480,515.00	480,515.00	480,515.00	0.00	0.0%
Lottery - Unrestricted and Instructional Materials		8560	3,270,514.00	3,718,806.00	897,257.93	3,718,806.00	0.00	0.0%
Tax Relief Subventions								
Restricted Levies - Other								
Homeowners' Exemptions		8575	0.00	0.00	0.00	0.00	0.00	0.0%
Other Subventions/In-Lieu Taxes		8576	0.00	0.00	0.00	0.00	0.00	0.0%
Pass-Through Revenues from State Sources		8587	0.00	0.00	0.00	0.00	0.00	0.0%
After School Education and Safety (ASES)	6010	8590	3,681,717.00	3,681,717.00	0.00	3,681,717.00	0.00	0.0%
Charter School Facility Grant	6030	8590	0.00	0.00	0.00	0.00	0.00	0.0%
Career Technical Education Incentive Grant Program	6387	8590	0.00	0.00	0.00	0.00	0.00	0.0%
Drug/Alcohol/Tobacco Funds	6650, 6690, 6695	8590	0.00	0.00	0.00	0.00	0.00	0.0%
California Clean Energy Jobs Act	6230	8590	0.00	0.00	0.00	0.00	0.00	0.0%
Specialized Secondary	7370	8590	0.00	0.00	0.00	0.00	0.00	0.0%
American Indian Early Childhood Education	7210	8590	0.00	0.00	0.00	0.00	0.00	0.0%
All Other State Revenue	All Other	8590	31,566,930.00	31,473,307.00	17,981,504.41	31,894,962.00	421,655.00	1.3%
TOTAL, OTHER STATE REVENUE			39,438,525.00	39,813,316.00	19,611,710.34	40,234,971.00	421,655.00	1.1%
OTHER LOCAL REVENUE								
Other Local Revenue								
County and District Taxes								
Other Restricted Levies								
Secured Roll		8615	0.00	0.00	0.00	0.00	0.00	0.0%
Unsecured Roll		8616	0.00	0.00	0.00	0.00	0.00	0.0%
Prior Years' Taxes		8617	0.00	0.00	0.00	0.00	0.00	0.0%
Supplemental Taxes		8618	0.00	0.00	0.00	0.00	0.00	0.0%
Non-Ad Valorem Taxes								
Parcel Taxes		8621	0.00	0.00	0.00	0.00	0.00	0.0%
Other		8622	0.00	0.00	0.00	0.00	0.00	0.0%
Community Redevelopment Funds Not Subject to LCFF Deduction		8625	0.00	0.00	0.00	0.00	0.00	0.0%
Penalties and Interest from Delinquent Non-LCFF Taxes		8629	0.00	0.00	0.00	0.00	0.00	0.0%
Sales								
Sale of Equipment/Supplies		8631	95,000.00	91,000.00	0.00	91,000.00	0.00	0.0%
Sale of Publications		8632	0.00	0.00	0.00	0.00	0.00	0.0%
Food Service Sales		8634	0.00	0.00	0.00	0.00	0.00	0.0%
All Other Sales		8639	0.00	0.00	0.00	0.00	0.00	0.0%
Leases and Rentals		8650	220,000.00	220,000.00	74,663.24	220,000.00	0.00	0.0%
Interest		8660	2,000,000.00	2,000,000.00	794,683.45	2,000,000.00	0.00	0.0%

Description	Resource Codes	Object Codes	Original Budget (A)	Board Approved Operating Budget (B)	Actuals To Date (C)	Projected Year Totals (D)	Difference (Col B & D) (E)	% Diff Column B & D (F)
Net Increase (Decrease) in the Fair Value of Investments		8662	0.00	0.00	0.00	0.00	0.00	0.0%
Fees and Contracts								
Adult Education Fees		8671	0.00	0.00	0.00	0.00	0.00	0.0%
Non-Resident Students		8672	0.00	0.00	0.00	0.00	0.00	0.0%
Transportation Fees From Individuals		8675	0.00	0.00	0.00	0.00	0.00	0.0%
Interagency Services		8677	0.00	0.00	49,298.69	0.00	0.00	0.0%
Mitigation/Developer Fees		8681	0.00	0.00	0.00	0.00	0.00	0.0%
All Other Fees and Contracts		8689	0.00	0.00	0.00	0.00	0.00	0.0%
Other Local Revenue								
Plus: Misc Funds Non-LCFF (50%) Adjustment		8691	0.00	0.00	0.00	0.00	0.00	0.0%
Pass-Through Revenues From Local Sources		8697	0.00	0.00	0.00	0.00	0.00	0.0%
All Other Local Revenue		8699	3,420,666.00	6,333,452.00	7,528,818.05	7,714,870.00	1,381,418.00	21.8%
Tuition		8710	0.00	0.00	0.00	0.00	0.00	0.0%
All Other Transfers In		8781-8783	0.00	0.00	0.00	0.00	0.00	0.0%
Transfers Of Apportionments								
Special Education SELPA Transfers								
From Districts or Charter Schools	6500	8791	0.00	0.00	0.00	0.00	0.00	0.0%
From County Offices	6500	8792	12,371,189.00	12,371,189.00	6,490,495.00	11,538,834.00	(832,355.00)	-6.7%
From JPAs	6500	8793	0.00	0.00	0.00	0.00	0.00	0.0%
ROC/P Transfers								
From Districts or Charter Schools	6360	8791	0.00	0.00	0.00	0.00	0.00	0.0%
From County Offices	6360	8792	0.00	0.00	0.00	0.00	0.00	0.0%
From JPAs	6360	8793	0.00	0.00	0.00	0.00	0.00	0.0%
Other Transfers of Apportionments								
From Districts or Charter Schools	All Other	8791	0.00	0.00	0.00	0.00	0.00	0.0%
From County Offices	All Other	8792	0.00	0.00	0.00	0.00	0.00	0.0%
From JPAs	All Other	8793	0.00	0.00	0.00	0.00	0.00	0.0%
All Other Transfers In from All Others		8799	0.00	0.00	0.00	0.00	0.00	0.0%
TOTAL, OTHER LOCAL REVENUE			18,106,855.00	21,015,641.00	14,937,958.43	21,564,704.00	549,063.00	2.6%
TOTAL, REVENUES			263,509,639.00	268,999,585.00	154,780,018.67	270,440,816.00	1,441,231.00	0.5%
CERTIFICATED SALARIES								
Certificated Teachers' Salaries		1100	81,956,494.00	85,124,045.00	44,244,969.54	83,974,897.00	1,149,148.00	1.3%
Certificated Pupil Support Salaries		1200	15,838,668.00	16,721,099.00	9,193,831.51	16,773,250.00	(52,151.00)	-0.3%
Certificated Supervisors' and Administrators' Salaries		1300	9,546,473.00	10,303,092.00	6,236,072.44	10,635,569.00	(332,477.00)	-3.2%
Other Certificated Salaries		1900	3,249,088.00	3,723,004.00	1,986,663.64	3,701,067.00	21,937.00	0.6%
TOTAL, CERTIFICATED SALARIES			110,590,723.00	115,871,240.00	61,661,537.13	115,084,783.00	786,457.00	0.7%
CLASSIFIED SALARIES								
Classified Instructional Salaries		2100	11,966,345.00	12,663,828.00	6,699,971.80	12,842,575.00	(178,747.00)	-1.4%
Classified Support Salaries		2200	11,150,293.00	11,736,505.00	6,348,368.04	11,655,142.00	81,363.00	0.7%
Classified Supervisors' and Administrators' Salaries		2300	2,718,740.00	2,945,839.00	1,701,717.15	2,833,463.00	112,376.00	3.8%
Clerical, Technical and Office Salaries		2400	13,500,804.00	14,185,828.00	7,299,088.52	13,382,047.00	803,781.00	5.7%
Other Classified Salaries		2900	6,865,689.00	7,323,490.00	3,730,540.56	7,331,211.00	(7,721.00)	-0.1%
TOTAL, CLASSIFIED SALARIES			46,201,871.00	48,855,490.00	25,779,686.07	48,044,438.00	811,052.00	1.7%
EMPLOYEE BENEFITS								

Description	Resource Codes	Object Codes	Original Budget (A)	Board Approved Operating Budget (B)	Actuals To Date (C)	Projected Year Totals (D)	Difference (Col B & D) (E)	% Diff Column B & D (F)
STRS		3101-3102	20,033,989.00	20,881,468.00	10,953,455.12	20,970,255.00	(88,787.00)	-0.4%
PERS		3201-3202	13,650,210.00	14,297,838.00	7,326,414.02	14,223,292.00	74,546.00	0.5%
OASDI/Medicare/Alternative		3301-3302	5,227,224.00	5,481,700.00	2,951,096.05	5,461,117.00	20,583.00	0.4%
Health and Welfare Benefits		3401-3402	16,494,765.00	17,397,809.00	9,116,455.60	17,253,349.00	144,460.00	0.8%
Unemployment Insurance		3501-3502	76,482.00	80,002.00	42,433.44	79,273.00	729.00	0.9%
Workers' Compensation		3601-3602	2,913,249.00	2,844,318.00	1,506,522.84	2,808,953.00	35,365.00	1.2%
OPEB, Allocated		3701-3702	4,004,333.00	3,573,300.00	1,873,730.27	3,503,659.00	69,641.00	1.9%
OPEB, Active Employees		3751-3752	0.00	0.00	0.00	0.00	0.00	0.0%
Other Employee Benefits		3901-3902	1,108,509.00	1,383,458.00	1,383,460.24	1,383,458.00	0.00	0.0%
TOTAL, EMPLOYEE BENEFITS			63,508,761.00	65,939,893.00	35,153,567.58	65,683,356.00	256,537.00	0.4%
BOOKS AND SUPPLIES								
Approved Textbooks and Core Curricula Materials		4100	2,300,000.00	2,250,000.00	134,677.75	2,250,000.00	0.00	0.0%
Books and Other Reference Materials		4200	928,554.00	958,949.00	160,419.54	786,559.00	172,390.00	18.0%
Materials and Supplies		4300	6,675,100.00	7,970,572.00	2,570,469.26	8,281,298.00	(310,726.00)	-3.9%
Noncapitalized Equipment		4400	3,217,857.00	3,325,537.00	655,273.47	3,567,722.00	(242,185.00)	-7.3%
Food		4700	0.00	0.00	0.00	0.00	0.00	0.0%
TOTAL, BOOKS AND SUPPLIES			13,121,511.00	14,505,058.00	3,520,840.02	14,885,579.00	(380,521.00)	-2.6%
SERVICES AND OTHER OPERATING EXPENDITURES								
Subagreements for Services		5100	29,746,500.00	38,431,974.00	12,262,326.65	41,913,823.00	(3,481,849.00)	-9.1%
Travel and Conferences		5200	1,311,854.00	1,452,313.00	627,431.96	1,449,719.00	2,594.00	0.2%
Dues and Memberships		5300	144,894.00	156,958.00	125,398.19	121,627.00	35,331.00	22.5%
Insurance		5400-5450	3,180,000.00	3,974,251.00	3,974,917.00	3,975,051.00	(800.00)	0.0%
Operations and Housekeeping Services		5500	4,372,850.00	4,595,100.00	2,561,637.86	4,667,100.00	(72,000.00)	-1.6%
Rentals, Leases, Repairs, and Noncapitalized Improvements		5600	1,019,723.00	963,132.00	590,040.03	1,200,099.00	(236,967.00)	-24.6%
Transfers of Direct Costs		5710	0.00	0.00	0.00	0.00	0.00	0.0%
Transfers of Direct Costs - Interfund		5750	52,213.00	200,213.00	135,066.61	226,746.00	(26,533.00)	-13.3%
Professional/Consulting Services and Operating Expenditures		5800	18,606,856.00	25,976,051.00	14,156,913.16	25,010,324.00	965,727.00	3.7%
Communications		5900	752,820.00	779,816.00	620,415.28	875,028.00	(95,212.00)	-12.2%
TOTAL, SERVICES AND OTHER OPERATING EXPENDITURES			59,187,710.00	76,529,808.00	35,054,146.74	79,439,517.00	(2,909,709.00)	-3.8%
CAPITAL OUTLAY								
Land		6100	0.00	0.00	0.00	0.00	0.00	0.0%
Land Improvements		6170	0.00	0.00	0.00	0.00	0.00	0.0%
Buildings and Improvements of Buildings		6200	500,000.00	385,000.00	15,000.00	948,800.00	(563,800.00)	-146.4%
Books and Media for New School Libraries or Major Expansion of School Libraries		6300	0.00	0.00	0.00	0.00	0.00	0.0%
Equipment		6400	942,586.00	1,182,956.00	1,037,054.32	2,385,756.00	(1,202,800.00)	-101.7%
Equipment Replacement		6500	0.00	450,000.00	0.00	463,200.00	(13,200.00)	-2.9%
Lease Assets		6600	0.00	0.00	0.00	0.00	0.00	0.0%
Subscription Assets		6700	0.00	0.00	0.00	0.00	0.00	0.0%
TOTAL, CAPITAL OUTLAY			1,442,586.00	2,017,956.00	1,052,054.32	3,797,756.00	(1,779,800.00)	-88.2%
OTHER OUTGO (excluding Transfers of Indirect Costs)								
Tuition								
Tuition for Instruction Under Interdistrict								

Description	Resource Codes	Object Codes	Original Budget (A)	Board Approved Operating Budget (B)	Actuals To Date (C)	Projected Year Totals (D)	Difference (Col B & D) (E)	% Diff Column B & D (F)
Attendance Agreements		7110	0.00	0.00	0.00	0.00	0.00	0.0%
State Special Schools		7130	0.00	0.00	0.00	0.00	0.00	0.0%
Tuition, Excess Costs, and/or Deficit Payments								
Payments to Districts or Charter Schools		7141	0.00	0.00	0.00	0.00	0.00	0.0%
Payments to County Offices		7142	2,387,300.00	2,360,503.00	331,927.00	2,487,168.00	(126,665.00)	-5.4%
Payments to JPAs		7143	0.00	0.00	0.00	0.00	0.00	0.0%
Transfers of Pass-Through Revenues								
To Districts or Charter Schools		7211	0.00	0.00	0.00	0.00	0.00	0.0%
To County Offices		7212	0.00	0.00	0.00	0.00	0.00	0.0%
To JPAs		7213	0.00	0.00	0.00	0.00	0.00	0.0%
Special Education SELPA Transfers of Apportionments								
To Districts or Charter Schools	6500	7221	0.00	0.00	0.00	0.00	0.00	0.0%
To County Offices	6500	7222	0.00	0.00	0.00	0.00	0.00	0.0%
To JPAs	6500	7223	0.00	0.00	0.00	0.00	0.00	0.0%
ROC/P Transfers of Apportionments								
To Districts or Charter Schools	6360	7221	0.00	0.00	0.00	0.00	0.00	0.0%
To County Offices	6360	7222	0.00	0.00	0.00	0.00	0.00	0.0%
To JPAs	6360	7223	0.00	0.00	0.00	0.00	0.00	0.0%
Other Transfers of Apportionments	All Other	7221-7223	0.00	0.00	0.00	0.00	0.00	0.0%
All Other Transfers		7281-7283	0.00	0.00	0.00	0.00	0.00	0.0%
All Other Transfers Out to All Others		7299	0.00	0.00	0.00	0.00	0.00	0.0%
Debt Service								
Debt Service - Interest		7438	0.00	0.00	0.00	0.00	0.00	0.0%
Other Debt Service - Principal		7439	0.00	0.00	0.00	0.00	0.00	0.0%
TOTAL, OTHER OUTGO (excluding Transfers of Indirect Costs)			2,387,300.00	2,360,503.00	331,927.00	2,487,168.00	(126,665.00)	-5.4%
OTHER OUTGO - TRANSFERS OF INDIRECT COSTS								
Transfers of Indirect Costs		7310	0.00	0.00	0.00	0.00		
Transfers of Indirect Costs - Interfund		7350	(363,101.00)	(387,873.00)	0.00	(344,897.00)	(42,976.00)	11.1%
TOTAL, OTHER OUTGO - TRANSFERS OF INDIRECT COSTS			(363,101.00)	(387,873.00)	0.00	(344,897.00)	(42,976.00)	11.1%
TOTAL, EXPENDITURES			296,077,361.00	325,692,075.00	162,553,758.86	329,077,700.00	(3,385,625.00)	-1.0%
INTERFUND TRANSFERS								
INTERFUND TRANSFERS IN								
From: Special Reserve Fund		8912	0.00	0.00	0.00	0.00	0.00	0.0%
From: Bond Interest and Redemption Fund		8914	0.00	0.00	0.00	0.00	0.00	0.0%
Other Authorized Interfund Transfers In		8919	0.00	0.00	0.00	0.00	0.00	0.0%
(a) TOTAL, INTERFUND TRANSFERS IN			0.00	0.00	0.00	0.00	0.00	0.0%
INTERFUND TRANSFERS OUT								
To: Child Development Fund		7611	0.00	0.00	0.00	0.00	0.00	0.0%
To: Special Reserve Fund		7612	0.00	0.00	0.00	0.00	0.00	0.0%
To: State School Building Fund/ County School Facilities Fund		7613	0.00	0.00	0.00	0.00	0.00	0.0%
To: Cafeteria Fund		7616	0.00	0.00	0.00	0.00	0.00	0.0%
Other Authorized Interfund Transfers Out		7619	0.00	0.00	0.00	0.00	0.00	0.0%

Description	Resource Codes	Object Codes	Original Budget (A)	Board Approved Operating Budget (B)	Actuals To Date (C)	Projected Year Totals (D)	Difference (Col B & D) (E)	% Diff Column B & D (F)
(b) TOTAL, INTERFUND TRANSFERS OUT			0.00	0.00	0.00	0.00	0.00	0.0%
OTHER SOURCES/USES								
SOURCES								
State Apportionments								
Emergency Apportionments		8931	0.00	0.00	0.00	0.00	0.00	0.0%
Proceeds								
Proceeds from Disposal of Capital Assets		8953	0.00	0.00	0.00	0.00	0.00	0.0%
Other Sources								
Transfers from Funds of Lapsed/Reorganized LEAs		8965	0.00	0.00	0.00	0.00	0.00	0.0%
Long-Term Debt Proceeds								
Proceeds from Certificates of Participation		8971	0.00	0.00	0.00	0.00	0.00	0.0%
Proceeds from Leases		8972	0.00	0.00	0.00	0.00	0.00	0.0%
Proceeds from Lease Revenue Bonds		8973	0.00	0.00	0.00	0.00	0.00	0.0%
Proceeds from SBITAs		8974	0.00	0.00	0.00	0.00	0.00	0.0%
All Other Financing Sources		8979	0.00	0.00	0.00	0.00	0.00	0.0%
(c) TOTAL, SOURCES			0.00	0.00	0.00	0.00	0.00	0.0%
USES								
Transfers of Funds from Lapsed/Reorganized LEAs		7651	0.00	0.00	0.00	0.00	0.00	0.0%
All Other Financing Uses		7699	0.00	0.00	0.00	0.00	0.00	0.0%
(d) TOTAL, USES			0.00	0.00	0.00	0.00	0.00	0.0%
CONTRIBUTIONS								
Contributions from Unrestricted Revenues		8980	0.00	0.00	0.00	0.00		
Contributions from Restricted Revenues		8990	0.00	0.00	0.00	0.00		
(e) TOTAL, CONTRIBUTIONS			0.00	0.00	0.00	0.00	0.00	0.0%
TOTAL, OTHER FINANCING SOURCES/USES (a - b + c - d + e)			0.00	0.00	0.00	0.00	0.00	0.0%

Resource	Description	2024-25 Projected Totals
2600	Expanded Learning Opportunities Program	5,267,273.00
6211	Literacy Coaches and Reading Specialists Grant Program	2,940,457.00
6266	Educator Effectiveness, FY 2021-22	192,233.00
6300	Lottery: Instructional Materials	2,109,120.00
6510	Special Ed: Early Ed Individuals with Exceptional Needs (Infant Program)	111,119.00
6546	Mental Health-Related Services	69,935.00
6547	Special Education Early Intervention Preschool Grant	2,197,648.00
7085	Learning Communities for School Success Program	191,046.00
7388	SB 117 COVID-19 LEA Response Funds	100,251.00
7810	Other Restricted State	81,922.00
8150	Ongoing & Major Maintenance Account (RMA: Education Code Section 17070.75)	7,524,647.00
9010	Other Restricted Local	8,737,409.00
Total, Restricted Balance		29,523,060.00

Description	Resource Codes	Object Codes	Original Budget (A)	Board Approved Operating Budget (B)	Actuals To Date (C)	Projected Year Totals (D)	Difference (Col B & D) (E)	% Diff Column B & D (F)
A. REVENUES								
1) LCFF Sources		8010-8099	0.00	0.00	0.00	0.00	0.00	0.0%
2) Federal Revenue		8100-8299	0.00	0.00	0.00	0.00	0.00	0.0%
3) Other State Revenue		8300-8599	0.00	0.00	0.00	0.00	0.00	0.0%
4) Other Local Revenue		8600-8799	0.00	0.00	119,938.09	0.00	0.00	0.0%
5) TOTAL, REVENUES			0.00	0.00	119,938.09	0.00		
B. EXPENDITURES								
1) Certificated Salaries		1000-1999	0.00	0.00	0.00	0.00	0.00	0.0%
2) Classified Salaries		2000-2999	0.00	0.00	0.00	0.00	0.00	0.0%
3) Employee Benefits		3000-3999	0.00	0.00	0.00	0.00	0.00	0.0%
4) Books and Supplies		4000-4999	0.00	0.00	74,754.59	0.00	0.00	0.0%
5) Services and Other Operating Expenditures		5000-5999	0.00	0.00	15,796.37	0.00	0.00	0.0%
6) Capital Outlay		6000-6999	0.00	0.00	0.00	0.00	0.00	0.0%
7) Other Outgo (excluding Transfers of Indirect Costs)		7100-7299, 7400-7499	0.00	0.00	0.00	0.00	0.00	0.0%
8) Other Outgo - Transfers of Indirect Costs		7300-7399	0.00	0.00	0.00	0.00	0.00	0.0%
9) TOTAL, EXPENDITURES			0.00	0.00	90,550.96	0.00		
C. EXCESS (DEFICIENCY) OF REVENUES OVER EXPENSES BEFORE OTHER FINANCING SOURCES AND USES (A5 - B9)			0.00	0.00	29,387.13	0.00		
D. OTHER FINANCING SOURCES/USES								
1) Interfund Transfers								
a) Transfers In		8900-8929	0.00	0.00	0.00	0.00	0.00	0.0%
b) Transfers Out		7600-7629	0.00	0.00	0.00	0.00	0.00	0.0%
2) Other Sources/Uses								
a) Sources		8930-8979	0.00	0.00	0.00	0.00	0.00	0.0%
b) Uses		7630-7699	0.00	0.00	0.00	0.00	0.00	0.0%
3) Contributions		8980-8999	0.00	0.00	0.00	0.00	0.00	0.0%
4) TOTAL, OTHER FINANCING SOURCES/USES			0.00	0.00	0.00	0.00		
E. NET INCREASE (DECREASE) IN FUND BALANCE (C + D4)			0.00	0.00	29,387.13	0.00		

Description	Resource Codes	Object Codes	Original Budget (A)	Board Approved Operating Budget (B)	Actuals To Date (C)	Projected Year Totals (D)	Difference (Col B & D) (E)	% Diff Column B & D (F)
F. FUND BALANCE, RESERVES								
1) Beginning Fund Balance								
a) As of July 1 - Unaudited		9791	207,784.00	188,812.00		188,812.00	0.00	0.0%
b) Audit Adjustments		9793	0.00	0.00		0.00	0.00	0.0%
c) As of July 1 - Audited (F1a + F1b)			207,784.00	188,812.00		188,812.00		
d) Other Restatements		9795	0.00	0.00		0.00	0.00	0.0%
e) Adjusted Beginning Balance (F1c + F1d)			207,784.00	188,812.00		188,812.00		
2) Ending Balance, June 30 (E + F1e)			207,784.00	188,812.00		188,812.00		
Components of Ending Fund Balance								
a) Nonspendable								
Revolving Cash		9711	0.00	0.00		0.00		
Stores		9712	0.00	0.00		0.00		
Prepaid Items		9713	0.00	0.00		0.00		
All Others		9719	0.00	0.00		0.00		
b) Restricted		9740	207,784.00	188,812.00		188,812.00		
c) Committed								
Stabilization Arrangements		9750	0.00	0.00		0.00		
Other Commitments		9760	0.00	0.00		0.00		
d) Assigned								
Other Assignments		9780	0.00	0.00		0.00		
e) Unassigned/Unappropriated								
Reserve for Economic Uncertainties		9789	0.00	0.00		0.00		
Unassigned/Unappropriated Amount		9790	0.00	0.00		0.00		
REVENUES								
Sale of Equipment and Supplies		8631	0.00	0.00	0.00	0.00	0.00	0.0%
All Other Sales		8639	0.00	0.00	0.00	0.00	0.00	0.0%
Interest		8660	0.00	0.00	0.00	0.00	0.00	0.0%
Net Increase (Decrease) in the Fair Value of Investments		8662	0.00	0.00	0.00	0.00	0.00	0.0%
All Other Fees and Contracts		8689	0.00	0.00	0.00	0.00	0.00	0.0%
All Other Local Revenue		8699	0.00	0.00	119,938.09	0.00	0.00	0.0%
TOTAL, REVENUES			0.00	0.00	119,938.09	0.00		

Description	Resource Codes	Object Codes	Original Budget (A)	Board Approved Operating Budget (B)	Actuals To Date (C)	Projected Year Totals (D)	Difference (Col B & D) (E)	% Diff Column B & D (F)
CERTIFICATED SALARIES								
Certificated Teachers' Salaries		1100	0.00	0.00	0.00	0.00	0.00	0.0%
Certificated Pupil Support Salaries		1200	0.00	0.00	0.00	0.00	0.00	0.0%
Certificated Supervisors' and Administrators' Salaries		1300	0.00	0.00	0.00	0.00	0.00	0.0%
Other Certificated Salaries		1900	0.00	0.00	0.00	0.00	0.00	0.0%
TOTAL, CERTIFICATED SALARIES			0.00	0.00	0.00	0.00	0.00	0.0%
CLASSIFIED SALARIES								
Classified Instructional Salaries		2100	0.00	0.00	0.00	0.00	0.00	0.0%
Classified Support Salaries		2200	0.00	0.00	0.00	0.00	0.00	0.0%
Classified Supervisors' and Administrators' Salaries		2300	0.00	0.00	0.00	0.00	0.00	0.0%
Clerical, Technical and Office Salaries		2400	0.00	0.00	0.00	0.00	0.00	0.0%
Other Classified Salaries		2900	0.00	0.00	0.00	0.00	0.00	0.0%
TOTAL, CLASSIFIED SALARIES			0.00	0.00	0.00	0.00	0.00	0.0%
EMPLOYEE BENEFITS								
STRS		3101-3102	0.00	0.00	0.00	0.00	0.00	0.0%
PERS		3201-3202	0.00	0.00	0.00	0.00	0.00	0.0%
OASDI/Medicare/Alternative		3301-3302	0.00	0.00	0.00	0.00	0.00	0.0%
Health and Welfare Benefits		3401-3402	0.00	0.00	0.00	0.00	0.00	0.0%
Unemployment Insurance		3501-3502	0.00	0.00	0.00	0.00	0.00	0.0%
Workers' Compensation		3601-3602	0.00	0.00	0.00	0.00	0.00	0.0%
OPEB, Allocated		3701-3702	0.00	0.00	0.00	0.00	0.00	0.0%
OPEB, Active Employees		3751-3752	0.00	0.00	0.00	0.00	0.00	0.0%
Other Employee Benefits		3901-3902	0.00	0.00	0.00	0.00	0.00	0.0%
TOTAL, EMPLOYEE BENEFITS			0.00	0.00	0.00	0.00	0.00	0.0%
BOOKS AND SUPPLIES								
Materials and Supplies		4300	0.00	0.00	74,754.59	0.00	0.00	0.0%
Noncapitalized Equipment		4400	0.00	0.00	0.00	0.00	0.00	0.0%
TOTAL, BOOKS AND SUPPLIES			0.00	0.00	74,754.59	0.00	0.00	0.0%
SERVICES AND OTHER OPERATING EXPENDITURES								
Subagreements for Services		5100	0.00	0.00	0.00	0.00	0.00	0.0%
Dues and Memberships		5300	0.00	0.00	0.00	0.00	0.00	0.0%
Insurance		5400-5450	0.00	0.00	0.00	0.00	0.00	0.0%
Rentals, Leases, Repairs, and Noncapitalized Improvements		5600	0.00	0.00	0.00	0.00	0.00	0.0%
Transfers of Direct Costs - Interfund		5750	0.00	0.00	0.00	0.00	0.00	0.0%
Professional/Consulting Services and Operating Expenditures		5800	0.00	0.00	15,796.37	0.00	0.00	0.0%
Communications		5900	0.00	0.00	0.00	0.00	0.00	0.0%
TOTAL, SERVICES AND OTHER OPERATING EXPENDITURES			0.00	0.00	15,796.37	0.00	0.00	0.0%
CAPITAL OUTLAY								
Equipment		6400	0.00	0.00	0.00	0.00	0.00	0.0%
Equipment Replacement		6500	0.00	0.00	0.00	0.00	0.00	0.0%
Lease Assets		6600	0.00	0.00	0.00	0.00	0.00	0.0%
Subscription Assets		6700	0.00	0.00	0.00	0.00	0.00	0.0%
TOTAL, CAPITAL OUTLAY			0.00	0.00	0.00	0.00	0.00	0.0%

Description	Resource Codes	Object Codes	Original Budget (A)	Board Approved Operating Budget (B)	Actuals To Date (C)	Projected Year Totals (D)	Difference (Col B & D) (E)	% Diff Column B & D (F)
OTHER OUTGO - TRANSFERS OF INDIRECT COSTS								
Transfers of Indirect Costs - Interfund		7350	0.00	0.00	0.00	0.00	0.00	0.0%
TOTAL, OTHER OUTGO - TRANSFERS OF INDIRECT COSTS			0.00	0.00	0.00	0.00	0.00	0.0%
TOTAL, EXPENDITURES			0.00	0.00	90,550.96	0.00		
INTERFUND TRANSFERS								
INTERFUND TRANSFERS IN								
Other Authorized Interfund Transfers In		8919	0.00	0.00	0.00	0.00	0.00	0.0%
(a) TOTAL, INTERFUND TRANSFERS IN			0.00	0.00	0.00	0.00	0.00	0.0%
INTERFUND TRANSFERS OUT								
Other Authorized Interfund Transfers Out		7619	0.00	0.00	0.00	0.00	0.00	0.0%
(b) TOTAL, INTERFUND TRANSFERS OUT			0.00	0.00	0.00	0.00	0.00	0.0%
OTHER SOURCES/USES								
SOURCES								
Proceeds from Disposal of Capital Assets		8953	0.00	0.00	0.00	0.00	0.00	0.0%
Transfers from Funds of Lapsed/Reorganized LEAs		8965	0.00	0.00	0.00	0.00	0.00	0.0%
Proceeds from Leases		8972	0.00	0.00	0.00	0.00	0.00	0.0%
Proceeds from SBITAs		8974	0.00	0.00	0.00	0.00	0.00	0.0%
(c) TOTAL, SOURCES			0.00	0.00	0.00	0.00	0.00	0.0%
USES								
Transfers of Funds from Lapsed/Reorganized LEAs		7651	0.00	0.00	0.00	0.00	0.00	0.0%
(d) TOTAL, USES			0.00	0.00	0.00	0.00	0.00	0.0%
CONTRIBUTIONS								
Contributions from Unrestricted Revenues		8980	0.00	0.00	0.00	0.00	0.00	0.0%
Contributions from Restricted Revenues		8990	0.00	0.00	0.00	0.00	0.00	0.0%
(e) TOTAL, CONTRIBUTIONS			0.00	0.00	0.00	0.00	0.00	0.0%
TOTAL, OTHER FINANCING SOURCES/USES (a - b + c - d + e)			0.00	0.00	0.00	0.00		

Resource	Description	2024-25 Project Year Totals
8210	Student Activity Funds	188,812.00
Total, Restricted Balance		188,812.00

Description	Resource Codes	Object Codes	Original Budget (A)	Board Approved Operating Budget (B)	Actuals To Date (C)	Projected Year Totals (D)	Difference (Col B & D) (E)	% Diff Column B & D (F)
A. REVENUES								
1) LCFF Sources		8010-8099	0.00	0.00	0.00	0.00	0.00	0.0%
2) Federal Revenue		8100-8299	0.00	0.00	0.00	0.00	0.00	0.0%
3) Other State Revenue		8300-8599	0.00	0.00	0.00	0.00	0.00	0.0%
4) Other Local Revenue		8600-8799	0.00	0.00	7,917.93	0.00	0.00	0.0%
5) TOTAL, REVENUES			0.00	0.00	7,917.93	0.00		
B. EXPENDITURES								
1) Certificated Salaries		1000-1999	0.00	0.00	0.00	0.00	0.00	0.0%
2) Classified Salaries		2000-2999	0.00	0.00	0.00	0.00	0.00	0.0%
3) Employee Benefits		3000-3999	0.00	0.00	0.00	0.00	0.00	0.0%
4) Books and Supplies		4000-4999	0.00	0.00	0.00	0.00	0.00	0.0%
5) Services and Other Operating Expenditures		5000-5999	0.00	0.00	0.00	0.00	0.00	0.0%
6) Capital Outlay		6000-6999	0.00	0.00	0.00	0.00	0.00	0.0%
7) Other Outgo (excluding Transfers of Indirect Costs)		7100-7299,7400-7499	0.00	0.00	0.00	0.00	0.00	0.0%
8) Other Outgo - Transfers of Indirect Costs		7300-7399	0.00	0.00	0.00	0.00	0.00	0.0%
9) TOTAL, EXPENDITURES			0.00	0.00	0.00	0.00		
C. EXCESS (DEFICIENCY) OF REVENUES OVER EXPENDITURES BEFORE OTHER FINANCING SOURCES AND USES (A5 - B9)			0.00	0.00	7,917.93	0.00		
D. OTHER FINANCING SOURCES/USES								
1) Interfund Transfers								
a) Transfers In		8900-8929	0.00	0.00	0.00	0.00	0.00	0.0%
b) Transfers Out		7600-7629	0.00	0.00	0.00	0.00	0.00	0.0%
2) Other Sources/Uses								
a) Sources		8930-8979	0.00	0.00	0.00	0.00	0.00	0.0%
b) Uses		7630-7699	0.00	0.00	0.00	0.00	0.00	0.0%
3) Contributions		8980-8999	0.00	0.00	0.00	0.00	0.00	0.0%
4) TOTAL, OTHER FINANCING SOURCES/USES			0.00	0.00	0.00	0.00		
E. NET INCREASE (DECREASE) IN FUND BALANCE (C + D4)			0.00	0.00	7,917.93	0.00		
F. FUND BALANCE, RESERVES								
1) Beginning Fund Balance								
a) As of July 1 - Unaudited		9791	632,225.00	356,196.00		356,196.00	0.00	0.0%
b) Audit Adjustments		9793	0.00	0.00		0.00	0.00	0.0%
c) As of July 1 - Audited (F1a + F1b)			632,225.00	356,196.00		356,196.00		
d) Other Restatements		9795	0.00	0.00		0.00	0.00	0.0%
e) Adjusted Beginning Balance (F1c + F1d)			632,225.00	356,196.00		356,196.00		
2) Ending Balance, June 30 (E + F1e)			632,225.00	356,196.00		356,196.00		
Components of Ending Fund Balance								
a) Nonspendable								
Revolving Cash		9711	0.00	0.00		0.00		
Stores		9712	0.00	0.00		0.00		
Prepaid Items		9713	0.00	0.00		0.00		
All Others		9719	0.00	0.00		0.00		
b) Restricted		9740	632,225.00	356,196.00		356,196.00		
c) Committed								
Stabilization Arrangements		9750	0.00	0.00		0.00		
Other Commitments		9760	0.00	0.00		0.00		
d) Assigned								
Other Assignments		9780	0.00	0.00		0.00		

Description	Resource Codes	Object Codes	Original Budget (A)	Board Approved Operating Budget (B)	Actuals To Date (C)	Projected Year Totals (D)	Difference (Col B & D) (E)	% Diff Column B & D (F)
e) Unassigned/Unappropriated								
Reserve for Economic Uncertainties		9789	0.00	0.00		0.00		
Unassigned/Unappropriated Amount		9790	0.00	0.00		0.00		
FEDERAL REVENUE								
Child Nutrition Programs		8220	0.00	0.00	0.00	0.00	0.00	0.0%
Interagency Contracts Between LEAs		8285	0.00	0.00	0.00	0.00	0.00	0.0%
Title I, Part A, Basic	3010	8290	0.00	0.00	0.00	0.00	0.00	0.0%
All Other Federal Revenue	All Other	8290	0.00	0.00	0.00	0.00	0.00	0.0%
TOTAL, FEDERAL REVENUE			0.00	0.00	0.00	0.00	0.00	0.0%
OTHER STATE REVENUE								
Child Nutrition Programs		8520	0.00	0.00	0.00	0.00	0.00	0.0%
Child Development Apportionments		8530	0.00	0.00	0.00	0.00	0.00	0.0%
Pass-Through Revenues from State Sources		8587	0.00	0.00	0.00	0.00	0.00	0.0%
State Preschool	6105	8590	0.00	0.00	0.00	0.00	0.00	0.0%
All Other State Revenue	All Other	8590	0.00	0.00	0.00	0.00	0.00	0.0%
TOTAL, OTHER STATE REVENUE			0.00	0.00	0.00	0.00	0.00	0.0%
OTHER LOCAL REVENUE								
Sales								
Sale of Equipment/Supplies		8631	0.00	0.00	0.00	0.00	0.00	0.0%
Food Service Sales		8634	0.00	0.00	0.00	0.00	0.00	0.0%
Interest		8660	0.00	0.00	7,917.93	0.00	0.00	0.0%
Net Increase (Decrease) in the Fair Value of Investments		8662	0.00	0.00	0.00	0.00	0.00	0.0%
Fees and Contracts								
Child Development Parent Fees		8673	0.00	0.00	0.00	0.00	0.00	0.0%
Interagency Services		8677	0.00	0.00	0.00	0.00	0.00	0.0%
All Other Fees and Contracts		8689	0.00	0.00	0.00	0.00	0.00	0.0%
Other Local Revenue								
All Other Local Revenue		8699	0.00	0.00	0.00	0.00	0.00	0.0%
All Other Transfers In from All Others		8799	0.00	0.00	0.00	0.00	0.00	0.0%
TOTAL, OTHER LOCAL REVENUE			0.00	0.00	7,917.93	0.00	0.00	0.0%
TOTAL, REVENUES			0.00	0.00	7,917.93	0.00		
CERTIFICATED SALARIES								
Certificated Teachers' Salaries		1100	0.00	0.00	0.00	0.00	0.00	0.0%
Certificated Pupil Support Salaries		1200	0.00	0.00	0.00	0.00	0.00	0.0%
Certificated Supervisors' and Administrators' Salaries		1300	0.00	0.00	0.00	0.00	0.00	0.0%
Other Certificated Salaries		1900	0.00	0.00	0.00	0.00	0.00	0.0%
TOTAL, CERTIFICATED SALARIES			0.00	0.00	0.00	0.00	0.00	0.0%
CLASSIFIED SALARIES								
Classified Instructional Salaries		2100	0.00	0.00	0.00	0.00	0.00	0.0%
Classified Support Salaries		2200	0.00	0.00	0.00	0.00	0.00	0.0%
Classified Supervisors' and Administrators' Salaries		2300	0.00	0.00	0.00	0.00	0.00	0.0%
Clerical, Technical and Office Salaries		2400	0.00	0.00	0.00	0.00	0.00	0.0%
Other Classified Salaries		2900	0.00	0.00	0.00	0.00	0.00	0.0%
TOTAL, CLASSIFIED SALARIES			0.00	0.00	0.00	0.00	0.00	0.0%
EMPLOYEE BENEFITS								
STRS		3101-3102	0.00	0.00	0.00	0.00	0.00	0.0%
PERS		3201-3202	0.00	0.00	0.00	0.00	0.00	0.0%
OASDI/Medicare/Alternative		3301-3302	0.00	0.00	0.00	0.00	0.00	0.0%
Health and Welfare Benefits		3401-3402	0.00	0.00	0.00	0.00	0.00	0.0%

Description	Resource Codes	Object Codes	Original Budget (A)	Board Approved Operating Budget (B)	Actuals To Date (C)	Projected Year Totals (D)	Difference (Col B & D) (E)	% Diff Column B & D (F)
Unemployment Insurance		3501-3502	0.00	0.00	0.00	0.00	0.00	0.0%
Workers' Compensation		3601-3602	0.00	0.00	0.00	0.00	0.00	0.0%
OPEB, Allocated		3701-3702	0.00	0.00	0.00	0.00	0.00	0.0%
OPEB, Active Employees		3751-3752	0.00	0.00	0.00	0.00	0.00	0.0%
Other Employee Benefits		3901-3902	0.00	0.00	0.00	0.00	0.00	0.0%
TOTAL, EMPLOYEE BENEFITS			0.00	0.00	0.00	0.00	0.00	0.0%
BOOKS AND SUPPLIES								
Approved Textbooks and Core Curricula Materials		4100	0.00	0.00	0.00	0.00	0.00	0.0%
Books and Other Reference Materials		4200	0.00	0.00	0.00	0.00	0.00	0.0%
Materials and Supplies		4300	0.00	0.00	0.00	0.00	0.00	0.0%
Noncapitalized Equipment		4400	0.00	0.00	0.00	0.00	0.00	0.0%
Food		4700	0.00	0.00	0.00	0.00	0.00	0.0%
TOTAL, BOOKS AND SUPPLIES			0.00	0.00	0.00	0.00	0.00	0.0%
SERVICES AND OTHER OPERATING EXPENDITURES								
Subagreements for Services		5100	0.00	0.00	0.00	0.00	0.00	0.0%
Travel and Conferences		5200	0.00	0.00	0.00	0.00	0.00	0.0%
Dues and Memberships		5300	0.00	0.00	0.00	0.00	0.00	0.0%
Insurance		5400-5450	0.00	0.00	0.00	0.00	0.00	0.0%
Operations and Housekeeping Services		5500	0.00	0.00	0.00	0.00	0.00	0.0%
Rentals, Leases, Repairs, and Noncapitalized Improvements		5600	0.00	0.00	0.00	0.00	0.00	0.0%
Transfers of Direct Costs		5710	0.00	0.00	0.00	0.00	0.00	0.0%
Transfers of Direct Costs - Interfund		5750	0.00	0.00	0.00	0.00	0.00	0.0%
Professional/Consulting Services and Operating Expenditures		5800	0.00	0.00	0.00	0.00	0.00	0.0%
Communications		5900	0.00	0.00	0.00	0.00	0.00	0.0%
TOTAL, SERVICES AND OTHER OPERATING EXPENDITURES			0.00	0.00	0.00	0.00	0.00	0.0%
CAPITAL OUTLAY								
Land		6100	0.00	0.00	0.00	0.00	0.00	0.0%
Land Improvements		6170	0.00	0.00	0.00	0.00	0.00	0.0%
Buildings and Improvements of Buildings		6200	0.00	0.00	0.00	0.00	0.00	0.0%
Equipment		6400	0.00	0.00	0.00	0.00	0.00	0.0%
Equipment Replacement		6500	0.00	0.00	0.00	0.00	0.00	0.0%
Lease Assets		6600	0.00	0.00	0.00	0.00	0.00	0.0%
Subscription Assets		6700	0.00	0.00	0.00	0.00	0.00	0.0%
TOTAL, CAPITAL OUTLAY			0.00	0.00	0.00	0.00	0.00	0.0%
OTHER OUTGO (excluding Transfers of Indirect Costs)								
Other Transfers Out								
All Other Transfers Out to All Others		7299	0.00	0.00	0.00	0.00	0.00	0.0%
Debt Service								
Debt Service - Interest		7438	0.00	0.00	0.00	0.00	0.00	0.0%
Other Debt Service - Principal		7439	0.00	0.00	0.00	0.00	0.00	0.0%
TOTAL, OTHER OUTGO (excluding Transfers of Indirect Costs)			0.00	0.00	0.00	0.00	0.00	0.0%
OTHER OUTGO - TRANSFERS OF INDIRECT COSTS								
Transfers of Indirect Costs - Interfund		7350	0.00	0.00	0.00	0.00	0.00	0.0%
TOTAL, OTHER OUTGO - TRANSFERS OF INDIRECT COSTS			0.00	0.00	0.00	0.00	0.00	0.0%
TOTAL, EXPENDITURES			0.00	0.00	0.00	0.00		
INTERFUND TRANSFERS								
INTERFUND TRANSFERS IN								
From: General Fund		8911	0.00	0.00	0.00	0.00	0.00	0.0%

Description	Resource Codes	Object Codes	Original Budget (A)	Board Approved Operating Budget (B)	Actuals To Date (C)	Projected Year Totals (D)	Difference (Col B & D) (E)	% Diff Column B & D (F)
Other Authorized Interfund Transfers In		8919	0.00	0.00	0.00	0.00	0.00	0.0%
(a) TOTAL, INTERFUND TRANSFERS IN			0.00	0.00	0.00	0.00	0.00	0.0%
INTERFUND TRANSFERS OUT								
Other Authorized Interfund Transfers Out		7619	0.00	0.00	0.00	0.00	0.00	0.0%
(b) TOTAL, INTERFUND TRANSFERS OUT			0.00	0.00	0.00	0.00	0.00	0.0%
OTHER SOURCES/USES								
SOURCES								
Other Sources								
Transfers from Funds of Lapsed/Reorganized LEAs		8965	0.00	0.00	0.00	0.00	0.00	0.0%
Long-Term Debt Proceeds								
Proceeds from Certificates of Participation		8971	0.00	0.00	0.00	0.00	0.00	0.0%
Proceeds from Leases		8972	0.00	0.00	0.00	0.00	0.00	0.0%
Proceeds from SBITAs		8974	0.00	0.00	0.00	0.00	0.00	0.0%
All Other Financing Sources		8979	0.00	0.00	0.00	0.00	0.00	0.0%
(c) TOTAL, SOURCES			0.00	0.00	0.00	0.00	0.00	0.0%
USES								
Transfers of Funds from Lapsed/Reorganized LEAs		7651	0.00	0.00	0.00	0.00	0.00	0.0%
All Other Financing Uses		7699	0.00	0.00	0.00	0.00	0.00	0.0%
(d) TOTAL, USES			0.00	0.00	0.00	0.00	0.00	0.0%
CONTRIBUTIONS								
Contributions from Unrestricted Revenues		8980	0.00	0.00	0.00	0.00	0.00	0.0%
Contributions from Restricted Revenues		8990	0.00	0.00	0.00	0.00	0.00	0.0%
(e) TOTAL, CONTRIBUTIONS			0.00	0.00	0.00	0.00	0.00	0.0%
TOTAL, OTHER FINANCING SOURCES/USES								
(a - b + c - d + e)			0.00	0.00	0.00	0.00		

Resource	Description	2024-25 Projected Totals
5059	Early Education: ARP California State Preschool Program One-time Stipend	96,302.00
6130	Early Education: Center-Based Reserve Account	4,489.00
7810	Other Restricted State	24,000.00
9010	Other Restricted Local	231,405.00
Total, Restricted Balance		356,196.00

Description	Resource Codes	Object Codes	Original Budget (A)	Board Approved Operating Budget (B)	Actuals To Date (C)	Projected Year Totals (D)	Difference (Col B & D) (E)	% Diff Column B & D (F)
A. REVENUES								
1) LCFF Sources		8010-8099	0.00	0.00	0.00	0.00	0.00	0.0%
2) Federal Revenue		8100-8299	9,687,175.00	9,687,175.00	3,309,004.25	9,687,175.00	0.00	0.0%
3) Other State Revenue		8300-8599	2,599,052.00	2,599,052.00	1,059,307.26	2,599,052.00	0.00	0.0%
4) Other Local Revenue		8600-8799	16,000.00	31,000.00	127,817.67	31,000.00	0.00	0.0%
5) TOTAL, REVENUES			12,302,227.00	12,317,227.00	4,496,129.18	12,317,227.00		
B. EXPENDITURES								
1) Certificated Salaries		1000-1999	0.00	0.00	0.00	0.00	0.00	0.0%
2) Classified Salaries		2000-2999	4,297,713.00	4,420,037.00	2,212,000.51	4,410,309.00	9,728.00	0.2%
3) Employee Benefits		3000-3999	1,883,600.00	1,962,847.00	973,841.60	1,960,551.00	2,296.00	0.1%
4) Books and Supplies		4000-4999	6,024,571.00	6,409,571.00	2,434,230.10	6,866,592.00	(457,021.00)	-7.1%
5) Services and Other Operating Expenditures		5000-5999	79,149.00	(51,284.00)	(73,566.67)	(77,017.00)	25,733.00	-50.2%
6) Capital Outlay		6000-6999	0.00	1,000,000.00	366,369.31	1,764,509.00	(764,509.00)	-76.5%
7) Other Outgo (excluding Transfers of Indirect Costs)		7100-7299,7400-7499	0.00	0.00	0.00	0.00	0.00	0.0%
8) Other Outgo - Transfers of Indirect Costs		7300-7399	363,101.00	387,873.00	0.00	344,897.00	42,976.00	11.1%
9) TOTAL, EXPENDITURES			12,648,134.00	14,129,044.00	5,912,874.85	15,269,841.00		
C. EXCESS (DEFICIENCY) OF REVENUES OVER EXPENDITURES BEFORE OTHER FINANCING SOURCES AND USES (A5 - B9)			(345,907.00)	(1,811,817.00)	(1,416,745.67)	(2,952,614.00)		
D. OTHER FINANCING SOURCES/USES								
1) Interfund Transfers								
a) Transfers In		8900-8929	0.00	0.00	0.00	0.00	0.00	0.0%
b) Transfers Out		7600-7629	0.00	0.00	0.00	0.00	0.00	0.0%
2) Other Sources/Uses								
a) Sources		8930-8979	0.00	0.00	0.00	0.00	0.00	0.0%
b) Uses		7630-7699	0.00	0.00	0.00	0.00	0.00	0.0%
3) Contributions		8980-8999	0.00	0.00	0.00	0.00	0.00	0.0%
4) TOTAL, OTHER FINANCING SOURCES/USES			0.00	0.00	0.00	0.00		
E. NET INCREASE (DECREASE) IN FUND BALANCE (C + D4)			(345,907.00)	(1,811,817.00)	(1,416,745.67)	(2,952,614.00)		
F. FUND BALANCE, RESERVES								
1) Beginning Fund Balance								
a) As of July 1 - Unaudited		9791	10,454,870.00	14,499,606.00		14,499,606.00	0.00	0.0%
b) Audit Adjustments		9793	0.00	0.00		0.00	0.00	0.0%
c) As of July 1 - Audited (F1a + F1b)			10,454,870.00	14,499,606.00		14,499,606.00		
d) Other Restatements		9795	0.00	0.00		0.00	0.00	0.0%
e) Adjusted Beginning Balance (F1c + F1d)			10,454,870.00	14,499,606.00		14,499,606.00		
2) Ending Balance, June 30 (E + F1e)			10,108,963.00	12,687,789.00		11,546,992.00		
Components of Ending Fund Balance								
a) Nonspendable								
Revolving Cash		9711	0.00	0.00		0.00		
Stores		9712	0.00	0.00		0.00		
Prepaid Items		9713	0.00	0.00		0.00		
All Others		9719	0.00	0.00		0.00		
b) Restricted		9740	10,108,963.00	12,687,789.00		11,546,992.00		
c) Committed								
Stabilization Arrangements		9750	0.00	0.00		0.00		
Other Commitments		9760	0.00	0.00		0.00		
d) Assigned								

Description	Resource Codes	Object Codes	Original Budget (A)	Board Approved Operating Budget (B)	Actuals To Date (C)	Projected Year Totals (D)	Difference (Col B & D) (E)	% Diff Column B & D (F)
Other Assignments		9780	0.00	0.00		0.00		
e) Unassigned/Unappropriated								
Reserve for Economic Uncertainties		9789	0.00	0.00		0.00		
Unassigned/Unappropriated Amount		9790	0.00	0.00		0.00		
FEDERAL REVENUE								
Child Nutrition Programs		8220	9,687,175.00	9,687,175.00	3,300,724.25	9,687,175.00	0.00	0.0%
Donated Food Commodities		8221	0.00	0.00	0.00	0.00	0.00	0.0%
All Other Federal Revenue		8290	0.00	0.00	8,280.00	0.00	0.00	0.0%
TOTAL, FEDERAL REVENUE			9,687,175.00	9,687,175.00	3,309,004.25	9,687,175.00	0.00	0.0%
OTHER STATE REVENUE								
Child Nutrition Programs		8520	2,529,052.00	2,529,052.00	1,059,307.26	2,529,052.00	0.00	0.0%
All Other State Revenue		8590	70,000.00	70,000.00	0.00	70,000.00	0.00	0.0%
TOTAL, OTHER STATE REVENUE			2,599,052.00	2,599,052.00	1,059,307.26	2,599,052.00	0.00	0.0%
OTHER LOCAL REVENUE								
Sales								
Sale of Equipment/Supplies		8631	0.00	0.00	0.00	0.00	0.00	0.0%
Food Service Sales		8634	0.00	15,000.00	51,285.78	15,000.00	0.00	0.0%
Leases and Rentals		8650	0.00	0.00	0.00	0.00	0.00	0.0%
Interest		8660	16,000.00	16,000.00	75,281.07	16,000.00	0.00	0.0%
Net Increase (Decrease) in the Fair Value of Investments		8662	0.00	0.00	0.00	0.00	0.00	0.0%
Fees and Contracts								
Interagency Services		8677	0.00	0.00	0.00	0.00	0.00	0.0%
Other Local Revenue								
All Other Local Revenue		8699	0.00	0.00	1,250.82	0.00	0.00	0.0%
TOTAL, OTHER LOCAL REVENUE			16,000.00	31,000.00	127,817.67	31,000.00	0.00	0.0%
TOTAL, REVENUES			12,302,227.00	12,317,227.00	4,496,129.18	12,317,227.00		
CERTIFICATED SALARIES								
Certificated Supervisors' and Administrators' Salaries		1300	0.00	0.00	0.00	0.00	0.00	0.0%
Other Certificated Salaries		1900	0.00	0.00	0.00	0.00	0.00	0.0%
TOTAL, CERTIFICATED SALARIES			0.00	0.00	0.00	0.00	0.00	0.0%
CLASSIFIED SALARIES								
Classified Support Salaries		2200	3,894,898.00	4,025,397.00	1,974,988.21	4,000,382.00	25,015.00	0.6%
Classified Supervisors' and Administrators' Salaries		2300	238,006.00	226,596.00	147,528.41	243,708.00	(17,112.00)	-7.6%
Clerical, Technical and Office Salaries		2400	164,809.00	168,044.00	89,483.89	166,219.00	1,825.00	1.1%
Other Classified Salaries		2900	0.00	0.00	0.00	0.00	0.00	0.0%
TOTAL, CLASSIFIED SALARIES			4,297,713.00	4,420,037.00	2,212,000.51	4,410,309.00	9,728.00	0.2%
EMPLOYEE BENEFITS								
STRS		3101-3102	0.00	0.00	1.98	0.00	0.00	0.0%
PERS		3201-3202	1,155,125.00	1,187,511.00	568,592.83	1,176,160.00	11,351.00	1.0%
OASDI/Medicare/Alternative		3301-3302	321,194.00	332,484.00	165,783.31	331,559.00	925.00	0.3%
Health and Welfare Benefits		3401-3402	267,351.00	306,421.00	168,193.26	316,570.00	(10,149.00)	-3.3%
Unemployment Insurance		3501-3502	2,097.00	2,172.00	1,086.02	2,169.00	3.00	0.1%
Workers' Compensation		3601-3602	79,673.00	76,099.00	38,253.47	75,933.00	166.00	0.2%
OPEB, Allocated		3701-3702	58,160.00	58,160.00	31,930.73	58,160.00	0.00	0.0%
OPEB, Active Employees		3751-3752	0.00	0.00	0.00	0.00	0.00	0.0%
Other Employee Benefits		3901-3902	0.00	0.00	0.00	0.00	0.00	0.0%
TOTAL, EMPLOYEE BENEFITS			1,883,600.00	1,962,847.00	973,841.60	1,960,551.00	2,296.00	0.1%
BOOKS AND SUPPLIES								
Books and Other Reference Materials		4200	0.00	0.00	0.00	0.00	0.00	0.0%

Description	Resource Codes	Object Codes	Original Budget (A)	Board Approved Operating Budget (B)	Actuals To Date (C)	Projected Year Totals (D)	Difference (Col B & D) (E)	% Diff Column B & D (F)
Materials and Supplies		4300	466,593.00	477,093.00	127,377.19	497,083.00	(19,990.00)	-4.2%
Noncapitalized Equipment		4400	4,000.00	103,500.00	44,429.85	141,500.00	(38,000.00)	-36.7%
Food		4700	5,553,978.00	5,828,978.00	2,262,423.06	6,228,009.00	(399,031.00)	-6.8%
TOTAL, BOOKS AND SUPPLIES			6,024,571.00	6,409,571.00	2,434,230.10	6,866,592.00	(457,021.00)	-7.1%
SERVICES AND OTHER OPERATING EXPENDITURES								
Subagreements for Services		5100	0.00	0.00	0.00	0.00	0.00	0.0%
Travel and Conferences		5200	13,282.00	13,500.00	8,153.61	13,500.00	0.00	0.0%
Dues and Memberships		5300	1,000.00	1,250.00	193.00	1,250.00	0.00	0.0%
Insurance		5400-5450	0.00	0.00	0.00	0.00	0.00	0.0%
Operations and Housekeeping Services		5500	45,000.00	60,450.00	28,300.36	60,450.00	0.00	0.0%
Rentals, Leases, Repairs, and Noncapitalized Improvements		5600	30,000.00	30,000.00	550.00	30,000.00	0.00	0.0%
Transfers of Direct Costs		5710	0.00	0.00	0.00	0.00	0.00	0.0%
Transfers of Direct Costs - Interfund		5750	(52,213.00)	(200,213.00)	(135,066.61)	(226,746.00)	26,533.00	-13.3%
Professional/Consulting Services and Operating Expenditures		5800	40,629.00	40,829.00	23,829.65	41,629.00	(800.00)	-2.0%
Communications		5900	1,451.00	2,900.00	473.32	2,900.00	0.00	0.0%
TOTAL, SERVICES AND OTHER OPERATING EXPENDITURES			79,149.00	(51,284.00)	(73,566.67)	(77,017.00)	25,733.00	-50.2%
CAPITAL OUTLAY								
Buildings and Improvements of Buildings		6200	0.00	0.00	0.00	0.00	0.00	0.0%
Equipment		6400	0.00	1,000,000.00	366,369.31	1,764,509.00	(764,509.00)	-76.5%
Equipment Replacement		6500	0.00	0.00	0.00	0.00	0.00	0.0%
Lease Assets		6600	0.00	0.00	0.00	0.00	0.00	0.0%
Subscription Assets		6700	0.00	0.00	0.00	0.00	0.00	0.0%
TOTAL, CAPITAL OUTLAY			0.00	1,000,000.00	366,369.31	1,764,509.00	(764,509.00)	-76.5%
OTHER OUTGO (excluding Transfers of Indirect Costs)								
Debt Service								
Debt Service - Interest		7438	0.00	0.00	0.00	0.00	0.00	0.0%
Other Debt Service - Principal		7439	0.00	0.00	0.00	0.00	0.00	0.0%
TOTAL, OTHER OUTGO (excluding Transfers of Indirect Costs)			0.00	0.00	0.00	0.00	0.00	0.0%
OTHER OUTGO - TRANSFERS OF INDIRECT COSTS								
Transfers of Indirect Costs - Interfund		7350	363,101.00	387,873.00	0.00	344,897.00	42,976.00	11.1%
TOTAL, OTHER OUTGO - TRANSFERS OF INDIRECT COSTS			363,101.00	387,873.00	0.00	344,897.00	42,976.00	11.1%
TOTAL, EXPENDITURES			12,648,134.00	14,129,044.00	5,912,874.85	15,269,841.00		
INTERFUND TRANSFERS								
INTERFUND TRANSFERS IN								
From: General Fund		8916	0.00	0.00	0.00	0.00	0.00	0.0%
Other Authorized Interfund Transfers In		8919	0.00	0.00	0.00	0.00	0.00	0.0%
(a) TOTAL, INTERFUND TRANSFERS IN			0.00	0.00	0.00	0.00	0.00	0.0%
INTERFUND TRANSFERS OUT								
Other Authorized Interfund Transfers Out		7619	0.00	0.00	0.00	0.00	0.00	0.0%
(b) TOTAL, INTERFUND TRANSFERS OUT			0.00	0.00	0.00	0.00	0.00	0.0%
OTHER SOURCES/USES								
SOURCES								
Other Sources								
Transfers from Funds of Lapsed/Reorganized LEAs		8965	0.00	0.00	0.00	0.00	0.00	0.0%
Long-Term Debt Proceeds								
Proceeds from Leases		8972	0.00	0.00	0.00	0.00	0.00	0.0%

Description	Resource Codes	Object Codes	Original Budget (A)	Board Approved Operating Budget (B)	Actuals To Date (C)	Projected Year Totals (D)	Difference (Col B & D) (E)	% Diff Column B & D (F)
Proceeds from SBITAs		8974	0.00	0.00	0.00	0.00	0.00	0.0%
All Other Financing Sources		8979	0.00	0.00	0.00	0.00	0.00	0.0%
(c) TOTAL, SOURCES			0.00	0.00	0.00	0.00	0.00	0.0%
USES								
Transfers of Funds from Lapsed/Reorganized LEAs		7651	0.00	0.00	0.00	0.00	0.00	0.0%
All Other Financing Uses		7699	0.00	0.00	0.00	0.00	0.00	0.0%
(d) TOTAL, USES			0.00	0.00	0.00	0.00	0.00	0.0%
CONTRIBUTIONS								
Contributions from Unrestricted Revenues		8980	0.00	0.00	0.00	0.00	0.00	0.0%
Contributions from Restricted Revenues		8990	0.00	0.00	0.00	0.00	0.00	0.0%
(e) TOTAL, CONTRIBUTIONS			0.00	0.00	0.00	0.00	0.00	0.0%
TOTAL, OTHER FINANCING SOURCES/USES								
(a - b + c - d + e)			0.00	0.00	0.00	0.00		

Resource	Description	2024-25 Projected Totals
5310	Child Nutrition: School Programs (e.g., School Lunch, School Breakfast, Milk, Pregnant & Lactating Students)	5,816,890.00
5320	Child Nutrition: Child Care Food Program (CCFP) Claims-Centers and Family Day Care Homes (Meal Reimbursements)	1,852,068.00
5330	Child Nutrition: Summer Food Service Program Operations	3,035,148.00
5466	Child Nutrition: Supply Chain Assistance (SCA) Funds	842,886.00
Total, Restricted Balance		11,546,992.00

Description	Resource Codes	Object Codes	Original Budget (A)	Board Approved Operating Budget (B)	Actuals To Date (C)	Projected Year Totals (D)	Difference (Col B & D) (E)	% Diff Column B & D (F)
A. REVENUES								
1) LCFF Sources		8010-8099	7,000,000.00	7,000,000.00	7,000,000.00	7,000,000.00	0.00	0.0%
2) Federal Revenue		8100-8299	0.00	0.00	0.00	0.00	0.00	0.0%
3) Other State Revenue		8300-8599	0.00	0.00	0.00	0.00	0.00	0.0%
4) Other Local Revenue		8600-8799	5,000.00	5,000.00	29,059.40	5,000.00	0.00	0.0%
5) TOTAL, REVENUES			7,005,000.00	7,005,000.00	7,029,059.40	7,005,000.00		
B. EXPENDITURES								
1) Certificated Salaries		1000-1999	0.00	0.00	0.00	0.00	0.00	0.0%
2) Classified Salaries		2000-2999	0.00	0.00	0.00	0.00	0.00	0.0%
3) Employee Benefits		3000-3999	0.00	0.00	0.00	0.00	0.00	0.0%
4) Books and Supplies		4000-4999	0.00	60,000.00	59,250.00	60,000.00	0.00	0.0%
5) Services and Other Operating Expenditures		5000-5999	922,400.00	1,842,400.00	1,364,490.00	1,842,400.00	0.00	0.0%
6) Capital Outlay		6000-6999	7,420,470.00	10,119,431.00	5,204,501.69	10,119,431.00	0.00	0.0%
7) Other Outgo (excluding Transfers of Indirect Costs)		7100-7299,7400-7499	0.00	0.00	0.00	0.00	0.00	0.0%
8) Other Outgo - Transfers of Indirect Costs		7300-7399	0.00	0.00	0.00	0.00	0.00	0.0%
9) TOTAL, EXPENDITURES			8,342,870.00	12,021,831.00	6,628,241.69	12,021,831.00		
C. EXCESS (DEFICIENCY) OF REVENUES OVER EXPENDITURES BEFORE OTHER FINANCING SOURCES AND USES (A5 - B9)			(1,337,870.00)	(5,016,831.00)	400,817.71	(5,016,831.00)		
D. OTHER FINANCING SOURCES/USES								
1) Interfund Transfers								
a) Transfers In		8900-8929	0.00	0.00	0.00	0.00	0.00	0.0%
b) Transfers Out		7600-7629	0.00	0.00	0.00	0.00	0.00	0.0%
2) Other Sources/Uses								
a) Sources		8930-8979	0.00	0.00	0.00	0.00	0.00	0.0%
b) Uses		7630-7699	0.00	0.00	0.00	0.00	0.00	0.0%
3) Contributions		8980-8999	0.00	0.00	0.00	0.00	0.00	0.0%
4) TOTAL, OTHER FINANCING SOURCES/USES			0.00	0.00	0.00	0.00		
E. NET INCREASE (DECREASE) IN FUND BALANCE (C + D4)			(1,337,870.00)	(5,016,831.00)	400,817.71	(5,016,831.00)		
F. FUND BALANCE, RESERVES								
1) Beginning Fund Balance								
a) As of July 1 - Unaudited		9791	1,337,870.00	6,616,115.00		6,616,115.00	0.00	0.0%
b) Audit Adjustments		9793	0.00	0.00		0.00	0.00	0.0%
c) As of July 1 - Audited (F1a + F1b)			1,337,870.00	6,616,115.00		6,616,115.00		
d) Other Restatements		9795	0.00	0.00		0.00	0.00	0.0%
e) Adjusted Beginning Balance (F1c + F1d)			1,337,870.00	6,616,115.00		6,616,115.00		
2) Ending Balance, June 30 (E + F1e)			0.00	1,599,284.00		1,599,284.00		
Components of Ending Fund Balance								
a) Nonspendable								
Revolving Cash		9711	0.00	0.00		0.00		
Stores		9712	0.00	0.00		0.00		
Prepaid Items		9713	0.00	0.00		0.00		
All Others		9719	0.00	0.00		0.00		
b) Restricted		9740	0.00	1,599,284.00		1,599,284.00		
c) Committed								
Stabilization Arrangements		9750	0.00	0.00		0.00		
Other Commitments		9760	0.00	0.00		0.00		
d) Assigned								

Description	Resource Codes	Object Codes	Original Budget (A)	Board Approved Operating Budget (B)	Actuals To Date (C)	Projected Year Totals (D)	Difference (Col B & D) (E)	% Diff Column B & D (F)
Other Assignments		9780	0.00	0.00		0.00		
e) Unassigned/Unappropriated								
Reserve for Economic Uncertainties		9789	0.00	0.00		0.00		
Unassigned/Unappropriated Amount		9790	0.00	0.00		0.00		
LCFF SOURCES								
LCFF Transfers								
LCFF Transfers - Current Year		8091	7,000,000.00	7,000,000.00	7,000,000.00	7,000,000.00	0.00	0.0%
LCFF/Revenue Limit Transfers - Prior Years		8099	0.00	0.00	0.00	0.00	0.00	0.0%
TOTAL, LCFF SOURCES			7,000,000.00	7,000,000.00	7,000,000.00	7,000,000.00	0.00	0.0%
OTHER STATE REVENUE								
All Other State Revenue		8590	0.00	0.00	0.00	0.00	0.00	0.0%
TOTAL, OTHER STATE REVENUE			0.00	0.00	0.00	0.00	0.00	0.0%
OTHER LOCAL REVENUE								
Community Redevelopment Funds Not Subject to LCFF Deduction		8625	0.00	0.00	0.00	0.00	0.00	0.0%
Sales								
Sale of Equipment/Supplies		8631	0.00	0.00	0.00	0.00	0.00	0.0%
Interest		8660	5,000.00	5,000.00	29,059.40	5,000.00	0.00	0.0%
Net Increase (Decrease) in the Fair Value of Investments		8662	0.00	0.00	0.00	0.00	0.00	0.0%
Other Local Revenue								
All Other Local Revenue		8699	0.00	0.00	0.00	0.00	0.00	0.0%
All Other Transfers In from All Others		8799	0.00	0.00	0.00	0.00	0.00	0.0%
TOTAL, OTHER LOCAL REVENUE			5,000.00	5,000.00	29,059.40	5,000.00	0.00	0.0%
TOTAL, REVENUES			7,005,000.00	7,005,000.00	7,029,059.40	7,005,000.00		
CLASSIFIED SALARIES								
Classified Support Salaries		2200	0.00	0.00	0.00	0.00	0.00	0.0%
Other Classified Salaries		2900	0.00	0.00	0.00	0.00	0.00	0.0%
TOTAL, CLASSIFIED SALARIES			0.00	0.00	0.00	0.00	0.00	0.0%
EMPLOYEE BENEFITS								
STRS		3101-3102	0.00	0.00	0.00	0.00	0.00	0.0%
PERS		3201-3202	0.00	0.00	0.00	0.00	0.00	0.0%
OASDI/Medicare/Alternative		3301-3302	0.00	0.00	0.00	0.00	0.00	0.0%
Health and Welfare Benefits		3401-3402	0.00	0.00	0.00	0.00	0.00	0.0%
Unemployment Insurance		3501-3502	0.00	0.00	0.00	0.00	0.00	0.0%
Workers' Compensation		3601-3602	0.00	0.00	0.00	0.00	0.00	0.0%
OPEB, Allocated		3701-3702	0.00	0.00	0.00	0.00	0.00	0.0%
OPEB, Active Employees		3751-3752	0.00	0.00	0.00	0.00	0.00	0.0%
Other Employee Benefits		3901-3902	0.00	0.00	0.00	0.00	0.00	0.0%
TOTAL, EMPLOYEE BENEFITS			0.00	0.00	0.00	0.00	0.00	0.0%
BOOKS AND SUPPLIES								
Books and Other Reference Materials		4200	0.00	0.00	0.00	0.00	0.00	0.0%
Materials and Supplies		4300	0.00	60,000.00	59,250.00	60,000.00	0.00	0.0%
Noncapitalized Equipment		4400	0.00	0.00	0.00	0.00	0.00	0.0%
TOTAL, BOOKS AND SUPPLIES			0.00	60,000.00	59,250.00	60,000.00	0.00	0.0%
SERVICES AND OTHER OPERATING EXPENDITURES								
Subagreements for Services		5100	0.00	0.00	0.00	0.00	0.00	0.0%
Travel and Conferences		5200	0.00	0.00	0.00	0.00	0.00	0.0%
Rentals, Leases, Repairs, and Noncapitalized Improvements		5600	11,000.00	11,000.00	0.00	11,000.00	0.00	0.0%
Transfers of Direct Costs		5710	0.00	0.00	0.00	0.00	0.00	0.0%

Description	Resource Codes	Object Codes	Original Budget (A)	Board Approved Operating Budget (B)	Actuals To Date (C)	Projected Year Totals (D)	Difference (Col B & D) (E)	% Diff Column B & D (F)
Transfers of Direct Costs - Interfund		5750	0.00	0.00	0.00	0.00	0.00	0.0%
Professional/Consulting Services and Operating Expenditures		5800	911,400.00	1,831,400.00	1,364,490.00	1,831,400.00	0.00	0.0%
TOTAL, SERVICES AND OTHER OPERATING EXPENDITURES			922,400.00	1,842,400.00	1,364,490.00	1,842,400.00	0.00	0.0%
CAPITAL OUTLAY								
Land Improvements		6170	5,050,400.00	6,523,115.00	3,375,431.64	6,523,115.00	0.00	0.0%
Buildings and Improvements of Buildings		6200	2,366,070.00	3,592,316.00	1,829,070.05	3,592,316.00	0.00	0.0%
Equipment		6400	0.00	0.00	0.00	0.00	0.00	0.0%
Equipment Replacement		6500	4,000.00	4,000.00	0.00	4,000.00	0.00	0.0%
Lease Assets		6600	0.00	0.00	0.00	0.00	0.00	0.0%
Subscription Assets		6700	0.00	0.00	0.00	0.00	0.00	0.0%
TOTAL, CAPITAL OUTLAY			7,420,470.00	10,119,431.00	5,204,501.69	10,119,431.00	0.00	0.0%
OTHER OUTGO (excluding Transfers of Indirect Costs)								
Debt Service								
Debt Service - Interest		7438	0.00	0.00	0.00	0.00	0.00	0.0%
Other Debt Service - Principal		7439	0.00	0.00	0.00	0.00	0.00	0.0%
TOTAL, OTHER OUTGO (excluding Transfers of Indirect Costs)			0.00	0.00	0.00	0.00	0.00	0.0%
TOTAL, EXPENDITURES			8,342,870.00	12,021,831.00	6,628,241.69	12,021,831.00		
INTERFUND TRANSFERS								
INTERFUND TRANSFERS IN								
Other Authorized Interfund Transfers In		8919	0.00	0.00	0.00	0.00	0.00	0.0%
(a) TOTAL, INTERFUND TRANSFERS IN			0.00	0.00	0.00	0.00	0.00	0.0%
INTERFUND TRANSFERS OUT								
Other Authorized Interfund Transfers Out		7619	0.00	0.00	0.00	0.00	0.00	0.0%
(b) TOTAL, INTERFUND TRANSFERS OUT			0.00	0.00	0.00	0.00	0.00	0.0%
OTHER SOURCES/USES								
SOURCES								
Other Sources								
Transfers from Funds of Lapsed/Reorganized LEAs		8965	0.00	0.00	0.00	0.00	0.00	0.0%
Long-Term Debt Proceeds								
Proceeds from Leases		8972	0.00	0.00	0.00	0.00	0.00	0.0%
Proceeds from SBITAs		8974	0.00	0.00	0.00	0.00	0.00	0.0%
All Other Financing Sources		8979	0.00	0.00	0.00	0.00	0.00	0.0%
(c) TOTAL, SOURCES			0.00	0.00	0.00	0.00	0.00	0.0%
USES								
Transfers of Funds from Lapsed/Reorganized LEAs		7651	0.00	0.00	0.00	0.00	0.00	0.0%
All Other Financing Uses		7699	0.00	0.00	0.00	0.00	0.00	0.0%
(d) TOTAL, USES			0.00	0.00	0.00	0.00	0.00	0.0%
CONTRIBUTIONS								
Contributions from Unrestricted Revenues		8980	0.00	0.00	0.00	0.00	0.00	0.0%
Contributions from Restricted Revenues		8990	0.00	0.00	0.00	0.00	0.00	0.0%
(e) TOTAL, CONTRIBUTIONS			0.00	0.00	0.00	0.00	0.00	0.0%
TOTAL, OTHER FINANCING SOURCES/USES (a - b + c - d + e)			0.00	0.00	0.00	0.00		

Resource	Description	2024-25 Projected Totals
9010	Other Restricted Local	1,599,284.00
Total, Restricted Balance		1,599,284.00

Description	Resource Codes	Object Codes	Original Budget (A)	Board Approved Operating Budget (B)	Actuals To Date (C)	Projected Year Totals (D)	Difference (Col B & D) (E)	% Diff Column B & D (F)
A. REVENUES								
1) LCFF Sources		8010-8099	0.00	0.00	0.00	0.00	0.00	0.0%
2) Federal Revenue		8100-8299	0.00	0.00	0.00	0.00	0.00	0.0%
3) Other State Revenue		8300-8599	0.00	0.00	0.00	0.00	0.00	0.0%
4) Other Local Revenue		8600-8799	1,508,000.00	1,508,000.00	0.00	1,508,000.00	0.00	0.0%
5) TOTAL, REVENUES			1,508,000.00	1,508,000.00	0.00	1,508,000.00		
B. EXPENDITURES								
1) Certificated Salaries		1000-1999	0.00	0.00	0.00	0.00	0.00	0.0%
2) Classified Salaries		2000-2999	0.00	0.00	0.00	0.00	0.00	0.0%
3) Employee Benefits		3000-3999	0.00	0.00	0.00	0.00	0.00	0.0%
4) Books and Supplies		4000-4999	1,610,000.00	1,613,400.00	(38,681.63)	1,614,200.00	(800.00)	0.0%
5) Services and Other Operating Expenditures		5000-5999	25,000.00	25,950.00	6,160.92	32,000.00	(6,050.00)	-23.3%
6) Capital Outlay		6000-6999	18,930,000.00	29,876,252.00	3,134,491.98	34,029,002.00	(4,152,750.00)	-13.9%
7) Other Outgo (excluding Transfers of Indirect Costs)		7100-7299,7400-7499	0.00	0.00	0.00	0.00	0.00	0.0%
8) Other Outgo - Transfers of Indirect Costs		7300-7399	0.00	0.00	0.00	0.00	0.00	0.0%
9) TOTAL, EXPENDITURES			20,565,000.00	31,515,602.00	3,101,971.27	35,675,202.00		
C. EXCESS (DEFICIENCY) OF REVENUES OVER EXPENDITURES BEFORE OTHER FINANCING SOURCES AND USES (A5 - B9)			(19,057,000.00)	(30,007,602.00)	(3,101,971.27)	(34,167,202.00)		
D. OTHER FINANCING SOURCES/USES								
1) Interfund Transfers								
a) Transfers In		8900-8929	0.00	0.00	0.00	0.00	0.00	0.0%
b) Transfers Out		7600-7629	0.00	0.00	0.00	0.00	0.00	0.0%
2) Other Sources/Uses								
a) Sources		8930-8979	0.00	0.00	0.00	0.00	0.00	0.0%
b) Uses		7630-7699	0.00	0.00	0.00	0.00	0.00	0.0%
3) Contributions		8980-8999	0.00	0.00	0.00	0.00	0.00	0.0%
4) TOTAL, OTHER FINANCING SOURCES/USES			0.00	0.00	0.00	0.00		
E. NET INCREASE (DECREASE) IN FUND BALANCE (C + D4)			(19,057,000.00)	(30,007,602.00)	(3,101,971.27)	(34,167,202.00)		
F. FUND BALANCE, RESERVES								
1) Beginning Fund Balance								
a) As of July 1 - Unaudited		9791	56,726,342.00	70,329,886.00		70,329,886.00	0.00	0.0%
b) Audit Adjustments		9793	0.00	0.00		0.00	0.00	0.0%
c) As of July 1 - Audited (F1a + F1b)			56,726,342.00	70,329,886.00		70,329,886.00		
d) Other Restatements		9795	0.00	0.00		0.00	0.00	0.0%
e) Adjusted Beginning Balance (F1c + F1d)			56,726,342.00	70,329,886.00		70,329,886.00		
2) Ending Balance, June 30 (E + F1e)			37,669,342.00	40,322,284.00		36,162,684.00		
Components of Ending Fund Balance								
a) Nonspendable								
Revolving Cash		9711	0.00	0.00		0.00		
Stores		9712	0.00	0.00		0.00		
Prepaid Items		9713	0.00	0.00		0.00		
All Others		9719	0.00	0.00		0.00		
b) Legally Restricted Balance		9740	33,977,903.00	35,086,866.00		30,927,266.00		
c) Committed								
Stabilization Arrangements		9750	0.00	0.00		0.00		
Other Commitments		9760	0.00	0.00		0.00		
d) Assigned								

Description	Resource Codes	Object Codes	Original Budget (A)	Board Approved Operating Budget (B)	Actuals To Date (C)	Projected Year Totals (D)	Difference (Col B & D) (E)	% Diff Column B & D (F)
Other Assignments		9780	3,691,439.00	5,235,418.00		5,235,418.00		
e) Unassigned/Unappropriated								
Reserve for Economic Uncertainties		9789	0.00	0.00		0.00		
Unassigned/Unappropriated Amount		9790	0.00	0.00		0.00		
FEDERAL REVENUE								
FEMA		8281	0.00	0.00	0.00	0.00	0.00	0.0%
All Other Federal Revenue		8290	0.00	0.00	0.00	0.00	0.00	0.0%
TOTAL, FEDERAL REVENUE			0.00	0.00	0.00	0.00	0.00	0.0%
OTHER STATE REVENUE								
Tax Relief Subventions								
Restricted Levies - Other								
Homeowners' Exemptions		8575	0.00	0.00	0.00	0.00	0.00	0.0%
Other Subventions/In-Lieu Taxes		8576	0.00	0.00	0.00	0.00	0.00	0.0%
All Other State Revenue		8590	0.00	0.00	0.00	0.00	0.00	0.0%
TOTAL, OTHER STATE REVENUE			0.00	0.00	0.00	0.00	0.00	0.0%
OTHER LOCAL REVENUE								
County and District Taxes								
Other Restricted Levies								
Secured Roll		8615	0.00	0.00	0.00	0.00	0.00	0.0%
Unsecured Roll		8616	0.00	0.00	0.00	0.00	0.00	0.0%
Prior Years' Taxes		8617	0.00	0.00	0.00	0.00	0.00	0.0%
Supplemental Taxes		8618	0.00	0.00	0.00	0.00	0.00	0.0%
Non-Ad Valorem Taxes								
Parcel Taxes		8621	0.00	0.00	0.00	0.00	0.00	0.0%
Other		8622	0.00	0.00	0.00	0.00	0.00	0.0%
Community Redevelopment Funds Not Subject to LCFF Deduction		8625	0.00	0.00	0.00	0.00	0.00	0.0%
Penalties and Interest from Delinquent Non-LCFF Taxes		8629	0.00	0.00	0.00	0.00	0.00	0.0%
Sales								
Sale of Equipment/Supplies		8631	0.00	0.00	0.00	0.00	0.00	0.0%
Leases and Rentals		8650	0.00	0.00	0.00	0.00	0.00	0.0%
Interest		8660	1,508,000.00	1,508,000.00	0.00	1,508,000.00	0.00	0.0%
Net Increase (Decrease) in the Fair Value of Investments		8662	0.00	0.00	0.00	0.00	0.00	0.0%
Other Local Revenue								
All Other Local Revenue		8699	0.00	0.00	0.00	0.00	0.00	0.0%
All Other Transfers In from All Others		8799	0.00	0.00	0.00	0.00	0.00	0.0%
TOTAL, OTHER LOCAL REVENUE			1,508,000.00	1,508,000.00	0.00	1,508,000.00	0.00	0.0%
TOTAL, REVENUES			1,508,000.00	1,508,000.00	0.00	1,508,000.00		
CLASSIFIED SALARIES								
Classified Support Salaries		2200	0.00	0.00	0.00	0.00	0.00	0.0%
Classified Supervisors' and Administrators' Salaries		2300	0.00	0.00	0.00	0.00	0.00	0.0%
Clerical, Technical and Office Salaries		2400	0.00	0.00	0.00	0.00	0.00	0.0%
Other Classified Salaries		2900	0.00	0.00	0.00	0.00	0.00	0.0%
TOTAL, CLASSIFIED SALARIES			0.00	0.00	0.00	0.00	0.00	0.0%
EMPLOYEE BENEFITS								
STRS		3101-3102	0.00	0.00	0.00	0.00	0.00	0.0%
PERS		3201-3202	0.00	0.00	0.00	0.00	0.00	0.0%
OASDI/Medicare/Alternative		3301-3302	0.00	0.00	0.00	0.00	0.00	0.0%

Description	Resource Codes	Object Codes	Original Budget (A)	Board Approved Operating Budget (B)	Actuals To Date (C)	Projected Year Totals (D)	Difference (Col B & D) (E)	% Diff Column B & D (F)
Health and Welfare Benefits		3401-3402	0.00	0.00	0.00	0.00	0.00	0.0%
Unemployment Insurance		3501-3502	0.00	0.00	0.00	0.00	0.00	0.0%
Workers' Compensation		3601-3602	0.00	0.00	0.00	0.00	0.00	0.0%
OPEB, Allocated		3701-3702	0.00	0.00	0.00	0.00	0.00	0.0%
OPEB, Active Employees		3751-3752	0.00	0.00	0.00	0.00	0.00	0.0%
Other Employee Benefits		3901-3902	0.00	0.00	0.00	0.00	0.00	0.0%
TOTAL, EMPLOYEE BENEFITS			0.00	0.00	0.00	0.00	0.00	0.0%
BOOKS AND SUPPLIES								
Books and Other Reference Materials		4200	0.00	0.00	0.00	0.00	0.00	0.0%
Materials and Supplies		4300	610,000.00	613,400.00	(42,346.08)	614,200.00	(800.00)	-0.1%
Noncapitalized Equipment		4400	1,000,000.00	1,000,000.00	3,664.45	1,000,000.00	0.00	0.0%
TOTAL, BOOKS AND SUPPLIES			1,610,000.00	1,613,400.00	(38,681.63)	1,614,200.00	(800.00)	0.0%
SERVICES AND OTHER OPERATING EXPENDITURES								
Subagreements for Services		5100	0.00	0.00	0.00	0.00	0.00	0.0%
Travel and Conferences		5200	0.00	0.00	0.00	0.00	0.00	0.0%
Insurance		5400-5450	0.00	0.00	0.00	0.00	0.00	0.0%
Operations and Housekeeping Services		5500	0.00	0.00	0.00	0.00	0.00	0.0%
Rentals, Leases, Repairs, and Noncapitalized Improvements		5600	0.00	0.00	460.00	2,000.00	(2,000.00)	New
Transfers of Direct Costs		5710	0.00	0.00	0.00	0.00	0.00	0.0%
Transfers of Direct Costs - Interfund		5750	0.00	0.00	0.00	0.00	0.00	0.0%
Professional/Consulting Services and Operating Expenditures		5800	25,000.00	25,950.00	5,700.92	30,000.00	(4,050.00)	-15.6%
Communications		5900	0.00	0.00	0.00	0.00	0.00	0.0%
TOTAL, SERVICES AND OTHER OPERATING EXPENDITURES			25,000.00	25,950.00	6,160.92	32,000.00	(6,050.00)	-23.3%
CAPITAL OUTLAY								
Land		6100	120,000.00	265,000.00	31,475.00	265,000.00	0.00	0.0%
Land Improvements		6170	25,000.00	31,500.00	1,601.00	31,500.00	0.00	0.0%
Buildings and Improvements of Buildings		6200	18,185,000.00	28,979,752.00	3,089,274.80	32,482,502.00	(3,502,750.00)	-12.1%
Books and Media for New School Libraries or Major Expansion of School Libraries		6300	0.00	0.00	0.00	0.00	0.00	0.0%
Equipment		6400	600,000.00	600,000.00	12,141.18	1,250,000.00	(650,000.00)	-108.3%
Equipment Replacement		6500	0.00	0.00	0.00	0.00	0.00	0.0%
Lease Assets		6600	0.00	0.00	0.00	0.00	0.00	0.0%
Subscription Assets		6700	0.00	0.00	0.00	0.00	0.00	0.0%
TOTAL, CAPITAL OUTLAY			18,930,000.00	29,876,252.00	3,134,491.98	34,029,002.00	(4,152,750.00)	-13.9%
OTHER OUTGO (excluding Transfers of Indirect Costs)								
Other Transfers Out								
All Other Transfers Out to All Others		7299	0.00	0.00	0.00	0.00	0.00	0.0%
Debt Service								
Repayment of State School Building Fund Aid - Proceeds from Bonds		7435	0.00	0.00	0.00	0.00	0.00	0.0%
Debt Service - Interest		7438	0.00	0.00	0.00	0.00	0.00	0.0%
Other Debt Service - Principal		7439	0.00	0.00	0.00	0.00	0.00	0.0%
TOTAL, OTHER OUTGO (excluding Transfers of Indirect Costs)			0.00	0.00	0.00	0.00	0.00	0.0%
TOTAL, EXPENDITURES			20,565,000.00	31,515,602.00	3,101,971.27	35,675,202.00		
INTERFUND TRANSFERS								
INTERFUND TRANSFERS IN								

Description	Resource Codes	Object Codes	Original Budget (A)	Board Approved Operating Budget (B)	Actuals To Date (C)	Projected Year Totals (D)	Difference (Col B & D) (E)	% Diff Column B & D (F)
Other Authorized Interfund Transfers In		8919	0.00	0.00	0.00	0.00	0.00	0.0%
(a) TOTAL, INTERFUND TRANSFERS IN			0.00	0.00	0.00	0.00	0.00	0.0%
INTERFUND TRANSFERS OUT								
To: State School Building Fund/County School Facilities Fund		7613	0.00	0.00	0.00	0.00	0.00	0.0%
Other Authorized Interfund Transfers Out		7619	0.00	0.00	0.00	0.00	0.00	0.0%
(b) TOTAL, INTERFUND TRANSFERS OUT			0.00	0.00	0.00	0.00	0.00	0.0%
OTHER SOURCES/USES								
SOURCES								
Proceeds								
Proceeds from Sale of Bonds		8951	0.00	0.00	0.00	0.00	0.00	0.0%
Proceeds from Sale/Lease-Purchase of Land/Buildings		8953	0.00	0.00	0.00	0.00	0.00	0.0%
Other Sources								
County School Building Aid		8961	0.00	0.00	0.00	0.00	0.00	0.0%
Transfers from Funds of Lapsed/Reorganized LEAs		8965	0.00	0.00	0.00	0.00	0.00	0.0%
Long-Term Debt Proceeds								
Proceeds from Certificates of Participation		8971	0.00	0.00	0.00	0.00	0.00	0.0%
Proceeds from Leases		8972	0.00	0.00	0.00	0.00	0.00	0.0%
Proceeds from Lease Revenue Bonds		8973	0.00	0.00	0.00	0.00	0.00	0.0%
Proceeds from SBITAs		8974	0.00	0.00	0.00	0.00	0.00	0.0%
All Other Financing Sources		8979	0.00	0.00	0.00	0.00	0.00	0.0%
(c) TOTAL, SOURCES			0.00	0.00	0.00	0.00	0.00	0.0%
USES								
Transfers of Funds from Lapsed/Reorganized LEAs		7651	0.00	0.00	0.00	0.00	0.00	0.0%
All Other Financing Uses		7699	0.00	0.00	0.00	0.00	0.00	0.0%
(d) TOTAL, USES			0.00	0.00	0.00	0.00	0.00	0.0%
CONTRIBUTIONS								
Contributions from Unrestricted Revenues		8980	0.00	0.00	0.00	0.00	0.00	0.0%
Contributions from Restricted Revenues		8990	0.00	0.00	0.00	0.00	0.00	0.0%
(e) TOTAL, CONTRIBUTIONS			0.00	0.00	0.00	0.00	0.00	0.0%
TOTAL, OTHER FINANCING SOURCES/USES								
(a - b + c - d + e)			0.00	0.00	0.00	0.00		

Resource	Description	2024-25 Projected Totals
9010	Other Restricted Local	30,927,266.00
Total, Restricted Balance		30,927,266.00

Description	Resource Codes	Object Codes	Original Budget (A)	Board Approved Operating Budget (B)	Actuals To Date (C)	Projected Year Totals (D)	Difference (Col B & D) (E)	% Diff Column B & D (F)
A. REVENUES								
1) LCFF Sources		8010-8099	0.00	0.00	0.00	0.00	0.00	0.0%
2) Federal Revenue		8100-8299	0.00	0.00	0.00	0.00	0.00	0.0%
3) Other State Revenue		8300-8599	0.00	0.00	0.00	0.00	0.00	0.0%
4) Other Local Revenue		8600-8799	100,000.00	100,000.00	590,155.09	100,000.00	0.00	0.0%
5) TOTAL, REVENUES			100,000.00	100,000.00	590,155.09	100,000.00		
B. EXPENDITURES								
1) Certificated Salaries		1000-1999	0.00	0.00	0.00	0.00	0.00	0.0%
2) Classified Salaries		2000-2999	0.00	0.00	0.00	0.00	0.00	0.0%
3) Employee Benefits		3000-3999	0.00	0.00	0.00	0.00	0.00	0.0%
4) Books and Supplies		4000-4999	0.00	0.00	0.00	0.00	0.00	0.0%
5) Services and Other Operating Expenditures		5000-5999	0.00	210,000.00	175,818.60	223,000.00	(13,000.00)	-6.2%
6) Capital Outlay		6000-6999	0.00	0.00	0.00	15,500.00	(15,500.00)	New
7) Other Outgo (excluding Transfers of Indirect Costs)		7100-7299,7400-7499	600,000.00	610,000.00	183,571.08	610,000.00	0.00	0.0%
8) Other Outgo - Transfers of Indirect Costs		7300-7399	0.00	0.00	0.00	0.00	0.00	0.0%
9) TOTAL, EXPENDITURES			600,000.00	820,000.00	359,389.68	848,500.00		
C. EXCESS (DEFICIENCY) OF REVENUES OVER EXPENDITURES BEFORE OTHER FINANCING SOURCES AND USES (A5 - B9)			(500,000.00)	(720,000.00)	230,765.41	(748,500.00)		
D. OTHER FINANCING SOURCES/USES								
1) Interfund Transfers								
a) Transfers In		8900-8929	0.00	0.00	0.00	0.00	0.00	0.0%
b) Transfers Out		7600-7629	0.00	0.00	0.00	0.00	0.00	0.0%
2) Other Sources/Uses								
a) Sources		8930-8979	0.00	0.00	0.00	0.00	0.00	0.0%
b) Uses		7630-7699	0.00	0.00	0.00	0.00	0.00	0.0%
3) Contributions		8980-8999	0.00	0.00	0.00	0.00	0.00	0.0%
4) TOTAL, OTHER FINANCING SOURCES/USES			0.00	0.00	0.00	0.00		
E. NET INCREASE (DECREASE) IN FUND BALANCE (C + D4)			(500,000.00)	(720,000.00)	230,765.41	(748,500.00)		
F. FUND BALANCE, RESERVES								
1) Beginning Fund Balance								
a) As of July 1 - Unaudited		9791	7,872,619.00	9,297,544.00		9,297,544.00	0.00	0.0%
b) Audit Adjustments		9793	0.00	0.00		0.00	0.00	0.0%
c) As of July 1 - Audited (F1a + F1b)			7,872,619.00	9,297,544.00		9,297,544.00		
d) Other Restatements		9795	0.00	0.00		0.00	0.00	0.0%
e) Adjusted Beginning Balance (F1c + F1d)			7,872,619.00	9,297,544.00		9,297,544.00		
2) Ending Balance, June 30 (E + F1e)			7,372,619.00	8,577,544.00		8,549,044.00		
Components of Ending Fund Balance								
a) Nonspendable								
Revolving Cash		9711	0.00	0.00		0.00		
Stores		9712	0.00	0.00		0.00		
Prepaid Items		9713	0.00	0.00		0.00		
All Others		9719	0.00	0.00		0.00		
b) Legally Restricted Balance		9740	7,372,619.00	8,577,544.00		8,549,044.00		
c) Committed								
Stabilization Arrangements		9750	0.00	0.00		0.00		
Other Commitments		9760	0.00	0.00		0.00		
d) Assigned								

Description	Resource Codes	Object Codes	Original Budget (A)	Board Approved Operating Budget (B)	Actuals To Date (C)	Projected Year Totals (D)	Difference (Col B & D) (E)	% Diff Column B & D (F)
Other Assignments		9780	0.00	0.00		0.00		
e) Unassigned/Unappropriated								
Reserve for Economic Uncertainties		9789	0.00	0.00		0.00		
Unassigned/Unappropriated Amount		9790	0.00	0.00		0.00		
OTHER STATE REVENUE								
Tax Relief Subventions								
Restricted Levies - Other								
Homeowners' Exemptions		8575	0.00	0.00	0.00	0.00	0.00	0.0%
Other Subventions/In-Lieu Taxes		8576	0.00	0.00	0.00	0.00	0.00	0.0%
All Other State Revenue		8590	0.00	0.00	0.00	0.00	0.00	0.0%
TOTAL, OTHER STATE REVENUE			0.00	0.00	0.00	0.00	0.00	0.0%
OTHER LOCAL REVENUE								
County and District Taxes								
Other Restricted Levies								
Secured Roll		8615	0.00	0.00	0.00	0.00	0.00	0.0%
Unsecured Roll		8616	0.00	0.00	0.00	0.00	0.00	0.0%
Prior Years' Taxes		8617	0.00	0.00	0.00	0.00	0.00	0.0%
Supplemental Taxes		8618	0.00	0.00	0.00	0.00	0.00	0.0%
Non-Ad Valorem Taxes								
Parcel Taxes		8621	0.00	0.00	0.00	0.00	0.00	0.0%
Other		8622	0.00	0.00	0.00	0.00	0.00	0.0%
Community Redevelopment Funds Not Subject to LCFF Deduction		8625	0.00	0.00	483,971.95	0.00	0.00	0.0%
Penalties and Interest from Delinquent Non-LCFF Taxes		8629	0.00	0.00	0.00	0.00	0.00	0.0%
Sales								
Sale of Equipment/Supplies		8631	0.00	0.00	0.00	0.00	0.00	0.0%
Interest		8660	0.00	0.00	50,767.89	0.00	0.00	0.0%
Net Increase (Decrease) in the Fair Value of Investments		8662	0.00	0.00	0.00	0.00	0.00	0.0%
Fees and Contracts								
Mitigation/Developer Fees		8681	100,000.00	100,000.00	55,415.25	100,000.00	0.00	0.0%
Other Local Revenue								
All Other Local Revenue		8699	0.00	0.00	0.00	0.00	0.00	0.0%
All Other Transfers In from All Others		8799	0.00	0.00	0.00	0.00	0.00	0.0%
TOTAL, OTHER LOCAL REVENUE			100,000.00	100,000.00	590,155.09	100,000.00	0.00	0.0%
TOTAL, REVENUES			100,000.00	100,000.00	590,155.09	100,000.00		
CERTIFICATED SALARIES								
Other Certificated Salaries		1900	0.00	0.00	0.00	0.00	0.00	0.0%
TOTAL, CERTIFICATED SALARIES			0.00	0.00	0.00	0.00	0.00	0.0%
CLASSIFIED SALARIES								
Classified Support Salaries		2200	0.00	0.00	0.00	0.00	0.00	0.0%
Classified Supervisors' and Administrators' Salaries		2300	0.00	0.00	0.00	0.00	0.00	0.0%
Clerical, Technical and Office Salaries		2400	0.00	0.00	0.00	0.00	0.00	0.0%
Other Classified Salaries		2900	0.00	0.00	0.00	0.00	0.00	0.0%
TOTAL, CLASSIFIED SALARIES			0.00	0.00	0.00	0.00	0.00	0.0%
EMPLOYEE BENEFITS								
STRS		3101-3102	0.00	0.00	0.00	0.00	0.00	0.0%
PERS		3201-3202	0.00	0.00	0.00	0.00	0.00	0.0%
OASDI/Medicare/Alternative		3301-3302	0.00	0.00	0.00	0.00	0.00	0.0%
Health and Welfare Benefits		3401-3402	0.00	0.00	0.00	0.00	0.00	0.0%
Unemployment Insurance		3501-3502	0.00	0.00	0.00	0.00	0.00	0.0%

Description	Resource Codes	Object Codes	Original Budget (A)	Board Approved Operating Budget (B)	Actuals To Date (C)	Projected Year Totals (D)	Difference (Col B & D) (E)	% Diff Column B & D (F)
Workers' Compensation		3601-3602	0.00	0.00	0.00	0.00	0.00	0.0%
OPEB, Allocated		3701-3702	0.00	0.00	0.00	0.00	0.00	0.0%
OPEB, Active Employees		3751-3752	0.00	0.00	0.00	0.00	0.00	0.0%
Other Employee Benefits		3901-3902	0.00	0.00	0.00	0.00	0.00	0.0%
TOTAL, EMPLOYEE BENEFITS			0.00	0.00	0.00	0.00	0.00	0.0%
BOOKS AND SUPPLIES								
Approved Textbooks and Core Curricula Materials		4100	0.00	0.00	0.00	0.00	0.00	0.0%
Books and Other Reference Materials		4200	0.00	0.00	0.00	0.00	0.00	0.0%
Materials and Supplies		4300	0.00	0.00	0.00	0.00	0.00	0.0%
Noncapitalized Equipment		4400	0.00	0.00	0.00	0.00	0.00	0.0%
TOTAL, BOOKS AND SUPPLIES			0.00	0.00	0.00	0.00	0.00	0.0%
SERVICES AND OTHER OPERATING EXPENDITURES								
Subagreements for Services		5100	0.00	0.00	0.00	0.00	0.00	0.0%
Travel and Conferences		5200	0.00	0.00	0.00	0.00	0.00	0.0%
Insurance		5400-5450	0.00	0.00	0.00	0.00	0.00	0.0%
Operations and Housekeeping Services		5500	0.00	0.00	0.00	0.00	0.00	0.0%
Rentals, Leases, Repairs, and Noncapitalized Improvements		5600	0.00	210,000.00	175,818.60	223,000.00	(13,000.00)	-6.2%
Transfers of Direct Costs		5710	0.00	0.00	0.00	0.00	0.00	0.0%
Transfers of Direct Costs - Interfund		5750	0.00	0.00	0.00	0.00	0.00	0.0%
Professional/Consulting Services and Operating Expenditures		5800	0.00	0.00	0.00	0.00	0.00	0.0%
Communications		5900	0.00	0.00	0.00	0.00	0.00	0.0%
TOTAL, SERVICES AND OTHER OPERATING EXPENDITURES			0.00	210,000.00	175,818.60	223,000.00	(13,000.00)	-6.2%
CAPITAL OUTLAY								
Land		6100	0.00	0.00	0.00	0.00	0.00	0.0%
Land Improvements		6170	0.00	0.00	0.00	15,500.00	(15,500.00)	New
Buildings and Improvements of Buildings		6200	0.00	0.00	0.00	0.00	0.00	0.0%
Books and Media for New School Libraries or Major Expansion of School Libraries		6300	0.00	0.00	0.00	0.00	0.00	0.0%
Equipment		6400	0.00	0.00	0.00	0.00	0.00	0.0%
Equipment Replacement		6500	0.00	0.00	0.00	0.00	0.00	0.0%
Lease Assets		6600	0.00	0.00	0.00	0.00	0.00	0.0%
Subscription Assets		6700	0.00	0.00	0.00	0.00	0.00	0.0%
TOTAL, CAPITAL OUTLAY			0.00	0.00	0.00	15,500.00	(15,500.00)	New
OTHER OUTGO (excluding Transfers of Indirect Costs)								
Other Transfers Out								
All Other Transfers Out to All Others		7299	0.00	0.00	0.00	0.00	0.00	0.0%
Debt Service								
Debt Service - Interest		7438	400,000.00	400,000.00	183,571.08	400,000.00	0.00	0.0%
Other Debt Service - Principal		7439	200,000.00	210,000.00	0.00	210,000.00	0.00	0.0%
TOTAL, OTHER OUTGO (excluding Transfers of Indirect Costs)			600,000.00	610,000.00	183,571.08	610,000.00	0.00	0.0%
TOTAL, EXPENDITURES			600,000.00	820,000.00	359,389.68	848,500.00		
INTERFUND TRANSFERS								
INTERFUND TRANSFERS IN								
Other Authorized Interfund Transfers In		8919	0.00	0.00	0.00	0.00	0.00	0.0%
(a) TOTAL, INTERFUND TRANSFERS IN			0.00	0.00	0.00	0.00	0.00	0.0%
INTERFUND TRANSFERS OUT								
To: State School Building Fund/County School Facilities Fund		7613	0.00	0.00	0.00	0.00	0.00	0.0%
Other Authorized Interfund Transfers Out		7619	0.00	0.00	0.00	0.00	0.00	0.0%
(b) TOTAL, INTERFUND TRANSFERS OUT			0.00	0.00	0.00	0.00	0.00	0.0%
OTHER SOURCES/USES								

Description	Resource Codes	Object Codes	Original Budget (A)	Board Approved Operating Budget (B)	Actuals To Date (C)	Projected Year Totals (D)	Difference (Col B & D) (E)	% Diff Column B & D (F)
SOURCES								
Proceeds								
Proceeds from Sale/Lease-Purchase of Land/Buildings		8953	0.00	0.00	0.00	0.00	0.00	0.0%
Other Sources								
Transfers from Funds of Lapsed/Reorganized LEAs		8965	0.00	0.00	0.00	0.00	0.00	0.0%
Long-Term Debt Proceeds								
Proceeds from Certificates of Participation		8971	0.00	0.00	0.00	0.00	0.00	0.0%
Proceeds from Leases		8972	0.00	0.00	0.00	0.00	0.00	0.0%
Proceeds from Lease Revenue Bonds		8973	0.00	0.00	0.00	0.00	0.00	0.0%
Proceeds from SBITAs		8974	0.00	0.00	0.00	0.00	0.00	0.0%
All Other Financing Sources		8979	0.00	0.00	0.00	0.00	0.00	0.0%
(c) TOTAL, SOURCES			0.00	0.00	0.00	0.00	0.00	0.0%
USES								
Transfers of Funds from Lapsed/Reorganized LEAs		7651	0.00	0.00	0.00	0.00	0.00	0.0%
All Other Financing Uses		7699	0.00	0.00	0.00	0.00	0.00	0.0%
(d) TOTAL, USES			0.00	0.00	0.00	0.00	0.00	0.0%
CONTRIBUTIONS								
Contributions from Unrestricted Revenues		8980	0.00	0.00	0.00	0.00	0.00	0.0%
Contributions from Restricted Revenues		8990	0.00	0.00	0.00	0.00	0.00	0.0%
(e) TOTAL, CONTRIBUTIONS			0.00	0.00	0.00	0.00	0.00	0.0%
TOTAL, OTHER FINANCING SOURCES/USES								
(a - b + c - d + e)			0.00	0.00	0.00	0.00		

Resource	Description	2024-25 Projected Totals
9010	Other Restricted Local	8,549,044.00
Total, Restricted Balance		8,549,044.00

Description	Resource Codes	Object Codes	Original Budget (A)	Board Approved Operating Budget (B)	Actuals To Date (C)	Projected Year Totals (D)	Difference (Col B & D) (E)	% Diff Column B & D (F)
A. REVENUES								
1) LCFF Sources		8010-8099	0.00	0.00	0.00	0.00	0.00	0.0%
2) Federal Revenue		8100-8299	0.00	0.00	0.00	0.00	0.00	0.0%
3) Other State Revenue		8300-8599	0.00	0.00	0.00	0.00	0.00	0.0%
4) Other Local Revenue		8600-8799	0.00	0.00	73,812.90	0.00	0.00	0.0%
5) TOTAL, REVENUES			0.00	0.00	73,812.90	0.00		
B. EXPENDITURES								
1) Certificated Salaries		1000-1999	0.00	0.00	0.00	0.00	0.00	0.0%
2) Classified Salaries		2000-2999	0.00	0.00	0.00	0.00	0.00	0.0%
3) Employee Benefits		3000-3999	0.00	0.00	0.00	0.00	0.00	0.0%
4) Books and Supplies		4000-4999	0.00	1,246.00	114,572.50	1,246.00	0.00	0.0%
5) Services and Other Operating Expenditures		5000-5999	0.00	595,000.00	9,297.89	595,000.00	0.00	0.0%
6) Capital Outlay		6000-6999	0.00	1,252,944.00	2,189,017.84	1,252,944.00	0.00	0.0%
7) Other Outgo (excluding Transfers of Indirect Costs)		7100-7299,7400-7499	0.00	0.00	0.00	0.00	0.00	0.0%
8) Other Outgo - Transfers of Indirect Costs		7300-7399	0.00	0.00	0.00	0.00	0.00	0.0%
9) TOTAL, EXPENDITURES			0.00	1,849,190.00	2,312,888.23	1,849,190.00		
C. EXCESS (DEFICIENCY) OF REVENUES OVER EXPENDITURES BEFORE OTHER FINANCING SOURCES AND USES (A5 - B9)			0.00	(1,849,190.00)	(2,239,075.33)	(1,849,190.00)		
D. OTHER FINANCING SOURCES/USES								
1) Interfund Transfers								
a) Transfers In		8900-8929	0.00	0.00	0.00	0.00	0.00	0.0%
b) Transfers Out		7600-7629	0.00	0.00	0.00	0.00	0.00	0.0%
2) Other Sources/Uses								
a) Sources		8930-8979	0.00	0.00	0.00	0.00	0.00	0.0%
b) Uses		7630-7699	0.00	0.00	0.00	0.00	0.00	0.0%
3) Contributions		8980-8999	0.00	0.00	0.00	0.00	0.00	0.0%
4) TOTAL, OTHER FINANCING SOURCES/USES			0.00	0.00	0.00	0.00		
E. NET INCREASE (DECREASE) IN FUND BALANCE (C + D4)			0.00	(1,849,190.00)	(2,239,075.33)	(1,849,190.00)		
F. FUND BALANCE, RESERVES								
1) Beginning Fund Balance								
a) As of July 1 - Unaudited		9791	10,424,032.00	12,392,949.00		12,392,949.00	0.00	0.0%
b) Audit Adjustments		9793	0.00	0.00		0.00	0.00	0.0%
c) As of July 1 - Audited (F1a + F1b)			10,424,032.00	12,392,949.00		12,392,949.00		
d) Other Restatements		9795	0.00	0.00		0.00	0.00	0.0%
e) Adjusted Beginning Balance (F1c + F1d)			10,424,032.00	12,392,949.00		12,392,949.00		
2) Ending Balance, June 30 (E + F1e)			10,424,032.00	10,543,759.00		10,543,759.00		
Components of Ending Fund Balance								
a) Nonspendable								
Revolving Cash		9711	0.00	0.00		0.00		
Stores		9712	0.00	0.00		0.00		
Prepaid Items		9713	0.00	0.00		0.00		
All Others		9719	0.00	0.00		0.00		
b) Legally Restricted Balance		9740	10,424,032.00	10,543,759.00		10,543,759.00		
c) Committed								
Stabilization Arrangements		9750	0.00	0.00		0.00		
Other Commitments		9760	0.00	0.00		0.00		
d) Assigned								

Description	Resource Codes	Object Codes	Original Budget (A)	Board Approved Operating Budget (B)	Actuals To Date (C)	Projected Year Totals (D)	Difference (Col B & D) (E)	% Diff Column B & D (F)
Other Assignments		9780	0.00	0.00		0.00		
e) Unassigned/Unappropriated								
Reserve for Economic Uncertainties		9789	0.00	0.00		0.00		
Unassigned/Unappropriated Amount		9790	0.00	0.00		0.00		
FEDERAL REVENUE								
All Other Federal Revenue		8290	0.00	0.00	0.00	0.00	0.00	0.0%
TOTAL, FEDERAL REVENUE			0.00	0.00	0.00	0.00	0.00	0.0%
OTHER STATE REVENUE								
School Facilities Apportionments		8545	0.00	0.00	0.00	0.00	0.00	0.0%
Pass-Through Revenues from State Sources		8587	0.00	0.00	0.00	0.00	0.00	0.0%
All Other State Revenue		8590	0.00	0.00	0.00	0.00	0.00	0.0%
TOTAL, OTHER STATE REVENUE			0.00	0.00	0.00	0.00	0.00	0.0%
OTHER LOCAL REVENUE								
Sales								
Sale of Equipment/Supplies		8631	0.00	0.00	0.00	0.00	0.00	0.0%
Leases and Rentals		8650	0.00	0.00	0.00	0.00	0.00	0.0%
Interest		8660	0.00	0.00	73,812.90	0.00	0.00	0.0%
Net Increase (Decrease) in the Fair Value of Investments		8662	0.00	0.00	0.00	0.00	0.00	0.0%
Other Local Revenue								
All Other Local Revenue		8699	0.00	0.00	0.00	0.00	0.00	0.0%
All Other Transfers In from All Others		8799	0.00	0.00	0.00	0.00	0.00	0.0%
TOTAL, OTHER LOCAL REVENUE			0.00	0.00	73,812.90	0.00	0.00	0.0%
TOTAL, REVENUES			0.00	0.00	73,812.90	0.00		
CLASSIFIED SALARIES								
Classified Support Salaries		2200	0.00	0.00	0.00	0.00	0.00	0.0%
Classified Supervisors' and Administrators' Salaries		2300	0.00	0.00	0.00	0.00	0.00	0.0%
Clerical, Technical and Office Salaries		2400	0.00	0.00	0.00	0.00	0.00	0.0%
Other Classified Salaries		2900	0.00	0.00	0.00	0.00	0.00	0.0%
TOTAL, CLASSIFIED SALARIES			0.00	0.00	0.00	0.00	0.00	0.0%
EMPLOYEE BENEFITS								
STRS		3101-3102	0.00	0.00	0.00	0.00	0.00	0.0%
PERS		3201-3202	0.00	0.00	0.00	0.00	0.00	0.0%
OASDI/Medicare/Alternative		3301-3302	0.00	0.00	0.00	0.00	0.00	0.0%
Health and Welfare Benefits		3401-3402	0.00	0.00	0.00	0.00	0.00	0.0%
Unemployment Insurance		3501-3502	0.00	0.00	0.00	0.00	0.00	0.0%
Workers' Compensation		3601-3602	0.00	0.00	0.00	0.00	0.00	0.0%
OPEB, Allocated		3701-3702	0.00	0.00	0.00	0.00	0.00	0.0%
OPEB, Active Employees		3751-3752	0.00	0.00	0.00	0.00	0.00	0.0%
Other Employee Benefits		3901-3902	0.00	0.00	0.00	0.00	0.00	0.0%
TOTAL, EMPLOYEE BENEFITS			0.00	0.00	0.00	0.00	0.00	0.0%
BOOKS AND SUPPLIES								
Books and Other Reference Materials		4200	0.00	0.00	0.00	0.00	0.00	0.0%
Materials and Supplies		4300	0.00	1,246.00	4,701.43	1,246.00	0.00	0.0%
Noncapitalized Equipment		4400	0.00	0.00	109,871.07	0.00	0.00	0.0%
TOTAL, BOOKS AND SUPPLIES			0.00	1,246.00	114,572.50	1,246.00	0.00	0.0%
SERVICES AND OTHER OPERATING EXPENDITURES								
Subagreements for Services		5100	0.00	0.00	0.00	0.00	0.00	0.0%
Travel and Conferences		5200	0.00	0.00	0.00	0.00	0.00	0.0%
Insurance		5400-5450	0.00	0.00	0.00	0.00	0.00	0.0%

Description	Resource Codes	Object Codes	Original Budget (A)	Board Approved Operating Budget (B)	Actuals To Date (C)	Projected Year Totals (D)	Difference (Col B & D) (E)	% Diff Column B & D (F)
Operations and Housekeeping Services		5500	0.00	0.00	0.00	0.00	0.00	0.0%
Rentals, Leases, Repairs, and Noncapitalized Improvements		5600	0.00	0.00	0.00	0.00	0.00	0.0%
Transfers of Direct Costs		5710	0.00	0.00	0.00	0.00	0.00	0.0%
Transfers of Direct Costs - Interfund		5750	0.00	0.00	0.00	0.00	0.00	0.0%
Professional/Consulting Services and Operating Expenditures		5800	0.00	595,000.00	9,297.89	595,000.00	0.00	0.0%
Communications		5900	0.00	0.00	0.00	0.00	0.00	0.0%
TOTAL, SERVICES AND OTHER OPERATING EXPENDITURES			0.00	595,000.00	9,297.89	595,000.00	0.00	0.0%
CAPITAL OUTLAY								
Land		6100	0.00	0.00	0.00	0.00	0.00	0.0%
Land Improvements		6170	0.00	4,788.00	23,288.18	4,788.00	0.00	0.0%
Buildings and Improvements of Buildings		6200	0.00	1,248,156.00	2,113,944.05	1,248,156.00	0.00	0.0%
Books and Media for New School Libraries or Major Expansion of School Libraries		6300	0.00	0.00	0.00	0.00	0.00	0.0%
Equipment		6400	0.00	0.00	51,785.61	0.00	0.00	0.0%
Equipment Replacement		6500	0.00	0.00	0.00	0.00	0.00	0.0%
Lease Assets		6600	0.00	0.00	0.00	0.00	0.00	0.0%
Subscription Assets		6700	0.00	0.00	0.00	0.00	0.00	0.0%
TOTAL, CAPITAL OUTLAY			0.00	1,252,944.00	2,189,017.84	1,252,944.00	0.00	0.0%
OTHER OUTGO (excluding Transfers of Indirect Costs)								
Other Transfers Out								
Transfers of Pass-Through Revenues								
To Districts or Charter Schools		7211	0.00	0.00	0.00	0.00	0.00	0.0%
To County Offices		7212	0.00	0.00	0.00	0.00	0.00	0.0%
To JPAs		7213	0.00	0.00	0.00	0.00	0.00	0.0%
All Other Transfers Out to All Others		7299	0.00	0.00	0.00	0.00	0.00	0.0%
Debt Service								
Debt Service - Interest		7438	0.00	0.00	0.00	0.00	0.00	0.0%
Other Debt Service - Principal		7439	0.00	0.00	0.00	0.00	0.00	0.0%
TOTAL, OTHER OUTGO (excluding Transfers of Indirect Costs)			0.00	0.00	0.00	0.00	0.00	0.0%
TOTAL, EXPENDITURES			0.00	1,849,190.00	2,312,888.23	1,849,190.00		
INTERFUND TRANSFERS								
INTERFUND TRANSFERS IN								
To: State School Building Fund/County School Facilities Fund From: All Other Funds		8913	0.00	0.00	0.00	0.00	0.00	0.0%
Other Authorized Interfund Transfers In		8919	0.00	0.00	0.00	0.00	0.00	0.0%
(a) TOTAL, INTERFUND TRANSFERS IN			0.00	0.00	0.00	0.00	0.00	0.0%
INTERFUND TRANSFERS OUT								
To: State School Building Fund/County School Facilities Fund		7613	0.00	0.00	0.00	0.00	0.00	0.0%
Other Authorized Interfund Transfers Out		7619	0.00	0.00	0.00	0.00	0.00	0.0%
(b) TOTAL, INTERFUND TRANSFERS OUT			0.00	0.00	0.00	0.00	0.00	0.0%
OTHER SOURCES/USES								
SOURCES								
Proceeds								
Proceeds from Sale/Lease-Purchase of Land/Buildings		8953	0.00	0.00	0.00	0.00	0.00	0.0%
Other Sources								
Transfers from Funds of Lapsed/Reorganized LEAs		8965	0.00	0.00	0.00	0.00	0.00	0.0%
Long-Term Debt Proceeds								

Description	Resource Codes	Object Codes	Original Budget (A)	Board Approved Operating Budget (B)	Actuals To Date (C)	Projected Year Totals (D)	Difference (Col B & D) (E)	% Diff Column B & D (F)
Proceeds from Certificates of Participation		8971	0.00	0.00	0.00	0.00	0.00	0.0%
Proceeds from Leases		8972	0.00	0.00	0.00	0.00	0.00	0.0%
Proceeds from Lease Revenue Bonds		8973	0.00	0.00	0.00	0.00	0.00	0.0%
Proceeds from SBITAs		8974	0.00	0.00	0.00	0.00	0.00	0.0%
All Other Financing Sources		8979	0.00	0.00	0.00	0.00	0.00	0.0%
(c) TOTAL, SOURCES			0.00	0.00	0.00	0.00	0.00	0.0%
USES								
Transfers of Funds from Lapsed/Reorganized LEAs		7651	0.00	0.00	0.00	0.00	0.00	0.0%
(d) TOTAL, USES			0.00	0.00	0.00	0.00	0.00	0.0%
CONTRIBUTIONS								
Contributions from Unrestricted Revenues		8980	0.00	0.00	0.00	0.00	0.00	0.0%
Contributions from Restricted Revenues		8990	0.00	0.00	0.00	0.00	0.00	0.0%
(e) TOTAL, CONTRIBUTIONS			0.00	0.00	0.00	0.00	0.00	0.0%
TOTAL, OTHER FINANCING SOURCES/USES								
(a - b + c - d + e)			0.00	0.00	0.00	0.00		

Resource	Description	2024-25 Projected Totals
7710	State School Facilities Projects	10,543,759.00
Total, Restricted Balance		10,543,759.00

Description	Resource Codes	Object Codes	Original Budget (A)	Board Approved Operating Budget (B)	Actuals To Date (C)	Projected Year Totals (D)	Difference (Col B & D) (E)	% Diff Column B & D (F)
A. REVENUES								
1) LCFF Sources		8010-8099	0.00	0.00	0.00	0.00	0.00	0.0%
2) Federal Revenue		8100-8299	0.00	0.00	0.00	0.00	0.00	0.0%
3) Other State Revenue		8300-8599	119,537.00	107,967.00	0.00	107,967.00	0.00	0.0%
4) Other Local Revenue		8600-8799	20,513,894.00	19,538,451.00	12,280,644.79	19,538,451.00	0.00	0.0%
5) TOTAL, REVENUES			20,633,431.00	19,646,418.00	12,280,644.79	19,646,418.00		
B. EXPENDITURES								
1) Certificated Salaries		1000-1999	0.00	0.00	0.00	0.00	0.00	0.0%
2) Classified Salaries		2000-2999	0.00	0.00	0.00	0.00	0.00	0.0%
3) Employee Benefits		3000-3999	0.00	0.00	0.00	0.00	0.00	0.0%
4) Books and Supplies		4000-4999	0.00	0.00	0.00	0.00	0.00	0.0%
5) Services and Other Operating Expenditures		5000-5999	0.00	0.00	0.00	0.00	0.00	0.0%
6) Capital Outlay		6000-6999	0.00	0.00	0.00	0.00	0.00	0.0%
7) Other Outgo (excluding Transfers of Indirect Costs)		7100-7299,7400-7499	20,170,266.00	20,170,266.00	20,182,066.59	20,170,266.00	0.00	0.0%
8) Other Outgo - Transfers of Indirect Costs		7300-7399	0.00	0.00	0.00	0.00	0.00	0.0%
9) TOTAL, EXPENDITURES			20,170,266.00	20,170,266.00	20,182,066.59	20,170,266.00		
C. EXCESS (DEFICIENCY) OF REVENUES OVER EXPENDITURES BEFORE OTHER FINANCING SOURCES AND USES (A5 - B9)			463,165.00	(523,848.00)	(7,901,421.80)	(523,848.00)		
D. OTHER FINANCING SOURCES/USES								
1) Interfund Transfers								
a) Transfers In		8900-8929	0.00	0.00	0.00	0.00	0.00	0.0%
b) Transfers Out		7600-7629	0.00	0.00	0.00	0.00	0.00	0.0%
2) Other Sources/Uses								
a) Sources		8930-8979	0.00	0.00	0.00	0.00	0.00	0.0%
b) Uses		7630-7699	0.00	0.00	0.00	0.00	0.00	0.0%
3) Contributions		8980-8999	0.00	0.00	0.00	0.00	0.00	0.0%
4) TOTAL, OTHER FINANCING SOURCES/USES			0.00	0.00	0.00	0.00		
E. NET INCREASE (DECREASE) IN FUND BALANCE (C + D4)			463,165.00	(523,848.00)	(7,901,421.80)	(523,848.00)		
F. FUND BALANCE, RESERVES								
1) Beginning Fund Balance								
a) As of July 1 - Unaudited		9791	18,721,806.00	19,957,504.00		19,957,504.00	0.00	0.0%
b) Audit Adjustments		9793	0.00	0.00		0.00	0.00	0.0%
c) As of July 1 - Audited (F1a + F1b)			18,721,806.00	19,957,504.00		19,957,504.00		
d) Other Restatements		9795	0.00	0.00		0.00	0.00	0.0%
e) Adjusted Beginning Balance (F1c + F1d)			18,721,806.00	19,957,504.00		19,957,504.00		
2) Ending Balance, June 30 (E + F1e)			19,184,971.00	19,433,656.00		19,433,656.00		
Components of Ending Fund Balance								
a) Nonspendable								
Revolving Cash		9711	0.00	0.00		0.00		
Stores		9712	0.00	0.00		0.00		
Prepaid Items		9713	0.00	0.00		0.00		
All Others		9719	0.00	0.00		0.00		
b) Legally Restricted Balance		9740	19,184,971.00	19,367,508.00		19,367,508.00		
c) Committed								
Stabilization Arrangements		9750	0.00	0.00		0.00		
Other Commitments		9760	0.00	0.00		0.00		
d) Assigned								

Description	Resource Codes	Object Codes	Original Budget (A)	Board Approved Operating Budget (B)	Actuals To Date (C)	Projected Year Totals (D)	Difference (Col B & D) (E)	% Diff Column B & D (F)
Other Assignments		9780	0.00	66,148.00		66,148.00		
e) Unassigned/Unappropriated								
Reserve for Economic Uncertainties		9789	0.00	0.00		0.00		
Unassigned/Unappropriated Amount		9790	0.00	0.00		0.00		
FEDERAL REVENUE								
All Other Federal Revenue		8290	0.00	0.00	0.00	0.00	0.00	0.0%
TOTAL, FEDERAL REVENUE			0.00	0.00	0.00	0.00	0.00	0.0%
OTHER STATE REVENUE								
Tax Relief Subventions								
Voted Indebtedness Levies								
Homeowners' Exemptions		8571	119,537.00	107,967.00	0.00	107,967.00	0.00	0.0%
Other Subventions/In-Lieu Taxes		8572	0.00	0.00	0.00	0.00	0.00	0.0%
TOTAL, OTHER STATE REVENUE			119,537.00	107,967.00	0.00	107,967.00	0.00	0.0%
OTHER LOCAL REVENUE								
County and District Taxes								
Voted Indebtedness Levies								
Secured Roll		8611	19,570,746.00	18,531,040.00	11,117,658.90	18,531,040.00	0.00	0.0%
Unsecured Roll		8612	887,148.00	951,411.00	932,543.52	951,411.00	0.00	0.0%
Prior Years' Taxes		8613	0.00	0.00	0.00	0.00	0.00	0.0%
Supplemental Taxes		8614	0.00	0.00	172,617.20	0.00	0.00	0.0%
Penalties and Interest from Delinquent Non-LCFF Taxes		8629	0.00	0.00	0.00	0.00	0.00	0.0%
Interest		8660	56,000.00	56,000.00	57,825.17	56,000.00	0.00	0.0%
Net Increase (Decrease) in the Fair Value of Investments		8662	0.00	0.00	0.00	0.00	0.00	0.0%
Other Local Revenue								
All Other Local Revenue		8699	0.00	0.00	0.00	0.00	0.00	0.0%
All Other Transfers In from All Others		8799	0.00	0.00	0.00	0.00	0.00	0.0%
TOTAL, OTHER LOCAL REVENUE			20,513,894.00	19,538,451.00	12,280,644.79	19,538,451.00	0.00	0.0%
TOTAL, REVENUES			20,633,431.00	19,646,418.00	12,280,644.79	19,646,418.00		
OTHER OUTGO (excluding Transfers of Indirect Costs)								
Debt Service								
Bond Redemptions		7433	8,371,024.00	8,371,024.00	8,371,023.90	8,371,024.00	0.00	0.0%
Bond Interest and Other Service Charges		7434	11,799,242.00	11,799,242.00	11,811,042.69	11,799,242.00	0.00	0.0%
Debt Service - Interest		7438	0.00	0.00	0.00	0.00	0.00	0.0%
Other Debt Service - Principal		7439	0.00	0.00	0.00	0.00	0.00	0.0%
TOTAL, OTHER OUTGO (excluding Transfers of Indirect Costs)			20,170,266.00	20,170,266.00	20,182,066.59	20,170,266.00	0.00	0.0%
TOTAL, EXPENDITURES			20,170,266.00	20,170,266.00	20,182,066.59	20,170,266.00		
INTERFUND TRANSFERS								
INTERFUND TRANSFERS IN								
Other Authorized Interfund Transfers In		8919	0.00	0.00	0.00	0.00	0.00	0.0%
(a) TOTAL, INTERFUND TRANSFERS IN			0.00	0.00	0.00	0.00	0.00	0.0%
INTERFUND TRANSFERS OUT								
To: General Fund		7614	0.00	0.00	0.00	0.00	0.00	0.0%
Other Authorized Interfund Transfers Out		7619	0.00	0.00	0.00	0.00	0.00	0.0%
(b) TOTAL, INTERFUND TRANSFERS OUT			0.00	0.00	0.00	0.00	0.00	0.0%
OTHER SOURCES/USES								
SOURCES								
Other Sources								
Transfers from Funds of Lapsed/Reorganized LEAs		8965	0.00	0.00	0.00	0.00	0.00	0.0%
All Other Financing Sources		8979	0.00	0.00	0.00	0.00	0.00	0.0%

Description	Resource Codes	Object Codes	Original Budget (A)	Board Approved Operating Budget (B)	Actuals To Date (C)	Projected Year Totals (D)	Difference (Col B & D) (E)	% Diff Column B & D (F)
(c) TOTAL, SOURCES			0.00	0.00	0.00	0.00	0.00	0.0%
USES								
Transfers of Funds from Lapsed/Reorganized LEAs		7651	0.00	0.00	0.00	0.00	0.00	0.0%
All Other Financing Uses		7699	0.00	0.00	0.00	0.00	0.00	0.0%
(d) TOTAL, USES			0.00	0.00	0.00	0.00	0.00	0.0%
CONTRIBUTIONS								
Contributions from Unrestricted Revenues		8980	0.00	0.00	0.00	0.00	0.00	0.0%
Contributions from Restricted Revenues		8990	0.00	0.00	0.00	0.00	0.00	0.0%
(e) TOTAL, CONTRIBUTIONS			0.00	0.00	0.00	0.00	0.00	0.0%
TOTAL, OTHER FINANCING SOURCES/USES								
(a - b + c - d + e)			0.00	0.00	0.00	0.00		

Resource	Description	2024-25 Projected Totals
9010	Other Restricted Local	19,367,508.00
Total, Restricted Balance		19,367,508.00

Description	Resource Codes	Object Codes	Original Budget (A)	Board Approved Operating Budget (B)	Actuals To Date (C)	Projected Year Totals (D)	Difference (Col B & D) (E)	% Diff Column B & D (F)
A. REVENUES								
1) LCFF Sources		8010-8099	0.00	0.00	0.00	0.00	0.00	0.0%
2) Federal Revenue		8100-8299	0.00	0.00	0.00	0.00	0.00	0.0%
3) Other State Revenue		8300-8599	0.00	0.00	0.00	0.00	0.00	0.0%
4) Other Local Revenue		8600-8799	0.00	0.00	49,714.86	0.00	0.00	0.0%
5) TOTAL, REVENUES			0.00	0.00	49,714.86	0.00		
B. EXPENSES								
1) Certificated Salaries		1000-1999	0.00	0.00	0.00	0.00	0.00	0.0%
2) Classified Salaries		2000-2999	0.00	0.00	0.00	0.00	0.00	0.0%
3) Employee Benefits		3000-3999	0.00	0.00	0.00	0.00	0.00	0.0%
4) Books and Supplies		4000-4999	0.00	0.00	0.00	0.00	0.00	0.0%
5) Services and Other Operating Expenses		5000-5999	0.00	0.00	2,206,276.09	0.00	0.00	0.0%
6) Depreciation and Amortization		6000-6999	0.00	0.00	0.00	0.00	0.00	0.0%
7) Other Outgo (excluding Transfers of Indirect Costs)		7100-7299, 7400-7499	0.00	0.00	0.00	0.00	0.00	0.0%
8) Other Outgo - Transfers of Indirect Costs		7300-7399	0.00	0.00	0.00	0.00	0.00	0.0%
9) TOTAL, EXPENSES			0.00	0.00	2,206,276.09	0.00		
C. EXCESS (DEFICIENCY) OF REVENUES OVER EXPENSES BEFORE OTHER FINANCING SOURCES AND USES(A5 -B9)			0.00	0.00	(2,156,561.23)	0.00		
D. OTHER FINANCING SOURCES/USES								
1) Interfund Transfers								
a) Transfers In		8900-8929	0.00	0.00	0.00	0.00	0.00	0.0%
b) Transfers Out		7600-7629	0.00	0.00	0.00	0.00	0.00	0.0%
2) Other Sources/Uses								
a) Sources		8930-8979	0.00	0.00	0.00	0.00	0.00	0.0%
b) Uses		7630-7699	0.00	0.00	0.00	0.00	0.00	0.0%
3) Contributions		8980-8999	0.00	0.00	0.00	0.00	0.00	0.0%
4) TOTAL, OTHER FINANCING SOURCES/USES			0.00	0.00	0.00	0.00		
E. NET INCREASE (DECREASE) IN NET POSITION (C + D4)			0.00	0.00	(2,156,561.23)	0.00		
F. NET POSITION								
1) Beginning Net Position								
a) As of July 1 - Unaudited		9791	11,137,257.00	12,267,706.00		12,267,706.00	0.00	0.0%
b) Audit Adjustments		9793	0.00	0.00		0.00	0.00	0.0%
c) As of July 1 - Audited (F1a + F1b)			11,137,257.00	12,267,706.00		12,267,706.00		
d) Other Restatements		9795	0.00	0.00		0.00	0.00	0.0%
e) Adjusted Beginning Net Position (F1c + F1d)			11,137,257.00	12,267,706.00		12,267,706.00		
2) Ending Net Position, June 30 (E + F1e)			11,137,257.00	12,267,706.00		12,267,706.00		

Description	Resource Codes	Object Codes	Original Budget (A)	Board Approved Operating Budget (B)	Actuals To Date (C)	Projected Year Totals (D)	Difference (Col B & D) (E)	% Diff Column B & D (F)
Components of Ending Net Position								
a) Net Investment in Capital Assets		9796	0.00	0.00		0.00		
b) Restricted Net Position		9797	11,137,257.00	12,267,706.00		12,267,706.00		
c) Unrestricted Net Position		9790	0.00	0.00		0.00		
OTHER LOCAL REVENUE								
Interest		8660	0.00	0.00	49,714.86	0.00	0.00	0.0%
Net Increase (Decrease) in the Fair Value of Investments		8662	0.00	0.00	0.00	0.00	0.00	0.0%
Fees and Contracts								
In-District Premiums/Contributions		8674	0.00	0.00	0.00	0.00	0.00	0.0%
Other Local Revenue								
All Other Local Revenue		8699	0.00	0.00	0.00	0.00	0.00	0.0%
TOTAL, OTHER LOCAL REVENUE			0.00	0.00	49,714.86	0.00	0.00	0.0%
TOTAL, REVENUES			0.00	0.00	49,714.86	0.00		
SERVICES AND OTHER OPERATING EXPENSES								
Subagreements for Services		5100	0.00	0.00	0.00	0.00	0.00	0.0%
Professional/Consulting Services and Operating Expenditures		5800	0.00	0.00	2,206,276.09	0.00	0.00	0.0%
TOTAL, SERVICES AND OTHER OPERATING EXPENSES			0.00	0.00	2,206,276.09	0.00	0.00	0.0%
TOTAL, EXPENSES			0.00	0.00	2,206,276.09	0.00		
INTERFUND TRANSFERS								
INTERFUND TRANSFERS IN								
Other Authorized Interfund Transfers In		8919	0.00	0.00	0.00	0.00	0.00	0.0%
(a) TOTAL, INTERFUND TRANSFERS IN			0.00	0.00	0.00	0.00	0.00	0.0%
OTHER SOURCES/USES								
SOURCES								
Other Sources								
Transfers from Funds of Lapsed/Reorganized LEAs		8965	0.00	0.00	0.00	0.00	0.00	0.0%
All Other Financing Sources		8979	0.00	0.00	0.00	0.00	0.00	0.0%
(c) TOTAL, SOURCES			0.00	0.00	0.00	0.00	0.00	0.0%
USES								
Transfers of Funds from Lapsed/Reorganized LEAs		7651	0.00	0.00	0.00	0.00	0.00	0.0%
(d) TOTAL, USES			0.00	0.00	0.00	0.00	0.00	0.0%
CONTRIBUTIONS								
Contributions from Unrestricted Revenues		8980	0.00	0.00	0.00	0.00	0.00	0.0%
Contributions from Restricted Revenues		8990	0.00	0.00	0.00	0.00	0.00	0.0%
(e) TOTAL, CONTRIBUTIONS			0.00	0.00	0.00	0.00	0.00	0.0%
TOTAL, OTHER FINANCING SOURCES/USES								
(a + c - d + e)			0.00	0.00	0.00	0.00		

Resource	Description	2024-25 Projected Totals
9010	Other Restricted Local	12,267,706.00
Total, Restricted Net Position		12,267,706.00

Description	Object Codes	Projected Year Totals (Form 01I) (A)	% Change (Cols. C-A/A) (B)	2025-26 Projection (C)	% Change (Cols. E-C/C) (D)	2026-27 Projection (E)
(Enter projections for subsequent years 1 and 2 in Columns C and E;						
current year - Column A - is extracted)						
A. REVENUES AND OTHER FINANCING SOURCES						
1. LCFF/Revenue Limit Sources	8010-8099	194,899,130.00	(.01%)	194,882,751.00	.75%	196,340,967.00
2. Federal Revenues	8100-8299	0.00	0.00%		0.00%	
3. Other State Revenues	8300-8599	6,318,305.00	(17.39%)	5,219,461.87	.17%	5,228,247.43
4. Other Local Revenues	8600-8799	5,124,534.00	0.00%	5,124,534.00	0.00%	5,124,534.00
5. Other Financing Sources						
a. Transfers In	8900-8929	0.00	0.00%		0.00%	
b. Other Sources	8930-8979	0.00	0.00%		0.00%	
c. Contributions	8980-8999	(22,268,838.00)	(11.34%)	(19,743,479.27)	(29.89%)	(13,841,511.02)
6. Total (Sum lines A1 thru A5c)		184,073,131.00	.77%	185,483,267.60	3.97%	192,852,237.41
B. EXPENDITURES AND OTHER FINANCING USES						
1. Certificated Salaries						
a. Base Salaries				92,932,426.00		96,113,962.72
b. Step & Column Adjustment				1,189,401.55		1,230,761.51
c. Cost-of-Living Adjustment						
d. Other Adjustments				1,992,135.17		(1,440,000.00)
e. Total Certificated Salaries (Sum lines B1a thru B1d)	1000-1999	92,932,426.00	3.42%	96,113,962.72	(.22%)	95,904,724.23
2. Classified Salaries						
a. Base Salaries				32,891,446.00		33,319,034.81
b. Step & Column Adjustment				427,588.81		433,147.46
c. Cost-of-Living Adjustment						
d. Other Adjustments						
e. Total Classified Salaries (Sum lines B2a thru B2d)	2000-2999	32,891,446.00	1.30%	33,319,034.81	1.30%	33,752,182.27
3. Employee Benefits	3000-3999	48,861,687.00	2.04%	49,860,730.88	(.28%)	49,718,640.14
4. Books and Supplies	4000-4999	9,549,718.00	(26.18%)	7,050,000.00	0.00%	7,050,000.00
5. Services and Other Operating Expenditures	5000-5999	27,053,884.00	(23.77%)	20,623,776.72	(.35%)	20,550,986.60
6. Capital Outlay	6000-6999	2,472,859.00	(100.00%)		0.00%	
7. Other Outgo (excluding Transfers of Indirect Costs)	7100-7299, 7400-7499	473,203.00	0.00%	473,203.00	0.00%	473,203.00
8. Other Outgo - Transfers of Indirect Costs	7300-7399	(3,306,968.00)	1.54%	(3,357,761.00)	(9.71%)	(3,031,731.01)
9. Other Financing Uses						
a. Transfers Out	7600-7629	0.00	0.00%		0.00%	
b. Other Uses	7630-7699	0.00	0.00%		0.00%	
10. Other Adjustments (Explain in Section F below)						
11. Total (Sum lines B1 thru B10)		210,928,255.00	(3.25%)	204,082,947.13	.16%	204,418,005.23
C. NET INCREASE (DECREASE) IN FUND BALANCE						
(Line A6 minus line B11)		(26,855,124.00)		(18,599,679.53)		(11,565,767.82)
D. FUND BALANCE						
1.Net Beginning Fund Balance(Form 01I, line F1e)		85,642,597.00		58,787,473.00		40,187,793.47
2. Ending Fund Balance (Sum lines C and D1)		58,787,473.00		40,187,793.47		28,622,025.65
3. Components of Ending Fund Balance (Form 01I)						
a. Nonspendable	9710-9719	120,000.00		120,000.00		120,000.00
b. Restricted	9740					
c. Committed						
1. Stabilization Arrangements	9750	0.00				
2. Other Commitments	9760	3,768,550.00		3,768,550.00		0.00
d. Assigned	9780	21,991,154.00		7,410,037.47		185,925.65
e. Unassigned/Unappropriated						

Description	Object Codes	Projected Year Totals (Form 01I) (A)	% Change (Cols. C-A/A) (B)	2025-26 Projection (C)	% Change (Cols. E-C/C) (D)	2026-27 Projection (E)
1. Reserve for Economic Uncertainties	9789	32,907,769.00		28,889,206.00		28,316,100.00
2. Unassigned/Unappropriated	9790	0.00		0.00		0.00
f. Total Components of Ending Fund Balance (Line D3f must agree with line D2)		58,787,473.00		40,187,793.47		28,622,025.65
E. AVAILABLE RESERVES						
1. General Fund						
a. Stabilization Arrangements	9750	0.00		0.00		0.00
b. Reserve for Economic Uncertainties	9789	32,907,769.00		28,889,206.00		28,316,100.00
c. Unassigned/Unappropriated	9790	0.00		0.00		0.00
(Enter other reserve projections in Columns C and E for subsequent years 1 and 2; current year - Column A - is extracted)						
2. Special Reserve Fund - Noncapital Outlay (Fund 17)						
a. Stabilization Arrangements	9750	0.00				
b. Reserve for Economic Uncertainties	9789	0.00				
c. Unassigned/Unappropriated	9790	0.00				
3. Total Available Reserves (Sum lines E1a thru E2c)		32,907,769.00		28,889,206.00		28,316,100.00

F. ASSUMPTIONS

Please provide below or on a separate attachment, the assumptions used to determine the projections for the first and second subsequent fiscal years. Further, please include an explanation for any significant expenditure adjustments projected in lines B1d, B2d, and B10. For additional information, please refer to the Budget Assumptions section of the SACS Financial Reporting Software User Guide.

Certificated Salaries: A reduction of $1,440,000 in salaries due to decline in Enrollment and ADA (12 FTE @ $120K unrestricted salary)for both the 2025/26 and 2026/27 fiscal years.

Description	Object Codes	Projected Year Totals (Form 01I) (A)	% Change (Cols. C-A/A) (B)	2025-26 Projection (C)	% Change (Cols. E-C/C) (D)	2026-27 Projection (E)
(Enter projections for subsequent years 1 and 2 in Columns C and E; current year - Column A - is extracted)						
A. REVENUES AND OTHER FINANCING SOURCES						
1. LCFF/Revenue Limit Sources	8010-8099	0.00	0.00%		0.00%	
2. Federal Revenues	8100-8299	13,742,011.00	(12.68%)	11,999,040.40	0.00%	11,999,040.40
3. Other State Revenues	8300-8599	33,916,666.00	1.42%	34,398,714.55	2.70%	35,328,937.93
4. Other Local Revenues	8600-8799	16,440,170.00	0.00%	16,440,170.00	0.00%	16,440,170.00
5. Other Financing Sources						
a. Transfers In	8900-8929	0.00	0.00%		0.00%	
b. Other Sources	8930-8979	0.00	0.00%		0.00%	
c. Contributions	8980-8999	22,268,838.00	(11.34%)	19,743,479.27	(29.89%)	13,841,511.02
6. Total (Sum lines A1 thru A5c)		86,367,685.00	(4.38%)	82,581,404.22	(6.02%)	77,609,659.35
B. EXPENDITURES AND OTHER FINANCING USES						
1. Certificated Salaries						
a. Base Salaries				22,152,357.00		17,468,685.67
b. Step & Column Adjustment				287,980.67		227,092.93
c. Cost-of-Living Adjustment						
d. Other Adjustments				(4,971,652.00)		(3,072,470.05)
e. Total Certificated Salaries (Sum lines B1a thru B1d)	1000-1999	22,152,357.00	(21.14%)	17,468,685.67	(16.29%)	14,623,308.55
2. Classified Salaries						
a. Base Salaries				15,152,992.00		15,227,967.75
b. Step & Column Adjustment				196,988.91		197,963.60
c. Cost-of-Living Adjustment						
d. Other Adjustments				(122,013.16)		(1,518,852.24)
e. Total Classified Salaries (Sum lines B2a thru B2d)	2000-2999	15,152,992.00	.49%	15,227,967.75	(8.67%)	13,907,079.11
3. Employee Benefits	3000-3999	16,821,669.00	(19.83%)	13,485,885.67	(10.53%)	12,065,482.24
4. Books and Supplies	4000-4999	5,335,861.00	(10.03%)	4,800,753.69	0.00%	4,800,753.69
5. Services and Other Operating Expenditures	5000-5999	52,385,633.00	(46.47%)	28,044,094.26	(.55%)	27,890,679.77
6. Capital Outlay	6000-6999	1,324,897.00	(43.02%)	754,897.00	0.00%	754,897.00
7. Other Outgo (excluding Transfers of Indirect Costs)	7100-7299, 7400-7499	2,013,965.00	0.00%	2,013,965.00	0.00%	2,013,965.00
8. Other Outgo - Transfers of Indirect Costs	7300-7399	2,962,071.00	1.71%	3,012,864.00	(10.82%)	2,686,834.01
9. Other Financing Uses						
a. Transfers Out	7600-7629	0.00	0.00%		0.00%	
b. Other Uses	7630-7699	0.00	0.00%		0.00%	
10. Other Adjustments (Explain in Section F below)						
11. Total (Sum lines B1 thru B10)		118,149,445.00	(28.22%)	84,809,113.04	(7.15%)	78,742,999.37
C. NET INCREASE (DECREASE) IN FUND BALANCE (Line A6 minus line B11)		(31,781,760.00)		(2,227,708.82)		(1,133,340.02)
D. FUND BALANCE						
1. Net Beginning Fund Balance (Form 01I, line F1e)		61,304,820.00		29,523,060.00		27,295,351.18
2. Ending Fund Balance (Sum lines C and D1)		29,523,060.00		27,295,351.18		26,162,011.16
3. Components of Ending Fund Balance (Form 01I)						
a. Nonspendable	9710-9719	0.00				
b. Restricted	9740	29,523,060.00		27,295,351.18		26,162,011.16
c. Committed						
1. Stabilization Arrangements	9750					
2. Other Commitments	9760					
d. Assigned	9780					
e. Unassigned/Unappropriated						
1. Reserve for Economic Uncertainties	9789					

Description	Object Codes	Projected Year Totals (Form 01I) (A)	% Change (Cols. C-A/A) (B)	2025-26 Projection (C)	% Change (Cols. E-C/C) (D)	2026-27 Projection (E)
2. Unassigned/Unappropriated	9790	0.00		0.00		0.00
f. Total Components of Ending Fund Balance (Line D3f must agree with line D2)		29,523,060.00		27,295,351.18		26,162,011.16
E. AVAILABLE RESERVES						
1. General Fund)						
a. Stabilization Arrangements	9750					
b. Reserve for Economic Uncertainties	9789					
c. Unassigned/Unappropriated Amount	9790					
(Enter current year reserve projections in Column A, and other reserve projections in Columns C and E for subsequent years 1 and 2)						
2. Special Reserve Fund - Noncapital Outlay (Fund 17)						
a. Stabilization Arrangements	9750					
b. Reserve for Economic Uncertainties	9789					
c. Unassigned/Unappropriated	9790					
3. Total Available Reserves (Sum lines E1a thru E2c)						

F. ASSUMPTIONS

Please provide below or on a separate attachment, the assumptions used to determine the projections for the first and second subsequent fiscal years. Further, please include an explanation for any significant expenditure adjustments projected in lines B1d, B2d, and B10. For additional information, please refer to the Budget Assumptions section of the SACS Financial Reporting Software User Guide.

2025/26: Reduction of carryover one-time salary expenditures in both Certificated and Classified Salaries. 2026/27: Reduction of salaries due to expiring resources in both Certificated and Classified Salaries.

Description	Object Codes	Projected Year Totals (Form 01I) (A)	% Change (Cols. C-A/A) (B)	2025-26 Projection (C)	% Change (Cols. E-C/C) (D)	2026-27 Projection (E)
(Enter projections for subsequent years 1 and 2 in Columns C and E; current year - Column A - is extracted)						
A. REVENUES AND OTHER FINANCING SOURCES						
1. LCFF/Revenue Limit Sources	8010-8099	194,899,130.00	(.01%)	194,882,751.00	.75%	196,340,967.00
2. Federal Revenues	8100-8299	13,742,011.00	(12.68%)	11,999,040.40	0.00%	11,999,040.40
3. Other State Revenues	8300-8599	40,234,971.00	(1.53%)	39,618,176.42	2.37%	40,557,185.36
4. Other Local Revenues	8600-8799	21,564,704.00	0.00%	21,564,704.00	0.00%	21,564,704.00
5. Other Financing Sources						
a. Transfers In	8900-8929	0.00	0.00%	0.00	0.00%	0.00
b. Other Sources	8930-8979	0.00	0.00%	0.00	0.00%	0.00
c. Contributions	8980-8999	0.00	0.00%	0.00	0.00%	0.00
6. Total (Sum lines A1 thru A5c)		270,440,816.00	(.88%)	268,064,671.82	.89%	270,461,896.76
B. EXPENDITURES AND OTHER FINANCING USES						
1. Certificated Salaries						
a. Base Salaries				115,084,783.00		113,582,648.39
b. Step & Column Adjustment				1,477,382.22		1,457,854.44
c. Cost-of-Living Adjustment				0.00		0.00
d. Other Adjustments				(2,979,516.83)		(4,512,470.05)
e. Total Certificated Salaries (Sum lines B1a thru B1d)	1000-1999	115,084,783.00	(1.31%)	113,582,648.39	(2.69%)	110,528,032.78
2. Classified Salaries						
a. Base Salaries				48,044,438.00		48,547,002.56
b. Step & Column Adjustment				624,577.72		631,111.06
c. Cost-of-Living Adjustment				0.00		0.00
d. Other Adjustments				(122,013.16)		(1,518,852.24)
e. Total Classified Salaries (Sum lines B2a thru B2d)	2000-2999	48,044,438.00	1.05%	48,547,002.56	(1.83%)	47,659,261.38
3. Employee Benefits	3000-3999	65,683,356.00	(3.56%)	63,346,616.55	(2.47%)	61,784,122.38
4. Books and Supplies	4000-4999	14,885,579.00	(20.39%)	11,850,753.69	0.00%	11,850,753.69
5. Services and Other Operating Expenditures	5000-5999	79,439,517.00	(38.74%)	48,667,870.98	(.46%)	48,441,666.37
6. Capital Outlay	6000-6999	3,797,756.00	(80.12%)	754,897.00	0.00%	754,897.00
7. Other Outgo (excluding Transfers of Indirect Costs)	7100-7299, 7400-7499	2,487,168.00	0.00%	2,487,168.00	0.00%	2,487,168.00
8. Other Outgo - Transfers of Indirect Costs	7300-7399	(344,897.00)	0.00%	(344,897.00)	0.00%	(344,897.00)
9. Other Financing Uses						
a. Transfers Out	7600-7629	0.00	0.00%	0.00	0.00%	0.00
b. Other Uses	7630-7699	0.00	0.00%	0.00	0.00%	0.00
10. Other Adjustments				0.00		0.00
11. Total (Sum lines B1 thru B10)		329,077,700.00	(12.21%)	288,892,060.17	(1.98%)	283,161,004.60
C. NET INCREASE (DECREASE) IN FUND BALANCE (Line A6 minus line B11)		(58,636,884.00)		(20,827,388.35)		(12,699,107.84)
D. FUND BALANCE						
1. Net Beginning Fund Balance (Form 01I, line F1e)		146,947,417.00		88,310,533.00		67,483,144.65
2. Ending Fund Balance (Sum lines C and D1)		88,310,533.00		67,483,144.65		54,784,036.81
3. Components of Ending Fund Balance (Form 01I)						
a. Nonspendable	9710-9719	120,000.00		120,000.00		120,000.00
b. Restricted	9740	29,523,060.00		27,295,351.18		26,162,011.16
c. Committed						
1. Stabilization Arrangements	9750	0.00		0.00		0.00
2. Other Commitments	9760	3,768,550.00		3,768,550.00		0.00
d. Assigned	9780	21,991,154.00		7,410,037.47		185,925.65
e. Unassigned/Unappropriated						
1. Reserve for Economic Uncertainties	9789	32,907,769.00		28,889,206.00		28,316,100.00

Description	Object Codes	Projected Year Totals (Form 01I) (A)	% Change (Cols. C-A/A) (B)	2025-26 Projection (C)	% Change (Cols. E-C/C) (D)	2026-27 Projection (E)
2. Unassigned/Unappropriated	9790	0.00		0.00		0.00
f. Total Components of Ending Fund Balance (Line D3f must agree with line D2)		88,310,533.00		67,483,144.65		54,784,036.81
E. AVAILABLE RESERVES (Unrestricted except as noted)						
1. General Fund						
a. Stabilization Arrangements	9750	0.00		0.00		0.00
b. Reserve for Economic Uncertainties	9789	32,907,769.00		28,889,206.00		28,316,100.00
c. Unassigned/Unappropriated	9790	0.00		0.00		0.00
d. Negative Restricted Ending Balances (Negative resources 2000-9999)	979Z			0.00		0.00
2. Special Reserve Fund - Noncapital Outlay (Fund 17)						
a. Stabilization Arrangements	9750	0.00		0.00		0.00
b. Reserve for Economic Uncertainties	9789	0.00		0.00		0.00
c. Unassigned/Unappropriated	9790	0.00		0.00		0.00
3. Total Available Reserves - by Amount (Sum lines E1 thru E2c)		32,907,769.00		28,889,206.00		28,316,100.00
4. Total Available Reserves - by Percent (Line E3 divided by Line F3c)		10.00%		10.00%		10.00%
F. RECOMMENDED RESERVES						
1. Special Education Pass-through Exclusions						
For districts that serve as the administrative unit (AU) of a special education local plan area (SELPA):						
a. Do you choose to exclude from the reserve calculation the pass-through funds distributed to SELPA members?	No					
b. If you are the SELPA AU and are excluding special education pass-through funds:						
1. Enter the name(s) of the SELPA(s):						
2. Special education pass-through funds (Column A: Fund 10, resources 3300-3499, 6500-6540 and 6546 objects 7211-7213 and 7221-7223; enter projections for subsequent years 1 and 2 in Columns C and E)		0.00		0.00		0.00
2. District ADA						
Used to determine the reserve standard percentage level on line F3d (Col. A: Form AI, Estimated P-2 ADA column, Lines A4 and C4; enter projections)		12,306.50		11,939.80		11,602.88
3. Calculating the Reserves						
a. Expenditures and Other Financing Uses (Line B11)		329,077,700.00		288,892,060.17		283,161,004.60
b. Plus: Special Education Pass-through Funds (Line F1b2, if Line F1a is No)		0.00		0.00		0.00
c. Total Expenditures and Other Financing Uses (Line F3a plus line F3b)		329,077,700.00		288,892,060.17		283,161,004.60
d. Reserve Standard Percentage Level (Refer to Form 01CSI, Criterion 10 for calculation details)		3%		3%		3%
e. Reserve Standard - By Percent (Line F3c times F3d)		9,872,331.00		8,666,761.81		8,494,830.14
f. Reserve Standard - By Amount (Refer to Form 01CSI, Criterion 10 for calculation details)		0.00		0.00		0.00
g. Reserve Standard (Greater of Line F3e or F3f)		9,872,331.00		8,666,761.81		8,494,830.14
h. Available Reserves (Line E3) Meet Reserve Standard (Line F3g)		YES		YES		YES

Provide methodology and assumptions used to estimate ADA, enrollment, revenues, expenditures, reserves and fund balance, and multiyear commitments (including cost-of-living adjustments).

Deviations from the standards must be explained and may affect the interim certification.

CRITERIA AND STANDARDS

1. CRITERION: Average Daily Attendance

STANDARD: Projected funded average daily attendance (ADA) for any of the current fiscal year or two subsequent fiscal years has not changed by more than two percent since first interim projections.

District's ADA Standard Percentage Range: **-2.0% to +2.0%**

1A. Calculating the District's ADA Variances

DATA ENTRY: First Interim data that exist will be extracted into the first column, otherwise, enter data for all fiscal years. Second Interim Projected Year Totals data that exist for the current year will be extracted; otherwise, enter data for all fiscal years. Enter district regular ADA and charter school ADA corresponding to financial data reported in the General Fund, only, for all fiscal years.

Estimated Funded ADA

Fiscal Year		First Interim Projected Year Totals (Form 01CSI, Item 1A)	Second Interim Projected Year Totals (Form AI, Lines A4 and C4)	Percent Change	Status
Current Year (2024-25)					
	District Regular	13,157.92	13,157.92		
	Charter School	0.00	0.00		
	Total ADA	**13,157.92**	**13,157.92**	**0.0%**	**Met**
1st Subsequent Year (2025-26)					
	District Regular	12,628.00	12,629.49		
	Charter School				
	Total ADA	**12,628.00**	**12,629.49**	**0.0%**	**Met**
2nd Subsequent Year (2026-27)					
	District Regular	12,283.64	12,273.98		
	Charter School				
	Total ADA	**12,283.64**	**12,273.98**	**(.1%)**	**Met**

1B. Comparison of District ADA to the Standard

DATA ENTRY: Enter an explanation if the standard is not met.

1a. STANDARD MET - Funded ADA has not changed since first interim projections by more than two percent in any of the current year or two subsequent fiscal years.

Explanation:
(required if NOT met)

2. CRITERION: Enrollment

STANDARD: Projected enrollment for any of the current fiscal year or two subsequent fiscal years has not changed by more than two percent since first interim projections

District's Enrollment Standard Percentage Range: **-2.0% to +2.0%**

2A. Calculating the District's Enrollment Variances

DATA ENTRY: First Interim data that exist will be extracted; otherwise, enter data into the first column for all fiscal years. Enter data in the second column for all fiscal years. Enter district regular enrollment and charter school enrollment corresponding to financial data reported in the General Fund, only, for all fiscal years.

Fiscal Year	Enrollment: First Interim (Form 01CSI, Item 2A)	Enrollment: Second Interim CALPADS/Projected	Percent Change	Status
Current Year (2024-25)				
District Regular	13,018.00	13,003.00		
Charter School				
Total Enrollment	**13,018.00**	**13,003.00**	**(.1%)**	**Met**
1st Subsequent Year (2025-26)				
District Regular	12,630.00	12,568.00		
Charter School				
Total Enrollment	**12,630.00**	**12,568.00**	**(.5%)**	**Met**
2nd Subsequent Year (2026-27)				
District Regular	12,267.00	12,182.00		
Charter School				
Total Enrollment	**12,267.00**	**12,182.00**	**(.7%)**	**Met**

2B. Comparison of District Enrollment to the Standard

DATA ENTRY: Enter an explanation if the standard is not met.

1a. STANDARD MET - Enrollment projections have not changed since first interim projections by more than two percent for the current year and two subsequent fiscal years.

Explanation:
(required if NOT met)

3. CRITERION: ADA to Enrollment

STANDARD: Projected second period (P-2) average daily attendance (ADA) to enrollment ratio for any of the current fiscal year or two subsequent fiscal years has not increased from the historical average ratio from the three prior fiscal years by more than one half of one percent (0.5%).

3A. Calculating the District's ADA to Enrollment Standard

DATA ENTRY: Unaudited Actuals data that exist will be extracted into the P-2 ADA column for the First Prior Year; otherwise, enter First Prior Year data. P-2 ADA for the second and third prior years are preloaded. First Interim data that exist will be extracted into the Enrollment column; otherwise, enter Enrollment data for all fiscal years. Data should reflect district regular and charter school ADA/enrollment corresponding to financial data reported in the General Fund, only, for all fiscal years.

Fiscal Year		P-2 ADA Unaudited Actuals (Form A, Lines A4 and C4)	Enrollment CALPADS Actual (Form 01CSI, Item 3A)	Historical Ratio of ADA to Enrollment
Third Prior Year (2021-22)				
	District Regular	13,089	14,381	
	Charter School			
	Total ADA/Enrollment	**13,089**	**14,381**	**91.0%**
Second Prior Year (2022-23)				
	District Regular	13,006	14,171	
	Charter School			
	Total ADA/Enrollment	**13,006**	**14,171**	**91.8%**
First Prior Year (2023-24)				
	District Regular	12,576	13,400	
	Charter School	0		
	Total ADA/Enrollment	**12,576**	**13,400**	**93.9%**
			Historical Average Ratio:	92.2%
			District's ADA to Enrollment Standard (historical average ratio plus 0.5%):	**92.7%**

3B. Calculating the District's Projected Ratio of ADA to Enrollment

DATA ENTRY: Estimated P-2 ADA will be extracted into the first column for the Current Year; enter data in the first column for the subsequent fiscal years. Data should reflect district regular and charter school ADA/enrollment corresponding to financial data reported in the General Fund, only, for all fiscal years. All other data are extracted.

Fiscal Year		Estimated P-2 ADA (Form AI, Lines A4 and C4)	Enrollment CALPADS/Projected (Criterion 2, Item 2A)	Ratio of ADA to Enrollment	Status
Current Year (2024-25)					
	District Regular	12,307	13,003		
	Charter School	0			
	Total ADA/Enrollment	**12,307**	**13,003**	**94.6%**	**Not Met**
1st Subsequent Year (2025-26)					
	District Regular	11,940	12,568		
	Charter School				
	Total ADA/Enrollment	**11,940**	**12,568**	**95.0%**	**Not Met**
2nd Subsequent Year (2026-27)					
	District Regular	11,603	12,182		
	Charter School				
	Total ADA/Enrollment	**11,603**	**12,182**	**95.2%**	**Not Met**

3C. Comparison of District ADA to Enrollment Ratio to the Standard

DATA ENTRY: Enter an explanation if the standard is not met.

1a. STANDARD NOT MET - Projected P-2 ADA to enrollment ratio exceeds the standard in any of the current year or two subsequent fiscal years. Provide reasons why the projected ratio exceeds the district's historical average ratio by more than 0.5%.

Explanation:
(required if NOT met)

During the peak of the pandemic in the 2021-2022 fiscal year, the Oxnard School District saw a significant decline in attendance. However, as we have recovered from the shutdowns, attendance has improved. We are optimistic that this positive trend will continue and eventually return to pre-pandemic levels.

4. CRITERION: LCFF Revenue

STANDARD: Projected LCFF revenue for any of the current fiscal year or two subsequent fiscal years has not changed by more than two percent since first interim projections.

District's LCFF Revenue Standard Percentage Range: **-2.0% to +2.0%**

4A. Calculating the District's Projected Change in LCFF Revenue

DATA ENTRY: First Interim data that exist will be extracted; otherwise, enter data into the first column. In the Second Interim column, Current Year data are extracted; enter data for the two subsequent years.

LCFF Revenue
(Fund 01, Objects 8011, 8012, 8020-8089)

Fiscal Year	First Interim (Form 01CSI, Item 4A)	Second Interim Projected Year Totals	Percent Change	Status
Current Year (2024-25)	201,839,570.00	201,899,130.00	0.0%	Met
1st Subsequent Year (2025-26)	199,597,374.00	198,882,751.00	(.4%)	Met
2nd Subsequent Year (2026-27)	200,148,773.00	200,340,967.00	.1%	Met

4B. Comparison of District LCFF Revenue to the Standard

DATA ENTRY: Enter an explanation if the standard is not met.

1a. STANDARD MET - LCFF revenue has not changed since first interim projections by more than two percent for the current year and two subsequent fiscal years.

Explanation:
(required if NOT met)

5. CRITERION: Salaries and Benefits

STANDARD: Projected ratio of total unrestricted salaries and benefits to total unrestricted general fund expenditures for any of the current fiscal year or two subsequent fiscal years has not changed from the historical average ratio from the three prior fiscal years by more than the greater of three percent or the district's required reserves percentage.

5A. Calculating the District's Historical Average Ratio of Unrestricted Salaries and Benefits to Total Unrestricted General Fund Expenditures

DATA ENTRY: Unaudited Actuals data that exist for the First Prior Year will be extracted; otherwise, enter data for the First Prior Year. Unaudited Actuals data for the second and third prior years are preloaded.

Fiscal Year	Unaudited Actuals - Unrestricted (Resources 0000-1999) Salaries and Benefits (Form 01, Objects 1000-3999)	Total Expenditures (Form 01, Objects 1000-7499)	Ratio of Unrestricted Salaries and Benefits to Total Unrestricted Expenditures
Third Prior Year (2021-22)	126,852,400.67	150,176,037.93	84.5%
Second Prior Year (2022-23)	163,092,654.62	179,395,374.17	90.9%
First Prior Year (2023-24)	163,693,704.14	192,467,682.84	85.0%
		Historical Average Ratio:	86.8%

	Current Year (2024-25)	1st Subsequent Year (2025-26)	2nd Subsequent Year (2026-27)
District's Reserve Standard Percentage (Criterion 10B, Line 4)	3%	3%	3%
District's Salaries and Benefits Standard (historical average ratio, plus/minus the greater of 3% or the district's reserve standard percentage):	**83.8% to 89.8%**	**83.8% to 89.8%**	**83.8% to 89.8%**

5B. Calculating the District's Projected Ratio of Unrestricted Salaries and Benefits to Total Unrestricted General Fund Expenditures

DATA ENTRY: If Form MYPI exists, Projected Year Totals data for the two subsequent years will be extracted; if not, enter Projected Year Totals data. Projected Year Totals data for Current Year are extracted.

Fiscal Year	Projected Year Totals - Unrestricted (Resources 0000-1999) Salaries and Benefits (Form 01I, Objects 1000-3999) (Form MYPI, Lines B1-B3)	Total Expenditures (Form 01I, Objects 1000-7499) (Form MYPI, Lines B1-B8, B10)	Ratio of Unrestricted Salaries and Benefits to Total Unrestricted Expenditures	Status
Current Year (2024-25)	174,685,559.00	210,928,255.00	82.8%	Not Met
1st Subsequent Year (2025-26)	179,293,728.41	204,082,947.13	87.9%	Met
2nd Subsequent Year (2026-27)	179,375,546.64	204,418,005.23	87.7%	Met

5C. Comparison of District Salaries and Benefits Ratio to the Standard

DATA ENTRY: Enter an explanation if the standard is not met.

1a. STANDARD NOT MET - Projected ratio of unrestricted salary and benefit costs to total unrestricted expenditures has changed by more than the standard in any of the current year or two subsequent fiscal years. Provide reasons why the change(s) exceed the standard and a description of the methods and assumptions used in projecting salaries and benefits.

Explanation:
(required if NOT met)

The district is allocating funds toward several one-time, non-labor expenditures that will not extend into future years. Additionally, salary negotiations with labor partners have not yet been finalized.

6. CRITERION: Other Revenues and Expenditures

STANDARD: Projected operating revenues (including federal, other state and other local) or expenditures (including books and supplies, and services and other operating), for any of the current fiscal year or two subsequent fiscal years, have not changed by more than five percent since first interim projections. Changes that exceed five percent in any major object category must be explained.

District's Other Revenues and Expenditures Standard Percentage Range:	**-5.0% to +5.0%**
District's Other Revenues and Expenditures Explanation Percentage Range:	**-5.0% to +5.0%**

6A. Calculating the District's Change by Major Object Category and Comparison to the Explanation Percentage Range

DATA ENTRY: First Interim data that exist will be extracted; otherwise, enter data into the first column. Second Interim data for the Current Year are extracted. If Second Interim Form MYPI exists, data for the two subsequent years will be extracted; if not, enter data for the two subsequent years into the second column. Explanations must be entered for each category if the percent change for any year exceeds the district's explanation percentage range.

Object Range / Fiscal Year	First Interim Projected Year Totals (Form 01CSI, Item 6A)	Second Interim Projected Year Totals (Fund 01) (Form MYPI)	Percent Change	Change Is Outside Explanation Range
Federal Revenue (Fund 01, Objects 8100-8299) (Form MYPI, Line A2)				
Current Year (2024-25)	13,331,058.00	13,742,011.00	3.1%	No
1st Subsequent Year (2025-26)	11,458,161.00	11,999,040.40	4.7%	No
2nd Subsequent Year (2026-27)	11,458,161.00	11,999,040.40	4.7%	No

Explanation:
(required if Yes)

Other State Revenue (Fund 01, Objects 8300-8599) (Form MYPI, Line A3)				
Current Year (2024-25)	39,813,316.00	40,234,971.00	1.1%	No
1st Subsequent Year (2025-26)	40,640,474.40	39,618,176.42	-2.5%	No
2nd Subsequent Year (2026-27)	41,606,201.14	40,557,185.36	-2.5%	No

Explanation:
(required if Yes)

Other Local Revenue (Fund 01, Objects 8600-8799) (Form MYPI, Line A4)				
Current Year (2024-25)	21,015,641.00	21,564,704.00	2.6%	No
1st Subsequent Year (2025-26)	21,015,641.00	21,564,704.00	2.6%	No
2nd Subsequent Year (2026-27)	21,015,641.00	21,564,704.00	2.6%	No

Explanation:
(required if Yes)
Due to increase in Medi-Cal monies.

Books and Supplies (Fund 01, Objects 4000-4999) (Form MYPI, Line B4)				
Current Year (2024-25)	14,505,058.00	14,885,579.00	2.6%	No
1st Subsequent Year (2025-26)	13,884,549.00	11,850,753.69	-14.6%	Yes
2nd Subsequent Year (2026-27)	13,845,007.00	11,850,753.69	-14.4%	Yes

Explanation:
(required if Yes)
Expenditures were reduced by removing one-time expenses funded by carryover monies and adjusting spending to match lower revenues from decreased enrollment

Services and Other Operating Expenditures (Fund 01, Objects 5000-5999) (Form MYPI, Line B5)				
Current Year (2024-25)	76,529,808.00	79,439,517.00	3.8%	No
1st Subsequent Year (2025-26)	47,642,840.85	48,667,870.98	2.2%	No
2nd Subsequent Year (2026-27)	46,557,989.47	48,441,666.37	4.0%	No

Explanation:
(required if Yes)

6B. Calculating the District's Change in Total Operating Revenues and Expenditures

DATA ENTRY: All data are extracted or calculated.

Object Range / Fiscal Year	First Interim Projected Year Totals	Second Interim Projected Year Totals	Percent Change	Status
Total Federal, Other State, and Other Local Revenue (Section 6A)				
Current Year (2024-25)	74,160,015.00	75,541,686.00	1.9%	Met
1st Subsequent Year (2025-26)	73,114,276.40	73,181,920.82	.1%	Met
2nd Subsequent Year (2026-27)	74,080,003.14	74,120,929.76	.1%	Met
Total Books and Supplies, and Services and Other Operating Expenditures (Section 6A)				
Current Year (2024-25)	91,034,866.00	94,325,096.00	3.6%	Met
1st Subsequent Year (2025-26)	61,527,389.85	60,518,624.67	-1.6%	Met
2nd Subsequent Year (2026-27)	60,402,996.47	60,292,420.06	-.2%	Met

6C. Comparison of District Total Operating Revenues and Expenditures to the Standard Percentage Range

DATA ENTRY: Explanations are linked from Section 6A if the status in Section 6B is Not Met; no entry is allowed below.

1a. STANDARD MET - Projected total operating revenues have not changed since first interim projections by more than the standard for the current year and two subsequent fiscal years.

Explanation:
Federal Revenue
(linked from 6A
if NOT met)

Explanation:
Other State Revenue
(linked from 6A
if NOT met)

Explanation:
Other Local Revenue
(linked from 6A
if NOT met)

1b. STANDARD MET - Projected total operating expenditures have not changed since first interim projections by more than the standard for the current year and two subsequent fiscal years.

Explanation:
Books and Supplies
(linked from 6A
if NOT met)

Explanation:
Services and Other Exps
(linked from 6A
if NOT met)

7. CRITERION: Facilities Maintenance

STANDARD: Identify changes that have occurred since first interim projections in the projected contributions for facilities maintenance funding as required pursuant to Education Code Section 17070.75, or in how the district is providing adequately to preserve the functionality of its facilities for their normal life in accordance with Education Code sections 52060(d)(1) and 17002(d)(1).

Determining the District's Compliance with the Contribution Requirement for EC Section 17070.75 - Ongoing and Major Maintenance/Restricted Maintenance Account (OMMA/RMA)

NOTE: EC Section 17070.75 requires the district to deposit into the account a minimum amount equal to or greater than three percent of the total general fund expenditures and other financing uses for that fiscal year. Statute exclude the following resource codes from the total general fund expenditures calculation: 3212, 3213, 3214, 3216, 3218, 3219, 3225, 3226, 3227, 3228, 5316, 5632, 5633, 5634, 7027, and 7690.

DATA ENTRY: Enter the Required Minimum Contribution if First Interim data does not exist. First Interim data that exist will be extracted; otherwise, enter First Interim data into lines 1, if applicable, and 2. All other data are extracted.

		Required Minimum Contribution	Second Interim Contribution Projected Year Totals (Fund 01, Resource 8150, Objects 8900-8999)	Status
1.	OMMA/RMA Contribution	8,882,320.83	8,885,000.00	Met
2.	First Interim Contribution (information only) (Form 01CSI, First Interim, Criterion 7, Line 1)		8,885,000.00	

If status is not met, enter an X in the box that best describes why the minimum required contribution was not made:

	Not applicable (district does not participate in the Leroy F. Greene School Facilities Act of 1998)
	Exempt (due to district's small size [EC Section 17070.75 (b)(2)(E)])
	Other (explanation must be provided)

Explanation:
(required if NOT met
and Other is marked)

8. CRITERION: Deficit Spending

STANDARD: Unrestricted deficit spending (total unrestricted expenditures and other financing uses is greater than total unrestricted revenues and other financing sources) as a percentage of total unrestricted expenditures and other financing uses, has not exceeded one-third of the district's available reserves[1] as a percentage of total expenditures and other financing uses[2] in any of the current fiscal year or two subsequent fiscal years.

[1]Available reserves are the unrestricted amounts in the Stabilization Arrangements, Reserve for Economic Uncertainties, and Unassigned/Unappropriated accounts in the General Fund and the Special Reserve Fund for Other Than Capital Outlay Projects. Available reserves will be reduced by any negative ending balances in restricted resources in the General Fund.

[2]A school district that is the Administrative Unit of a Special Education Local Plan Area (SELPA) may exclude from its expenditures the distribution of funds to its participating members.

8A. Calculating the District's Deficit Spending Standard Percentage Levels

DATA ENTRY: All data are extracted or calculated.

	Current Year (2024-25)	1st Subsequent Year (2025-26)	2nd Subsequent Year (2026-27)
District's Available Reserve Percentages (Criterion 10C, Line 9)	10.0%	10.0%	10.0%
District's Deficit Spending Standard Percentage Levels (one-third of available reserve percentage):	**3.3%**	**3.3%**	**3.3%**

8B. Calculating the District's Deficit Spending Percentages

DATA ENTRY: Current Year data are extracted. If Form MYPI exists, data for the two subsequent years will be extracted; if not, enter data for the two subsequent years into the first and second columns.

	Projected Year Totals			
Fiscal Year	Net Change in Unrestricted Fund Balance (Form 01I, Section E) (Form MYPI, Line C)	Total Unrestricted Expenditures and Other Financing Uses (Form 01I, Objects 1000-7999) (Form MYPI, Line B11)	Deficit Spending Level (If Net Change in Unrestricted Fund Balance is negative, else N/A)	Status
Current Year (2024-25)	(26,855,124.00)	210,928,255.00	12.7%	Not Met
1st Subsequent Year (2025-26)	(18,599,679.53)	204,082,947.13	9.1%	Not Met
2nd Subsequent Year (2026-27)	(11,565,767.82)	204,418,005.23	5.7%	Not Met

8C. Comparison of District Deficit Spending to the Standard

DATA ENTRY: Enter an explanation if the standard is not met.

1a. STANDARD NOT MET - Unrestricted deficit spending has exceeded the standard percentage level in any of the current year or two subsequent fiscal years. Provide reasons for the deficit spending, a description of the methods and assumptions used in balancing the unrestricted budget, and what changes will be made to ensure that the budget deficits are eliminated or are balanced within the standard.

Explanation:
(required if NOT met)

The district has maintained a strong unrestricted ending fund balance by prioritizing the use of the most restricted resources first. As we work toward better aligning expenditures with revenues, we are utilizing reserves. The district will continue to closely monitor the budget and ensure expenditures remain in line with revenues to maintain financial stability.

9. CRITERION: Fund and Cash Balances

A. FUND BALANCE STANDARD: Projected general fund balance will be positive at the end of the current fiscal year and two subsequent fiscal years.

9A-1. Determining if the District's General Fund Ending Balance is Positive

DATA ENTRY: Current Year data are extracted. If Form MYPI exists, data for the two subsequent years will be extracted; if not, enter data for the two subsequent years.

Fiscal Year	Ending Fund Balance General Fund Projected Year Totals (Form 01I, Line F2) (Form MYPI, Line D2)	Status
Current Year (2024-25)	88,310,533.00	Met
1st Subsequent Year (2025-26)	67,483,144.65	Met
2nd Subsequent Year (2026-27)	54,784,036.81	Met

9A-2. Comparison of the District's Ending Fund Balance to the Standard

DATA ENTRY: Enter an explanation if the standard is not met.

1a. STANDARD MET - Projected general fund ending balance is positive for the current fiscal year and two subsequent fiscal years.

Explanation:
(required if NOT met)

B. CASH BALANCE STANDARD: Projected general fund cash balance will be positive at the end of the current fiscal year.

9B-1. Determining if the District's Ending Cash Balance is Positive

DATA ENTRY: If Form CASH exists, data will be extracted; if not, data must be entered below.

Fiscal Year	Ending Cash Balance General Fund (Form CASH, Line F, June Column)	Status
Current Year (2024-25)	91,855,294.03	Met

9B-2. Comparison of the District's Ending Cash Balance to the Standard

DATA ENTRY: Enter an explanation if the standard is not met.

1a. STANDARD MET - Projected general fund cash balance will be positive at the end of the current fiscal year.

Explanation:
(required if NOT met)

10. CRITERION: Reserves

STANDARD: Available reserves[1] for any of the current fiscal year or two subsequent fiscal years are not less than the following percentages or amounts[2] as applied to total expenditures and other financing uses[3]:

DATA ENTRY: Current Year data are extracted. If Form MYPI exists, 1st and 2nd Subsequent Year data will be extracted. If not, enter district regular ADA and charter school ADA corresponding to financial data reported in the General Fund, only, for the two subsequent years.

Percentage Level	District ADA	
5% or $87,000 (greater of)	0	to 300
4% or $87,000 (greater of)	301	to 1,000
3%	1,001	to 30,000
2%	30,001	to 250,000
1%	250,001	and over

[1] Available reserves are the unrestricted amounts in the Stabilization Arrangements, Reserve for Economic Uncertainties, and Unassigned/Unappropriated accounts in the General Fund and Special Reserve Fund for Other Than Capital Outlay Projects. Available reserves will be reduced by any negative ending balances in restricted resources in the General Fund.

[2] Dollar amounts to be adjusted annually by the prior year statutory cost-of-living adjustment (Education Code Section 42238), rounded to the nearest thousand.

[3] A school district that is the Administrative Unit (AU) of a Special Education Local Plan Area (SELPA) may exclude from its expenditures the distribution of funds to its participating members.

	Current Year (2024-25)	1st Subsequent Year (2025-26)	2nd Subsequent Year (2026-27)
District Estimated P-2 ADA (Current Year, Form AI, Lines A4 and C4. Subsequent Years, Form MYPI, Line F2, if available.)	12,307	11,940	11,603
District's Reserve Standard Percentage Level:	**3%**	**3%**	**3%**

10A. Calculating the District's Special Education Pass-through Exclusions (only for districts that serve as the AU of a SELPA)

DATA ENTRY: For SELPA AUs, if Form MYPI exists, all data will be extracted including the Yes/No button selection. If not, click the appropriate Yes or No button for item 1. If Yes, enter data for item 2a. If No, enter data for the two subsequent years in item 2b; Current Year data are extracted.

For districts that serve as the AU of a SELPA (Form MYPI, Lines F1a, F1b1, and F1b2):

1. Do you choose to exclude from the reserve calculation the pass-through funds distributed to SELPA members? No
2. If you are the SELPA AU and are excluding special education pass-through funds:
   a. Enter the name(s) of the SELPA(s):

	Current Year Projected Year Totals (2024-25)	1st Subsequent Year (2025-26)	2nd Subsequent Year (2026-27)
b. Special Education Pass-through Funds (Fund 10, resources 3300-3499, 6500-6540 and 6546, objects 7211-7213 and 7221-7223)	0.00	0.00	0.00

10B. Calculating the District's Reserve Standard

DATA ENTRY: If Form MYPI exists, all data will be extracted or calculated. If not, enter data for line 1 for the two subsequent years; Current Year data are extracted.

	Current Year Projected Year Totals (2024-25)	1st Subsequent Year (2025-26)	2nd Subsequent Year (2026-27)
1. Expenditures and Other Financing Uses (Form 01I, objects 1000-7999) (Form MYPI, Line B11)	329,077,700.00	288,892,060.17	283,161,004.60
2. Plus: Special Education Pass-through (Criterion 10A, Line 2b, if Criterion 10A, Line 1 is No)	0.00	0.00	0.00
3. Total Expenditures and Other Financing Uses (Line B1 plus Line B2)	329,077,700.00	288,892,060.17	283,161,004.60

4.	Reserve Standard Percentage Level	3%	3%	3%
5.	Reserve Standard - by Percent (Line B3 times Line B4)	9,872,331.00	8,666,761.81	8,494,830.14
6.	Reserve Standard - by Amount ($87,000 for districts with 0 to 1,000 ADA, else 0)	0.00	0.00	0.00
7.	**District's Reserve Standard (Greater of Line B5 or Line B6)**	**9,872,331.00**	**8,666,761.81**	**8,494,830.14**

10C. Calculating the District's Available Reserve Amount

DATA ENTRY: All data are extracted from fund data and Form MYPI. If Form MYPI does not exist, enter data for the two subsequent years.

Reserve Amounts (Unrestricted resources 0000-1999 except Line 4)	Current Year Projected Year Totals (2024-25)	1st Subsequent Year (2025-26)	2nd Subsequent Year (2026-27)
1. General Fund - Stabilization Arrangements (Fund 01, Object 9750) (Form MYPI, Line E1a)	0.00		
2. General Fund - Reserve for Economic Uncertainties (Fund 01, Object 9789) (Form MYPI, Line E1b)	32,907,769.00	28,889,206.00	28,316,100.00
3. General Fund - Unassigned/Unappropriated Amount (Fund 01, Object 9790) (Form MYPI, Line E1c)	0.00	0.00	0.00
4. General Fund - Negative Ending Balances in Restricted Resources (Fund 01, Object 979Z, if negative, for each of resources 2000-9999) (Form MYPI, Line E1d)	0.00	0.00	0.00
5. Special Reserve Fund - Stabilization Arrangements (Fund 17, Object 9750) (Form MYPI, Line E2a)	0.00		
6. Special Reserve Fund - Reserve for Economic Uncertainties (Fund 17, Object 9789) (Form MYPI, Line E2b)	0.00		
7. Special Reserve Fund - Unassigned/Unappropriated Amount (Fund 17, Object 9790) (Form MYPI, Line E2c)	0.00		
8. District's Available Reserve Amount (Lines C1 thru C7)	32,907,769.00	28,889,206.00	28,316,100.00
9. District's Available Reserve Percentage (Information only) (Line 8 divided by Section 10B, Line 3)	10.00%	10.00%	10.00%
District's Reserve Standard (Section 10B, Line 7):	**9,872,331.00**	**8,666,761.81**	**8,494,830.14**
Status:	Met	Met	Met

10D. Comparison of District Reserve Amount to the Standard

DATA ENTRY: Enter an explanation if the standard is not met.

1a. STANDARD MET - Available reserves have met the standard for the current year and two subsequent fiscal years.

Explanation:
(required if NOT met)

SUPPLEMENTAL INFORMATION

DATA ENTRY: Click the appropriate Yes or No button for items S1 through S4. Enter an explanation for each Yes answer.

S1. Contingent Liabilities

1a. Does your district have any known or contingent liabilities (e.g., financial or program audits, litigation, state compliance reviews) that have occurred since first interim projections that may impact the budget? No

1b. If Yes, identify the liabilities and how they may impact the budget:

S2. Use of One-time Revenues for Ongoing Expenditures

1a. Does your district have ongoing general fund expenditures funded with one-time revenues that have changed since first interim projections by more than five percent? No

1b. If Yes, identify the expenditures and explain how the one-time resources will be replaced to continue funding the ongoing expenditures in the following fiscal years:

S3. Temporary Interfund Borrowings

1a. Does your district have projected temporary borrowings between funds? (Refer to Education Code Section 42603) No

1b. If Yes, identify the interfund borrowings:

S4. Contingent Revenues

1a. Does your district have projected revenues for the current fiscal year or either of the two subsequent fiscal years contingent on reauthorization by the local government, special legislation, or other definitive act (e.g., parcel taxes, forest reserves)? No

1b. If Yes, identify any of these revenues that are dedicated for ongoing expenses and explain how the revenues will be replaced or expenditures reduced:

S5. Contributions

Identify projected contributions from unrestricted resources in the general fund to restricted resources in the general fund for the current fiscal year and two subsequent fiscal years. Provide an explanation if contributions have changed by more than $20,000 and more than five percent since first interim projections.

Identify projected transfers to or from the general fund to cover operating deficits in either the general fund or any other fund for the current fiscal year and two subsequent fiscal years. Provide an explanation if transfers have changed by more than $20,000 and more than five percent since first interim projections.

Identify capital project cost overruns that have occurred since first interim projections that may impact the general fund budget.

District's Contributions and Transfers Standard: -5.0% to +5.0% or -$20,000 to +$20,000

S5A. Identification of the District's Projected Contributions, Transfers, and Capital Projects that may Impact the General Fund

DATA ENTRY: First Interim data that exist will be extracted; otherwise, enter data into the first column. For Contributions, the Second Interim's Current Year data will be extracted. Enter Second Interim Contributions for the 1st and 2nd Subsequent Years. For Transfers In and Transfers Out, the Second Interim's Current Year data will be extracted. If Form MYPI exists, the data will be extracted into the Second Interim column for the 1st and 2nd Subsequent Years. If Form MYPI does not exist, enter data for 1st and 2nd Subsequent Years. Click on the appropriate button for Item 1d; all other data will be calculated.

Description / Fiscal Year	First Interim (Form 01CSI, Item S5A)	Second Interim Projected Year Totals	Percent Change	Amount of Change	Status
1a. **Contributions, Unrestricted General Fund (Fund 01, Resources 0000-1999, Object 8980)**					
Current Year (2024-25)	(19,522,241.00)	(22,268,838.00)	14.1%	2,746,597.00	Not Met
1st Subsequent Year (2025-26)	(14,537,054.00)	(15,643,862.24)	7.6%	1,106,808.24	Not Met
2nd Subsequent Year (2026-27)	(13,238,216.00)	(13,807,818.72)	4.3%	569,602.72	Met
1b. **Transfers In, General Fund ***					
Current Year (2024-25)	0.00	0.00	0.0%	0.00	Met
1st Subsequent Year (2025-26)	0.00	0.00	0.0%	0.00	Met
2nd Subsequent Year (2026-27)	0.00	0.00	0.0%	0.00	Met
1c. **Transfers Out, General Fund ***					
Current Year (2024-25)	0.00	0.00	0.0%	0.00	Met
1st Subsequent Year (2025-26)	0.00	0.00	0.0%	0.00	Met
2nd Subsequent Year (2026-27)	0.00	0.00	0.0%	0.00	Met

1d. **Capital Project Cost Overruns**

Have capital project cost overruns occurred since first interim projections that may impact the general fund operational budget? No

* Include transfers used to cover operating deficits in either the general fund or any other fund.

S5B. Status of the District's Projected Contributions, Transfers, and Capital Projects

DATA ENTRY: Enter an explanation if Not Met for items 1a-1c or if Yes for Item 1d.

1a. NOT MET - The projected contributions from the unrestricted general fund to restricted general fund programs have changed since first interim projections by more than the standard for any of the current year or subsequent two fiscal years. Identify restricted programs and contribution amount for each program and whether contributions are ongoing or one-time in nature. Explain the district's plan, with timeframes, for reducing or eliminating the contribution.

Explanation: (required if NOT met)

The district continues to analyze positions currently assigned to special education to determine if they can be reallocated to other areas.

1b. MET - Projected transfers in have not changed since first interim projections by more than the standard for the current year and two subsequent fiscal years.

Explanation: (required if NOT met)

1c. MET - Projected transfers out have not changed since first interim projections by more than the standard for the current year and two subsequent fiscal years.

Explanation:
(required if NOT met)

1d. NO - There have been no capital project cost overruns occurring since first interim projections that may impact the general fund operational budget.

Project Information:
(required if YES)

S6. Long-term Commitments

Identify all existing and new multiyear commitments[1] and their annual required payment for the current fiscal year and two subsequent fiscal years. Explain how any increase in annual payments will be funded. Also, explain how any decrease to funding sources used to pay long-term commitments will be replaced.

[1] Include multiyear commitments, multiyear debt agreements, and new programs or contracts that result in long-term obligations.

S6A. Identification of the District's Long-term Commitments

DATA ENTRY: If First Interim data exist (Form 01CSI, Item S6A), long-term commitment data will be extracted and it will only be necessary to click the appropriate button for Item 1b. Extracted data may be overwritten to update long-term commitment data in Item 2, as applicable. If no First Interim data exist, click the appropriate buttons for items 1a and 1b, and enter all other data, as applicable.

1. a. Does your district have long-term (multiyear) commitments?
(If No, skip items 1b and 2 and sections S6B and S6C) — Yes

b. If Yes to Item 1a, have new long-term (multiyear) commitments been incurred since first interim projections? — No

2. If Yes to Item 1a, list (or update) all new and existing multiyear commitments and required annual debt service amounts. Do not include long-term commitments for postemployment benefits other than pensions (OPEB); OPEB is disclosed in Item S7A.

Type of Commitment	# of Years Remaining	SACS Fund and Object Codes Used For: Funding Sources (Revenues)	Debt Service (Expenditures)	Principal Balance as of July 1, 2024-25
Capital Leases				
Certificates of Participation	20	25	581,500	7,630,000
General Obligation Bonds	30	51	20,170,266.56	332,121,336
Supp Early Retirement Program	5	01	1,383,458	6,675,879
State School Building Loans				
Compensated Absences				

Other Long-term Commitments (do not include OPEB):

TOTAL:				346,427,214

Type of Commitment (continued)	Prior Year (2023-24) Annual Payment (P & I)	Current Year (2024-25) Annual Payment (P & I)	1st Subsequent Year (2025-26) Annual Payment (P & I)	2nd Subsequent Year (2026-27) Annual Payment (P & I)
Capital Leases				
Certificates of Participation	581,500	581,500	581,000	580,000
General Obligation Bonds	19,373,683	20,170,267	22,035,114	22,893,780
Supp Early Retirement Program	0	1,383,458	1,383,458	1,383,458
State School Building Loans				
Compensated Absences				

Other Long-term Commitments (continued):

Total Annual Payments:	19,955,183	22,135,225	23,999,572	24,857,238
Has total annual payment increased over prior year (2023-24)?		**Yes**	**Yes**	**Yes**

S6B. Comparison of the District's Annual Payments to Prior Year Annual Payment

DATA ENTRY: Enter an explanation if Yes.

1a. Yes - Annual payments for long-term commitments have increased in one or more of the current or two subsequent fiscal years. Explain how the increase in annual payments will be funded.

Explanation:
(Required if Yes to increase in total annual payments)

The increase in GO Bond payments will be funded by Fund 51, while the increase in the Early Retirement Plan will be funded from the General Fund (Fund 01)

S6C. Identification of Decreases to Funding Sources Used to Pay Long-term Commitments

DATA ENTRY: Click the appropriate Yes or No button in Item 1; if Yes, an explanation is required in Item 2.

1. Will funding sources used to pay long-term commitments decrease or expire prior to the end of the commitment period, or are they one-time sources?

No

2. No - Funding sources will not decrease or expire prior to the end of the commitment period, and one-time funds are not being used for long-term commitment.

Explanation:
(Required if Yes)

S7. Unfunded Liabilities

Identify any changes in estimates for unfunded liabilities since first interim projections, and indicate whether the changes are the result of a new actuarial valuation.

S7A. Identification of the District's Estimated Unfunded Liability for Postemployment Benefits Other Than Pensions (OPEB)

DATA ENTRY: Click the appropriate button(s) for items 1a-1c, as applicable. First Interim data that exist (Form 01CSI, Item S7A) will be extracted; otherwise, enter First Interim and Second Interim data in items 2-4.

1	a. Does your district provide postemployment benefits other than pensions (OPEB)? (If No, skip items 1b-4)	Yes
	b. If Yes to Item 1a, have there been changes since first interim in OPEB liabilities?	No
	c. If Yes to Item 1a, have there been changes since first interim in OPEB contributions?	

2 OPEB Liabilities	First Interim (Form 01CSI, Item S7A)	Second Interim
a. Total OPEB liability	90,137,292.00	90,137,292.00
b. OPEB plan(s) fiduciary net position (if applicable)	8,532,490.00	8,532,490.01
c. Total/Net OPEB liability (Line 2a minus Line 2b)	81,604,802.00	81,604,801.99
d. Is total OPEB liability based on the district's estimate or an actuarial valuation?		Actuarial
e. If based on an actuarial valuation, indicate the measurement date of the OPEB valuation.	Jun 30, 2024	Jun 30, 2024

3 OPEB Contributions	First Interim (Form 01CSI, Item S7A)	Second Interim
a. OPEB actuarially determined contribution (ADC) if available, per actuarial valuation or Alternative Measurement Method		
Current Year (2024-25)		0.00
1st Subsequent Year (2025-26)		0.00
2nd Subsequent Year (2026-27)		0.00
b. OPEB amount contributed (for this purpose, include premiums paid to a self-insurance fund) (Funds 01-70, objects 3701-3752)		
Current Year (2024-25)	3,631,460.00	3,561,819.00
1st Subsequent Year (2025-26)	3,631,460.00	3,566,364.00
2nd Subsequent Year (2026-27)	3,631,460.00	3,566,364.00
c. Cost of OPEB benefits (equivalent of "pay-as-you-go" amount)		
Current Year (2024-25)		0.00
1st Subsequent Year (2025-26)		0.00
2nd Subsequent Year (2026-27)		0.00
d. Number of retirees receiving OPEB benefits		
Current Year (2024-25)	231	231
1st Subsequent Year (2025-26)	231	231
2nd Subsequent Year (2026-27)	231	231

4. Comments:

S7B. Identification of the District's Unfunded Liability for Self-insurance Programs

DATA ENTRY: Click the appropriate button(s) for items 1a-1c, as applicable. First Interim data that exist (Form 01CSI, Item S7B) will be extracted; otherwise, enter First Interim and Second Interim data in items 2-4.

1 a. Does your district operate any self-insurance programs such as workers' compensation, employee health and welfare, or property and liability? (Do not include OPEB; which is covered in Section S7A) (If No, skip items 1b-4): No

b. If Yes to item 1a, have there been changes since first interim in self-insurance liabilities? n/a

c. If Yes to item 1a, have there been changes since first interim in self-insurance contributions? n/a

2 Self-Insurance Liabilities

	First Interim (Form 01CSI, Item S7B)	Second Interim
a. Accrued liability for self-insurance programs		
b. Unfunded liability for self-insurance programs		

3 Self-Insurance Contributions

a. Required contribution (funding) for self-insurance programs	First Interim (Form 01CSI, Item S7B)	Second Interim
Current Year (2024-25)		
1st Subsequent Year (2025-26)		
2nd Subsequent Year (2026-27)		

b. Amount contributed (funded) for self-insurance programs		
Current Year (2024-25)		
1st Subsequent Year (2025-26)		
2nd Subsequent Year (2026-27)		

4 Comments:

S8. Status of Labor Agreements

Analyze the status of all employee labor agreements. Identify new labor agreements that have been ratified since first interim projections, as well as new commitments provided as part of previously ratified multiyear agreements; and include all contracts, including all administrator contracts (and including all compensation). For new agreements, indicate the date of the required board meeting. Compare the increase in new commitments to the projected increase in ongoing revenues, and explain how these commitments will be funded in future fiscal years.

If salary and benefit negotiations are not finalized, upon settlement with certificated or classified staff:

The school district must determine the cost of the settlement, including salaries, benefits, and any other agreements that change costs, and provide the county office of education (COE) with an analysis of the cost of the settlement and its impact on the operating budget.

The county superintendent shall review the analysis relative to the criteria and standards and may provide written comments to the president of the district governing board and superintendent.

S8A. Cost Analysis of District's Labor Agreements - Certificated (Non-management) Employees

DATA ENTRY: Click the appropriate Yes or No button for "Status of Certificated Labor Agreements as of the Previous Reporting Period." There are no extractions in this section.

Status of Certificated Labor Agreements as of the Previous Reporting Period

Were all certificated labor negotiations settled as of first interim projections? No

If Yes, complete number of FTEs, then skip to section S8B.

If No, continue with section S8A.

Certificated (Non-management) Salary and Benefit Negotiations

	Prior Year (2nd Interim) (2023-24)	Current Year (2024-25)	1st Subsequent Year (2025-26)	2nd Subsequent Year (2026-27)
Number of certificated (non-management) full-time-equivalent (FTE) positions	898.0	874.0	862.0	850.0

1a. Have any salary and benefit negotiations been settled since first interim projections? No

If Yes, and the corresponding public disclosure documents have been filed with the COE, complete questions 2 and 3.

If Yes, and the corresponding public disclosure documents have not been filed with the COE, complete questions 2-5.

If No, complete questions 6 and 7.

1b. Are any salary and benefit negotiations still unsettled? Yes

If Yes, complete questions 6 and 7.

Negotiations Settled Since First Interim

2a. Per Government Code Section 3547.5(a), date of public disclosure board meeting:

2b. Per Government Code Section 3547.5(b), was the collective bargaining agreement certified by the district superintendent and chief business official?

If Yes, date of Superintendent and CBO certification:

3. Per Government Code Section 3547.5(c), was a budget revision adopted to meet the costs of the collective bargaining agreement? n/a

If Yes, date of budget revision board adoption:

4. Period covered by the agreement: Begin Date: End Date:

5. Salary settlement:

	Current Year (2024-25)	1st Subsequent Year (2025-26)	2nd Subsequent Year (2026-27)
Is the cost of salary settlement included in the interim and multiyear projections (MYPs)?			
One Year Agreement			
Total cost of salary settlement			
% change in salary schedule from prior year			
or			
Multiyear Agreement			
Total cost of salary settlement			
% change in salary schedule from prior year (may enter text, such as "Reopener")			

Identify the source of funding that will be used to support multiyear salary commitments:

Negotiations Not Settled

6.	Cost of a one percent increase in salary and statutory benefits	1,180,778

		Current Year (2024-25)	1st Subsequent Year (2025-26)	2nd Subsequent Year (2026-27)
7.	Amount included for any tentative salary schedule increases	0	0	0

Certificated (Non-management) Health and Welfare (H&W) Benefits		Current Year (2024-25)	1st Subsequent Year (2025-26)	2nd Subsequent Year (2026-27)
1.	Are costs of H&W benefit changes included in the interim and MYPs?	Yes	Yes	Yes
2.	Total cost of H&W benefits	10,972,335	10,792,335	10,612,335
3.	Percent of H&W cost paid by employer			
4.	Percent projected change in H&W cost over prior year			

Certificated (Non-management) Prior Year Settlements Negotiated Since First Interim Projections

Are any new costs negotiated since first interim projections for prior year settlements included in the interim?	No		
If Yes, amount of new costs included in the interim and MYPs			

If Yes, explain the nature of the new costs:

Certificated (Non-management) Step and Column Adjustments		Current Year (2024-25)	1st Subsequent Year (2025-26)	2nd Subsequent Year (2026-27)
1.	Are step & column adjustments included in the interim and MYPs?			
2.	Cost of step & column adjustments		1,343,161	1,321,889
3.	Percent change in step & column over prior year		1.3%	1.3%

Certificated (Non-management) Attrition (layoffs and retirements)		Current Year (2024-25)	1st Subsequent Year (2025-26)	2nd Subsequent Year (2026-27)
1.	Are savings from attrition included in the interim and MYPs?			
2.	Are additional H&W benefits for those laid-off or retired employees included in the interim and MYPs?			

Certificated (Non-management) - Other

List other significant contract changes that have occurred since first interim projections and the cost impact of each change (i.e., class size, hours of employment, leave of absence, bonuses, etc.):

S8B. Cost Analysis of District's Labor Agreements - Classified (Non-management) Employees

DATA ENTRY: Click the appropriate Yes or No button for "Status of Classified Labor Agreements as of the Previous Reporting Period." There are no extractions in this section.

Status of Classified Labor Agreements as of the Previous Reporting Period

Were all classified labor negotiations settled as of first interim projections? No

If Yes, complete number of FTEs, then skip to section S8C.

If No, continue with section S8B.

Classified (Non-management) Salary and Benefit Negotiations

	Prior Year (2nd Interim) (2023-24)	Current Year (2024-25)	1st Subsequent Year (2025-26)	2nd Subsequent Year (2026-27)
Number of classified (non-management) FTE positions	764.8	837.3	837.3	837.3

1a. Have any salary and benefit negotiations been settled since first interim projections? No

If Yes, and the corresponding public disclosure documents have been filed with the COE, complete questions 2 and 3.

If Yes, and the corresponding public disclosure documents have not been filed with the COE, complete questions 2-5.

If No, complete questions 6 and 7.

1b. Are any salary and benefit negotiations still unsettled? Yes

If Yes, complete questions 6 and 7.

Negotiations Settled Since First Interim Projections

2a. Per Government Code Section 3547.5(a), date of public disclosure board meeting:

2b. Per Government Code Section 3547.5(b), was the collective bargaining agreement certified by the district superintendent and chief business official?

If Yes, date of Superintendent and CBO certification:

3. Per Government Code Section 3547.5(c), was a budget revision adopted to meet the costs of the collective bargaining agreement? n/a

If Yes, date of budget revision board adoption:

4. Period covered by the agreement: Begin Date: End Date:

5. Salary settlement:

	Current Year (2024-25)	1st Subsequent Year (2025-26)	2nd Subsequent Year (2026-27)
Is the cost of salary settlement included in the interim and multiyear projections (MYPs)?			
One Year Agreement			
Total cost of salary settlement			
% change in salary schedule from prior year			
or			
Multiyear Agreement			
Total cost of salary settlement			
% change in salary schedule from prior year (may enter text, such as "Reopener")			

Identify the source of funding that will be used to support multiyear salary commitments:

Negotiations Not Settled

6. Cost of a one percent increase in salary and statutory benefits 609,124

Current Year (2024-25)	1st Subsequent Year (2025-26)	2nd Subsequent Year (2026-27)

7.	Amount included for any tentative salary schedule increases			

Classified (Non-management) Health and Welfare (H&W) Benefits	Current Year (2024-25)	1st Subsequent Year (2025-26)	2nd Subsequent Year (2026-27)
1. Are costs of H&W benefit changes included in the interim and MYPs?	Yes	Yes	Yes
2. Total cost of H&W benefits	4,968,910	4,968,910	4,968,910
3. Percent of H&W cost paid by employer			
4. Percent projected change in H&W cost over prior year			

Classified (Non-management) Prior Year Settlements Negotiated Since First Interim

Are any new costs negotiated since first interim projections for prior year settlements included in the interim?			
If Yes, amount of new costs included in the interim and MYPs			

If Yes, explain the nature of the new costs:

Classified (Non-management) Step and Column Adjustments	Current Year (2024-25)	1st Subsequent Year (2025-26)	2nd Subsequent Year (2026-27)
1. Are step & column adjustments included in the interim and MYPs?	Yes	Yes	Yes
2. Cost of step & column adjustments		588,435	594,498
3. Percent change in step & column over prior year		1.3%	1.3%

Classified (Non-management) Attrition (layoffs and retirements)	Current Year (2024-25)	1st Subsequent Year (2025-26)	2nd Subsequent Year (2026-27)
1. Are savings from attrition included in the interim and MYPs?			
2. Are additional H&W benefits for those laid-off or retired employees included in the interim and MYPs?			

Classified (Non-management) - Other

List other significant contract changes that have occurred since first interim and the cost impact of each (i.e., hours of employment, leave of absence, bonuses, etc.):

S8C. Cost Analysis of District's Labor Agreements - Management/Supervisor/Confidential Employees

DATA ENTRY: Click the appropriate Yes or No button for "Status of Management/Supervisor/Confidential Labor Agreements as of the Previous Reporting Period." There are no extractions in this section.

Status of Management/Supervisor/Confidential Labor Agreements as of the Previous Reporting Period

Were all managerial/confidential labor negotiations settled as of first interim projections? No

If Yes or n/a, complete number of FTEs, then skip to S9.

If No, continue with section S8C.

Management/Supervisor/Confidential Salary and Benefit Negotiations

	Prior Year (2nd Interim) (2023-24)	Current Year (2024-25)	1st Subsequent Year (2025-26)	2nd Subsequent Year (2026-27)
Number of management, supervisor, and confidential FTE positions	89.0	92.5	92.5	92.5

1a. Have any salary and benefit negotiations been settled since first interim projections? No

If Yes, complete question 2.

If No, complete questions 3 and 4.

1b. Are any salary and benefit negotiations still unsettled? Yes

If Yes, complete questions 3 and 4.

Negotiations Settled Since First Interim Projections

2. Salary settlement:	Current Year (2024-25)	1st Subsequent Year (2025-26)	2nd Subsequent Year (2026-27)
Is the cost of salary settlement included in the interim and multiyear projections (MYPs)?			
Total cost of salary settlement			
Change in salary schedule from prior year (may enter text, such as "Reopener")			

Negotiations Not Settled

3. Cost of a one percent increase in salary and statutory benefits: 194,472

	Current Year (2024-25)	1st Subsequent Year (2025-26)	2nd Subsequent Year (2026-27)
4. Amount included for any tentative salary schedule increases			

Management/Supervisor/Confidential Health and Welfare (H&W) Benefits	Current Year (2024-25)	1st Subsequent Year (2025-26)	2nd Subsequent Year (2026-27)
1. Are costs of H&W benefit changes included in the interim and MYPs?	Yes	Yes	Yes
2. Total cost of H&W benefits	1,260,239	1,260,239	1,260,239
3. Percent of H&W cost paid by employer			
4. Percent projected change in H&W cost over prior year			

Management/Supervisor/Confidential Step and Column Adjustments	Current Year (2024-25)	1st Subsequent Year (2025-26)	2nd Subsequent Year (2026-27)
1. Are step & column adjustments included in the interim and MYPs?			
2. Cost of step & column adjustments		36,835	37,314
3. Percent change in step and column over prior year		1.3%	1.3%

Management/Supervisor/Confidential Other Benefits (mileage, bonuses, etc.)	Current Year (2024-25)	1st Subsequent Year (2025-26)	2nd Subsequent Year (2026-27)
1. Are costs of other benefits included in the interim and MYPs?	Yes	Yes	Yes
2. Total cost of other benefits	0	0	0

3.	Percent change in cost of other benefits over prior year			

S9. Status of Other Funds

Analyze the status of other funds that may have negative fund balances at the end of the current fiscal year. If any other fund has a projected negative fund balance, prepare an interim report and multiyear projection for that fund. Explain plans for how and when the negative fund balance will be addressed.

S9A. Identification of Other Funds with Negative Ending Fund Balances

DATA ENTRY: Click the appropriate button in Item 1. If Yes, enter data in Item 2 and provide the reports referenced in Item 1.

1. Are any funds other than the general fund projected to have a negative fund balance at the end of the current fiscal year? No

If Yes, prepare and submit to the reviewing agency a report of revenues, expenditures, and changes in fund balance (e.g., an interim fund report) and a multiyear projection report for each fund.

2. If Yes, identify each fund, by name and number, that is projected to have a negative ending fund balance for the current fiscal year. Provide reasons for the negative balance(s) and explain the plan for how and when the problem(s) will be corrected.

ADDITIONAL FISCAL INDICATORS

The following fiscal indicators are designed to provide additional data for reviewing agencies. A "Yes" answer to any single indicator does not necessarily suggest a cause for concern, but may alert the reviewing agency to the need for additional review. DATA ENTRY: Click the appropriate Yes or No button for items A2 through A9; Item A1 is automatically completed based on data from Criterion 9.

A1.	Do cash flow projections show that the district will end the current fiscal year with a negative cash balance in the general fund? (Data from Criterion 9B-1, Cash Balance, are used to determine Yes or No)	No
A2.	Is the system of personnel position control independent from the payroll system?	No
A3.	Is enrollment decreasing in both the prior and current fiscal years?	Yes
A4.	Are new charter schools operating in district boundaries that impact the district's enrollment, either in the prior or current fiscal year?	No
A5.	Has the district entered into a bargaining agreement where any of the current or subsequent fiscal years of the agreement would result in salary increases that are expected to exceed the projected state funded cost-of-living adjustment?	No
A6.	Does the district provide uncapped (100% employer paid) health benefits for current or retired employees?	Yes
A7.	Is the district's financial system independent of the county office system?	No
A8.	Does the district have any reports that indicate fiscal distress pursuant to Education Code Section 42127.6(a)? (If Yes, provide copies to the county office of education.)	No
A9.	Have there been personnel changes in the superintendent or chief business official positions within the last 12 months?	Yes

When providing comments for additional fiscal indicators, please include the item number applicable to each comment.

Comments:
(optional)

A3: Enrollment Trends The district is expecting a decline in enrollment, which is reflected in the district's Multi-Year Projection (MYP).
A6:Retiree Health Benefits The district offers uncapped health benefits to vested retirees hired prior to 2013. These benefits are provided until the retirees reach the age of 69. A9:The position of Assistant Superintendent of Business Services is currently vacant.

End of School District Second Interim Criteria and Standards Review

Second Interim
Actuals to Date 2024-25
Technical Review Checks
Phase - All
Display - Exceptions Only

Oxnard Elementary **Ventura County**

Following is a chart of the various types of technical review checks and related requirements:

F - Fatal (Data must be corrected; an explanation is not allowed)
W/WC - Warning/Warning with Calculation (If data are not correct, correct the data; if data are correct an explanation is required)
O - Informational (If data are not correct, correct the data; if data are correct an explanation is optional, but encouraged)

Second Interim
Board Approved Operating Budget 2024-25
Technical Review Checks
Phase - All
Display - Exceptions Only

Oxnard Elementary **Ventura County**

Following is a chart of the various types of technical review checks and related requirements:

F - Fatal (Data must be corrected; an explanation is not allowed)
W/WC - Warning/Warning with Calculation (If data are not correct, correct the data; if data are correct an explanation is required)
O - Informational (If data are not correct, correct the data; if data are correct an explanation is optional, but encouraged)

Second Interim
Original Budget 2024-25
Technical Review Checks
Phase - All
Display - Exceptions Only

Oxnard Elementary **Ventura County**

Following is a chart of the various types of technical review checks and related requirements:

F - Fatal (Data must be corrected; an explanation is not allowed)
W/WC - Warning/Warning with Calculation (If data are not correct, correct the data; if data are correct an explanation is required)
O - Informational (If data are not correct, correct the data; if data are correct an explanation is optional, but encouraged)

Second Interim
Projected Totals 2024-25
Technical Review Checks
Phase - All
Display - Exceptions Only

Oxnard Elementary **Ventura County**

Following is a chart of the various types of technical review checks and related requirements:

F - Fatal (Data must be corrected; an explanation is not allowed)
W/WC - Warning/Warning with Calculation (If data are not correct, correct the data; if data are correct an explanation is required)
O - Informational (If data are not correct, correct the data; if data are correct an explanation is optional, but encouraged)

OSD BOARD AGENDA ITEM

Name of Contributor: Dr. Anabolena DeGenna **Date of Meeting:** March 19, 2025

Agenda Section: Section D: Action Items

Approval of Agreement #24-211, Nigro & Nigro, PC – District's Measure I Building Bond Audit Services for Fiscal Years 2024-25 and 2025-26 (Nuñez)

Nigro & Nigro, PC will perform the District's Measure I Building Fund Bond Audits.

Terms of Agreement: March 20, 2025 – June 30, 2026

FISCAL IMPACT:
Not to Exceed: $20,000.00 for Both Years - General Fund

RECOMMENDATION:
It is the recommendation of the Director of Fiscal Services that the Board of Trustees approve Agreement #24-211 with Nigro & Nigro, PC.

ADDITIONAL MATERIALS:

Attached: Agreement #24-211, Nigro & Nigro 2024-2026 Measure I Audit Svcs (4 Pages)
Letter of Engagement (4 Pages)

Oxnard School District

Short-Term Services Agreement

Use ONLY for low cost, low risk, short-term services – No Sub-Contractors

Requisition Number

Purchase Order Number

24-211

Contract Number

This Services Agreement (the "Agreement") is made and entered into March 19,2025 by and between the OXNARD SCHOOL DISTRICT (the "Local Educational Agency" or District") and Nigro & Nigro PC, (hereinafter referred to as "Provider"). District and Provider may be referred to herein individually as a "Party" and collectively as the "Parties."

Nigro & Nigro PC	951-698-8783
Provider	Telephone Number
25220 Hancock Ave., Ste. 400	pgienn@nncpas.com
Street Address	E-mail Address
Murrieta, CA 92562-0903	
City, State, Zip code	Tax Identification or Social Security Number

Services

Perform the District's Measure I Building Fund Bond Audit services.

Description of Services (if more space is needed, attach pages labeled as ATTACHMENT A, which is incorporated herein in full)

March 20, 2025 through June 30, 2026	TBD	TBD
Date(s) of Service	Hour(s) of Service	Location

Fees

Compensation for Services	$ 20,000.00
Other Ancillary Cost, as applicable	$ 0.00
Total not to Exceed	$ 20,000.00

☑ W-9 received

Payment. District will pay Provider within 30 days after receipt of an invoice, in form and content acceptable to District, and reflecting charges for District approved costs and services performed by Provider and not previously invoiced.

Conditions. Provider will have no obligation to provide services until District returns a signed copy of this Agreement.

Nature of Relationship. The parties agree the relationship created by this Agreement is that of independent contractor. Provider understands and agrees that the Provider, officers, agents, or employees of Provider are not entitled to any benefits normally offered or conveyed to District employees, including but not limited to coverage under the California Workers' Compensation Insurance laws.

Binding Effect. This Agreement shall inure to the benefit and shall be binding upon all of the parties to this Agreement, and their respective successors in interest or assigns.

Termination or Amendment. This Agreement may be terminated or amended in writing at any time by mutual written consent of all of the parties to this Agreement, and may be terminated by either party for any reason by giving the other party 30 days advance written notice.

Compliance with Laws. Provider hereby agrees that Provider, and each of its officers, agents, and employees (each a "Provider Party) shall obey all local, state, and federal laws and regulations in the performance of this Agreement, including but not limited to each of the following laws and regulations, as and if applicable:

- Provider shall be responsible for the safety of its employees and shall comply with California Code of Regulations Title 8, section 3205, COVID-19 Prevention.

- Provider shall ensure that each Provider Party who is on-site supporting school functions is compliant with all the following laws, if and as applicable:
  - Fingerprinting / criminal background investigations (see paragraph titled "Fingerprinting, below);
  - Public Health Department Orders and Guidance or other related mandates related to COVID-19, so long as such Orders and Guidance are in effect during the Term of this Agreement;
  - Tuberculosis Clearance (Education Code § 49406)

Non-Discrimination and Equal Employment Opportunity. Provider represents and agrees that it does not and shall not discriminate against any employee or applicant for employment, company, individual or group of individuals, because of ancestry, age, color, disability (physical and mental, including HIV and AIDS), genetic information, gender identity, gender expression, marital status, medical condition, military or veteran status, national origin, race, religion, sex/gender, and sexual orientation.

Confidentiality. Provider agrees to maintain the confidentiality of all District and District-related data, information, and records including but not limited to student identifiable information and employee personnel information pursuant to all California and Federal statutory laws relating to privacy, confidentiality, and information security including but not limited to California Education Code sections 49060 – 49085 and the Family Educational Rights and Privacy Act (FERPA), that currently exist or exist at any time during the term of this Agreement. All such records and information shall be considered confidential and kept confidential by Provider and Provider's officers, agents, employees, participants, vendors, or customers.

Fingerprinting. Provider shall ensure that Provider and any employee who interacts with students, outside of the immediate supervision and control of the student's parent or guardian or a school employee, has a current valid criminal records summary as described in California *Education Code* section 44237. If any services will be provided on-site, or through an app or other electronic method that might allow any interaction between any student and Provider shall, prior to commencing any service hereunder, provide the District a Fingerprinting/ Criminal Background Check investigation Certificate, in form and substance satisfactory to the District. While this Agreement is in effect, Provider shall immediately provide any arrest and conviction information it receives concerning any person providing Services hereunder to the District.

Food Vendors. Ventura County Environmental Health Facilities Permit: https://vcrma.org/consumer-food-protection

❑ Mobile Food Facility permit ❑ Temporary Food Facility permit ❑ Exempt – must show documentation

Date checked by school official: _____initials: _____

Indemnification. To the fullest extent permitted by law, Provider agrees to defend, indemnify, and hold harmless District, its governing board, officers, administrators, managers, agents, employees, successors, assigns, independent contractors and/or volunteers from and against any and all claims, demands, monetary or other losses, loss of use, damages and expenses, including but not limited to, reasonable legal fees and costs, or other obligations or claims arising out of any liability or damage to person or property resulting from bodily injury, illness, communicable disease, virus, pandemic, or any other loss, sustained or claimed to have been sustained arising out of activities of the Provider or those of any of its officers, agents, employees, participants, vendors, or customers of Provider, whether such act or omission is authorized by this Agreement or not. Provider also agrees to pay for any and all damage to the real and personal property of the District, or loss or theft of such property, or damage to the Property done or caused by such persons. District assumes no responsibility whatsoever for any property placed on District premises by Provider, Provider's agents, employees, participants, vendors, or customers. The provisions of this Indemnification do not apply to any damage or losses caused solely by the intentional misconduct of the District or any of its governing board, officers, administrators, managers, agents, employees and/or volunteers.

This Indemnification shall survive termination of this Agreement, for any reason whatsoever, and binds each party's legal representatives, successors, and assigns.

Insurance. Provider, at its own cost and expense, shall procure and maintain during the term of this Agreement, policies of insurance for the following types of coverage:

a. Commercial General Liability Insurance. Provider shall procure and maintain, during the term of this Agreement, not less than the following General Liability Insurance coverage in the amounts of $1,000,000 per occurrence and $2,000,000 aggregate.

   Commercial General Liability insurance shall include products/completed operations, property damage, and personal and advertising injury coverage.

b. Automobile Liability. Provider shall procure and maintain, during the full term of this Agreement following Automobile Liability Insurance including non-owned and leased automobiles, as applicable with the following coverage limits:

Personal vehicles:	$500,000.00 combined single limit or
	$100,000.00 per person / $300,000.00 per accident
Commercial vehicles:	$1,000,000.00 per accident for bodily injury and property damage

c. Workers' Compensation Insurance. Provider shall procure and maintain, during the term of this Agreement, Workers' Compensation Insurance, as required by California law, on all of its employees engaged in work related to the performance of this Agreement. Provider shall procure and maintain Employers' Liability insurance coverage of $1,000,000. Absent proof of Workers' Compensation Insurance, Provider will submit a fully executed Certification of Exemption from Workers' Compensation Insurance, which District in its sole discretion may accept or reject.

d. Other Coverage as Dictated by the District. If any employee of Provider interacts with students, outside of the immediate supervision and control of the student's parent or guardian or a certificated school employee, Provider shall procure and maintain, during the term of this Agreement, Abuse and Molestation coverage in the amounts of $2,000,000 per occurrence and $4,000,000 aggregate.

If professional services are offered, Provider shall procure and maintain, during the term of this Agreement, Professional Liability (Errors and Omissions) insurance coverage in the amounts of $1,000,000 per occurrence and $2,000,000 aggregate.

e. Provider's insurance is primary and will not seek contribution from any other insurance available to the District. Provider further hereby waives any and all rights of subrogation that it may have against the District.

f. Certificates of Insurance. Provider shall provide certificates of insurance to the District as evidence of the insurance coverage required herein, not less than 15 days prior to commencing the proposed activity, and at any other time upon the request of the District. Certificates of insurance will be deemed invalid if proper endorsements are not attached. Certificates of such insurance shall be filed with the District on or before commencement of the services under this Agreement.

g. Endorsements. Provider's Commercial General Liability insurance and Commercial Automobile Liability coverage and Abuse and Molestation coverage shall name the District, its governing board, officers, agents, employees, and/or volunteers as additional insureds. All endorsements specifying additional insureds for any of the Insurance Policies shall be as indicated below or an equivalent endorsement reasonably acceptable to the District.

1) General Liability: CG 20 26 10 01
2) Primary, non-contributory: CG 20 01 04 13
3) Waiver of subrogation: CG 24 04 05 09
4) Commercial Automobile Liability: CA 20 48 10 13

h. Acceptability of Insurers. Insurance is to be placed with insurers with a current A.M. Best's rating of no less than A: VII, unless otherwise acceptable to the District.

i. Insurance written on a "claims made" basis is to be renewed by the Provider for a period of three (3) years following termination of this Agreement. Such insurance must have the same coverage and limits as the policy that was in effect during the term of this agreement and will cover the Provider for all claims made. If coverage is canceled or non-renewed, and not replaced with another claims-made policy form with a Retroactive Date prior to the contract effective date, the Consultant must purchase "extended reporting" coverage for a minimum of three (3) years after completion of the Services.

j. Failure to Procure Insurance**.** Failure on the part of Provider to procure or maintain required insurance shall constitute a material breach of contract under which the District may immediately terminate this Agreement

Governing Law and Venues. This Agreement shall be interpreted in accordance with the laws of the State of California. If any action is brought to interpret or enforce any term of this Agreement, the action shall be brought in state or federal court situated in the County of Ventura, State of California.

Dispute Resolution. If any dispute arises out of or in connection with the Agreement, representatives of the Parties with authority to settle the dispute shall communicate, in person, electronically, or in writing within 30 days of written notice, in a good faith effort to resolve the dispute.

The parties agree that, in the event of any unresolved dispute under the agreement in which the amount sought is $5,000.00 or less, any litigation to resolve the dispute shall be brought in the Ventura County Small Claims Court.

If the unresolved amount in dispute exceeds $5,000.00, the parties agree that they will first submit the matter to a mutually agreed upon mediator. Notwithstanding the following section, Attorneys Fees, the cost of the mediator shall be borne equally by the parties.

Attorney Fees. In the event of any action or proceeding to interpret or enforce the terms of this Agreement, the prevailing party, as determined by the court or mediator, shall be entitled to recover its reasonable attorney fees and costs incurred in connection with such actions or proceeding.

Nature of Agreement. This Agreement represents the entire agreement between the parties hereto with respect to the subject matter hereof and supersedes any and all other agreements and communications however characterized, written or oral, between or on behalf of the parties hereto with respect to the subject matter hereof. This Agreement may only be modified by a written instrument signed by authorized representatives of each of the parties hereto.

Counterpart Execution. This Agreement may be executed in any number of counterparts which, when taken together, shall constitute one and the same instrument. Executed counterparts of this Agreement may be delivered by PDF email or electronic facsimile transmission and shall have the same legal effect as an "ink-signed" original.

Signature Authority. Provider represents and warrants that Provider has all requisite power and authority to conduct its business and to execute, deliver, and perform this Agreement.

Acknowledgement and Agreement

I have read this Agreement and agree to its terms

Provider Authorized Signer	Signature	Date

Oxnard School District

Melissa Reyes		
Director, Purchasing	Signature	Date

NIGRO & NIGRO PC

A Professional Accountancy Corporation

March 6, 2025

To the Board of Education and Management of
Oxnard School District
1051 South A Street
Oxnard, CA 93030

We are pleased to confirm our understanding of the services we are providing for Oxnard School District for the fiscal years ending June 30, 2025 and June 30, 2026. We will audit the financial statements of the Measure "I" Building Fund of Oxnard School District as of and for the fiscal years ending June 30, 2025 and June 30, 2026. We will also conduct an annual performance audit in accordance with Government Auditing Standards to ensure that bond proceeds have been spent only on allowable costs.

Objective

The objective of our financial audit is the expression of an opinion about whether the financial statements of the Measure I Building Fund are fairly presented, in all material respects, in conformity with generally accepted accounting principles.

The objective of our performance audit is the expression of an opinion about whether the expenditures charged to the Building Fund have been made in accordance with the bond project list approved by the voters through the approval of Measure "I".

Our audit will be conducted in accordance with auditing standards generally accepted in the United States of America and will include tests of the accounting records of Oxnard School District and other procedures we consider necessary to enable us to express an opinion on whether the financial statements are fairly presented, in all material respects, in conformity with generally accepted accounting principles. If our opinion is other than unqualified, we will fully discuss the reasons with you in advance. If, for any reason, we are unable to complete the audit or form an opinion, we may disclaim an opinion or not issue a report.

Audit Procedures

An audit includes examining, on a test basis, evidence supporting the amounts and disclosures in the financial statements. Therefore, our audit will involve judgment about the number of transactions to be examined and the areas to be tested. Also, we will plan and perform the audit to obtain reasonable rather than absolute assurance about whether the financial statements are free of material misstatement, whether from errors, fraudulent financial reporting, misappropriation of assets, or violations of laws or governmental regulations that are attributable to the entity or to acts by management or employees acting on behalf of the entity. An audit is not designed, though, to detect immaterial misstatements or violations of laws or governmental regulations that do not have a direct and material effect on the financial statements. However, because of the concept of reasonable assurance and because we will not perform a detailed examination of all transactions, there is a risk that material misstatements may exist and not be detected by us. We will inform you of any material errors, fraudulent financial reporting or misappropriation of assets that come to our attention.

Jeff Nigro, CPA, CFE | Shannon Bishop, CPA | Peter Glenn, CPA, CFE | Paul J. Kaymark, CPA | Jessica Berry, CPA | Angelika Vartikyan, CPA | Jared Solmonsen, CPA

MURRIETA OFFICE 25220 Hancock Avenue, Suite 400, Murrieta, CA 92562 • P: (951) 698-8783 • F: (951) 699-1064
WALNUT CREEK OFFICE 2121 N. California Blvd. Suite 290, Walnut Creek, CA 94596 • P: (844) 557-3111 • F: (844) 557-3444
www.nncpas.com • Licensed by the California Board of Accountancy

In addition, we will inform you of any violations of laws or governmental regulations that come to our attention, unless clearly inconsequential. Our responsibility as auditors is, of course, limited to the period covered by our audit and does not extend to any later periods for which we are not engaged as auditors.

As part of obtaining reasonable assurance about whether the financial statements are free of material misstatement, we will perform tests of Oxnard School District's compliance with applicable laws and regulations and the provisions of contracts and agreements. However, the objective of our audit will not be to provide an opinion on overall compliance and we will not express such an opinion. Management maintains the responsibility for identifying and ensuring that Oxnard School District complies with applicable laws, regulations, contracts, and other agreements.

Our procedures will also include tests of documentary evidence supporting the transactions recorded in the accounts, may include tests of the physical existence of inventories, and will include direct confirmation of receivables and certain other assets and liabilities by correspondence with selected individuals, creditors, and financial institutions. We may request written representations from your attorneys as part of the engagement, and they may bill you for responding. At the conclusion of our audit, we will also request certain written representations from you about the financial statements and related matters.

An audit includes obtaining an understanding of internal control sufficient to plan the audit and to determine the nature, timing, and extent of audit procedures to be performed. An audit is not designed to provide assurance on internal control or to identify deficiencies in internal control. However, during the audit, we will communicate internal control-related matters to management and those charged with governance as required by professional standards.

Management Responsibilities

We understand that you will make all financial records and related information available to us for our audit and that you are responsible for the accuracy and completeness of that information. The management of Oxnard School District has the responsibility for the proper recording of transactions in the books of account, for establishing and maintaining effective internal controls, including monitoring ongoing activities, for the safeguarding of assets, for ensuring compliance with applicable laws and regulations, and for the preparation and substantial accuracy of the financial statements, in accordance with generally accepted accounting principles. Although we may advise you about appropriate accounting principles and their application, the selection and method of application are the sole responsibility of the Oxnard School District' management. As part of our engagement, we may also propose standard, adjusting, or correcting journal entries on your financial statements. Management, however, has final responsibility for reviewing the proposed entries and understanding the nature and impact of the proposed entries to the financial statements. It is our understanding that management has designated qualified individuals with the necessary expertise to be responsible and accountable for overseeing all services performed as part of this engagement as well as evaluating the adequacy and results of those services and accepting responsibility for the services. In addition, management is responsible for adjusting the financial statements for all material adjustments and for confirming to us in the management representation letter that all uncorrected misstatements aggregated by us during the current audit engagement are immaterial, both individually and in the aggregate, to the financial statements taken as a whole.

By your signature below, you acknowledge that you are responsible for the design and implementation of programs and controls to prevent and detect fraud, and for informing us about all known or suspected fraud affecting the government that involves management, employees who have significant roles in internal control, and others where the fraud could have a material effect on the financial statements. You are also responsible for informing us of your knowledge of any allegations of fraud or suspected fraud affecting the government that have been received in communications from employees, former employees, regulators, or others. In addition, you are responsible for identifying and ensuring that the entity complies with applicable laws and regulations and for taking timely and appropriate actions to remedy any fraud, illegal acts, or violations of contracts and agreements. You agree that you will confirm to us in your management representation letter your understanding of your responsibilities as defined in this letter.

Other
Peter Glenn, CPA, CFE is the engagement partner for the audit services specified in this letter. His responsibilities include supervising Nigro & Nigro's services performed as part of this engagement and signing or authorizing another qualified firm representative to sign the audit report.

It is our policy to keep records related to this engagement for seven (7) years. However, Nigro & Nigro does not keep any original client records, so we will return those to you at the completion of the services rendered under this engagement. When records are returned to you, it is your responsibility to retain and protect your records for possible future use, including potential examination by any government or regulatory agencies.

By your signature below, you acknowledge and agree that upon the expiration of the seven-year period Nigro & Nigro shall be free to destroy our records related to this engagement.

The maximum annual fee for auditing services under the terms of this agreement shall be $10,000 for the fiscal years ending June 30, 2025 and June 30, 2026. Our invoices for these fees will be rendered each month as work progresses and are payable upon presentation. In accordance with our firm policies, work may be suspended if your account becomes 90 days or more overdue and may not be resumed until your account is paid in full. The above fee is based on anticipated cooperation from your personnel and the assumption that unexpected circumstances will not be encountered during the audit. If significant additional time is necessary, we will discuss it with you and arrive at a new fee estimate before incurring additional costs.

If a dispute arises among the parties hereto, the parties agree to first try in good faith to settle the dispute by mediation administered by the American Arbitration Association under its Rules for Professional Accounting and Related Services Disputes before resorting to litigation. The costs of any mediation proceeding shall be shared equally by all parties.

Client and accountant both agree that any dispute over fees charged by the accountant to the client will be submitted for resolution by arbitration in accordance with the Rules for Professional Accounting and Related Services Disputes of the American Arbitration Association. Such arbitration shall be binding and final. IN AGREEING TO ARBITRATION, WE BOTH ACKNOWLEDGE THAT, IN THE EVENT OF A DISPUTE OVER FEES CHARGED BY THE ACCOUNTANT, EACH OF US IS GIVING UP THE RIGHT TO HAVE THE DISPUTE DECIDED IN A COURT OF LAW BEFORE A JUDGE OR JURY AND INSTEAD WE ARE ACCEPTING THE USE OF ARBITRATION FOR RESOLUTION.

The agreement may be cancelled annually if notified by the District or auditor by February 1 for the audit of the following fiscal year. Additional extensions beyond 2026 may be secured on a year-by-year basis, subject to the agreement of the District and the auditor.

We appreciate the opportunity to be of service to Oxnard School District and believe this letter accurately summarizes the significant terms of our engagement. If you have any questions, please let us know. If you agree with the terms of our engagement as described in this letter, please sign the enclosed copy and return it to us.

Very truly yours,

Nigro + Nigro, PC.

Nigro & Nigro, PC

RESPONSE:
This letter correctly sets forth the understanding of Oxnard School District.

APPROVED:

_____

Oxnard School District

_____

Date

OSD BOARD AGENDA ITEM

Name of Contributor: Dr. Anabolena DeGenna **Date of Meeting:** March 19, 2025

Agenda Section: Section E: Approval of Minutes

Approval of Minutes (DeGenna)

It is the recommendation of the Superintendent that the Board of Trustees approve the minutes of Board meetings, as presented:

- January 15, 2025 Regular Board Meeting

FISCAL IMPACT:
N/A

RECOMMENDATION:
It is the recommendation of the Superintendent that the Board approve the minutes of Board meetings, as presented.

ADDITIONAL MATERIALS:

Attached: Minutes January 15, 2025 Regular Board Meeting (11 pages)

OXNARD SCHOOL DISTRICT

1051 South "A" Street • Oxnard, California 93030 • 805/385-1501

BOARD OF TRUSTEES
Veronica Robles-Solis, President
Brian Melanephy, Clerk
Monica Madrigal Lopez, Member
Rose Gonzales, Member
Cynthia Salas, Member

ADMINISTRATION
Anabolena DeGenna, Ed.D.
Superintendent
Vacant
Assistant Superintendent,
Business & Fiscal Services
Aracely Fox, Ed.D.
Assistant Superintendent,
Educational Services
Scott Carroll, Ed.D.
Acting Assistant Superintendent,
Human Resources

MINUTES
REGULAR BOARD MEETING
Wednesday, January 15, 2025

5:00 PM - Open Meeting
5:30 PM - Study Session
7:00 PM - Return to Regular Board Meeting

***NOTE:** In accordance with requirements of the Americans with Disabilities Act and related federal regulations, individuals who require special accommodation, including but not limited to an American Sign Language interpreter, accessible seating or documentation in accessible formats, should contact the Superintendent's office at least two days before the meeting date.

Persons wishing to address the Board of Trustees on any agenda item may do so by completing a Speaker Request Form and submitting the form to the Associate Superintendent of Educational Services. The speaker should indicate on the card whether they wish to speak during Public Comment or when a specific agenda item is considered.

Watch the meeting live: osdtv.oxnardsd.org

Broadcasted by Charter Spectrum, Channel 20 &
Frontier Communications, Channel 37

Note: No new items will be considered after 10:00 p.m. in accordance with Board Bylaws, BB 9323 – Meeting Conduct

Section A: PRELIMINARY

A.1. Call to Order and Roll Call (5:00 PM)

President Robles-Solis called the meeting to order at 5:00 p.m.

Present: Trustees Cynthia Salas, Rose Gonzales, Monica Madrigal Lopez (left meeting after Item D.4), Brian Melanephy, and Veronica Robles-Solis (left meeting after Closed Session). Also in attendance were Superintendent Anabolena DeGenna, Assistant Superintendent Aracely Fox, Acting Assistant Superintendent Scott Carroll, and Executive Assistant Lydia Lugo Dominguez.

President Robles-Solis called for a moment of silence in memory of former Trustee Al Duff.

A.2. Pledge of Allegiance to the Flag

Sebastian Gaeta, 3rd grade student in Ms. Moran's class at Rose Avenue School, led the audience in the Pledge of Allegiance.

A.3. District's Vision and Mission Statement

Adrian Wayiera, 5th grade student in Ms. Hwan's class at Rose Avenue School, read the district's Mission and Vision Statement in English. Crystal Martinez, 4th grade student in Ms. Medrano's class at Rose Avenue School, read the district's Mission and Vision Statement in Spanish. Mishak Havugimana, 4th grade student in Ms. Medrano's class at Rose Avenue School, read the Rose Avenue School Mission and Vision Statement.

A.4. Presentation by Rose Avenue School

Diana Perez, Principal, Rose Avenue School, provided a presentation about Rose Avenue.

A.5. Adoption of Agenda (Superintendent)

The agenda was adopted with the following changes:

- Item A.13 – Presentation of the Fremont Academy Reconstruction Project (Hubbard/CFW) – *item was pulled from the agenda as the presenters were unable to attend due to illness.*
- Item C.10 – Approval of Overnight Field Trip and Agreement #24-185 – United Boys & Girls Clubs of Santa Barbara County - Camp Whittier – Soria School (Fox/Kemp) - *item was pulled from the agenda due to the camp's additional insurance requirement that goes against the district's JPA*

The following items were moved from Consent to Action at the Board's request:

- Item C.3 – Approval of School Accountability Report Cards (Fox/Thomas)
- Item C. 7 - Approval of Amendment #1 to Agreement #24-32 – Acceleration Behavioral Therapies (DeGenna/Jefferson)

- Item C.8 – Approval of Agreement #24-183 – FEV Tutors, Inc. (Fox/Shea)
- Item C.9 - Approval of Agreement #24-184 – Insight Neuropsychology (DeGenna/Jefferson)
- Item C.11 – Approval of Agreement #24-186 – Leadership Associates, LLC (Carroll)

Motion #24-74 Adoption of Agenda as Amended
Mover: Rose Gonzales
Seconder: Brian Melanephy
Moved To: Adopt
Ayes: 5 - Veronica Robles-Solis, Brian Melanephy, Monica Madrigal Lopez, Rose Gonzales, Cynthia Salas
Motion Result: Passed

A.6. Introduction of Newly Appointed Oxnard School District Administrator (DeGenna)

The newly appointed Oxnard School District administrator was introduced to the Board of Trustees:

- Alina Silvestre, Assistant Principal at Elm, McAuliffe and McKinna

A.7. Recognition of Driscoll's Partnership with Oxnard School District (Fox/Ruvalcaba)

Dr. Aracely Fox, Assistant Superintendent, Educational Services, introduced Teresa Ruvalcaba, Manager of Equity, Family, and Community Engagement, and Karina Lopez, Parent Support Liaison, who presented tokens to Driscoll's representatives Paulina Veana Schiavon and Hector Murillo in recognition of their ongoing partnership with Oxnard School District.

A.8. Study Session - Report Outlining the Support System and Resources Available to TK Teachers (Fox)

Dr. Aracely Fox, Assistant Superintendent, Educational Services, and Katherine Leppaluoto, Teacher on Special Assignment, provided information relative to the support system and resources available to Transitional Kindergarten teachers.

A.9. Closed Session – Public Participation/Comment (Limit three minutes per person per topic)

There were no comments.

A.10. Closed Session

The Board convened to closed session at 7:00 p.m. to consider the following items:

1. Pursuant to Section 54956.9 of Government Code:
   Conference with Legal Counsel
   - Existing Litigation:
   - Oxnard School District et al. Central District No. CV-04304-JAK-FFM
   - S.T. v. Oxnard SD, et al., Case #2023-CUOE015904

- Anticipated Litigation:
  - Significant exposure to litigation pursuant to paragraph (2) or (3) of subdivision (d) of Section 54956.9: 2 cases

2. Pursuant to Sections 54957.6 and 3549.1 of the Government Code:
   Conference with Labor Negotiator:
   Agency Negotiators: OSD Assistant Superintendent, Human Resources, and Garcia Hernandez & Sawhney, LLP
   Association(s): OEA, CSEA, OSSA; and All Unrepresented Personnel-Administrators, Classified Management, Confidential

3. Pursuant to Section 54957 of the Government Code the Board will consider personnel matters, including:
   - Public Employee(s) Discipline/Dismissal/Release

A.11. Reconvene to Open Session (7:00 PM)
The Board reconvened to open session at 7:03 p.m.

A.12. Report Out of Closed Session
Board Clerk Melanephy reported that there was nothing to report out.

A.13. Presentation of the Fremont Academy Reconstruction Project (Hubbard/CFW)
Item pulled at Adoption of Agenda.

Section B: PUBLIC COMMENT/HEARINGS

B.1. Public Comment (3 minutes per speaker) / Comentarios del Público (3 minutos por cada ponente)
There were no comments.

Section C: CONSENT AGENDA

The consent agenda was approved as amended.

Motion #24-75 Approval of Consent Agenda as Amended
Mover: Cynthia Salas
Seconder: Monica Madrigal Lopez
Moved To: Approve
Ayes: 4 - Brian Melanephy, Monica Madrigal Lopez, Rose Gonzales, Cynthia Salas
Absent: 1 - Veronica Robles-Solis
Motion Result: Passed

C.1. Approval of the 2024-25 Quarterly Report on Williams Uniform Complaints, Second Quarter (Carroll)

As presented.

C.2. Personnel Actions (Carroll/Fuentes)
As presented.

C.3. Approval of School Accountability Report Cards (Fox/Thomas)
Item moved to Action Item D.3 at Adoption of Agenda.

C.4. Approval and Adoption of the December 2024 Semi-Annual Implementation Program Update as an Adjustment to the Enhanced Master Construct Program (Hubbard/CFW)
As presented.

C.5. Purchase Order/Draft Payment Report #24-06 (Núñez/Reyes)
As presented.

Section C: APPROVAL OF AGREEMENTS

C.6. Approval of Amendment #002 for Agreement #23-100 for Inspector of Record Services with Kenco Construction Services, Inc., for New PS/TK facilities at Driffill Elementary School (Hubbard/CFW)
To extend the agreement to ensure the Inspector of Record Services continue for the remainder of the project due to an unforeseen construction project duration extension, in the amount of $36,960.00, to be paid out of Master Construct and Implementation Funds.

C.7. Approval of Amendment #1 to Agreement #24-32 – Acceleration Behavioral Therapies (DeGenna/Jefferson)
Item moved to Action Item D.4 at Adoption of Agenda.

C.8. Approval of Agreement #24-183 – FEV Tutors, Inc. (Fox/Shea)
Item moved to Action Item D.5 at Adoption of Agenda.

C.9. Approval of Agreement #24-184 – Insight Neuropsychology (DeGenna/Jefferson)
Item moved to Action Item D.6 at Adoption of Agenda.

C.10. Approval of Overnight Field Trip and Agreement #24-185 – United Boys & Girls Clubs of Santa Barbara County - Camp Whittier – Soria School (Fox/Kemp)
Item pulled at Adoption of Agenda.

C.11. Approval of Agreement #24-186 – Leadership Associates, LLC
(Carroll) Item moved to Action Item D.7 at Adoption of Agenda.

C.12. Approval of Agreement #24-187 for Geotechnical Investigation Services with Universal Engineering Sciences UES for the Lemonwood Elementary School Changing Room Project (Hubbard/CFW)

To select UES as the Geotechnical Engineer of Record for the Lemonwood Elementary School Changing Room Project and approve a corresponding agreement, in the amount of $14,000.00, to be paid out of Enhanced Master Construct Program Funds

C.13. Approval of Agreement #24-188 for Geotechnical Investigation Services with Universal Engineering Sciences UES for the Marshall Elementary School Changing Room Project (Hubbard/CFW)

To select UES as the Geotechnical Engineer of Record for the Marshall Elementary School Changing Room Project and approve a corresponding agreement, in the amount of $14,000.00, to be paid out of Enhanced Master Construct Program Funds.

C.14. Approval of Agreement #24-189 – Thiel College (Carroll)

For Oxnard School District to offer supervised internship opportunities to students enrolled in the Thiel College Master of Science in Speech Pathology program, January 16, 2025 to June 30, 2028, at no cost to Oxnard School District.

Section C: RATIFICATION OF AGREEMENTS

C.15. Ratification of Amendment #1 to Agreement #23-246 - Ventura County Office of Education/SELPA (DeGenna/Jefferson)

For providing Instructional Teaching at home through the end of the 2023-2024 fiscal year, in the amount of $6,702.91, to be paid out of Special Education Funds.

Section D: ACTION ITEMS

D.1. Approval of Speech Language Pathologist Permit Waiver for Nohelia Caceres to Serve as a Speech Therapist at Harrington School for the 2024-2025 School Year (Carroll)

Dr. Scott Carroll, Acting Assistant Superintendent, Human Resources, recommended the Board's approval of a Speech Language Pathologist Permit Waiver for Nohelia Caceres to serve as a Speech Therapist at Harrington School for the 2024-2025 School Year

Motion #24-76 Approval of Speech Language Pathologist Permit Waiver for Nohelia Caceres to Serve as a Speech Therapist at Harrington School for the 2024-2025 School Year
Mover: Monica Madrigal Lopez
Seconder: Rose Gonzales
Moved To: Approve
Ayes: 4 - Brian Melanephy, Monica Madrigal Lopez, Rose Gonzales, Cynthia Salas
Absent: 1 - Veronica Robles-Solis
Motion Result: Passed

D.2. Approval of School-Level Parent and Family Engagement Policies for 2024-2025 School Year - 20 Schools (Fox/Ruvalcaba)

Dr. Aracely Fox, Assistant Superintendent, Educational Services, and Teresa Ruvalcaba, Manager, Equity, Family and Community Engagement, recommended the Board's approval of the School-Level Parent and Family Engagement Policies for the 2024-2025 School Year, for 20 Schools, as presented.

Motion #24-77 Approval of School-Level Parent and Family Engagement Policies for 2024-2025 School Year - 20 Schools
Mover: Cynthia Salas
Seconder: Rose Gonzales
Moved To: Approve
Ayes: 4 - Brian Melanephy, Monica Madrigal Lopez, Rose Gonzales, Cynthia Salas
Absent: 1 - Veronica Robles-Solis
Motion Result: Passed

D.3. Approval of School Accountability Report Cards (Fox/Thomas)

Dr. Aracely Fox, Assistant Superintendent, Educational Services, and Anna Thomas, Director, School Performance and Student Outcomes, recommended the Board's approval of School Accountability Report Cards (SARCs), as presented.

Motion #24-79 Approval of School Accountability Report Cards
Mover: Cynthia Salas
Seconder: Rose Gonzales
Moved To: Approve
Ayes: 4 - Brian Melanephy, Monica Madrigal Lopez, Rose Gonzales, Cynthia Salas
Absent: 1 - Veronica Robles-Solis
Motion Result: Passed

D.4. Approval of Amendment #1 to Agreement #24-32 – Acceleration Behavioral Therapies (DeGenna/Jefferson)

Dr. Ana DeGenna, Superintendent, and Danielle Jefferson, Director, Special Education Services, recommended the Board's approval of Amendment #1 to Agreement #24-32 with Acceleration Behavioral Therapies, to continue supporting Special Education students with Applied Behavioral Therapy and related services through the 2024-2025 fiscal year, in the amount not to exceed $1,500,000.00, to be paid out of Special Education Funds.

Motion #24-80 Approval of Amendment #1 to Agreement #24-32 – Acceleration Behavioral Therapies
Mover: Cynthia Salas
Seconder: Rose Gonzales
Moved To: Approve

Ayes: 4 - Brian Melanephy, Monica Madrigal Lopez, Rose Gonzales, Cynthia Salas
Absent: 1 - Veronica Robles-Solis
Motion Result: Passed

D.5. Approval of Agreement #24-183 – FEV Tutors, Inc. (Fox/Shea)

Dr. Aracely Fox, Assistant Superintendent, Educational Services and Dr. Ginger Shea, Director, Enrichment & Specialized Programs, recommended the Board's approval of Agreement #24-183 with FEV Tutor, Inc., to provide virtual Math/ELA Enrichment tutoring for 100 students, February 1, 2025 through May 31, 2025, in the amount not to exceed $151,000.00, to be paid out of Expanded Learning Opportunities Program Funds.

Motion #24-81 Approval of Agreement #24-183 – FEV Tutors, Inc.
Mover: Rose Gonzales
Seconder: Brian Melanephy
Moved To: Approve
Ayes: 3 - Brian Melanephy, Rose Gonzales, Cynthia Salas
Absent: 2 - Veronica Robles-Solis, Monica Madrigal Lopez
Motion Result: Passed

D.6. Approval of Agreement #24-184 – Insight Neuropsychology (DeGenna/Jefferson)

Dr. Ana DeGenna, Superintendent., and Danielle Jefferson, Director, Special Education, recommended the Board's approval of Agreement #24-184 with Insight Neuropsychology, to provide psychoeducational assessment services to students in the Special Education Department at the Oxnard School District on an as-needed basis, January 16, 2025 through June 30, 2025, in the amount not to exceed $30,000.00, to be paid out of Special Education Funds.

Motion #24-82 Approval of Agreement #24-184 – Insight Neuropsychology
Mover: Cynthia Salas
Seconder: Rose Gonzales
Moved To: Approve
Ayes: 3 - Brian Melanephy, Rose Gonzales, Cynthia Salas
Absent: 2 - Veronica Robles-Solis, Monica Madrigal Lopez
Motion Result: Passed

D.7. Approval of Agreement #24-186 – Leadership Associates, LLC (Carroll)

Dr. Scott Carroll, Acting Assistant Superintendent, Human Resources, recommended the Board's approval of Agreement #24-186 with Leadership Associates, LLC, to provide up to four (4) days of executive advising services to the Assistant Superintendent, Educational Services, January 16, 2025 through June 30, 2025, in the amount not to exceed $9,000.00, to be paid out of the General Fund.

Motion #24-83 Approval of School-Level Parent and Family Engagement Policies for 2024-2025 School Year - 20 Schools
Mover: Cynthia Salas
Seconder: Rose Gonzales
Moved To: Approve
Ayes: 3 - Brian Melanephy, Rose Gonzales, Cynthia Salas
Absent: 2 - Veronica Robles-Solis, Monica Madrigal Lopez
Motion Result: Passed

Section F: BOARD POLICIES

F.1. Second Reading and Adoption - BP/AR 5145.13 Response to Immigration Enforcement (DeGenna)

Dr. Ana DeGenna, Superintendent, recommended the Board's adoption of the new BP/AR 5145.13 Response to Immigration Enforcement, as presented for Second Reading.

Motion #24-78 Adoption of BP/AR 5145.13 Response to Immigration Enforcement
Mover: Cynthia Salas
Seconder: Rose Gonzales
Moved To: Adopt
Ayes: 3 - Brian Melanephy, Rose Gonzales, Cynthia Salas
Absent: 2 - Veronica Robles-Solis, Monica Madrigal Lopez
Motion Result: Passed

Section G: CONCLUSION

G.1. Superintendent's Report (3 minutes)

Ana DeGenna

- OSD Student profile
- OSD Holiday Luncheon
- Thank you to Maintenance, Custodial and Warehouse teams for work during break for modernization moves
- January is School Board Recognition Month - thank you to Trustees
- January observances
- Condolences to Duff Family

G.2. Trustees' Announcements (3 minutes each speaker)

Cynthia Salas

- Thank you to Cabinet and Dr. DeGenna for their meeting last week - looks forward to continuing to move forward

Rose Gonzales

- Enjoyed attending OSD holiday luncheon
- Attended VCOE inservice for Board members on 1/11/25
- Thank you to the district for taking care of students at all levels

Brian Melanephy

- Thank you to Rose Avenue for attending today
- Appreciates the recognition sign from Lemonwood
- Attended VCOE inservice for Board members on 1/11/25
- Enjoyed attending ESC holiday luncheon
- Importance of mental health - reminder to be on the lookout for people in need

G.3. ADJOURNMENT

Clerk Melanephy adjourned the meeting at 8:38 p.m.

Motion to adjourn
Mover: Cynthia Salas
Seconder: Rose Gonzales
Moved To: Adjourn
Ayes: 3 - Brian Melanephy, Rose Gonzales, Cynthia Salas
Absent: 2 - Veronica Robles-Solis, Monica Madrigal Lopez
Motion Result: Passed

Ana DeGenna, Ed.D.

District Superintendent and
Secretary to the Board of Trustees

By our signature below, given on this 19th day of March, 2025, the Board of Trustees of the Oxnard School District approves the Minutes of the Regular Board Meeting of January 15, 2025, on motion by Trustee_____, seconded by Trustee_____.

Signed:

_____
President of the Board of Trustees

_____
Clerk of the Board of Trustees

_____
Member of the Board of Trustees

_____
Member of the Board of Trustees

_____
Member of the Board of Trustees

OSD BOARD AGENDA ITEM

Name of Contributor: Dr. Scott Carroll **Date of Meeting:** March 19, 2025

Agenda Section: Section F: Board Policies, First Reading

First Reading - 1312.3 BP and AR (Revisions): Uniform Complaint Procedures (Carroll)

The policy and regulation have been updated to align with recent changes in laws, as recommended by the California School Boards Association (CSBA). Updates include the addition of new language, identified in red underline, and the removal of outdated language, indicated in red strikethrough. The revised policies will be presented for Second Reading and Adoption at the April 2, 2025 Regular Board meeting.

FISCAL IMPACT:
N/A

RECOMMENDATION:
It is the recommendation of the Assistant Superintendent, Human Resources that the Board of Trustees review the attached policy and regulation for first reading, as presented.

ADDITIONAL MATERIALS:

Attached: BP 1312.3_ UCP rev. 03.19.2025 (four pages)
AR 1312.3_ UCP rev.03.19.2025 (ten pages)

Policy 1312.3: Uniform Complaint Procedures

Status: ADOPTED

Original Adopted Date: 10/19/2011 | **Last Revised Date:** 05/04/2022 |

The Governing Board recognizes that the district has the primary responsibility to comply with applicable state and federal laws and regulations governing educational programs. The Board encourages the early resolution of complaints whenever possible. To resolve complaints which may require a more formal process, the Board adopts the uniform system of complaint processes specified in 5 CCR 4600-4670 and the accompanying administrative regulation.

Complaints Subject to UCP

The district's uniform complaint procedures (UCP) shall be used to investigate and resolve complaints regarding the following programs and activities:

1. Accommodations for pregnant and parenting students (Education Code 46015)
2. Adult education programs (Education Code 8500-8538, 52334.7, 52500-52617)
3. After School Education and Safety programs (Education Code 8482-8484.65)
4. Agricultural career technical education (Education Code 52460-52462)
5. Career technical and technical education and career technical and technical training programs (Education Code 52300-52462)
6. Child care and development programs (Education Code 8200-8488)
7. Compensatory education (Education Code 54400)
8. Consolidated categorical aid programs (Education Code 33315; 34 CFR 299.10299.12)
9. Course periods without educational content, (Education Code 51228.1-51228.3)
10. Discrimination, harassment, intimidation, or bullying in district programs and activities, including in those programs or activities funded directly by or that receive or benefit from any state financial assistance, based on a person's actual or perceived characteristics of race or ethnicity, color, ancestry, nationality, national origin, immigration status, ethnic group identification, age, religion, ~~marital status, pregnancy, parental status~~, physical or mental disability, medical condition, ~~sex, sexual orientation, gender, gender identity, gender expression~~, or genetic information;~~, or~~ any other characteristic identified in Education Code 200 or 220, Government Code 11135, or Penal Code 422.55;~~,~~ or based on the person's association with a person or group with one or more of these actual or perceived characteristics (5 CCR 4610)

~~10.~~ Discrimination includes, but is not limited to, the Board's refusal to approve the use or prohibit the use of any textbook, instructional material, supplemental instructional material, or other curriculum for classroom instruction, or any book or other resource in a school library, on the basis that it includes a study of the role and contributions of any individual or group

consistent with the requirements of Education Code 51204.5 and 60040, unless such study would violate Education Code 51501 or 60044. Additionally, discrimination includes, but is not limited to, the Board's adoption or approval of use of any textbook, instructional material, supplemental instructional material, or other curriculum for classroom instruction, or any book or other resource in a school library if the use would subject a student to unlawful discrimination pursuant to Education Code 220. A complaint alleging such unlawful discrimination may, in addition to or in lieu of being filed with the district, be directly filed with the Superintendent of Public Instruction (SPI). (Education Code 243, 244)

The UCP shall not be used to investigate and resolve employment discrimination complaints. (5 CCR 4611)

11. Educational and graduation requirements for students in foster care, students experiencing homelessness ~~students~~, students from military families, ~~and~~ students formerly in a juvenile court school, students who are migratory, and newcomer students (Education Code 48645.7, 48853, 48853.5, 49069.5, 51225.1, 51225.2)

12. Every Student Succeeds Act (Education Code 52059.5; 20 USC 6301 et seq.)

13. Local control and accountability plan (Education Code 52075)

14. Migrant education (Education Code 54440-54445)

15. Physical education instructional minutes (Education Code 51210, 51222, 51223)

16. Student fees (Education Code 49010-49013)

17. Reasonable accommodations to a lactating student (Education Code 222)

18. Regional occupational centers and programs (Education Code 52300-52334.7)

19. School plans for student achievement as required for the consolidated application for specified federal and/or state categorical funding (Education Code 64001)

20. School safety plans (Education Code 32280-32289)

21. School site councils as required for the consolidated application for specified federal and/or state categorical funding (Education Code 65000)

22. State preschool programs (Education Code 8207-8225)

23. State preschool health and safety issues in license-exempt programs (Education Code 8212)

24. Any complaint alleging retaliation against a complainant or other participant in the complaint process or anyone who has acted to uncover or report a violation subject to this policy

25. Any other state or federal educational program the Superintendent of Public Instruction or designee deems appropriate

The Board recognizes that alternative dispute resolution (ADR) can, depending on the nature of the allegations, offer a process for resolving a complaint in a manner that is acceptable to all parties. An ADR process such as mediation may be offered to resolve complaints that involve more than one

student and no adult. However, mediation shall not be offered or used to resolve any complaint ~~involving sexual assault or~~ where there is a reasonable risk that a party to the mediation would feel compelled to participate. The Superintendent or designee shall ensure that the use of ADR is consistent with federal, state, ~~-~~and local ~~federal~~ laws and regulations.

The district shall protect all complainants from retaliation. In investigating complaints, the confidentiality of the parties involved shall be protected as required by law. For any complaint alleging retaliation or unlawful discrimination (such as discriminatory harassment, intimidation, or bullying), the Superintendent or designee shall keep the identity of the complainant, and/or the subject of the complaint if different from the complainant, confidential when appropriate and as long as the integrity of the complaint process is maintained.

When an allegation that is not subject to UCP is included in a UCP complaint, the district shall refer the non-UCP allegation to the appropriate staff or agency and shall investigate and, if appropriate, resolve the UCP-related allegation(s) through the district's UCP.

The Superintendent or designee shall provide training to district staff to ensure awareness and knowledge of current law and requirements related to UCP, including the steps and timelines specified in this policy and the accompanying administrative regulation.

The Superintendent or designee shall maintain a record of each complaint and subsequent related actions, including steps taken during the investigation and all information required for compliance with 5 CCR 4631 and 4633.

Non-UCP Complaints

The following complaints shall not be subject to the district's UCP but shall be investigated and resolved by the specified agency or through an alternative process:

1. Any complaint alleging child abuse or neglect shall be referred to the County Department of Social Services Protective Services Division or the appropriate law enforcement agency. (5 CCR 4611)

2. Any complaint alleging health and safety violations by a child development program shall, for licensed facilities, be referred to Department of Social Services. (5 CCR 4611)

3. Any complaint alleging that a student, while in an education program or activity ~~in which the district exercises substantial control over the context and respondent~~, was subjected to ~~sexual~~ conduct known to the district that may reasonably constitute sex discrimination under Title IX, including sex-based harassment as defined in 34 CFR 106.2~~30~~ ~~shall be addressed through the federal Title IX complaint procedures adopted pursuant to 34 CFR 106.44-106.45, as specified in AR 5145.71 - Title IX Sexual Harassment Complaint Procedures.~~

   Discrimination on the basis of sex includes sex stereotypes; sex characteristics; sexual orientation; gender; gender identity; gender expression; pregnancy, childbirth, termination of pregnancy, or lactation, including related medical conditions or recovery; and parental, marital, and family status. Such a complaint shall be addressed through the federal Title IX complaint procedures adopted pursuant to 34 CFR 106.44-106.45, as specified in

Administrative Regulation 5145.71 - Title IX Sex Discrimination and Sex-Based Harassment Complaint Procedures. (34 CFR 106.2, 106.10, 106.11, 106.44)

~~3.~~

4. ~~Any~~Except for complaints alleging sex discrimination, including sex-based harassment, any complaint alleging employment discrimination or harassment shall be investigated and resolved by the district in accordance with the procedures specified in AR 4030 - Nondiscrimination in Employment, including the right to file the complaint with the California Department of Fair Employment and Housing.

~~4.~~ Employment complaints alleging sex discrimination, including sex-based harassment, shall be investigated and resolved as specified in 34 CFR 106.44 and 106.45 and Administrative Regulation 4119.12/4219.12/4319.12 - Title IX Sex Discrimination and Sex-Based Harassment Complaint Procedures.

5. Any complaint alleging a violation of a state or federal law or regulation related to special education, (FAPE), failure or refusal to implement a due process hearing order to which the district is subject, or a physical safety concern that interferes with the district's provision of FAPE a settlement agreement related to the provision of a free appropriate public education, or a due process hearing order shall be submitted to the California Department of Education (CDE) in accordance with AR 6159.1 - Procedural Safeguards and Complaints for Special Education. (5 CCR 3200-3205)

6. Any complaint alleging noncompliance of the district's food service program with laws regarding meal counting and claiming, reimbursable meals, eligibility of children or adults, or use of cafeteria funds and allowable expenses shall be filed with or referred to CDE in accordance with BP 3555 - Nutrition Program Compliance. (5 CCR 15580-15584)

7. Any allegation of discrimination based on race, color, national origin, sex, age, or disability in the district's food service program shall be filed with or referred to the U.S. Department of Agriculture in accordance with BP 3555 - Nutrition Program Compliance. (5 CCR 15582)

8. Any complaint related to sufficiency of textbooks or instructional materials, emergency or urgent facilities conditions that pose a threat to the health or safety of students or staff, or teacher vacancies and misassignments shall be investigated and resolved in accordance with AR 1312.4 - Williams Uniform Complaint Procedures. (Education Code 35186)

Regulation 1312.3: Uniform Complaint Procedures

Status: ADOPTED

Original Adopted Date: 10/19/2011 | **Last Revised Date:** 05/04/2022 |

Except as may otherwise be specifically provided in other district policies, these uniform complaint procedures (UCP) shall be used to investigate and resolve only the complaints specified in the accompanying Board Policy.

Compliance Officers

The district designates the individual(s), position(s), or unit(s) identified below as responsible for receiving, coordinating, and investigating complaints and for complying with state and federal civil rights laws. The individual(s), position(s), or unit(s) also serve as the compliance officer(s) specified in AR 5145.3 -Nondiscrimination/Harassment responsible for handling complaints regarding unlawful such as discriminatory harassment, intimidation, or bullying and in AR 5145.7 ~~-~~– Sex~~ual~~ Discrimination and Sex-Based Harassment for handling complaints regarding sex~~ual~~ discrimination and sex-based harassment.

Assistant Superintendent, Human Resources
1051 South A Street, Oxnard, CA 93030
(805) 385-1501 ext. 2050
certificatedhr@oxnardsd.org

The compliance officer who receives a complaint may assign another compliance officer to investigate and resolve the complaint. The compliance officer shall promptly notify the complainant and respondent, if another compliance officer is assigned to the complaint.

In no instance shall a compliance officer be assigned to a complaint in which the compliance officer has a bias or conflict of interest that would prohibit the fair investigation or resolution of the complaint. Any complaint against a compliance officer or that raises a concern about the compliance officer's ability to investigate the complaint fairly and without bias shall be filed with the Superintendent or designee who shall determine how the complaint will be investigated.

The Superintendent or designee shall ensure that employees assigned to investigate and resolve complaints receive training and are knowledgeable about the laws and programs at issue in the complaints to which they are assigned. Training provided to such employees shall cover current state and federal laws and regulations governing the program, ;applicable processes for investigating and resolving complaints, including those alleging unlawful discrimination harassment, intimidation, or bullying); applicable standards for reaching decisions on complaints; and appropriate corrective measures. Assigned employees may have access to legal counsel as determined by the Superintendent or designee.

The compliance officer or, if necessary, an appropriate administrator shall determine whether interim measures are necessary during an investigation and while the result is pending. If interim

measures are determined to be necessary, the compliance officer or the administrator shall consult with the Superintendent, the Superintendent's designee, or, if appropriate, the site principal to implement one or more interim measures. The interim measures shall remain in place until the compliance officer determines that they are no longer necessary or until the district issues its final written decision, whichever occurs first.

Notifications

The district's UCP policy and administrative regulation shall be posted in all district schools and offices, including staff lounges and student government meeting rooms. (Education Code 234.1)

In addition, the Superintendent or designee shall annually provide written notification of the district's UCP to students, employees, parents/guardians of district students, district advisory committee members, school advisory committee members, appropriate private school officials or representatives, and other interested parties. (5 CCR 4622)

The notice shall include:

1. A statement that the district is primarily responsible for compliance with federal and state laws and regulations, including those related to prohibition of unlawful discrimination, harassment, intimidation, or bullying against any protected group, and a list of all programs and activities that are subject to UCP as identified in ~~the section~~ "Complaints Subject to UCP" in the accompanying Board policy

2. The title of the position responsible for processing complaints, the identity of the person(s) currently occupying that position if known, and a statement that such persons will be knowledgeable about the laws and programs that they are assigned to investigate

3. A statement that a UCP complaint except a complaint alleging unlawful discrimination, harassment, intimidation, or bullying, must be filed no later than one year from the date the alleged violation occurred

4. A statement that a UCP complaint alleging unlawful discrimination, harassment, intimidation, or bullying, must be filed no later than six months from the date of the alleged conduct or the date the complainant first obtained knowledge of the facts of the alleged conduct.

5. A statement that a student enrolled in a public school shall not be required to pay a fee for participation in an educational activity that constitutes an integral fundamental part of the district's educational program, including curricular and extracurricular activities

6. A statement that a complaint regarding student fees or the local control and accountability plan (LCAP) may be filed anonymously if the complainant provides evidence or information leading to evidence to support the complaint

7. A statement that the district will post a standardized notice of the educational and graduation requirements rights of foster youth, students experiencing homelessness ~~students~~, children of military families, ~~and~~ former juvenile court school students now enrolled in the district, students who are migratory, and newcomer students as specified in Education Code 48645.7, 48853, 48853.5, 49069.5, 51225.1, and 51225.2, and the complaint process

8. A statement that complaints will be investigated in accordance with the district's UCP and a written decision will be sent to the complainant within 60 days from the receipt of the complaint, unless this time period is extended by written agreement of the complainant

9. A statement that, for programs within the scope of the UCP as specified in the accompanying Board policy, the complainant has a right to appeal the district's investigation report to the California Department of Education CDE by filing a written appeal, including a copy of the original complaint and the district's decision, within 30 calendar days of receiving the district's decision

10. A statement advising the complainant of any civil law remedies, including, but not limited to, injunctions, restraining orders, or other remedies or orders that may be available under state or federal laws prohibiting discrimination, harassment, intimidation, or bullying, if applicable

11. A statement that copies of the district's UCP are available free of charge

The annual notification, complete contact information of the compliance officer(s), and information related to Title IX as required pursuant to Education Code 221.61 and 34 CFR 106.8 shall be posted on the district and district school web-sites, published in handbooks, catalogs, announcements, bulletins, and application forms, -and may be provided through district-supported social media, if available.

The Superintendent or designee shall ensure that all students and parents/guardians, including students and parents/guardians with limited English proficiency, have access to the relevant information provided in the district's policy, regulation, forms, and notices concerning the UCP.

If 15 percent or more of students enrolled in a particular district school speak a single primary language other than English, the district's UCP policy, regulation, forms, and notices shall be translated into that language, in accordance with Education Code 234.1 and 48985. In all other instances, the district shall ensure meaningful access to all relevant UCP information for parents/guardians with limited English proficiency.

Filing of Complaints

The complaint shall be presented to the compliance officer who shall maintain a log of complaints received, providing each with a code number and a date stamp. If a site administrator not designated as a compliance officer receives a complaint, the site administrator shall notify the compliance officer.

All complaints except for those that allege sex discrimination, including sex-based harassment, shall be filed in writing and signed by the complainant. If a complainant is unable to put a complaint in writing due to conditions such as a disability or illiteracy, district staff shall assist in the filing of the complaint. (5 CCR 4600; 34 CFR 106.2)

Complaints shall also be filed in accordance with the following rules, as applicable:

1. A complaint alleging district violation of applicable state or federal law or regulations governing the programs specified in the accompanying Board policy may be filed by any individual, public agency, or organization. (5 CCR 4600)

2. Any complaint alleging noncompliance with law regarding the prohibition against student fees, deposits, and charges or any requirement related to the LCAP may be filed anonymously if the complaint provides evidence, or information leading to evidence, to support an allegation of noncompliance. A complaint about a violation of the prohibition against the charging of unlawful student fees may be filed with the principal of the school or with the Superintendent or designee.

3. A UCP complaint, except for a UCP complaint alleging unlawful discrimination, harassment, intimidation, or bullying, shall be filed no later than one year from the date the alleged violation occurred. (5 CCR 4630) For complaints related to the LCAP, the date of the alleged violation is the date when the County Superintendent of Schools approves the LCAP that was adopted by the Governing Board. (5 CCR 4630)

4. A complaint alleging unlawful discrimination harassment, intimidation, or bullying may be filed only by a person who alleges having personally suffered unlawful discrimination, a person who believes that any specific class of individuals has been subjected to unlawful discrimination, or a duly authorized representative who alleges that an individual student has been subjected to discrimination, harassment, intimidation, or bullying. (5 CCR 4630)

5. A complaint alleging unlawful discrimination, harassment, intimidation, or bullying shall be initiated no later than six months from the date that the alleged unlawful discrimination occurred, or six months from the date that the complainant first obtained knowledge of the facts of the alleged unlawful discrimination.(5 CCR 4630) The time for filing may be extended for up to 90 days by the Superintendent or designee for good cause upon written request by the complainant setting forth the reasons for the extension. (5 CCR 4630)

6. When a~~A~~ complaint alleging unlawful discrimination harassment, intimidation, or bullying is AR 1312.3(f) filed anonymously, the compliance officer shall pursue an investigation or other response as appropriate, depending on the specificity and reliability of the information provided and the seriousness of the allegation.

7. When a complainant of unlawful discrimination harassment, intimidation, or bullying or the alleged victim, when not the complainant, requests confidentiality, the compliance officer shall inform the complainant or victim that the request may limit the district's ability to investigate the conduct or take other necessary action. When honoring a request for confidentiality, the district shall nevertheless take all reasonable steps to investigate and resolve/respond to the complaint consistent with the request.

Mediation

Within three business days after receiving the complaint, the compliance officer may informally discuss with all the parties the possibility of using mediation to resolve the complaint. Mediation shall be offered to resolve complaints that involve more than one student and no adult. However, mediation shall not be offered or used to resolve any complaint ~~involving an allegation of sexual assault or~~ where there is a reasonable risk that a party to the mediation would feel compelled to participate. If the parties agree to mediation, the compliance officer shall make all arrangements for this process.

Before initiating the mediation of a complaint alleging retaliation or unlawful discrimination harassment, intimidation, or bullying, the compliance officer shall ensure that all parties agree to permit the mediator access to all relevant confidential information. The compliance officer shall also

notify all parties of the right to end the informal process at any time.

If the mediation process does not resolve the problem within the parameters of law, the compliance officer shall proceed with an investigation of the complaint.

The use of mediation shall not extend the district's timelines for investigating and resolving the complaint unless the complainant agrees in writing to such an extension of time. If mediation is successful and the complaint is withdrawn, then the district shall take only the actions agreed upon through the mediation. If mediation is unsuccessful, the district shall then continue with subsequent steps specified in this administrative regulation.

Investigation of Complaint

Within 10 business days after the compliance officer receives the complaint, the compliance officer shall begin an investigation into the complaint.

Within one business day of initiating the investigation, the compliance officer shall provide the complainant and/or the complainant's representative with the opportunity to present the information contained in the complaint to the compliance officer and shall notify the complainant and/or representative of the opportunity to present the compliance officer with any evidence, or information leading to evidence, to support the allegations in the complaint. Such evidence or information may be presented at any time during the investigation.

In conducting the investigation, the compliance officer shall collect all available documents and review all available records, notes, or statements related to the complaint, including any additional evidence or information received from the parties during the course of the investigation. The compliance officer shall individually interview all available witnesses with information pertinent to the complaint, and may visit any reasonably accessible location where the relevant actions are alleged to have taken place. At appropriate intervals, the compliance officer shall inform the parties of the status of the investigation.

To investigate a complaint alleging retaliation or unlawful discrimination harassment, intimidation, or bullying, the compliance officer shall interview the alleged victim(s), any alleged offender(s), and other relevant witnesses privately, separately, and in a confidential manner. As necessary, additional staff or legal counsel may conduct or support the investigation.

A complainant's refusal to provide the district's investigator with documents or other evidence related to the allegations in the complaint, failure or refusal to cooperate in the investigation, or any other obstruction of the investigation may result in the dismissal of the complaint because of a lack of evidence to support the allegation.

Refusal by the district to provide the investigator with access to records and/or information related to the allegations in the complaint, failure or refusal to cooperate in the investigation, or any other obstruction of the investigation may result in a finding based on evidence collected that a violation has occurred and in the imposition of a remedy in favor of the complainant. (5 CCR 4631)

Timeline for Investigation Report

Unless extended by written agreement with the complainant, the compliance officer shall prepare and send to the complainant a written investigation report, as described in the section "Investigation Report" below, within 60 calendar days of the district's receipt of the complaint. (5 CCR 4631)

For any complaint alleging unlawful discrimination harassment, intimidation, and bullying, the respondent shall be informed of any extension of the timeline agreed to by the complainant.

Investigation Report

For all complaints, the district's investigation report shall include: (5 CCR 4631)

1. The findings of fact based on the evidence gathered

2. A conclusion providing a clear determination for each allegation as to whether the district is in compliance with the relevant of law,

3. Corrective actions, whenever the district finds merit in the complaint, including, when required by law, a remedy to all affected students and parents/guardians and, for a student fees complaint, a remedy that complies with Education Code 49013 and 5 CCR 4600

4. (Notice of the complainant's right to appeal the district's investigation report to CDE, except when the district has used the UCP to address a complaint not specified in 5 CCR 4610

5. Procedures to be followed for initiating an appeal to CDE

The investigation report may also include follow-up procedures to prevent recurrence or retaliation and for reporting any subsequent problems.

In consultation with district legal counsel, information about the relevant part of an investigation report may be communicated to a victim who is not the complainant and to other parties who may be involved in implementing the investigation report or are affected by the complaint, ~~a~~so long as the privacy of the parties is protected. In a complaint alleging unlawful discrimination, harassment, intimidation, and bullying, notice of the investigation report to the alleged victim shall include information about any sanction to be imposed upon the respondent that relates directly to the alleged victim.

If the complaint involves a limited-English-proficient (LEP) student or parent/guardian then the district's response, if requested by the complainant, and the investigation report shall be written in English and the primary language in which the complaint was filed.

For complaints alleging unlawful discrimination based on state law harassment, intimidation, and bullying, based on state law, the investigation report shall also include a notice to the complainant that:

1. The complainant may pursue available civil law remedies outside of the district's complaint procedures, including, but not limited to, injunctions, restraining orders or other remedies or orders, 60 calendar days after the filing of an appeal with CDE. (Education Code 262.3)

2. The 60 days moratorium does not apply to complaints seeking injunctive relief in state courts or to discrimination complaints based on federal law. (Education Code 262.3)

3. Complaints alleging discrimination based on race, color, national origin, sex, gender, disability, or age may also be filed with the U.S. Department of Education, Office for Civil Rights at www.ed.gov/ocr within 180 days of the alleged discrimination.

Corrective Actions

When a complaint is found to have merit, the compliance officer shall adopt any appropriate corrective action permitted by law. Appropriate corrective actions that focus on the larger school or district environment may include, but are not limited to, actions to reinforce district policies; training for faculty, staff, and students; updates to school policies; or school climate surveys.

For complaints involving retaliation or unlawful discrimination, harassment, intimidation, or bullying, appropriate remedies that may be offered to the victim but not communicated to the respondent may include, but are not limited to, the following:

1. Counseling

2. Academic support

3. Health services

4. Assignment of an escort to allow the victim to move safely about campus

5. Information regarding available resources and how to report similar incidents or retaliation

6. Separation of the victim from any other individuals involved, provided the separation does not penalize the victim

7. Restorative justice

8. Follow-up inquiries to ensure that the conduct has stopped and there has been no retaliation

For complaints of retaliation or unlawful discrimination harassment, intimidation, or bullying, involving a student as the respondent, appropriate corrective actions that may be provided to the student include, but are not limited to, the following:

1. Transfer from a class or school as permitted by law

2. Parent/guardian conference

3. Education regarding the impact of the conduct on others

4. Positive behavior support

5. Referral to a student success team

6. Denial of participation in extracurricular or cocurricular activities or other privileges as permitted by law

7. Disciplinary action, such as suspension or expulsion, as permitted by law

When an employee is found to have committed retaliation or unlawful discrimination harassment, intimidation, or bullying), the district shall take appropriate disciplinary action, up to and including dismissal, in accordance with applicable law and collective bargaining agreement.

The district may also consider training and other interventions for the larger school community to ensure that students, staff, and parents/guardians understand the types of behavior that constitute unlawful discrimination, harassment, intimidation, or bullying, that the district does not tolerate it, and how to report and respond to it.

When a complaint is found to have merit, an appropriate remedy shall be provided to the complainant or other affected person.

However, if a complaint alleging noncompliance with the laws regarding student fees, deposits, and other charges, physical education instructional minutes, courses without educational content, or any requirement related to the LCAP is found to have merit, the district shall provide a remedy to all affected students and parents/guardians subject to procedures established by regulation of the State Board of Education. (Education Code 49013, 51222, 51223, 51228.3, 52075)

For complaints alleging noncompliance with the laws regarding student fees, the district, by engaging in reasonable efforts, shall attempt in good faith, to identify and fully reimburse all affected students and parents/guardians who paid the unlawful student fees within one year prior to the filing of the complaint. (Education Code 49013; 5 CCR 4600)

Appeals to the California Department of Education

Any complainant who is dissatisfied with the district's investigation report on a complaint regarding any specified federal or state educational program subject to UCP may file an appeal in writing with CDE within 30 calendar days of receiving the district's investigation report. (5 CCR 4632)

The appeal shall be sent to CDE with a copy of the original locally filed complaint and a copy of the district's investigation report for that complaint. The complainant shall specify and explain the basis for the appeal, including at least one of the following: (5 CCR 4632)

1. The district failed to follow its complaint procedures.

2. Relative to the allegations of the complaint, the district's investigation report lacks material findings of fact necessary to reach a conclusion of law.

3. The material findings of fact in the district's investigation report are not supported by substantial evidence.

4. The legal conclusion in the district's investigation report is inconsistent with the law.

5. In a case in which the district found noncompliance, the corrective actions fail to provide a proper remedy.

Upon notification by CDE that the district's investigation report has been appealed, the Superintendent or designee shall forward the following documents to CDE within 10 days of the date of notification: (5 CCR 4633)

1. A copy of the original complaint
2. A copy of the district's investigation report
3. A copy of the investigation file including, but not limited to, all notes, interviews, and documents submitted by the parties and gathered by the investigator
4. A report of any action taken to resolve the complaint
5. A copy of the district's UCP
6. Other relevant information requested by CDE

If notified by CDE that the district's investigation report failed to address allegation(s) raised by the complaint, the district shall, within 20 days of the notification, provide CDE and the appellant with an amended investigation report that addresses the allegation(s) that were not addressed in the original investigation report. The amended report shall also inform the appellant of the right to separately appeal the amended report with respect to the allegation(s) that were not addressed in the original report. (5 CCR 4632)

Health and Safety Complaints in License-Exempt Preschool Programs

Any complaint regarding health or safety issues in a license-exempt California State Preschool Program (CSPP) shall be addressed through the procedures described in 5 CCR 4690-4694.

In order to identify appropriate subjects of CSPP health and safety issues pursuant to Health and Safety Code 1596.7925, a notice shall be posted in each license-exempt CSPP classroom in the district notifying parents/guardians, students, and teachers of the health and safety requirements of Title 5 regulations that apply to CSPP programs pursuant to Health and Safety Code 1596.7925 and the location at which to obtain a form to file any complaint alleging noncompliance with those requirements. For the purpose, the Superintendent or designee may download and post a notice available from the CDE web site.(Education Code 8212; 5 CCR 4691)

The district's annual UCP notification distributed pursuant to 5 CCR 4622 shall clearly indicate which of its CSPP programs are operating as exempt from licensing and which CSPP programs are operating pursuant to requirements under Title 22 of the Code of Regulations. (5 CCR 4691)

Any complaint regarding specified health or safety issues in a license-exempt CSPP program shall be filed with the preschool program administrator or designee, and may be filed anonymously. The complaint form shall specify the location for filing the complaint, contain a space to indicate whether the complainant desires a response to the complaint, and allow a complainant to add as much text as desired to explain the complaint. (Education Code 8212; 5 CCR 4690)

If it is determined that the complaint is beyond the authority of the preschool program administrator, the matter shall be forwarded to the Superintendent or designee in a timely manner, not to exceed 10 working days, for resolution. The preschool administrator or the Superintendent

or designee shall make all reasonable efforts to investigate any complaint within their authority (Education Code 8212; 5 CCR 4692)

Investigation of a complaint regarding health or safety issues in a license-exempt CSPP program shall begin within 10 days of receipt of the complaint. (Education Code 8212; 5 CCR 4692)

The preschool administrator or designee shall remedy a valid complaint within a reasonable time period not to exceed 30 working days from the date the complaint was received. If the complainant has indicated on the complaint form a desire to receive a response to the complaint, the preschool administrator or Superintendent's designee shall, within 45 working days of the initial filing of the complaint, report the resolution of the complaint to the complainant and CDE's assigned field consultant. If the preschool administrator makes this report, the information shall be reported at the same time to the Superintendent or designee. (Education Code 8212; 5 CCR 4692)

If a complaint regarding health or safety issues in a license-exempt CSPP program involves an LEP student or parent/guardian, then the district's response, if requested by the complainant, and the investigation report shall be written in English and the primary language in which the complaint was filed.

If a complainant is not satisfied with the resolution of a complaint, the complainant has the right to describe the complaint to the Board at a regularly scheduled hearing and, within 30 days of the date of the written report, may file a written appeal of the district's decision to the Superintendent of Public Instruction in accordance with 5 CCR 4632. (Education Code 8212; 5 CCR 4693, 4694)

All complaints and responses are public records. (5 CCR 4690)

On a quarterly basis, the Superintendent or designee shall report summarized data on the nature and resolution of all CSPP health and safety complaints, including the number of complaints by general subject area with the number of resolved and unresolved complaints, to the Board at a regularly scheduled Board meeting and to the County Superintendent. (5 CCR 4693)

OSD BOARD AGENDA ITEM

Name of Contributor: Dr. Scott Carroll **Date of Meeting:** March 19, 2025

Agenda Section: Section F: Board Policies, First Reading

First Reading - 1312.4 AR, E(1), and E(2) (Revisions): Williams Uniform Complaint Procedures (Carroll)

The regulation and exhibits have been updated to align with recent changes in laws, as recommended by the California School Boards Association (CSBA). Updates include the addition of new language, identified in red underline, and the removal of outdated language, indicated in red strikethrough. The revised policies will be presented for Second Reading and Adoption at the April 2, 2025 Regular Board meeting.

FISCAL IMPACT:
N/A

RECOMMENDATION:
It is the recommendation of the Assistant Superintendent, Human Resources that the Board of Trustees review the attached regulation and exhibits for First Reading, as presented.

ADDITIONAL MATERIALS:

Attached: OSD Regulation 1312.4 Williams UCP 03.19.2025 (eight pages)
OSD 1312.4-E(1) Williams UCP 03.19.2025 (7 pages)
OSD 1312.1-E(2) Williams UCP 03.19.2025 (ten pages)

Regulation 1312.4: Williams Uniform Complaint Procedures

Status: ADOPTED

Original Adopted Date: 10/19/2011 | **Last Revised Date:** 12/14/2022 |

Types of Complaints

The district shall use the procedures described in this administrative regulation only to investigate and resolve the following:

1. Complaints regarding the insufficiency of textbooks and instructional materials, including any complaint alleging that: (Education Code 35186; 5 CCR 4681)

    a. A student, including an English learner, does not have standards-aligned textbooks or instructional materials or state- or district-adopted textbooks or other required instructional materials to use in class.

    b. A pupilstudent does not have access to textbooks or instructional materials to use at home or after school

    This does not require two sets of textbooks or instructional materials for each student.

    c. Textbooks or instructional materials are in poor or unusable condition, have missing pages, or are unreadable due to damage.

    d. A student was provided photocopied sheets from only a portion of a textbook or instructional materials to address a shortage of textbooks or instructional materials.

2. Complaints regarding teacher vacancy or misassignment, including any complaint alleging that:(: (Education Code 35186; 5 CCR 4682)

    a. A semester begins and a teacher vacancy exists.

    b. A teacher who lacks credentials or training to teach English learners is assigned to teach a class with one or more than 20 percent English learnerlearners in the class.

    c. A teacher is assigned to teach a class for which the teacher lacks subject matter competency.

    Teacher vacancy means a position to which a single designated certificated employee has not been assigned at the beginning of the year for an entire year or, if the position is for a one--semester course, a position to which a single designated certificated employee has not been assigned at the beginning of the semester for an entire semester. (Education Code 35186; 5 CCR 4600)

    Beginning of the year or semester means the time period from the first day pupilsstudents attend classes for a year-long course or semester--long course, though not later than 20 business days afterwards. (5 CCR 4600)

Misassignment means the placement of a certificated employee in a teaching or services position for which the employee does not hold a legally recognized certificate or credential or the placement of a certificated employee in a teaching or services position that the employee is not otherwise authorized by statute to hold. (Education Code 35186; 5 CCR 4600)

3. Complaints regarding the condition of school facilities, including any complaint alleging that: (Education Code 35186; 5 CCR 4683)

   a. A condition poses an emergency or urgent threat to the health or safety of ~~pupils~~students or staff~~.~~

      Emergency or urgent threat means structures or systems that are in a condition that poses a threat to the health and safety of students or staff while at school, including, but not limited to, gas leaks; nonfunctioning heating, ventilation, fire sprinklers, or ~~airconditioning~~air-conditioning systems; electrical power failure; major sewer line stoppage; major pest or vermin infestation; broken windows or exterior doors or gates that will not lock and that pose a security risk; abatement of hazardous materials previously undiscovered that pose an immediate threat to students or staff; structural damage creating a hazardous or uninhabitable condition; or any other condition deemed appropriate. (Education Code 17592.72)

   b. A school restroom has not been cleaned, maintained, or kept open in accordance with Education Code 35292.5~~.~~

      Clean or maintained school restroom means a school restroom has been cleaned or maintained regularly, is fully operational, or has been stocked at all times with toilet paper, soap, ~~or~~and paper towels or functional hand dryers. (Education Code 35292.5)

      Open restroom means the school has kept all restrooms open during school hours when students are not in classes and has kept a sufficient number of restrooms open during school hours when students are in classes. This does not apply when the temporary closing of the restroom is necessary for a documented student safety concern, an immediate threat to student safety, or to ~~make repairs.~~ repair the facility. (Education Code 35292.5)

      In any school serving students any of grades ~~6~~3-12, a complaint may be filed alleging noncompliance with the requirement of Education Code 35292.6 to, at all times, stock and make available~~-~~ and accessible free of cost, an adequate supply of menstrual products in every women's and all-gender restroom, and in at least one men's restroom. (Education Code 35292.6)

      Additionally, starting July 1, 2026, in any school that has more than one female and more than one male restroom designated exclusively for student use, a complaint may be filed alleging noncompliance with the requirements specified in Education Code 35292.5 to maintain at least one all-gender restroom for student use. (Education Code 35292.5)

Forms and Notices

The Superintendent or designee shall ensure that ~~the district's~~ a Williams complaint form is available at each school. However, complainants need not use the district's complaint form in order to file a complaint. (Education Code 35186; 5 CCR 4680)

The Superintendent or designee shall ensure that the district's complaint form specifies the location for filing a complaint and contains a space to indicate whether the complainant desires a response to the complaint. A complainant may add as much text to explain the complaint as desired. (Education Code 35186; 5 CCR 4680)

The Superintendent or designee shall post in each classroom in each school a notice containing the components specified in Education Code 35186. (Education Code 35186)

Filing of Complaint

A complaint alleging any condition(s) specified in the section "Types of Complaints" above shall be filed with the principal or designee at the school in which the complaint arises. A complaint about problems beyond the authority of the principal shall be forwarded to the Superintendent or designee in a timely manner, but not to exceed 10 working days. Complaints may be filed anonymously. ~~(Education Code 35186; 5 CCR 4680)~~ (Education Code 35186; 5 CCR 4680)

A complaint alleging that more than one student does not have sufficient textbooks or instructional materials as the result of an act by the Governing Board, or the Board's failure to remedy the deficiency, may be filed with the Superintendent of Public Instruction (SPI) directly in addition to or in lieu of being filed with the district. Any such complaint shall identify the basis and provide evidence to support its filing directly with the SPI. (Education Code 35186)

If the Superintendent or designee becomes aware that a complaint alleging insufficient textbooks or instructional materials has been filed directly with the SPI but not with the district, the Superintendent or designee may initiate an investigation in accordance with this administrative regulation, as described below, if there is sufficient evidence to do so.

Investigation and Response

The principal or a designee of the Superintendent shall make all reasonable efforts to investigate any problem within the principal's or designee's authority. (Education Code 35186; 5 CCR 4685)

The principal or Superintendent's designee shall remedy a valid complaint within a reasonable time period not to exceed 30 working days from the date the complaint was received. (Education Code 35186; 5 CCR 4685)

If the complainant has indicated on the complaint form a desire to receive a response to the complaint, the principal or Superintendent's designee shall send written resolution of the complaint to the mailing address of the complainant as indicated on the complaint within 45 working days of the initial filing of the complaint. If the principal makes this report, the information shall be reported at the same time to the Superintendent or designee. (Education Code 35186; 5 CCR 4680, 4685)

When Education Code 48985 is applicable and the complainant has requested a response, the response shall be written in English and in the primary language in which the complaint was filed. (Education Code 35186)

If a complainant is not satisfied with the resolution of a complaint, the complainant has the right to describe the complaint to the Governing Board at a regularly scheduled meeting. (Education Code 35186; 5 CCR 4686)

For any complaint concerning a facilities condition that poses an emergency or urgent threat to the health or safety of students or staff as described in Item #3a in the section "Types of Complaints" above, a complainant who is not satisfied with the resolution proffered by the principal or Superintendent or designee may file an appeal to the Superintendent of Public Instruction (SPI) within 15 days of receiving the district's response. The complainant shall comply with the appeal requirements specified in 5 CCR 4632. (Education Code 35186; 5 CCR 4610, 4687)

However, no other type of complaint regarding the condition of school facilities as described in the section "Types of Complaints" above may be appealed to the SPI. (Education Code 35186; 5 CCR 4610, 4687)

All complaints and written responses shall be public records. (Education Code 35186; 5 CCR 4686)

Reports

~~The~~
On a quarterly basis, the Superintendent or designee shall report, to the Board at a regularly scheduled Board meeting and to the County Superintendent of Schools, summarized data on the nature and resolution of all complaints ~~to the Board and the County Superintendent of Schools on a quarterly basis~~. The report shall include the number of complaints by general subject area with the number of resolved and unresolved complaints. ~~These summaries shall be publicly reported on a quarterly basis at a regularly scheduled Board meeting.~~ (Education Code 35186; 5 CCR 4686)

Policy Reference Disclaimer:
These references are not intended to be part of the policy itself, nor do they indicate the basis or authority for the board to enact this policy. Instead, they are provided as additional resources for those interested in the subject matter of the policy.

State	Description
5 CCR 4600-4670	Uniform complaint procedures
5 CCR ~~4600~~4680-4687	~~Uniform complaint procedures and Williams complaints~~Williams uniform complaint procedures
5 CCR 4690-4694	~~Health and safety complaints in license-exempt preschool programs~~Health and safety complaints in license-exempt preschool programs
Ed. Code 1240	County superintendent of schools; duties

Ed. Code 17592.72	School Facility Emergency Repair Account; urgent or emergency repairs
Ed. Code 200-270	Prohibition of discrimination
Ed. Code 234.1	Student protections relating to discrimination, harassment, intimidation, and bullying
Ed. Code 33126	School accountability report card
Ed. Code 35186	Williams uniform complaint procedures
Ed. Code 35292.5-35292.6	Restrooms; maintenance and cleanliness
Ed. Code 48907	Exercise of free expression; time, place, and manner rules and regulations
Ed. Code 48950	Speech and other communication
Ed. Code 48985	Notices to parents in language other than English
Ed. Code 51501	Nondiscriminatory subject matter
Ed. Code 60010	Instructional materials; definition
Ed. Code 60040-60052	Requirements for instructional materials
Ed. Code 60119	Hearing on sufficiency of instructional materials
Ed. Code 60150	Penalty for insufficiency of textbooks and instructional materials

Federal	**Description**
20 USC 6314	~~Title I schoolwide program~~Title I schoolwide program

Management Resources	**Description**
CA Office of the Attorney General Publication	Guidance to School Officials re: Legal Requirements for Providing Inclusive Curricula and Books, Legal Alert, January 2024
CSBA Publication	Instructional Materials Adoptions: State and local governing board processes, roles, and responsibilities, Governance Brief, February 2024
CSBA Publication	Instructional Materials Adoptions: Local governing board responsibilities, Fact Sheet, February 2024
Website	California County Superintendents Educational Services Association
Website	CSBA District and County Office of Education Legal Services

Website	State Allocation Board, Office of Public School Construction
Website	Department of Justice
Website	U.S. Department of Education, Office for Civil Rights
Website	CSBA
Website	California Department of Education

Cross References

Code	Description
0410	~~Nondiscrimination In District Programs And Activities~~Nondiscrimination In District Programs And Activities
0460	~~Local Control And Accountability Plan~~Local Control And Accountability Plan
0460	~~Local Control And Accountability Plan~~Local Control And Accountability Plan
1100	~~Communication With The Public~~Communication With The Public
1250	~~Visitors/Outsiders~~Visitors/Outsiders
1250	~~Visitors/Outsiders~~Visitors/Outsiders
1312.2	~~Complaints Concerning Instructional Materials~~Complaints Concerning Instructional Materials
1312.2	~~Complaints Concerning Instructional Materials~~Complaints Concerning Instructional Materials
1312.2~~-E PDF(1)~~	~~Complaints Concerning Instructional Materials~~Complaints Concerning Instructional Materials
1312.3	~~Uniform Complaint Procedures~~Uniform Complaint Procedures
1312.3	~~Uniform Complaint Procedures~~Uniform Complaint Procedures
1312.3	Uniform Complaint Procedures
1312.3	Uniform Complaint Procedures
1340	~~Access To District Records~~Access To District Records
1340	~~Access To District Records~~Access To District Records
3270	~~Sale And Disposal Of Books, Equipment And Supplies~~Sale And Disposal Of Books, Equipment And Supplies

3270	~~Sale And Disposal Of Books, Equipment And Supplies~~Sale And Disposal Of Books, Equipment And Supplies
3514	~~Environmental Safety~~Environmental Safety
3514	~~Environmental Safety~~Environmental Safety
3514.2	~~Integrated Pest Management~~Integrated Pest Management
3517	~~Facilities Inspection~~Facilities Inspection
3517	Facilities Inspection
3550	~~Food Service/Child Nutrition Program~~Food Service/Child Nutrition Program
3550	~~Food Service/Child Nutrition Program~~Food Service/Child Nutrition Program
4112.2	~~Certification~~Certification
4112.2	~~Certification~~Certification
4112.22	Staff Teaching English Learners
4113	~~Assignment~~Assignment
4113	~~Assignment~~Assignment
4144	~~Complaints~~Complaints
4144	Complaints
4244	~~Complaints~~Complaints
4244	Complaints
4344	~~Complaints~~Complaints
4344	Complaints
5145.3	~~Nondiscrimination/Harassment~~Nondiscrimination/Harassment
5145.3	~~Nondiscrimination/Harassment~~Nondiscrimination/Harassment
6142.92	~~Mathematics Instruction~~Mathematics Instruction
6143	~~Courses Of Study~~Courses Of Study
6143	~~Courses Of Study~~Courses Of Study
6161.~~11~~1	~~Supplementary Instructional Materials~~Selection And Evaluation Of Instructional Materials
6161.1	Selection And Evaluation Of Instructional Materials
6161.1	Selection And Evaluation Of Instructional Materials

6161.11~~ E PDF(1)~~	~~Supplementary Instructional Materials~~Supplementary Instructional Materials
6161.2	~~Damaged Or Lost Instructional Materials~~Damaged Or Lost Instructional Materials
6163.1	~~Library Media Centers~~Library Media Centers
9000	~~Role Of The Board~~Role Of The Board
9012	~~Board Member Electronic Communications~~Board Member Electronic Communications
9200	~~Limits Of Board Member Authority~~Limits Of Board Member Authority
9322	~~Agenda/Meeting Materials~~Agenda/Meeting Materials

Exhibit 1312.4-E(1): Williams Uniform Complaint Procedures

Status: ADOPTED

Original Adopted Date: 10/19/2011 | Last Revised Date: 12/14/2022 |

See PDF on the next page.

~~Exhibit 1~~

NOTICE TO PARENTS/GUARDIANS~~/PUPILS~~, STUDENTS, AND TEACHERS

K-12 COMPLAINT RIGHTS

Parents/Guardians, ~~Pupils~~Students, and Teachers:

Pursuant to Education Code 35186, you are hereby notified that:

1. There should be sufficient textbooks and instructional materials~~. For there to be sufficient textbooks and instructional materials,~~

   That means each ~~pupil~~student, including an English ~~learners~~learner, must have a textbook or instructional ~~material~~materials, or both, to use in class and to take home.

2. School facilities must be clean, safe, and maintained in good repair~~.~~

   This includes the identification and resolution of emergency or urgent facilities conditions that pose a threat to the health and safety of students or staff.

~~1.~~ There should be no teacher vacancies or misassignments~~.~~

There should be a teacher assigned to each class and not a series of substitutes or other temporary teachers. ~~–~~The teacher should have the proper credential to teach the class, including the certification required to teach English learners, if present.

3.

Misassignment means the placement of a certificated employee in a teaching or services position for which the employee does not hold a legally recognized certificate or credential or the placement of a certificated employee in a teaching or services position that the employee is not otherwise authorized by statute to hold.

Teacher vacancy means a position to which a single designated certificated employee has not been assigned at the beginning of the year for an entire year or, if the position is for a one-semester course, a position to which a single designated certificated employee has not been assigned at the beginning of a semester for an entire semester.

~~Misassignment means the placement of a certificated employee in a teaching or services position for which the employee does not hold a legally recognized~~

~~certificate or credential or the placement of a certificated employee in a teaching or services position that the employee is not otherwise authorized by statute to hold.~~

~~2.~~

If you choose to file a complaint alleging that any of the above conditions is not being met, your complaint will be addressed through the district's Williams uniform complaint procedures as required by law. A complaint form ~~can~~may be obtained at the school office or district office, or downloaded from the school or district ~~web site~~website. You may also download a copy of the California Department of Education (CDE) complaint form from ~~the following web site: http://www.cde.ca.gov/re/cp/uc.~~ CDE's, website when available. However, a complaint need not be filed using either the district's complaint form or the complaint form from ~~the California Department of Education~~CDE.

Policy Reference Disclaimer:
These references are not intended to be part of the policy itself, nor do they indicate the basis or authority for the board to enact this policy. Instead, they are provided as additional resources for those interested in the subject matter of the policy.

State	Description
5 CCR 4600-4670	Uniform complaint procedures
5 CCR ~~4600~~4680-4687	~~Uniform complaint procedures and Williams complaints~~Williams uniform complaint procedures
5 CCR 4690-4694	~~Health and safety complaints in license-exempt preschool programs~~Health and safety complaints in license-exempt preschool programs
Ed. Code 1240	~~County superintendent of schools; duties~~County superintendent of schools; duties
Ed. Code 17592.72	~~School Facility Emergency Repair Account; urgent or emergency repairs~~School Facility Emergency Repair Account; urgent or emergency repairs
Ed. Code 200-270	~~Prohibition of discrimination~~Prohibition of discrimination
Ed. Code 234.1	~~Student protections relating to discrimination, harassment, intimidation, and bullying~~Student protections relating to discrimination, harassment, intimidation, and bullying
Ed. Code 33126	~~School accountability report card~~School accountability report card
Ed. Code 35186	~~Williams uniform complaint procedures~~Williams uniform complaint procedures
Ed. Code 35292.5-35292.6	~~Restrooms; maintenance and cleanliness~~Restrooms; maintenance and cleanliness
Ed. Code 48907	~~Exercise of free expression; time, place, and manner rules and regulations~~Exercise of free expression; time, place, and manner rules and regulations

Ed. Code 48950	~~Speech and other communication~~Speech and other communication
Ed. Code 48985	~~Notices to parents in language other than English~~Notices to parents in language other than English
Ed. Code 51501	~~Nondiscriminatory subject matter~~Nondiscriminatory subject matter
Ed. Code 60010	~~Instructional materials; definition~~Instructional materials; definition
Ed. Code 60040-60052	~~Requirements for instructional materials~~Requirements for instructional materials
Ed. Code 60119	~~Hearing on sufficiency of instructional materials~~Hearing on sufficiency of instructional materials
Ed. Code 60150	~~Penalty for insufficiency of textbooks and instructional materials~~Penalty for insufficiency of textbooks and instructional materials
Federal	**Description**
20 USC 6314	~~Title I schoolwide program~~Title I schoolwide program
Management Resources	**Description**
CA Office of the Attorney General Publication	~~Guidance to School Officials re: Legal Requirements for Providing Inclusive Curricula and Books, Legal Alert, January 2024~~Guidance to School Officials re: Legal Requirements for Providing Inclusive Curricula and Books, Legal Alert, January 2024
CSBA Publication	~~Instructional Materials Adoptions: State and local governing board processes, roles, and responsibilities, Governance Brief, February 2024~~Instructional Materials Adoptions: State and local governing board processes, roles, and responsibilities, Governance Brief, February 2024
CSBA Publication	~~Instructional Materials Adoptions: Local governing board responsibilities, Fact Sheet, February 2024~~Instructional Materials Adoptions: Local governing board responsibilities, Fact Sheet, February 2024
Website	~~California County Superintendents Educational Services Association~~California County Superintendents Educational Services Association
Website	~~CSBA District and County Office of Education Legal Services~~CSBA District and County Office of Education Legal Services

Website	State Allocation Board, Office of Public School ConstructionState Allocation Board, Office of Public School Construction
Website	Department of Justice
Website	U.S. Department of Education, Office for Civil Rights
Website	CSBA
Website	California Department of Education

Cross References

Management Resources	Description
Website	Department of Justice
Website	U.S. Department of Education, Office for Civil Rights
Website	CSBA
WebsiteCode	California Department of Education

Cross References	Description
0410	Nondiscrimination In District Programs And ActivitiesNondiscrimination In District Programs And Activities
0460	Local Control And Accountability PlanLocal Control And Accountability Plan
0460	Local Control And Accountability PlanLocal Control And Accountability Plan
1100	Communication With The PublicCommunication With The Public
1250	Visitors/OutsidersVisitors/Outsiders
1250	Visitors/OutsidersVisitors/Outsiders
1312.2	Complaints Concerning Instructional MaterialsComplaints Concerning Instructional Materials
1312.2	Complaints Concerning Instructional MaterialsComplaints Concerning Instructional Materials
1312.2-E PDF(1)	Complaints Concerning Instructional MaterialsComplaints Concerning Instructional Materials
1312.3	Uniform Complaint ProceduresUniform Complaint Procedures
1312.3	Uniform Complaint ProceduresUniform Complaint Procedures
1312.3	Uniform Complaint Procedures
1312.3	Uniform Complaint Procedures
1340	Access To District RecordsAccess To District Records
1340	Access To District RecordsAccess To District Records
3270	Sale And Disposal Of Books, Equipment And SuppliesSale And Disposal Of Books, Equipment And Supplies

3270	~~Sale And Disposal Of Books, Equipment And Supplies~~Sale And Disposal Of Books, Equipment And Supplies
3514	~~Environmental Safety~~Environmental Safety
3514	~~Environmental Safety~~Environmental Safety
3514.2	~~Integrated Pest Management~~Integrated Pest Management
3517	~~Facilities Inspection~~Facilities Inspection
3517	Facilities Inspection
3550	~~Food Service/Child Nutrition Program~~Food Service/Child Nutrition Program
3550	~~Food Service/Child Nutrition Program~~Food Service/Child Nutrition Program
4112.2	~~Certification~~Certification
4112.2	~~Certification~~Certification
4112.22	Staff Teaching English Learners
4113	~~Assignment~~Assignment
4113	~~Assignment~~Assignment
4144	~~Complaints~~Complaints
4144	Complaints
4244	~~Complaints~~Complaints
4244	Complaints
4344	~~Complaints~~Complaints
4344	Complaints
5145.3	~~Nondiscrimination/Harassment~~Nondiscrimination/Harassment
5145.3	~~Nondiscrimination/Harassment~~Nondiscrimination/Harassment
6142.92	Mathematics Instruction
6143	Courses Of Study
6143	Courses Of Study
6161.1	Selection And Evaluation Of Instructional Materials
6161.1	Selection And Evaluation Of Instructional Materials
6161.1	Selection And Evaluation Of Instructional Materials
6161.11	Supplementary Instructional Materials
6161.2	Damaged Or Lost Instructional Materials
6163.1	Library Media Centers
9000	Role Of The Board
9012	Board Member Electronic Communications
9200	Limits Of Board Member Authority
9322	Agenda/Meeting Materials

~~Cross References~~	~~Description~~
~~6142.92~~	~~Mathematics Instruction~~
~~6143~~	~~Courses Of Study~~
~~6143~~	~~Courses Of Study~~

~~6161.11~~	~~Supplementary Instructional Materials~~
~~6161.11-E PDF(1)~~	~~Supplementary Instructional Materials~~
~~6161.2~~	~~Damaged Or Lost Instructional Materials~~
~~6163.1~~	~~Library Media Centers~~
~~9000~~	~~Role Of The Board~~
~~9012~~	~~Board Member Electronic Communications~~
~~9200~~	~~Limits Of Board Member Authority~~
~~9322~~	~~Agenda/Meeting Materials~~

Exhibit 1312.4-E(2): Williams Uniform Complaint Procedures

Status: ADOPTED

Original Adopted Date: 12/14/2022 | **Last Revised Date:** 12/14/2022

~~*See PDF on the next page.*~~

~~Exhibit 1312.4-E(2): Complaint Form~~

K-12 COMPLAINT FORM:
WILLIAMS UNIFORM COMPLAINT PROCEDURES

Education Code 35186 creates a procedure for the filing of complaints concerning deficiencies related to instructional materials, conditions of facilities that are not maintained in a clean or safe manner or in good repair, including emergency or urgent facilities conditions that pose a threat to the health and safety of students or staff, or teacher vacancy or misassignment. The complaint and response are public documents as provided by law. Complaints may be filed anonymously. However, if you wish to receive a response to your complaint, you must provide the contact information below.

Response requested? ___ Yes ___ No

Contact information: (if response is requested)

Name:_____
Address:_____
Phone number: Day:_____ Evening:_____
E-mail address, if any:_____

Date problem was observed:_____

Location of the problem that is the subject of this complaint:

School name/address:_____

Course title/grade level and teacher name: _____

Room number/name of room/location of facility:_____

Only the following issues may be the subject of this complaint process. If you wish to complain about an issue not specified below, please contact the school or district for the appropriate district complaint procedure.

Specific issue(s) of the complaint: (Please check all that apply. A complaint may contain more than one allegation.)

~~1.~~ Textbooks and instructional materials: (Education Code 35186; 5 CCR 4681)

1.

~~a~~a. A student, including an English learner, does not have standards-aligned textbooks or instructional materials or state- or district-adopted textbooks or other required

instructional materials to use in class.

a. A student does not have access to textbooks or instructional materials to use at home or after school.

This does not require two sets of textbooks or instructional materials for each student.

b. Textbooks or instructional materials are in poor or unusable condition, have missing pages, or are unreadable due to damage.

c. A student was provided photocopied sheets from only a portion of a textbook or instructional materials to address a shortage of textbooks or instructional materials.

2. Teacher vacancy or misassignment: (Education Code 35186; 5 CCR 4682)

2.

a. A semester begins and a teacher vacancy exists.

A teacher vacancy is a position to which a single designated certificated employee has not been assigned at the beginning of the school year for an entire year or, if the position is for a onesemesterone-semester course, a position to which a single designated certificated employee has not been assigned at the beginning of a semester for an entire semester. (5 CCR 4600)

b. A teacher who lacks credentials or training to teach English learners is assigned to teach a class with one or more than 20 percent English learners in the class.

This does not relieve the district from complying with state or federal law regarding teachers of English Learners.

c. A teacher is assigned to teach a class for which the teacher lacks subject matter competency

3. Facilities conditions: (Education Code 17592.72, 35186, 35292.5, 35292.6; 5 CCR 4683)

3.

a. A condition exists that poses an emergency or urgent threat to the health or safety of students or staff while at school including gas leaks; nonfunctioning heating, ventilation, fire sprinklers, or air-conditioning systems; electrical power failure; major sewer line stoppage; major pest or vermin infestation; broken windows or exterior doors or gates that will not lock and that pose a security risk; abatement of hazardous materials previously undiscovered that pose an immediate threat to students or staff; structural damage creating a hazardous or uninhabitable condition; and any other condition deemed appropriate by the district.

~~a.~~b. A school restroom has not been cleaned or maintained regularly, is not fully operational, or has not been stocked at all times with toilet paper, soap, ~~or~~and paper towels or functional hand dryers~~.~~

~~b.~~c. For a school serving students in any of grades ~~6~~3-12, the school has not, at all times, stocked and made available and accessible free of cost, an adequate supply of menstrual products in every women's and all-gender restroom, and in at least one men's restroom~~.~~

d. Starting July 1, 2026, for a school that has more than one female and more than one male restroom designated exclusively for student use, the school has not maintained at least one all-gender restroom for student use in accordance with Education Code 35292.5

~~c~~e. The school has not kept all restrooms open during school hours when students are not in classes and has not kept a sufficient number of restrooms open during school hours when students are in classes~~.~~

This does not apply when temporary closing of the restroom is necessary for a documented student safety concern, an immediate threat to student safety, or to ~~make repairs.~~ repair the facility.

Please describe the issue of your complaint in detail. You may attach additional pages and include as much text as ~~necessary~~you wish to fully describe the situation. For complaints regarding facilities conditions, please describe the emergency or urgent facilities condition and how that condition poses a threat to the health or safety of students or staff.

_____
_____
_____
_____
_____
_____
_____

Please file this complaint at the following location:

_____
(principal or designee)

_____
(address)

Please be aware that you may file a complaint directly with the Superintendent of Public Instruction if you are alleging that more than one student does not have sufficient textbooks or instructional materials as the result of an act by the Governing Board, or the Board's failure to

remedy the deficiency.

Please provide a signature below. If you wish to remain anonymous, a signature is not required.– However, all complaints, even anonymous ones, should be dated.

_____ _____

Signature Date

~~Please file this complaint at the following location:~~

~~Assistant Superintendent, Human Resources (principal or designee)~~

~~Oxnard School District~~

~~1051 South A Street~~

~~Oxnard, California 93030~~

~~Please provide a signature below. If you wish to remain anonymous, a signature is not required. However, all complaints, even anonymous ones, should be dated.~~

~~_____ _____~~

~~(Signature) (Date)~~

Policy Reference Disclaimer:
These references are not intended to be part of the policy itself, nor do they indicate the basis or authority for the board to enact this policy. Instead, they are provided as additional resources for those interested in the subject matter of the policy.

State	Description
5 CCR 4600-4670	Uniform complaint procedures
5 CCR ~~4600~~4680-4687	~~Uniform complaint procedures and Williams complaints~~Williams uniform complaint procedures
5 CCR 4690-4694	~~Health and safety complaints in license-exempt preschool programs~~Health and safety complaints in license-exempt preschool programs
Ed. Code 1240	~~County superintendent of schools; duties~~County superintendent of schools; duties
Ed. Code 17592.72	~~School Facility Emergency Repair Account; urgent or emergency repairs~~School Facility Emergency Repair Account; urgent or emergency repairs
Ed. Code 200-270	~~Prohibition of discrimination~~Prohibition of discrimination
Ed. Code 234.1	~~Student protections relating to discrimination, harassment, intimidation, and bullying~~Student protections relating to discrimination, harassment, intimidation, and bullying
Ed. Code 33126	~~School accountability report card~~School accountability report card
Ed. Code 35186	~~Williams uniform complaint procedures~~Williams uniform complaint procedures
Ed. Code 35292.5-35292.6	~~Restrooms; maintenance and cleanliness~~Restrooms; maintenance and cleanliness
Ed. Code 48907	~~Exercise of free expression; time, place, and manner rules and regulations~~Exercise of free expression; time, place, and manner rules and regulations
Ed. Code 48950	~~Speech and other communication~~Speech and other communication
Ed. Code 48985	~~Notices to parents in language other than English~~Notices to parents in language other than English

Ed. Code 51501	~~Nondiscriminatory subject matter~~Nondiscriminatory subject matter
Ed. Code 60010	~~Instructional materials; definition~~Instructional materials; definition
Ed. Code 60040-60052	~~Requirements for instructional materials~~Requirements for instructional materials
Ed. Code 60119	~~Hearing on sufficiency of instructional materials~~Hearing on sufficiency of instructional materials
Ed. Code 60150	~~Penalty for insufficiency of textbooks and instructional materials~~Penalty for insufficiency of textbooks and instructional materials

Federal	**Description**
20 USC 6314	~~Title I schoolwide program~~Title I schoolwide program

Management Resources	**Description**
CA Office of the Attorney General Publication	~~Guidance to School Officials re: Legal Requirements for Providing Inclusive Curricula and Books, Legal Alert, January 2024~~Guidance to School Officials re: Legal Requirements for Providing Inclusive Curricula and Books, Legal Alert, January 2024
CSBA Publication	~~Instructional Materials Adoptions: State and local governing board processes, roles, and responsibilities, Governance Brief, February 2024~~Instructional Materials Adoptions: State and local governing board processes, roles, and responsibilities, Governance Brief, February 2024
CSBA Publication	~~Instructional Materials Adoptions: Local governing board responsibilities, Fact Sheet, February 2024~~Instructional Materials Adoptions: Local governing board responsibilities, Fact Sheet, February 2024
Website	~~California County Superintendents Educational Services Association~~California County Superintendents Educational Services Association
Website	~~CSBA District and County Office of Education Legal Services~~CSBA District and County Office of Education Legal Services

Website	~~State Allocation Board, Office of Public School Construction~~State Allocation Board, Office of Public School Construction
Website	Department of Justice
Website	U.S. Department of Education, Office for Civil Rights
Website	CSBA
Website	California Department of Education

Cross References

~~Management Resources~~	**Description**
~~Website~~	~~Department of Justice~~
~~Website~~	~~U.S. Department of Education, Office for Civil Rights~~
~~Website~~	~~CSBA~~
~~Website~~**Code**	~~California Department of Education~~

~~Cross References~~	~~Description~~
0410	~~Nondiscrimination In District Programs And Activities~~Nondiscrimination In District Programs And Activities
0460	~~Local Control And Accountability Plan~~Local Control And Accountability Plan
0460	~~Local Control And Accountability Plan~~Local Control And Accountability Plan
1100	~~Communication With The Public~~Communication With The Public
1250	~~Visitors/Outsiders~~Visitors/Outsiders
1250	~~Visitors/Outsiders~~Visitors/Outsiders
1312.2	~~Complaints Concerning Instructional Materials~~Complaints Concerning Instructional Materials
1312.2	~~Complaints Concerning Instructional Materials~~Complaints Concerning Instructional Materials
1312.2~~ E PDF(1)~~	~~Complaints Concerning Instructional Materials~~Complaints Concerning Instructional Materials

1312.3	~~Uniform Complaint Procedures~~Uniform Complaint Procedures
1312.3	~~Uniform Complaint Procedures~~Uniform Complaint Procedures
1312.3	Uniform Complaint Procedures
1312.3	Uniform Complaint Procedures
1340	~~Access To District Records~~Access To District Records
1340	~~Access To District Records~~Access To District Records
3270	~~Sale And Disposal Of Books, Equipment And Supplies~~Sale And Disposal Of Books, Equipment And Supplies
3270	~~Sale And Disposal Of Books, Equipment And Supplies~~Sale And Disposal Of Books, Equipment And Supplies
3514	~~Environmental Safety~~Environmental Safety
3514	~~Environmental Safety~~Environmental Safety
3514.2	~~Integrated Pest Management~~Integrated Pest Management
3517	~~Facilities Inspection~~Facilities Inspection
3517	Facilities Inspection
3550	~~Food Service/Child Nutrition Program~~Food Service/Child Nutrition Program
3550	~~Food Service/Child Nutrition Program~~Food Service/Child Nutrition Program
4112.2	~~Certification~~Certification
4112.2	~~Certification~~Certification
4112.22	Staff Teaching English Learners
4113	~~Assignment~~Assignment
4113	~~Assignment~~Assignment
4144	~~Complaints~~Complaints
4144	Complaints
4244	~~Complaints~~Complaints
4244	Complaints
4344	~~Complaints~~Complaints
4344	Complaints

5145.3	~~Nondiscrimination/Harassment~~Nondiscrimination/Harassment
5145.3	~~Nondiscrimination/Harassment~~Nondiscrimination/Harassment
6142.92	Mathematics Instruction
6143	Courses Of Study
6143	Courses Of Study
6161.1	Selection And Evaluation Of Instructional Materials
6161.1	Selection And Evaluation Of Instructional Materials
6161.1	Selection And Evaluation Of Instructional Materials
6161.11	Supplementary Instructional Materials
6161.2	Damaged Or Lost Instructional Materials
6163.1	Library Media Centers
9000	Role Of The Board
9012	Board Member Electronic Communications
9200	Limits Of Board Member Authority
9322	Agenda/Meeting Materials

~~Cross References~~	~~Description~~
~~6142.92~~	~~Mathematics Instruction~~
~~6143~~	~~Courses Of Study~~
~~6143~~	~~Courses Of Study~~
~~6161.11~~	~~Supplementary Instructional Materials~~
~~6161.11-E PDF(1)~~	~~Supplementary Instructional Materials~~
~~6161.2~~	~~Damaged Or Lost Instructional Materials~~
~~6163.1~~	~~Library Media Centers~~
~~9000~~	~~Role Of The Board~~
~~9012~~	~~Board Member Electronic Communications~~
~~9200~~	~~Limits Of Board Member Authority~~
~~9322~~	~~Agenda/Meeting Materials~~

OSD BOARD AGENDA ITEM

Name of Contributor: Dr. Aracely Fox **Date of Meeting:** March 19, 2025

Agenda Section: Section F: Board Policies, Second Reading

Second Reading and Adoption - BP/AR 6158 Independent Study (Fox/Nocero)

The BP/AR 6158 Independent Study has been updated based on recommendations by CSBA (California School Board Association). New language is highlighted. Deleted language is indicated by strikethrough.

FISCAL IMPACT:
N/A

RECOMMENDATION:
It is the recommendation of the Assistant Superintendent of Educational Services, and Director of Pupil Services that the Board of Trustees approve and adopt the BP/AR 6158 Independent Study as presented.

ADDITIONAL MATERIALS:
Attached: Updated Regulation 6158_Independent Study (7pgs).pdf
Updated OSD Policy 6158 _Independent Study 3-13-25 (9 pgs).pdf

Regulation 6158: Independent Study Status: ADOPTED

Original Adopted Date: 07/14/2020 | Last Revised Date: 02/15/2023 | Last Reviewed Date: 02/15/2023

Definitions

Live interaction means interaction between the student and classified or certificated staff, and may include peers, provided for the purpose of maintaining school connectedness, including, but not limited to, wellness checks, progress monitoring, provision of services, and instruction. This interaction may take place in-person, or in the form of Internet or telephonic communication. (Education Code 51745.5)

Student-parent-educator conference means a meeting involving, at a minimum, all parties who signed the student's written independent study agreement pursuant to Education Code 51747 or the written learning agreement pursuant to Education Code 51749.6. (Education Code 51745.5)

Synchronous instruction means classroom-style instruction or designated small group or one-on-one instruction delivered in-person, or in the form of Internet or telephonic communications, and involving live two-way communication between the teacher and student. Synchronous instruction shall be provided by a teacher(s) ~~or teachers~~ of record for that student pursuant to Education Code 51747.5 or the certificated employee providing instruction for course-based independent study. (Education Code 51745.5)

Educational Opportunities

Educational opportunities offered through independent study may include, but are not limited to: (Education Code 51745)

1. Special assignments extending the content of regular courses of instruction
2. Individualized study in a particular area of interest or in a subject not currently available in the regular school curriculum
3. Continuing and special study during travel
4. Volunteer community service activities and leadership opportunities that support and strengthen student achievement
5. Individualized study for a student whose health, as determined by the student's parent/guardian, would be put at risk by in-person instruction or for a student who is unable to attend in-person instruction due to a quarantine due to exposure to, or infection with, COVID-19, pursuant to local or state public health guidance

In addition, when requested by a parent/guardian due to an emergency or illness, independent study may be used on a short-term basis to ensure that the student is able to maintain academic progress in the student's regular classes.

Equivalency

The district's independent study option shall be substantially equivalent in quality and quantity to classroom instruction to enable participating students to complete the district's adopted course of study within the customary timeframe. Students in independent study shall have access to the same services and resources that are available to other students in the school and shall have equal rights and privileges. (5 CCR 11700, 11701.5)

Students participating in independent study shall have access to Internet connectivity and devices adequate to participate in the educational program and complete assigned work. (Education Code 51747)

The district shall not provide independent study students and their parents/guardians with funds

or items of value that are not provided for other students and their parents/guardians. Providing access to Internet connectivity and district-owned devices adequate to participate in an independent study program and complete assigned work consistent with Education Code 51747, or to participate in an independent study course, as authorized by Education Code 51749.5, shall not be considered funds or other things of value. (Education Code 46300.6, 51747.3)

Eligibility for Independent Study

To participate in independent study, a student shall be enrolled in a district school. (Education Code 51748)

The Superintendent or designee may approve the participation of a student who demonstrates the motivation, commitment, organizational skills, and academic skills necessary to work independently provided that experienced certificated staff are available to effectively supervise students in independent study. The Superintendent or designee may also approve the participation of a student whose health would be put at risk by in-person instruction. A student whose academic performance is not at grade level may participate in independent study only if the program is able to provide appropriate support, such as supplemental instruction, tutoring, counseling, ongoing diagnostic assessments, and/or differentiated materials, to enable the student to be successful. For an elementary student, the Superintendent or designee may consider the parent/guardian's level of commitment to assist the student.

A student participating in independent study must be a resident of the county or an adjacent county. Full-time independent study shall not be available to students whose district residency status is based on their parent/guardian's employment within district boundaries pursuant to Education Code 48204. (Education Code 46300.2, 51747.3)

A student with disabilities, as defined in Education Code 56026, may participate in independent study if the student's individualized education program (IEP) specifically provides for such participation. If a parent/guardian of a student with disabilities requests independent study because the student's health would be put at risk by in-person instruction, the student's IEP team shall make an individualized determination as to whether the student can receive a free appropriate public education (FAPE) in an independent study placement. A student's inability to work independently, need for adult support, or need for special education or related services shall not preclude the IEP team from determining that the student can receive FAPE in an independent study placement. (Education Code 51745)

In addition, any student with disabilities who receives services from a nonpublic, nonsectarian school through a virtual program may be permitted to participate in independent study if the student's IEP team determines that FAPE can be provided to the student by means of the virtual program and other conditions of law are satisfied.

A temporarily disabled student shall not receive individual instruction pursuant to Education Code 48206.3 through independent study. (Education Code 51745)

Except for students participating in independent study due to an emergency as described in Education Code 41422 and 46392 and pregnant and parenting students who are the primary caregiver for their child(ren), no more than 10 percent of the students enrolled in a continuation high school or opportunity school or program, shall be enrolled in independent study. (Education Code 51745)

Monitoring Student Progress

The independent study administrator and/or supervising teacher shall promptly and directly address any failure by the student to meet the terms of the student's written agreement. The following supportive strategies may be used:

1. A letter to the student and/or parent/guardian
2. A meeting between the student and the teacher and/or counselor
3. A meeting between the student and the independent study administrator, including the parent/guardian if appropriate

4. An increase in the amount of time the student works under direct supervision

When the student has failed to make satisfactory educational progress or missed the number of assignments specified in the written agreement as requiring an evaluation, the Superintendent or designee shall conduct an evaluation to determine whether or not independent study is in the student's best interest. This evaluation may result in termination of the independent study agreement and the student's return to the regular classroom program or other alternative program. (Education Code 51747, 51749.5; 5 CCR 11701)

A written record of the findings of any such evaluation shall be treated as a mandatory interim student record which shall be maintained for three years from the date of the evaluation, and if the student transfers to another public school in California, the record shall be forwarded to that school. (Education Code 51747, 51749.5)

Responsibilities of Independent Study Administrator

The responsibilities of the independent study administrator include, but are not limited to:

1. Recommending certificated staff to be assigned as independent study teachers at the required teacher-student ratios pursuant to Education Code 51745.6 and supervising staff assigned to independent study functions who are not regularly supervised by another administrator
2. Approving or denying the participation of students requesting independent study
3. Facilitating the completion of written independent study agreements
4. Ensuring a smooth transition for students into and out of the independent study mode of instruction
5. Approving all credits earned through independent study
6. Completing or coordinating the preparation of all records and reports required by law, Board policy, or administrative regulation

Assignment and Responsibilities of Independent Study Teachers

Each student's independent study shall be coordinated, evaluated, and carried out under the general supervision of a district employee who possesses a valid certification document pursuant to Education Code 44865 or emergency credential pursuant to Education Code 44300, registered as required by law, and who consents to the assignment. (Education Code 44865, 51747.5; 5 CCR 11700)

The ratio of student average daily attendance for independent study students age 18 years or younger to full-time equivalent certificated employees responsible for independent study shall not exceed the equivalent ratio for all other education programs in the district, unless a new higher or lower ratio for all other educational programs offered is negotiated in a collective bargaining agreement or the district enters into a memorandum of understanding that indicates an existing collective bargaining agreement contains an alternative ratio. (Education Code 51745.6)

The responsibilities of the supervising teacher shall include, but are not limited to:

1. Completing designated portions of the written independent study agreement and signing the agreement
2. Supervising and approving coursework and assignments
3. Maintaining records of student assignments showing the date the assignment is given and the date the assignment is due
4. Maintaining a daily or hourly attendance register in accordance with item #4 in "Records" in the section on in the accompanying Board policy
5. Providing direct instruction and counsel as necessary for individual student success

6. Regularly meeting with the student to discuss the student's progress
7. Determining the time value of assigned work or work products completed and submitted by the student including time that the student engaged in asynchronous instruction
8. Assessing student work and assigning grades or other approved measures of achievement
9. Documenting each student's participation in live interaction and/or synchronous instruction pursuant to Education Code 51747 on each school day, as applicable, in whole or in part, for which live interaction or synchronous instruction is provided as part of the independent study program

The Superintendent or designee shall ensure that independent study teachers have access to professional development and support comparable to classroom-based teachers.

Policy Reference Disclaimer:These references are not intended to be part of the policy itself, nor do they indicate the basis or authority for the board to enact this policy. Instead, they are provided as additional resources for those interested in the subject matter of the policy.

State	Description
5 CCR 11700-11705	Independent study
State	**Description**
Ed. Code 147610-47615	Charter School Operation
Ed. Code 17289	Exemption for facilities
Ed. Code 41020	Requirement for annual audit
Ed. Code 41422	Emergency conditions and apportionments
Ed. Code 42238	Revenue limits
Ed. Code 42238.05	Local control funding formula; average daily attendance
Ed. Code 44865	Qualifications for independent study teachers
Ed. Code 46100	Length of school day
Ed. Code 46200-46208	Incentives for longer instructional day and year
Ed. Code 46300-46307.1	Methods of computing average daily attendance
Ed. Code 46390-46393	Emergency average daily attendance
Ed. Code 46600	Interdistrict attendance computation
Ed. Code 47612.5	Charter schools operations; general requirements
Ed. Code 48204	Residency requirements for school attendance
Ed. Code 48206.3	Home or hospital instruction; students with temporary disabilities
Ed. Code 48220	Classes of children exempted
Ed. Code 48340	Improvement of pupil attendance
Ed. Code 48915	Expulsion; particular circumstances
Ed. Code 48916.1	Educational program requirements for expelled students
Ed. Code 48917	Suspension of expulsion order
Ed. Code 49010	Educational activity; definition
Ed. Code 49011	Student fees; definition
Ed. Code 49501.5	School Meals
Ed. Code 51225.3	High school graduation requirements
Ed. Code 51744-51749.6	Independent study
Ed. Code 52060	Local control and accountability plan
Ed. Code 52523	Adult education as supplement to high school curriculum; criteria

Ed. Code 56026	Individual with exceptional needs; definition
Ed. Code 58500-58512	Alternative schools and programs of choice
Fam. Code 6550-6552	Caregivers

Federal	**Description**
20 USC 6311	State plan

Management Resources	**Description**
California Department of Education Publication	Legal Requirements for Independent Study
California Department of Education Publication	Conducting Individualized Determinations of Need
California Department of Education Publication	California Digital Learning Integration and Standards Guidance, May 2021
California Department of Education Publication	Elements of Exemplary Independent Study
Court Decision	Modesto City Schools v. Education Audits Appeal Panel (2004) 123 Cal.App.4th 1365

Management Resources	Description
Education Audit Appeals Panel Publication	Guide for Annual Audits of K-12 Local Education Compliance Reporting
Agencies and State Website	CSBA District and County Office of Education Legal Services
Website	California Consortium for Independent Study
Website	California Department of Education, Independent Study
Website	Education Audit Appeals Panel

Cross References	Description
0410	Nondiscrimination In District Programs And Activities
0450	Comprehensive Safety Plan
0450	Comprehensive Safety Plan
0500	Accountability
3260	Fees And Charges
3260	Fees And Charges
3516.5	Emergency Schedules
3550	Food Service/Child Nutrition Program
3550	Food Service/Child Nutrition Program
3580	District Records
3580	District Records
4112.2	Certification
4112.2	Certification
4131	Staff Development
5111.1	District Residency
5111.1	District Residency
5112.3	Student Leave Of Absence
5112.3	Student Leave Of Absence
5113	Absences And Excuses
5113	Absences And Excuses
5121	Grades/Evaluation Of Student Achievement
5121	Grades/Evaluation Of Student Achievement
5125	Student Records
5125	Student Records
5126	Awards For Achievement
5126	Awards For Achievement
5141.22	Infectious Diseases
5141.31	Immunizations
5141.31	Immunizations
5144.1	Suspension And Expulsion/Due Process
5144.1	Suspension And Expulsion/Due Process
5145.6	Parent/Guardian Notifications
5145.6-E PDF(1)	Parent/Guardian Notifications

Cross References	Description
5146	Married/Pregnant/Parenting Students
5146	Married/Pregnant/Parenting Students
5147	Dropout Prevention
6000	Concepts And Roles
6011	Academic Standards
6111	School Calendar
6112	School Day
6112	School Day
6142.4	Service Learning/Community Service Classes
6143	Courses Of Study
6143	Courses Of Study
6159	Individualized Education Program
6159	Individualized Education Program
6162.5	Student Assessment
6164.5	Student Success Teams
6164.5	Student Success Teams
6172	Gifted And Talented Student Program
6172	Gifted And Talented Student Program
6183	Home And Hospital Instruction

Policy 6158: Independent Study Status: ADOPTED

Original Adopted Date: 07/14/2020 | Last Revised Date: 02/15/2023 | Last Reviewed Date: 02/15/2023

The Board of Trustees authorizes independent study as an optional alternative instructional strategy for students whose needs may be best met through study outside of the regular classroom setting. Independent study shall offer a means of individualizing the educational plan to serve students who desire a more challenging educational experience, whose health or other personal circumstances make classroom attendance difficult, who are unable to access course(s) due to scheduling problems, and/or who need to make up credits or fill gaps in their learning. As necessary to meet student needs, independent study may be offered for short- or long-term placements, on a full- time or part-time basis, and/or in conjunction with part- or full-time classroom study.

The Board shall hold a public hearing when considering the scope of its existing or prospective use of independent study as an instructional strategy, its purposes in authorizing independent study, and factors bearing specifically on the maximum realistic lengths of assignments and acceptable number of missed assignments for specific populations of students. (Education Code 51747; 5 CCR 11701)

The Superintendent or designee may provide a variety of independent study opportunities, including, but not limited to, through a program or class within a comprehensive school, an alternative school or program of choice, a charter school, and an online course.

Student participation in independent study shall be voluntary and no student shall be required to participate. (Education Code 51747, 51749.5, 51749.6)

Independent study for each student shall be under the general supervision of a district employee who possesses a valid certification document pursuant to Education Code 44865 or an emergency credential pursuant to Education Code 44300. Students' independent study shall be coordinated, evaluated, and documented, as prescribed by law and reflected in the accompanying administrative regulation. (Education Code 51747.5)

~~The minimum period of time for any independent study option shall be three consecutive school days. (Education Code 46300)~~

An independent study student shall not be credited with more than one day of attendance per calendar day. (Education Code 46300)

A nutritionally adequate breakfast and lunch shall be made available at no cost to any independent study student scheduled for educational activities lasting two or more hours at a school site, resource center, meeting space, or other satellite facility, who requests a meal. (Education Code 49501.5)

General Independent Study Requirements

The Superintendent or designee may offer and approve independent study for an individual student upon determining that the student is prepared to meet the district's requirements for participation and is likely to succeed as well as or better than the student would in the regular classroom setting.

The minimum instructional minutes for all students shall be the same at each school including students participating in independent study, except as otherwise permitted by law. (Education Code 46100)

Because excessive leniency in the duration of independent study assignments may result in a student falling behind peers and increase the risk of dropping out of school, independent study assignments shall be completed no more than one week after assigned for all grade levels and types of programs.

When necessary based on the specific circumstances of the student's approved program, the Superintendent or designee may allow for a longer period of time between the date an assignment is made and when it is due. However, in no event shall the due date of an assignment be extended beyond the termination date of the agreement.

An evaluation shall be conducted to determine whether it is in a student's best interest to remain in independent study whenever the student fails to make satisfactory educational progress and/or misses three assignments.
Satisfactory educational progress shall be determined based on all of the following indicators: (Education Code 51747)

1. The student's achievement and engagement in the independent study program, as indicated by the student's performance on applicable student-level measures of student achievement and engagement specified in Education Code 52060
2. The completion of assignments, assessments, or other indicators that evidence that the student is working on assignments
3. Learning of required concepts, as determined by the supervising teacher
4. Progress towards successful completion of the course of study or individual course, as determined by the supervising teacher

The Superintendent or designee shall ensure that students participating in independent study are provided with content aligned to grade level standards at a level of quality and intellectual challenge substantially equivalent to in- person instruction. (Education Code 51747)

The Superintendent or designee shall ensure that students participating in independent study for ~~15~~ 16 school days or more receive the following throughout the school year: (Education Code 51747)

1. For students in grades transitional kindergarten (TK) - 3, ~~kindergarten, and grades 1 to 3,~~ opportunities for daily synchronous instruction
2. For students in grades 4-8, opportunities for both daily live interaction and at least weekly synchronous instruction

The Superintendent or designee shall ensure that procedures for tiered reengagement strategies are used for all students participating in an independent study program for ~~15~~ 16 school days or more who are: (Education Code 51747)

1. Not generating attendance for more than ten percent of required minimum instructional time over four continuous weeks of the district's approved instructional calendar
2. Not participating in synchronous instructional offerings pursuant to Education Code 51747.5 for more than 50 percent of the scheduled times of synchronous instruction in a school month as applicable by grade span
3. In violation of their written agreement

Tiered reengagement strategies procedures used in district independent study programs shall include local programs to address chronic absenteeism, as applicable, including, but ~~are~~ not ~~necessarily~~ limited to, ~~all of~~ the following: (Education Code 51747)

1. Verification of current contact information for each enrolled student
2. Notification to parents/guardians of lack of participation within one school day of the recording of a non- attendance day or lack of participation
3. A plan for outreach from the school to determine student needs, including connection with health and social services as necessary
4. A clear standard for requiring a student-parent-educator conference to review a student's written

agreement and reconsider the independent study program's impact on the student's achievement and well-being

The Superintendent or designee shall, for students who participate in an independent study program for ~~15~~ 16 school days of more, develop a plan to transition students whose families wish to return to in-person instruction from independent study expeditiously, and, in no case later, than five instructional days. (Education Code 51747)

When any student enrolled in classroom-based instruction is participating in independent study due to necessary medical treatment or inpatient treatment for mental health or substance abuse under the care of appropriately licensed professionals, the student shall be exempt from the live interaction and/or synchronous instruction, tiered reengagement strategies, and transition back to in-person instruction requirements specified above. In such cases, evidence from appropriately licensed professionals, of the student's need to participate in independent study, shall be submitted to the Superintendent or designee. (Education Code 51747)

The Superintendent or designee shall ensure that a written master agreement exists for each participating student as prescribed by law. (Education Code 51747, 51749.5)

Upon the request of the parent/guardian of a student, and before signing a written agreement as described below in the section "Master Agreement," the district shall conduct a telephone, videoconference, or in-person student- parent-educator conference or other meeting during which the student, parent/guardian, and, if requested, by the parent/guardian an advocate, may ask questions about the educational options, including which curriculum offerings and nonacademic supports will be available to the student in independent study. (Education Code 51747)

Master Agreement

A written agreement shall be developed and implemented for each student participating in independent study for three or more consecutive school days. (Education Code 46300, 51747~~; 5 CCR 11703~~)

For student participation for ~~15~~ 16 school days or more, a signed written agreement shall be obtained before the student begins independent study. For student participation of ~~less than~~ 15 school days or fewer, a signed written agreement ~~shall~~ may be obtained ~~within ten school days of the first day of the student's enrollment~~ at any time during the school year in which the independent study program takes place. (Education Code 46300, 51747)

The agreement shall include general student data, including the student's name, address, grade level, birth date, school of enrollment, and program placement.

The independent study agreement for each participating student also shall include, but is not limited to, all of the following: (Education Code 51747; 5 CCR 11700, 11702)

1. The manner, time, frequency, and place for submitting the student's assignments, reporting the student's academic progress, and communicating with a student's parent/guardian regarding the student's academic progress
2. The objectives and methods of study for the student's work and the methods used to evaluate that work
3. The specific resources that will be made available to the student, including materials and personnel, and access to Internet connectivity and devices adequate to participate in the educational program and complete assigned work
4. A statement of the Board's policy detailing the maximum length of time allowed between an assignment and its completion, the level of satisfactory educational progress, and the number of missed assignments which will trigger an evaluation of whether the student should be allowed to continue in independent study
5. The duration of the independent study agreement, including the beginning and ending dates for the

student's participation in independent study under the agreement, with a maximum of one school year

6. A statement of the number of course credits or, for the elementary grades, other measures of academic accomplishment appropriate to the agreement, to be earned by the student upon completion

7. A statement detailing the academic and other supports that will be provided to address the needs of students who are not performing at grade level, or need support in other areas, such as English learners, students with disabilities with an individualized education program or a Section 504 plan in order to be consistent with their program or plan, students in foster care or experiencing homelessness, and students requiring mental health supports.

8. A statement that independent study is an optional educational alternative ~~in which~~ and no student may be required to participate

9. In the case of a suspended or expelled student who is referred or assigned to any school, class, or program pursuant to Education Code 48915 or 48917, a statement that instruction may be provided through independent study only if the student is offered the alternative of classroom instruction

10. ~~Before the commencement of independent study projected to last for 15 school days or more, or within ten school days of the first day of enrollment for independent study for less than 15 school days, the agreement shall be signed and dated by the student, the student's parent/guardian or caregiver if the student is under age 18 years, the certificated employee responsible for the general supervision of independent study, and for students with disabilities, the certificated employee designated as having responsibility for the special education programming of the student~~

All learning agreements shall be signed by the student, the student's parent/guardian or caregiver if the student is less than 18 years of age, the certificated employee responsible for the general supervision of independent study, and as applicable for students with disabilities, the certificated employee designated as having responsibility for the special education programming of the student. If the independent study program is projected to last for more than 15 school days, the learning agreement shall be signed before the commencement of the program. For an independent study program that is projected to last for 15 or fewer school days, the learning agreement shall be signed at any time during the school year in which the independent study program is to take place. (Education Code 51747)

For purposes of the above paragraph, caregiver means a person who has met the requirements of Family Code 6550-6552.

Written agreements may be signed using an electronic signature that complies with state and federal standards, as determined by the California Department of Education (CDE). (Education Code 51747)

The parent/guardian's signature on the agreement shall constitute permission for the student to receive instruction through independent study.

Student-Parent-Educator Conferences

A student-parent-educator conference shall be held as appropriate including, but not limited to, as a reengagement strategy and/or, if requested by a parent/guardian, prior to enrollment or disenrollment from independent study. (Education Code 51745.5, 51747, 51749.5)

Records

The Superintendent or designee shall ensure that records are maintained for audit purposes.

These records shall include, but not be limited to: (Education Code 51748; 5 CCR 11703)

1. A copy of the Board policy, administrative regulation, and other procedures related to independent study

2. A listing of the students, by grade level, program, and school, who have participated in independent study, along with the units of the curriculum attempted and completed by students in grades K-8.
3. A file of all agreements, with representative samples of each student's work products bearing the supervising teacher's signed or initialed and dated notations indicating that the teacher has personally evaluated the work or personally reviewed the evaluations made by another certificated teacher
4. As appropriate to the program in which the students are participating, a daily or hourly attendance register that is separate from classroom attendance records, maintained on a current basis as time values of student work products judged by a certificated teacher, and reviewed by the supervising teacher if they are two different persons

   Additionally, the district shall maintain documentation of hours or fraction of an hour for student work products and the time that students engaged in asynchronous instruction. (Education Code 54747.5)
5. Appropriate documentation of compliance with the teacher-student ratios required by Education Code 51746 and 51749.5 (Education Code 51746 and 51749.5)
6. Appropriate documentation of compliance with the requirements pursuant to Education Code 51747.5 to ensure the coordination, evaluation, and supervision of the independent study of each student by a district employee who possesses a valid certification document pursuant to Education Code 44865 or an emergency credential pursuant to Education Code 44300 (Education Code 51747.5)

The district shall document each student's participation in live interaction and synchronous instruction pursuant to Education Code 51747 on each school day, as applicable, in whole or in part, for which live interaction or synchronous instruction is provided as part of the independent study program. A student who does not participate in scheduled live interaction or synchronous instruction shall be documented as non-participatory for that school day. (Education Code 51747.5)

The Superintendent or designee shall also maintain a written or computer-based record such as a grade book or summary document of student engagement, for each class, of all grades, assignments, and assessments for each student for independent study assignments. (Education Code 51747.5)

Signed written and supplemental agreements, assignment records, work samples, and attendance records may be maintained as an electronic file in accordance with Education Code 51747 and 51749.6, as applicable.

Program Evaluation

The Superintendent or designee shall annually report to the Board the number of district students participating in independent study, the average daily attendance generated for apportionment purposes, student performance as measured by standard indicators and in comparison to students in classroom based instruction, and the number and proportion of independent study students who graduate or successfully complete independent study. Based on the program evaluation, the Board and Superintendent shall determine areas for program improvement as needed.

Policy Reference Disclaimer:These references are not intended to be part of the policy itself, nor do they indicate the basis or authority for the board to enact this policy. Instead, they are provided as additional resources for those interested in the subject matter of the policy.

State	Description
5 CCR 11700-11705	Independent study
Ed. Code 147610-47615	Charter School Operation
Ed. Code 17289	Exemption for facilities

Ed. Code 41020	Requirement for annual audit
Ed. Code 41422	Emergency conditions and apportionments
Ed. Code 42238	Revenue limits
Ed. Code 42238.05	Local control funding formula; average daily attendance
Ed. Code 44865	Qualifications for independent study teachers
Ed. Code 46100	Length of school day
Ed. Code 46200-46208	Incentives for longer instructional day and year
Ed. Code 46300-46307.1	Methods of computing average daily attendance
Ed. Code 46390-46393	Emergency average daily attendance
Ed. Code 46600	Interdistrict attendance computation
State	**Description**
Ed. Code 47612.5	Charter schools operations; general requirements
Ed. Code 48204	Residency requirements for school attendance
Ed. Code 48206.3	Home or hospital instruction; students with temporary disabilities
Ed. Code 48220	Classes of children exempted
Ed. Code 48340	Improvement of pupil attendance
Ed. Code 48915	Expulsion; particular circumstances
Ed. Code 48916.1	Educational program requirements for expelled students
Ed. Code 48917	Suspension of expulsion order
Ed. Code 49010	Educational activity; definition
Ed. Code 49011	Student fees; definition
Ed. Code 49501.5	School Meals
Ed. Code 51225.3	High school graduation requirements
Ed. Code 51744-51749.6	Independent study
Ed. Code 52060	Local control and accountability plan
Ed. Code 52523	Adult education as supplement to high school curriculum; criteria
Ed. Code 56026	Individual with exceptional needs; definition
Ed. Code 58500-58512	Alternative schools and programs of choice
Fam. Code 6550-6552	Caregivers

Federal	**Description**
20 USC 6311	State plan

Management Resources	**Description**
California Department of Education Publication	Legal Requirements for Independent Study California Department of Education Publication Conducting Individualized Determinations of Need California Department of Education Publication California Digital Learning Integration and Standards Guidance, May 2021 California Department of Education Publication Elements of Exemplary Independent Study
Court	Modesto City Schools v. Education Audits Appeal Panel (2004) 123 Cal.App.4th 1365
Education Audit Appeals Panel Publication	Guide for Annual Audits of K-12 Local Education Agencies and State Compliance Reporting

Website	CSBA District and County Office of Education Legal Services
Website	California Consortium for Independent Study
Website	California Department of Education, Independent Study
Website	Education Audit Appeals Panel

Cross References	Description
0410	Nondiscrimination In District Programs And Activities
0450	Comprehensive Safety Plan
0450	Comprehensive Safety Plan
0500	Accountability
3260	Fees And Charges
3260	Fees And Charges
3516.5	Emergency Schedules
3550	Food Service/Child Nutrition Program
3550	Food Service/Child Nutrition Program
3580	District Records
3580	District Records
4112.2	Certification
4112.2	Certification
4131	Staff Development
5111.1	District Residency
5111.1	District Residency
5112.3	Student Leave Of Absence
5112.3	Student Leave Of Absence
5113	Absences And Excuses
5113	Absences And Excuses
5121	Grades/Evaluation Of Student Achievement
5121	Grades/Evaluation Of Student Achievement
5125	Student Records
5125	Student Records
5126	Awards For Achievement
5126	Awards For Achievement
5141.22	Infectious Diseases
5141.31	Immunizations
5141.31	Immunizations
5144.1	Suspension And Expulsion/Due Process
5144.1	Suspension And Expulsion/Due Process
5145.6	Parent/Guardian Notifications

5145.6-E PDF(1)	Parent/Guardian Notifications
5146	Married/Pregnant/Parenting Students
5146	Married/Pregnant/Parenting Students
5147	Dropout Prevention
6000	Concepts And Roles
6011	Academic Standards
6111	School Calendar
6112	School Day
6112	School Day
6142.4	Service Learning/Community Service Classes
6143	Courses Of Study
6143	Courses Of Study
6159	Individualized Education Program

6159	Individualized Education Program
6162.5	Student Assessment
6164.5	Student Success Teams
6164.5	Student Success Teams
6172	Gifted And Talented Student Program
6172	Gifted And Talented Student Program
6183	Home And Hospital Instruction

OSD BOARD AGENDA ITEM

Name of Contributor: Dr. Anabolena DeGenna **Date of Meeting:** March 19, 2025

Agenda Section: Section G: Conclusion

Superintendent's Report (3 minutes)

A brief report will be presented concerning noteworthy activities of district staff, matters of general interest to the Board, and pertinent and timely state and federal legislation.

FISCAL IMPACT:
N/A

RECOMMENDATION:
A brief report will be presented concerning noteworthy activities of district staff, matters of general interest to the Board, and pertinent and timely state and federal legislation.

OSD BOARD AGENDA ITEM

Name of Contributor: Dr. Anabolena DeGenna **Date of Meeting:** March 19, 2025

Agenda Section: Section G: Conclusion

Trustees' Announcements (3 minutes each speaker)

The trustees' report is provided for the purpose of making announcements, providing conference and visitation summaries, coordinating meeting dates, identifying board representation on committees, and providing other information of general interest.

FISCAL IMPACT:
N/A

RECOMMENDATION:
N/A

OSD BOARD AGENDA ITEM

Name of Contributor: Dr. Anabolena DeGenna **Date of Meeting:** March 19, 2025

Agenda Section: Section G: Conclusion

ADJOURNMENT

Moved:
Seconded:
Vote:

ROLL CALL VOTE:

Salas ___, Gonzales ___, Madrigal Lopez ___, Melanephy ___, Robles-Solis ___

Anabolena DeGenna, Ed. D.
District Superintendent and Secretary to the Board of Trustees

This notice is posted in conformance with the provisions of Chapter 9 of the Government Code, in the front of the Educational Services Center; 1051 South A Street, Oxnard, California by 5:00 p.m. on Friday, March 14, 2025.

FISCAL IMPACT:
N/A

RECOMMENDATION:
N/A