DOCUMENT 00 91 13

ADDENDA
03/07/2025

NOTICE TO ALL BIDDERS: THE FOLLOWING MODIFICATIONS, ADDITIONS, DELETIONS, CLARIFICATIONS AND/OR INFORMATION ARE HEREBY MADE PART OF THE CONTRACT DOCUMENTS. ADDENDUM MUST BE ACKNOWLEGDED AS PART OF THE BIF FORM.

(1) CHANGES TO CONTRACT DOCUMENTS (attached)
- **(a) 00.40.13 – Bid Form - Removed and replaced**
  - (i) Added two (2) add alternates to Bid Form

(2) CHANGES TO TECHNICAL SPECIFICATIONS
- **(a) 01.64.00 – Owner Furnished Products – Removed and replaced**
- **(b) 07.22.00 – Deck Insulation – Removed and replaced**
- **(c) 07.55.00 – Modified Bituminous Roofing**

(3) CHANGES TO THE DRAWINGS
- **(a) Shadelands-Sunrise ES – Drawing set removed and replaced with markups**
- **(b) Valley View MS – Drawing set removed and replaced with markups**

END OF SECTION

DOCUMENT 00 41 13

BID FORM

To: Governing Board of **Mt. Diablo Unified School District** ("District")

From: _____
(Proper Name of Bidder)

1. **Total Bid.** The undersigned declares that the Contract Documents including, without limitation, the Invitation to Bid, the Instructions to Bidders, and the Special Conditions have been read, and agrees and proposes to furnish all necessary labor, materials, and equipment to perform and furnish all work in accordance with the terms and conditions of the Contract Documents, including, without limitation, the Drawings and Specifications for the following project:

   2025 MDUSD Roofing Project #1 at Shadelands-Sunrise Schools and Valley View Middle School ("Project" or "Contract")

   and will accept in full payment for that Work the following total lump sum amount, all taxes included:

Bid Item No. 1 for Shadelands-Sunrise Schools **Replacement of roof at Shadelands-Sunrise Schools**	**$** _____ **Dollars**
Bid Item No. 2 for Valley View Middle School **Replacement of Roof at Valley View Middle School**	**$** _____ **Dollars**
TOTAL BASE BID **NOTE: IF THERE ARE ALLOWANCES IDENTIFIED IN THIS BID FORM, DO NOT INCLUDE ANY ALLOWANCE(S) AMOUNTS IN THESE BID AMOUNTS.**	**$** _____ **Dollars**

2. **Add Alternates.**

   Alternate #1

Shadelands-Sunrise ES: Demolish existing skylights and replace with new decking and roofing. Additive:	**$** _____ **Dollars**

   Alternate #2

Valley View MS: Add duct seams through the site roofs. Additive:	**$** _____ **Dollars**

   Descriptions of alternates are primarily scope definitions and do not necessarily detail the full range of materials and processes needed to complete the construction.

3. **Unit Price(s).** The Bidder's Base Bid includes the following unit price(s), which the Bidder must provide and the District may, at its discretion, utilize in valuing additive and/or deductive change orders:

Unit Price #1

Cost per square foot to repair damaged roof decking	$_____ Dollars/square Foot

Unit Price #2

Cost per linear feet to repair damaged fascia	$_____ Dollars/linear Foot

4. **Allowance(s).** The Bidder's Base Bid shall **NOT** include the following potential Allowance(s). The District will add some or all of the following Allowance(s) amount(s) to the successful bidder's Contract, at the District's discretion. Contractor shall be permitted to invoice for Work under an Allowance in the identical structure as a Change Order.

Owner Allowance: Allowance to unforeseen conditions, design errors and omissions, owner directed changes, 10% of Total Bae Bid	$_____ **(10% of Total Base Bid)"]**

5. **Contract Review.** The undersigned has reviewed the Work outlined in the Contract Documents and fully understands the scope of Work required in this bid, understands the construction and project management function(s) is described in the Contract Documents, and that each Bidder who is awarded a contract shall be in fact a prime contractor, not a subcontractor, to the District, and agrees that its bid, if accepted by the District, will be the basis for the Bidder to enter into a contract with the District in accordance with the intent of the Contract Documents.

6. **Requests for Clarification.** The undersigned has notified the District in writing of any discrepancies or omissions or of any doubt, questions, or ambiguities about the meaning of any of the Contract Documents, and has contacted the Construction Manager before bid date to verify the issuance of any clarifying Addenda.

7. **Contract Time.** The undersigned agrees to commence work under this Contract on the date established in the Contract Documents and to complete all work within the time specified in the Contract Documents.

8. **Contractual Provisions.** The undersigned hereby acknowledges and agrees to be bound by following provisions and all provisions in the Contract Documents:

   - The liquidated damages clause of the General Conditions and Agreement.
   - The "Changes in the Work" provisions in the General Conditions that limit the permitted charges and mark-ups on change orders and on the amount of home office overhead that the successful bidder can receive from the District.
   - The "Claims" provisions in the General Conditions that delineate the required process to submit and process disputes and claims.
   - The "COVID-19" provisions in the Contract Documents related to the Contractor's staffing requirements and its compliance with all applicable and existing federal, state, and/or local statutes, orders, rules, regulations, ordinances, and/or directives relating to construction site safety in connection with COVID-19, and/or any similar virus or derivative strain.

9. **Bid Open for 90 Days.** It is understood that the District reserves the right to reject this bid and that the bid shall remain open to acceptance and is irrevocable for a period of ninety (90) days.

10. **Attachments.** The following documents are attached hereto:

- The Bid Bond on the District's form or other security
- The Designated Subcontractors List
- The Noncollusion Declaration
- Iran Contracting Act Certification

11. **Addenda Acknowledgement.** Receipt and acceptance of the following addenda is hereby acknowledged:

No.____, Dated _____	No.____, Dated _____
No.____, Dated _____	No.____, Dated _____
☐ Or check here if **no** addenda were issued.	

12. **Bidder's License.** Bidder acknowledges that the license required for performance of the Work is as stated in the Invitation to Bid. Bidder certifies that it is, at the time of bidding, and shall be throughout the period of the contract, licensed by the State of California to do the type of work required under the terms of the Contract Documents. Bidder further certifies that it is regularly engaged in the general class and type of work called for in the Contract Documents.

13. **Labor Harmony.** The undersigned hereby certifies that Bidder is able to furnish labor that can work in harmony with all other elements of labor employed or to be employed on the Work.

14. **DIR Registration.** Bidder shall ensure that it and its Subcontractors comply with the registration and compliance monitoring provisions of Labor Code section 1771.4, including furnishing its CPRs to the Labor Commissioner, and are registered pursuant to Labor Code section 1725.5.

15. **General Acknowledgement.** The Bidder represents that it is competent, knowledgeable, and has special skills with respect to the nature, extent, and inherent conditions of the Work to be performed. Bidder further acknowledges that there are certain peculiar and inherent conditions existent in the construction of the Work that may create, during the Work, unusual or peculiar unsafe conditions hazardous to persons and property. Bidder expressly acknowledges that it is aware of such peculiar risks and that it has the skill and experience to foresee and to adopt protective measures to adequately and safely perform the Work with respect to such hazards.

16. **False Claims Act.** Bidder expressly acknowledges that it is aware that if a false claim is knowingly submitted (as the terms "claim" and "knowingly" are defined in the California False Claims Act, Cal. Gov. Code, §12650 et seq.), the District will be entitled to civil remedies set forth in the California False Claim Act. It may also be considered fraud and the Contractor may be subject to criminal prosecution.

Furthermore, Bidder hereby certifies to the District that all representations, certifications, and statements made by Bidder, as set forth in this bid form, are true and correct and are made under penalty of perjury.

Dated this _____ day of _____ 20 _____

Signature _____

Signed by (Print Name) _____

Title of Person Signing _____

Name of Bidder _____

Type of Organization _____

Address of Bidder _____

Taxpayer's Identification No. of Bidder _____

Telephone Number _____

Fax Number _____

E-mail _____ Web page _____

Bidder's DIR Registration No.: No.:_____

Contractor's License No(s): No.: _____ Class: _____ Expiration Date: _____

No.: _____ Class: _____ Expiration Date: _____

No.: _____ Class: _____ Expiration Date: _____

If Bidder is a corporation, provide the following:

Name of Corporation: _____

President: _____

Secretary: _____

Treasurer: _____

END OF DOCUMENT

SECTION 01640
OWNER FURNISHED PRODUCTS

PART 1 - GENERAL

1.1 SUMMARY

A. **DESCRIPTION:** The Owner shall procure and provide certain products for installation as shown and specified per Contract Documents.

B. **RELATED WORK SPECIFIED ELSEWHERE:**

1. **General:** Products furnished **and paid for by the Owner are described in the following technical sections and /or in the Drawings.**

2. DISTRICT SUPPLIED MATERIAL
Note that this project includes the installation of owner-supplied material; the District has acquired roofing material through the CMAS (California Multiple Award Schedules) program.

1.2 DEFINITIONS

A. **GENERAL:** The following are used to identify products as noted on the Drawings.

B. **OWNER FURNISHED CONTRACTOR INSTALLED (O.F.C.I.):** Products or equipment furnished by the Owner for installation under this contract.

C. **OWNER FURNISHED OWNER INSTALLED (O.F.O.I.):** Products or equipment to be provided and installed by the Owner, but requiring surfacing, backing, utility connections or other preparation under this contract, for proper installation.

D. **NOT IN CONTRACT (N.I.C.):** Products or equipment to be provided and installed by Owner, not requiring surfacing, backing, utility connections or other preparation under this contract.

PART 2 - PRODUCTS

2.1 PRODUCTS

A. **ROOFING MATERIAL FURNISHED BY OWNER (O.F.C.I.):** District supplied material through the CMAS (California Multiple Award Schedules) program. Related specification sections include; Section 075360 Modified Bituminous Membrane Roofing

B. **MATERIAL LIST**

Shadelands/Sunrise ES:

Stressply Plus FR Mineral:	386 Rolls
Stressbase 80 Plus:	193 Rolls
Pyramic Plus LO:	175 Buckets
Garla-Prime VOC:	8 Buckets
Flashing Bond:	20 Buckets
Tuff Stuff MS:	5 Cases
Freight to Jobsite:	1

Valley View MS:

Stressply Plus FR Mineral:	164 Rolls
Stressbase 80 Plus:	82 Rolls
Pyramic Plus LO:	74 Buckets
Garla-Prime VOC:	4 Buckets
Flashing Bond:	10 Buckets
Liquitec:	312 Buckets
Liquitec Base Coat:	312 Buckets
Grip Polyester Soft 6":	60 Rolls
Tuff-Stuff MS:	10 Cases
Freight to Jobsite:	1

Any material or accessories required for the installation of the roof system in excess of the district provided material must be supplied by the Contractor. It is up to the Contractor to determine the precise amount of material required for the completion of this project; and to provide excess material, as required. The cost to handle and break flashing metal from the District provided flat stock is contractor's responsibility.

PART 3 - EXECUTION

2.2 OWNER'S RESPONSIBILITIES

A. **SUBMITTALS:** Arrange for and deliver necessary shop drawings, product data and samples to Contractor.

B. **DELIVERY:**

1. **General:** Arrange and pay for product delivery to site, in accordance with construction schedule.

2. **Bill of Materials:** Deliver supplier's documentation to Contractor.

3. **Inspection:** Inspect jointly with Contractor.

4. **Claims:** Submit for transportation damage and replacement of otherwise damaged, defective, or missing items.

C. **GUARANTEES:** Arrange for manufacturer's warranties, bonds, service, inspections, as required.

2.3 CONTRACTOR'S RESPONSIBILITIES

A. **SUBMITTALS:** Review shop drawings, product data and samples and submit to owner with notification of any discrepancies or problems anticipated in use of product.

B. **DELIVERY:**

1. **General:** Designate delivery date for each product in Progress Schedule.

2. **Receiving:** Receive and unload products at site. Handle products at site, including uncrating and storage.

3. **Inspection:** Promptly inspect products jointly with Owner; record shortages, damaged or defective items.

4. **Storage:** Protect products from damage or exposure to elements.

C. **INSTALLATION:**

1. **General:** Assemble, install, connect, adjust and finish products, as stipulated in the respective section of Specifications.

2. **Repair and Replacement:** Items damaged during handling and installation are responsibility of contractor.

* End Section 01640 *

SECTION 07 22 00 - ROOF DECK INSULATION

PART 1 – GENERAL

1.1 RELATED DOCUMENTS

A. Drawings and general provisions of the Contract, including the Conditions of the Contract and Division 01 Specification Sections apply to this section.

1.2 SUMMARY

A. Section includes roof insulation over the properly prepared roof deck substrate.

B. Related Sections:
1. Section 01: Summary of Work
2. Section 06: Rough Carpentry
3. Section 07550- Modified Bituminous Membrane Roofing
4. Section 07 62 00 – Sheet Metal Flashing and Trim

1.3 REFERENCES

A. American Society for Testing and materials (ASTM):
1. ASTM C165 Standard Test Method for Measuring Compressive Properties of Thermal Insulation.
2. ASTM C208 Standard Specification for Cellulosic Fiber Insulation Board.
3. ASTM C209 Standard Test Method for Cellulosic Fiber Insulating Board.
4. ASTM C272 Standard Test Method for Water Absorption of Core Materials for Structural Sandwich Constructions.
5. ASTM C1396 Standard Specification for Gypsum Wallboard.
6. ASTM C518 Standard Test Method for Steady-State Heat Flux Measurements and Thermal Transmission Properties by Means of the Heat Flow Meter Apparatus.
7. ASTM C578 Standard Specification for Perlite Thermal Insulation Board.
8. ASTM C728 Standard Test Methods for Fire Test of Roof Coverings.
9. ASTM C1289 Standard Specification for Faced Rigid Polyisocyanurate Thermal Insulation.
10. ASTM D312 Standard Specification for Asphalt Used in Roofing.
11. ASTM D412 Standard Test Methods for Vulcanized Rubber and Thermoplastic Rubbers and Thermoplastic Elastomers-Tension.
12. ASTM D1621 Standard Test Method for Compressive Properties of Rigid Cellular Plastics.

13. ASTM D1622 Standard Test Method for Apparent Density of Rigid Cellular Plastics.
14. ASTM D2126 Standard Test Method for Response off Rigid Cellular Plastics to Thermal Humid Aging.

B. Cast Iron Soil Pipe Institute, Washington, D.C. (CISPI)

C. Factory Mutual Research (FM):
1. Roof Assembly Classifications.

D. National Roofing Contractors Association (NRCA):
1. Roofing and Waterproofing Manual.

E. Underwriters Laboratories, Inc. (UL):
1. Fire Hazard Classifications.

F. Warnock Hersey (WH):
1. Fire Hazard Classifications.

G. Sheet Metal and Air Conditioning Contractors National Association (SMACNA)

H. Steel Deck Institute, St. Louis, Missouri (SDI)

I. Southern Pine Inspection Bureau, Pensacola, Florida (SPIB)

J. Insulation Board, Polyisocyanurate (FS HH-I-1972)

K. Insulation Board, Thermal (Fiberboard) (FS LLL-1-535B)

1.4 SUBMITTALS

A. Product Data: Provide manufacturer's specification data sheets for each product in accordance with Division 01 Section Submittal Procedures. 01300.

B. Provide approval letters from insulation manufacturer for use of their insulation within this particular roofing system type.

C. Provide a sample of each insulation type.

D. Shop Drawings
1. Submit manufacturer's shop drawings indicating complete installation details of tapered insulation system, including identification of each insulation block, sequence of installation, layout, drain locations, roof slopes, thicknesses, crickets and saddles.

2. Shop drawing shall include: Outline of roof, location of drains, complete board layout of tapered insulation components, thickness and the average "R" value for the completed insulation system.

E. Certification
1. Submit roof manufacturer's certification that insulation fasteners furnished are acceptable to roof manufacturer.
2. Submit roof manufacturer's certification that insulation furnished is acceptable to roofing manufacturer as a component of roofing system and is eligible for roof manufacturer's system warranty.

1.5 QUALITY ASSURANCE

A. Fire Classification, ASTM E-108.

B. Manufacturer's Certificate: Certify that roof system furnished is approved by Factory Mutual, Underwriters Laboratories, Warnock Hersey or approved third party testing facility in accordance with ASTM E108, Class A for external fire and meets local or nationally recognized building codes.

C. Manufacturer's Certificate: Certify that the roof system is adhered properly to meet or exceed the requirements of FM 1-90.

D. Pre-installation meeting: Refer to Division 07 roofing specifications for pre-installation meeting requirements.

1.6 DELIVERY, STORAGE AND HANDLING

A. Deliver products to site with seals and labels intact, in manufacturer's original containers, dry and undamaged.

B. Store all insulation materials in a manner to protect them from the wind, sun and moisture damage prior to and during installation. Any insulation that has been exposed to any moisture shall be removed from the project site.

C. Keep materials enclosed in a watertight, ventilated enclosure (i.e. tarpaulins).

D. Store materials off the ground. Any warped, broken or wet insulation boards shall be removed from the site.

PART 2 – PRODUCTS

2.1 PRODUCTS, GENERAL

A. Refer to Division 01 Section "Common Product Requirements."

B. Basis of Design: Materials, manufacturer's product designations, and/or manufacturer's names specified herein shall be regarded as the minimum standard of quality required for work of this Section. Comply with all manufacturer and contractor/fabricator quality and performance criteria specified in Part 1.

C. Substitutions: Products proposed as equal to the products specified in this Section shall be submitted in accordance with Bidding Requirements and Division 01 provisions.
   1. Proposals shall be accompanied by a copy of the manufacturer's standard specification section. That specification section shall be signed and sealed by a professional engineer licensed in the state in which the installation is to take place. Substitution requests containing specifications without licensed engineer certification shall be rejected for non-conformance.
   2. Include a list of three (3) projects of similar type and extent, located within a one hundred mile radius from the location of the project. In addition, the three projects must be at least five (5) years old and be available for inspection by the Architect, Owner or Owner's Representative.
   3. Equivalency of performance criteria, warranty terms, submittal procedures, and contractual terms will constitute the basis of acceptance.
   4. The Owner's decision regarding substitutions will be considered final. Unauthorized substitutions will be rejected.

2.2 INSULATION MATERIALS

A. Thermal Insulation Properties and Approved Insulation Boards.
   1. Polyisocyanurate Roof Insulation. (for Valley View MPR)
      a. PSI 25
      b. 2.5" thickness
   2. Wood fiberboard roof board
      a. Qualities: 6 sided asphalt coated wood fiberboard.
      b. Board Size: Four feet by eight feet (4'x8').
      c. Thickness: One half (1/2) inch.
      d. R-Value: 1.3
      e. Compliances: UL, WH or FM listed under Roofing Systems.

2.3 RELATED MATERIALS

A. Fasteners: Corrosion resistant screw fastener as recommended by roof membrane manufacturer.
   1. Factory Mutual Tested and Approved with three (3) inch coated disc for I-90 rating, length required to penetrate metal deck one inch.

PART 3 – EXECUTION

3.1 EXECUTION, GENERAL

A. Comply with requirements of Division 01 Section "Common Execution Requirements."

3.2 INSTALLATION

A. Attachment with Mechanical Fasteners
   1. Approved insulation board shall be fully attached to the deck with an approved mechanical fastening system. As a minimum, the amount of fasteners shall be in accordance with manufacturer's recommendation. Otherwise, a minimum of one fastener per two square feet shall be installed.
   2. Minimum penetration into deck shall be as recommended by the fastener manufacturer. There is a one (1) inch minimum for metal, wood and structural concrete decks where not specified by the manufacturer. For gypsum and cement-wood fiber decks, penetration shall be determined from pull-out test results with a minimum penetration of one and one-half (1 ½) inches.

3.3 CLEANING

A. Remove debris and cartons from roof deck. Leave insulation clean and dry, ready to receive roofing membrane.

3.4 CONSTRUCTION WASTE MANAGEMENT

A. Remove and properly dispose of waste products generated during installation. Comply with requirements of authorities having jurisdiction.

END OF SECTION

SECTION 07550
MODIFIED BITUMINOUS MEMBRANE ROOFING

PART 1 GENERAL

1.1 SECTION INCLUDES

A. Includes all labor, non-owner supplied materials, and equipment to install a modified bitumen roof system over the properly prepared substrate.

B. Includes removal and disposal of existing roofing system(s), insulation board, gutters, downspouts (schedule 40 to remain), flashings, counter flashings, sheet metal items, copings, etc. for a complete prepared roof surface to receive the new roofing system.

C. Includes a new hot applied 2-ply asphalt roofing system with all accessories as needed for a complete warrantable roofing system.

D. Includes testing of all drains and downspouts before construction and after construction to ensure proper drain performance.

1.2 RELATED SECTIONS

A. Section 01640 – Owner Furnished Material

B. Section 07220 – Roof Deck Insulation

C. Section 07620 - Sheet Metal Flashing and Trim

1.3 REFERENCES

A. ASTM D 41 - Standard Specification for Asphalt Primer Used in Roofing, Dampproofing, and Waterproofing.

B. ASTM D 312 - Standard Specification for Asphalt used in Roofing.

C. ASTM D 451 - Standard Test Method for Sieve Analysis of Granular Mineral Surfacing for Asphalt Roofing Products.

D. ASTM D 1079 Standard Terminology Relating to Roofing, Waterproofing and Bituminous Materials.

E. ASTM D 1863 Standard Specification for Mineral Aggregate Used as a Protective Coating for Roofing.

F. ASTM D 2178 Standard Specification for Asphalt Glass Felt Used in Roofing and Waterproofing.

G. ASTM D 2822 Standard Specification for Asphalt Roof Cement.

H. ASTM D 4601 Standard Specification for Asphalt Coated Glass Fiber Base Sheet Used in Roofing.

I. ASTM D 5147 Standard Test Method for Sampling and Testing Modified Bituminous Sheet Materials.

J. ASTM D 6162 Standard Specification for Styrene Butadiene Styrene (SBS) Modified Bituminous Sheet Materials Using a Combination of Polyester and Glass Fiber

Reinforcements.

K. ASTM E 108 - Standard Test Methods for Fire Test of Roof Coverings

L. Factory Mutual Research (FM): Roof Assembly Classifications.

M. National Roofing Contractors Association (NRCA): Roofing and Waterproofing Manual.

N. Sheet Metal and Air Conditioning Contractors National Association, Inc. (SMACNA) - Architectural Sheet Metal Manual.

O. Underwriters Laboratories, Inc. (UL): Fire Hazard Classifications.

P. Warnock Hersey (WH): Fire Hazard Classifications.

Q. ANSI-SPRI ES-1 Wind Design Standard for Edge Systems used with Low Slope Roofing Systems.

R. ASCE 7, Minimum Design Loads for Buildings and Other Structures

S. UL - Fire Resistance Directory.

T. FM Approvals - Roof Coverings and/or RoofNav assembly database.

U. California Title 24 Energy Efficient Standards.

1.4 DESIGN / PERFORMANCE REQUIREMENTS

A. Perform work in accordance with all federal, state and local codes.

B. Exterior Fire Test Exposure: Roof system shall achieve a UL, FM or WH Class rating for roof slopes indicated on the Drawings as follows:
1. Factory Mutual Class A Rating.
2. Underwriters Laboratory Class A Rating.
3. Warnock Hersey Class A Rating.

C. Design Requirements:
1. Uniform Wind Uplift Load Capacity
   a. Installed roof system shall withstand negative (uplift) design wind loading pressures complying with the following criteria.
      1) Design Code: ASCE 7, Method 2 for Components and Cladding.
      2) Importance Category:
         a) III.
      3) Importance Factor of:
         a) 1.0
      4) Wind Speed: 115 mph
      5) Ultimate Pullout Value: 364 pounds per each of the fastener
      6) Exposure Category:
         a) B.
      7) Roof Pitch: 0.5 :12.
      8) Roof Area Design Uplift Pressure:
         a) Zone 1 - Field of roof 14.3 psf
         b) Zone 2 - Eaves, ridges, hips and rakes 24 psf
         c) Zone 3 - Corners 36 psf
2. Live Load: 20 psf, or not to exceed original building design.
3. Dead Load:
   a. Installation of new roofing materials shall not exceed the dead load capacity of the existing roof structure.

D. Energy Star: Roof System shall comply with the initial and aged reflectivity required by the U.S. Federal Government's Energy Star program.

E. LEED: Roof system shall meet the reflectivity and emissivity criteria to qualify for one point under the LEED credit category, Credit 7.2, Landscape & Exterior Design to Reduce Heat Island - Roof.

F. Roof System membranes containing recycled or bio-based materials shall be third party certified through UL Environment.

G. Roof system shall have been tested in compliance with the following codes and test requirements:
   1. Miami-Dade County:
      a. Self-Adhered Membrane Systems Over:
         1) Wood Decks N.O.A.
      b. Torch and Mop Membrane Systems Over
         1) Wood Decks N.O.A.
      c. Roofing Underlayments
         1) Garland Underlayments N.O.A.
      d. Roofing Cements and Coatings
         1) Garland Coatings and Mastics N.O.A.
   2. Cool Roof Rating Council:
      a. CRRC Directory CRRC 077-0028
   3. International Code Council Evaluation Service (ICC-ES):
      a. Membrane Systems
         1) ESR
   4. Underwriters Laboratories:
      a. Certification TGFU.R
   5. Warnock Hersey
      a. ITS Directory of Listed Products
   6. FM Approvals:
      a. RoofNav Website

1.5 SUBMITTALS

A. Submit under provisions of Section 01300.

B. Product Data: Manufacturer's data sheets on each product to be used, including:
   1. Preparation instructions and recommendations.
   2. Storage and handling requirements and recommendations.
   3. Installation instructions.

C. Shop Drawings: Submit shop drawings including installation details of roofing, flashing, fastening, insulation and vapor barrier, including notation of roof slopes and fastening patterns of insulation and base modified bitumen membrane, prior to job start.

D. Design Pressure Calculations: Submit design pressure calculations for the roof area in accordance with ASCE 7 and local Building Code requirements. Include a roof system attachment analysis report, certifying the system's compliance with applicable wind load requirements before Work begins. Report shall be signed and sealed by a Professional Engineer registered in the State of the Project who has provided roof system attachment analysis for not less than 5 consecutive years.

E. LEED Submittals: Provide documentation of how the requirements of Credit will be met:
   1. List of proposed materials with recycled content. Indicate post-consumer recycled content and pre-consumer recycled content for each product having recycled content.
   2. Product data and certification letter indicating percentages by weight of post-

consumer and pre-consumer recycled content for products having recycled content.

3. Product reflectivity and emissivity criteria to qualify for one point under the LEED credit category, Credit 7.2, Landscape & Exterior Design to Reduce Heat Island - Roof.

F. Recycled or Bio-Based Materials: Provide third party certification through UL Environment of roof System membranes containing recycled or bio based materials

G. Verification Samples: For each modified bituminous membrane ply product specified, two samples, minimum size 6 inches (150 mm) square, representing actual product, color, and patterns.

H. Provide written certification from the roofing system manufacturer certifying the applicator is currently authorized to install the specified roof system and ability to provide the specified warranty.

I. Sample Warranty: Provide an unexecuted copy of the warranty specified for this project clearly stating the terms required of the owner, contractor, and manufacturer.

J. Manufacturer's Certificates: Provide to certify products meet or exceed specified requirements.

K. Test Reports: Submit test reports, prepared by an independent testing agency, for all modified bituminous sheet roofing, indicating compliance with ASTM D5147.

L. Manufacturer's Fire Compliance Certificate: Certify that the roof system furnished is approved by Factory Mutual (FM), Underwriters Laboratories (UL), Warnock Hersey (WH) or approved third party testing facility in accordance with ASTM E108, Class A for external fire and meets local or nationally recognized building codes.

M. Closeout Submittals: Provide manufacturer's maintenance instructions that include recommendations for periodic inspection and maintenance of all completed roofing work. Provide product warranty executed by the manufacturer. Assist Owner in preparation and submittal of roof installation acceptance certification as may be necessary in connection with fire and extended coverage insurance on roofing and associated work.

1.6 QUALITY ASSURANCE

A. Perform Work in accordance with NRCA Roofing and Waterproofing Manual.

B. Manufacturer Qualifications: Company specializing in manufacturing products specified with documented ISO 9001 certification and minimum of twelve years of documented experience and must not have been in Chapter 11 bankruptcy during the last five years.

C. Installer Qualifications: Company specializing in performing Work of this section with minimum five years documented experience and a certified Pre-Approved Garland Contractor.

D. Installer's Field Supervision: Maintain a full-time Supervisor/Foreman on job site during all phases of roofing work while roofing work is in progress.

E. Product Certification: Provide manufacturer's certification that materials are manufactured in the United States and conform to requirements specified herein, are chemically and physically compatible with each other, and are suitable for inclusion within the total roof system specified herein.

F. Source Limitations: Obtain all components of roof system from a single manufacturer. Secondary products that are required shall be recommended and approved in writing by the

roofing system Manufacturer. Upon request of the Architect or Owner, submit Manufacturer's written approval of secondary components in list form, signed by an authorized agent of the Manufacturer.

1.7 PRE-INSTALLATION MEETINGS

A. Convene minimum two weeks prior to commencing Work of this section.

B. Review installation procedures and coordination required with related Work.

C. Inspect and make notes of job conditions prior to installation:
   1. Record minutes of the conference and provide copies to all parties present.
   2. Identify all outstanding issues in writing designating the responsible party for follow-up action and the timetable for completion.
   3. Installation of roofing system shall not begin until all outstanding issues are resolved to the satisfaction of the Owner and Architect.

1.8 DELIVERY, STORAGE, AND HANDLING

A. Deliver and store products in manufacturer's unopened packaging with labels intact until ready for installation.

B. Store all roofing materials in a dry place, on pallets or raised platforms, out of direct exposure to the elements until time of application. Store materials at least 4 inches above ground level and covered with "breathable" tarpaulins.

C. Stored in accordance with the instructions of the manufacturer prior to their application or installation. Store roll goods on end on a clean flat surface except store KEE-Stone FB 60 rolls flat on a clean flat surface. No wet or damaged materials will be used in the application.

D. Store at room temperature wherever possible, until immediately prior to installing the roll. During winter, store materials in a heated location with a 50 degree F (10 degree C) minimum temperature, removed only as needed for immediate use. Keep materials away from open flame or welding sparks.

E. Avoid stockpiling of materials on roofs without first obtaining acceptance from the Architect/Engineer.

1.9 COORDINATION

A. Coordinate Work with installing associated metal flashings as work of this section proceeds.

1.10 PROJECT CONDITIONS

A. Maintain environmental conditions (temperature, humidity, and ventilation) within limits recommended by manufacturer for optimum results. Do not install products under environmental conditions outside manufacturer's absolute limits.

1.11 WARRANTY

A. Upon completion of the work, provide the Manufacturer's written and signed NDL Warranty, warranting that, if a leak develops in the roof during the term of this warranty, due either to defective material or defective workmanship by the installing contractor, the manufacturer shall provide the Owner, at the Manufacturer's expense, with the labor and material necessary to return the defective area to a watertight condition. Warranty shall be solely provided by the roof system manufacturer and must cover the calculated wind speed of 115mph. No 3rd party warranties or insurance riders will be accepted.
   1. Warranty Period:

a. 30 years from date of acceptance.

B. Installer is to guarantee all work against defects in materials and workmanship for a period indicated following final acceptance of the Work.
1. Warranty Period:
a. 5 years from date of acceptance.

PART 2 PRODUCTS

2.1 MANUFACTURERS

A. Acceptable Manufacturer: The Garland Company, Inc.; 3800 E. 91st St., Cleveland, OH 44105. Local Representative: Doug Clark Phone: (925) 784-6701. dclark@garlandind.com Web Site: www.garlandco.com.

B. Requests for substitutions will not be considered for this project as MDUSD is supplying the material to complete the project through CMAS.

C. The Products specified are intended and the Standard of Quality for the products required for this project. If other products are proposed the bidder must disclose in the bid the manufacturer and the products that they intend to use on the Project. If no manufacturer and products are listed, the bid may be accepted only with the use of products specified.
1. Bidder will not be allowed to change materials after the bid opening date.
2. If alternate products are included in the bid, the products must be equal to or exceed the products specified. Supporting technical data shall be submitted to the Architect/ Owner for approval prior to acceptance.
3. In making a request for substitution, the Bidder/Roofing Contractor represents that it has:
a. Personally investigated the proposed product or method, and determined that it is equal or superior in all respects to that specified.
b. Will provide the same guarantee for substitution as for the product and method specified.
c. Will coordinate installation of accepted substitution in work, making such changes as may be required for work to be completed in all respects.
d. Will waive all claims for additional cost related to substitution, which consequently become apparent.
e. Cost data is complete and includes all related cost under his/her contract or other contracts, which may be affected by the substitution.
f. Will reimburse the Owner for all redesign cost by the Architect for accommodation of the substitution.
4. Architect/ Owner reserves the right to be the final authority on the acceptance or rejection of any or all bids, proposed alternate roofing systems or materials that has met ALL specified requirement criteria.
5. Failure to submit substitution package, or any portion thereof requested, will result in immediate disqualification and consideration for that particular contractors request for manufacturer substitution.

2.2 HOT APPLIED 2-PLY ROOF SYSTEM

A. Rosin Sheet: One ply of mechanically attached to the prepared substrate.
1. Red Rosin Paper:

B. Insulation: As specified in Section 07220
1. One layer of six side primed ½” woodfiber insulation board is to be installed with mechanical fasteners per ASCE 7.

C. Base (Ply) Sheet: One ply bonded to the prepared substrate with Interply Adhesive:

1. StressBase 80 Plus:

D. Modified Cap Sheet: One ply bonded to the prepared substrate with Interply Adhesive:
   1. StressPly Plus FR Mineral:

E. Interply Adhesive:
   1. Garlastic KM Plus: 20 lbs per square

F. Flashing Base (Ply): One ply bonded to the prepared substrate with Interply Adhesive:
   1. StressBase 80 Plus:

G. Flashing Cap Sheet: One ply bonded to the prepared substrate with Interply Adhesive:
   1. StressPly Plus FR Mineral:

H. Flashing Ply Adhesive:
   1. Garlastic KM Plus: 20 lbs per square

I. Surfacing:
   1. Pyramic Plus LO Coating: Two coats of 1.5 gallon per square (3 gal total per square)

2.3 ACCESSORIES:

A. Roof Insulation Base Layer(s): Provide roof insulation as specified in accordance with Section 07220.

B. Roof Insulation Top Layer: Provide one layer of ½" six side primed Blue Ridge Structodek High Density Fiberboard Roof Insulation. ASTM C 208, Type II.

C. Vapor Retarder: Red Rosin Paper; Install layer rosin sheet shingled uniformly to achieve one ply over the entire prepared substrate. Shingle in direction of slope of roof to shed water on each area of roof.
   1. Red Rosin Paper by WR Meadows
      a. Weight – 12 lb./roll
      b. Size – 500 square feet p/roll
      c. 36" wide by 167' long

D. Nails and Fasteners: Non-ferrous metal or galvanized steel, except that hard copper nails shall be used with copper; aluminum or stainless steel nails shall be used with aluminum; and stainless steel nails shall be used with stainless steel, Fasteners shall be self-clinching type of penetrating type as recommended by the deck manufacturer. Fasten nails and fasteners flush-driven through flat metal discs not less than 1 inch (25 mm) diameter. Omit metal discs when one-piece composite nails or fasteners with heads not less than 1 inch (25 mm) diameter are used.

E. Urethane Sealant Hybrid - Tuff-Stuff MS: One part, non-sag sealant as approved and furnished by the membrane manufacturer for moving joints.
   1. Tensile Strength, ASTM D 412: 250 psi
   2. Elongation, ASTM D 412: 450%
   3. Hardness, Shore A ASTM C 920: 35
   4. Adhesion-in-Peel, ASTM C 92: 30 pli

F. Sealant - Green-Lock Structural Adhesive: Single component, 100% solids structural adhesive as furnished and recommended by the membrane manufacturer.
   1. Elongation, ASTM D 412: 300%
   2. Hardness, Shore A, ASTM C 920: 50
   3. Shear Strength, ASTM D 1002: 300 psi

G. Butyl Tape: 100% solids, asbestos free and compressive tape designed to seal as

recommended and furnished by the membrane manufacturer.

H. Glass Fiber Cant - Glass Cant: Continuous triangular cross Section made of inorganic fibrous glass used as a cant strip as recommended and furnished by the membrane manufacturer.

I. Mastic: Flashing Bond

J. Duct Coating (add alt): Liquitec Flashing Grade and Uni-Bond

2.4 EDGE TREATMENT AND ROOF PENETRATION FLASHINGS

A. Pre-Manufactured Edge Metal Finishes:
   1. Exposed and unexposed surfaces for mill finish flashing, fascia, and coping cap, as shipped from the mill
   2. Exposed surfaces for coated panels:
      a. Steel Finishes: fluorocarbon finish. Epoxy primer baked both sides, .2-.25 mils thickness as approved by finish coat manufacturer.
         Weathering finish as referred by National Coil Coaters Association (NCCA).
         Provided with the following properties.
         1) Pencil Hardness: ASTM D3363, HB-H / NCCA II-2.
         2) Bend: ASTM D-4145, O-T / NCCA II-19
         3) Cross-Hatch Adhesion: ASTM D3359, no loss of adhesion
         4) Gloss (60 deg. angle): ASTM D523, 25+/-5%
         5) Reverse Bend: ASTM D2794, no cracking or loss of adhesion
         6) Nominal Thickness: ASTM D1005
            a) Primer: 0.2 mils
            b) Topcoat, 0.7 mils min
            c) Clear Coat (optional, only used with 22 ga. steel) 0.3 mils
         7) Color: Provide as specified. (Subject to minimum quantities)

B. Vents and Breathers: Heavy gauge aluminum and fully insulated vent that allows moisture and air to escape but not enter the roof system as recommended and furnished by the membrane manufacturer.

C. Pitch pans, Rain Collar 24 gauge stainless or 20oz (567gram) copper. All joints should be welded/soldered watertight. See details for design.

D. Drain Flashings should be 4lb (1.8kg) sheet lead formed and rolled.

E. Plumbing stacks should be 4lb (1.8kg) sheet lead formed and rolled. All plumbing stacks are to have the factory lead caps installed. Caulking and banding will not be acceptable on open top pipe penetrations. On field fabricated flashings where a lead cap can’t be applied a lead umbrella flashing is to be installed. Caulking and banding will be required with the specified sealant.

F. Liquid Flashing - Tuff-Flash: An asphaltic-polyurethane, low odor, liquid flashing material designed for specialized details unable to be waterproofed with typical modified membrane flashings.
   1. Tensile Strength, ASTM D 412: 400 psi
   2. Elongation, ASTM D 412: 300%
   3. Density @77 deg. F 8.5 lb/gal typical

G. Fabricated Flashings: Fabricated flashings and trim are specified in Section 07620.
   1. Fabricated flashings and trim shall conform to the detail requirements of SMACNA "Architectural Sheet Metal Manual" and/or the CDA Copper Development Association "Copper in Architecture - Handbook" as applicable.

H. Manufactured Roof Specialties: Shop fabricated copings, fascia, gravel stops, control joints, expansion joints, joint covers and related flashings and trim are specified in Section 07710.
   1. Manufactured roof specialties shall conform to the detail requirements of SMACNA "Architectural Sheet Metal Manual" and/or the NRCA "Roofing and Waterproofing Manual" as applicable.

I. Pipe Housing Waterproofing: provide “dog house” detail as provided on the plans at locations where lead flashing are not applicable. Fill detail with waterproofing material as recommended by manufacturer.

PART 3 EXECUTION

3.1 EXAMINATION

A. Do not begin installation until substrates have been properly prepared.

B. Inspect and approve the deck condition, slopes and fastener backing if applicable, parapet walls, expansion joints, roof drains, stack vents, vent outlets, nailers and surfaces and elements.

C. Verify that work penetrating the roof deck, or which may otherwise affect the roofing, has been properly completed.

D. If substrate preparation and other conditions are the responsibility of another installer, notify Architect of unsatisfactory preparation before proceeding.

3.2 PREPARATION

A. General: Clean surfaces thoroughly prior to installation.
   1. Prepare surfaces using the methods recommended by the manufacturer for achieving the best result for the substrate under the project conditions.
   2. Fill substrate surface voids that are greater than 1/4 inch wide with an acceptable fill material.
   3. Roof surface to receive roofing system shall be smooth, clean, free from loose gravel, dirt and debris, dry and structurally sound.
   4. Wherever necessary, all surfaces to receive roofing materials shall be power broom and vacuumed to remove debris and loose matter prior to starting work.
   5. Do not apply roofing during inclement weather. Do not apply roofing membrane to damp, frozen, dirty, or dusty surfaces.
   6. Fasteners and plates for fastening components mechanically to the substrate shall provide a minimum pull-out capacity of 300 lbs. (136 k) per fastener. Base or ply sheets attached with cap nails require a minimum pullout capacity of 40 lb. per nail.
   7. Prime decks where required, in accordance with requirements and recommendations of the primer and deck manufacturer.
   8. Test all drains, and downspouts to ensure drain is properly working prior to construction.
   9. Note all conduit conditions, connections, and components. Bring any deficiencies to attention of MDUSD for review.

B. Wood Deck:
   1. Dimensional wood deck shall be minimum 1 inch (25 mm) thick, knotholes and cracks larger than 1/4 inch shall be covered with sheet metal. All boards shall be appropriately nailed and have adequate end bearing to the centers of beams/rafters. Lumber shall be kiln dried.
   2. Plywood shall be a minimum 15/32 inch (11.9 mm) thick and conform to the standards and installation requirements of the American Plywood Association (APA).

3. Red rosin paper to be staggered and nailed to ensure protection for building interior.
4. Insulation is to be mechanically attached in accordance with the insulation manufacturer's recommendations unless otherwise required by the applicable Code.
5. In all retrofit roof applications, it is required that deck be inspected for defects. Any defects are to be corrected per the deck manufacturer's recommendations and standards of the APA/Engineered Wood Association prior to new roof application.
6. Light metal wall ties or other structural metal exposed on top of the wood deck shall be covered with one ply of a heavy roofing sheet, such as HPR Glasbase Base Sheet, extending 2 inches to 6 inches (51 mm to 152 mm) beyond the metal in all directions. Nail in place before applying the base ply.

3.3 INSTALLATION - GENERAL

A. Install modified bitumen membranes and flashings in accordance with manufacturer's instructions and with the recommendations provided by the National Roofing Contractors Association's Roofing & Waterproofing Manual, the Asphalt Roofing Manufacturers Association, and applicable codes.

B. General: Avoid installation of modified bitumen membranes at temperatures lower than 40-45 degrees F. When work at such temperatures unavoidable use the following precautions:
1. Take extra care during cold weather installation and when ambient temperatures are affected by wind or humidity, to ensure adequate bonding is achieved between the surfaces to be joined. Use extra care at material seam welds and where adhesion of the applied product to the appropriately prepared substrate as the substrate can be affected by such temperature constraints as well.
2. Unrolling of cold materials, under low ambient conditions must be avoided to prevent the likelihood of unnecessary stress cracking. Rolls must be at least 40 degrees F at the time of application. If the membrane roll becomes stiff or difficult to install, it must be replaced with roll from a heated storage area.

C. Commence installation of the roofing system at the lowest point of the roof (or roof area), working up the slope toward the highest point. Lap sheets shingle fashion so as to constantly shed water

D. All slopes greater than 2:12 require back-nailing to prevent slippage of the ply sheets. Use ring or spiral-shank 1 inch cap nails, or screws and plates at a rate of 1 fastener per ply (including the membrane) at each insulation stop. Place insulation stops at 16 ft o.c. for slopes less than 3:12 and 4 feet o.c. for slopes greater than 3:12. On non-insulated systems, nail each ply directly into the deck at the rate specified above. When slope exceeds 2:12, install all plies parallel to the slope (strapping) to facilitate backnailing. Install 4 additional fasteners at the upper edge of the membrane when strapping the plies.

3.4 INSTALLATION HOT APPLIED ROOF SYSTEM

A. Base Ply: Install base sheet in twenty (20) lbs per square of bitumen shingled uniformly to achieve one or more plies over the entire prepared substrate. Shingle in direction of slope of roof to shed water on each area of roof. Do not step on base rolls until asphalt has cooled, fish mouths should be cut and patched.
1. Lap ply sheet ends 8 inches (203 mm). Stagger end laps 2 inches (304mm) minimum.
2. Install base flashing ply to all perimeter and projection details after membrane application.
3. Extend plies 2 inches beyond top edges of cants at wall and projection bases.
4. Install base flashing ply to all perimeter and projection details.
5. Allow the one ply of base sheet to cure at least 30 minutes before installing the modified membrane. However, the modified membrane must be installed the same day as the base plies.

B. Modified Cap Ply: Solidly bond the modified membrane to the base layers with specified material at the rate of 20 to 25 lbs. per 100 square feet.
   1. Roll must push a puddle of hot material in front of it with material slightly visible at all side laps. Use care to eliminate air entrapment under the membrane. Exercise care during application to eliminate air entrapment under the membrane.
   2. Apply pressure to all seams to ensure that the laps are solidly bonded to substrate.
   3. Install subsequent rolls of modified membrane as above with a minimum of 4 inch (101 mm) side laps and 8 inch (203 mm) end laps. Stagger end laps. Apply membrane in the same direction as the previous layers but stagger the laps so they do not coincide with the laps of the base layers.
   4. Apply hot material no more than 5 feet (1.5 m) ahead of each roll being embedded.
   5. Extend membrane 2 inches (50 mm) beyond top edge of all cants in full moppings of the specified hot material.

C. Fibrous Cant Strips: Provide non-combustible perlite or glass fiber cant strips at all wall/curb detail treatments where angle changes are greater than 45 degrees. Cant may be set in approved cold adhesives, hot asphalt or mechanically attached with approved plates and fasteners.

D. Wood Blocking, Nailers and Cant Strips: Provide wood blocking, nailers and cant strips as specified in Section 06114.
   1. Provide nailers at all roof perimeters and penetrations for fastening membrane flashings and sheet metal components.
   2. Wood nailers should match the height of any insulation, providing a smooth and even transition between flashing and insulation areas.
   3. Nailer lengths should be spaced with a minimum 1/8 inch gap for expansion and contraction between each length or change of direction.
   4. Nailers and flashings should be fastened in accordance with Factory Mutual "Loss Prevention Data Sheet 1- 49, Perimeter Flashing" and be designed to be capable of resisting a minimum force of 200 lbs/lineal foot in any direction.

E. Metal Work: Provide metal flashings, counter flashings, parapet coping caps and thru-wall flashings as specified in Section 07620 or Section 07710. Install in accordance with the SMACNA "Architectural Sheet Metal Manual" or the NRCA Roofing Waterproofing manual.

F. Termination Bar: Provide a metal termination bar or approved top edge securement at the terminus of all flashing sheets at walls and curbs. Fasten the bar a minimum of 8 inches (203 mm) o/c to achieve constant compression. Provide suitable, sealant at the top edge if required.

G. Flashing Base Ply: Install flashing sheets by the same application method used for the base ply.
   1. Seal curb, wall and parapet flashings with an application of mastic and mesh on a daily basis. Do not permit conditions to exist that will allow moisture to enter behind, around or under the roof or flashing membrane.
   2. Prepare all walls, penetrations, expansion joints and surfaces to be flashed with required primer at the rate of 100 square feet per gallon. Allow primer to dry tack free.
   3. Adhere to the underlying base flashing ply with specified hot material unless otherwise noted in these specifications. Nail off at a minimum of 8 inches (203 mm) o.c. from the finished roof at all vertical surfaces.
   4. Solidly adhere the entire sheet of flashing membrane to the substrate.
   5. Seal all vertical laps of flashing membrane with a three-course application of trowel-grade mastic and mesh.
   6. Coordinate counter flashing, cap flashings, expansion joints, and similar work with modified bitumen roofing work as specified.
   7. Coordinate roof accessories, miscellaneous sheet metal accessory items, including piping vents and other devices with the roofing system work.

H. Flashing Cap Ply: Install flashing cap sheets by the same application method used for the cap ply.
   1. Seal curb, wall and parapet flashings with an application of mastic and mesh on a daily basis. Do not permit conditions to exist that will allow moisture to enter behind, around or under the roof or flashing membrane.
   2. Prepare all walls, penetrations, expansion joints and where shown on the Drawings to be flashed with required primer at the rate of 100 square feet per gallon. Allow primer to dry tack free.
   3. Adhere to the underlying base flashing ply with specified flashing ply adhesive unless otherwise specified. Nail off at a minimum of 8 inches (203 mm) o.c. from the finished roof at all vertical surfaces.
   4. Coordinate counter flashing, cap flashings, expansion joints and similar work with modified bitumen roofing work as specified.
   5. Coordinate roof accessories, miscellaneous sheet metal accessory items with the roofing system work.
   6. All stripping shall be installed prior to flashing cap sheet installation.
   7. Heat and scrape granules when welding or adhering at cut areas and seams to granular surfaces at all flashings.
   8. Secure the top edge of the flashing sheet using a termination bar only when the wall surface above is waterproofed, or nailed 4 inches on center and covered with an acceptable counter flashing.

3.5 INSTALLATION OF SURFACING

A. Prior to installation of surface coating, obtain approval from manufacturer as to work completed. On average, at least 5 days are required prior to final surfacing.
   1. Reflective Coating: Pyramic Plus LO
      a. Allow all cold applied mastics and coating to properly dry and cure before coating application.
      b. Paint all exposed roofing with manufacturer's base coat acrylic coating installed at a rate of one (1.5) gallons per square, back roll entire installation required.
      c. Paint all exposed roofing with manufacturer's Energy Star top coat acrylic coating installed at a rate of one (1.5) gallons per square, complete coverage for a clean neat appearance is required. Additional coats may be required to achieve complete coverage and proper mil thickness.

3.6 ADD ALT- INSTALLATION OF DUCT JOINT COATING REINFORCEMENT

A. Application of Liquitec and Uni-bond to all duct joints.
   1. Clean all duct joints so they are free of all dirt and debris.
   2. Wire brush any rusted areas so they are flake free.
   3. Apply 6” Uni-Bond to all duct joints and seams.
   4. Apply a base coat of Liquitec flashing grade at 1 gallon per square to all areas with Uni-Bond and run coating a minimum of 2” past Uni-Bond Edge. Allow to cure.
   5. Apply a top coat of Liquitec flashing grade at 1.5 gallons per square.

3.7 INSTALLATION EDGE TREATMENT AND ROOF PENETRATION FLASHING

A. Fabricated Flashings: Fabricated flashings and trim are provided as specified in Section 07620.
   1. Fabricated flashings and trim shall conform to the detail requirements of SMACNA "Architectural Sheet Metal Manual" and/or the Copper Development Association "Copper in Architecture - Handbook" as applicable.

B. Metal Edge:

1. Inspect the nailers to assure proper attachment and configuration.
2. Run one ply over the edge. Assure coverage of all wood nailers. Fasten plies with ring shank nails at 8 inches (203 mm) o.c.
3. Install continuous cleat and fasten at 6 inches (152 mm) o.c.
4. Install new metal edge hooked to continuous cleat and set in bed of roof cement. Fasten flange to wood nailers every 3 inches (76 mm) o.c. staggered.
5. Prime metal edge at a rate of 100 square feet per gallon and allow to dry.
6. Strip in flange with base flashing ply covering entire flange in bitumen with 6 inches (152 mm) on to the field of roof. Assure ply laps do not coincide with metal laps.
7. Install a second ply of modified flashing ply in bitumen over the base flashing ply, 9 inches (228 mm) on to the field of the roof. Seal outside edge with rubberized cement.

C. Roof Edge With Gutter:
1. Inspect the nailer to assure proper attachment and configuration. Increase slope at metal edge by additional degree of slope in first board.
2. Run one ply over the edge. Assure coverage of all wood nailers. Fasten plies with ring shank nails at 8 inches (203 mm) o.c.
3. Install gutter and strapping.
4. Install continuous cleat and fasten at 6 inches (152 mm) o.c.
5. Install new metal edge hooked to continuous cleat and set in bed of roof cement. Fasten flange to wood nailer every 3 inches (76 mm) o.c. staggered.
6. Prime metal edge at a rate of 100 square feet per gallon and allow to dry.
7. Strip in flange with base flashing ply covering entire flange in bitumen with 6 inches (152 mm) onto the field of the roof. Assure ply laps do not coincide with metal laps.
8. Install a second ply of modified flashing ply in bitumen over the base flashing ply, 9 inches (228 mm) on to the field of the roof.

D. Scupper Through Wall (Overflow):
1. Inspect the nailer to assure proper attachment and configuration.
2. Run one ply over nailer up the overflow, into the scupper hole and up flashing as in typical wall flashing detail. Assure coverage of all wood nailers.
3. Install scupper box in a 1/4 inch (6 mm) bed of mastic. Assure all box seams are soldered and have a minimum 4 inch (101 mm) flange. Make sure all corners are closed and soldered. Prime scupper at a rate of 100 square feet per gallon and allow to dry.
4. Fasten flange of scupper box every 3 inches (76 mm) o.c. staggered.
5. Strip in flange scupper box with base flashing ply covering entire area with 6 inch (152 mm) overlap on to the field of the roof and wall flashing.
6. Install a second ply of modified flashing ply in bitumen over the base flashing ply, 9 inches (228 mm) on to the field of the roof. Apply a three-course application of mastic and mesh at all seams.

E. Coping Cap:
1. Minimum flashing height is 8 inches (203 mm) above finished roof height. Maximum flashing height is 24 inches (609 mm). Prime vertical wall at a rate of 100 square feet per gallon and allow to dry.
2. Set cant in bitumen. Run all field plies over cant a minimum of 2 inches (50 mm).
3. Attach tapered board to top of wall.
4. Install base flashing ply covering entire wall and wrapped over top of wall and down face with 6 inches (152 mm) on to field of roof and set in cold asphalt. Nail membrane at 8 inches (203 mm) o.c.
5. Install a second ply of modified flashing ply in bitumen over the base flashing ply, 9 inches (228 mm) on to the field of the roof. Apply a three-course application of mastic and mesh at all seams and install white roofing granules in fresh mastic.
6. Install continuous cleat and fasten at 6 inches (152 mm) o.c. to outside wall.
7. Install new metal coping cap hooked to continuous cleat.

8. Fasten inside cap 24 inches (609 mm) o.c. with approved fasteners and neoprene washers through slotted holes, which allow for expansion and contraction.

F. Surface Mounted Counterflashing:
1. Minimum flashing height is 8 inches (203 mm) above finished roof height. Maximum flashing height is 24 inches (609 mm). Prime vertical wall at a rate of 100 square feet per gallon and allow to dry.
2. Set cant in bitumen. Run all field plies over cant a minimum of 2 inches (50 mm).
3. Install base flashing ply covering wall set in bitumen with 6 inches (152 mm) on to field of the roof.
4. Install a second ply of modified flashing ply in bitumen over the base flashing ply, 9 inches (228 mm) on to the field of the roof. Apply a three-course application of mastic and mesh at all vertical seams and install white roofing granules in fresh mastic.
5. Apply butyl tape to wall behind flashing. Secure termination bar through flashing, butyl tape and into wall. Alternatively use caulk to replace the butyl tape.
6. Secure counterflashing set on butyl tape above flashing at 8 inches (203 mm) o.c. and caulk top of counterflashing.

G. Equipment Support:
1. Minimum curb height is 8 inches (203 mm) above finished roof height. Prime vertical at a rate of 100 square feet per gallon and allow to dry.
2. Set cant in bitumen. Run all field plies over cant a minimum of 2 inches (50 mm).
3. Install base flashing ply covering curb set in bitumen with 6 inches (152 mm) on to field of the roof.
4. Install a second ply of modified flashing ply in bitumen over the base flashing ply, 9 inches (228 mm) on to the field of the roof. Attach top of membrane to top of curb and nail at 8 inches (203 mm) o.c. Apply a three-course application of mastic and mesh at all vertical seams and install white roofing granules in fresh roofing mastic.
5. Install pre-manufactured cover. Fasten sides at 24 inches (609 mm) o.c. with fasteners and neoprene washers. Furnish all joint cover laps with butyl tape between metal covers.
6. Set equipment on neoprene pad and fasten as required by equipment manufacturer.

H. Curb Detail/Air Handling Station:
1. Minimum curb height is 8 inches (203 mm) above finished roof height. Prime vertical at a rate of 100 square feet per gallon and allow to dry.
2. Set cant in bitumen. Run all field plies over cant a minimum of 2 inches (50 mm).
3. Install base flashing ply covering curb set in bitumen with 6 inches (152 mm) on to field of the roof.
4. Install a second ply of modified flashing ply in bitumen over the base flashing ply, 9 inches (228 mm) on to the field of the roof. Apply a three-course application of mastic and mesh at all vertical seams and install white roofing granules into fresh mastic.
5. Install pre-manufactured counterflashing with fasteners and neoprene washers or per manufacturer's recommendations.
6. Set equipment on neoprene pad and fasten as required by equipment manufacturer.

I. Skylight:
1. Minimum curb height is 8 inches (203 mm) above finished roof height. Prime vertical at a rate of 100 square feet per gallon and allow to dry.
2. Set cant in bitumen. Run all field plies over cant a minimum of 2 inches (50 mm).
3. Install base flashing ply covering curb set in bitumen with 6 inches (152 mm) on to field of the roof.
4. Install a second ply of modified flashing ply in bitumen over the base flashing ply, 9 inches (228 mm) on to the field of the roof. Attach top of membrane to top of wood nailer and apply a three-course application of mastic and mesh. Allow to cure and install white roofing granules in fresh mastic.

5. Install pre-manufactured lens and fasten flashing sides at 8 inches (203 mm) o.c. with fasteners and neoprene washers.

J. Exhaust Fan:
1. Minimum curb height is 8 inches (203 mm) above finished roof height. Prime vertical at a rate of 100 square feet per gallon and allow to dry.
2. Set cant in bitumen. Run all plies over cant a minimum of 2 inches (50 mm).
3. Install base flashing ply covering curb with 6 inches (152 mm) on to field of the roof.
4. Install a second ply of modified flashing ply installed over the base flashing ply, 9 inches (228 mm) on to field of the roof. Attach top of membrane to top of wood curb and nail at 8 inches (203 mm) o.c. Apply a three-course application of mastic and mesh at all vertical seams and install white roofing granules into fresh mastic.
5. Install metal exhaust fan over the wood nailers and flashing to act as counterflashing. Fasten per manufacturer's recommendation.

K. Roof Drain:
1. Plug drain to prevent debris from entering plumbing.
2. Taper insulation to drain minimum of 24 inches (609 mm) from center of drain.
3. Install two base flashing plies (40 inch square minimum) in bitumen.
4. Set lead/copper flashing (30 inch square minimum) in 1/4 inch (6 mm) bed of mastic. Run lead/copper into drain a minimum of 2 inches (50 mm). Prime lead/copper at a rate of 100 square feet per gallon and allow to dry.
5. Run roof system plies over drain. Cut out plies inside drain bowl.
6. Install modified membrane (48 inch square minimum) in bitumen.
7. Install clamping ring and assure that all plies are under the clamping ring.
8. Remove drain plug and install strainer.

L. Plumbing Stack:
1. Minimum stack height is 12 inches (609 mm).
2. Run roof system over the entire surface of the roof. Seal the base of the stack with elastomeric sealant.
3. Set lead/copper flashing in 1/4 inch (6 mm) bed of mastic.
4. Prime flange of new sleeve. Install properly sized sleeves set in 1/4 inch (6 mm) bed of roof cement.
5. Install base flashing ply in bitumen.
6. Install membrane in bitumen.
7. Caulk the intersection of the membrane with elastomeric sealant.
8. Turn sleeve a minimum of 1 inch (25 mm) down inside of stack, if stack is taller than the lead jack factory cap must be installed.

M. Heat Stack:
1. Minimum stack height is 12 inches (609 mm).
2. Run roof system over the entire surface of the roof. Seal the base of the stack with elastomeric sealant.
3. Prime flange of new sleeve. Install properly sized sleeves set in 1/4 inch (6 mm) bed of roof cement.
4. Install base flashing ply in bitumen.
5. Install modified membrane in bitumen.
6. Caulk the intersection of the membrane with elastomeric sealant.
7. Install new collar over cape. Weld collar or install stainless steel draw brand.

3.8 CLEANING

A. Clean-up and remove daily from the site all wrappings, empty containers, paper, loose particles and other debris resulting from these operations. Contractor will thoroughly clean both roof area and ground area after each day.

B. Remove asphalt markings from finished surfaces.

C. Repair or replace defaced or disfigured finishes caused by Work of this section.

D. Paint all conduit pipes, vents, and hoods with Pyramic Plus LO. Conduit to be sealed and reattached with proper couplings. Lines should be straight and as tidy as possible.

E. Test drains and downspouts to ensure they are working properly after construction has been completed.

3.9 PROTECTION

A. Provide traffic ways, erect barriers, fences, guards, rails, enclosures, chutes and the like to protect personnel, roofs and structures, vehicles and utilities.

B. Protect exposed surfaces of finished walls with tarps to prevent damage.

C. Plywood for traffic ways required for material movement over existing roofs shall be not less than 5/8 inch (16 mm) thick.

D. In addition to the plywood listed above, an underlayment of minimum 1/2 inch (13 mm) recover board is required on new roofing.

E. Special permission shall be obtained from the Manufacturer before any traffic shall be permitted over new roofing.

3.10 FIELD QUALITY CONTROL

A. Inspection: Provide manufacturer's field observations at start-up and three (3) days per week through project completion. Provide a final inspection upon completion of the Work.
   1. Warranty shall be issued upon manufacturer's acceptance of the installation.
   2. Field observations shall be performed by a representative employed full-time by the manufacturer and whose primary job description is to assist, inspect and approve membrane installations for the manufacturer.
   3. Provide observation reports from the representative indicating procedures followed, weather conditions and any discrepancies found during inspection.
   4. Provide a final report from the representative, certifying that the roofing system has been satisfactorily installed according to the project specifications, approved details and good general roofing practice.

3.11 OWNER SUPPLIED MATERIALS

A. The Owner will only supply the quantity listed in the owner supplied materials section of this specification below. All additional materials and accessories will be the full responsibility of the contractor to provide and install per the specification and project requirements.

B. Any material or accessories required for the installation of the roof system in excess of the Owner provided material must be supplied by the Contractor and added into the bid cost proposal. It is up to the Contractor to determine the precise amount of material required for the completion of this project; and to provide excess material, as required. The cost to handle and fabricate flashing metal from the Owner provided flat stock is contractor’s responsibility and to be added into the bid cost proposal.

C. All required flashings as required per each specification section for plumbing, electrical, gas, etc. will be the Contractors responsibility to provide and install as well as to be included in the bid cost.

D. All materials not specifically included in the owner supplied materials section will be the responsibility of the contractor to provide and install in compliance with section 07550.

E. Freight charges of owner supplied materials will be the responsibility of the Owner.

F. Contractor must coordinate and take delivery of materials, count all materials and ensure it matches the list below, unload and properly locate materials at the job site, and properly protect, cover and store at jobsite.

G. Contractor must be able to provide certification in writing from roof system manufacturer that the contractor is approved to install the specified roof system and provide all warranty requirements of section 07550.

1. Materials specifically provided by the Owner:

Shadelands/Sunrise ES:

a.	StressPly Plus FR Mineral:	386 Rolls
b.	StressBase 80 Plus:	193 Rolls
c.	Pyramic Plus LO:	175 Buckets
d.	Flashing Bond:	20 Buckets
e.	Tuff-Stuff MS:	5 Cases
f.	Garla-Prime VOC:	8 Buckets
g.	Freight to jobsite:	1

Valley View MS:

a.	StressPly Plus FR Mineral:	164 Rolls
b.	StressBase 80 Plus:	82 Rolls
c.	Pyramic Plus LO:	74 Buckets
d.	Flashing Bond:	10 Buckets
e.	Tuff-Stuff MS:	2 Cases
f.	Garla-Prime VOC:	4 Buckets
g.	Freight to jobsite:	1

END OF SECTION

Mt. Diablo Unified School District

SHADELANDS AND SUNRISE ELEMENTARY

1861 SILVERWOOD DR, CONCORD, CA 94519



ADDENDUM #1
03/07/2025

LOCATION MAP

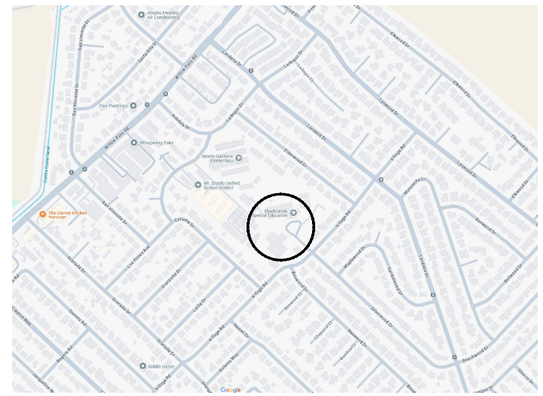

KEY PLAN

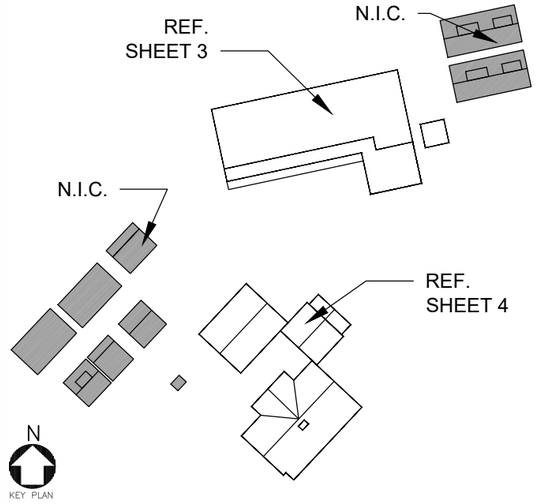

DRAWING INDEX

SHT 1 - COVER SHEET
SHT 2 - ROOF PLAN - SHADELANDS
SHT 3 - ROOF PLAN - SUNRISE
SHT 4 - DETAILS
SHT 5 - DETAILS
SHT 6 - DETAILS

THE GARLAND COMPANY INC.
3800 EAST 91st STREET - CLEVELAND, OHIO 44105-2197
PHONE (800) 321-9336 / FAX (216) 641-0633

GARLAND since 1895

Mt. Diablo Unified School District
SHADELANDS AND SUNRISE ELEMENTARY
1861 SILVERWOOD DR, CONCORD, CA 94519
AGENT: JOE SALAZAR
DWG BY: GCK | CHK BY: JS | DATE: 1-6-25

REVISION:

SHEET: 1
OF 6

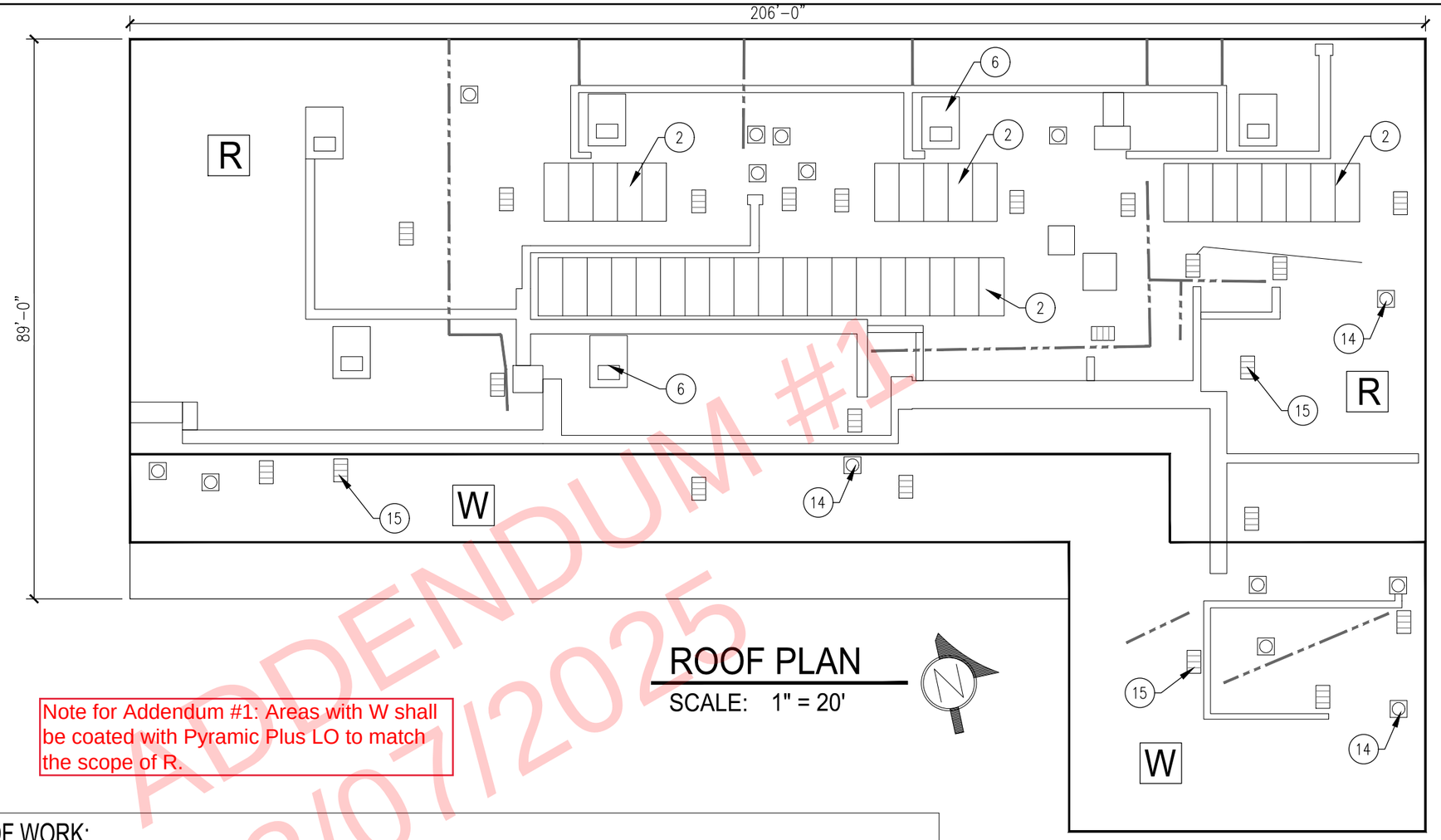

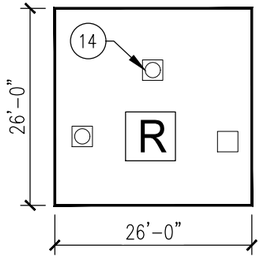

ROOF PLAN

SCALE: 1" = 20'

ADDENDUM #1
03/07/2025

Note for Addendum #1: Areas with W shall be coated with Pyramic Plus LO to match the scope of R.

SCOPE OF WORK:

ROOF REPLACEMENT SCOPE -

1. REMOVE AND DISPOSE OF ALL ROOFING, EDGE METAL, AND COUNTER-FLASHING DOWN TO STRUCTURAL DECK. ANY GUTTERS TO BE REMOVED AND REPLACED.
2. PERFORM ANY REPAIRS AS NEEDED.
3. NAIL RED ROSIN PAPER.
4. MECHANICALLY FASTEN 1/2" WOOD FIBER BOARD PER MANUFACTURERS WIND UPLIFT CALCULATIONS.
5. RAISE ALL CURBS WITH NEW NAILERS TO PROVIDE A MINIMUM 8" BASE FLASHING HEIGHT.
6. INSTALL 2 PLY MODIFIED BITUMEN SYSTEM IN HOT APPLIED ASPHALT.
7. INSTALL NEW KYNAR COATED EDGE METAL AND COUNTERFLASHING.
8. ON BUILDINGS (INDICATED WITH R) APPLY TITLE 24 REFLECTIVE COATING IN 2 COATS. (1.5+1.5 GAL PER SQUARE). ON WALKWAY/LOWER ROOFS INSTALL GARLA-BLOCK 2K PRIMER AT 0.5 GALLONS PER SQUARE AND APPLY GREEN-LOCK WHITE AT 4.5 GALLONS PER SQUARE. IMMEDIATELY BROACAST TITLE 24 APPROVED 3/8" ROCK AT 200 LBS PER SQUARE (INDICATED WITH W).
9. CLEAN OFF ALL MASTIC/ASPHALT AND PAINT ALL CONDUIT PIPES, VENTS, AND HOODS WITH PYRAMIC TO ENSURE A CLEAN FINAL PROJECT. ALL CONDUIT TO BE SEALED AND REATTACHED WITH PROPER COUPLINGS. LINES SHOULD BE STRAIGHT AND AS TIDY AS POSSIBLE. ANY COUPLINGS THAT CANNOT BE PROPERLY SEALED SHOULD BE BROUGHT TO DISTRICT ATTENTION.
10. ALL DRAINS AND GUTTER DOWNSPOUTS TO RECEIVE NEW STRAINERS.
11. AT END OF EVERY WORK DAY ENSURE THE WORK SITE AND SURROUNDING AREA IS FREE OF ANY DIRT AND DEBRIS.
12. TEST ALL DRAINS AND DOWNSPOUT PRIOR TO CONSTRUCTION AND ONCE AGAIN AFTER COMPLETION.

SYMBOL LEGEND

1. EQUIPMENT SUPPORT, DTL C/4
2. SKYLIGHT, DTL D/4
5. ROOF HATCH, DTL E/5
6. CURB DETAIL, DTL F/5
7. HEAT STACK, DTL G/5
8. WALL FLASHING, DTL H/5
9. WINDOW SILL FLASHING, DTL J/5
10. PIPE PENETRATION, DTL, K/5
11. PLUMBING STACK, DTL L/6
12. PIPE HOUSING, DTL M/6
13. ROOF DRAIN, DTL N/6
14. EXHAUST FAN, DTL P/6
15. VENT INTAKE, DTL Q/6

NOTE:
CONTRACTOR SHALL FIELD VERIFY ALL DIMENSIONS, CONDITIONS AND QUANTITIES.

THE GARLAND COMPANY INC.
3800 EAST 91st STREET - CLEVELAND, OHIO 44105-2197
PHONE (800) 321-9336 / FAX (216) 641-0633

Mt. Diablo Unified School District
SHADELANDS AND SUNRISE ELEMENTARY
1861 SILVERWOOD DR, CONCORD, CA 94519

DATE: 1-6-25
CHK BY: JS
DWG BY: GCK
AGENT: JOE SALAZAR
REVISION:

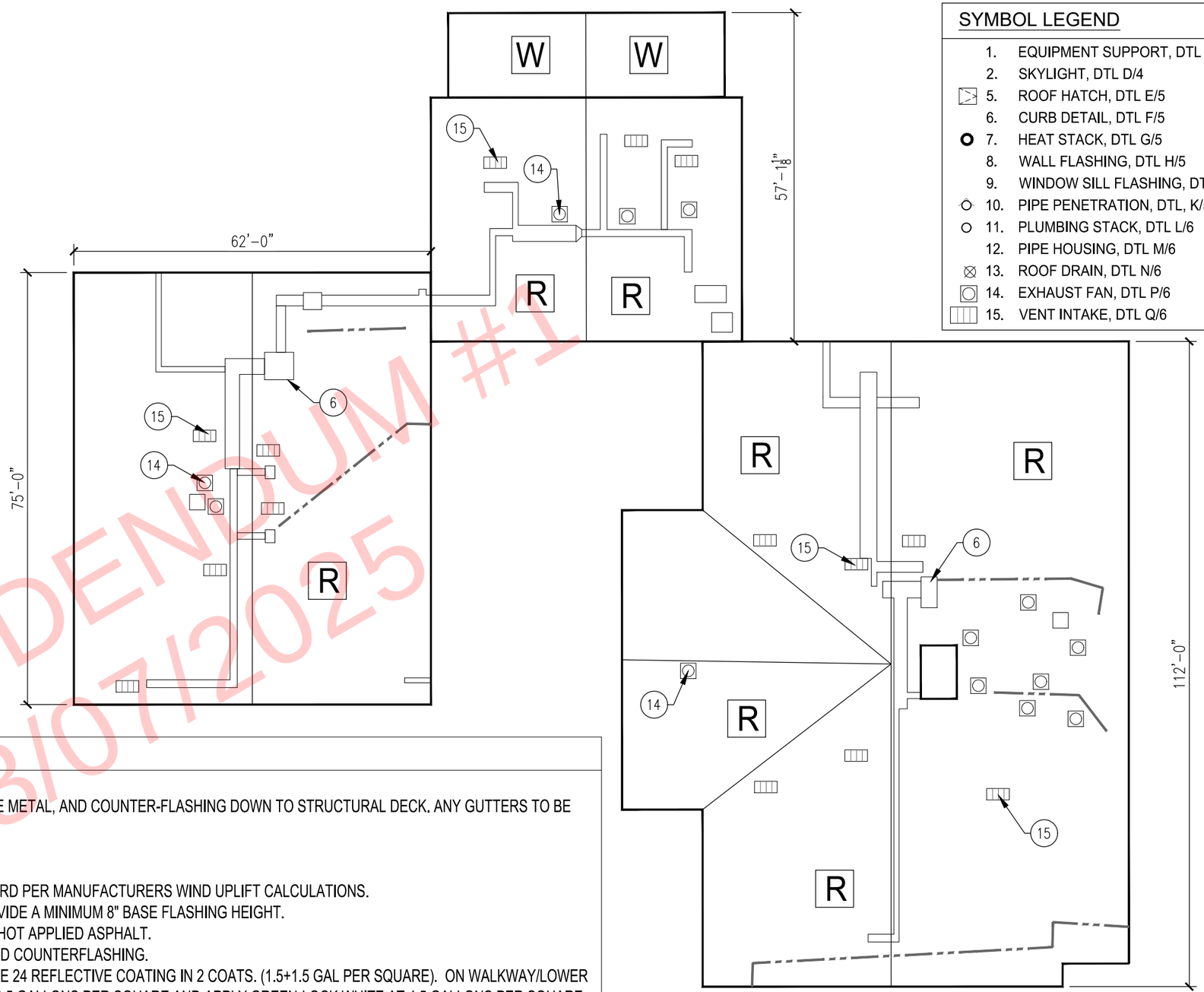

SYMBOL LEGEND

1. EQUIPMENT SUPPORT, DTL C/4
2. SKYLIGHT, DTL D/4
5. ROOF HATCH, DTL E/5
6. CURB DETAIL, DTL F/5
7. HEAT STACK, DTL G/5
8. WALL FLASHING, DTL H/5
9. WINDOW SILL FLASHING, DTL J/5
10. PIPE PENETRATION, DTL, K/5
11. PLUMBING STACK, DTL L/6
12. PIPE HOUSING, DTL M/6
13. ROOF DRAIN, DTL N/6
14. EXHAUST FAN, DTL P/6
15. VENT INTAKE, DTL Q/6

ADDENDUM #1
03/07/2025

SCOPE OF WORK:

ROOF REPLACEMENT SCOPE -

1. REMOVE AND DISPOSE OF ALL ROOFING, EDGE METAL, AND COUNTER-FLASHING DOWN TO STRUCTURAL DECK. ANY GUTTERS TO BE REMOVED AND REPLACED.
2. PERFORM ANY REPAIRS AS NEEDED.
3. NAIL RED ROSIN PAPER.
4. MECHANICALLY FASTEN 1/2" WOOD FIBER BOARD PER MANUFACTURERS WIND UPLIFT CALCULATIONS.
5. RAISE ALL CURBS WITH NEW NAILERS TO PROVIDE A MINIMUM 8" BASE FLASHING HEIGHT.
6. INSTALL 2 PLY MODIFIED BITUMEN SYSTEM IN HOT APPLIED ASPHALT.
7. INSTALL NEW KYNAR COATED EDGE METAL AND COUNTERFLASHING.
8. ON BUILDINGS (INDICATED WITH R) APPLY TITLE 24 REFLECTIVE COATING IN 2 COATS. (1.5+1.5 GAL PER SQUARE). ON WALKWAY/LOWER ROOFS INSTALL GARLA-BLOCK 2K PRIMER AT 0.5 GALLONS PER SQUARE AND APPLY GREEN-LOCK WHITE AT 4.5 GALLONS PER SQUARE. IMMEDIATELY BROACAST TITLE 24 APPROVED 3/8" ROCK AT 200 LBS PER SQUARE (INDICATED WITH W).
9. CLEAN OFF ALL MASTIC/ASPHALT AND PAINT ALL CONDUIT PIPES, VENTS, AND HOODS WITH PYRAMIC TO ENSURE A CLEAN FINAL PROJECT. ALL CONDUIT TO BE SEALED AND REATTACHED WITH PROPER COUPLINGS. LINES SHOULD BE STRAIGHT AND AS TIDY AS POSSIBLE. ANY COUPLINGS THAT CANNOT BE PROPERLY SEALED SHOULD BE BROUGHT TO DISTRICT ATTENTION.
10. ALL DRAINS AND GUTTER DOWNSPOUTS TO RECEIVE NEW STRAINERS.
11. AT END OF EVERY WORK DAY ENSURE THE WORK SITE AND SURROUNDING AREA IS FREE OF ANY DIRT AND DEBRIS.
12. TEST ALL DRAINS AND DOWNSPOUT PRIOR TO CONSTRUCTION AND ONCE AGAIN AFTER COMPLETION.

ROOF PLAN

SCALE: 1" = 20'

NOTE:
CONTRACTOR SHALL FIELD VERIFY ALL DIMENSIONS, CONDITIONS AND QUANTITIES.

THE GARLAND COMPANY INC.
3800 EAST 91st STREET - CLEVELAND, OHIO 44105-2197
PHONE (800) 321-9336 / FAX (216) 641-0633

Mt. Diablo Unified School District
SHADELANDS AND SUNRISE ELEMENTARY
1861 SILVERWOOD DR. CONCORD, CA 94519
AGENT: JOE SALAZAR
DWG BY: GCK | CHK BY: JS | DATE: 1-6-25
REVISION:

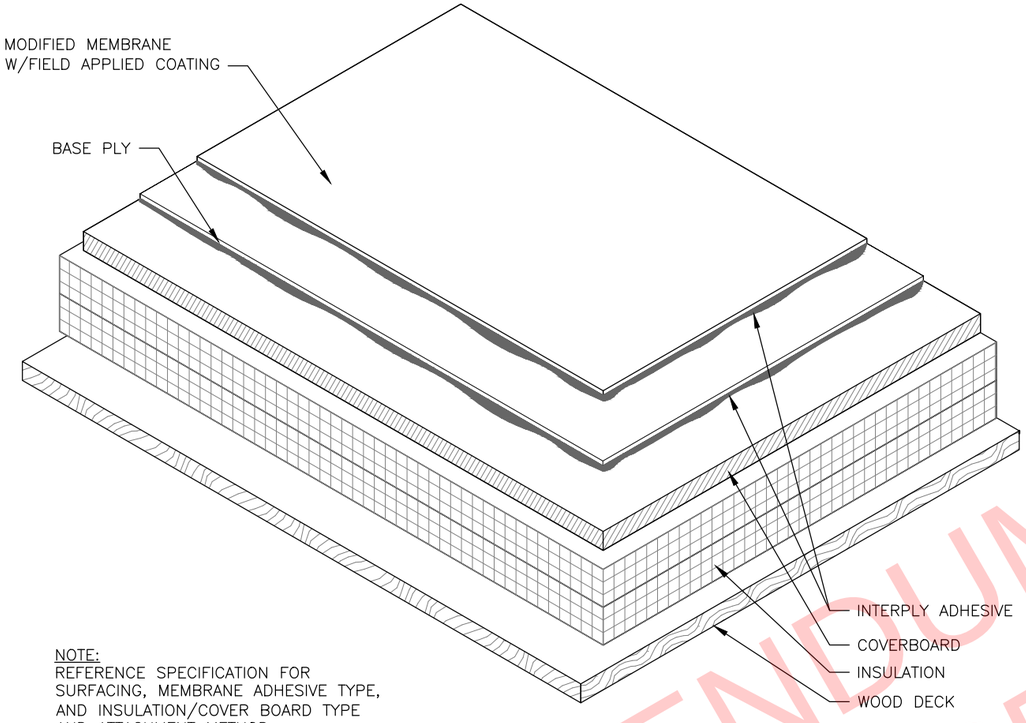

NOTE:
REFERENCE SPECIFICATION FOR SURFACING, MEMBRANE ADHESIVE TYPE, AND INSULATION/COVER BOARD TYPE AND ATTACHMENT METHOD.

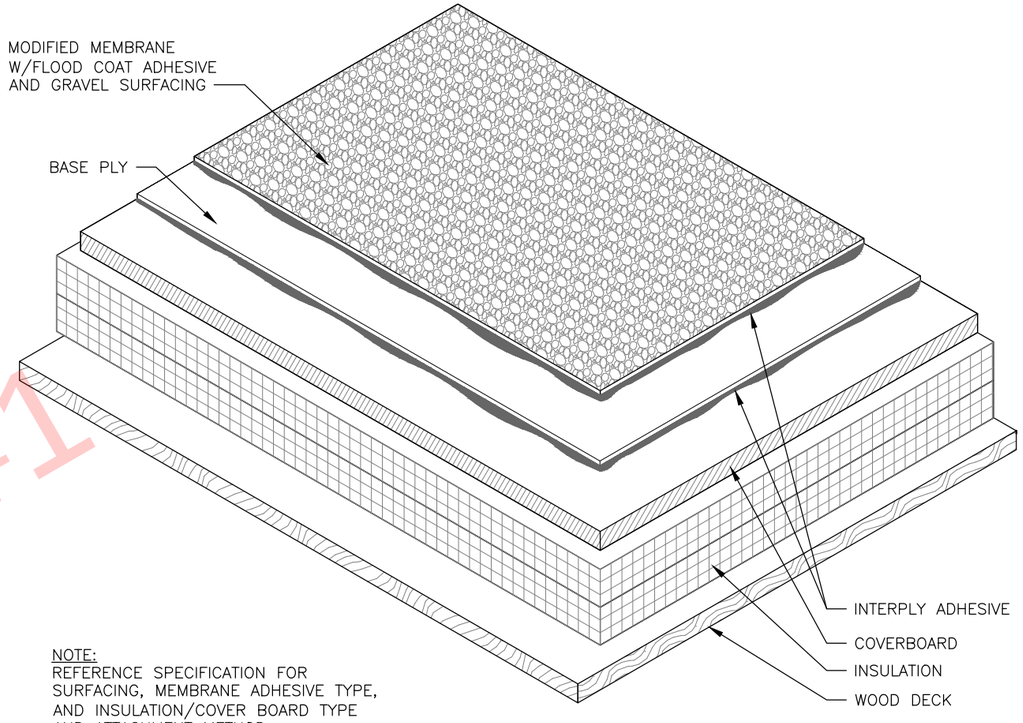

NOTE:
REFERENCE SPECIFICATION FOR SURFACING, MEMBRANE ADHESIVE TYPE, AND INSULATION/COVER BOARD TYPE AND ATTACHMENT METHOD.

A/4 TYPICAL ROOF SYSTEM COATED SURFACE
SCALE: 3" = 1'-0"

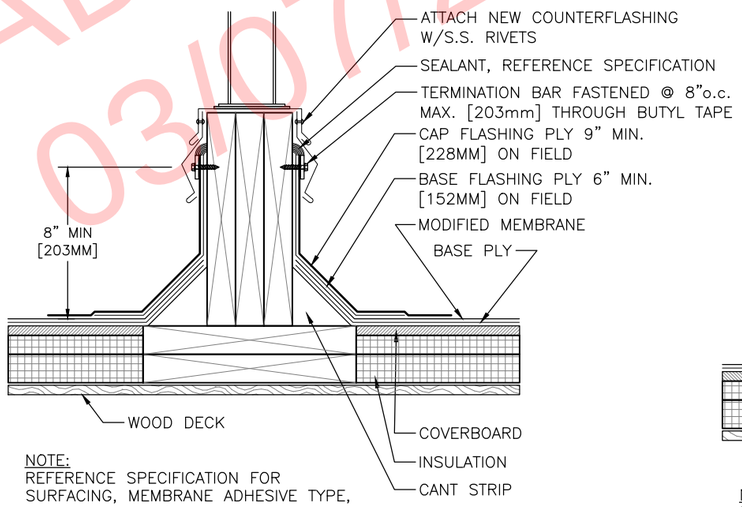

NOTE:
REFERENCE SPECIFICATION FOR SURFACING, MEMBRANE ADHESIVE TYPE, AND INSULATION/COVER BOARD TYPE AND ATTACHMENT METHOD.

B/4 TYPICAL ROOF SYSTEM GRAVEL SURFACE
SCALE: 3" = 1'-0"

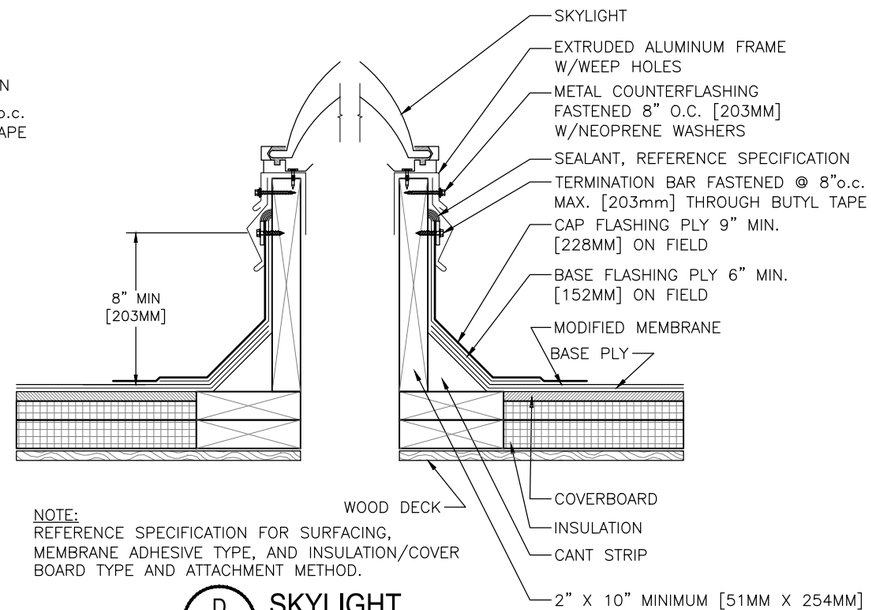

NOTE:
REFERENCE SPECIFICATION FOR SURFACING, MEMBRANE ADHESIVE TYPE, AND INSULATION/COVER BOARD TYPE AND ATTACHMENT METHOD.

C/4 EQUIPMENT SUPPORT - EXISTING
SCALE: 1½" = 1'-0"

D/4 SKYLIGHT
SCALE: 1½" = 1'-0"

ADDENDUM #1
03/07/2025

THE GARLAND COMPANY INC.
3800 EAST 91st STREET - CLEVELAND, OHIO 44105-2197
PHONE (800) 321-9336 / FAX (216) 641-0633

Mt. Diablo Unified School District
SHADELANDS AND SUNRISE ELEMENTARY
1861 SILVERWOOD DR. CONCORD, CA 94519

DWG BY: GCK | CHK BY: JS | AGENT: JOE SALAZAR | DATE: 1-6-25

REVISION:

SHEET: 4
OF 6

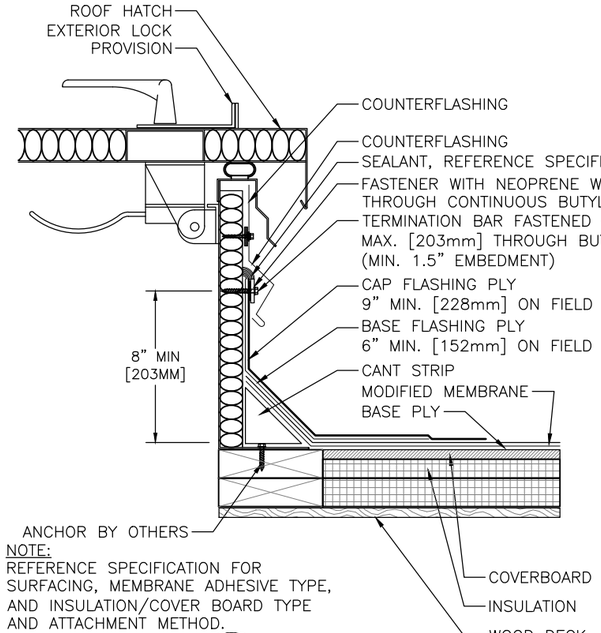

NOTE:
REFERENCE SPECIFICATION FOR SURFACING, MEMBRANE ADHESIVE TYPE, AND INSULATION/COVER BOARD TYPE AND ATTACHMENT METHOD.

E/5 HATCH DETAIL
SCALE: 1½" = 1'-0"

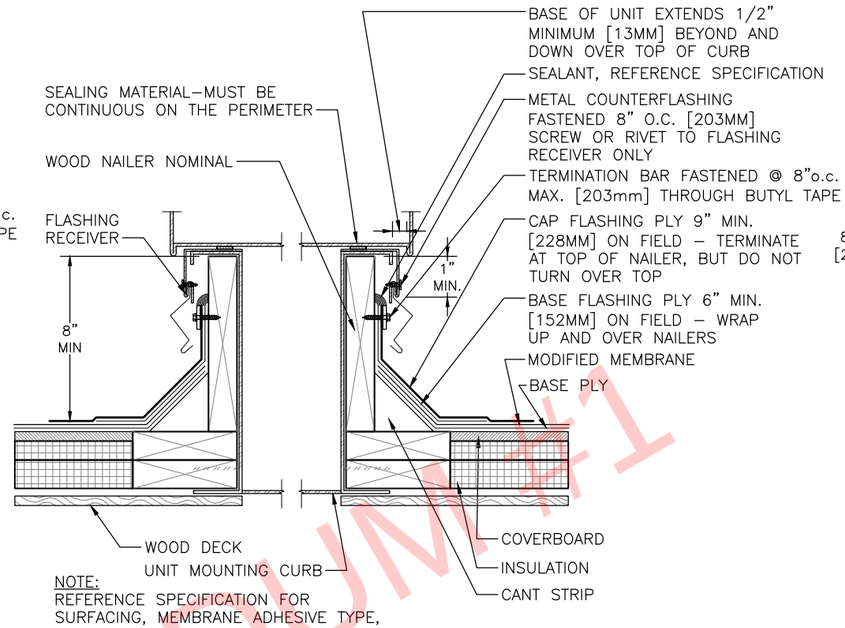

NOTE:
REFERENCE SPECIFICATION FOR SURFACING, MEMBRANE ADHESIVE TYPE, AND INSULATION/COVER BOARD TYPE AND ATTACHMENT METHOD.

F/5 CURB DETAIL / AIR HANDLING STATION
SCALE: 1½" = 1'-0"

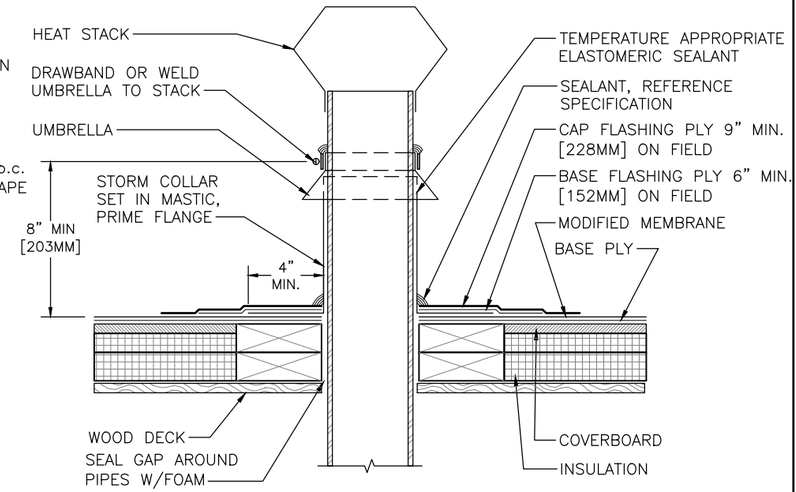

NOTE:
REFERENCE SPECIFICATION FOR SURFACING, MEMBRANE ADHESIVE TYPE, AND INSULATION/COVER BOARD TYPE AND ATTACHMENT METHOD.

G/5 HEAT STACK
SCALE: 1½" = 1'-0"

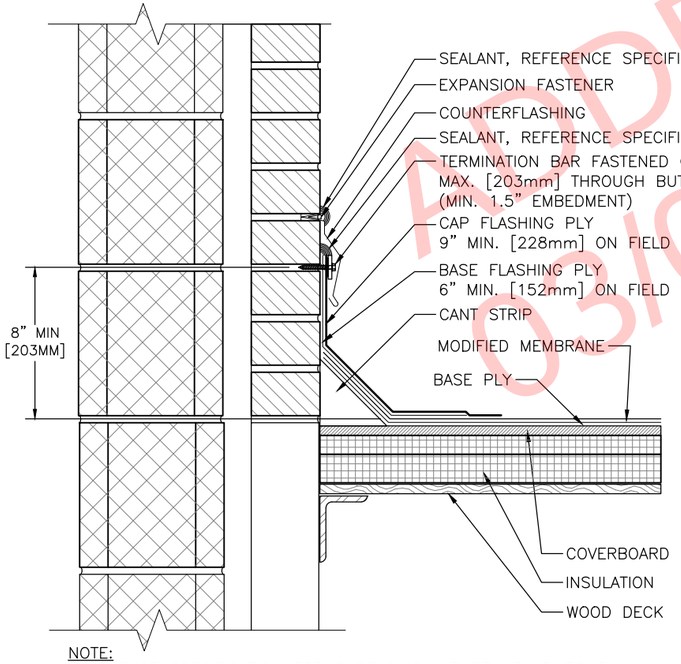

NOTE:
REFERENCE SPECIFICATION FOR SURFACING, MEMBRANE ADHESIVE TYPE, AND INSULATION/COVER BOARD TYPE AND ATTACHMENT METHOD.

H/5 WALL FLASHING - REGLET MOUNTED COUNTERFLASHING
SCALE: 1½" = 1'-0"

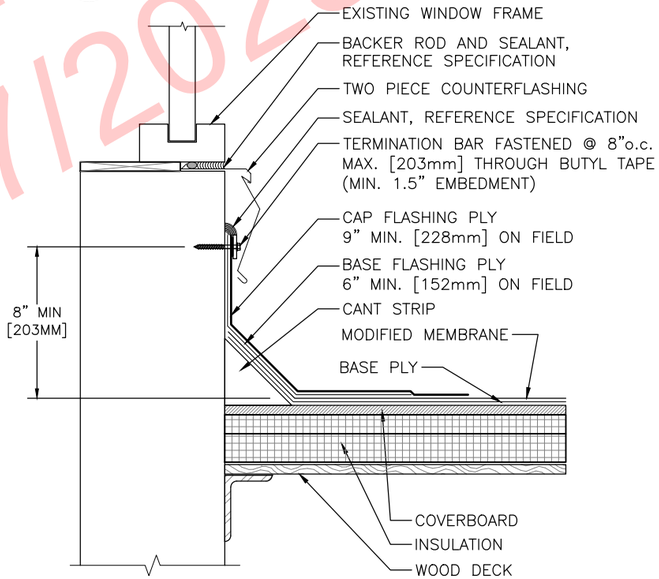

NOTE:
REFERENCE SPECIFICATION FOR SURFACING, MEMBRANE ADHESIVE TYPE, AND INSULATION/COVER BOARD TYPE AND ATTACHMENT METHOD.

J/5 WINDOW SILL FLASHING
SCALE: 1½" = 1'-0"

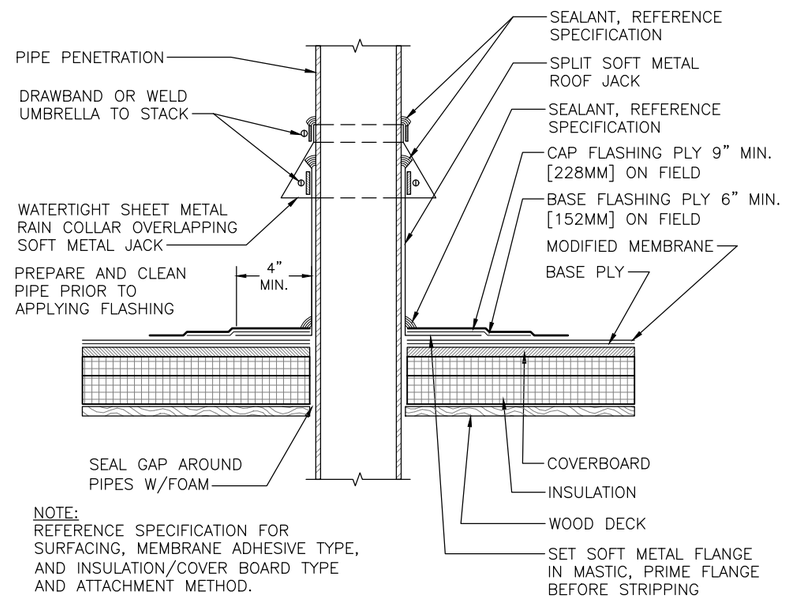

NOTE:
REFERENCE SPECIFICATION FOR SURFACING, MEMBRANE ADHESIVE TYPE, AND INSULATION/COVER BOARD TYPE AND ATTACHMENT METHOD.

K/5 PIPE/TUBE PENETRATION - SPLIT JACK w/COLLAR
SCALE: 1½" = 1'-0"

ADDENDUM #1
05/07/2025

THE GARLAND COMPANY INC.
3800 EAST 91st STREET - CLEVELAND, OHIO 44105-2197
PHONE (800) 321-9336 / FAX (216) 641-0633

Mt. Diablo Unified School District
SHADELANDS AND SUNRISE ELEMENTARY
1861 SILVERWOOD DR, CONCORD, CA 94519

DWG BY: GCK | CHK BY: JS | AGENT: JOE SALAZAR | DATE: 1-6-25

REVISION:

SHEET: 5
OF 6

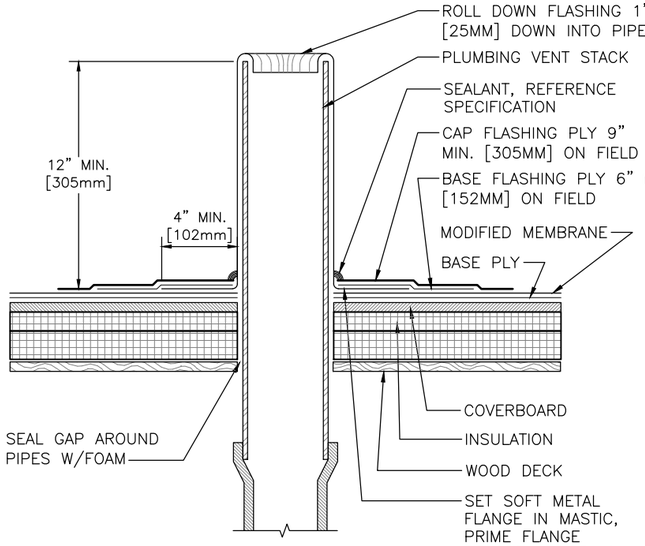

NOTE:
REFERENCE SPECIFICATION FOR SURFACING, MEMBRANE ADHESIVE TYPE, AND INSULATION/COVER BOARD TYPE AND ATTACHMENT METHOD.

L/6 PLUMBING STACK
SCALE: 1½" = 1'-0"

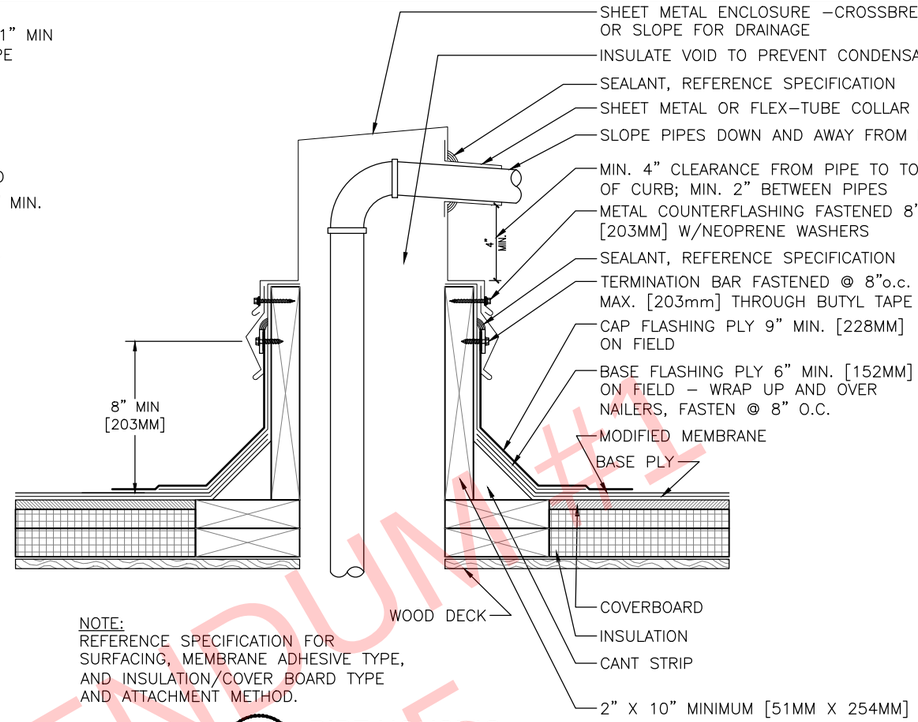

NOTE:
REFERENCE SPECIFICATION FOR SURFACING, MEMBRANE ADHESIVE TYPE, AND INSULATION/COVER BOARD TYPE AND ATTACHMENT METHOD.

M/6 PIPE HOUSING
SCALE: 1½" = 1'-0"

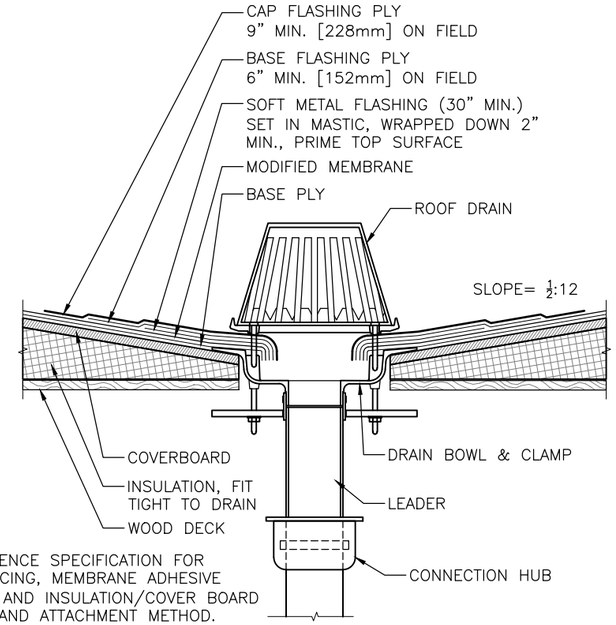

NOTE:
REFERENCE SPECIFICATION FOR SURFACING, MEMBRANE ADHESIVE TYPE, AND INSULATION/COVER BOARD TYPE AND ATTACHMENT METHOD.

N/6 ROOF DRAIN
SCALE: 1½" = 1'-0"

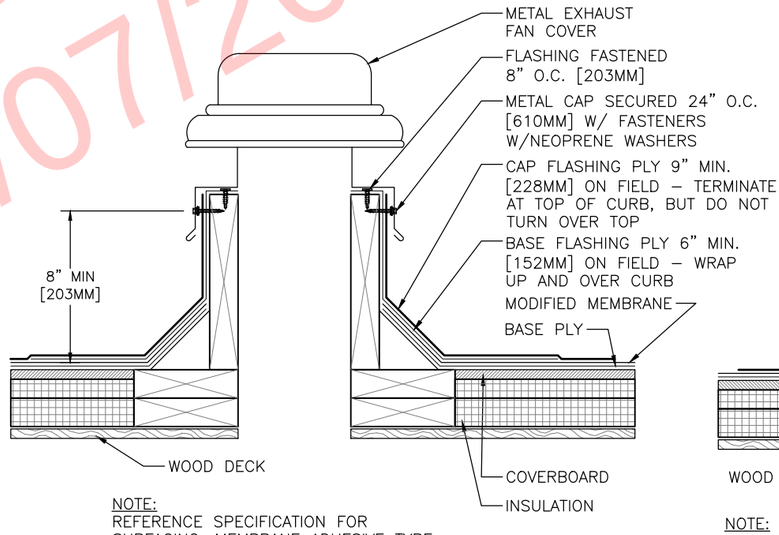

NOTE:
REFERENCE SPECIFICATION FOR SURFACING, MEMBRANE ADHESIVE TYPE, AND INSULATION/COVER BOARD TYPE AND ATTACHMENT METHOD.

P/6 EXHAUST FAN
SCALE: 1½" = 1'-0"

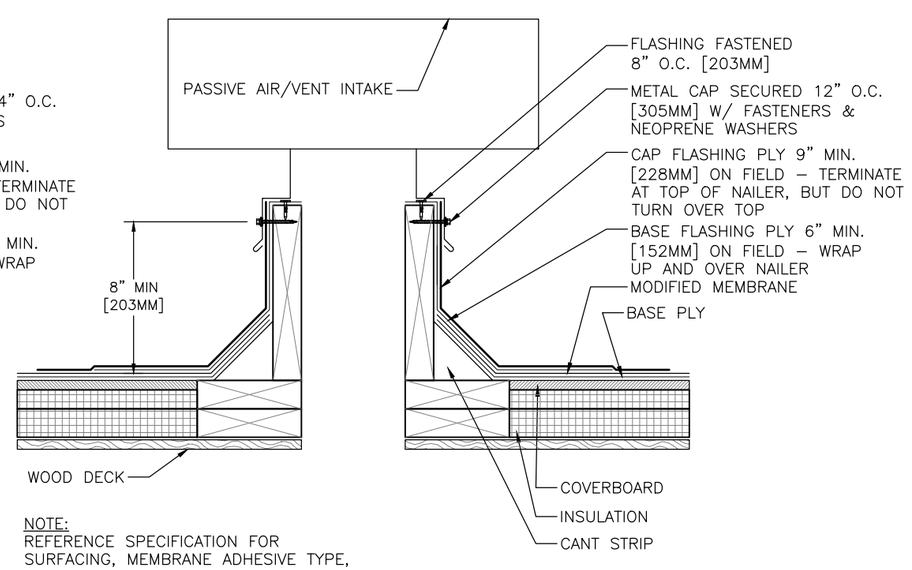

NOTE:
REFERENCE SPECIFICATION FOR SURFACING, MEMBRANE ADHESIVE TYPE, AND INSULATION/COVER BOARD TYPE AND ATTACHMENT METHOD.

Q/6 PASSIVE AIR / VENT INTAKE
SCALE: 1½" = 1'-0"

ADDENDUM #1
03/07/2025

THE GARLAND COMPANY INC.
3800 EAST 91st STREET - CLEVELAND, OHIO 44105-2197
PHONE (800) 321-9336 / FAX (216) 641-0633

Mt. Diablo Unified School District
SHADELANDS AND SUNRISE ELEMENTARY
1861 SILVERWOOD DR. CONCORD, CA 94519
AGENT: JOE SALAZAR
DWG BY: GCK
CHK BY: JS
DATE: 1-6-25
REVISION:
SHEET: 6
OF 6

Mt. Diablo Unified School District

VALLEY VIEW MIDDLE SCHOOL

181 VIKING DR, PLEASANT HILL, CA 94523



ADDENDUM #1
03/07/2025

N

LOCATION MAP

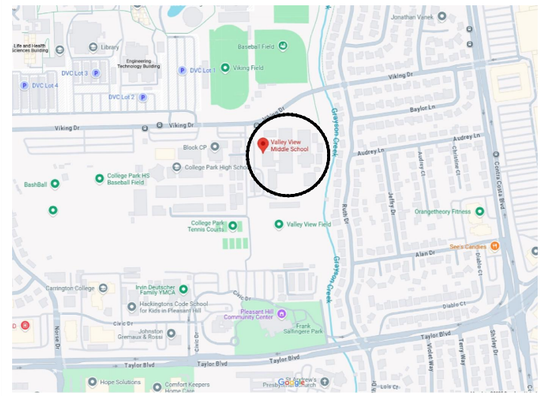

N

KEY PLAN

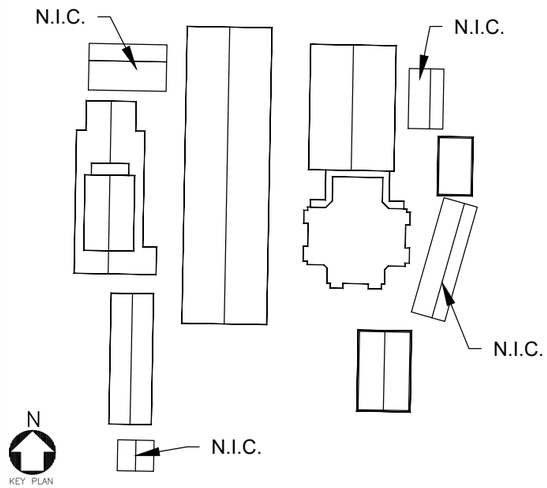

DRAWING INDEX

SHT 1 - COVER SHEET
SHT 2 - SCOPE OF WORK & TYPICAL DETAIL
SHT 3 - ROOF PLAN
SHT 4 - DETAILS
SHT 5 - DETAILS
SHT 6 - DETAILS
SHT 7 - DETAILS
SHT 8 - DETAILS

THE GARLAND COMPANY INC.
3800 EAST 91st STREET - CLEVELAND, OHIO 44105-2197
PHONE (800) 321-9336 / FAX (216) 641-0633

Mt. Diablo Unified School District
VALLEY VIEW MIDDLE SCHOOL
181 VIKING DR, PLEASANT HILL, CA 94523
AGENT: DOUG CLARK

DWG BY: GCK | CHK BY: DC | DATE: 1-13-25

REVISION:

SHEET: 1
OF 8

SCOPE OF WORK:

LIQUID APPLIED ROOF RESTORATION SCOPE:

1. REMOVE AND DISPOSE OF ALL VERTICAL FLASHINGS AND DETAIL FLASHINGS. REMOVE ALL BLISTERS, MOLE RUNS, AND DAMAGED AREAS PER MANUFACTURERS RECOMMENDATIONS. REMOVE ALL GUTTERS WHERE EXISTING AND ASSOCIATED METAL AND FLASHINGS.
2. INSTALL NEW BOX GUTTERS USING GARLAND 22 GA. FLATSTOCK AT ALL CLASSROOM AND ADMIN BUILDING EAVES.
3. INSTALL NEW FLASHINGS USING STRESSBASE 80 PLUS AND STRESSPLY PLUS FR MINERAL IN GREEN-LOCK FLASHING ADHESIVE PER MANUFACTURERS REQUIREMENTS.
4. REMOVE EXISTING DRAINAGE DIVERTERS AND INSTALL NEW L BRACKET TO DIVERT WATER IN SAME LOCATION AS PREVIOUSLY DESIGNED. PATCH ROOF AREA AND STRIP IN L BRACKET WITH MEMBRANE AND ADHESIVE PER ITEM #3.
5. POWER WASH ROOF SYSTEM USING TSP AND WATER SOLUTION.
6. REINFORCE ALL SEAMS BY APPLYING LIQUITEC AND POLYESTER PER SPECIFIED REQUIREMENTS.
7. APPLY A BASE AND TOP COAT OF LIQUITEC PER SPECIFIED REQUIREMENTS.
8. CLEAN OFF ALL MASTIC/ASPHALT AND PAINT ALL CONDUIT PIPES, VENTS, AND HOODS WITH PYRAMIC TO ENSURE A CLEAN FINAL PROJECT. ALL CONDUIT TO BE SEALED AND REATTACHED WITH PROPER COUPLINGS. LINES SHOULD BE STRAIGHT AND AS TIDY AS POSSIBLE. ANY COUPLINGS THAT CANNOT BE PROPERLY SEALED SHOULD BE BROUGHT TO DISTRICT ATTENTION.
9. ALL DRAINS AND GUTTER DOWNSPOUTS TO RECEIVE NEW STRAINERS.
10. AT END OF EVERY WORK DAY ENSURE THE WORK SITE AND SURROUNDING AREA IS FREE OF ANY DIRT AND DEBRIS.
11. TEST ALL DRAINS AND DOWNSPOUT PRIOR TO CONSTRUCTION AND ONCE AGAIN AFTER COMPLETION.

SCOPE OF WORK: REPLACEMENT

1. REMOVE AND DISPOSE OF ALL ROOFING, EDGE METAL, AND COUNTER-FLASHING DOWN TO STRUCTURAL DECK. ANY GUTTERS TO BE REMOVED AND REPLACED.
2. PERFORM ANY REPAIRS AS NEEDED
3. NAIL RED ROSIN PAPER.
4. MECHANICALLY FASTEN 1/2" WOOD FIBER BOARD PER MANUFACTURERS WIND UPLIFT CALCULATIONS.
4. INSTALL 2 PLY MODIFIED BITUMEN SYSTEM IN HOT APPLIED ASPHALT.
5. INSTALL NEW KYNAR COATED EDGE METAL, COPING, GUTTERS, AND COUNTERFLASHING IN 22 GA. GARLAND FLAT STOCK.
6. APPLY TITLE 24 REFLECTIVE COATING IN 2 COATS. (1.5+1.5 GAL PER SQUARE).
7. CLEAN OFF ALL MASTIC/ASPHALT AND PAINT ALL CONDUIT PIPES, VENTS, AND HOODS WITH PYRAMIC TO ENSURE A CLEAN FINAL PROJECT. ALL CONDUIT TO BE SEALED AND REATTACHED WITH PROPER COUPLINGS. LINES SHOULD BE STRAIGHT AND AS TIDY AS POSSIBLE. ANY COUPLINGS THAT CANNOT BE PROPERLY SEALED SHOULD BE BROUGHT TO DISTRICT ATTENTION.
8. ALL DRAINS AND GUTTER DOWNSPOUTS TO RECEIVE NEW STRAINERS.
9. AT END OF EVERY WORK DAY ENSURE THE WORK SITE AND SURROUNDING AREA IS FREE OF ANY DIRT AND DEBRIS.
10. TEST ALL DRAINS AND DOWNSPOUT PRIOR TO CONSTRUCTION AND ONCE AGAIN AFTER COMPLETION.

At MPR, install 2.5" polyiso and coverboard.

Add Alt #1 - Apply Liquitec FG and Uni-Bond to all duct seams and joints. See updated addendum #1 Specs.

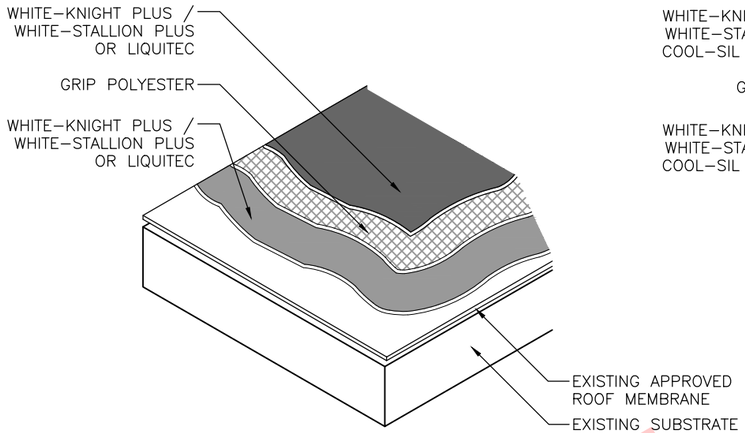

NOTE:
1. REFER TO WHITE–KNIGHT PLUS / WHITE–STALLION PLUS OR LIQUITEC APPLICATION GUIDES FOR INSTALLATION GUIDELINES.

A/2 TYPICAL FULLY REINFORCED FIELD DETAIL
SCALE: 1½" = 1'-0"

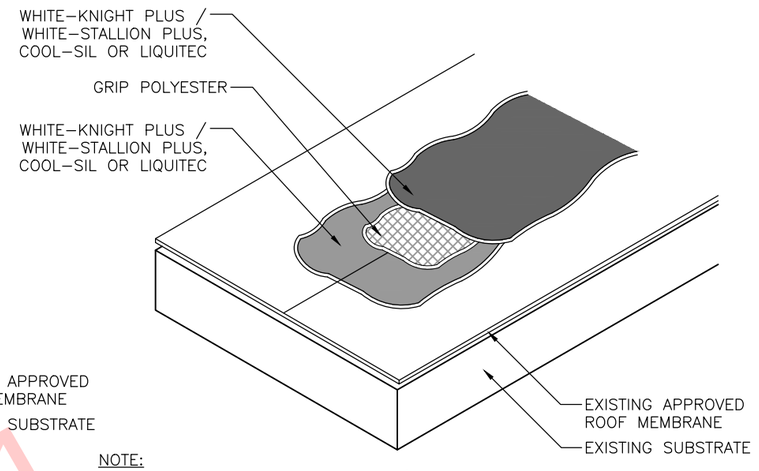

NOTE:
1. REFER TO WHITE–KNIGHT PLUS / WHITE–STALLION PLUS, COOL–SIL OR LIQUITEC APPLICATION GUIDES FOR INSTALLATION GUIDELINES.

B/2 TYPICAL MEMBRANE SEAM DETAIL
SCALE: 1½" = 1'-0"

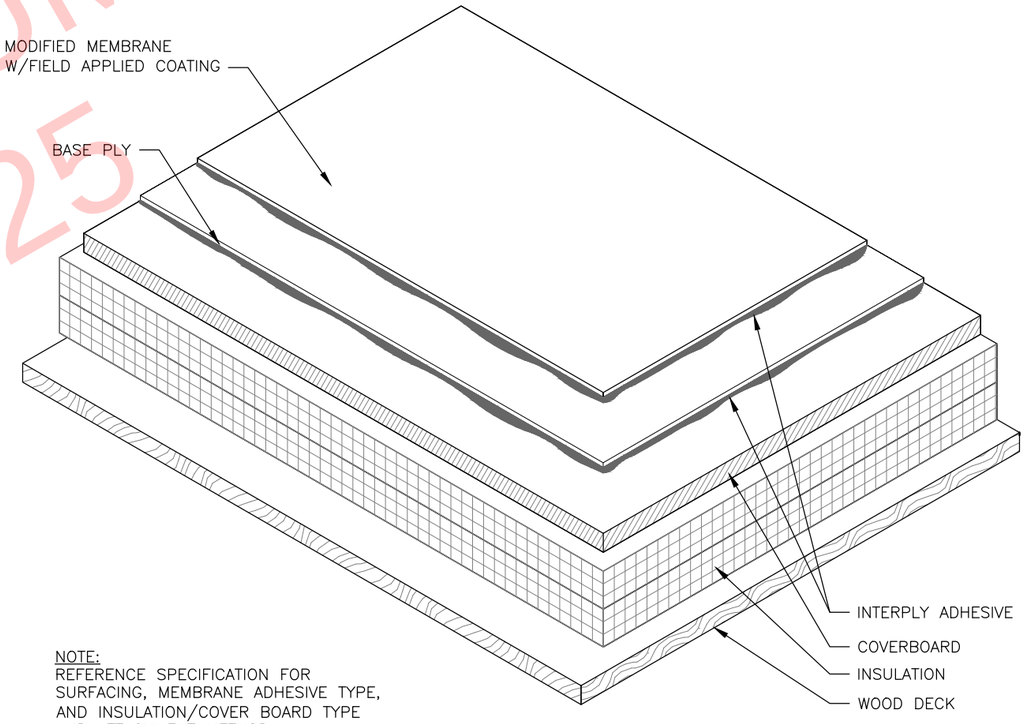

NOTE:
REFERENCE SPECIFICATION FOR SURFACING, MEMBRANE ADHESIVE TYPE, AND INSULATION/COVER BOARD TYPE AND ATTACHMENT METHOD.

C/2 TYPICAL ROOF SYSTEM COATED SURFACE
SCALE: 3" = 1'-0"

ADDENDUM #1
08/07/2025

THE GARLAND COMPANY INC.
3800 EAST 91st STREET - CLEVELAND, OHIO 44105-2197
PHONE (800) 321-9336 / FAX (216) 641-0633

Mt. Diablo Unified School District
VALLEY VIEW MIDDLE SCHOOL
181 VIKING DR, PLEASANT HILL, CA 94523
AGENT: DOUG CLARK
DWG BY: GCK
CHK BY: DC
DATE: 1-13-25
REVISION:
SHEET: 2
OF 8

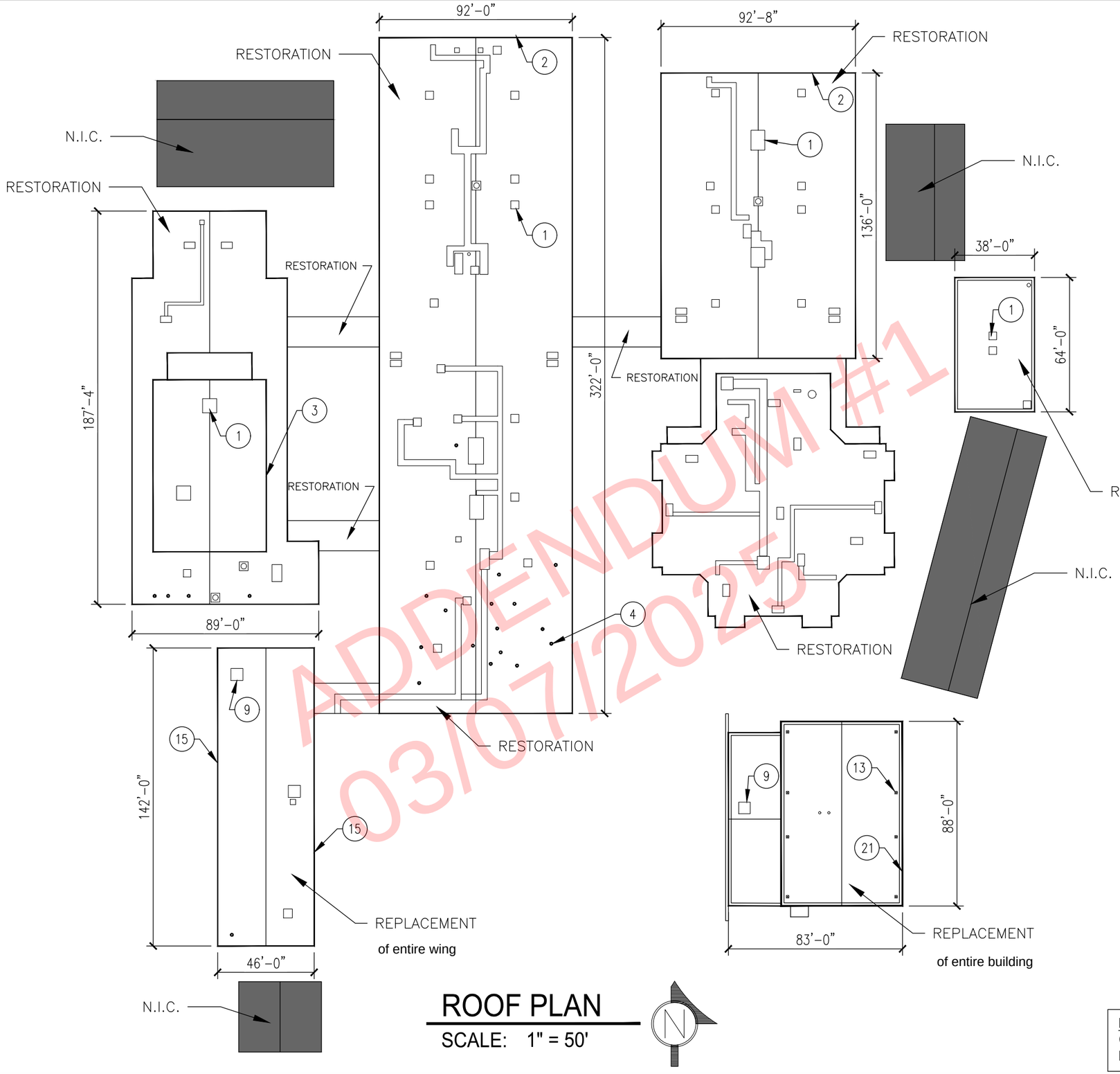

ADDENDUM #1
03/07/2025

SYMBOL LEGEND

1. CURB DETAIL, DTL C/4
2. EMBEDDED EDGE METAL, DTL D/4
3. WALL FLASHING, DTL E/4
4. PIPE PENETRATION, DTL F/4
5. RESTOR-EDGE, DTL G/5
6. ROOF DRAIN, DTL H/5
7. THROUGH WALL SCUPPER, DTL J/5
8. AREA DIVIDER, DTL K/6
9. CURB DETAIL, DTL L/6
10. EQUIPMENT SUPPORT, DTL M/6
11. EXHAUST FAN, DTL N/6
12. HEAT STACK, DTL P/6
13. ROOF DRAIN, DTL Q/6
14. METAL EDGE, DTL R/7
15. METAL EDGE W/GUTTER, DTL S/7
16. EXPANSION JOINT, DTL T/7
17. PASSIVE AIR VENT, DTL U/7
18. PLUMBING STACK, DTL V/7
19. PIPE HOUSING, DTL W/8
20. PIPE PENETRATION, DTL X/8
21. WALL FLASHING, DTL Y/8

ROOF PLAN

SCALE: 1" = 50'

NOTE:
CONTRACTOR SHALL FIELD VERIFY ALL DIMENSIONS, CONDITIONS AND QUANTITIES.

THE GARLAND COMPANY INC.
3800 EAST 91st STREET - CLEVELAND, OHIO 44105-2197
PHONE (800) 321-9336 / FAX (216) 641-0633

Mt. Diablo Unified School District
VALLEY VIEW MIDDLE SCHOOL
181 VIKING DR, PLEASANT HILL, CA 94523

AGENT: DOUG CLARK
DWG BY: GCK
CHK BY: DC
DATE: 1-13-25
REVISION:

SHEET: 3
OF 8

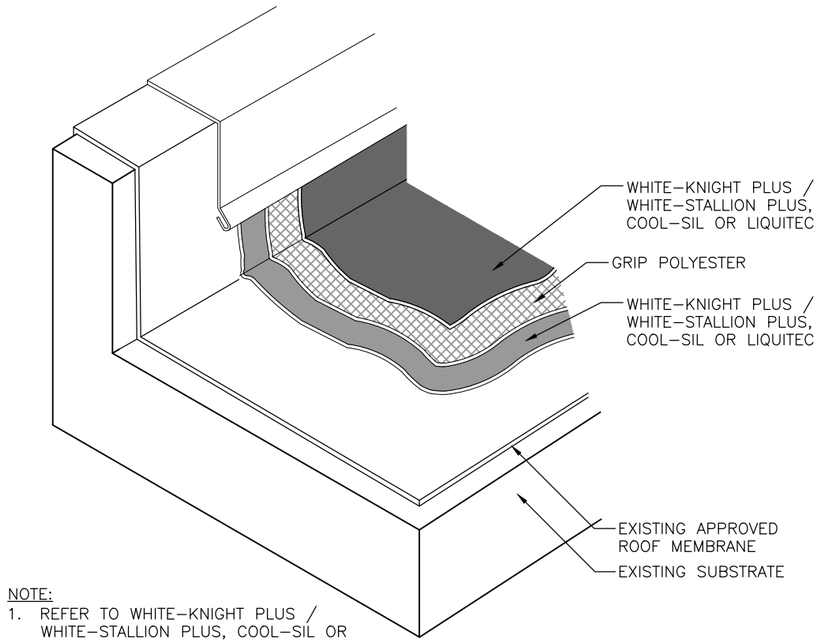

NOTE:
1. REFER TO WHITE–KNIGHT PLUS / WHITE–STALLION PLUS, COOL–SIL OR LIQUITEC APPLICATION GUIDES FOR INSTALLATION GUIDELINES.

C/4 TYPICAL CURB DETAIL
SCALE: 1½" = 1'-0"

NOTE:
1. REFER TO WHITE–KNIGHT PLUS / WHITE–STALLION PLUS, COOL–SIL OR LIQUITEC APPLICATION GUIDES FOR INSTALLATION GUIDELINES.

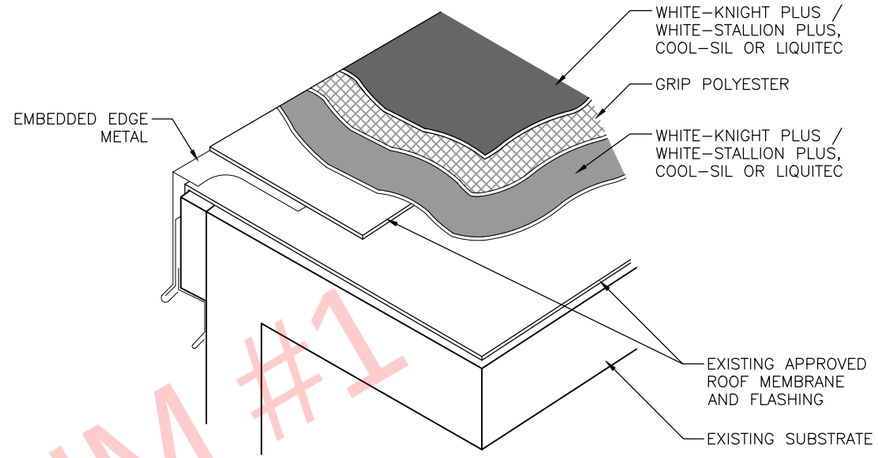

D/4 TYPICAL EMBEDDED EDGE METAL DETAIL
SCALE: 1½" = 1'-0"

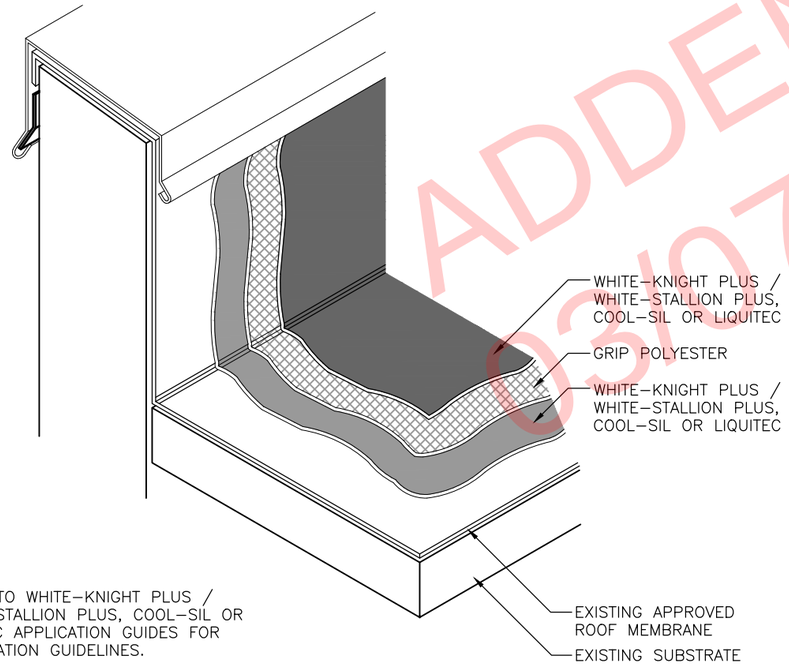

NOTE:
1. REFER TO WHITE–KNIGHT PLUS / WHITE–STALLION PLUS, COOL–SIL OR LIQUITEC APPLICATION GUIDES FOR INSTALLATION GUIDELINES.

E/4 TYPICAL WALL DETAIL
SCALE: 1½" = 1'-0"

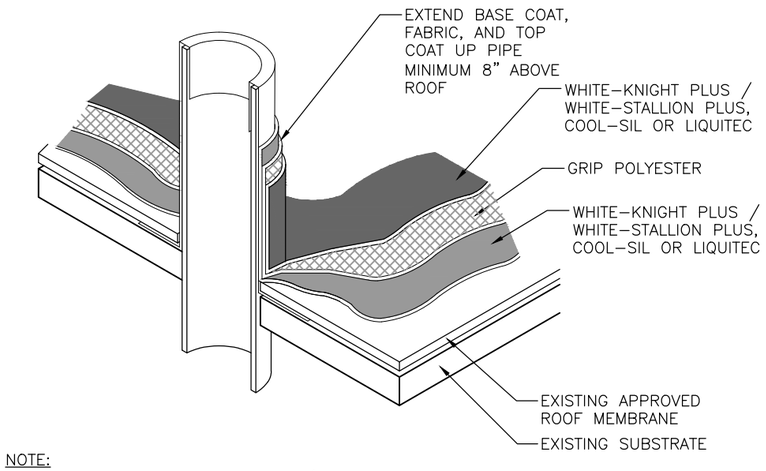

NOTE:
1. REFER TO WHITE–KNIGHT PLUS / WHITE–STALLION PLUS, COOL–SIL OR LIQUITEC APPLICATION GUIDES FOR INSTALLATION GUIDELINES.

F/4 TYPICAL PIPE PENETRATION DETAIL
SCALE: 1½" = 1'-0"

ADDENDUM #1
03/07/2025

THE GARLAND COMPANY INC.
3800 EAST 91st STREET - CLEVELAND, OHIO 44105-2197
PHONE (800) 321-9336 / FAX (216) 641-0633

Mt. Diablo Unified School District
VALLEY VIEW MIDDLE SCHOOL
181 VIKING DR, PLEASANT HILL, CA 94523
AGENT: DOUG CLARK
DWG BY: GCK | CHK BY: DC | DATE: 1-13-25
REVISION:
SHEET: 4
OF 8

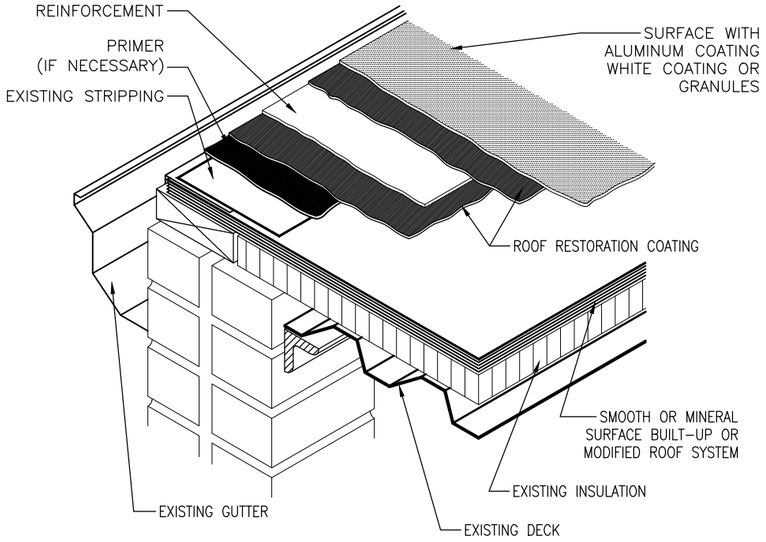

G/5 RESTOR-EDGE DETAIL

SCALE: 1½" = 1'-0"

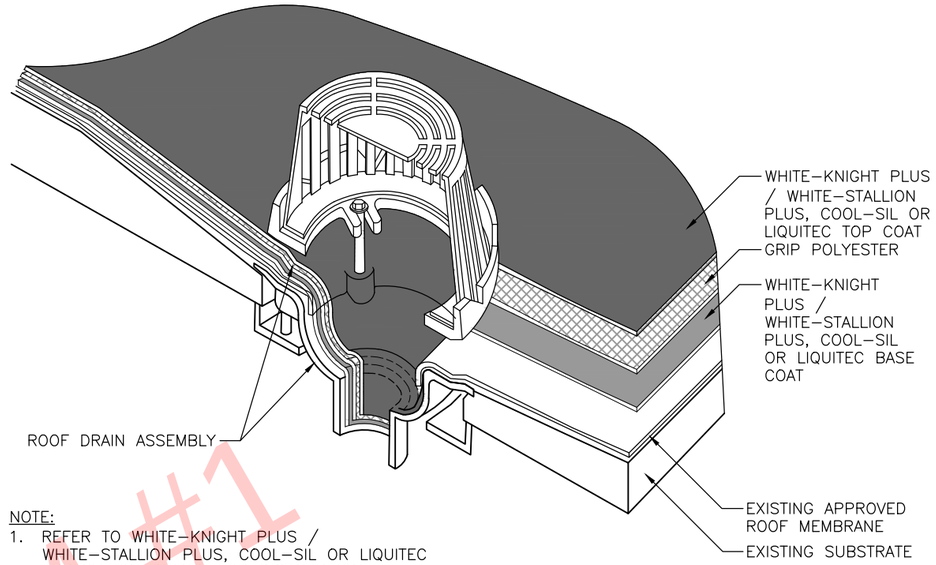

NOTE:
1. REFER TO WHITE–KNIGHT PLUS / WHITE–STALLION PLUS, COOL–SIL OR LIQUITEC APPLICATION GUIDES FOR INSTALLATION GUIDELINES.

H/5 ROOF DRAIN

SCALE: 1½" = 1'-0"

NOTE:
1. REFER TO WHITE–KNIGHT PLUS / WHITE–STALLION PLUS, COOL–SIL OR LIQUITEC APPLICATION GUIDES FOR INSTALLATION GUIDELINES.

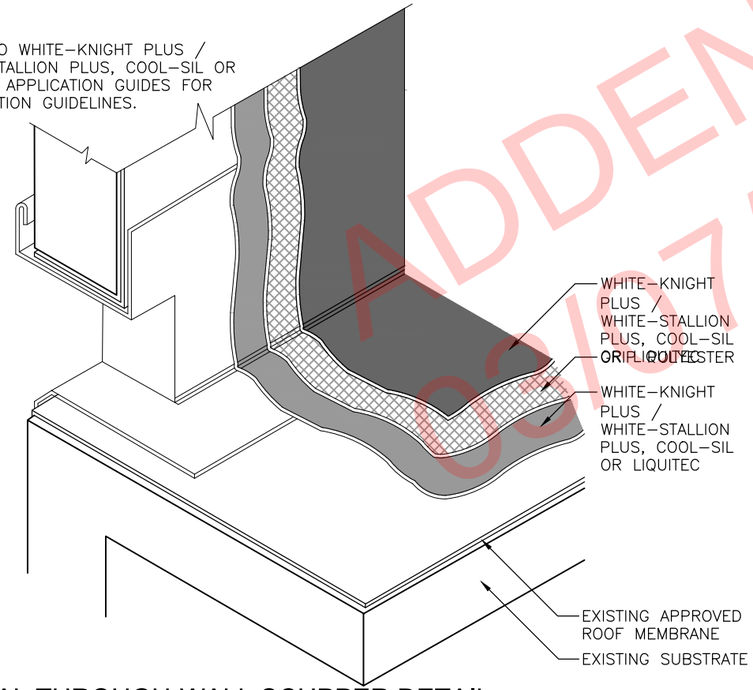

J/5 TYPICAL THROUGH-WALL SCUPPER DETAIL

SCALE: 1½" = 1'-0"

ADDENDUM #1
09/17/2025

THE GARLAND COMPANY INC.
3800 EAST 91st STREET - CLEVELAND, OHIO 44105-2197
PHONE (800) 321-9336 / FAX (216) 641-0633

GARLAND since 1895

Mt. Diablo Unified School District
VALLEY VIEW MIDDLE SCHOOL
181 VIKING DR, PLEASANT HILL, CA 94523

DWG BY: GCK | CHK BY: DC
AGENT: DOUG CLARK | DATE: 1-13-25

REVISION:

SHEET: 5
OF 8

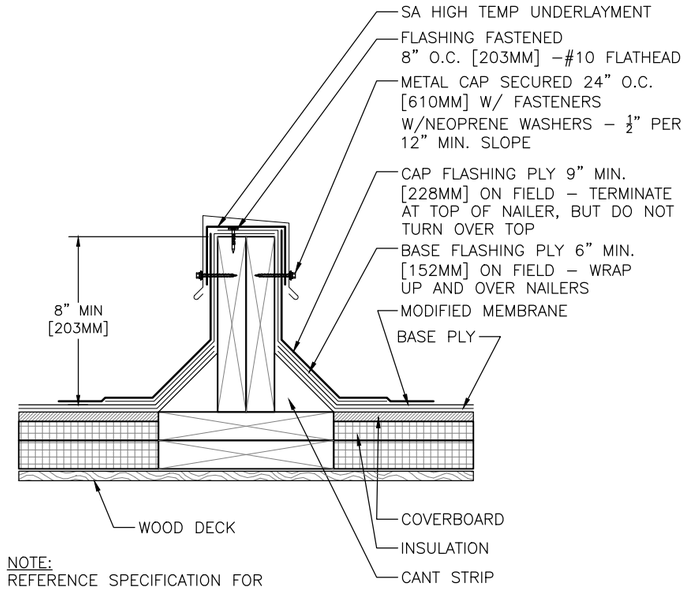

NOTE:
REFERENCE SPECIFICATION FOR SURFACING, MEMBRANE ADHESIVE TYPE, AND INSULATION/COVER BOARD TYPE AND ATTACHMENT METHOD.

K/6 AREA DIVIDER
SCALE: 1½" = 1'-0"

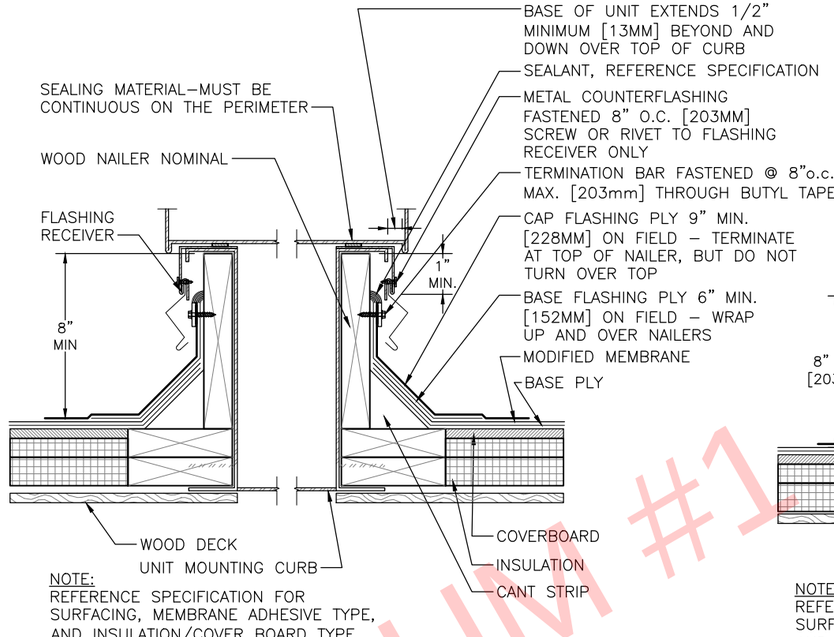

NOTE:
REFERENCE SPECIFICATION FOR SURFACING, MEMBRANE ADHESIVE TYPE, AND INSULATION/COVER BOARD TYPE AND ATTACHMENT METHOD.

L/6 CURB DETAIL / AIR HANDLING STATION
SCALE: 1½" = 1'-0"

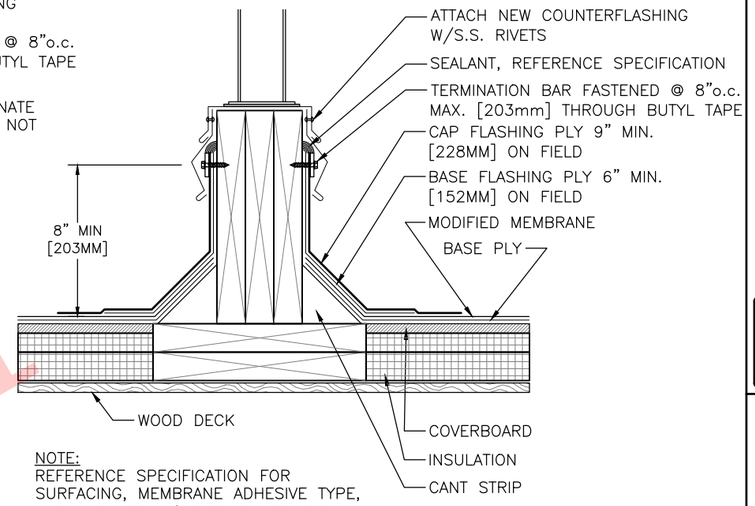

NOTE:
REFERENCE SPECIFICATION FOR SURFACING, MEMBRANE ADHESIVE TYPE, AND INSULATION/COVER BOARD TYPE AND ATTACHMENT METHOD.

M/6 EQUIPMENT SUPPORT - EXISTING
SCALE: 1½" = 1'-0"

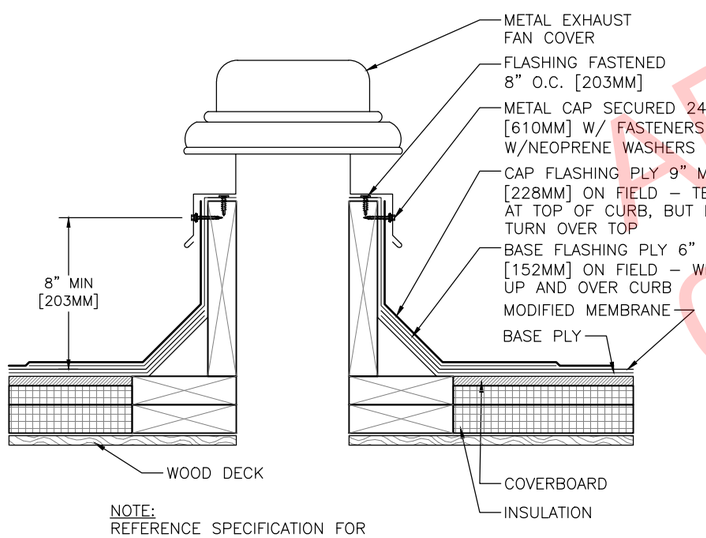

NOTE:
REFERENCE SPECIFICATION FOR SURFACING, MEMBRANE ADHESIVE TYPE, AND INSULATION/COVER BOARD TYPE AND ATTACHMENT METHOD.

N/6 EXHAUST FAN
SCALE: 1½" = 1'-0"

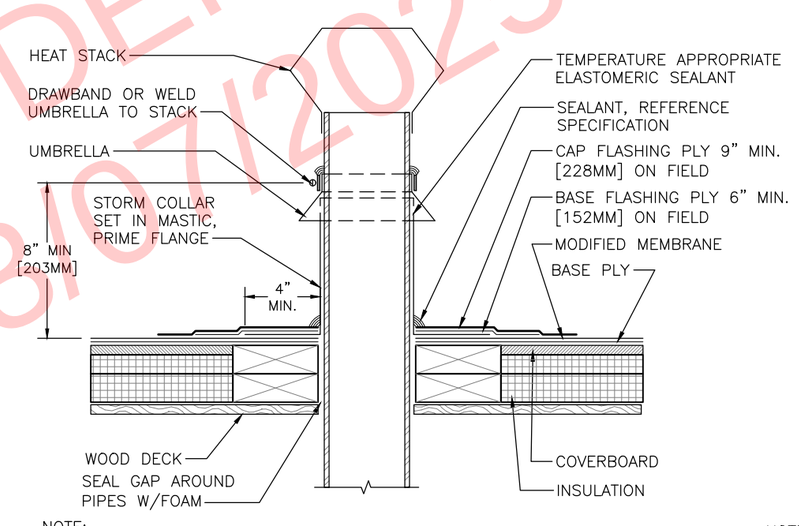

NOTE:
REFERENCE SPECIFICATION FOR SURFACING, MEMBRANE ADHESIVE TYPE, AND INSULATION/COVER BOARD TYPE AND ATTACHMENT METHOD.

P/6 HEAT STACK
SCALE: 1½" = 1'-0"

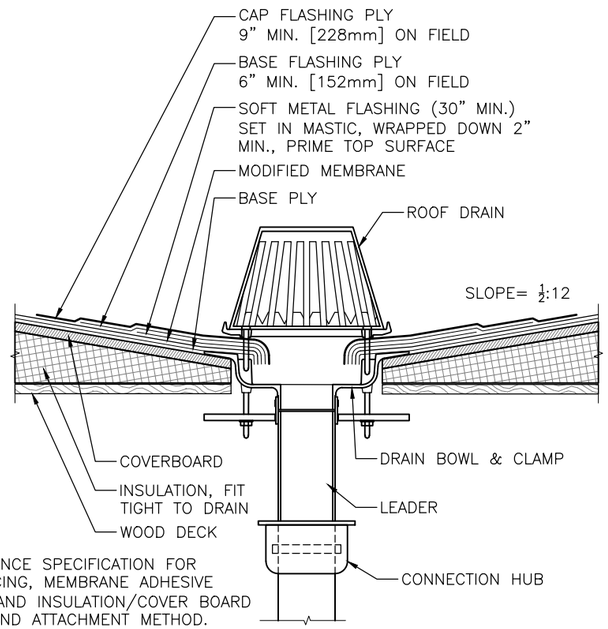

NOTE:
REFERENCE SPECIFICATION FOR SURFACING, MEMBRANE ADHESIVE TYPE, AND INSULATION/COVER BOARD TYPE AND ATTACHMENT METHOD.

Q/6 ROOF DRAIN
SCALE: 1½" = 1'-0"

ADDENDUM #1
03/07/2025

THE GARLAND COMPANY INC.
3800 EAST 91st STREET - CLEVELAND, OHIO 44105-2197
PHONE (800) 321-9336 / FAX (216) 641-0633

GARLAND since 1895

Mt. Diablo Unified School District
VALLEY VIEW MIDDLE SCHOOL
181 VIKING DR, PLEASANT HILL, CA 94523
AGENT: DOUG CLARK
DWG BY: GCK
CHK BY: DC
DATE: 1-13-25
REVISION:
SHEET: 6
OF 8

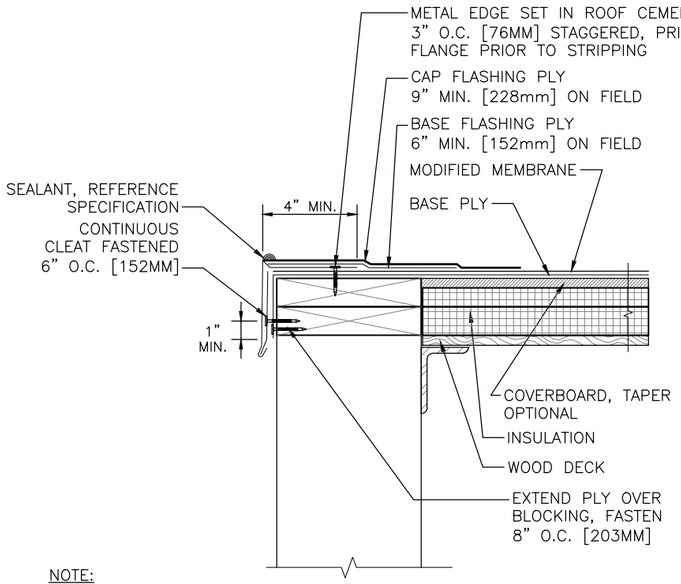

NOTE:
REFERENCE SPECIFICATION FOR SURFACING, MEMBRANE ADHESIVE TYPE, AND INSULATION/COVER BOARD TYPE AND ATTACHMENT METHOD.

R 7 METAL EDGE - DRIP EDGE
SCALE: 1½" = 1'-0"

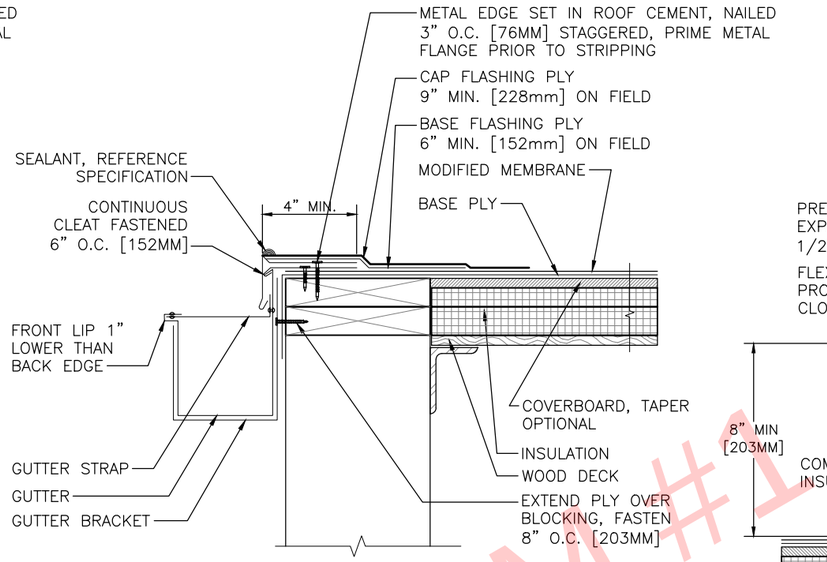

NOTE:
REFERENCE SPECIFICATION FOR SURFACING, MEMBRANE ADHESIVE TYPE, AND INSULATION/COVER BOARD TYPE AND ATTACHMENT METHOD.

S 7 METAL EDGE - DRIP EDGE WITH GUTTER
SCALE: 1½" = 1'-0"

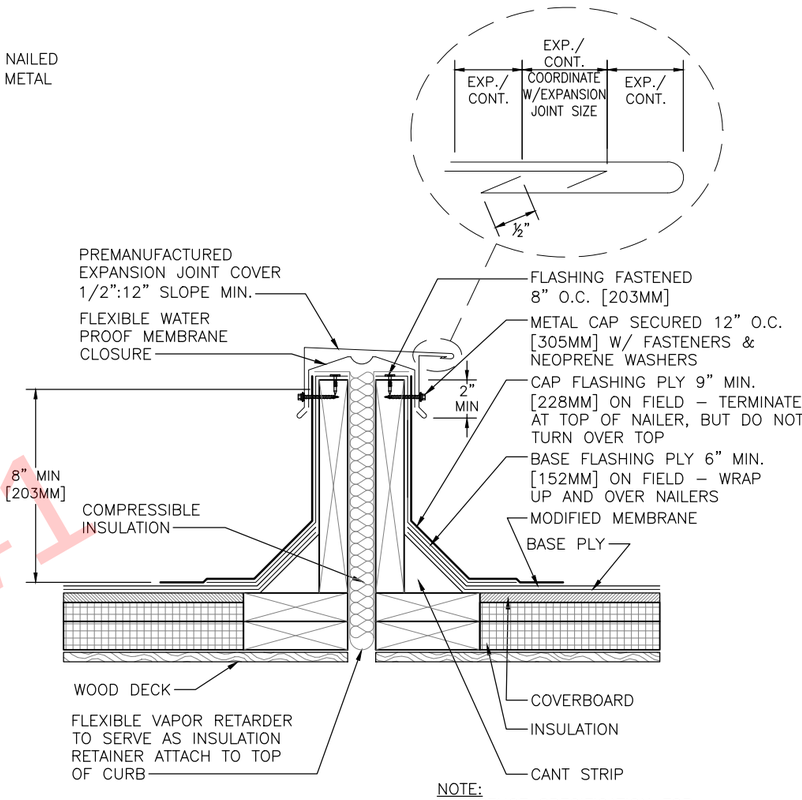

NOTE:
REFERENCE SPECIFICATION FOR SURFACING, MEMBRANE ADHESIVE TYPE, AND INSULATION/COVER BOARD TYPE AND ATTACHMENT METHOD.

T 7 EXPANSION JOINT
SCALE: 1½" = 1'-0"

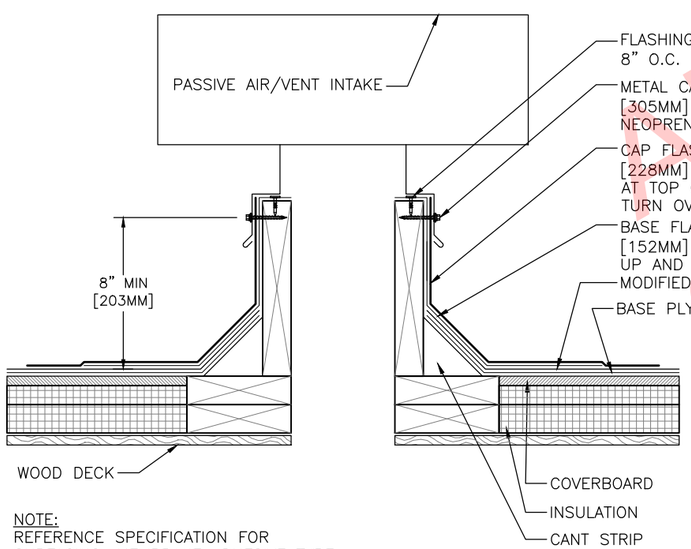

NOTE:
REFERENCE SPECIFICATION FOR SURFACING, MEMBRANE ADHESIVE TYPE, AND INSULATION/COVER BOARD TYPE AND ATTACHMENT METHOD.

U 7 PASSIVE AIR / VENT INTAKE
SCALE: 1½" = 1'-0"

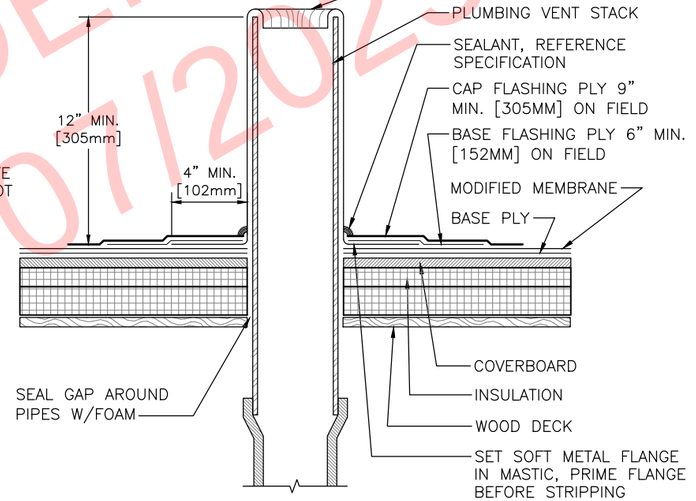

NOTE:
REFERENCE SPECIFICATION FOR SURFACING, MEMBRANE ADHESIVE TYPE, AND INSULATION/COVER BOARD TYPE AND ATTACHMENT METHOD.

V 7 PLUMBING STACK
SCALE: 1½" = 1'-0"

ADDENDUM #1
05/07/2025

THE GARLAND COMPANY INC.
3800 EAST 91st STREET - CLEVELAND, OHIO 44105-2197
PHONE (800) 321-9336 / FAX (216) 641-0633

Mt. Diablo Unified School District
VALLEY VIEW MIDDLE SCHOOL
181 VIKING DR, PLEASANT HILL, CA 94523

DATE: 1-13-25
CHK BY: DC
DWG BY: GCK
AGENT: DOUG CLARK
REVISION:

SHEET: 7
OF 8

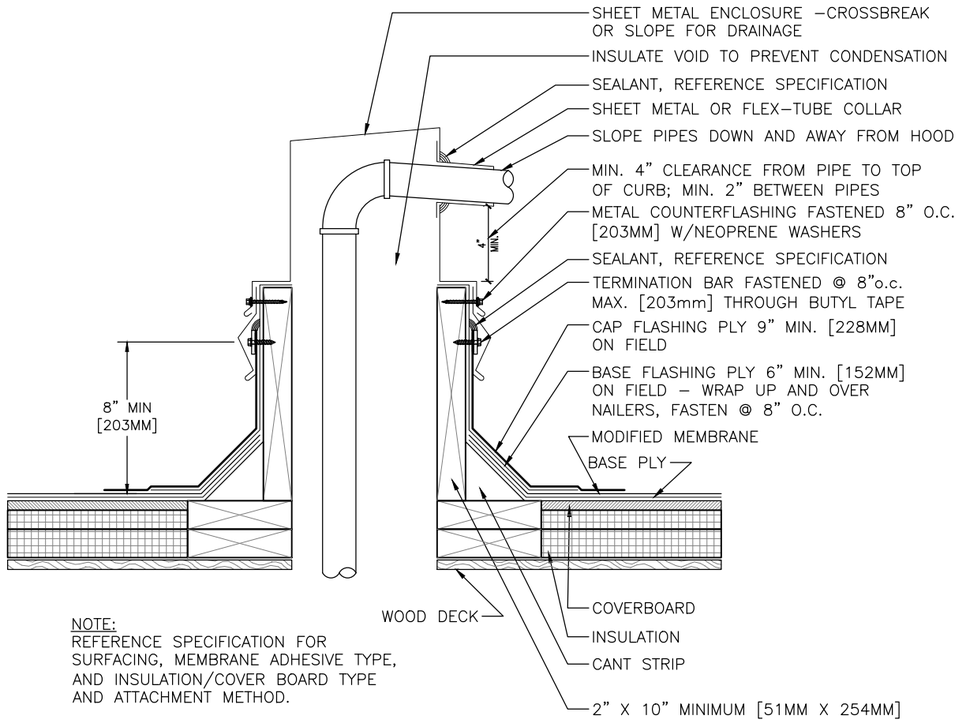

NOTE:
REFERENCE SPECIFICATION FOR SURFACING, MEMBRANE ADHESIVE TYPE, AND INSULATION/COVER BOARD TYPE AND ATTACHMENT METHOD.

W/8 PIPE HOUSING
SCALE: 1½" = 1'-0"

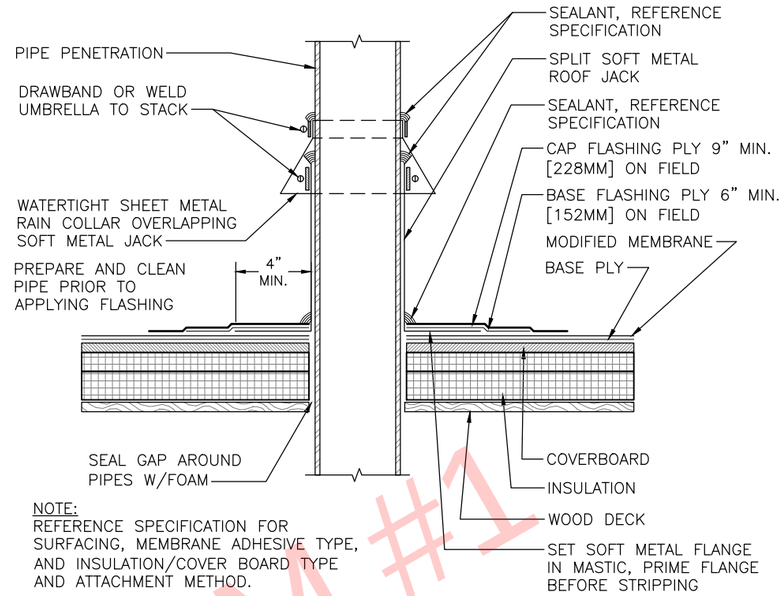

NOTE:
REFERENCE SPECIFICATION FOR SURFACING, MEMBRANE ADHESIVE TYPE, AND INSULATION/COVER BOARD TYPE AND ATTACHMENT METHOD.

X/8 PIPE/TUBE PENETRATION - SPLIT JACK w/COLLAR
SCALE: 1½" = 1'-0"

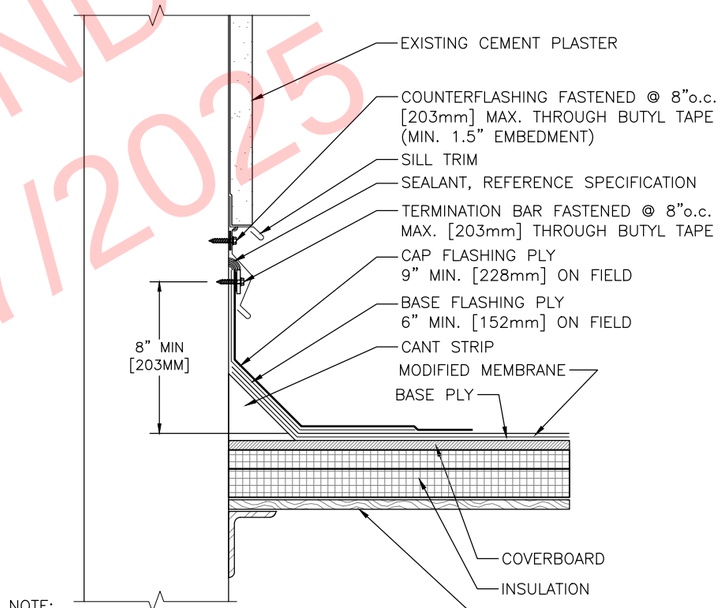

NOTE:
REFERENCE SPECIFICATION FOR SURFACING, MEMBRANE ADHESIVE TYPE, AND INSULATION/COVER BOARD TYPE AND ATTACHMENT METHOD.

Y/8 WALL FLASHING AT EXISTING CEMENT PLASTER WALL
SCALE: 1½" = 1'-0"

ADDENDUM #1
03/07/2025

THE GARLAND COMPANY INC.
3800 EAST 91st STREET - CLEVELAND, OHIO 44105-2197
PHONE (800) 321-9336 / FAX (216) 641-0633

GARLAND since 1895

Mt. Diablo Unified School District
VALLEY VIEW MIDDLE SCHOOL
181 VIKING DR. PLEASANT HILL, CA 94523

AGENT: DOUG CLARK
DWG BY: GCK
CHK BY: DC
DATE: 1-13-25
REVISION:

SHEET: 8
OF 8