Mt. Diablo Unified School District

AYERS ELEMENTARY ROOF RESTORATION

5120 MYRTLE DR, CONCORD, CA 94521



N

LOCATION MAP

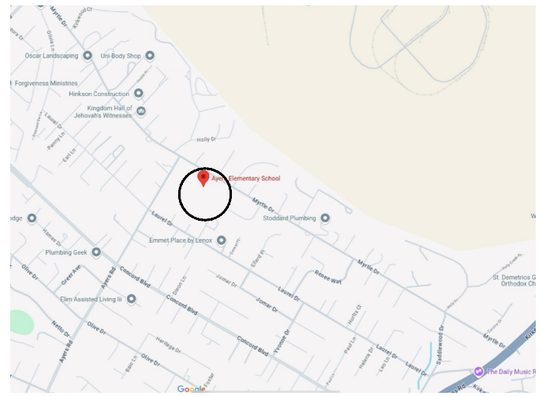

N

KEY PLAN

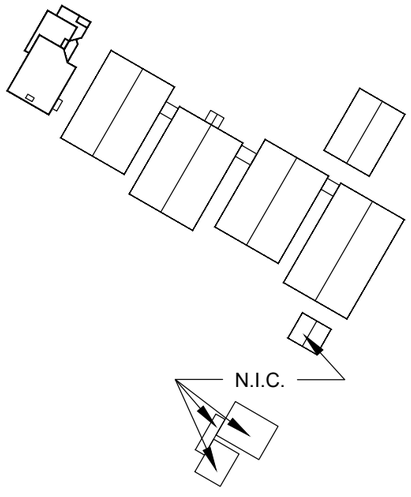

N
KEY PLAN

DRAWING INDEX

SHT 1 - COVER SHEET
SHT 2 - SCOPE OF WORK & TYPICAL DETAIL
SHT 3 - ROOF PLAN
SHT 4 - DETAILS
SHT 5 - DETAILS

THE GARLAND COMPANY INC.
3800 EAST 91st STREET - CLEVELAND, OHIO 44105-2197
PHONE (800) 321-9336 / FAX (216) 641-0633

GARLAND since 1895

Mt. Diablo Unified School District
AYERS ELEMENTARY
5120 MYRTLE DR, CONCORD, CA 94521
AGENT: DOUG CLARK

DWG BY: GCK | CHK BY: DC | DATE: 1-13-25

REVISION:

SHEET: 1
OF 5

SCOPE OF WORK:

LIQUID APPLIED ROOF RESTORATION SCOPE:

1. REMOVE AND DISPOSE OF ALL VERTICAL FLASHINGS AND DETAIL FLASHINGS. REMOVE ALL BLISTERS, MOLE RUNS, AND DAMAGED AREAS PER MANUFACTURERS RECOMMENDATIONS. REMOVE ALL GUTTERS, ASSOCIATED METAL, AND FLASHING MEMBRANE AT GUTTER EAVES.
2. INSTALL NEW FLASHINGS USING STRESSBASE 80 PLUS AND STRESSPLY PLUS FR MINERAL IN GREEN-LOCK FLASHING ADHESIVE PER MANUFACTURERS REQUIREMENTS.
3. INSTALL NEW BOX GUTTERS USING GARLAND 22 GA. FLATSTOCK AT ALL CLASSROOM AND ADMIN BUILDING EAVES.
4. POWER WASH ROOF SYSTEM USING TSP AND WATER SOLUTION.
5. REINFORCE ALL SEAMS BY APPLYING LIQUITEC AND POLYESTER PER SPECIFIED REQUIREMENTS.
6. APPLY A BASE AND TOP COAT OF LIQUITEC PER SPECIFIED REQUIREMENTS.
7. CLEAN OFF ALL MASTIC/ASPHALT AND PAINT ALL CONDUIT PIPES, VENTS, AND HOODS WITH PYRAMIC TO ENSURE A CLEAN FINAL PROJECT. ALL CONDUIT TO BE SEALED AND REATTACHED WITH PROPER COUPLINGS. LINES SHOULD BE STRAIGHT AND AS TIDY AS POSSIBLE. ANY COUPLINGS THAT CANNOT BE PROPERLY SEALED SHOULD BE BROUGHT TO DISTRICT ATTENTION.
8. ALL DRAINS AND GUTTER DOWNSPOUTS TO RECEIVE NEW STRAINERS.
9. AT END OF EVERY WORK DAY ENSURE THE WORK SITE AND SURROUNDING AREA IS FREE OF ANY DIRT AND DEBRIS.
10. TEST ALL DRAINS AND DOWNSPOUT PRIOR TO CONSTRUCTION AND ONCE AGAIN AFTER COMPLETION.

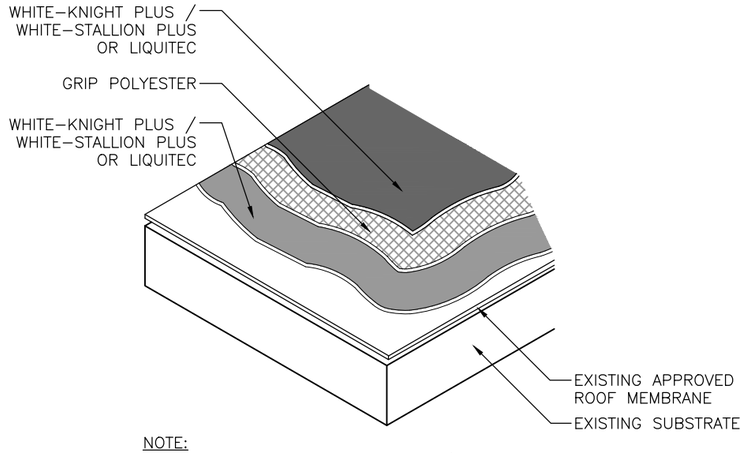

NOTE:
1. REFER TO WHITE–KNIGHT PLUS / WHITE–STALLION PLUS OR LIQUITEC APPLICATION GUIDES FOR INSTALLATION GUIDELINES.

A/2 TYPICAL FULLY REINFORCED FIELD DETAIL
SCALE: 1½" = 1'-0"

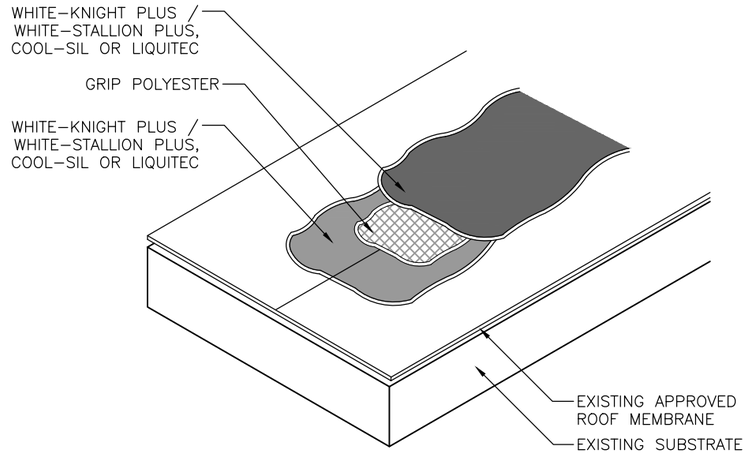

NOTE:
1. REFER TO WHITE–KNIGHT PLUS / WHITE–STALLION PLUS, COOL–SIL OR LIQUITEC APPLICATION GUIDES FOR INSTALLATION GUIDELINES.

B/2 TYPICAL MEMBRANE SEAM DETAIL
SCALE: 1½" = 1'-0"

THE GARLAND COMPANY INC.
3800 EAST 91st STREET - CLEVELAND, OHIO 44105-2197
PHONE (800) 321-9336 / FAX (216) 641-0633

Mt. Diablo Unified School District
AYERS ELEMENTARY
5120 MYRTLE DR. CONCORD, CA 94521
AGENT: DOUG CLARK
DWG BY: GCK
CHK BY:
DATE: 1-13-25
REVISION:
SHEET: 2
OF 5

SYMBOL LEGEND

1. CURB DETAIL, DTL C/4
2. EMBEDDED EDGE METAL, DTL D/4
3. WALL FLASHING, DTL E/4
4. PIPE PENETRATION, DTL F/4
5. RESTOR-EDGE, DTL G/5
6. ROOF DRAIN, DTL H/5
7. THROUGH WALL SCUPPER, DTL J/5

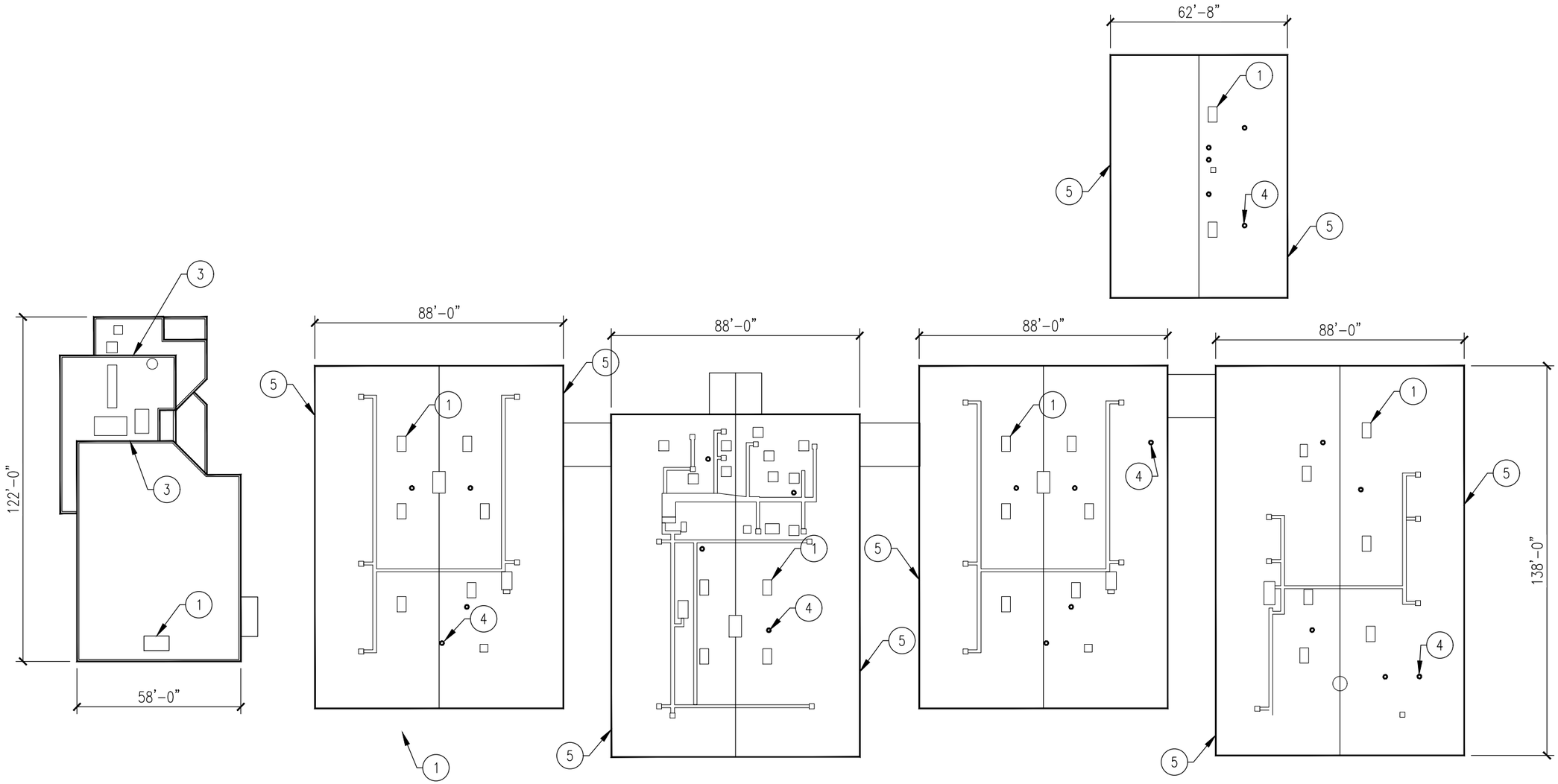

ROOF PLAN

SCALE: 1" = 40'

NOTE:
CONTRACTOR SHALL FIELD VERIFY ALL DIMENSIONS, CONDITIONS AND QUANTITIES.

THE GARLAND COMPANY INC.
3800 EAST 91st STREET - CLEVELAND, OHIO 44105-2197
PHONE (800) 321-9336 / FAX (216) 641-0633

Mt. Diablo Unified School District
AYERS ELEMENTARY
5120 MYRTLE DR. CONCORD, CA 94521

AGENT: DOUG CLARK
DWG BY: GCK
CHK BY: DC
DATE: 1-13-25

REVISION:

SHEET: 3
OF 5

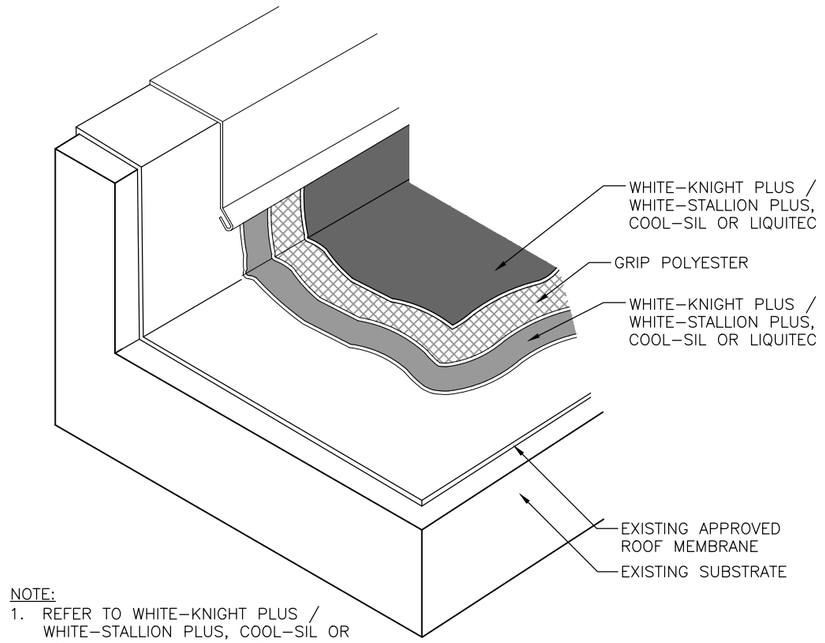

NOTE:
1. REFER TO WHITE–KNIGHT PLUS / WHITE–STALLION PLUS, COOL–SIL OR LIQUITEC APPLICATION GUIDES FOR INSTALLATION GUIDELINES.

C/4 TYPICAL CURB DETAIL
SCALE: 1½" = 1'-0"

NOTE:
1. REFER TO WHITE–KNIGHT PLUS / WHITE–STALLION PLUS, COOL–SIL OR LIQUITEC APPLICATION GUIDES FOR INSTALLATION GUIDELINES.

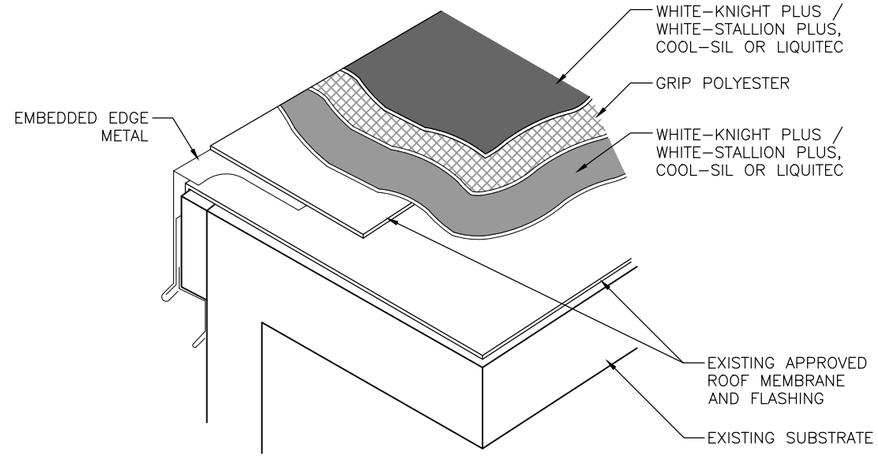

D/4 TYPICAL EMBEDDED EDGE METAL DETAIL
SCALE: 1½" = 1'-0"

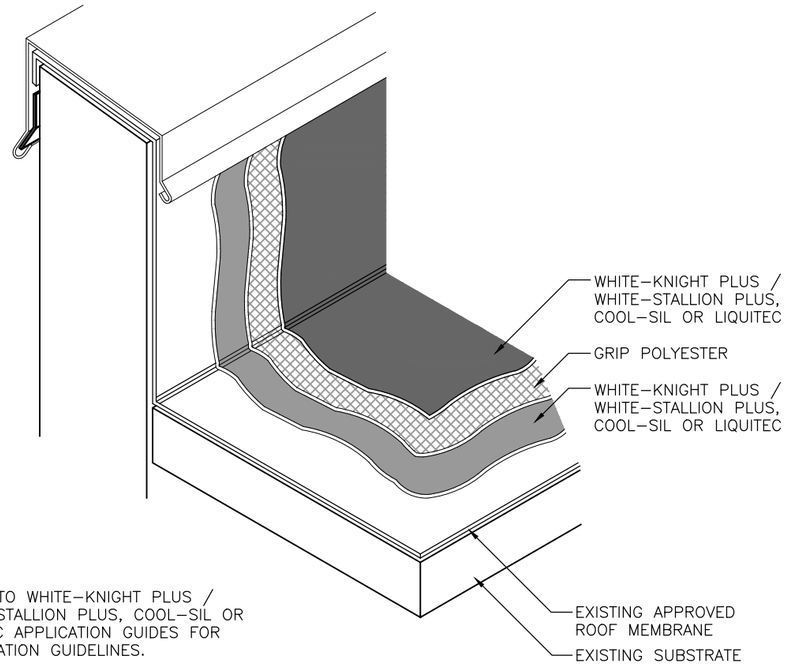

NOTE:
1. REFER TO WHITE–KNIGHT PLUS / WHITE–STALLION PLUS, COOL–SIL OR LIQUITEC APPLICATION GUIDES FOR INSTALLATION GUIDELINES.

E/4 TYPICAL WALL DETAIL
SCALE: 1½" = 1'-0"

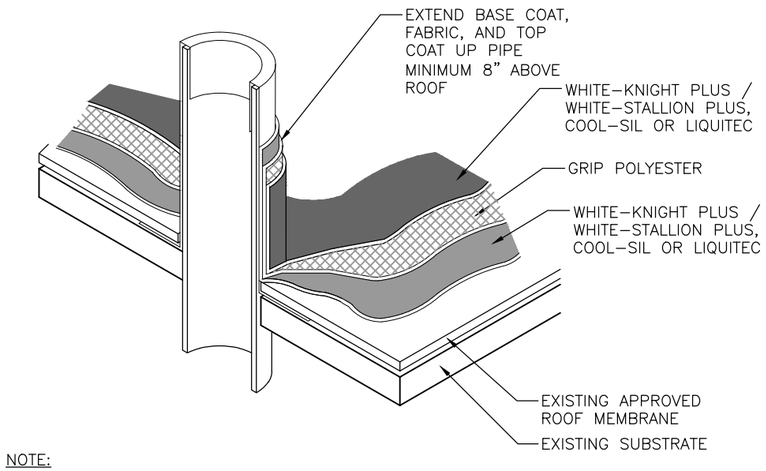

NOTE:
1. REFER TO WHITE–KNIGHT PLUS / WHITE–STALLION PLUS, COOL–SIL OR LIQUITEC APPLICATION GUIDES FOR INSTALLATION GUIDELINES.

F/4 TYPICAL PIPE PENETRATION DETAIL
SCALE: 1½" = 1'-0"

THE GARLAND COMPANY INC.
3800 EAST 91st STREET - CLEVELAND, OHIO 44105-2197
PHONE (800) 321-9336 / FAX (216) 641-0633

GARLAND since 1895

Mt. Diablo Unified School District
AYERS ELEMENTARY
5120 MYRTLE DR, CONCORD, CA 94521

DWG BY: GCK | CHK BY: DC | DATE: 1-13-25
AGENT: DOUG CLARK

REVISION:

SHEET: 4
OF 5

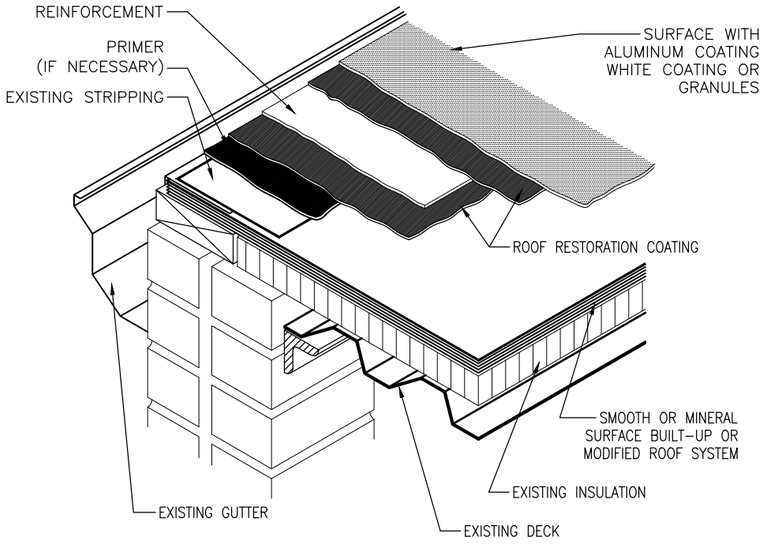

G/5 RESTOR-EDGE DETAIL

SCALE: 1½" = 1'-0"

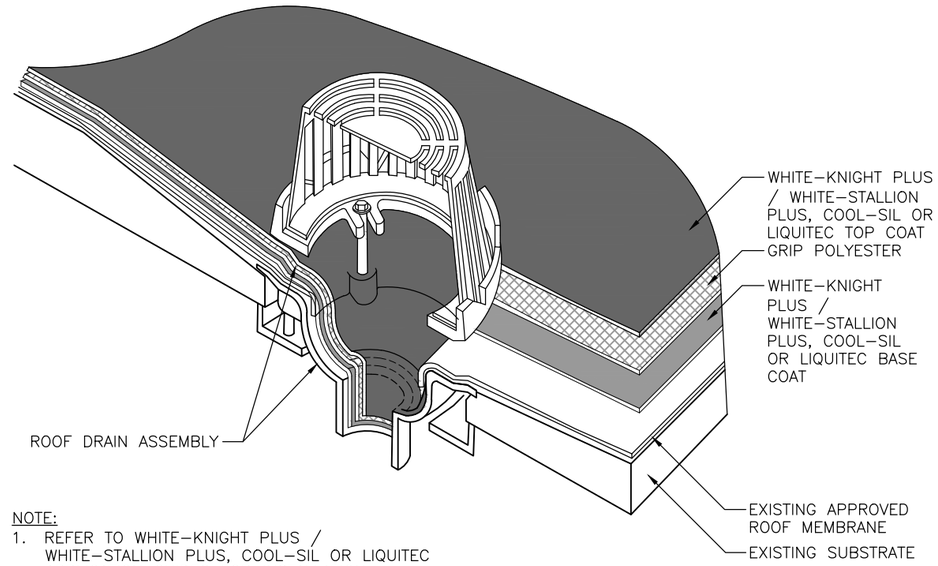

NOTE:
1. REFER TO WHITE-KNIGHT PLUS / WHITE-STALLION PLUS, COOL-SIL OR LIQUITEC APPLICATION GUIDES FOR INSTALLATION GUIDELINES.

H/5 ROOF DRAIN

SCALE: 1½" = 1'-0"

NOTE:
1. REFER TO WHITE-KNIGHT PLUS / WHITE-STALLION PLUS, COOL-SIL OR LIQUITEC APPLICATION GUIDES FOR INSTALLATION GUIDELINES.

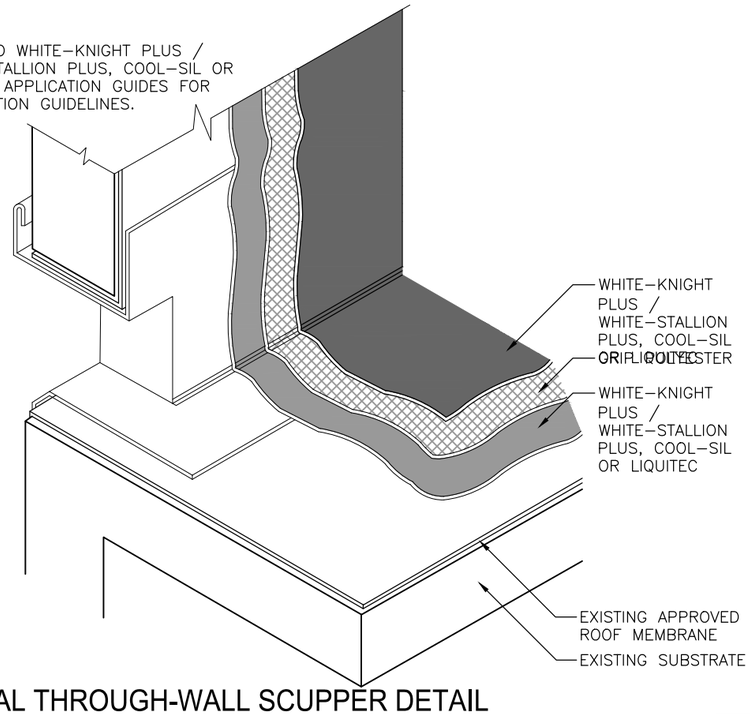

J/5 TYPICAL THROUGH-WALL SCUPPER DETAIL

SCALE: 1½" = 1'-0"

THE GARLAND COMPANY INC.
3800 EAST 91st STREET - CLEVELAND, OHIO 44105-2197
PHONE (800) 321-9336 / FAX (216) 641-0633

Mt. Diablo Unified School District
AYERS ELEMENTARY
5120 MYRTLE DR, CONCORD, CA 94521
AGENT: DOUG CLARK

DWG BY: GCK | CHK BY: DC | DATE: 1-13-25

REVISION:

SHEET: 5
OF 5