ARCHITECTURE

TMP ARCHITECTURE INC
1191 WEST SQUARE LAKE ROAD · BLOOMFIELD HILLS · MICHIGAN · 48302
PH · 248.338.4561 FX · 248.338.0223 EM · INFO @TMP-ARCHITECTURE.COM

TROY HIGH SCHOOL ATHLETIC FIELDS

TROY SCHOOL DISTRICT - TROY, MICHIGAN 48098

2022 BOND PROGRAM - BID PACKAGE NO. 02B

PROJECT NUMBER 22104E

CONSTRUCTION DOCUMENTS

CONSULTANTS:

CIVIL ENGINEER

SPALDING DeDECKER ASSOCIATES, INC.
CIVIL ENGINEERS
905 SOUTH BOULEVARD EAST
ROCHESTER HILLS, MICHIGAN 48307
PHONE: (248) 844-5400
FAX: (248) 844-5404

LANDSCAPE ARCHITECT

FORESITE DESIGN, INC.
LANDSCAPE ARCHITECTS
3269 COOLIDGE HIGHWAY
BERKLEY, MICHIGAN 48072
PHONE: (248) 547-7757
FAX: (248) 547-0218

STRUCTURAL ENGINEER

WILLIAM A. KIBBBE & ASSOCIATES, INC.
CONSULTING ENGINEERS
1475 S. WASHINGTON AVE.
SAGINAW, MI 48601
PHONE: (989) 752-5000
FAX: (989) 752-5002

MECHANICAL & ELECTRICAL ENGINEER

PETER BASSO ASSOCIATES INC.
ELECTRICAL ENGINEERS
5145 LIVERNOIS ROAD, SUITE 100
TROY, MICHIGAN 48098-3276
PHONE: (248) 879-5666
FAX: (248) 879-0007

LICENSEE'S STATEMENT:

This Document has been prepared under the supervision of the Architect, as the person in Responsible Charge with the firm of TMP ARCHITECTURE, INC. An original embossed or rubber stamp seal and original signature of the Architect is required and shall be affixed to any copy of this Document submitted to a governmental agency for approval or record. This is in conformance with the State of Michigan's PA 299, Article 20 and the General Rules of the Board of Architects.

The Architect's seal provided hereon does not take responsibility for certain portions of the Documentation or project requiring the services of a licensed Professional Engineer or other design professional. An original embossed or rubber stamp seal and original signature of the Professional Engineer is required and shall be affixed to any copy of this or other Document submitted to a governmental agency for approval or record. The engineering firms associated with this document are listed above as Consultants.

LIST OF DRAWINGS

GENERAL INFORMATION
TS.1 COVER SHEET
TG.1 GENERAL INFORMATION

CIVIL
C-1.0 TOPOGRAPHIC SURVEY - TENNIS COURTS
C-1.1 TOPOGRAPHIC SURVEY - STADIUM ENTRANCE
C-2.0 DEMOLITION PLAN - TENNIS COURTS
C-2.1 DEMOLITION PLAN - STADIUM ENTRANCE
C-3.0 DIMENSION AND PAVING PLANS - TENNIS COURTS
C-3.1 DIMENSION AND PAVING PLANS - STADIUM ENTRANCE
C-4.0 GRADING PLAN - TENNIS COURTS
C-4.1 GRADING PLAN - STADIUM ENTRANCE
C-5.0 SESC - TENNIS COURTS
C-5.1 SESC - STADIUM ENTRANCE
C-6.0 UTILITY PLAN - TENNIS COURTS
C-6.1 UTILITY PLAN - STADIUM ENTRANCE
C-7.0 STORM SEWER PROFILES
C-7.1 STORM SEWER PROFILES
C-7.2 WATER MAIN PROFILES
C-8.0 STORM WATER CALCULATIONS
C-9.0 NOTES AND DETAILS
C-9.1 DETAILS
STANDARD SANITARY SEWER DETAILS (1of2)
STANDARD SANITARY SEWER DETAILS (2of2)
STANDARD EROSION CONTROL DETAILS
STANDARD STORM SEWER DETAILS
STANDARD WATER MAIN DETAILS

ATHLETIC FIELDS
L2.01 ATHLETICS SITE PLAN
L2.02 ATHLETICS DIMENSION & FENCE PLAN
L2.03 ATHLETICS GRADING & DRAINAGE PLAN
LD2.01 POST-TENSION CONCRETE TENNIS COURT DETAILS
LD2.02 SITE DETAILS

STRUCTURAL
S0.0 STRUCTURAL GENERAL NOTES
S1.0 STRUCTURAL PLANS
S4.1 CONCRETE DETAILS
S5.1 MASONRY DETAILS
S6.1 STEEL DETAILS

ARCHITECTURAL
A0.1 DOOR & FRAME SCHEDULE
A0.2 DOOR & FRAME DETAILS
A0.1 THIS EXISTING TOILET BUILDING DEMOLITION FLOOR PLAN
A1.1 THIS CONCESSIONS BUILDING FLOOR PLAN AND EXISTING TOILET BUILDING FLOOR PLAN
A2.1 THIS CONCESSIONS BUILDING REFLECTED CEILING PLAN & ROOF PLAN AND EXISTING TOILET BUILDING REFLECTED CEILING PLAN
A3.1 THIS CONCESSIONS BUILDING ELEVATIONS
A4.1 THIS STADIUM ENTRANCE DETAILS

FOOD SERVICE EQUIPMENT
FSE.1 FOOD SERVICE EQUIPMENT LAYOUT AND SCHEDULE
FSE.2 FOOD SERVICE EQUIPMENT ELECTRICAL ROUGH-IN PLAN
FSE.3 FOOD SERVICE EQUIPMENT PLUMBING ROUGH-IN PLAN
FSE.4 FOOD SERVICE EQUIPMENT ELEVATION DETAILS

MECHANICAL
M0.1 MECHANICAL STANDARDS AND DRAWING INDEX
M02.1 MECHANICAL DEMOLITION PLAN
M2.0 UNDERGROUND PLUMBING NEW WORK PLANS
M2.1 PLUMBING NEW WORK PLANS
M4.1 MECHANICAL NEW WORK PLANS
M6.1 MECHANICAL DETAILS
M6.2 MECHANICAL DETAILS
M7.1 MECHANICAL SCHEDULES
M7.2 MECHANICAL SCHEDULES
M8.1 TEMPERATURE CONTROL STANDARDS AND GENERAL NOTES

ELECTRICAL
E0.1 ELECTRICAL STANDARDS AND DRAWING INDEX
E0.2 ELECTRICAL STANDARD SCHEDULES
ED1.0 ELECTRICAL SITE DEMOLITION PLAN
E1.0 ELECTRICAL SITE NEW WORK PLAN
ED1.1 ELECTRICAL DEMOLITION PLAN
E2.1 LIGHTING NEW WORK PLANS
E3.1 POWER NEW WORK PLANS
E5.1 ONE LINE DIAGRAM
E5.2 PANEL SCHEDULES
E7.1 ELECTRICAL DETAILS AND DIAGRAMS

REGISTRATION SEALS

PROJECT DATA:

LOCATION MAP

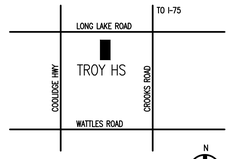

TROY, MI. NO SCALE

ADDRESS: TROY HIGH SCHOOL
4777 NORTHFIELD PARKWAY
TROY, MICHIGAN 48098

BUILDING:

BUILDING AREA(S) = 1,848 SQ. FT. (NEW)
1,425 SQ. FT. (EXISTING)

CODE:

GOVERNING CODES :

- 2016 SCHOOL FIRE SAFETY RULES (2012 Life Safety Code, plus amendments)
- 2015 MICHIGAN BUILDING CODE
- 2015 MICHIGAN REHABILITATION CODE FOR EXISTING BUILDINGS
- 2018 MICHIGAN PLUMBING CODE
- 2015 MICHIGAN MECHANICAL CODE
- 2015 MICHIGAN UNIFORM ENERGY CODE (ANSI/ASHRAE/IES Standard 90.1-2013)
- 2017 MICHIGAN ELECTRICAL CODE (2017 NEC, plus Part 8 Rules)
- 2010 MICHIGAN ELEVATOR RULES (ASME A17.1-2010, ASME A18.1-2011)
- MICHIGAN BARRIER FREE CODE (Michigan Building Code 2015 and ICC A117.1-2009)
- 2013 MICHIGAN BOILER CODE RULES (ASME Boiler and Pressure Vessel Code, 2019 edition) (National Board Inspection Code [NBIC], 2019 edition)

CONSTRUCTION CLASSIFICATION : V-B (MBC) | V(000) (LSC)

USE GROUP CLASSIFICATION : S-1 MODERATE-HAZARD STORAGE

DATE	ISSUED FOR:
12-10-2024	CONSTRUCTION DOCUMENTS

COPYRIGHT

© The "architectural work" displayed on these documents is owned exclusively by TMP Architecture, Inc. and may not be used for any purpose without their involvement or express written consent.

PROJECT TITLE

Troy High School Athletic Fields

PROJECT NO.

22104E

DRAWING NO.

TS.1

Drawing Title: Q:\Arch\2022\mep\22104s\22104s_ca\Phase 2B\22104E_2B_ct1.dwg
Date: 2024 - 12:02pm

ABBREVIATIONS

A

ABV.	ABOVE
A.F.F.	ABOVE FINISH FLOOR
A.R.F.	ABOVE REFERENCE FLOOR
ABR.	ABRASIVE
ABS.	ABSORBING
ACC.	ACCESS
ACC. PNL	ACCESS PANEL
AC.	ACOUSTIC/ACOUSTICAL
ACT	ACOUSTIC TILE
AC. INSUL.	ACOUSTIC INSULATION
ADD.	ADDENDUM
ADDN.	ADDITION
ADDNL.	ADDITIONAL
ADH.	ADHESIVE
ADJ.	ADJUSTIBLE
AGGR.	AGGREGATE
A.C.B.	AIR CIRCUIT BREAKER
A/C	AIR CONDITIONING
A.C.C.	AIR CONDITIONING COMPRESSOR
A.C.U.	AIR CONDITIONING UNIT
A.H.U.	AIR HANDLING UNIT
ALT.	ALTERNATE
ALUM./AL	ALUMINUM
AMT	AMOUNT
AMP	AMPHERE
AMPL.	AMPLIFIER
ANCH.	ANCHOR
A.B.	ANCHOR BOLT
&	AND
ANG./ L or ∠	ANGLE
ANOD.	ANODIZED
APT.	APARTMENT
APPR.	APPROVED
APPROX.	APPROXIMATE
ARCH.	ARCHITECT/ARCHITECTURAL
--	ARCHITECTURAL DRAWING-NO.
A.T.	ASH TRAY
ATM	AUTOMATIC TELLER MACHINE
ASPH.	ASPHALT
ASSY.	ASSEMBLY
@	AT
AUTO.	AUTOMATIC
A.S.R.	AUTOMATIC SPRINKLER RISER
AUX.	AUXILIARY
AVG.	AVERAGE

B

B/B	BACK-TO-BACK
B.F.P.	BACK FLOW PREVENTER
B.D.D.	BACK DRAFT DAMPER
B.F.	BARRIER FREE
B.B.R.	BASE BOARD RADIATION
B.PL.	BASE PLATE
BSMT	BASEMENT
B.	BATH ROOM
BM	BEAM
B/C	BACK OF CURB
BRG	BEARING
B.R.	BEDROOM
B.M.	BENCH MARK
BT	BENT
BETW.	BETWEEN
BEV.	BEVEL
BIT.	BITUMINOUS
BL.	BLACK-IRON
BLK	BLOCK
BLKG	BLOCKING
BD	BOARD
BLR	BOILER
BLR. F.	BOILER FEED
BLR. H.	BOILER HOUSE
BK. SH.	BOOK SHELVES
B.S.	BOTH SIDES
B.W.	BOTH WAYS
BOT.	BOTTOM
BOT. EL.	BOTTOM ELEVATION
BLVD	BOULEVARD
BDRY	BOUNDARY
BRKT	BRACKET
BR.	BRASS
BRKR	BREAKER
BRK	BRICK
BTU	BRITISH THERMAL UNIT
BRZ	BRONZE
BLDG.	BUILDING
B.L.	BUILDING LINE
B.U.R.	BUILT-UP ROOFING
B.N.	BULLNOSE
BLKD	BULKHEAD
BULL.	BULLETIN
B.A.	BURGLAR ALARM
BUZZ.	BUZZER

C

CAB.	CABINET
C.U.H.	CABINET UNIT HEATER
CAP.	CAPACITY
CPT	CARPET
C.R.S.	CARPET REDUCER STRIP
CSMT	CASEMENT
CSWRK	CASEWORK
CSG	CASING
C.I.	CAST IRON
C.I.F.	CAST IRON FRAME
C.I.P.	CAST IRON PIPE/CAST-IN-PLACE
CSTG	CASTING
CAT. NO.	CATALOG NUMBER
C.B.	CATCH BASIN
CLG.	CEILING
C.D.	CEILING DIFFUSER
CLG. HT.	CEILING HEIGHT
CEM.	CEMENT
CEM. PLAS.	CEMENT PLASTER
CTR	CENTER
℄	CENTERLINE
C/C	CENTER-TO-CENTER
CER.	CERAMIC
C.T.	CERAMIC TILE
C.BD.	CHALKBOARD
CHAM.	CHAMFER
CHG.	CHANGE
CHANN. or ⊏	CHANNEL
CHKD. PL.	CHECKERED PLATE
CHWR	CHILLED WATER RETURN
CHWS	CHILLED WATER SUPPLY
CHD	CHORD
CIRCUM.	CIRCUMFERENCE
CIR.	CIRCLE/CIRCULAR
CIRC.	CIRCUIT
C.BR	CIRCUIT BREAKER
C.	CIVIL DRAWING-NO.
CL.	CLASS
CLRM	CLASSROOM
C.O.	CLEAN OUT
CLR	CLEAR
CLR GL	CLEAR GLASS
CLR W.GL.	CLEAR WIRE GLASS
CL.	CLOSET
CLO.	CLOSURE
C.CL.	COAT CLOSET
COEF.	COEFFICIENT
CW	COLD WATER
COL.	COLUMN
CO.	COMPANY
COMPT.	COMPARTMENT
COMPO.	COMPOSITION
CA	COMPRESSED AIR
COMPR.	COMPRESSOR
CONC.	CONCRETE
C.M.U.	CONCRETE MASONRY UNIT
CWR	CONDENSING WATER RETURN
CWS	CONDENSING WATER SUPPLY
COND.	CONDUIT
CONF.	CONFERENCE
CONN.	CONNECT
CONST.	CONSTRUCTION
C.J.	CONTROL JOINT
CONT.	CONTINUE/CONTINUOUS
CONTR.	CONTRACTOR
C.P.	CONTROL PANEL
CONV.	CONVECTOR
CNVYR	CONVEYOR
COR.	CORNER
C.G.	CORNER GUARD
CORR.	CORRIDOR/CORRUGATED
CPR	COPPER
CNTR	COUNTER
CTSK	COUNTERSINK
CRS.	COURSE
COV.	COVER
COV. PL.	COVER PLATE
C.C.T.	CUBICAL CURTAIN TRACK
CU.FT.	CUBIC FEET/ CUBIC FOOT
CFM	CUBIC FEET PER MINUTE
CY	CUBIC YARD
CULV.	CULVERT
C.D.	CUP DISPENSER
CYL.	CYLINDER
CYC.	CYCLES

D

DMPR	DAMPER
DMPFG	DAMPPROOFING
D.L.	DEAD LOAD
DB	DECIBLE
D.	DEEP
DWG.	DRAWING
DMT. PARTN	DEMOUNTABLE PARTITION
DEPT.	DEPARTMENT
DEPR.	DEPRESSED
DES.	DESIGN
DET.	DETAIL
D.E. CO.	DETROIT EDISON COMPANY
DIAG.	DIAGONAL
DGM	DIAGRAM
DIA.	DIAMETER
DIFF.	DIFFUSER
DIM.	DIMENSION
D.R.	DINING ROOM
DIR.	DIRECTORY.
DISC.	DISCONNECT
DISCONT.	DISCONTINUOUS
DW	DISHWASHER
DISP.	DISPENSER
DIST.	DISTANCE
D.P.	DISTRIBUTION PANEL
DO	DITTO (DO OVER)
DIV.	DIVIDER/DIVISION
DR.	DOOR
D.O.	DOOR OPENING
DR. OP.	DOOR OPERATOR
DBL.	DOUBLE
D.A.	DOUBLE ACTING
D.H.	DOUBLE HUNG
DWL.	DOWEL
DN	DOWN
D.S.	DOWNSPOUT
DRN	DRAIN
D.T.	DRAIN TILE
D.T.C.	DRAIN TILE CONNECTOR
DWR	DRAWER
DWG	DRAWING
D.F.	DRINKING FOUNTAIN
D.B.	DRY BULB
D.S.P.	DRY STAND PIPE
DBWTR	DUMBWAITER
DUP.	DUPLICATE
D.DR.	DUTCH DOOR

E

EA.	EACH
E.F.	EACH FACE
E.W.	EACH WAY
E	EAST
E.I.F.S.	EXTERIOR INSULATION FINISH SYSTEM
ELAST.	ELASTOMERIC
ELAST. FLASH.	ELASTOMERIC FLASHING
ELAST. W.P.	ELASTOMERIC WATERPROOFING
E.S.R.	ELASTOMERIC SHEET ROOFING
ELEC.	ELECTRIC/ELECTRICAL
ELEC. CL.	ELECTRICAL CLOSET
ELEC. CAB.	ELECTRICAL CABINET
E.C.	ELECTRICAL CONTRACTOR
E-	ELECTRICAL DRAWING-NO.
E.P.	ELECTRICAL PANEL
EWC	ELECTRIC WATER COOLER
ELEC. OPER.	ELECTRICALLY OPERATED
EL.	ELEVATION
ELEV.	ELEVATOR
EMERG.	EMERGENCY
ENCL.	ENCLOSURE
ENGR	ENGINEER
E/E	END-TO-END
ENTR.	ENTRANCE/ENTRY
EP.	EPOXY
EPDM	ETHYLENE PROPYLENE DIENE MONOMER
EQ.	EQUAL
EQUIP.	EQUIPMENT
EQUIV.	EQUIVALENT
ESC.	ESCALATOR
EST.	ESTIMATE
EXC.	EXCAVATED
EXH.	EXHAUST
E.D.	EXHAUST DUCT
E.F.	EXHAUST FAN
E.G.	EXHAUST GRILLE
E.R.	EXHAUST REGISTER
EXIST.	EXISTING
EXP	EXPANSION
EXP.B.	EXPANSION BOLT
E.J.	EXPANSION JOINT
EXPL.P.	EXPLOSION PROOF
EXP'D	EXPOSED
EXT'N	EXTENSION
EXT.	EXTERIOR
E.I.F.S.	EXTERIOR INSULATION FINISH SYSTEM
E.H.	EXTRA HEAVY
EXTR.	EXTRUDED
E.S.P.	EXTERNAL STATIC PRESSURE

F

FAB.	FABRICATED/FABRIC
F/F	FACE-TO-FACE
F. FIN.	FACTORY FINISH
F.C.U.	FAN COIL UNIT
F.S.	FAR SIDE
FAS.	FASTENER
FDR	FEEDER
FT or '	FEET/FOOT
FPM	FEET PER MINUTE
FN	FENCE
F.BD.	FIBER BOARD
FIG.	FIGURE
FIN.	FINISH/FINISHED
FIN. FLR/F.F.	FINISH FLOOR
F.T.R.	FINNED TUBE RADIATION
F.A.	FIRE ALARM
F.A.C.P.	FIRE ALARM CONTROL PANEL
F. BRK	FIRE BRICK
F.D.	FIRE DAMPER
F.E.	FIRE EXTINGUISHER
F.E.C.	FIRE EXTINGUISHER CABINET
F.H.C.	FIRE HOSE CABINET
F.H.	FIRE HYDRANT
F.L.	FIRE LINE
F.R.	FIRE RETARDANT/FIRE RATED
F.R.T.W.D	FIRE RETARDANT TREATED WOOD
F.V.C.	FIRE VALVE CABINET
FP	FIREPLACE
FPRFG.	FIREPROOFING
FIXT.	FIXTURE
FLASH.	FLASHING
FHMS	FLAT HEAD MACHINE SCREW
FHWS	FLAT HEAD WOOD SCREW
F.C.	FLEXIBLE CONNECTION
FLR	FLOOR
F.C.O.	FLOOR CLEAN OUT
F.D.	FLOOR DRAIN
FLR. FIN.	FLOOR FINISH
FLUOR.	FLUORESCENT
FLDG	FOLDING
FTG	FOOTING
FM. BD	FORMBOARD
FDN	FOUNDATION
FR.	FRAME
FR/COV.	FRAME AND COVER
FRMG	FRAMING
FRZR	FREEZER
F.S.	FULL SIZE
FURN.	FURNISH/FURNISHED
FURR.	FURRING/FURRED
FUT.	FUTURE

G

GA.	GAUGE
GAL.	GALLON
GPH	GALLONS PER HOUR
GPM	GALLONS PER MINUTE
GALV.	GALVANIZED
GALV. I.	GALVANIZED IRON
G	GAS
GSKT	GASKET
G.V.& B.	GATE VALVE AND BOX
GEN'L.	GENERAL
GL.	GLASS
GLZ	GLAZING
G.H.T.	GLAZED HOLLOW TILE
G.B.	GRAB BAR
GR.	GRADE/GRILLE
GB	GRADE BEAM
GRAT.	GRATING
G.L.	GRID LINE
GRN	GRANITE
G.S.	GREASE SEPARATOR
G.T.	GREASE TRAP
GND	GROUND
G.F.I.	GROUND FAULT INTERRUPTOR
GT	GROUT
G.	GUTTER ELEVATION
GYP.	GYPSUM
GYP.BD.	GYPSUM BOARD

H

HNDCP	HANDICAPPED
H.R.	HANDRAIL
H.BD	HARDBOARD
HDWE	HARDWARE
HDWD	HARDWOOD
HD	HEAD
HDR	HEADER
H.A. GL.	HEAT ABSORBING GLASS
H.R.U.	HEAT RECOVERY UNIT
HTR	HEATER
HTG	HEATING
H/V	HEATING AND VENTILATING
H.V.A.C.	HEATING, VENTILATING AND AIR CONDITIONING
HWHR	HEATING HOT WATER SUPPLY
HWHS	HEATING HOT WATER RETURN
HGT	HEIGHT
HEX.	HEXAGON
H.	HIGH
H.I.D.	HIGH INTENSITY DISCHARGE
H.P.	HIGH POINT
H.PR.	HIGH PRESSURE
H.S.	HIGH STRENGTH
H.S.B.	HIGH STRENGTH BOLT
H.V.	HIGH VOLTAGE
HWY	HIGHWAY
HSTWY	HOISTWAY
H.C.	HOLLOW CORE
H.M.	HOLLOW METAL
HNYCB	HONEYCOMB
HK	HOOK
HORIZ.	HORIZONTAL
HP	HORSEPOWER
H.B.	HOSE BIBB
H.S.P.	HOSE STAND PIPE
H.V.C.	HOSE VALVE CABINET
HOSP.	HOSPITAL
H.W.	HOT WATER
HWR	HOT WATER RETURN
HWS	HOT WATER SUPPLY
HR.	HOUR
H.O.	HUB OUTLET
HYD.	HYDRANT/HYDRAULIC
H	HYDROGEN

I

I.D.	IDENTIFICATION
INCAND.	INCANDESCENT
IN. or "	INCH/INCHES
INCIN.	INCINERATOR
INCL.	INCLUDE/INCLUDING
I.W.	INDIRECT WASTE
INFO.	INFORMATION
I.D.	INSIDE DIAMETER
I.F.	INSIDE FACE
INSTL.	INSTALL/INSTALLATION
INSUL.	INSULATE/INSULATION
INT.	INTERIOR
INTER.	INTERMEDIATE
INV.	INVERT
I.E.	INVERT ELEVATION

J

J.C.	JANITOR CLOSET
JT	JOINT
JST	JOIST
J.B.	JUNCTION BOX
JR	JUNIOR

K

K.P.	KICK PLATE
KV	KILOVOLT
KVA	KILOVOLT AMPHERE
KW	KILOWATT
K	KIP (1000#)
KIT.	KITCHEN
K.S.	KNEE SPACE
K.D.	KNOCK DOWN
K.O.P.	KNOCK-OUT PANEL

L

LBL.	LABEL
LAB.	LABORATORY
LAD.	LADDER
LAG.	LAG BOLT
LAM.	LAMINATE/LAMINATED
LDG	LANDING
L-	LANDSCAPE DRAWING-NO.
LGE	LARGE
LDRY	LAUNDRY
LAV.	LAVATORY
L.H.	LEFT HAND
L.H.R.B.	LEFT HAND REVERSE BEVEL
LGTH	LENGTH
LEV.	LEVEL
LIB.	LIBRARY
LT.	LIGHT
LPRF	LIGHTPROOF
LTG	LIGHTING
L.P.	LIGHTING PANEL
L.R.P.	LIGHTING RECEPTACLE PANEL
LTWT	LIGHTWEIGHT
LTWT. CONC.	LIGHTWEIGHT CONCRETE
LMS	LIMESTONE
LTL	LINTEL
LIN. DIFF.	LINEAR DIFFUSER
L.F.	LINEAR FEET/FOOT
LIQ	LIQUID
LPG	LIQUID PROPANE GAS
L.P.G.	LIQUID PETROLEUM GAS
L.L.	LIVE LOAD
L.R.	LIVING ROOM
LOC.	LOCATION
LKR	LOCKER
LG	LONG
L.L.H.	LONG LEG HORIZONTAL
L.L.V.	LONG LEG VERTICAL
LVR	LOUVER
L.O.	LOUVER OPENING
L.P.	LOW POINT
L.PR.	LOW PRESSURE
LBR.	LUMBER
LBS. or #	POUNDS

M

MACH.	MACHINE
M.B.	MACHINE BOLT
MACH. RM	MACHINE ROOM
M.A.U.	MAKE-UP AIR UNIT
M.D.P.	MAIN DISTRIBUTION PANEL
M.S.B.	MAIN SWITCH BOARD
MAINT.	MAINTENANCE
MH.	MANHOLE
MFR	MANUFACTURER
MAR.	MARBLE
MK	MARK
MAS.	MASONRY
M.O.	MASONRY OPENING
MATL	MATERIAL
MAX.	MAXIMUM
MECH.	MECHANICAL
M-	MECHANICAL DRAWING-NO.
M.C.	MEDICINE CABINET
MED.	MEDIUM
MEMB.	MEMBRANE
MET.	METAL
M.D.S.	METAL DIVIDER STRIP
M.E.S.	METAL EDGE STRIP
M.L.	METAL LATH
M.L.& PLAS.	METAL LATH AND PLASTER
M.T.	METAL THRESHOLD
MET. W.P.	METALLIC WATERPROOFING
MEZZ.	MEZZANINE
MDOT	MICHIGAN DEPARTMENT OF TRANSPORTATION
MWK	MILLWORK
MIN.	MINIMUM
MIR.	MIRROR
M.&S.	MIRROR AND SHELF
MISC.	MISCELLANEOUS
M.I.	MISCELLANEOUS IRON
MOD.	MODEL
MON.	MONUMENT
M.S.& S.	MOP STRIP AND SHELF
M.O.D.	MOTOR OPERATED DAMPER
MLDG	MOULDING
MTD	MOUNTED
MTG	MEETING/MOUNTING
MOV.	MOVEABLE
MOV. PARTN.	MOVEABLE PARTITION
MULL	MULLION
M	THOUSAND (1000)

N

NAT.	NATURAL
N.S.	NEAR SIDE
NEUT.	NEUTRAL
NRC	NOISE REDUCTION COEFFICIENT
NOM.	NOMINAL
NOR.	NORMAL
N	NORTH
NOS.	NOSING
N.I.C.	NOT-IN-CONTRACT
N.T.S.	NOT-TO-SCALE
NO. or #	NUMBER

O

OBS.	OBSCURE
OBS.GL.	OBSCURE GLASS
OFF.	OFFICE
O.C.	ON CENTER
OPQ.	OPAQUE
OPG.	OPENING
OPER.	OPERATOR
OPP.	OPPOSITE
OPP.HD.	OPPOSITE HAND
ORIG.	ORIGINAL
ORN.	ORNAMENTAL
OZ.	OUNCE
O/O	OUT-TO-OUT
O.A.	OUTSIDE AIR
O.D.	OUTSIDE DIAMETER
O.F.	OUTSIDE FACE
O.H.S.	OVAL HEAD SCREW
O.A.	OVERALL
OHD	OVERHEAD
OHD.DR	OVERHEAD DOOR
OXY.	OXYGEN

P

PTD	PAINTED
PR	PAIR
PG.	PAGE
PNL.	PANEL
P.T.D.	PAPER TOWEL DISPENSER
P.T.W.R.	PAPER TOWEL WASTE RECEPTACLE
PRL	PARALLEL
PKG	PARKING
P.BD	PARTICLE BOARD
PRTN	PARTITION
PASS.	PASSAGE
PAT.	PATENT
PVMT	PAVEMENT
PVG	PAVING
PED.	PEDESTAL
PERF.	PERFORATED
PERM.	PERIMETER
PERM.	PERMANENT
PERP.	PERPENDICULAR
P. or ℘	PHASE
PHOTO.	PHOTOGRAPH
P.H.	PHYSICALLY HANDICAPPED
PC.	PIECE
PCS.	PIECES
PLAS.	PLASTER
PL. LAM.	PLASTIC LAMINATE
PL.	PLATE
PL. GL.	PLATE GLASS
PLAT.	PLATFORM
PLBG	PLUMBING
PLWD	PLYWOOD
PT	POINT
P.T.	POINT OF TANGENCY
P.C.	POINT OF CURVATURE
POL.	POLISH/POLISHED
PVC	POLYVINYLCLORIDE
PORC.	PORCELAIN
PORC. ENAM.	PORCELAIN ENAMEL
POR.	POROUS
PORT.	PORTABLE
POS.	POSITION
P.I.V.	POST INDICATOR VALVE
PLF	POUNDS PER LINEAR FOOT
PSF	POUNDS PER SQUARE FOOT
PSI	POUNDS PER SQUARE INCH
PCF	POUNDS PER CUBIC FOOT
P.P	POWER PANEL
P/C	PRECAST
P.T.R.	PRECAST TERRAZZO RECEPTOR
PREFAB.	PREFABRICATED
PFN.	PREFINISHED
P.T.WD	PRESERVATIVE TREATED WOOD
P.G.	PRESSURE GAUGE
P.R.V.	PRESSURE REDUCING VALVE
PRIM.	PRIMARY
PROJ.	PROJECT/PROJECTION
PROP.	PROPERTY/PROPOSED
P.L.	PROPERTY LINE
P.A.	PUBLIC ADDRESS
P.S.	PURSE SHELF
P.B.	PUSH BUTTON

Q

QTY	QUANTITY
Q.T.	QUARRY TILE
QTR	QUARTER
QTR. RD	QUARTER ROUND

R

RBT	RABBET
RAD. or R.	RADIUS
R.W.C.	RAIN WATER CONDUCTOR
R.R.	RAILROAD
RECV.	RECEIVE/RECEIVING
RECPT.	RECEPTACLE
R.P.	RECEPTACLE PANEL
REC.	RECESS
RECT.	RECTANGLE/RECTANGULAR
RED.	REDUCER
RWD	REDWOOD
REF.	REFER/REFERENCE
REFL.	REFLECTED/REFLECTIVE
REFR.	REFRIGERATOR
REG.	REGISTER
REINF.	REINFORCE/REINFORCING/ REINFORCEMENT
REM.	REMOVE/REMOVABLE
REP.	REPAIR
REQ'D.	REQUIRED
RESIL.	RESILIENT
RET.	RETURN
R.A.	RETURN AIR
R.A.D.	RETURN AIR DIFFUSER
R.A.F.	RETURN AIR FAN
REV.	REVISED/REVISION
RPM	REVOLUTIONS PER MINUTE
R.	RISER
R.H.	RIGHT HAND
R.H.R.B.	RIGHT HAND REVERSE BEVEL
R.O.W.	RIGHT OF WAY
RVT	RIVET
RD	ROAD
R.S.C.	ROLLING STEEL CURTAIN
RF	ROOF
R.C.	ROOF CONDUCTOR
R.D.	ROOF DRAIN
RF.H.	ROOF HATCH
R.S.	ROOF SUMP
R.V.	ROOF VENTILATOR
RFG	ROOFING
R.T.U.	ROOF TOP UNIT
RM	ROOM
R.O.	ROUGH OPENING
RND or ◠	ROUND
RHMS	ROUND HEAD MACHINE SCREW
RHWS	ROUND HEAD WOOD SCREW
R.T.	RUBBER TILE

S

SAN.	SANITARY
S.N.D.	SANITARY NAPKIN DISPENSER
S.N.R.	SANITARY NAPKIN RECEPTACLE
SCHED.	SCHEDULE
SCN	SCREEN
STG	SEATING
SECT.	SECTION
SERV.	SERVICE
S.S.	SERVICE SINK
SHTHG	SHEATHING
SHT	SHEET
SHT. MET.	SHEET METAL
SH.&R.	SHELF AND ROD
SHWR	SHOWER
S.C.R.	SHOWER CURTAIN ROD
S.DR	SHOWER DOOR
S.W.	SIDEWALK
SIM.	SIMILAR
SGL.	SINGLE
SK	SINK
S.D.	SOAP DISPENSER
S.C.	SOLID CORE
STC	SOUND TRANSMISSION CLASS
S	SOUTH
SP.	SPACE
SPR.	SPARE
SPKR	SPEAKER
SPEC.	SPECIFICATIONS
S.D.	SPLITTER DAMPER
SPRYD	SPRAYED
SPKLR	SPRINKLER
SQ.	SQUARE
S.F.	SQUARE FEET/SQUARE FOOT
STAG.	STAGGERED
ST.STL	STAINLESS STEEL
STD	STANDARD
SP.	STANDPIPE
S.P.	STATIC PRESSURE
STA.	STATION
STM	STEAM
STL.	STEEL
STL. PL.	STEEL PLATE
STIFF.	STIFFENER
STO. FR.	STOREFRONT
STOR.	STORAGE
STR.	STRAIGHT
ST.	STREET
STRUCT.	STRUCTURAL
S-	STRUCTURAL DRAWING-NO.
S.G.F.T.	STRUCTURAL GLAZED FACING TILE
S.STL	STRUCTURAL STEEL
SS.D.	SUBSOIL DRAIN
SS.D.C.	SUBSOIL DRAIN CONNECTION
SUB.	SUBSTATION
S.A.G.	SUPPLY AIR GRILLE
S.D.	SUPPLY DIFFUSER/ DUCT
SUBST.	SUSTITUTE
S.A.R.	SUPPLY AIR REGISTER
S.F.	SUPPLY FAN

S

SW.	SWITCH
SWBD	SWITCHBOARD
SWGR	SWITCHGEAR
SYM	SYMBOL/ SYMMETRICAL
SYS.	SYSTEM
SUPP.	SUPPORT
SURF.	SURFACE/ SURFACING
SUSP.	SUSPEND/ SUSPENSION

T

T.BD	TACKBOARD
TAN.	TANGENT
TECHN.	TECHNICAL
TEL.	TELEPHONE
TEL. CAB.	TELEPHONE CABINET
TV	TELEVISION
TV.M	TELEVISION MONITOR
TEMP.	TEMPERATURE
TEMP. GL.	TEMPERED GLASS
T.U.	TERMINAL UNIT
TERR.	TERRAZZO
T.B.	TEST BORING
T.	THERMOSTAT
THK	THICK/ THICKNESS
T.S.	THICKENED SLAB
THD	THREAD
THRESH.	THRESHOLD
THRU	THROUGH
T.	TILE
T./ TOIL.	TOILET
T.P.D.	TOILET PAPER DISPENSER
T.P.H.	TOILET PAPER HOLDER
T&G	TONGUE AND GROOVE
T & B	TOP AND BOTTOM
T/C	TOP OF CURB
T/EL.	TOP ELEVATION
T/F	TOP OF FOOTING
T/G	TOP OF GUTTER
T/M	TOP OF MASONRY
T/P	TOP OF PARAPET
T/P	TOP OF PAVEMENT
T/R	TOP OF RIM
T/S	TOP OF STEEL
T/W	TOP OF WALL
T.B.	TOWEL BAR
T.D.	TOWEL DISPENSER
TD & WR	TOWEL DISPENSER AND WASTE RECEPTACLE
T.G.	TRANSFER GRILLE
TRFR	TRANSFORMER
TRAN.	TRANSOM
T	TREAD
T.D.	TRENCH DRAIN
TS	TUBE SECTION
T.V.	TURNING VANE
T.T.	TWIN TEE
TYP.	TYPICAL

U

U.C.	UNDERCUT
U.G.	UNDER GROUND
UL	UNDERWRITER'S LABORATORY
ULT.	ULTIMATE
UNFIN.	UNFINISHED
U.H.	UNIT HEATER
U.SUB.	UNIT SUBSTATION
U.V.	UNIT VENTILATOR
USGS	UNITED STATES GEOLOGICAL SURVEY
U.O.N.	UNLESS OTHERWISE NOTED
UR.	URINAL

V

VAC.	VACUUM
V.B.	VACUUM BREAKER
V.C.O.	VACUUM CLEANER OUTLET
V. BARR.	VAPOR BARRIER
VAR.	VARIABLE
VARN.	VARNISH
VNR	VENEER
V. PLAS.	VENEER PLASTER
V.	VENT
VTR	VENT THRU ROOF
VENT.	VENTILATE/ VENTILATION
V.I.F.	VERIFY IN FIELD
VS.	VERSUS
VERT.	VERTICAL/ VERTICALLY
VERT. C.	VERTICAL CURVE
VEST.	VESTIBULE
V.I.	VIBRATION ISOLATOR
VNYL	VINYL
VCT	VINYL COMPOSITION TILE
VIN. FAB.	VINYL FABRIC
V.R.S.	VINYL REDUCER STRIP
VIT.	VITREOUS
VCP	VITRIFIED CLAY PIPE
VOL.	VOLUME
V.D.	VOLUME DAMPER
V	VOLTS

W

WAINS.	WAINSCOT
W.CAB.	WALL CABINET
W.C.O.	WALL CLEAN OUT
W.H.	WALL HYDRANT
W/W	WALL-TO-WALL
W.V.	WALL VENT
WHSE	WAREHOUSE
W.F.	WASH FOUNTAIN
W.	WASTE/ WATTS
W &v	WASTE AND VENT
W.R.	WASTE RECEPTACLE
W.C.	WATER CLOSET
W.G.	WATER GAUGE
W.H.	WATER HEATER
WP.	WATERPROOFING
W.PRFG.	WEATHERPROOFING
W.STPG.	WEATHERSTRIPPING
WT.	WEIGHT
W.W.F.	WELDED WIRE FABRIC
W	WEST
W.B.	WET BULB
W.	WIDE/ WIDTH
W_x_	WIDE FLANGE SECTION
WT	WIDE FLANGE TEE SECTION
W.O.	WINDOW OPENING
W.GL.	WIRE GLASS
W.M.	WIRE MESH
w/	WITH
w/o	WITHOUT
WD	WOOD
W.L.	WORK LINE
W.P.	WORK POINT
W.I.	WROUGHT IRON

X

Y

YD	YARD
Y.P.	YIELD POINT
Y.S.	YIELD STRENGTH
YR	YEAR

Z

ZC	ZINC

TYPICAL MOUNTING HEIGHTS

MISCELLANEOUS ACCESSORIES, TOILET ACCESSORIES AND FIXTURES

NOTE: MOUNTING HEIGHTS SHOWN ARE PROPOSED FOR ALL ACCESSORIES AND FIXTURES REQUIRED UNLESS OTHERWISE NOTED OR DIMENSIONED ON DRAWINGS FOR SPECIFIC CONDITIONS (B.F. - DENOTES ACCESSIBLE BARRIER FREE REQUIREMENTS)

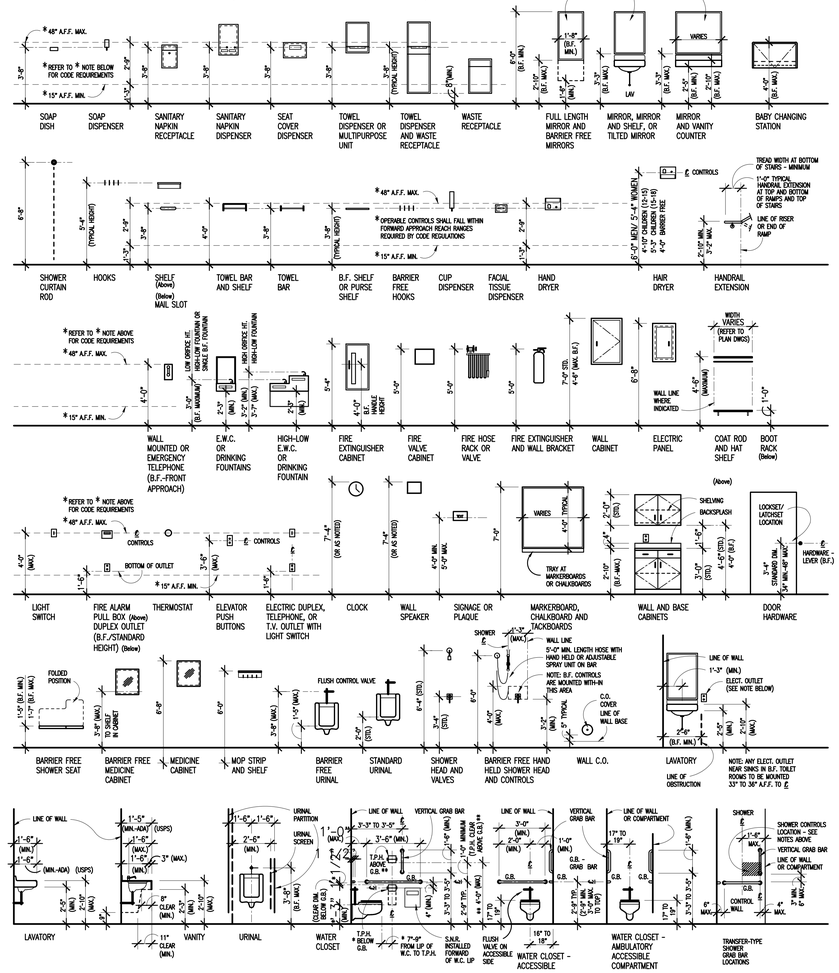
* 48" A.F.F. MAX.
* REFER TO * NOTE BELOW FOR CODE REQUIREMENTS
* 15" A.F.F. MIN.
MIRROR SIZE AS SPECIFIED OR NOTED.
VARIES
SOAP DISH
SOAP DISPENSER
SANITARY NAPKIN RECEPTACLE
SANITARY NAPKIN DISPENSER
SEAT COVER DISPENSER
TOWEL DISPENSER OR MULTIPURPOSE UNIT
TOWEL DISPENSER AND WASTE RECEPTACLE
WASTE RECEPTACLE
FULL LENGTH MIRROR AND BARRIER FREE MIRRORS
MIRROR, MIRROR AND SHELF, OR TILTED MIRROR
MIRROR AND VANITY COUNTER
BABY CHANGING STATION
SHOWER CURTAIN ROD
HOOKS
SHELF (Above) (Below) MAIL SLOT
TOWEL BAR AND SHELF
TOWEL BAR
B.F. SHELF OR PURSE SHELF
BARRIER FREE HOOKS
CUP DISPENSER
FACIAL TISSUE DISPENSER
HAND DRYER
HAIR DRYER
HANDRAIL EXTENSION
* 48" A.F.F. MAX.
* OPERABLE CONTROLS SHALL FALL WITHIN FORWARD APPROACH REACH RANGES REQUIRED BY CODE REGULATIONS
* 15" A.F.F. MIN.
℄ CONTROLS
TREAD WIDTH AT BOTTOM OF STAIRS - MINIMUM
1'-0" TYPICAL HANDRAIL EXTENSION AT TOP AND BOTTOM OF RAMPS AND TOP OF STAIRS
LINE OF RISER OR END OF RAMP
* REFER TO * NOTE ABOVE FOR CODE REQUIREMENTS
* 48" A.F.F. MAX.
LOW ORIFICE HT. HIGH-LOW FOUNTAIN OR SINGLE B.F. FOUNTAIN
HIGH ORIFICE HT. HIGH-LOW FOUNTAIN
* 15" A.F.F. MIN.
WIDTH VARIES (REFER TO PLAN DIMS)
WALL LINE WHERE INDICATED
WALL MOUNTED OR EMERGENCY TELEPHONE (B.F.-FRONT APPROACH)
E.W.C. OR DRINKING FOUNTAINS
HIGH-LOW E.W.C. OR DRINKING FOUNTAIN
FIRE EXTINGUISHER CABINET
FIRE VALVE CABINET
FIRE HOSE RACK OR VALVE
FIRE EXTINGUISHER AND WALL BRACKET
WALL CABINET
ELECTRIC PANEL
COAT ROD AND HAT SHELF
BOOT RACK (Below)
* REFER TO * NOTE ABOVE FOR CODE REQUIREMENTS
* 48" A.F.F. MAX.
CONTROLS
BOTTOM OF OUTL

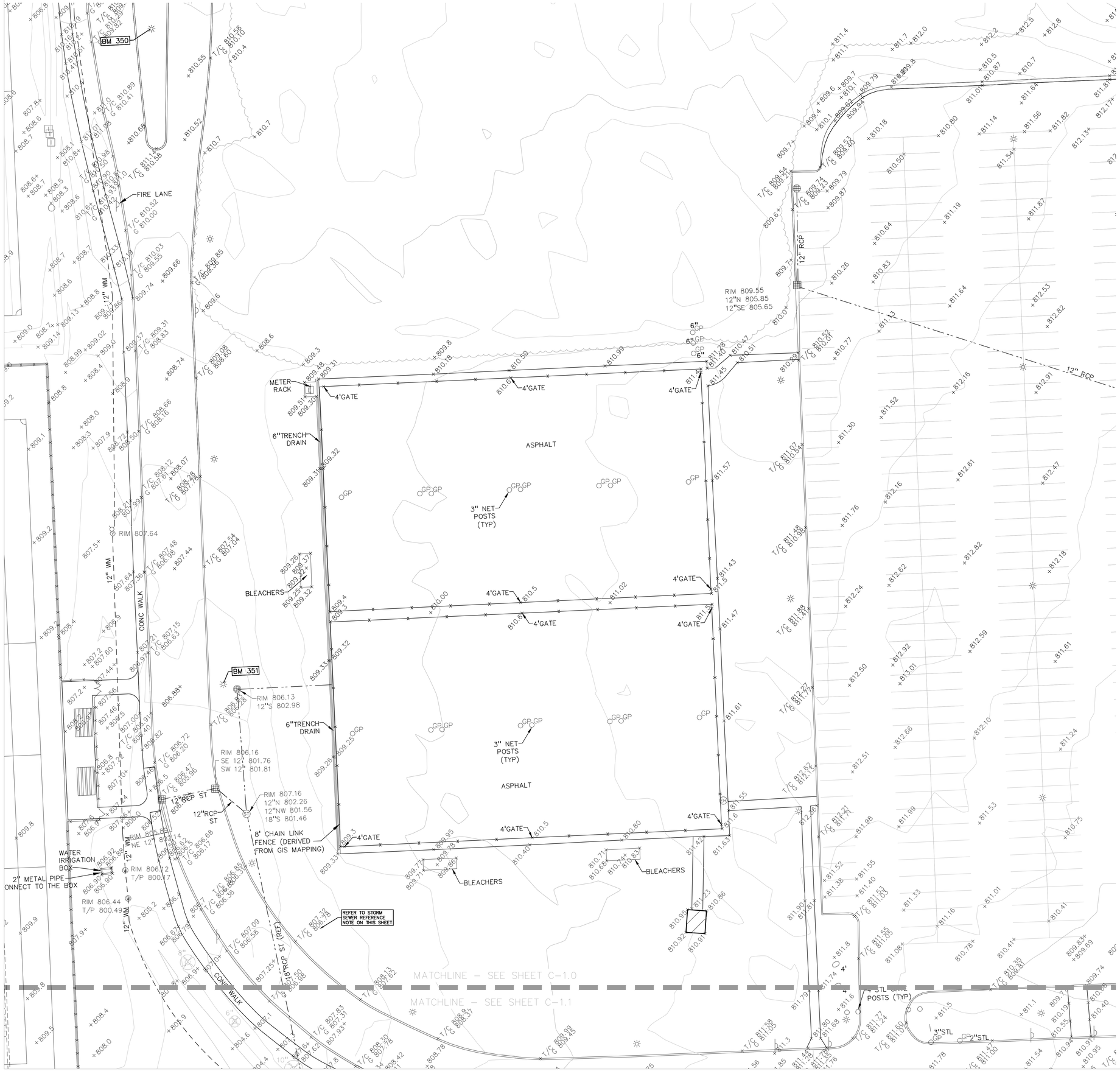

LEGEND:

- EX. OH. ELEC. POLE & GUY WIRE
- EX. U.G. CABLE TV & PEDESTAL
- EX. U.G. COMMUNICATION LINE, PEDESTAL & MANHOLE
- EX. U.G. ELEC.MANHOLE, METER & HANDHOLE
- EX. GAS LINE
- EX. GAS VALVE & GAS LINE MARKER
- EX. TRANSFORMER & IRRIGATION VALVE
- EX. WATER MAIN
- EX. HYDRANT, GATE VALVE & POST INDICATOR VALVE
- EX. WATER VALVE BOX & SHUTOFF
- EX. SANITARY SEWER
- EX. SANITARY CLEANOUT & MANHOLE
- EX. COMBINED SEWER MANHOLE
- EX. STORM SEWER
- EX. CLEANOUT & MANHOLE
- EX. SQUARE, ROUND & BEEHIVE CATCH BASIN
- EX. YARD DRAIN & ROOF DRAIN
- EX. UNIDENTIFIED STRUCTURE
- EX. MAILBOX, SIGN & LIGHTPOLE
- EX. FENCE
- EX. GUARD RAIL
- EX. DEC. TREE, CONIFEROUS TREE & SHRUB
- EX. TREE TAG, & TREE LINE
- EX. SPOT ELEVATION
- EX. CONTOUR
- EX. WETLAND

- IRON FOUND / SET
- NAIL FOUND / NAIL & CAP SET
- BRASS PLUG SET
- MONUMENT FOUND / SET
- SECTION CORNER FOUND

R M C — RECORDED / MEASURED / CALCULATED

REF. BENCHMARKS:
(PER PEA JOB NO. 2012-144)

BM #300
FOUND CHISELED + ON SOUTHEAST QUADRANT OF ROUND CONCRETE BASE FOR LIGHT POLE. SECOND LIGHT POLE SOUTH OF EAST WEST DRIVE, ±20 FEET WEST OF THE EAST EDGE OF SIDEWALK
ELEV. - 805.54

BM #301
FOUND CHISELED + ON NORTHEAST QUADRANT OF ROUND CONCRETE BASE FOR LIGHT POLE. FIFTH LIGHT POLE SOUTH OF EAST-WEST DRIVE, ±20 FEET WEST OF THE EAST EDGE OF SIDEWALK.
ELEV. - 806.21

BENCHMARKS:
(GPS DERIVED - NAVD88)

BM #350
FOUND MAG NAIL W/PEA WASHER LOCATED ON THE WEST SIDE OF THE 2ND LIGHT POLE BASE SOUTH OF LONG LAKE ROAD IN ENTRANCE BLVD.
(PEA JOB NO. 2022-0662 "BM 300")
ELEV. - 810.71

BM #351
FOUND MAG NAIL (NO TAG, WORN OFF) IN THE WEST SIDE OF A LIGHT POLE BASE LOCATED SOUTHWEST OF THE BLEACHERS ON THE WEST SIDE OF THE TENNIS COURTS.
(PEA JOB NO. 2022-0662 "BM 301")
ELEV. - 807.76

BENCHMARK NOTE:
THE BENCHMARKS ON SITE WERE TAKEN FROM SEVERAL DIFFERENT PROJECTS OVER THE COURSE OF MULTIPLE YEARS. IT IS NOT KNOW IF THESE WERE CITY OF TROY BENCHMARKS, IF TWO CITY APPROVED BENCHMARKS ARE NEEDED FOR DEVELOPMENT, THEN THE CITY CAN SEND NEARBY BENCHMARK DATA TO PEA GROUP SO THAT IT BE ADDED TO THE SURVEY.

FLOODPLAIN NOTE:
BY GRAPHICAL PLOTTING, SITE IS WITHIN ZONE "X", AREA DETERMINED TO BE OUTSIDE OF THE 0.2% ANNUAL CHANCE FLOODPLAIN PER FLOOD INSURANCE RATE MAP NUMBER 26125C0533F DATED 9, 29, 2006.

STORM SEWER REFERENCE NOTE:
SURVEY DATA AND CITY OF TROY RECORDS DIFFER ON PIPE SIZE, CONTRACTOR TO VERIFY PIPE SIZE IN THE FIELD.

TMP ARCHITECTURE

TMP ARCHITECTURE INC
1191 WEST SQUARE LAKE ROAD
BLOOMFIELD HILLS - MICHIGAN - 48302
PH - 248.338.4561 FX - 248.338.0223
EM - INFO@TMP-ARCHITECTURE.COM

REGISTRATION SEAL

STATE OF MICHIGAN
CHRISTOPHER THOMAS BELAND
PROFESSIONAL SURVEYOR NO. 4001049106
LICENSED PROFESSIONAL SURVEYOR

CONSULTANT

PEA GROUP
t: 844.813.2949
www.peagroup.com

PROJECT TITLE

Troy High School Athletic Fields Bid Package No. 02B

Troy School District
Troy, Michigan

DRAWING TITLE
TOPOGRAPHIC SURVEY - TENNIS COURTS

ISSUE DATES

01-25-2024	SESC PERMIT
12-10-2024	CONSTRUCTION DOCUMENTS

DATE:	ISSUED FOR:
DRAWN	JW
CHECKED	TD
APPROVED	TD

PROJECT NO.
22104E

DRAWING NO.
C-1.0

Drawing File: S:\PROJECTS\2021\21-0300 TROY SCHOOLS 2022 BOND\CAD\1_CONSTRUCTION\TROY ATHLETICS\TROY HIGH - PHASE 2\1C-1.0TOPO-25-031-THA PHASE 2.dwg
Date: Dec 06, 2024 - 4:45pm

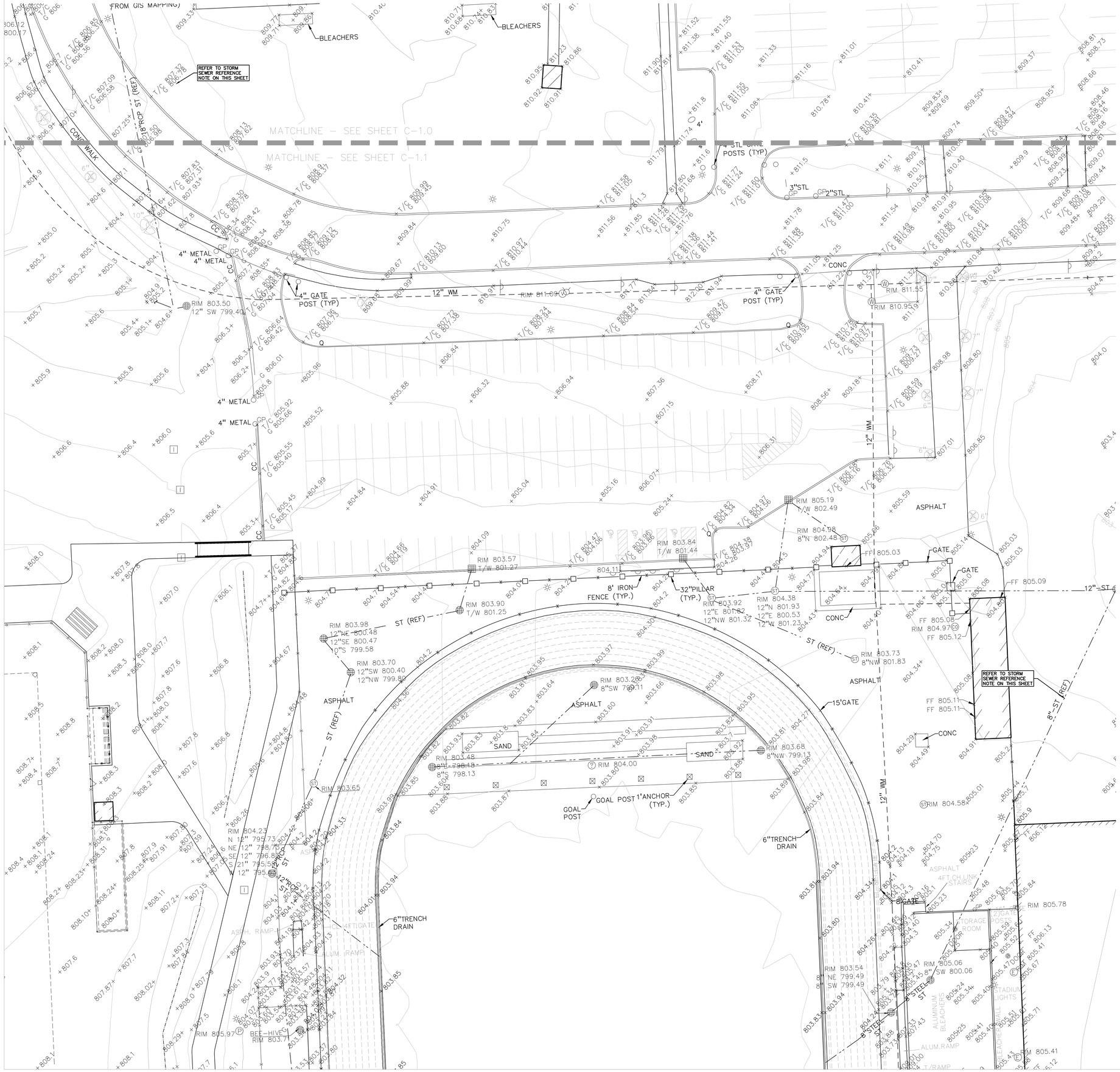

LEGEND:

- EX. OH. ELEC. POLE & GUY WIRE
- EX. U.G. CABLE TV & PEDESTAL
- EX. U.G. COMMUNICATION LINE, PEDESTAL & MANHOLE
- EX. U.G. ELEC.MANHOLE, METER & HANDHOLE
- EX. GAS LINE
- EX. GAS VALVE & GAS LINE MARKER
- EX. TRANSFORMER & IRRIGATION VALVE
- EX. WATER MAIN
- EX. HYDRANT, GATE VALVE & POST INDICATOR VALVE
- EX. WATER VALVE BOX & SHUTOFF
- EX. SANITARY SEWER
- EX. SANITARY CLEANOUT & MANHOLE
- EX. COMBINED SEWER MANHOLE
- EX. STORM SEWER
- EX. CLEANOUT & MANHOLE
- EX. SQUARE, ROUND & BEEHIVE CATCH BASIN
- EX. YARD DRAIN & ROOF DRAIN
- EX. UNIDENTIFIED STRUCTURE
- EX. MAILBOX, SIGN & LIGHTPOLE
- EX. FENCE
- EX. GUARD RAIL
- EX. DEC. TREE, CONIFEROUS TREE & SHRUB
- EX. TREE TAG, & TREE LINE
- EX. SPOT ELEVATION
- EX. CONTOUR
- EX. WETLAND
- IRON FOUND / SET
- NAIL FOUND / NAIL & CAP SET
- BRASS PLUG SET
- MONUMENT FOUND / SET
- SECTION CORNER FOUND
- R M C — RECORDED / MEASURED / CALCULATED

REF. BENCHMARKS:
(PER PEA JOB NO, 2012-144)

BM #300
FOUND CHISELED + ON SOUTHEAST QUADRANT OF ROUND CONCRETE BASE FOR LIGHT POLE, SECOND LIGHT POLE SOUTH OF EAST WEST DRIVE, ±20 FEET WEST OF THE EAST EDGE OF SIDEWALK
ELEV.- 805.54

BM #301
FOUND CHISELED + ON NORTHEAST QUADRANT OF ROUND CONCRETE BASE FOR LIGHT POLE, FIFTH LIGHT POLE SOUTH OF EAST-WEST DRIVE, ±20 FEET WEST OF THE EAST EDGE OF SIDEWALK.
ELEV.- 806.21

BENCHMARKS:
(GPS DERIVED - NAVD88)

BM #350
FOUND MAG NAIL W/PEA WASHER LOCATED ON THE WEST SIDE OF THE 2ND LIGHT POLE BASE SOUTH OF LONG LAKE ROAD IN ENTRANCE BLVD.
(PEA JOB NO. 2022-0662 "BM 300")
ELEV. - 810.71

BM #351
FOUND MAG NAIL (NO TAG, WORN OFF) IN THE WEST SIDE OF A LIGHT POLE BASE LOCATED SOUTHWEST OF THE BLEACHERS ON THE WEST SIDE OF THE TENNIS COURTS.
(PEA JOB NO. 2022-0662 "BM 301")
ELEV.- 807.76

FLOODPLAIN NOTE:
BY GRAPHICAL PLOTTING, SITE IS WITHIN ZONE 'X', AREA DETERMINED TO BE OUTSIDE OF THE 0.2% ANNUAL CHANCE FLOODPLAIN PER FLOOD INSURANCE RATE MAP NUMBER 26125C0533F DATED 9, 29, 2006.

BENCHMARK NOTE:
THE BENCHMARKS ON SITE WERE TAKEN FROM SEVERAL DIFFERENT PROJECTS OVER THE COURSE OF MULTIPLE YEARS, IT IS NOT KNOW IF THESE WERE CITY OF TROY BENCHMARKS, IF TWO CITY APPROVED BENCHMARKS ARE NEEDED FOR DEVELOPMENT, THEN THE CITY CAN SEND NEARBY BENCHMARK DATA TO PEA GROUP SO THAT IT BE ADDED TO THE SURVEY.

STORM SEWER REFERENCE NOTE:
SURVEY DATA AND CITY OF TROY RECORDS DIFFER ON PIPE SIZE, CONTRACTOR TO VERIFY PIPE SIZE IN THE FIELD.

NORTH

0 10 20 40
SCALE: 1" = 20'

TMP ARCHITECTURE

TMP ARCHITECTURE INC
1191 WEST SQUARE LAKE ROAD
BLOOMFIELD HILLS - MICHIGAN - 48302
PH - 248.338.4561 FX - 248.338.0223
EM - INFO @TMP-ARCHITECTURE.COM

REGISTRATION SEAL

STATE OF MICHIGAN
CHRISTOPHER THOMAS BELAND
PROFESSIONAL SURVEYOR NO. 4001049106
LICENSED PROFESSIONAL SURVEYOR

CONSULTANT

PEA GROUP
t: 844.813.2949
www.peagroup.com

PROJECT TITLE

Troy High School Athletic Fields Bid Package No. 02B

Troy School District
Troy, Michigan

DRAWING TITLE

TOPOGRAPHIC SURVEY - STADIUM ENTRANCE

ISSUE DATES

12-10-2024	CONSTRUCTION DOCUMENTS
DATE:	ISSUED FOR:
DRAWN	JW
CHECKED	TD
APPROVED	TD

PROJECT NO.

22104E

DRAWING NO.

C-1.1

Drawing File: S:\PROJECTS\2021\21-0300 TROY SCHOOLS 2022 BOND\DWGS_CONSTRUCTION\TROY ATHLETICS\TROY HIGH - PHASE 2\(C-1.0TOPO-21-03)-TMA PHASE 2.dwg
Dec 20, 2024 - 4:01pm

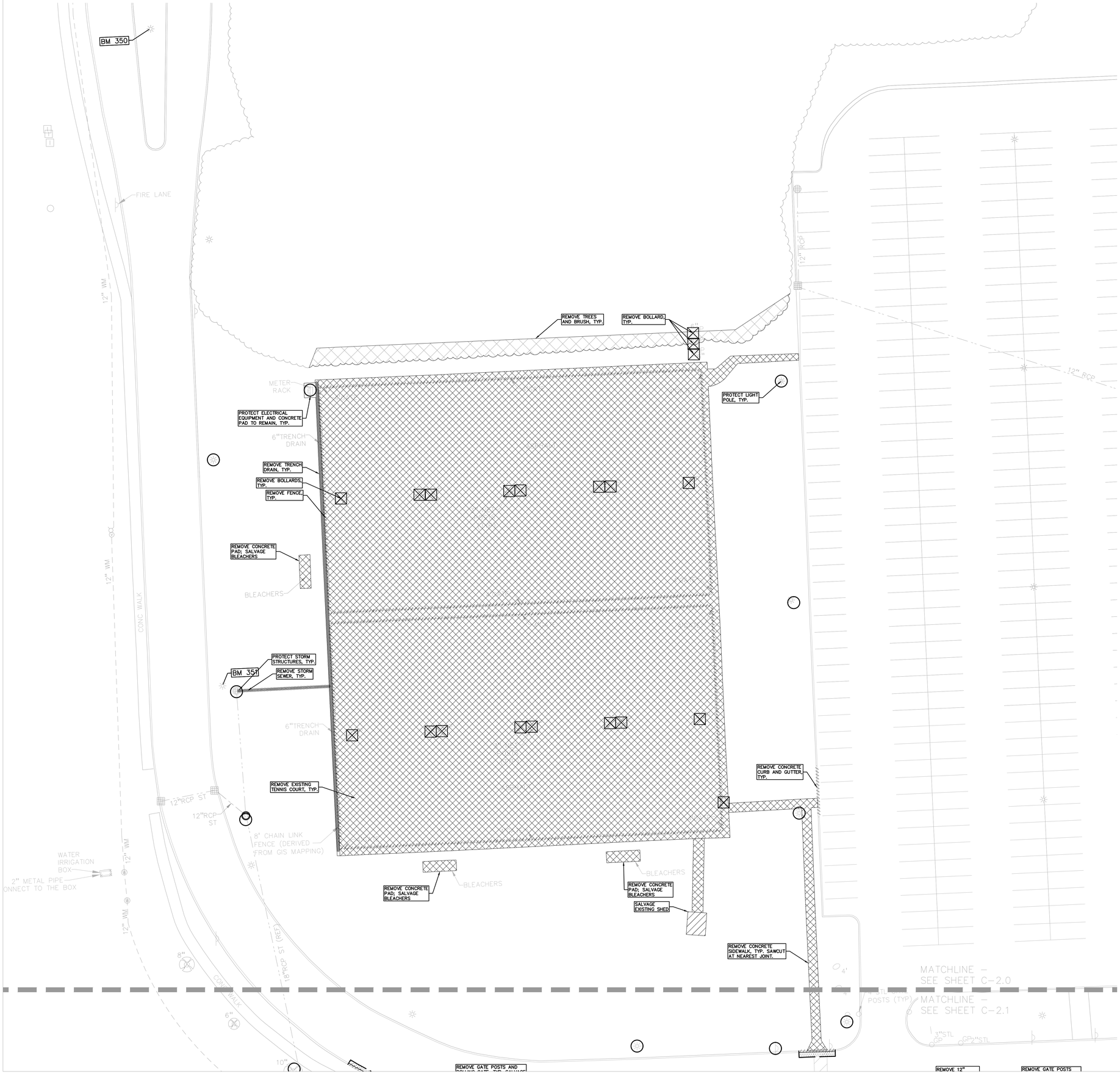

GENERAL DEMOLITION NOTES:

THESE NOTES APPLY TO ALL CONSTRUCTION ACTIVITIES ON THIS PROJECT:

1. ALL MATERIAL TO BE REMOVED, WHETHER SPECIFICALLY NOTED IN THE PLANS OR NOT, SHALL BE REMOVED FROM THE SITE BY THE CONTRACTOR AND DISPOSED OF OFF-SITE IN A LEGAL MANNER. NO ON-SITE BURY OR BURN PITS SHALL BE ALLOWED.
2. ALL DEMOLITION WORK SHALL CONFORM TO ALL LOCAL CODES AND ORDINANCES.
3. STAGING/PHASING OF DEMOLITION AND CONSTRUCTION IS TO BE COORDINATED WITH THE OWNER AND THE CONTRACTOR PRIOR TO CONSTRUCTION.
4. SPECIFIC DEMOLITION ITEMS HAVE BEEN INDICATED ON THE PLANS AS A GUIDE TO THE GENERAL SCOPE OF THE WORK. IT IS THE INTENT THAT THESE ITEMS SHALL BE COMPLETELY REMOVED BY THE CONTRACTOR ABOVE AND BELOW GROUND, UNLESS SPECIFICALLY NOTED OTHERWISE, AND THAT DEMOLITION WILL INCLUDE BUT WILL NOT NECESSARILY BE LIMITED TO THESE ITEMS. CONTRACTOR SHALL VISIT SITE TO VERIFY EXISTING CONDITIONS AND EXTENTS OF THE DEMOLITION THAT WILL BE REQUIRED PRIOR TO SUBMITTING A BID.
5. REMOVE ALL STRUCTURES DESIGNATED FOR REMOVAL ACCORDING TO THE DEMOLITION PLAN. THIS INCLUDES FOUNDATIONS, FOOTINGS, FOUNDATION WALLS, FLOOR SLABS, UNDERGROUND UTILITIES, CONCRETE, ASPHALT, TREES, ETC.
6. REFER TO SHEET C-9.1 FOR TREE PROTECTION DETAILS.
7. THE CONTRACTOR SHALL, AS A MINIMUM, PROVIDE TREE PROTECTION FENCING AROUND EXISTING TREES TO BE SAVED THAT ARE WITHIN 15 FEET OF CONSTRUCTION ACTIVITIES AND AS INDICATED IN THE PLANS OR PER LOCAL AGENCY REQUIREMENTS.
8. THE CONTRACTOR SHALL BE RESPONSIBLE FOR CLEAN UP, NOISE, DUST CONTROL, STREET SWEEPING AND HOURS OF OPERATION IN ACCORDANCE WITH THE LOCAL CODES.
9. THE CONTRACTOR SHALL PROVIDE ALL NECESSARY BARRICADES, SIGNAGE, MARKINGS, LIGHTS AND OTHER TRAFFIC CONTROL DEVICES TO PROTECT THE WORK ZONE AND SAFELY MAINTAIN TRAFFIC PER AGENCY REQUIREMENTS AND IN ACCORDANCE WITH THE LATEST EDITION OF THE STATE MANUAL OF UNIFORM TRAFFIC CONTROL DEVICES.
10. THE CONTRACTOR SHALL CONTACT THE APPROPRIATE UTILITY COMPANIES TO CONFIRM THAT UTILITY LEADS HAVE BEEN TAKEN OUT OF SERVICE PRIOR TO DEMOLITION.
11. ALL BUILDING GAS LEADS, METERS AND ASSOCIATED EQUIPMENT SHALL BE REMOVED AS SHOWN ON THE PLANS. COORDINATE ALL ASSOCIATED WORK WITH THE APPROPRIATE UTILITY COMPANY.
12. REMOVE ALL OVERHEAD AND UNDERGROUND ELECTRICAL LINES WITHIN THE AREA OF CONSTRUCTION AS SHOWN ON THE PLANS. COORDINATE SHUTDOWNS AND REMOVALS WITH ELECTRICAL SERVICE PROVIDER OR THE APPROPRIATE UTILITY COMPANY. (NOTE: PHONE AND CABLE T.V. SERVICES MAY ALSO BE LOCATED ON OVERHEAD LINES.)
13. THE CONTRACTOR IS RESPONSIBLE FOR THE REMOVAL AND REPLACEMENT OF SIGNS AND SUPPORTS WITHIN THE WORK AREA, AS NECESSARY TO FACILITATE CONSTRUCTION. SIGNS SHALL BE PROTECTED OR STOCKPILED FOR REUSE AS SPECIFIED IN THE PLANS OR AS REQUIRED BY THE AGENCY OF JURISDICTION. THE CONTRACTOR SHALL REPLACE ANY DAMAGED SIGNS AND SUPPORTS AT NO ADDITIONAL COST TO THE OWNER.
14. THE CONTRACTOR SHALL NOTIFY THE APPROPRIATE 811/ONE CALL UTILITY LOCATING CENTER, THE CITY ENGINEER AND/OR THE AUTHORITY HAVING JURISDICTION 3 BUSINESS DAYS PRIOR TO THE BEGINNING OF CONSTRUCTION.

DEMOLITION LEGEND:

- ITEM TO BE PROTECTED
- ITEM TO BE REMOVED
- CURB/FENCE REMOVAL
- CONCRETE PAVEMENT AND SIDEWALK REMOVAL
- AREA OR ITEMS TO BE REMOVED
- UTILITY REMOVAL
- ABANDON UTILITY
- ASPHALT REMOVAL
- TREE REMOVAL
- SAWCUT LINE

NORTH

0 10 20 40

SCALE: 1" = 20'

TMP ARCHITECTURE

TMP ARCHITECTURE INC
1191 WEST SQUARE LAKE ROAD
BLOOMFIELD HILLS • MICHIGAN • 48302
PH • 248.338.4561 FX • 248.338.0223
EM • INFO@TMP-ARCHITECTURE.COM

STATE OF MICHIGAN
JOSEPH B. WYWROT
ENGINEER
No. 6201045674
LICENSED PROFESSIONAL ENGINEER

CONSULTANT

PEA GROUP
t: 844.813.2949
www.peagroup.com

PROJECT TITLE

Troy High School Athletic Fields Bid Package No. 02B

Troy School District
Troy, Michigan

DRAWING TITLE

DEMOLITION PLAN - TENNIS COURTS

ISSUE DATES

DATE:	ISSUED FOR:
12-10-2024	CONSTRUCTION DOCUMENTS

DRAWN	JW
CHECKED	TD
APPROVED	TD

PROJECT NO.

22104E

DRAWING NO.

C-2.0

Drawing File: S:\PROJECTS\2021\21-0301 TROY SCHOOLS 2022 BOND\DWG\1_CONSTRUCTION\TROY ATHLETICS\TROY HIGH - PHASE 2\C-2.0DEMO-21-0301-THA PHASE 2.dwg
Date: Dec 06, 2024 - 4:03pm

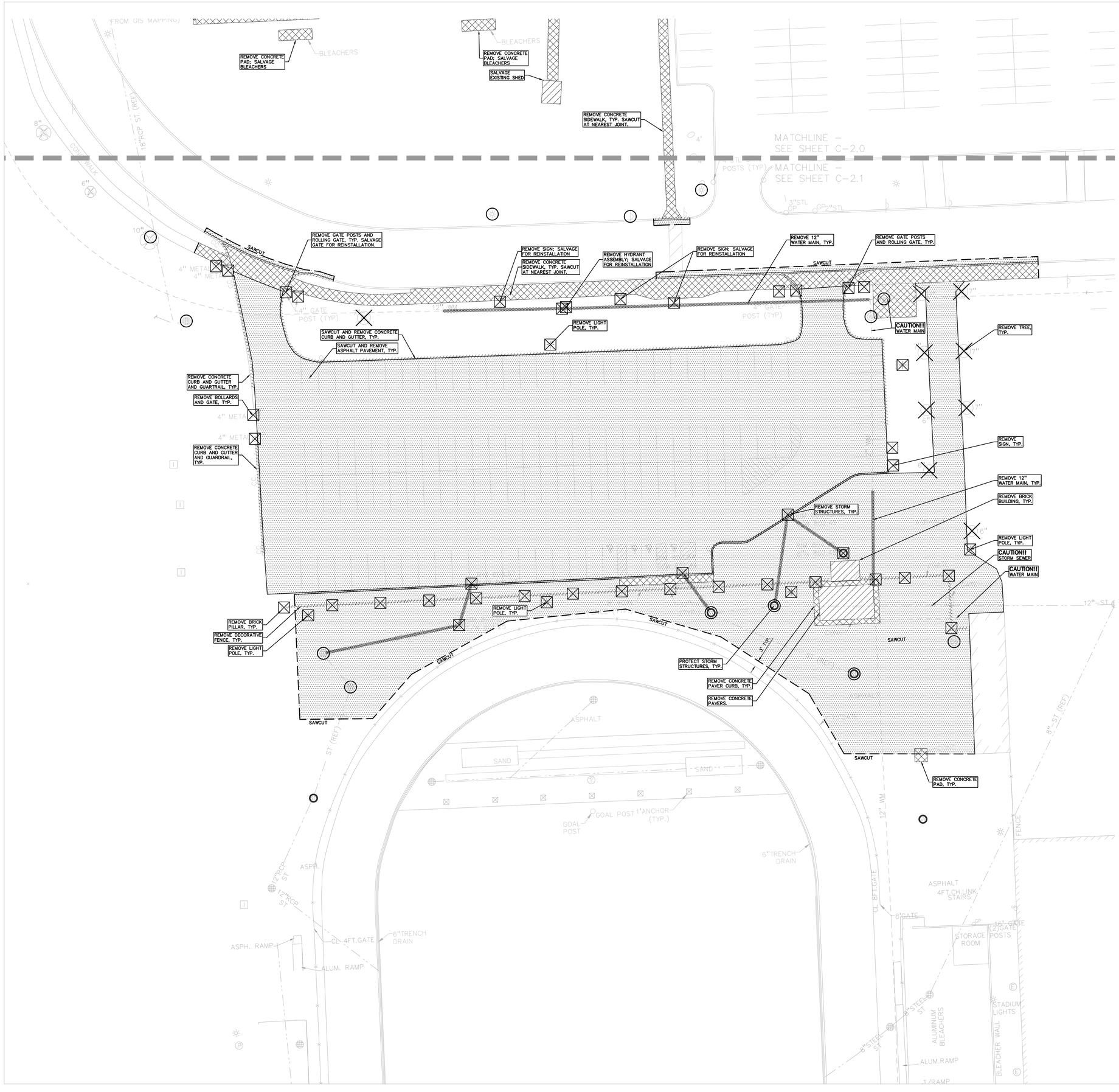

GENERAL DEMOLITION NOTES:

THESE NOTES APPLY TO ALL CONSTRUCTION ACTIVITIES ON THIS PROJECT:

1. ALL MATERIAL TO BE REMOVED, WHETHER SPECIFICALLY NOTED IN THE PLANS OR NOT, SHALL BE REMOVED FROM THE SITE BY THE CONTRACTOR AND DISPOSED OF OFF-SITE IN A LEGAL MANNER. NO ON-SITE BURY OR BURN PITS SHALL BE ALLOWED.
2. ALL DEMOLITION WORK SHALL CONFORM TO ALL LOCAL CODES AND ORDINANCES.
3. STAGING/PHASING OF DEMOLITION AND CONSTRUCTION IS TO BE COORDINATED WITH THE OWNER AND THE CONTRACTOR PRIOR TO CONSTRUCTION.
4. SPECIFIC DEMOLITION ITEMS HAVE BEEN INDICATED ON THE PLANS AS A GUIDE TO THE GENERAL SCOPE OF THE WORK. IT IS THE INTENT THAT THESE ITEMS SHALL BE COMPLETELY REMOVED BY THE CONTRACTOR ABOVE AND BELOW GROUND, UNLESS SPECIFICALLY NOTED OTHERWISE, AND THAT DEMOLITION WILL INCLUDE BUT WILL NOT NECESSARILY BE LIMITED TO THESE ITEMS. CONTRACTOR SHALL VISIT SITE TO VERIFY EXISTING CONDITIONS AND EXTENTS OF THE DEMOLITION THAT WILL BE REQUIRED PRIOR TO SUBMITTING A BID.
5. REMOVE ALL STRUCTURES DESIGNATED FOR REMOVAL ACCORDING TO THE DEMOLITION PLAN. THIS INCLUDES FOUNDATIONS, FOOTINGS, FOUNDATION WALLS, FLOOR SLABS, UNDERGROUND UTILITIES, CONCRETE, ASPHALT, TREES, ETC.
6. REFER TO SHEET C-9.1 FOR TREE PROTECTION DETAILS.
7. THE CONTRACTOR SHALL, AS A MINIMUM, PROVIDE TREE PROTECTION FENCING AROUND EXISTING TREES TO BE SAVED THAT ARE WITHIN 15 FEET OF CONSTRUCTION ACTIVITIES AND AS INDICATED IN THE PLANS OR PER LOCAL AGENCY REQUIREMENTS.
8. THE CONTRACTOR SHALL BE RESPONSIBLE FOR CLEAN UP, NOISE, DUST CONTROL, STREET SWEEPING AND HOURS OF OPERATION IN ACCORDANCE WITH THE LOCAL CODES.
9. THE CONTRACTOR SHALL PROVIDE ALL NECESSARY BARRICADES, SIGNAGE, MARKINGS, LIGHTS AND OTHER TRAFFIC CONTROL DEVICES TO PROTECT THE WORK ZONE AND SAFELY MAINTAIN TRAFFIC PER AGENCY REQUIREMENTS AND IN ACCORDANCE WITH THE LATEST EDITION OF THE STATE MANUAL OF UNIFORM TRAFFIC CONTROL DEVICES.
10. THE CONTRACTOR SHALL CONTACT THE APPROPRIATE UTILITY COMPANIES TO CONFIRM THAT UTILITY LEADS HAVE BEEN TAKEN OUT OF SERVICE PRIOR TO DEMOLITION.
11. ALL BUILDING GAS LEADS, METERS AND ASSOCIATED EQUIPMENT SHALL BE REMOVED AS SHOWN ON THE PLANS. COORDINATE ALL ASSOCIATED WORK WITH THE APPROPRIATE UTILITY COMPANY.
12. REMOVE ALL OVERHEAD AND UNDERGROUND ELECTRICAL LINES WITHIN THE AREA OF CONSTRUCTION AS SHOWN ON THE PLANS. COORDINATE SHUTDOWNS AND REMOVALS WITH ELECTRICAL SERVICE PROVIDER OR THE APPROPRIATE UTILITY COMPANY. (NOTE: PHONE AND CABLE T.V. SERVICES MAY ALSO BE LOCATED ON OVERHEAD LINES.)
13. THE CONTRACTOR IS RESPONSIBLE FOR THE REMOVAL AND REPLACEMENT OF SIGNS AND SUPPORTS WITHIN THE WORK AREA, AS NECESSARY TO FACILITATE CONSTRUCTION. SIGNS SHALL BE PROTECTED OR STOCKPILED FOR REUSE AS SPECIFIED IN THE PLANS OR AS REQUIRED BY THE AGENCY OF JURISDICTION. THE CONTRACTOR SHALL REPLACE ANY DAMAGED SIGNS AND SUPPORTS AT NO ADDITIONAL COST TO THE OWNER.
14. THE CONTRACTOR SHALL NOTIFY THE APPROPRIATE 811/ONE CALL UTILITY LOCATING CENTER, THE CITY ENGINEER AND/OR THE AUTHORITY HAVING JURISDICTION 3 BUSINESS DAYS PRIOR TO THE BEGINNING OF CONSTRUCTION.

DEMOLITION LEGEND:

- ITEM TO BE PROTECTED
- ITEM TO BE REMOVED
- CURB/FENCE REMOVAL
- CONCRETE PAVEMENT AND SIDEWALK REMOVAL
- AREA OR ITEMS TO BE REMOVED
- UTILITY REMOVAL
- ABANDON UTILITY
- ASPHALT REMOVAL
- TREE REMOVAL
- SAWCUT LINE

TMP ARCHITECTURE

TMP ARCHITECTURE INC
1191 WEST SQUARE LAKE ROAD
BLOOMFIELD HILLS - MICHIGAN - 48302
PH - 248.338.4561 FX - 248.338.0223
EM - INFO@TMP-ARCHITECTURE.COM

STATE OF MICHIGAN
JOSEPH B. WYWROT
ENGINEER
No. 6201045874
LICENSED PROFESSIONAL ENGINEER

CONSULTANT

PEA GROUP
t: 844.813.2949
www.peagroup.com

PROJECT TITLE

Troy High School Athletic Fields Bid Package No. 02B

Troy School District
Troy, Michigan

DRAWING TITLE

DEMOLITION PLAN - STADIUM ENTRANCE

ISSUE DATES

12-10-2024	CONSTRUCTION DOCUMENTS

DATE:	ISSUED FOR:
DRAWN	JW
CHECKED	TD
APPROVED	TD

PROJECT NO.

22104E

DRAWING NO.

C-2.1

Drawing File: S:\PROJECTS\2023\23-2301 TROY SCHOOLS 2022 BOND\DWG\3_CONSTRUCTION\TROY ATHLETICS\TROY HIGH - PHASE 2\(C-2.0)DEMO-23-2301-THA PHASE 2.dwg
Dec 09, 2024 - 4:02pm

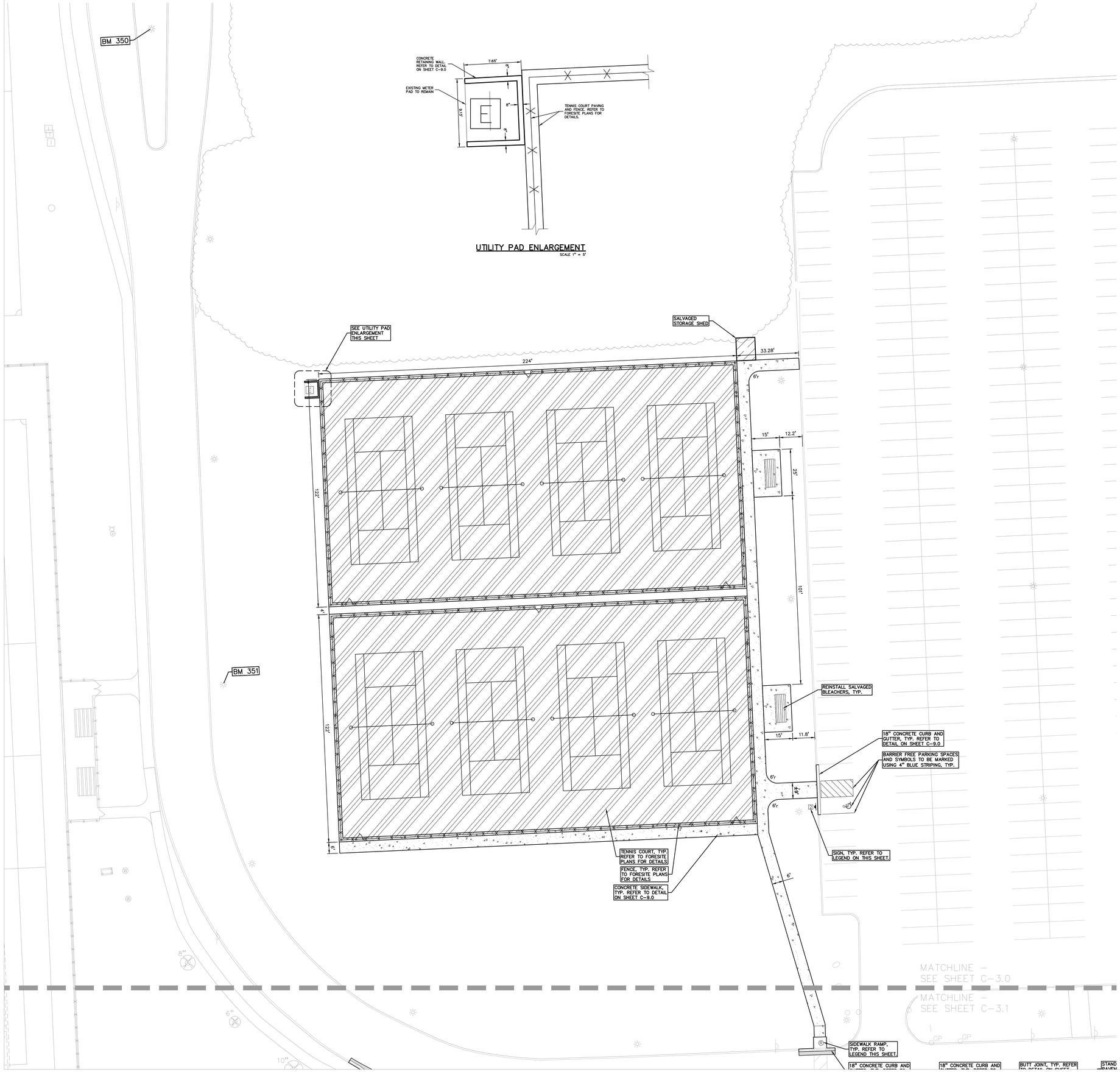

LEGEND:

- CONCRETE PAVEMENT (STD DUTY, HEAVY DUTY, R.O.W. ONLY)
- ASPHALT PAVEMENT (STD DUTY, HEAVY DUTY, DEEP STRENGTH)
- GRAVEL
- WETLAND
- CONCRETE CURB AND GUTTER
- REVERSE GUTTER PAN
- SETBACK LINE
- SIGN
- LIGHTPOLE
- FENCE
- GUARD RAIL

GENERAL NOTES:

THESE NOTES APPLY TO ALL CONSTRUCTION ACTIVITIES ON THIS PROJECT.

1. ALL DIMENSIONS SHOWN ARE TO BACK OF CURB, FACE OF SIDEWALK, OUTSIDE FACE OF BUILDING, PROPERTY LINE, CENTER OF MANHOLE/CATCH BASIN OR CENTERLINE OF PIPE UNLESS OTHERWISE NOTED.
2. 'NO PARKING-FIRE LANE' SIGNS SHALL BE POSTED ALONG ALL FIRE LANES AT XXX FOOT INTERVALS OR AS DIRECTED BY THE FIRE OFFICIAL.
3. REFER TO NOTES & DETAILS SHEET FOR ON-SITE PAVING DETAILS.
4. REFER TO NOTES & DETAILS SHEET FOR ON-SITE SIDEWALK RAMP DETAILS

SIDEWALK RAMP LEGEND:

SIDEWALK RAMP 'TYPE R' (R)

SIDEWALK RAMP 'TYPE P' (P)

REFER TO LATEST MDOT R-28 STANDARD RAMP AND DETECTABLE WARNING DETAILS

SIGN LEGEND:

'BARRIER FREE PARKING' SIGN [1]

'VAN ACCESSIBLE' SIGN [2]

REFER TO DETAIL SHEET FOR SIGN DETAILS

TMP ARCHITECTURE

TMP ARCHITECTURE INC

1191 WEST SQUARE LAKE ROAD
BLOOMFIELD HILLS • MICHIGAN • 48302
PH • 248.338.4561 FX • 248.338.0223
EM • INFO@TMP-ARCHITECTURE.COM

STATE OF MICHIGAN
JOSEPH B. WYWROT
ENGINEER
No. 6201045674
LICENSED PROFESSIONAL ENGINEER

CONSULTANT

PEA GROUP
t: 844.813.2949
www.peagroup.com

PROJECT TITLE

Troy High School Athletic Fields Bid Package No. 02B

Troy School District
Troy, Michigan

DRAWING TITLE

DIMENSION AND PAVING PLANS - TENNIS COURTS

ISSUE DATES

DATE:	ISSUED FOR:
12-10-2024	CONSTRUCTION DOCUMENTS

DRAWN	JW
CHECKED	TD
APPROVED	TD

PROJECT NO.

22104E

DRAWING NO.

C-3.0

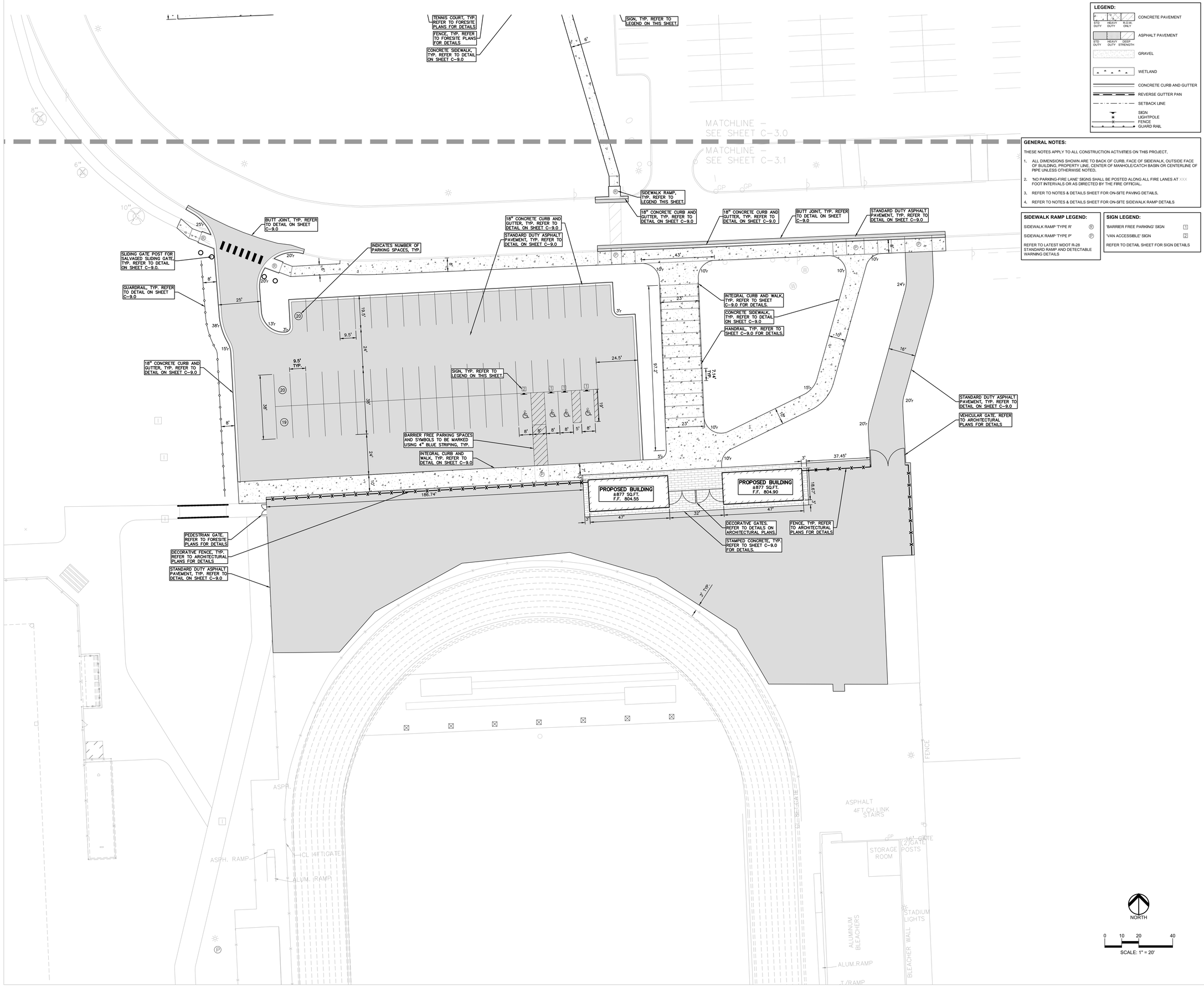

LEGEND:

- CONCRETE PAVEMENT (STD DUTY, HEAVY DUTY, R.O.W. ONLY)
- ASPHALT PAVEMENT (STD DUTY, HEAVY DUTY, DEEP STRENGTH)
- GRAVEL
- WETLAND
- CONCRETE CURB AND GUTTER
- REVERSE GUTTER PAN
- SETBACK LINE
- SIGN
- LIGHTPOLE
- FENCE
- GUARD RAIL

GENERAL NOTES:

THESE NOTES APPLY TO ALL CONSTRUCTION ACTIVITIES ON THIS PROJECT.

1. ALL DIMENSIONS SHOWN ARE TO BACK OF CURB, FACE OF SIDEWALK, OUTSIDE FACE OF BUILDING, PROPERTY LINE, CENTER OF MANHOLE/CATCH BASIN OR CENTERLINE OF PIPE UNLESS OTHERWISE NOTED.
2. 'NO PARKING-FIRE LANE' SIGNS SHALL BE POSTED ALONG ALL FIRE LANES AT XXX FOOT INTERVALS OR AS DIRECTED BY THE FIRE OFFICIAL.
3. REFER TO NOTES & DETAILS SHEET FOR ON-SITE PAVING DETAILS.
4. REFER TO NOTES & DETAILS SHEET FOR ON-SITE SIDEWALK RAMP DETAILS

SIDEWALK RAMP LEGEND:

- SIDEWALK RAMP 'TYPE R' (R)
- SIDEWALK RAMP 'TYPE P' (P)

REFER TO LATEST MDOT R-28 STANDARD RAMP AND DETECTABLE WARNING DETAILS

SIGN LEGEND:

- 'BARRIER FREE PARKING' SIGN [1]
- 'VAN ACCESSIBLE' SIGN [2]

REFER TO DETAIL SHEET FOR SIGN DETAILS

NORTH

0 10 20 40

SCALE: 1" = 20'

TMP ARCHITECTURE

TMP ARCHITECTURE INC
1191 WEST SQUARE LAKE ROAD
BLOOMFIELD HILLS · MICHIGAN · 48302
PH · 248.338.4561 FX · 248.338.0223
EM · INFO@TMP-ARCHITECTURE.COM

STATE OF MICHIGAN
JOSEPH B. WYWROT
ENGINEER
No. 6201045674
LICENSED PROFESSIONAL ENGINEER

CONSULTANT

PEA GROUP
t: 844.813.2949
www.peagroup.com

PROJECT TITLE

Troy High School Athletic Fields Bid Package No. 02B

Troy School District Troy, Michigan

DRAWING TITLE

DIMENSION AND PAVING PLAN - STADIUM ENTRANCE

ISSUE DATES

DATE:	ISSUED FOR:
12-10-2024	CONSTRUCTION DOCUMENTS

DRAWN	JW
CHECKED	TD
APPROVED	TD

PROJECT NO.

22104E

DRAWING NO.

C-3.1

Drawing File: S:\PROJECTS\2021\21-1001 TROY SCHOOLS 2022 BOND\DWG\1_CONSTRUCTION\TROY ATHLETICS\TROY HIGH - PHASE 2\C-3.00dwg-23-1001- THA PHASE 2.dwg
Dec 06, 2024 - 4:40pm

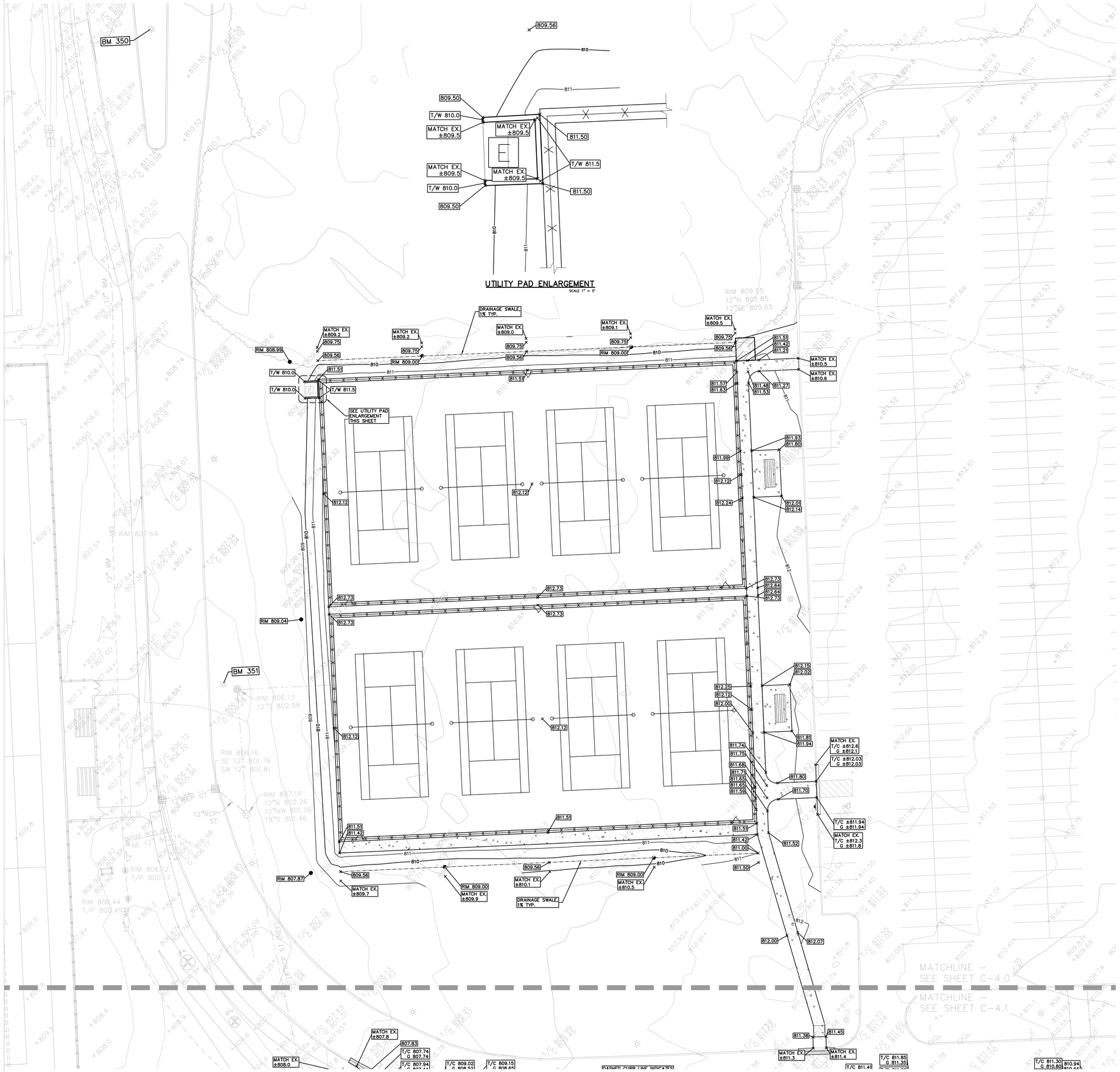

GRADING LEGEND:

- EXISTING SPOT ELEVATION
- PROPOSED SPOT ELEVATION: TYPICALLY TOP OF PAVEMENT IN PAVED AREAS, GUTTER GRADE IN CURB LINES.
- EXISTING CONTOUR
- PROPOSED CONTOUR
- PROPOSED REVERSE GUTTER PAN
- PROPOSED RIDGE LINE
- PROPOSED SWALE/DITCH

ABBREVIATIONS

T/C = TOP OF CURB	F = FLUSH WALK
T/P = TOP OF PAVEMENT	G = GUTTER GRADE
T/S = TOP OF SIDEWALK	FF = FINISH FLOOR
T/W = TOP OF WALL	FG = FINISH GRADE
B/W = BOTTOM OF WALL	RIM = RIM ELEVATION

REFER TO GRADING NOTES ON SHEET C-9.0.

RETAINING WALL NOTE:

TOP OF WALL (T/W) AND BOTTOM OF WALL (B/W) GRADES ARE THE FINISH GRADE AT THE TOP AND BOTTOM OF THE RETAINING WALL, NOT ACTUAL TOP AND BOTTOM OF THE WALL STRUCTURE.

EARTHWORK BALANCING NOTE:

THE CONTRACTOR SHALL BE RESPONSIBLE FOR IMPORTING OR EXPORTING ALL MATERIALS AS REQUIRED TO PROPERLY GRADE THIS PROJECT TO THE FINISHED ELEVATIONS SHOWN ON THE APPROVED PLANS. THE CONTRACTOR SHALL MAKE THEIR OWN DETERMINATION OF CUT AND FILL QUANTITIES AND ALLOW FOR REMOVAL OF EXCESS OR IMPORTATION OF ADDITIONAL MATERIAL AT NO ADDITIONAL COST TO THE OWNER.

REF. BENCHMARKS:
(PER PEA JOB NO. 2012-144)

BM #300
FOUND CHISELED + ON SOUTHEAST QUADRANT OF ROUND CONCRETE BASE FOR LIGHT POLE. SECOND LIGHT POLE SOUTH OF EAST WEST DRIVE, ±20 FEET WEST OF THE EAST EDGE OF SIDEWALK
ELEV. - 805.54

BM #301
FOUND CHISELED + ON NORTHEAST QUADRANT OF ROUND CONCRETE BASE FOR LIGHT POLE. FIFTH LIGHT POLE SOUTH OF EAST-WEST DRIVE, ±20 FEET WEST OF THE EAST EDGE OF SIDEWALK.
ELEV. - 806.21

BENCHMARKS:
(GPS DERIVED - NAVD88)

BM #350
FOUND MAG NAIL W/PEA WASHER LOCATED ON THE WEST SIDE OF THE 2ND LIGHT POLE BASE SOUTH OF LONG LAKE ROAD IN ENTRANCE BLVD.
(PEA JOB NO. 2022-0662 "BM 300")
ELEV. - 810,71

BM #351
FOUND MAG NAIL (NO TAG, WORN OFF) IN THE WEST SIDE OF A LIGHT POLE BASE LOCATED SOUTHWEST OF THE BLEACHERS ON THE WEST SIDE OF THE TENNIS COURTS.
(PEA JOB NO. 2022-0662 "BM 301")
ELEV.- 807.76

SIDEWALK RAMP LEGEND:

SIDEWALK RAMP "TYPE R"	(R)
SIDEWALK RAMP "TYPE F"	(F)
SIDEWALK RAMP "TYPE P"	(P)
SIDEWALK RAMP "TYPE C"	(C)
SIDEWALK RAMP "TYPE D"	(D)
CURB DROP ONLY	(X)

REFER TO LATEST MDOT R-28 STANDARD RAMP AND DETECTABLE WARNING DETAILS

NORTH

0 10 20 40
SCALE: 1" = 20'

TMP ARCHITECTURE

TMP ARCHITECTURE INC
1191 WEST SQUARE LAKE ROAD
BLOOMFIELD HILLS · MICHIGAN · 48302
PH · 248.338.4561 FX · 248.338.0223
EM · INFO @TMP-ARCHITECTURE.COM

STATE OF MICHIGAN
JOSEPH B. WYWROT
ENGINEER
No. 6201045674
LICENSED PROFESSIONAL ENGINEER

CONSULTANT

PEA GROUP
t: 844.813.2949
www.peagroup.com

PROJECT TITLE

Troy High School Athletic Fields Bid Package No. 02B

Troy School District
Troy, Michigan

DRAWING TITLE

GRADING PLAN - TENNIS COURTS

ISSUE DATES

12-10-2024	CONSTRUCTION DOCUMENTS
DATE:	ISSUED FOR:
DRAWN	JW
CHECKED	TD
APPROVED	TD

PROJECT NO.
22104E

DRAWING NO.
C-4.0

Drawing File: S:\PROJECTS\2023\23-0301 TROY SCHOOLS 2022 BOND\DWG\1_CONSTRUCTION\TROY ATHLETICS\TROY HIGH - PHASE 2\TC-4.0\GRADE-23-0301-TMA PHASE 2.dwg
Dec 06, 2024 - 4:03pm

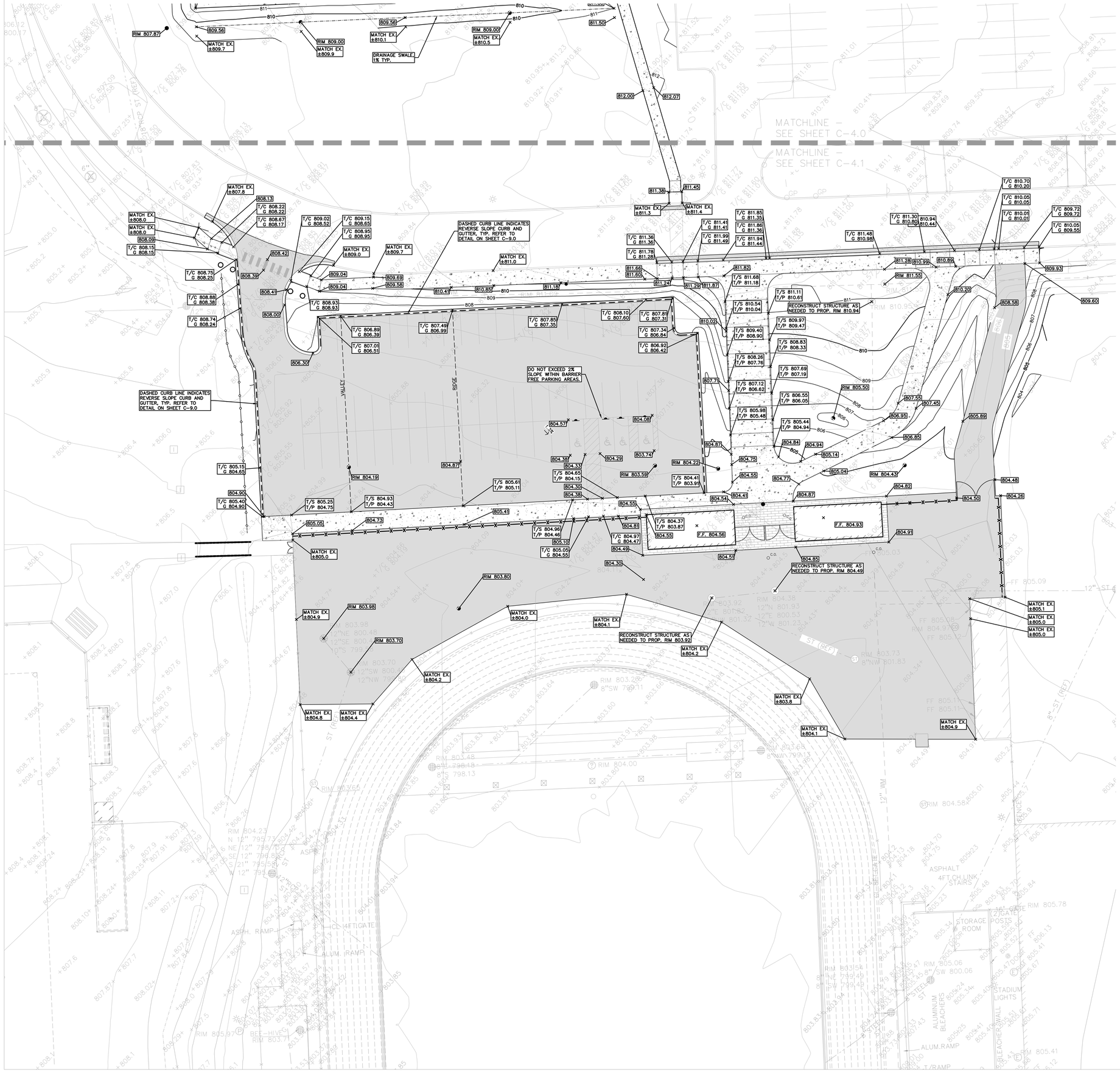

GRADING LEGEND:

- EXISTING SPOT ELEVATION
- 622.50 — PROPOSED SPOT ELEVATION: TYPICALLY TOP OF PAVEMENT IN PAVED AREAS, GUTTER GRADE IN CURB LINES.
- 670 — EXISTING CONTOUR
- 922 — PROPOSED CONTOUR
- PROPOSED REVERSE GUTTER PAN
- PROPOSED RIDGE LINE
- PROPOSED SWALE/DITCH

ABBREVIATIONS

T/C = TOP OF CURB	F = FLUSH WALK
T/P = TOP OF PAVEMENT	G = GUTTER GRADE
T/S = TOP OF SIDEWALK	FF = FINISH FLOOR
T/W = TOP OF WALL	FG = FINISH GRADE
B/W = BOTTOM OF WALL	RIM = RIM ELEVATION

REFER TO GRADING NOTES ON SHEET C-9.0.

RETAINING WALL NOTE:

TOP OF WALL (T/W) AND BOTTOM OF WALL (B/W) GRADES ARE THE FINISH GRADE AT THE TOP AND BOTTOM OF THE RETAINING WALL, NOT ACTUAL TOP AND BOTTOM OF THE WALL STRUCTURE

EARTHWORK BALANCING NOTE:

THE CONTRACTOR SHALL BE RESPONSIBLE FOR IMPORTING OR EXPORTING ALL MATERIALS AS REQUIRED TO PROPERLY GRADE THIS PROJECT TO THE FINISHED ELEVATIONS SHOWN ON THE APPROVED PLANS. THE CONTRACTOR SHALL MAKE THEIR OWN DETERMINATION OF CUT AND FILL QUANTITIES AND ALLOW FOR REMOVAL OF EXCESS OR IMPORTATION OF ADDITIONAL MATERIAL AT NO ADDITIONAL COST TO THE OWNER.

REF. BENCHMARKS:
(PER PEA JOB NO. 2012-144)

BM #300
FOUND CHISELED + ON SOUTHEAST QUADRANT OF ROUND CONCRETE BASE FOR LIGHT POLE. SECOND LIGHT POLE SOUTH OF EAST WEST DRIVE, ±20 FEET WEST OF THE EAST EDGE OF SIDEWALK
ELEV. - 805.54

BM #301
FOUND CHISELED + ON NORTHEAST QUADRANT OF ROUND CONCRETE BASE FOR LIGHT POLE. FIFTH LIGHT POLE SOUTH OF EAST-WEST DRIVE, ±20 FEET WEST OF THE EAST EDGE OF SIDEWALK.
ELEV. - 806.21

BENCHMARKS:
(GPS DERIVED - NAVD88)

BM #350
FOUND MAG NAIL W/PEA WASHER LOCATED ON THE WEST SIDE OF THE 2ND LIGHT POLE BASE SOUTH OF LONG LAKE ROAD IN ENTRANCE BLVD.
(PEA JOB NO. 2022-0662 "BM 300")
ELEV. - 810.71

BM #351
FOUND MAG NAIL (NO TAG, WORN OFF) IN THE WEST SIDE OF A LIGHT POLE BASE LOCATED SOUTHWEST OF THE BLEACHERS ON THE WEST SIDE OF THE TENNIS COURTS.
(PEA JOB NO. 2022-0662 "BM 301")
ELEV. - 807.76

SIDEWALK RAMP LEGEND:

SIDEWALK RAMP "TYPE R"	(R)
SIDEWALK RAMP "TYPE F"	(F)
SIDEWALK RAMP "TYPE P"	(P)
SIDEWALK RAMP "TYPE C"	(C)
SIDEWALK RAMP "TYPE D"	(D)
CURB DROP ONLY	(X)

REFER TO LATEST MDOT R-28 STANDARD RAMP AND DETECTABLE WARNING DETAILS

NORTH

0 10 20 40
SCALE: 1" = 20'

TMP ARCHITECTURE

TMP ARCHITECTURE INC
1191 WEST SQUARE LAKE ROAD
BLOOMFIELD HILLS · MICHIGAN · 48302
PH - 248.338.4561 FX - 248.338.0223
EM - INFO @TMP-ARCHITECTURE.COM

STATE OF MICHIGAN
JOSEPH B. WYWROT
ENGINEER
No. 6201045674
LICENSED PROFESSIONAL ENGINEER

CONSULTANT

PEA GROUP
t: 844.813.2949
www.peagroup.com

PROJECT TITLE

Troy High School Athletic Fields Bid Package No. 02B

Troy School District
Troy, Michigan

DRAWING TITLE

GRADING PLAN - STADIUM ENTRANCE

ISSUE DATES

DATE:	ISSUED FOR:
12-10-2024	CONSTRUCTION DOCUMENTS

DRAWN	JW
CHECKED	TD
APPROVED	TD

PROJECT NO.
22104E

DRAWING NO.
C-4.1

Drawing File: S:\PROJECTS\2021\21-3001 TROY SCHOOLS 2022 BOND\DWG\3_CONSTRUCTION\TROY ATHLETICS\TROY HIGH – PHASE 2\TC-4.0\GRADE-21-3001-THA PHASE 2.dwg
Dec 16, 2024 - 2:54pm



SYMBOLS: EROSION CONTROL:

- (SP-2) SILT FENCE
- (SI-2A) LOW POINT INLET FILTER
- (SI-3) RYCB INLET FILTER
- (SP-9) TEMPORARY STONE ACCESS DRIVE
- (E-9) EROSION CONTROL BLANKET
- (E-7) RIPRAP
- TEMPORARY SEED AND MULCH

REFER TO O.C.W.R.C. SOIL EROSION AND SEDIMENTATION CONTROL DETAILS SHEET FOR ALL DEVICE DETAILS.

NORTH

0 10 20 40

SCALE: 1" = 20'

TMP ARCHITECTURE

TMP ARCHITECTURE INC

1191 WEST SQUARE LAKE ROAD
BLOOMFIELD HILLS · MICHIGAN · 48302
PH · 248.338.4561 FX · 248.338.0223
EM · INFO@TMP-ARCHITECTURE.COM

STATE OF MICHIGAN
JOSEPH B. WYWROT
ENGINEER
No. 6201045674
LICENSED PROFESSIONAL ENGINEER

CONSULTANT

PEA GROUP
t: 844.813.2949
www.peagroup.com

PROJECT TITLE

Troy High School Athletic Fields Bid Package No. 02B

Troy School District
Troy, Michigan

DRAWING TITLE

SESC - TENNIS COURTS

ISSUE DATES

12-10-2024	CONSTRUCTION DOCUMENTS
DATE:	ISSUED FOR:
DRAWN	JW
CHECKED	TD
APPROVED	TD

PROJECT NO.

22104E

DRAWING NO.

C-5.0

Drawing File: S:\PROJECTS\2021\21-0301 TROY SCHOOLS 2022 BOND\DWG\3_CONSTRUCTION\TROY ATHLETICS\TROY HIGH - PHASE 2\C-5.0\SESC-21-0301-TRA PHASE 2.dwg
Dec 06, 2024 - 4:09pm



SYMBOLS: EROSION CONTROL:

- (SP-2) SILT FENCE
- (SI-2A) LOW POINT INLET FILTER
- (SI-3) RYCB INLET FILTER
- (SP-9) TEMPORARY STONE ACCESS DRIVE
- (E-9) EROSION CONTROL BLANKET
- (E-7) RIPRAP
- TEMPORARY SEED AND MULCH

REFER TO O.C.W.R.C. SOIL EROSION AND SEDIMENTATION CONTROL DETAILS SHEET FOR ALL DEVICE DETAILS.

TMP ARCHITECTURE

TMP ARCHITECTURE INC
1191 WEST SQUARE LAKE ROAD
BLOOMFIELD HILLS - MICHIGAN - 48302
PH - 248.338.4561 FX - 248.338.0223
EM - INFO@TMP-ARCHITECTURE.COM

STATE OF MICHIGAN
JOSEPH B. WYWROT
ENGINEER
No. 6201045674
LICENSED PROFESSIONAL ENGINEER

CONSULTANT

PEA GROUP
t: 844.813.2949
www.peagroup.com

PROJECT TITLE
Troy High School Athletic Fields Bid Package No. 02B

Troy School District
Troy, Michigan

DRAWING TITLE
SESC - STADIUM ENTRANCE

ISSUE DATES

12-10-2024	CONSTRUCTION DOCUMENTS
DATE:	ISSUED FOR:
DRAWN	JW
CHECKED	TD
APPROVED	TD

PROJECT NO.
22104E

DRAWING NO.
C-5.1

Drawing File: S:\PROJECTS\2022\22-0301 TROY SCHOOLS 2022 BOND\DWG\3_CONSTRUCTION\TROY ATHLETICS\TROY HIGH - PHASE 2\EC-5.0(ESC)-22-0301- PHA PHASE 2.dwg
Dec 16, 2024 - 8:42am

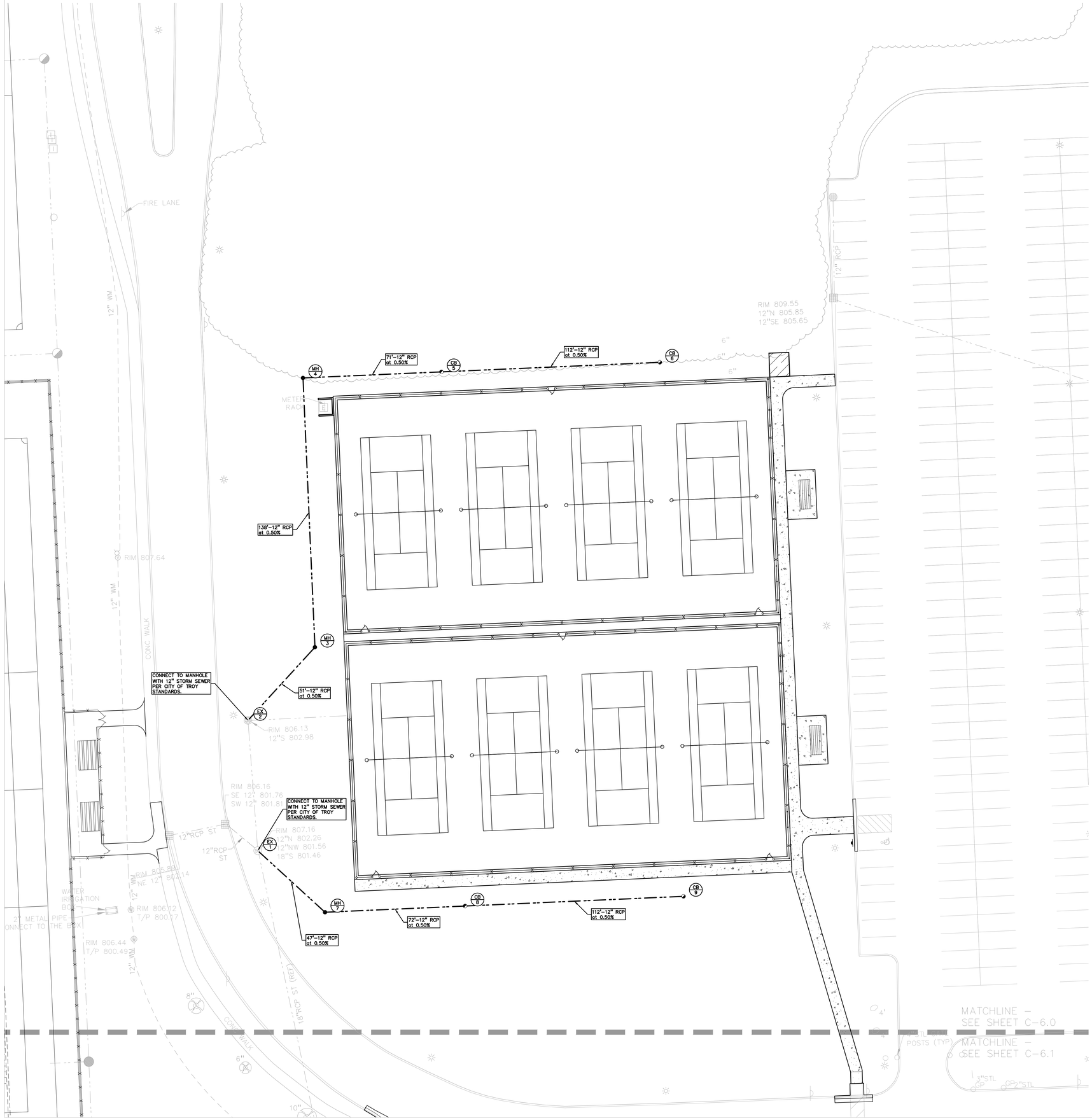

UTILITY LEGEND:

- EX. OH, ELEC, POLE & GUY WIRE
- EX. U.G. CABLE TV & PEDESTAL
- EX. U.G. COMMUNICATION LINE, PEDESTAL & MANHOLE
- EX. U.G. ELEC.MANHOLE, METER & HANDHOLE
- EX. GAS LINE
- EX. GAS VALVE & GAS LINE MARKER
- EX. TRANSFORMER & IRRIGATION VALVE
- EX. WATER MAIN
- EX. HYDRANT, GATE VALVE & POST INDICATOR VALVE
- EX. WATER VALVE BOX & SHUTOFF
- EX. SANITARY SEWER
- EX. SANITARY CLEANOUT & MANHOLE
- EX. COMBINED SEWER MANHOLE
- EX. STORM SEWER
- EX. CLEANOUT & MANHOLE
- EX. SQUARE, ROUND, & BEEHIVE CATCH BASIN
- EX. YARD DRAIN & ROOF DRAIN
- EX. UNIDENTIFIED STRUCTURE
- PROPOSED WATER MAIN
- PROPOSED HYDRANT AND GATE VALVE
- PROPOSED TAPPING SLEEVE, VALVE & WELL
- PROPOSED POST INDICATOR VALVE
- PROPOSED SANITARY SEWER
- PROPOSED SANITARY CLEANOUT & MANHOLE
- PROPOSED STORM SEWER
- PROPOSED STORM SEWER CLEANOUT & MANHOLE
- PROPOSED CATCH BASIN, INLET & YARD DRAIN

STORM SEWER QUANTITIES:

12" RCP CL-IV PIPE	1,022 LF
12" HDPE PIPE	120 LF
4' DIA. CATCH BASIN	9 EA.
4' DIA. MANHOLE	4 EA.
CONNECT TO EXISTING MANHOLE	4 EA.

WATER MAIN QUANTITIES:

12" D.I.W.M. CLASS 54	259 LF
CONNECT TO EXISTING WATER MAIN	4 EA.
SALVAGED HYDRANT ASSEMBLY	1 EA.

NOTE:
CONTRACTOR TO VERIFY ALL QUANTITIES. ANY DEVIATIONS TO THE PLAN QUANTITIES SHALL BE BROUGHT TO THE ATTENTION OF PEA GROUP FOR VERIFICATION, PRIOR TO BIDDING.

PREMIUM TRENCH BACKFILL NOTE:
ALL UTILITIES UNDER PAVEMENT OR WITHIN 3' OF THE EDGE OF PAVEMENT (OR WITHIN THE 45° LINE OF INFLUENCE OF PAVEMENT) SHALL HAVE M.D.O.T. CLASS II GRANULAR BACKFILL COMPACTED TO 95% MAX. DRY DENSITY (ASTM D-1557).

REFER TO:
UTILITY NOTES ON SHEET C-9.0
STORM SEWER DESIGN ON SHEET [illegible]
UTILITY NOTES AND DETAILS ON SHEET C-9.0

PUBLIC UTILITY EASEMENTS:
ALL SANITARY SEWERS 15" AND LARGER IN DIAMETER ARE TO BE PUBLIC AND SHALL BE LOCATED IN A [illegible]' WIDE EASEMENT. ALL WATER MAIN SHALL BE LOCATED IN A [illegible]' WIDE EASEMENT.

CITY OF TROY STORM SEWER FRAME AND COVER NOTES

MANHOLE
FRAME: EJ 1000
COVER: TYPE "C" PERFORATED WITH "CITY OF TROY STORM" TEXT

CATCH BASIN - PAVEMENT (RESIDENTIAL)
FRAME: EJ 5080
COVER: SINUSOIDAL M2

CATCH BASIN - PAVEMENT (NON-RESIDENTIAL)
FRAME: EJ 5105
COVER: SINUSOIDAL M2

CATCH BASIN - NON-PAVEMENT
FRAME: EJ 1000
COVER: TYPE "M","N" OR "01" HEAVY DUTY

CATCH BASIN - LANDSCAPE AREA OR ROADSIDE DITCH MAY REQUIRE:
- EJ 1040 TYPE "N" OVAL GRATE OR TYPE 02 BEEHIVE GRATE
- EJ 1130 TYPE "N" OVAL GRATE OR TYPE 01 BEEHIVE GRATE
- EJ 2800 TYPE "N" OVAL GRATE OR TYPE 02 BEEHIVE GRTE
- EJ 6508 OR EJ6517

EXISTING STORM STRUCTURES

EX	1	EXISTING STRUCTURE RIM = 806.86 12" SE 803.50 12" N 802.26 18" S 801.46
EX	2	EXISTING STRUCTURE RIM = 807.00 12" NE 803.50 12" S 802.98
EX	10	EXISTING STRUCTURE RIM = 803.70 12" N 799.90 12" NE 799.90 12" S 799.80 12" NW 799.80
EX	20	EXISTING STRUCTURE RIM = 804.49 12" N 800.63 12" W 801.23 12" E 800.53

HYDRANTS

a	HYDRANT ASSEMBLY F.G. = 810.95

STORM CLEANOUTS

30	C.O. IN BOX RIM. 804.65 INV. 801.13
31	C.O. IN BOX RIM. 804.89 INV. 801.13

STORM STRUCTURES

MH	3	(4' DIA./0' SUMP) RIM = 809.04 12" N 803.85 12" SW 803.75
MH	4	(4' DIA./0' SUMP) RIM = 808.99 12" E 804.64 12" S 804.54
CB	5	(4' DIA./2' SUMP) RIM = 809.00 12" E 805.10 12" W 805.00
CB	6	(4' DIA./2' SUMP) RIM = 809.00 12" W 805.66
MH	7	(4' DIA./0' SUMP) RIM = 807.87 12" E 803.83 12" NW 803.73
CB	8	(4' DIA./2' SUMP) RIM = 809.00 12" E 804.29 12" W 804.19
CB	9	(4' DIA./2' SUMP) RIM = 809.00 12" W 804.85

STORM STRUCTURES

CB	11	(4' DIA./2' SUMP) RIM = 804.19 12" E 800.38 12" S 800.28
CB	12	(4' DIA./2' SUMP) RIM = 803.59 12" W 800.95
MH	21	(4' DIA./0' SUMP) RIM = 804.70 12" NW 800.89 12" NE 800.89 6" SW 801.00 6" SE 801.00 12" S 800.79
CB	22	(4' DIA./2' SUMP) RIM = 805.50 12" SE 801.20 12" SW 801.10
CB	23	(4' DIA./2' SUMP) RIM = 804.43 12" NW 801.36
CB	24	(4' DIA./2' SUMP) RIM = 804.22 12" SE 801.00

NORTH

0 10 20 40
SCALE: 1" = 20'

TMP ARCHITECTURE

TMP ARCHITECTURE INC
1191 WEST SQUARE LAKE ROAD
BLOOMFIELD HILLS · MICHIGAN · 48302
PH · 248.338.4561 FX · 248.338.0223
EM · INFO @ TMP-ARCHITECTURE.COM

STATE OF MICHIGAN
JOSEPH B. WYWROT
ENGINEER
No. 6201045674
LICENSED PROFESSIONAL ENGINEER

CONSULTANT

PEA GROUP
t: 844.813.2949
www.peagroup.com

PROJECT TITLE
Troy High School Athletic Fields Bid Package No. 02B

Troy School District Troy, Michigan

DRAWING TITLE
UTILITY PLAN - TENNIS COURTS

ISSUE DATES

DATE:	ISSUED FOR:
12-10-2024	CONSTRUCTION DOCUMENTS

DRAWN	JW
CHECKED	TD
APPROVED	TD

PROJECT NO.
22104E

DRAWING NO.
C-6.0

Drawing File: S:\PROJECTS\2021\21-0301 TROY SCHOOLS 2022 BOND\DWG\1_CONSTRUCTION\TROY ATHLETICS\TROY HIGH - PHASE 2\TC-6.0UTIL-21-0301- THA PHASE 2.dwg
Dec 16, 2024 - 2:56pm

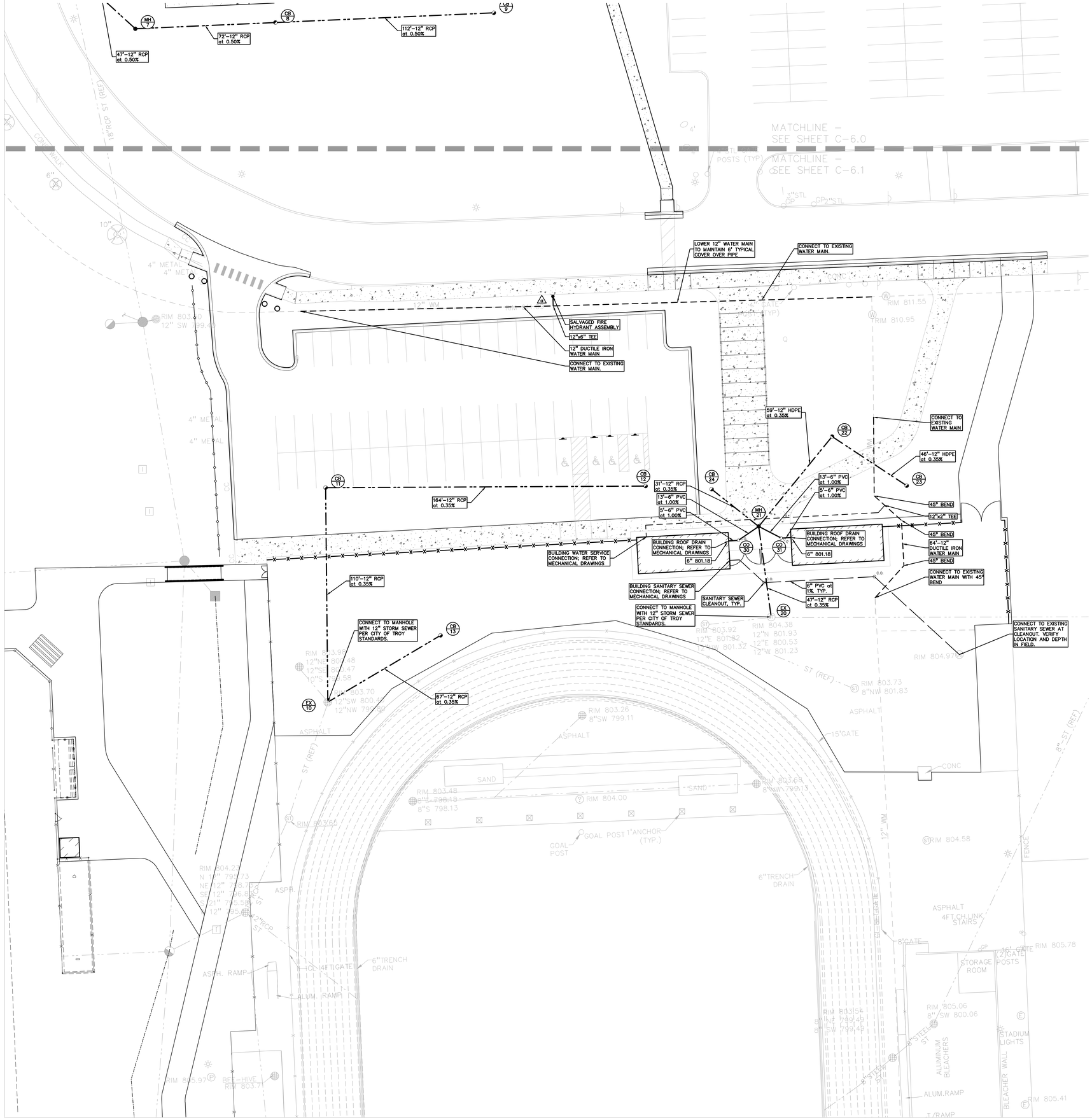

UTILITY LEGEND:

- EX. OH, ELEC, POLE & GUY WIRE
- EX. U.G. CABLE TV & PEDESTAL
- EX. U.G. COMMUNICATION LINE, PEDESTAL & MANHOLE
- EX. U.G. ELEC.MANHOLE, METER & HANDHOLE
- EX. GAS LINE
- EX. GAS VALVE & GAS LINE MARKER
- EX. TRANSFORMER & IRRIGATION VALVE
- EX. WATER MAIN
- EX. HYDRANT, GATE VALVE & POST INDICATOR VALVE
- EX. WATER VALVE BOX & SHUTOFF
- EX. SANITARY SEWER
- EX. SANITARY CLEANOUT & MANHOLE
- EX. COMBINED SEWER MANHOLE
- EX. STORM SEWER
- EX. CLEANOUT & MANHOLE
- EX. SQUARE, ROUND, & BEEHIVE CATCH BASIN
- EX. YARD DRAIN & ROOF DRAIN
- EX. UNIDENTIFIED STRUCTURE
- PROPOSED WATER MAIN
- PROPOSED HYDRANT AND GATE VALVE
- PROPOSED TAPPING SLEEVE, VALVE & WELL
- PROPOSED POST INDICATOR VALVE
- PROPOSED SANITARY SEWER
- PROPOSED SANITARY CLEANOUT & MANHOLE
- PROPOSED STORM SEWER
- PROPOSED STORM SEWER CLEANOUT & MANHOLE
- PROPOSED CATCH BASIN, INLET & YARD DRAIN

STORM SEWER QUANTITIES:

12" RCP CL-IV PIPE	1,022 LF
12" HDPE PIPE	120 LF
4' DIA. CATCH BASIN	9 EA.
4' DIA. MANHOLE	4 EA.
CONNECT TO EXISTING MANHOLE	4 EA.

WATER MAIN QUANTITIES:

12" D.I.W.M. CLASS 54	259 LF
CONNECT TO EXISTING WATER MAIN	4 EA.
SALVAGED HYDRANT ASSEMBLY	1 EA.

NOTE:
CONTRACTOR TO VERIFY ALL QUANTITIES. ANY DEVIATIONS TO THE PLAN QUANTITIES SHALL BE BROUGHT TO THE ATTENTION OF PEA GROUP FOR VERIFICATION, PRIOR TO BIDDING.

PREMIUM TRENCH BACKFILL NOTE:
ALL UTILITIES UNDER PAVEMENT OR WITHIN 3' OF THE EDGE OF PAVEMENT (OR WITHIN THE 45° LINE OF INFLUENCE OF PAVEMENT) SHALL HAVE M.D.O.T. CLASS II GRANULAR BACKFILL COMPACTED TO 95% MAX. DRY DENSITY (ASTM D-1557).

REFER TO:
UTILITY NOTES ON SHEET C-9.0
STORM SEWER DESIGN ON SHEET D-X.X
UTILITY NOTES AND DETAILS ON SHEET C-9.0

PUBLIC UTILITY EASEMENTS:
ALL SANITARY SEWERS 7" AND LARGER IN DIAMETER ARE TO BE PUBLIC AND SHALL BE LOCATED IN A 30' WIDE EASEMENT. ALL WATER MAIN SHALL BE LOCATED IN A 30' WIDE EASEMENT.

CITY OF TROY STORM SEWER FRAME AND COVER NOTES

MANHOLE
FRAME: EJ 1000
COVER: TYPE "C" PERFORATED WITH "CITY OF TROY STORM" TEXT

CATCH BASIN - PAVEMENT (RESIDENTIAL)
FRAME: EJ 5080
COVER: SINUSOIDAL M2

CATCH BASIN - PAVEMENT (NON-RESIDENTIAL)
FRAME: EJ 5105
COVER: SINUSOIDAL M2

CATCH BASIN - NON-PAVEMENT
FRAME: EJ 1000
COVER: TYPE "M","N" OR "01" HEAVY DUTY

CATCH BASIN - LANDSCAPE AREA OR ROADSIDE DITCH MAY REQUIRE:
- EJ 1040 TYPE "N" OVAL GRATE OR TYPE 02 BEEHIVE GRATE
- EJ 1130 TYPE "N" OVAL GRATE OR TYPE 01 BEEHIVE GRATE
- EJ 2800 TYPE "N" OVAL GRATE OR TYPE 02 BEEHIVE GRTE
- EJ 6508 OR EJ6517

EXISTING STORM STRUCTURES

EX	1	EXISTING STRUCTURE RIM = 806.86 12" SE 803.50 12" N 802.26 18" S 801.46
EX	2	EXISTING STRUCTURE RIM = 807.00 12" NE 803.50 12" S 802.98
EX	10	EXISTING STRUCTURE RIM = 803.70 12" N 799.90 12" NE 799.90 12" S 799.80 12" NW 799.80
EX	20	EXISTING STRUCTURE RIM = 804.49 12" N 800.63 12" W 801.23 12" E 800.53

HYDRANTS

⌀	HYDRANT ASSEMBLY F.G. = 810.95

STORM CLEANOUTS

30	C.O. IN BOX RIM. 804.65 INV. 801.13
31	C.O. IN BOX RIM. 804.89 INV. 801.13

STORM STRUCTURES

MH	3	(4' DIA./0' SUMP) RIM = 809.04 12" N 803.85 12" SW 803.75
MH	4	(4' DIA./0' SUMP) RIM = 808.99 12" E 804.64 12" S 804.54
CB	5	(4' DIA./2' SUMP) RIM = 809.00 12" E 805.10 12" W 805.00
CB	6	(4' DIA./2' SUMP) RIM = 809.00 12" W 805.66
MH	7	(4' DIA./0' SUMP) RIM = 807.87 12" E 803.83 12" NW 803.73
CB	8	(4' DIA./2' SUMP) RIM = 809.00 12" E 804.29 12" W 804.19
CB	9	(4' DIA./2' SUMP) RIM = 809.00 12" W 804.85

STORM STRUCTURES

CB	11	(4' DIA./2' SUMP) RIM = 804.19 12" E 800.38 12" S 800.28
CB	12	(4' DIA./2' SUMP) RIM = 803.59 12" W 800.95
MH	21	(4' DIA./0' SUMP) RIM = 804.70 12" NW 800.89 12" NE 800.89 12" SW 801.00 6" SE 801.00 12" S 800.79
CB	22	(4' DIA./2' SUMP) RIM = 805.50 12" SE 801.20 12" SW 801.10
CB	23	(4' DIA./2' SUMP) RIM = 804.43 12" NW 801.36
CB	24	(4' DIA./2' SUMP) RIM = 804.22 12" SE 801.00

NORTH

0 10 20 40
SCALE: 1" = 20'

TMP ARCHITECTURE

TMP ARCHITECTURE INC
1191 WEST SQUARE LAKE ROAD
BLOOMFIELD HILLS - MICHIGAN - 48302
PH - 248.338.4561 FX - 248.338.0223
EM - INFO @TMP-ARCHITECTURE.COM

STATE OF MICHIGAN
JOSEPH B. WYWROT
ENGINEER
No. 6201045674
LICENSED PROFESSIONAL ENGINEER

CONSULTANT

PEA GROUP
t: 844.813.2949
www.peagroup.com

PROJECT TITLE
Troy High School Athletic Fields Bid Package No. 02B

Troy School District
Troy, Michigan

DRAWING TITLE
UTILITY PLAN - STADIUM ENTRANCE

ISSUE DATES

12-10-2024	CONSTRUCTION DOCUMENTS

DATE:	ISSUED FOR:
DRAWN	JW
CHECKED	TD
APPROVED	TD

PROJECT NO.
22104E

DRAWING NO.
C-6.1

Drawing File: S:\PROJECTS\2021\21-0301 TROY SCHOOLS 2022 BOND\DWGS\1_CONSTRUCTION\TROY ATHLETICS\TROY HIGH - PHASE 2\1C-6.0\TR-21-0301-THA PHASE 2.dwg
Dec 10, 2024 - 3:56pm

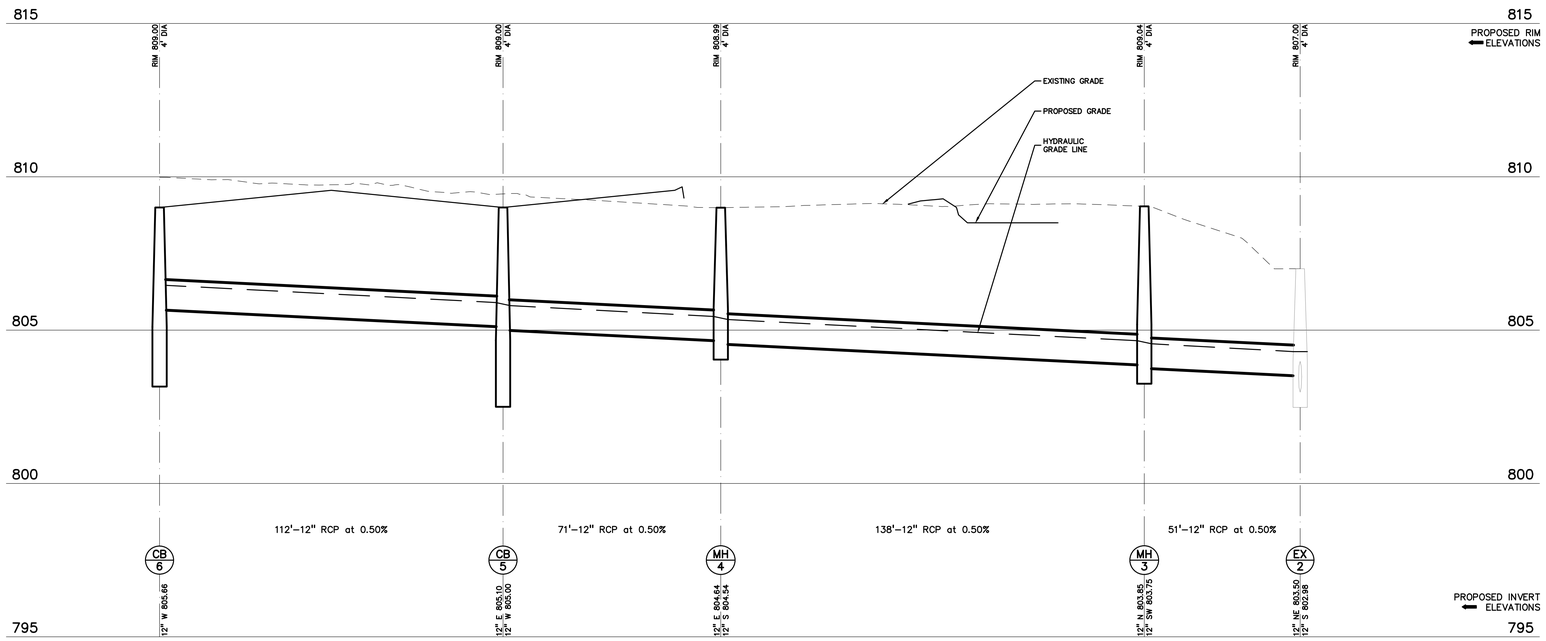

ST 6–EX 2 PROFILE

HORIZ: 1" = 20'
VERT: 1" = 2'

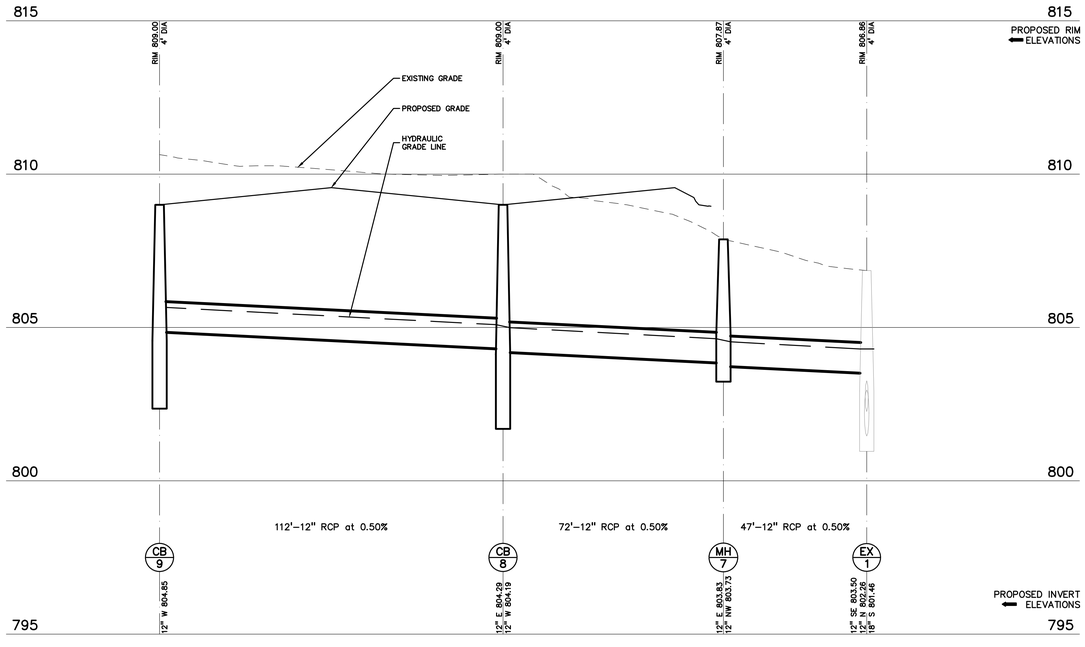

ST 9–EX 1 PROFILE

HORIZ: 1" = 20'
VERT: 1" = 2'

TMP ARCHITECTURE

TMP ARCHITECTURE INC
1191 WEST SQUARE LAKE ROAD
BLOOMFIELD HILLS · MICHIGAN · 48302
PH · 248.338.4561 FX · 248.338.0223
EM · INFO@TMP-ARCHITECTURE.COM

STATE OF MICHIGAN
JOSEPH B. WYWROT
ENGINEER
No. 6201045674
LICENSED PROFESSIONAL ENGINEER

CONSULTANT

PEA GROUP
t: 844.813.2949
www.peagroup.com

PROJECT TITLE

Troy High School Athletic Fields
Bid Package No. 02B

Troy School District
Troy, Michigan

DRAWING TITLE
STORM SEWER PROFILES

ISSUE DATES

12-10-2024	CONSTRUCTION DOCUMENTS
DATE:	ISSUED FOR:
DRAWN	JW
CHECKED	TD
APPROVED	TD

PROJECT NO.
22104E

DRAWING NO.
C-7.0

Drawing File: S:\PROJECTS\2021\21-0301 TROY SCHOOLS 2022 BOND\CAD\1_CONSTRUCTION\TROY ATHLETICS\TROY HIGH – PHASE 2\(C-7.0)PRF-21-0301-THA PHASE 2.dwg
Date: NL, 2024 - 3:56pm

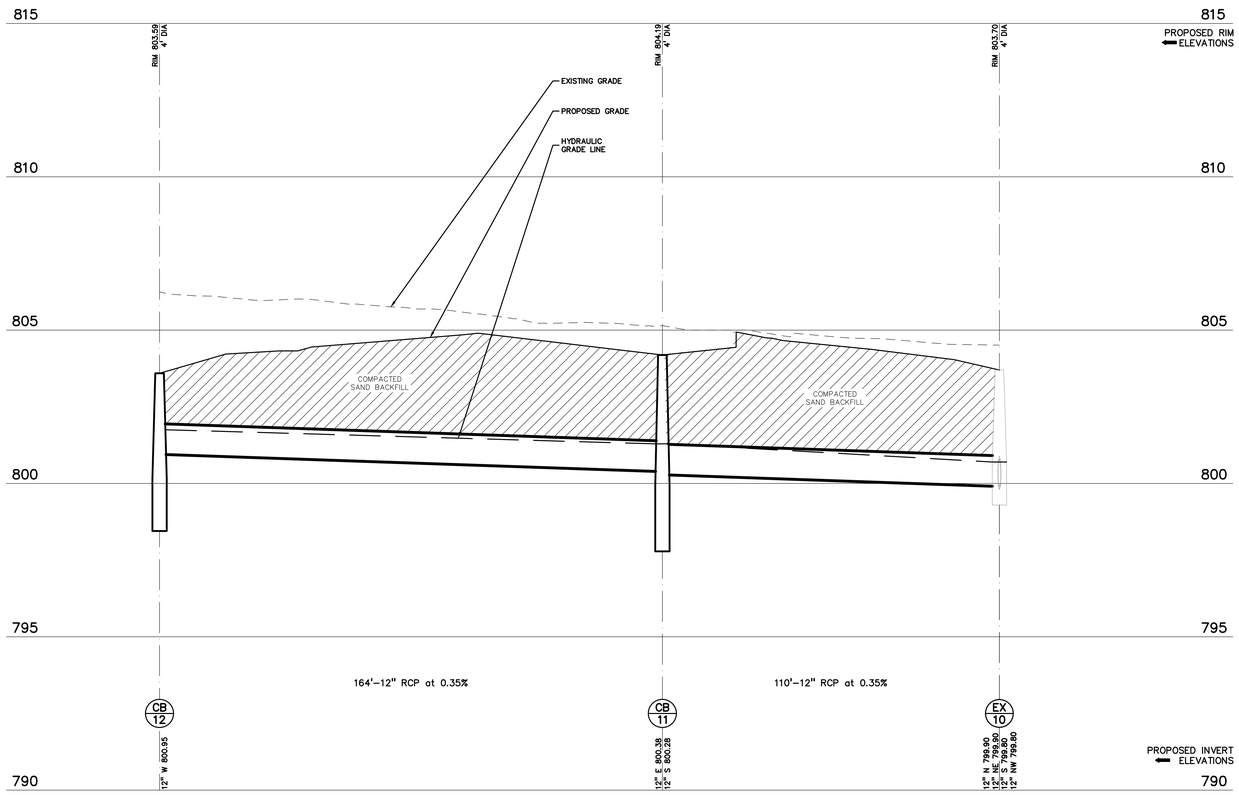

ST 12–10 PROFILE

HORIZ: 1" = 20'
VERT: 1" = 2'

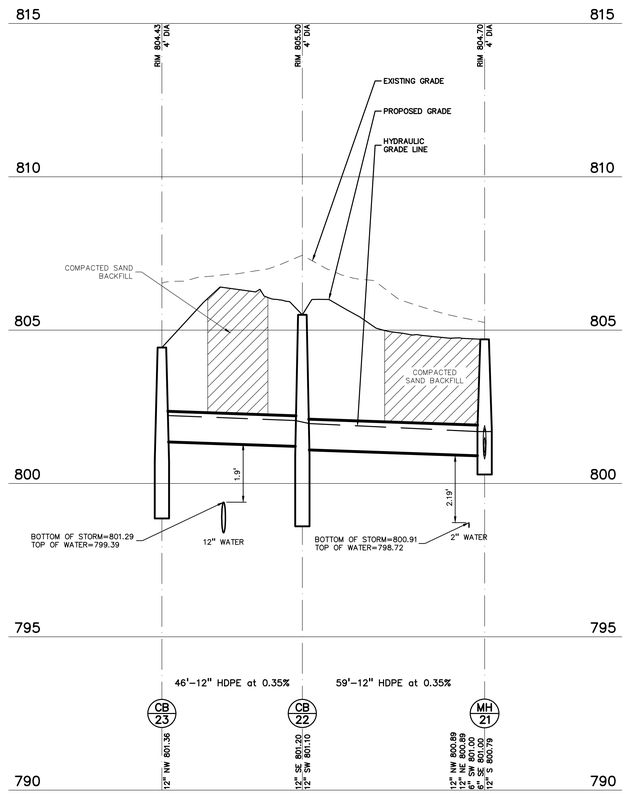

ST 23–21 PROFILE

HORIZ: 1" = 20'
VERT: 1" = 2'

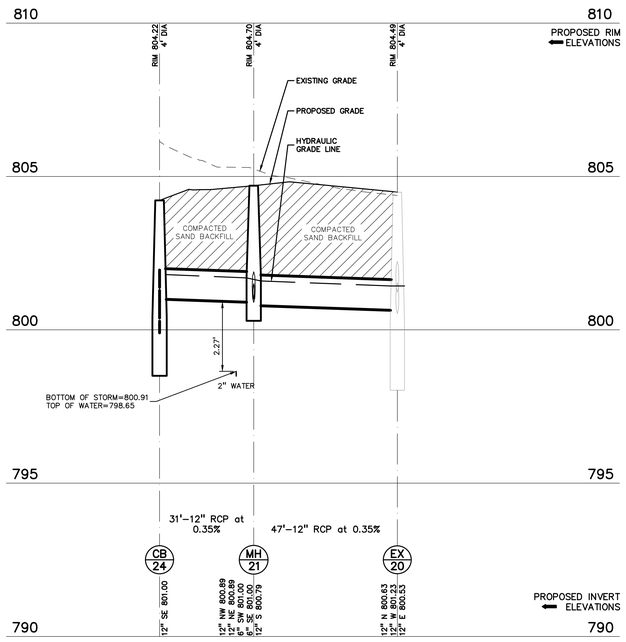

ST 24–EX 20 PROFILE

HORIZ: 1" = 20'
VERT: 1" = 2'

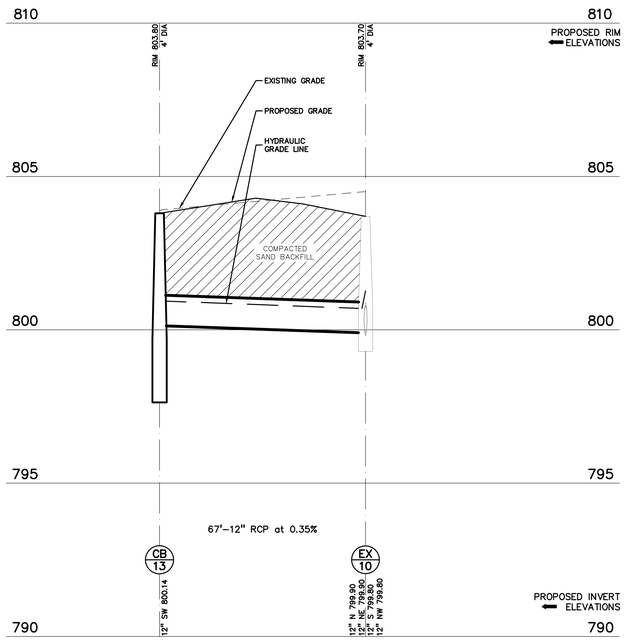

ST 13–10 PROFILE

HORIZ: 1" = 20'
VERT: 1" = 2'

TMP ARCHITECTURE

TMP ARCHITECTURE INC
1191 WEST SQUARE LAKE ROAD
BLOOMFIELD HILLS · MICHIGAN · 48302
PH · 248.338.4561 FX · 248.338.0223
EM · INFO@TMP-ARCHITECTURE.COM

STATE OF MICHIGAN
JOSEPH B. WYWROT
ENGINEER
No. 6201045674
LICENSED PROFESSIONAL ENGINEER

CONSULTANT

PEA GROUP
t: 844.813.2949
www.peagroup.com

PROJECT TITLE
Troy High School Athletic Fields Bid Package No. 02B

Troy School District
Troy, Michigan

DRAWING TITLE
STORM SEWER PROFILES

ISSUE DATES

DATE:	ISSUED FOR:
12–10–2024	CONSTRUCTION DOCUMENTS

DRAWN	JW
CHECKED	TD
APPROVED	TD

PROJECT NO.
22104E

DRAWING NO.
C-7.1

Drawing File: S:\PROJECTS\2021\21-0301 TROY SCHOOLS 2022 BOND\DWGS\1_CONSTRUCTION\TROY ATHLETICS\TROY HIGH - PHASE 2\(C-7.0)PRP-21-0301-THA PHASE 2.dwg
Dec 10, 2024 - 3:51pm

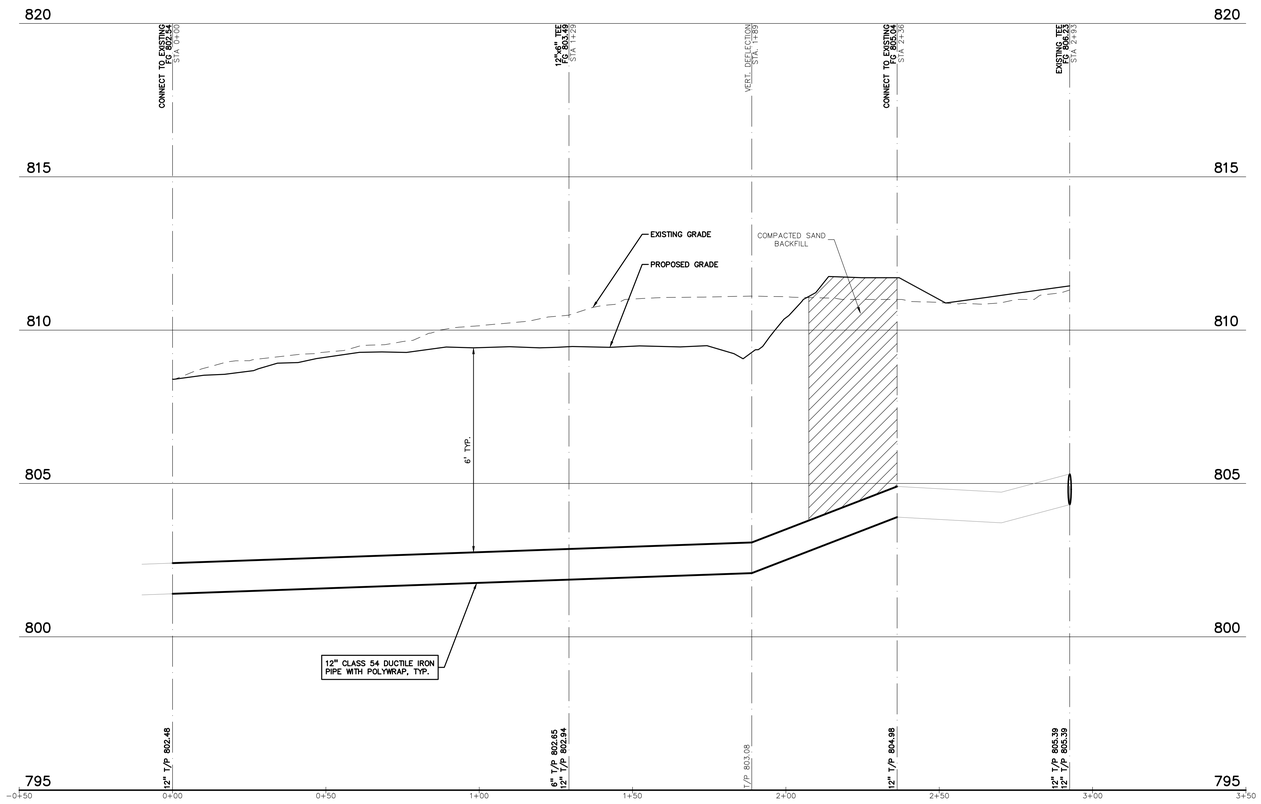

WATER MAIN LOWERING

HORIZ: 1" = 20'
VERT: 1" = 2'

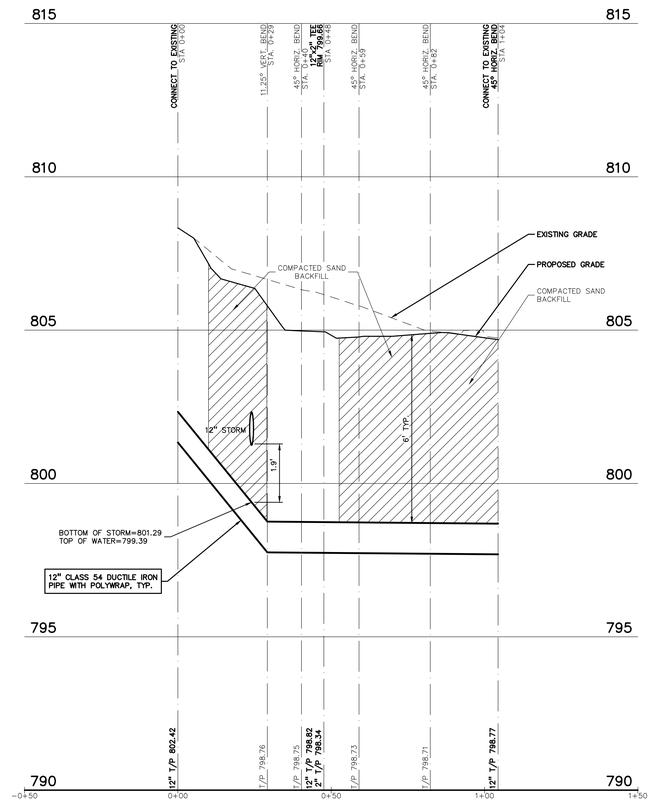

WATER MAIN REROUTE

HORIZ: 1" = 20'
VERT: 1" = 2'

TMP ARCHITECTURE

TMP ARCHITECTURE INC
1191 WEST SQUARE LAKE ROAD
BLOOMFIELD HILLS - MICHIGAN - 48302
PH - 248.338.4561 FX - 248.338.0223
EM - INFO@TMP-ARCHITECTURE.COM

STATE OF MICHIGAN
JOSEPH B. WYWROT
ENGINEER
No. 6201045674
LICENSED PROFESSIONAL ENGINEER

CONSULTANT

PEA GROUP
t: 844.813.2949
www.peagroup.com

PROJECT TITLE
Troy High School Athletic Fields Bid Package No. 02B

Troy School District Troy, Michigan

DRAWING TITLE
WATER MAIN PROFILES

ISSUE DATES

DATE:	ISSUED FOR:
12-10-2024	CONSTRUCTION DOCUMENTS

DRAWN	JW
CHECKED	TD
APPROVED	TD

PROJECT NO.
22104E

DRAWING NO.
C-7.2

Drawing File: S:\PROJECTS\2021\21-0301 TROY SCHOOLS 2022 BOND\DWG\3_CONSTRUCTION\TROY ATHLETICS\TROY HIGH - PHASE 2\(C-7.0)PRP-21-0301-THA PHASE 2.dwg
Dec 10, 2024 - 3:51pm

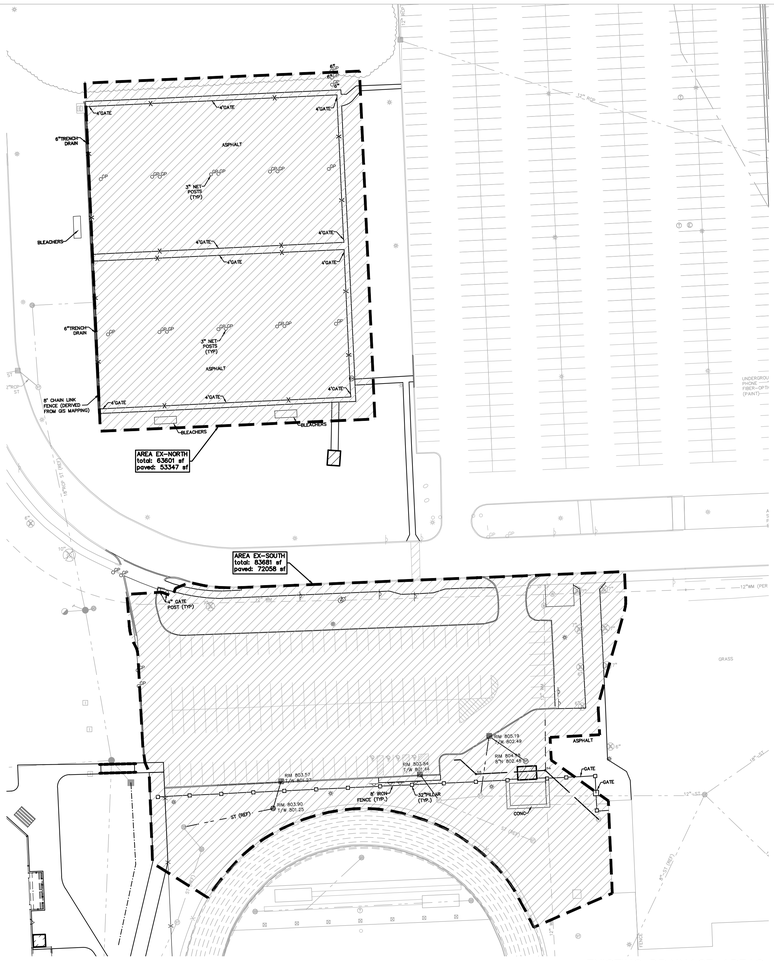

EXISTING DRAINAGE AREAS
SCALE: 1" = 50'

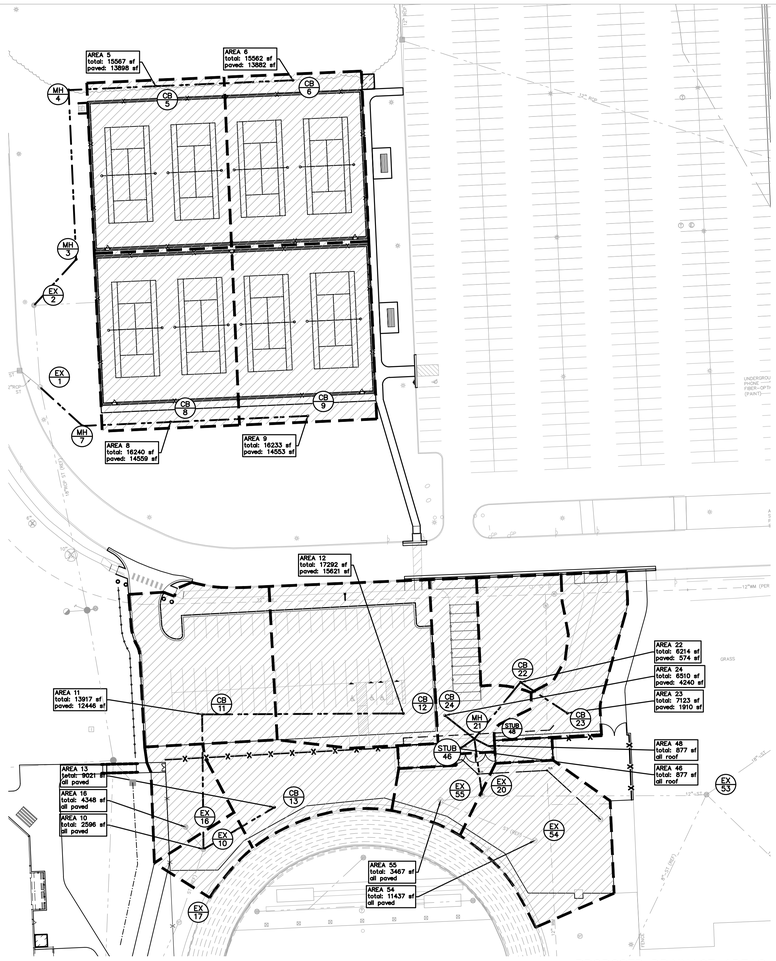

PROPOSED DRAINAGE AREAS
SCALE: 1" = 50'

AREA	IMPERVIOUS (SF)	PERVIOUS (SF)	TOTAL (SF)
EXISTING CONDITION			
NORTH	53,347	10,254	63,601
SOUTH	72,058	11,623	83,681
TOTAL	125,405	21,877	147,282

PROPOSED CONDITION			
NORTH			
5	13,898	1,680	15,578
6	13,882	1,680	15,562
8	14,559	1,681	16,240
9	14,553	1,680	16,233
SUB-TOTAL	56,892	6,721	63,613
SOUTH			
10	2,596	0	2,596
11	12,446	1,471	13,917
12	15,621	1,671	17,292
13	9,021	0	9,021
16	4,348	0	4,348
22	574	5,640	6,214
23	1,910	5,213	7,123
24	4,240	2,270	6,510
46	877	0	877
48	877	0	877
54	11,437	0	11,437
55	3,467	0	3,467
SUB-TOTAL	67,414	16,265	83,679
TOTAL	124,306	22,986	147,292

DIFFERENCE			
PR-EX	-1,099	1,109	10

STORM SEWER SYSTEM DESIGN

Region Michigan
Location: Oakland County

I = B/(T+D)^E B = 50.12 D = 9.17 E = 0.81
C = varies
T = 15 (min.) Pipe "n" Value = 0.013

FROM STR	TO STR	AREA (A) (Acres)	COEF. C	A x C	TOTAL AREA (AxC)	TOTAL AREA (Acres)	TIME t (min.)	INT. I (in/hr)	FLOW Q (cfs)	PIPE CAP. (cfs)	PIPE DIA. (in.)	PIPE LENGTH (ft.)	PIPE SLOPE (%)	MIN HG PER "Q"	VEL. FULL (ft./sec)	TIME FLOW (min.)	H.G.L. ELEV. UP STREAM	H.G.L. ELEV. DOWN STREAM	RIM ELEV. UP STREAM	RIM ELEV. DOWN STREAM	INVERT ELEV. UP STREAM	INVERT ELEV. DOWN STREAM	PIPE COVER UP STREAM	PIPE COVER DOWN STREAM	HGL COVER UP STREAM	HGL COVER DOWN STREAM
6	5	0.36	0.88	0.31	0.31	0.36	15.00	3.80	1.19	2.52	12	112	0.50	0.11%	3.2	0.6	806.46	805.90	809.00	809.00	805.66	805.10	2.17	2.73	2.54	3.10
5	4	0.36	0.88	0.31	0.63	0.71	15.60	3.72	2.34	2.52	12	71	0.50	0.43%	3.2	0.4	805.80	805.44	809.00	808.99	805.00	804.64	2.83	3.18	3.20	3.55
4	3	0.00	0.00	0.00	0.63	0.71	16.00	3.68	2.34	2.52	12	138	0.50	0.43%	3.2	0.7	805.34	804.65	808.99	809.04	804.54	803.85	3.28	4.02	3.65	4.38
3	2	0.00	0.00	0.00	0.63	0.71	16.70	3.59	2.34	2.52	12	51	0.50	0.43%	3.2	0.3	804.55	804.30	809.04	807.00	803.75	803.50	4.12	2.33	4.48	2.70
9	8	0.37	0.88	0.33	0.33	0.37	15.00	3.80	1.25	2.52	12	112	0.50	0.12%	3.2	0.6	805.65	805.09	809.00	809.00	804.85	804.29	2.98	3.54	3.35	3.91
8	7	0.37	0.88	0.33	0.66	0.75	15.60	3.72	2.45	2.52	12	72	0.50	0.47%	3.2	0.4	804.99	804.63	809.00	807.87	804.19	803.83	3.64	2.87	4.01	3.24
7	1	0.00	0.00	0.00	0.66	0.75	16.00	3.68	2.45	2.52	12	47	0.50	0.47%	3.2	0.2	804.53	804.30	807.87	806.86	803.73	803.50	2.97	2.19	3.34	2.56
12	11	0.40	0.89	0.35	0.35	0.40	15.00	3.80	1.34	2.09	12	164	0.35	0.14%	2.7	1.0	801.75	801.18	803.59	804.19	800.95	800.38	1.47	2.64	1.84	3.01
11	10	0.32	0.88	0.28	0.63	0.72	16.00	3.68	2.33	2.11	12	110	0.35	0.43%	2.7	0.7	801.17	800.70	804.19	803.70	800.28	799.90	2.74	2.63	3.02	3.00
13	10	0.21	0.95	0.20	0.20	0.21	15.00	3.80	0.75	2.11	12	67	0.35	0.04%	2.7	0.4	800.94	800.70	803.80	803.70	800.14	799.90	2.50	2.63	2.86	3.00
16	10	0.10	0.95	0.09	0.09	0.10	15.00	3.80	0.36	6.06	12	23	2.89	0.01%	7.7	0.1	801.27	800.70	803.98	803.70	800.47	799.80	2.35	2.74	2.71	3.00
10	17	0.06	0.95	0.06	0.98	1.08	15.10	3.79	3.72	3.42	12	63	0.92	1.09%	4.4	0.2	800.70	800.02	803.70	803.65	799.80	799.22	2.74	3.26	3.00	3.63
23	22	0.16	0.47	0.08	0.08	0.16	15.00	3.80	0.29	2.11	12	46	0.35	0.01%	2.7	0.3	802.16	802.00	804.43	805.97	801.36	801.20	1.91	3.60	2.27	3.97
22	21	0.14	0.36	0.05	0.13	0.31	15.30	3.76	0.48	2.09	12	59	0.35	0.02%	2.7	0.4	801.90	801.69	805.97	804.70	801.10	800.89	3.70	2.64	4.07	3.01
21	20	0.00	0.00	0.00	0.28	0.50	15.70	3.71	1.02	2.11	12	47	0.35	0.08%	2.7	0.3	801.59	801.43	804.70	804.49	800.79	800.63	2.74	2.69	3.11	3.06
24	21	0.15	0.72	0.11	0.11	0.15	15.00	3.80	0.41	2.11	12	31	0.35	0.01%	2.7	0.2	801.80	801.69	804.22	804.70	801.00	800.89	2.05	2.64	2.42	3.01
46	30	0.02	0.95	0.02	0.02	0.02	15.00	3.80	0.07	0.56	6	5	1.00	0.02%	2.9	0.0	801.58	801.53	804.59	804.65	801.18	801.13	2.79	2.90	3.02	3.12
30	21	0.00	0.00	0.00	0.02	0.02	15.00	3.80	0.07	0.56	6	13	1.00	0.02%	2.9	0.1	801.53	801.40	804.65	804.70	801.13	801.00	2.90	3.08	3.12	3.30
48	31	0.02	0.95	0.02	0.02	0.02	15.00	3.80	0.07	0.56	6	5	1.00	0.02%	2.9	0.0	801.58	801.53	804.94	804.89	801.18	801.13	3.14	3.13	3.36	3.36
31	21	0.00	0.00	0.00	0.02	0.02	15.00	3.80	0.07	0.56	6	13	1.00	0.02%	2.9	0.1	801.53	801.40	804.89	804.70	801.13	801.00	3.13	3.08	3.36	3.30
54	55	0.26	0.95	0.25	0.25	0.26	15.00	3.80	0.95	2.49	12	83	0.49	0.07%	3.2	0.4	802.63	802.22	804.19	803.92	801.83	801.42	1.20	1.33	1.56	1.70
55	20	0.08	0.95	0.08	0.33	0.34	15.40	3.75	1.22	1.82	12	34	0.26	0.12%	2.3	0.2	802.12	802.03	803.92	804.49	801.32	801.23	1.43	2.09	1.80	2.46
20	53	0.00	0.00	0.00	0.60	0.84	15.60	3.72	2.24	2.11	12	183	0.35	0.39%	2.7	1.1	801.41	800.69	804.49	801.06	800.53	799.89	2.79	0.00	3.08	0.37

NORTH

0 25 50 100
SCALE: 1" = 50'

TMP ARCHITECTURE
TMP ARCHITECTURE INC
1191 WEST SQUARE LAKE ROAD
BLOOMFIELD HILLS · MICHIGAN · 48302
PH · 248.338.4561 FX · 248.338.0223
EM · INFO @ TMP-ARCHITECTURE.COM

STATE OF MICHIGAN
JOSEPH B. WYWROT
ENGINEER
No. 6201045674
LICENSED PROFESSIONAL ENGINEER

CONSULTANT

PEA GROUP
t: 844.813.2949
www.peagroup.com

PROJECT TITLE
Troy High School Athletic Fields Bid Package No. 02B

Troy School District Troy, Michigan

DRAWING TITLE
STORM WATER CALCULATIONS

ISSUE DATES

DATE:	ISSUED FOR:
12-10-2024	CONSTRUCTION DOCUMENTS

DRAWN	JW
CHECKED	TD
APPROVED	TD

PROJECT NO.
22104E

DRAWING NO.
C-8.0

Drawing File: J:\PROJECTS\2023\23-0301 TROY SCHOOLS 2022 BOND\DWGS_CONSTRUCTION\TROY ATHLETICS\TROY HIGH - PHASE 2\C-8.0CALC-23-0301- THA PHASE 2.dwg
Dec 16, 2024 - 4:39pm

GENERAL NOTES:

THESE NOTES APPLY TO ALL CONSTRUCTION ACTIVITIES ON THIS PROJECT.

1. ALL CONSTRUCTION, WORKMANSHIP AND MATERIALS SHALL BE IN ACCORDANCE WITH CURRENT OSHA, MDOT AND MUNICIPALITY STANDARDS AND REGULATIONS.
2. THE CONTRACTOR SHALL NOTIFY THE CITY ENGINEER AND/OR THE AUTHORITY HAVING JURISDICTION 3 BUSINESS DAYS PRIOR TO THE BEGINNING OF CONSTRUCTION.
3. THE CONTRACTOR SHALL CONTACT THE ENGINEER SHOULD THEY ENCOUNTER ANY DESIGN ISSUES DURING CONSTRUCTION. IF THE CONTRACTOR MAKES DESIGN MODIFICATIONS WITHOUT THE WRITTEN DIRECTION OF THE DESIGN ENGINEER, THE CONTRACTOR DOES SO AT HIS OWN RISK.
4. ALL NECESSARY PERMITS, TESTING, BONDS AND INSURANCES ETC., SHALL BE PAID FOR BY THE CONTRACTOR. THE OWNER SHALL PAY FOR ALL CITY INSPECTION FEES.
5. THE CONTRACTOR SHALL NOTIFY THE APPROPRIATE 811/ONE CALL UTILITY LOCATING CENTER, THE CITY ENGINEER AND/OR THE AUTHORITY HAVING JURISDICTION 3 BUSINESS DAYS PRIOR TO THE BEGINNING OF CONSTRUCTION. IF NO NOTIFICATION IS GIVEN AND DAMAGE RESULTS, SAID DAMAGE WILL BE REPAIRED AT SOLE EXPENSE OF THE CONTRACTOR. IF EXISTING UTILITY LINES ARE ENCOUNTERED THAT CONFLICT IN LOCATION WITH NEW CONSTRUCTION, THE CONTRACTOR SHALL NOTIFY THE DESIGN ENGINEER SO THAT THE CONFLICT MAY BE RESOLVED.
6. CONTRACTOR SHALL VERIFY THAT THE PLANS AND SPECIFICATIONS ARE THE VERY LATEST PLANS AND SPECIFICATIONS AND FURTHERMORE, VERIFY THAT THESE PLANS AND SPECIFICATIONS HAVE BEEN APPROVED. ALL ITEMS CONSTRUCTED BY THE CONTRACTOR PRIOR TO RECEIVING FINAL APPROVAL, HAVING TO BE ADJUSTED OR RE-DONE, SHALL BE AT THE CONTRACTORS EXPENSE. SHOULD THE CONTRACTOR ENCOUNTER A CONFLICT BETWEEN THESE PLANS AND/OR SPECIFICATIONS, THEY SHALL SEEK CLARIFICATION IN WRITING FROM THE ENGINEER BEFORE COMMENCEMENT OF CONSTRUCTION. FAILURE TO DO SO SHALL BE AT SOLE EXPENSE TO THE CONTRACTOR.
7. ANY WORK WITHIN THE STREET OR HIGHWAY RIGHTS-OF-WAY SHALL BE PERFORMED IN ACCORDANCE WITH THE REQUIREMENTS OF THE AGENCIES HAVING JURISDICTION AND SHALL NOT BEGIN UNTIL ALL NECESSARY PERMITS HAVE BEEN ISSUED FOR THE WORK.
8. ALL PROPERTIES OR FACILITIES IN THE SURROUNDING AREAS, PUBLIC OR PRIVATE, DESTROYED OR OTHERWISE DISTURBED DUE TO CONSTRUCTION, SHALL BE REPLACED AND/OR RESTORED TO THE ORIGINAL CONDITION BY THE CONTRACTOR.
9. THE CONTRACTOR SHALL PROVIDE ALL NECESSARY BARRICADING, SIGNAGE, LIGHTS AND TRAFFIC CONTROL DEVCES TO PROTECT THE WORK AND SAFELY MAINTAIN TRAFFIC IN ACCORDANCE WITH LOCAL REQUIREMENTS AND THE MANUAL OF UNIFORM TRAFFIC CONTROL DEVICES (LATEST EDITION). THE DESIGN ENGINEER, OWNER, CITY, AND STATE SHALL NOT BE HELD LIABLE FOR ANY CLAIMS RESULTING FROM ACCIDENTS OR DAMAGES CAUSED BY THE CONTRACTOR'S FAILURE TO COMPLY WITH TRAFFIC AND PUBLIC SAFETY REGULATIONS DURING THE CONSTRUCTION PERIOD.
10. THE USE OF CRUSHED CONCRETE IS PROHIBITED ON THE PROJECT WITHIN 100 FEET OF ANY WATER COURSE (STREAM, RIVER, COUNTY DRAIN, ETC.) AND LAKE, REGARDLESS OF THE APPLICATION OR LOCATION OF THE WATER COURSE OR LAKE RELATIVE TO THE PROJECT LIMITS.
11. IT SHALL BE THE RESPONSIBILITY OF THE CONTRACTOR TO ADJUST THE TOP OF ALL EXISTING AND PROPOSED STRUCTURES (MANHOLES, CATCH BASINS, INLETS, GATE WELLS ETC.) WITHIN GRADED AND /OR PAVED AREAS TO FINAL GRADE SHOWN ON THE PLANS. ALL SUCH ADJUSTMENTS SHALL BE INCIDENTAL TO THE JOB AND WILL NOT BE PAID FOR SEPARATELY.

PAVING NOTES:

1. IN AREAS WHERE NEW PAVEMENTS ARE BEING CONSTRUCTED, THE TOPSOIL AND SOIL CONTAINING ORGANIC MATTER SHALL BE REMOVED PRIOR TO PAVEMENT CONSTRUCTION.
2. REFER TO ARCHITECTURAL PLANS FOR DETAILS OF FROST SLAB AT EXTERIOR BUILDING DOORS.
3. CONSTRUCTION TRAFFIC SHOULD BE MINIMIZED ON THE NEW PAVEMENT. IF CONSTRUCTION TRAFFIC IS ANTICIPATED ON THE PAVEMENT STRUCTURE, THE INITIAL LIFT THICKNESS COULD BE INCREASED AND PLACEMENT OF THE FINAL LIFT COULD BE DELAYED UNTIL THE MAJORITY OF THE CONSTRUCTION ACTIVITIES HAVE BEEN COMPLETED. THIS ACTION WILL ALLOW REPAIR OF LOCALIZED FAILURE, IF ANY DOES OCCUR, AS WELL AS REDUCE LOAD DAMAGE ON THE PAVEMENT SYSTEM.
4. ALL EXPANSION JOINTS AND CONCRETE PAVEMENT JOINTS TO BE SEALED.
5. CONCRETE PAVEMENT JOINTING – UNLESS SHOWN OTHERWISE IN THE PLANS OR REQUIRED BY THE AUTHORITY HAVING JURISDICTION:
   - 5.1. WHERE PROPOSED CONCRETE ABUTS A STRUCTURE, PROVIDE A MINIMUM 1/2" EXPANSION JOINT. THE JOINT FILLER BOARD MUST BE AT LEAST THE FULL DEPTH OF THE CONCRETE AND HELD DOWN A 1/2" TO ALLOW FOR SEALING.
   - 5.2. WHERE PROPOSED CONCRETE ABUTS EXISTING CONCRETE OR IN BETWEEN POURS OF PROPOSED CONCRETE (CONSTRUCTION JOINT), PROVIDE 5/8" DOWELS EVERY 30" CENTER TO CENTER HALF WAY ALONG THE THICKNESS OF THE PROPOSED PAVEMENT. ALTERNATE DOWELS SIZES AND SPACING MUST BE APPROVED THE ENGINEER PRIOR TO COMMENCING WORK AND VIA THE SUBMITTAL PROCESS.
   - 5.3. WHERE PROPOSED CONCRETE ABUTS EXISTING OR PROPOSED SIDEWALK OR CURBING, PROVIDE A MINIMUM 1/2" EXPANSION JOINT.
   - 5.4. CONTROL, LONGITUDINAL AND/OR TRANSVERSE JOINTS SHALL BE PLACED TO PROVIDE PANELS WITHIN THE PAVEMENT AS SQUARE AS POSSIBLE WITH THE FOLLOWING MAXIMUM SPACING PARAMETERS:
     - 5.4.1. 6–INCH THICK CONCRETE PAVEMENT: 12' X 12'
     - 5.4.2. 8–INCH THICK CONCRETE PAVEMENT: 15' X 15'
   - 5.5. IRREGULAR–SHAPED PANELS MAY REQUIRE THE USE OF REINFORCING MESH OR FIBER MESH AS DETERMINED BY THE ENGINEER. THE USE OF MESH MUST BE APPROVED THE ENGINEER PRIOR TO COMMENCING WORK AND VIA THE SUBMITTAL PROCESS.
   - 5.6. IF A JOINT PLAN IS NOT PROVIDED IN THE PLANS, THE CONTRACTOR SHALL SUBMIT ONE TO THE ENGINEER FOR REVIEW PRIOR TO COMMENCING WORK AND VIA THE SUBMITTAL PROCESS.
6. CONCRETE CURBING JOINTING – UNLESS SHOWN OTHERWISE IN THE PLANS OR REQUIRED BY THE AUTHORITY HAVING JURISDICTION
   - 6.1. JOINTS WHEN ADJACENT TO ASPHALT PAVEMENT
     - 6.1.1. PLACE CONTRACTION JOINTS AT 10' INTERVALS
     - 6.1.2. PLACE 1/2" EXPANSION JOINT AT CATCH BASINS, EXISTING AND PROPOSED SIDEWALK OR EXISTING CURBING.
     - 6.1.3. PLACE 1" EXPANSION JOINT:
       - 6.1.3.1. AT SPRING POINTS OF INTERSECTIONS OR ONE OF THE END OF RADIUS LOCATIONS IN A CURVE
       - 6.1.3.2. AT 400' MAXIMUM INTERVALS ON STRAIGHT RUNS
       - 6.1.3.3. AT THE END OF RADIUS AT OPPOSITE ENDS IN A CURBED LANDSCAPE ISLAND
   - 6.2. JOINTS WHEN TIED TO CONCRETE PAVEMENT
     - 6.2.1. PLACE CONTRACTION JOINTS OPPOSITE ALL TRANSVERSE CONTRACTION JOINTS IN PAVEMENT
     - 6.2.2. PLACE 1/2" EXPANSION JOINT AT CATCH BASINS, EXISTING AND PROPOSED SIDEWALK OR EXISTING CURBING.
     - 6.2.3. PLACE 1"EXPANSION JOINT OPPOSITE ALL TRANSVERSE EXPANSION JOINTS IN PAVEMENT
     - 6.2.4. CURB AND GUTTER AND CONCRETE SHALL BE TIED TOGETHER SIMILAR TO A LONGITUDINAL LANE TIE JOINT (MDOT B1 JOINT)
   - 6.3. IN BETWEEN POURS OF PROPOSED CONCRETE CURBING (CONSTRUCTION JOINT):
     - 6.3.1. CARRY THE REBAR CONTINUOUSLY BETWEEN POURS
     - 6.3.2. IF THE REBAR IS NOT LONG ENOUGH TO CARRY CONTINUOUSLY, THEN TIE TWO PIECES OF REBAR PER THE LATEST MDOT SPECIFICATIONS
7. CONCRETE SIDEWALK JOINTING – UNLESS SHOWN OTHERWISE IN THE PLANS OR REQUIRED BY THE AUTHORITY HAVING JURISDICTION
   - 7.1. PLACE TRANSVERSE CONTRACTION JOINTS EQUAL TO THE WIDTH OF THE WALK WHEN WIDTH IS LESS THAN 8'
   - 7.2. PLACE TRANSVERSE AND LONGITUDINAL CONTRACTION JOINTS EQUAL TO 1/2 THE WIDTH OF THE WALK WHEN WIDTH IS EQUAL TO OR GREATER THAN 8'
   - 7.3. PLACE 1" EXPANSION JOINT WHERE ABUTTING SIDEWALK RAMP AND/OR RADIUS IN INTERSECTION
   - 7.4. PLACE TRANSVERSE 1/2" EXPANSION JOINT AT MAXIMUM OF 100' SPACING
   - 7.5. PLACE 1/2" EXPANSION JOINT WHEN ABUTTING A FIXED STRUCTURE, OTHER PAVEMENT (CONCRETE PAVEMENT AND DRIVE APPROACHES), UTILITY STRUCTURES, LIGHT POLE BASES AND COLUMNS

GENERAL GRADING AND EARTHWORK NOTES:

THESE NOTES APPLY TO ALL CONSTRUCTION ACTIVITIES ON THIS PROJECT

1. CONTRACTOR SHALL FIELD VERIFY ALL EXISTING TREES AND BRUSH AND REMOVE ALL THAT ARE NECESSARY TO GRADE SITE.
2. ALL GRADES ARE TO TOP OF PAVEMENT UNLESS OTHERWISE NOTED.
3. THE STAGING OF CONSTRUCTION ACTIVITIES SHALL OCCUR ONLY WITHIN THE SITE BOUNDARIES. ANY CONSTRUCTION ACTIVITIES OUTSIDE OF THE SITE BOUNDARIES SHALL BE AT THE SOLE RESPONSIBILITY AND RISK OF THE CONTRACTOR.
4. ALL SOIL EROSION AND SEDIMENTATION CONTROL MEASURES SHALL MEET THE REQUIREMENTS OF THE AUTHORIZED PUBLIC AGENCY OF JURISDICTION. AN EROSION CONTROL PERMIT MUST BE SECURED FROM THE CITY PRIOR TO CONSTRUCTION.
5. ALL EARTHWORK AND GRADING OPERATIONS SHALL BE PERFORMED IN ACCORDANCE WITH THE SOILS INVESTIGATION AND REPORT.
6. REFER TO SOIL EROSION CONTROL PLAN FOR ADDITIONAL SOIL EROSION AND SEDIMENTATION CONTROL MEASURES AND NOTES.
7. THE DETENTION BASIN SIDE SLOPES AND ALL SLOPE EXCEEDING 1:6 MUST BE STABILIZED BY SODDING OR BY PLACING A MULCH BLANKET PEGGED IN PLACE OVER SEED.
8. ALL DISTURBED AREAS SHALL BE SEEDED AND MULCHED OR SODDED IN ACCORDANCE WITH THE LANDSCAPE PLANS. PROVIDE A MINIMUM OF 3" OF TOPSOIL IN THESE AREAS UNLESS OTHERWISE NOTED.
9. THE CONTRACTOR SHALL NOTE EXISTING UNDERGROUND UTILITIES WITHIN AND ADJACENT TO THE SITE. BACKFILL FOR EXISTING UTILITY TRENCHES SHALL BE EXAMINED CRITICALLY. ANY TRENCHES FOUND TO HAVE SOFT, UNSTABLE OR UNSUITABLE BACKFILL MATERIAL IN THE OPINION OF THE THIRD PARTY TESTING COMPANY, THAT ARE TO BE WITHIN THE ZONE OF INFLUENCE OF PROPOSED BUILDINGS OR PAVEMENT SHALL BE COMPLETELY EXCAVATED AND BACKFILLED WITH SUITABLE MATERIAL.
10. ON–SITE FILL CAN BE USED IF THE SPECIFIED COMPACTION REQUIREMENTS CAN BE ACHIEVED. IF ON–SITE SOIL IS USED, IT SHOULD BE CLEAN AND FREE OF FROZEN SOIL, ORGANICS, OR OTHER DELETERIOUS MATERIALS.
11. THE FINAL SUBGRADE/EXISTING AGGREGATE BASE SHOULD BE THOROUGHLY PROOFROLLED USING A FULLY LOADED TANDEM AXLE TRUCK OR FRONT END LOADER UNDER THE OBSERVATION OF A GEOTECHNICAL/PAVEMENT ENGINEER. LOOSE OR YIELDING AREAS THAT CANNOT BE MECHANICALLY STABILIZED SHOULD BE REINFORCED USING GEOGRIDS OR REMOVED AND REPLACED WITH ENGINEERED FILL OR AS DICTATED BY FIELD CONDITIONS.
12. SUBGRADE UNDERCUTTING, INCLUDING BACKFILLING SHALL BE PERFORMED TO REPLACE MATERIALS SUSCEPTIBLE TO FROST HEAVING AND UNSTABLE SOIL CONDITIONS. ANY EXCAVATIONS THAT MAY BE REQUIRED BELOW THE TOPSOIL IN FILL AREAS OR BELOW SUBGRADE IN CUT AREAS WILL BE CLASSIFIED AS SUBGRADE UNDERCUTTING.
13. SUBGRADE UNDERCUTTING SHALL BE PERFORMED WHERE NECESSARY AND THE EXCAVATED MATERIAL SHALL BECOME THE PROPERTY OF THE CONTRACTOR. ANY SUBGRADE UNDERCUTTING SHALL BE BACKFILLED AS RECOMMENDED IN THE GEOTECHNICAL ENGINEERING REPORT FOR THE PROJECT.
14. ANY SUB–GRADE WATERING REQUIRED TO ACHIEVE REQUIRED DENSITY SHALL BE CONSIDERED INCIDENTAL TO THE JOB.

GENERAL UTILITY NOTES:

1. ALL WORKMANSHIP AND MATERIALS SHALL BE IN ACCORDANCE WITH THE STANDARDS AND SPECIFICATIONS OF THE CITY
2. ALL TRENCHES UNDER OR WITHIN THREE (3) FEET OR THE FORTY–FIVE (45) DEGREE ZONE OF INFLUENCE LINE OF EXISTING AND/OR PROPOSED PAVEMENT, BUILDING PAD OR DRIVE APPROACH SHALL BE BACKFILLED WITH SAND COMPACTED TO AT LEAST NINETY–FIVE (95) PERCENT OF MAXIMUM UNIT WEIGHT (ASTM D–1557). ALL OTHER TRENCHES TO BE COMPACTED TO 90% OR BETTER.
3. WHERE EXISTING MANHOLES OR SEWER PIPE ARE TO BE TAPPED, DRILL HOLES 4" CENTER TO CENTER, AROUND PERIPHERY OF OPENING TO CREATE A PLANE OF WEAKNESS JOINT BEFORE BREAKING SECTION OUT.
4. THE LOCATIONS AND DIMENSIONS SHOWN ON THE PLANS FOR EXISTING UTILITIES ARE IN ACCORDANCE WITH AVAILABLE INFORMATION WITHOUT UNCOVERING AND MEASURING. THE DESIGN ENGINEER DOES NOT GUARANTEE THE ACCURACY OF THIS INFORMATION OR THAT ALL EXISTING UNDERGROUND FACILITIES ARE SHOWN. CONTRACTOR SHALL FIELD VERIFY UTILITIES.
5. THE CONTRACTOR SHALL COORDINATE TO ENSURE ALL REQUIRED PIPES, CONDUITS, CABLES AND SLEEVES ARE PROPERLY PLACED FOR THE INSTALLATION OF GAS, ELECTRIC, PHONE, CABLE, IRRIGATION, ETC. IN SUCH A MANNER THAT WILL FACILITATE THEIR PROPER INSTALLATION PRIOR TO THE PLACEMENT OF THE PROPOSED PAVEMENT AND LANDSCAPING.
6. PIPE LENGTHS INDICATED ARE FROM CENTER OF STRUCTURE AND TO END OF FLARED END SECTION UNLESS NOTED OTHERWISE.
7. CONTRACTOR SHALL INSPECT ALL EXISTING PUBLIC STORM SEWER, SANITARY SEWER AND WATER MAIN STRUCTURES WITHIN THE LIMITS OF CONSTRUCTION AND WITH THE GOVERNING AGENCY INSPECTOR PRIOR TO ESTABLISHING FINAL GRADE. NOTIFY THE ENGINEER, OWNER/DEVELOPER, AND GOVERNING AGENCY IF STRUCTURE IS DEEMED TO BE STRUCTURALLY UNSOUND AND/OR IN NEED OF REPAIR.

STORM SEWER NOTES:

1. ALL STORM SEWER 12" DIAMETER OR LARGER SHALL BE REINFORCED CONCRETE PIPE (RCP C–76) CLASS IV WITH MODIFIED TONGUE AND GROOVE JOINT WITH RUBBER GASKETS UNLESS SPECIFIED OTHERWISE (ASTM C–443).
2. ALL STORM SEWER LEADS SHALL BE CONSTRUCTED AT 1.00% MINIMUM SLOPE.
3. ALL STORM SEWER 10" OR LESS AND/OR LEADS SHALL BE SDR 26.
4. JOINTS FOR P.V.C. PIPE SHALL BE ELASTOMERIC (RUBBER GASKET) AS SPECIFIED IN A.S.T.M. DESIGNATION D–3212.

WATER MAIN NOTES:

1. ALL WATER MAIN SHALL BE INSTALLED WITH A MINIMUM COVER OF 5.0' BELOW FINISH GRADE. WHEN WATER MAINS MUST DIP TO PASS UNDER A STORM SEWER OR SANITARY SEWER, THE SECTIONS WHICH ARE DEEPER THAN NORMAL SHALL BE KEPT TO A MINIMUM LENGTH BY THE USE OF VERTICAL TWENTY TWO AND A HALF (22.5°) DEGREE BENDS, PROPERLY ANCHORED.
2. ALL TEES, BENDS, CONNECTIONS, ETC. ARE CONSIDERED INCIDENTAL TO THE JOB.
3. PHYSICAL CONNECTIONS SHALL NOT BE MADE BETWEEN EXISTING AND NEW WATER MAINS UNTIL REQUIRED TESTING IS SATISFACTORILY COMPLETED.
4. MAINTAIN 10' HORIZONTAL CLEARANCE BETWEEN OUTER EDGE OF WATERMAIN AND ANY SANITARY/STORM SEWER OR STRUCTURE.
5. NO PHYSICAL CONNECTION TO THE EXISTING WATER MAIN CAN BE MADE UNTIL ALL NEW WATER MAIN PASSES PRESSURE AND BACTERIOLOGICAL TESTS TO THE SATISFACTION OF THE CITY.
6. ALL WATER MAIN AND FITTINGS (3" DIAMETER AND LARGER) SHALL BE DUCTILE IRON, CLASS 54.
7. WATER MAIN SERVICE LEADS SHALL BE TYPE 'K' ANNEALED SEAMLESS COPPER WITH FLARED FITTINGS, UNLESS OTHERWISE NOTED.
8. ALL FIRE HYDRANTS SHALL BE EJIW #5BR MODEL #250 PER XXXX STANDARDS.
9. ALL HYDRANTS TO BE A MINIMUM OF 5' FROM BACK OF CURB, TYP.
10. ALL NECESSARY FITTINGS, THRUST BLOCKS, RESTRAINING GLANDS, BLOW OFFS, ETC. FOR WATER MAIN ARE CONSIDERED INCIDENTAL TO THIS PROJECT. THE CONTRACTOR SHALL INSTALL THESE ITEMS AS NECESSARY AND AS REQUIRED BY THE XXXX.
11. THE WATER MAIN CONTRACTOR SHALL NOTIFY THE INSPECTION SECTION OF THE XXXXXXXX AT XXX–XXX–XXXX AT LEAST THREE WORKING DAYS IN ADVANCE OF STARTING CONSTRUCTION.

SANITARY SEWER NOTES:

1. DOWNSPOUTS, WEEP TILE, FOOTING DRAINS OR ANY CONDUIT THAT CARRIES STORM OR GROUND WATER SHALL NOT BE ALLOWED TO DISCHARGE INTO A SANITARY SEWER.
2. ALL SANITARY LEADS SHALL BE CONSTRUCTED AT 1.00% MINIMUM SLOPE.
3. ALL SANITARY SEWER 8" OR LARGER SHALL BE P.V.C. TRUSS PIPE (ASTM D2680) AND FITTINGS, WITH ELASTOMERIC GASKET JOINTS PER ASTM D3212 UNLESS OTHERWISE NOTED.
4. ALL SANITARY SEWER LEADS SHALL BE POLYVINYL CHLORIDE (PVC) SDR 23.5 PIPE AND FITTINGS. ALL JOINTS TO BE ELASTOMERIC GASKET JOINTS PER ASTM D3212 UNLESS OTHERWISE NOTED.
5. SANITARY LEADS SHALL BE PROVIDED WITH CLEANOUTS EVERY 100 FEET AND AT EVERY BEND AS SHOWN. ALL CLEANOUTS TO BE PROVIDED WITH E.J.I.W. #1565 BOX OR EQUAL.

CONSTRUCTION MATERIAL SUBMITTALS

UNLESS REQUIRED OTHERWISE IN THE PROJECT SPECIFICATIONS, THE CONTRACTOR SHALL ONLY SUBMIT THE FOLLOWING CONSTRUCTION MATERIAL SUBMITTALS, AS APPLICABLE TO THE PLANS, FOR REVIEW BY THE ENGINEER. UNLESS APPROVED IN ADVANCE AND IN WRITING BY THE ENGINEER, ANY MATERIAL SUBMITTALS PROVIDED TO THE ENGINEER FOR REVIEW IN ADDITION TO THIS LIST SHALL BE RETURNED TO THE CONTRACTOR WITHOUT A REVIEW BEING PERFORMED.

1. SOIL EROSION AND SEDIMENTATION CONTROL MEASURES
2. UTILITY TRENCH BACKFILL MATERIAL WITH ALL MATERIAL DATA INCLUDED IN THE SUBMITTAL BEING DATED WITHIN 60 DAYS OF THE SUBMITTAL UNLESS APPROVED OTHERWISE BY THE ENGINEER
3. RIP RAP MATERIAL WITH ALL MATERIAL DATA INCLUDED IN THE SUBMITTAL BEING DATED WITHIN 60 DAYS OF THE SUBMITTAL UNLESS APPROVED OTHERWISE BY THE ENGINEER
4. STORM AND SANITARY SEWER PIPING INCLUDING JOINTS
5. STORM AND SANITARY SEWER STRUCTURES
6. STORM AND SANITARY SEWER STRUCTURE FRAME AND COVERS INCLUDING CLEAN OUTS
7. WATER DISTRIBUTION SYSTEM PIPING INCLUDING JOINTS
8. WATER DISTRIBUTION SYSTEM STRUCTURES
9. WATER DISTRIBUTION SYSTEM STRUCTURE FRAME AND COVERS
10. WATER DISTRIBUTION SYSTEM SHUT OFF BOXES
11. WATER DISTRIBUTION SYSTEM FIRE HYDRANTS
12. WATER DISTRIBUTION SYSTEM GATE VALVES
13. STORM WATER MANAGEMENT OUTLET CONTROL STRUCTURES INCLUDING COVERS OR GRATES
14. STORM WATER MANAGEMENT OUTLET SEDIMENTATION BASIN RISERS INCLUDING GRATES
15. STORM WATER MANAGEMENT MECHANICAL PRE–TREATMENT UNITS INCLUDING COVERS
16. STORM WATER MANAGEMENT UNDERGROUND DETENTION SYSTEM MATERIAL AND SHOP DRAWINGS DEPICTING THE LAYOUT OF THE SYSTEM
17. PAVEMENT AGGREGATE BASE MATERIAL WITH ALL MATERIAL DATA INCLUDED IN THE SUBMITTAL BEING DATED WITHIN 60 DAYS OF THE SUBMITTAL UNLESS APPROVED OTHERWISE BY THE ENGINEER
18. PAVEMENT UNDERDRAIN MATERIAL AND BACKFILL WITH ALL BACKFILL MATERIAL DATA INCLUDED IN THE SUBMITTAL BEING DATED WITHIN 60 DAYS OF THE SUBMITTAL UNLESS APPROVED OTHERWISE BY THE ENGINEER
19. PAVEMENT MIX DESIGNS SUBMITTED FOR REVIEW BY THE ENGINEER MUST FOLLOW THE CURRENT MDOT REVIEW CHECKLISTS AS SUMMARIZED BELOW AND ALL MATERIAL DATA INCLUDED IN THE SUBMITTAL BEING DATED WITHIN 60 DAYS OF THE SUBMITTAL UNLESS APPROVED OTHERWISE BY THE ENGINEER:
    - 19.1. CONCRETE MIX DESIGN REVIEW CHECKLIST (FORM 2000)
    - 19.2. SUPERPAVE MIX DESIGN CHECKLIST (FORM 1862)
    - 19.3. MARSHALL MIX DESIGN CHECKLIST (FORM 1849)
20. SITE FENCING AND GATES INCLUDING FOOTINGS
21. SITE RAILINGS INCLUDING FOOTING OR EMBEDMENTS
22. ANY ITEMS SHOWN IN THE PLANS OR DETAIL SHEETS THAT SPECIFICALLY STATE FOR THE CONTRACTOR TO SUBMIT A SHOP DRAWING TO THE ENGINEER FOR REVIEW. THESE ITEMS INCLUDE, BUT ARE NOT LIMITED TO:
    - •• TRENCH DRAIN MATERIAL AND SHOP DRAWING DEPICTING THE LAYOUT OF THE SYSTEM
    - •• ANY SPECIALITY ITEMS SHOWN IN THE PLANS OR DETAIL SHEETS THAT SPECIFICALLY DO NOT STATE FOR THE CONTRACTOR SHALL SUBMIT A SHOP DRAWING TO THE ENGINEER FOR REVIEW BUT THE CONTRACTOR REQUESTS TO BE REVIEWED. THE CONTRACTOR'S REQUEST FOR REVIEW MUST BE IN WRITING AND APPROVED BY THE ENGINEER PRIOR TO SUBMITTING THE INFORMATION.

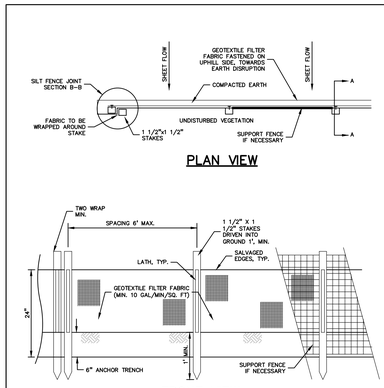

PLAN VIEW

FRONT VIEW

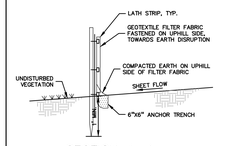

SECTION A–A

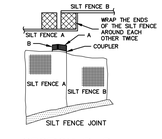

SECTION B–B

SILT FENCE DETAIL
NOT TO SCALE

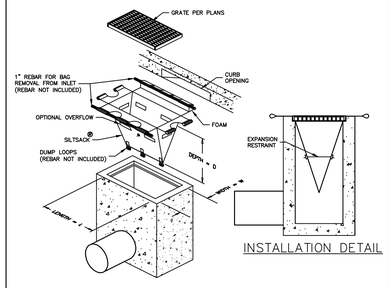

INSTALLATION DETAIL

'SILTSACK' DETAIL
NOT TO SCALE

18"x6" STANDARD CONCRETE CURB AND GUTTER
NOT TO SCALE

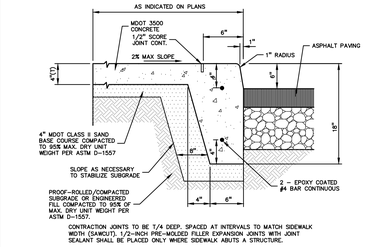

INTEGRAL CURB AND SIDEWALK
NOT TO SCALE

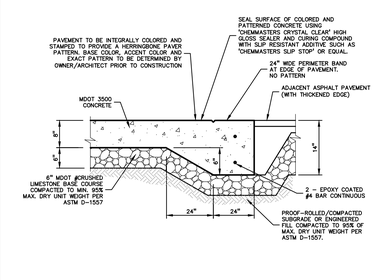

STAMPED CONCRETE PAVEMENT DETAIL
NOT TO SCALE

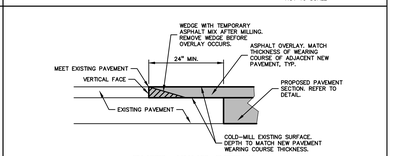

BUTT JOINT DETAIL
NOT TO SCALE

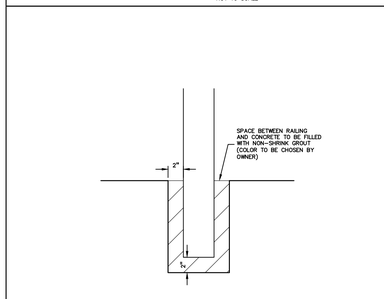

HANDRAIL EMBEDMENT DETAIL
NOT TO SCALE

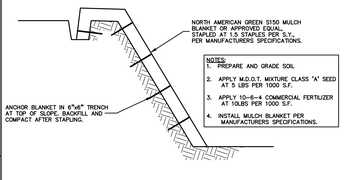

TEMPORARY EROSION BLANKET DETAIL
NOT TO SCALE

ASPHALT MIX DESIGN CHART					
COMMERCIAL ADT 0–300	COMMER

* MAXIMUM LANDING SLOPE IS 2.1% IN EACH DIRECTION OF TRAVEL. LANDING MINIMUM DIMENSIONS 5' x 5'. SEE NOTES.

** MAXIMUM RAMP CROSS SLOPE IS 2.1%, RUNNING SLOPE 5% - 7% (8.3% MAXIMUM). SEE NOTES.

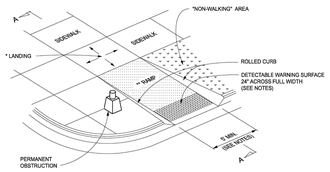

CURB RAMP TYPE R

(ROLLED SIDES)

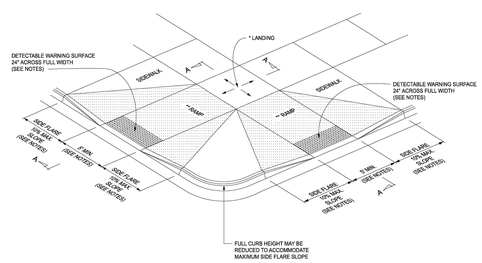

CURB RAMP TYPE F

(FLARED SIDES, TWO RAMPS SHOWN)

APPROVED BY: _____ DIRECTOR, BUREAU OF FIELD SERVICES

APPROVED BY: _____ DIRECTOR, BUREAU OF DEVELOPMENT

MDOT Michigan Department of Transportation

DEPARTMENT DIRECTOR
BRADLEY C. WIEFFERICH, PE

STANDARD PLAN FOR
CURB RAMP AND
DETECTABLE WARNING DETAILS

(SPECIAL DETAIL)	11/08/2023	R-28-K	SHEET 1 OF 7
FHWA APPROVAL	PLAN DATE		

SHEET

* MAXIMUM LANDING SLOPE IS 2.1% IN EACH DIRECTION OF TRAVEL. LANDING MINIMUM DIMENSIONS 5' x 5'. SEE NOTES.

** MAXIMUM RAMP CROSS SLOPE IS 2.1%, RUNNING SLOPE 5% - 7% (8.3% MAXIMUM). SEE NOTES.

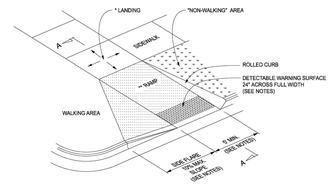

CURB RAMP TYPE RF

(ROLLED / FLARED SIDES)

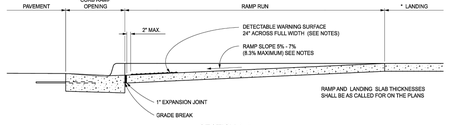

SECTION A-A

CURB TYPE	MAXIMUM RISE (INCHES)	
	A	B
B1	⅝	1
B2	⅝	1
B3	⅝	1
D1	⅝	1
D2	⅝	1
D3	⅝	1
C1	½	½
C2	½	½
C3	½	½
C4	½	½
C5	1	½
C6	1	½
F1	½	½
F2	½	½
F3	½	½
F4	½	½
F5	1	½
F6	1	½

FOR CURB TYPES SEE STANDARD PLAN R-30-SERIES

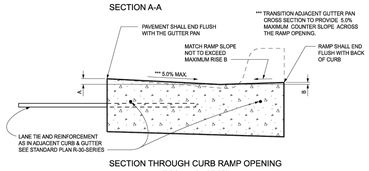

SECTION THROUGH CURB RAMP OPENING

(TYPICAL ALL RAMP TYPES)

MDOT Michigan Department of Transportation

DEPARTMENT DIRECTOR
BRADLEY C. WIEFFERICH, PE

STANDARD PLAN FOR
CURB RAMP AND
DETECTABLE WARNING DETAILS

(SPECIAL DETAIL)	11/08/2023	R-28-K	SHEET 2 OF 7
FHWA APPROVAL	PLAN DATE		

SHEET

* MAXIMUM LANDING SLOPE IS 2.1% IN EACH DIRECTION OF TRAVEL. LANDING MINIMUM DIMENSIONS 5' x 5'. SEE NOTES.

** MAXIMUM RAMP CROSS SLOPE IS 2.1%, RUNNING SLOPE 5% - 7% (8.3% MAXIMUM). SEE NOTES.

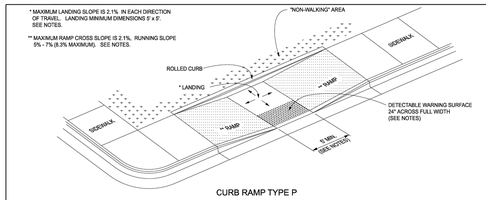

CURB RAMP TYPE P

(PARALLEL RAMP)

DO NOT USE IN AREAS WHERE PONDING MAY OCCUR

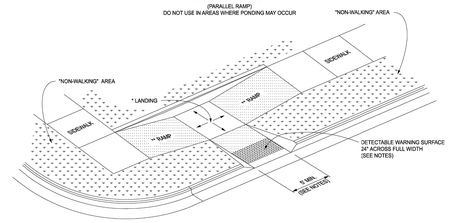

CURB RAMP TYPE C

(COMBINATION RAMP)

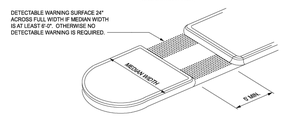

CURB RAMP TYPE M

(MEDIAN ISLAND)

MDOT Michigan Department of Transportation

DEPARTMENT DIRECTOR
BRADLEY C. WIEFFERICH, PE

STANDARD PLAN FOR
CURB RAMP AND
DETECTABLE WARNING DETAILS

(SPECIAL DETAIL)	11/08/2023	R-28-K	SHEET 3 OF 7
FHWA APPROVAL	PLAN DATE		

SHEET

* MAXIMUM LANDING SLOPE IS 2.1% IN EACH DIRECTION OF TRAVEL. LANDING MINIMUM DIMENSIONS 5' x 5'. SEE NOTES.

** MAXIMUM RAMP CROSS SLOPE IS 2.1%, RUNNING SLOPE 5% - 7% (8.3% MAXIMUM). SEE NOTES.

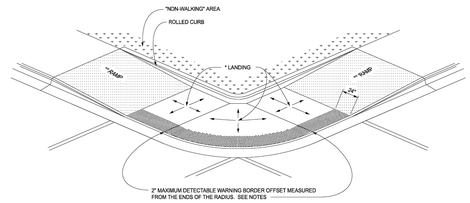

(RADIAL DETECTABLE WARNING SHOWN)

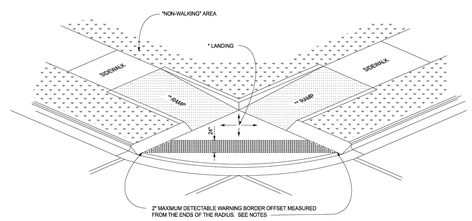

(TANGENT DETECTABLE WARNING SHOWN)

CURB RAMP TYPE D

(DEPRESSED CORNER)

USE ONLY WHEN INDEPENDENT DIRECTIONAL RAMPS CAN NOT BE CONSTRUCTED FOR EACH CROSSING DIRECTION

MDOT Michigan Department of Transportation

DEPARTMENT DIRECTOR
BRADLEY C. WIEFFERICH, PE

STANDARD PLAN FOR
CURB RAMP AND
DETECTABLE WARNING DETAILS

(SPECIAL DETAIL)	11/08/2023	R-28-K	SHEET 4 OF 7
FHWA APPROVAL	PLAN DATE		

SHEET

TMP ARCHITECTURE

TMP ARCHITECTURE INC

1191 WEST SQUARE LAKE ROAD
BLOOMFIELD HILLS • MICHIGAN • 48302
PH • 248.338.4561 FX • 248.338.0223
EM • INFO @ TMP-ARCHITECTURE.COM

STATE OF MICHIGAN
JOSEPH B. WYWROT
ENGINEER
No. 6201045674
LICENSED PROFESSIONAL ENGINEER

CONSULTANT

PEA GROUP
t: 844.813.2949
www.peagroup.com

PROJECT TITLE

Troy High School Athletic Fields Bid Package No. 02B

Troy School District
Troy, Michigan

DRAWING TITLE

DETAILS

ISSUE DATES

12-10-2024	CONSTRUCTION DOCUMENTS
DATE:	ISSUED FOR:

DRAWN	JW
CHECKED	TD
APPROVED	TD

PROJECT NO.

22104E

DRAWING NO.

C-9.1

Drawing File: S:\PROJECTS\2023\23-0301 TROY SCHOOLS 2022 BOND\DWGS_CONSTRUCTION\TROY ATHLETICS\TROY HIGH - PHASE 2\C-9.0DETAILS-23-0301-THA PHASE 2.dwg
Dec 06, 2024 - 4:13pm

NOTIFY CITY OF TROY ENGINEERING DEPT. AT 248-524-3409 PRIOR TO STARTING ANY WORK

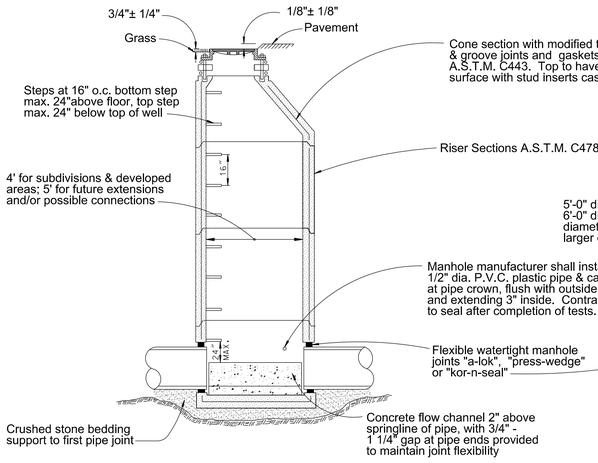

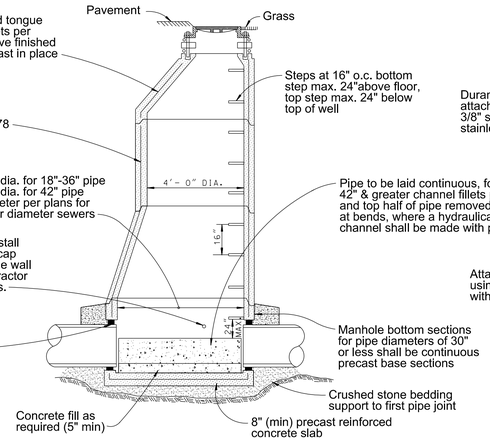

NOTE: ALL PRECAST MANHOLES, SLAB BASES & CONCRETE CHANNELIZATION SHALL BE MANUFACTURED WITH TYPE II, IP, OR IIA CEMENT

SANITARY SEWER MANHOLE
(8" THRU 15" DIA. SEWERS)

SANITARY SEWER MANHOLE
(18" AND LARGER DIA. SEWERS)

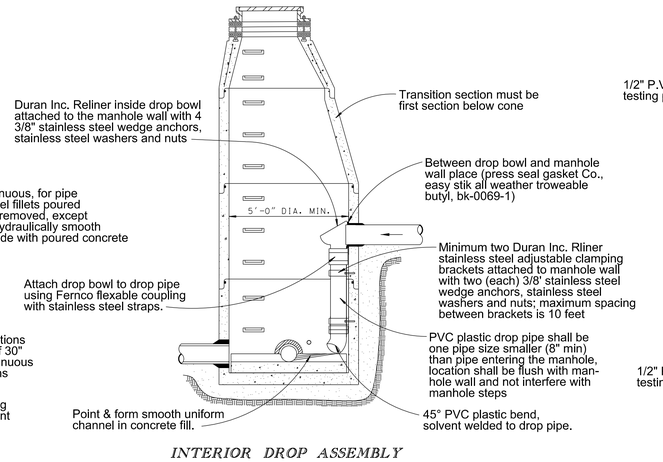

INTERIOR DROP ASSEMBLY
FOR ALL DROP CONNECTIONS

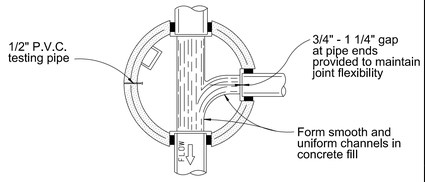

PLAN VIEW

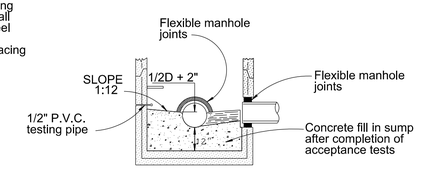

SUMP MANHOLE
FOR TESTING, CLEANING & DEWATERING

GENERAL PIPE BEDDING & TRENCH NOTES

1. The contractor shall install the pipe in accordance with the bedding detail required for the pipe depth (measured from the top of the pipe), and trench width (measured across the trench at the top of the pipe) constructed. Alternate material and methods must be approved in writing by the City Engineer
2. Crushed stone bedding shall be utilized for dewatered ground trench's, trenches greater than 30" in width or 20' in depth.
3. Bedding material shall be as follows:

   Standard bedding - MDOT 6A, 17A or 34R
   Crushed stone bedding - MDOT 25A or 34G
   MDOT Class II or IIA granular material
4. Backfill material shall be as follows:

   Excavated material - T.D. - A
   MDOT Class II granular material - T.D. - B

Bedding shall be defined as that material placed from four (4) inches below the pipe to a point twelve (12) inches above the pipe.

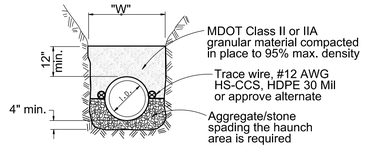

STANDARD BEDDING

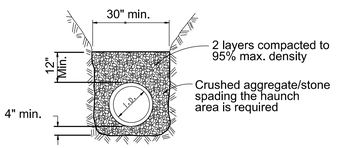

CRUSHED STONE BEDDING

2" LETTERS

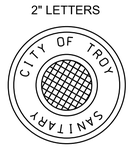

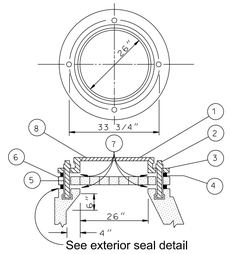

WATERPROOF MANHOLE FRAME & COVER

1. Bolted waterproof frame & cover equal to East Jordan 1040 ZPT with four (4) 3/4" dia. base flange holes.
2. Four (4) cadmium coated 5/8" threaded studs, 3/4" x 2" x 1/16" flat washers and hex headnuts.
3. Four (4) 3/4" x 2" x 1/16" neoprene flat washers.
4. Elastic joint sealant.
5. Four (4) 5/8" threaded inserts cast as shown
6. Concrete brick in full mortar bed for grade adjustment. 5" min. - 12" max. adjustment. No brick or mortar coating shall extend beyond the O.D. of the manhole. Mortar coat all open spaces and irregularities on the outside of the brickwork. Taper outside mortar coat a min. 1% from the manhole O.D. to the frame flange.
7. Form inside of manhole and completely fill space with type "M" mortar.
8. Cover supplied with four (4) 1/2" stainless steel cap screws countersunk flush with cover.

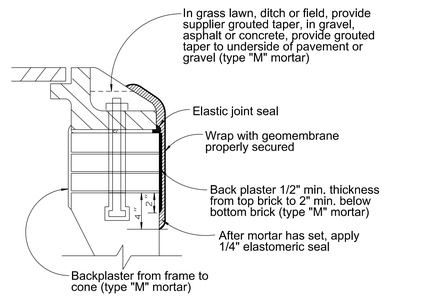

EXTERIOR SEAL DETAIL

MATERIALS

1. Elastic joint seal: butyl rubber joint sealant (A-Lok, Butly-Lok system) or approved equal.
2. Elastomeric seal: butul rubber sealant (trowelable-grade) (a-lok, butyl-lok system) or approved equal.
3. Geomembrane: pvc geometric, in thickness fifteen (15 mil), Staff Inds. or double layer of six (6) mil polyethylene wrap.
4. Adhesive primer: water emulsion or solvent per manufacturers recommendations.

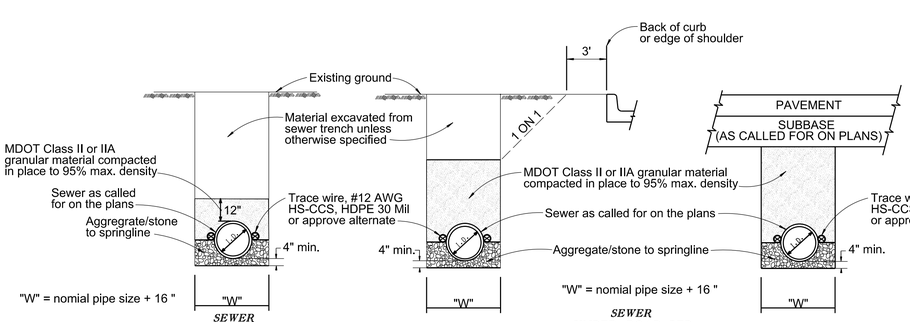

TRENCH DETAIL 'A'

TRENCH DETAIL 'B'

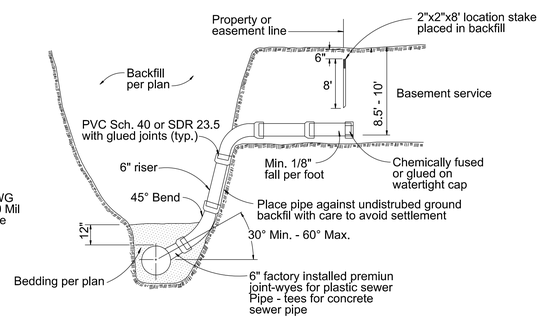

BUILDING LEAD DETAIL
0' - 15' COVER

TROY MICHIGAN

STANDARD SANITARY SEWER DETAILS (1 of 2)
ENGINEERING DEPARTMENT

APPROVED BY : WILLIAM J. HUOTARI, CITY ENGINEER DATE : JUNE 2019

REVISIONS	DATE	REMARKS
	APRIL 2019	GENERAL UPDATES

STATE OF MICHIGAN ★ LICENSED PROFESSIONAL ENGINEER ★
WILLIAM J. HUOTARI ENGINEER NO. 43231
WILLIAM J. HUOTARI, P.E. #43231

Contractor Note:
The locations of existing underground utilities are shown on these plans in a diagrammatic way only. The contractor shall determine the exact location of all existing utilities before commencing new construction. He shall be fully responsible for any and all damages which might be occasioned by the failure to exactly locate and preserve any and all underground utilities.

3 FULL WORKING DAYS BEFORE YOU DIG CALL 811
Know what's below Call before you dig
MISS DIG System Inc. 1-800-482-7171 www.missdig.net

CONTRACT NO. XX-XX
PROJECT NO. XX.XXXX.X

A

GENERAL NOTES

1. All construction shall conform to the current standards and specifications of the City of Troy. Prior to construction, the contractor shall attend a preconstruction meeting at a time and place arranged by the City Engineer, in which various utility companies and governmental agency representatives will be present. The design engineer shall submit approved plans to all utility companies and governmental agencies 10 (ten) days prior to the preconstruction meeting. Construction shall start within 3 (three) weeks of the meeting. The contractor shall notify the City Engineer 72 hours prior to starting any work.

2. The entire project area of publicly funded projects, and all areas not under the ownership of any private developer for privately funded projects, shall be digitally recorded in color prior to the start of construction. The DVD shall be utilized by the City to determine construction related damage and to assure adequate restoration.

3. Before start of construction, the contractor must request and have in his possession a sewer inspection permit issued by the Water Resource Commissioner's (WRC) office and contact the WRC office at 248-885-1105 24 hours prior to starting work. WRC must witness the new connection and all testing.

4. Prior to any excavation, the contractor shall telephone Miss Dig (1-800-482-7171) for the location of underground facilities and shall also notify representatives of other utilities located in the vicinity of the work. The contractor shall assume responsibility for the protection of all existing utilities, services and mains during construction. All costs for locating, removing and replacing or relocating these utilities, services and mains shall be included in the cost of constructing the sanitary sewer. All utilities, services and mains damaged during construction shall be repaired with like material. The contractor shall verify the depth and horizontal location of all existing utilities, services and mains before any work is started. The exact location of existing utilities, services and mains shall be determined by hand digging.

5. A City of Troy, Road Commission for Oakland County, and/or Michigan Department of Transportation permit is required for all construction within their road Right-of-Ways. It is the contractor's responsibility to secure all permits and bonds prior to construction, or to insure that all required permits and bonds have been obtained prior to starting construction.

6. The contractor shall abide by all the requirements of the road Right-of-Way owner regarding construction of sanitary sewer mains, maintaining traffic, barricading, boring, backfill and restoration. There will be no additional compensation due the contractor for complying with these requirements.

7. Prior to the start of construction, the contractor shall furnish material certificates to the City Engineer verifying that all the materials used on the project are in accordance with the specifications.

8. All construction changes must have written approval of the City Engineer.

9. Sewer Pipe Material:

a. 8" through 15" pipe shall be PVC (Poly Vinyl Chloride) composite sewer pipe conforming to the current ASTM D2680 specifications with elastomeric rubber gasketed joints for PVC.

b. 18" and larger pipe shall be reinforced concrete circular sewer pipe conforming to the current ASTM specification C-76 (Wall C) with size and class as indicated on the plans. All reinforced concrete sewer pipe shall be cast with reinforcing steel extending into the spigots. All joints and gaskets shall be modified tongue and groove, conforming to the requirements of ASTM (C-443).

c. Extra strength vitrified clay pipe conforming to the current ASTM specification (C-700). For use in industrial areas only.

10. All new manholes shall have approved flexible, water-tight seals where pipes pass through walls. Manholes shall be precast reinforced concrete in accordance with ASTM C478 current specifications. Precast manhole joints and gaskets shall be modified tongue and groove in accordance with ASTM C443 current specifications. Precast manhole cone sections shall be City of Troy modified eccentric cone type. All manholes shall be provided with bolt down frames and bolted, water-tight covers reading "City of Troy" in raised letters.

11. All precast manholes, slab bases, concrete pipe and concrete channelization shall be manufactured with Type II, IP or IIA cement.

12. Manhole steps shall normally be provided on a back wall of the manhole furthest from traffic, manhole steps shall be factory installed at 16 inches center to center spacing. Steps shall be M.A. Industries P.S.I. Polypropylene MSU #360 ALU Poly or approved alternate.

13. At the connections to manholes, sewers or extensions thereto, drop connections will be required when the difference in invert elevations exceeds 18 inches. All drop connections are to be interior, minimum manhole diameter is 5 feet.

14. Existing manholes shall be tapped with the "Kor-N-Seal" method, with a water-tight rubber boot for sewers 6" thru 15" in diameter. Manhole taps for 18" diameter sewers and larger shall have holes drilled at 4 inches on center around the periphery of the opening to create a plane of weakness before breaking out the section. Non-shrink grout shall be used to seal the opening and a concrete collar shall be poured 12 inches around the pipe and extend 12 inches beyond the opening.

15. Individual sanitary service leads shall be required for each separate unit within a proposed commercial, industrial and/or multiple family residential buildings.

16. Building lead connections shall be made with 6" wyes for PVC and 6" tees for concrete pipe. Wyes for PVC and pipe shall be factory fabricated (not extruded) and shall be checked for irregularities which could affect the deflection test prior to installation. Building lead pipe, wyes and caps shall be solid wall plastic pipe, 6" dia., SCH 40 or SDR 23.5 with chemically welded joints. The joint between two dissimilar sizes or types of building lead pipe shall be made with a proper fitting acceptable to the City Engineer.

17. All sanitary sewer leads shall be marked with a 2"x2"x8' location stake buried to 6" below finish grade.

18. No ground water, storm water, construction water, downspout drainage or weep tile drainage shall be allowed to enter any sanitary sewer installation.

19. In industrial areas, or any other areas where deemed necessary by the City Engineer, private service connections made to the service lead must have an accessible sampling and monitoring manhole. The manhole shall be located on private property at a location approved by the City Engineer.

20. Grease, oil and sand interceptors shall be installed by the user when the City Engineer determines they are necessary for the proper handling of liquid wastes, to remove grease in excessive amounts, to remove any flammable wastes, sand and other harmful ingredients. All interceptors shall be of a type and capacity approved by the City, shall be located so as to be rapidly and easily accessible for cleaning and inspection, and shall be continuously maintained by the user in an operating condition to accomplish the required result. All restaurants or establishments involved in the preparation of food shall install a grease interceptor. All grease interceptors shall be constructed in accordance with the detail and shall have a minimum capacity of 1000 gallons. The detail shown below is not designed to withstand traffic loads.

21. A mainline trace wire must be installed, with all service lateral trace wires properly connected to the mainline trace wire, to ensure full tracing/locating capabilities from a single connection point. Lay mainline trace wire continuously, by-passing around the outside of manholes/structures on the North or East side. Trace wire on all sanitary service laterals must terminate at an approved trace wire access box color coded green and located directly above the service lateral at the edge of road right of way.

22. All sewer installations shall pass low pressure air test, deflection test and television inspection as specified in the city standards. All testing shall be carried out under the direct supervision of the inspector and the contractor. Any testing performed in the absence of a representative of the City will not be approved.

Air Test Table
Minimum holding time in seconds required for pressure to drop from 4 to 3 psi

Length Of Line In Feet	Pipe Diameter												
X	4"	6"	8"	10"	12"	15"	18"	21"	24"	27"	30"	33"	36"
25	4	10	18	28	70	62	89	121	158	200	248	299	356
50	9	20	35	55	79	124	178	243	317	401	495	599	713
75	10	30	53	83	119	186	267	364	475	601	743	898	1020
100	18	40	70	110	158	248	356	485	634	765	851	935	|
125	22	50	88	138	198	309	446	595	680	|	|	|	|
150	26	59	406	165	238	371	510	|	|	|	|	|	|
175	31	69	123	193	277	425	|	|	|	|	|	|	|
200	35	79	141	220	317	|	|	|	|	|	|	|	|
225	40	89	158	248	340	|	|	|	|	|	|	|	|
250	44	99	176	275	|	|	|	|	|	|	|	|	|
275	48	109	194	283	|	|	|	|	|	|	|	|	|
300	53	119	211	|	|	|	|	|	|	|	|	|	|
350	62	139	227	|	|	|	|	|	|	|	|	|	|
400	70	158	|	|	|	|	|	|	|	|	|	|	|
450	79	170	|	|	|	|	|	|	|	|	|	|	|
500	88	|	|	|	|	|	|	|	|	|	|	|	|
550	97	|	|	|	|	|	|	|	|	|	|	|	|
600	106	|	|	|	|	|	|	|	|	|	|	|	|
650	113	170	227	283	340	425	510	595	680	765	851	935	1020

NOTE: TO BE USED WHEN TESTING ONE DIAMETER ONLY

23. All television inspections shall be recorded on digital video disk (DVD) and turned over to the City for reference at a later date. The digital video recording shall display continuously the date, time and engineering stations and shall periodically display the name of the project, name of the area covered and direction of travel.

24. PVC composite pipe and any approved plastic pipe shall be subject to deflection test 30 days after construction with a nine sided mandrel. The contractor must supply the mandrel and perform the test. The City will witness the test. Deflection shall not exceed 5%. The City reserves the right to test the sewer for deflection not to exceed 7% during the period of the maintenance bond. Any sewer found exceeding these limits shall be replaced by and at the contractor's expense.

25. Infiltration testing when required cannot exceeding 100 gallons per inch of diameter per mile of pipe per 24 hour period. Test sections shall generally be limited to a maximum length of one half mile. The city reserves the right to test shorter pipe length segments if deemed necessary to assure that no segment exceeds the infiltration limits.

26. The contractor shall provide a 3 year maintenance and guarantee bond to the City, dated from the time of final acceptance by the City. The bond shall be for 35% of the construction costs.

27. Before final acceptance, As-Built drawings must be submitteto the City of Troy Engineering Department. One electronic copy (PDF) and one digital copy (DWG or DGN) is required.

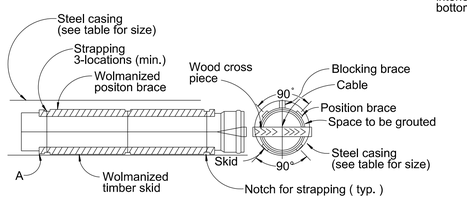

NOTE:
The ends of the casing shall be sealed after the sewer is installed through the casing

PIPE SIZE	RECOMMENDED MINIMUM CASING DIAMETER	MINIMUM WALL THICKNESS
6"	12"	.375
8"	16"	.375
10"	18"	.375
12"	20"	.375
15"	24"	.406
18" & 21"	36"	.532
24"	42"	.563
27" & 30"	48"	.625
36"	54"	.688
42"	60"	.750
48"	66"	.813

STEEL CASING REQUIREMENTS

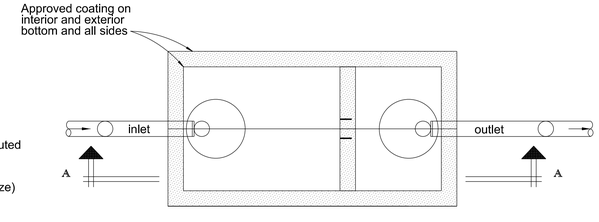

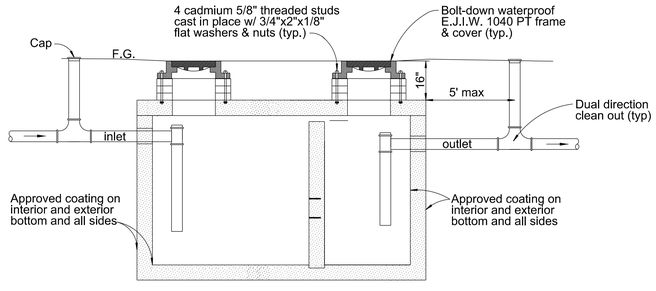

GREASE INTERCEPTOR (EXTERIOR)
NOTE : Capacity - 1000 gallons (min)

TROY MICHIGAN

STANDARD SANITARY SEWER DETAILS (2 of 2)
ENGINEERING DEPARTMENT
APPROVED BY : WILLIAM J. HUOTARI, CITY ENGINEER DATE : JUNE 2019

REVISIONS	DATE	REMARKS

REVISIONS	DATE	REMARKS
	APRIL 2019	GENERAL UPDATES

STATE OF MICHIGAN ★ LICENSED PROFESSIONAL ENGINEER
WILLIAM J. HUOTARI ENGINEER NO. 43231
WILLIAM J. HUOTARI, P.E. #43231

Contractor Note:
The locations of existing underground utilities are shown in an approximate way only. The contractor shall determine the exact location of all existing utilities before commencing work. The contractor will be fully responsible for any and all damages which might be occasioned by the failure to exactly locate and preserve any and all underground utilities.

3 FULL WORKING DAYS BEFORE YOU DIG CALL 811
Know what's below Call before you dig
MISS DIG System Inc. 1-800-482-7171 www.missdig.net

CONTRACT NO. XX-XX
PROJECT NO. XX.XXXX.X

B

Project Information

a. Type of soil being disrupted:

Derived from: Soil Survey Soil Borings Other

b. Present the chronological sequence and expected time of year for each major phase of earth disruption.

	DATE
Site Clearing	
Soil Erosion Control	
Mass Balancing	
Underground Utilities	
Paving	
Restoration / Stabilization	

c. Indicate the measures proposed to prevent sediment from leaving the site:

Hydrologic Characteristics of Site

a. Type of "Offsite" drainage outlet(s) available for this site:

County Drain — Name of Drain:
Lake/Pond — Name of Lake/Pond:
River/Stream — Name of River/Stream:
Enclosed Drain — Name of Enclosed Drain:
Detention Basin (with outlet)
Wetland — Retention Basin (no oulet)
Overland Flow — Open Ditch

b. Distance to nearest lake, stream, pond, open drain, or wetland:

c. Does the project include any work or disruption with a flood plain (Yes or No)?

d. Does the project include work within the cross-section of a lake/stream (Yes or No)?

e. Is a MDEQ Permit required (Yes or No)? If Yes, what is the MDEQ Permit Number (if known):

f. If MDEQ Permit is required and application has not been submitted, what is the expected date of submittal?

The graph listed below is used to determine the adequacy of an existing vegetative buffer zone for use as a sediment filter. This graph is only applicable if the vegetation is a dense well-grown stand of ground cover, at least 4" in height. An area covered with bushes and trees without a good ground cover is not acceptable.

EXAMPLE

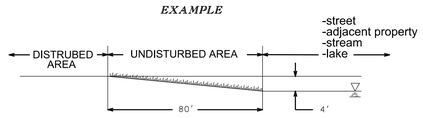

Length of Buffer Zone 80'
Drop of Buffer Zone 4'
% of Slope of Buffer Zone 4' / 80' x 100%

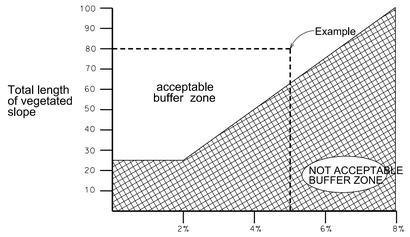

VEGETATIVE BUFFER ZONE

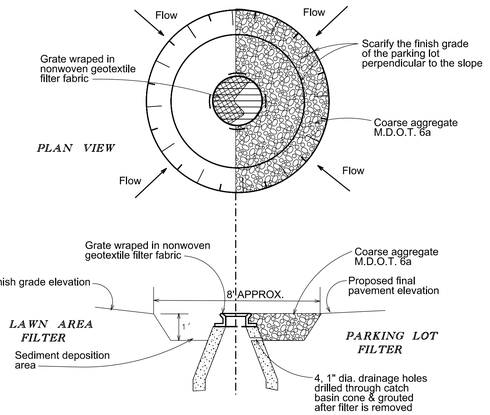

INLET SEDIMENT TRAP LAWN OR PARKING LOT

Builders and developers working in Troy are responsible for complying with the regulations for temporary Storm Drain inserts, also known as "siltsacks". The inserts are used on many construction projects to catch sediment not captured upstream by other construction-related erosion control devices and can be an important temporary environmental safeguard.

Builders must clean and/or replace the inserts when half of the trap is filled with sediment.

Builders must inspect and maintain the inserts whenever 1/2 inch of rain falls within a 24-hour period.

The inserts are to be removed by the builders within 30 days of site stabilization or after the temporary erosion measures are no longer needed.

If inserts are removed during times of flooding, the builder is responsible for re-installing them per regulations.

Silt sock inserts are required for all developments with curb inlets or pavement inlets. Rear yard catch basins may utilize a non-woven Geotextile fabric.

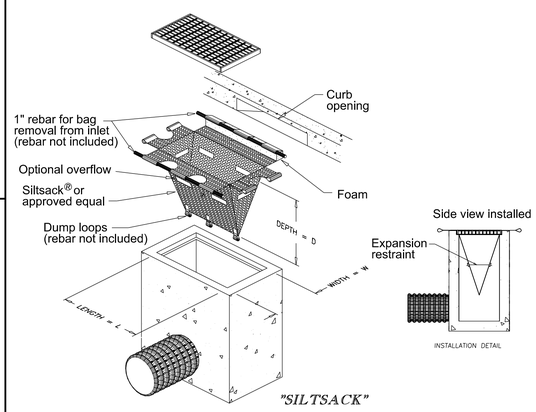

"SILTSACK"

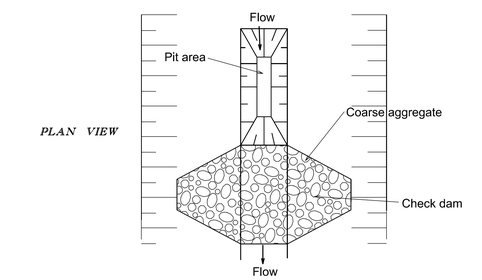

SEDIMENT TRAP WITH CHECK DAM

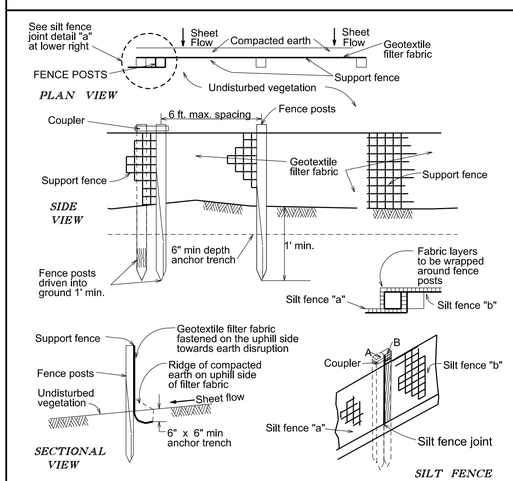

SILT FENCE

Definition	Sod inlet filter are pads of sod placed around a storm drain inlet or catch basin.
Purpose	Sod inlet filters are installed to slow the flow of water into an inlet or catch basin and to filter out appreciable amounts of sediment in the process.
Where applicable	Sod inlet filters should only be used to handle light concentrations of sediment. They are best used after final grading is completed and during the establishment of a vegetative cover.

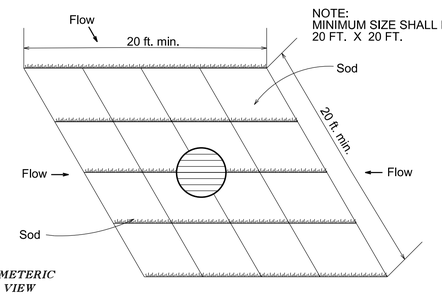

SOD INLET FILTER

SOIL EROSION & SEDIMENTATION CONTROL NOTES

1. The following items are intended to be a guide to the contractor in evaluating Soil Erosion control requirements for the project. Specific Soil Erosion control devices and locations may be detailed on the plans. The contractor should also note that Soil Erosion and Sedimentation controls are included in the project unless specified otherwise on the plans or in the specifications.

2. All erosion and Sediment control work shall conform to the permit requirements and the standards and specifications of the City of Troy.

3. Daily inspections shall be made by the contractor for effectiveness of Soil Erosion and Sedimentation control measures and any necessary repairs shall be performed without delay.

4. Erosion and any sedimentation from work on this site shall be contained on the site and not allowed to collect on any off-site areas or in waterways.

5. Waterways include natural or man-made open ditches, streams, storm drains, lakes and ponds.

6. Contractor shall apply temporary soil erosion and sedimentation control measures when required or as directed. Contractor shall remove temporary measures as soon as permanent stabilization of slopes, ditches, and other earth changes has been accomplished.

7. Staging the work will be done by the contractor as indicated on the Soil Erosion plans and as required to ensure progressive stabilization of disturbed earth.

8. The contractor will establish soil erosion control measures in the early stages of construction. Sediment control measures will be applied as a perimeter defense against any transporting of silt off the site.

9. Engineer and owner certification must be included on the plans.

10. Separate sheets showing soil erosion and sedimentation control plans must be provided.

11. The following guidelines are to be implemented:

a. Check Dams:

i. Stone size must be increased with increased slope and velocity.
ii. Side slope of the dam should be 2:1 or flatter.
iii. Straw bales are not to be used for check dams.
iv. Add stones as needed to maintain design height and cross section.
v. Any accumulation of sediment shall be removed and stockpiled in a stabilized area to prevent the material from eroding back into the drainage course.

b. Vegetative Buffer Zones:

i. Vegetation must be maintained in a vigorous condition.
ii. Reshape and reseed areas where concentrated flow occurs or vegetation fails.
iii. To be used for sheet flows only.
iv. Not to be used as a roadway.

c. Silt Fence:

i. Must be installed along the contour line.
ii. Is not to be used in areas of concentrated flow.
iii. Must be trenched in at least 6 inches and backfilled.
iv. Multiple rows are to be used up a slope.
v. Accumulated sediment must be periodically removed.
vi. Where necessary, a support fence shall be used to support the geotextile filter fabric.
vii. To be removed after site is permanently stabilized.

d. Inlet Sediment Trap:

i. The sediment deposition area and nonwoven geotextile filter fabric should be cleaned of all accumulated sediment after each storm.
ii. After all contributing areas are stabilized, the filter fabric will be removed, sediment deposition area filled, and a sod inlet filter placed over the disrupted lawn area.
iii. The filter material used to backfill parking lot drainage holes will be peastone. The side excavation for the placement of this material will not be deeper than the invert of the drainage holes.

e. Inlet Filters After Paving or Grading:

i. Inlet filters will remain in place until all denuded areas contributing to them are stabilized with vegetation.
ii. Periodic inspection and maintenance will be provided to insure that filters are functioning properly.

f. Sod Inlet Filter:

i. Sod inlet filters will only be used to handle light concentrations of sediment.
ii. Recommended for use after final grading is complete and during the establishment of a vegetative cover.
iii. Catch basin inlet covers may be wrapped in a non-woven geotextile filter fabric for additional filtration
iv. Periodic inspection and maintenance must be provided to insure efficient operation.

TROY MICHIGAN

STANDARD SOIL EROSION CONTROL DETAILS
ENGINEERING DEPARTMENT
APPROVED BY: WILLIAM J. HUOTARI, CITY ENGINEER DATE: JUNE 2019

REVISIONS	DATE	REMARKS
	APRIL 2019	GENERAL UPDATES

STATE OF MICHIGAN — WILLIAM J. HUOTARI — ENGINEER NO. 43231 — REGISTERED PROFESSIONAL ENGINEER
WILLIAM J. HUOTARI, P.E. #43231

Contractor Note:
The locations of existing underground utilities are shown in an approximate way only. The contractor shall determine the exact location of all existing utilities before commencing work. The contractor to be fully responsible for any and all damages which might be occasioned by the failure to exactly locate and preserve any and all underground utilities.

3 FULL WORKING DAYS BEFORE YOU DIG CALL 811
Know what's below. Call before you dig.
MISS DIG System, Inc. (800) 482-7171 www.missdig.net

CONTRACT NO. XX-XX
PROJECT NO. XX.XXXX.X

D

NOTIFY CITY OF TROY ENGINEERING DEPT. AT 248-524-3409 PRIOR TO STARTING ANY WORK

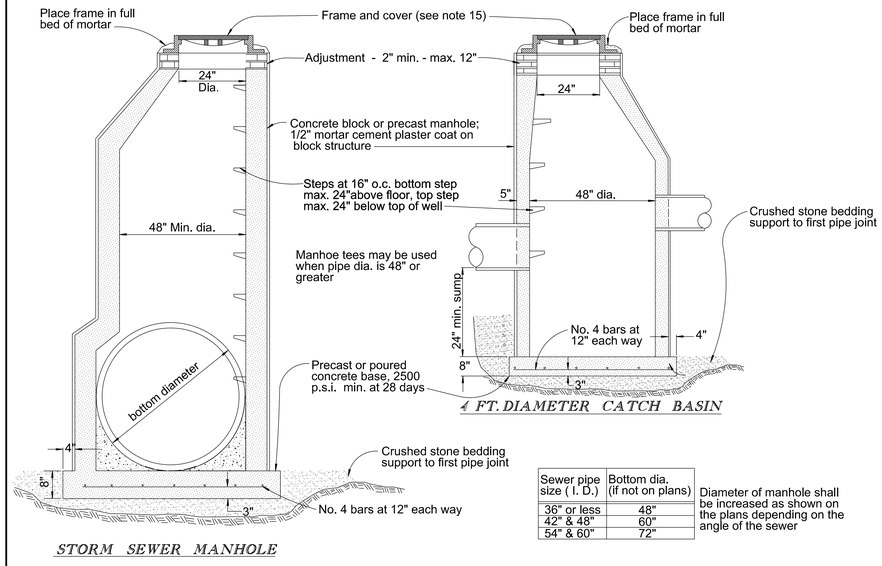

4 FT. DIAMETER CATCH BASIN

STORM SEWER MANHOLE

Sewer pipe size (I. D.)	Bottom dia. (if not on plans)
36" or less	48"
42" & 48"	60"
54" & 60"	72"

Diameter of manhole shall be increased as shown on the plans depending on the angle of the sewer

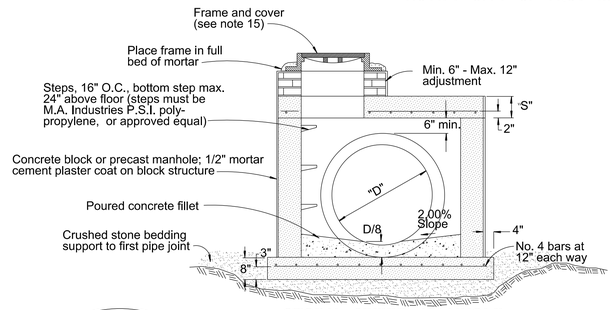

STORM SEWER MANHOLE WITH FLAT SLAB

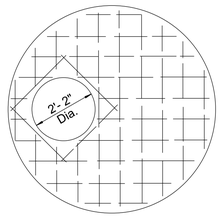

TOP SLAB X-SECTION

Outlet "d"	M.h. I.d."	Top slab "S"	Reinforcing steel requirements
36" or less	4	9"	3/4" @ 9" ea. way
42"	5	10"	3/4" @ 9" ea. way
48"- 54"	6	11"	7/8" @ 9" ea. way
	7	12"	1" @ 9" ea. way
	8	12"	1" @ 9" ea. way

GENERAL NOTES

1. All construction shall conform to the current standards and specifications of the City of Troy. Prior to construction, the contractor shall attend a reconstruction meeting at a time and place arranged by the City Engineer, in which various utility companies and governmental agency representatives will be present. The design engineer shall submit approved plans to all utility companies and governmental agencies 10 (ten) days prior to the preconstruction meeting. Construction shall start within 3 (three) weeks of meeting. The contractor shall notify the City Engineer 72 hours prior to starting any work.

2. The entire project area of publicly funded projects, and all areas not under the ownership of any private developer for privately funded projects, shall be digitally recorded in color prior to the start of construction. The DVD shall be utilized by the City to determine construction related damage and to assure adequate restoration

3. Before start of construction, the contractor must request and have in their possession a copy of a valid permit to construct a connection to, or an extension of, the Storm Water Drainage System.

4. Prior to any excavation, the contractor shall call Miss Dig (1-800-482-7171) for the location of underground facilities and shall also notify representatives of other utilities located in the vicinity of the work. The contractor shall assume responsibility for the protection of all existing utilities, services and mains during construction. All costs for locating, removing and replacing or relocating these utilities, services and mains shall be included in the cost of constructing the sanitary sewer. All utilities, services and mains damaged during construction shall be repaired with like material. The contractor shall verify the depth and horizontal location of all existing utilities, services and mains before any work is started. The exact location of existing utilities, services and mains shall be determined by hand digging.

5. A City of Troy, Water Resources Commissioner's, Road Commission for Oakland County, and/or Michigan Department of Transportation permit is required for all construction within their Right-of-Ways. WRC must witness the new connection, contact the WRC office at 248-885-1105 - 48 hours prior to starting work. It is the contractor's responsibility to secure all permits and bonds prior to construction, or to insure that all required permits and bonds have been obtained prior to starting construction.

6. The contractor shall abide by all the requirements of the Right-of-Way owner regarding construction of storm sewer mains, maintaining traffic, barricading, boring, backfill and restoration. There will be no additional compensation due the contractor for complying with these requirements.

7. The contractor shall implement all soil erosion control measures indicated in the permit and/or shown on the plans prior to making any earth changes.

8. Prior to the start of construction, the contractor shall furnish material certificates to the City verifying that all the materials used on the project are in accordance with the specifications.

9. All construction changes must have written approval of the Project Engineer.

10. Sewer Pipe Material:

a. Reinforced concrete circular sewer pipe conforming to the current ASTM specification C-76 (Wall C) with size and class as indicated on the plans; minimum class III. All reinforced concrete sewer pipe shall be cast with reinforcing steel extending into the spigots. All joints and gaskets shall be modified tongue and groove, conforming to the requirements of ASTM (C-443). All sewer pipe 30" and larger shall have pointed joints.

b. Plastic circular sewer pipe conforming to the current ASTM specifications for PVC Corrugated with smooth interior wall (A-2000) or high-performance polypropylene (N-12 HP), when approved for use by the City Engineer. All joints and gaskets shall conform to the respective ASTM specifications.

c. The following storm sewer pipe materials may be used only with approval of the City Engineer. If soils PH & Resistivity tests demonstrate a PH of 5.0 to 9.0 and an Electrical Resistance of 2000 OHM/CM/CU or higher, then helically corrugated, full welded seam, AASHTO M-218 steel pipe, gauge as shown, manufactured according to AASHTO M-36 with 2 2/3" x ½", aluminized at 1.00 oz per sq. ft. per AASHTO M-274 may be used. Corrugated steel pipe shall have two circumstantial corrugations rolled on each end of each section. Steel coupling bands of the same material as the pipe, fitting the pipe configuration with two "O" Ring rubber gaskets shall produce a watertight joint ("Hugger Bands").

d. Underdrains, rear yard and ditches, slotted perforations of 1.90 - 2.00 square inches per foot of pipe length. A-2000, N-12 or approved equal.

e. All sump and building service connections shall be 3" Polyvinyl Chloride (PVC) sewer pipe, schedule 40 with chemically fused joints and connect to a catch basin or manhole. No blind taps. The joint between two dissimilar sizes or types of building lead pipe shall be made with a proper fitting acceptable to the City Engineer

11. All new manholes shall have approved flexible, water-tight seals where pipes pass through walls. Manholes shall be precast reinforced concrete in accordance with ASTM C478 current specifications. Precast manhole joints and gaskets shall be modified tongue and groove in accordance with ASTM C443 current specifications. Precast manhole cone sections shall be City of Troy modified eccentric cone type.

12. All precast manholes, slab bases, concrete pipe and concrete channelization shall be manufactured with Type II, IP or IIA cement.

13. Manhole steps shall normally be provided on a back wall of the manhole furthest from traffic, manhole steps shall be factory installed at 16 inches center to center spacing. Steps shall be M.A. Industries P.S.I. Polypropylene MSU #360 ALU Poly (or approved equal).

14. Existing manholes shall be tapped by coring for sewers 6" thru 15" in diameter. Manhole taps for 18" diameter sewers and larger shall have holes drilled at 4 inches center to center around the periphery of the opening to create a plane of weakness before breaking out the section. Non-shrink grout shall be used to seal the opening and a concrete collar shall be poured 12 inches around the pipe and extend 12 inches beyond the opening. If the wall of the structure being tapped is damaged, the City shall decide if it can be repaired and approve the method. If the structure cannot be repaired it will be replaced.

15. A mainline trace wire must be installed, with all service lateral trace wires properly connected to the mainline trace wire, to ensure full tracing/locating capabilities from a single connection point. Lay mainline trace wire continuously, by-passing around the outside of manholes/structures on the North or East side. Trace wire on all storm service laterals must terminate at an approved trace wire access box color coded green and located directly above the service lateral at the edge of road right of way.

16. Unless otherwise noted on the plans, structure frame and covers shall be as follows:

a. Manhole - EJ 1000 with type "C" perforated cover with CITY OF TROY STORM on cover.
b. Catch Basin in pavement - EJ 5080 with sinusoidal m2 grate, or equal, in residential areas.
c. Catch Basin in pavement - EJ 5105 with sinusoidal m2 grate, or equal, in non-residential areas.
d. Catch Basin not in pavement - EJ 1000 with type M, N, or 01 heavy duty grate, or equal.
e. Catch Basin in Landscape area or Roadside Ditch may require the use of the following:

1) EJ 1040 type "N" oval grate or type 02 beehive grate
2) EJ 1130 type "N" oval grate or type 01 beehive grate
3) EJ 2800 type "N" oval grate or type 02 beehive grate
4) EJ 6508 or EJ 6517

2" LETTERS



(2) 1" HOLES

17. The contractor shall provide a 3 year maintenance and guarantee bond to the City, dated from the time of final acceptance by the City. The bond amount shall be 35% of constructions costs.

18. Before final acceptance, As-Built drawings must be submitted to the City of Troy Engineering Department. One electronic copy (PDF) and one digital copy (DWG or DGN) is required. .

GENERAL PIPE BEDDING & TRENCH NOTES

1. The contractor shall install the pipe in accordance with the bedding detail required for the pipe depth (measured from the top of the pipe), and trench width (measured across the trench at the top of the pipe) constructed. Alternate material and methods must be approved in writing by the City Engineer

2. Crushed stone bedding shall be utilized for dewatered ground trench's, trenches greater than 30" in width or 20' in depth.

3. Bedding material shall be as follows:

   Standard bedding - MDOT 6A, 17A or 34R
   Crushed stone bedding - MDOT 25A or 34G
   MDOT Class II or IIA granular material

4. Backfill material shall be as follows:

   Excavated material - T.D. - A
   MDOT Class II granular material - T.D. - B

Bedding shall be defined as that material placed from four (4) inches below the pipe to a point twelve (12) inches above the pipe.

NOTE: Crushed concrete will not be allowed as bedding or backfill with underdrains or rear yard storm sewer

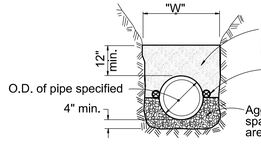

STANDARD BEDDING

Maximum trench width = "W"
O.D. + 12" for 8" - 36" I.D.
O.D. + 24" for 42" I.D. & larger

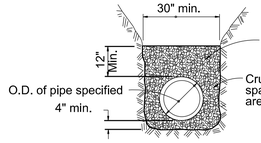

CRUSHED STONE BEDDING

TYPICAL CONCRETE BLOCK SECTION

NOTE: Unless otherwise authorized by the City Engineer, each structure shall be constructed totally of either precast segments or built - up with mortar and block

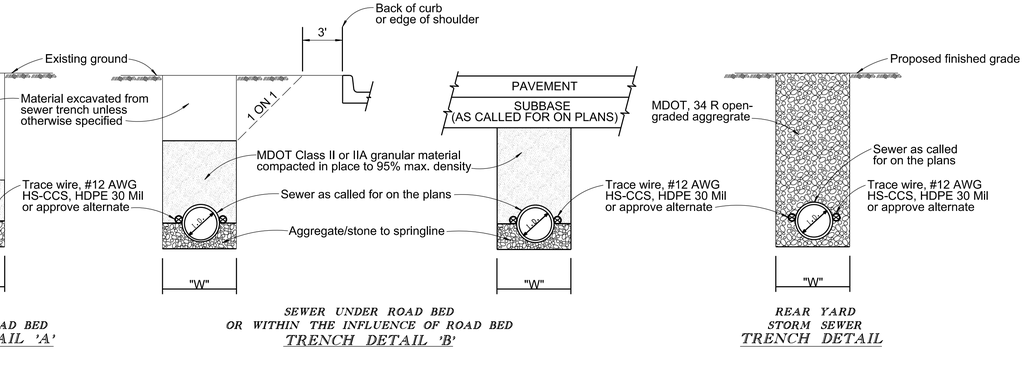

SEWER NOT UNDER ROAD BED
TRENCH DETAIL 'A'

SEWER UNDER ROAD BED OR WITHIN THE INFLUENCE OF ROAD BED
TRENCH DETAIL 'B'

REAR YARD STORM SEWER
TRENCH DETAIL

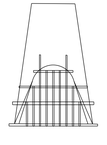

Steel Grates for End Sections
See current MDOT detail
Required for 12" dia. and greater

TROY MICHIGAN

STANDARD STORM SEWER DETAILS
ENGINEERING DEPARTMENT
APPROVED BY : WILLIAM J. HUOTARI, CITY ENGINEER DATE : JUNE 2019

REVISIONS	DATE	REMARKS
	APRIL 2019	GENERAL UPDATES

STATE OF MICHIGAN · WILLIAM J. HUOTARI · ENGINEER · NO. 43231 · PROFESSIONAL ENGINEER

WILLIAM J. HUOTARI, P.E. #43231

Contractor Note:
The locations of existing underground utilities are shown on the plans in a diagrammatic way only. The contractor shall determine the exact location of all existing utilities before beginning construction work. The contractor shall be fully responsible for any and all damages which might be occasioned by the failure to exactly locate and preserve any and all underground utilities.

3 FULL WORKING DAYS BEFORE YOU DIG CALL 811
Know what's below Call before you dig
MISS DIG System Inc. 1-800-482-7171 www.missdig.net

CONTRACT NO. XX-XX
PROJECT NO. XXXXXX

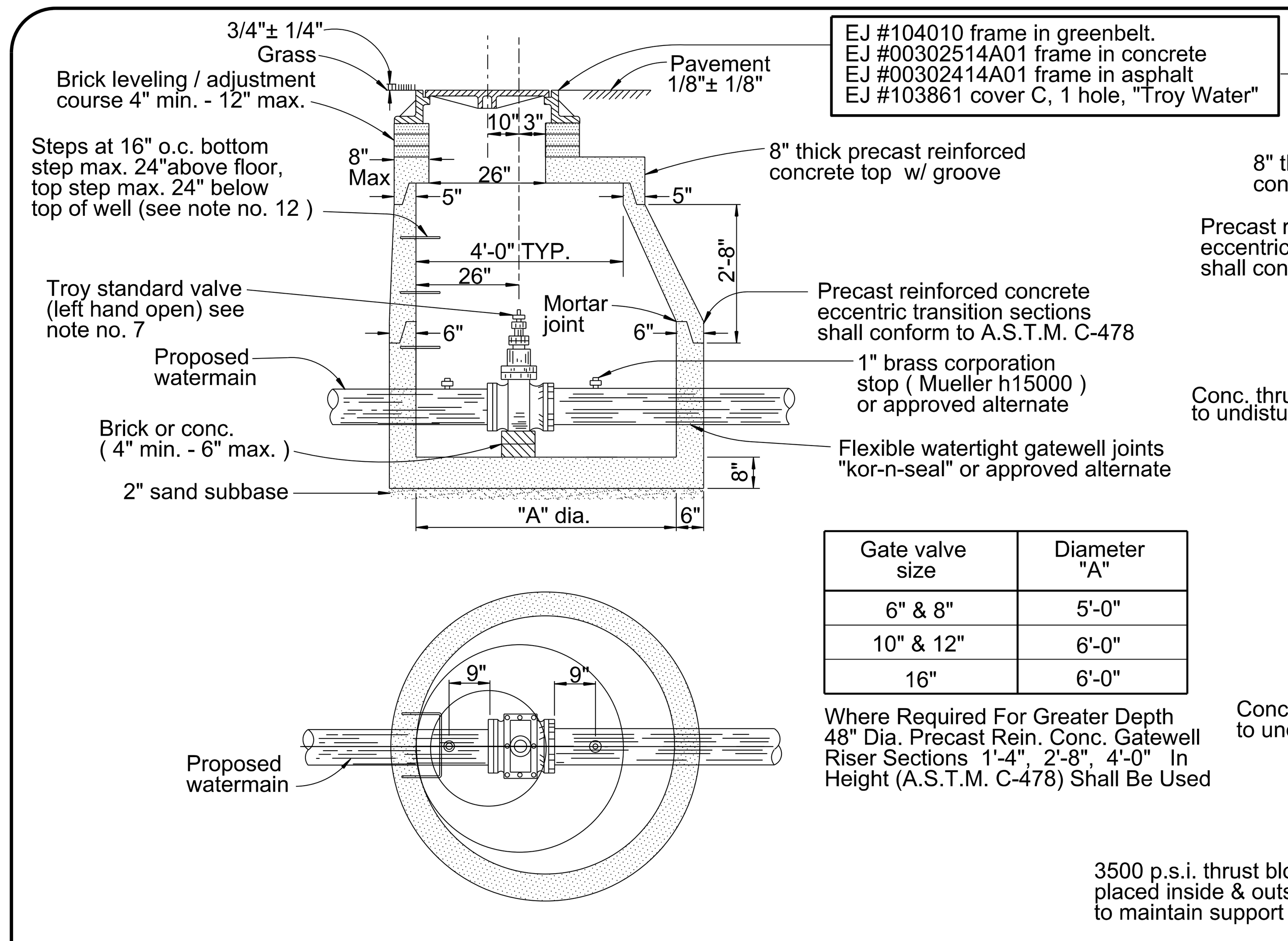

Gate valve size	Diameter "A"
6" & 8"	5'-0"
10" & 12"	6'-0"
16"	6'-0"

Where Required For Greater Depth 48" Dia. Precast Rein. Conc. Gatewell Riser Sections 1'-4", 2'-8", 4'-0" In Height (A.S.T.M. C-478) Shall Be Used

GATE VALVE & WELL DETAIL

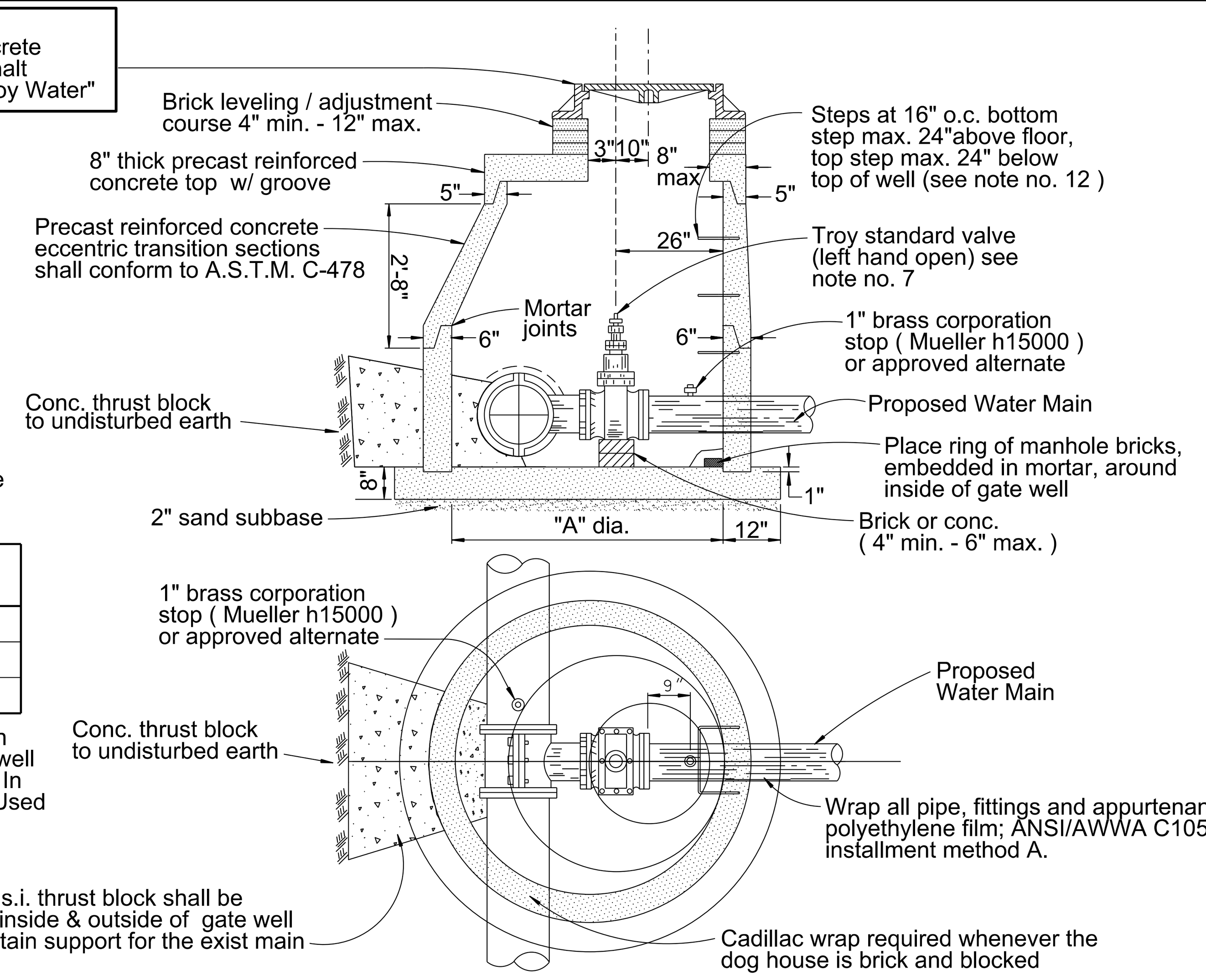

TAPPING SLEEVE, VALVE & WELL DETAIL 6' DIA.

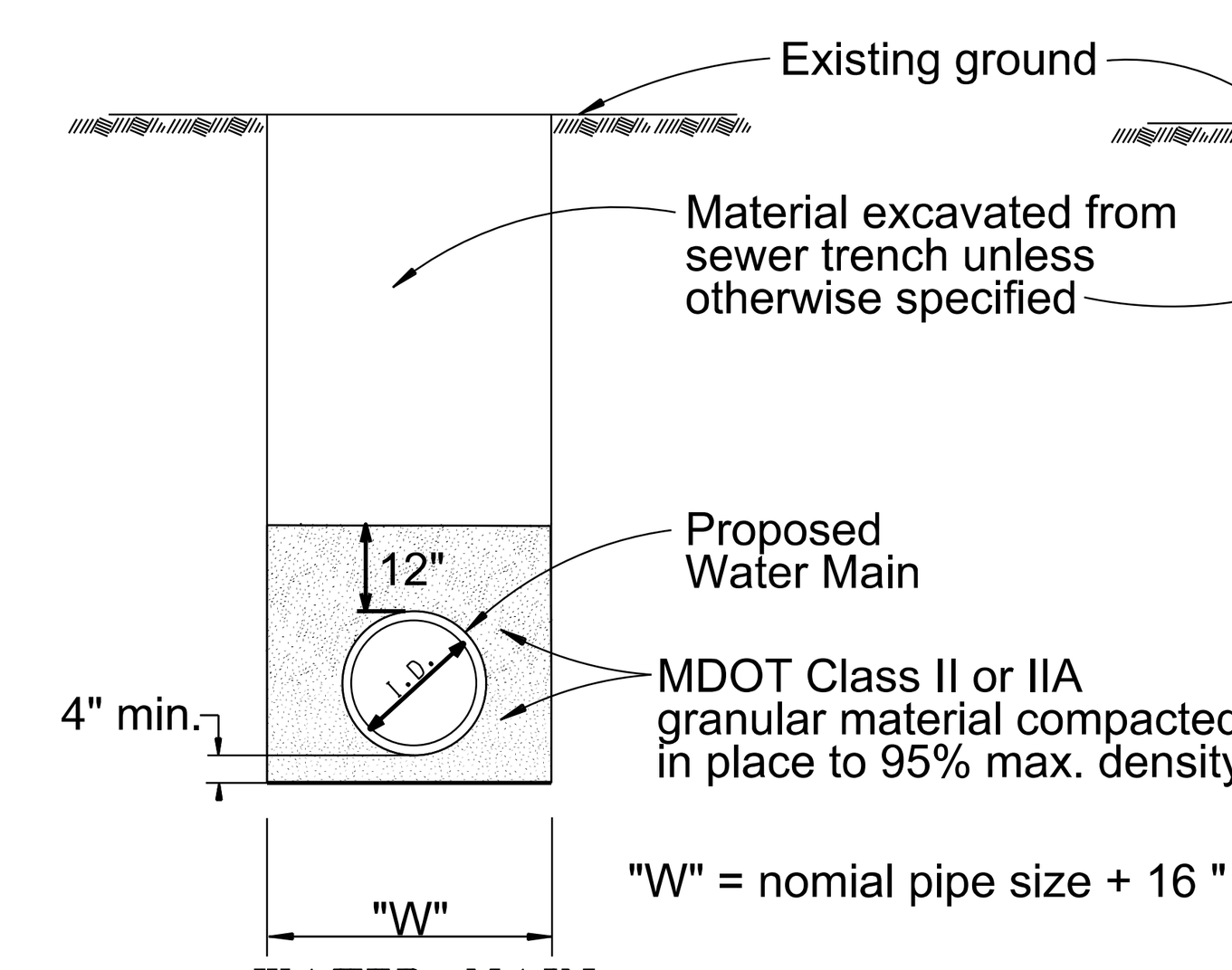

WATER MAIN NOT UNDER ROADBED

TRENCH DETAIL 'F'

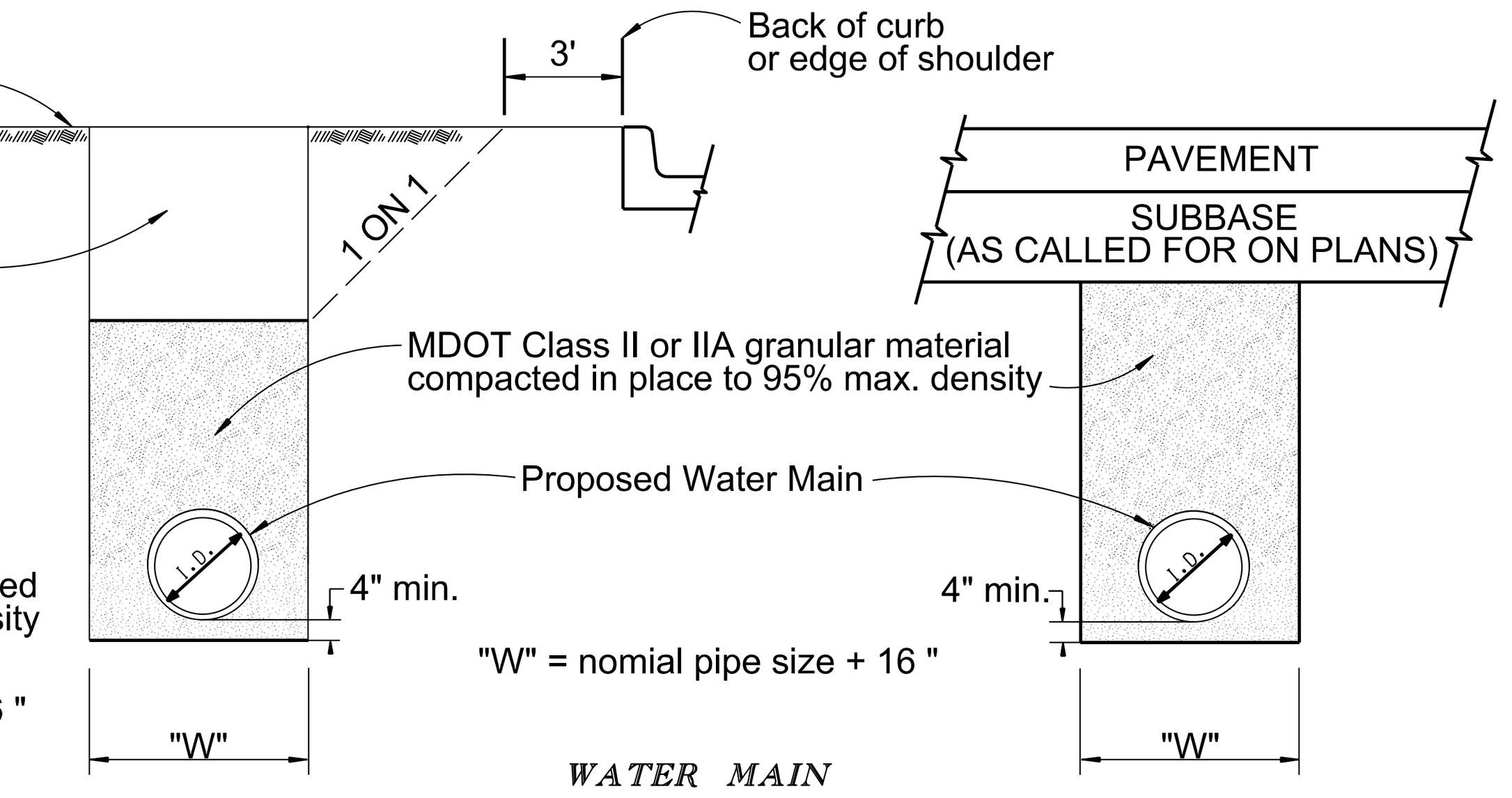

WATER MAIN UNDER ROAD BED OR WITHIN THE INFLUENCE OF ROADBED

TRENCH DETAIL 'G'

NOTE:
D.I. Megalug Retainer Gland Or Swivel Glands Are Required On All Joints Between Hydrant Tee And Hydrant Inlet

NOTE:
All Hydrants Shall Be Painted Fire Hydrant Red (Rust - Oleum # 1210 Or Approved Alternate)

NOTE:
All End Of Line Hydrants Shall Have E.J. No. 946504 6BR Brass Conversion Seat Installed

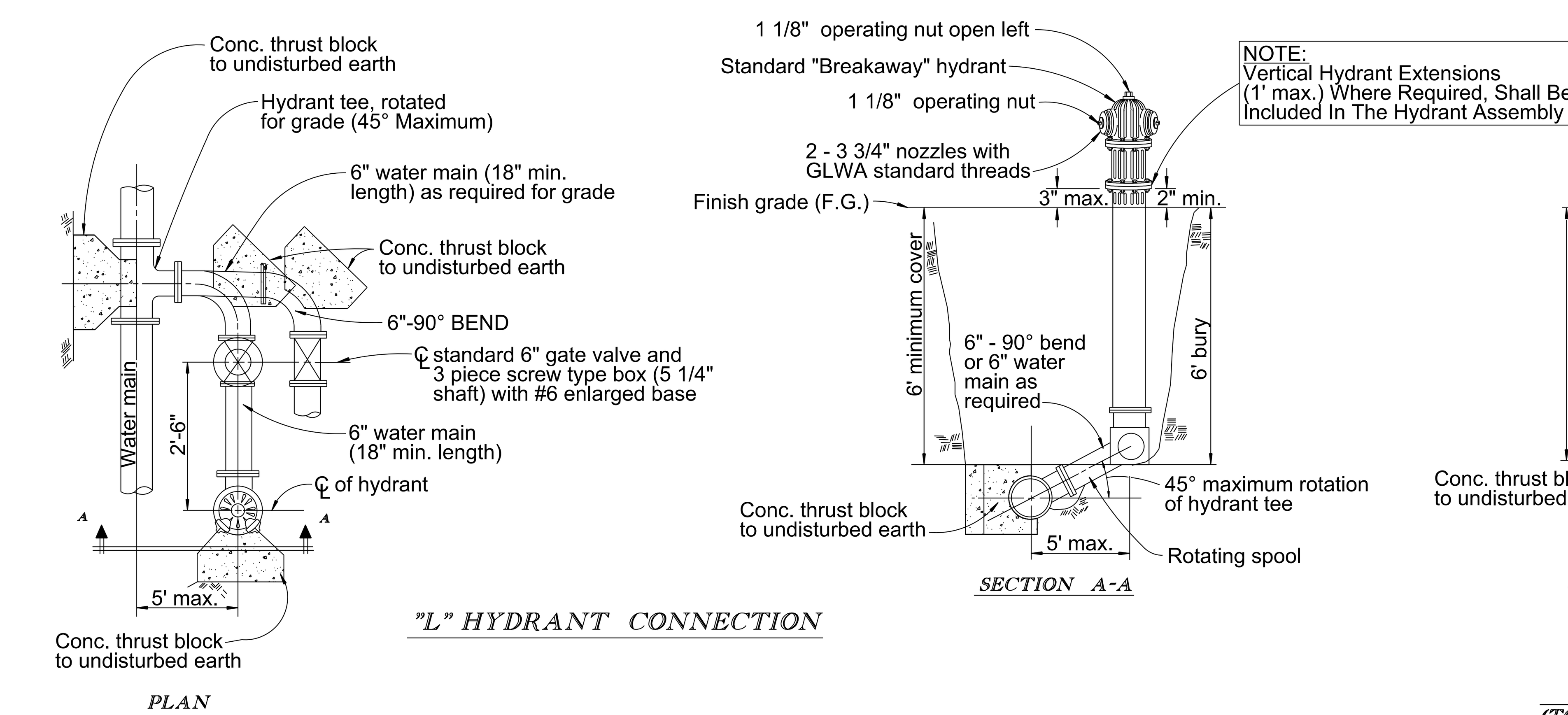

"L" HYDRANT CONNECTION

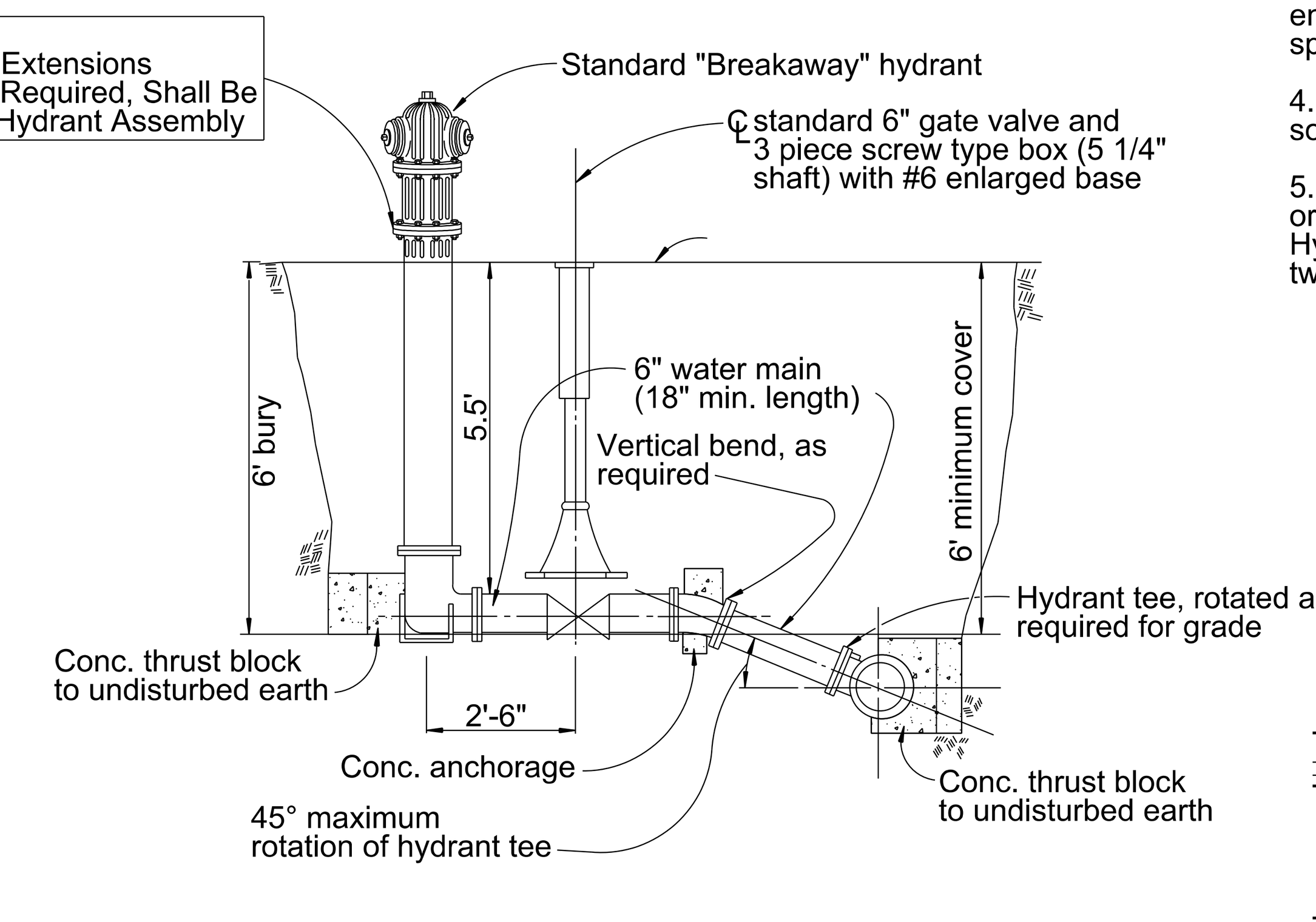

"T" HYDRANT CONNECTION
(TO BE INSTALLED ONLY WITH ENGINEER'S APPROVAL)

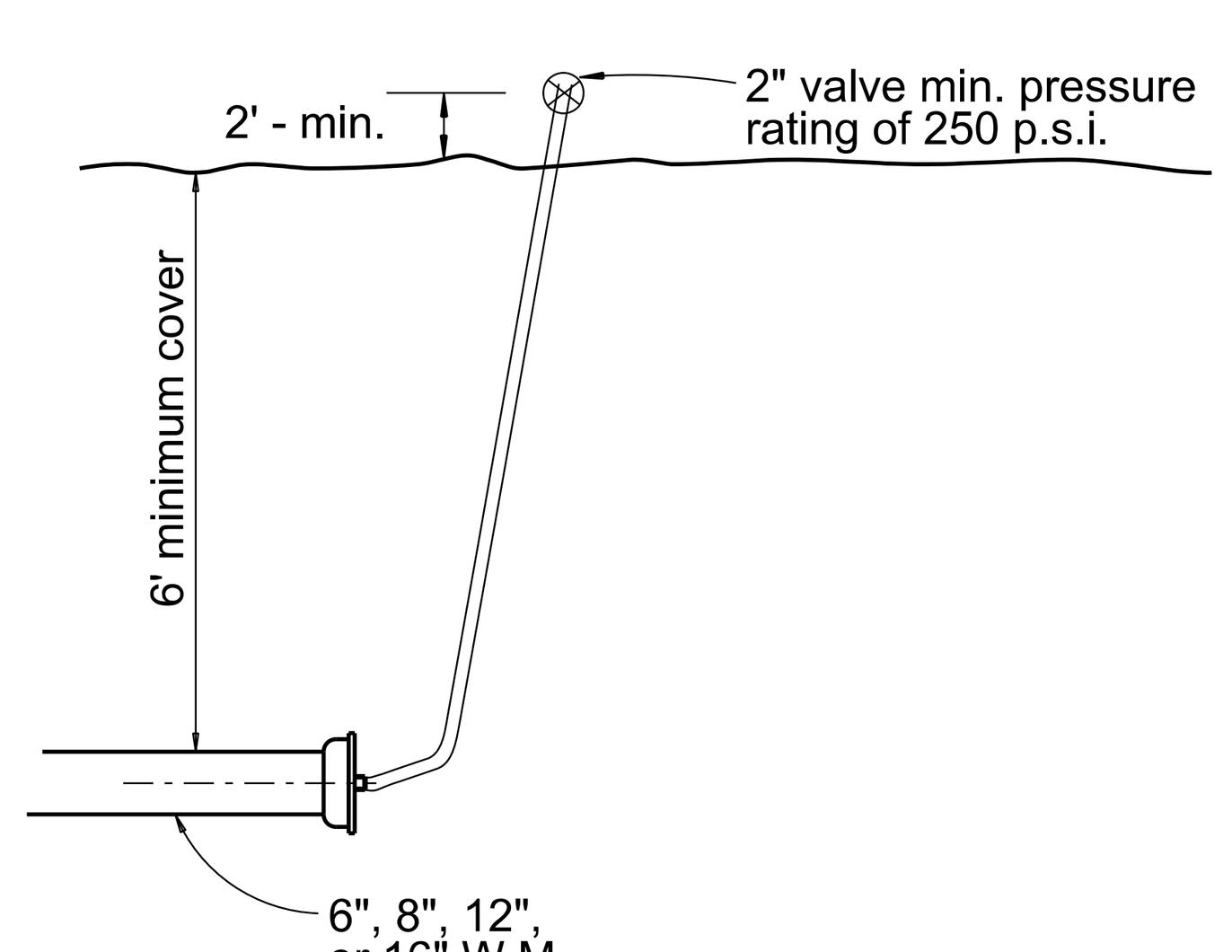

2" BLOWOFF ASSEMBLY

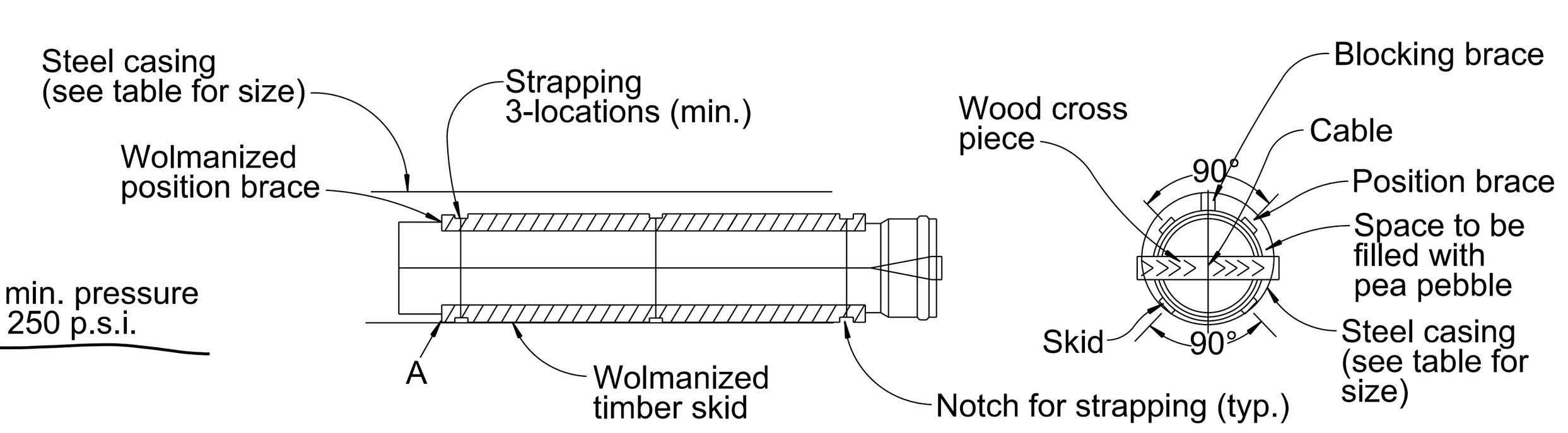

Note: The Ends Of The Casing Shall Be Sealed After The Water Main Is Installed Through The Casing

Pipe Size	Recommended Minimum Casing Diameter	Minimum Casing Wall Thickness
4"	12.75"	0.375"
6"	14"	0.375"
8"	16"	0.375"
12"	20"	0.375"
16"	24"	0.406"
24"	36"	0.532"

STEEL CASING REQUIREMENTS

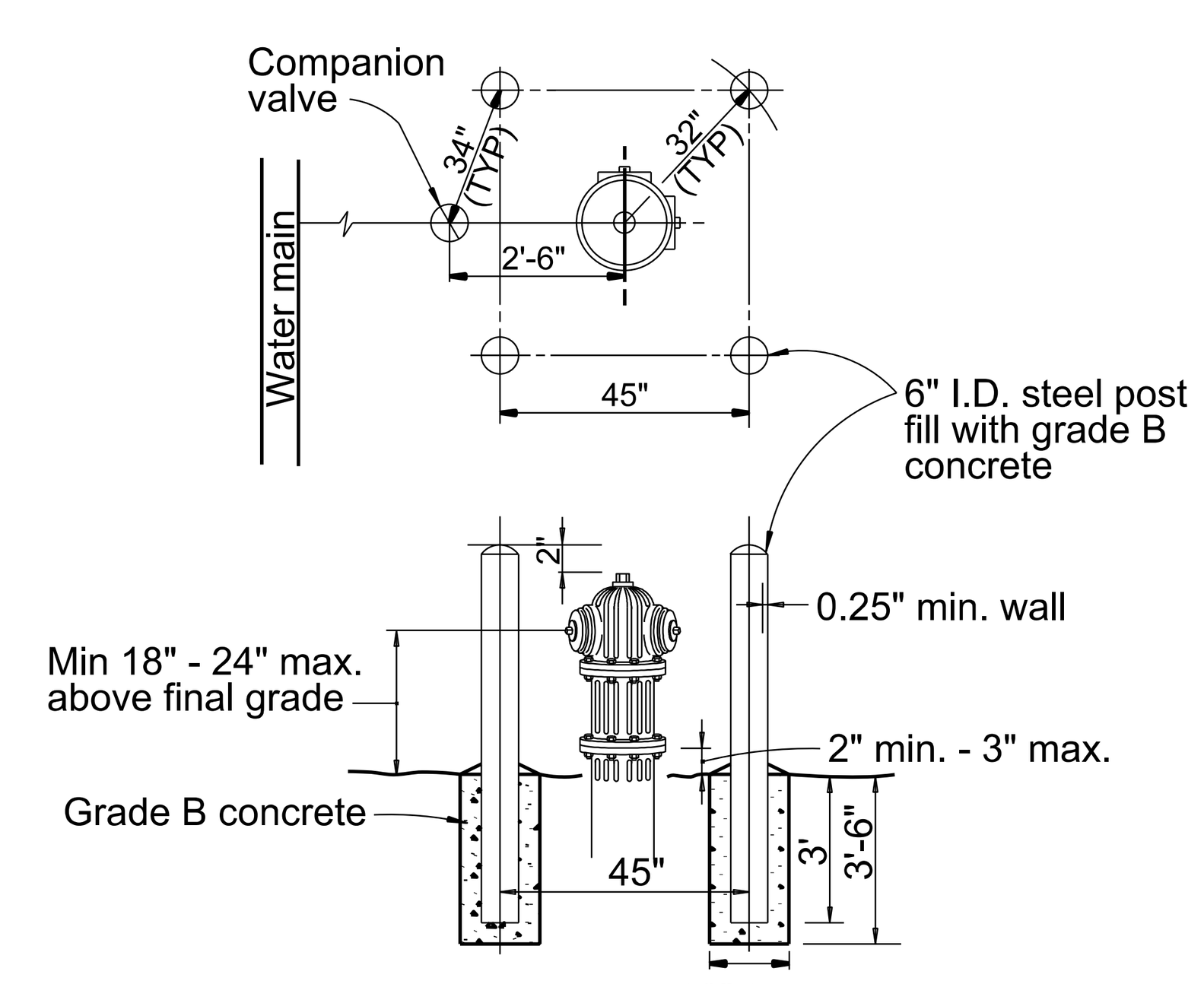

FIRE HYDRANT GUARD POSTS DETAIL

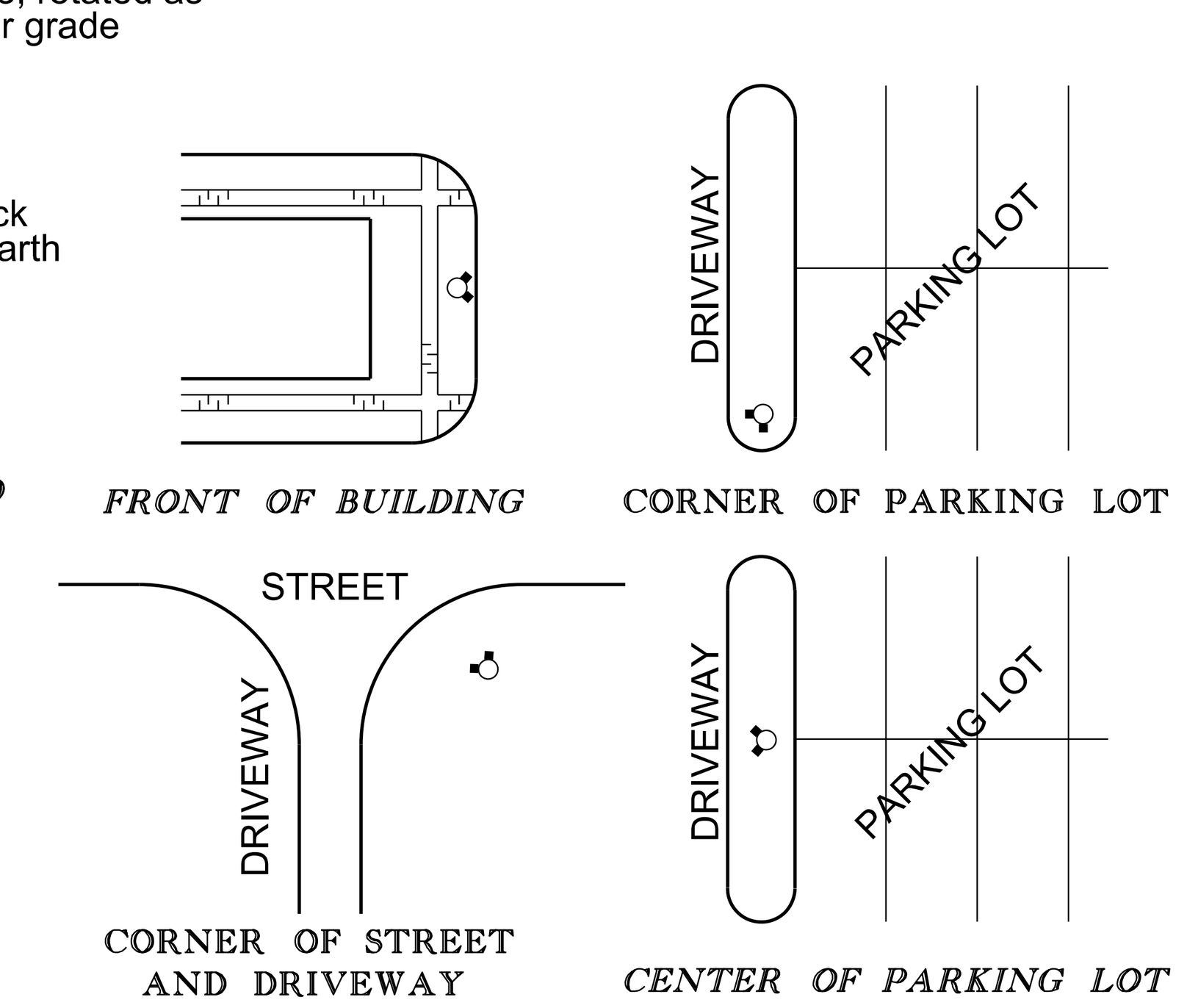

Hydrants shall be faced such that it is in the most optimum postion for fire department useage. the hydrant shall be free from obstructions, i.e. screen wall, landscaping material, dumpster, etc.

Final grade of hydrants shall be checked after final grade of ground has been approved. Adjustment of hydrant shall include no more than 12" extension.

Hydrants in vehicular areas shall have protection per "Fire Hydrant Guard Posts Detail". Final grade of hydrants in paved areas shall be checked after paving is in place.

Note: When questions arise regarding the facing of a hydrant, the Fire Department offices shall be contacted (248-524-3419).

TYPICAL FIRE HYDRANT FACING

GENERAL NOTES

1. All Water Main and Water System construction shall conform to the current standards and specifications of The City of Troy. Detailed written specifications are available upon request.

2. Prior to construction, the contractor shall attend a pre-construction meeting at a time and place as arranged by the City Engineer, in which various utility companies and governmental agency representatives may be present. The owner's, Engineer shall submit approved plans to all utility companies and governmental agencies 10 days prior to pre-construction meeting. Construction shall start within 3 weeks of meeting.

3. Ductile iron pipe shall meet the requirements of ANSI/AWWA C151/A21.51 for Class 54, double cement lined (with interior bituminous coating) with push on type joints. Push on joints shall be tyton, super belltite or approved alternate with serrated brass wedges. 6" thru 12" pipe requires 2 wedges per joint, 16" and larger requires 4 wedges per joint.

All ductile iron pipe, fittings and appurtenances shall be encased in polyethylene film conforming to A.N.S.I./A.W.W.A. specification C-105/A21.5; installment method A.

4. Hydrants shall be set on property line side of the ditch so they are not in the ditch line or back slope of ditch.

5. All hydrants shall be City of Troy standard EJ 5BR250 or Mueller A425 Super Centurion 200 with a breakaway flange. Hydrants shall open counter-clockwise and be supplied with two 3-3/4" nozzles having GLWA standard thread.

6. Unless otherwise shown on plans hydrants shall be Type "L" hydrants and shall be set to the elevation of the existing ground. When the existing ground is higher than the road centerline, the hydrant shall be extended upward (from road centerline) by inserting barrel extensions between the head and the top barrel flange. (the purpose of this requirement is to provide for the future lowering of the hydrant to the elevation of the road centerline). Hydrant extensions shall be included in the hydrant assembly.

7. All gatewells shall be City of Troy standard EJ series "RW" or Mueller series 2360 & 2361 conforming to ANSI/AWWA C-509 and C-515. All valves shall have double resilient seats. The valve shall be cast with an iron body with a bronze non-rising stem, double "O" Ring replaceable seal plates and mechanical joints. The valve shall be furnished with a 2" square operating nut, left to open, counterclockwise.

Shop drawings must be submitted for all gate valves greater than sixteen (16) inches in diameter. Bypass in accordance with ANSI/AWWA C-500 unless otherwise specified by the Engineer. Bypass valve shall be a gate valve conforming to the requirements of the City of Troy.

8. Gate valves and tapping valves shall be housed within a precast concrete gatewell. Hydrant valves shall be housed in a 3-piece screw type box (5-1/4" shaft) with #6 enlarged base.

9. All end-of-the-line gatewells shall have a capped stub extending 6 feet beyond the gatewell. The valve, pipe and cap shall be installed with megalug retainer glands and a concrete thrust block at the cap. Oak blocking is required for all end-of-the-line gate valves, inside the gatewell.

10. All fittings shall be ductile iron in accordance with ANSI/AWWA C153/A21.53 (compact fittings), 350 p.s.i. pressure rating with double cement lining, mechanical joints and megalug retaining gaskets. Field lock glands may be required by the Engineer or Inspector. Split retainers not allowed.

11. Concrete thrust blocks are required at all bends, tees, caps or pugs. Concrete shall have a compressive strength of 3500 p.s.i. (minimum) at 28 days. Dry mix not permitted.

12. Steps are to be MSU# 360 ALU Poly, MA Industries PSI Polypropylene or approved alternate and installed by the gatewell manufacturer. Steps shall align over the center of the pipe along the straight vertical wall of the eccentric gatewel, there must be clear access to steps.

13. A two (2) inch blow-off assembly shall be installed, for testing purposes, in all stubs and points of connection to the existing main. Upon successful completion of the tests and with the approval of the City of Troy Water Department, the contractor shall remove the blow-off assembly.

14. A vertical clearance of 1.5 feet (minimum) must be maintained between the water main and any utilities or as specified on the plans or permit, whichever is greater adjustments to the water main depth in order to obtain the desired clearances must be accomplished with vertical bends, thrust blocks and anchorages.

15. Deflection of pipe joints to obtain the desired clearances or alignment shall only be accomplished with the owner's approval. The maximum allowable deflection (for 1 full length of pipe with push-on joint) is 14 inches for 4" thru 12" pipe and 8.25 inches for 16" and 24" pipe.

16. The maximum permissible leakage, during hydrostatic testing, shall not exceed 0.18 gallon per inch diameter of main per 1000 feet of pipe in 2 hours at a test pressure of 150 p.s.i. The maximum text length is 3000 feet. The City of Troy reserves the right to test shorter lengths. The City will perform all pressure tests and pull all samples for bacteriological tests.

17. Connections to the existing water system shall not be made until the new main has been successfully pressure tested and has passed bacteriological testing. Final connections shall be coordinated with the City of Troy Engineering Department.

18. In new developments, water main shall not be installed until rough grading is completed to within 12" of proposed finish grade.

19. The contractor shall provide a 3 year maintenance and guarantee bond to the City, dated from the time of final acceptance by the City. The bond shall be for 35% of the construction costs.

20. Before final acceptance, As-Built drawings must be submitted to the City of Troy Engineering Department. One electronic copy (PDF) and one digital copy (DWG or DGN) is required.

TROY MICHIGAN

STANDARD WATER MAIN DETAILS

ENGINEERING DEPARTMENT

DATE : JUNE 2019

APPROVED BY : WILLIAM J. HUOTARI, CITY ENGINEER

REVISIONS

DATE	REMARKS
APRIL 2019	GENERAL UPDATES

REVISIONS

DATE	REMARKS

STATE OF MICHIGAN ★ WILLIAM J. HUOTARI ENGINEER NO. 43231 ★ LICENSED PROFESSIONAL ENGINEER

WILLIAM J. HUOTARI, P.E. #43231

3 FULL WORKING DAYS BEFORE YOU DIG CALL 811 Know what's below. Call before you dig MISS DIG System, Inc. 1-800-482-7171 (TOLL FREE) www.missdig.net

Contractor Note:
The locations of existing underground utilities are shown in an approximate way only. The contractor shall determine the exact location of all existing utilities before commencing work. they agree to be fully responsible for any and all damages which might be occasioned by their failure to exactly locate and preserve any and all underground utilities.

CONTRACT NO. XX-XX
PROJECT NO. XX.XXX.X

C

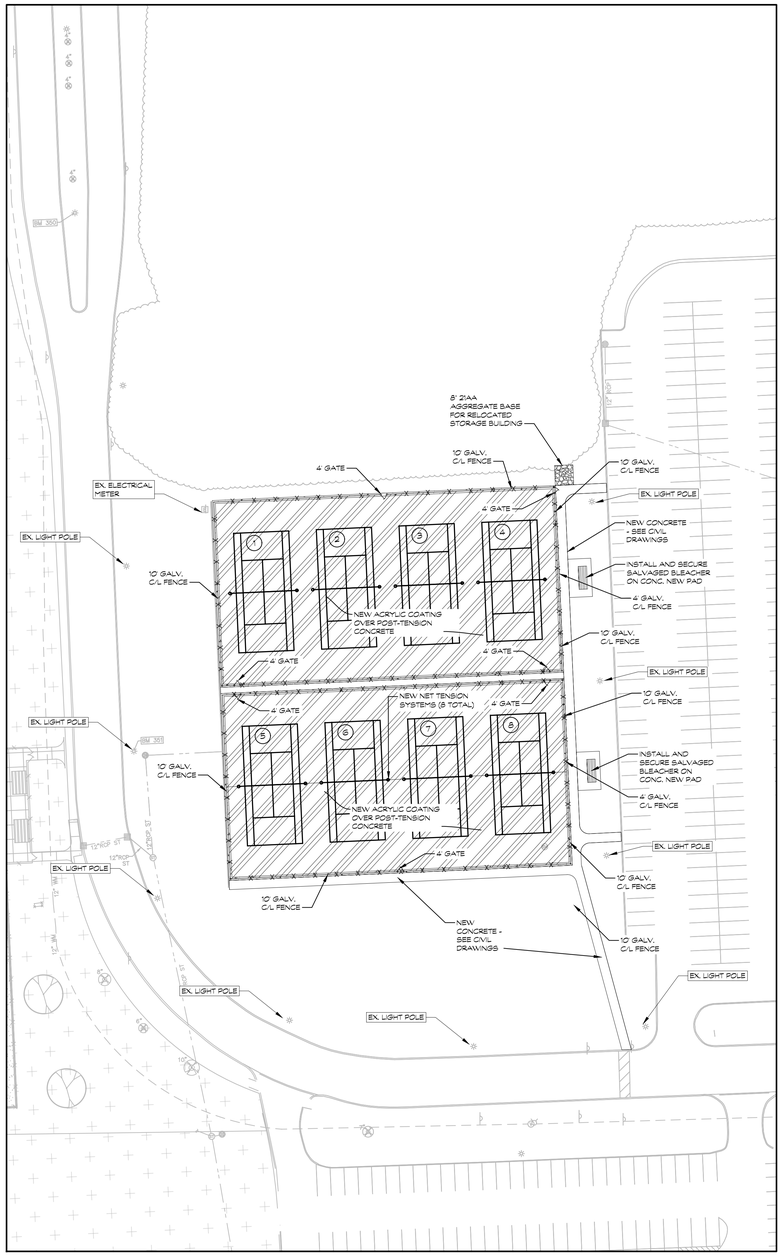

1 TROY H.S. - TENNIS SITE PLAN

SCALE 1"=40'-0"

LEGEND

EXISTING	PROPOSED
SPOT ELEVATION	SPOT GRADE
AS-BUILT SPOT ELEVATION	TOP OF WALL ELEVATION
FENCE	TOP OF CURB ELEVATION
DRAINAGE STRUCTURE	MATCH EXISTING ELEVATION
STORM DRAIN	TOP OF TRENCH ELEVATION
LIGHT POLE	DRAINAGE SWALE
ELECTRICAL	CHAINLINK FENCE - SEE PLANS FOR HT.
WATER	ORNAMENTAL FENCE - SEE PLANS FOR HT.
TELEPHONE	DRAINAGE STRUCTURE
IRRIGATION	STORM DRAIN
PROPERTY	FLAT DRAIN
SANITARY	4" PERFORATED DRAINTILE
GAS	6" PERFORATED DRAINTILE
	8" PERFORATED DRAINTILE
	LIGHT POLE
	ELECTRICAL
	WATER
	TELEPHONE
	IRRIGATION
	LIMITS OF CONSTRUCTION
	ACRYLIC COATING OVER POST-TENSION CONCRETE OVER SAND BASE
	POST-TENSION CONCRETE OVER SAND BASE
	NON-REINFORCED CONCRETE OVER SAND BASE
	TOPSOIL AND SEED
	6" 21AA AGGREGATE BASE

NOTES

1. NOTES AND LEGEND SHALL APPLY TO ALL SHEETS AND ALL SITES
2. CONTRACTOR SHALL BE SOLELY RESPONSIBLE AND MAKE EVERY EFFORT TO LOCATE EXISTING UNDERGROUND UTILITIES. THIS SHALL INCLUDE CONSULTING WITH ALL LOCAL UTILITY COMPANIES AND USING A SIGNAL LOCATOR PRIOR TO EXCAVATION. ANY AND ALL REPAIRS SHALL BE COMPLETED WITHIN 48 HRS. OR THE OWNER SHALL HAVE THE REPAIR WORK COMPLETED AT THE CONTRACTORS EXPENSE.
3. TOPSOIL AND SEED ALL AREAS DISTURBED AND NOT OTHERWISE DEVELOPED. ALL WORK I.E. DEMOLITION AND REMOVALS, DRAINAGE WORK, STONE AND ASPHALT, FENCING, TRACK SURFACE, ETC. SHALL BE COMPLETED BY DATE AS NOTED IN CONTRACT DOCUMENTS. ALL LAWN AREAS SHALL SLOPE TO DRAINAGE STRUCTURES.
4. ALL CONTOURS AND SPOT GRADES REFER TO FINISH GRADE OF LAWN, ASPHALT, OR CONCRETE. DO NOT FACTOR IN THE ALL-WEATHER SURFACE OR ACRYLIC COATING DEPTH.

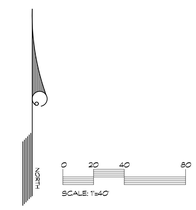

TMP ARCHITECTURE

TMP ARCHITECTURE INC
1191 WEST SQUARE LAKE ROAD
BLOOMFIELD HILLS - MICHIGAN - 48302
PH - 248.338.4561 FX - 248.338.0223
EM - INFO@TMP-ARCHITECTURE.COM

REGISTRATION SEAL

CONSULTANT

FORESITE DESIGN, INC.
ATHLETIC FACILITY PLANNING | SITE PLANNING
CONSULTING | LANDSCAPE ARCHITECTURE
3003 COOLIDGE HWY BERKLEY MI 48072
248.547.7767

PROJECT TITLE

Troy High School Athletic Fields Bid Package No. 02B

Troy School District
Troy, Michigan

DRAWING TITLE

Athletics Site Plan

ISSUE DATES

DATE:	ISSUED FOR:
12-10-2024	CONSTRUCTION DOCUMENTS

DRAWN	JB
CHECKED	HD
APPROVED	MDS

PROJECT NO.

22104E

DRAWING NO.

L2.01

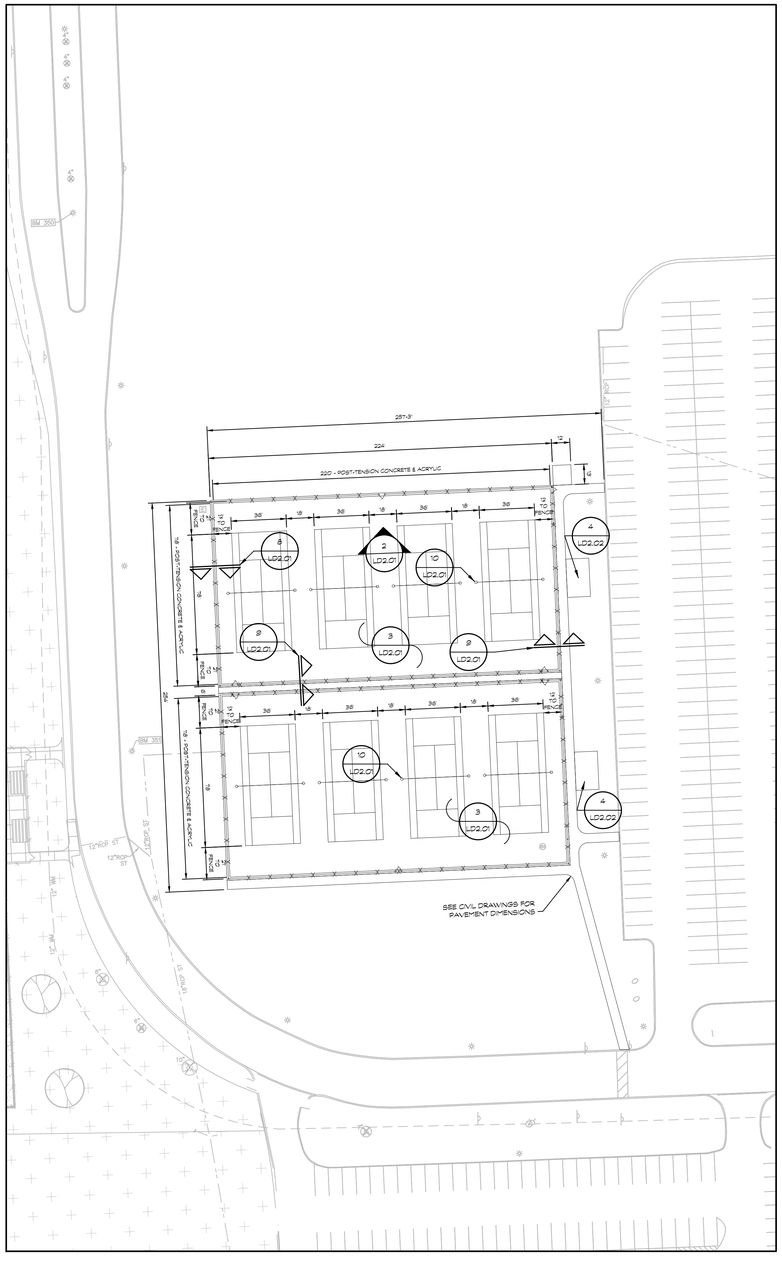

1 TROY H.S. - TENNIS DIMENSION PLAN

SCALE 1"=40'-0"

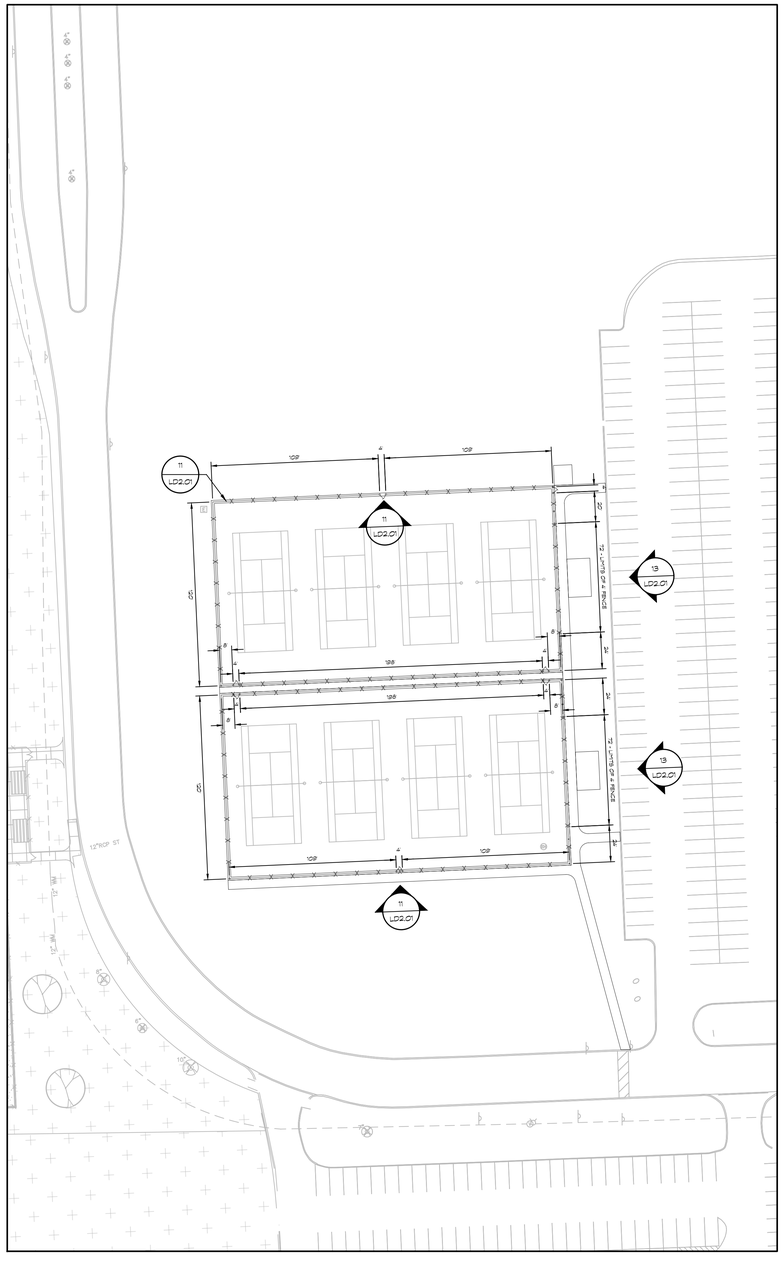

2 TROY H.S. - TENNIS FENCE PLAN

SCALE 1"=40'-0"

LEGEND

EXISTING

- SPOT ELEVATION
- XXXXX AS-BUILT SPOT ELEVATION
- —X—X— FENCE
- DRAINAGE STRUCTURE
- —ST— STORM DRAIN
- LIGHT POLE
- —E— ELECTRICAL
- —W— WATER
- —T— TELEPHONE
- —IRR— IRRIGATION
- PROPERTY
- —SS— SANITARY
- —GAS— GAS

PROPOSED

- XXXXX SPOT GRADE
- T/AXXXXXX TOP OF WALL ELEVATION
- T/CXXXXXX TOP OF CURB ELEVATION
- ME = XXXXX MATCH EXISTING ELEVATION
- T/TXXXXXX TOP OF TRENCH ELEVATION
- DRAINAGE SWALE
- CHAINLINK FENCE - SEE PLANS FOR HT.
- ORNAMENTAL FENCE - SEE PLANS FOR HT.
- DRAINAGE STRUCTURE
- STORM DRAIN
- FLAT DRAIN
- 4" PERFORATED DRAINTILE
- 6" PERFORATED DRAINTILE
- 8" PERFORATED DRAINTILE
- LIGHT POLE
- E ELECTRICAL
- W WATER
- T TELEPHONE
- IRR IRRIGATION
- LIMITS OF CONSTRUCTION
- ACRYLIC COATING OVER POST-TENSION CONCRETE OVER SAND BASE
- POST-TENSION CONCRETE OVER SAND BASE
- NON-REINFORCED CONCRETE OVER SAND BASE
- TOPSOIL AND SEED
- 6" 21AA AGGREGATE BASE

NOTES

1. NOTES AND LEGEND SHALL APPLY TO ALL SHEETS AND ALL SITES
2. CONTRACTOR SHALL BE SOLELY RESPONSIBLE AND MAKE EVERY EFFORT TO LOCATE EXISTING UNDERGROUND UTILITIES. THIS SHALL INCLUDE CONSULTING WITH ALL LOCAL UTILITY COMPANIES AND USING A SIGNAL LOCATOR PRIOR TO EXCAVATION. ANY AND ALL REPAIRS SHALL BE COMPLETED WITHIN 48 HRS. OR THE OWNER SHALL HAVE THE REPAIR WORK COMPLETED AT THE CONTRACTORS EXPENSE.
3. TOPSOIL AND SEED ALL AREAS DISTURBED AND NOT OTHERWISE DEVELOPED. ALL WORK I.E. DEMOLITION AND REMOVALS, DRAINAGE WORK, STONE AND ASPHALT, FENCING, TRACK SURFACE, ETC. SHALL BE COMPLETED BY DATE AS NOTED IN CONTRACT DOCUMENTS. ALL LAWN AREAS SHALL SLOPE TO DRAINAGE STRUCTURES.
4. ALL CONTOURS AND SPOT GRADES REFER TO FINISH GRADE OF LAWN, ASPHALT, OR CONCRETE. DO NOT FACTOR IN THE ALL-WEATHER SURFACE OR ACRYLIC COATING DEPTH.

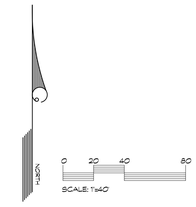

TMP ARCHITECTURE

TMP ARCHITECTURE INC
1191 WEST SQUARE LAKE ROAD
BLOOMFIELD HILLS - MICHIGAN - 48302
PH - 248.338.4561 FX - 248.338.0223
EM - INFO@TMP-ARCHITECTURE.COM

REGISTRATION SEAL

CONSULTANT

FORESITE DESIGN, INC.
ATHLETIC FACILITY PLANNING | SITE PLANNING
CONSULTING | LANDSCAPE ARCHITECTURE
3003 COOLIDGE HWY BERKLEY MI 48072
248.547.7767

PROJECT TITLE

Troy High School Athletic Fields Bid Package No. 02B

Troy School District
Troy, Michigan

DRAWING TITLE

Athletics Dimension & Fence Plan

ISSUE DATES

DATE:	ISSUED FOR:
12-10-2024	CONSTRUCTION DOCUMENTS

DRAWN	JB
CHECKED	HD
APPROVED	MDS

PROJECT NO.

22104E

DRAWING NO.

L2.02

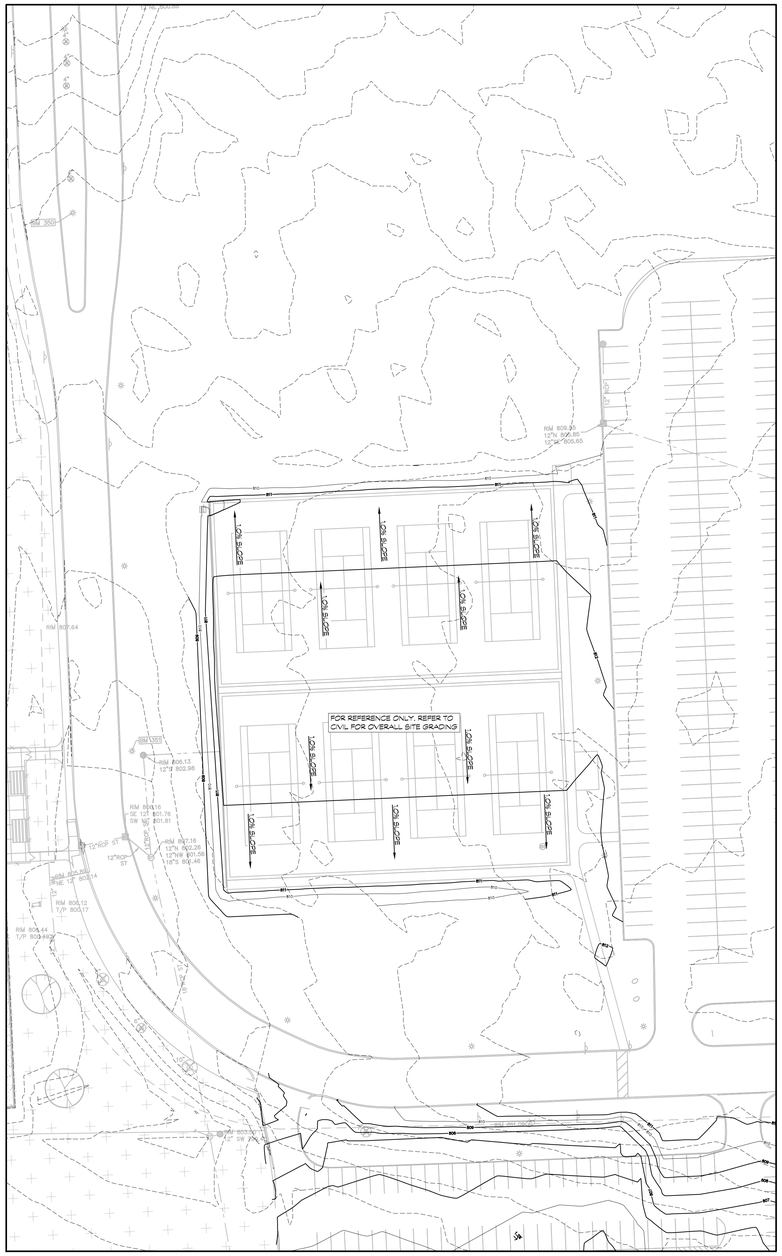

1 TROY H.S. - TENNIS GRADING PLAN
SCALE: 1"=40'-0"

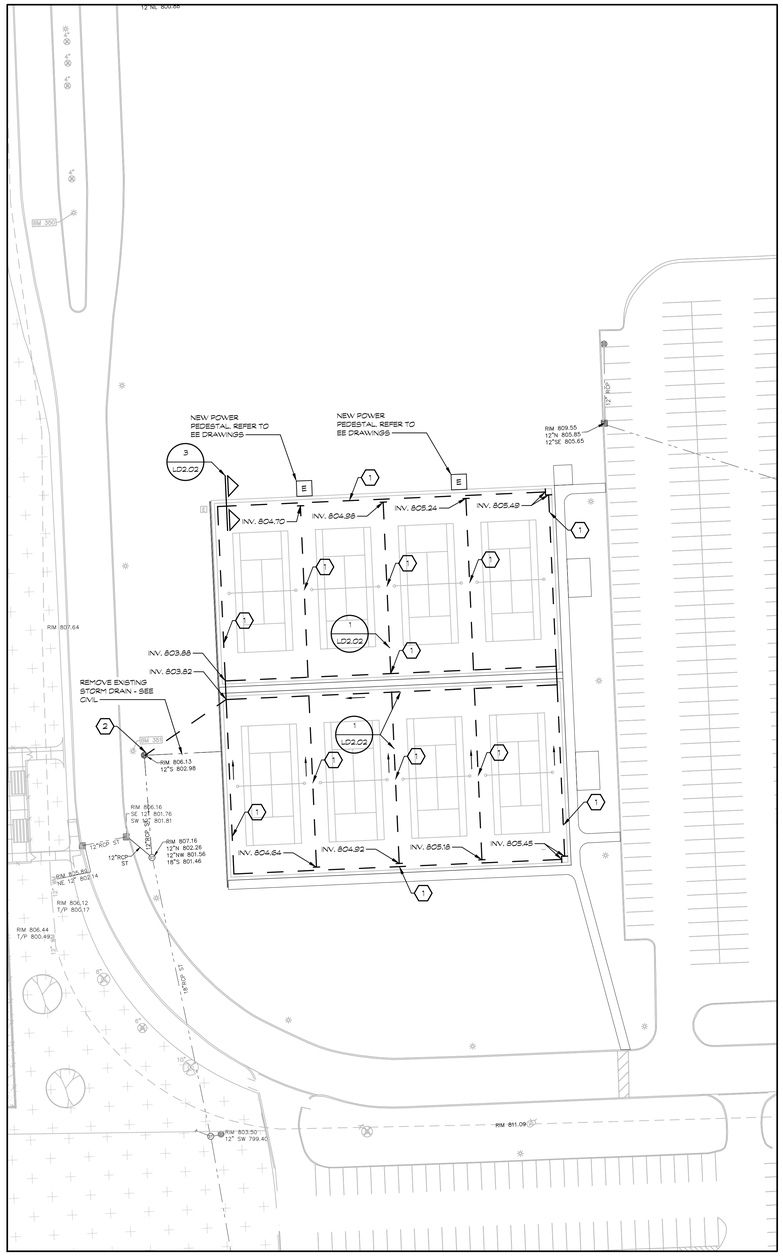

2 TROY H.S. - TENNIS DRAINAGE PLAN
SCALE: 1"=40'-0"

LEGEND

EXISTING	PROPOSED
SPOT ELEVATION	SPOT GRADE
AS-BUILT SPOT ELEVATION	TOP OF WALL ELEVATION
FENCE	TOP OF CURB ELEVATION
DRAINAGE STRUCTURE	MATCH EXISTING ELEVATION
STORM DRAIN	TOP OF TRENCH ELEVATION
LIGHT POLE	DRAINAGE SWALE
ELECTRICAL	CHAINLINK FENCE - SEE PLANS FOR HT.
WATER	ORNAMENTAL FENCE - SEE PLANS FOR HT.
TELEPHONE	DRAINAGE STRUCTURE
IRRIGATION	STORM DRAIN
PROPERTY	FLAT DRAIN
SANITARY	4" PERFORATED DRAINTILE
GAS	6" PERFORATED DRAINTILE
	8" PERFORATED DRAINTILE
	LIGHT POLE
	ELECTRICAL
	WATER
	TELEPHONE
	IRRIGATION
	LIMITS OF CONSTRUCTION
	ACRYLIC COATING OVER POST-TENSION CONCRETE OVER SAND BASE
	POST-TENSION CONCRETE OVER SAND BASE
	NON-REINFORCED CONCRETE OVER SAND BASE
	TOPSOIL AND SEED
	6" 21AA AGGREGATE BASE

TENNIS UTILITY LEGEND:

1. NEW 6" PERFORATED DRAINTILE W/ FABRIC IN MDOT PEASTONE TRENCH AT .5% SLOPE (MIN. 18" COVER).
2. FIELD CONNECT NEW PERFORATED DRAINTILE TO EXISTING DRAINAGE STRUCTURE

NOTES

1. NOTES AND LEGEND SHALL APPLY TO ALL SHEETS AND ALL SITES
2. CONTRACTOR SHALL BE SOLELY RESPONSIBLE AND MAKE EVERY EFFORT TO LOCATE EXISTING UNDERGROUND UTILITIES. THIS SHALL INCLUDE CONSULTING WITH ALL LOCAL UTILITY COMPANIES AND USING A SIGNAL LOCATOR PRIOR TO EXCAVATION. ANY AND ALL REPAIRS SHALL BE COMPLETED WITHIN 48 HRS. OR THE OWNER SHALL HAVE THE REPAIR WORK COMPLETED AT THE CONTRACTORS EXPENSE.
3. TOPSOIL AND SEED ALL AREAS DISTURBED AND NOT OTHERWISE DEVELOPED. ALL WORK I.E. DEMOLITION AND REMOVALS, DRAINAGE WORK, STONE AND ASPHALT, FENCING, TRACK SURFACE, ETC. SHALL BE COMPLETED BY DATE AS NOTED IN CONTRACT DOCUMENTS. ALL LAWN AREAS SHALL SLOPE TO DRAINAGE STRUCTURES.
4. ALL CONTOURS AND SPOT GRADES REFER TO FINISH GRADE OF LAWN, ASPHALT, OR CONCRETE. DO NOT FACTOR IN THE ALL-WEATHER SURFACE OR ACRYLIC COATING DEPTH.

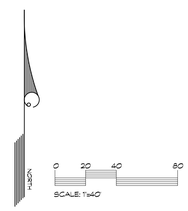

TMP ARCHITECTURE

TMP ARCHITECTURE INC
1191 WEST SQUARE LAKE ROAD
BLOOMFIELD HILLS - MICHIGAN - 48302
PH - 248.338.4561 FX - 248.338.0223
EM - INFO@TMP-ARCHITECTURE.COM

REGISTRATION SEAL

CONSULTANT

FORESITE DESIGN, INC.
ATHLETIC FACILITY PLANNING | SITE PLANNING
CONSULTING | LANDSCAPE ARCHITECTURE
3959 COOLIDGE HWY. BERKLEY MI 48072
248.547.7767

PROJECT TITLE

Troy High School Athletic Fields Bid Package No. 02B

Troy School District
Troy, Michigan

DRAWING TITLE
Athletics Grading & Drainage Plan

ISSUE DATES

DATE:	ISSUED FOR:
12-10-2024	CONSTRUCTION DOCUMENTS

DRAWN	JB
CHECKED	HD
APPROVED	MDS

PROJECT NO.
22104E

DRAWING NO.
L2.03

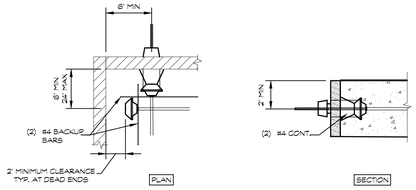

1 MINIMUM ANCHOR DISTANCE

SCALE 1"=1'-0"

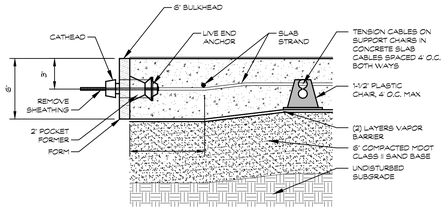

2 LIVE END ANCHOR

SCALE 1"=1'-0"

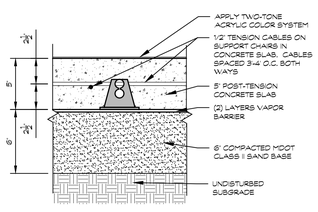

3 TENNIS COURT SURFACE

SCALE 1"=1'-0"

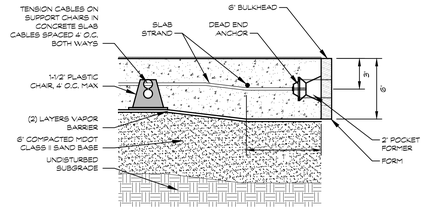

4 DEAD END ANCHOR

SCALE 1"=1'-0"

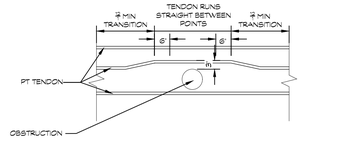

5 TENDON SWEEP PLAN

SCALE 1/2"=1'-0"

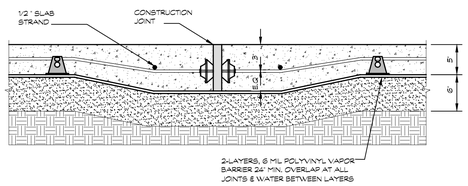

6 JOINT BETWEEN SLAB SECTION

SCALE 1"=1'-0"

NOTE: TENDON LAYOUT IS DIAGRAMMATIC ONLY AND SHOULD BE A DELEGATED DESIGN BY THE CONTRACTORS STRUCTURAL ENGINEER

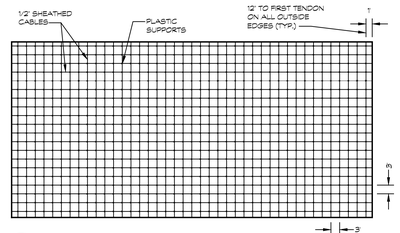

7 POST TENSION CABLE GRID LAYOUT

N.T.S.

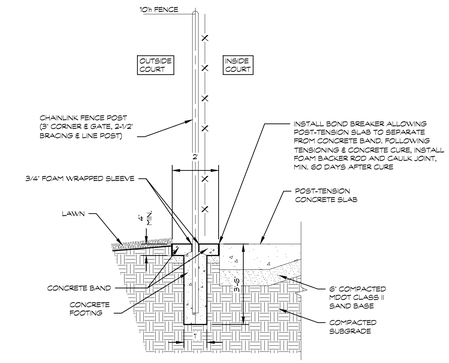

8 COURT SECTION AT FENCE

PERIMETER FENCING ADJACENT TO LAWN

N.T.S.

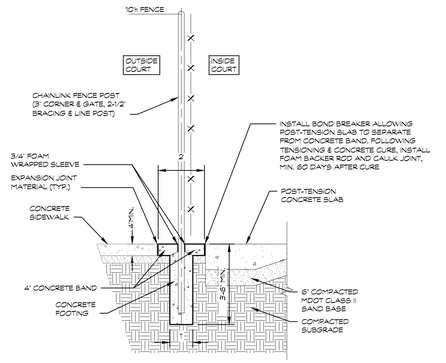

9 COURT SECTION AT FENCE

PERIMETER FENCING ADJACENT TO SIDEWALK

N.T.S.

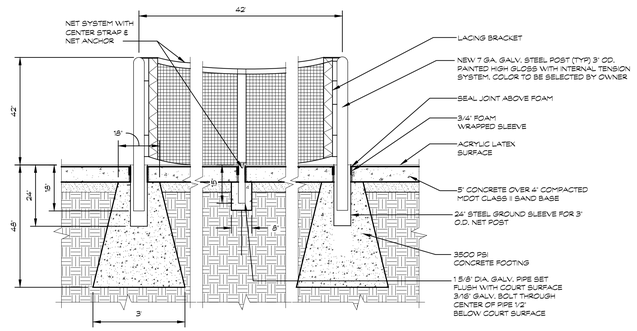

10 TENNIS NET TENSION SYSTEM

(8 SETS)

SCALE 1/2"=1'-0"

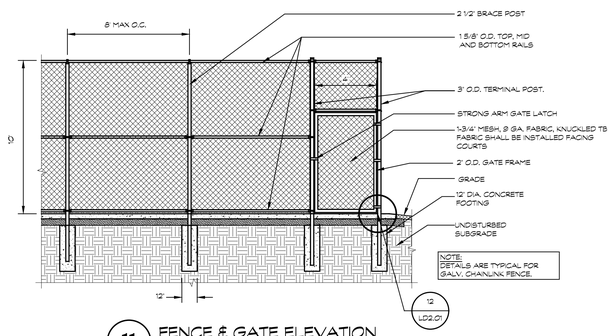

11 FENCE & GATE ELEVATION

SCALE 1/4"=1'-0"

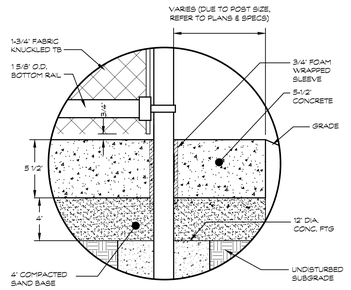

12 FENCE PAVEMENT DETAIL

SCALE 1/4"=1'-0"

NOTE: ACRYLIC COATING COLORS OF INNER AND OUTER COURT TO BE SELECTED BY OWNER FROM MANUFACTURER'S STANDARD COLORS

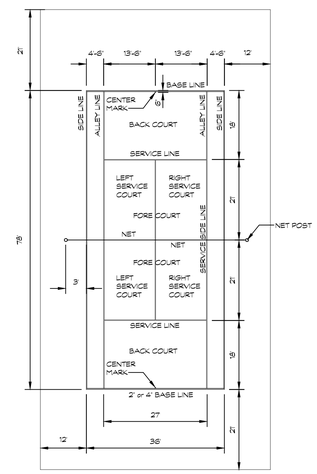

14 TENNIS COURT LAYOUT

SCALE 1/16"=1'-0"

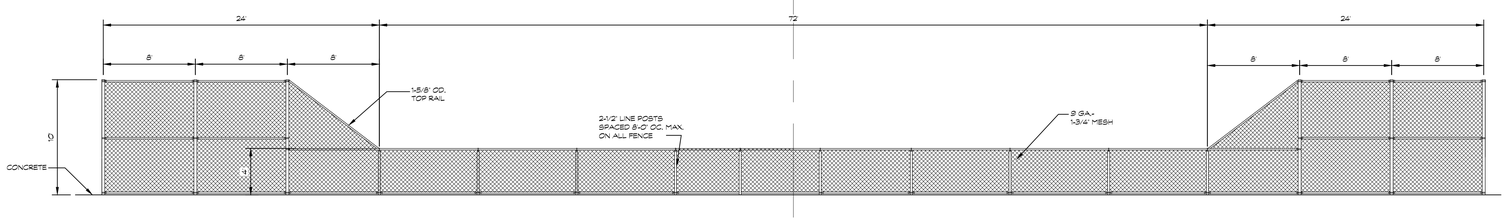

13 TENNIS STEP DOWN FENCE ELEVATION

EAST

SCALE 3/16"=1'-0"

TMP ARCHITECTURE

TMP ARCHITECTURE INC
1191 WEST SQUARE LAKE ROAD
BLOOMFIELD HILLS · MICHIGAN · 48302
PH · 248.338.4561 FX · 248.338.0223
EM · INFO@TMP-ARCHITECTURE.COM

REGISTRATION SEAL

CONSULTANT

FORESITE DESIGN, INC.
ATHLETIC FACILITY PLANNING | SITE PLANNING CONSULTING | LANDSCAPE ARCHITECTURE
3969 COOLIDGE HWY BERKLEY MI 48072
248.547.7767

PROJECT TITLE

Troy High School Athletic Fields Bid Package No. 02B

Troy School District
Troy, Michigan

DRAWING TITLE

Post-Tension Concrete Tennis Court Details

ISSUE DATES

DATE:	ISSUED FOR:
12-10-2024	CONSTRUCTION DOCUMENTS

DRAWN	JB
CHECKED	HD
APPROVED	MDS

PROJECT NO.

22104E

DRAWING NO.

LD2.01

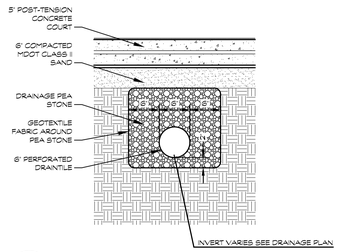

1 TENNIS COURT DRAINAGE SECTION
SCALE 1"=1'-0"

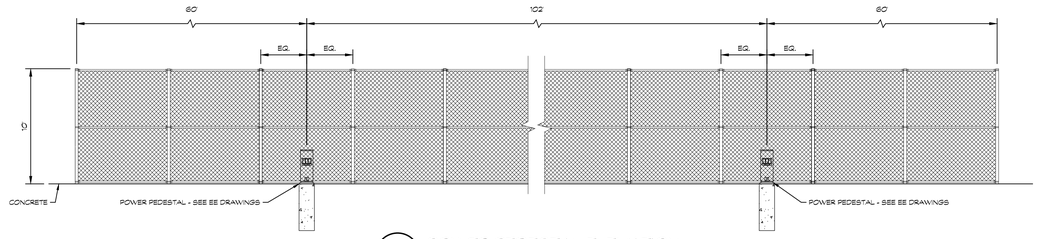

2 POWER PEDESTAL ELEVATION
SCALE 3/16"=1'-0"

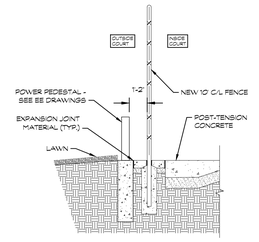

3 POWER PEDESTAL SECTION
SCALE 1/4"=1'-0"

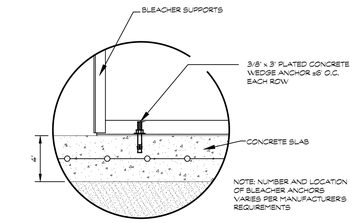

4 BLEACHER ANCHORING SYSTEM
NOT TO SCALE

TMP ARCHITECTURE

TMP ARCHITECTURE INC
1191 WEST SQUARE LAKE ROAD
BLOOMFIELD HILLS · MICHIGAN · 48302
PH · 248.338.4561 FX · 248.338.0223
EM · INFO@TMP-ARCHITECTURE.COM

REGISTRATION SEAL

CONSULTANT

FORESITE DESIGN, INC.
ATHLETIC FACILITY PLANNING | SITE PLANNING
CONSULTING | LANDSCAPE ARCHITECTURE
3269 COOLIDGE HWY BERKLEY MI 48072
248 547 7757

PROJECT TITLE
Troy High School Athletic Fields Bid Package No. 02B

Troy School District
Troy, Michigan

DRAWING TITLE
Site Details

ISSUE DATES

DATE:	ISSUED FOR:
12-10-2024	CONSTRUCTION DOCUMENTS

DRAWN	JB
CHECKED	HD
APPROVED	MDS

PROJECT NO.
22104E

DRAWING NO.
LD2.02

STRUCTURAL GENERAL NOTES

GENERAL

1. THIS BUILDING HAS BEEN DESIGNED AND SHALL BE CONSTRUCTED IN ACCORDANCE WITH THE MICHIGAN BUILDING CODE, 2015 EDITION.
2. THE OWNER WILL EMPLOY QUALIFIED SPECIAL INSPECTORS TO PERFORM INSPECTIONS IN ACCORDANCE WITH CHAPTER 17 OF THE MICHIGAN BUILDING CODE, EXCEPT AS NOTED BELOW. SPECIAL INSPECTIONS WILL BE PERFORMED FOR THE FOLLOWING:
   A. SOILS.
   B. CONCRETE.
   C. MASONRY
      I. MASONRY SPECIAL INSPECTION SHALL BE PERFORMED IN ACCORDANCE WITH TMS 402 & TMS 602 AND SHALL BE LEVEL B QUALITY ASSURANCE.
   D. STEEL
      I. STEEL SPECIAL INSPECTION SHALL BE PERFORMED IN ACCORDANCE WITH AISC 360.
3. WHEN "PROFESSIONAL ENGINEER" IS REFERRED TO IN THE FOLLOWING NOTES, IT DENOTES A LICENSED PROFESSIONAL ENGINEER REGISTERED IN THE STATE OF MICHIGAN, QUALIFIED TO PERFORM THE WORK.
4. THE CONTRACTOR SHALL VISIT THE SITE TO BECOME FAMILIAR WITH THE EXISTING CONDITIONS, THE OWNERS REQUIREMENTS FOR ACCESS TO THE SITE AND CONTINUED OPERATIONS DURING CONSTRUCTION.
5. THE PLAN, DETAIL DIMENSIONS & ELEVATIONS RELATIVE TO THE EXISTING STRUCTURE HAVE BEEN TAKEN FROM AVAILABLE DRAWINGS. IT SHALL BE THE RESPONSIBILITY OF THE CONTRACTOR TO VERIFY SUCH DIMENSIONS, ELEVATIONS & DETAILS AS NECESSARY AND MAKE APPROVED ADJUSTMENTS PRIOR TO CONSTRUCTION OR ORDERING OF MATERIAL.
6. THE CONTRACTOR SHALL SUBMIT CONCRETE REINFORCING, STRUCTURAL STEEL, AND METAL DECK SHOP DRAWINGS PRIOR TO FABRICATION. THE CONTRACTOR SHALL ALSO SUBMIT MATERIAL REQUIREMENTS AND CONCRETE MIX DESIGNS. ALLOW (2) WEEKS FOR ENGINEER REVIEW.
7. THE STRUCTURE SHALL BE CONSIDERED TO BE IN AN UNSTABLE CONDITION UNTIL ALL FLOOR, WALL AND ROOF STRUCTURES ARE COMPLETED. CONTRACTOR SHALL PROVIDE TEMPORARY BRACING FOR STABILITY AND TO RESIST LATERAL LOADS DURING ERECTION.
8. ALL NON LOAD BEARING WALLS, EXCEPT INDICATED SHEAR WALLS, SHALL BE CONSTRUCTED TO ALLOW FOR VERTICAL DEFLECTION OF THE STRUCTURE ABOVE.

DIVISION 2 - DEMOLITION/SHORING

1. CONTRACTOR SHALL PROVIDE ALL NECESSARY SHORING WHERE REQUIRED DURING CONSTRUCTION. SHORING SHALL BE DESIGNED & DETAILED UNDER THE DIRECT SUPERVISION OF A PROFESSIONAL ENGINEER. SHORING PROCEDURES, DESIGNS AND DETAILS SHALL BE SUBMITTED FOR REVIEW PRIOR TO COMMENCEMENT OF WORK, ALLOW (2) WEEKS FOR ENGINEER TO REVIEW.
2. THE CONTRACTOR IS RESPONSIBLE FOR DETERMINING ERECTION PROCEDURE AND SEQUENCING AND TO SUBMIT WRITTEN PROCEDURES TO ENSURE THE SAFETY OF THE STRUCTURE AND IT'S COMPONENTS DURING ERECTION.
3. FIELD VERIFY ALL EXISTING CONDITIONS PRIOR TO DEMOLITION. IF CONDITIONS EXIST THAT ARE DIFFERENT FROM WHAT IS INDICATED ON THE DRAWINGS, NOTIFY ARCHITECT FOR DIRECTION BEFORE PROCEEDING.
4. DUE CARE MUST BE TAKEN NOT TO UNDERMINE OR DISTURB EXISTING SOIL AND FOUNDATIONS WHEN EXCAVATING ADJACENT TO EXISTING FOUNDATIONS. FIELD VERIFY THE DEPTH AND WIDTH OF ANY EXISTING FOOTINGS & NOTIFY ARCHITECT OF ANY INTERFERENCES WITH NEW WORK.

DIVISION 3 - CONCRETE

1. THE LATEST REVISION OF THE FOLLOWING CODES GOVERN THE DESIGN, DETAILING, FABRICATION AND CONSTRUCTION OF ALL REINFORCED CONCRETE:
   A. AMERICAN CONCRETE INSTITUTE (ACI) ACI 318, BUILDING CODE REQUIREMENTS FOR REINFORCED CONCRETE.
   B. ACI 315, DETAILS & DETAILING OF CONCRETE REINFORCEMENT.
2. REINFORCING STEEL SHALL CONFORM TO THE FOLLOWING ASTM MATERIAL SPECIFICATIONS.
   A. DEFORMED BAR REINFORCING: ASTM A615 GRADE 60.
   B. WELDED WIRE REINFORCEMENT: A1064 (FLAT SHEETS ONLY).
3. ALL EXTERIOR CONCRETE (INCLUDING FOUNDATION WALLS, PIERS & FOOTINGS) SHALL BE AS FOLLOWS:
   A. MINIMUM 28-DAY COMPRESSIVE STRENGTH (f'c) = 4500 PSI.
   B. SLUMP = 3" TO 5".
   C. WATER/CEMENTITIOUS RATIO = 0.45.
   D. AIR ENTRAINMENT = 6% ± 1%.
   E. EXPOSURE CLASSES = F3, S0, W1, & C2.
4. ALL INTERIOR CONCRETE SHALL BE AS FOLLOWS:
   A. MINIMUM 28-DAY COMPRESSIVE STRENGTH (f'c) = 4000 PSI.
   B. SLUMP = 3" TO 5".
   C. WATER/CEMENTITIOUS RATIO = 0.50.
   D. EXPOSURE CLASSES = F0, S0, W1, & C1.
5. SPLICES FOR DEFORMED BARS SHALL BE CLASS B WITH APPLICABLE INCREASES FOR BAR SPACING, COVER, TOP BAR EFFECT ETC. PER ACI 318.
6. BEFORE PLACING CONCRETE REFER TO ARCHITECTURAL, MECHANICAL AND ELECTRICAL DRAWINGS FOR LOCATIONS OF PIPE SLEEVES, EMBEDDED ITEMS, OPENINGS, EQUIPMENT PADS, ELECTRICAL CONDUITS, RECESSES, DRAINS, ETC. ALL OPENINGS FOR PIPE, CONDUITS, ETC. SHALL BE SLEEVED. MINIMUM SLEEVE SPACING SHALL BE 3 SLEEVE DIAMETERS.
7. SUGGESTED CONSTRUCTION AND CONTROL JOINT LOCATIONS ARE INDICATED ON THE DRAWINGS. THE CONTRACTOR MAY DEVIATE FROM SUGGESTED JOINT LOCATIONS WITH PRIOR APPROVAL OF THE ARCHITECT.
8. CONCRETE CONTROL JOINTS SHALL BE CUT AS SOON AS CONCRETE HAS HARDENED SUFFICIENTLY TO PREVENT DISLODGMENT OF AGGREGATES. SAW A CONTINUOUS SLOT TO A DEPTH OF 1/4 THE THICKNESS OF THE SLAB BUT NOT LESS THAN 1". COMPLETE SAWING WITHIN 12 HOURS AFTER PLACEMENT.
9. PROVIDE A RECESS IN THE TOP OF FOUNDATION WALLS AT DOOR OPENINGS FOR SUPPORT OF THICKENED FLOOR SLABS AND TO RECEIVE DOOR JAMBS. DEPTH OF RECESS TO BE 2" GREATER THAN THICKNESS OF THE FLOOR SLABS, UNLESS NOTED OTHERWISE.
10. PROVIDE BENT CORNER BARS IN ALL WALLS AND FOOTINGS OF THE SAME SIZE AND NUMBER AS THE CONTINUOUS REINFORCEMENT.
11. CONCRETE SHALL BE TESTED BY AN INDEPENDENT TESTING AGENCY. A SET OF (3) CONCRETE TEST CYLINDERS SHALL BE MADE AND TESTED FOR COMPRESSION STRENGTH AT 7 AND 28 DAYS OR EVERY 50 CUBIC YARDS OF CONCRETE CAST (MINIMUM OF (1) SET PER DAY OF CASTING). ALSO SLUMP AND UNIT WEIGHT TESTS SHALL BE PERFORMED EVERY OTHER TRUCK LOAD. CONTRACTOR MADE CONCRETE TEST CYLINDERS ARE NOT ACCEPTABLE.

DIVISION 4 - MASONRY

1. THE LATEST REVISION OF THE FOLLOWING CODES GOVERN THE DESIGN, DETAILING AND CONSTRUCTION OF ALL MASONRY:
   A. THE MASONRY SOCIETY (TMS) TMS 402, BUILDING CODE REQUIREMENTS FOR MASONRY STRUCTURES.
   B. TMS 602, SPECIFICATIONS FOR MASONRY STRUCTURES.
2. ALL MASONRY SHALL HAVE A MINIMUM COMPRESSIVE STRENGTH OF f'm = 2000 PSI.
3. ALL MORTAR SHALL BE TYPE S, PROPORTIONED BY VOLUME ACCORDING TO ASTM C270.
4. ALL GROUT SHALL HAVE A MINIMUM 28 DAY COMPRESSIVE STRENGTH OF 2000 PSI AND SHALL BE PROPORTIONED BY VOLUME ACCORDING TO ASTM C476.
5. ALL CONCRETE MASONRY UNITS SHALL BE NORMAL WEIGHT WEIGHT ASTM C90, GRADE N, UNITS UNLESS NOTED OTHERWISE. UNITS SHALL HAVE A MINIMUM NET AREA COMPRESSIVE STRENGTH OF 2000 PSI.
6. ALL MASONRY WALLS SHALL HAVE HORIZONTAL JOINT REINFORCEMENT (9 GA, HOT DIPPED GALVANIZED) AT 16" O.C. PROVIDE PREFABRICATED CORNER PIECES AT ALL CORNERS AND INTERSECTIONS OF WALLS.
7. ALL DEFORMED BAR REINFORCING SHALL BE ASTM A615, GRADE 60. AT LOCATIONS WHERE REINFORCING IS TO BE WELDED, THE DEFORMED BAR REINFORCING SHALL BE ASTM A706, GRADE 60.
8. LAP SPLICES IN WALLS SHALL BE DETERMINED IN ACCORDANCE WITH TMS 402 AND ARE INDICATED IN THE TYPICAL DETAILS, THE MINIMUM SPLICE SHALL BE 48 BAR DIAMETERS.
9. ALL MASONRY REINFORCING SHALL BE SECURED IN PLACE WITH REBAR POSITIONERS AND SPACERS.
10. ALL VERTICAL MASONRY WALL REINFORCEMENT SHALL BE CENTERED ON THE WALL, DOWELED INTO THE FOOTINGS, AND GROUTED SOLID, UNLESS NOTED OTHERWISE ON DETAILS.
11. IN ADDITION TO ALL OTHER REINFORCING IN MASONRY WALLS PROVIDE A MINIMUM OF (1) #5 BAR AT EACH SIDE OF ALL OPENINGS, EACH SIDE OF CONTROL JOINTS, AT CORNERS OR ENDS OF WALLS AND AT BEAM OR LINTEL BEARING. BAR TO BE FULL HEIGHT OF WALL.
12. ALL MASONRY WALLS SHALL HAVE A CONTINUOUSLY REINFORCED BOND BEAM NEAR THE TOP OF THE WALL, WITH (2) #5 BARS U.N.O. PROVIDE BENT CORNER BARS AT ALL BOND BEAM INTERSECTIONS. REFER TO APPROPRIATE DETAILS FOR LOCATION OF BOND BEAM.
13. THE CONTRACTOR IS RESPONSIBLE FOR PROVIDING TEMPORARY WALL BRACING ADEQUATE TO RESIST LATERAL LOADS.
14. SEE ARCHITECTURAL DRAWINGS FOR LOCATIONS OF WALL CONTROL JOINTS AND EXPANSION JOINTS.
15. UNLESS NOTED OTHERWISE ON PLANS, LINTELS IN NON-LOAD BEARING MASONRY WALLS SHALL BE SIZED AS PER THE LOOSE LINTEL SCHEDULE ON THE DRAWINGS.
16. REFER TO ARCHITECTURAL DRAWINGS AND SPECIFICATIONS FOR TYPE, SIZE, LOCATION AND ATTACHMENT REQUIREMENTS FOR MASONRY VENEER AND OTHER CLADDING.

DIVISION 5 - STRUCTURAL STEEL

1. THE LATEST REVISION OF THE FOLLOWING CODES GOVERN THE DESIGN, DETAILING, FABRICATION AND ERECTION OF ALL STRUCTURAL STEEL.
   A. AMERICAN INSTITUTE OF STEEL CONSTRUCTION (AISC) AISC 360, SPECIFICATION FOR STRUCTURAL STEEL BUILDINGS.
   B. AISC 303, CODE OF STANDARD PRACTICE FOR STEEL BUILDINGS AND BRIDGES.
2. STRUCTURAL STEEL SHALL CONFORM TO THE FOLLOWING ASTM MATERIAL SPECIFICATIONS:
   A. W AND WT SHAPES: ASTM A992, GRADE 50 (Fy = 50 KSI).
   B. MISCELLANEOUS SHAPES AND PLATES: ASTM A36 (Fy = 36 KSI).
   C. PIPE: ASTM A53, GRADE B, TYPE E OR S (Fy = 35 KSI).
   D. HOLLOW STRUCTURAL SECTIONS: ASTM A500, GRADE C (Fy = 50 KSI).
   E. ALL COLUMN ANCHOR RODS SHALL BE ASTM F1554 (Fy = 36 KSI).
3. ALL WELDING SHALL BE PERFORMED USING THE ELECTRIC ARC METHOD IN ACCORDANCE WITH THE LATEST REVISION OF THE AMERICAN WELDING SOCIETY (AWS) D1.1 "STRUCTURAL WELDING CODE". E70XX ELECTRODES CONFORMING TO AWS A5.1 OR A5.5 SHALL BE USED FOR SHIELDED METAL ARC METHOD & FX7-EGXX FLUX - ELECTRODE COMBINATION CONFORMING TO AWS A5.17 FOR SUBMERGED ARC METHOD.
4. ALL BOLTS SHALL BE 3/4" DIAMETER ASTM F3125 GRADE A325 TYPE N BOLTS. ALL BOLTED CONNECTIONS SHALL BE SNUG-TIGHT BEARING TYPE BOLTS UNLESS NOTED OTHERWISE.
5. THE CONTRACTOR SHALL SUBMIT SHOP DRAWINGS SHOWING SIZES, DESIGN VALUES, MATERIALS, DIMENSIONS AND CONNECTIONS.
6. ALL CONNECTIONS NOT SPECIFICALLY DETAILED, SHALL BE DESIGNED AND DETAILED UNDER THE DIRECT SUPERVISION OF A PROFESSIONAL ENGINEER. DETAILING SHALL BE PERFORMED USING RATIONAL ENGINEERING DESIGN AND STANDARD PRACTICE IN ACCORDANCE WITH THE CONTRACT DOCUMENTS. THE GENERAL DETAILS SHOWN ON THE DRAWINGS ARE APPROXIMATE ONLY AND DO NOT INDICATE THE REQUIRED NUMBER OF BOLTS OR WELD SIZES, UNLESS SPECIFICALLY NOTED.
7. PROVIDE "SLIP-CRITICAL" CONNECTIONS AT BRACING, WHERE BOLTS ARE IN TENSION AND AT MOMENT CONNECTIONS.
8. ALL BEAM CONNECTIONS ARE TO CONFORM TO AISC STANDARD TWO ANGLE WEB CONNECTIONS CAPABLE OF SUPPORTING 66% OF THE TOTAL UNIFORM LOAD CAPACITY OF THE BEAM OR FOR LOADS INDICATED ON DRAWING. NO CONNECTION SHALL CONSIST OF LESS THAN TWO 3/4" DIAMETER BOLTS OR A WELD DEVELOPING LESS THAN 10 KIPS.
9. ALL FIELD CONNECTIONS SHALL BE BOLTED UNLESS NOTED OTHERWISE. FIELD WELDING IS NOT ALLOWED EXCEPT WHERE SPECIFICALLY INDICATED OR APPROVED.
10. ALL SHOP AND FIELD WELDS SHALL BE VISUALLY INSPECTED PER AWS D1.1. ALL DEFICIENT OR NON CONFORMING ITEMS SHALL BE REPORTED TO THE ENGINEER WHO WILL DETERMINE THE CORRECTIVE ACTION REQUIRED.
11. ALL BEAMS SHALL BE FABRICATED WITH THE NATURAL CAMBER UP. PROVIDE CAMBERS AS INDICATED ON THE DRAWINGS.
12. GROUT REQUIRED UNDER COLUMN BASE PLATES AS SHOWN IN THE DETAILS SHALL BE A STANDARD NON-SHRINK GROUT SUCH AS "MASTERFLOW 100" BY MASTER BUILDERS.
13. PRIME PAINT ALL STRUCTURAL STEEL WITH FABRICATOR'S STANDARD LEAD AND CHROMATE- FREE, NONASPHALTIC, RUST-INHIBITING PRIMER COMPLYING WITH MASTER PAINTER INSTITUTE (MPI) #79. APPLY PRIMER ACCORDING TO THE MANUFACTURER'S WRITTEN INSTRUCTIONS AND AT RATE RECOMMENDED BY SSPC TO PROVIDE A MINIMUM DRY FILM THICKNESS OF 1.5 MILS. USE PRIMING METHODS THAT RESULT IN FULL COVERAGE OF JOINTS, CORNERS, EDGES, AND EXPOSED SURFACES. TOUCH-UP DAMAGE/OR MISSING PAINT AFTER STEEL ERECTION IS COMPLETE. OMIT PAINT AT: HOLES FOR SLIP CRITICAL CONNECTIONS, AT STEEL TO BE FIRE PROOFED, AT STEEL ENCASED IN CONCRETE AND ON THE TOP FLANGE OF STEEL BEAMS WITH SHEAR CONNECTIONS.
14. PROVIDE AND HAVE IN PLACE ADEQUATE LATERAL BRACING AND VERTICAL SUPPORTS FOR THE SAFE ERECTION AND TRUE ALIGNMENT OF THE STRUCTURAL STEEL. THIS CONTRACTOR ASSUMES FULL RESPONSIBILITY FOR THE SAFE ERECTION AND TEMPORARY BRACING OF STRUCTURAL STEEL.
15. VERIFY NUMBER AND SIZE OF OPENINGS IN ROOF, WALLS AND FLOOR WITH ARCHITECTURAL, MECHANICAL AND ELECTRICAL DRAWINGS. SEE DETAILS, AND SPECIFICATIONS, FOR STRUCTURAL REQUIREMENTS. VERIFY ALL INFORMATION WITH THE APPROPRIATE CONTRACTOR.
16. ALL DIMENSIONS RELATED TO STRUCTURAL STEEL USED TO SUPPORT EQUIPMENT OR FRAME OPENINGS SHALL BE VERIFIED WITH CERTIFIED AND APPROVED SHOP DRAWINGS OF PURCHASED EQUIPMENT PRIOR TO DETAILING AND FABRICATION.
17. PROVIDE L3x3x1/4 SHELF ANGLES AT TOPS OF COLUMNS AS REQUIRED TO SUPPORT ROOF DECK.
18. ALL EDGES OF METAL DECK SHALL BE SUPPORTED AT A CHANGE IN DECK SPAN WHETHER SHOWN ON DRAWINGS OR NOT. PROVIDE TUBE STEEL OR A DOUBLE ANGLE BETWEEN JOIST OR STRUCTURAL STEEL AND METAL DECK.
19. ALL FREE EDGES OF METAL DECK SHALL BE SUPPORTED WITH AN EDGE ANGLE L3x3x1/4 OR OTHER SUITABLE SUPPORT. THIS SHALL BE PROVIDED WHETHER SHOWN ON DRAWINGS OR NOT.
20. ALL BEAMS, JOISTS, OR LINTELS BEARING ON MASONRY WALLS SHALL HAVE BEARING PLATES WITH ANCHOR BOLTS. IF NOT NOTED ON PLAN, SEE TYPICAL DETAILS.
21. ALL WF BEAMS SUPPORTING MASONRY AND WITH SPANS GREATER THAN 6'-0" SHALL HAVE 1/2" DIAMETER BY 6" LONG HEADED CONCRETE ANCHORS SPACED AT 2'-0" O.C. WELDED TO THE TOP FLANGE.
22. ALL STEEL IN EXTERIOR MASONRY WALLS IS TO BE HOT-DIP GALVANIZED IN ACCORDANCE WITH ASTM A-123.

DIVISION 5 - STEEL DECK

1. THE LATEST REVISION OF THE FOLLOWING CODES GOVERN THE DESIGN, DETAILING, MANUFACTURING AND ERECTION OF STEEL DECK.
   A. STEEL DECK INSTITUTE (SDI) MOC3, MANUAL OF CONSTRUCTION WITH STEEL DECK.
   B. SDI FDDM, FLOOR DECK DESIGN MANUAL.
   C. SDI RDDM, ROOF DECK DESIGN MANUAL.
2. ALL ROOF DECK SHALL BE AS FOLLOWS:
   A. ALL ROOF DECK SHALL BE 1 1/2" DEEP 22 GA WIDE RIB GALVANIZED DECK, 3 SPAN MINIMUM. 1.5B BY VULCRAFT OR AN APPROVED EQUAL.
   B. FASTEN ROOF DECK TO ALL SUPPORTS AND AT PERIMETER WITH 5/8" DIAMETER PUDDLE WELDS @ 6" O.C. AT SUPPORTS AND 6" O.C. AT PERIMETER. FASTEN SIDE LAPS WITH #10 TEK SCREWS, 2 PER SPAN.
3. PROVIDE ADDITIONAL SUPPORT FRAMING AT OPENINGS IN ROOF AND FLOOR PER TYPICAL DETAILS. COORDINATE LOCATIONS WITH APPROPRIATE TRADES.
4. THE CONTRACTOR SHALL FURNISH ALL ACCESSORIES INCLUDING CLOSURES, "Z" CLOSURES, COLUMN CLOSURES, SCREED ANGLES, GIRDER FILLERS, CANT STRIP, FILLER SHEET AND REINFORCING CHANNEL, AS REQUIRED.
5. ALL DECKING SHALL BE WELDED TO STRUCTURAL STEEL BY QUALIFIED WELDERS USING PRE-QUALIFIED PROCEDURES. THE ERECTOR SHALL ESTABLISH A WELDING PROCEDURE FOR THE PLUG WELD OF THE STEEL DECKING TO THE STRUCTURAL STEEL FOR THE PARTICULAR GAGE USED. PRIOR TO THE START OF ERECTION OF THE STEEL DECK, EACH WELDER SHALL BE QUALIFIED USING THIS PROCEDURE AS WITNESSED BY THE OWNER'S TESTING AGENCY.
6. THE METAL DECK SHALL BE DESIGNED TO BE CONTINUOUS OVER THREE (3) SPANS IN THE DIRECTION INDICATED. SINGLE AND DOUBLE SPANS, IF REQUIRED, SHALL SATISFY LOAD AND DEFLECTION REQUIREMENTS.
7. NO LOADS SHALL BE PERMITTED TO BE HUNG FROM ANY ROOF DECK. ALL HANGERS FOR CEILINGS, DUCTWORK, ELECTRICAL CONDUIT, PIPING, ETC. SHALL BE HUNG DIRECTLY FROM STRUCTURAL STEEL WORK OR SUPPLEMENTARY MEMBERS.

DIVISION 31 - FOUNDATIONS/BACKFILL

1. CONTRACTOR SHALL REVIEW A COPY OF THE GEOTECHNICAL REPORT PREPARED FOR THIS PROJECT.
2. FOUNDATIONS ARE DESIGNED FOR A MAXIMUM ALLOWABLE BEARING CAPACITY OF 2000 PSF. FOUNDATIONS SHALL BEAR ON NATURAL UNDISTURBED SOILS OR ON ENGINEERED FILL.
3. THE OWNER WILL RETAIN THE SERVICES OF A GEOTECHNICAL ENGINEER TO MONITOR THE FOUNDATION WORK AND DETERMINE THE QUALITY OF THE SOIL AT ALL FOOTING LOCATIONS. IF UNSUITABLE MATERIALS ARE ENCOUNTERED AT THE FOOTING LOCATIONS, THE UNSUITABLE SHALL BE REMOVED AND REPLACED OR THE FOOTINGS LOWERED AT THE DIRECTION OF THE ENGINEER.
4. THE CONTRACTOR SHALL BE AWARE OF AND VERIFY LOCATION OF ALL UNDERGROUND UTILITIES, TANKS, ETC. DUE CARE SHALL BE EXERCISED DURING EXCAVATION SUCH THAT EXISTING UTILITIES ARE NOT DAMAGED.
5. ALL EXCAVATED MATERIAL SHALL BE TRANSPORTED TO A DISPOSAL AREA DESIGNATED BY THE OWNER ALL EXCAVATIONS SHALL CONFORM TO MI-OSHA REQUIREMENTS. ANY PERCHED GROUNDWATER ENTERING THE EXCAVATION SHALL BE PUMPED PRIOR TO PLACING CONCRETE.
6. ALL BACKFILL MATERIALS SHALL CONFORM TO MDOT CLASS II MATERIAL. ALL BACKFILL SHALL BE PLACED IN 9" LOOSE LIFTS AND COMPACTED TO AT LEAST 95% OF THE MAXIMUM DRY DENSITY DETERMINED IN ACCORDANCE WITH ASTM D-1557 (MODIFIED PROCTOR). FIELD DENSITY TESTING SHALL BE PERFORMED IN ACCORDANCE WITH ASTM D-2922 OR D-1556 WITH A MINIMUM OF 1 TEST PER 1500 SQ FEET OF AREA PER 9" LIFT.(MINIMUM OF (3) TEST PER LIFT).

DESIGN CRITERIA

MICHIGAN BUILDING CODE 2015 (ASCE 7-10)
RISK CATEGORY II.

ROOF DEAD LOADS

• EPDM	1 PSF
• POLYISO INSULATION	2 PSF
• STEEL DECK	2 PSF
• CEILING	3 PSF
• STRUCTURAL STEEL	5 PSF
• MECHANICAL AND ELECTRICAL	5 PSF
• MISCELLANEOUS	2 PSF
TOTAL	**20 PSF**

ROOF LIVE LOADS

• MINIMUM LOAD	20 PSF

SNOW LOADS

• IMPORTANCE FACTOR	I_s = 1.0
• GROUND SNOW LOAD	P_g = 25 PSF
• SNOW EXPOSURE FACTOR	C_e = 1.0
• THERMAL FACTOR	C_t = 1.2
• FLAT USE SNOW	P_f = 22 PSF (TYPICAL ROOF)
• SNOW DRIFT PER ASCE 7	

WIND LOADS

• BASIC WIND SPEED	115 MPH (3 SEC GUST)
• EXPOSURE CATEGORY	C
• COMPONENTS AND CLADDING PER ASCE 7	

SEISMIC DESIGN DATA

• SITE CLASS	D
• RESPONSE COEFFICIENTS	SD_S = 0.11 SD_1 = 0.064
• SEISMIC DESIGN CATEGORY	A

ABBREVIATIONS

@	AT
A.B.	ANCHOR BOLT
ADD'L	ADDITIONAL
A.F.F.	ABOVE FINISHED FLOOR
B.C.	BOTTOM CHORD
B.O.	BOTTOM OF
B.O.D.	BOTTOM OF DECK
B.O.F.	BOTTOM OF FOOTING
B.O.S.	BOTTOM OF STEEL
B.O.T.	BOTTOM OF TRUSS
B.S.	BOTH SIDES
BM	BEAM
BOTT	BOTTOM
BRG	BEARING
C.L.	CENTER LINE
CJ	CONTROL JOINT
COL	COLUMN
CONC	CONCRETE
CONT	CONTINUOUS
CSJ	CONSTRUCTION JOINT
DET	DETAIL
DIA	DIAMETER
DIAG	DIAGONAL
DIM	DIMENSION
DL	DEAD LOAD
DWG	DRAWING
E.F.	EACH FACE
EA.	EACH
ELEV	ELEVATION
EQ	EQUAL
EX.	EXISTING
F.S.	FAR SIDE
F.V.	FIELD VERIFY
FIN	FINISH
FLG	FLANGE
FLR	FLOOR
FDN	FOUNDATION
FT	FOOT
FTG	FOOTING
GA	GAGE
G.L.	GIRT LINE
H.P.	HIGH POINT
HORIZ	HORIZONTAL
k	KIPS
LG	LONG
L.P.	LOW POINT
LL	LIVE LOAD
L.L.H.	LONG LEG HORIZONTAL
L.L.V.	LONG LEG VERTICAL
LN	LINE
L.S.H.	LONG SIDE HORIZONTAL
MAX	MAXIMUM
MTL	METAL
MIN	MINIMUM
MISC	MISCELLANEOUS
N.S.	NEAR SIDE
N.T.S.	NOT TO SCALE
NO	NUMBER
O.C.	ON CENTER
OPP	OPPOSITE
PC	PIECE
PL	PLATE
PLCS	PLACES
PSF	POUNDS PER SQUARE FOOT
PSI	POUNDS PER SQUARE INCH
REF	REFERENCE
REINF	RINFORC-ED, -ING, EMENT
REQ'D	REQUIRED
SCHED	SCHEDULE
SECT	SECTION
SIM	SIMILAR
SPA	SPACES
STD	STANDARD
STL	STEEL
T.O.	TOP OF
T.O.C.	TOP OF CONCRETE
T.O.F.	TOP OF FOOTING
T.O.M.	TOP OF MASONRY
T.O.S.	TOP OF STEEL
TYP	TYPICAL
U.N.O.	UNLESS NOTED OTHERWISE
VERT	VERTICAL
W.P.	WORK POINT
W/	WITH
WWR	WELDED WIRE REINFORCEMENT

TMP ARCHITECTURE

TMP ARCHITECTURE INC
1191 WEST SQUARE LAKE ROAD · BOX 289
BLOOMFIELD HILLS · MICHIGAN · 48302
PH · 248.338.4561 FX · 248.338.0223
EM · INFO @TMP-ARCHITECTURE.COM

REGISTRATION SEAL

CONSULTANT

WILLIAM A. KIBBE & ASSOCIATES, INC.
ENGINEERS | ARCHITECTS | SURVEYORS

PROJECT TITLE

Troy High School Athletic Fields

BID PACKAGE No. 02B

Troy School Dsitrict
Troy, Michigan

DRAWING TITLE

Structural General Notes

N

KEY PLAN

ISSUE DATES

DATE:	ISSUED FOR:
12-10-2024	CONSTRUCTION DOCUMENTS

DRAWN	D. BART
CHECKED	B. KANNERS
APPROVED	E. MANNOR

PROJECT NO.

22104E

DRAWING NO.

S0.0

C:\Users\dbart\Documents\22\14730252_Troy HS Concessions Bldg_S_v24_Darren.-rvt
12/9/2024 1:41:55 PM

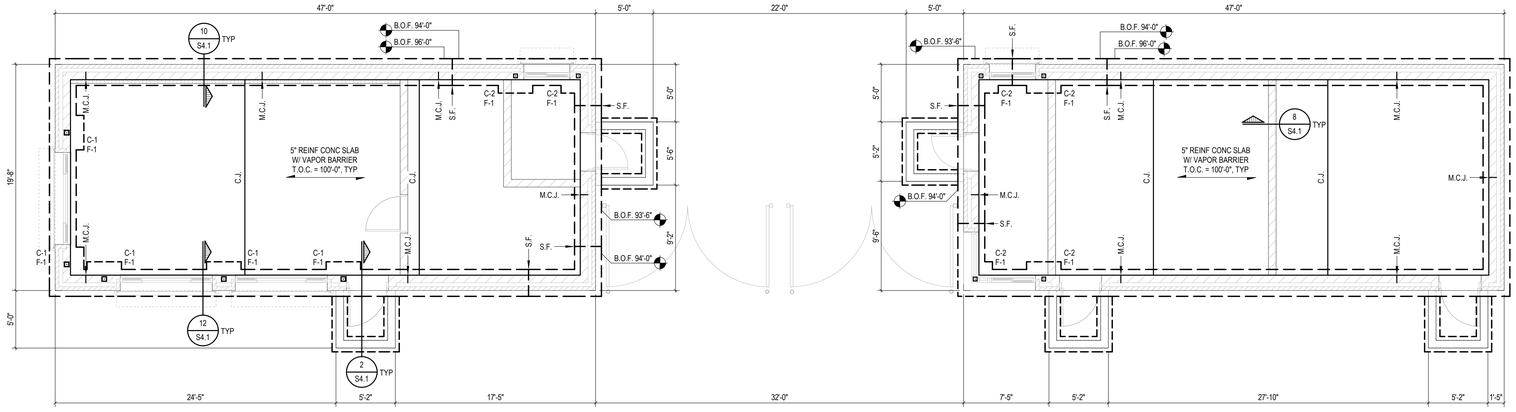

N

THS CONCESSION BUILDING FOUNDATION PLAN

SCALE: 3/16" = 1'-0"

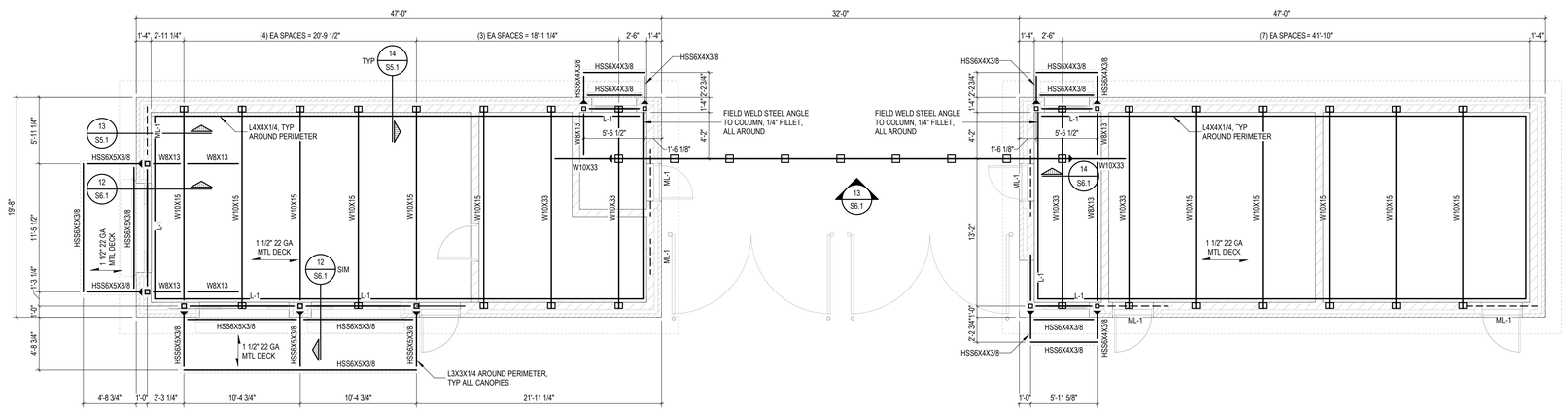

N

THS CONCESSION BUILDING ROOF FRAMING PLAN

SCALE: 3/16" = 1'-0"
ROOF T.O.S. = 112'-0"
CANOPY T.O.S. = 109'-9 1/2"
► INDICATES MOMENT CONNECTION

TMP ARCHITECTURE

TMP ARCHITECTURE INC
1191 WEST SQUARE LAKE ROAD · BOX 289
BLOOMFIELD HILLS · MICHIGAN · 48302
PH · 248.338.4561 FX · 248.338.0223
EM · INFO@TMP-ARCHITECTURE.COM

REGISTRATION SEAL

CONSULTANT

WILLIAM A. KIBBE & ASSOCIATES, INC.
ENGINEERS | ARCHITECTS | SURVEYORS

PROJECT TITLE

Troy High School Athletic Fields

BID PACKAGE No. 02B

Troy School Dsitrict
Troy, Michigan

DRAWING TITLE
Structural Plans

KEY PLAN

ISSUE DATES

DATE:	ISSUED FOR:
12-10-2024	CONSTRUCTION DOCUMENTS

DRAWN	D. BART
CHECKED	B. KANNERS
APPROVED	E. MANNOR

PROJECT NO.
22104E

DRAWING NO.
S1.0

C:\Users\dbart\Documents\24\4730252_Troy HS Concessions Bldg_S_v24_Darren -.rvt
12/19/2024 4:18:15 PM

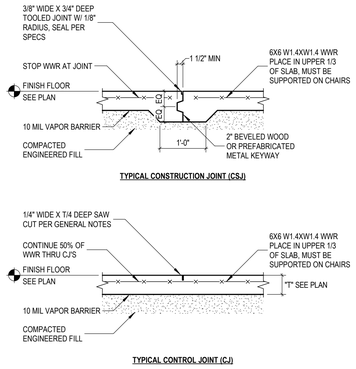

1 S4.1 TYPICAL SLAB ON GRADE DETAILS
NOT TO SCALE

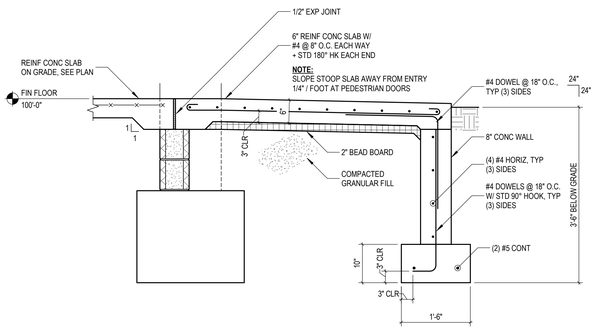

2 S4.1 TYPICAL STOOP SECTION
NOT TO SCALE

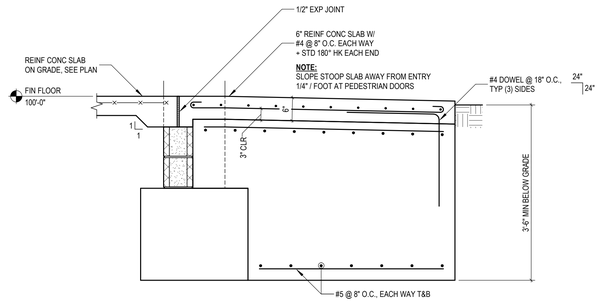

3 S4.1 MASS POUR STOOP SECTION
NOT TO SCALE

NOTE:
CONTACTER MAY USE TYPICAL STOOP SECTION.

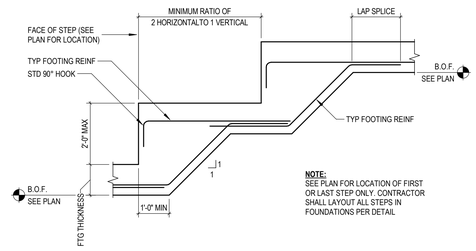

4 S4.1 TYPICAL STEP FOOTING DETAIL
NOT TO SCALE

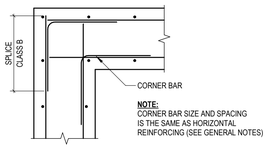

5 S4.1 TYP WALL & FTG CORNER DETAIL
NOT TO SCALE

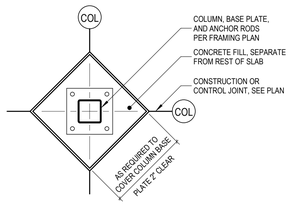

6 S4.1 TYP INTERIOR ISOLATION JOINT
NOT TO SCALE

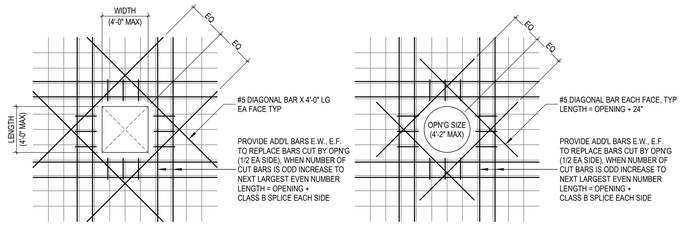

7 S4.1 TYPICAL SLAB AND WALL OPENINGS
NOT TO SCALE

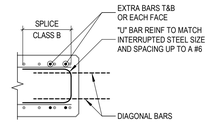

OPENING EDGE DETAIL

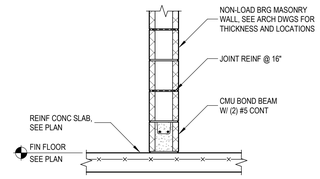

8 S4.1 DETAIL
NOT TO SCALE

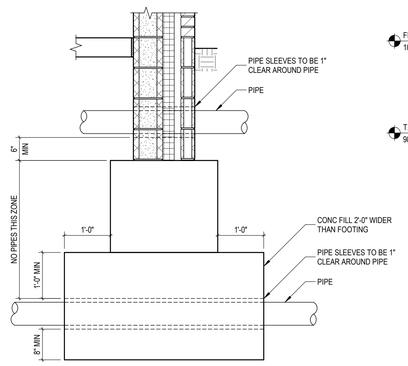

9 S4.1 TYP FDN DETAIL AT UTILITY
NOT TO SCALE

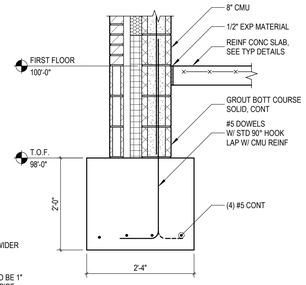

10 S4.1 DETAIL
SCALE: 3/4" = 1'-0"

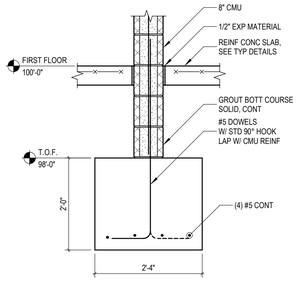

11 S4.1 DETAIL
SCALE: 3/4" = 1'-0"

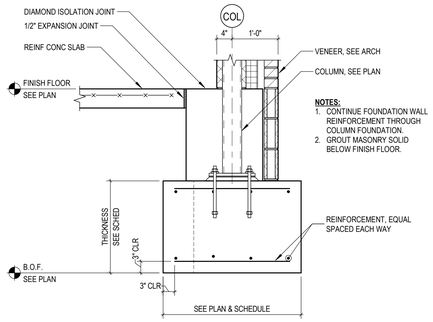

12 S4.1 TYPICAL EXTERIOR FOOTING
NOT TO SCALE

FOOTING SCHEDULE

	DIMENSIONS			REINFORCING		
MARK	WIDTH	LENGTH	THICKNESS	W (SHORT BARS)	L (LONG BARS)	DETAIL
F-1	3'-0"	3'-0"	2'-0"	(5) #5	(5) #5	12/S4.1

TMP ARCHITECTURE INC
1191 WEST SQUARE LAKE ROAD · BOX 289
BLOOMFIELD HILLS · MICHIGAN · 48302
PH · 248.338.4561 FX · 248.338.0223
EM · INFO @TMP-ARCHITECTURE.COM

REGISTRATION SEAL

CONSULTANT

WILLIAM A. KIBBE & ASSOCIATES, INC.
ENGINEERS | ARCHITECTS | SURVEYORS

PROJECT TITLE
Troy High School Athletic Fields
BID PACKAGE No. 02B

Troy School Dsitrict
Troy, Michigan

DRAWING TITLE
Concrete Details

KEY PLAN

ISSUE DATES

DATE:	ISSUED FOR:
12-10-2024	CONSTRUCTION DOCUMENTS

DRAWN	D. BART
CHECKED	B. KANNERS
APPROVED	E. MANNOR

PROJECT NO.
22104E

DRAWING NO.
S4.1

C:\Users\dbart\Documents\22\4730252_Troy HS Concessions Bldg_S_v24_Darren.-rvt
12/9/2024 1:51:10 PM

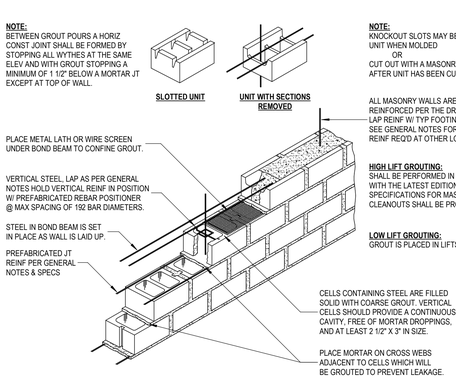

1 S5.1 LOW-LIFT GROUTING TECHNIQUE
NOT TO SCALE

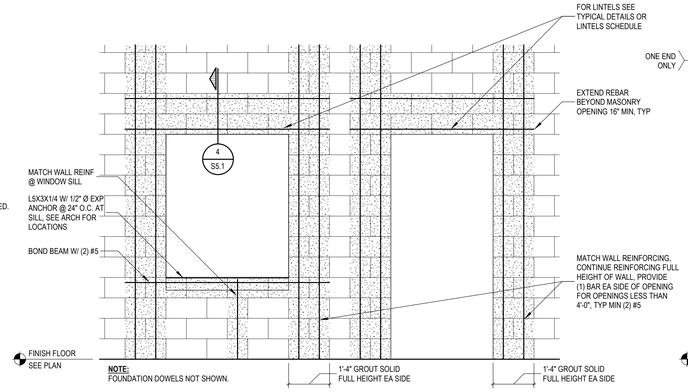

2 S5.1 TYPICAL MASONRY OPENING W/ MASONRY LINTEL
NOT TO SCALE

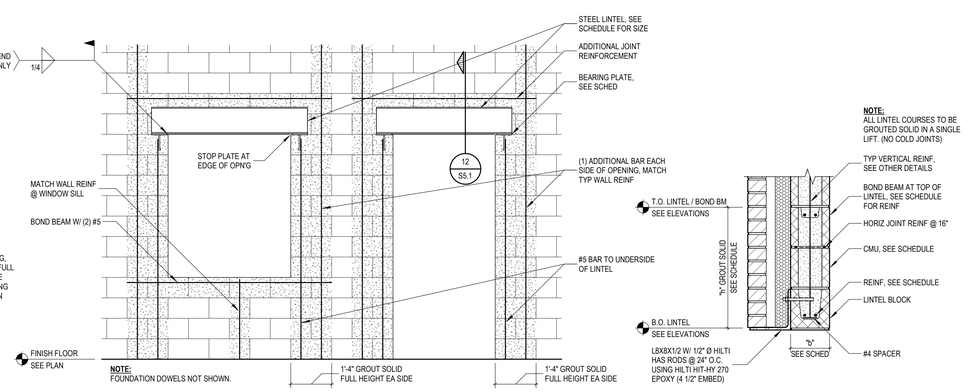

3 S5.1 TYPICAL MASONRY OPENING W/ STEEL LINTEL
NOT TO SCALE

4 S5.1 TYP MASONRY LINTEL DETAIL
NOT TO SCALE

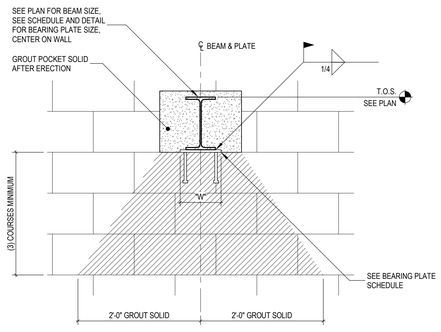

5 S5.1 TYPICAL BEAM PERPENDICULAR TO WALL
NOT TO SCALE

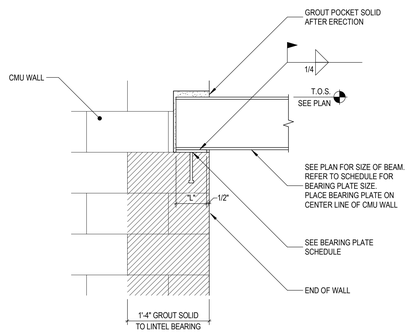

6 S5.1 TYPICAL BEAM PARALLEL TO WALL
NOT TO SCALE

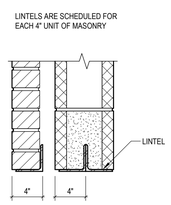

LOOSE LINTEL SCHEDULE

"L (FT)	SIZE OF LINTEL	BEARING EACH END (IN)
UP TO 4	L3-1/2X3-1/2X1/4	4
5	L3-1/2X3-1/2X1/4	6
6	L3-1/2X3-1/2X1/4	6
7	L4X3-1/2X1/4 L.L.V.	6
8	L5X3-1/2X1/4 L.L.V.	8
9	L6X3-1/2X1/4 L.L.V.	8

NOTES:
1. LINTEL SCHEDULE APPLIES AT ALL OPENINGS IN MASONRY VENEER AND NON-LOAD BEARING MASONRY. SEE ARCH FOR SIZE AND LOCATIONS.
2. (S.L.V.) - SHORT LEG VERTICAL.
3. (L.L.V.) - LONG LEG VERTICAL.
4. "L = CLEAR OPENING

7 S5.1 TYPICAL LOOSE LINTEL SCHEDULE
NOT TO SCALE

TABLE #1 - LAP SLICE LENGTHS FOR MASONRY WALLS (INCHES)

BARS CENTERED IN WALL (SINGLE REINFORCING)

BAR SIZE	8" CMU	12" CMU
#3	18	18
#4	24	24
#5	30	30
#6	38	36
#7	-	42
#8	-	50
#9	-	64

DESIGN CRITERIA:
Fy = 60,000 PSI
Fm = 2,000 PSI

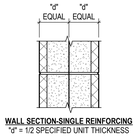

WALL SECTION-SINGLE REINFORCING
"d" = 1/2 SPECIFIED UNIT THICKNESS

TABLE #2 - LAP SLICE LENGTHS FOR MASONRY WALLS (INCHES)

BARS PLACED FOR MAX "d" (DOUBLE REINFORCING)

BAR SIZE	8" CMU	12" CMU
#3	18	18
#4	24	24
#5	30	30
#6	57	57
#7	80	80
#8	-	-
#9	-	-

DESIGN CRITERIA:
Fy = 60,000 PSI
Fm = 2,000 PSI

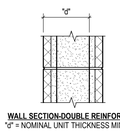

WALL SECTION-DOUBLE REINFORCING
"d" = NOMINAL UNIT THICKNESS MINUS 3"

8 S5.1 TYPICAL VERTICAL REINFORCMENT LOCATION AND LAP SPLICE LENGTHS
NOT TO SCALE

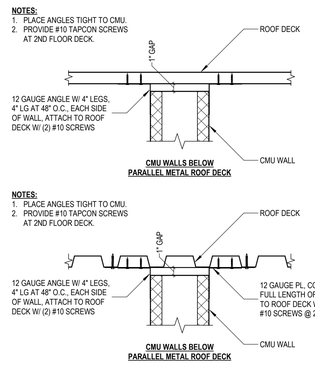

9 S5.1 TYPICAL T.O.M. DETAILS (INTERIOR NON-LOAD BEARING)
NOT TO SCALE

NOTES TO DESIGN PROFESSIONAL:
1. FIRE SAFETY NOT ADDRESSED IN THESE DETAILS. REFER TO ARCHITECTURAL FOR FIRE RATING REQUIREMENTS.
2. VERIFY ANTICIPATED DEFLECTION GAP.

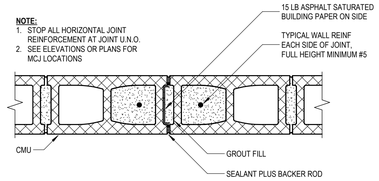

10 S5.1 MASONRY CONTROL JOINT (MCJ)
NOT TO SCALE

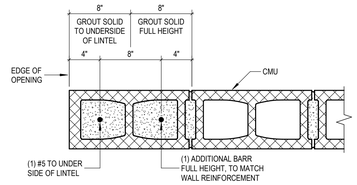

11 S5.1 TYPICAL LINTEL JAMB
NOT TO SCALE

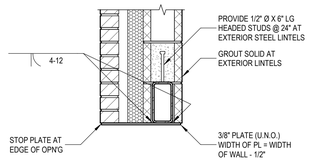

12 S5.1 TYP STEEL LINTEL DETAIL
NOT TO SCALE

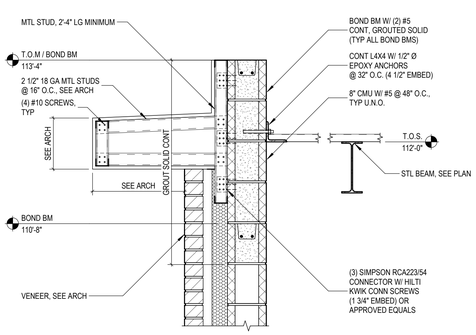

13 S5.1 DETAIL
SCALE: 1" = 1'-0"

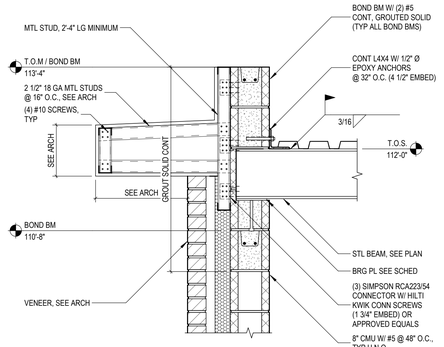

14 S5.1 DETAIL
SCALE: 1" = 1'-0"

STEEL LINTEL SCHEDULE

MARK	SIZE	BEARING PLATE	DETAIL
L-1	HSS8X4X3/8 + 3/8" PL	5/16" X 6" X 6"	12/S5.1

MASONRY LINTEL SCHEDULE

MARK	OPENING WIDTH	b (IN)	h (IN)	TOP STEEL	BOTTOM STEEL	DETAIL
ML-1	SEE PLAN	7 5/8"	16"	-	(2) #5	

TMP ARCHITECTURE INC
1191 WEST SQUARE LAKE ROAD · BOX 289
BLOOMFIELD HILLS · MICHIGAN · 48302
PH · 248.338.4561 FX · 248.338.0223
EM · INFO@TMP-ARCHITECTURE.COM

REGISTRATION SEAL

CONSULTANT

WILLIAM A. KIBBE & ASSOCIATES, INC.
ENGINEERS | ARCHITECTS | SURVEYORS

PROJECT TITLE
Troy High School Athletic Fields
BID PACKAGE No. 02B

Troy School Dsitrict
Troy, Michigan

DRAWING TITLE
Masonry Details

KEY PLAN

ISSUE DATES

DATE:	ISSUED FOR:
12-10-2024	CONSTRUCTION DOCUMENTS

DRAWN	D. BART
CHECKED	B. KANNERS
APPROVED	E. MANNOR

PROJECT NO.
22104E

DRAWING NO.
S5.1

C:\Users\dbart\Documents\22\4\4730252_Troy HS Concessions Bldg_S_v24_Darren -rvt
12/9/2024 11:41:59 PM

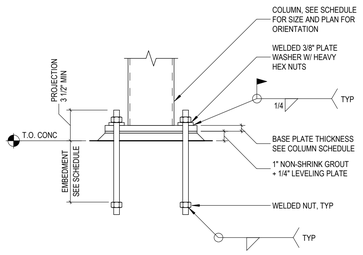

1 S6.1 TYPICAL ANCHOR BOLT DETAIL
NOT TO SCALE

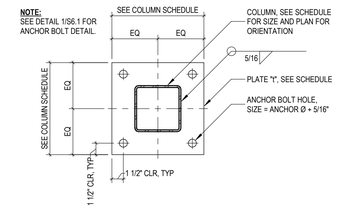

2 S6.1 TYPICAL BASE PLATE DETAIL
NOT TO SCALE

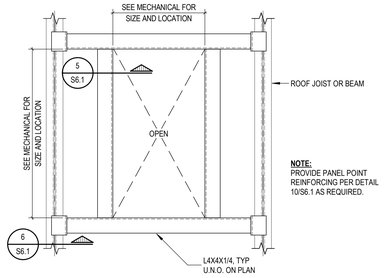

3 S6.1 TYPICAL ROOF OPENING
NOT TO SCALE

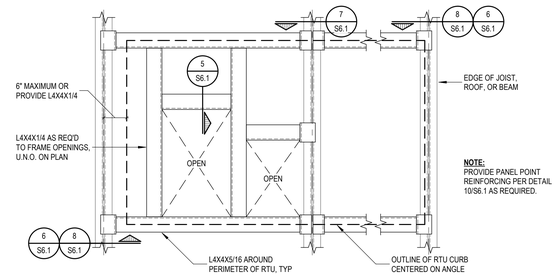

4 S6.1 TYPICAL RTU SUPPORT FRAME
NOT TO SCALE

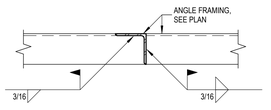

5 S6.1 TYP ROOF FRAME
NOT TO SCALE

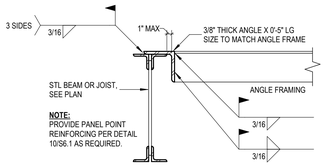

6 S6.1 TYP ROOF FRAME
NOT TO SCALE

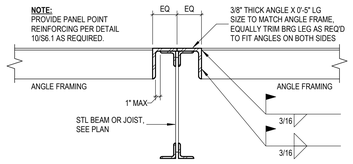

7 S6.1 TYP ROOF FRAME
NOT TO SCALE

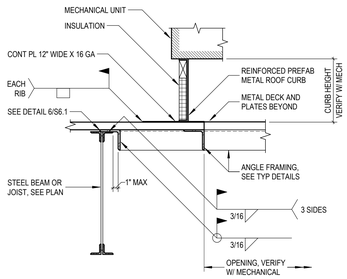

8 S6.1 TYPICAL RTU SUPPORT AT CURB
NOT TO SCALE

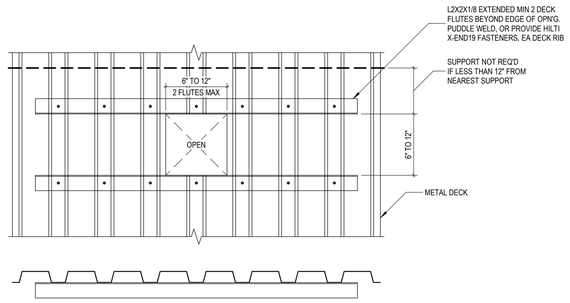

9 S6.1 TYP SMALL ROOF OPENING FRAMING
NOT TO SCALE

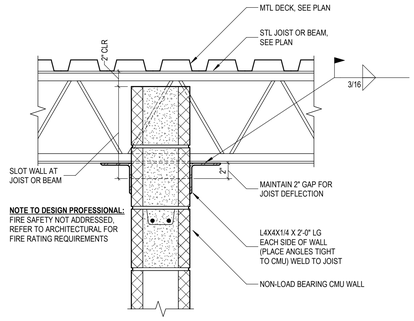

10 S6.1 TYP T.O. WALL AT STUCTURAL FRAMING
NOT TO SCALE

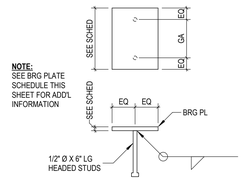

11 S6.1 TYP BEARING PL DETAIL
NOT TO SCALE

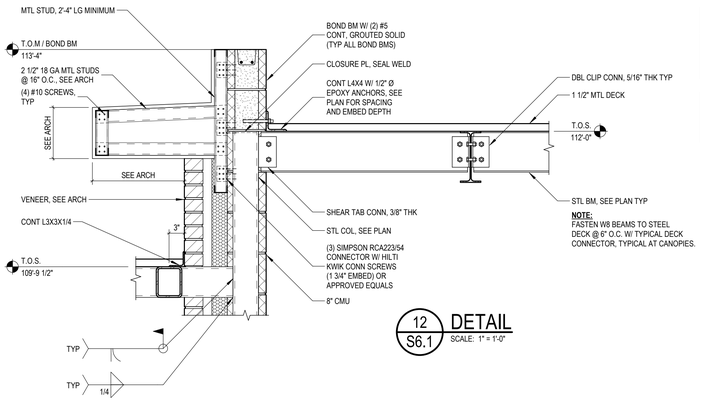

12 S6.1 DETAIL
SCALE: 1" = 1'-0"

COLUMN SCHEDULE

MARK	MEMBER	BASE PLATE (txWxL)	ANCHOR BOLTS QTY.	ANCHOR BOLTS SIZE	ANCHOR BOLTS MIN EMBED	COMMENTS
C-1	HSS5X5X3/8	3/4" X 11" X 11"	4	3/4" Ø	12"	
C-2	HSS4X4X3/8	3/4" X 10" X 10"	4	3/4" Ø	12"	

BEARING PLATE SCHEDULE

BM/JOIST OR MARK	SIZE	REMARKS
W10	3/8" X 6" X 8" W/ (2) 1/2" Ø X 6" LG HEADED STUDS (GA = 6")	

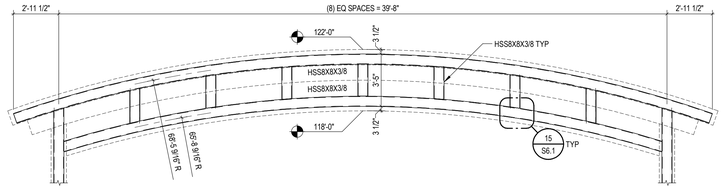

13 S6.1 SIGN ELEVATION
SCALE: 1/4" = 1'-0"

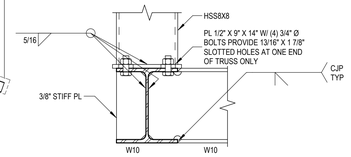

14 S6.1 DETAIL
SCALE: 1 1/2" = 1'-0"

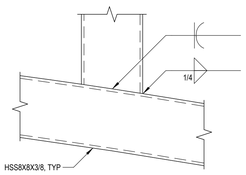

15 S6.1 DETAIL
SCALE: 1 1/2" = 1'-0"

C:\Users\dbart\Documents\2414730252_Troy HS Concessions Bldg_S_v24_Darren_.rvt
12/9/2024 1:42:01 PM

TMP ARCHITECTURE

TMP ARCHITECTURE INC
1191 WEST SQUARE LAKE ROAD · BOX 289
BLOOMFIELD HILLS · MICHIGAN · 48302
PH · 248.338.4561 FX · 248.338.0223
EM · INFO@TMP-ARCHITECTURE.COM

REGISTRATION SEAL

CONSULTANT

WILLIAM A. KIBBE & ASSOCIATES, INC.
ENGINEERS | ARCHITECTS | SURVEYORS

PROJECT TITLE
Troy High School Athletic Fields
BID PACKAGE No. 02B

Troy School Dsitrict
Troy, Michigan

DRAWING TITLE
Steel Details

KEY PLAN

ISSUE DATES

DATE:	ISSUED FOR:
12-10-2024	CONSTRUCTION DOCUMENTS

DRAWN	D. BART
CHECKED	B. KANNERS
APPROVED	E. MANNOR

PROJECT NO.
22104E

DRAWING NO.
S6.1

INTERIOR SIGNAGE SCHEDULE

Door or Room Number	Sign Type	Mounting Type	Text (TBD = TO BE DETERMINED BY OWNER)
101	2	1	LINE 1: CONCESSIONS LINE 2: BRAILLE LINE 3: LINE 4: LINE 5: LINE 6:
102	2	1	LINE 1: CONCESSIONS LINE 2: BRAILLE LINE 3: LINE 4: LINE 5: LINE 6:
103	1	1	LINE 1: TICKETS LINE 2: BRAILLE LINE 3: LINE 4: LINE 5: LINE 6:
105	1	1	LINE 1: TICKETS LINE 2: BRAILLE LINE 3: LINE 4: LINE 5: LINE 6:
106	1	1	LINE 1: STORAGE LINE 2: BRAILLE LINE 3: LINE 4: LINE 5: LINE 6:
107	1	1	LINE 1: STORAGE LINE 2: BRAILLE LINE 3: LINE 4: LINE 5: LINE 6:
108	1	1	LINE 1: SYMBOL LINE 2: TOILET LINE 3: BRAILLE LINE 4: LINE 5: LINE 6:
109	1	1	LINE 1: SYMBOL LINE 2: TOILET LINE 3: BRAILLE LINE 4: LINE 5: LINE 6:
110	1	1	LINE 1: OFFICIALS LINE 2: BRAILLE LINE 3: LINE 4: LINE 5: LINE 6:

DOOR & FRAME SCHEDULE

Opening		Door				Frame				Details			Threshold	U.L. Label	Hdwe. Set	Remarks
No.	Opening Size (Width x Height)	Type	Material	Finish	Glass	Type	Material	Finish	Glass	Head	Jamb	Sill				
First Level																
101	3'-0"x 7'-0"	A	FRP	PFN	.	1	AL	PFN	.	5/AD.1	4/AD.1	1/AD.1	MET	.	1.00	.
101A	8'-7"x 3'-10"	B	STSTL	PFN	-	-	-	-	.	2/A4.1	7/AD.1	2/A4.1	.	.	5.00	.
101B	8'-7"x 3'-10"	B	STSTL	PFN	-	-	-	-	.	2/A4.1	7/AD.1	2/A4.1	.	.	5.00	.
101C	8'-7"x 3'-10"	B	STSTL	PFN	-	-	-	-	.	2/A4.1	7/AD.1	2/A4.1	.	.	5.00	.
101D	8'-0" X 3'-8"	WINDOW OPENING			-	3	AL	PFN	.	.	.	.	.	.	.	.
101E	8'-0" X 3'-8"	WINDOW OPENING			-	3	AL	PFN	.	.	.	.	.	.	.	.
101F	8'-0" X 3'-8"	WINDOW OPENING			-	3	AL	PFN	.	.	.	.	.	.	.	.
102	3'-0"x 7'-0"	A	FRP	PFN	.	1	AL	PFN	.	3/AD.1	2/AD.1	.	.	.	3.00	.
103	3'-0"x 7'-0"	A	FRP	PFN	.	1	AL	PFN	.	5/AD.1	4/AD.1	.	MET	.	1.00	.
103A	4'-8"x 3'-10"	B	STSTL	PFN	-	-	-	-	.	2/A4.1	7/AD.1	2/A4.1	.	.	5.00	.
103B	4'-0" x 3'-8"	WINDOW OPENING			-	2	AL	PFN	.	.	.	.	.	.	.	.
105	3'-0"x 7'-0"	A	FRP	PFN	.	1	AL	PFN	.	5/AD.1	4/AD.1	1/AD.1	MET	.	1.00	.
105A	4'-8"x 3'-10"	B	STSTL	PFN	-	2	-	-	.	2/A4.1	7/AD.1	2/A4.1	.	.	5.00	.
105B	5'-1-7/8" x 3'-10"	WINDOW OPENING			-	4	AL	PFN	.	.	.	.	.	.	.	.
105C	4'-0" X 3'-10"	WINDOW OPENING			-	5	AL	PFN	.	.	.	.	.	.	.	.
105D	4'-0" X 3'-10"	WINDOW OPENING			-	2	AL	PFN	.	.	.	.	.	.	.	.
106	3'-0"x 7'-0"	A	FRP	PFN	.	1	AL	PFN	.	5/AD.1	4/AD.1	1/AD.1	MET	.	1.00	.
107	3'-0"x 7'-0"	A	FRP	PFN	.	1	AL	PFN	.	5/AD.1	4/AD.1	1/AD.1	MET	.	1.00	.
108	3'-0"x 7'-0"	A	FRP	PFN	.	1	AL	PFN	.	5/AD.1	4/AD.1	1/AD.1	MET	.	4.00	.
109	3'-0"x 7'-0"	A	FRP	PFN	.	1	AL	PFN	.	5/AD.1	4/AD.1	1/AD.1	MET	.	2.00	.
110	3'-0"x 7'-0"	A	FRP	PFN	.	1	AL	PFN	.	5/AD.1	4/AD.1	1/AD.1	MET	.	1.01	.

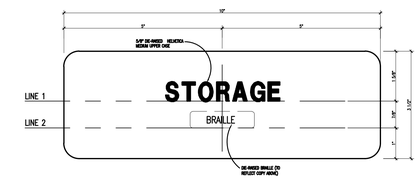

INTERIOR SIGNAGE TYPES

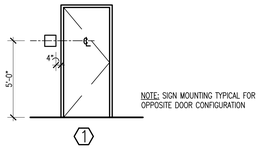

INTERIOR SIGNAGE MOUNTING TYPES

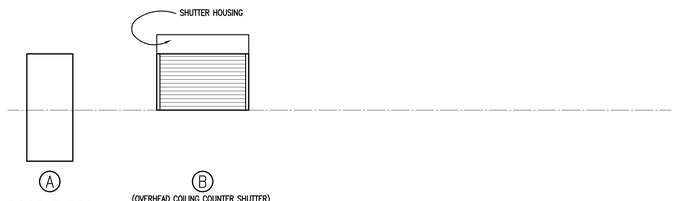

DOOR TYPES

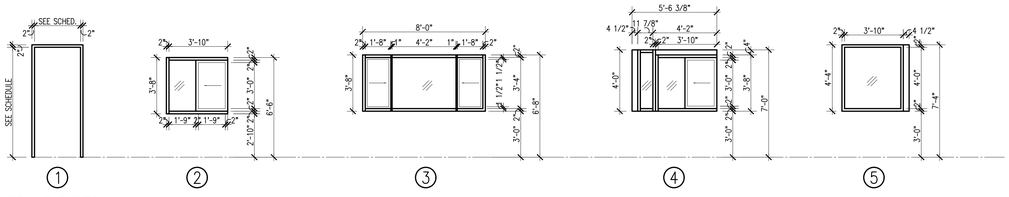

FRAME TYPES

DOOR SCHEDULE ABBREVIATIONS AND NOTES

(REFER TO SPECIFICATIONS FOR ADDITIONAL DOOR INFORMATION)

DOOR SCHEDULE ABBREVIATIONS

AL	ALUMINUM
ALGL	ALUMINUM AND GLASS
EX	EXISTING
FRAF	FIRE RATED ALUMINUM FRAMING
FRP	FIBERGLASS REINFORCED POLYESTER
HM	HOLLOW METAL
LAM	PLASTIC LAMINATE CLAD
MET	METAL THRESHOLD
NAT	NATURAL FINISHED WOODWORK
PFN	PREFINISHED BY MANUFACTURER
PTD	PAINTED
SDSF	SOLID SURFACE THRESHOLD
STL	STEEL
STSTL	STAINLESS STEEL
WD	SOLID CORE HARDWOOD

DOOR SCHEDULE GENERAL NOTES

1. GALVANIZED METAL TO BE PROVIDED FOR HOLLOW METAL DOOR AND/OR FRAME AT EXTERIOR LOCATION.
2. DOORS ARE 1-3/4" THICK UNLESS OTHERWISE NOTED.
3. DETAIL NUMBERS NOTED SIM. REFER TO DETAILS SHOWING HEAD, JAMB, AND/ OR SILL DETAILS THAT REPRESENT CONDITIONS SIMILAR TO THOSE NOTED.
4. HOLLOW METAL FRAMES SET IN MASONRY WALLS ARE 5 3/4" WIDE (U.O.N.).
5. HOLLOW METAL FRAMES, SET IN GYPSUM BD. /METAL STUD PARTITIONS, SHALL BE "DOUBLE BACK-BEND" FRAMES WITH A THROAT DIMENSION EQUAL TO THE PARTITION THICKNESS PLUS 9/16" RETURNS ON EACH SIDE OF THE PARTITION. PROVIDE EQUAL RABBETS.
6. AN ASTERISK (*) CALLS ATTENTION TO THE REMARKS COLUMN OF THE SCHEDULE.
7. WHERE NEW DOORS ARE INDICATED IN EXISTING FRAMES, FIELD VERIFY EXISTING FRAME PREPS AND FABRICATE DOORS TO MATCH.
8. DOORS AND/OR FRAMES LISTED AS EXISTING, WITH 'PTD' IN THE FINISH COLUMN, SHOULD BE PAINTED IN ACCORDANCE WITH THE PAINTING SPECIFICATION.

U.L. DOOR LABEL DESIGNATIONS:

U.L. LABEL**	MIN. OPENING PROTECTION ASSEMBLY
180	3 HR. FIRE RATING
90	1-1/2 HR. FIRE RATING
60	1 HR. FIRE RATING
45	3/4 HR. FIRE RATING
20	1/3 HR. FIRE RATING

** ALL FIRE RATED DOORS SHALL BE SMOKE AND DRAFT CONTROL LABELED IN ADDITION TO U.L. LABELS INDICATED.

GLAZING TYPES

(REFER TO SPECIFICATIONS FOR ASSEMBLIES)

GL-1	1/4" (6mm) CLEAR TEMPERED MONOLITHIC GLASS
GL-6	1/4" (6mm) CLEAR HEAT-STRENGTHENED LAMINATED GLASS
GL-13	1" (25mm) CLEAR TEMPERED INSULATING GLASS (LOW-E)
MP-1	1" PREFINISHED, INSULATED METAL PANEL

TMP ARCHITECTURE

TMP ARCHITECTURE INC
1191 WEST SQUARE LAKE ROAD
BLOOMFIELD HILLS · MICHIGAN · 48302
PH · 248.338.4561 FX · 248.338.0223
EM · INFO@TMP-ARCHITECTURE.COM

REGISTRATION SEAL

CONSULTANT

PROJECT TITLE
Troy High School Athletic Fields Bid Package No. 02B

Troy School District Troy, Michigan

DRAWING TITLE
THS Concessions Building Door & Frame Schedule

ISSUE DATES

DATE:	ISSUED FOR:
12-10-2024	CONSTRUCTION DOCUMENTS

DRAWN	DO
CHECKED	JW
APPROVED	DL

PROJECT NO.
22104E

DRAWING NO.
AD.1

Drawing File: Q:\Local\2020\mep\22104H\22104H_cd\22104H_AD1.dwg
Date: 12-10-2024 - 4:42pm

NOTE: NOT ALL DETAILS SHOWN ARE USED. SEE SHEET AD.1 FOR DOOR SCHEDULE ABBREVIATIONS AND NOTES, GLAZING TYPES, DOOR TYPES, AND FRAME TYPES, TYP.

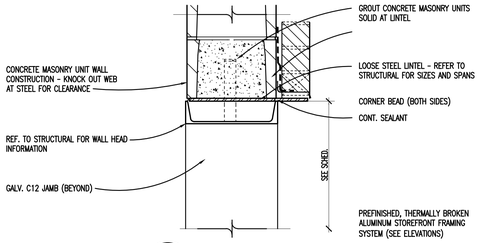

9 / AD.1 OVERHEAD DOOR FRAME HEAD
SCALE: 1 1/2" = 1'-0"

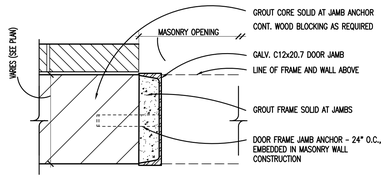

8 / AD.1 OVERHEAD DOOR FRAME JAMB
SCALE: 1 1/2" = 1'-0"

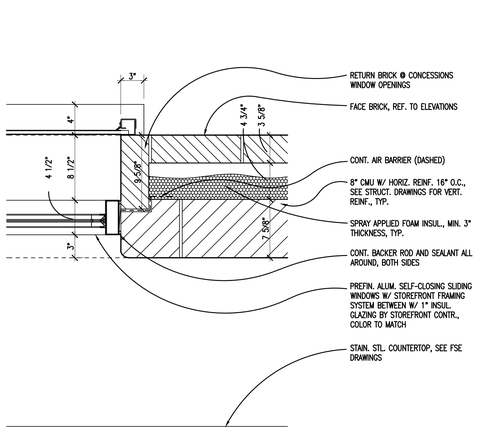

7 / AD.1 CONCESSIONS WINDOW JAMB DETAIL
SCALE: 1 1/2" = 1'-0"

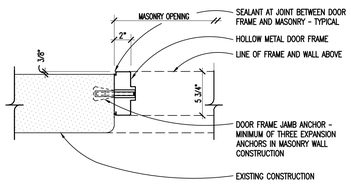

6 / AD.1 HOLLOW METAL DOOR FRAME JAMB
SCALE: 1 1/2" = 1'-0"

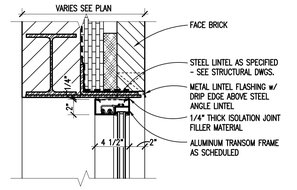

5 / AD.1 ALUMINUM TRANSOM HEAD AT TYPICAL EXTERIOR
SCALE: 1 1/2" = 1'-0"

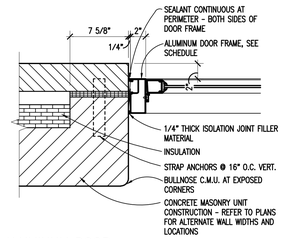

4 / AD.1 ALUMINUM DOOR JAMB AT TYPICAL EXTERIOR
SCALE: 1 1/2" = 1'-0"

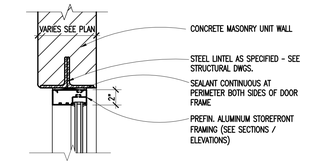

3 / AD.1 ALUMINUM FRAME HEAD AT C.M.U.
SCALE: 1 1/2" = 1'-0"

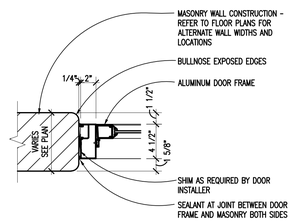

2 / AD.1 ALUMINUM DOOR JAMB AT C.M.U.
SCALE: 1 1/2" = 1'-0"

NOTE:
ALL ALUMINUM THRESHOLD SHALL BE THE SAME WIDTH AS DOOR FRAMES.

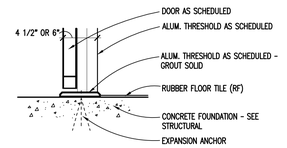

1 / AD.1 ALUMINUM THRESHOLD
SCALE: 1 1/2" = 1'-0"

TMP ARCHITECTURE

TMP ARCHITECTURE INC
1191 WEST SQUARE LAKE ROAD
BLOOMFIELD HILLS - MICHIGAN - 48302
PH - 248.338.4561 FX - 248.338.0223
EM - INFO @TMP-ARCHITECTURE.COM

REGISTRATION SEAL

CONSULTANT

PROJECT TITLE
Troy High School Athletic Fields Bid Package No. 02B

Troy School District
Troy, Michigan

DRAWING TITLE
THS Concessions Building Door & Frame Details

ISSUE DATES

12-10-2024	CONSTRUCTION DOCUMENTS

DATE:	ISSUED FOR:
DRAWN	DO
CHECKED	JW
APPROVED	DL

PROJECT NO.
22104E

DRAWING NO.
AD.2

Drawing File: G:\Local\2022\tmp\22104E_Local\22104E_AD2.dwg
Dec 09, 2024 - 10:10am

GENERAL NOTES

1. REFER TO MECHANICAL AND ELECTRICAL DRAWINGS FOR RELATED AND ADDITIONAL DEMOLITION AND PATCHING WORK BY MECHANICAL AND ELECTRICAL TRADES.
2. REFER TO ROOF PLANS FOR THE EXTENT OF ROOFING DEMOLITION.
3. SEE CIVIL DRAWINGS FOR SITE DEMOLITION AND PATCHING WORK.
4. SEE EXTERIOR ELEVATIONS FOR ADDITIONAL DEMOLITION AND PATCHING WORK AT EXTERIOR OF BUILDING, INCLUDING (BUT NOT LIMITED TO) DEMOLITION NOTES RELATED TO WINDOW REPLACEMENT.
5. WHERE REMOVAL OF CASEWORK, MILLWORK, CHALKBOARDS, TACKBOARDS, OR EQUIPMENT IS INDICATED, FILL HOLES AND PATCH EXISTING WALLS, BASE AND CEILINGS WHICH ARE TO REMAIN EXPOSED.
6. UNLESS OTHERWISE INDICATED, TOOTH NEW MATERIAL, INTO EXISTING, WHEREVER INFILL REMAINS EXPOSED.
7. SEE SPECIFICATION SECTIONS 01 7329 AND 02 4100 FOR ADDITIONAL DEMOLITION AND PATCHING REQUIREMENTS.
8. REFER TO ARCHITECTURAL WALL SECTIONS FOR ADDITIONAL SELECTIVE DEMOLITION.

DEMOLITION KEYNOTES

1. REMOVE MECHANICAL EQUIPMENT, REFER TO MECHANICAL DRAWINGS FOR ADDITIONAL NOTES AND DETAILS. PATCH, REPAIR AND/OR FILL EXPOSED ADJACENT SURFACES TO MATCH EXISTING (U.O.N.).
2. REMOVE OVERHEAD COILING GRILLE / DOOR, MOTOR, AND ASSOCIATED HARDWARE AND CONTROLS.
3. REMOVE PLUMBING FIXTURE. REFER TO PLUMBING DRAWINGS FOR ADDITIONAL NOTES AND DETAILS. PATCH ANY SURFACES TO REMAIN EXPOSED.
4. REMOVE EXTERIOR FRP DOORS, FRAMING AND GLAZING, ALUMINUM THRESHOLDS. TURN OVER DOORS AND HARDWARE TO THE OWNER, FOR THEIR STOCK, IF REQUESTED.
5. REMOVE CASEWORK AND/OR MILLWORK. FINISH EXPOSED SURFACES TO MATCH EXISTING.
6. REMOVE ALL MISCELLANEOUS ITEMS SUCH AS SHELVING, BRACKETS, ETC.
7. REMOVE CEILING
8. REMOVE SLAB FOR UNDERGROUND PLUMBING
9. REMOVE RETRACTABLE AWNINGS - PATCH AND REPAIR WALL TO MATCH ADJACENT FINISHES.

SALVAGED ITEMS

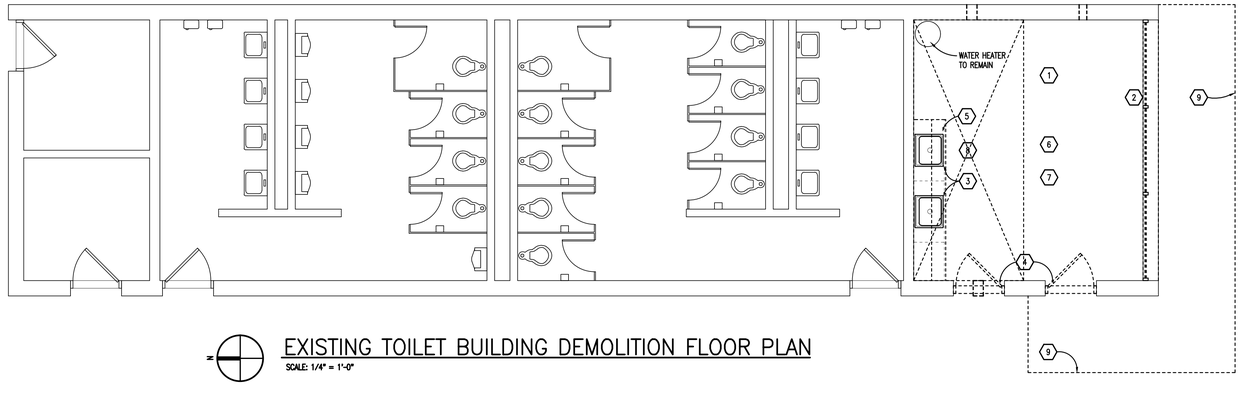

EXISTING TOILET BUILDING DEMOLITION FLOOR PLAN

SCALE: 1/4" = 1'-0"

TMP ARCHITECTURE

TMP ARCHITECTURE INC

1191 WEST SQUARE LAKE ROAD
BLOOMFIELD HILLS • MICHIGAN • 48302
PH • 248.338.4561 FX • 248.338.0223
EM • INFO @TMP-ARCHITECTURE.COM

REGISTRATION SEAL

CONSULTANT

PROJECT TITLE

Troy High School Athletic Fields Bid Package No. 02B

Troy School District
Troy, Michigan

DRAWING TITLE

THS Existing Toilet Building Demolition Floor Plan

ISSUE DATES

DATE:	ISSUED FOR:
12-10-2024	CONSTRUCTION DOCUMENTS

DRAWN	DO
CHECKED	JW
APPROVED	DL

PROJECT NO.

22104E

DRAWING NO.

A0.1

FINISH GENERAL NOTES

1. REFER TO REFLECTED CEILING PLANS FOR CEILING TYPES, HEIGHTS AND FINISH INFORMATION.
2. ALL WALL MOUNTED MECHANICAL EQUIPMENT (DIFFUSERS, GRILLES, ETC.) AND ELECTRICAL EQUIPMENT (PANELS, ETC.) SHALL BE PAINTED TO MATCH THE ADJACENT WALL COLOR. REFER TO MECHANICAL AND ELECTRICAL DRAWINGS FOR QUANTITIES AND LOCATIONS.
3. REFER TO SPEC. SECTION 012300 FOR COMPLETE LIST AND DESCRIPTION OF ALTERNATES.
4. WHERE REMOVAL OR MODIFICATION TO A FINISH MATERIAL IS SHOWN, BUT NEW FINISHES ARE NOT SCHEDULED, PATCH AND REPAIR TO MATCH EXISTING FINISH CONDITION AS REQUIRED.
5. PROVIDE APPROPRIATE TRANSITION STRIPS BETWEEN DISSIMILAR FLOORING MATERIALS AT VERTICAL AND/OR HORIZONTAL APPLICATIONS.

FINISH LEGEND

ROOM TAGS

ROOM NAME AND NUMBER PLUS GENERAL ROOM FINISH INFORMATION. FINISH TAGS SHALL APPLY TO ALL LIKE MATERIALS WITHIN A ROOM (U.O.N.).

FINISH LEGEND

FINISH LEGEND IS GENERAL. REFER TO SPECIFICATIONS FOR SPECIFIC FINISH INFORMATION. MULTIPLE FINISH TYPES ARE DENOTED BY NUMBER FOLLOWING ABBREVIATION.

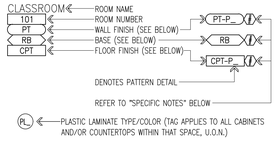

WALL FINISH ABBREVIATIONS

EP	EPOXY PAINT
EX	EXISTING (NO NEW FINISH)
PT	PAINT

BASE FINISH ABBREVIATIONS

EX	EXISTING (NO NEW FINISH)
NB	NO BASE, WALL FINISH EXTENDS TO FLOOR
RB	RESILIENT BASE

FLOOR FINISH ABBREVIATIONS

CONC	CONCRETE (UNFINISHED)
CONCD	CONCRETE - DECORATIVE CONCRETE
CONCS	CONCRETE - WITH APPLIED SURFACE SEALER
EX	EXISTING (NO NEW FINISHED)

INTERIOR SIGNAGE

5 — THIS IS AN INTERIOR SIGNAGE IDENTIFICATION, REFER TO SPECIFICATIONS FOR INTERIOR SIGNAGE TYPE AND SCHEDULED INFORMATION

GENERAL NOTES CONTINUED

10. REFER TO STRUCTURAL DRAWINGS FOR ORIENTATION AND SIZES OF ALL STRUCTURAL COLUMNS.
11. REFER TO DRAWING A8.1 FOR TYPICAL DETAILS PERTAINING TO WALL TERMINATIONS AT STRUCTURE ABOVE AND MASONRY CONTROL JOINT DETAILS.
12. VERIFY ALL DIMENSIONS IN FIELD.
13. PROVIDE WOOD BLOCKING WITHIN STUD WALLS FOR WALL MOUNTED ITEMS i.e. GRAB BARS, TOWEL DISPENSERS, PENCIL SHARPENERS, WALL STOPS, ACCORDIAN PARTITION JAMBS, ETC.
14. REFER TO EXTERIOR ELEVATIONS AND PLAN DETAILS FOR LOCATIONS OF CONTROL JOINTS IN EXTERIOR WALLS.

GENERAL NOTES

1. COORDINATE SIZE AND LOCATION OF ALL CONCRETE HOUSEKEEPING PADS AND/OR EQUIPMENT SUPPORTS WITH APPROPRIATE EQUIPMENT MANUFACTURER.
2. COORDINATE SIZE AND LOCATION OF ALL ACCESS PANELS WITH TRADE REQUIRING THE SAME. ACCESS PANELS ARE SPECIFIED ARCHITECTURALLY BUT ARE REQUIRED TO BE PROVIDED BY EACH TRADE. ALL LOCATIONS MUST BE COORDINATED AND APPROVED BY THE ARCHITECT'S FIELD REPRESENTATIVE.
3. CONTRACTORS SHALL VERIFY ALL EXISTING BUILDING DIMENSIONS, PARTITION AND WALL LOCATIONS, AND FLOOR ELEVATIONS IN THE FIELD AND NOTIFY THE ARCHITECTS REPRESENTATIVE OF ANY DISCREPANCIES BEFORE START OF WORK.
4. DIMENSIONS FOLLOWED BY ± SHOULD BE REVIEWED AND ALL NECESSARY ADJUSTMENTS MADE PRIOR TO FABRICATION AND/OR INSTALLATION OF AFFECTED WORK. NOTIFY ARCHITECTS REPRESENTATIVE IF DISCREPANCIES ARISE BEFORE PROCEEDING WITH THE WORK.
5. INSTALL CONTROL JOINTS IN GYPSUM BOARD AND METAL STUD-FRAMED PARTITIONS, WALLS, CEILINGS, BULKHEADS, FASCIAE AND SOFFITS IN COMPLIANCE WITH SPECIFICATIONS, AND WITH GENERAL REQUIREMENTS OF ASTM C840. PRIOR TO COMMENCEMENT OF FRAMING INSTALLATION SUBMIT COORDINATION DRAWINGS INDICATING PROPOSED LOCATIONS OF ALL CONTROL JOINTS, AS SPECIFIED.
6. PROVIDE CONTROL JOINTS WHERE INTERIOR CMU (ON SLAB) ABUTS EXTERIOR/INTERIOR MASONRY (ON FOUNDATIONS OR FOOTINGS).
7. VERIFY QUANTITY, SIZE, AND LOCATION OF ALL FLOOR, ROOF, AND WALL OPENINGS FOR MECHANICAL AND ELECTRICAL WORK WITH THE APPROPRIATE TRADE. PROVIDE ALL OPENINGS SHOWN OR REQUIRED FOR THE COMPLETION OF THE WORK. PROVIDE ALL LINTELS REQUIRED FOR THESE OPENINGS PER SPECIFICATIONS.
8. REFER TO REFLECTED CEILING PLANS FOR EXTENSION OF PARTITION WALLS TO FLOOR OR ROOF CONSTRUCTION ABOVE AND WALL FIRE RESISTANCE RATING REQUIREMENTS.
9. REFER TO STRUCTURAL DRAWINGS FOR ALL WIND FRAME LOCATIONS AT INTERIOR AND EXTERIOR WALLS.

PATCHING NOTES

1. REFER TO DEMOLITION PLANS FOR ADDITIONAL PATCHING NOTES.
2. FOR ALL FLOOR SURFACES RECEIVING NEW FLOOR FINISHES, PREPARE SUBSTRATE BY PROVIDING LEVELING AND PATCHING COMPOUNDS RECOMMENDED BY FINISH FLOORING MANUFACTURERS. CONTRACTOR'S BASE BID PROPOSAL SHALL ASSUME THAT ALL AREAS, INDICATED TO RECEIVE NEW FINISHES, WILL REQUIRE FLOOR PREPARATION.
3. PATCH AND REPAIR ALL FLOOR AND WALL SURFACES LEFT DAMAGED OR INCOMPLETE FROM REMOVAL OF EXISTING PARTITIONS, MILLWORK, CASEWORK, CHALKBOARDS, TACKBOARDS, DISPLAY CASES OR OTHER FIXED EQUIPMENT WITH MATERIALS TO MATCH EXISTING, AS ACCEPTABLE TO THE ARCHITECT.
4. MATCH EXISTING MASONRY COURSING ADJACENT IN EACH AREA AND TOOTH NEW WORK INTO EXISTING, UNLESS OTHERWISE INDICATED.
5. AT EXISTING FLOOR FINISHES TO REMAIN, THAT BECOME SUBSTRATES FOR NEW FLOOR FINISHES, PATCH AND FILL EXISTING AS REQUIRED TO PREPARE FOR NEW FLOOR FINISH UNTIL ACCEPTABLE TO NEW FLOOR FINISH CONTRACTOR.
6. TOOTH-IN MASONRY INTO EXISTING, U.O.N., INCLUDING JAMBS OF DOOR AND OTHER OPENINGS.

ACCESSORIES LEGEND

1. SURFACE MOUNTED, ELECTRIC HAND DRYER
2. SURFACE-MOUNTED, LIQUID SOAP DISPENSER - OWNER PROVIDED AND INSTALLED
3. SURFACE-MOUNTED, TOILET PAPER HOLDER - OWNER PROVIDED AND INSTALLED
4. SURFACE-MOUNTED, SANITARY NAPKIN DISPOSAL UNIT
5. GRAB BAR (42" LONG)
6. GRAB BAR (36" LONG)
7. GRAB BAR (18" TALL - VERTICAL)
8. CHANNEL FRAME MIRROR (24"W x 36" H)
9. MOP HOOK WITH SHELF

GENERAL NOTES

A. MOUNTING HEIGHTS AND POSITIONING SHALL BE AS INDICATED ON GENERAL INFORMATION SHEET (TG.1) U.O.N.

WALL / PARTITION KEY

METAL STUD PARTITION

CONCRETE MASONRY UNIT WALL w/ HORIZONTAL JOINT REINFORCEMENT AT 16" O.C..

WALL / PARTITION LEGEND

1B — 3 5/8" METAL STUDS AT 16" O.C. (MAX.) WITH 5/8" GYPSUM BOARD ONE SIDE. HEIGHT: FROM FLOOR TO 4" ABOVE CEILING. BRACE TO ADJACENT WALL AS REQUIRED.

4F — 6" NOMINAL CONCRETE MASONRY UNIT. HEIGHT: FROM FLOOR TO UNDERSIDE OF ROOF TRUSSES.

4G — 8" NOMINAL CONCRETE MASONRY UNIT. HEIGHT: FROM FLOOR TO UNDERSIDE OF ROOF TRUSSES.

NOTES:

1. COORDINATE WITH THE REFLECTED CEILING PLANS FOR RATED WALLS. DIMENSIONS OF WALLS ARE SHOWN NOMINAL IN PLAN FOR DETERMINING THE CMU THICKNESS.
2. REFER TO MASONRY SPECIFICATION FOR VERTICAL REINFORCEMENT AND WALL BRACING NOT INDICATED ON DRAWINGS.
3. AT FIRE-RATED AND SMOKE-RESISTING WALLS (MASONRY OR GYPSUM BOARD), PROVIDE U.L. APPROVED, FIRE-RATED, HEAD-OF-WALL TERMINATIONS AS INDICATED. IF NOT INDICATED, PROVIDE "BASIS OF DESIGN", HEAD-OF-WALL FIRESTOP JOINT SYSTEM AS INDICATED IN SPECIFICATION SECTION 078446 (1 OR 2 HOUR AS APPROPRIATE). PROVIDE MINIMUM 1 HOUR TERMINATION AT SMOKE-RESISTING WALLS.
4. ALL CMU IS 8" THICK (NOM.) UNLESS DIMENSIONED OTHERWISE.
5. PROVIDE BULLNOSE CMU UNITS AT ALL OUTSIDE CORNERS WHEN CORNERS ARE EXPOSED IN FINAL CONSTRUCTION. DO NOT BULLNOSE CORNERS WHEN ABUTTING CONSTRUCTION (I.E. GYPSUM BOARD) IS INTENDED TO BE FLUSH WITH CMU.

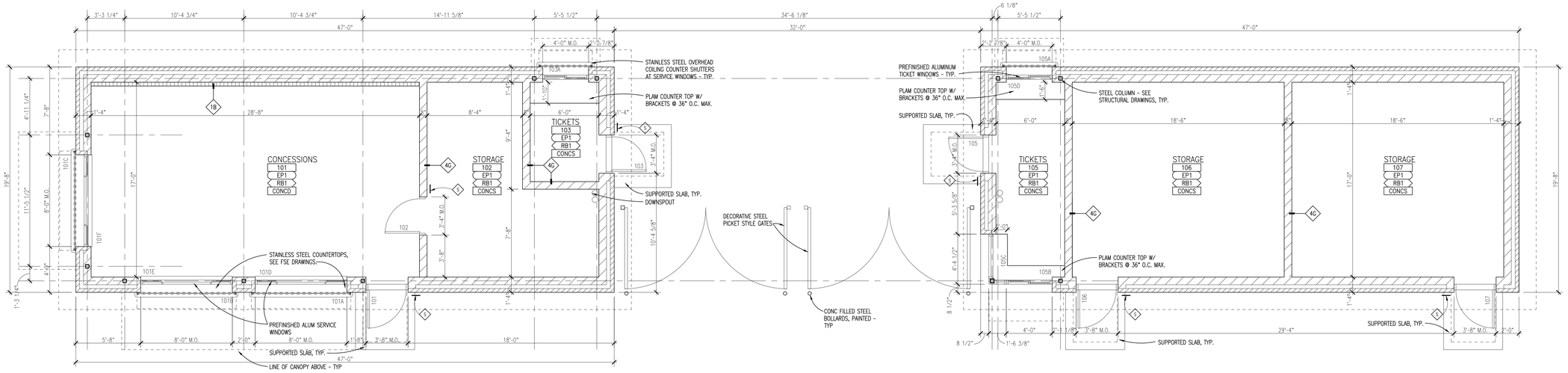

N

THS CONCESSION BUILDING FLOOR PLAN

SCALE: 1/4" = 1'-0"

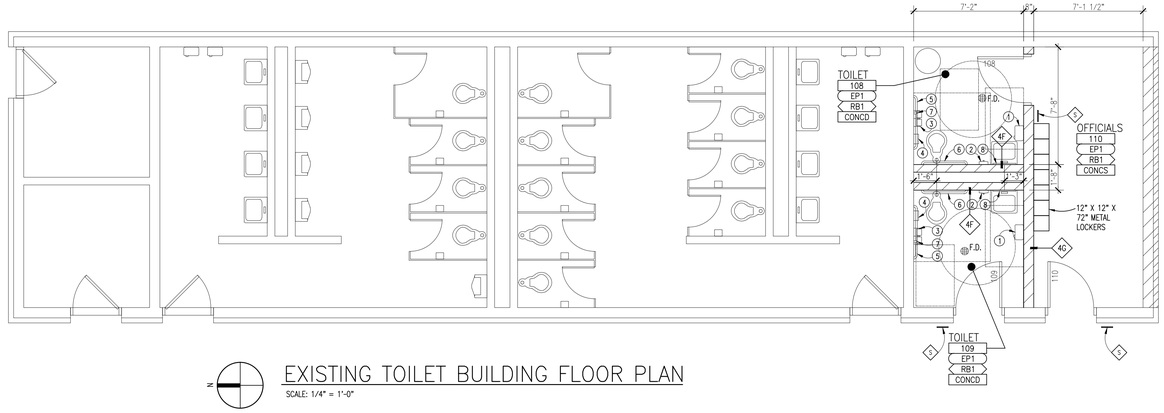

N

EXISTING TOILET BUILDING FLOOR PLAN

SCALE: 1/4" = 1'-0"

TMP ARCHITECTURE

TMP ARCHITECTURE INC
1191 WEST SQUARE LAKE ROAD
BLOOMFIELD HILLS - MICHIGAN - 48302
PH - 248.338.4565 FX - 248.338.0223
EM - INFO@TMP-ARCHITECTURE.COM

REGISTRATION SEAL

CONSULTANT

PROJECT TITLE

Troy High School Athletic Fields Bid Package No. 02B

Troy School District
Troy, Michigan

DRAWING TITLE

THS Concessions Building Floor Plan and Existing Toilet Building Floor Plan

ISSUE DATES

12-10-2024	CONSTRUCTION DOCUMENTS
DATE:	ISSUED FOR:

DRAWN	DO
CHECKED	JW
APPROVED	DL

PROJECT NO.

22104E

DRAWING NO.

A1.1

Drawing File: Q:\cccd\2022\tmp\v22104\v22104_cd\22104e_a11.dwg
Dec 09, 2024 - 1:45pm

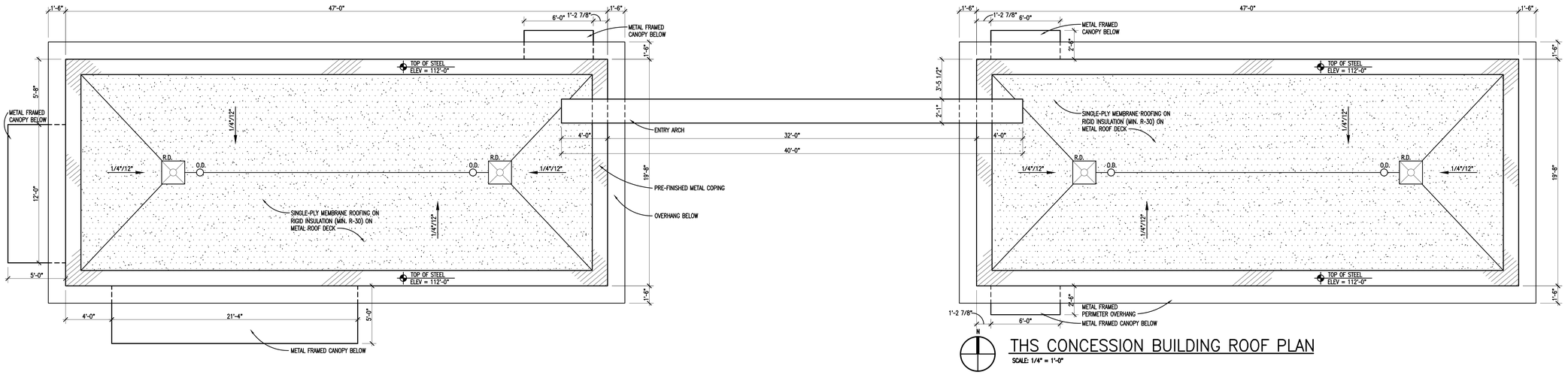

THS CONCESSION BUILDING ROOF PLAN

SCALE: 1/4" = 1'-0"

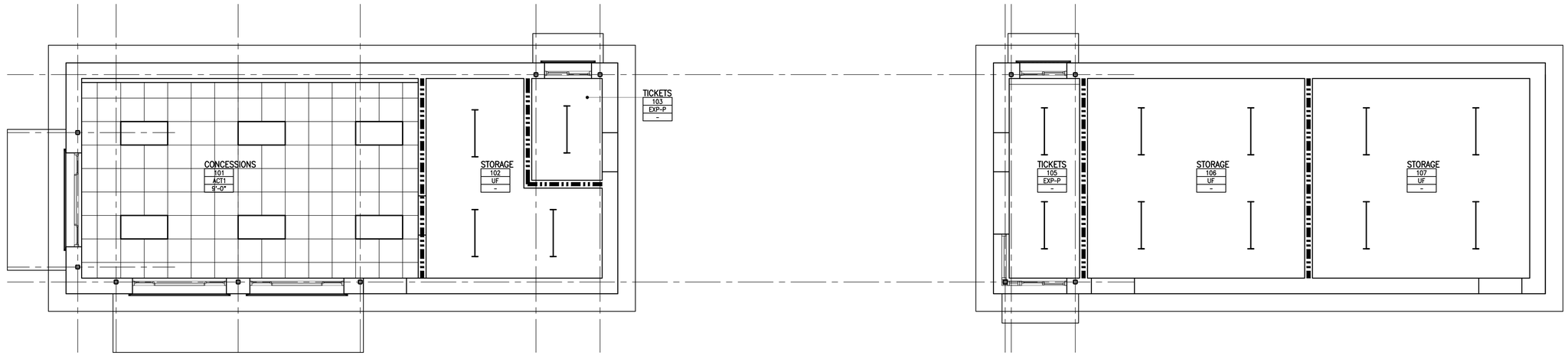

NEW STADIUM ENTRANCE REFLECTED CEILING PLAN

SCALE: 1/4" = 1'-0"

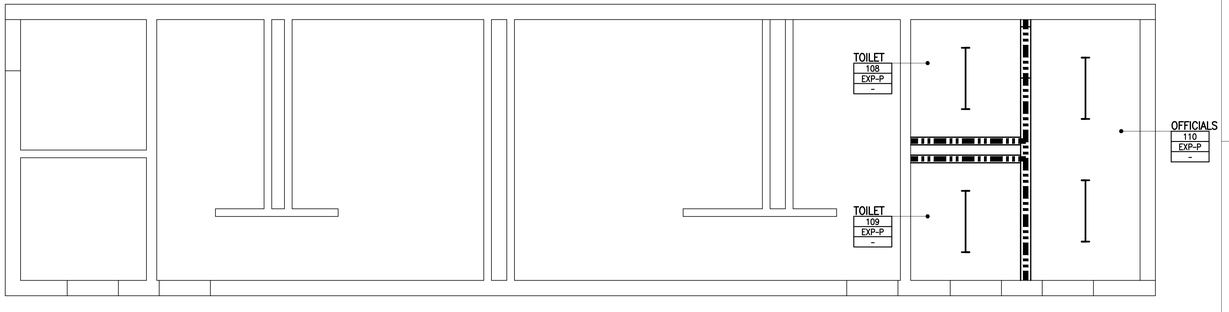

EXISTING TOILET BUILDING REFLECTED CEILING PLAN

SCALE: 1/4" = 1'-0"

ROOF PLAN LEGEND

- R.D. — ROOF DRAIN (PRIMARY)
- O.D. — ROOF DRAIN (SECONDARY)
- ROOFING ON TAPERED INSULATION (1/4" PER FOOT, MIN.) ON UNIFORM THICKNESS (NON-TAPERED) INSULATION
- (0.0"±) — APPROXIMATE THICKNESS OF TAPERED INSULATION (IN ADDITION TO UNIFORM THICKNESS INSULATION)
- INDICATES PITCH OF ROOF SURFACE TOWARD DRAINS (TAPERED INSULATION OR SADDLES)

ROOF PLAN NOTES

1. SEE MECHANICAL DRAWINGS FOR LOCATIONS OF PLUMBING VENTS (FLASH AS PER S.M.A.C.N.A. AND N.R.C.A. STANDARDS).
2. SEE MECHANICAL DRAWINGS FOR ADDITIONAL OPENINGS, IF ANY, IN NEW AND/OR EXISTING ROOFS. DETAILS OF SIMILAR OPENINGS REFERENCED ON THIS SHEET ARE APPLICABLE.
3. WHERE NEW OPENINGS OCCUR IN EXISTING ROOF AREAS, INSTALL SUPPLEMENTAL STEEL FRAMING UNDER DECK PRIOR TO CUTTING HOLE IN DECK. REPAIR ROOFING AND INSULATION TO 2'-0" (MIN.) AROUND OPENING.
4. WHERE WOOD NAILERS ARE SHOWN IN PLANE OF ROOF INSULATION, CUT NAILERS AS REQUIRED TO MATCH INSULATION THICKNESS.
5. TYPICAL ROOF IS FLEXIBLE SHEET ROOFING ON RIGID INSULATION ON METAL DECK (TAPERED INSULATION AT SADDLES AND ELSEWHERE WHERE INDICATED).
6. TAPERED INSULATION SADDLES/CRICKETS SHALL BE 1/2" PER FOOT MIN.

WALL FIRE RATING LEGEND

ALL WALLS INDICATED WITH LINE TYPES BELOW CONTINUE TO FLOOR OR ROOF STRUCTURE ABOVE - ALL WALLS WITHOUT THESE INDICATIONS EXTEND A MINIMUM OF 4" ABOVE THE HIGHEST ADJACENT CEILING

: NON RATED WALLS TO STRUCTURE ABOVE

GENERAL NOTES

1. REFER TO ELECTRICAL DRAWINGS FOR FIXTURE TYPES. REFER TO ELECTRICAL AND MECHANICAL DRAWINGS FOR ADDITIONAL INFORMATION PERTAINING TO ELECTRICAL AND MECHANICAL WORK.
2. COORDINATE SIZE AND LOCATION OF ALL ACCESS PANELS WITH TRADE REQUIRING THE SAME. ACCESS PANELS ARE SPECIFIED ARCHITECTURALLY BUT ARE REQUIRED TO BE PROVIDED BY TRADE. SPOT ALL LOCATIONS WITHIN FIXED GYPSUM BOARD CEILINGS AND RECEIVE APPROVAL FROM THE ARCHITECT'S FIELD REPRESENTATIVE BEFORE PLACEMENT.
3. COORDINATE CEILING SUSPENSION SYSTEMS WITH OTHER CEILING SPACE EQUIPMENT SUPPORTS.
4. ALL FIRE WALLS, FIRE BARRIERS, FIRE PARTITIONS, SMOKE BARRIERS AND SMOKE PARTITIONS (ABOVE ACCESSIBLE CEILINGS) SHALL BE MARKED EVERY 30'-0" HORIZONTALLY AND WITHIN 15'-0" OF ENDS OF WALLS: "FIRE AND/OR SMOKE BARRIER - PROTECT ALL OPENINGS". REFER TO CURRENT BUILDING CODE FOR LETTERING HEIGHT, STROKE AND CONTRAST.
5. ALL GYPSUM BOARD FASCIAE @ SOFFITS, ADJACENT TO LAY-IN CEILINGS, SHALL EXTEND 4" MINIMUM ABOVE LAY-IN CEILINGS.
6. INSTALL CONTROL JOINTS IN GYPSUM BOARD AND METAL STUD-FRAMED PARTITIONS, WALLS, CEILINGS, BULKHEADS, FASCIAE AND SOFFITS IN COMPLIANCE WITH SPECIFICATIONS, AND WITH GENERAL REQUIREMENTS OF ASTM C840. PRIOR TO COMMENCEMENT OF FRAMING INSTALLATION SUBMIT COORDINATION DRAWINGS INDICATING PROPOSED LOCATIONS OF ALL CONTROL JOINTS, AS SPECIFIED.
7. PROVIDE WOOD BLOCKING, ABOVE GYPSUM BOARD CEILINGS, AS REQUIRED FOR MISCELLANEOUS SUSPENDED ITEMS (e.g. CURTAIN TRACKS, WINDOW SHADES, ACOUSTICAL BAFFLES, ETC.)
8. REFER TO DRAWING A___ FOR TYPICAL DETAILS PERTAINING TO WALL TERMINATIONS AT STRUCTURE ABOVE.

FIXTURE LEGEND

- RECESSED TROFFER (2'x4'/ 1'x4')
- INDUSTRIAL FIXTURE
- RECESSED DOWNLIGHT
- EXTERIOR, WALL-MOUNTED L.E.D. FIXTURE (9'-0" A.F.F. TO CENTER)

CEILING LEGEND

ROOM/CEILING TAGS — ROOM NAME AND NUMBER PLUS GENERAL CEILING FINISH AND HEIGHT UNLESS OTHERWISE NOTED CEILING FINISH TAGS.

CEILING FINISH TAG — SPECIFIC FINISH/HEIGHT WHERE VARYING FROM GENERAL ROOM/CEILING TAGS.

CLASSROOM (ROOM NAME)
101 (ROOM NUMBER)
ACT (CEILING FINISH ABBREVIATION (SEE BELOW) → ALUM)
9'-0" (CEILING HEIGHT (A.F.F.) → 8'-10")

CEILING FINISH ABBREVIATIONS

ACT	ACOUSTICAL LAY-IN CEILING TILE
DAFS	DIRECT APPLIED FINISH SYSTEM
EX	EXISTING
EXP-P	EXPOSED CONSTRUCTION - TO BE PAINTED
GYP-P	GYPSUM BOARD - TO BE PAINTED
GYP-EP	GYPSUM BOARD - TO BE EPOXY PAINTED
UF	UNFINISHED

NOTES:

1. REFER TO FINISH PLANS FOR INFORMATION ON ROOM FINISHES.
2. REFER TO ARCHITECTURAL PLANS AND SPECIFICATIONS FOR ADDITIONAL INFORMATION ON MATERIALS AND CONSTRUCTION.
3. WHERE EXPOSED CONSTRUCTION IS INDICATED TO BE PAINTED, THIS SHALL INCLUDE ALL STRUCTURAL MEMBERS, ROOF/FLOOR DECK, DUCTWORK, DIFFUSERS, GRILLES, PIPING, SUSPENDED EQUIPMENT, CONDUITS, ETC. (U.O.N.)

CEILING KEY

- GYPSUM BOARD (PAINTED) OR INTERIOR/EXTERIOR FINISH SYSTEM CEILING/SOFFIT
- 24" x 24" SUSPENDED LAY-IN ACOUSTICAL CEILING
- EXPOSED OR EXISTING CONSTRUCTION TO REMAIN (PAINTED, U.O.N.)

TMP ARCHITECTURE

TMP ARCHITECTURE INC
1191 WEST SQUARE LAKE ROAD
BLOOMFIELD HILLS - MICHIGAN - 48302
PH - 248.338.4561 FX - 248.338.0223
EM - INFO@TMP-ARCHITECTURE.COM

REGISTRATION SEAL

CONSULTANT

PROJECT TITLE

Troy High School Athletic Fields Bid Package No. 02B

Troy School District Troy, Michigan

DRAWING TITLE

THS Concessions Building Reflected Ceiling Plan & Roof Plan and Existing Toilet Building Reflected Ceiling Plan

ISSUE DATES

12-10-2024	CONSTRUCTION DOCUMENTS
DATE:	ISSUED FOR:
DRAWN	DO
CHECKED	JW
APPROVED	DL

PROJECT NO.

22104E

DRAWING NO.

A2.1

Drawing File: G:\Local\2022\mod\22104\Arch\22104H_col2104H_A21.dwg
Dec 09, 2024 - 10:12am

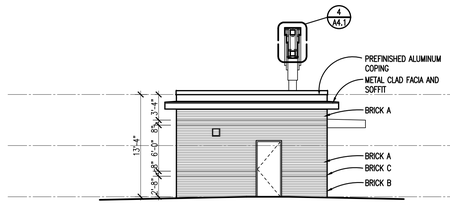

6 A1.1 EAST ELEVATION - INTERIOR
SCALE: 1/8" = 1'-0"

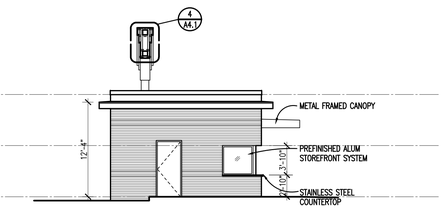

5 A1.1 WEST ELEVATION - INTERIOR
SCALE: 1/8" = 1'-0"

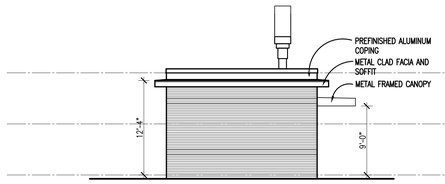

4 A1.1 EAST ELEVATION
SCALE: 1/8" = 1'-0"

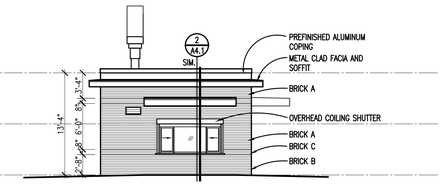

3 A1.1 WEST ELEVATION
SCALE: 1/8" = 1'-0"

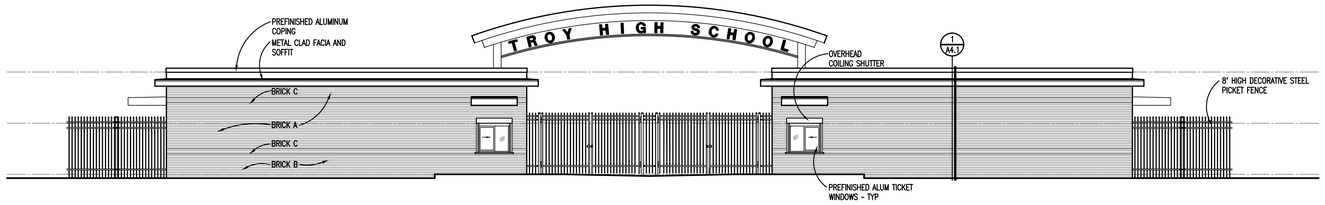

2 A1.1 NORTH ELEVATION
SCALE: 1/8" = 1'-0"

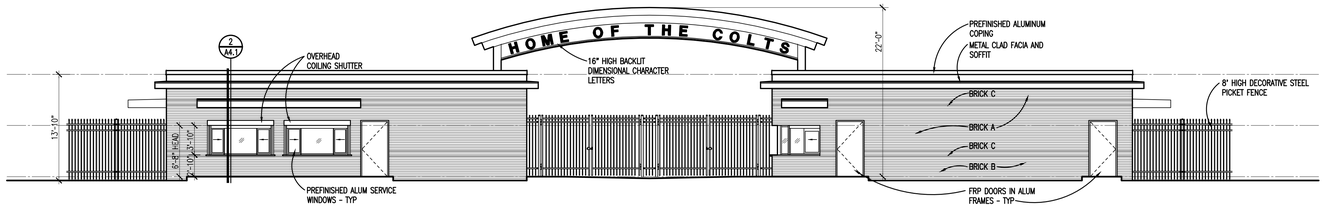

1 A1.1 SOUTH ELEVATION
SCALE: 1/8" = 1'-0"

TMP ARCHITECTURE

TMP ARCHITECTURE INC
1191 WEST SQUARE LAKE ROAD
BLOOMFIELD HILLS • MICHIGAN • 48302
PH • 248.338.4561 FX • 248.338.0223
EM • INFO@TMP-ARCHITECTURE.COM

REGISTRATION SEAL

CONSULTANT

PROJECT TITLE
Troy High School Athletic Fields
Bid Package No. 02B

Troy School District
Troy, Michigan

DRAWING TITLE
THS Concessions Building Elevations

ISSUE DATES

DATE:	ISSUED FOR:
12-10-2024	CONSTRUCTION DOCUMENTS

DRAWN	DO
CHECKED	JW
APPROVED	DL

PROJECT NO.
22104E

DRAWING NO.
A3.1

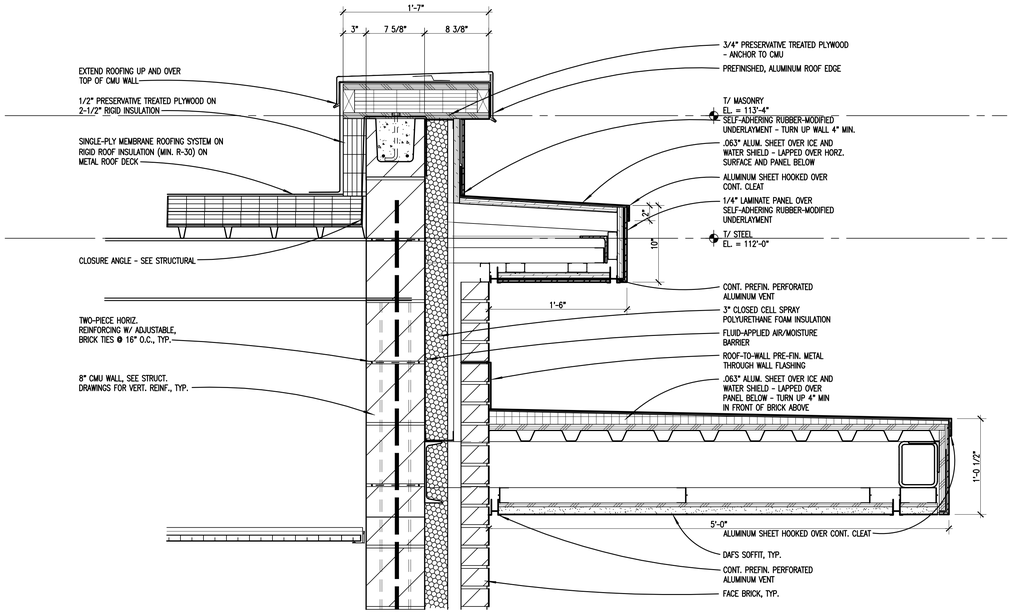

3 / A4.1 ROOF EDGE DETAIL

SCALE: 1-1/2" = 1'-0"

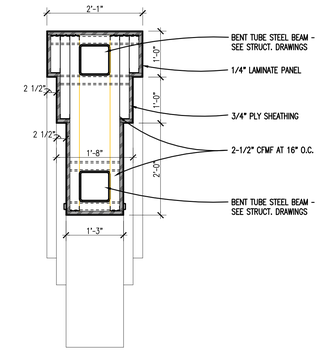

4 / A3.1 SIGN DETAIL

SCALE: 3/4" = 1'-0"

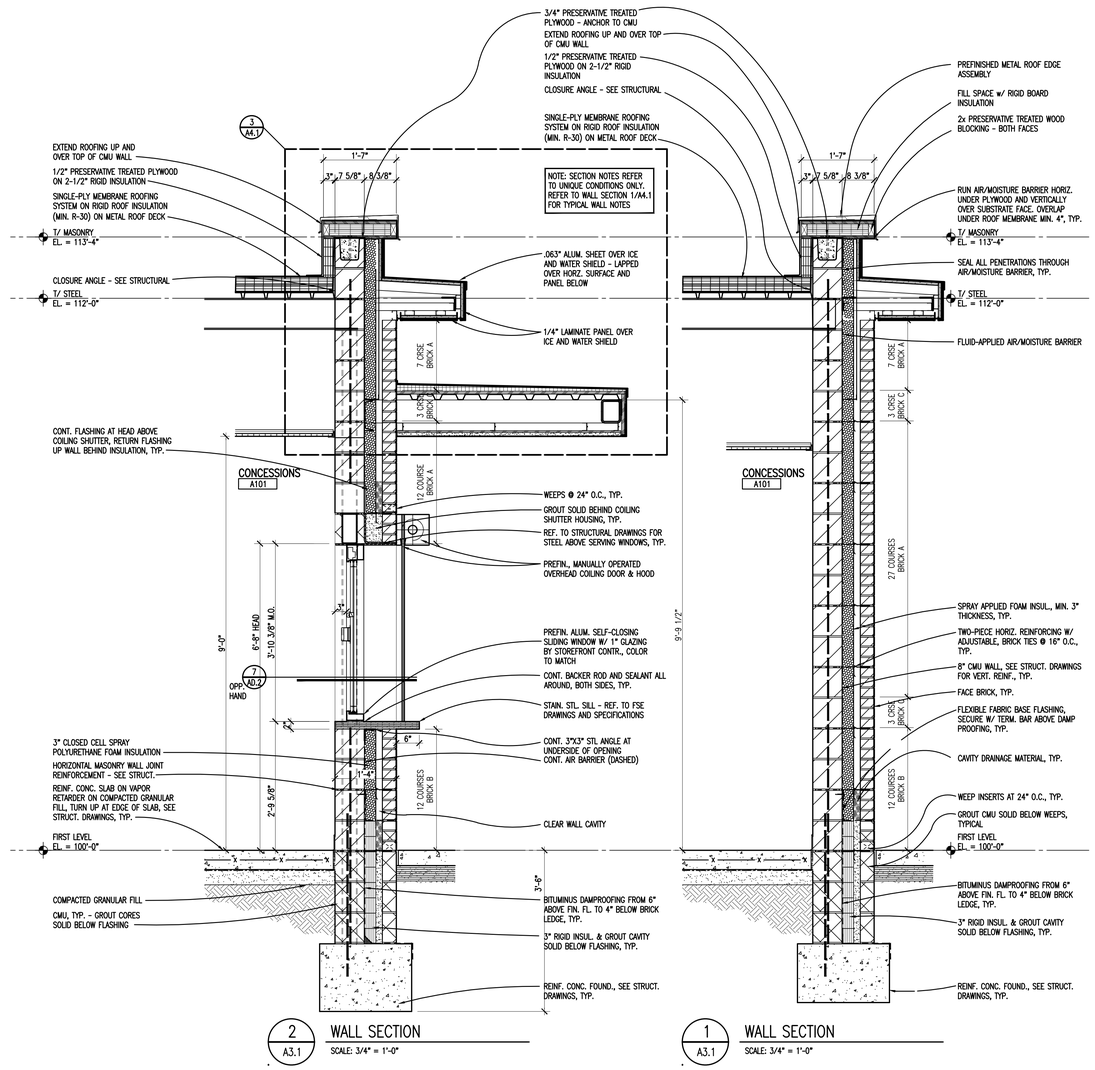

2 / A3.1 WALL SECTION

SCALE: 3/4" = 1'-0"

1 / A3.1 WALL SECTION

SCALE: 3/4" = 1'-0"

TMP ARCHITECTURE

TMP ARCHITECTURE INC

1191 WEST SQUARE LAKE ROAD
BLOOMFIELD HILLS - MICHIGAN - 48302
PH - 248.338.4561 FX - 248.338.0223
EM - INFO @TMP-ARCHITECTURE.COM

REGISTRATION SEAL

CONSULTANT

PROJECT TITLE

Troy High School Athletic Fields Bid Package No. 02B

Troy School District
Troy, Michigan

DRAWING TITLE

THS Stadium Entrance Details

ISSUE DATES

12-10-2024	CONSTRUCTION DOCUMENTS

DATE:	ISSUED FOR:
DRAWN	DO
CHECKED	JW
APPROVED	DL

PROJECT NO.

22104E

DRAWING NO.

A4.1

Drawing File: G:\acad\2022\mep\22104H\22104H_cd\22104H_A4.1.dwg
Dec 20, 2024 - 10:00am

FOOD SERVICE EQUIPMENT SCHEDULE

ITEM NO	QTY	EQUIPMENT CATEGORY	MANUFACTURER	MODEL NUMBER	EQUIPMENT REMARKS	AMPS	KW	HP	VOLTS	PHASE	DIRECT	PLUG	NEMA	ELECTRICAL A.F.F. (IN)	FTLEC REMARKS	COLD WATER SIZE (IN)	COLD WATER A.F.F. (IN)	HOT WATER SIZE (IN)	HOT WATER GPH	HOT WATER A.F.F. (IN)	DIRECT DRAIN SIZE (IN)	DIRECT DRAIN A.F.F. (IN)	INDIR. DRAIN SIZE (IN)	GAS SIZE (IN)	MBTUH	GAS A.F.F. (IN)	PLUMBING REMARKS	ITEM NO
1	1LOT	BIB SODA SYSTEM	BOOSTER PROVIDED	BY COKE	RACK/CO2/PUMPS/CARBONATOR	8.0			115	1		X	5-15P	48		0.5	48											1
2	1	MOP SINK STORAGE CABINET	ADVANCE TABCO	9-OPC-84DL-300												0.5	30	0.5		30	2							2
3	1	COAT/PURSE HOOKS	EX-CELL (KAISER)	700-SA																								3
4	3	STORAGE SHELVING	METRO	WIRE																								4
5	1	FREEZER, REACH-IN	TRUE MFG.	T-49F-HC		9.6	1.1	1.0	115	1		X	5-15P	84														5
6	1	REFRIGERATOR, REACH-IN	TRUE MFG.	T-49-HC		5.4	1.1	1/2	115	1		X	5-15P	84														6
7	1	EXISTING ICE MAKER W/ BIN	BOOSTER PROVIDED	–	RELOCATED BY FSEC * * *	15.2			115	1		X	5-15P	48		0.5	48						.75				RUN TO INDIRECT WASTE	7
8	1	SINK, CORNER	ADVANCE TABCO	94-K4-24D												0.5	18	18	0.5		2	SU	2				WASH TO G.T. RINSE AND RINSE / SANITIZE TO I.W.	8
9	1LOT	ST. ST. WALL PANELING	ST. ST. FABRICATOR	CUSTOM																								9
10	1LOT	MENU SCREENS	BOOSTER PROVIDED	–	RELOCATED BY BOOSTERS * * *	2.0			120	1		X	5-15P		POWERED FROM (CO1)													10
11	1LOT	WIRE WALL SHELVING	METRO																									11
12	1	HAND SINK, WALL MOUNT	ADVANCE TABCO	7-PS-40		1.0			120	1		X	5-15P	18		0.5	18	0.5		18	1.5	21						12
13	1	DIPPIN DOTS FREEZER	BOOSTER PROVIDED	–	RELOCATED BY BOOSTERS * * *	6.7			115	1		X	5-15P	72	SINGLE DROP CORD RECEPTACLE													13
14	1LOT	EXISTING SODA DISPENSER/ICE BIN	BOOSTER PROVIDED	BY COKE	RELOCATED BY BOOSTERS * * *	6.0			115	1		X	5-15P	18									.75				RUN TO INDIRECT WASTE	14
15	1	TABLE, ENCLOSED BASE, HINGED DOORS	ADVANCE TABCO	HK-SS-3010M	HINGED DOORS																							15
16	1	EXISTING AIRPOT COFFEE BREWER	BOOSTER PROVIDED	–	RELOCATED BY BOOSTERS * * *	23.2			208	1	X		VERIFY	48		0.5	18											16
17	1	CABINET, WALL	ADVANCE TABCO	WCH-15-96	HINGED DOORS																							17
18	1	EXISTING HOT DOG ROLLER	BOOSTER PROVIDED	–	RELOCATED BY BOOSTERS * * *	7.5	.90		120	1		X	5-15P	48														18
19	1	EXISTING CONCESSIONS EQUIPMENT	BOOSTER PROVIDED	–	RELOCATED BY BOOSTERS * * *	12.5	1.5		120	1		X	5-15P	48														19
20	1	EXISTING CONCESSIONS EQUIPMENT	BOOSTER PROVIDED	–	RELOCATED BY BOOSTERS * * *	14.2	1.7		120	1		X	5-15P	48														20
21	1	EXISTING POP CORN MAKER	BOOSTER PROVIDED	–	RELOCATED BY BOOSTERS * * *	13.8	1.66		120	1		X	5-15P	48														21
22	1	HOLDING CABINET, HUMIDIFIED HEATED	F.W.E.	MTU-12		13.8			120	1		X	5-15P	18														22
23	1	EXISTING DISPLAY COOLER	BOOSTER PROVIDED	BY COKE	RELOCATED BY BOOSTERS * * *	15.0			120	1		X	5-15P	84														23
24	6	WIRE SHELVING	METRO	WIRE	3 TIER HIGH																							24
25	1	WARMER, DRAWER TYPE	HATCO	HDW-2		7.5	0.9		120	1		X	5-15P	18														25
26	1	TABLE, ENCLOSED BASE, SLIDING DOORS	ADVANCE TABCO	CB-SS-308M	SLIDING DOORS																							26
27	1	DISPLAY WARMER	AVANTCO	SH-1H		12.5	1.5		120	1		X	5-15P	72	SINGLE DROP CORD RECEPTACLE													27
28	1	WARMER, DRAWER TYPE	HATCO	HDW-2		7.5	0.9		120	1		X	5-15P	18														28
29	1	EXISTING COUNTER TOP WARMER	BOOSTER PROVIDED	–	RELOCATED BY BOOSTERS * * *	12.5	1.5		120	1		X	5-15P	72	SINGLE DROP CORD RECEPTACLE													29
30	6	POS SCREENS (SQUARE)	BOOSTER PROVIDED	–	RELOCATED BY BOOSTERS * * *	1.0			120	1		X	5-15P	18	POWERED FROM (CO1)													30
31	1	EXISTING CHEESE WARMER	BOOSTER PROVIDED	–	RELOCATED BY BOOSTERS * * *	4.5	.55		120	1		X	5-15P	72	SINGLE DROP CORD RECEPTACLE													31
32	1	TABLE, ENCLOSED BASE, SLIDING DOORS	ADVANCE TABCO	CB-SS-307M	SLIDING DOORS																							32
33	2	EXISTING HOT BEVERAGE DISPENSERS	BOOSTER PROVIDED	–	RELOCATED BY BOOSTERS * * *	15.0	1.8		120	1		X	5-15P	72	SINGLE DROP CORD RECEPTACLE	0.5	SU											33
34	1	WARMER, DRAWER TYPE	HATCO	HDW-2		7.5	0.9		120	1		X	5-15P	18														34
35	1	EXISTING SLUSH DISPENSER	BOOSTER PROVIDED	–	RELOCATED BY BOOSTERS * * *	12.0	1.4		120	1		X	5-15P	72	SINGLE DROP CORD RECEPTACLE													35
36	1	DISPLAY COOLER	BOOSTER PROVIDED	BY COKE		10.0			120	1		X	5-15P	72	SINGLE DROP CORD RECEPTACLE													36
37	1LOT	21" DEEP ST. ST. SERVICE COUNTER	ST. ST. FABRICATOR	CUSTOM	OPEN STORAGE UNDER																							37
38	2	TV/MONITORS	BOOSTER PROVIDED	–	RELOCATED BY BOOSTERS * * *	2.0			120	1		X	5-15P	DFA	VERIFY DATA/INPUT REQUIREMENTS													38
39	1LOT	FIELD ERECTION LABOR																										39
CO1		CONVENIENCE OUTLET			DEDICATED	20.0			120	1				18														CO1
CO2		CONVENIENCE OUTLET			DEDICATED	20.0			120	1				48														CO2
CO3		CONVENIENCE OUTLET			DEDICATED	20.0			120	1				72	SINGLE DROP CORD RECEPTACLE													CO3

* * * ENGINEER TO VERIFY UTILITIES OF BOOSTER PROVIDED EXISTING EQUIPMENT

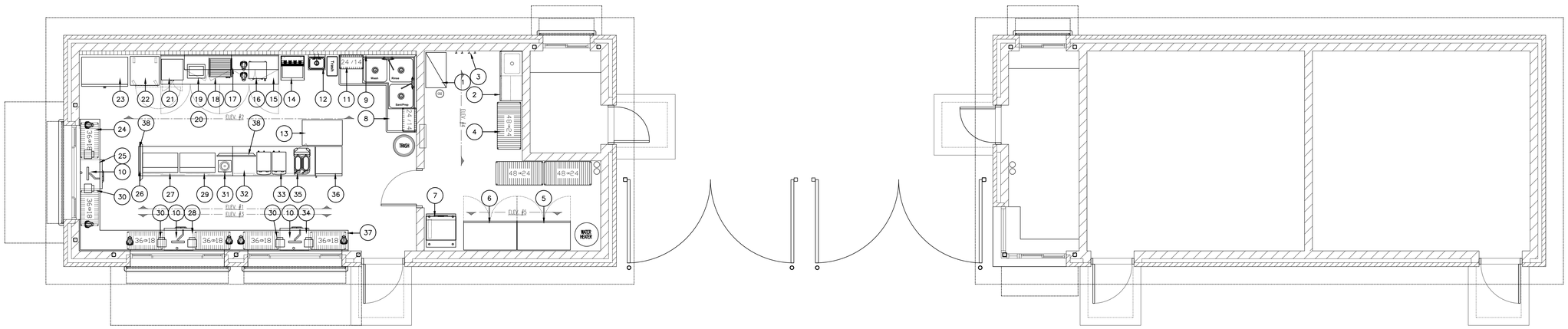

TMP ARCHITECTURE

TMP ARCHITECTURE INC
1191 WEST SQUARE LAKE ROAD
BLOOMFIELD HILLS MICHIGAN 48302
PH 248.338.4561 FX 248.338.0223
EM INFO@TMP-ARCHITECTURE.COM

REGISTRATION SEAL

CONSULTANT

PROJECT TITLE

Troy High Concessions

Troy School District
Troy, Michigan

DRAWING TITLE

Food Service Equipment Layout and Schedule

KEY PLAN

ISSUE DATES

DATE:	ISSUED FOR:
12-10-2024	CONSTRUCTION DOCUMENTS

DRAWN	RIC
CHECKED	...
APPROVED	

PROJECT NO.

22104E

DRAWING NO.

FSE.1

FOOD SERVICE EQUIPMENT SCHEDULE

ITEM NO	QTY	EQUIPMENT CATEGORY	MANUFACTURER	MODEL NUMBER	EQUIPMENT REMARKS	AMPS	KW	HP	VOLTS	PHASE	DIRECT	PLUG	NEMA	ELECTRICAL A.F.F. (IN)	ELEC REMARKS	COLD WATER SIZE (IN)	COLD WATER A.F.F. (IN)	HOT WATER SIZE (IN)	HOT WATER GPH	HOT WATER A.F.F. (IN)	DIRECT DRAIN SIZE (IN)	DIRECT DRAIN A.F.F. (IN)	INDIR DRAIN SIZE (IN)	GAS SIZE (IN)	MBTUH	GAS A.F.F. (IN)	PLUMBING REMARKS	ITEM NO
1	1LOT	BIB SODA SYSTEM	BOOSTER PROVIDED	BY COKE	RACK/CO2/PUMPS/CARBONATOR	8.0			115	1		X	5-15P	48		0.5	48											1
2	1	MOP SINK STORAGE CABINET	ADVANCE TABCO	9-OPC-84DL-300												0.5	30	0.5		30	2							2
3	1	COAT/PURSE HOOKS	EX-CELL (KAISER)	700-SA																								3
4	3	STORAGE SHELVING	METRO	WIRE																								4
5	1	FREEZER, REACH-IN	TRUE MFG.	T-49F-HC		9.6	1.1	1.0	115	1		X	5-15P	84														5
6	1	REFRIGERATOR, REACH-IN	TRUE MFG.	T-49-HC		5.4	1.1	1/2	115	1		X	5-15P	84														6
7	1	EXISTING ICE MAKER W/ BIN	BOOSTER PROVIDED	-	RELOCATED BY FSEC * * *	15.2			115	1		X	5-15P	48		0.5	48						.75				RUN TO INDIRECT WASTE	7
8	1	SINK, CORNER	ADVANCE TABCO	94-K4-24D												0.5	18	18	0.5		2	SU	2				WASH TO G.T. RINSE AND RINSE / SANITIZE TO I.W.	8
9	1LOT	ST. ST. WALL PANELING	ST. ST. FABRICATOR	CUSTOM																								9
10	1LOT	MENU SCREENS	BOOSTER PROVIDED	-	RELOCATED BY BOOSTERS * * *	2.0			120	1		X	5-15P		POWERED FROM (CO1)													10
11	1LOT	WIRE WALL SHELVING	METRO																									11
12	1	HAND SINK, WALL MOUNT	ADVANCE TABCO	7-PS-40		1.0			120	1		X	5-15P	18		0.5	18	0.5		18	1.5	21						12
13	1	DIPPIN DOTS FREEZER	BOOSTER PROVIDED	-	RELOCATED BY BOOSTERS * * *	6.7			115	1		X	5-15P	72	SINGLE DROP CORD RECEPTACLE													13
14	1LOT	EXISTING SODA DISPENSER/ICE BIN	BOOSTER PROVIDED	BY COKE	RELOCATED BY BOOSTERS * * *	6.0			115	1		X	5-15P	18									.75				RUN TO INDIRECT WASTE	14
15	1	TABLE, ENCLOSED BASE, SLIDING DOORS	ADVANCE TABCO	CK-SS-3010M	HINGED DOORS																							15
16	1	EXISTING AIRPOT COFFEE BREWER	BOOSTER PROVIDED	-	RELOCATED BY BOOSTERS * * *	23.2			208	1	X		VERIFY	48		0.5	18											16
17	1	CABINET, WALL	ADVANCE TABCO	WCH-15-96	HINGED DOORS																							17
18	1	EXISTING HOT DOG ROLLER	BOOSTER PROVIDED	-	RELOCATED BY BOOSTERS * * *	7.5	.90		120	1		X	5-15P	48														18
19	1	EXISTING CONCESSIONS EQUIPMENT	BOOSTER PROVIDED	-	RELOCATED BY BOOSTERS * * *	12.5	1.5		120	1		X	5-15P	48														19
20	1	EXISTING CONCESSIONS EQUIPMENT	BOOSTER PROVIDED	-	RELOCATED BY BOOSTERS * * *	14.2	1.7		120	1		X	5-15P	48														20
21	1	EXISTING POP CORN MAKER	BOOSTER PROVIDED	-	RELOCATED BY BOOSTERS * * *	13.8	1.66		120	1		X	5-15P	48														21
22	1	HOLDING CABINET, HUMIDIFIED HEATED	F.W.E.	MTU-12		13.8			120	1		X	5-15P	18														22
23	1	EXISTING DISPLAY COOLER	BOOSTER PROVIDED	BY COKE	RELOCATED BY BOOSTERS * * *	15.0			120	1		X	5-15P	84														23
24	6	WIRE SHELVING	METRO	WIRE	3 TIER HIGH																							24
25	1	WARMER, DRAWER TYPE	HATCO	HDW-2		7.5	0.9		120	1		X	5-15P	18														25
26	1	TABLE, ENCLOSED BASE, SLIDING DOORS	ADVANCE TABCO	CB-SS-308M	SLIDING DOORS																							26
27	1	DISPLAY WARMER	AVANTCO	SH-1H		12.5	1.5		120	1		X	5-15P	72	SINGLE DROP CORD RECEPTACLE													27
28	1	WARMER, DRAWER TYPE	HATCO	HDW-2		7.5	0.9		120	1		X	5-15P	18														28
29	1	EXISTING COUNTER TOP WARMER	BOOSTER PROVIDED	-	RELOCATED BY BOOSTERS * * *	12.5	1.5		120	1		X	5-15P	72	SINGLE DROP CORD RECEPTACLE													29
30	6	POS SCREENS (SQUARE)	BOOSTER PROVIDED	-	RELOCATED BY BOOSTERS * * *	1.0			120	1		X	5-15P	18	POWERED FROM (CO1)													30
31	1	EXISTING CHEESE WARMER	BOOSTER PROVIDED	-	RELOCATED BY BOOSTERS * * *	4.5	.55		120	1		X	5-15P	72	SINGLE DROP CORD RECEPTACLE													31
32	1	TABLE, ENCLOSED BASE, SLIDING DOORS	ADVANCE TABCO	CB-SS-307M	SLIDING DOORS																							32
33	2	EXISTING HOT BEVERAGE DISPENSERS	BOOSTER PROVIDED	-	RELOCATED BY BOOSTERS * * *	15.0	1.8		120	1		X	5-15P	72	SINGLE DROP CORD RECEPTACLE	0.5	SU											33
34	1	WARMER, DRAWER TYPE	HATCO	HDW-2		7.5	0.9		120	1		X	5-15P	18														34
35	1	EXISTING SLUSH DISPENSER	BOOSTER PROVIDED	-	RELOCATED BY BOOSTERS * * *	12.0	1.4		120	1		X	5-15P	72	SINGLE DROP CORD RECEPTACLE													35
36	1	DISPLAY COOLER	BOOSTER PROVIDED	BY COKE		10.0			120	1		X	5-15P	72	SINGLE DROP CORD RECEPTACLE													36
37	1LOT	21" DEEP ST. ST. SERVICE COUNTER	ST. ST. FABRICATOR	CUSTOM	OPEN STORAGE UNDER																							37
38	2	TV/MONITORS	BOOSTER PROVIDED	-	RELOCATED BY BOOSTERS * * *	2.0			120	1		X	5-15P	DFA	VERIFY DATA/INPUT REQUIREMENTS													38
39	1LOT	FIELD ERECTION LABOR																										39
CO1		CONVENIENCE OUTLET			DEDICATED	20.0			120	1				18														CO1
CO2		CONVENIENCE OUTLET			DEDICATED	20.0			120	1				48														CO2
CO3		CONVENIENCE OUTLET			DEDICATED	20.0			120	1				72	SINGLE DROP CORD RECEPTACLE													CO3

* * * ENGINEER TO VERIFY UTILITIES OF BOOSTER PROVIDED EXISTING EQUIPMENT

GENERAL NOTES for ROUGH-IN PLAN

THIS PLAN IS TO BE USED FOR BIDDING PURPOSES ONLY & MUST BE REDRAWN BY FOOD SERVICE EQUIP. CONTR. USING ARCHITECTS FINAL WORKING DRAWINGS (ARCH., ELECT., PLUMB. & VENT.). F.S.EQ. CONTR. SHALL FURNISH FULLY DIMENSIONED ROUGH-IN PLAN FOR ELECTRICAL, PLUMBING, VENTILATION, DEPRESSION & WALL OPENINGS WITHIN 30 DAYS AFTER AWARD OF CONTRACT. PLANS ARE TO BE REDRAWN & NOT TRACED-OFF OF ORIGINAL DRAWINGS.

FOOD SERVICE EQUIP. CONTR. IS TO ASSIST ELECTRICAL TRADES DURING PERIOD WHILE FINAL ROUGH-IN CONNECTIONS ARE BEING MADE. F.S.EQ. CONTR. SHALL FURNISH ALL NECESSARY WIRING DETAILS AS REQUIRED. F.S.EQ. CONTR. ALSO TO HAVE FIELD SUPERVISOR ON JOBSITE AT TIME OF FINAL CONN'S.

FOOD SERVICE EQUIP. CONTR. SHALL CONTACT ELECTRICAL ENGINEER BEFORE DRAWING ROUGH-PLAN TO VERIFY EXACT VOLTAGES AVAILABLE ON JOBSITE. THIS CHECK MUST BE MADE TO INSURE PROPER VOLTAGES TO ALL EQUIPMENT.

GENERAL NOTES for ROUGH-IN PLAN

ALL ADDITIONAL RECEPTACLES, CONN.'s, WIRING, ETC., TO BE SHOWN BY ELECT. ENGINEER.

ALL 120v DUPLEX RECEPTACLES WITHIN KITCHEN AREAS & WITHIN 72" OF A SINK MUST BE GFCI PROTECTED BY ELECT. TRADES.

ELECT. TRADES TO FURN. & INSTALL ALL LINE DISCONNECT SWITCHES AS REQUIRED TO MEET STATE & LOCAL CODES.

ELECTRICAL ROUGH-IN CODE

J.B.	JUNCTION BOX
	ELECTRICAL CONDUIT CONNECTION
H.P.	HORSEPOWER
KW.	KILOWATT
W.	WATT
V.	VOLT
1ph.	SINGLE PHASE
3ph.	THREE PHASE
	DUPLEX RECEPTACLE
	SINGLE RECEPTACLE
	DUPLEX FLOOR RECEPTACLE
	SINGLE FLOOR RECEPTACLE
	DROP CORD RECEPTACLE
	FUSED DISCONNECT SWITCH
	SWITCH
S.U.	STUB UP
A.F.F.	ABOVE FINISH FLOOR
D.F.A.	DOWN FROM ABOVE

GENERAL NOTE for ROUGH-IN PLAN

ALL SERVICES SHOWN WITH SYMBOLS CENTERED ON WALL SHOULD BE BROUGHT TO THAT POINT CONCEALED IN WALL & STUBBED-OUT AT HEIGHT SHOWN ON THIS PLAN OR F.S.EQ. CONTR'S FINAL DIMENSIONED ROUGH-IN PLAN. DO NOT STUB OUT OF FLOOR & RUN EXPOSED ON WALL.

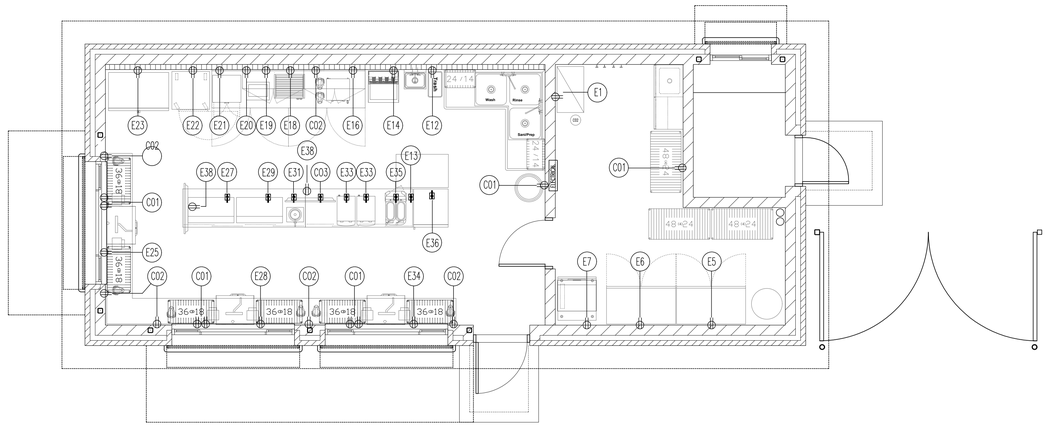

TMP ARCHITECTURE

TMP ARCHITECTURE INC

1191 WEST SQUARE LAKE ROAD
BLOOMFIELD HILLS · MICHIGAN · 48302
PH · 248.338.4561 FX · 248.338.0223
EM · INFO @TMP-ARCHITECTURE.COM

REGISTRATION SEAL

CONSULTANT

PROJECT TITLE

Troy High Concessions

Troy School District
Troy, Michigan

DRAWING TITLE

Food Service Equipment Electrical Rough-in Plan

KEY PLAN

ISSUE DATES

DATE:	ISSUED FOR:
12-10-2024	CONSTRUCTION DOCUMENTS

DRAWN	RIC
CHECKED	...
APPROVED	

PROJECT NO.

22104E

DRAWING NO.

FSE.2

FOOD SERVICE EQUIPMENT SCHEDULE

ITEM NO	QTY	EQUIPMENT CATEGORY	MANUFACTURER	MODEL NUMBER	EQUIPMENT REMARKS	AMPS	KW	HP	VOLTS	PHASE	DIRECT	PLUG	NEMA	ELECTRICAL AFF (IN)	ELEC REMARKS	COLD WATER SIZE (IN)	COLD WATER AFF (IN)	HOT WATER SIZE (IN)	HOT WATER GPH	HOT WATER AFF (IN)	DIRECT DRAIN SIZE (IN)	DIRECT DRAIN AFF (IN)	INDIR DRAIN SIZE (IN)	GAS SIZE (IN)	MBTUH	GAS AFF (IN)	PLUMBING REMARKS	ITEM NO
1	1LOT	BIB SODA SYSTEM	BOOSTER PROVIDED	BY COKE	RACK/CO2/PUMPS/CARBONATOR	8.0			115	1		X	5-15P	48		0.5	48											1
2	1	MOP SINK STORAGE CABINET	ADVANCE TABCO	9-OPC-84DL-300												0.5	30	0.5		30	2							2
3	1	COAT/PURSE HOOKS	EX-CELL (KAISER)	700-SA																								3
4	3	STORAGE SHELVING	METRO	WIRE																								4
5	1	FREEZER, REACH-IN	TRUE MFG.	T-49F-HC		9.6	1.1	1.0	115	1		X	5-15P	84														5
6	1	REFRIGERATOR, REACH-IN	TRUE MFG.	T-49-HC		5.4	1.1	1/2	115	1		X	5-15P	84														6
7	1	EXISTING ICE MAKER W/ BIN	BOOSTER PROVIDED	-	RELOCATED BY FSEC * * *	15.2			115	1		X	5-15P	48		0.5	48						.75				RUN TO INDIRECT WASTE	7
8	1	SINK, CORNER	ADVANCE TABCO	94-K4-24D												0.5	18	18	0.5		2	SU	2				WASH TO G.T., RINSE AND RINSE / SANITIZE TO I.W.	8
9	1LOT	ST. ST. WALL PANELING	ST. ST. FABRICATOR	CUSTOM																								9
10	1LOT	MENU SCREENS	BOOSTER PROVIDED	-	RELOCATED BY BOOSTERS * * *	2.0			120	1		X	5-15P		POWERED FROM (CO1)													10
11	1LOT	WIRE WALL SHELVING	METRO																									11
12	1	HAND SINK, WALL MOUNT	ADVANCE TABCO	7-PS-40		1.0			120	1		X	5-15P	18		0.5	18	0.5		18	1.5	21						12
13	1	DIPPIN DOTS FREEZER	BOOSTER PROVIDED	-	RELOCATED BY BOOSTERS * * *	6.7			115	1		X	5-15P	72	SINGLE DROP CORD RECEPTACLE													13
14	1LOT	EXISTING SODA DISPENSER/ICE BIN	BOOSTER PROVIDED	BY COKE	RELOCATED BY BOOSTERS * * *	6.0			115	1		X	5-15P	18									.75				RUN TO INDIRECT WASTE	14
15	1	TABLE, ENCLOSED BASE, SLIDING DOORS	ADVANCE TABCO	CK-SS-3010M	HINGED DOORS																							15
16	1	EXISTING AIRPOT COFFEE BREWER	BOOSTER PROVIDED	-	RELOCATED BY BOOSTERS * * *	23.2			208	1	X		VERIFY	48		0.5	18											16
17	1	CABINET, WALL	ADVANCE TABCO	WCH-15-96	HINGED DOORS																							17
18	1	EXISTING HOT DOG ROLLER	BOOSTER PROVIDED	-	RELOCATED BY BOOSTERS * * *	7.5	.90		120	1		X	5-15P	48														18
19	1	EXISTING CONCESSIONS EQUIPMENT	BOOSTER PROVIDED	-	RELOCATED BY BOOSTERS * * *	12.5	1.5		120	1		X	5-15P	48														19
20	1	EXISTING CONCESSIONS EQUIPMENT	BOOSTER PROVIDED	-	RELOCATED BY BOOSTERS * * *	14.2	1.7		120	1		X	5-15P	48														20
21	1	EXISTING POP CORN MAKER	BOOSTER PROVIDED	-	RELOCATED BY BOOSTERS * * *	13.8	1.66		120	1		X	5-15P	48														21
22	1	HOLDING CABINET, HUMIDIFIED HEATED	F.W.E.	MTU-12		13.8			120	1		X	5-15P	18														22
23	1	EXISTING DISPLAY COOLER	BOOSTER PROVIDED	BY COKE	RELOCATED BY BOOSTERS * * *	15.0			120	1		X	5-15P	84														23
24	6	WIRE SHELVING	METRO	WIRE	3 TIER HIGH																							24
25	1	WARMER, DRAWER TYPE	HATCO	HDW-2		7.5	0.9		120	1		X	5-15P	18														25
26	1	TABLE, ENCLOSED BASE, SLIDING DOORS	ADVANCE TABCO	CB-SS-308M	SLIDING DOORS																							26
27	1	DISPLAY WARMER	AVANTCO	SH-1H		12.5	1.5		120	1		X	5-15P	72	SINGLE DROP CORD RECEPTACLE													27
28	1	WARMER, DRAWER TYPE	HATCO	HDW-2		7.5	0.9		120	1		X	5-15P	18														28
29	1	EXISTING COUNTER TOP WARMER	BOOSTER PROVIDED	-	RELOCATED BY BOOSTERS * * *	12.5	1.5		120	1		X	5-15P	72	SINGLE DROP CORD RECEPTACLE													29
30	6	POS SCREENS (SQUARE)	BOOSTER PROVIDED	-	RELOCATED BY BOOSTERS * * *	1.0			120	1		X	5-15P	18	POWERED FROM (CO1)													30
31	1	EXISTING CHEESE WARMER	BOOSTER PROVIDED	-	RELOCATED BY BOOSTERS * * *	4.5	.55		120	1		X	5-15P	72	SINGLE DROP CORD RECEPTACLE													31
32	1	TABLE, ENCLOSED BASE, SLIDING DOORS	ADVANCE TABCO	CB-SS-307M	SLIDING DOORS																							32
33	2	EXISTING HOT BEVERAGE DISPENSERS	BOOSTER PROVIDED	-	RELOCATED BY BOOSTERS * * *	15.0	1.8		120	1		X	5-15P	72	SINGLE DROP CORD RECEPTACLE	0.5	SU											33
34	1	WARMER, DRAWER TYPE	HATCO	HDW-2		7.5	0.9		120	1		X	5-15P	18														34
35	1	EXISTING SLUSH DISPENSER	BOOSTER PROVIDED	-	RELOCATED BY BOOSTERS * * *	12.0	1.4		120	1		X	5-15P	72	SINGLE DROP CORD RECEPTACLE													35
36	1	DISPLAY COOLER	BOOSTER PROVIDED	BY COKE		10.0			120	1		X	5-15P	72	SINGLE DROP CORD RECEPTACLE													36
37	1LOT	21" DEEP ST. ST. SERVICE COUNTER	ST. ST. FABRICATOR	CUSTOM	OPEN STORAGE UNDER																							37
38	2	TV/MONITORS	BOOSTER PROVIDED	-	RELOCATED BY BOOSTERS * * *	2.0			120	1		X	5-15P	DFA	VERIFY DATA/INPUT REQUIREMENTS													38
39	1LOT	FIELD ERECTION LABOR																										39
CO1		CONVENIENCE OUTLET			DEDICATED	20.0			120	1				18														CO1
CO2		CONVENIENCE OUTLET			DEDICATED	20.0			120	1				48														CO2
CO3		CONVENIENCE OUTLET			DEDICATED	20.0			120	1				72	SINGLE DROP CORD RECEPTACLE													CO3

* * * ENGINEER TO VERIFY UTILITIES OF BOOSTER PROVIDED EXISTING EQUIPMENT

GENERAL NOTES for ROUGH-IN PLAN

THIS PLAN IS TO BE USED FOR BIDDING PURPOSES ONLY & MUST BE REDRAWN BY FOOD SERVICE EQUIP. CONTR. USING ARCHITECTS FINAL WORKING DRAWINGS (ARCH., ELECT., PLUMB. & VENT.). F.S.EQ. CONTR. SHALL FURNISH FULLY DIMENSIONED ROUGH-IN PLAN FOR ELECTRICAL, PLUMBING, VENTILATION, DEPRESSION & WALL OPENINGS WITHIN 30 DAYS AFTER AWARD OF CONTRACT. PLANS ARE TO BE REDRAWN & NOT TRACED-OFF OF ORIGINAL DRAWINGS.

FOOD SERVICE EQUIP. CONTR. IS TO ASSIST PLUMBING TRADES DURING PERIOD WHILE FINAL ROUGH-IN CONNECTIONS ARE BEING MADE. F.S.EQ. CONTR. SHALL FURNISH ALL NECESSARY PIPING DETAILS AS REQUIRED. F.S.EQ. CONTR. ALSO TO HAVE FIELD SUPERVISOR ON JOBSITE AT TIME OF FINAL CONN'S.

FOOD SERVICE EQUIP. CONTR. SHALL CONTACT PLUMB. ENGINEER BEFORE DRAWING ROUGH-IN PLAN TO VERIFY TYPE OF GAS ON JOBSITE. WHEN STEAM IS AVAILABLE, PRESSURE IS TO BE VERIFIED AND ALL EQUIPMENT TO BE FURNISHED ACCORDINGLY.

GENERAL NOTE for ROUGH-IN PLAN

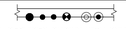

ALL SERVICES SHOWN WITH SYMBOLS CENTERED ON WALL SHOULD BE BROUGHT TO THAT POINT CONCEALED IN WALL & STUBBED-OUT AT HEIGHT SHOWN ON THIS PLAN OR F.S.EQ. CONTR'S FINAL DIMENSIONED ROUGH-IN PLAN. DO NOT STUB OUT OF FLOOR & RUN EXPOSED ON WALL.

GENERAL NOTES for ROUGH-IN PLAN

PLUMB. TRADES TO RUN ALL DRAIN/WASTE/CONDENSATE LINES FROM EQUIPMENT TO NEAREST F.D./F.S./I.W.

ALL ADDITIONAL PIPING, DRAINS, SLEEVES, F.D.'s, I.W.'s, ETC., TO BE SHOWN BY MECH. ENGINEER.

ALL ADDITIONAL P.R.V.s, R.P.Z.s, V.B.s, SHUT-OFF VALVES, ATMOSPHERIC V.B.s, SHOCK-STOPS, ETC., TO BE FURN. & INST'D BY PLUMB. TRADES.

FLOOR DRAIN SCHEDULE

ALL BY PLUMB. TRADES- TYPICAL SIZES SHOWN.

TYPE #1: 6" DIA. W/ FULL NICKLE-BRONZE STRAINER. FLUSH W/ FINISH FLOOR.

TYPE #2: 6" DIA. W/ FULL NICKLE-BRONZE STRAINER & 4" HIGH NICKLE-BRONZE FUNNEL. FLUSH W/ FINISH FLOOR.

TYPE #3: 12" x 12" x 8 1/2" DEEP W/ FULL NICKLE-BRONZE GRATE TOP, ACID RESISTANT INTERIOR & PERFORATED REMOVABLE ENAMELED BASKET. FLUSH W/ FINISH FLOOR.

TYPE #4: 12" x 12" x 10" DEEP W/ FULL ST. ST. REMOVABLE GRATE TOP & REMOVABLE ST. ST. PERFORATED BASKET. FLUSH W/ FINISH FLOOR.

INDIRECT WASTE SCHEDULE

ALL BY PLUMB. TRADES- TYPICAL SIZES SHOWN.

TYPE #5: 6" DIA. W/ FULL NICKLE-BRONZE STRAINER & 4" HIGH NICKLE-BRONZE FUNNEL.

TYPE #6: 8 1/2" DIA. W/ WHITE PORCELIN INTERIOR & NICKLE-BRONZE INTERIOR DOME STRAINER.

TYPE #7: 12" x 12" x 10" DEEP NO GRATE TOP W/ ACID RESISTANT INTERIOR & NICKLE-BRONZE INTERIOR DOME STRAINER.

TYPE #8: 12" x 12" x 10" DEEP W/ 1/4 CUT-OUT NICKLE-BRONZE GRATE TOP, ACID RESISTANT INTERIOR & NICKLE-BRONZE INTERIOR DOME STRAINER.

PLUMBING ROUGH-IN CODE

- H.W. HOT WATER
- C.W. COLD WATER
- W. WASTE
- I.W. INDIRECT WASTE
- F.D. FLOOR DRAIN
- F.T.F.D. FUNNEL-TYPE FLOOR DRAIN
- FLOOR SINK
- G. GAS (NATURAL)
- A.F.F. ABOVE FINISH FLOOR

SYMBOL DENOTES DRAIN/WASTE/CONDENSATE LINE OF VARIOUS SIZE, TO BE FURNISHED & INSTALLED BY PLUMB. TRADES- TO RUN FROM EQUIPMENT TO NEAREST F.D./F.S./I.W./H.D. VERIFY EXACT SIZE WITH FSEC FINAL BUY-OUT BOOKLET.

DETAIL of SODA LINE CONDUIT

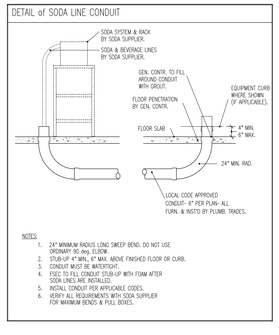

NOTES:
1. 24" MINIMUM RADIUS LONG SWEEP BEND. DO NOT USE ORDINARY 90 deg. ELBOW.
2. STUB-UP 4" MIN., 6" MAX. ABOVE FINISHED FLOOR OR CURB.
3. CONDUIT MUST BE WATERTIGHT.
4. FSEC TO FILL CONDUIT STUB-UP WITH FOAM AFTER SODA LINES ARE INSTALLED.
5. INSTALL CONDUIT PER APPLICABLE CODES.
6. VERIFY ALL REQUIREMENTS WITH SODA SUPPLIER FOR MAXIMUM BENDS & PULL BOXES.

PLUMBING NOTE

SC 6" PVC SODA LINE CONDUIT TO RUN UNDER SLAB FROM BAG-N-BOX SYSTEM ITEM #1 TO SODA DISPENSER ITEM #12 - SEE DETAIL ON THIS SHEET

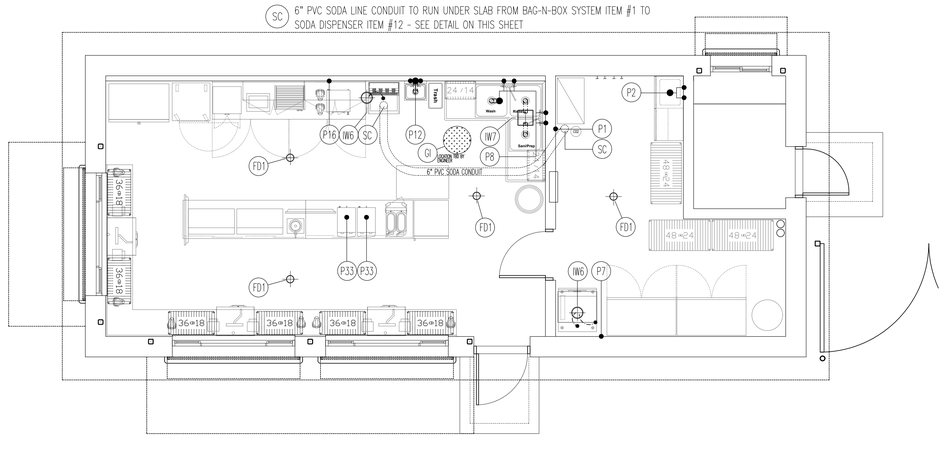

TMP ARCHITECTURE

TMP ARCHITECTURE INC

1191 WEST SQUARE LAKE ROAD
BLOOMFIELD HILLS - MICHIGAN - 48302
PH - 248.338.4561 FX - 248.338.0223
EM - INFO @TMP-ARCHITECTURE.COM

REGISTRATION SEAL

CONSULTANT

PROJECT TITLE

Troy High Concessions

Troy School District
Troy, Michigan

DRAWING TITLE

Food Service Equipment Plumbing Rough-in Plan

KEY PLAN

ISSUE DATES

12-10-2024	CONSTRUCTION DOCUMENTS

DATE: ISSUED FOR:

DRAWN RIC

CHECKED ...

APPROVED

PROJECT NO.

22104E

DRAWING NO.

FSE.3

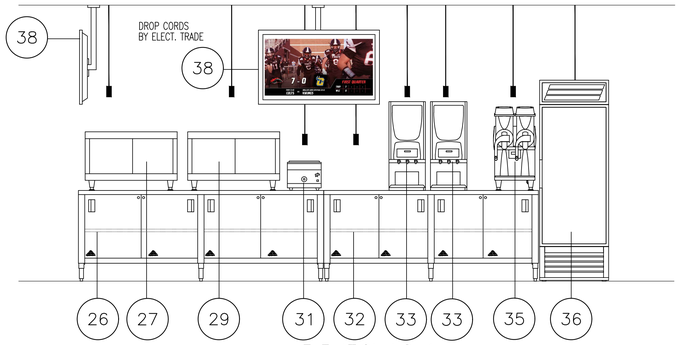

ELEVATION NO. 1
SCALE 1/2"=1'-0"

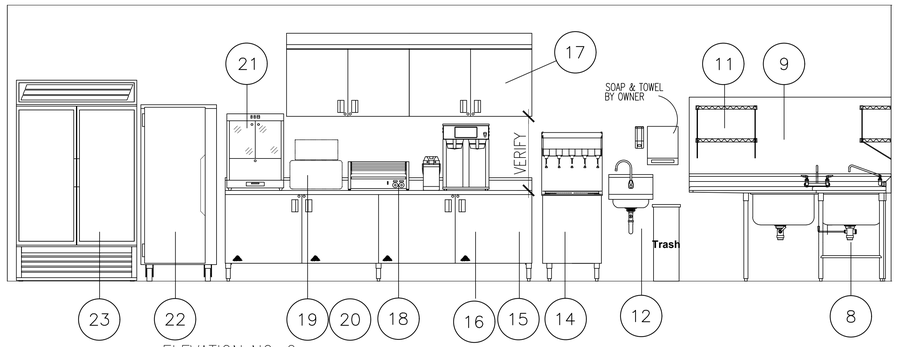

ELEVATION NO. 2
SCALE 1/2"=1'-0"

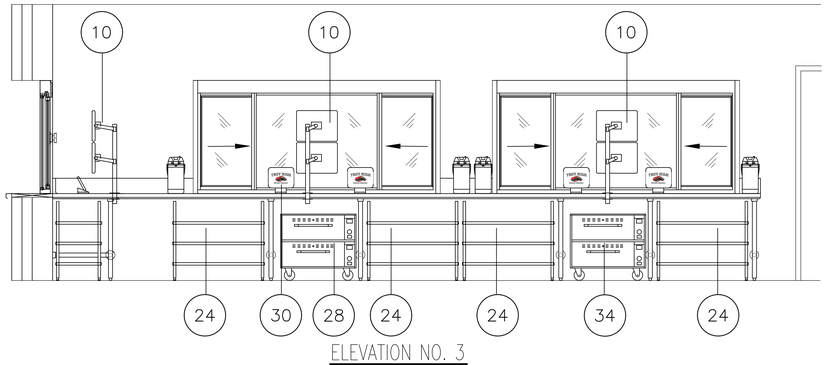

ELEVATION NO. 3
SCALE 1/2"=1'-0"

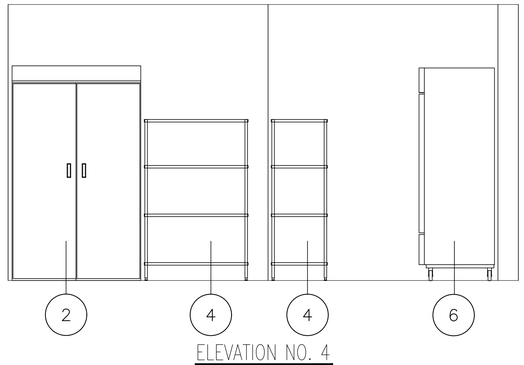

ELEVATION NO. 4
SCALE 1/2"=1'-0"

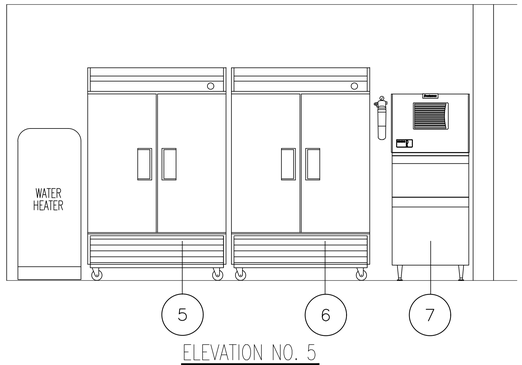

ELEVATION NO. 5
SCALE 1/2"=1'-0"

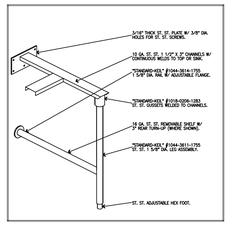

ONE-LEG SUPPORT DETAIL
NO SCALE

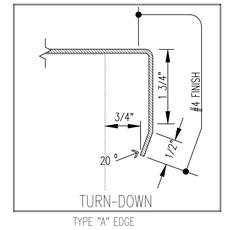

TYPE "A" EDGE

STANDARD
EDGE DETAILS
NO SCALE

TMP ARCHITECTURE

TMP ARCHITECTURE INC
1191 WEST SQUARE LAKE ROAD
BLOOMFIELD HILLS - MICHIGAN - 48302
PH - 248.338.4561 FX - 248.338.0223
EM - INFO @TMP-ARCHITECTURE.COM

REGISTRATION SEAL

CONSULTANT

PROJECT TITLE
Troy High Concessions

Troy School District
Troy, Michigan

DRAWING TITLE
Food Service Equipment Elevation Details

KEY PLAN

ISSUE DATES

DATE:	ISSUED FOR:
12-10-2024	CONSTRUCTION DOCUMENTS

DRAWN RIC
CHECKED ...
APPROVED

PROJECT NO.
22104E

DRAWING NO.
FSE.4

MECHANICAL ABBREVIATION LIST

ABBREVIATION	DESCRIPTION
A	COMPRESSED AIR
A(___#)	COMPRESSED AIR (SPECIFIC PSIG)
AAV	AUTOMATIC AIR VENT
ACC	AIR COOLED CONDENSER
ACCU	AIR COOLED CONDENSING UNIT
AD	ACCESS DOOR
AD	AREA DRAIN
AE	AIR EXTRACTOR
AFF	ABOVE FINISHED FLOOR
AHU	AIR HANDLING UNIT
ALT	ALTERNATE
AMP	AMPERE
APD	AIR PRESSURE DROP
AR	ARGON
ASHRAE	AMERICAN SOCIETY OF HEATING, REFRIGERATION AND AIR-CONDITIONING ENGINEERS
ASR	AUTOMATIC SPRINKLER RISER
ATD	AIR TRANSFER DUCT
AUX	AUXILIARY
AV	ACID VENT
AVTR	ACID VENT THROUGH ROOF
AW	ACID WASTE
BAS	BUILDING AUTOMATION SYSTEM
BCU	BLOWER COIL UNIT
BDD	BACKDRAFT DAMPER
BFF	BELOW FINISHED FLOOR
BFP	BACKFLOW PREVENTER
BHP	BRAKE HORSEPOWER
BOD	BOTTOM OF DUCT
BOP	BOTTOM OF PIPE
BTU	BRITISH THERMAL UNIT
BTUH	BRITISH THERMAL UNIT PER HOUR
BVC	BEVERAGE CONDUIT
BWV	BACKWATER VALVE
C	COMMON
CAP	CAPACITY
CAV	CONSTANT AIR VOLUME
CB	CATCH BASIN
CC	COOLING COIL
CD	COLD DECK
CD	CONDENSATE DRAIN
CFCI	CONTRACTOR FURNISHED, CONTRACTOR INSTALLED
CFH	CUBIC FEET PER HOUR
CFM	CUBIC FEET PER MINUTE
CH	CHILLER
CHW	CHILLED WATER
CHWR	CHILLED WATER RETURN
CHWS	CHILLED WATER SUPPLY
CLG	COOLING
CNDS	CONDENSATE
CNDS (___#)	CONDENSATE (SPECIFIC PSIG)
CO	CLEAN OUT
CO2	CARBON DIOXIDE
CONT	CONTINUATION OR CONTINUED
CONTR	CONTRACTOR
CONV	CONVECTOR
COP	COEFFICIENT OF PERFORMANCE
CP	CIRCULATING PUMP
CRU	CONDENSATE RETURN UNIT
CSS	CLINICAL SERVICE SINK
CT	COOLING TOWER
CUH	CABINET UNIT HEATER
CW	DOMESTIC COLD WATER
CWF	DOMESTIC COLD WATER - FILTERED
CWR	CONDENSER WATER RETURN
CWS	CONDENSER WATER SUPPLY
D&T	DRIP AND TRAP
DA	DISCHARGE AIR
DAT	DISCHARGE AIR TEMPERATURE
DB	DRY BULB
DDC	DIRECT DIGITAL CONTROL
DEG	DEGREE
DFU	DRAINAGE FIXTURE UNITS
DIA	DIAMETER
DMPR	DAMPER
D/N	DAY/NIGHT
DN	DOWN
DNZ	DOWNSPOUT NOZZLE
DS	DUCT SILENCER
DT	DRAIN TILE
DTC	DRAIN TILE CONNECTION
DWH	DOMESTIC WATER HEATER
DWG	DRAWING
(E)	EXISTING
E	EXHAUST GRILLE OR REGISTER
EA	EACH
EA	EXHAUST AIR
EAT	ENTERING AIR TEMPERATURE
EC	EXPANSION COMPENSATOR
ECM	ELECTRONICALLY COMMUTATED MOTOR
ECUH	ELECTRIC CABINET UNIT HEATER
EDB	ENTERING DRY BULB
EER	ENERGY EFFICIENCY RATIO
EES	EMERGENCY EYE WASH / SHOWER
EEW	EMERGENCY EYE WASH
EF	EXHAUST FAN
EFF	EFFICIENCY
EHC	ELECTRIC HEATING COIL
EJ	EXPANSION JOINT
EL	ELEVATION
ELEC	ELECTRICAL
EMS	ENERGY MANAGEMENT SYSTEM
ERL	ENERGY RECOVERY LOOP
ERLR	ENERGY RECOVERY LOOP RETURN
ERLS	ENERGY RECOVERY LOOP SUPPLY
ERU	ENERGY RECOVERY UNIT
ESH	EMERGENCY SHOWER
ESP	EXTERNAL STATIC PRESSURE
EUH	ELECTRIC UNIT HEATER
EWB	ENTERING WET BULB
EWC	ELECTRIC WATER COOLER
EWT	ENTERING WATER TEMPERATURE
EXH	EXHAUST
F	FIRE PROTECTION
°F	DEGREES FAHRENHEIT
F&B	FACE AND BYPASS
F&T	FLOAT AND THERMOSTATIC
FA	FACE AREA
FCU	FAN COIL UNIT
FD	FLOOR DRAIN
FFD	FUNNEL FLOOR DRAIN
FH	FIRE HYDRANT
FHC	FIRE HOSE CABINET
FHR	FIRE HOSE RACK
FHV	FIRE HOSE VALVE
FLA	FULL LOAD AMPS
FLR	FLOOR
FM	FLOW METER
FMS	FLOW MEASURING STATION
FOB	FLAT ON BOTTOM
FOT	FLAT ON TOP
FPM	FEET PER MINUTE
FP	FIRE PUMP
FPTU	FAN POWERED (AIR) TERMINAL UNIT
FS	FLOOR SINK
FSEC	FOOD SERVICE EQUIPMENT CONTRACTOR
FT	FEET
FTR	FINNED TUBE RADIATION
FV	FACE VELOCITY
G	NATURAL GAS
GA	GAUGE
GAL	GALLON
GRH	GRAVITY RELIEF HOOD
GPH	GALLONS PER HOUR
GPM	GALLONS PER MINUTE
GSAN	GREASE SANITARY WASTE
H	HYDROGEN
HB	HOSE BIBB
HC	HEATING COIL
HD	HOT DECK
HEPA	HIGH EFFICIENCY PARTICULATE ARRESTANCE
HL	HIGH LIMIT
HOA	HAND/OFF/AUTO
HP	HEAT PUMP
HP	HORSEPOWER
HPCW	HIGH PRESSURE DOMESTIC COLD WATER
HPHW	HIGH PRESSURE DOMESTIC HOT WATER
HPHWR	HIGH PRESSURE DOMESTIC HOT WATER RETURN
HPL	HEAT PUMP LOOP
HPLR	HEAT PUMP LOOP RETURN
HPLS	HEAT PUMP LOOP SUPPLY
HR	HOUR
HTG	HEATING
HV	HEATING VENTILATING
HVAC	HEATING, VENTILATING, AIR CONDITIONING
HWH	HOT WATER HEATING
HWHR	HOT WATER HEATING RETURN
HWHS	HOT WATER HEATING SUPPLY
HW	DOMESTIC HOT WATER
HW(___)	DOMESTIC HOT WATER (SPECIFIC TEMP °F)
HWR	DOMESTIC HOT WATER RETURN
HX	HEAT EXCHANGER
HZ	HERTZ
IAQ	INDOOR AIR QUALITY
ID	INSIDE DIAMETER
IE	INVERT ELEVATION
IH	INTAKE HOOD
IN	INCHES
IR	INFRARED HEATER
IW	INDIRECT WASTE
JC	JANITOR'S CLOSET
JP	JOCKEY PUMP
KA	THOUSAND AMP
KW	KILOWATT
KWH	KILOWATT-HOUR
LAT	LEAVING AIR TEMPERATURE
LAB	LABORATORY
LAV	LAVATORY
LBS	POUNDS
LDB	LEAVING DRY BULB
LL	LOW LIMIT
LPC	LOW PRESSURE CONDENSATE
LPS	LOW PRESSURE STEAM
LRA	LOCKED ROTOR AMPS
LWB	LEAVING WET BULB
LWT	LEAVING WATER TEMPERATURE
MA	MIXED AIR
MAT	MIXED AIR TEMPERATURE
MAU	MAKE-UP AIR UNIT
MAX	MAXIMUM
MBH	THOUSAND BRITISH THERMAL UNITS PER HOUR
MCA	MEDICAL COMPRESSED AIR
MCA	MINIMUM CIRCUIT AMPACITY
MCC	MOTOR CONTROL CENTER
MECH	MECHANICAL
MEZZ	MEZZANINE
MFR	MANUFACTURER
MH	MANHOLE
MIL	1/1000th INCH
MIN	MINIMUM
MISC	MISCELLANEOUS
MMBH	MILLION BRITISH THERMAL UNITS PER HOUR
MOP	MAXIMUM OVERCURRENT PROTECTION
M/S	MOTOR STARTER
MTD	MOUNTED
MTR	MOTOR
MV	MANUAL AIR VENT
MVAC	MEDICAL VACUUM
N	NITROGEN
N2O	NITROUS OXIDE
NC	NOISE CRITERIA
NC	NORMALLY CLOSED
NCTC	NORMALLY CLOSED TIMED CLOSED
NCTO	NORMALLY CLOSED TIMED OPEN
NFPA	NATIONAL FIRE PROTECTION ASSOCIATION
NOTC	NORMALLY OPEN TIMED CLOSED
NOTO	NORMALLY OPEN TIMED OPEN
NIC	NOT IN CONTRACT
NO	NORMALLY OPEN
NOM	NOMINAL
NPCW	NON POTABLE COLD WATER
O	OXYGEN
OA	OUTSIDE AIR
OAT	OUTSIDE AIR TEMPERATURE
OB	OUTLET BOX
OBD	OPPOSED BLADE DAMPER
OC	ON CENTER/CENTER TO CENTER
OD	OUTSIDE DIAMETER
OED	OPEN ENDED DUCT
OFCI	OWNER FURNISHED, CONTRACTOR INSTALLED
OFOI	OWNER FURNISHED, OWNER INSTALLED
OL	OVERLOAD
ORC	OVERFLOW RAIN CONDUCTOR
ORD	OVERFLOW ROOF DRAIN
OS&Y	OUTSIDE SCREW AND YOKE
OV	OUTLET VELOCITY
OWS	OPERATOR WORKSTATION
PACU	PACKAGED AIR CONDITIONING UNIT
PBD	PARALLEL BLADE DAMPER
PC	PUMPED CONDENSATE
PCW	PROCESS COOLING WATER
PCWR	PROCESS COOLING WATER RETURN
PCWS	PROCESS COOLING WATER SUPPLY
PD	PRESSURE DROP (FEET OF WATER)
PH	PERIMETER HEAT
PHR	PERIMETER HEAT RETURN
PHS	PERIMETER HEAT SUPPLY
PNL	PANEL
PPM	PARTS PER MILLION
PRESS	PRESSURE
PRV	PRESSURE REDUCING VALVE
PSAN	PUMPED SANITARY
PST	PUMPED STORM
PSI	POUNDS PER SQUARE INCH
PSIA	POUNDS PER SQUARE INCH - ABSOLUTE
PSIG	POUNDS PER SQUARE INCH - GAUGE
PW	PURIFIED WATER
PWR	PURIFIED WATER RETURN
PWS	PURIFIED WATER SUPPLY
R	RETURN GRILLE OR REGISTER
RA	RETURN AIR
RAT	RETURN AIR TEMPERATURE
RC	RAIN CONDUCTOR
RCP	RADIANT CEILING PANEL
RD	ROOF DRAIN
REQD	REQUIRED
REF	ROOF EXHAUST FAN
RF	RETURN FAN
RH	RELATIVE HUMIDITY
RL	REFRIGERANT LIQUID
RLFA	RELIEF AIR
RPM	REVOLUTIONS PER MINUTE
RPDA	REDUCED PRESSURE BACKFLOW PREVENTION DETECTION ASSY
RPZA	REDUCED PRESSURE BACKFLOW PREVENTION ZONE ASSY
RS	REFRIGERANT SUCTION
RTU	ROOFTOP UNIT
S	SUPPLY AIR DIFFUSER OR GRILLE
SA	SOUND ATTENUATOR
SA	SUPPLY AIR
SAN	SANITARY WASTE
SAT	SUPPLY AIR TEMPERATURE
SECT	SECTION
SCCR	SHORT CIRCUIT CURRENT RATING
SF	SUPPLY FAN
SH	SHOWER
SK	SINK
SMR	SNOW MELT RETURN
SMS	SNOW MELT SUPPLY
SP	STATIC PRESSURE
SPEC	SPECIFICATION
SPKLR	SPRINKLER
SQFT	SQUARE FOOT/SQUARE FEET
S/S	START/STOP
SS	SERVICE SINK
ST	STORM
STD	STANDARD
STK	STACK
STM	STEAM
STM(___#)	STEAM (SPECIFIC PSIG)
S/W	SUMMER/WINTER
SW	SWITCH
T	TRANSFER GRILLE
TC	TEMPERATURE CONTROL
TC	TEMPERING COIL
TCP	TEMPERATURE CONTROL PANEL
TD	TRENCH DRAIN
TEMP	TEMPERATURE
TEMP	TEMPORARY
TH	TERMINAL HEATING
THA	TOTAL HEAT ABSORBED
THR	TERMINAL HEATING RETURN
THR	TOTAL HEAT REJECTED
THS	TERMINAL HEATING SUPPLY
TK	TANK
TMR	TIMER SWITCH
TPD	TEPID WATER
TSP	TOTAL STATIC PRESSURE
TU	(AIR) TERMINAL UNIT
TV	TURNING VANES
TW	TEMPERED WATER
TYP	TYPICAL
UH	UNIT HEATER
UL	UNDERWRITER'S LABORATORY
UON	UNLESS OTHERWISE NOTED
UR	URINAL
UV	UNIT VENTILATOR
V	VALVE
V	VENT
VAC	VACUUM
VAV	VARIABLE AIR VOLUME
VB	VACUUM BREAKER
VD	VOLUME DAMPER (MANUALLY ADJUSTABLE)
VOL	VOLUME
VFC	VARIABLE FREQUENCY CONTROLLER
VTR	VENT THROUGH ROOF
VTU	VENTURI TERMINAL UNIT
VUV	VERTICAL UNIT VENTILATOR
W	WASTE
W&V	WASTE AND VENT
WAGD	WASTE ANESTHETIC GAS DISPOSAL
WB	WET BULB
WC	WATER CLOSET
WC	WATER COLUMN
WG	WATER GAUGE
WH	WALL HYDRANT
WMSD	WASHING MACHINE SUPPLY AND DRAIN BOX
WPD	WATER PRESSURE DROP
WT	WEIGHT
XFMR	TRANSFORMER
ZVB	ZONE VALVE BOX

TEMPERATURE CONTROL - PARTIAL SYMBOLS LIST

SYMBOL	DESCRIPTION
CO2	CARBON DIOXIDE SENSOR
CO	CARBON MONOXIDE SENSOR
DPT	DIFFERENTIAL PRESSURE TRANSMITTER
FM	FLOW METER
	GUARD FOR STAT OR SENSOR
H	HUMIDISTAT OR HUMIDITY SENSOR (AS DEFINED ON TC DRAWINGS)
OS	OCCUPANCY SENSOR
PT	PRESSURE TRANSMITTER
SP	STATIC PRESSURE SENSOR OR PROBE
	VALVE - 2 WAY CONTROL VALVE
	VALVE - 3 WAY CONTROL VALVE
T	THERMOSTAT OR TEMPERATURE SENSOR (AS DEFINED ON TC DRAWINGS)

NOTE: LIST OF ADDITIONAL SYMBOLS & ABBREVIATIONS ASSOCIATED WITH TEMPERATURE CONTROLS ARE IDENTIFIED ON TC DRAWINGS.

MECHANICAL SYMBOL LIST

PIPING SYMBOLS

SYMBOL	DESCRIPTION
AV	AIR VENT - AUTOMATIC
MV	AIR VENT - MANUAL
BFP	BACKFLOW PREVENTER
	CATCH BASIN
	CIRCULATING PUMP
CO	CLEAN OUT - IN FLOOR
CO	CLEAN OUT - FLANGE
	DIRECTION OF FLOW
	DIRECTION OF PITCH - DOWN
	FINNED TUBE RADIATION
	FIRE PROTECTION - SIAMESE CONNECTION - FREE STANDING
	FIRE PROTECTION - SIAMESE CONNECTION - WALL MOUNTED
	FIRE PROTECTION - SPRINKLER HEAD, CONCEALED
	FIRE PROTECTION - SPRINKLER HEAD, PENDANT
	FIRE PROTECTION - SPRINKLER HEAD, UPRIGHT
	FIRE PROTECTION - SPRINKLER HEAD, SIDEWALL
	FLOOR DRAIN
	FLOOR DRAIN - ELEVATION
	FLOOR DRAIN - FUNNEL
	FLOOR DRAIN - FUNNEL, ELEVATION
	FLOW MEASURING DEVICE (FOR TEST AND BALANCING)
FS	FLOW SWITCH
FM	FLOW METER
HB	HOSE BIBB
MH	MANHOLE
	OPEN SITE DRAIN
	PIPE - ANCHOR
	PIPE - CAP OR PLUG
	PIPE - ELBOW DOWN
	PIPE - ELBOW UP
	PIPE - EXPANSION JOINT OR COMPENSATOR
	PIPE - FLANGE
	PIPE - HOSE AND BRAID FLEXIBLE CONNECTION
	PIPE - RUBBER FLEXIBLE CONNECTION
	PIPE - GUIDE
	PIPE - TEE DOWN
	PIPE - TEE UP
	PIPE - UNION
P/T	PRESSURE AND TEMPERATURE TEST PLUG
	PRESSURE GAUGE AND COCK
	REDUCER - CONCENTRIC
	REDUCER - ECCENTRIC
	ROOF/OVERFLOW DRAIN
	STEAM TRAP - FLOAT AND THERMOSTATIC
	STEAM TRAP - BUCKET
	STRAINER
	STRAINER WITH VALVE AND BLOW-OFF
	THERMOMETER
	TRAP
	VALVE - ANGLE
	VALVE - BALL
	VALVE - BUTTERFLY
0.5	VALVE - BALANCE (i.e. BALANCE VALVE TO 0.5 GPM)
0.5	VALVE - COMBINATION BALANCE & FLOW MEASURING (i.e. BALANCE VALVE TO 0.5 GPM)
	VALVE - CHECK
	VALVE - SPRING CHECK
	VALVE - GAS (MANUAL)
	VALVE - GLOBE
	VALVE - ISOLATION
	VALVE - NEEDLE
	VALVE - OS&Y
	VALVE - PLUG
	VALVE - PRESSURE REGULATING
	VALVE - PRESSURE REDUCING
	VALVE - PRESSURE RELIEF
	VALVE - PRESSURE & TEMPERATURE RELIEF
VTR	VENT THROUGH ROOF
	WALL HYDRANT
WM	WATER METER
GM	GAS METER

DOUBLE LINE PIPING SYMBOLS

SYMBOL	DESCRIPTION
	FLANGE
	FLEX CONNECTION
	STRAINER - BASKET
	STRAINER - Y TYPE
	VALVE - 2 WAY CONTROL
	VALVE - 3 WAY CONTROL
	VALVE - BUTTERFLY
	VALVE - CHECK
	VALVE - DETECTOR CHECK
	VALVE - OS&Y HORIZONTAL STEM
	VALVE - OS&Y VERTICAL STEM

DUCTWORK SYMBOLS

SYMBOL	DESCRIPTION
TU-101	AIR TERMINAL UNIT
TU-101	AIR TERMINAL UNIT WITH HEATING COIL
VTU-101	VENTURI AIR TERMINAL UNIT
VTU-101	VENTURI AIR TERMINAL UNIT WITH HEATING COIL
	DAMPER - HORIZONTAL FIRE (EXISTING, NEW)
	DAMPER - HORIZONTAL FIRE / SMOKE (EXISTING, NEW)
	DAMPER - SMOKE (EXISTING, NEW)
	DAMPER - VERTICAL FIRE (EXISTING, NEW)
	DAMPER - VERTICAL FIRE / SMOKE (EXISTING, NEW)
BDD	DAMPER - BACK DRAFT
M	DAMPER - MOTORIZED
	DAMPER - VOLUME (MANUALLY ADJUSTABLE)
	DIFFUSER - BLANK OFF
	DIFFUSER - LINEAR SLOT
	DIFFUSER - SQUARE OR RECTANGULAR
	DUCT CROSS SECTION - SUPPLY
	DUCT CROSS SECTION - RETURN
	DUCT CROSS SECTION - EXHAUST
	DUCT - FLEXIBLE CONNECTION
	DUCT - FLEXIBLE DUCT
	DUCT TAKE-OFF - ROUND CONICAL
	DUCT TAKE-OFF - RECTANGULAR WITH SHOE TAP
	ELBOW - RECTANGULAR WITH TURNING VANES
	ELBOW - RECTANGULAR WITH TURNING VANES
	ELBOW - RECTANGULAR/ ROUND SMOOTH RADIUS
	ELBOW DOWN - RECTANGULAR
	ELBOW DOWN - ROUND
	ELBOW UP - RECTANGULAR
	ELBOW UP - ROUND
	FAN - AXIAL
	FAN - CENTRIFUGAL (ELEVATION)
VFC XX-#	VARIABLE FREQUENCY CONTROLLER SERVING EQUIPMENT XX-#
	HEATING COIL
D	INCLINED DROP IN DIRECTION OF AIRFLOW
R	INCLINED RISE IN DIRECTION OF AIRFLOW
	INTAKE OR RELIEF HOOD
	REGISTER - RETURN OR EXHAUST
	REGISTER - RETURN WITH BOOT
	REGISTER - TRANSFER GRILLE
	ROOF EXHAUST FAN
	TRANSITION - CONCENTRIC
	TRANSITION - ECCENTRIC
	UNIT HEATER - HORIZONTAL THROW
	UNIT HEATER - VERTICAL THROW

DOUBLE LINE DUCTWORK SYMBOLS

SYMBOL	DESCRIPTION
	DUCT TAKE-OFF - RECTANGULAR WITH SHOE TAP
	DUCT TAKE-OFF - ROUND CONICAL
	ELBOW - RECTANGULAR WITH TURNING VANES
	ELBOW - RECTANGULAR SHORT RADIUS WITH SPLITTER VANES
	ELBOW - ROUND
	ELBOW - RECTANGULAR SMOOTH RADIUS
	ELBOW DOWN - RECTANGULAR
	ELBOW DOWN - ROUND
	ELBOW UP - RECTANGULAR
	ELBOW UP - ROUND
	HEATING COIL
D	INCLINED DROP IN DIRECTION OF AIRFLOW
R	INCLINED RISE IN DIRECTION OF AIRFLOW
	TRANSITION - CONCENTRIC
	TRANSITION - ECCENTRIC

MECHANICAL DRAWING INDEX

SHEET NO.	SHEET TITLE
M0.1	MECHANICAL STANDARDS AND DRAWING INDEX
M2.0	UNDERGROUND PLUMBING NEW WORK PLANS
M2.1	PLUMBING NEW WORK PLANS
M4.1	MECHANICAL NEW WORK PLANS
M6.1	MECHANICAL DETAILS
M7.1	MECHANICAL SCHEDULES
M8.1	TEMPERATURE CONTROL

STANDARD METHODS OF NOTATION

S-1 / 10# / 350-4 — SUPPLY DIFFUSER WITH SCHEDULE TAG "1", 10" DIAMETER NECK SIZE, 350 CFM TYPICAL FOR 4

R-1 / 22x22 / 640-2 — RETURN REGISTER WITH SCHEDULE TAG "1", 22"x 22" NECK SIZE, 640 CFM TYPICAL FOR 2, EXHAUST REGISTER E DESIGNATION SIMILAR.

TU-101 — AIR TERMINAL UNIT WITH HEATING COIL NO. 101 WITH SERVICE CLEARANCE SHOWN

VTU-101 — VENTURI AIR TERMINAL WITH HEATING COIL NO. 101 WITH SERVICE CLEARANCE SHOWN

(2)WC-1 / FD-1 — PLUMBING FIXTURE UNIT IDENTIFICATION TAG, WATER CLOSET TYPE "1", TYPICAL FOR 2

8 — PIPE DIAMETER NOTATION, ALL SIZES IN INCHES

8x8 / 22x10 / 18x148 — DUCT SIZE NOTATION, ALL SIZES IN INCHES

OVAL DUCT, RECTANGULAR DUCT

1 — CONSTRUCTION KEY NOTE (NUMBER) OR DEMOLITION KEY NOTE (LETTER)

EF 1 — EQUIPMENT DESIGNATION, (i.e. EXHAUST FAN NUMBER 1)

HW-1 — PIPING RISER DESIGNATION (i.e. HOT WATER RISER NUMBER 1)

NEW SYSTEM COMPONENT

EXISTING SYSTEM COMPONENT TO REMAIN

POINT OF NEW CONNECTION SYMBOL

1 / M5.1 — SECTION OR PLAN NUMBER, SHEET WHERE SECTION IS DRAWN

AREA OF ENLARGEMENT

PLAN NUMBER

SHEET WHERE ENLARGED PLAN IS DRAWN

1 / M5.1 — SECTION OR PLAN NUMBER

SECTION OR ENLARGED PLAN
SCALE: 1/8" = 1' - 0"

SHEET WHERE SECTION IS CUT OR ENLARGED PLAN IS REFERENCED

SHEET M1.0 / SHEET M1.1 — MATCH LINE

HEAVY LINE WEIGHT INDICATES NEW WORK

LIGHT LINE WEIGHT INDICATES EXISTING EQUIPMENT OR REFERENCED INFORMATION

GRAY LINE INDICATES BACKGROUND INFORMATION

DASHED LINES INDICATE PIPING ROUTED BELOW SLAB OR GRADE

HATCH MARKS INDICATE EQUIPMENT OR MATERIALS TO BE DISCONNECTED AND REMOVED.

NOTE: SOME SYMBOLS AND ABBREVIATIONS SHOWN MAY NOT APPLY TO THIS PROJECT.

TMP ARCHITECTURE

TMP ARCHITECTURE INC
1191 WEST SQUARE LAKE ROAD
BLOOMFIELD HILLS • MICHIGAN • 48302
PH • 248.338.4561 FX • 248.338.0223
EM • INFO@TMP-ARCHITECTURE.COM

REGISTRATION SEAL

CONSULTANT

Peter Basso Associates
CONSULTING ENGINEERS
5145 Livernois, Suite 100
Troy, Michigan 48098-3276
Tel: 248-879-5666
www.PeterBassoAssociates.com
PBA Project No.: 2023.0156.03

PROJECT TITLE

Troy High School
Athletic Fields
Bid Package No. 02B

Troy School District
Troy, Michigan

DRAWING TITLE

MECHANICAL STANDARDS AND DRAWING INDEX

ISSUE DATES

DATE:	ISSUED FOR:
12-10-2024	CONSTRUCTION DOCUMENTS

DRAWN WTF
CHECKED KLH
APPROVED SVM

PROJECT NO.
22104E

DRAWING NO.
M0.1

G:\2023\2023-0156-00\CAD\03 - Athletics Phase 2\2023-0156-03-M0-IND.dwg, M0.1, 12/9/2024 11:57:29 AM, Alexandra A. Muncey, None ,0.13459, Peter Basso Associates Inc.

THE FOLLOWING DIMENSION EQUALS ONE INCH WHEN PRINTED TO SCALE. 1"

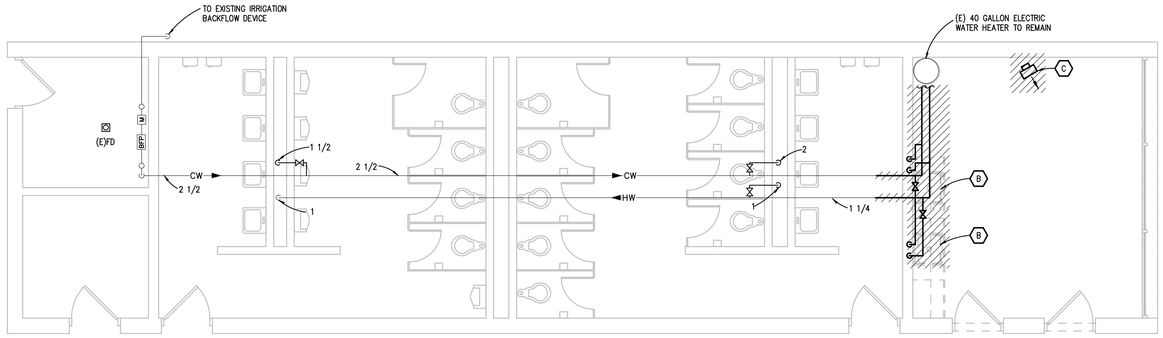

EXISTING TOILET BUILDING MECHANICAL DEMOLITION PLAN

SCALE: 1/4" = 1' - 0"

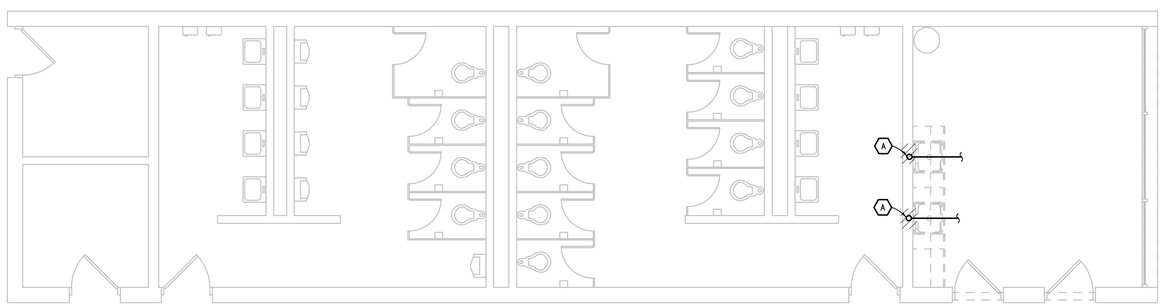

EXISTING TOILET BUILDING UNDERGROUND PLUMBING DEMOLITION PLAN

SCALE: 1/4" = 1' - 0"

MECHANICAL DEMOLITION GENERAL NOTES:

1. ANY INTERRUPTION OF EXISTING SERVICES AND/OR EQUIPMENT SHALL BE PERFORMED AT A TIME APPROVED IN ADVANCE BY THE OWNER'S REPRESENTATIVE.
2. THESE DRAWINGS ARE DIAGRAMMATIC AND INDICATE THE GENERAL EXTENT OF THE WORK. ACTUAL ROUTING AND SIZES OF EXISTING PIPING AND DUCTWORK MIGHT DIFFER TO A LIMITED EXTENT FROM WHAT IS SHOWN. MAJOR DISCREPANCIES BETWEEN THE DRAWINGS AND ACTUAL EXISTING CONDITIONS SHALL BE REPORTED TO THE ENGINEER.
3. THE EXACT EXTENT OF DEMOLITION SHALL BE AS REQUIRED BY THE NEW WORK.
4. ALL MECHANICAL ITEMS TO BE REMOVED SHALL BE REMOVED COMPLETE, INCLUDING ALL RELATED ITEMS SUCH AS HANGERS, SUPPORTS, CONTROLS, ETC. CAP ALL OPEN ENDED PIPES AND DUCTWORK.

(#) DEMOLITION KEY NOTES:

A. REMOVE EXISTING SANITARY SERVING EXISTING SINK. CAP SANITARY AT FLOOR.

B. REMOVE EXISTING PLUMBING FIXTURE. REMOVE ALL PIPING BACK TO MAIN BRANCH AND CAP.

C. SALVAGE EXISTING ELECTRIC UNIT HEATER AND CONTROLS FOR RELOCATION.

TMP ARCHITECTURE

TMP ARCHITECTURE INC

1191 WEST SQUARE LAKE ROAD
BLOOMFIELD HILLS • MICHIGAN • 48302
PH • 248.338.4561 FX • 248.338.0223
EM • INFO@TMP-ARCHITECTURE.COM

REGISTRATION SEAL

CONSULTANT

Peter Basso Associates
CONSULTING ENGINEERS
5145 Livernois, Suite 100
Troy, Michigan 48098-3276
Tel: 248-879-5666
www.PeterBassoAssociates.com
PBA Project No.: 2023.0156.03

PROJECT TITLE

Troy High School Athletic Fields Bid Package No. 02B

Troy School District
Troy, Michigan

DRAWING TITLE

MECHANICAL DEMOLITION PLAN

ISSUE DATES

DATE:	ISSUED FOR:
12-10-2024	CONSTRUCTION DOCUMENTS

DRAWN MEP
CHECKED KLH
APPROVED SVM

PROJECT NO.

22104E

DRAWING NO.

MD2.1

G:\2023\2023-0156-00\CAD\03 - Athletics Phase 2\2023-0156-03-MD2-DP.dwg, MD2.1, 12/9/2024 1:42:05 PM, Alexandra A. Muncey, None ,0.13459, Peter Basso Associates Inc.

THE FOLLOWING DIMENSION EQUALS ONE INCH WHEN PRINTED TO SCALE. 1"

PLUMBING GENERAL NOTES:

1. THESE DRAWINGS ARE DIAGRAMMATIC, AND REPRESENT THE GENERAL INTENT AND ARRANGEMENT OF SYSTEMS. THEY ARE NOT TO BE CONSIDERED FABRICATION/COORDINATION/SHOP DRAWINGS. COORDINATION WITH OTHER TRADES IS REQUIRED. PROVIDE THE ADDITIONAL FITTINGS AND OFFSETS THAT WILL BE REQUIRED TO COMPLETE EACH SYSTEM AND TO AVOID INTERFERENCES WITH ALL OTHER SYSTEMS INCLUDING THE STRUCTURE, SHEET METAL, OTHER PIPING SYSTEMS, ELECTRICAL CONDUITS, BUS DUCTS, CABLE TRAY, LIGHT FIXTURES, ETC. AND/OR OTHER SPACE CONSTRAINTS.
2. INSTALL SYSTEMS SUCH THAT REQUIRED CLEARANCE AND SERVICE ACCESS SPACE IS PROVIDED AROUND ALL MECHANICAL AND ELECTRICAL EQUIPMENT, AND AROUND ANY COMPONENTS WHICH REQUIRE SERVICE ACCESS.
3. PIPING SHALL NOT BE INSTALLED ABOVE ELECTRICAL TRANSFORMERS, SWITCHBOARDS, PANELBOARDS OR MOTOR CONTROL CENTERS.
4. COORDINATE AND PROVIDE ACCESS DOORS WITHIN INACCESSIBLE CEILING, SHAFT, AND CHASE AREAS FOR ALL COMPONENTS WHICH REQUIRE SERVICE ACCESS. REFER TO ARCHITECTURAL DRAWINGS FOR CEILING TYPES.
5. PROVIDE SUPPLEMENTARY STEEL AS REQUIRED FOR THE PROPER SUPPORT OF ALL SYSTEMS.
6. REFER TO ARCHITECTURAL PLANS FOR DIMENSIONED LOCATIONS OF PLUMBING FIXTURES.
7. HOT AND COLD WATER PIPING RUN-OUTS TO LAVATORIES AND SINKS SHALL BE 1/2" UNLESS OTHERWISE NOTED.
8. PLUMBING VENT PIPING THROUGH ROOF SHALL BE LOCATED A MINIMUM OF 10'-0" FROM ANY FRESH AIR INTAKE LOCATION AND A MINIMUM OF 18" CLEAR FROM THE INSIDE FACE OF PARAPET.
9. PROVIDE CODE REQUIRED CLEARANCE FOR ALL CLEANOUTS INSTALLED IN SANITARY WASTE AND VENT PIPING.
10. MINIMUM UNDERGROUND PIPE SIZE SHALL BE 3".
11. WATER SERVICE ENTRANCE PIPING SHALL BE BURIED WITH DEPTH OF COVER OVER TOP OF PIPE OF AT LEAST 72", OR WITH TOP OF PIPE AT LEAST 12" BELOW LEVEL OF MAXIMUM FROST PENETRATION, OR AS REQUIRED BY AUTHORITIES HAVING JURISDICTION, WHICHEVER IS DEEPEST.

CONSTRUCTION KEY NOTES:

1. 3 SAN FOR LAV.
2. 4 SAN FOR WATER CLOSET.
3. 3 SAN FOR FLOOR DRAIN.
4. 3 SAN TO FLOOR SINK.
5. 3 SAN TO KITCHEN SINK.
6. 1/2 CW TO ICE MAKER. ROUTE PIPING THROUGH CODE APPROVED BACK FLOW DEVICE. MOUNT CW CONNECTION AT 48" AFF.
7. 1/2 CW TO SODA BIB SYSTEM. MOUNT CW AT 48" AFF. ROUTE PIPING THROUGH CODE APPROVED BACK FLOW DEVICE.
8. 1/2 CW TO AIR POT COFFEE BREWER. ROUTE PIPING THROUGH CODE APPROVED BACK FLOW DEVICE.
9. 1/2 CW TO HOT BEVERAGE DISPENSERS. ROUTE PIPING THROUGH CODE APPROVED BACK FLOW DEVICE. ROUTE PIPING DOWN IN WALL UNDER FLOOR TO HOT BEVERAGE DISPENSER LOCATION.
10. ROUTE 3/4 IW FROM ICE BIN AND TERMINATE TO CODE APPROVED DISTANCE TO FLOOR SINK.
11. 1/2 HW AND 1/2 CW TO MOP SINK. MOUNT HW&CW CONNECTIONS AT 30" AFF.
12. ROUTE 2 SAN FROM WASH BASIN ON CORNER MOUNTED 3 COMPARTMENT SINK TO POINT OF USE GREASE INTERCEPTOR. SIMILAR OR EQUAL TO SCHIER MODEL NUMBER GB3 OR APPROVED EQUAL.
13. ROUTE 3/4 IW FROM SODA DISPENSER/ICE BIN AND TERMINATE TO CODE REQUIRED DISTANCE TO FLOOR SINK.
14. ROUTE 2 IW FROM CORNER MOUNTED SINK AND TERMINATE TO CODE REQUIRED DISTANCE TO FLOOR SINK. HARD PIPE RINSE AND SANITIZE PIPING SEPARATELY TO FLOOR SINK AND DISCHARGE.
15. 3 SAN TO KITCHEN SERVICE SINK.
16. PROVIDE ELECTRICAL HEAT TRACING FOR ALL HW/CW PIPING (TYPICAL) IN ALL SPACES.
17. ROUTE 6" PVC SODA LINE CONDUIT FROM BAG-IN-BOX SYSTEM TO SODA DISPENSER. CONDUIT TO HAVE 24" MINIMUM LONG RADIUS BEND AND BE

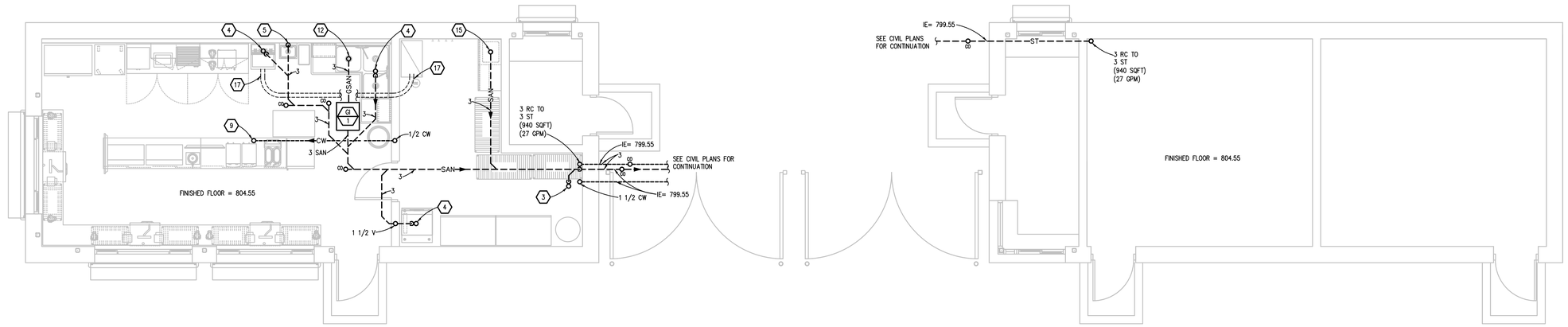

NEW STADIUM ENTRANCE UNDERGROUND PLUMBING PLAN
SCALE: 1/4" = 1' - 0"

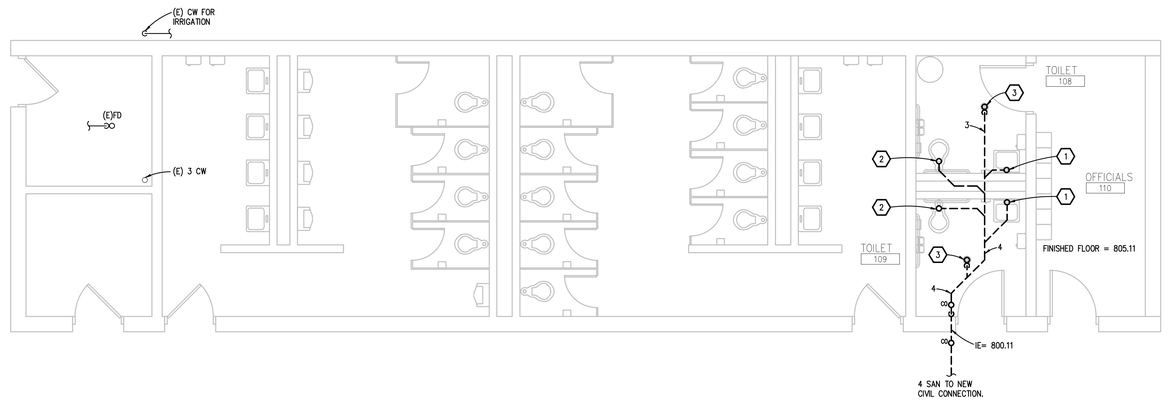

EXISTING TOILET BUILDING UNDERGROUND PLUMBING NEW WORK PLAN
SCALE: 1/4" = 1' - 0"

TMP ARCHITECTURE

TMP ARCHITECTURE INC
1191 WEST SQUARE LAKE ROAD
BLOOMFIELD HILLS • MICHIGAN • 48302
PH • 248.338.4561 FX • 248.338.0223
EM • INFO@TMP-ARCHITECTURE.COM

REGISTRATION SEAL

CONSULTANT

Peter Basso Associates
CONSULTING ENGINEERS
5145 Livernois, Suite 100
Troy, Michigan 48098-3276
Tel: 248-879-5666
www.PeterBassoAssociates.com
PBA Project No.: 2023.0156.03

PROJECT TITLE

Troy High School Athletic Fields Bid Package No. 02B

Troy School District
Troy, Michigan

DRAWING TITLE
UNDERGROUND PLUMBING NEW WORK PLANS

ISSUE DATES

DATE:	ISSUED FOR:
12-10-2024	CONSTRUCTION DOCUMENTS

DRAWN MEP
CHECKED KLH
APPROVED SVM

PROJECT NO.
22104E

DRAWING NO.
M2.0

G:\2023\2023-0156-00\CAD\03 - Athletics Phase 2\2023-0156-03-M2-PL0.dwg, M2.0, 12/12/2024 9:56:41 AM, Michael E. Pietrzak, None ,0.13459, Peter Basso Associates Inc.

THE FOLLOWING DIMENSION EQUALS ONE INCH WHEN PRINTED TO SCALE. 1"



NEW STADIUM ENTRANCE PLUMBING ROOF PLAN
SCALE: 1/4" = 1' - 0"

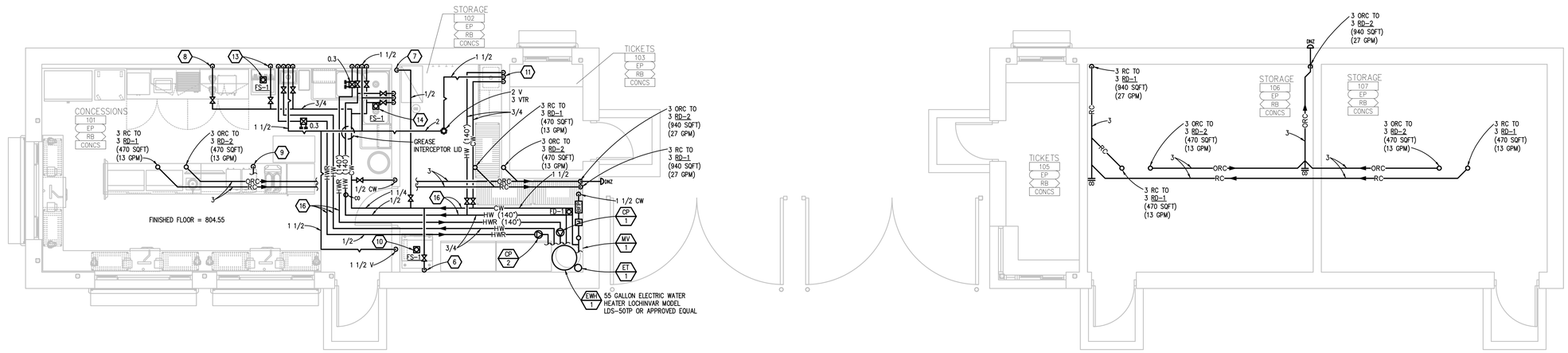

NEW STADIUM ENTRANCE PLUMBING PLAN
SCALE: 1/4" = 1' - 0"

PLUMBING GENERAL NOTES:

1. THESE DRAWINGS ARE DIAGRAMMATIC, AND REPRESENT THE GENERAL INTENT AND ARRANGEMENT OF SYSTEMS. THEY ARE NOT TO BE CONSIDERED FABRICATION/COORDINATION/SHOP DRAWINGS. COORDINATION WITH OTHER TRADES IS REQUIRED. PROVIDE THE ADDITIONAL FITTINGS AND OFFSETS THAT WILL BE REQUIRED TO COMPLETE EACH SYSTEM AND TO AVOID INTERFERENCES WITH ALL OTHER SYSTEMS INCLUDING THE STRUCTURE, SHEET METAL, OTHER PIPING SYSTEMS, ELECTRICAL CONDUITS, BUS DUCTS, CABLE TRAY, LIGHT FIXTURES, ETC. AND/OR OTHER SPACE CONSTRAINTS.
2. INSTALL SYSTEMS SUCH THAT REQUIRED CLEARANCE AND SERVICE ACCESS SPACE IS PROVIDED AROUND ALL MECHANICAL AND ELECTRICAL EQUIPMENT, AND AROUND ANY COMPONENTS WHICH REQUIRE SERVICE ACCESS.
3. PIPING SHALL NOT BE INSTALLED ABOVE ELECTRICAL TRANSFORMERS, SWITCHBOARDS, PANELBOARDS OR MOTOR CONTROL CENTERS.
4. COORDINATE AND PROVIDE ACCESS DOORS WITHIN INACCESSIBLE CEILING, SHAFT, AND CHASE AREAS FOR ALL COMPONENTS WHICH REQUIRE SERVICE ACCESS. REFER TO ARCHITECTURAL DRAWINGS FOR CEILING TYPES.
5. PROVIDE SUPPLEMENTARY STEEL AS REQUIRED FOR THE PROPER SUPPORT OF ALL SYSTEMS.
6. REFER TO ARCHITECTURAL PLANS FOR DIMENSIONED LOCATIONS OF PLUMBING FIXTURES.
7. HOT AND COLD WATER PIPING RUN-OUTS TO LAVATORIES AND SINKS SHALL BE 1/2" UNLESS OTHERWISE NOTED.
8. PLUMBING VENT PIPING THROUGH ROOF SHALL BE LOCATED A MINIMUM OF 10'-0" FROM ANY FRESH AIR INTAKE LOCATION AND A MINIMUM OF 18" CLEAR FROM THE INSIDE FACE OF PARAPET.
9. PROVIDE CODE REQUIRED CLEARANCE FOR ALL CLEANOUTS INSTALLED IN SANITARY WASTE AND VENT PIPING.
10. MINIMUM UNDERGROUND PIPE SIZE SHALL BE 3".
11. WATER SERVICE ENTRANCE PIPING SHALL BE BURIED WITH DEPTH OF COVER OVER TOP OF PIPE OF AT LEAST 72", OR WITH TOP OF PIPE AT LEAST 12" BELOW LEVEL OF MAXIMUM FROST PENETRATION, OR AS REQUIRED BY AUTHORITIES HAVING JURISDICTION, WHICHEVER IS DEEPEST.

CONSTRUCTION KEY NOTES:

1. 3 SAN FOR LAV.
2. 4 SAN FOR WATER CLOSET.
3. 3 SAN FOR FLOOR DRAIN.
4. 3 SAN TO FLOOR SINK.
5. 3 SAN TO KITCHEN SINK.
6. 1/2 CW TO ICE MAKER. ROUTE PIPING THROUGH CODE APPROVED BACK FLOW DEVICE. MOUNT CW CONNECTION AT 48" AFF.
7. 1/2 CW TO SODA BIB SYSTEM. MOUNT CW AT 48" AFF. ROUTE PIPING THROUGH CODE APPROVED BACK FLOW DEVICE.
8. 1/2 CW TO AIR POT COFFEE BREWER. ROUTE PIPING THROUGH CODE APPROVED BACK FLOW DEVICE.
9. 1/2 CW TO HOT BEVERAGE DISPENSERS. ROUTE PIPING THROUGH CODE APPROVED BACK FLOW DEVICE. ROUTE PIPING DOWN IN WALL UNDER FLOOR TO HOT BEVERAGE DISPENSER LOCATION.
10. ROUTE 3/4 IW FROM ICE BIN AND TERMINATE TO CODE APPROVED DISTANCE TO FLOOR SINK.
11. 1/2 HW AND 1/2 CW TO MOP SINK. MOUNT HW&CW CONNECTIONS AT 30" AFF.
12. ROUTE 2 SAN FROM WASH BASIN ON CORNER MOUNTED 3 COMPARTMENT SINK TO POINT OF USE GREASE INTERCEPTOR. SIMILAR OR EQUAL TO SCHIER MODEL NUMBER GB3 OR APPROVED EQUAL.
13. ROUTE 3/4 IW FROM SODA DISPENSER/ICE BIN AND TERMINATE TO CODE REQUIRED DISTANCE TO FLOOR SINK.
14. ROUTE 2 IW FROM CORNER MOUNTED SINK AND TERMINATE TO CODE REQUIRED DISTANCE TO FLOOR SINK. HARD PIPE RINSE AND SANITIZE PIPING SEPARATELY TO FLOOR SINK AND DISCHARGE.
15. 3 SAN TO KITCHEN SERVICE SINK.
16. PROVIDE ELECTRICAL HEAT TRACING FOR ALL HW/CW PIPING (TYPICAL) IN ALL SPACES.

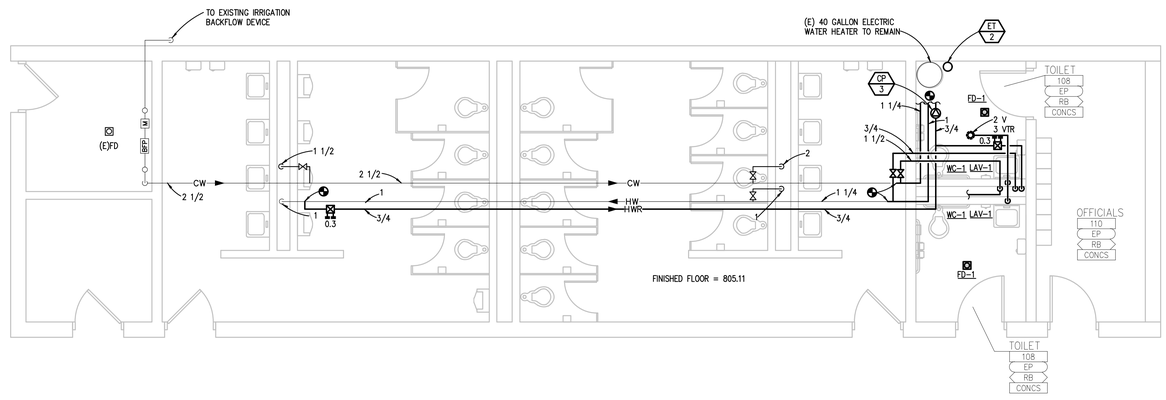

EXISTING TOILET BUILDING PLUMBING NEW WORK PLAN
SCALE: 1/4" = 1' - 0"

TMP ARCHITECTURE

TMP ARCHITECTURE INC
1191 WEST SQUARE LAKE ROAD
BLOOMFIELD HILLS • MICHIGAN • 48302
PH • 248.338.4561 FX • 248.338.0223
EM • INFO@TMP-ARCHITECTURE.COM

REGISTRATION SEAL

CONSULTANT

Peter Basso Associates
CONSULTING ENGINEERS
5145 Livernois, Suite 100
Troy, Michigan 48098-3276
Tel: 248-879-5666
www.PeterBassoAssociates.com
PBA Project No.: 2023.0156.03

PROJECT TITLE

Troy High School Athletic Fields Bid Package No. 02B

Troy School District
Troy, Michigan

DRAWING TITLE
PLUMBING NEW WORK PLANS

ISSUE DATES

DATE:	ISSUED FOR:
12-10-2024	CONSTRUCTION DOCUMENTS

DRAWN MEP
CHECKED KLH
APPROVED SVM

PROJECT NO.
22104E

DRAWING NO.
M2.1

G:\2023\2023-0156-00\CAD\03 - Athletics Phase 2\2023-0156-03-M2-PL1.dwg, M2.1, 12/9/2024 1:42:15 PM, Alexandra A. Muncey, None ,0.13459, Peter Basso Associates Inc.

THE FOLLOWING DIMENSION EQUALS ONE INCH WHEN PRINTED TO SCALE. 1"



NEW STADIUM ENTRANCE MECHANICAL PLAN
SCALE: 1/4" = 1' - 0"

SHEET METAL GENERAL NOTES:

1. THESE DRAWINGS ARE DIAGRAMMATIC, AND REPRESENT THE GENERAL INTENT AND ARRANGEMENT OF SYSTEMS. THEY ARE NOT TO BE CONSIDERED FABRICATION/COORDINATION/SHOP DRAWINGS. COORDINATION WITH OTHER TRADES IS REQUIRED. PROVIDE THE ADDITIONAL FITTINGS AND OFFSETS THAT WILL BE REQUIRED TO COMPLETE EACH SYSTEM AND TO AVOID INTERFERENCES WITH ALL OTHER SYSTEMS INCLUDING THE STRUCTURE, PIPING SYSTEMS, ELECTRICAL CONDUITS, BUS DUCTS, CABLE TRAY, LIGHT FIXTURES, ETC. AND/OR OTHER SPACE CONSTRAINTS.
2. INSTALL SYSTEMS SUCH THAT REQUIRED CLEARANCE AND SERVICE ACCESS SPACE IS PROVIDED AROUND ALL MECHANICAL AND ELECTRICAL EQUIPMENT, AND AROUND ANY COMPONENTS WHICH REQUIRE SERVICE ACCESS.
3. PIPING AND DUCTWORK SHALL NOT BE INSTALLED ABOVE ELECTRICAL TRANSFORMERS, SWITCHBOARDS, PANELBOARDS OR MOTOR CONTROL CENTERS.
4. COORDINATE AND PROVIDE ACCESS DOORS WITHIN INACCESSIBLE CEILING, SHAFT, AND CHASE AREAS FOR ALL COMPONENTS WHICH REQUIRE SERVICE ACCESS. REFER TO ARCHITECTURAL DRAWINGS FOR CEILING TYPES.
5. PROVIDE SUPPLEMENTARY STEEL AS REQUIRED FOR THE PROPER SUPPORT OF ALL SYSTEMS.
6. REFER TO ARCHITECTURAL REFLECTED CEILING PLANS FOR DIMENSIONED LOCATION OF GRILLES, REGISTERS, AND DIFFUSERS.
7. REFER TO TEMPERATURE CONTROLS STANDARD MOUNTING HEIGHTS DETAIL FOR ELEVATIONS OF WALL MOUNTED TEMPERATURE CONTROL DEVICES.

(#) CONSTRUCTION KEY NOTES:

1. RELOCATED EUH AND ASSOCIATED CONTROLS.
2. TRANSFER AIR DUCT WITH (2) TRANSFER LOUVERS. EXTERIOR LOUVER TO BE WEATHERPROOF CONSTRUCTION WITH INSECT SCREEN. COORDINATE WITH ARCHITECTURAL TRADES.
3. EF-1 TIME CLOCK.
4. EF-2 TIME CLOCK.

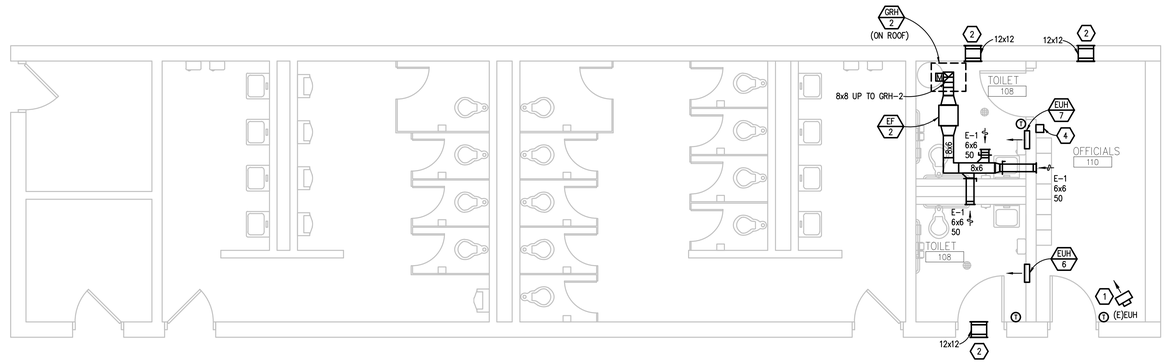

EXISTING TOILET BUILDING MECHANICAL NEW WORK PLAN
SCALE: 1/4" = 1' - 0"

TMP ARCHITECTURE

TMP ARCHITECTURE INC
1191 WEST SQUARE LAKE ROAD
BLOOMFIELD HILLS • MICHIGAN • 48302
PH • 248.338.4561 FX • 248.338.0223
EM • INFO@TMP-ARCHITECTURE.COM

REGISTRATION SEAL

CONSULTANT

Peter Basso Associates
CONSULTING ENGINEERS
5145 Livernois, Suite 100
Troy, Michigan 48098-3276
Tel: 248-879-5666
www.PeterBassoAssociates.com
PBA Project No.: 2023.0156.03

PROJECT TITLE

Troy High School Athletic Fields Bid Package No. 02B

Troy School District
Troy, Michigan

DRAWING TITLE
MECHANICAL NEW WORK PLANS

ISSUE DATES

DATE:	ISSUED FOR:
12-10-2024	CONSTRUCTION DOCUMENTS

DRAWN	WTF
CHECKED	KLH
APPROVED	SVM

PROJECT NO.
22104E

DRAWING NO.
M4.1

G:\2023\2023-0156-00\CAD\03 - Athletics Phase 2\2023-0156-03-M4-SM1.dwg, M4.1, 12/9/2024 1:18:08 PM, Alexandra A. Muncey, None ,0.13459, Peter Basso Associates Inc.

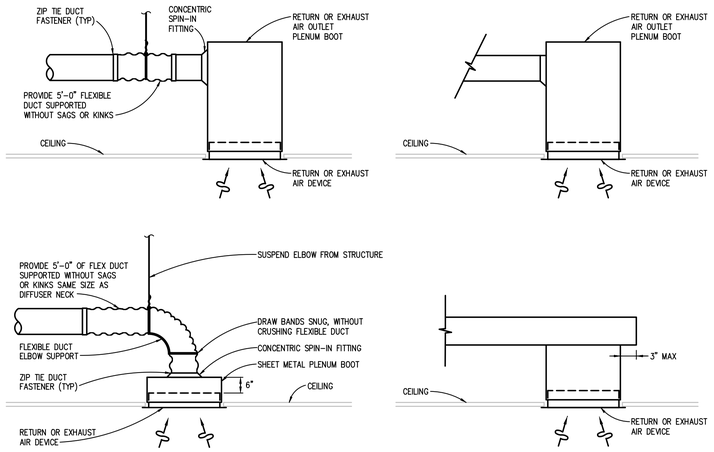

RETURN OR EXHAUST AIR DEVICE INSTALLATION DETAIL

NO SCALE

NOTE: PAINT INTERIOR SURFACE OF PLENUM BOX FLAT BLACK.

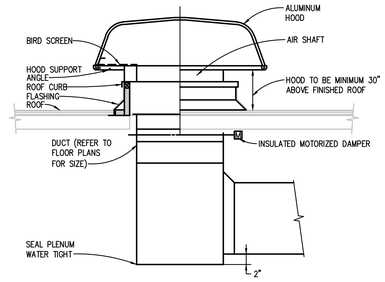

DUCTED INTAKE OR RELIEF HOOD INSTALLATION DETAIL

NO SCALE

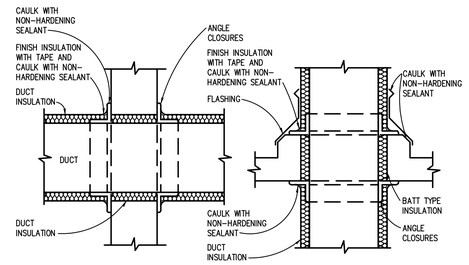

VERTICAL OR HORIZONTAL (NON FIRE RATED ASSEMBLY) DUCT PENETRATION DETAIL

NO SCALE

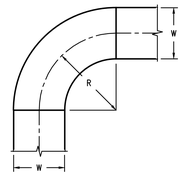

NOTES:
1. R/W = 1.0 FOR VELOCITIES <= 2,000 FPM UNLESS OTHERWISE INDICATED, R/W = 1.5 FOR VELOCITIES > 2,000 FPM UNLESS OTHERWISE INDICATED.
2. ALL CHANGES IN DIRECTION SHALL BE SMOOTH RADIUS ELBOW UNLESS OTHERWISE INDICATED.
3. THIS DETAIL APPLIES TO CHANGES IN DIRECTION FOR ALL ANGLES.

SMOOTH RADIUS ELBOW DETAIL

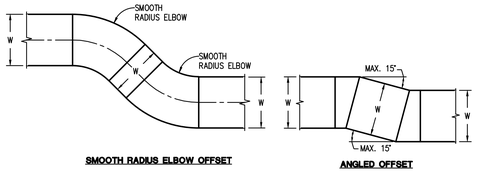

SMOOTH RADIUS ELBOW OFFSET

ANGLED OFFSET

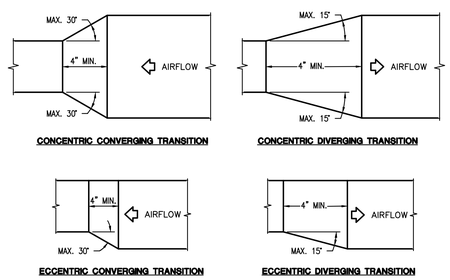

CONCENTRIC CONVERGING TRANSITION

CONCENTRIC DIVERGING TRANSITION

ECCENTRIC CONVERGING TRANSITION

ECCENTRIC DIVERGING TRANSITION

DUCT TRANSITION AND OFFSET DETAILS

NO SCALE

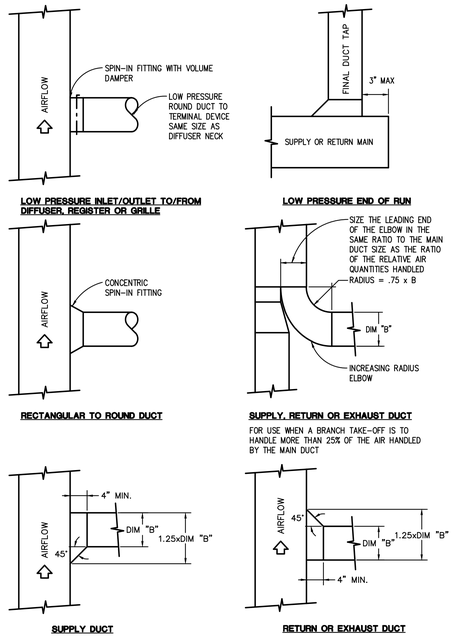

LOW PRESSURE INLET/OUTLET TO/FROM DIFFUSER, REGISTER OR GRILLE

LOW PRESSURE END OF RUN

RECTANGULAR TO ROUND DUCT

SUPPLY, RETURN OR EXHAUST DUCT

FOR USE WHEN A BRANCH TAKE-OFF IS TO HANDLE MORE THAN 25% OF THE AIR HANDLED BY THE MAIN DUCT

SUPPLY DUCT

RETURN OR EXHAUST DUCT

RECTANGULAR DUCT BRANCH TAKE-OFF DETAILS

NO SCALE

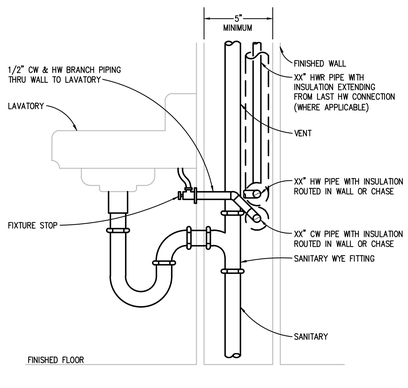

TYPICAL LAVATORY DETAIL

NO SCALE

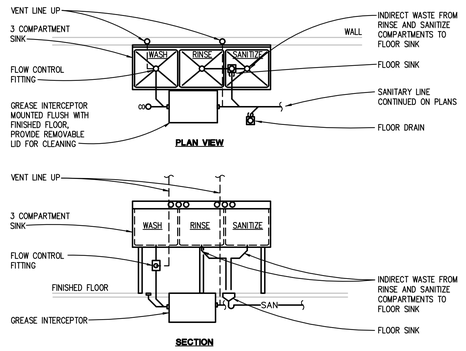

DEDICATED GREASE INTERCEPTOR DETAIL

NO SCALE

NOTES:
1. FOR 4" AND LARGER WATER SERVICES SHALL BE ROLLED OFF AT A 45° ANGLE FROM CENTERLINE OF WATER METER.
2. ALL PIPING SHALL BE SUPPORTED INDEPENDENTLY FROM WATER METER.

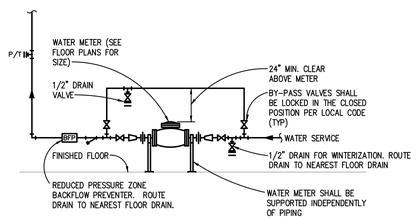

DOMESTIC WATER METER PIPING DIAGRAM

NO SCALE

TMP ARCHITECTURE

TMP ARCHITECTURE INC
1191 WEST SQUARE LAKE ROAD
BLOOMFIELD HILLS • MICHIGAN • 48302
PH • 248.338.4561 FX • 248.338.0223
EM • INFO@TMP-ARCHITECTURE.COM

REGISTRATION SEAL

CONSULTANT

Peter Basso Associates
CONSULTING ENGINEERS
5145 Livernois, Suite 100
Troy, Michigan 48098-3276
Tel: 248-879-5666
www.PeterBassoAssociates.com
PBA Project No.: 2023.0156.03

PROJECT TITLE

Troy High School Athletic Fields Bid Package No. 02B

Troy School District
Troy, Michigan

DRAWING TITLE

MECHANICAL DETAILS

ISSUE DATES

DATE:	ISSUED FOR:
12-10-2024	CONSTRUCTION DOCUMENTS

DRAWN	WTF
CHECKED	KLH
APPROVED	SVM

PROJECT NO.

22104E

DRAWING NO.

M6.1

G:\2023\2023-0156-00\CAD\03 - Athletics Phase 2\2023-0156-03-M6-DT.dwg, M6.1, 12/9/2024 1:25:20 PM, Alexandra A. Muncey, None (0.13459), Peter Basso Associates Inc.

HOT WATER TEMPERATURE SET-UP

1. CREATE DEMAND GREATER THAN VALVE'S MINIMUM FLOW RATING USING HOSE CONNECTION ON HW LINE WITHIN ASSEMBLY. IF FLOW CAN NOT BE ACHIEVED THIS WAY, TURN ON FIXTURES WITHIN THE BUILDING.
2. ADJUST TEMPERATURE TO 130°F AND LET STABILIZE. RE-ADJUST AS NECESSARY.
3. SET HIGH LIMIT ON AQUASTAT TO 132°F.

HOT WATER RETURN SET-UP (TO BE DONE AFTER HOT WATER TEMPERATURE SET-UP)

1. ENSURE THERE IS NO FLOW IN THE SYSTEM.
2. SET LOW LIMIT ON AQUASTAT TO 127°F.
3. START RETURN PUMP.
4. OPEN BALANCE VALVE ON RETURN LINE GOING BACK TO WATER HEATER TO 10% OF RETURN FLOW.
5. LET PUMP RUN FOR MINIMUM 30 MINUTES. IF TEMPERATURE INCREASES ON OUTLET OF MIXING VALVE CLOSE THE BALANCE VALVE UNTIL TEMPERATURE IS MAINTAINED. IF TEMPERATURE DECREASES, OPEN THE BALANCE VALVE UNTIL TEMPERATURE IS MAINTAINED.
6. ALLOW PUMP TO CYCLE TO ENSURE IT STARTS AND STOPS AT AQUASTAT SETTINGS.

140°F HOT WATER RETURN SET-UP (TO BE DONE AFTER HOT WATER TEMPERATURE SET-UP)

1. ENSURE THERE IS NO FLOW IN THE SYSTEM.
2. SET HIGH LIMIT ON AQUASTAT TO 142°F
3. SET LOW LIMIT ON AQUASTAT TO 137°F.
4. START RETURN PUMP.
5. ALLOW PUMP TO CYCLE TO ENSURE IT STARTS AND STOPS AT AQUASTAT SETTINGS.

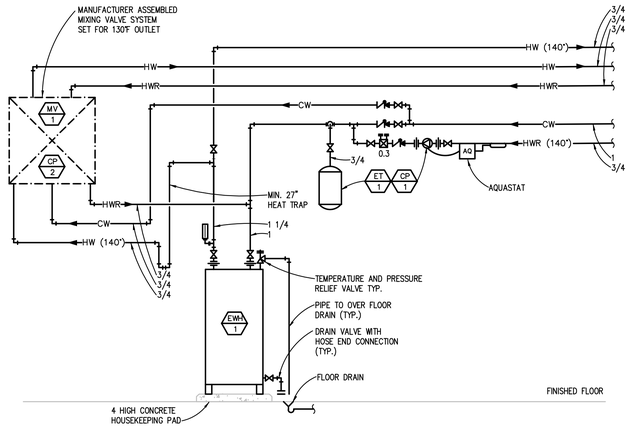

CONCESSIONS ELECTRIC WATER HEATER WITH MIXING VALVE PIPING DIAGRAM

NO SCALE

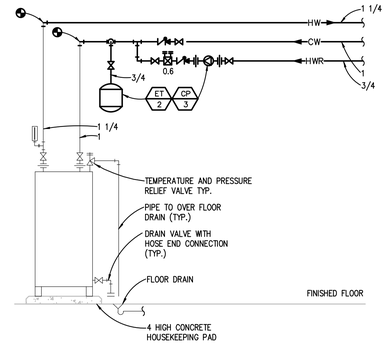

EXISTING ELECTRIC WATER HEATER PIPING DIAGRAM

NO SCALE

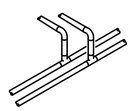

BRANCH CONNECTION OFF TOP

APPLIES TO THE FOLLOWING SYSTEMS:
DOMESTIC WATER
STEAM & CONDENSATE
LABORATORY GASES
LABORATORY VACUUM
COMPRESSED AIR
NATURAL GAS

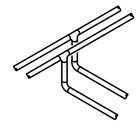

BRANCH CONNECTION OFF BOTTOM

APPLIES TO THE FOLLOWING SYSTEMS:
HOT WATER HEATING
CHILLED WATER
CONDENSER WATER
ENERGY RECOVERY
PROCESS COOLING WATER

NOTE: BOTTOM AS INDICATED OR SIDE CONNECTION IS ACCEPTABLE. CONNECTION ABOVE CENTERLINE OF MAINS IS NOT ACCEPTABLE.

TYPICAL BRANCH TAKE-OFF CONNECTION PIPING DETAIL

NO SCALE

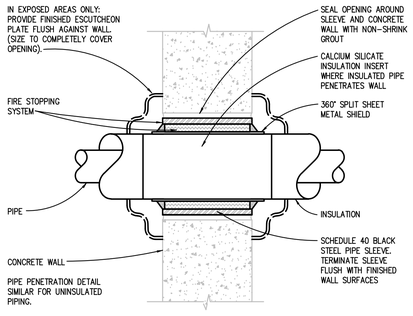

FIRE RATED AND NON-FIRE RATED POURED CONCRETE OR BLOCK WALL PIPE PENETRATION DETAIL

NO SCALE

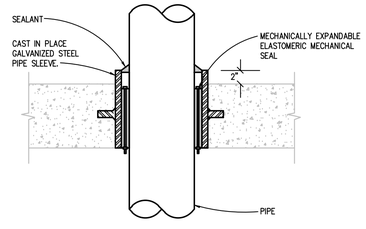

NEW SLAB ON GRADE FLOOR PIPE PENETRATION DETAIL

NO SCALE

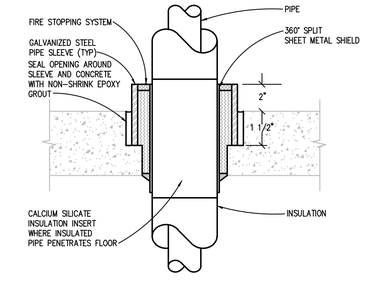

EXISTING FLOOR PIPE PENETRATION DETAIL

NO SCALE

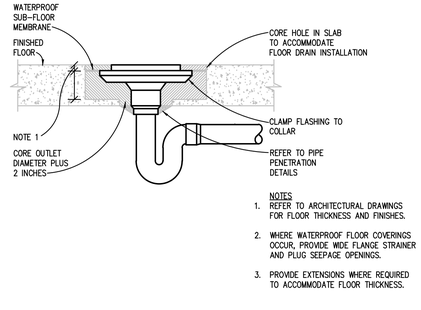

NOTES

1. REFER TO ARCHITECTURAL DRAWINGS FOR FLOOR THICKNESS AND FINISHES.
2. WHERE WATERPROOF FLOOR COVERINGS OCCUR, PROVIDE WIDE FLANGE STRAINER AND PLUG SEEPAGE OPENINGS.
3. PROVIDE EXTENSIONS WHERE REQUIRED TO ACCOMMODATE FLOOR THICKNESS.

FLOOR DRAIN DETAIL (EXISTING FLOORS)

NO SCALE

TMP ARCHITECTURE

TMP ARCHITECTURE INC
1191 WEST SQUARE LAKE ROAD
BLOOMFIELD HILLS • MICHIGAN • 48302
PH • 248.338.4561 FX • 248.338.0223
EM • INFO@TMP-ARCHITECTURE.COM

REGISTRATION SEAL

CONSULTANT

Peter Basso Associates
CONSULTING ENGINEERS
5145 Livernois, Suite 100
Troy, Michigan 48098-3276
Tel: 248-879-5666
www.PeterBassoAssociates.com
PBA Project No.: 2023.0156.03

PROJECT TITLE

Troy High School Athletic Fields Bid Package No. 02B

Troy School District
Troy, Michigan

DRAWING TITLE

MECHANICAL DETAILS

ISSUE DATES

DATE:	ISSUED FOR:
12-10-2024	CONSTRUCTION DOCUMENTS

DRAWN WTF
CHECKED KLH
APPROVED SVM

PROJECT NO.
22104E

DRAWING NO.
M6.2

G:\2023\2023-0156-00\CAD\03 - Athletics Phase 2\2023-0156-03-M6-DT.dwg, M6.2, 12/9/2024 1:55:41 PM, Alexandra A. Muncey, None ,0.13459, Peter Basso Associates Inc.

PLUMBING PIPING & VALVE APPLICATION SCHEDULE

PIPE SIZE (INCHES)	SOFT COPPER TYPE K	HARD COPPER TYPE L	HARD COPPER TYPE M	CARBON STEEL (SCHED. 40)	CARBON STEEL (STD.)	GALV. STEEL (SCHED. 40)	STAINLESS STEEL (SCHED. 10)	PEX	PE PIPE	RE SWEATHED CARBON STEEL PIPE	CSST	NO-HUB CISP	PVC TYPE DWV	PP DRAINAGE PIPE	COPPER TYPE DWV	DUCTILE IRON PIPE	SOLDERED	BRAZED	WELDED	THREADED	FLANGED	GROOVED	INSERT & CRIMP	FUSION	PRESSURE-SEAL	MECHANICALLY-FORMED TEE	MECHANICAL JOINT	PUSH-ON-JOINT	SOLVENT WELDED	SOLDERED	FUSION	CISP, HUBLESS	HEAVY-DUTY HUBLESS	BALL	AGA BALL	GENERAL SERVICE BUTTERFLY	LUBRICATED PLUG	GATE	KEYED NOTES
ABOVEGROUND DOMESTIC WATER (POTABLE AND NON-POTABLE) ON DISTRIBUTION SIDE OF METER - MIN. WORKING PRESS. & TEMP.: 125 PSIG AT 200 DEG F																																							
UP TO 4		X															X	X			X	X			X	X								X		X				A
ABOVEGROUND SANITARY WASTE & VENT - MIN. WORKING PRESS.: 10-FOOT HEAD OF WATER																																							
1-1/2 TO 15												X																				X							
ABOVEGROUND INDIRECT SANITARY WASTE - MIN. WORKING PRESS.: 10-FOOT HEAD OF WATER																																							
UP TO 8			X												X															X										
UNDERGROUND SANITARY WASTE & VENT - MIN. WORKING PRESS.: 10-FOOT HEAD OF WATER																																							
3 TO 12												X																					X						
15												X																					X						
ABOVEGROUND STORM DRAINAGE - MIN. WORKING PRESS.: 10-FOOT HEAD OF WATER																																							
2												X																				X							
3 TO 15												X																				X							
UNDERGROUND STORM DRAINAGE - MIN. WORKING PRESS.: 10-FOOT HEAD OF WATER																																							
3 TO 12												X																					X						
15												X																					X						

GENERAL NOTES:

1. 'X' INDICATES ACCEPTABLE SELECTION. IF MORE THAN ONE SELECTION IS INDICATED FOR A PIPING SYSTEM, CONTRACTOR MAY SELECT FROM THOSE INDICATED SELECTIONS.
2. DISSIMILAR-METAL PIPING JOINTS: CONSTRUCT JOINTS USING DIELECTRIC FITTINGS COMPATIBLE WITH BOTH PIPING MATERIALS.
   a. NPS 2 AND SMALLER: USE DIELECTRIC NIPPLE/WATERWAY.
   b. NPS 2-1/2 AND LARGER: USE DIELECTRIC FLANGE KITS.
3. USE UNIONS OR FLANGES AT VALVE AND EQUIPMENT CONNECTIONS.
4. PLUMBING EQUIPMENT DRAINS, VENTS, SAFETY VALVE PIPING, BLOWDOWN PIPING AND THE LIKE SHALL BE SAME PIPING MATERIAL AS ASSOCIATED PIPING SYSTEM.
5. GROOVED END VALVES MAY BE USED WITH GROOVED PIPING.

KEYED NOTES

A. GROOVED AND FLANGED FITTINGS, JOINTS, AND COUPLINGS, IF INDICATED AS AN ACCEPTABLE SELECTION, MAY BE USED IN ACCESSIBLE LOCATIONS ONLY FOR THIS PIPING SYSTEM. ACCESSIBLE LOCATIONS ARE DEFINED AS EXPOSED CONSTRUCTION OR ABOVE LAY-IN CEILINGS.

DUCT SYSTEM INSULATION APPLICATION SCHEDULE

	INSULATION MATERIAL & THICKNESS (INCHES)						FIELD APPLIED JACKET MATERIAL		
	FIBERGLASS BLANKET 0.75 LB/CU FT	FIBERGLASS BLANKET 1.0 LB/CU FT	FIBERGLASS BOARD 2.25 LB/CU FT	FIBERGLASS BOARD 6.0 LB/CU FT	FLEXIBLE ELASTOMERIC	ASTM E2336 2-HOUR FIRE RATED BLANKET	2-HOUR FIRE RATED BLANKET	ALUMINUM	SELF-ADHESIVE (FOR OUTDOOR APPLICATIONS)	KEYED NOTES
DUCT SYSTEMS LOCATED INDOORS										
EXHAUST AND RELIEF AIR BETWEEN ISOLATION DAMPER AND PENETRATION OF BUILDING EXTERIOR		1.5								

PLENUMS, DUCTS, AND DUCT ACCESSORIES NOT REQUIRING INSULATION:
- DOUBLE-WALL METAL DUCTS WITH INSULATION OF SUFFICIENT THICKNESS TO COMPLY WITH ENERGY CODE AND ASHRAE/IESNA 90.1 – 2013
- METAL DUCTS WITH DUCT LINER OF SUFFICIENT THICKNESS TO COMPLY WITH ENERGY CODE AND ASHRAE/IESNA 90.1 – 2013
- FACTORY-INSULATED FLEXIBLE DUCTS
- FACTORY-INSULATED PLENUMS AND CASINGS
- FLEXIBLE CONNECTORS
- FACTORY-INSULATED ACCESS PANELS AND DOORS

GENERAL NOTES

1. 'X' OR THICKNESS IN INCHES INDICATE ACCEPTABLE SELECTION. IF MORE THAN ONE SELECTION IS INDICATED FOR A DUCT SYSTEM, CONTRACTOR MAY SELECT FROM THOSE INDICATED SELECTIONS.
2. REFER TO METAL DUCT SECTION OF SPECIFICATIONS FOR DUCT LINING AND DOUBLE-WALL INSULATED DUCT.
3. REFER TO HVAC CASINGS SECTION OF SPECIFICATIONS FOR DOUBLE-WALL INSULATED PLENUMS.

KEYED NOTES

A. INCLUDE INSULATION AROUND DUCT MOUNTED COILS AND AIR TERMINAL UNIT COILS.
B. NUMBER OF LAYERS AND TOTAL INSULATION THICKNESS AS RECOMMENDED BY SELECTED MANUFACTURER.
C. DOES NOT APPLY TO PREFABRICATED, ZERO-CLEARANCE GREASE DUCT.
D. PROVIDE MANUFACTURER'S RECOMMENDED PROTECTIVE COATING FOR FLEXIBLE ELASTOMERIC THERMAL DUCT INSULATION.
E. EXPOSED SUPPLY DUCTWORK LOCATED IN A CONDITIONED SPACE SERVED BY THE SAME AIR HANDLING SYSTEM IS NOT REQUIRED TO BE INSULATED.

SCHEDULES GENERAL NOTES:

TYPICAL FOR ALL SCHEDULE SHEETS:

1. REFER TO ELECTRICAL STANDARD SCHEDULES, ONE LINE DIAGRAM AND PANEL SCHEDULES FOR ADDITIONAL ELECTRICAL INFORMATION
2. PROVIDE THE FOLLOWING FACTORY-WIRED ELECTRICAL OPTIONS/ACCESSORIES WHERE INDICATED IN SCHEDULE:
   - A – NON-FUSED DISCONNECT SWITCH
   - B – UNIT SHALL BE SINGLE POINT ELECTRICAL CONNECTION WITH FACTORY INSTALLED DISCONNECTING MEANS AND ALL REQUIRED STARTERS AND CONTROLS
   - C – SERVICE RECEPTACLE
   - D – FUSED DISCONNECT SWITCH
   - E – COMBINATION STARTER
   - F – UNIT SHALL HAVE (2) SINGLE POINT CONNECTIONS WITH FACTORY INSTALLED DISCONNECTING MEANS AND ALL REQUIRED STARTERS AND CONTROLS. (1) CONNECTION SHALL BE FOR CONDENSING SECTION AND (1) CONNECTION SHALL BE FOR THE REMAINDER OF THE UNIT.
3. FOR MODULATION/CONTROL TYPE COLUMN, "VFC" INDICATES VARIABLE FREQUENCY CONTROLLERS, "AUTO" INDICATES AUTOMATIC OPERATION (CONTROLLED BY TEMPERATURE CONTROLS OR SELF CONTAINED CONTROLS), "MANUAL" INDICATES HAND OPERATION.
4. IF VARIABLE FREQUENCY CONTROLLERS ARE INDICATED TO BE PROVIDED AND ARE NOT INSTALLED INTEGRAL TO THE UNIT, VARIABLE FREQUENCY CONTROLLERS SHALL BE SUPPLIED BY THE MECHANICAL CONTRACTOR (UNLESS OTHERWISE NOTED) AND INSTALLED BY THE ELECTRICAL CONTRACTOR INCLUDING THE LINE SIDE AND LOAD SIDE WIRING TO THE MOTOR AND INCLUDING MISCELLANEOUS STEEL REQUIRED FOR THE SUPPORT AND MOUNTING OF THE VFC. REFER TO FLOOR PLANS FOR LOCATION.
5. WHERE EQUIPMENT IS INDICATED TO HAVE A SINGLE POINT ELECTRICAL CONNECTION, THAT EQUIPMENT SHALL COME COMPLETE WITH FACTORY INSTALLED STARTERS, MOTOR OVERLOAD PROTECTION, CONTACTORS, FUSING AND ALL NECESSARY INTERNAL WIRING AND CONTROLS. PROVIDE A FACTORY MOUNTED UNIT DISCONNECTING MEANS WHERE THE ELECTRICAL CONTRACTOR SHALL MAKE SINGLE POINT CONNECTION. INSTALL PACKAGED EQUIPMENT SUCH THAT THE ELECTRICAL CONNECTION AND CONTROLS ARE ACCESSIBLE AND HAVE CLEARANCES MEETING THE NATIONAL ELECTRICAL CODE.
6. WHERE PACKAGED EQUIPMENT IS PROVIDED, NAMEPLATE MUST INDICATE MAXIMUM OVERCURRENT PROTECTION BY HACR RATED CIRCUIT BREAKERS OR FUSES. IF FUSE PROTECTION ONLY IS INDICATED, PROVIDE A FUSIBLE DISCONNECT AND FUSES WITH THE UNIT.
7. WHERE EQUIPMENT IS DESIGNATED BY MANUFACTURER AND MODEL NUMBER, THIS IS THE BASIS OF DESIGN. IF THE CONTRACTOR ELECTS TO PROVIDE EQUIPMENT BY OTHER SPECIFIED MANUFACTURERS OR PROPOSED ALTERNATE EQUIPMENT BY THE BASIS OF DESIGN MANUFACTURER, THE CONTRACTOR SHALL BE RESPONSIBLE FOR ANY REVISIONS TO ELECTRICAL REQUIREMENTS, STRUCTURAL LOADING, OR ARCHITECTURAL APPURTENANCES AND SHALL INCLUDE THE COST OF SUCH REVISIONS IN HIS BID.
8. WHERE EQUIPMENT IS SCHEDULED TO INCLUDE A SERVICE RECEPTACLE, PROVIDE A FACTORY MOUNTED SERVICE RECEPTACLE WITH APPROPRIATE FUSES AND TRANSFORMERS CONNECTED ON THE LINE SIDE OF THE UNIT DISCONNECT. PROVIDE A NAMEPLATE ON THE DISCONNECT SWITCH INDICATING THE PRESENCE OF LIVE POWER TO THE SERVICE RECEPTACLE WHEN THE UNIT DISCONNECT IS IN THE OFF POSITION.
9. SIZE ALL EQUIPMENT FEEDERS BASED ON THE LISTED MOP (MAXIMUM OVERCURRENT PROTECTION). REFER TO THE FEEDER AND BRANCH CIRCUIT SIZING SCHEDULE ON THE ELECTRICAL STANDARD SCHEDULES SHEET.

VIBRATION ISOLATOR APPLICATION SCHEDULE

EQUIPMENT TYPE	EQUIPMENT CATEGORY	HORSEPOWER AND OTHER	RPM	EQUIPMENT LOCATION: SLAB ON GRADE: BASE TYPE	SLAB ON GRADE: ISOLATOR TYPE	SLAB ON GRADE: MIN. DEFL., IN. (MM)	UP TO 40 FT (12 M) FLOOR SPAN: BASE TYPE	UP TO 40 FT (12 M) FLOOR SPAN: ISOLATOR TYPE	UP TO 40 FT (12 M) FLOOR SPAN: MIN. DEFL., IN. (MM)	KEYED NOTES
SUSPENDED AXIAL FANS, PLENUM FANS, CABINET FANS, FAN SECTIONS, CENTRIFUGAL INLINE FANS	UP TO 22 IN. DIAMETER	ALL	ALL				A OR B	8a OR 8b	0.75 (19)	NOTES 1, 3, 4
	24 IN. DIAMETER AND UP	≤2 IN. SP	UP TO 300				A OR B	8a OR 8b	1.50 (38)	
			301 TO 500				A OR B	8a OR 8b	1.50 (38)	
			500 AND UP				A OR B	8a OR 8b	1.50 (38)	
		>2 IN. SP	UP TO 300				A OR B	8a OR 8b	3.50 (89)	
			301 TO 500				A OR B	8a OR 8b	2.50 (64)	
			500 AND UP				A OR B	8a OR 8b	2.50 (64)	

GENERAL NOTES:

KEYED NOTES:
1. THRUST RESTRAINTS: PROVIDE THRUST RESTRAINTS BETWEEN FAN DISCHARGE AND DUCT (IN PAIRS, LOCATED ON THE CENTERLINE OF THE DISCHARGE OUTLET OF THE FAN, BRIDGING THE FLEXIBLE DUCT CONNECTOR) FOR ALL FAN HEADS, FOR AXIAL AND CENTRIFUGAL FANS UNITS OPERATING AT 2 INCHES OR GREATER TOTAL STATIC PRESSURE AND AS SHOWN ON DRAWINGS. SPRING DEFLECTION SHALL BE SAME AS THE SUPPORT ISOLATORS.
2. PIPING RISER ISOLATION: PROVIDE PIPE RISER RESILIENT ANCHORS, SPRING MOUNTS AND RESILIENT PIPE GUIDES CAPABLE OF DISTRIBUTING THE LOADS WITHIN THE BUILDING DESIGN LIMITS AT THE SUPPORT POINTS.
3. HORIZONTAL PIPING VIBRATION ISOLATION: PROVIDE TYPE 8a OR 8b SPRING HANGERS FOR PIPING CONNECTED TO VIBRATION ISOLATED EQUIPMENT FOR ALL PIPING IN MECHANICAL ROOMS OR THE FOLLOWING MINIMUM HORIZONTAL DISTANCES FROM THE ISOLATED EQUIPMENT: UP TO 6" – 50 FEET (1 1/2" MINIMUM DEFLECTION), 8" AND LARGER – 100 FEET (2 1/2" MINIMUM DEFLECTION), WHICHEVER IS GREATER, AND AS SHOWN ON DRAWINGS. THE FIRST 4 HANGERS FROM THE ISOLATED EQUIPMENT SHALL BE TYPE 8b.
4. DUCTWORK VIBRATION ISOLATION: PROVIDE TYPE 8a OR 8b SPRING HANGERS FOR DUCTWORK WITH A CROSS SECTION OF 2 SQUARE FEET OR GREATER CONNECTED TO AIR HANDLING UNITS, RETURN OR RELIEF FANS, AND VIBRATION ISOLATED EQUIPMENT FOR ALL SUCH DUCTWORK IN MECHANICAL ROOMS OR FOR A MINIMUM HORIZONTAL DISTANCE OF 100 FEET FROM THE ISOLATED EQUIPMENT, WHICHEVER IS GREATER, AND AS SHOWN ON DRAWINGS (3/4" MINIMUM DEFLECTION).
5. IF SPAN DOES NOT EXCEED 20 FT, SPRING DEFLECTION MAY BE 1.0 IN AND TYPE D BASE MAY BE USED. FOR SPANS GREATER THAN 20 FT, USE SPRING DEFLECTION INDICATED AND TYPE E BASE.

BASE TYPES:

BASE TYPE A – NO BASE, ISOLATORS ATTACHED DIRECTLY TO EQUIPMENT.
BASE TYPE B – STRUCTURAL, STEEL RAILS OR BASE.
BASE TYPE C – CONCRETE INERTIA BASE.
BASE TYPE D – CURB – MOUNTED ALUMINUM BASE WITH 1" DEFL. SPRING ISOLATORS
BASE TYPE E – CURB – MOUNTED STEEL BASE WITH ADJUSTABLE 1", 2" OR 3" DEFL. SPRING ISOLATORS

ISOLATOR TYPES:

ISOLATOR TYPE 1a – ELASTOMERIC ISOLATION PAD.
ISOLATOR TYPE 1b – ELASTOMERIC ISOLATION PAD WITH STEEL LOAD BEARING PLATE.
ISOLATOR TYPE 2 – ELASTOMERIC FLOOR ISOLATOR.
ISOLATOR TYPE 3 – FREE STANDING SPRING FLOOR ISOLATOR.
ISOLATOR TYPE 4 – RESTRAINED SPRING ISOLATOR.
ISOLATOR TYPE 5 – THRUST RESTRAINT.
ISOLATOR TYPE 6 – AIR SPRING.
ISOLATOR TYPE 7 – ELASTOMERIC HANGERS.
ISOLATOR TYPE 8a – SPRING HANGERS.
ISOLATOR TYPE 8b – SPRING HANGERS WITH VERTICAL-LIMIT STOP.

DUCT SYSTEM APPLICATION SCHEDULE

AIR SYSTEMS	G90 GALV. SHEET METAL	DOUBLE-WALL LINED G90 GALV. SHEET METAL (SOLID INNER WALL)	DOUBLE-WALL LINED G90 GALV. SHEET METAL (PERF. INNER WALL)	G90 GALV. SHEET METAL WITH 1-INCH LINING	GALVANNEALED SHEET METAL	ALUMINUM	TYPE 304 STAINLESS STEEL	TYPE 316 STAINLESS STEEL	PVC COATED GALV. SHEET METAL (4X1)	PVC COATED GALV. SHEET METAL (1X4)	PVC COATED GALV. SHEET METAL (4X4)	16 GA. CARBON STEEL	ZERO-CLEARANCE PREFABRICATED RANGE HOOD EXHAUST DUCT	FABRIC	DESIGN PRESSURE CLASS (INCHES WG)	SEAL CLASS	MAX. ALLOWABLE LEAKAGE RATE (PERCENT)	KEYED NOTES
EXHAUST AIR WITHOUT TERMINAL UNITS	X														-2	A	5	
AIR TRANSFER DUCT				X											+2	A	5	
RELIEF AIR DOWNSTREAM OF FANS	X														+6	A	5	

GENERAL NOTES:

1. 'X' INDICATES ACCEPTABLE SELECTION. IF MORE THAN ONE SELECTION IS INDICATED FOR A DUCT SYSTEM, CONTRACTOR MAY SELECT FROM THOSE INDICATED SELECTIONS.
2. 4 X 1 PVC-COATED GALVANIZED STEEL: FACTORY-APPLIED PVC COATINGS SHALL BE 4 MILS (0.10 MM) THICK ON EXTERIOR SHEET METAL SURFACES OF DUCTS AND FITTINGS EXPOSED TO CORROSIVE CONDITIONS AND MINIMUM 1 MIL (0.025 MM) THICK ON INTERIOR SURFACES.
3. 1 X 4 (4 X 1 REVERSE COATED) PVC-COATED GALVANIZED STEEL: FACTORY-APPLIED PVC COATINGS SHALL BE 4 MILS (0.10 MM) THICK ON INTERIOR SHEET METAL SURFACES OF DUCTS AND FITTINGS EXPOSED TO CORROSIVE CONDITIONS AND MINIMUM 1 MIL (0.025 MM) THICK ON EXTERIOR SURFACES.
4. 4 X 4 PVC-COATED GALVANIZED STEEL: FACTORY-APPLIED PVC COATINGS SHALL BE 4 MILS (0.10 MM) THICK ON SHEET METAL SURFACES OF DUCTS AND FITTINGS EXPOSED TO CORROSIVE CONDITIONS AND 4 MILS (0.10 MM) THICK ON OPPOSITE SURFACES.

KEYED NOTES

A. SCREWS, DAMPERS, OR PROJECTIONS OF ANY TYPE ON INTERIOR OF DUCT SURFACE ARE PROHIBITED.

HORIZONTAL PIPING AND SUPPORT APPLICATION SCHEDULE

METAL PIPE TYPE & SIZE	HANGER OR SUPPORT TYPE: MSS TYPE 1 CLEVIS HANGER	MSS TYPE 10 SWIVEL RING BAND HANGER	MSS TYPE 41 DOUBLE ROD PIPE ROLLER	MSS TYPE 43 SINGLE ROD ROLLER HANGER	MSS TYPE 44 PIPE ROLLER & STAND	MSS TYPE 46 ADJUSTABLE PIPE ROLL STAND	SHIELD TYPE: MSS TYPE 39 PROTECTION SADDLE	MSS TYPE 40 INSULATION PROTECTION SHIELD	THERMAL-HANGER SHIELD	KEYED NOTES
UNINSULATED SINGLE PIPE										
UP TO 2 INCH	X	X								
2-1/2 INCH TO 4 INCH	X	X								
INSULATED SINGLE COLD PIPES										
UP TO 2 INCH	X	X						X	X	A
2-1/2 INCH TO 4 INCH	X								X	
INSULATED SINGLE HOT PIPES										
UP TO 2 INCH	X	X					X	X	X	A, C
2-1/2 INCH TO 4 INCH			X	X	X	X	X		X	B, C

GENERAL NOTES

1. "X" INDICATES APPROVED HANGER OR SUPPORT ELEMENTS. IF MORE THAN ONE HANGER OR SUPPORT ELEMENT IS INDICATED, SELECTION FROM APPROVED ELEMENTS IS CONTRACTOR'S OPTION.
2. REFER TO HANGER AND SUPPORT SECTION FOR APPROVED MANUFACTURERS.
3. HANGERS AND SUPPORTS USED FOR FIRE PROTECTION SERVICES SHALL BE UL LISTED OR FMG APPROVED.
4. HANGER ELEMENTS IN CONTACT WITH BARE COPPER PIPE SHALL BE COPPER PLATED, PLASTIC COATED, FELT LINED, OR USE MANUFACTURED COPPER TUBE ISOLATORS.
5. REFER TO INDIVIDUAL PIPING SPECIFICATION SECTIONS FOR HANGER SPACING.
6. MULTIPLE PARALLEL COLD PIPES MAY BE TRAPEZE SUPPORTED FROM BELOW USING U-BOLTS OR STRUT CLAMPS AND THERMAL HANGER SHIELDS. REFER TO KEYED NOTE A.
7. MULTIPLE PARALLEL COLD PIPES MAY BE TRAPEZE SUPPORTED FROM ABOVE USING STANDARD HANGER ELEMENTS INDICATED FOR SINGLE COLD PIPES.
8. MULTIPLE PARALLEL HOT PIPES MAY BE TRAPEZE SUPPORTED FROM BELOW USING ROLLER ELEMENTS AND THERMAL HANGER SHIELD OR INSULATION PROTECTION SADDLE. REFER TO KEYED NOTES B AND C.
9. MULTIPLE PARALLEL HOT PIPES MAY BE TRAPEZE SUPPORTED FROM ABOVE USING STANDARD ROLLER HANGERS INDICATED AND THERMAL HANGER SHIELD OR INSULATION PROTECTION SADDLE. REFER TO KEY NOTES B AND C.
10. REFER TO INDIVIDUAL PIPING SPECIFICATION SECTIONS FOR ADDITIONAL SYSTEM SPECIFIC HANGER APPLICATIONS.

KEYED NOTES

A. USE THERMAL HANGER SHIELD ON TRAPEZE SUPPORTED INSULATED PIPE TO PREVENT CRUSHING OF INSULATION.
B. USE THERMAL HANGER SHIELD DESIGNED FOR USE ON ROLLER SUPPORTS FOR INSULATED HOT PIPE .
C. USE TYPE 39 PROTECTION SADDLES IF INSULATION WITHOUT VAPOR BARRIER IS INDICATED. FILL INTERIOR VOIDS WITH INSULATION MATCHING ADJOINING INSULATION.

ABOVEGROUND PLUMBING PIPE & ACCESSORY INSULATION APPLICATION SCHEDULE

INDOOR PIPE SYSTEM AND SIZE (INCHES)	INSULATION MATERIAL & THICKNESS (INCHES): FLEXIBLE ELASTOMERIC	FIBERGLASS	MINERAL WOOL	POLYISOCYANURATE	PHENOLIC	CELLULAR GLASS	CALCIUM SILICATE	FIELD-APPLIED JACKET MATERIAL: ALUMINUM	STAINLESS STEEL	PVC	SELF-ADHESIVE (FOR OUTDOOR APPLICATIONS)	PVDC (INDOOR)	PVDC (OUTDOOR)	KEYED NOTES
DOMESTIC COLD WATER	1	1						X		X				A
DOMESTIC HOT WATER SUPPLY & RETURN 140 DEG F AND LESS:														
NPS 1-1/4 AND SMALLER	1	1						X		X				A
NPS 1-1/2 AND LARGER	1.5	1.5						X		X				A
STORM WATER & OVERFLOW	1	1						X		X				A
ROOF DRAIN AND OVERFLOW DRAIN BODIES	1	1												
CONDENSATE AND EQUIPMENT DRAIN PIPING BELOW 60 DEG F	0.75	1												
FLOOR DRAINS, TRAPS AND SANITARY DRAIN PIPING WITHIN 10 FEET OF DRAIN RECEIVING CONDENSATE AND EQUIPMENT DRAIN WATER BELOW 60 DEG F	0.75	1						X		X				A

UNLESS OTHERWISE INDICATED OR SCHEDULED, DO NOT INSULATE THE FOLLOWING:
- FIRE SUPPRESSION PIPING
- UNDERGROUND PIPING
- LABORATORY GAS AND VACUUM PIPING
- MEDICAL GAS AND VACUUM PIPING
- FUEL GAS PIPING
- FUEL OIL PIPING

GENERAL NOTES

1. 'X' OR THICKNESS IN INCHES INDICATES ACCEPTABLE SELECTION. IF MORE THAN ONE SELECTION IS INDICATED FOR A SYSTEM, CONTRACTOR MAY SELECT FROM THOSE INDICATED SELECTIONS.
2. INSULATE PIPING WITHIN AIR HANDLING EQUIPMENT THE SAME AS INDOOR PIPING. PROVIDE ALUMINUM OR STAINLESS STEEL JACKET.

KEYED NOTES

A. PROVIDE FIELD APPLIED JACKET FOR PIPING EXPOSED IN EQUIPMENT ROOMS, STORAGE ROOMS, JANITORS CLOSETS, RECEIVING ROOMS, TEST AREAS, CIRCULATION AREAS AND SUCH AREAS SUBJECT TO DAMAGE, WITHIN 10 FEET (3 METERS) OF FINISHED FLOOR.

TMP ARCHITECTURE

TMP ARCHITECTURE INC
1191 WEST SQUARE LAKE ROAD
BLOOMFIELD HILLS • MICHIGAN • 48302
PH • 248.338.4561 FX • 248.338.0223
EM • INFO@TMP-ARCHITECTURE.COM

REGISTRATION SEAL

CONSULTANT

Peter Basso Associates
CONSULTING ENGINEERS
5145 Livernois, Suite 100
Troy, Michigan 48098-3276
Tel: 248-879-5666
www.PeterBassoAssociates.com
PBA Project No.: 2023.0156.03

PROJECT TITLE

Troy High School Athletic Fields Bid Package No. 02B

Troy School District
Troy, Michigan

DRAWING TITLE

MECHANICAL SCHEDULES

ISSUE DATES

DATE:	ISSUED FOR:
12-10-2024	CONSTRUCTION DOCUMENTS

DRAWN WTF
CHECKED KLH
APPROVED SVM

PROJECT NO.

22104E

DRAWING NO.

M7.1

G:\2023\2023-0156-00\CAD\03 - Athletics Phase 2\2023-0156-03-M7-SH1.dwg, M7.1, 12/9/2024 11:57:59 AM, Alexandra A. Munsey, None .0.13459, Peter Basso Associates Inc.

GRILLE, REGISTER, AND DIFFUSER SCHEDULE

UNIT IDENTIFICATION	TYPE	FACE SIZE	NECK SIZE	FRAME TYPE	ACCESSORY	CONSTRUCTION	FINISH	MODEL NUMBER	KEYED NOTES
E-1	GRILLE	NECK SIZE + 1-1/4"	SEE PLANS	NOTE 2	–	ALUMINUM	WHITE	630	
E-2	GRILLE	24x24	SEE PLANS	NOTE 2	–	ALUMINUM	WHITE	PDDR	

GENERAL NOTES:
1. MODEL NUMBERS ARE PRICE UNLESS OTHERWISE NOTED.
2. COORDINATE EXACT FRAME TYPE WITH ARCHITECTURAL TRADES.

GRAVITY RELIEF HOOD SCHEDULE

UNIT IDENTIFICATION	SYSTEM SERVED	CFM	THROAT SIZE INCHES	THROAT VELOCITY FPM	STATIC PRESSURE DROP IN. W.G.	HOOD SIZE			CURB HEIGHT INCHES	HOOD CONSTRUCTION	MODEL NUMBER	KEYED NOTES
						WIDTH INCHES	LENGTH INCHES	HEIGHT INCHES				
GRH-1	EF-1	400	12x12	400	0.024	22	27	14	18	ALUMINUM	FGR12X12	
GRH-2	EF-2	190	8x8	427	0.024	26	27	14	18	ALUMINUM	FGR8X8	

GENERAL NOTES:
1. MODEL NUMBERS ARE GREENHECK UNLESS OTHERWISE NOTED.
2. PROVIDE WITH BIRD SCREEN.

ELECTRIC CENTRIFUGAL FAN CABINET UNIT HEATER SCHEDULE

UNIT IDENTIFICATION	CAPACITY MBH	AIR			HEATING ELEMENT		DIMENSIONS			RECESS DEPTH INCHES	FILTER		MODULATION/ CONTROL TYPE	ELECTRICAL						MODEL NUMBER	KEYED NOTES
		AIRFLOW CFM	E.D.B. °F	L.D.B. °F	1ST STAGE KW	TOTAL KW	LENGTH INCHES	HEIGHT INCHES	DEPTH INCHES		TYPE	AREA SQ. FT.		VOLTS	PHASE	FLA	MOP	SCCR KA	OPTIONS/ ACCESSORIES		
ECUH-1	17	250	60	123	3	5	33	25	9	9	THROWAWAY	–	AUTO	208	3	17.6	30	5	A	6333D05203	
ECUH-2	17	250	60	123	3	5	33	25	9	9	THROWAWAY	–	AUTO	208	3	17.6	30	5	A	6333D05203	

GENERAL NOTES:
1. REFER TO SCHEDULES GENERAL NOTES.
2. MODEL NUMBERS ARE MARKEL UNLESS OTHERWISE NOTED.

POWER VENTILATOR SCHEDULE

UNIT IDENTIFICATION	SYSTEM SERVED	TYPE	AIRFLOW CFM	T.S.P. IN. W.G.	TIP SPEED FPM	FAN RPM	MOTOR				CURB HEIGHT INCHES	MODULATION/ CONTROL TYPE	ELECTRICAL				MAXIMUM SOUND POWER LEVELS												MODEL NUMBER	KEYED NOTES
							BHP	HP	RPM	DRIVE TYPE			VOLTS	PHASE	SCCR KA (NOTE 3)	OPTIONS/ ACCESSORIES	UNIT DISCHARGE Lw BY OCTAVE BAND								UNIT INLET Lw BY OCTAVE BAND									
																	63 HZ (DB)	125 HZ (DB)	250 HZ (DB)	500 HZ (DB)	1000 HZ (DB)	2000 HZ (DB)	4000 HZ (DB)	8000 HZ (DB)	63 HZ (DB)	125 HZ (DB)	250 HZ (DB)	500 HZ (DB)	1000 HZ (DB)	2000 HZ (DB)	4000 HZ (DB)	8000 HZ (DB)		
EF-1	CONCESSIONS 101 & STORAGE 102	INLINE	400	0.5	4667	1639	0.8	1/10	1725	DIRECT	---	AUTO	120	1	5	B	–	–	–	–	–	–	–	–	75	74	70	63	59	56	53	46	SQ-90-VG	
EF-2	TOILET 108, TOILET 109, & OFFICIALS 110	INLINE	190	0.5	4418	1552	0.05	1/10	1725	DIRECT	---	AUTO	120	1	5	B	–	–	–	–	–	–	–	–	68	74	69	61	60	57	52	46	SQ-80-VG	

GENERAL NOTES:
1. REFER TO SCHEDULES GENERAL NOTES.
2. MODEL NUMBERS ARE GREENHECK UNLESS OTHERWISE NOTED.
3. CONTROLLER (E.G. VARIABLE FREQUENCY CONTROLLER, MOTOR STARTER) FOR SPECIFIED EQUIPMENT SHALL BE MANUFACTURED AND MARKED PER NEC WITH A MINIMUM SHORT CIRCUIT CURRENT RATING AS INDICATED.

ELECTRIC PROPELLER FAN UNIT HEATER SCHEDULE

UNIT IDENTIFICATION	CAPACITY MBH	FAN		HEATING ELEMENT KW	FINAL AIR TEMPERATURE °F	MOTOR HP	MODULATION/ CONTROL TYPE	ELECTRICAL						MODEL NUMBER	KEYED NOTES
		RPM	CFM					VOLTS	PHASE	FLA	MOP	SCCR KA	OPTIONS/ ACCESSORIES		
EUH-1	11.3	–	400	3.3	86.2	–	AUTO	208	3	9.2	20	5	B	F3FUH03C03	
EUH-2	11.3	–	400	3.3	86.2	–	AUTO	208	3	9.2	20	5	B	F3FUH03C03	
EUH-3	16.4	600	175	4.8	147	–	AUTO	208	3	13.3	20	5	B	J3327TD-RP	
EUH-4	13.6	600	175	4	114	–	AUTO	208	1	19.2	40	5	B	F3326TD-RP	
EUH-5	13.6	600	175	4	132	–	AUTO	208	3	11.1	20	5	B	J3326TD-RP	
EUH-6	13.6	600	175	4	114	–	AUTO	208	1	19.2	40	5	B	F3326TD-RP	
EUH-7	13.6	600	175	4	114	–	AUTO	208	1	19.2	40	5	B	F3326TD-RP	

GENERAL NOTES:
1. REFER TO SCHEDULES GENERAL NOTES.
2. MODEL NUMBERS ARE MARKEL UNLESS OTHERWISE NOTED.

ELECTRIC DOOR AIR CURTAIN SCHEDULE (AMBIENT)

UNIT IDENTIFICATION	AIR			MOTOR		WINDOW DIMENSIONS		MODULATION/ CONTROL TYPE	ELECTRICAL						MODEL NUMBER	KEYED NOTES
	AIRFLOW CFM	VELOCITY (FPM)	OUTLET VELOCITY UNIFORMITY	H.P. EACH FAN	NO. OF MOTORS	WIDTH FT.	HEIGHT FT.		VOLTS	PHASE	MCA	MOP	SCCR KA	OPTIONS/ ACCESSORIES		
DAC-1	446	1147	79%	1/5	1	2	3.5	AUTO	120	1	3.4	15	5	B	PE06-C-1024AA-R-SS	WALL MOUNT
DAC-2	446	1147	79%	1/5	1	2	3.5	AUTO	120	1	3.4	15	5	B	PE06-C-1024AA-R-SS	WALL MOUNT
DAC-3	446	1147	79%	1/5	1	2	3.5	AUTO	120	1	3.4	15	5	B	PE06-C-1024AA-R-SS	WALL MOUNT
DAC-4	446	1147	79%	1/5	1	2	3.5	AUTO	120	1	3.4	15	5	B	PE06-C-1024AA-R-SS	WALL MOUNT
DAC-5	446	1147	79%	1/5	1	2	3.5	AUTO	120	1	3.4	15	5	B	PE06-C-1024AA-R-SS	WALL MOUNT
DAC-6	446	1147	79%	1/5	1	2	3.5	AUTO	120	1	3.4	15	5	B	PE06-C-1024AA-R-SS	WALL MOUNT

GENERAL NOTES:
1. REFER TO SCHEDULES GENERAL NOTES.
2. MODEL NUMBERS ARE BERNER UNLESS OTHERWISE NOTED.
3. FLUID TYPE: W = WATER, PGXX = PROPYLENE GLYCOL SOLUTION XX PERCENTAGE OF GLYCOL, EGXX = ETHYLENE GLYCOL SOLUTION XX PERCENTAGE OF GLYCOL.

PUMP SCHEDULE

UNIT IDENTIFICATION	SYSTEM SERVED	LOCATION	TYPE	COUPLING TYPE	WATERFLOW GPM	FLUID TYPE	COLDEST SYSTEM OPERATING TEMP. °F FOR PUMP SELECTION	PUMP HEAD FT.	OVERLOAD GPM			MODULATION/ CONTROL TYPE	ELECTRICAL					MODEL NUMBER	KEYED NOTES
										HP	RPM		VOLTS	PHASE	SCCR KA (NOTE 4)	OPTIONS/ ACCESSORIES		
CP-1	HWR (140)	STORAGE	IN LINE	CLOSE	0.3	WATER	40°F	10	NON-OVERLOADING	1/12	2650	AUTO	120	1	5	–	PL-30B	
CP-2	HWR	STORAGE	IN LINE	CLOSE	0.3	WATER	40°F	10	NON-OVERLOADING	1/12	2650	AUTO	120	1	5	–	PL-30B	
CP-3	HWR	EXISTING STORAGE TOILET ROOM	IN LINE	CLOSE	0.3	WATER	40°F	10	NON-OVERLOADING	1/12	2650	AUTO	120	1	5	–	PL-30B	

GENERAL NOTES:
1. REFER TO SCHEDULES GENERAL NOTES.
2. MODEL NUMBER ARE BELL & GOSSETT UNLESS OTHERWISE NOTED.
3. FLUID TYPE: W = WATER, PGXX = PROPYLENE GLYCOL SOLUTION XX PERCENTAGE OF GLYCOL, EGXX = ETHYLENE GLYCOL SOLUTION XX PERCENTAGE OF GLYCOL.
4. CONTROLLER (E.G. VARIABLE FREQUENCY CONTROLLER, MOTOR STARTER) FOR SPECIFIED EQUIPMENT SHALL BE MANUFACTURED AND MARKED PER NEC WITH A MINIMUM SHORT CIRCUIT CURRENT RATING AS INDICATED.

DOMESTIC WATER HEATER SCHEDULE (ELECTRIC)

UNIT IDENTIFICATION	STORAGE CAPACITY GALLONS	KW INPUT	RECOVERY GPH	E.W.T. °F	L.W.T. °F	MODULATION/ CONTROL TYPE	ELECTRICAL						MODEL NUMBER	KEYED NOTES
							VOLTS	PHASE	FLA	MOP	SCCR KA	OPTIONS/ ACCESSORIES		
EWH-1	55	6	20	40	140	AUTO	208	3	37.5	50	5	–	LDT-50TP	

GENERAL NOTES:
1. REFER TO SCHEDULES GENERAL NOTES.
2. MODEL NUMBERS ARE LOCHINVAR UNLESS OTHERWISE NOTED.

PLUMBING CONNECTION SCHEDULE

UNIT IDENTIFICATION	CW INCHES	HW INCHES	SAN INCHES	VENT INCHES	KEYED NOTES
WC-1	1 1/2	–	4	2	
LAV-1	1/2	1/2	1 1/2	1 1/2	
SK-1	3/4	3/4	1 1/2	1 1/2	
SS-1	3/4	3/4	3	–	
FD-1	–	–	3	–	
FS-1	–	–	6	–	

GENERAL NOTES:
1. INDIVIDUAL WATER LINE BRANCHES, WASTE LINES, VENTS, AND TRAPS FOR CONNECTION TO INDIVIDUAL FIXTURES, FIXTURE FITTINGS, AND SPECIALTIES SHALL BE IN ACCORDANCE WITH THE FOLLOWING SCHEDULE OR AS INDICATED ON DRAWINGS, WHICHEVER IS GREATER.

KEYED NOTES:
1. PROVIDE MIXING VALVE.

TMP ARCHITECTURE

TMP ARCHITECTURE INC
1191 WEST SQUARE LAKE ROAD
BLOOMFIELD HILLS • MICHIGAN • 48302
PH • 248.338.4561 FX • 248.338.0223
EM • INFO@TMP-ARCHITECTURE.COM

REGISTRATION SEAL

CONSULTANT

Peter Basso Associates
CONSULTING ENGINEERS
5145 Livernois, Suite 100
Troy, Michigan 48098-3276
Tel: 248-879-5666
www.PeterBassoAssociates.com

PBA Project No.: 2023.0156.03

PROJECT TITLE

Troy High School Athletic Fields Bid Package No. 02B

Troy School District
Troy, Michigan

DRAWING TITLE
MECHANICAL SCHEDULES

ISSUE DATES

DATE:	ISSUED FOR:
12-10-2024	CONSTRUCTION DOCUMENTS

DRAWN WTF
CHECKED KLH
APPROVED SVM

PROJECT NO.
22104E

DRAWING NO.
M7.2

G:\2023\2023-0156-00\CAD\03 - Athletics Phase 2\2023-0156-03-M7-SH2.dwg, M7.2, 12/9/2024 1:25:25 PM, Alexandra A. Muncey, None ,0.13459, Peter Basso Associates Inc.

TEMPERATURE CONTROL - SYMBOLS LIST

SCHEMATIC SYMBOLS

SYMBOL	DESCRIPTION
AQ	AQUASTAT, STRAP ON BULB
CO2	CARBON DIOXIDE SENSOR – WALL MOUNTED
CO2	CARBON DIOXIDE SENSOR – DUCT MOUNTED
CS	CURRENT SWITCH
CT	CURRENT TRANSDUCER
	DAMPER – OPPOSED BLADE
	DAMPER – PARALLEL BLADE
M	DAMPER MOTOR
DPS	DIFFERENTIAL PRESSURE SWITCH
DPT	DIFFERENTIAL PRESSURE TRANSMITTER
ECM	ELECTRONICALLY COMMUTATED MOTOR
CM	FIRE ALARM SYSTEM, ADDRESSABLE CONTROL MODULE
FM	FLOW METER
FS	FLOW SWITCH
FZ	FREEZESTAT
	GUARD FOR STAT OR SENSOR
	HUMIDIFIER
H	HUMIDISTAT OR HUMIDITY SENSOR (AS DEFINED ON TC DRAWINGS)
H	HUMIDITY SENSOR, DUCT MOUNTED
LVL	LEVEL SWITCH OR TRANSMITTER
LS	LIMIT SWITCH
	LINE – ELECTRIC
	LINE – INSTRUMENT AIR (PNEUMATIC)
M/S	MOTOR STARTER
OS	OCCUPANCY SENSOR
PT	PRESSURE TRANSMITTER
R	RELAY, ELECTRIC
N	SELECTOR SWITCH, (N=NUMBER OF POSITIONS)
AI	SIGNAL – DDC/BAS, ANALOG INPUT
AO	SIGNAL – DDC/BAS, ANALOG OUTPUT
DI	SIGNAL – DDC/BAS, DIGITAL INPUT
DO	SIGNAL – DDC/BAS, DIGITAL OUTPUT
AI	SIGNAL – PACKAGED EQUIPMENT, ANALOG INPUT
AO	SIGNAL – PACKAGED EQUIPMENT, ANALOG OUTPUT
DI	SIGNAL – PACKAGED EQUIPMENT, DIGITAL INPUT
DO	SIGNAL – PACKAGED EQUIPMENT, DIGITAL OUTPUT
DD	SMOKE DETECTOR – DUCT MOUNTED
S/S	START/STOP RELAY
SPT	STATIC PRESSURE TRANSMITTER
SP	STATIC PRESSURE SENSOR OR PROBE

SCHEMATIC SYMBOLS (CONT.)

SYMBOL	DESCRIPTION
SW	SWITCH
T	TEMPERATURE SENSOR – RIGID ELEMENT IN WELL
T	TEMPERATURE SENSOR – STRAP ON BULB
T	TEMP SENSOR – DUCT MOUNTED AVG ELEMENT
T	TEMP SENSOR – DUCT MOUNTED RIGID ELEMENT
T	THERMOSTAT OR TEMPERATURE SENSOR (AS DEFINED ON TC DRAWINGS)
TMR	TIMER SWITCH
XF	TRANSFORMER
	VALVE – 2 WAY CONTROL VALVE
	VALVE – 3 WAY CONTROL VALVE
VFC	VARIABLE FREQUENCY CONTROLLER
VS	VELOCITY SENSOR
VIB	VIBRATION SWITCH

WIRING SYMBOLS

M/S	COIL – MOTOR STARTER CONTACTOR
R	COIL – RELAY
	CONTACT – INSTANT OPERATING, NO
	CONTACT – INSTANT OPERATING, NC
	GROUND
	MOTOR, SINGLE PHASE
	PUSH BUTTON – MOMENTARY, NC (MUSHROOM HEAD)
H O A	SWITCH – 3 POSITION SELECTOR HAND/OFF/AUTO
	SWITCH – FLOW (AIR, WATER, ETC.), NO
	SWITCH – LIMIT, NO
	SWITCH – PRESSURE & VACUUM, NC
	SWITCH – TEMPERATURE ACTUATED, NO
	THERMAL OVERLOAD, SINGLE PHASE
OLs	THERMAL OVERLOAD CONTACTS–3 PHASE
	TRANSFORMER
	WIRE TERMINATION AT DEVICE
	WIRE TO WIRE TERMINATION
	WIRING NOT CONNECTED

ABBREVIATIONS

ABBREVIATION	DESCRIPTION
BAS	BUILDING AUTOMATION SYSTEM
DDC	DIRECT DIGITAL CONTROL
TC	TEMPERATURE CONTROLS
NO	NORMALLY OPEN
NC	NORMALLY CLOSED

NOTES:

1. SOME SYMBOLS & ABBREVIATIONS SHOWN MAY NOT APPLY TO THIS PROJECT.
2. REFER TO MECHANICAL STANDARDS ON DRAWING M0.1 FOR ADDITIONAL SYMBOLS & ABBREVIATIONS THAT MAY BE USED ON TEMPERATURE CONTROL DRAWINGS.

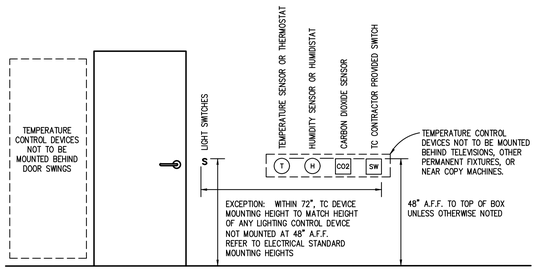

TC DEVICE STANDARD MOUNTING HEIGHTS DETAIL

NO SCALE

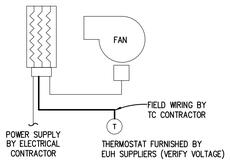

TYPICAL ECUH CONTROL

NOTE:
REFER TO FLOOR PLANS FOR QUANTITY AND LOCATION OF UNITS.

SEQUENCE OF OPERATION:
SPACE THERMOSTAT SHALL ENERGIZE UNIT HEATER CONTROL CIRCUIT TO MAINTAIN SPACE TEMPERATURE SETPOINT.

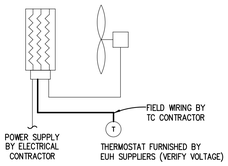

TYPICAL EUH CONTROL

NOTE:
REFER TO FLOOR PLANS FOR QUANTITY AND LOCATION OF UNITS.

SEQUENCE OF OPERATION:
SPACE THERMOSTAT SHALL ENERGIZE UNIT HEATER CONTROL CIRCUIT TO MAINTAIN SPACE TEMPERATURE SETPOINT.

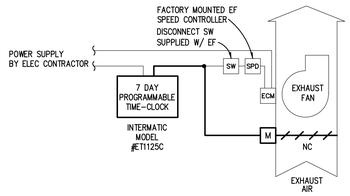

TYPICAL EXHAUST FAN CONTROL

NOTES:

1. REFER TO MECH FLOOR PLANS FOR QUANTITY AND LOCATIONS.
2. EXHAUST FAN SPEED SHALL BE MANUALLY SET VIA ON BOARD POTENTIOMETER DIAL DURING SYSTEM BALANCING.

SEQUENCE OF OPERATION:

1. EXHAUST FAN SHALL BE STARTED AND STOPPED BY LOCAL PROGRAMMABLE TIME CLOCK. WIRING INTERLOCK SHALL OPEN DAMPERS.

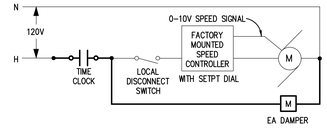

EF MOTOR CONTROL WIRING

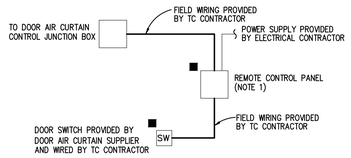

DOOR AIR CURTAIN FIELD WIRING

REFER TO FLOOR PLANS FOR QUANTITIES AND LOCATIONS

NOTES

1. ■ INDICATED COMPONENT FURNISHED BY DOOR AIR CURTAIN SUPPLIER AND INSTALLED BY TC CONTRACTOR.
2. COORDINATE ALL WIRING AND TERMINATIONS WITH DOOR AIR CURTAIN SUPPLIER.

TC GENERAL NOTES

1. THESE GENERAL NOTES SHALL BE APPLICABLE FOR ALL TEMPERATURE CONTROL (TC) DRAWINGS.
2. "PROVIDE" IS DEFINED AS "FURNISH AND INSTALL".
3. TEMPERATURE CONTROLS CONTRACTOR (TC CONTRACTOR) SHALL BE RESPONSIBLE TO COMPLY WITH ALL APPLICABLE CODES AND STANDARDS.
4. FOR TEMPERATURE CONTROL DRAWINGS ONLY: ALL DETAILED INFORMATION IDENTIFIED WITH HEAVY LINE WEIGHT SHALL BE PROVIDED BY TC CONTRACTOR. ALL OTHER INFORMATION IDENTIFIED WITH LIGHT LINE WEIGHT SHALL BE PROVIDED BY OTHER TRADES.
5. ALL CONTROL SCHEMATICS AND WIRING DIAGRAMS ARE FOR THE CLARIFICATION OF EQUIPMENT INTERLOCKING FUNCTIONS AND THE INTERFACE OF VARIOUS CONTRACTORS' WORK AND SHALL NOT BE MISTAKEN AS SHOP DRAWINGS FOR ACTUAL INSTALLATION.
6. TC CONTRACTOR SHALL PROVIDE DDC CONTROLLERS AS REQUIRED TO MEET INTENT OF DESIGN DOCUMENTS. REFER TO THE PLANS FOR THE DDC FUNCTIONS THAT APPLY TO EACH MECHANICAL SYSTEM.
7. ALL TC PROVIDED COMPONENTS AND ALL TC CONTRACTOR INSTALLED WIRING SHALL BE LABELED PER SPECIFICATIONS.
8. ALL WIRING AND SYSTEM CONTROL VOLTAGES SHALL BE IN ACCORDANCE WITH THE EQUIPMENT MANUFACTURER'S RECOMMENDATION AND THE ELECTRICAL SPECIFICATIONS.
9. VARIABLE FREQUENCY CONTROLLER, FAN AND PUMP MOTOR STARTERS, STARTER WIRING, CONTROL VOLTAGE TRANSFORMERS AND ASSOCIATED POWER WIRING SHALL BE PROVIDED BY OTHER TRADES.
10. DUCT SMOKE DETECTORS SHALL BE FURNISHED, INSTALLED AND WIRED TO THE FIRE ALARM SYSTEM BY THE ELECTRICAL CONTRACTOR. ELECTRICAL SHALL PROVIDE FIRE ALARM SYSTEM CONTROL MODULES FOR REQUIRED SAFETIES TO MOTOR STARTERS OR VFC'S AS INDICATED. CONTROL MODULES SHALL BE LOCATED NEAR RESPECTIVE MOTOR STARTERS OR VFCs. TC CONTRACTOR SHALL PROVIDE INTERLOCK WIRING FROM CONTROL MODULES TO MOTOR STARTERS OR VFCs.
11. ALL DDC AND CONTROL INTERLOCK WIRING SHALL BE BY TC CONTRACTOR UNLESS OTHERWISE NOTED. TC CONTRACTOR SHALL COORDINATE WITH VFC AND MOTOR STARTER SUPPLIERS TO DETERMINE EXACT WIRING REQUIREMENTS AND TERMINATION POINTS.
12. ALL DDC AND CONTROL INTERLOCK WIRING BETWEEN COMPONENTS SHALL BE INSTALLED WITHOUT INTERMEDIATE STOPS. WIRE SPLICING AT INTERMEDIATE TERMINAL STRIPS IS NOT ACCEPTABLE.
13. ALL ELECTRICAL WIRING AND RACEWAY SYSTEMS SHALL COMPLY WITH ELECTRICAL SPECIFICATION REQUIREMENTS. WHERE RACEWAY IS REQUIRED, TWO SEPARATE ELECTRICAL RACEWAY SYSTEMS SHALL BE PROVIDED: ONE FOR 120V WIRING AND THE OTHER FOR 24V WIRING.
14. TC CONTRACTOR SHALL BE RESPONSIBLE FOR ALL POWER SUPPLIES REQUIRED FOR TC SYSTEM UNLESS OTHERWISE NOTED. REFER TO ELECTRICAL PANEL SCHEDULES FOR SPARE CIRCUITS OR CIRCUITS DEDICATED TO TEMPERATURE CONTROLS. COORDINATE CIRCUIT USE WITH ELECTRICAL CONTRACTOR.
15. TC CONTRACTOR SHALL VERIFY EXACT LOCATION OF ALL FIELD MOUNTED COMPONENTS.
16. REFER TO TEMPERATURE CONTROLS STANDARD MOUNTING HEIGHTS DETAIL FOR ELEVATIONS OF WALL MOUNTED TEMPERATURE CONTROL DEVICES. PROVIDE WALL MOUNTED DEVICE GUARDS WHERE INDICATED ON TC DETAILS OR AT SPECIFIC LOCATIONS INDICATED ON MECHANICAL FLOOR PLANS.
17. TC CONTRACTOR SHALL PROVIDE AUXILIARY PANELS FOR REQUIRED PANEL MOUNTED EQUIPMENT SUCH AS RELAYS, TRANSDUCERS, CONTROL TRANSFORMERS, ETC. AUXILIARY PANELS SHALL BE LOCATED NEXT TO ASSOCIATED DDC PANEL. DEPENDING ON WIRE QUANTITY OR COMPLEXITY, PROVIDE CONDUITS BETWEEN PANELS OR WIRING THROUGH WITH CONDUIT STUBS ABOVE ALL ASSOCIATED PANELS.
18. REMOTELY MOUNTED FIELD DEVICES SUCH AS RELAYS, CONTROL TRANSFORMERS, ETC., SHALL BE HOUSED IN AN ENCLOSURE PROVIDED BY THE TC CONTRACTOR.
19. CONTROL TRANSFORMERS WHEN REQUIRED SHALL BE SIZED FOR 150% OF ACTUAL LOAD.
20. FREEZESTATS SHALL BE MOUNTED ON UPSTREAM FACE OF COOLING COILS. FREEZESTAT QUANTITY SHALL BE ONE PER 20 SQ. FT OF CROSS SECTIONAL AREA.
21. CURRENT SWITCHES USED FOR OPERATIONAL STATUS SHALL HAVE CURRENT THRESHOLD SETPOINT ADJUSTED TO INDICATE BELT OR DRIVE FAILURE.
22. ALL CONTROL VALVES, CONTROL DAMPERS AND ASSOCIATED CONTROL ACTUATORS IDENTIFIED ON TC DRAWINGS SHALL BE FURNISHED BY TC CONTRACTOR UNLESS OTHERWISE NOTED. DAMPER SIZE AND LOCATIONS ARE INDICATED ON MECHANICAL FLOOR PLAN DRAWINGS.
23. ALL CONTROL VALVES AND DAMPERS FURNISHED BY THE TC CONTRACTOR SHALL BE INSTALLED BY THE MECHANICAL CONTRACTOR. ALL PIPE PENETRATIONS AND BASIC FITTINGS REQUIRED FOR SENSOR INSTALLATIONS SHALL BE PROVIDED BY MECHANICAL CONTRACTOR.
24. DAMPER ACTUATORS SHALL BE INSTALLED BY TC CONTRACTOR WHEN FURNISHED BY TC CONTRACTOR.
25. ALL INSTRUMENTATION TUBING REQUIRED FOR DPS AND DPT COMPONENT INSTALLATIONS SHALL BE PROVIDED BY TC CONTRACTOR.
26. TC CONTRACTOR SHALL FIELD MOUNT ALL REQUIRED "SHIPPED LOOSE" PACKAGED CONTROL COMPONENTS FURNISHED BY EQUIPMENT SUPPLIERS WHERE INDICATED. ALL REQUIRED 24V AND 120V FIELD WIRING SHALL BE PROVIDED BY TC CONTRACTOR UNLESS NOTED OTHERWISE. TC CONTRACTOR SHALL COORDINATE SPECIFIC SYSTEM WIRING REQUIREMENTS WITH PACKAGED EQUIPMENT SUPPLIERS.

TMP ARCHITECTURE

TMP ARCHITECTURE INC
1191 WEST SQUARE LAKE ROAD
BLOOMFIELD HILLS • MICHIGAN • 48302
PH • 248.338.4561 FX • 248.338.0223
EM • INFO@TMP-ARCHITECTURE.COM

REGISTRATION SEAL

CONSULTANT

Peter Basso Associates
CONSULTING ENGINEERS
5145 Livernois, Suite 100
Troy, Michigan 48098-3276
Tel: 248-879-5666
www.PeterBassoAssociates.com
PBA Project No.: 2023.0156.03

PROJECT TITLE

Troy High School
Athletic Fields
Bid Package No. 02B

Troy School District
Troy, Michigan

DRAWING TITLE

TEMPERATURE CONTROL STANDARDS AND GENERAL NOTES

ISSUE DATES

DATE:	ISSUED FOR:
12-10-2024	CONSTRUCTION DOCUMENTS

DRAWN	WTF
CHECKED	KLH
APPROVED	SVM

PROJECT NO.

22104E

DRAWING NO.

M8.1

G:\2023\2023-0156-00\CAD\03 – Athletics Phase 2\2023-0156-03-M8-CP.dwg, M8.1, 12/9/2024 11:58:08 AM, Alexandra A. Muncey, None ,0.13459, Peter Basso Associates Inc.

ELECTRICAL SYMBOL LIST

(NOTE: SOME SYMBOLS AND ABBREVIATIONS SHOWN MAY NOT APPLY TO THIS PROJECT)

SYMBOL	DESCRIPTION
X (NL)	X DENOTES FIXTURE TYPE (NL INDICATES NIGHT LIGHT)
	FILL DENOTES EMERGENCY FIXTURE
	TROFFER LIGHT
	STRIP LIGHT
	LINEAR LIGHT
	MULTIHEAD ADJUSTABLE LIGHT
	DOWN LIGHT
	DIRECTIONAL DOWN LIGHT
	DECORATIVE LIGHT
	DECORATIVE LIGHT
	WALL MOUNTED LIGHT
	WALL SCONCE
	ARM MOUNTED LIGHT
	LIGHTING TRACK
	TRACK LIGHT
	ADJUSTABLE FLOOD LIGHT
	STEP LIGHT
	LED TAPE
	REMOTE DRIVER
	HIGH BAY LIGHT
	POLE MOUNTED LIGHT
	POST TOP LIGHT
	BOLLARD LIGHT
	IN GROUND LIGHT
	EMERGENCY LIGHT
	EXIT LIGHT WITH DIRECTIONAL ARROWS (FILLED AREA INDICATES FACE)
	EXIT LIGHT WITH DIRECTIONAL ARROWS (FILLED AREA INDICATES FACE)
	EXIT LIGHT – WALL MOUNTED (FILLED AREA INDICATES FACE)
	EXIT/EMERGENCY LIGHT COMBO – WALL MOUNTED (FILLED AREA INDICATES FACE)
BCELTS	BRANCH CIRCUIT EMERGENCY LIGHTING TRANSFER SWITCH
ALCR	AUTOMATIC LOAD CONTROL RELAY
LC	LIGHTING CONTROL DEVICE – REFER TO LIGHTING CONTROL SCHEDULE
XX	ROOM CONTROL DESIGNATION – REFER TO LIGHTING CONTROL SCHEDULE
S	SINGLE POLE TOGGLE SWITCH
S2	TWO POLE TOGGLE SWITCH
S3	3 WAY TOGGLE SWITCH
S4	4 WAY TOGGLE SWITCH
K	KEY OPERATED SWITCH
K3	3 WAY KEY OPERATED SWITCH
K4	4 WAY KEY OPERATED SWITCH
D	DIMMER SWITCH
D3	3 WAY DIMMER SWITCH
Do	DIMMER OCCUPANCY SENSOR SWITCH
DL	LOW VOLTAGE DIMMER SWITCH
SP	PILOT SWITCH

SYMBOL	DESCRIPTION
TWC	TWO-WAY COMMUNICATION SYSTEM CALL STATION
TWCD	TWO-WAY COMMUNICATION SYSTEM AUTO DIALER
TWCA	TWO-WAY COMMUNICATION SYSTEM ANNUNCIATOR & COMMUNICATION PANEL
TWCP	TWO-WAY COMMUNICATION SYSTEM POWER SUPPLY WITH BATTERY BACK-UP
TWCDP	TWO-WAY COMMUNICATION SYSTEM AUTO DIALER POWER SUPPLY WITH BATTERY BACK-UP
RGP	REMOTE GENERATOR ANNUCIATOR PANEL
ATS	AUTOMATIC TRANSFER SWITCH
UPS	UNINTERRUPTIBLE POWER SUPPLY
CSX	LOW VOLTAGE CONTROL STATION "X" INDICATES TYPE
	SINGLE / DUPLEX RECEPTACLE OUTLET "X" INDICATES TYPE
	SINGLE/DUPLEX RECEPTACLE OUTLET CONTROLLED BY AUTOMATIC CONTROL DEVICE/SYSTEM
HH	QUAD RECEPTACLE OUTLET
X	ABOVE COUNTER DUPLEX RECEPTACLE OUTLET (SIMILAR FOR TAMPER RESISTANT, CONTROLLED, QUADS, EMERGENCY, UPS, USB, AND GFCI RECEPTACLE OUTLETS)
	DUPLEX GROUND FAULT CIRCUIT INTERRUPTER RECEPTACLE OUTLET
	DEAD FRONT GROUND FAULT CIRCUIT INTERRUPTER
	DUPLEX EMERGENCY RECEPTACLE OUTLET
	DUPLEX TAMPER RESISTANT RECEPTACLE OUTLET
	QUAD TAMPER RESISTANT RECEPTACLE OUTLET
X	DUPLEX UPS RECEPTACLE OUTLET
	DUPLEX RECEPTACLE OUTLET WITH 2 USB PORTS
X	4 PORT USB CHARGING STATION
X	CEILING MOUNTED DUPLEX/QUAD RECEPTACLE OUTLET
	POWER POLE
TGB	TELECOMMUNICATION GROUNDING BUS BAR
TMGB	TELECOMMUNICATION MAIN GROUNDING BUS BAR
	MULTI-OUTLET SURFACE RACEWAY
ALCR	AUTOMATIC LOAD CONTROL RELAY
	MULTI-SERVICE DROP SEE ELECTRICAL DETAILS AND DIAGRAMS SHEET "X" INDICATES TYPE
PTX	POKE-THROUGH ASSEMBLY "X" INDICATES TYPE
FBX	FLOOR SERVICE FITTING "X" INDICATES TYPE
AFX	ACCESS FLOOR SERVICE FITTING "X" INDICATES TYPE
RX	CORD REEL "X" INDICATES TYPE
	DUAL SWITCHING FOR INNER/OUTER LAMPS OF FLUORESCENT LIGHT FIXTURES
	3-WAY DUAL SWITCHING FOR INNER/OUTER LAMPS OF FLUORESCENT LIGHT FIXTURES
	4-WAY DUAL SWITCHING FOR INNER/OUTER LAMPS OF FLUORESCENT LIGHT FIXTURES
ST	DIGITAL TIME SWITCH
S1	ILLUMINATED TOGGLE SWITCH FOR CONTROL OF LIGHTING ON CRITICAL POWER-ILLUMINATED WHEN SWITCH IS IN "OFF" POSITION
SL	LOW VOLTAGE SWITCH
SO	OCCUPANCY SENSOR REFER TO ELECTRICAL STANDARD SCHEDULES
SO2	OCCUPANCY SENSOR
OS X	OCCUPANCY SENSOR "X" INDICATES TYPE

SYMBOL	DESCRIPTION
CP	CONTROL PANEL
	MOTOR
VFC	VARIABLE FREQUENCY CONTROLLER.
	MANUAL CONTROLLER
	MAGNETIC CONTROLLER
	COMBINATION MAGNETIC CONTROLLER
	NON-FUSIBLE DISCONNECT SWITCH
	FUSIBLE DISCONNECT SWITCH
CB	ENCLOSED CIRCUIT BREAKER
	PUSH BUTTON STATION
J	JUNCTION BOX
	HARD WIRE POWER CONNECTION
	GROUND ROD
	GROUND CONNECTION
HH	HANDHOLE
ACCP	ACCESS CONTROL CONTROL PANEL
ACPS	ACCESS CONTROL POWER SUPPLY
	CIRCUIT BREAKER
	DRAWOUT CIRCUIT BREAKER MANUALLY/ OPERATED
	DRAWOUT CIRCUIT BREAKER ELECTRICALLY/ OPERATED
	SWITCH
FACP	AUTOMATIC OR MANUAL TRANSFER SWITCH
	FUSE
	TRANSFORMER
	CURRENT TRANSFORMER
	POTENTIAL TRANSFORMER
	LIGHTNING ARRESTOR
X	PANELBOARD "X" INDICATES PANELBOARD NAME
	GROUND
	STRESS CONE TERMINATION
K	SECURITY KEY INTERLOCK
G	ENGINE GENERATOR
M	UTILITY METER
EMU	ELECTRONIC METERING UNIT
A	AMMETER
V	VOLTMETER
AS	AMMETER SWITCH
VS	VOLTMETER SWITCH
SPD	SURGE PROTECTIVE DEVICE
CR	CONTROL RELAY
TDR	TIME DELAY RELAY
PRM	PHASE ROTATION MONITOR
	CAMLOK – MALE
	CAMLOK – FEMALE
	THERMAL OVERLOAD RELAY
	NORMALLY OPEN CONTACTS
	NORMALLY CLOSED CONTACTS
	N.O. PUSH BUTTON SINGLE CIRCUIT
	N.C. PUSH BUTTON SINGLE CIRCUIT
X–X	CABLE VAULT "X–X" INDICATES TYPE
	BRANCH CIRCUIT PANELBOARD
	LOAD CENTER
	MOTOR CONTROL CENTER
T	TRANSFORMER
	DISTRIBUTION EQUIPMENT
GB	ELECTRICAL GROUNDING BUS BAR
PB	PLUG IN BUSWAY
FB	FEEDER BUSWAY
12x4	CABLE TRAY – ALL SIZES IN INCHES

SYMBOL	DESCRIPTION
	SECURITY CAMERA
MD	MOTION DETECTOR
	SECURITY KEY SWITCH
DC	DOOR CONTACT
KP	KEY PAD
CR	CARD READER
DB	DURESS PUSH BUTTON STATION
DE	DELAYED EGRESS
REX	REQUEST TO EXIT STATION
PP	AUTOMATIC DOOR PUSH PAD OPERATOR
DO	DOOR OPERATOR
DA	DOOR ACTUATOR
AC	ACCESS CONTROL STATION
	ACCESS CONTROL CONTROL PANEL
	ACCESS CONTROL POWER SUPPLY
	CIRCUIT BREAKER
	DRAWOUT CIRCUIT BREAKER MANUALLY/ OPERATED
	DRAWOUT CIRCUIT BREAKER ELECTRICALLY/ OPERATED
	SWITCH
FACP	AUTOMATIC OR MANUAL TRANSFER SWITCH
FAA	FUSE
	TRANSFORMER
NAC	CURRENT TRANSFORMER
MM	POTENTIAL TRANSFORMER
CM	LIGHTNING ARRESTOR
TS	PANELBOARD "X" INDICATES PANELBOARD NAME
FS	GROUND
DR	STRESS CONE TERMINATION

REFER TO ELECTRICAL STANDARD SCHEDULES

SYMBOL	DESCRIPTION
F	MANUAL FIRE ALARM BOX
SD	SMOKE DETECTOR
DD	DUCT SMOKE DETECTOR
CO	CARBON MONOXIDE DETECTOR
RT	REMOTE TEST STATION (FOR DUCT DETECTOR)
HD	HEAT DETECTOR
BD	PROJECTED BEAM DETECTOR
F	FIRE ALARM BELL
F	FIRE ALARM AUDIBLE NOTIFICATION APPLIANCE
XX	FIRE ALARM VISUAL NOTIFICATION APPLIANCE "XX" INDICATES CANDELA RATING IF NO RATING SHOWN, APPLIANCE IS 15cd
XX	FIRE ALARM COMBINATION VISUAL/ AUDIBLE "XX" INDICATES CANDELA RATING IF NO RATING SHOWN, APPLIANCE IS 15cd
F XX	FIRE ALARM COMBINATION VISUAL/ AUDIBLE NOTIFICATION APPLIANCE– CEILING MOUNTED "XX" INDICATES CANDELA RATING IF NO RATING SHOWN, APPLIANCE IS 15cd
XX	FIRE ALARM VISUAL NOTIFICATION APPLIANCE CEILING MOUNTED "XX" INDICATES CANDELA RATING IF NO RATING SHOWN, APPLIANCE IS 15cd
F	FIRE ALARM AUDIBLE NOTIFICATION APPLIANCE – CEILING MOUNTED
F	FIREFIGHTERS PHONE JACK
FACP	FIRE ALARM CONTROL PANEL
FAA	FIRE ALARM ANNUNCIATOR PANEL
NAC	NOTIFICATION APPLIANCE CIRCUIT EXTENDER PANEL
MM	ADDRESSABLE MONITORING MODULE
CM	ADDRESSABLE CONTROL MODULE
TS	ADDRESSABLE MONITORING MODULE FOR TAMPER SWITCH
FS	ADDRESSABLE MONITORING MODULE FOR FLOW SWITCH
DR	MAGNETIC DOOR RELEASE

STANDARD MOUNTING HEIGHTS

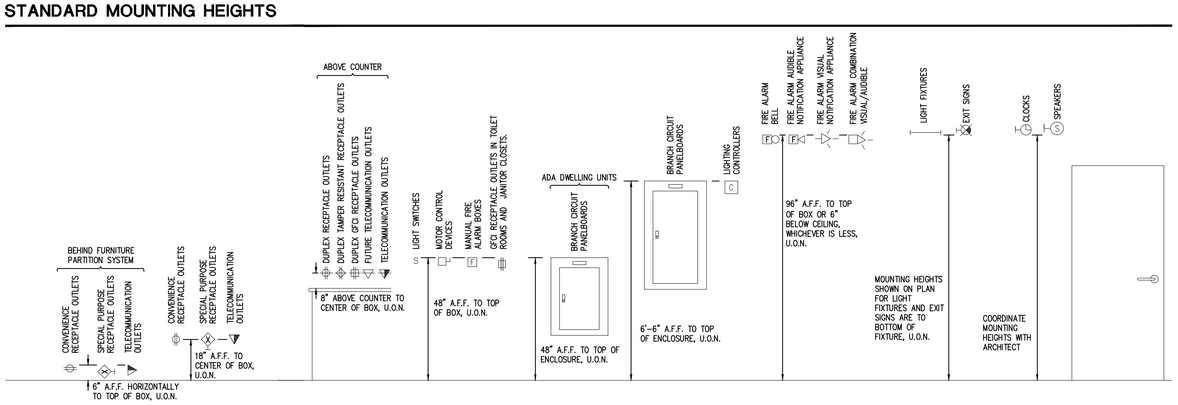

ELECTRICAL DRAWING INDEX

SHEET NO.	SHEET TITLE
E0.1	ELECTRICAL STANDARDS AND DRAWING INDEX
E0.2	ELECTRICAL STANDARD SCHEDULES
ED1.0	ELECTRICAL SITE DEMOLITION PLAN
E1.0	ELECTRICAL SITE NEW WORK PLAN
ED1.1	ELECTRICAL DEMOLITION PLAN
E2.1	LIGHTING NEW WORK PLANS
E3.1	POWER NEW WORK PLANS
E5.1	ONE LINE DIAGRAM
E5.2	PANEL SCHEDULES
E7.1	ELECTRICAL DETAILS AND DIAGRAMS

ELECTRICAL ABBREVIATION LIST

ABBREVIATION	DESCRIPTION
A	AMPERES
AER	ARC ENERGY REDUCTION
AF	AMPERES FRAME (BREAKER RATING)
AFCI	ARC FAULT CIRCUIT INTERRUPTER
A.F.F.	ABOVE FINISH FLOOR
AIC	AMPS INTERRUPTING CAPACITY
AL	AUDIENCE LEFT
ALCR	AUTOMATIC LOAD CONTROL RELAY
AR	AUDIENCE RIGHT
AT	AMPERES TRIP (BREAKER SETTING)
ATS	AUTOMATIC TRANSFER SWITCH
AUX	AUXILIARY
BCELTS	BRANCH CIRCUIT EMERGENCY LIGHTING TRANSFER SWITCH
BKR	BREAKER
BPS	BOLTED PRESSURE SWITCH
C	CONDUIT
CB	CIRCUIT BREAKER
CFCI	CONTRACTOR FURNISHED, CONTRACTOR INSTALLED
CKT	CIRCUIT
CT	CURRENT TRANSFORMER
DEMO	DEMOLITION
DIM	DIMENSION
DISC	DISCONNECT
DP	DISTRIBUTION PANEL
DS	DOWNSTAGE
DWG	DRAWING
EBU	EMERGENCY BATTERY UNIT
EC	ELECTRICAL CONTRACTOR
ECM	ELECTRONICALLY COMMUTATED MOTOR
ELEC	ELECTRICAL
EM/ EMERG	EMERGENCY
EMT	ELECTRICAL METALLIC TUBING
EO	ELECTRICALLY OPERATED
EPO	EMERGENCY POWER OFF
EWC	ELECTRIC WATER COOLER
EXIST	EXISTING
FA	FIRE ALARM
FLA	FULL LOAD AMPS
FLR	FLOOR
FOH	FRONT OF HOUSE
FSEC	FOOD SERVICE EQUIPMENT CONTRACTOR
FU	FUSE
G/GRD/EG	GROUND
GFCI	GROUND FAULT CIRCUIT INTERRUPTER
GFP	GROUND FAULT PROTECTION
HOA	HAND–OFF–AUTO
HP	HORSEPOWER
HV	HIGH VOLTAGE
HZ	HERTZ
IG	ISOLATED GROUND
JB	JUNCTION BOX
KA	THOUSAND AMP
KV	KILOVOLT
KVA	KILOVOLT – AMPERES
KW	KILOWATT
KWH	KILOWATT – HOURS
LA	LIGHTNING ARRESTOR
LP	LIGHTING PANEL
LDP	LIGHTING DISTRIBUTION PANEL
MAX	MAXIMUM
MCA	MINIMUM CIRCUIT AMPACITY
MCB	MAIN CIRCUIT BREAKER
MCC	MOTOR CONTROL CENTER
MDP	MAIN DISTRIBUTION PANEL
MECH	MECHANICAL
MIN	MINIMUM
MISC.	MISCELLANEOUS
MLO	MAIN LUGS ONLY
MOP	MAXIMUM OVERCURRENT PROTECTION
MTD	MOUNTED
MTG	MOUNTING
MTR	MOTOR
N	NEUTRAL
NC	NORMALLY CLOSED
NEC	NATIONAL ELECTRICAL CODE
NF	NON–FUSIBLE
NIC	NOT IN CONTRACT
NL	NIGHT LIGHT
NO	NORMALLY OPEN
NTS	NOT TO SCALE
OC	ON CENTER
OFCI	OWNER FURNISHED, CONTRACTOR INSTALLED
OFOI	OWNER FURNISHED, OWNER INSTALLED
P	POLE
PB	PUSHBUTTON STATION
PH	PHASE
PT	POTENTIAL TRANSFORMER
PDP	POWER DISTRIBUTION PANEL
RECEPT.	RECEPTACLE
RDP	RECEPTACLE DISTRIBUTION PANEL
RP	RECEPTACLE PANEL
RSC	RIGID STEEL CONDUIT
SCCR	SHORT CIRCUIT CURRENT RATING
SCHED	SCHEDULE
SPD	SURGE PROTECTION DEVICE
ST	SHUNT TRIP
SW	SWITCH
SWBD	SWITCHBOARD
SWGR	SWITCHGEAR
TB	TERMINAL BOX
TELECOM	TELECOMMUNICATIONS
TR	TAMPER RESISTANT
TTB	TELEPHONE TERMINAL BACKBOARD
TYP	TYPICAL
U.O.N.	UNLESS OTHERWISE NOTED
US	UPSTAGE
V	VOLTS
W	WIRE OR WATTS
WAP	WIRELESS ACCESS POINT
WG	WIRE GUARD
WP	WEATHERPROOF
WR	WEATHER RESISTANT
XFMR	TRANSFORMER
XP	EXPLOSION PROOF
(E)	EXISTING
(R)	RELOCATED

STANDARD METHODS OF NOTATION

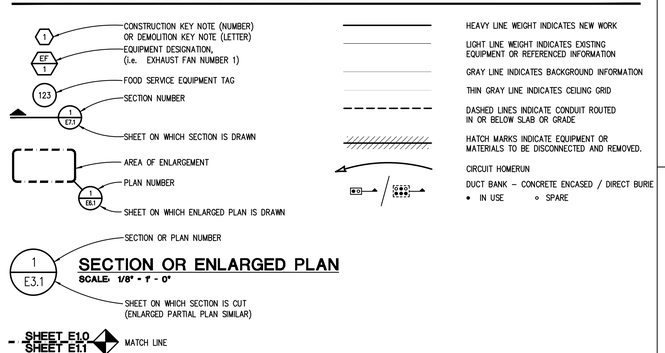

TMP ARCHITECTURE

TMP ARCHITECTURE INC
1191 WEST SQUARE LAKE ROAD
BLOOMFIELD HILLS • MICHIGAN • 48302
PH • 248.338.4561 FX • 248.338.0223
EM • INFO@TMP-ARCHITECTURE.COM

REGISTRATION SEAL

CONSULTANT

Peter Basso Associates
CONSULTING ENGINEERS
5145 Livernois, Suite 100
Troy, Michigan 48098-3276
Tel: 248-879-5666
www.PeterBassoAssociates.com

PBA Project No.: 2023.0156.03

PROJECT TITLE

Troy High School Athletic Fields Bid Package No. 02B

Troy School District
Troy, Michigan

DRAWING TITLE

ELECTRICAL STANDARDS AND DRAWING INDEX

ISSUE DATES

DATE:	ISSUED FOR:
12–10–2024	CONSTRUCTION DOCUMENTS

DRAWN ZDB
CHECKED ZDB
APPROVED STP

PROJECT NO.
22104E

DRAWING NO.
E0.1

G:\2023\2023-0156-00\CAD\03 - Athletics Phase 2\2023-0156-03-E0-IND.dwg, E0.1, 12/9/2024 11:56:35 AM, Alexandra A. Muncey, None ,0.13459, Peter Basso Associates Inc.

DTE LIGHTING INCENTIVES PROGRAM

THE ELECTRICAL CONTRACTOR SHALL BE RESPONSIBLE FOR PROVIDING AND MEETING ALL REQUIREMENTS FOR THE OWNER TO PARTICIPATE IN THE CURRENT DTE ENERGY SAVINGS PROGRAM. THE FOLLOWING ITEMS WILL BE REQUIRED BUT NOT LIMITED TO, FOR OWNER TO PARTICIPATE IN THIS PROGRAM:

1. ON BEHALF OF THE OWNER, PROVIDE ALL REQUIRED INFORMATION FOR THE RESERVATION APPLICATION. REFER TO DTE ENERGY PROGRAM APPLICATION AT www.eecontractor.com
2. CONTRACTOR BUSINESS INFORMATION.
3. LIGHTING INCENTIVES WORKSHEET.
4. TYPE OF FIXTURES REMOVED, WATTAGE AND LAMP SIZE.
5. EASY TO READ ITEMIZED INVOICES WITH PART NUMBERS OF ALL LED LIGHT FIXTURES, AND CONTROLS.
6. MANUFACTURERS CUT SHEETS WITH HIGHLIGHTED FIGURES, TYPES OF LED FIXTURES, DRIVERS, AND CONTROLS, ETC. AS REQUIRED BY DTE.
7. MEASURES ARE COMPLETELY INSTALLED WITH 90 DAYS OF PROJECT APPROVAL.

IT IS THE ELECTRICAL CONTRACTORS RESPONSIBILITY TO CONTACT DTE'S ENERGY SAVINGS TEAM OR ASSIGNED REPRESENTATIVE IF A PROJECT IS DELAYED, OR SUBSTANTIALLY CHANGED.

THE ELECTRICAL CONTRACTOR SHALL WORK WITH AND COORDINATE WITH THE OWNER FOR THE RESERVATION PROCESS PRIOR TO SITE WORK BEING CONDUCTED AND POST REVIEW INSPECTION FOR REMOVAL AND INSTALLATION OF ALL EQUIPMENT RELATED TO THE INCENTIVE PROGRAM.

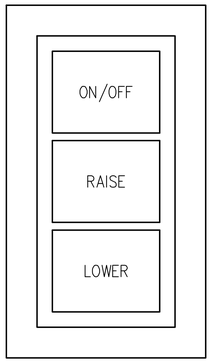

LC **TYPICAL SINGLE ZONE DIMMING LIGHTING CONTROL STATION**

NO SCALE

NOTES:
1. FOR LIGHTING CONTROL DEVICES IN REMOTE LOCATIONS DEVICES SHALL HAVE PILOT LIGHT AND LABELING FOR FIXTURES BEING CONTROLLED.

FEEDER AND BRANCH CIRCUIT SIZING SCHEDULE - GENERAL PURPOSE

OVERCURRENT DEVICE RATING (AMPERES)	COPPER CONDUCTORS						KEYED NOTES	ALUMINUM CONDUCTORS					
	WIRE SIZE (AWG OR KCMIL)		CONDUIT SIZE					WIRE SIZE (AWG OR KCMIL)		CONDUIT SIZE			
	PHASE & NEUTRAL	GROUND	SINGLE PHASE 2 WIRE+G (1PH, 1N, 1G, 2PH, 1G)	SINGLE PHASE 3 WIRE+G (2PH, 1N, 1G)	THREE PHASE 3 WIRE+G (3PH, 1G)	THREE PHASE & NEUTRAL 4 WIRE+G (3PH, 1N, 1G)		PHASE & NEUTRAL	GROUND	SINGLE PHASE 3 WIRE+G (2PH, 1N, 1G)	THREE PHASE 3 WIRE+G (3PH, 1G)	THREE PHASE & NEUTRAL 4 WIRE+G (3PH, 1N, 1G)
15–20	12	12	3/4"	3/4"	3/4"	3/4"		NOT ACCEPTABLE					
25–30	10	10	3/4"	3/4"	3/4"	3/4"							
35–40	8	10	3/4"	3/4"	3/4"	3/4"							
45–50	8 (6)	10	3/4"	3/4"	3/4"	3/4"	1						
60	6 (4)	10	3/4" (1")	3/4" (1")	3/4" (1")	1" (1 1/4")	1						
70	4	8	1"	1 1/4"	1 1/4"	1 1/4"							
80	4 (3)	8	1"	1 1/4"	1 1/4"	1 1/4"	1						
90–100	3 (2)	8	1 1/4"	1 1/4"	1 1/4"	1 1/4"	1	1	6	1 1/2"	1 1/2"	1 1/2"	
110	2 (1)	6	–	1 1/4"	1 1/4"	1 1/4" (1 1/2")	1	1/0	4	1 1/2"	1 1/2"	2"	
125	1 (1/0)	6	–	1 1/4" (1 1/2")	1 1/4" (1 1/2")	1 1/2"	1	2/0	4	1 1/2"	1 1/2"	2"	
150	1/0	6	–	1 1/2"	1 1/2"	1 1/2"		3/0	4	2"	2"	2 1/2"	
175	2/0	6	–	2"	2"	2"		4/0	4	2"	2"	2 1/2"	
200	3/0	6	–	2"	2"	2 1/2"		250	4	2"	2"	3"	
225	4/0	4	–	2"	2"	2 1/2"		300	2	2 1/2"	2 1/2"	3"	
250	250	4	–	2 1/2"	2 1/2"	2 1/2"		350	2	2 1/2"	2 1/2"	3"	
300	350	4	–	2 1/2"	2 1/2"	3"		500	2	3"	3"	3 1/2"	
350	500	3	–	3"	3"	3"		2-4/0	2-1/0	2-2"	2-2"	2-2"	
400	500	3	–	3"	3"	3"		2-250	2-1/0	2-2 1/2"	2-2 1/2"	2-2 1/2"	

GENERAL NOTES:
1. CONTRACTOR TO SIZE FEEDERS AND BRANCH CIRCUITS BASED ON THIS SCHEDULE AND OVER CURRENT DEVICE SIZE, UNLESS NOTED OTHERWISE.
2. CONTRACTOR MAY COMBINE 20A CIRCUITS AS NOTED IN SPECIFICATION.
3. COPPER CONDUCTORS ARE BASED ON THHN/THWN-2 UP TO AND INCLUDING #4/0. COPPER CONDUCTORS LARGER THAN #4/0 AND ALUMINUM CONDUCTORS ARE BASED ON XHHW-2.
4. CONDUIT SIZES ARE VALID FOR EMT OR RSC. CONDUIT SIZES SHALL BE ADJUSTED AS REQUIRED FOR OTHER TYPES OF CONDUIT.
5. SIZE OF DISCONNECT SWITCH LOCATED AT EQUIPMENT SHALL BE SIZED BASED UPON OVERCURRENT PROTECTION OF THAT DEVICE.
6. OBTAIN APPROVAL FROM ENGINEER PRIOR TO INSTALLING DIFFERENT SIZE/QUANTITY OF CONDUCTORS TO OBTAIN AN EQUIVALENT AMPACITY.

KEYED NOTES:
1. CONDUCTORS ARE BASED ON 90°C, 600V INSULATED WIRE APPLIED AT 75°C FOR TERMINATION RATED 60/75°C OR 75°C. FOR TERMINATION RATED AT 60°C, USE CONDUCTORS AND CONDUIT SIZES INDICATED IN PARENTHESES.

DRY TYPE DISTRIBUTION TRANSFORMER CIRCUIT SIZING SCHEDULE

XFMR KVA	PRIMARY (480V)	SECONDARY (208Y/120 VOLT)								KEYED NOTES
	OVERCURRENT PROTECTION	OVERCURRENT PROTECTION	CONDUCTOR SIZE (AWG OR KCMIL)						GROUNDING ELECTRODE CONDUCTOR	
			PHASE & NEUTRAL		SUPPLY SIDE BONDING JUMPER		CONDUIT (4W + SSBJ)			
			COPPER	ALUMINUM	COPPER	ALUMINUM	COPPER	ALUMINUM	COPPER	ALUMINUM	
9	20A	30A	10	NA	8	NA	3/4"	NA	8	NA	
15	25A	60A	6	NA	8	NA	1"	NA	8	NA	1
30	45A	100A	3	1	8	6	1 1/4"	1 1/2"	8	6	1
45	70A	175A	2/0	4/0	4	2	2"	2 1/2"	4	2	
75	125A	300A/225A	350 / 4/0	500 / 300	2	1/0	3"	3 1/2"	2	1/0	2
112 1/2	175A	400A	600	2-250	1/0	2	3 1/2"	2-2 1/2"	1/0	1/0	
150	225A	600A	2-350	2-500	2-2	2-1/0	2-3"	2-3 1/2"	2/0	4/0	
225	350A	800A	2-600	3-400	2-1/0	3-1/0	2-3 1/2"	3-3"	3/0	4/0	
300	500A	1200A	3-600	4-500	3-1/0	4-1/0	3-3 1/2"	4-3 1/2"	3/0	250	
500	800A	1600A	4-600	5-600	4-1/0	5-3/0	4-3 1/2"	5-3 1/2"	3/0	250	

GENERAL NOTES:
1. TRANSFORMERS AND FEEDERS ARE BASED ON 480 VOLT, 3 PHASE, 3 WIRE PRIMARY AND 208Y/120 VOLT, 3 PHASE, 4 WIRE, SECONDARY.
2. ALUMINUM CONDUCTORS ARE PERMITTED ONLY IF INCLUDED IN FEEDER AND BRANCH CIRCUIT SIZING SCHEDULE.
3. PRIMARY OVERCURRENT PROTECTION IS SIZED AT 125% OF TRANSFORMER FULL LOAD CURRENT. PROVIDE PRIMARY OVERCURRENT DEVICE SELECTION TO ALLOW TRANSFORMER IN-RUSH CURRENT AND PROTECT BASED ON THE ANSI DAMAGE CURVE. IF MANUFACTURER REQUIRES PRIMARY OVERCURRENT GREATER THAN 125% (NOT TO EXCEED 250%) THEN PRIMARY FEEDER SHALL BE INCREASED ACCORDINGLY.
4. SECONDARY CONDUCTOR BASED ON TEN FOOT MAXIMUM LENGTH (NEC 240.21(C)(2)). IF CONDUCTORS ARE LONGER THAN TEN FOOT, REQUIREMENTS IN NEC 240.21(C)(6) MUST BE MET. IN NO CASE SHALL CONDUCTORS BE LONGER THAN TWENTY-FIVE FEET.

KEYED NOTES:
1. CONDUCTORS ARE BASED ON 90°C, 600V. INSULATED WIRE APPLIED AT 75°C FOR TERMINATION RATED 60/75°C OR 75°C.
2. THE SMALLER SIZE IS TO BE USED TO FEED 225A PANELBOARDS.

BRANCH CIRCUIT VOLTAGE DROP WIRING SCHEDULE FOR SINGLE PHASE CIRCUITS

BRANCH CKT RATING (A)	WIRE SIZE (AWG)	MAXIMUM BRANCH CIRCUIT LENGTH (IN FEET)				
		120V	208V	240V	277V	480V
20A	12	83	143	165	191	331
	10	128	222	256	295	511
	8	201	348	402	464	804
	6	313	542	625	721	1250
30A	10	85	148	170	197	341
	8	134	232	268	309	536
	6	208	361	417	481	833
	4	313	542	625	721	1250

GENERAL NOTES:
1. THE ABOVE TABLE VALUES ARE BASED ON COPPER CONDUCTORS, IN STEEL CONDUIT, WITH A LOAD POWER FACTOR OF 0.85 PER NEC CHAPTER 9, TABLE 9.
2. PROVIDE BRANCH CIRCUIT CONDUCTORS AS INDICATED IN THE TABLE ABOVE FOR ALL LIGHTING AND RECEPTACLE BRANCH CIRCUITS. WHERE BRANCH CIRCUITS SERVE DEDICATED EQUIPMENT, THE CONTRACTOR MAY PERFORM VOLTAGE DROP CALCULATIONS BASED ON ACTUAL EQUIPMENT CONNECTED LOAD AND PROVIDE CONDUCTORS APPROPRIATELY SIZED TO LIMIT VOLTAGE DROP TO A MAXIMUM OF 3%.
3. CONDUCTOR SIZES ARE BASED ON MAXIMUM OF 9 CURRENT CARRYING CONDUCTORS IN A SINGLE CONDUIT.
4. LIMITS FOR CONDUCTOR LENGTHS SHOWN ARE BASED ON A MAXIMUM BRANCH CIRCUIT LOADING OF 64% OF THE BRANCH BREAKER RATING AND A MAXIMUM OF 3 PERCENT VOLTAGE DROP TO COMPLY WITH ASHRAE 90.1 AND THE NEC. FOR CIRCUITS LOADED GREATER THAN 64% OF BRANCH BREAKER RATING, THE CONTRACTOR SHALL PROVIDE CONDUCTORS APPROPRIATELY SIZED TO LIMIT VOLTAGE DROP TO 3%.

MOTOR CIRCUIT SIZING SCHEDULE (120V, SINGLE PHASE)

MOTOR HP	CIRCUIT BREAKER	MANUAL MOTOR STARTER SIZE	COMBINATION STARTER SIZE	MOTOR DISCONNECT (NOTE 3)
1/6	15A	1 HP	0	20A
1/4	15A	1 HP	0	20A
1/3	15A	1 HP	0	20A
1/2	20A	1 HP	0	20A

GENERAL NOTES:
1. BASED ON MOTOR FULL LOAD AMPERES AS PROVIDED BY THE NEC
2. BASED ON MOTOR RUNNING OVERLOAD PROTECTIONS PROVIDED BY THERMAL OVERLOAD RELAYS.
3. WHERE THE STARTER IS LOCATED REMOTE FROM THE MOTOR, PROVIDE DISCONNECT LOCATED AT THE MOTOR, SIZE AS INDICATED.

RACEWAY / CONDUCTOR / CABLE APPLICATION SCHEDULE

	WIRE			RACEWAY										CABLE / CORD		
	COPPER, TYPE THHN/THWN-2	COPPER, TYPE XHHW-2	ALUMINUM, TYPE XHHW-2 (100A AND ABOVE ONLY)	ELECTRICAL METALLIC TUBING (EMT)	INTERMEDIATE METAL CONDUIT (IMC)	RIGID STEEL CONDUIT (RSC)	PVC COATED RIGID STEEL CONDUIT	RIGID NON-METALLIC CONDUIT (RNC) TYPE EPC-40	RIGID NON-METALLIC CONDUIT (RNC) TYPE EPC-80	HIGH DENSITY POLYETHYLENE (HDPE) SCHEDULE 40	HIGH DENSITY POLYETHYLENE (HDPE) SCHEDULE 80	FLEXIBLE METAL CONDUIT (FMC)	LIQUID TIGHT FLEXIBLE METAL CONDUIT (LFMC)	SURFACE RACEWAY	METAL CLAD TYPE CABLE WITH INSULATED GROUND WIRE (TYPE MC)	POWER LIMITED CABLE
FEEDERS - EXTERIOR																
EXPOSED, SURFACE MOUNTED TO STRUCTURE		X	X		X	X										
EXPOSED, WITH FREESTANDING SUPPORT		X	X		X	X										
CONCEALED IN RETAINING WALL OR SIMILAR ELEMENT		X	X			X	X	X	X	X						
BELOW PARKING LOTS AND ROADWAYS		X	X						X		X					
BELOW GREEN SPACE		X	X				X	X		X						
WITHIN 5' OF FOUNDATION WALL		X	X			X	X									
FEEDERS - INTERIOR																
CONCEALED, ACCESSIBLE CEILINGS	X		X		X	X										
CONCEALED, INACCESSIBLE CEILINGS	X		X		X	X										
EXPOSED, BELOW 10' AFF AND SUBJECT TO DAMAGE	X		X			X	X	X								
EXPOSED, BELOW 10' AFF AND NOT SUBJECT TO DAMAGE	X		X		X	X										
EXPOSED, ABOVE 10' AFF UNFINISHED SPACES	X		X		X	X										
EXPOSED, FINISHED SPACES	X		X											X		
BRANCH CIRCUITS - EXTERIOR																
EXPOSED, SURFACE MOUNTED TO STRUCTURE		X			X	X	X		X							
EXPOSED, WITH FREESTANDING SUPPORT		X			X	X	X									
CONCEALED IN RETAINING WALL OR SIMILAR ELEMENT		X				X	X	X								
BELOW PARKING LOTS AND ROADWAYS		X				X	X	X		X						
BELOW GREEN SPACE		X					X									
WITHIN 5' OF FOUNDATION WALL		X				X	X									
BRANCH CIRCUITS - INTERIOR																
CONCEALED, ACCESSIBLE CEILINGS	X				X	X									X	
CONCEALED, INACCESSIBLE CEILINGS	X				X	X										
CONCEALED IN GYPSUM BOARD PARTITION WALLS	X				X	X						X			X	
CONCEALED IN CMU WALLS	X				X	X										
EXPOSED, BELOW 10' AFF AND SUBJECT TO DAMAGE	X					X	X	X								
EXPOSED, BELOW 10' AFF AND NOT SUBJECT TO DAMAGE	X				X	X								X		
EXPOSED, ABOVE 10' AFF UNFINISHED SPACES	X				X	X										
EXPOSED, FINISHED SPACES	X													X		
BELOW SLAB ON GRADE	X							X								
DAMP AND WET LOCATIONS	X				X	X	X	X					X			
SPECIAL APPLICATIONS																
CLASS 1 CONTROL CIRCUITS	X				X	X										
CLASS 2 CONTROL CIRCUITS	X				X	X										X
CLASS 3 CONTROL CIRCUITS	X				X	X										X
CONNECTIONS TO TRANSFORMERS, MOTORS AND VIBRATING EQUIPMENT		X											X			

GENERAL NOTES:
1. TRANSITION FROM PVC/HDPE AND PROVIDE RIGID STEEL OR RTRC SWEEPS WHERE CONDUITS PENETRATE WALLS, CONCRETE SLABS, CONCRETE BASES, AND ASPHALT.
2. REFER TO SPECIFICATIONS FOR RESTRICTIONS ON MC/AC CABLE INSTALLATION.
3. EMT SHALL NOT BE USED ON THE EXTERIOR OF A BUILDING OR IN AREAS SUBJECT TO DAMAGE BELOW 10' AFF.
4. INSTALL SURFACE RACEWAYS ONLY WHERE INDICATED ON DRAWINGS.

LUMINAIRE SCHEDULE

TYPE	DESCRIPTION	MANUFACTURER(S)	WATTAGE	VOLTAGE	LIGHT CHARACTERISTICS	CONTROLS	REMARKS
L1	2'X4' RECESSED FLAT PANEL LIGHT FIXTURE; ALUMINUM BEZEL, STEEL BACKING AND WHITE FROST ACRYLIC DIFFUSER.	1. LITHONIA CPX SERIES 2. METALUX CGTX SERIES 3. COLUMBIA CBT SERIES	36.7	MULTI	LED 4000K 80CRI 4,000 LUMENS	0-10V TO 10% DIMMING	FOR FIXTURES INDICATED AS EMERGENCY ON PLAN PROVIDE 1,400 LUMENS OUTPUT COLD WEATHER EMERGENCY BATTERY.
L2	4' CHAIN HUNG STRIP LIGHT FIXTURE; STEEL HOUSING PAINTED AFTER FABRICATION. FROSTED LENS WITH WIRE GUARD. FIXTURE SHALL BE WHITE	1. LITHONIA CLX SERIES 2. METALUX FP SERIES 3. COLUBIA LCL SERIES	44.5	MULTI	LED 4000K 80CRI 4,000 LUMENS		FOR FIXTURES INDICATED AS EMERGENCY ON PLAN PROVIDE 1,400 LUMENS OUTPUT COLD WEATHER EMERGENCY BATTERY.
L3	8"x48" VANDAL RESISTANT SURFACE MOUNT FIXTURE; DIE CAST ALUMINUM HOUSING, UV STABILIZED IMPACT RESISTANT POLYCARBONATE LENS FULLY GASKETED WITH ALLEN PIN FASTENERS. FIXTURE SHALL BE WHITE. NOTE: PROVIDE (3) ALLEN PIN SCREW DRIVERS AND TURN OVER TO OWNER.	1. KENALL MLHA SERIES 2. NEW STAR VICTORY SERIES 3. FAIL SAFE HVL SERIES	45	MULTI	LED 5,000 LUMENS 4000K, 80CRI	0-10V 10% DIMMING	FOR FIXTURES INDICATED AS EMERGENCY PROVIDE 1,400 LUMENS OUTPUT EMERGENCY BATTERY PACK.
EXIT SIGN	WHITE DIE CAST ALUMINUM FACE, RED LETTERS, HIGH OUTPUT LED DIFFUSE LIGHT PANEL. SELF CONTAINED NICKEL-CADMIUM BATTERY WITH INTEGRAL TEST SWITCH. SINGLE OR DOUBLE STENCIL WITH DIRECTIONAL ARROWS AS INDICATED ON PLAN. PROVIDE MOUNTING AS INDICATED ON PLAN.	1. LITHONIA SIGNATURE SERIES 2. DUAL-LITE SEMPRA SERIES 3. SURELITE CX SERIES	2	MULTI	HIGH OUTPUT LED LIGHT PANEL		
OL1	LED ARCHITECTURAL WALL PACK FIXTURE; TYPE IV FORWARD THROW DISTRIBUTION, WEATHER RESISTANT ALUMINUM HOUSING, IP65 RATED. COLOR SHALL BE BRONZE.	1. LITHONIA WST SERIES 2. MCGRAW EDISON IST SERIES 3. SPAULDING TRP SERIES	25	MULTI	LED 4000K 70CRI 3,000 LUMENS		FOR FIXTURES INDICATED AS EMERGENCY ON PLAN PROVIDE 1,400 LUMENS OUTPUT COLD WEATHER EMERGENCY BATTERY.
OL2	4" RECESSED LINEAR LIGHT FIXTURE; ALUMINUM HOUSING WITH POLY CARBONATE LENS. WET LOCATION LISTED. LENGTHS AS INDICATED ON PLANS	1. FINELIGHT HP-4 WET SERIES 2. AXIS WET BEAM 4 SERIES 3. NULITE RXT SERIES	4 PER FOOT	MULTI	LED 4000K 80CRI 400 LUMENS PER FOOT		

GENERAL NOTES:
1. REFER TO ARCHITECTURAL REFLECTED CEILING PLANS FOR CEILING TYPES.
2. WATTAGE LISTED IS FROM THE BASIS OF DESIGN MANUFACTURER.
3. FINISH TO BE APPROVED BY INTERIOR DESIGNER, ARCHITECT OR CLIENT.
4. ALL LUMINAIRES TO BE AS SPECIFIED OR EQUAL APPROVED BY PBA.

INTERIOR LIGHTING CONTROL SCHEDULE

PLAN REFERENCE	ROOM TYPE	LOCAL CONTROL		CONTROL ON / OFF	SENSOR TYPE	TURN ON LIGHTING TO %	BI-LEVEL CONTROL	DAYLIGHT			NO DETECTION FULL OFF (MIN)	EMERGENCY LIGHTING CIRCUIT CONTROL	HVAC CONTROL	NOTES
		SWITCH TYPE	SWITCH CONTROL					SIDE LIGHT	TOP LIGHT	MAINTAIN FC LEVEL				
A	ELECTRICAL/MECHANICAL ROOM	LINE VOLTAGE	ON-OFF	MANUAL ON / MANUAL OFF	N/A	FULL 100%	N/A	N/A	N/A	N/A	N/A	BATTERY		
B	FOOD PREPARATION AREA	LOW VOLTAGE	ON-OFF-DIM	SENSOR ON / SENSOR OFF	DUAL TECHNOLOGY	PARTIAL 50%	CONTINUOUS DIM	N/A	N/A	N/A	20	BATTERY		
C	LOCKER ROOM	LOW VOLTAGE	ON-OFF-DIM	SENSOR ON / SENSOR OFF	DUAL TECHNOLOGY	PARTIAL 50%	CONTINUOUS DIM	N/A	N/A	N/A	20	BATTERY		
D	STORAGE ROOM (≥50 FT2 AND ≤ 1000 SQFT)	LINE VOLTAGE	ON-OFF	SENSOR ON / SENSOR OFF	ULTRASONIC	FULL 100%	N/A	N/A	N/A	N/A	20	BATTERY		
E	RESTROOM (ALL OTHER RESTROOMS)	LINE VOLTAGE	ON-OFF	SENSOR ON / SENSOR OFF	ULTRASONIC	FULL 100%	N/A	N/A	N/A	N/A	20	BATTERY		
F	OFFICE (ENCLOSED AND ≤ 250 SQFT)	LOW VOLTAGE	ON-OFF-DIM	SENSOR ON / SENSOR OFF	DUAL TECHNOLOGY	PARTIAL 50%	CONTINUOUS DIM	N/A	N/A	N/A	20	N/A		

NOTE:
1. REFER TO PLANS FOR LOCATION OF LOCAL CONTROL.
2. CONTRACTOR SHALL PROVIDE FLOOR PLAN INDICATING SENSOR AND EQUIPMENT LOCATIONS OF CHOSEN CONTROL SYSTEM.
3. REFER TO LUMINAIRE SCHEDULE FOR FIXTURE CHARACTERISTICS.
4. LIGHTING SENSOR SHALL HAVE CONTACT FOR HVAC CONTROL WHEN A "YES" SELECTION IS MADE IN THE HVAC CONTROL COLUMN.
5. REFER TO TEMPERATURE CONTROL DRAWINGS AND DIAGRAMS FOR ADDITIONAL SENSOR REQUIREMENTS.
6. PROVIDE WIRING CONTROL DIAGRAM FOR APPLICABLE CONTROL SYSTEM(S).

N/A = NOT APPLICABLE

©Copyright 2017 by Peter Basso Associates, Inc.

NOTE: SOME SYMBOLS AND ABBREVIATIONS SHOWN MAY NOT APPLY TO THIS PROJECT.

TMP ARCHITECTURE

TMP ARCHITECTURE INC
1191 WEST SQUARE LAKE ROAD
BLOOMFIELD HILLS • MICHIGAN • 48302
PH • 248.338.4561 FX • 248.338.0223
EM • INFO@TMP-ARCHITECTURE.COM

REGISTRATION SEAL

CONSULTANT

Peter Basso Associates
CONSULTING ENGINEERS
5145 Livernois, Suite 100
Troy, Michigan 48098-3276
Tel: 248-879-5666
www.PeterBassoAssociates.com
PBA Project No.: 2023.0156.03

PROJECT TITLE

Troy High School Athletic Fields Bid Package No. 02B

Troy School District
Troy, Michigan

DRAWING TITLE

ELECTRICAL STANDARD SCHEDULES

ISSUE DATES

DATE:	ISSUED FOR:
12-10-2024	CONSTRUCTION DOCUMENTS

DRAWN	ZDB
CHECKED	ZDB
APPROVED	STP

PROJECT NO.

22104E

DRAWING NO.

E0.2

G:\2023\2023-0156-00\CAD\03 - Athletics Phase 2\2023-0156-03-E0-IND.dwg, E0.2, 12/9/2024 11:56:36 AM, Alexandra A. Muncey, None .0.13459, Peter Basso Associates Inc.

THE FOLLOWING DIMENSION EQUALS ONE INCH WHEN PRINTED TO SCALE. 1"

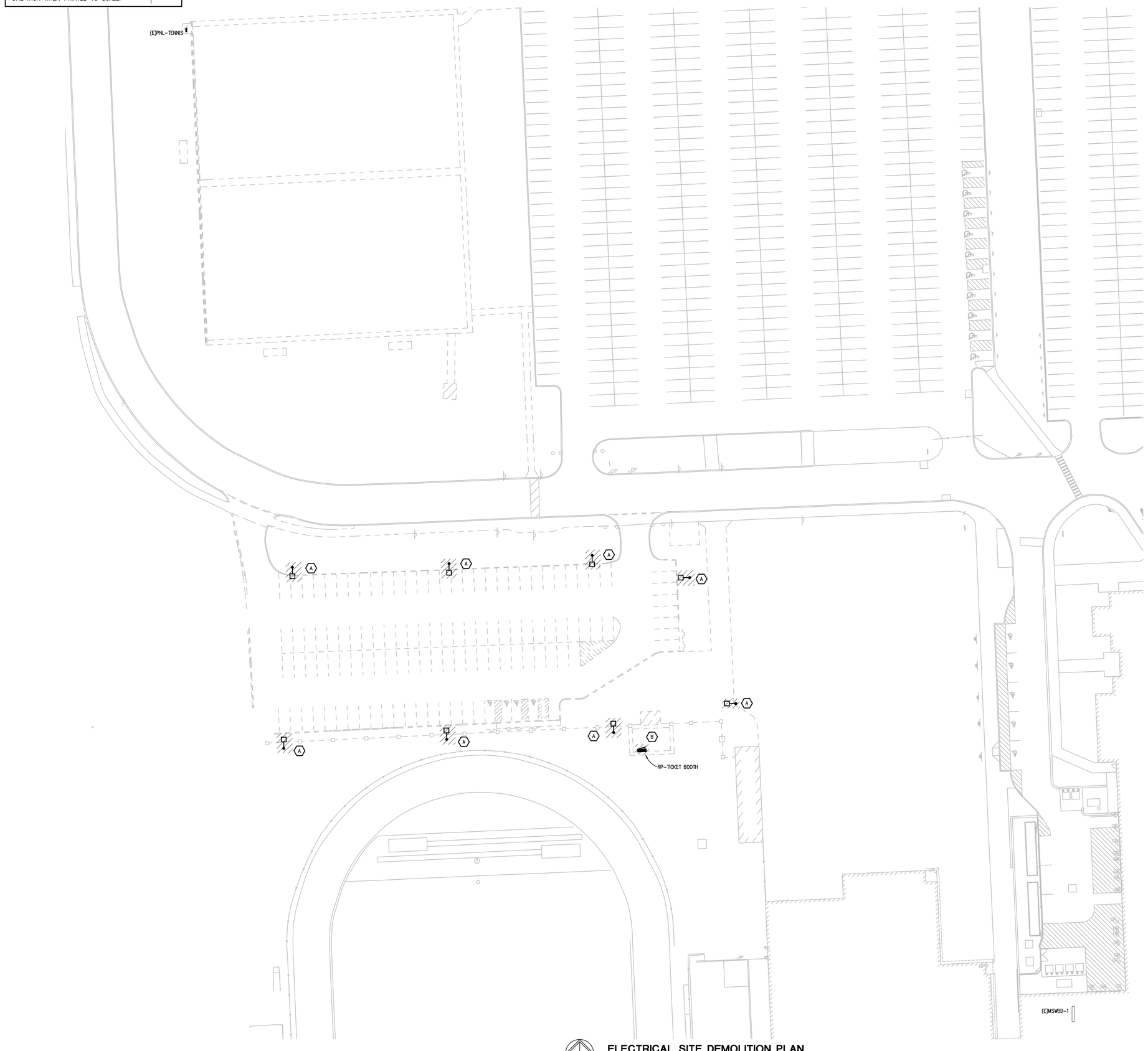

ELECTRICAL SITE DEMOLITION PLAN
SCALE: 1" = 30'

SITE PLAN GENERAL NOTES:

1. THESE NOTES ARE GENERIC GUIDELINES ONLY. ELECTRICAL CONTRACTOR'S PERSONNEL ON SITE SHALL BE THOROUGHLY FAMILIAR WITH THE PUBLISHED SPECIFICATIONS FOR EXACT DESCRIPTIONS OF SCOPE, METHODS, AND MATERIAL.
2. THESE DRAWINGS REPRESENT THE GENERAL EXTENT AND ARRANGEMENT OF SYSTEMS. COORDINATE EXACT EQUIPMENT LOCATIONS, ELEVATIONS, AND FINAL CONNECTION REQUIREMENTS. PROVIDE EACH SYSTEM COMPLETE, INCLUDING ALL NECESSARY COMPONENTS, FITTINGS AND OFFSETS.
3. CONDUCT A SURVEY TO IDENTIFY ALL UNDERGROUND UTILITIES. CALL 811 PRIOR TO EXCAVATION.
4. UTILITIES SHOWN ON THESE DRAWINGS ARE FOR REFERENCE ONLY. COORDINATE EXACT LOCATION OF ALL EXISTING UTILITIES, AND ROUTING OF ALL NEW UNDERGROUND UTILITIES PRIOR TO EXCAVATION.
5. DEWATER TRENCHES PRIOR TO INSTALLATION OF CONDUITS. PROVIDE WATER TIGHT FITTINGS ON ALL UNDERGROUND CONDUITS.
6. COORDINATE DEMOLITION WORK, AND ELECTRICAL AND TELEPHONE SERVICES TO THE SITE, WITH THE RESPECTIVE LOCAL UTILITY COMPANY REPRESENTATIVES PRIOR TO COMMENCEMENT OF WORK. INCLUDE ALL ASSOCIATED COST/FEES BY THE UTILITY COMPANIES IN THE BID PRICE.
7. INSTALL UNDERGROUND CONDUITS 42" BELOW FINISHED GRADE, MINIMUM, UNLESS NOTED OTHERWISE.
8. COORDINATE SERVICE SHUT-DOWNS WITH ALL TRADES INVOLVED ON SITE AND OBTAIN WRITTEN AUTHORIZATION FROM OWNER 72 HOURS PRIOR TO ANY ELECTRICAL AND/OR TELEPHONE SHUT-DOWN.
9. REMOVE ALL DE-ENERGIZED CONDUCTORS FROM SITE AT COMPLETION OF THE PROJECT.
10. OUTDOOR LIGHTING BRANCH CIRCUIT WIRING SHALL BE MINIMUM #8 AWG CONDUCTORS (XHHW-2), IN MINIMUM 1" DIA. CONDUIT, UNLESS NOTED OTHERWISE.
11. SPARE CONDUITS SHALL INCLUDE PULL STRING AND SHALL BE TERMINATED WITH A CAP.
12. EXCAVATE THE ENTIRE LENGTH OF TRENCH TO PROPERLY SET DUCT ELEVATIONS.

(#) DEMOLITION KEY NOTES:

A. SALVAGE LIGHT FIXTURE HEAD AND POLE. REMOVE CONCRETE BASE. MAINTAIN BRANCH CIRCUIT FOR REUSE.

B. BUILDING BEING DEMOLISHED. DISCONECT AND REMOVE ALL ELECTRICAL EQUIPMENT AND DEVICES.

Know what's **below.**
Call before you dig.

TMP ARCHITECTURE

TMP ARCHITECTURE INC
1191 WEST SQUARE LAKE ROAD
BLOOMFIELD HILLS • MICHIGAN • 48302
PH • 248.338.4561 FX • 248.338.0223
EM • INFO@TMP-ARCHITECTURE.COM

REGISTRATION SEAL

CONSULTANT

Peter Basso Associates
CONSULTING ENGINEERS
5145 Livernois, Suite 100
Troy, Michigan 48098-3276
Tel: 248-879-5666
www.PeterBassoAssociates.com
PBA Project No.: 2023.0156.03

PROJECT TITLE

Troy High School Athletic Fields Bid Package No. 02B

Troy School District
Troy, Michigan

DRAWING TITLE
ELECTRICAL SITE DEMOLITION PLAN

ISSUE DATES

DATE:	ISSUED FOR:
12-10-2024	CONSTRUCTION DOCUMENTS

DRAWN	ZDB
CHECKED	ZDB
APPROVED	STP

PROJECT NO.
22104E

DRAWING NO.
ED1.0

G:\2023\2023-0156-00\CAD\03 - Athletics Phase 2\2023-0156-03-ED1-SP.dwg, ED1.0, 12/9/2024 11:56:42 AM, Alexandra A. Muncey, None ,0.13, Peter Basso Associates Inc.

THE FOLLOWING DIMENSION EQUALS ONE INCH WHEN PRINTED TO SCALE. 1"

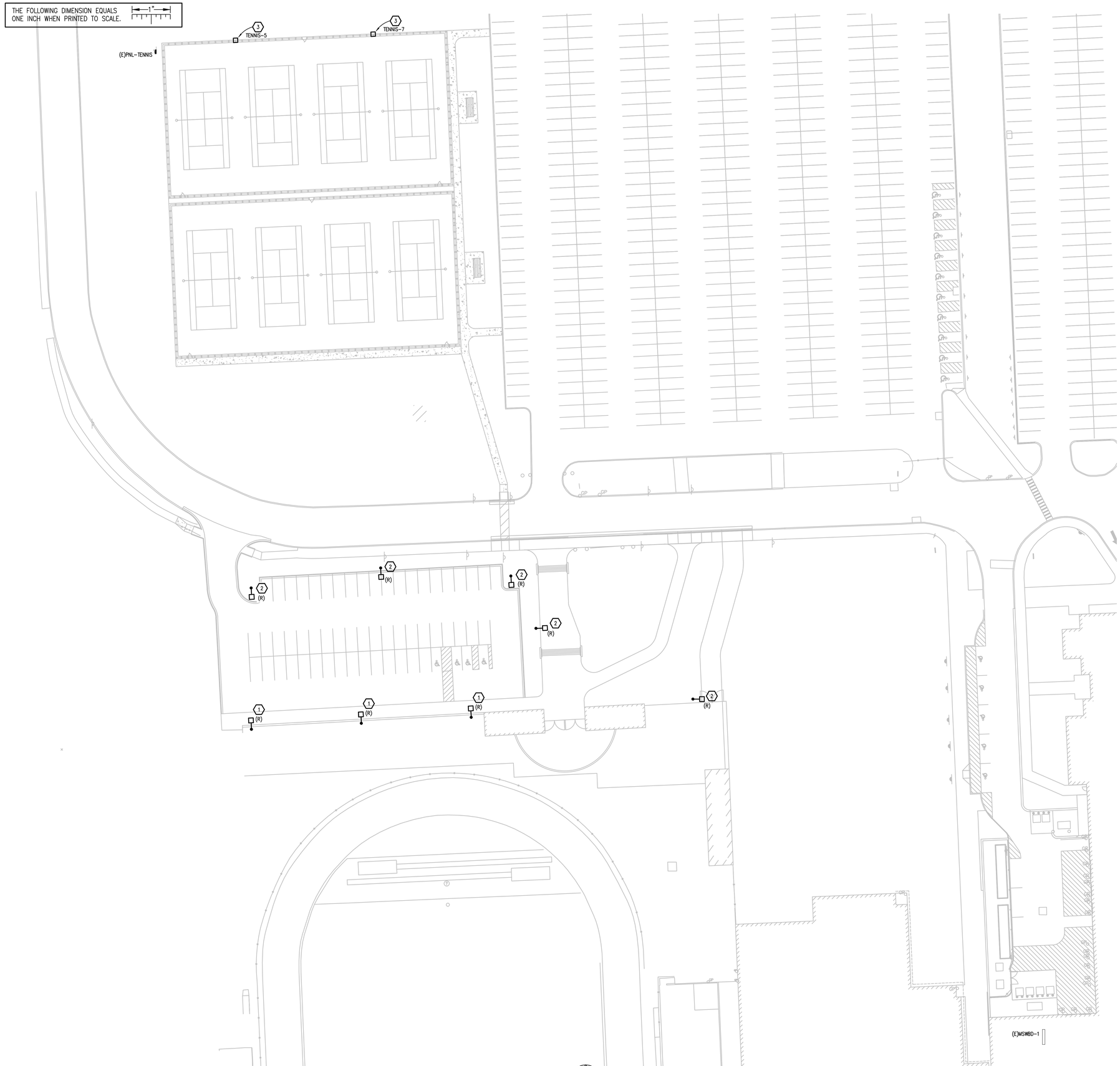

ELECTRICAL SITE NEW WORK PLAN
SCALE: 1" = 30'

SITE PLAN GENERAL NOTES:

1. THESE NOTES ARE GENERIC GUIDELINES ONLY. ELECTRICAL CONTRACTOR'S PERSONNEL ON SITE SHALL BE THOROUGHLY FAMILIAR WITH THE PUBLISHED SPECIFICATIONS FOR EXACT DESCRIPTIONS OF SCOPE, METHODS, AND MATERIAL.
2. THESE DRAWINGS REPRESENT THE GENERAL EXTENT AND ARRANGEMENT OF SYSTEMS. COORDINATE EXACT EQUIPMENT LOCATIONS, ELEVATIONS, AND FINAL CONNECTION REQUIREMENTS. PROVIDE EACH SYSTEM COMPLETE, INCLUDING ALL NECESSARY COMPONENTS, FITTINGS AND OFFSETS.
3. CONDUCT A SURVEY TO IDENTIFY ALL UNDERGROUND UTILITIES. CALL 811 PRIOR TO EXCAVATION.
4. UTILITIES SHOWN ON THESE DRAWINGS ARE FOR REFERENCE ONLY. COORDINATE EXACT LOCATION OF ALL EXISTING UTILITIES, AND ROUTING OF ALL NEW UNDERGROUND UTILITIES PRIOR TO EXCAVATION.
5. DEWATER TRENCHES PRIOR TO INSTALLATION OF CONDUITS. PROVIDE WATER TIGHT FITTINGS ON ALL UNDERGROUND CONDUITS.
6. COORDINATE DEMOLITION WORK, AND ELECTRICAL AND TELEPHONE SERVICES TO THE SITE, WITH THE RESPECTIVE LOCAL UTILITY COMPANY REPRESENTATIVES PRIOR TO COMMENCEMENT OF WORK. INCLUDE ALL ASSOCIATED COST/FEES BY THE UTILITY COMPANIES IN THE BID PRICE.
7. INSTALL UNDERGROUND CONDUITS 42" BELOW FINISHED GRADE, MINIMUM, UNLESS NOTED OTHERWISE.
8. COORDINATE SERVICE SHUT-DOWNS WITH ALL TRADES INVOLVED ON SITE AND OBTAIN WRITTEN AUTHORIZATION FROM OWNER 72 HOURS PRIOR TO ANY ELECTRICAL AND/OR TELEPHONE SHUT-DOWN.
9. REMOVE ALL DE-ENERGIZED CONDUCTORS FROM SITE AT COMPLETION OF THE PROJECT.

(#) CONSTRUCTION KEY NOTES:

1. INSTALL SALVAGED LIGHT FIXTURE AND POLE ON NEW 6" CONCRETE BASE. CONNECT TO MAINTAINED BRANCH CIRCUIT. EXTEND CONDUIT AND WIRE AS REQUIRED.
2. INSTALL SALVAGED LIGHT FIXTURE AND POLE ON NEW 36" CONCRETE BASE. CONNECT TO MAINTAINED BRANCH CIRCUIT. EXTEND CONDUIT AND WIRE AS REQUIRED.
3. OUTDOOR POWER PEDESTAL.

Know what's **below.**
Call before you dig.

TMP ARCHITECTURE

TMP ARCHITECTURE INC
1191 WEST SQUARE LAKE ROAD
BLOOMFIELD HILLS • MICHIGAN • 48302
PH • 248.338.4561 FX • 248.338.0223
EM • INFO@TMP-ARCHITECTURE.COM

REGISTRATION SEAL

CONSULTANT

Peter Basso Associates
CONSULTING ENGINEERS
5145 Livernois, Suite 100
Troy, Michigan 48098-3276
Tel: 248-879-5666
www.PeterBassoAssociates.com
PBA Project No.: 2023.0156.03

PROJECT TITLE

Troy High School Athletic Fields Bid Package No. 02B

Troy School District
Troy, Michigan

DRAWING TITLE
ELECTRICAL SITE NEW WORK PLAN

ISSUE DATES

DATE:	ISSUED FOR:
12-10-2024	CONSTRUCTION DOCUMENTS

DRAWN	ZDB
CHECKED	ZDB
APPROVED	STP

PROJECT NO.
22104E

DRAWING NO.
E1.0

G:\2023\2023-0156-00\Cad\03 - Athletics Phase 2\2023-0156-03-E1-SP.dwg, E1.0, 12/9/2024 11:56:47 AM, Alexandra A. Muncey, None .0.13, Peter Basso Associates Inc.

THE FOLLOWING DIMENSION EQUALS ONE INCH WHEN PRINTED TO SCALE. 1"

ELECTRICAL DEMOLITION GENERAL NOTES:

1. VISIT THE SITE PRIOR TO SUBMISSION OF BID TO EXAMINE THE EXISTING CONDITIONS AND THE EXTENT OF DEMOLITION WORK.
2. EXAMINE THE DRAWINGS OF OTHER TRADES AND BE FAMILIAR WITH THE DEMOLITION REQUIRED BY OTHER TRADES. PERFORM ALL INCIDENTAL ELECTRICAL DEMOLITION AND/OR RELOCATION REQUIRED TO FACILITATE THE DEMOLITION WORK OF OTHER TRADES, WHETHER OR NOT SPECIFICALLY INDICATED.
3. REMOVE EQUIPMENT OR MATERIALS AS INDICATED ON PLAN WITH CROSS HATCHING. DEMOLITION SHALL INCLUDE, BUT NOT BE LIMITED TO, THOSE COMPONENTS SHOWN.
4. COORDINATE WITH NEW WORK PLANS, ONE LINE DIAGRAMS AND RISER DIAGRAMS FOR EXTENT OF DEMOLITION WORK.
5. PROVIDE PROPER SUPPORT FOR EXISTING TO REMAIN CONDUITS AND BOXES WHERE EXISTING SUPPORT IS TO BE REMOVED. RE-ROUTE BRANCH CIRCUIT CONDUITS AND RELOCATE JUNCTION BOXES AS REQUIRED TO FACILITATE INSTALLATION OF NEW EQUIPMENT AND SYSTEMS IN CEILING SPACES.
6. REMOVE ALL CONDUIT AND WIRE BACK TO THE SOURCE OR NEAREST UPSTREAM DEVICE REMAINING IN SERVICE.
7. MAINTAIN ELECTRICAL SERVICE TO ALL LIGHTING FIXTURES, DEVICES AND EQUIPMENT THAT ARE TO REMAIN. EXTEND CONDUIT AND WIRE AS REQUIRED WHERE DEMOLITION WORK AFFECTS ELECTRICAL SERVICE TO DOWNSTREAM LOADS THAT ARE TO REMAIN.
8. DISPOSE OF ALL MATERIALS OFF SITE AND INCLUDE ALL COSTS FOR DISPOSAL IN BID. ALL MATERIALS SHALL BE DISPOSED OF IN ACCORDANCE WITH ALL FEDERAL, STATE, AND LOCAL REGULATIONS, INCLUDING TCLP TESTING, PROPER DISPOSAL AND/OR RECYCLING OF FLUORESCENT LAMPS.
9. PROVIDE BLANK COVER PLATES WHERE SWITCHES AND DEVICES ARE REMOVED BUT EXISTING WALLS REMAIN INTACT.
10. RING OUT AND TAG ALL CIRCUITS AFFECTED BY THIS ALTERATION AT BOTH ENDS. MARK ALL UNUSED CIRCUIT BREAKERS "SPARE".
11. PROVIDE UPDATED TYPED-IN DIRECTORIES FOR ALL PANELS AFFECTED BY THIS ALTERATION.
12. VERIFY ALL UNDERGROUND AND IN SLAB UTILITY LOCATIONS PRIOR TO SAW-CUTTING OR PENETRATING ANY FLOOR SLAB.
13. COORDINATE ANY SHUT DOWN OF EXISTING SERVICES AND EQUIPMENT THAT ARE REMAINING IN USE WITH THE OWNER'S REPRESENTATIVE. WHERE EXISTING BUILDING SERVICE IS REQUIRED TO BE SHUT DOWN, INCLUDE ALL ASSOCIATED OVERTIME COSTS TO PERFORM THIS WORK DURING WEEKENDS AND EVENINGS INCLUDE ALL COSTS FOR PROVIDING TEMPORARY POWER WHERE SHUT DOWNS MUST OCCUR FOR PERIODS LONGER THAN THESE HOURS. COORDINATE ELECTRICAL SHUT DOWNS WITH THE OWNER 72 HOURS PRIOR TO SHUT DOWN.

(#) DEMOLITION KEY NOTES:

A. REMOVE ALL ELECTRICAL DEVICES IN WALLS AND CEILINGS UNLESS OTHERWISE NOTED. (LIGHTING AND ASSOCIATED CONTROLS, POWER, ETC.) REFER TO NEW WORK PLANS FOR EXTENT OF WORK.

B. DISCONNECT POWER TO MECHANICAL EQUIPMENT TO BE RELOCATED. MAINTAIN BRANCH CIRCUIT FOR EXTENSION TO NEW LOCATION.

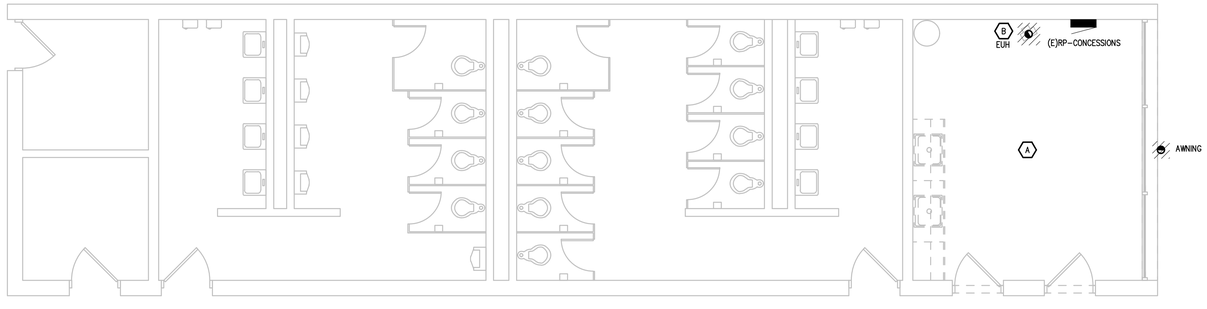

EXISTING TOILET BUILDING ELECTRICAL DEMOLITION PLAN
SCALE: 1/4" = 1' - 0"

TMP ARCHITECTURE

TMP ARCHITECTURE INC
1191 WEST SQUARE LAKE ROAD
BLOOMFIELD HILLS • MICHIGAN • 48302
PH • 248.338.4561 FX • 248.338.0223
EM • INFO@TMP-ARCHITECTURE.COM

REGISTRATION SEAL

CONSULTANT

Peter Basso Associates
CONSULTING ENGINEERS
5145 Livernois, Suite 100
Troy, Michigan 48098-3276
Tel: 248-879-5666
www.PeterBassoAssociates.com
PBA Project No.: 2023.0156.03

PROJECT TITLE

Troy High School Athletic Fields Bid Package No. 02B

Troy School District
Troy, Michigan

DRAWING TITLE

ELECTRICAL DEMOLITION PLAN

ISSUE DATES

DATE:	ISSUED FOR:
12-10-2024	CONSTRUCTION DOCUMENTS

DRAWN ZDB
CHECKED ZDB
APPROVED STP

PROJECT NO.
22104E

DRAWING NO.
ED1.1

G:\2023\2023-0156-00\CAD\03 - Athletics Phase 2\2023-0156-03-ED2-DP1.dwg, ED1.1, 12/9/2024 11:56:53 AM, Alexandra A. Muncey, None .0.13459, Peter Basso Associates Inc.

THE FOLLOWING DIMENSION EQUALS ONE INCH WHEN PRINTED TO SCALE. 1"

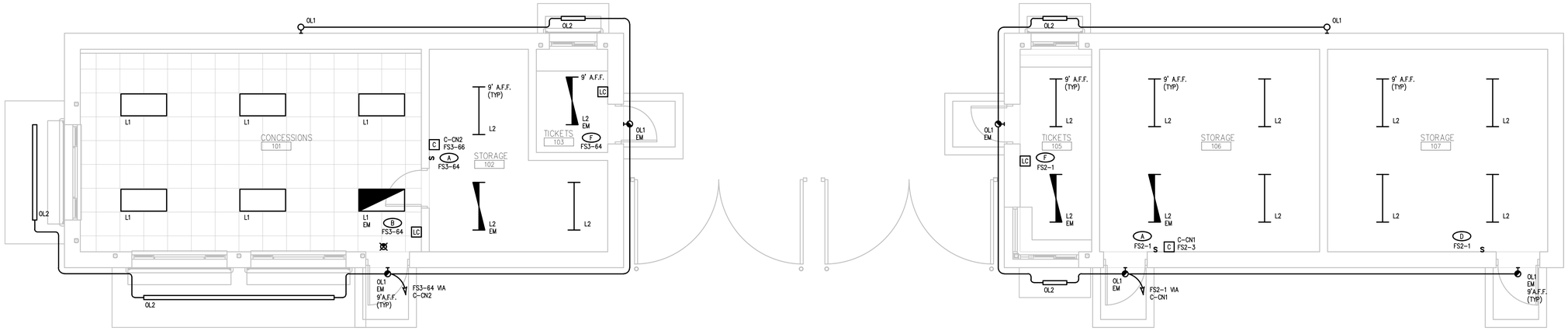

NEW STADIUM ENTRANCE LIGHTING PLAN
SCALE: 1/4" = 1' - 0"

ELECTRICAL GENERAL NOTES:

1. THESE DRAWINGS REPRESENT THE GENERAL EXTENT AND ARRANGEMENT OF SYSTEMS. COORDINATE EXACT EQUIPMENT LOCATIONS, ELEVATIONS, AND FINAL CONNECTION REQUIREMENTS. PROVIDE EACH SYSTEM COMPLETE, INCLUDING ALL NECESSARY COMPONENTS, FITTINGS AND OFFSETS.
2. INSTALL SYSTEMS SUCH THAT REQUIRED CLEARANCE AND SERVICE ACCESS SPACE IS PROVIDED AROUND ALL MECHANICAL AND ELECTRICAL EQUIPMENT, AND AROUND ANY COMPONENTS WHICH REQUIRE SERVICE ACCESS.
3. COORDINATE AND PROVIDE ACCESS DOORS WITHIN INACCESSIBLE CEILING, SHAFT, AND CHASE AREAS FOR ALL COMPONENTS WHICH REQUIRE SERVICE ACCESS. REFER TO ARCHITECTURAL DRAWINGS FOR CEILING TYPES.
4. PROVIDE SUPPLEMENTARY STEEL AS REQUIRED FOR THE PROPER SUPPORT OF ALL SYSTEMS.
5. TRANSFORMER SECONDARY CONDUCTORS SHALL BE SIZED IN ACCORDANCE WITH TRANSFORMER CIRCUIT SIZING SCHEDULE SHOWN ON "ELECTRICAL STANDARD SCHEDULES DRAWING" UNLESS OTHERWISE NOTED.
6. MOTOR CIRCUIT PROTECTION SHALL BE SIZED IN ACCORDANCE WITH MOTOR CIRCUIT SIZING SCHEDULES SHOWN ON "ELECTRICAL STANDARD SCHEDULES DRAWING" UNLESS OTHERWISE NOTED.
7. COORDINATE THE MOUNTING HEIGHTS OF DEVICES WITH ARCHITECTURAL ELEVATIONS AND THE TRADES INSTALLING THE WORK.
8. REFER TO MECHANICAL SCHEDULE SHEETS FOR ELECTRICAL REQUIREMENTS FOR MECHANICAL EQUIPMENT. PROVIDE ALL CONNECTIONS, STARTERS, DISCONNECTS, ETC. AS REQUIRED BY SCHEDULES AND WHERE NOTED ELSEWHERE. VERIFY REQUIREMENTS OF ALL MECHANICAL EQUIPMENT WITH SHOP DRAWINGS SUBMITTALS. NOTIFY ENGINEER OF ANY CONFLICTS BETWEEN EQUIPMENT SUBMITTALS AND ELECTRICAL DRAWINGS. WHERE CIRCUIT SIZES ARE SHOWN ON THE ELECTRICAL DRAWINGS THAT DIFFER FROM WHAT IS INDICATED ON THE MECHANICAL SCHEDULES, PROVIDE THE CIRCUIT OF HIGHER AMPACITY.
9. REFER TO LIGHTING CONTROL SCHEDULE FOR ROOM CONTROL AND EMERGENCY LIGHTING CIRCUIT CONTROL REQUIREMENTS. DESIGNATION FOR ROOM IS INDICATED AS A LETTERED OVAL SYMBOL.
10. CONNECT EXIT SIGNS TO NORMAL LIGHTING BRANCH CIRCUIT SERVING THE AREA. CONNECT AHEAD OF ANY LIGHTING CONTROL DEVICE OR SYSTEM.

(#) CONSTRUCTION KEY NOTES:

1. CONNECT LIGHT FIXTURE TO MAINTAINED BRANCH CIRCUIT. EXTEND CONDUIT AND WIRE AND MODIFY SWITCH LEG AS REQUIRED.

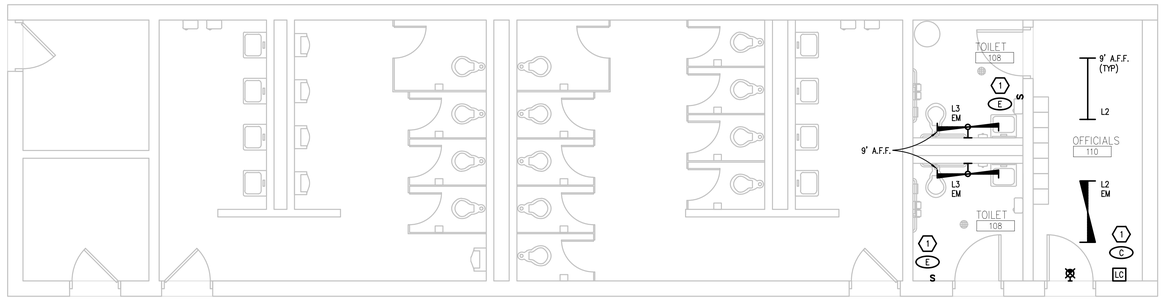

EXISTING TOILET BUILDING LIGHTING NEW WORK PLAN
SCALE: 1/4" = 1' - 0"

TMP ARCHITECTURE

TMP ARCHITECTURE INC
1191 WEST SQUARE LAKE ROAD
BLOOMFIELD HILLS • MICHIGAN • 48302
PH • 248.338.4561 FX • 248.338.0223
EM • INFO@TMP-ARCHITECTURE.COM

REGISTRATION SEAL

CONSULTANT

Peter Basso Associates
CONSULTING ENGINEERS
5145 Livernois, Suite 100
Troy, Michigan 48098-3276
Tel: 248-879-5666
www.PeterBassoAssociates.com
PBA Project No.: 2023.0156.03

PROJECT TITLE

Troy High School Athletic Fields Bid Package No. 02B

Troy School District
Troy, Michigan

DRAWING TITLE
LIGHTING NEW WORK PLANS

ISSUE DATES

DATE:	ISSUED FOR:
12-10-2024	CONSTRUCTION DOCUMENTS

DRAWN	ZDB
CHECKED	ZDB
APPROVED	STP

PROJECT NO.
22104E

DRAWING NO.
E2.1

G:\2023\2023-0156-00\CAD\03 - Athletics Phase 2\2023-0156-03-E2-LP1.dwg, E2.1, 12/9/2024 12:58:52 PM, Alexandra A. Muncey, None ,0.13459, Peter Basso Associates Inc.

THE FOLLOWING DIMENSION EQUALS ONE INCH WHEN PRINTED TO SCALE. ←—1"—→

FOOD SERVICE EQUIPMENT SCHEDULE

ITEM NO	QTY	EQUIPMENT CATEGORY	MANUFACTURER	MODEL NUMBER	EQUIPMENT REMARKS	AMPS	KW	HP	VOLTS	PHASE	DIRECT	PLUG	NEMA	ELECTRICAL AFF (IN)	ELEC REMARKS	COLD WATER SIZE (IN)	COLD WATER AFF (IN)	HOT WATER SIZE (IN)	HOT WATER GPH	HOT WATER AFF (IN)	DIRECT DRAIN SIZE (IN)	DIRECT DRAIN AFF (IN)	INDIR DRAIN SIZE (IN)	GAS SIZE (IN)	MBTUH	GAS AFF (IN)	PLUMBING REMARKS	ITEM NO
1	1LOT	BIB SODA SYSTEM	BOOSTER PROVIDED	BY COKE	RACK/CO2/PUMPS/CARBONATOR	8.0			115	1		X	5-15P	48		0.5	48											1
2	1	MOP SINK STORAGE CABINET	ADVANCE TABCO	9-OPC-84DL-300												0.5	30	0.5		30	2							2
3	1	COAT/PURSE HOOKS	EX-CELL (KAISER)	700-SA																								3
4	3	STORAGE SHELVING	METRO	WIRE																								4
5	1	FREEZER, REACH-IN	TRUE MFG.	T-49F-HC		9.6	1.1	1.0	115	1		X	5-15P	84														5
6	1	REFRIGERATOR, REACH-IN	TRUE MFG.	T-49-HC		5.4	1.1	1/2	115	1		X	5-15P	84														6
7	1	EXISTING ICE MAKER W/ BIN	BOOSTER PROVIDED	–	RELOCATED * * *	15.2			115	1		X	5-15P	48		0.5	48						.75				RUN TO INDIRECT WASTE	7
8	1	SINK, CORNER	ADVANCE TABCO	94-K4-24D												0.5	18	18	0.5		2	SU	2				WASTE TO CT. RINSE AND RINSE / SANITIZE TO LW.	8
9	1LOT	ST. ST. WALL PANELING	ST. ST. FABRICATOR	CUSTOM																								9
10	1LOT	MENU SCREENS	BOOSTER PROVIDED	–	RELOCATED * * *	2.0			120	1		X	5-15P		POWERED FROM (CO1)													10
11	1LOT	WIRE WALL SHELVING	METRO																									11
12	1	HAND SINK, WALL MOUNT	ADVANCE TABCO	7-PS-40		1.0			120	1		X	5-15P	18		0.5	18	0.5		18	1.5	21						12
13	1	DIPPIN DOTS FREEZER	BOOSTER PROVIDED	–	RELOCATED * * *	6.7			115	1		X	5-15P	72	SINGLE DROP CORD RECEPTACLE													13
14	1LOT	EXISTING SODA DISPENSER/ICE BIN	BOOSTER PROVIDED	BY COKE	RELOCATED * * *	6.0			115	1		X	5-15P	18									.75				RUN TO INDIRECT WASTE	14
15	1	TABLE, ENCLOSED BASE, SLIDING DOORS	ADVANCE TABCO	CK-SS-3010M	HINGED DOORS																							15
16	1	EXISTING AIRPOT COFFEE BREWER	BOOSTER PROVIDED	–	RELOCATED * * *	23.2			208	1	X		VERIFY	48		0.5	18											16
17	2	CABINET, WALL	ADVANCE TABCO	WCH-15-48	HINGED DOORS																							17
18	1	EXISTING HOT DOG ROLLER	BOOSTER PROVIDED	–	RELOCATED * * *	7.5	.90		120	1		X	5-15P	48														18
19	1	EXISTING OVEN	BOOSTER PROVIDED	–	RELOCATED * * *	12.5	1.5		120	1		X	5-15P	48														19
20	1	EXISTING OVEN/AIR FRY	BOOSTER PROVIDED	–	RELOCATED * * *	14.2	1.7		120	1		X	5-15P	48														20
21	1	EXISTING POP CORN MAKER	BOOSTER PROVIDED	–	RELOCATED * * *	13.8	1.66		120	1		X	5-15P	48														21
22	1	HOLDING CABINET, HUMIDIFIED HEATED	F.W.E.	MTU-12		13.8			120	1		X	5-15P	18														22
23	1	EXISTING DISPLAY COOLER	BOOSTER PROVIDED	BY COKE	RELOCATED * * *	15.0			120	1		X	5-15P	84														23
24	6	WIRE SHELVING	METRO	WIRE	3 TIER HIGH																							24
25	1	WARMER, DRAWER TYPE	HATCO	HDW-2		7.5	0.9		120	1		X	5-15P	18														25
26	1	TABLE, ENCLOSED BASE, SLIDING DOORS	ADVANCE TABCO	CB-SS-308M	SLIDING DOORS																							26
27	1	DISPLAY WARMER	AVANTCO	SH-1H		12.5	1.5		120	1		X	5-15P	72	SINGLE DROP CORD RECEPTACLE													27
28	1	WARMER, DRAWER TYPE	HATCO	HDW-2		7.5	0.9		120	1		X	5-15P	18														28
29	1	EXISTING COUNTER TOP WARMER	BOOSTER PROVIDED	–	RELOCATED * * *	12.5	1.5		120	1		X	5-15P	72	SINGLE DROP CORD RECEPTACLE													29
30	6	POS SCREENS (SQUARE)	BOOSTER PROVIDED	–	RELOCATED * * *	1.0			120	1		X	5-15P	18	POWERED FROM (CO1)													30
31	1	EXISTING CHEESE WARMER	BOOSTER PROVIDED	–	RELOCATED * * *	4.5	.55		120	1		X	5-15P	72	SINGLE DROP CORD RECEPTACLE													31
32	1	TABLE, ENCLOSED BASE, SLIDING DOORS	ADVANCE TABCO	CB-SS-307M	SLIDING DOORS																							32
33	2	EXISTING HOT BEVERAGE DISPENSERS	BOOSTER PROVIDED	–	RELOCATED * * *	15.0	1.8		120	1		X	5-15P	72	SINGLE DROP CORD RECEPTACLE	0.5	SU											33
34	1	WARMER, DRAWER TYPE	HATCO	HDW-2		7.5	0.9		120	1		X	5-15P	18														34
35	1	EXISTNIG SLUSH DISPENSER	BOOSTER PROVIDED	–	RELOCATED * * *	12.0	1.4		120	1		X	5-15P	72	SINGLE DROP CORD RECEPTACLE													35
36	1	DISPLAY COOLER	BOOSTER PROVIDED	BY COKE		10.0			120	1		X	5-15P	72	SINGLE DROP CORD RECEPTACLE													36
37	1LOT	21" DEEP ST. ST. SERVICE COUNTER	ST. ST. FABRICATOR	CUSTOM	OPEN STORAGE UNDER																							37
38	2	TV/MONITORS	BOOSTER PROVIDED	–		2.0			120	1		X	5-15P	DFA	VERIFY DATA/INPUT REQUIREMENTS													38
39	1LOT	FIELD ERECTION LABOR																										39
CO1		CONVENIENCE OUTLET			DEDICATED	20.0			120	1				18														CO1
CO2		CONVENIENCE OUTLET			DEDICATED	20.0			120	1				48														CO2
CO3		CONVENIENCE OUTLET			DEDICATED	20.0			120	1				72	SINGLE DROP CORD RECEPTACLE													CO3

* * * ENGINEER TO VERIFY UTILITIES OF BOOSTER PROVIDED EXISTING EQUIPMENT



NEW STADIUM ENTRANCE FIRST LEVEL POWER PLAN
SCALE: 1/4" = 1' - 0"

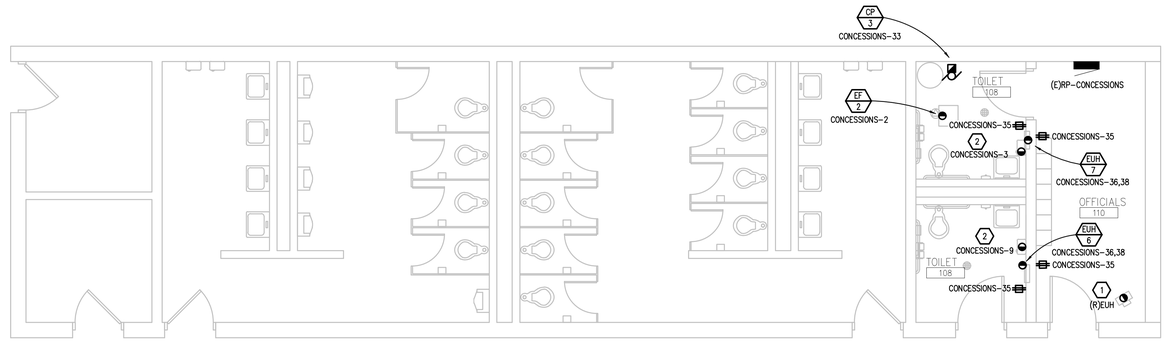

EXISTING TOILET BUILDING POWER NEW WORK PLAN
SCALE: 1/4" = 1' - 0"

ELECTRICAL GENERAL NOTES:

1. THESE DRAWINGS REPRESENT THE GENERAL EXTENT AND ARRANGEMENT OF SYSTEMS. COORDINATE EXACT EQUIPMENT LOCATIONS, ELEVATIONS, AND FINAL CONNECTION REQUIREMENTS. PROVIDE EACH SYSTEM COMPLETE, INCLUDING ALL NECESSARY COMPONENTS, FITTINGS AND OFFSETS.
2. INSTALL SYSTEMS SUCH THAT REQUIRED CLEARANCE AND SERVICE ACCESS SPACE IS PROVIDED AROUND ALL MECHANICAL AND ELECTRICAL EQUIPMENT, AND AROUND ANY COMPONENTS WHICH REQUIRE SERVICE ACCESS.
3. COORDINATE AND PROVIDE ACCESS DOORS WITHIN INACCESSIBLE CEILING, SHAFT, AND CHASE AREAS FOR ALL COMPONENTS WHICH REQUIRE SERVICE ACCESS. REFER TO ARCHITECTURAL DRAWINGS FOR CEILING TYPES.
4. PROVIDE SUPPLEMENTARY STEEL AS REQUIRED FOR THE PROPER SUPPORT OF ALL SYSTEMS.
5. TRANSFORMER SECONDARY CONDUCTORS SHALL BE SIZED IN ACCORDANCE WITH TRANSFORMER CIRCUIT SIZING SCHEDULE SHOWN ON "ELECTRICAL STANDARD SCHEDULES DRAWING" UNLESS OTHERWISE NOTED.
6. MOTOR CIRCUIT PROTECTION SHALL BE SIZED IN ACCORDANCE WITH MOTOR CIRCUIT SIZING SCHEDULES SHOWN ON "ELECTRICAL STANDARD SCHEDULES DRAWING" UNLESS OTHERWISE NOTED.
7. COORDINATE THE MOUNTING HEIGHTS OF DEVICES WITH ARCHITECTURAL ELEVATIONS AND THE TRADES INSTALLING THE WORK.
8. REFER TO MECHANICAL SCHEDULE SHEETS FOR ELECTRICAL REQUIREMENTS FOR MECHANICAL EQUIPMENT. PROVIDE ALL CONNECTIONS, STARTERS, DISCONNECTS, ETC. AS REQUIRED BY SCHEDULES AND WHERE NOTED ELSEWHERE. VERIFY REQUIREMENTS OF ALL MECHANICAL EQUIPMENT WITH SHOP DRAWINGS SUBMITTALS. NOTIFY ENGINEER OF ANY CONFLICTS BETWEEN EQUIPMENT SUBMITTALS AND ELECTRICAL DRAWINGS. WHERE CIRCUIT SIZES ARE SHOWN ON THE ELECTRICAL DRAWINGS THAT DIFFER FROM WHAT IS INDICATED ON THE MECHANICAL SCHEDULES, PROVIDE THE CIRCUIT OF HIGHER AMPACITY.
9. REFER TO LIGHTING CONTROL SCHEDULE FOR ROOM CONTROL AND EMERGENCY LIGHTING CIRCUIT CONTROL REQUIREMENTS. DESIGNATION FOR ROOM IS INDICATED AS A LETTERED OVAL SYMBOL.
10. CONNECT EXIT SIGNS TO NORMAL LIGHTING BRANCH CIRCUIT SERVING THE AREA. CONNECT AHEAD OF ANY LIGHTING CONTROL DEVICE OR SYSTEM.

FOOD SERVICE GENERAL NOTES:

1. LOCATIONS, DIMENSIONS, UTILITY REQUIREMENTS, INTERCONNECTIONS, AND NEMA CONFIGURATIONS OF CORD AND PLUG ASSEMBLIES, ETC. ARE BASED ON BASIS OF DESIGN MANUFACTURER IN THE SPECIFICATIONS. COORDINATE FINAL LOCATIONS AND DEVIATIONS FROM BASIS OF DESIGN WITH FOOD SERVICE EQUIPMENT CONTRACTOR (FSEC).
2. PROVIDE GROUND-FAULT-CIRCUIT-INTERRUPTER (GFCI) FOR PERSONNEL PROTECTION, PER NEC, FOR ALL SINGLE-PHASE RECEPTACLES 150V TO GROUND OR LESS AND 50A OR LESS, AND FOR ALL THREE-PHASE RECEPTACLES 150V TO GROUND OR LESS AND 100A OR LESS. PROVIDE GFCI CIRCUIT BREAKER(S) OR REMOTE DEAD FRONT GFCI DEVICE(S), IN READILY ACCESSIBLE LOCATIONS, FOR ANY RECEPTACLE THAT CANNOT BE ACCESSED WITHOUT MOVING EQUIPMENT.

(#) CONSTRUCTION KEY NOTES:

1. CONNECT TO MAINTAINED BRANCH CIRCUIT. EXTEND CONDUIT AND WIRE AS REQUIRED.
2. HAND DRYER BY OTHERS. COORDINATE MOUNTING LOCATION WITH ARCHITECTURAL ELEVATIONS.

TMP ARCHITECTURE

TMP ARCHITECTURE INC
1191 WEST SQUARE LAKE ROAD
BLOOMFIELD HILLS • MICHIGAN • 48302
PH • 248.338.4561 FX • 248.338.0223
EM • INFO@TMP-ARCHITECTURE.COM

REGISTRATION SEAL

CONSULTANT
Peter Basso Associates
CONSULTING ENGINEERS
5145 Livernois, Suite 100
Troy, Michigan 48098-3276
Tel: 248-879-5666
www.PeterBassoAssociates.com
PBA Project No.: 2023.0156.03

PROJECT TITLE
Troy High School Athletic Fields Bid Package No. 02B

Troy School District
Troy, Michigan

DRAWING TITLE
POWER NEW WORK PLANS

ISSUE DATES

DATE:	ISSUED FOR:
12-10-2024	CONSTRUCTION DOCUMENTS

DRAWN ZDB
CHECKED ZDB
APPROVED STP

PROJECT NO.
22104E

DRAWING NO.
E3.1

G:\2023\2023-0156-00\CAD\03 - Athletics Phase 2\2023-0156-03-E3-PP1.dwg, E3.1, 12/9/2024 12:59:00 PM, Alexandra A. Muncey, None ,0.13459, Peter Basso Associates Inc.

(E)MSWBD-1 CONNECTED LOAD CALCULATIONS

(E)MSWBD-1 (METERED PER NEC 220.87) 634.6 KVA X 125%	793.3 KVA
RP-FS2	14.6 KVA
RP-FS3	71.7 KVA
(E)MSWBD-1 TOTAL CONNECTED LOAD	879.6 KVA

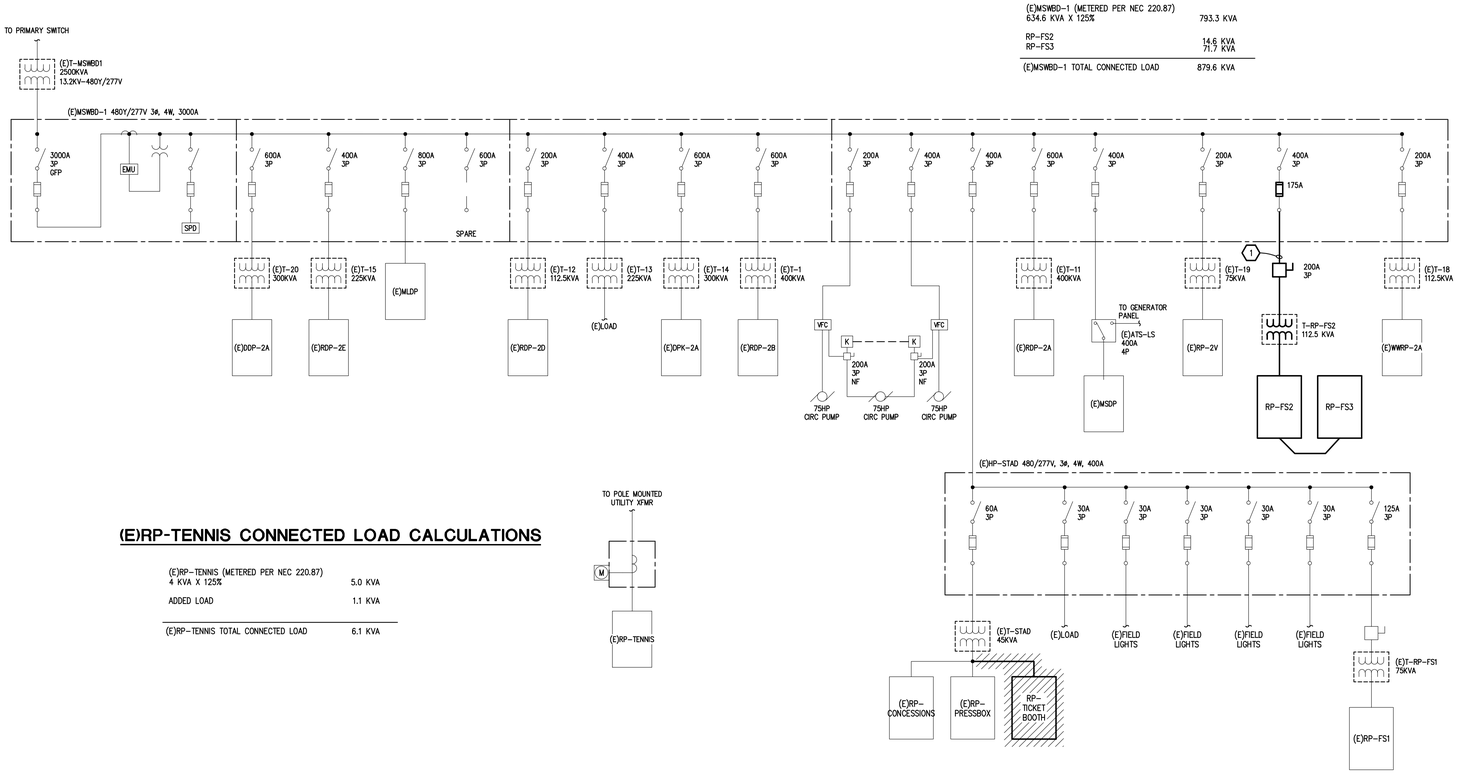

(E)RP-TENNIS CONNECTED LOAD CALCULATIONS

(E)RP-TENNIS (METERED PER NEC 220.87) 4 KVA X 125%	5.0 KVA
ADDED LOAD	1.1 KVA
(E)RP-TENNIS TOTAL CONNECTED LOAD	6.1 KVA

SHORT-CIRCUIT CALCULATIONS

FAULT POINT	PANEL/ TRANSFORMER	SOURCE FAULT POINT	SOURCE Isc	CONDUIT TYPE	CONDUCTOR MATERIAL	CONDUCTOR OR BUS SIZE	'C' VALUE	E (V)	L (FT)	XFMR kVA	XFMR %Z	f	M	Isc
1	(E)T-MSWBD1							480		2500	5.75			52,298
2	(E)MSWBD-1	1	52,298	NM	CU	7 SETS OF 600 KCML	28033	480	100.0			0.096	0.91	47,710
3	T-RP-FS2(PRIM)	2	47,710	NM	CU	2 SETS OF 2/0	11424	480	600.0			4.521	0.18	8,642
4	T-RP-FS2(SECD)	3	8,642					208		112.5	4.37	2.788	0.26	5,265
5	RP-FS2	4	5,265	M	CU	1 SET OF 500 KCML	22185	208	10.0			0.020	0.98	5,163
6	RP-FS3	5	5,163	NM	CU	1 SET OF 500 KCML	26706	208	70.0			0.113	0.90	4,640

THE FOLLOWING THREE PHASE CALCULATIONS ARE BASED ON THE "POINT-BY POINT" METHOD WHERE:

$Isc = Isc \times M$ $\quad M = 1/(1+f)$

CONDUCTOR OR BUS: $f = \frac{1.732 \times L \times Isc}{C \times n \times E}$

UTILITY XFMR: $Isc = \frac{kVA \times 100{,}000}{E \times 1.732 \times \%Z}$

XFMR: $f = \frac{Ip(sc) \times Ep \times 1.73 \times \%Z}{100{,}000 \times KVA}$ $\quad Is(sc) = \frac{Ep \times M \times Ip(sc)}{Es}$

L = LENGTH (ft) OF CONDUCTOR, C = CONSTANT FROM TABLE, n = NUMBER OF CONDUCTORS PER PHASE
Isc = AVAILABLE SHORT CIRCUIT (A), E = VOLTAGE OF CIRCUIT

©Copyright 2021 by Peter Basso Associates, Inc.

DIAGRAM GENERAL NOTES:

1. THESE DRAWINGS REPRESENT THE GENERAL EXTENT AND ARRANGEMENT OF SYSTEMS. COORDINATE EXACT EQUIPMENT LOCATIONS, ELEVATIONS, AND FINAL CONNECTION REQUIREMENTS. PROVIDE EACH SYSTEM COMPLETE, INCLUDING ALL NECESSARY COMPONENTS, FITTINGS AND OFFSETS.
2. FEEDER AND BRANCH CIRCUIT CONDUCTORS SHALL BE SIZED IN ACCORDANCE WITH THE "FEEDER AND BRANCH CIRCUIT SIZING SCHEDULE-GENERAL PURPOSE" ON THE "ELECTRICAL STANDARD SCHEDULES DRAWING" UNLESS SPECIFICALLY NOTED OTHERWISE.
3. TRANSFORMER SECONDARY CONDUCTORS SHALL BE SIZED IN ACCORDANCE WITH THE "TRANSFORMER CIRCUIT SIZING SCHEDULE-GENERAL PURPOSE" ON THE "ELECTRICAL STANDARD SCHEDULES DRAWING" UNLESS SPECIFICALLY NOTED OTHERWISE.
4. MOTOR CIRCUIT PROTECTION SHALL BE SIZED IN ACCORDANCE WITH THE MOTOR CIRCUIT SIZING SCHEDULES ON THE "ELECTRICAL STANDARD SCHEDULES DRAWING" UNLESS SPECIFICALLY NOTED OTHERWISE.
5. BASIS OF DESIGN IS SQUARE D DISTRIBUTION EQUIPMENT. IF THE CONTRACTOR ELECTS TO PROVIDE EQUIPMENT FROM OTHER APPROVED MANUFACTURERS, THE CONTRACTOR SHALL BE RESPONSIBLE TO COORDINATE THE LAYOUT AND CLEARANCE REQUIREMENTS IN ALL SPACES CONTAINING ELECTRICAL EQUIPMENT AND PROVIDE EQUIPMENT MEETING THE SPECIFICATIONS AND ACHIEVING CODE REQUIRED CLEARANCES WITHIN THE SPACE PROVIDED.
6. TRANSFORMERS ARE 408-208Y/120V, 3ø, 4W UNLESS OTHERWISE NOTED.

⬡ CONSTRUCTION KEY NOTES:

1. (2)2 1/2"C. EACH WITH (4)2/0 + (1)6 GROUND.

TMP ARCHITECTURE

TMP ARCHITECTURE INC
1191 WEST SQUARE LAKE ROAD
BLOOMFIELD HILLS • MICHIGAN • 48302
PH • 248.338.4561 FX • 248.338.0223
EM • INFO@TMP-ARCHITECTURE.COM

REGISTRATION SEAL

CONSULTANT

Peter Basso Associates
CONSULTING ENGINEERS
5145 Livernois, Suite 100
Troy, Michigan 48098-3276
Tel: 248-879-5666
www.PeterBassoAssociates.com
PBA Project No.: 2023.0156.03

PROJECT TITLE

Troy High School Athletic Fields Bid Package No. 02B

Troy School District
Troy, Michigan

DRAWING TITLE

ONE LINE DIAGRAM

ISSUE DATES

DATE:	ISSUED FOR:
12-10-2024	CONSTRUCTION DOCUMENTS

DRAWN ZDB
CHECKED ZDB
APPROVED STP

PROJECT NO.
22104E

DRAWING NO.
E5.1

G:\2023\2023-0156-00\CAD\03 - Athletics Phase 2\2023-0156-E5-DG.dwg, E5.1, 12/9/2024 11:57:20 AM, Alexandra A. Muncey, None .0.13459, Peter Basso Associates Inc.

RP-FS2

#	LOAD TYPE	DESCRIPTION	CB TYPE	CB	VA	ØA	ØB	ØC	VA	CB	CB TYPE	DESCRIPTION	LOAD TYPE	#
1	L	LIGHTING		20	540	2120			1580				E	2
3	NC	CONTACTOR C-CN1		20	120		1700		1580	20		EUH-3	E	4
5	R	RECEPTACLES		20	180			1760	1580				E	6
7	R	RECEPTACLES		20	180	1280			1100				E	8
9	R	RECEPTACLES		20	180		1280		1100	15		EUH-1	E	10
11	R	RECEPTACLES		20	180			1280	1100				E	12
13	R	RECEPTACLES		20	180	1280			1100				E	14
15	R	RECEPTACLES		20	180		1280		1100	15		EUH-2	E	16
17	R	RECEPTACLES		20	360			1460	1100				E	18
19	R	RECEPTACLES		20	540	540				20		SPARE		20
21	R	RECEPTACLES		20	360		360			20		SPARE		22
23	L	BACKLIT SIGN		20	250			250		20		SPARE		24
25		SPARE		20						20		SPARE		26
27		SPARE		20						20		SPARE		28
29		SPARE		20						20		SPARE		30
						5220	4620	4750						
						ØA	ØB	ØC						

PANELBOARD INFORMATION
VOLTAGE: 208Y/120
BUS AMPACITY: 400A
MAIN TYPE: 400A MCB
MINIMUM A.I.C.: 10,000
MOUNTING: SURFACE

[X] FEED-THROUGH LUGS
[ ] DOUBLE LUGS
[ ] INTEGRAL SPD

PANELBOARD LOCATION

BRANCH CIRCUIT CONNECTED LOAD		DEMAND FACTOR	CALCULATED LOAD	FEEDER AND OCPD SIZING
CONTINUOUS LOAD (C)		100%		125%
ELECTRIC HEAT (E)	11340	100%	11340	100% 11340
NON-CONTINUOUS LOAD (NC)	120	100%	120	100% 120
KITCHEN LOAD (K)		100%		100%
RECEPTACLE BASE LOAD (R)	2340	100%	2340	100% 2340
RECEPTACLE DEMAND LOAD (R)		50%		100%
LIGHTING LOAD (L)	790	100%	790	125% 988
ADDITIONAL TRACK LIGHTING LOAD				100%
MOTORS, HIGHEST LOAD (MH)		125%		100%
MOTORS, REMAINING LOAD (M)		100%		100%
		TOTAL(KVA):	14.59	
		TOTAL (AMPS):	40	TOTAL (AMPS): 41

NOTE: DEMAND AND SIZING INFORMATION IS CALCULATED FROM CONNECTED LOAD

NOTES:

©Copyright 2024 by Peter Basso Associates, Inc

RP-FS3

#	LOAD TYPE	DESCRIPTION	CB TYPE	CB	VA	ØA	ØB	ØC	VA	CB	CB TYPE	DESCRIPTION	LOAD TYPE	#
1	NC				4500	5700			1200	20		CO2 – RECEPTACLES	R	2
3	NC	EWH-1		50	4500		5320		820	15		DAC-5,6	M	4
5	NC				4500			5400	900	20	GFCI	E34 – WARMER	K	6
7	M	CP-1		15	270	1470			1200	20	GFCI	C01 – RECEPTACLES	R	8
9	M	CP-2		15	270		1470		1200	20		C02 – RECEPTACLES	R	10
11	K	E5 – FREEZER		20	1150			2050	900	20	GFCI	E28 – WARMER	K	12
13	K	E6 – REFRIGERATOR		20	650	1470			820	15		DAC-3,4	M	14
15	K	E7 – ICE MAKER		20	1820		3020		1200	20	GFCI	C01 – RECEPTACLES	R	16
17	R	C01 – RECEPTACLE		20	1200			2400	1200	20		C02 – RECEPTACLES	R	18
19	E				1330	2530			1200	20		C02 – RECEPTACLES	R	20
21	E	EUH-5		20	1330		1510		180	20		RECEPTACLE	R	22
23	E				1330			1510	180	20		RECEPTACLE	R	24
25	K	E1 – BIB SODA SYSTEM		20	960	1780			820	15		DAC-1,2	M	26
27	R	RECEPTACLES		20	180		1080		900	20	GFCI	E25 – WARMER	K	28
29	E				1000			2200	1200	20	GFCI	C01 – RECEPTACLES	R	30
31	E	EUH-4		15	1000	2200			1200	20		C02 – RECEPTACLES	R	32
33	E				1000		1180		180	20		RECEPTACLE	R	34
35	R	C01 – RECEPTACLE		20	1200			1380	180	20		RECEPTACLE	R	36
37	E				2110	2290			180	20		RECEPTACLE	R	38
39	E	ECUH-2		30	2110		2290		180	20		RECEPTACLE	R	40
41	E				2110			3910	1800	20	GFCI	E23 – DISPLAY COOLER	K	42
43	K	E36 – DISPLAY COOLER	GFCI	20	1200	2860			1660	20	GFCI	E22 – HOLDING CABINET	K	44
45	K	E13 – DIPPIN DOTS FREEZER	GFCI	20	800		2460		1660	20	GFCI	E21 – POP CORN MAKER	K	46
47	K	E35 – SLUSH DISPENSER	GFCI	20	1440			3140	1700	20	GFCI	E20 – OVEN/AIR FRY	K	48
49	K	E33 – HOT BEVERAGE DISPENSER	GFCI	20	1800	3300			1500	20	GFCI	E19 – OVEN	K	50
51	K	E33 – HOT BEVERAGE DISPENSER	GFCI	20	1800		2700		900	20	GFCI	E18 – HOT DOG ROLLER	K	52
53	M	EF-1		20	290			1490	1200	20		C02 – RECEPTACLES	R	54
55	R	C03 – RECEPTACLE	GFCI	20	1200	3610			2410	30	GFCI	E16 – AIRPOT COFFEE BREWER	K	56
57	K	E38 – MONITOR	GFCI	20	240		2650		2410		GFCI		K	58
59	K	E31 – CHEESE WARMER	GFCI	20	540			1260	720	20	GFCI	E14 – SODA DISPENSER	K	60
61	K	E29 – COUNTER TOP WARMER	GFCI	20	1500	1620			120	20		E12 – HAND SINK	K	62
63	K	E27 – DISPLAY WARMER	GFCI	20	1500		2080		580	20		LIGHTING	L	64
65	K	E38 – MONITOR	GFCI	20	240			490	250	20		CONTACTOR C-CN2	NC	66
67	E				2110	2110				20		SPARE		68
69	E	ECUH-1		30	2110		2110			20		SPARE		70
71	E				2110			2110		20		SPARE		72
73		SPARE		20						20		SPARE		74
75		SPARE		20						20		SPARE		76
77		SPARE		20						20		SPARE		78
79		SPARE		20						20		SPARE		80
81		SPARE		20						20		SPARE		82
83		SPARE		20		30940	27870	27340		20		SPARE		84
						ØA	ØB	ØC						

PANELBOARD INFORMATION
VOLTAGE: 208Y/120
BUS AMPACITY: 400A
MAIN TYPE: 400A MCB
MINIMUM A.I.C.: 10,000
MOUNTING: SURFACE

[ ] FEED-THROUGH LUGS
[ ] DOUBLE LUGS
[ ] INTEGRAL SPD

PANELBOARD LOCATION

BRANCH CIRCUIT CONNECTED LOAD		DEMAND FACTOR	CALCULATED LOAD	FEEDER AND OCPD SIZING
CONTINUOUS LOAD (C)		100%		125%
ELECTRIC HEAT (E)	19650	100%	19650	100% 19650
NON-CONTINUOUS LOAD (NC)	13750	100%	13750	100% 13750
KITCHEN LOAD (K)	33220	65%	21593	100% 21593
RECEPTACLE BASE LOAD (R)	10000	100%	10000	100% 10000
RECEPTACLE DEMAND LOAD (R)	5660	50%	2830	100% 2830
LIGHTING LOAD (L)	580	100%	580	125% 725
ADDITIONAL TRACK LIGHTING LOAD				100%
MOTORS, HIGHEST LOAD (MH)		125%		100%
MOTORS, REMAINING LOAD (M)	3290	100%	3290	100% 3290
		TOTAL(KVA):	71.69	
		TOTAL (AMPS):	199	TOTAL (AMPS): 199

NOTE: DEMAND AND SIZING INFORMATION IS CALCULATED FROM CONNECTED LOAD

NOTES:

©Copyright 2024 by Peter Basso Associates, Inc

EXISTING RP-CONCESSIONS

#	LOAD TYPE	DESCRIPTION	CB TYPE	CB	VA	ØA	ØB	ØC	VA	CB	CB TYPE	DESCRIPTION	LOAD TYPE	#
1	NC	EXISTING LOAD	EXIST	20	500	700			200	20	NEW	EF-2	M	2
3	NC	HAND DRYER	NEW	20	1200		1200			20	EXIST	SPARE		4
5	NC	EXISTING LOAD	EXIST	20	500			1000	500	20	EXIST	EXISTING LOAD	NC	6
7	NC	EXISTING LOAD	EXIST	20	500	1000			500	20	EXIST	EXISTING LOAD	NC	8
9	NC	HAND DRYER	NEW	20	1200		1700		500	20	EXIST	EXISTING LOAD	NC	10
11	NC	EXISTING LOAD	EXIST	20	500			500		20	EXIST	SPARE		12
13	NC	EXISTING LOAD	EXIST	20	500	1000			500		EXIST		NC	14
15	NC		EXIST		750		1250		500	20	EXIST	EXISTING LOAD	NC	16
17	NC	EXISTING LOAD	EXIST	30	750			1250	500		EXIST		NC	18
19	NC		EXIST		750	1250			500	20	EXIST	EXISTING LOAD	NC	20
21		SPARE	EXIST	20			500		500	20	EXIST	EXISTING LOAD	NC	22
23	NC	EXISTING LOAD	EXIST	20	500			1000	500		EXIST		NC	24
25	NC	EXISTING LOAD	EXIST	20	500	1000			500	20	EXIST	EXISTING LOAD	NC	26
27	NC		EXIST		500		1000		500		EXIST		NC	28
29	NC	EXISTING LOAD	EXIST	20	500			1000	500		EXIST		NC	30
31	NC		EXIST		500	1000			500	20	EXIST	EXISTING LOAD	NC	32
33	M	CP-3	NEW	15	250		750		500		EXIST		NC	34
35	R	RECEPTACLE	NEW	20	720			2220	1500	30	NEW	EUH-6	E	36
37			EXIST			1500			1500		NEW		E	38
39		MAIN CIRCUIT BREAKER	EXIST	100			1500		1500	30	NEW	EUH-7	E	40
41			EXIST					1500	1500		NEW		E	42
						7450	7900	8470						
						ØA	ØB	ØC						

PANELBOARD INFORMATION
VOLTAGE: 208Y/120
BUS AMPACITY: 100A
MAIN TYPE: 100A MCB
MINIMUM A.I.C.: 10,000
MOUNTING: SURFACE

[ ] FEED-THROUGH LUGS
[ ] DOUBLE LUGS
[ ] INTEGRAL SPD

PANELBOARD LOCATION

BRANCH CIRCUIT CONNECTED LOAD		DEMAND FACTOR	CALCULATED LOAD	FEEDER AND OCPD SIZING
CONTINUOUS LOAD (C)		100%		125%
ELECTRIC HEAT (E)	6000	100%	6000	100% 6000
NON-CONTINUOUS LOAD (NC)	16650	100%	16650	100% 16650
KITCHEN LOAD (K)		100%		100%
RECEPTACLE BASE LOAD (R)	720	100%	720	100% 720
RECEPTACLE DEMAND LOAD (R)		50%		100%
LIGHTING LOAD (L)		100%		125%
ADDITIONAL TRACK LIGHTING LOAD				100%
MOTORS, HIGHEST LOAD (MH)		125%		100%
MOTORS, REMAINING LOAD (M)	450	100%	450	100% 450
		TOTAL(KVA):	23.82	
		TOTAL (AMPS):	66	TOTAL (AMPS): 66

NOTE: DEMAND AND SIZING INFORMATION IS CALCULATED FROM CONNECTED LOAD

NOTES:

©Copyright 2024 by Peter Basso Associates, Inc

EXISTING PNL-TENNIS

#	LOAD TYPE	DESCRIPTION	CB TYPE	CB	VA	ØA	ØC	VA	CB	CB TYPE	DESCRIPTION	LOAD TYPE	#
1	NC	EXISTING LOAD		20	1000	2000		1000	20		EXISTING LOAD	NC	2
3	NC	EXISTING LOAD		20	1000		2000	1000	20		EXISTING LOAD	NC	4
5	R	RECEPTACLES		20	540	540					SPACE		6
7	R	RECEPTACLES		20	540		540				SPACE		8
9		SPACE									SPACE		10
11		SPACE									SPACE		12
13		SPACE									SPACE		14
15		SPACE									SPACE		16
17		SPACE									SPACE		18
19		SPACE									SPACE		20
21		SPACE									SPACE		22
23		SPACE									SPACE		24
25		SPACE									SPACE		26
27		SPACE									SPACE		28
29		SPACE									SPACE		30
						2540	2540						
						ØA	ØC						

PANELBOARD INFORMATION
VOLTAGE: 120/240-1Ø
BUS AMPACITY: 225A
MAIN TYPE: 200A MCB
MINIMUM A.I.C.: 22,000
MOUNTING: SURFACE

[ ] FEED-THROUGH LUGS
[ ] DOUBLE LUGS
[ ] INTEGRAL SPD

PANELBOARD LOCATION

BRANCH CIRCUIT CONNECTED LOAD:		DEMAND FACTOR	CALCULATED LOAD	FEEDER AND OCPD SIZING
CONTINUOUS LOAD (C):		100%		125%
ELECTRIC HEAT (E)		100%		100%
NON-CONTINUOUS LOAD (NC):	4000	100%	4000	100% 4000
KITCHEN LOAD (K):		100%		100%
RECEPTACLE BASE LOAD (R):	1080	100%	1080	100% 1080
RECEPTACLE DEMAND LOAD (R):		50%		100%
LIGHTING LOAD (L):		100%		125%
ADDITIONAL TRACK LIGHTING LOAD				100%
MOTORS, HIGHEST LOAD (MH):		125%		100%
MOTORS, REMAINING LOAD (M):		100%		100%
		TOTAL(KVA):	5.08	
		TOTAL (AMPS):	21	TOTAL (AMPS): 21

NOTE: DEMAND AND SIZING INFORMATION IS CALCULATED FROM CONNECTED LOAD

NOTES:

©Copyright 2024 by Peter Basso Associates, Inc

TMP ARCHITECTURE

TMP ARCHITECTURE INC
1191 WEST SQUARE LAKE ROAD
BLOOMFIELD HILLS • MICHIGAN • 48302
PH • 248.338.4561 FX • 248.338.0223
EM • INFO@TMP-ARCHITECTURE.COM

REGISTRATION SEAL

CONSULTANT

Peter Basso Associates
CONSULTING ENGINEERS
5145 Livernois, Suite 100
Troy, Michigan 48098-3276
Tel: 248-879-5666
www.PeterBassoAssociates.com
PBA Project No.: 2023.0156.03

PROJECT TITLE

Troy High School Athletic Fields Bid Package No. 02B

Troy School District
Troy, Michigan

DRAWING TITLE

PANEL SCHEDULES

ISSUE DATES

DATE:	ISSUED FOR:
12-10-2024	CONSTRUCTION DOCUMENTS

DRAWN ZDB
CHECKED ZDB
APPROVED STP

PROJECT NO.
22104E

DRAWING NO.
E5.2

G:\2023\2023-0156-00\CAD\03 - Athletics Phase 2\2023-0156-E5-DG.dwg, E5.2, 12/9/2024 11:57:21 AM, Alexandra A. Muncey, None .0.13459, Peter Basso Associates Inc.

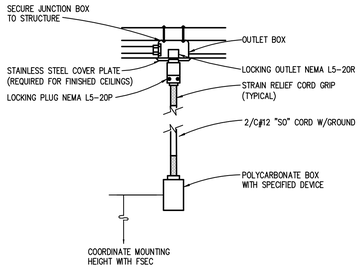

SUSPENDED OUTLET DETAIL
NO SCALE

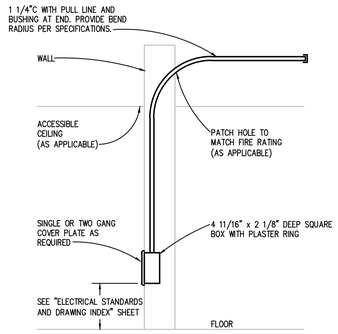

TELECOMMUNICATION OUTLET DETAIL
NO SCALE

NOTES:

1. IF CEILING IN ROOM IS NOT ACCESSIBLE, ROUTE CONDUIT TO NEAREST ACCESSIBLE CEILING IN DIRECTION OF AND WITH PATHWAY OR ACCESS TO TELECOMMUNICATION ROOM.

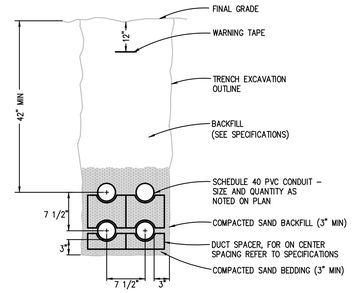

UNDERGROUND CONDUIT DETAIL
NO SCALE

NOTES:

1. QUANTITY AND CONFIGURATION OF DUCTS SHALL BE AS SHOWN ON PLAN DRAWINGS. 12" MINIMUM SEPARATION SHALL BE MAINTAINED BETWEEN ELECTRICAL AND COMMUNICATIONS DUCTS.

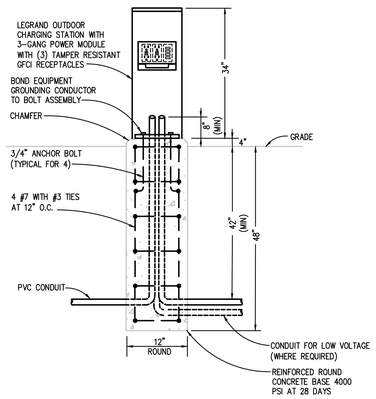

OUTDOOR POWER PEDESTAL DETAIL
NO SCALE

NOTES:

1. INSTALL POWER PEDESTAL PER MANUFACTURER'S REQUIREMENTS.
2. PROVIDE PRECAST CONCRETE BASE AS MANUFACTURED BY NORTHERN CONCRETE PIPE, INC. OR APPROVED EQUAL.
3. CONCRETE REINFORCEMENTS SHALL BE BARE, ZINC GALVANIZED, OR ELECTRICALLY CONDUCTIVE COATED STEEL. BOND ALL CONCRETE REINFORCEMENTS AND ANCHOR BOLTS TOGETHER SO THAT SYSTEM IS ELECTRICALLY CONTINUOUS.

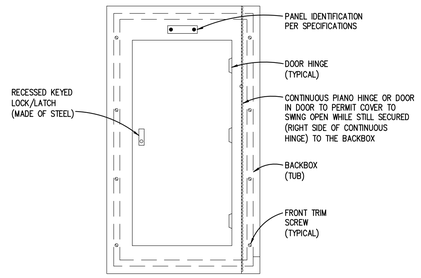

PANELBOARD FRONT COVER DETAIL
NO SCALE

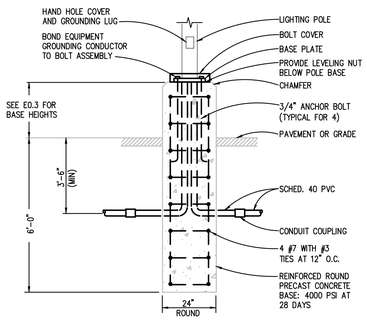

LIGHTING POLE BASE DETAIL
NO SCALE

NOTE:

1. PROVIDE PRECAST CONCRETE BASE AS MANUFACTURED BY NORTHERN CONCRETE PIPE, INC. OR APPROVED EQUAL.
2. CONCRETE REINFORCEMENTS SHALL BE BARE, ZINC GALVANIZED, OR ELECTRICALLY CONDUCTIVE COATED STEEL. BOND ALL CONCRETE REINFORCEMENTS AND ANCHOR BOLTS TOGETHER SO THAT SYSTEM IS ELECTRICALLY CONTINUOUS.

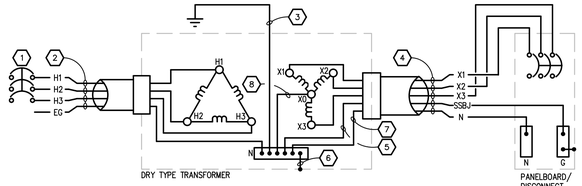

DRY TYPE DISTRIBUTION TRANSFORMER GROUNDING ARRANGEMENT
NO SCALE

(#) KEYED NOTES:

1. 480V, 3# PRIMARY CIRCUIT BREAKER BASED ON DRY TYPE DISTRIBUTION TRANSFORMER CIRCUIT SIZING SCHEDULE ON ELECTRICAL STANDARD SCHEDULE DRAWING UNLESS OTHERWISE NOTED.
2. PRIMARY FEEDER BASED ON FEEDER AND BRANCH CIRCUIT SIZING TABLE ON ELECTRICAL STANDARD SCHEDULE DRAWING UNLESS OTHERWISE NOTED.
3. GROUNDING ELECTRODE CONDUCTOR TO NEAREST GROUNDING ELECTRODE (i.e. METAL IN GROUND SUPPORT STRUCTURE, METAL WATER PIPE, GROUND RING, OR GROUND BUS). SEE DRY TYPE DISTRIBUTION TRANSFORMER CIRCUIT SIZING SCHEDULE ON ELECTRICAL STANDARD SCHEDULE DRAWING FOR SIZE UNLESS OTHERWISE NOTED.
4. 208Y/120V, 3#, 4W SECONDARY FEEDER BASED ON DRY TYPE DISTRIBUTION TRANSFORMER CIRCUIT SIZING SCHEDULE ON ELECTRICAL STANDARD SCHEDULE DRAWING UNLESS OTHERWISE NOTED.
5. SUPPLY SIDE BONDING JUMPER.
6. SYSTEM BONDING JUMPER.
7. GROUNDED CONDUCTOR (NEUTRAL).
8. NEUTRAL CONDUCTOR PROVIDED WITH EQUIPMENT.

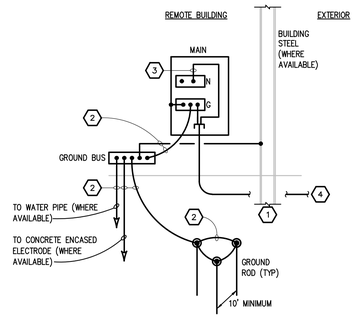

REMOTE BUILDING GROUNDING
NO SCALE

(#) KEYED NOTES:

1. METAL IN-GROUND SUPPORT STRUCTURE IN DIRECT CONTACT WITH EARTH VERTICALLY FOR A MINIMUM OF 10FT, WHERE AVAILABLE.
2. GROUNDING ELECTRODE CONDUCTOR, #4/0 COPPER.
3. GROUNDED CONDUCTOR (NEUTRAL), SEE ONE LINE DIAGRAM.
4. PHASE CONDUCTORS, GROUNDED CONDUCTOR (NEUTRAL), AND EQUIPMENT GROUNDING CONDUCTOR IN CONDUIT TO MAIN BUILDING. SEE ONE LINE DIAGRAM.

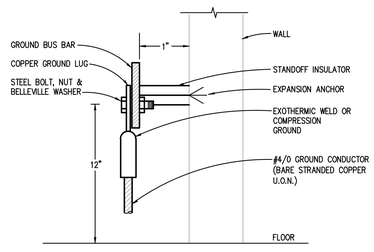

GROUND BUS DETAIL
NO SCALE

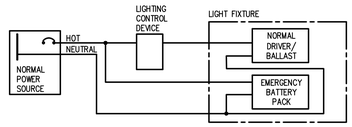

SWITCHED (NON-NIGHT LIGHT EMERGENCY FIXTURE)

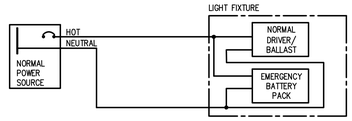

UNSWITCHED (NIGHT LIGHT EMERGENCY FIXTURE)

EMERGENCY BATTERY BACKUP WIRING DIAGRAM - INTERNAL TO LIGHT FIXTURE
NO SCALE

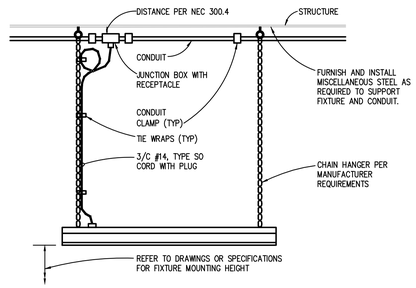

TYPICAL MOUNTING DETAIL FOR CHAIN HUNG LIGHTING FIXTURES
NO SCALE

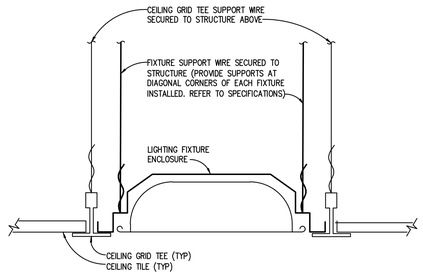

RECESSED LIGHTING FIXTURE INSTALLATION DETAIL
NO SCALE

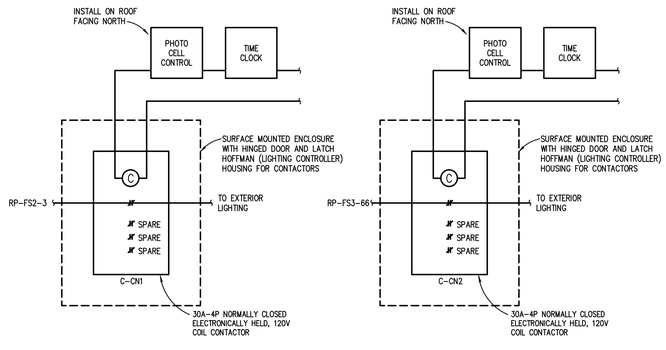

EXTERIOR LIGHTING CONTACTOR
NO SCALE

TMP ARCHITECTURE

TMP ARCHITECTURE INC
1191 WEST SQUARE LAKE ROAD
BLOOMFIELD HILLS • MICHIGAN • 48302
PH • 248.338.4561 FX • 248.338.0223
EM • INFO@TMP-ARCHITECTURE.COM

REGISTRATION SEAL

CONSULTANT

Peter Basso Associates
CONSULTING ENGINEERS
5145 Livernois, Suite 100
Troy, Michigan 48098-3276
Tel: 248-879-5666
www.PeterBassoAssociates.com
PBA Project No.: 2023.0156.03

PROJECT TITLE

Troy High School Athletic Fields Bid Package No. 02B

Troy School District
Troy, Michigan

DRAWING TITLE

ELECTRICAL DETAILS AND DIAGRAMS

ISSUE DATES

12-10-2024	CONSTRUCTION DOCUMENTS
DATE:	ISSUED FOR:

DRAWN	ZDB
CHECKED	ZDB
APPROVED	STP

PROJECT NO.

22104E

DRAWING NO.

E7.1

G:\2023\2023-0156-00\CAD\03 - Athletics Phase 2\2023-0156-03-E7-01.dwg, E7.1, 12/9/2024 11:57:25 AM, Alexandra A. Muncey, None ,0.13459, Peter Basso Associates Inc.