MULTI-USE SAFE ROOM

BARNWELL SCHOOL DISTRICT

474 JACKSON STREET
BARNWELL, SC 29812

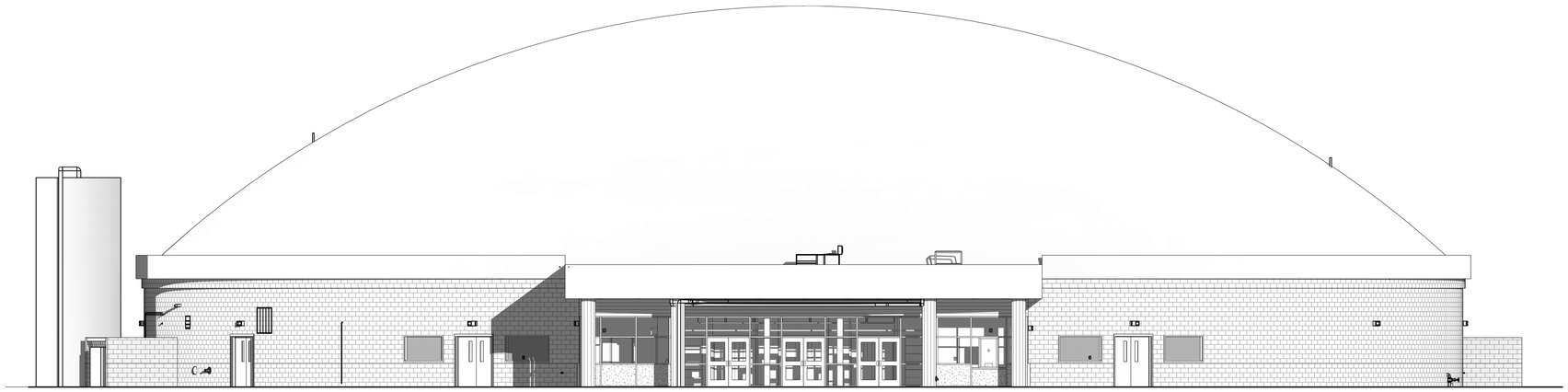

240 Continental Drive, Suite 200
Newark, DE 19713
Tel: 302.738.7551
Fax: 302.454.5989

www.tetratech.com

TETRA TECH

PROJECT LOCATION:
474 JACKSON STREET
BARNWELL, SC 29812

CLIENT INFORMATION:
BARNWELL SCHOOL DISTRICT
770 HAGOOD AVE.
BARNWELL, SC 29812
Tel: 803 541 1300

Tt PROJECT No.:
200-207015-20004

PROJECT NAME:
BARNWELL DISTRICT
MULTI-USE SAFE ROOM

PROJECT DESCRIPTION:
This project consists of a new multi-use dome safe room for Barnwell District 45. The building will be used to host sporting and different types of events.

ISSUED:

09/11/2024 - ISSUED FOR BID

STATE OF SOUTH CAROLINA
LINDA ANN D'ISABELLA
Newark, DE
No. 15292
REGISTERED ARCHITECT

09/11/2024

VICINITY MAP:



LOCAL MAP:

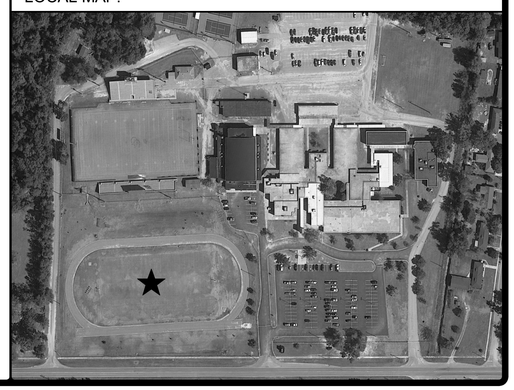

ARCHITECT
MECHANICAL ENGINEER
PLUMBING ENGINEER
ELECTRICAL ENGINEER
TETRA TECH
240 Continental Drive, Suite 200
Newark, DE 19713
Tel 302.738.7551

CIVIL ENGINEER
THOMAS & HUTTON
1501 MAIN ST., Suite 760
COLUMBIA, SC 29201
Tel: 803.451.0200

STRUCTURAL ENGINEER
ZZ CONSULTING
640 S. STATE ST.
SHELLEY, ID 83274
Tel: 208.357.5404

DRAWING SHEET INDEX

GENERAL

G-002	FIRST FLOOR CODE PLAN
G-003	SIGNAGE PLAN AND SCHEDULES
G-004	SIGNAGE AND MOUNTING TYPES

CIVIL

C-002	GENERAL NOTES & INDEX
C-100	EXISTING CONDITION & DEMO PLAN
C-200	SITE PLAN - PHASE 1
C-201	SITE PLAN - PHASE II
C-300	EROSION CONTROL NOTES
C-301	EROSION CONTROL CHARTS
C-302	EROSION CONTROL - SWIPP DETAILS
C-303	EROSION CONTROL - SWIPP DETAILS
C-400	EROSION CONTROL PLAN - INITIAL
C-500	EROSION CONTROL PLAN - CONSTRUCTION
C-600	EROSION CONTROL PLAN - STABILIZATION
C-700	UTILITY PLAN
C-701	SANITARY SEWER PROFILE
C-702	UTILITY DETAILS
C-800	PAVING, GRADING, & DRAINAGE PLAN
C-801	STORM DRAINAGE PROFILES
C-802	PAVING, GRADING, & DRAINAGE DETAILS
C-803	PAVING, GRADING, & DRAINAGE DETAILS
C-804	POND DETAILS
C-900	FIRE TRUCK ACCESS PLAN

STRUCTURAL

S-001	GENERAL STRUCTURAL NOTES
S-002	TYPICAL DETAILS
S-110	FOUNDATION PLAN
S-111	FOUNDATION DETAILS
S-115	MEZZANINE AND LOW ROOF FRAMING PLANS
S-116	FRAMING DETAILS
S-301	DOME REINFORCING SECTION
S-302	DOME DETAILS

ARCHITECTURAL

A-001	ABBREVIATIONS, LEGENDS AND GENERAL NOTES
A-002	ARCHITECTURAL STANDARDS
A-110	FIRST FLOOR PLAN
A-150	ARCHITECTURAL ROOF PLAN / DETAILS
A-160	FIRST FLOOR REFLECTED CEILING PLAN / DETAILS
A-200	EXTERIOR BUILDING ELEVATIONS
A-301	BUILDING SECTIONS
A-302	WALL SECTIONS / PARTIAL BUILDING SECTIONS
A-401	HOME TEAM LOCKER ROOMS & MEZZANINE NORTH & SOUTH ENLARGED PLANS
A-402	VISITING TEAM LOCKER ROOMS - TOILET ROOMS & MEZZANINE WEST ENLARGED PLANS
A-403	INTERIOR ELEVATIONS
A-501	PARTITION TYPES AND ARCHITECTURAL DETAILS
A-502	ARCHITECTURAL DETAILS
A-503	SECTION DETAILS
A-601	DOOR SCHEDULE, DOOR DETAILS, AND DOOR/FRAME TYPES
A-602	STOREFRONT ELEVATIONS
A-801	FINISH PLAN AND FINISH SCHEDULE
A-802	BASKETBALL COURT STRIPING PLAN / DETAILS

MECHANICAL

M-001	ABBREVIATIONS, LEGENDS AND GENERAL NOTES
M-110	MECHANICAL FIRST FLOOR PLAN
M-111	MECHANICAL MEZZANINE PLAN
M-301	MECHANICAL SECTIONS
M-501	MECHANICAL DETAILS
M-601	MECHANICAL SCHEDULES
M-701	AIRFLOW DIAGRAMS
M-901	MECHANICAL CONTROLS

PLUMBING

P-001	ABBREVIATIONS, LEGENDS AND GENERAL NOTES
P-110	PLUMBING FIRST FLOOR OVERALL PRESSURE PIPING PLAN
P-111	PLUMBING MECHANICAL PLATFORM NATURAL GAS PIPING PLAN
P-131	PLUMBING FIRST FLOOR OVERALL WASTE PIPING PLAN
P-132	PLUMBING FIRST FLOOR VENT PIPING PLAN
P-141	PLUMBING ROOF PLAN
P-401	PLUMBING ENLARGED FIRST FLOOR PRESS. PIPING PLANS
P-402	PLUMBING ENLARGED FIRST FLOOR PRESS. PIPING PLANS
P-431	PLUMBING ENLARGED FIRST FLOOR WASTE PIPING PLAN
P-432	PLUMBING ENLARGED FIRST FLOOR WASTE PIPING PLAN
P-433	PLUMBING ENLARGED FIRST FLOOR VENT PIPING PLAN
P-434	PLUMBING ENLARGED FIRST FLOOR VENT PIPING PLAN
P-501	PLUMBING DETAILS
P-502	PLUMBING DETAILS
P-601	PLUMBING SCHEDULES
P-901	PLUMBING RISER DIAGRAMS
P-902	PLUMBING RISER DIAGRAMS
P-903	PLUMBING RISER DIAGRAMS
P-904	PLUMBING RISER DIAGRAMS

FIRE PROTECTION

FP001	LEGEND, ABBREVIATIONS AND NOTES
FP110	FIRE PROTECTION FIRST FLOOR PLAN
FP501	FIRE PROTECTION DETAILS AND SCHEDULES

ELECTRICAL

E-001	ELECTRICAL LEGEND, ABBREVIATIONS AND GENERAL NOTES
E-100	ELECTRICAL SITE PLAN
E-110	FIRST FLOOR LIGHTING PLAN
E-111	MEZZANINE LIGHTING PLAN
E-112	FIRST FLOOR POWER PLAN
E-113	FIRST FLOOR COMMUNICATIONS PLAN
E-114	FIRST FLOOR SECURITY PLAN
E-210	FIRST FLOOR HVAC POWER PLAN
E-211	MEZZANINE AND PARTIAL ROOF HVAC POWER PLAN
E-501	ELECTRICAL DETAILS
E-502	ELECTRICAL DETAILS
E-601	SINGLE LINE DIAGRAM
E-602	ELECTRICAL PANEL SCHEDULES

FIRE ALARM

FA001	FIRE ALARM LEGEND, ABBREVIATION AND GENERAL NOTES
FA110	FIRST FLOOR FIRE ALARM PLAN
FA111	MEZZANINE FIRE ALARM/MNS PLAN
FA601	FIRE ALARM RISER DIAGRAM AND DETAILS

12/9/2024 2:02:58 PM BIM 360://200-207015-20004 - Barnwell Dome/A_BARN_DOME_v2019.rvt

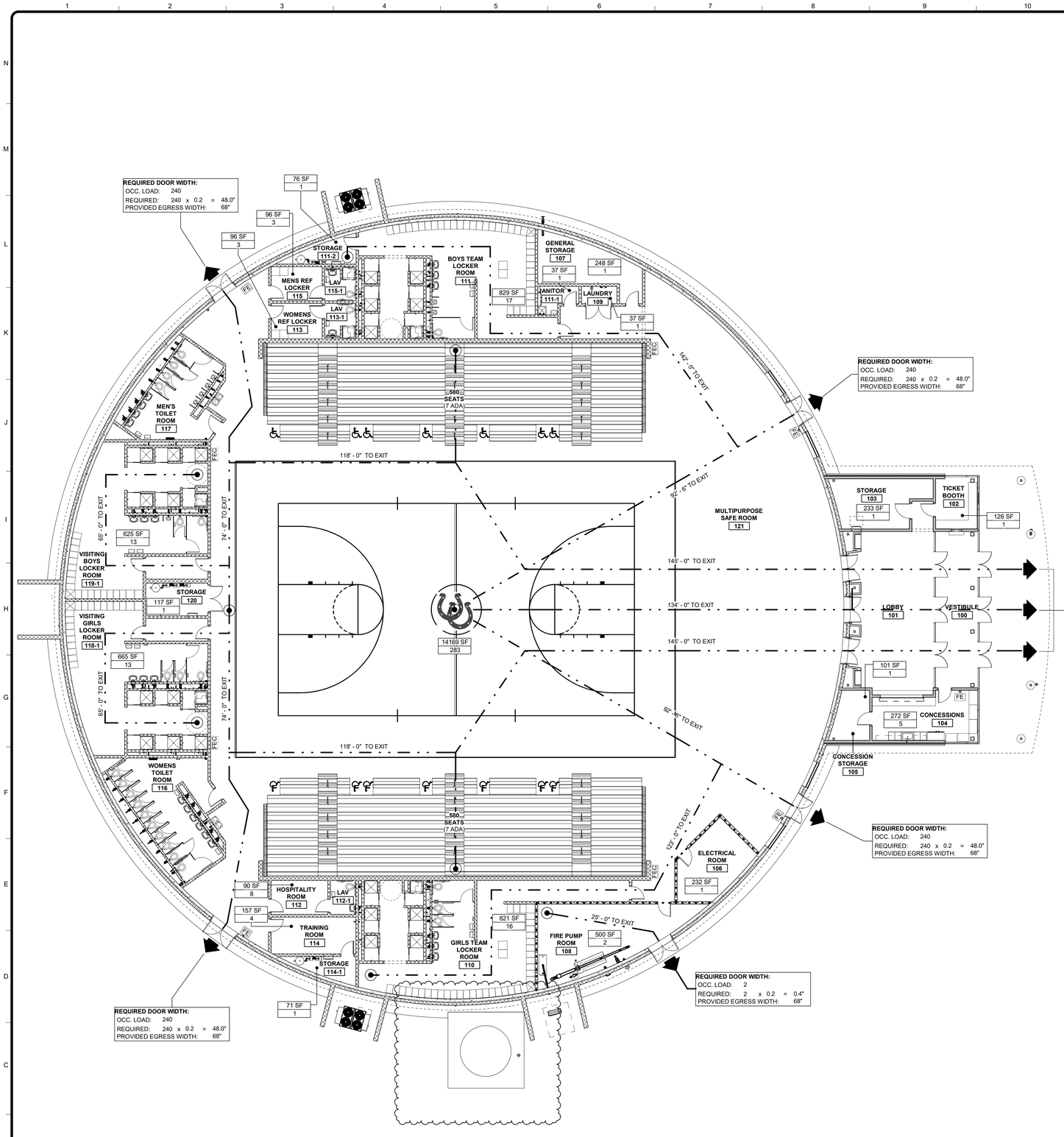

1 G-002 FIRST FLOOR PLAN CODE PLAN
SCALE: 3/32" = 1'-0"

BUILDING CODE ABSTRACT

	IBC	REMARKS
CLASSIFICATION OF OCCUPANCY		
CODE REFERENCE		
	ASSEMBLY, GROUP A-4	
CONSTRUCTION TYPE		
CODE REFERENCE	602	
TYPE	IIB	
BUILDING AREA		
CODE REFERENCE	IIB - TABLE 506.2	
ALLOWABLE AREA	38,000 SF	
ACTUAL AREA	29,525 SF	NO OPEN PERIMETER INCREASE REQUIRED
CODE REFERENCE	IBC TABLE 504.3	
ALLOWABLE BUILDING HEIGHT	75'	
ACTUAL BUILDING HEIGHT	54'	
NUMBER OF STORIES		
CODE REFERENCE	IBC TABLE 504.4	
ALLOWABLE STORIES	3	
ACTUAL STORIES	1	
NUMBER OF OCCUPANTS		
CODE REFERENCE	Table 1004.5	
FIRST FLOOR	1,888 OCC.	SEE OCCUPANCY CALCULATIONS
NUMBER OF EXITS, REQUIRED		
CODE REFERENCE	TABLE 1006.3.2	
FIRST FLOOR	4	
NUMBER OF EXITS, ACTUAL		
FIRST FLOOR	5	
LEVEL EGRESS WIDTH FACTOR		
CODE REFERENCE	1005.3.2	AUTOMATIC SPRINKLER SYSTEM
CODE REQUIRED	0.2	INCHES PER OCCUPANT
TOTAL INCHES REQUIRED	314.2 / 386.2	BASKETBALL / STAGE EVENT
FIRST FLOOR - PROVIDED	476"	
EGRESS REQUIREMENTS		
CODE REFERENCE	CHAPTER 10	
MAX TRAVEL DISTANCE	250 FT.	TABLE 1017.2
COMMON PATH OF TRAVEL	75 FT.	TABLE 1006.3.3 (2)
DEAD END CORRIDORS	20 FT.	TABLE 1020.4
AREA OF REFUGE	N/A	
FIRE PROTECTION SYSTEMS		
CODE REFERENCE	CHAPTER 9	
SPRINKLERS	903	REQUIRED
FIRE ALARM	907	REQUIRED
SMOKE DETECTORS	907	REQUIRED
FIRE EXTINGUISHERS	906	REQUIRED
FIRE RESISTANCE RATING REQUIREMENTS		
CODE REFERENCE	-	
PRIMARY STRUCTURE	0 HRS	
BEARING WALLS - INTERIOR	0 HRS	
NON-BEARING WALLS - EXTERIOR	0 HRS	
NONBEARING WALLS - INTERIOR	0 HRS	
FLOOR CONSTRUCTION	0 HRS	
ROOF CONSTRUCTION	0 HRS	

BUILDING CODE ANALYSIS

APPLICABLE CODES:

- 2021 INTERNATIONAL BUILDING CODE (IBC)
- 2021 INTERNATIONAL PLUMBING CODE (IPC)
- 2021 INTERNATIONAL MECHANICAL CODE (IMC)
- 2021 INTERNATIONAL FIRE CODE (IFC)
- 2021 INTERNATIONAL FUEL GAS CODE (IFGC)
- 2009 INTERNATIONAL ENERGY CONSERVATION CODE (IECC)
- 2010 ADA STANDARDS FOR ACCESSIBLE DESIGN
- 2020 NATIONAL ELECTRIC CODE (NEC)
- ANSI ICC A117.1-2017
- 2015 FEMA P-361
- 2014 ICC 500

GENERAL CODE NOTES:

1. USE AND OCCUPANCY CLASSIFICATION OF ASSEMBLY GROUP A-4 PER IBC 2018, SECTION 303.
2. SEE CODE PLAN FOR FIRE EXTINGUISHER LOCATIONS. CONTRACTOR TO CONFIRM QUANTITY AND PLACEMENT OF ALL FIRE EXTINGUISHERS WITH FIRE MARSHAL - COORDINATE FINAL LOCATIONS WITH ARCHITECT.

EGRESS CAPACITY

36" DOOR = 34" CLEAR
(2) 36" DOORS = 68" CLEAR

PLUMBING FIXTURE CALCULATIONS

(1,888 TOTAL OCCUPANTS)

	WATER CLOSET MALE	WATER CLOSET FEMALE	LAVORATORIES MALE	LAVORATORIES FEMALE	WATER FOUNTAINS	SERVICE SINK
PROVIDED	14	16	10	10	4	1
REQUIRED	8	15	5	5	4	1

NOTE:

TOILET ROOMS IN REFEREE ROOMS AND HOSPITALITY ROOMS ARE NOT INCLUDED IN TOTAL FIXTURE COUNT BECAUSE THEY SERVE THOSE SPACES RESPECTIVELY.

OCCUPANCY CALCULATIONS

FIRST FLOOR: BASKETBALL

• ACCESSORY STORAGE AREAS, AND MECHANICAL EQUIPMENT RM.	(1 OCC / 300 GSF)	=	11
• BUSINESS AREAS	(1 OCC / 150 GSF)	=	1
• ASSEMBLY - UNCONCENTRATED	(1 OCC / 15 NSF)	=	8
• GYM, EXERCISE ROOMS, TRAINING, AND LOCKER ROOMS	(1 OCC / 50 GSF)	=	343
• BLEACHERS		=	1,160
• CONCESSIONS	(1 OCC / 60 GSF)	=	5
TOTAL		=	**1,528**

NOTE:

OCCUPANCY CALCULATIONS ABOVE ARE BASED UPON A SPORTING COURT. IF THE VENUE IS USED FOR AN EVENT WITH A STAGE AND SEATING ON THE BASKETBALL COURT, THE OCCUPANCY LOAD WOULD INCREASE BY 360 TOTAL OCCUPANTS (20' X 30' STAGE & 50' X 84' CONCENTRATED SEATING). TOTAL OCCUPANT LOAD FOR THIS TYPE OF EVENT WOULD BE 1,888 OCCUPANTS. EGRESS CAPACITY FOR THIS NUMBER OF OCCUPANTS IS PROVIDED AND SHOWN ON THE EGRESS PLAN.

CODE PLAN LEGEND

- RM. NAME / 0 SF / 0 — ROOM AREA (NET OR GROSS DEPENDING ON OCCUPANCY CALCULATION) / CALCULATED IBC
- X' - X" TO EXIT — EGRESS PATHWAY - INDICATES MAXIMUM TRAVEL DISTANCE TO EXIT
- INDICATES POINT AND DIRECTION OF EGRESS DISCHARGE
- FEC — FIRE EXTINGUISHER CABINET
- FE — FIRE EXTINGUISHER - WALL MOUNTED
- 1 HOUR FIRE RATED PARTITION

FIRE EXTINGUISHERS

INSTALLED PER IBC 906 AND NFPA 10.
- LIGHT HAZARD

FIRE EXTINGUISHERS TO BE 10A:120B:C WITH A MAXIMUM TRAVEL DISTANCE OF 75'.

FEMA REQUIREMENTS

- DESIGN WIND SPEED: 160 MPH
- THE BARNWELL SCHOOL DISTRICT 45 MULTI-PURPOSE SAFE ROOM IS DESIGNED FOR MAXIMUM OCCUPANCY OF 950 BASED ON THE CALCULATIONS BELOW.

USABLE STORM SHELTER
FLOOR AREA PER 2014 ICC 500

TABLE 501.1.1 OCCUPANT DENSITY - COMMUNITY SHELTERS

HURRICANE	MINIMUM REQUIRED USABLE SHELTER FLOOR AREA, IN SQUARE FEET PER OCCUPANT
STANDING OR SEATED	20
WHEELCHAIR	20
BEDRIDDEN	40

- 750 STANDING / SEATED X 20 SF = 15, 000 SF
- 100 WHEELCHAIR X 20 SF = 2,000 SF
- 100 MEDICAL BED X 40 SF = 4,000 SF

TOTAL USABLE AREA REQUIRED IS ESTIMATED TO BE 21,000 SQUARE FEET.

TOTAL USABLE AREA PROVIDED IS 21,540 SQUARE FEET.

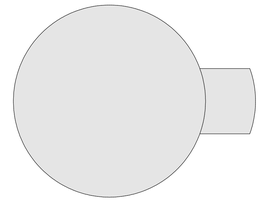

KEY PLAN

PROJECT NORTH
TRUE NORTH
0 5'-4" 10'-8" 21'-4"
SCALE: 3/32" = 1'-0"

TETRA TECH
www.tetratech.com
240 Continental Drive, Suite 200
Newark, DE 19713
Tel: 302.738.7551 Fax: 302.454.3989

STATE OF SOUTH CAROLINA
LINDA ANN DISABELLA
Newark, DE
No. 35292
REGISTERED ARCHITECT
12/06/2024

BARNWELL SCHOOL DISTRICT
OWNER
770 HAGOOD AVE
BARNWELL, SC 29812
Tel: 803 541 1300

TETRA TECH
ARCHITECT
MECHANICAL ENGINEER
PLUMBING ENGINEER
ELECTRICAL ENGINEER
240 Continental Drive, Suite
Newark, DE 19713
302.738.7551

THOMAS & HUTTON
CIVIL ENGINEER
1501 MAIN ST.
COLUMBIA, SC 29201
Tel: 803 451 0200

THOMAS & HUTTON

ZZ CONSULTING
STRUCTURAL ENGINEER
640 S. STATE ST
SHELLEY, ID 83274
Tel: 208 357 5404

MARK	DATE	DESCRIPTION	BY
	12/6/24	ISSUED FOR CONSTRUCTION CONFORMANCE SET	LAD

BARNWELL SCHOOL DISTRICT
MULTI-USE SAFE ROOM

FIRST FLOOR CODE PLAN

Project No.: 200-207015-20004
Designed By: MTR
Drawn By: JRF/JDR
Checked By: JS

G-002

Copyright: Tetra Tech

12/9/2024 2:03:12 PM BIM 360://200-207015-20004 - Barnwell Dome/A_BARN_DOME_v2019.rvt

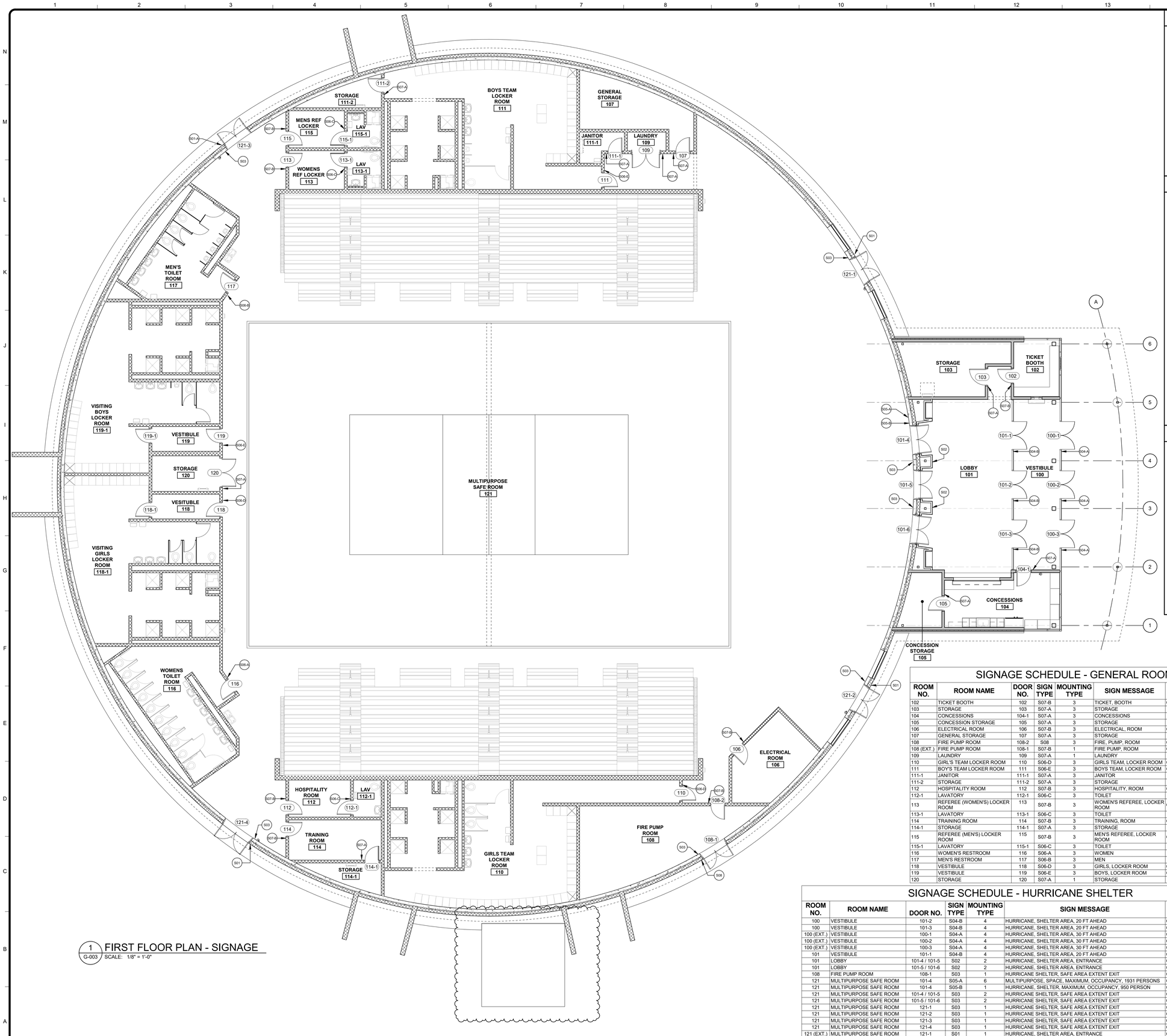

1 FIRST FLOOR PLAN - SIGNAGE
G-003 SCALE: 1/8" = 1'-0"

GENERAL NOTES

1. SEE SIGNAGE FLOOR PLAN FOR LOCATIONS OF SIGNS LISTED IN SCHEDULES. CONTRACTOR TO BE RESPONSIBLE FOR QUANTITIES.
2. SIGN TYPE S04 (SHELTER AHEAD). SEE CIVIL DRAWINGS FOR LOCATIONS
3. COORDINATE SIGNAGE LOCATIONS WITH ARCHITECT/OWNER PRIOR TO INSTALLATION.
4. PROVIDE (1) SIGN AT EACH LOCATION, TYPICAL, U.N.O.
5. VISUAL CHARACTERS ON SIGNAGE SHALL BE NO LESS THAN 40 INCHES AND NO MORE THAN 70 INCHES A.F.F.
6. RAISED CHARACTERS ON SIGNAGE SHALL BE NO LESS THAN 48 INCHES AND NO MORE THAN 60 INCHES A.F.F., MEASURED TO BASE OF RAISED CHARACTERS. SEE DRAWINGS A-002 & G-004 FOR MOUNTING HEIGHT.
7. CHARACTERS AND THEIR BACKGROUND SHALL HAVE A NON-GLARE FINISH. CHARACTERS SHALL CONTRAST WITH THEIR BACKGROUND, WITH ONE BEING LIGHT IN COLOR AND THE OTHER DARK IN COLOR.
8. BRAILLE SHALL BE 48 INCH MINIMUM AND 60 INCH MAXIMUM A.F.F., MEASURED TO BASE OF THE BRAILLE CELLS.
9. FOR ADDITIONAL SIGN TEXT, CHARACTER, BRAILLE, SPACING, HEIGHT INFORMATION SEE ICC A117.1 SECTION 703 SIGNS.

CONSTRUCTION NOTES

1. TERMS "SIGN" AND/OR "SIGNAGE" HEREWITH SHALL REFER TO ANY OF THE TYPES OF SIGNAGE AS DEFINED IN 'SIGN TYPE DESCRIPTIONS'.
2. SIGNAGE ON ALL WALLS SHALL BE CONCEALED SCREW MOUNTED. SIGNAGE ON WINDOWS, GLASS WALLS, AND DOORS SHALL BE ADHESIVE MOUNTED.
3. FURNISH TEMPLATES FOR PLACEMENT OF SIGN-ANCHORAGE DEVICES EMBEDDED IN PERMANENT CONSTRUCTION TO BE INSTALLED BY OTHERS.
4. SUBMIT SHOP DRAWINGS FOR ALL SIGN TYPES. SHOP DRAWINGS SHALL INCLUDE THE FOLLOWING:
   A. INCLUDE FABRICATION AND INSTALLATION DETAILS FOR ATTACHMENT TO OTHER WORK.
   B. SHOW SIGN MOUNTING HEIGHTS, LOCATIONS OF SUPPLEMENTARY SUPPORTS TO BE PROVIDED BY OTHER INSTALLERS AND ACCESSORIES.
   C. SHOW MESSAGE LIST, TYPE STYLES, GRAPHIC ELEMENTS, INCLUDING RAISED CHARACTERS, BRAILLE, AND LAYOUT FOR EACH SIGN AT LEAST HALF SIZE.
5. SUBMIT FULL SIZED SAMPLES FOR VERIFICATION DURING THE SUBMITTAL PROCESS. INCLUDE ALL CONCEALED FASTENERS. FULL SIZED SAMPLES.
6. PROVIDE SPECIAL WARRANTY FOR UP TO FIVE YEARS FROM DATE OF SUBSTANTIAL COMPLETION. MANUFACTURER AGREES TO REPAIR OR REPLACE COMPONENTS OF SIGNS THAT FAIL IN MATERIALS OR WORKMANSHIP WITHIN SPECIFIED WARRANTY PERIOD. FAILURES INCLUDE, BUT ARE NOT LIMITED TO THE FOLLOWING:
   A. DETERIORATION OF FINISHES BEYOND NORMAL WEATHERING.
   B. DETERIORATION OF EMBEDDED GRAPHIC IMAGE.
   C. SEPARATION OR DELAMINATION OF SHEET MATERIALS AND COMPONENTS.
7. USE CONCEALED FASTENERS, ANCHORS, OR ADHESIVE, TYPICAL UNO, AS RECOMMENDED BY SIGN MANUFACTURER AND AS INDICATED IN DRAWINGS.
   A. USE CONCEALED, THREADED STUDS WELDED OR BRAZED TO BACK OF SIGN MATERIALS OR SCREWED INTO BACK OF SIGN ASSEMBLY.
   B. USE TWO-FACED TAPE, HIGH-BOND FOAM-CORE TAPE .045 INCH THICK.
   C. THROUGH FASTENERS, OR EXPOSED FASTENERS SHALL MATCH SIGN FINISH, WITH TYPE OF HEAD INDICATED, INSTALLED IN PREDRILLED HOLES.
8. PRE-ASSEMBLE SIGNS AND ASSEMBLIES IN THE SHOP TO GREATEST EXTENT POSSIBLE. CLEARLY MARK UNITS FOR REASSEMBLY AND INSTALLATION. APPLY MARKINGS IN LOCATIONS CONCEALED FROM VIEW AFTER FINAL ASSEMBLY.

ACRYLIC SIGNAGE NOTES

1. PRIOR TO FABRICATION, SUBMIT SHOP DRAWINGS OF ALL SIGN TYPES SHOWING GRAPHIC; BACKGROUND COLOR, TEXT COLOR, AND SPECIFIED FONTS.
2. ALL INTERIOR PLAQUES SHALL BE 3/8" THICK CLEAR, NON-GLARE ACRYLIC, BACK PAINTED TO MATCH ADJACENT WALL COLOR, U.N.O.
3. ALL PLAQUES SHALL BE 3/8" THICK CLEAR, NON-GLARE, EXTERIOR GRADE ACRYLIC, BACK PAINTED TO MATCH ADJACENT WALL COLOR. U.N.O.
4. SOLID VINYL PANEL TO MATCH SIZE OF ROOM SIGN SHALL BE APPLIED TO REVERSE SIDE OF GLASS WALL, WINDOW, OR DOOR WINDOW WHERE SIGNAGE IS MOUNTED ON GLAZING.
5. EDGE CONDITION AT VERTICAL AND HORIZONTAL EDGES SHALL BE SMOOTH, SQUARE CUT. CORNER CONDITION IN ELEVATION SHALL BE SQUARE, AS INDICATED ON DRAWINGS.
6. FINISHED ENGLISH BRAILLE SHALL MATCH PLAQUE'S BACKGROUND COLOR.
7. TYP. SIGN MATERIAL SHALL BE ACRYLIC SHEET: ASTM D 4802, CATEGORY AS STANDARD WITH MANUFACTURER FOR EACH SIGN, TYPE UVF (UV FILTERING). SEE DRAWINGS FOR ADDITIONAL NOTES.
8. ALL TEXT: GOTHIC BOLD, BLACK IN COLOR
   CHARACTERS SHALL BE UPPERCASE, 1" IN HEIGHT, TYP. (U.N.O.)
   ALL TEXT HEIGHT, WIDTH, AND SPACING SHALL COMPLY WITH ICC A117.1
   ALL TEXT SHALL HAVE 1/2" SPACE BETWEEN LINES, TYP. (U.N.O.)
9. SIGN TEXT CHARACTERS SHALL BE RAISED A MINIMUM OF 1/32" ABOVE THEIR BACKGROUND PLAQUE AND SHALL BE DUPLICATED IN BRAILLE AND COMPLY WITH ICC A117.1 SECTION 703.3

SIGNAGE SCHEDULE - GENERAL ROOM

ROOM NO.	ROOM NAME	DOOR NO.	SIGN TYPE	MOUNTING TYPE	SIGN MESSAGE	COMMENTS
102	TICKET BOOTH	102	S07-B	3	TICKET, BOOTH	COMMA DENOTES NEXT LINE
103	STORAGE	103	S07-A	3	STORAGE	
104	CONCESSIONS	104-1	S07-A	3	CONCESSIONS	
105	CONCESSION STORAGE	105	S07-A	3	STORAGE	
106	ELECTRICAL ROOM	106	S07-B	3	ELECTRICAL, ROOM	COMMA DENOTES NEXT LINE
107	GENERAL STORAGE	107	S07-A	3	STORAGE	
108	FIRE PUMP ROOM	108-2	S08	3	FIRE, PUMP, ROOM	COMMA DENOTES NEXT LINE
108 (EXT.)	FIRE PUMP ROOM	108-1	S07-B	1	FIRE PUMP, ROOM	COMMA DENOTES NEXT LINE
109	LAUNDRY	109	S07-A	1	LAUNDRY	
110	GIRLS TEAM LOCKER ROOM	110	S06-D	3	GIRLS TEAM, LOCKER ROOM	COMMA DENOTES NEXT LINE
111	BOY'S TEAM LOCKER ROOM	111	S06-E	3	BOYS TEAM, LOCKER ROOM	COMMA DENOTES NEXT LINE
111-1	JANITOR	111-1	S07-A	3	JANITOR	
111-2	STORAGE	111-2	S07-A	3	STORAGE	
112	HOSPITALITY ROOM	112	S07-B	3	HOSPITALITY, ROOM	COMMA DENOTES NEXT LINE
112-1	LAVATORY	112-1	S06-C	3	TOILET	
113	REFEREE (WOMEN'S) LOCKER ROOM	113	S07-B	3	WOMEN'S REFEREE, LOCKER ROOM	COMMA DENOTES NEXT LINE
113-1	LAVATORY	113-1	S06-C	3	TOILET	
114	TRAINING ROOM	114	S07-B	3	TRAINING, ROOM	COMMA DENOTES NEXT LINE
114-1	STORAGE	114-1	S07-A	3	STORAGE	
115	REFEREE (MEN'S) LOCKER ROOM	115	S07-B	3	MEN'S REFEREE, LOCKER ROOM	COMMA DENOTES NEXT LINE
115-1	LAVATORY	115-1	S06-C	3	TOILET	
116	WOMEN'S RESTROOM	116	S06-A	3	WOMEN	
117	MEN'S RESTROOM	117	S06-B	3	MEN	
118	VESTIBULE	118	S06-D	3	GIRLS, LOCKER ROOM	COMMA DENOTES NEXT LINE
119	VESTIBULE	119	S06-E	3	BOYS, LOCKER ROOM	COMMA DENOTES NEXT LINE
120	STORAGE	120	S07-A	1	STORAGE	

SIGNAGE SCHEDULE - HURRICANE SHELTER

ROOM NO.	ROOM NAME	DOOR NO.	SIGN TYPE	MOUNTING TYPE	SIGN MESSAGE	COMMENTS
100	VESTIBULE	101-2	S04-B	4	HURRICANE, SHELTER AREA, 20 FT AHEAD	COMMA DENOTES NEXT LINE
100	VESTIBULE	101-3	S04-B	4	HURRICANE, SHELTER AREA, 20 FT AHEAD	COMMA DENOTES NEXT LINE
100 (EXT.)	VESTIBULE	100-1	S04-A	4	HURRICANE, SHELTER AREA, 30 FT AHEAD	COMMA DENOTES NEXT LINE
100 (EXT.)	VESTIBULE	100-2	S04-A	4	HURRICANE, SHELTER AREA, 30 FT AHEAD	COMMA DENOTES NEXT LINE
100 (EXT.)	VESTIBULE	100-3	S04-A	4	HURRICANE, SHELTER AREA, 30 FT AHEAD	COMMA DENOTES NEXT LINE
101	VESTIBULE	101-1	S04-B	4	HURRICANE, SHELTER AREA, 20 FT AHEAD	COMMA DENOTES NEXT LINE
101	LOBBY	101-4 / 101-5	S02	2	HURRICANE, SHELTER AREA, ENTRANCE	COMMA DENOTES NEXT LINE
101	LOBBY	101-5 / 101-6	S02	2	HURRICANE, SHELTER AREA, ENTRANCE	COMMA DENOTES NEXT LINE
108	FIRE PUMP ROOM	108-1	S03	1	HURRICANE SHELTER, SAFE AREA EXTENT EXIT	COMMA DENOTES NEXT LINE
121	MULTIPURPOSE SAFE ROOM	101-4	S05-A	6	MULTIPURPOSE, SPACE, MAXIMUM, OCCUPANCY, 1931 PERSONS	COMMA DENOTES NEXT LINE
121	MULTIPURPOSE SAFE ROOM	101-4	S05-B	1	HURRICANE, SHELTER, MAXIMUM, OCCUPANCY, 950 PERSON	COMMA DENOTES NEXT LINE
121	MULTIPURPOSE SAFE ROOM	101-4 / 101-5	S03	2	HURRICANE SHELTER, SAFE AREA EXTENT EXIT	COMMA DENOTES NEXT LINE
121	MULTIPURPOSE SAFE ROOM	101-5 / 101-6	S03	2	HURRICANE SHELTER, SAFE AREA EXTENT EXIT	COMMA DENOTES NEXT LINE
121	MULTIPURPOSE SAFE ROOM	121-1	S03	1	HURRICANE SHELTER, SAFE AREA EXTENT EXIT	COMMA DENOTES NEXT LINE
121	MULTIPURPOSE SAFE ROOM	121-2	S03	1	HURRICANE SHELTER, SAFE AREA EXTENT EXIT	COMMA DENOTES NEXT LINE
121	MULTIPURPOSE SAFE ROOM	121-3	S03	1	HURRICANE SHELTER, SAFE AREA EXTENT EXIT	COMMA DENOTES NEXT LINE
121	MULTIPURPOSE SAFE ROOM	121-4	S03	1	HURRICANE SHELTER, SAFE AREA EXTENT EXIT	COMMA DENOTES NEXT LINE
121 (EXT.)	MULTIPURPOSE SAFE ROOM	121-1	S01	1	HURRICANE, SHELTER AREA, ENTRANCE	COMMA DENOTES NEXT LINE
121 (EXT.)	MULTIPURPOSE SAFE ROOM	121-2	S01	1	HURRICANE, SHELTER AREA, ENTRANCE	COMMA DENOTES NEXT LINE
121 (EXT.)	MULTIPURPOSE SAFE ROOM	121-3	S01	1	HURRICANE, SHELTER AREA, ENTRANCE	COMMA DENOTES NEXT LINE
121 (EXT.)	MULTIPURPOSE SAFE ROOM	121-4.	S01	1	HURRICANE, SHELTER AREA, ENTRANCE	COMMA DENOTES NEXT LINE

KEY PLAN

PROJECT NORTH
TRUE NORTH
0 5'-4" 10'-8" 21'-4"
SCALE: 3/32" = 1'-0"

TETRA TECH
www.tetratech.com
240 Continental Drive, Suite 200
Newark, DE 19713
Tel: 302.738.7551 Fax: 302.454-3989

STATE OF SOUTH CAROLINA
LINDA ANN DISABELLA
Newark, DE
No. 37292
REGISTERED ARCHITECT
12/06/2024

BARNWELL SCHOOL DISTRICT
OWNER
770 HAGOOD AVE
BARNWELL, SC 29812
Tel: 803 541 1300

TETRA TECH
ARCHITECT
MECHANICAL ENGINEER
PLUMBING ENGINEER
ELECTRICAL ENGINEER
240 Continental Drive, Suite
Newark, DE 19713
302.738.7551

THOMAS & HUTTON
CIVIL ENGINEER
1501 MAIN ST.
COLUMBIA, SC 29201
Tel: 803 451 0200

ZZ CONSULTING
STRUCTURAL ENGINEER
640 S. STATE ST
SHELLEY, ID 83274
Tel: 208 357 5404

MARK	DATE	DESCRIPTION	BY
	12/6/24	ISSUED FOR CONSTRUCTION CONFORMANCE SET	LAD

BARNWELL SCHOOL DISTRICT
MULTI-USE SAFE ROOM

SIGNAGE PLAN AND SCHEDULES

Project No.: 200-207015-20004
Designed By: JS/KSZ
Drawn By: KSZ
Checked By: MDB/LG

G-003

Copyright: Tetra Tech

12/9/2024 2:03:17 PM BIM 360://200-207015-20004 - Barnwell Dome/A_BARN_DOME_v2019.rvt

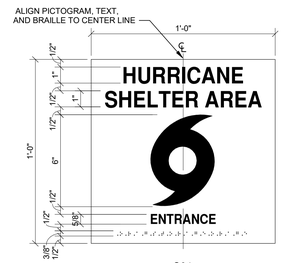

S01
EXTERIOR ACRYLIC SIGN
HURRICANE SHELTER ENTRANCE

1 G-004 SHELTER ENTRANCE - S01
SCALE: 3" = 1'-0"

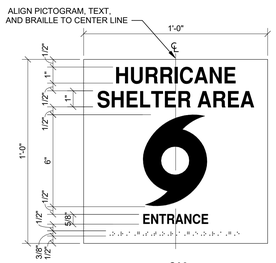

S02
INTERIOR ACRYLIC SIGN
HURRICANE SHELTER ENTRANCE

2 G-004 SHELTER ENTRANCE - S02
SCALE: 3" = 1'-0"

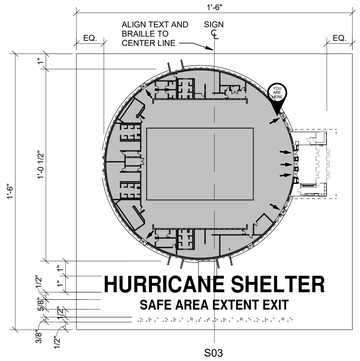

S03
INTERIOR ACRYLIC SIGN
HURRICANE SHELTER EXTENTS MAP
NOTE: "YOU ARE HERE" TO BE COORDINATED WITH DOOR LOCATION SPECIFIED ON SIGNAGE SCHEDULE.

3 G-004 SHELTER MAP - S03
SCALE: 3" = 1'-0"

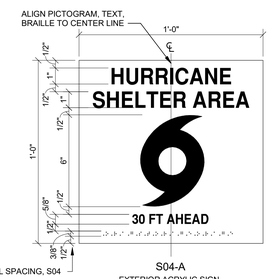

TYPICAL SPACING, S04

S04-A
EXTERIOR ACRYLIC SIGN
HURRICANE SHELTER 30FT AHEAD

4 G-004 SHELTER AHEAD - S04
SCALE: 3" = 1'-0"



ALL BRAILLE SHOWN IN DRAWINGS IS REPRESENTATIVE. CONTRACTOR IS RESPONSIBLE FOR CORRECT BRAILLE WORDING ON SHOP DRAWINGS AND FINAL SIGNAGE.

S04-B
INTERIOR ACRYLIC SIGN
HURRICANE SHELTER 20FT AHEAD

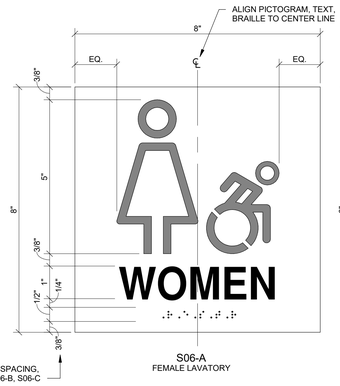

TYPICAL SPACING, S06-1, S06-B, S06-C

S06-A
FEMALE LAVATORY

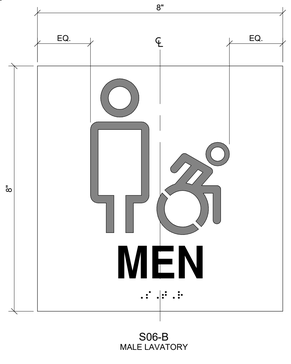

S06-B
MALE LAVATORY



S06-C
UNISEX LAVATORY

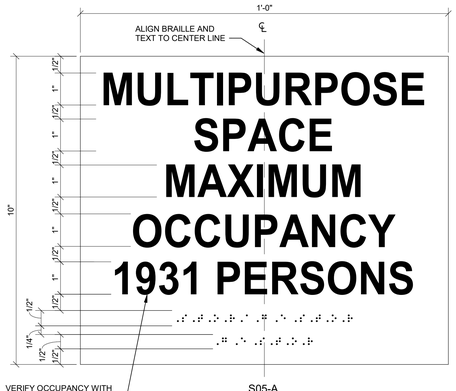

VERIFY OCCUPANCY WITH ARCHITECT/OWNER PRIOR TO CREATION OF SIGN

S05-A
INTERIOR ACRYLIC SIGN
MAXIMUM OCCUPANCY

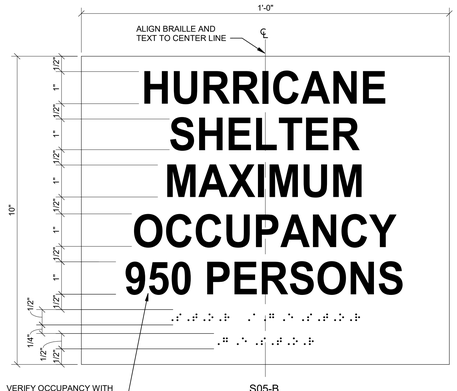

VERIFY OCCUPANCY WITH ARCHITECT/OWNER PRIOR TO CREATION OF SIGN

S05-B
INTERIOR ACRYLIC SIGN
MAXIMUM OCCUPANCY

5 G-004 OCCUPANCY SIGNAGE - S05
SCALE: 6" = 1'-0"



TYPICAL SPACING, S06-D AND S06-E

S06-D
INTERIOR ACRYLIC SIGN
FEMALE LOCKER ROOM

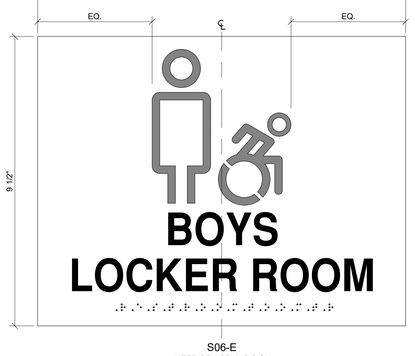

S06-E
INTERIOR ACRYLIC SIGN
MALE LOCKER ROOM

6 G-004 TOILET AND LOCKER ROOM SIGNAGE - S06
SCALE: 6" = 1'-0"

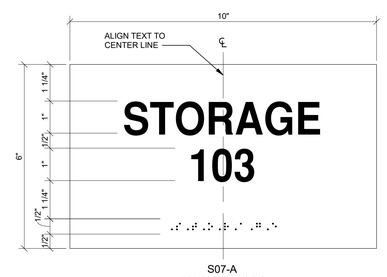

S07-A
INTERIOR ACRYLIC SIGN
SINGLE TEXT LINE ROOM NAME W/ ROOM NUMBER

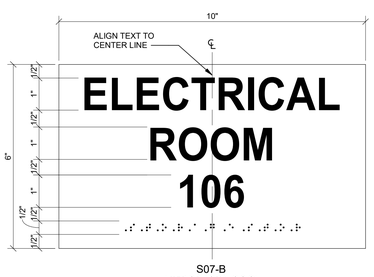

S07-B
INTERIOR ACRYLIC SIGN
DOUBLE TEXT LINE ROOM NAME W/ ROOM NUMBER

7 G-004 GENERAL ROOM SIGNAGE - S07
SCALE: 6" = 1'-0"

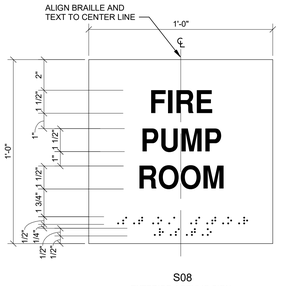

S08
EXTERIOR ACRYLIC SIGN
EMPLOYEES ONLY

8 G-004 EMPLOYEES ONLY - S08
SCALE: 3" = 1'-0"

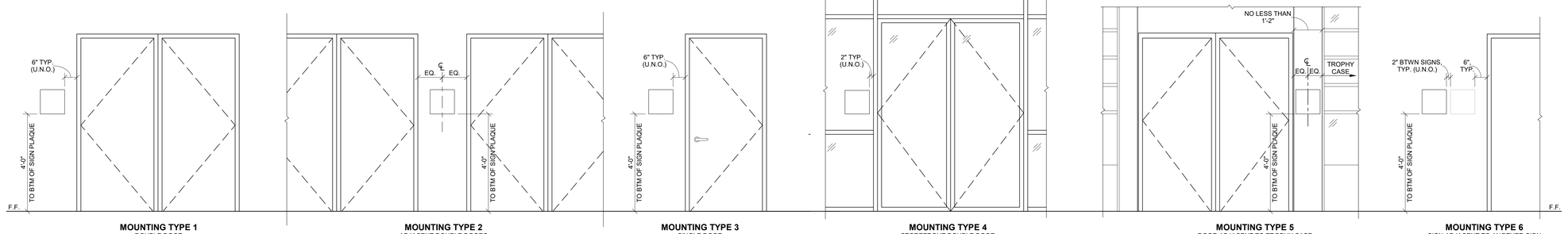

MOUNTING TYPE 1
DOUBLE DOOR
(PLAN IDENTIFIES LEFT/RIGHT OF DOOR)

MOUNTING TYPE 2
ADJACENT DOUBLE DOORS
(SIGN TO BE PLACED EQUALLY BTWN)

MOUNTING TYPE 3
SINGLE DOOR
(SIGN TO BE PLACED ON LATCH SIDE OF DOOR; U.N.O.)

MOUNTING TYPE 4
STOREFRONT DOUBLE DOOR
(SIGN TO BE MOUNTED ON ADJACENT GLAZING)

MOUNTING TYPE 5
DOOR ADJACENT TO TROPHY CASE
(PLAN IDENTIFIES LOCATIONS)

MOUNTING TYPE 6
SIGN ADJACENT TO ANOTHER SIGN.
(SEE SCHEDULE/PLAN FOR ADDITIONAL INFO)

9 G-004 MOUNTING TYPES
SCALE: 1/2" = 1'-0"

SCALE: 6" = 1'-0"
SCALE: 3" = 1'-0"
SCALE: 1/2" = 1'-0"

GENERAL NOTES

1. SEE SIGNAGE FLOOR PLAN FOR LOCATIONS OF SIGNS LISTED IN SCHEDULES. CONTRACTOR TO BE RESPONSIBLE FOR QUANTITIES.
2. SIGN TYPE S04 (SHELTER AHEAD). SEE CIVIL DRAWINGS FOR LOCATIONS
3. COORDINATE SIGNAGE LOCATIONS WITH ARCHITECT/OWNER PRIOR TO INSTALLATION.
4. PROVIDE (1) SIGN AT EACH LOCATION, TYPICAL, U.N.O.
5. VISUAL CHARACTERS ON SIGNAGE SHALL BE NO LESS THAN 40 INCHES AND NO MORE THAN 70 INCHES A.F.F.
6. RAISED CHARACTERS ON SIGNAGE SHALL BE NO LESS THAN 48 INCHES AND NO MORE THAN 60 INCHES A.F.F., MEASURED TO BASE OF RAISED CHARACTERS. SEE DRAWINGS A-002 & G-004 FOR MOUNTING HEIGHT.
7. CHARACTERS AND THEIR BACKGROUND SHALL HAVE A NON-GLARE FINISH. CHARACTERS SHALL CONTRAST WITH THEIR BACKGROUND, WITH ONE BEING LIGHT IN COLOR AND THE OTHER DARK IN COLOR.
8. BRAILLE SHALL BE 48 INCH MINIMUM AND 60 INCH MAXIMUM A.F.F., MEASURED TO BASE OF THE BRAILLE CELLS.
9. FOR ADDITIONAL SIGN TEXT, CHARACTER, BRAILLE, SPACING, HEIGHT INFORMATION SEE ICC A117.1 SECTION 703 SIGNS.

CONSTRUCTION NOTES

1. TERMS "SIGN" AND/OR "SIGNAGE" HEREWITH SHALL REFER TO ANY OF THE TYPES OF SIGNAGE AS DEFINED IN 'SIGN TYPE DESCRIPTIONS'.
2. SIGNAGE ON ALL WALLS SHALL BE CONCEALED SCREW MOUNTED. SIGNAGE ON WINDOWS, GLASS WALLS, AND DOORS SHALL BE ADHESIVE MOUNTED.
3. FURNISH TEMPLATES FOR PLACEMENT OF SIGN-ANCHORAGE DEVICES EMBEDDED IN PERMANENT CONSTRUCTION TO BE INSTALLED BY OTHERS.
4. SUBMIT SHOP DRAWINGS FOR ALL SIGN TYPES. SHOP DRAWINGS SHALL INCLUDE THE FOLLOWING:
   A. INCLUDE FABRICATION AND INSTALLATION DETAILS FOR ATTACHMENT TO OTHER WORK.
   B. SHOW SIGN MOUNTING HEIGHTS, LOCATIONS OF SUPPLEMENTARY SUPPORTS TO BE PROVIDED BY OTHER INSTALLERS AND ACCESSORIES.
   C. SHOW MESSAGE LIST, TYPE STYLES, GRAPHIC ELEMENTS, INCLUDING RAISED CHARACTERS, BRAILLE, AND LAYOUT FOR EACH SIGN AT LEAST HALF SIZE.
5. SUBMIT FULL SIZED SAMPLES FOR VERIFICATION DURING THE SUBMITTAL PROCESS. INCLUDE ALL CONCEALED FASTENERS. FULL SIZED SAMPLES.
6. PROVIDE SPECIAL WARRANTY FOR UP TO FIVE YEARS FROM DATE OF SUBSTANTIAL COMPLETION. MANUFACTURER AGREES TO REPAIR OR REPLACE COMPONENTS OF SIGNS THAT FAIL IN MATERIALS OR WORKMANSHIP WITHIN SPECIFIED WARRANTY PERIOD. FAILURES INCLUDE, BUT ARE NOT LIMITED TO THE FOLLOWING:
   A. DETERIORATION OF FINISHES BEYOND NORMAL WEATHERING.
   B. DETERIORATION OF EMBEDDED GRAPHIC IMAGE.
   C. SEPARATION OR DELAMINATION OF SHEET MATERIALS AND COMPONENTS.
7. USE CONCEALED FASTENERS, ANCHORS, OR ADHESIVE, TYPICAL UNO, AS RECOMMENDED BY SIGN MANUFACTURER AND AS INDICATED IN DRAWINGS.
   A. USE CONCEALED, THREADED STUDS WELDED OR BRAZED TO BACK OF SIGN MATERIALS OR SCREWED INTO BACK OF SIGN ASSEMBLY.
   B. USE TWO-FACED TAPE, HIGH-BOND FOAM-CORE TAPE .045 INCH THICK.
   C. THROUGH FASTENERS, OR EXPOSED FASTENERS SHALL MATCH SIGN FINISH, WITH TYPE OF HEAD INDICATED, INSTALLED IN PREDRILLED HOLES.
8. PRE-ASSEMBLE SIGNS AND ASSEMBLIES IN THE SHOP TO GREATEST EXTENT POSSIBLE. CLEARLY MARK UNITS FOR REASSEMBLY AND INSTALLATION. APPLY MARKINGS IN LOCATIONS CONCEALED FROM VIEW AFTER FINAL ASSEMBLY.

ACRYLIC SIGNAGE NOTES

1. PRIOR TO FABRICATION, SUBMIT SHOP DRAWINGS OF ALL SIGN TYPES SHOWING GRAPHIC; BACKGROUND COLOR, TEXT COLOR, AND SPECIFIED FONTS.
2. ALL INTERIOR PLAQUES SHALL BE 3/8" THICK CLEAR, NON-GLARE ACRYLIC, BACK PAINTED TO MATCH ADJACENT WALL COLOR, U.N.O.
3. ALL PLAQUES SHALL BE 3/8" THICK CLEAR, NON-GLARE, EXTERIOR GRADE ACRYLIC, BACK PAINTED TO MATCH ADJACENT WALL COLOR, U.N.O.
4. SOLID VINYL PANEL TO MATCH SIZE OF ROOM SIGN SHALL BE APPLIED TO REVERSE SIDE OF GLASS WALL, WINDOW, OR DOOR WINDOW WHERE SIGNAGE IS MOUNTED ON GLAZING.
5. EDGE CONDITION AT VERTICAL AND HORIZONTAL EDGES SHALL BE SMOOTH, SQUARE CUT. CORNER CONDITION IN ELEVATION SHALL BE SQUARE, AS INDICATED ON DRAWINGS.
6. FINISHED ENGLISH BRAILLE SHALL MATCH PLAQUE'S BACKGROUND COLOR.
7. TYP. SIGN MATERIAL SHALL BE ACRYLIC SHEET: ASTM D 4802, CATEGORY AS STANDARD WITH MANUFACTURER FOR EACH SIGN, TYPE UVF (UV FILTERING). SEE DRAWINGS FOR ADDITIONAL NOTES.
8. ALL TEXT: GOTHIC BOLD, BLACK IN COLOR
   CHARACTERS SHALL BE UPPERCASE, 1" IN HEIGHT, TYP. (U.N.O.)
   ALL TEXT HEIGHT, WIDTH, AND SPACING SHALL COMPLY WITH ICC A117.1
   ALL TEXT SHALL HAVE 1/2" SPACE BETWEEN LINES, TYP. (U.N.O.)
9. SIGN TEXT CHARACTERS SHALL BE RAISED A MINIMUM OF 1/32" ABOVE THEIR BACKGROUND PLAQUE AND SHALL BE DUPLICATED IN BRAILLE AND COMPLY WITH ICC A117.1 SECTION 703.3

EXTERIOR ACRYLIC SIGNAGE NOTES

1. PRIOR TO FABRICATION, SUBMIT SHOP DRAWINGS OF ALL SIGN TYPES SHOWING GRAPHIC; BACKGROUND COLOR, TEXT COLOR, AND SPECIFIED FONTS.
2. ALL PLAQUES SHALL BE 3/8" THICK CLEAR, NON-GLARE, EXTERIOR GRADE ACRYLIC, BACK PAINTED TO MATCH ADJACENT WALL COLOR. U.N.O.
3. SOLID VINYL PANEL TO MATCH SIZE OF ROOM SIGN SHALL BE APPLIED TO REVERSE SIDE OF GLASS WALL, WINDOW, OR DOOR WINDOW WHERE SIGNAGE IS MOUNTED ON GLAZING.
4. EDGE CONDITION AT VERTICAL AND HORIZONTAL EDGES SHALL BE SMOOTH, SQUARE CUT. CORNER CONDITION IN ELEVATION SHALL BE SQUARE, AS INDICATED ON DRAWINGS.
5. FINISHED ENLGISH BRAIL SHALL MATCH THE PLAQUE'S BACKGROUND COLOR.
6. TYP. SIGN MATERIAL SHALL BE ACRYLIC SHEET: ASTM D 4802, CATEGORY AS STANDARD WITH MANUFACTERER FOR EACH SIGN, TYPE UVF (UV FILTERING). SEE DRAWINGS FOR ADDITIONAL NOTES.
7. ALL TEXT:
   SANS SERIF FONT, CHARACTERS SHALL BE UPPERCASE, 1" IN HEIGHT, TYP. (U.N.O.)
   ALL TEXT HEIGHT, WIDTH, AND SPACING SHALL COMPLY WITH ICC A117.1
   ALL TEXT SHALL HAVE 1/2" SPACE BETWEEN LINES, TYP. (U.N.O.)
8. SIGN TEXT CHARACTERS SHALL BE RAISED A MINIMUM OF 1/32" ABOVE THEIR BACKGROUND PLAQUE AND SHALL BE DUPLICATED IN BRAILLE AND SHALL COMPLY WITH ICC A117.1 SECTION 703.3

TETRA TECH
www.tetratech.com
240 Continental Drive, Suite 200
Newark, DE 19713
Tel: 302.738.7551 Fax: 302.454.3989

STATE OF SOUTH CAROLINA
LINDA ANN DISABELLA
Newark, DE
No. 37292
REGISTERED ARCHITECT
12/06/2024

BARNWELL SCHOOL DISTRICT
OWNER
770 HAGOOD AVE
BARNWELL, SC 29812
Tel: 803 541 1300

TETRA TECH
ARCHITECT
MECHANICAL ENGINEER
PLUMBING ENGINEER
ELECTRICAL ENGINEER
240 Continental Drive, Suite
Newark, DE 19713
302.738.7551

THOMAS & HUTTON
CIVIL ENGINEER
1501 MAIN ST.
COLUMBIA, SC 29201
Tel: 803 451 0200

ZZ CONSULTING
STRUCTURAL ENGINEER
640 S. STATE ST
SHELLEY, ID 83274
Tel: 208 357 5404

MARK	DATE	DESCRIPTION	BY
	12/6/24	ISSUED FOR CONSTRUCTION CONFORMANCE SET	LAD

BARNWELL SCHOOL DISTRICT
MULTI-USE SAFE ROOM

SIGNAGE AND MOUNTING TYPES

Project No.:	200-207015-20004
Designed By:	JS/KSZ
Drawn By:	KSZ
Checked By:	MDB/LG

G-004

Copyright: Tetra Tech

12/9/2024 2:03:19 PM BIM 360://200-207015-20004 - Barnwell Dome/A_BARN_DOME_v2019.rvt

GENERAL NOTES

1. CONTRACTOR SHALL COORDINATE TIE-IN OF NEW WATER AND SEWER FACILITIES WITH CITY OF BARNWELL.
2. CONTRACTOR SHALL MAINTAIN MINIMUM COVER OVER THE WATER MAIN PIPE BARREL OF 3'-0" UNLESS OTHERWISE INDICATED. TOP OF PIPE ELEVATIONS ARE SHOWN FOR CASES WHERE FUTURE STORM SEWERS ARE TO BE INSTALLED. IN NO CASE SHALL THE WATER MAIN BE INSTALLED AT A LOWER ELEVATION THAN THAT SHOWN.
3. SHOULD PIPE, FITTINGS, AND OTHER MATERIALS BE NEEDED IN ADDITION TO THAT SHOWN ON THE DRAWINGS BECAUSE PIPELINE WAS NOT INSTALLED TO THE ALIGNMENT AND PROFILE SHOWN, THEN THE CONTRACTOR IS RESPONSIBLE FOR OBTAINING THOSE NECESSARY MATERIALS AND PROVIDING THE EQUIPMENT AND LABOR TO INSTALL THEM TO MEET THE DESIGN INTENT OF THE WATERMAIN AT NO ADDITIONAL COST TO THE OWNER.
4. THE CONTRACTOR SHALL NOTIFY THE OWNER AND THE ENGINEER 48 HOURS IN ADVANCE OF ALL REQUIRED TESTS AND INSPECTIONS.
5. THE CONTRACTOR WILL NOTIFY THE ENGINEER IF UNSUITABLE MATERIAL IS DISCOVERED PRIOR TO BEGINNING ANY REMOVAL OPERATION.
6. ALL WATERMAINS SHALL BE POLYVINYL CHLORIDE (PVC C900) UNLESS OTHERWISE INDICATED.
7. ALL GRAVITY SEWER MAIN SHALL BE POLYVINYL CHLORIDE (PVC SDR35) UNLESS OTHERWISE INDICATED.
8. SURVEYING AND BOUNDARY INFORMATION BY THOMAS AND HUTTON
9. ALL ELEVATIONS SHOWN ARE BASED ON NAVD88.
10. TOPOGRAPHIC SURVEY BY THOMAS AND HUTTON.
11. CONTRACTOR IS TO VERIFY ACCURACY OF ANY TEMPORARY BENCHMARKS SHOWN PRIOR TO UTILIZING THEM FOR CONSTRUCTION.
12. THE EXISTING UNDERGROUND UTILITIES SHOWN HEREON ARE BASED UPON AVAILABLE INFORMATION. THE CONTRACTOR SHALL BE RESPONSIBLE FOR DETERMINING THE EXACT LOCATION OF ALL UTILITIES OTHER THAN THOSE SHOWN ARE ENCOUNTERED DURING CONSTRUCTION , THE CONTRACTOR SHALL NOTIFY THE ENGINEER IMMEDIATELY AND TAKE STEPS TO PROTECT THE LINE(S) AND ENSURE CONTINUED SERVICE. DAMAGE CAUSED TO EXISTING UTILITIES BY THE CONTRACTOR SHALL BE REPAIRED BY THE CONTRACTOR. ADDITIONALLY, THE CONTRACTOR SHALL CONFIRM THE CONNECTION POINTS OF NEW UTILITIES TO EXISTING UTILITIES PRIOR TO BEGINNING NEW CONSTRUCTION.
13. IF WORK IS SUSPENDED OR DELAYED FOR 14 DAYS, THE CONTRACTOR SHALL TEMPORARILY STABILIZE THE DISTURBED AREA AT NO ADDITIONAL COST TO THE OWNER.
14. THE CONTRACTOR SHALL INSTALL ANY BARRICADES PRIOR TO BEGINNING CONSTRUCTION
15. ANY DAMAGE TO EXISTING PAVEMENT MUST BE REPAIRED AT CONTRACTORS EXPENSE AND TO THE SATISFACTION OF THE PROJECT ENGINEER.
16. ALL RIGHT-OF-WAY AND DRAINAGE EASEMENT CONSTRUCTION SHALL MEET SCDOT STANDARD SPECIFICATIONS UNLESS SPECIFIED ELSEWHERE AND APPROVED IN WRITING BY THE PROJECT ENGINEER.
17. A COMPLETE SET OF APPROVED DRAWINGS AND SPECIFICATIONS MUST BE MAINTAINED ON SITE AT ALL TIMES THAT THE CONTRACTOR IS PERFORMING WORK. THESE DRAWINGS SHALL BE MADE AVAILABLE UPON REQUEST.
18. ANY REVISIONS DURING CONSTRUCTION WHICH ALTER THE ROAD LAYOUT, CONSTRUCTION METHODS, RIGHT-OF-WAY LOCATION OR DRAINAGE MUST BE SUBMITTED AND APPROVED IN WRITING BY THE PROJECT ENGINEER.
19. THE CONTRACTOR IS RESPONSIBLE FOR OBTAINING ALL CONSTRUCTION PERMITS NECESSARY FROM OTHER RESPONSIBLE AGENCIES.
20. ALL ABOVE GROUND UTILITIES ARE TO BE OUTSIDE OF THE R/W.
21. THE CONTRACTOR SHALL INSTALL ALL EROSION CONTROL AND PREVENTION STRUCTURES SHOWN ON THE PLANS.
22. CONTRACTOR WILL BE REQUIRED TO ADJUST MANHOLE FRAMES TO MATCH FINAL GRADE AT NO ADDITIONAL COST.
23. THE FOLLOWING NOTES ARE SPECIFIED BY THE SOUTH CAROLINA DEPARTMENT OF HEALTH AND ENVIRONMENTAL CONTROL - OFFICE OF OCEAN AND COASTAL RESOURCES MANAGEMENT (SCDHEC-OCRM) AND ARE TO BE EXECUTED BY THE CONTRACTOR:
   - 23.1. ALL SEDIMENT CONTROL MEASURES SHALL BE INSPECTED AT LEAST ONCE EVERY SEVEN CALENDAR DAYS AND AFTER ANY STORM EVENT OF GREATER THAN 0.5 INCHES OF PRECIPITATION DURING ANY 24-HOUR PERIOD. ALL SEDIMENT CONTROL FEATURES SHALL BE MAINTAINED UNTIL FINAL STABILIZATION HAS BEEN OBTAINED.
   - 23.2. STABILIZATION MEASURES SHALL BE INITIATED AS SOON AS PRACTICABLE IN PORTIONS OF THE SITE WHERE CONSTRUCTION ACTIVITIES HAVE TEMPORARILY OR PERMANENTLY CEASED, BUT IN NO CASE MORE THAN 14 DAYS AFTER THE CONSTRUCTION ACTIVITY IN THAT PORTION OF THE SITE HAS TEMPORARILY OR PERMANENTLY CEASED, UNLESS ACTIVITY IN THAT PORTION OF THE SITE WILL RESUME WITHIN 14 DAYS.
   - 23.3. RESIDENTIAL SUBDIVISIONS REQUIRE EROSION CONTROL FEATURES FOR INFRASTRUCTURE AS WELL AS FOR INDIVIDUAL LOT CONSTRUCTION. INDIVIDUAL PROPERTY OWNERS SHALL FOLLOW THESE PLANS DURING LOT CONSTRUCTION OR PROVIDE AN INDIVIDUAL PLAN MEETING SECTION R.72-307 OF THE STORM WATER MANAGEMENT AND SEDIMENT REDUCTION ACT REQUIREMENTS.
   - 23.4. ALL EROSION AND SEDIMENT CONTROL DEVICES SHALL BE CONSTRUCTED SIMULTANEOUSLY WITH THE DISTURBANCE OF THE LAND AND SHALL REMAIN FUNCTIONAL UNTIL THE CONTRIBUTING DISTURBED AREAS ARE STABILIZED. SILT BARRIERS WILL BE INSTALLED AS NECESSARY TO PREVENT EXCESSIVE SEDIMENTATION OF DOWNSTREAM AREAS. DEVICES SHALL BE IN ACCORDANCE WITH THE MANUAL OF "EROSION AND SEDIMENT CONTROL PRACTICES FOR DEVELOPING AREAS" BY THE S.C. LAND RESOURCES CONSERVATION COMMISSION.
   - 23.5. CONTRACTOR SHALL GRADE AREAS TO DRAIN FOR POSITIVE FLOW PRIOR TO FINAL APPROVAL.
24. ALL TRAFFIC CONTROL SIGNS AND PAVEMENT MARKINGS SHALL BE IN ACCORDANCE WITH THE MANUAL ON "UNIFORM TRAFFIC CONTROL DEVICES FOR STREETS AND HIGHWAYS" AND "SOUTH CAROLINA MANUAL ON UNIFORM TRAFFIC CONTROL DEVICES" BOTH CURRENT EDITIONS.
25. ALL AREAS DISTURBED WILL BE GRASSED IMMEDIATELY AFTER THE INSTALLATION. GRASSING SHALL BE IN ACCORDANCE WITH SECTION 810 OF THE SCDOT STANDARD SPECIFICATIONS FOR HIGHWAY CONSTRUCTION CURRENT EDITION. PAYMENT SHALL BE AS SHOWN IN THE BID FORM AND SHALL BE COMPENSATION FOR ALL NECESSARY WORK AND MATERIALS TO COMPLETE THE SEEDING IN ACCORDANCE WITH THESE SPECIFICATIONS.
26. ALL DRAINAGE WILL BE MADE FUNCTIONAL DAILY AS WORK PROGRESSES.
27. EACH EXISTING ROAD WILL BE CLEANED UP AND RESTORED DAILY.
28. NEW PAVEMENT TO BE FLUSH WITH EDGE OF EXISTING PAVEMENT.
29. ALL STORM DRAIN PIPE INVERTS IN AND OUT ARE THE SAME AS THE BOX INVERT UNLESS OTHERWISE NOTED ON THE PLAN SHEETS AND/OR PROFILES.
30. ALL SEWER VALVES SHALL COMPLY WITH CITY OF BARNWELL SEWER SYSTEM STANDARDS AND SPECIFICATIONS.
31. ALL WATER VALVES SHALL COMPLY WITH CITY OF BARNWELL WATER SYSTEM STANDARDS AND SPECIFICATIONS.
32. ONLY TYPE S AND M MORTAR IS TO BE USED IN STORMWATER SYSTEM CONSTRUCTION AND ALL BRICKWORK AND BRICK MUST MEET SCDOT SPECIFICATIONS.
33. THE DESIGN OF THE PAVEMENT AND EARTHWORK MATERIALS, PROCEDURES AND METHODS SPECIFIED ARE BASED ON THE CRITERIA AND RECOMMENDATIONS ESTABLISHED IN THE GEOTECHNICAL INVESTIGATION REPORT PREPARED BY TERRACON, DATED 2021-03-16 AND SUBSEQUENT ADDENDUMS.

ABBREVIATIONS

DBL	DOUBLE	FM	FORCE MAIN (SANITARY SEWER)	PC	POINT OF CURVE	TC	TOP OF CURB
BOT	BOTTOM	FP	FINISH PAD	PH	POST HYDRANT	TH	THROAT ELEVATION
CB	CATCH BASIN	FR	FRAME	PT	POINT OF TANGENT	TG	TOP OF GUTTER
CI	CURB INLET	GI	GRATE INLET	PVC	POLYVINYL CHLORIDE	TP	TOP OF PAVEMENT
CO	CLEAN OUT	GV	GATE VALVE	RCP	REINFORCED CONCRETE PIPE	TW	TOP OF WALK
CPP	CORRUGATED PLASTIC PIPE	HDPE	HIGH DENSITY POLYETHYLENE	RC	ROLL CURB INLET	TYP	TYPICAL
DBL	DOUBLE	HI	HOODED INLET	RCP	REINFORCED CONCRETE PIPE	VI	VALLEY INLET
DI	DITCH INLET	INV	INVERT ELEVATION	RI	ROOF INLET	W	WATER
DIP	DUCTILE IRON PIPE	JB	JUNCTION BOX	RJP	RESTRAINED JOINT PIPE	W/	WITH
EL	ELEVATION	LF	LINEAR FEET	R/W	RIGHT-OF-WAY	WV	WATER VALVE
ES	END SECTION	MAX	MAXIMUM	SD	STORM DRAINAGE	YI	YARD INLET
FES	FLARED END SECTION	MIN	MINIMUM	SDMH	STORM DRAINAGE MANHOLE	YI	YARD INLET
FG	FINISH GRADE	MH	MANHOLE	SF	SQUARE FEET		
FH	FIRE HYDRANT	OC	ON CENTER	SS	SANITARY SEWER		

DRAINAGE LEGEND

DESCRIPTION	EXISTING	PROPOSED
PIPE		
DITCH		
CURB INLET (CI) CATCH BASIN (CB)		
CURB INLET - RIGHT (CI) OR CATCH BASIN - RIGHT (CB)	OR	OR
CURB INLET - LEFT (CI) OR CATCH BASIN - LEFT (CB)	OR	OR
CURB INLET - BOTH (CI) OR CATCH BASIN - LEFT (CB)	OR	OR
CONTROL STRUCTURE (CS)		
DITCH INLET (DI)		
GRATE INLET (GI)		
HOODED INLET (HI)	OR	OR
JUNCTION BOX (JB)		
MANHOLE (SDMH)		
ROLL CURB INLET (RC)		
ROOF INLET (RI)		
YARD INLET (YI)		
FLARED END SECTION (FES)		

OTHER UTILITIES LEGEND

DESCRIPTION	EXISTING
NATURAL GAS	UGG UGG
TELEPHONE	OHT OHT
UNDERGROUND TELEPHONE	UTL UTL
ELECTRICITY	OHP OHP
UNDERGROUND ELECTRICITY	UGP UGP

SEWER LEGEND

DESCRIPTION	EXISTING	PROPOSED
GRAVITY PIPE	SS	
SINGLE SERVICE LATERAL		
DOUBLE SERVICE LATERAL		
MANHOLE		
CLEANOUT		
FORCEMAIN	10"FM 10"FM	10"FM 10"FM
VALVE AND BOX		
FLUSH HYDRANT		
REDUCER		
BACKFLOW PREVENTOR		
CROSS		
TEE		
90° BEND - HORIZONTAL		
45° BEND - HORIZONTAL		
22-½° BEND - HORIZONTAL		
11-¼° BEND - HORIZONTAL		
BEND - VERTICAL		
PLUG \ CAP		

WATER LEGEND

DESCRIPTION	EXISTING	PROPOSED
WATER MAIN	10"W	10"W
SINGLE SERVICE LATERAL		
DOUBLE SERVICE LATERAL		
VALVE AND BOX		
FIRE HYDRANT W/VALVE & BOX		
POST HYDRANT		
REDUCER		
BACKFLOW PREVENTOR		
CROSS		
TEE		
90° BEND - HORIZONTAL		
45° BEND - HORIZONTAL		
22-½° BEND - HORIZONTAL		
11-¼° BEND - HORIZONTAL		
BEND - VERTICAL		
CAP		



VICINITY MAP
SCALE: 1" = 500'

Sheet List Table

Sheet Number	Sheet Title
C-002	GENERAL NOTES & INDEX
C-100	EXISTING CONDITION & DEMO PLAN
C-200	SITE PLAN - PHASE I
C-201	SITE PLAN PHASE II
C-300	EROSION CONTROL NOTES
C-301	EROSION CONTROL CHARTS
C-302	EROSION CONTROL - SWPPP DETAILS
C-303	EROSION CONTROL - SWPPP DETAILS
C-400	EROSION CONTROL PLAN - INITIAL
C-500	EROSION CONTROL PLAN - CONSTRUCTION
C-600	EROSION CONTROL PLAN - STABLIZATION
C-700	UTILITY PLAN
C-701	SANITARY SEWER PROFILE
C-702	UTILITY DETAILS
C-800	PAVING, GRADING, & DRAINAGE PLAN
C-801	STORM DRAINAGE PROFILES
C-802	PAVING, GRADING, & DRAINAGE DETAILS
C-803	PAVING, GRADING, & DRAINAGE DETAILS
C-804	POND DETAILS
C-900	FIRE TRUCK ACCESS PLAN

04 04 04

REVISION HISTORY

REV. NO.	REVISION	BY	DATE
04	ISSUED FOR CONSTRUCTION CONFORMANCE SET	CVJ	12/06/24
03	ISSUED FOR BID	CVJ	09/11/24
02	REVISED AS NOTED	CVJ	08/26/24
01	REVISED CONSTRUCTION DOC. SUBMITTAL FOR OSF REVIEW & APPROVAL	CVJ	07/18/24

SUBMITTAL HISTORY

SUBMITTED TO	DATE
CITY OF BARNWELL UTILITIES	08/27/24
SCDOT	08/27/24
SC DES	08/27/24
REVISED CONSTRUCTION DOC. SUBMITTAL FOR OSF REVIEW & APPROVAL	07/18/24

PREPARED FOR:

BARNWELL SCHOOL DISTRICT
770 HAGOOD AVE
BARNWELL, SC 29812
803 541 1300

TM# 073-11-03-001

GENERAL INFORMATION

COUNTY	BARNWELL
TOWN	BARNWELL
ZONING	R-15

OWNER:
BARNWELL SCHOOL DISTRICT
770 HAGOOD AVE
BARNWELL, SC 29812
803 541 1300

ENGINEER:
THOMAS & HUTTON
1501 MAIN STREET
COLUMBIA, SC 29201
(803) 451-6789

SURVEYOR:
THOMAS & HUTTON
50 PARK OF COMMERCE WAY
SAVANNAH, GA 31405
(912) 234-5300

UTILITY:
BARNWELL WATER DEPARTMENT
130 MAIN ST,
BARNWELL, SC 29812
803 259 3266

811
Know what's below.
Call before you dig.

THOMAS & HUTTON
1501 Main Street • Suite 760
Columbia, SC 29201
p.803.451.6789
www.thomasandhutton.com

TETRA TECH
www.tetratech.com
240 Continental Drive, Suite 200
Newark, DE 19713
Tel: 302.738.7551 Fax: 302.454.5989



BARNWELL SCHOOL DISTRICT
OWNER
770 HAGOOD AVE
BARNWELL, SC 29812
Tel: 803 541 1300

TETRA TECH
ARCHITECT
MECHANICAL ENGINEER
PLUMBING ENGINEER
ELECTRICAL ENGINEER
240 CONTINENTAL DR
NEWARK, DE 19713
Tel: 302 738 7551

THOMAS & HUTTON
CIVIL ENGINEER
1501 MAIN ST.
COLUMBIA, SC 29201
Tel: 803 451 0200

ZZ CONSULTING
STRUCTURAL ENGINEER
640 S. STATE ST.
SHELLEY, ID 83274
Tel: 208 357 5404

MARK	DATE	DESCRIPTION	BY
01	07/18/24	REVISED CONSTRUCTION DOC. SUBMITTAL FOR OSF REVIEW & APPROVAL	T&H
03	09/11/24	ISSUED FOR BID	T&H
04	12/06/24	ISSUED FOR CONSTRUCTION CONFORMANCE SET	T&H

BARNWELL SCHOOL DISTRICT
BARNWELL COUNTY MULTI-USE SAFE ROOM
GENERAL NOTES & INDEX

Project No.:	28810.0000
Designed By:	MCL
Drawn By:	MCL
Checked By:	MGD

C-002

Copyright: Tetra Tech

Z:\28810\28810.0000\Engineering\Drawings\Construction Plans\28810.0000 - C0-GN.dwg - Mar 3, 2021 - 2:30:57 PM

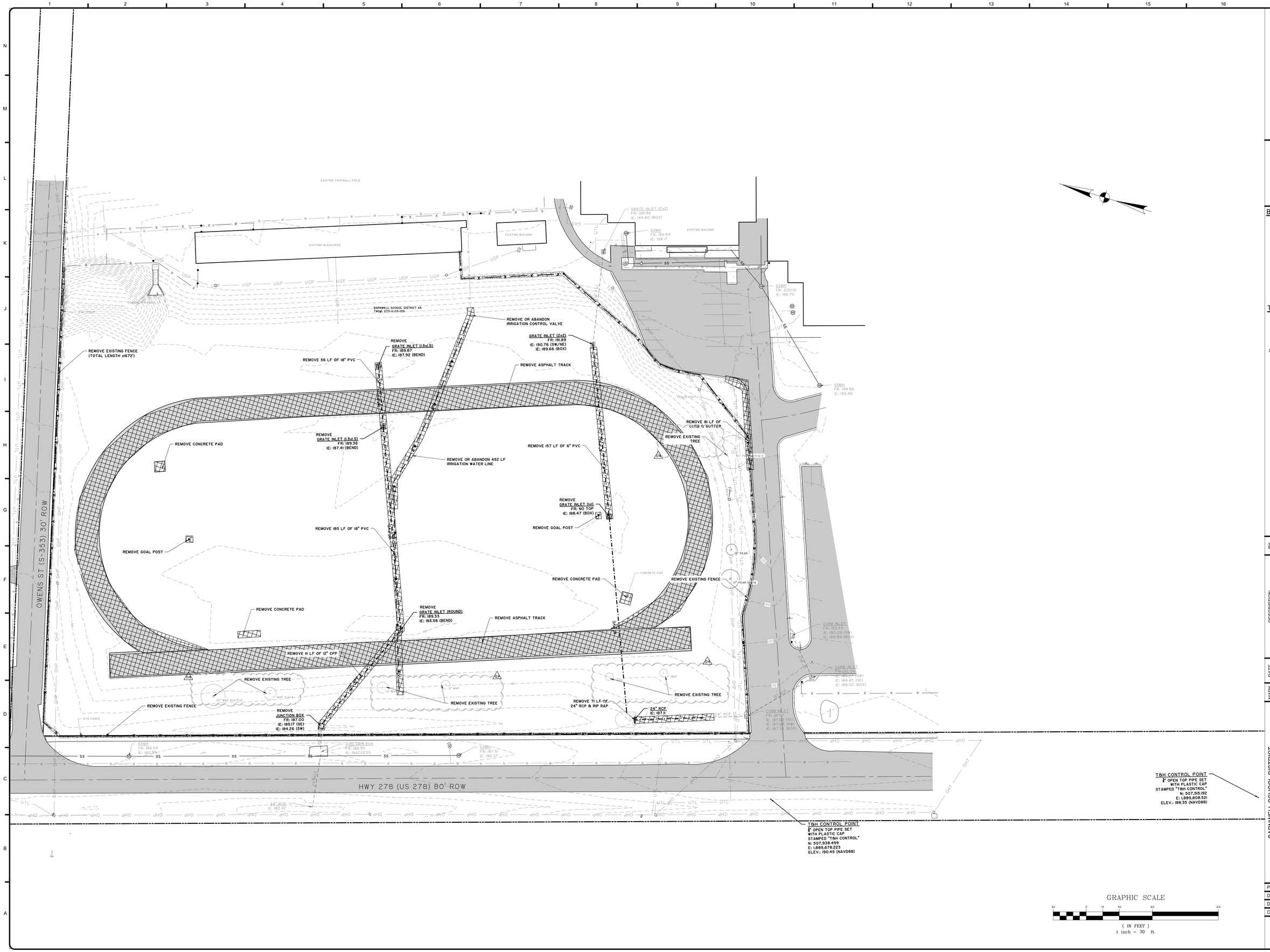

TETRA TECH
www.tetratech.com
240 Continental Drive, Suite 200
Newark, DE 19713
Tel: 302.738.7551 Fax: 302.454.5989

SOUTH CAROLINA LICENSED PROFESSIONAL ENGINEER No. 35576 MARK DeSOUZA 2024/11/26

BARNWELL SCHOOL DISTRICT
OWNER
770 HAGOOD AVE
BARNWELL, SC 29812
Tel: 803 541 1300

TETRA TECH
ARCHITECT
MECHANICAL ENGINEER
PLUMBING ENGINEER
ELECTRICAL ENGINEER
240 CONTINENTAL DR
NEWARK, DE 19713
302 738 7551

THOMAS & HUTTON
CIVIL ENGINEER
1501 MAIN ST.
COLUMBIA, SC 29201
Tel: 803 451 0200

ZZ CONSULTING
STRUCTURAL ENGINEER
640 S. STATE ST.
SHELLEY, ID 83274
Tel: 208 357 5404

MARK	DATE	DESCRIPTION	BY
01	07/18/24	REVISED CONSTRUCTION DOC. SUBMITTAL FOR COP REVIEW & APPROVAL	T&H
03	09/11/24	ISSUED FOR BID	T&H
04	12/06/24	ISSUED FOR CONSTRUCTION CONFORMANCE SET	T&H

BARNWELL SCHOOL DISTRICT
BARNWELL COUNTY MULTI-USE SAFE ROOM
EXISTING CONDITION & DEMO PLAN

Project No.:	28810.0000
Designed By:	MCL
Drawn By:	MCL
Checked By:	MGD

C-100

Copyright: Tetra Tech

Z:\28810\28810.0000\Engineering\Drawings\Construction Plans\28810.0000 - EX - DM.dwg - Mar 3, 2021 - 2:35:20 PM

EXISTING FOOTBALL FIELD

EXISTING BLEACHERS

EXISTING BUILDING

CONCRETE STAIRS

SITE FENCE

10' SIDE SETBACK

CONCRETE SIDEWALK / PAD

20' WIDE ASPHALT EMERGENCY ACCESS

BARNWELL SCHOOL DISTRICT 45
TMS#: 073-11-03-001

N: 508,492.27
E: 1,889,961.32

N: 508,425.84
E: 1,889,350.56

N: 508,418.55
E: 1,889,362.86

N: 508,345.49
E: 1,890,006.04

N: 508,339.66
E: 1,889,986.91

N: 508,477.06
E: 1,889,945.04

R8-3
(12)18

36" CONCRETE BAND
(REFER TO ARCHITECTURAL PLANS)

6' CONCRETE SIDEWALK

10'X20' EMERGENCY GENERATOR PAD

20' WIDE ASPHALT EMERGENCY ACCESS

PROPOSED BUILDING
AREA: +/- 29,200 SF
FFE: 193.5

N: 508,510.44
E: 1,889,840.95

BEGIN TRANSITION TO SPILL CURB & GUTTER

20' GRAVEL EMERGENCY ACCESS DRIVE

N: 508,366.8
E: 1,889,867.88

N: 508,625.92
E: 1,889,865.05

N: 508,588.60
E: 1,889,757.67

N: 508,588.30
E: 1,889,748.68

N: 508,644.62
E: 1,889,752.03

STOP
R1-1
36

24" THERMOPLASTIC WHITE STOP BAR

N: 508,688.94
E: 1,889,736.45

BEGIN 18" SPILL CURB & GUTTER

N: 508,573.2
E: 1,889,735.98

5' CONCRETE SIDEWALK

R7-8
(12)18 (TYP.)

N: 508,382.41
E: 1,889,818.45

FLUSH CURB

N: 508,377.93
E: 1,889,875.0

N: 508,318.15
E: 1,889,856.36

N: 508,356.42
E: 1,889,836.08

N: 508,331.44
E: 1,889,833.36

ACCESSIBLE PARKING SPACE (TYP)
SEE DETAILS

R7-8 (12)18
R7-8P (18)9

N: 508,428.22
E: 1,889,758.90

N: 508,419.53
E: 1,889,748.78

N: 508,363.95
E: 1,889,783.60

N: 508,343.53
E: 1,889,781.47

N: 508,318.05
E: 1,889,787.67

75 FEET OF 4" DOUBLE YELLOW CENTER LINE

BEGIN TRANSITION TO FLUSH CURB

N: 508,589.40
E: 1,889,722.59

N: 508,624.70
E: 1,889,674.54

N: 508,590.24
E: 1,889,696.79

N: 508,423.18
E: 1,889,718.32

109.16'
N 16°56'50" W

R8-3
(12)18

PROPERTY LINE (TYP.)

N: 508,481.43
E: 1,889,680.15

N: 508,357.01
E: 1,889,712.95

N: 508,380.31
E: 1,889,732.90

R7-8 (12)18
R7-8P (18)9

PROPOSED DETENTION BASIN

35' FRONT SETBACK

OWENS ST (S-25) 30' ROW

HWY 278 (US 278) 80' ROW

SSMH
FR: 186.54
IE: 180.99

SSMH
FR: 187.51
IE: 182.37

SSMH
FR: 199.93
IE: 198.17

SSMH
FR: 200.10
IE: 196.70

SSMH
FR: 198.96
IE: 190.66

EXISTING BUILDING

MATCH EXISTING ASPHALT

N: 508,093.68
E: 1,890,034.06

FEATHER CURB & GUTTER (TYP.)

N: 508,000.18
E: 1,889,998.34

N: 508,077.12
E: 1,890,006.97

50 FEET OF 4" DOUBLE YELLOW CENTER LINE

N: 508,137.15
E: 1,889,960.80

N: 508,046.69
E: 1,890,005.01

52.44'
N 20°30'50" W

24" THERMOPLASTIC WHITE STOP BAR

N: 508,140.07
E: 1,889,952.60

N: 508,164.46
E: 1,889,929.33

N: 508,091.42
E: 1,889,974.93

N: 508,078.18
E: 1,889,980.63

18" CURB & GUTTER (TYP.)

N: 508,053.80
E: 1,889,952.40

N: 508,016.53
E: 1,889,944.20

N: 508,044.08
E: 1,889,966.10

183.32'
N 16°56'50" W

N: 508,257.18
E: 1,889,905.41

STOP
R1-1
(30)30

MATCH EXISTING ASPHALT

10" PEAR

17" PEAR S-4(+6

NOTE: SCDOT WILL CORDINATE WITH SCHOOL TO ADD ADDITIONAL TRAFFIC SIGNS OUTSIDE OF PROJECT AREA

T&H CONTROL POINT
3" OPEN TOP PIPE SET WITH PLASTIC CAP STAMPED "T&H CONTROL"
N: 507,338.499
E: 1,889,678.223
ELEV.: 190.45 (NAVD88)

SITE DATA CHART

PROJECT LIMITS	5.1 ACRES
SETBACKS	MINIMUM FRONT YARD DEPTH: 35' MINIMUM SIDE YARD: 10'
BUFFER YARDS	NONE
GYMNASIUM SEATS	1204
ADA SPACES REQUIRED	8
ADA SPACES PROVIDED	8

CURVE TABLE

CURVE	RADIUS	LENGTH	CHORD	CHD BEARING	DELTA
C1	17.50'	27.52'	24.77'	N 62°00'06" W	90°06'31"
C2	47.51'	73.75'	66.57'	N 62°34'54" W	88°56'19"
C3	155.62'	136.50'	132.17'	N 08°10'54" E	50°15'27"
C4	35.00'	30.10'	29.18'	N 08°40'35" E	49°16'01"
C5	50.00'	43.51'	42.15'	N 45°26'36" W	49°51'33"
C6	50.00'	46.62'	44.95'	N 43°39'36" W	53°25'32"

GRAPHIC SCALE
30 0 15 30 60 120
(IN FEET)
1 inch = 30 ft.

TETRA TECH
www.tetratech.com
240 Continental Drive, Suite 200
Newark, DE 19713
Tel: 302.738.7551 Fax: 302.454.5989

SOUTH CAROLINA PROFESSIONAL ENGINEER
No. 33570
Matthew C. DeStefano

BARNWELL SCHOOL DISTRICT
OWNER
770 HAGOOD AVE
BARNWELL, SC 29812
Tel: 803 541 1300

TETRA TECH
ARCHITECT
MECHANICAL ENGINEER
PLUMBING ENGINEER
ELECTRICAL ENGINEER
240 CONTINENTAL DR
NEWARK, DE 19713
302 738 7551

THOMAS & HUTTON
CIVIL ENGINEER
1501 MAIN ST.
COLUMBIA, SC 29201
Tel: 803 451 0200

ZZ CONSULTING
STRUCTURAL ENGINEER
640 S. STATE ST.
SHELLEY, ID 83274
Tel: 208 357 5404

MARK	DATE	DESCRIPTION	BY
01	07/16/24	ISSUED FOR PERMITTING, SUBMITTAL TO SCDOT, PERMIT REVIEW & APPROVAL	GSH
02	09/11/24	ISSUED FOR BID	TJH
03	10/04/24	ISSUED FOR CONSTRUCTION DOCUMENTS SET	TJH

BARNWELL SCHOOL DISTRICT
BARNWELL COUNTY MULTI-USE SAFE ROOM

SITE PLAN - PHASE I

Project No.:	28810.0000
Designed By:	MCL
Drawn By:	MCL
Checked By:	MGD

C-200

Copyright: Tetra Tech

Z:\28810\28810.0000\Engineering\Drawings\Construction Plans\28810.0000 - SP.dwg - Jul 15, 2024 - 7:58:31 AM

TETRA TECH
www.tetratech.com
240 Continental Drive, Suite 200
Newark, DE 19713
Tel: 302.738.7551 Fax: 302.454.5989

BARNWELL SCHOOL DISTRICT
OWNER
770 HAGOOD AVE
BARNWELL, SC 29812
Tel: 803 541 1300

TETRA TECH
ARCHITECT
MECHANICAL ENGINEER
PLUMBING ENGINEER
ELECTRICAL ENGINEER
240 CONTINENTAL DR
NEWARK, DE 19713
302 738 7551

THOMAS & HUTTON
CIVIL ENGINEER
1501 MAIN ST.
COLUMBIA, SC 29201
Tel: 803 451 0200

ZZ CONSULTING
STRUCTURAL ENGINEER
640 S. STATE ST.
SHELLEY, ID 83274
Tel: 208 357 5404

MARK	DATE	DESCRIPTION	BY
01	07/18/24	REVISED CONSTRUCTION DOC. SUBMITTAL FOR OSP REVIEW & APPROVAL	T&H
03	09/11/24	ISSUED FOR BID	T&H
04	12/06/24	ISSUED FOR CONSTRUCTION CONFORMANCE SET	T&H

BARNWELL SCHOOL DISTRICT
BARNWELL COUNTY MULTI-USE SAFE ROOM

SITE PLAN PHASE II

Project No.: 28810.0000
Designed By: MCL
Drawn By: MCL
Checked By: MGD

C-201

Copyright Tetra Tech

SITE DATA CHART

PROJECT LIMITS	5.1 ACRES
SETBACKS	NONE
BUFFER YARDS	NONE
GYMNASIUM SEATS	1204
SPACES CALCULATION	1 SPACE / 4 SEAT
SPACES REQUIRED	301
SPACES PROVIDED	244
ADA SPACES REQUIRED	8
ADA SPACES PROVIDED	8

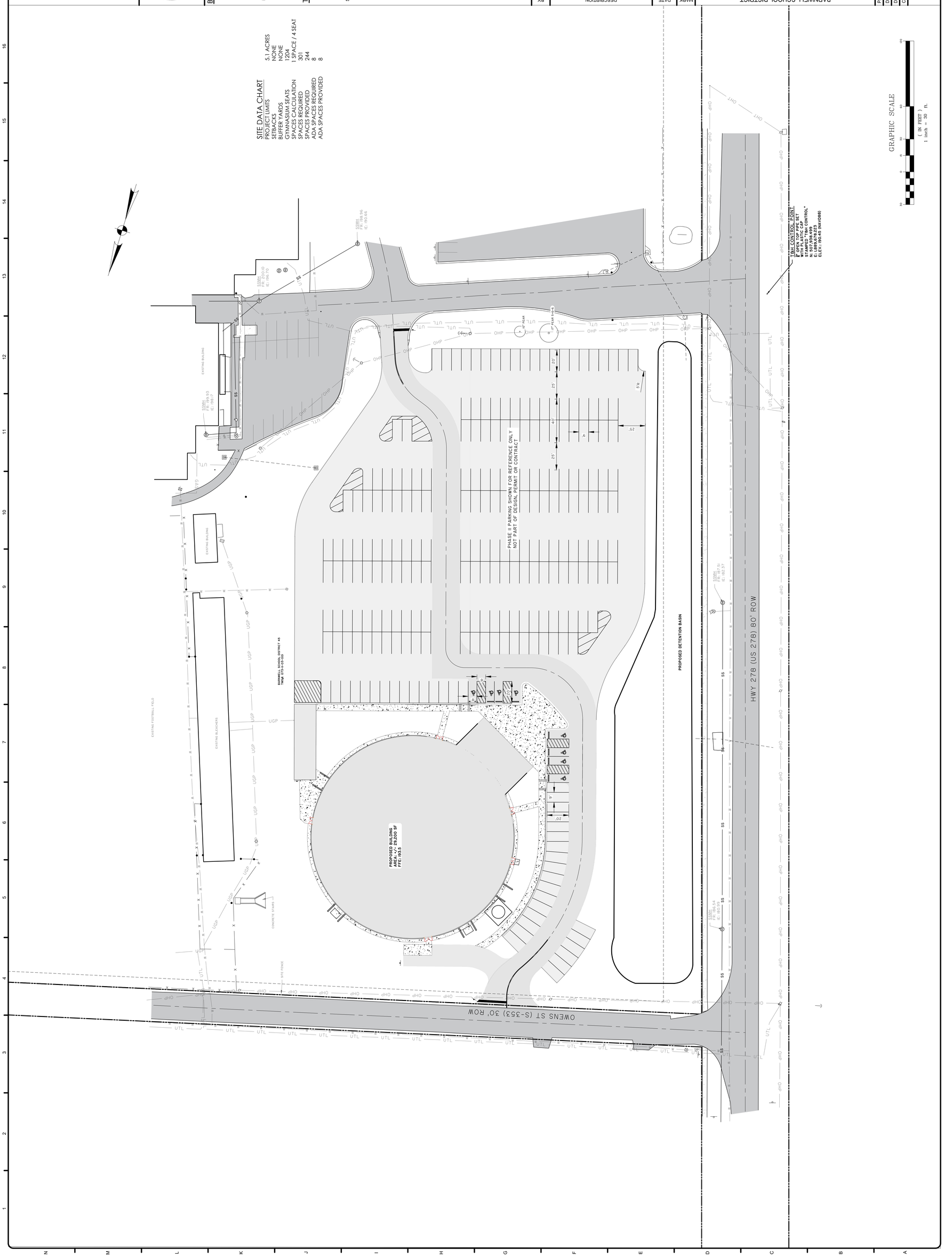

Z:\28810\28810.0000\Engineering\Drawings\Construction Plans\28810.0000 - SP PH02.dwg - May 13, 2021 - 9:48:04 AM

STORMWATER POLLUTION PREVENTION PLAN

I. SITE DESCRIPTION

A. PROJECT DESCRIPTION

A.1.	PROJECT AREA	7.0 ACRES
A.2.	AREA DISTURBED	5.1 ACRES
A.3.	PERCENT IMPERVIOUS AREA BEFORE CONSTRUCTION	20 %
A.4.	RUNOFF COEFFICIENT BEFORE CONSTRUCTION	67 CN
A.5.	PERCENT IMPERVIOUS AREA AFTER CONSTRUCTION	63 %
A.6.	RUNOFF COEFFICIENT AFTER CONSTRUCTION	84 CN

B. DESCRIPTION OF CONSTRUCTION ACTIVITY

WORK CONSISTS OF CREATING A DETENTION BASIN AND ASSOCIATED STORM DRAINAGE, PAVING AN ACCESS ROAD WITH FIRE LANE AND PARKING LOT, AND DEMOLISHING EXISTING FENCING, PAVEMENT, AS WELL AS DRAINAGE PIPES AND STRUCTURES.

C. RUNOFF DATA

C.1.	SOIL CLASSIFICATIONS:	(HSG) B
C.2.	LAND USE(S):	COMMERCIAL

D. RECEIVING WATERS

D.1.	CLOSEST RECEIVING WATERS:	UNNAMED TRIBUTARY TURKEY CREEK
D.2.	ULTIMATE RECEIVING WATERS:	TURKEY CREEK

E. FLOOD

E.1.	FEMA FLOOD ZONE(S):	X
E.2.	FEMA FLOOD INSURANCE MAP(S):	45011C0326D (EFF. 9/29/2010)

II. CONTROL MEASURES

1. EROSION AND SEDIMENT CONTROLS

PRIOR TO START OF CONSTRUCTION, ALL EXTERIOR SILT FENCE WILL BE INSTALLED AS SHOWN ON THE PLANS.

1.1. CLEARING

1.1.1. AS CLEARING IS COMPLETED, ADDITIONAL SILT FENCE WILL BE INSTALLED WHERE NECESSARY, SUCH AS POINTS WHERE FLOWS BECOME CHANNELIZED, AND OTHER POINTS WHERE EXCESSIVE RUNOFF VELOCITIES MAY OCCUR.
1.1.2. INSTALL CONSTRUCTION ENTRANCES / EXITS BEFORE BEGINNING CLEARING
1.1.3. CONSTRUCTION DELAYS IN ANY ONE AREA GREATER THAN 14 DAYS PRIOR TO START OF ROUGH GRADING WILL MANDATE STABILIZATION PROCEDURES. ACCEPTABLE METHODS OF STABILIZATION INCLUDE MULCHING AND TEMPORARY SEEDING.
1.1.4. MAINTAIN EXISTING VEGETATION WHENEVER POSSIBLE AND MINIMIZE THE AREA OF DISTURBANCE. RETAIN AND PROTECT TREES TO ENHANCE FUTURE LANDSCAPING EFFORTS AND REDUCE RAINDROP IMPACT.
1.1.5. INSTALL ALL SEDIMENT CONTROL PRACTICES PRIOR TO ANY UP-SLOPE SOIL DISTURBING ACTIVITIES.
1.1.6. PHASE CONSTRUCTION ACTIVITIES TO MINIMIZE THE AREAS DISTURBED AT ONE TIME. THIS WILL ALSO ALLOW COMPLETED AREAS TO BE STABILIZED AND RE-VEGETATED BEFORE DISTURBING ADJACENT SITES. THE NEED FOR TEMPORARY EROSION CONTROL MEASURES MAY BE AVOIDED BY COMPLETING A PHASE AND INSTALLING PERMANENT EROSION CONTROL MEASURES WHEN THE FINAL GRADE IS ATTAINED.
1.1.7. MAINTAIN AND PROTECT ALL NATURAL WATERWAYS. RETAIN AT LEAST A 35-FOOT UNDISTURBED BUFFER OF NATURAL VEGETATION ALONG ALL WATERWAYS TO FILTER OUT SEDIMENT AND OTHER POLLUTANTS. MAINTAIN A 45-FOOT UNDISTURBED BUFFER AROUND SENSITIVE WATERS.
1.1.8. INSTALL SILT FENCE (OR BIO ROLLS/ROCK SOCK PRODUCTS) ON THE DOWN-SLOPE PERIMETER OF ALL DISTURBED AREAS PRIOR TO ANY SOIL DISTURBING ACTIVITIES (INCLUDING CLEARING AND GRUBBING). SILT FENCE CAN TREAT A MAXIMUM OF 100 SQUARE FEET PER LINEAL FOOT OF FENCE. INSTALL SILT FENCE IN SHORTER REACHES ON THE CONTOUR WITH EACH END TURNED UP-SLOPE . SWALES AND SHORELAND AREAS SHOULD ALSO BE PROTECTED WITH SILT FENCE, BIO ROLLS, OR ROCK SOCKS.
1.1.9. IN AREAS OF CONCENTRATED FLOW INSTALL STRAW BALE CHECKS, ROCK CHECK DAMS, TRIANGULAR DIKES, BIO ROLL BLANKETS, OR ROCK SOCKS TO SLOW RUNOFF AND TRAP SEDIMENT.
1.1.10. USE TEMPORARY SLOPE DRAINS OR ROCK CHUTES TO MOVE WATER DOWN STEEP SLOPES.
1.1.11. CONSTRUCT SEDIMENT BASINS FOR DRAINAGE AREAS GREATER THAN 10 ACRES

1.2. ROUGH GRADING

1.2.1. ALL EXISTING CONTROLS WILL BE MAINTAINED DURING ROUGH GRADING, DELAYS OF GREATER THAN 14 DAYS PRIOR TO START OF NEXT ACTIVITY WILL MANDATE STABILIZATION PROCEDURES. ACCEPTABLE METHODS OF STABILIZATION INCLUDE MULCHING AND TEMPORARY SEEDING.
1.2.2. ALL AREAS NOT SUBJECT TO FURTHER CONSTRUCTION (DRAINAGE, SANITARY SEWER, ROADS, WATER DISTRIBUTION SYSTEMS, OR STORM WATER FACILITIES) SHALL BE GRASSED WITH A PERMANENT COVER.
1.2.3. COVER ANY STOCK PILED TOPSOIL WITH PLASTIC (OR OTHER IMPERVIOUS COVERING) OR USE A TEMPORARY SEED MIX. USE STOCKPILED TOPSOIL AS EARTHEN BERMS TO SERVE AS TEMPORARY SEDIMENT BASINS.

1.3. DRAINAGE

1.3.1. ALL EXISTING CONTROLS WILL BE MAINTAINED DURING DRAINAGE INSTALLATION.
1.3.2. CONSTRUCTION DRAINAGE WILL BE ROUTED THROUGH LAKES, WHICH WILL ACT AS SEDIMENT BASINS OR OTHER ACCEPTABLE SEDIMENT BASINS/TRAPS.
1.3.3. STORM DRAIN INLET PROTECTION AS SHOWN ON DETAIL SHEET SHALL BE INSTALLED ON ALL CURB INLETS, STORM DRAIN MANHOLES, JUNCTION BOXES, AND GRATE INLETS.
1.3.4. DELAYS OF GREATER THAN 14 DAYS PRIOR TO START OF THE NEXT CONSTRUCTION SEQUENCE WILL MANDATE STABILIZATION PROCEDURES. ACCEPTABLE METHODS OF STABILIZATION INCLUDE MULCHING AND TEMPORARY SEEDING.
1.3.5. ALL STORM LINES NOT IN STREETS OR OTHER PAVED AREAS ARE TO BE MULCHED AND SEEDED WITHIN 5 DAYS AFTER BACKFILL.

1.4. WASTE DISTRIBUTION SYSTEM INSTALLATION

1.4.1. ALL EXISTING CONTROLS WILL BE MAINTAINED DURING INSTALLATION OF THE WATER DISTRIBUTION SYSTEM.
1.4.2. DELAYS OF GREATER THAN 14 DAYS PRIOR TO START OF NEXT ACTIVITY WILL MANDATE STABILIZATION PROCEDURES. ACCEPTABLE METHODS OF STABILIZATION INCLUDE MULCHING AND TEMPORARY SEEDING.

1.5. WASTEWATER COLLECTION SYSTEM INSTALLATION

1.5.1. ALL EXISTING CONTROLS WILL BE MAINTAINED DURING INSTALLATION OF THE WASTEWATER SYSTEM.
1.5.2. DELAYS OF GREATER THAN 14 DAYS PRIOR TO START OF NEXT ACTIVITY WILL MANDATE STABILIZATION PROCEDURES. ACCEPTABLE METHODS OF STABILIZATION INCLUDE MULCHING AND TEMPORARY SEEDING.

1.6. CONSTRUCTION OF ROADS

1.6.1. ALL EXISTING CONTROLS WILL BE MAINTAINED DURING ROAD CONSTRUCTION.
1.6.2. DELAYS OF GREATER THAN 14 DAYS PRIOR TO START OF NEXT ACTIVITY WILL MANDATE STABILIZATION PROCEDURES. ACCEPTABLE METHODS OF STABILIZATION INCLUDE MULCHING AND TEMPORARY SEEDING.

1.7. GRASSING

1.7.1. ALL EXISTING CONTROLS WILL BE MAINTAINED UNTIL GRASSING IS ESTABLISHED
1.7.2. ANY AREAS THAT ERODE OR WHERE GRASS DOES NOT ESTABLISH ITSELF SHALL BE RE-GRADED AND RE-GRASSED.

2. STORM WATER MANAGEMENT

RUNOFF FROM THIS PROJECT WILL DISCHARGE INTO A STORM WATER MANAGEMENT SYSTEM. TREATMENT WILL OCCUR IN STORM WATER DETENTION PONDS.

3. OTHER CONTROLS

3.1. WASTE DISPOSAL

3.1.1. NO SOLID MATERIALS, INCLUDING BUILDING MATERIALS, SHALL BE DISCHARGED TO ANY RECEIVING WATERS.
3.1.2. OFFSITE VEHICLE TRACKING OF SEDIMENTS AND THE GENERATION OF DUST SHALL BE MINIMIZED.
3.1.3. THIS PLAN SHALL COMPLY WITH STATE AND/OR LOCAL WASTE DISPOSAL, SANITARY SEWER OR SEPTIC SYSTEM REGULATIONS.
3.1.4. DUST CONTROL ON DISTURBED AREAS - CONTROLLING SURFACE AND AIR MOVEMENT OF DUST ON CONSTRUCTION SITE AND HAUL ROUTES. THE PURPOSE OF THE MEASURE IS TO REDUCE THE PRESENCE OF AIRBORNE SUBSTANCES, WHICH MAY BE HARMFUL OR INJURIOUS TO HUMAN HEALTH, WELFARE OR SAFETY, OR TO ANIMALS OR PLANT LIFE.

III. MAINTENANCE

1. MAINTENANCE PROGRAM

1.1. THE SITE SUPERINTENDENT, OR HIS/HER REPRESENTATIVE, SHALL MAKE VISUAL INSPECTIONS OF ALL MECHANICAL CONTROLS AND NEWLY STABILIZED AREAS (I.E. SEEDED AND MULCHED AND/OR SODDED AREAS) ON A DAILY BASIS; ESPECIALLY AFTER HEAVY RAINFALL EVENT TO INSURE THAT ALL CONTROLS ARE MAINTAINED AND PROPERLY FUNCTIONING. ANY DAMAGED CONTROLS SHALL BE REPAIRED PRIOR TO THE END OF THE WORK DAY INCLUDING RE-SEEDING AND MULCHING OR RE-SODDING IF NECESSARY.

1.2. EROSION CONTROL MEASURES WILL BE MAINTAINED AT ALL TIMES. IF FULL IMPLEMENTATION OF THE APPROVED PLAN DOES NOT PROVIDE FOR EFFECTIVE EROSION CONTROL, ADDITIONAL EROSION AND SEDIMENTATION CONTROL MEASURES SHALL BE IMPLEMENTED TO CONTROL OR TREAT THE SEDIMENT SOURCE. ALL DRAINAGE SWALES, POCKETS, DEPRESSION, LOW LINES, AND OUTLET DITCHES SHALL DRAIN EFFECTIVELY AT ALL TIMES. SETTLEMENT OR WASHING THAT MAY OCCUR SHALL BE REPAIRED BY THE CONTRACTOR. SEDIMENT WILL BE REMOVED FROM BEHIND THE SEDIMENT FENCE WHEN IT REACHES 1/3 THE HEIGHT OF THE FENCE. THE SEDIMENT FENCE WILL BE REPAIRED AS NECESSARY TO MAINTAIN AN EFFECTIVE BARRIER. MAINTAIN THE CONSTRUCTION EXIT IN A CONDITION TO PREVENT MUD OR SEDIMENT FROM LEAVING THE SITE. THIS MAY REQUIRE PERIODIC TOP DRESSING WITH ADDITIONAL STONE. IMMEDIATELY REMOVE ALL OBJECTIONABLE MATERIALS SPILLED, WASHED, OR TACKED ONTO PUBLIC ROADWAYS. RESEED AND MULCH AREA WHERE SEEDING EMERGENCE IS POOR, OR WHERE EROSION OCCURS. PROTECT FROM TRAFFIC AS MUCH AS POSSIBLE. INSPECT ALL MULCHES PERIODICALLY, AND AFTER RAINSTORMS TO CHECK FOR EROSION, DISLOCATION OR FAILURE. IF WASHOUT OCCURS, REPAIR THE SLOPE GRADE, RESEED AND REINSTALL MULCH. FOLLOW THE CONSTRUCTION SEQUENCE THROUGHOUT THE PROJECT DEVELOPMENT. WHEN CHANGES IN CONSTRUCTION ACTIVITIES ARE NEEDED, AMEND THE SEQUENCE SCHEDULE IN ADVANCE TO MAINTAIN MANAGEMENT CONTROL. IF MAJOR CHANGES ARE NECESSARY, SEND A COPY OF THE MODIFIED SCHEDULE TO THE ENGINEER, SEDIMENT AND EROSION CONTROL MEASURES WILL REMAIN IN PLACE AND BE MAINTAINED UNTIL THE DISTURBED AREAS ARE STABILIZED.

2. SILT FENCE

SILT FENCES WILL BE MONITORED DURING CONSTRUCTION. ANY SILT FENCE WHICH IS NOT FUNCTIONING PROPERLY WILL BE PROMPTLY REPAIRED. CLEAN OUT THE SILT FENCE WHEN IT REACHES 1/3 THE HEIGHT OF THE FENCE OR REPLACE WITH FUNCTIONAL SILT FENCE WITHIN 24 HOURS. USE OF HOSES AND WATER TO FLUSH THE SEDIMENT INTO THE STORM INLETS IS UNACCEPTABLE.

3. SEDIMENTATION BASINS

SEDIMENTATION BASINS WHICH ARE AT 50% USED CAPACITY OR APPROACHING SUCH CAPACITY SHALL BE RE-EXCAVATED TO ORIGINAL DIMENSIONS AND THE SILT PROPERLY DISPOSED OF.

4. SEDIMENT LOGS/ROLLS

SEDIMENT LOGS/ROLLS OR OTHER CONTROL MEASURES WHICH BEGIN TO DISINTEGRATE OR FUNCTION INEFFECTIVELY SHALL BE PROMPTLY REPLACED.

5. VEGETATION COVER

ANY VEGETATION COVER SERVING TO STABILIZE DISTURBED SOILS WHICH IS ITSELF DISTURBED SHALL IMMEDIATELY BE REPLACED.

6. CONSTRUCTION ENTRANCE

MAINTAIN ROCK CONSTRUCTION ENTRANCE AND CLEAN ADJACENT ROADS OF ANY MUD TRACKED ONTO THEM.

IV. INSPECTIONS

1. QUALIFIED PERSONNEL WILL INSPECT DISTURBED AREAS OF THE CONSTRUCTION SITE, AREAS USED FOR STORAGE OF MATERIALS THAT ARE EXPOSED TO PRECIPITATION THAT HAVE NOT BEEN FINALLY STABILIZED, STRUCTURAL CONTROL MEASURES, AND LOCATIONS WHERE VEHICLES ENTER OR EXIT THE SITE AT LEAST ONCE EVERY SEVEN CALENDAR DAYS. WHERE SITES HAVE BEEN FINALLY STABILIZED SUCH INSPECTIONS SHALL BE CONDUCTED AT LEAST ONCE EVERY MONTH DURING THE WARRANTY PERIOD.

2. DISTURBED AREAS AND AREAS USED FOR STORAGE OF MATERIALS THAT ARE EXPOSED TO PRECIPITATION SHALL BE INSPECTED FOR EVIDENCE OF, OR THE POTENTIAL FOR, POLLUTANTS ENTERING THE DRAINAGE SYSTEM. EROSION AND SEDIMENT CONTROL MEASURES IDENTIFIED IN THE PLAN SHALL BE OBSERVED TO ENSURE THAT THEY ARE OPERATING CORRECTLY. WHERE DISCHARGE LOCATIONS OR POINTS ARE ACCESSIBLE, THEY SHALL BE INSPECTED TO ASCERTAIN WHETHER EROSION CONTROL MEASURES ARE EFFECTIVE IN PREVENTING SIGNIFICANT IMPACTS TO RECEIVING WATERS. LOCATIONS WHERE VEHICLES ENTER OR EXIT THE SITE SHALL BE INSPECTED FOR EVIDENCE OF OFFSITE SEDIMENT TRACKING.

3. A WRITTEN REPORT SUMMARIZING THE SCOPE OF THE INSPECTION, NAME(S) AND QUALIFICATIONS OF PERSONNEL MAKING THE INSPECTION, THE DATE(S) OF THE INSPECTION, WEATHER INFORMATION FOR THE PERIOD SINCE THE LAST INSPECTION (OR SINCE COMMENCEMENT OF CONSTRUCTION ACTIVITY) INCLUDING A BEST ESTIMATE OF THE BEGINNING OF EACH STORM EVENT, DURATION OF EACH STORM EVENT, APPROXIMATE AMOUNT OF RAINFALL FOR EACH STORM EVENT (IN INCHES) AND WHETHER ANY DISCHARGES OCCURRED, LOCATION(S) OF DISCHARGES OF SEDIMENT OR OTHER POLLUTANTS FROM THE SITE, LOCATION(S) OF BMP'S THAT NEED MAINTENANCE, LOCATION(S) OF BMP'S THAT FAILED TO OPERATE AS DESIGNED OR PROVED INADEQUATE FOR A PARTICULAR LOCATION, LOCATION(S) WHERE ADDITIONAL BMP'S ARE NEEDED THAT DID NOT EXIST AT THE TIME OF INSPECTION AND ANY CORRECTIVE ACTION REQUIRED INCLUDING ANY CHANGES TO SWPPP NECESSARY AND IMPLEMENTATION DATES.

4. THE REPORT SHALL BE MAINTAINED AT LEAST THREE YEARS FROM THE DATE THE SITE IS FINALLY STABILIZED. THE REPORT MUST BE SIGNED AND SHALL CONTAIN A CERTIFICATION THAT THE FACILITY IS IN COMPLIANCE WITH THE STORM WATER POLLUTION PREVENTION PLAN AND THE NPDES PERMIT REFERENCED ABOVE. THE CONTRACTOR SHALL MAINTAIN THIS REPORT. THE REPORT SHALL BE SUBMITTED TO THE ENGINEER AND OWNER.

V. LONG TERM MAINTENANCE OF DRAINAGE AND STORM WATER MANAGEMENT SYSTEM

THE ROADS AND DRAINAGE SYSTEM WILL BE OWNED AND MAINTAINED BY THE OWNER AFTER CONSTRUCTION IS COMPLETE.

VI. SC DHEC STANDARD NOTES

1. IF NECESSARY, SLOPES WHICH EXCEED EIGHT (8) VERTICAL FEET SHOULD BE STABILIZED WITH SYNTHETIC OR VEGETATIVE MATS, IN ADDITION TO GRASSING / HYDROSEEDING. IT MAY BE NECESSARY TO INSTALL TEMPORARY SLOPE DRAINS DURING CONSTRUCTION. TEMPORARY BERMS MAY BE NEEDED UNTIL THE SLOPE IS BROUGHT TO GRADE.

2. STABILIZATION MEASURES SHALL BE INITIATED AS SOON AS PRACTICABLE IN PORTIONS OF THE SITE WHERE CONSTRUCTION ACTIVITIES HAVE TEMPORARILY OR PERMANENTLY CEASED, BUT IN NO CASE MORE THAN FOURTEEN (14) DAYS AFTER WORK HAS CEASED, EXCEPT AS STATED BELOW:

2.1. WHERE STABILIZATION BY THE 14TH DAY IS PRECLUDED BY SNOW COVER OR FROZEN GROUND CONDITIONS STABILIZATION MEASURES MUST BE INITIATED AS SOON AS PRACTICABLE.
2.2. WHERE CONSTRUCTION ACTIVITY ON A PORTION OF THE SITE IS TEMPORARILY CEASED, AND EARTH-DISTURBING ACTIVITIES WILL BE RESUMED WITHIN 14 DAYS, TEMPORARY STABILIZATION MEASURES DO NOT HAVE TO BE INITIATED ON THAT PORTION OF THE SITE.

3. ALL SEDIMENT AND EROSION CONTROL DEVICES SHALL BE INSPECTED ONCE EVERY CALENDAR WEEK. IF PERIODIC INSPECTION OR OTHER INFORMATION INDICATES THAT A BMP HAS BEEN USED INAPPROPRIATELY, OR INCORRECTLY, THE PERMITTEE MUST ADDRESS THE NECESSARY REPLACEMENT OR MODIFICATION REQUIRED TO CORRECT THE BMP WITHIN 48 HOURS OF IDENTIFICATION.

4. PROVIDE SILT FENCE AND/OR OTHER CONTROL DEVICES, AS MAY BE REQUIRED, TO CONTROL SOIL EROSION DURING UTILITY CONSTRUCTION. ALL DISTURBED AREAS SHALL BE CLEANED, GRADED AND STABILIZED WITH GRASSING IMMEDIATELY AFTER THE UTILITY INSTALLATION. FILL, COVER, AND TEMPORARY SEEDING AT THE END OF EACH DAY ARE RECOMMENDED. IF WATER IS ENCOUNTERED WHILE TRENCHING, THE WATER SHOULD BE FILTERED TO REMOVE ANY SEDIMENTS BEFORE BEING PUMPED INTO ANY WATERS OF THE STATE.

5. ALL EROSION CONTROL DEVICES SHALL BE PROPERLY MAINTAINED DURING ALL PHASES OF CONSTRUCTION UNTIL THE COMPLETION OF ALL CONSTRUCTION ACTIVITIES AND ALL DISTURBED AREAS HAVE BEEN STABILIZED. ADDITIONAL CONTROL DEVICES MAY BE REQUIRED DURING CONSTRUCTION IN ORDER TO CONTROL EROSION AND/OR OFFSITE SEDIMENTATION. ALL TEMPORARY CONTROL DEVICES SHALL BE REMOVED ONCE CONSTRUCTION IS COMPLETE AND THE SITE IS STABILIZED.

6. THE CONTRACTOR MUST TAKE NECESSARY ACTION TO MINIMIZE THE TRACKING OF MUD ONTO THE PAVED ROADWAY FROM CONSTRUCTION AREAS AND THE GENERATION OF DUST. THE CONTRACTOR SHALL DAILY REMOVE MUD/SOIL FROM PAVEMENT AS MAY BE REQUIRED.

7. RESIDENTIAL SUBDIVISIONS REQUIRE EROSION CONTROL FEATURES FOR INFRASTRUCTURE AS WELL AS FOR INDIVIDUAL LOT CONSTRUCTION. INDIVIDUAL PROPERTY OWNERS SHALL FOLLOW THESE PLANS DURING CONSTRUCTION OR OBTAIN APPROVAL OF AN INDIVIDUAL PLAN IN ACCORDANCE WITH S.C. REG. 72-300 AND SCR100000.

8. TEMPORARY DIVERSION BERMS AND/OR DITCHES WILL BE PROVIDED AS NEEDED DURING CONSTRUCTION TO PROTECT WORK AREAS FROM UPSLOPE RUNOFF AND/OR TO DIVERT SEDIMENT LADEN WATER TO APPROPRIATE TRAPS OR STABLE OUTLETS.

9. ALL WATERS OF THE STATE (WOS), INCLUDING WETLANDS, ARE TO BE FLAGGED OR OTHERWISE CLEARLY MARKED IN THE FIELD. A DOUBLE ROW OF SILT FENCE IS TO BE INSTALLED IN ALL AREAS WHERE A 50-FOOT BUFFER CAN NOT BE MAINTAINED BETWEEN THE DISTURBED AREA AND ALL WOS. A 10-FOOT BUFFER SHOULD BE MAINTAINED BETWEEN THE LAST ROW OF SILT FENCE AND ALL WOS

10. LITTER, CONSTRUCTION DEBRIS, OILS, FUELS, AND BUILDING PRODUCTS WITH SIGNIFICANT POTENTIAL FOR IMPACT (SUCH AS STOCKPILES OF FRESHLY TREATED LUMBER) AND CONSTRUCTION CHEMICALS THAT COULD BE EXPOSED TO STORM WATER MUST BE PREVENTED FROM BECOMING A POLLUTANT SOURCE IN STORM WATER DISCHARGES.

11. A COPY OF THE SWPPP, INSPECTION RECORDS AND RAINFALL DATA MUST BE RETAINED AT THE CONSTRUCTION SITE OR A NEARBY LOCATION EASILY ACCESSIBLE DURING NORMAL BUSINESS HOURS, FROM THE DATE OF COMMENCEMENT OF CONSTRUCTION ACTIVITIES TO THE DATE THAT FINAL STABILIZATION IS REACHED.

12. INITIATE STABILIZATION MEASURES ON ANY EXPOSED STEEP SLOPE (3H:1V OR GREATER) WHERE LAND DISTURBING ACTIVITIES HAVE PERMANENTLY OR TEMPORARILY CEASED, AND WILL NOT RESUME FOR A PERIOD OF 7 CALENDAR DAYS.

13. MINIMIZE SOIL COMPACTION IN AREAS NOT UNDER PAVEMENTS AND /OR STRUCTURES AND, UNLESS INFEASIBLE, PRESERVE TOPSOIL.

14. MINIMIZE THE DISCHARGE OF POLLUTANTS FROM EQUIPMENT AND VEHICLE WASHING, WHEEL WASH WATER AND OTHER WASH WATERS. WASH WATERS MUST BE TREATED IN A SEDIMENT BASIN OR ALTERNATIVE CONTROL THAT PROVIDES EQUAL OR BETTER TREATMENT PRIOR TO DISCHARGE.

15. MINIMIZE THE DISCHARGE OF POLLUTANTS FROM DEWATERING OF TRENCHES AND EXCAVATED AREAS. THESE DISCHARGES ARE TO BE ROUTED THROUGH APPROPRIATE BMPS (SEDIMENT BASIN, FILTER BAG, ETC.).

16. THE FOLLOWING DISCHARGES ARE PROHIBITED:

16.1. WASTEWATER FROM WASHOUT OF CONCRETE, UNLESS MANAGED BY AN APPROPRIATE CONTROL;
16.2. WASTEWATER FROM WASHOUT AND CLEANOUT OF OF STUCCO, PAINT, FORM RELEASE OILS, CURING COMPOUNDS AND OTHER CONSTRUCTION MATERIALS;
16.3. FUELS, OILS OR OTHER POLLUTANTS USED IN VEHICLE AND EQUIPMENT OPERATION AND MAINTENANCE; AND
16.4. SOAPS OR SOLVENTS USED IN VEHICLE AND EQUIPMENT WASHING.

17. AFTER CONSTRUCTION ACTIVITIES BEGIN, INSPECTIONS MUST BE CONDUCTED AT A MINIMUM OF AT LEAST ONCE EVERY CALENDAR WEEK AND MUST BE CONDUCTED UNTIL FINAL STABILIZATION IS REACHED ON ALL AREAS OF THE CONSTRUCTION SITE.

18. IF EXISTING BMPS NEED TO BE MODIFIED OR IF ADDITIONAL BMPS ARE NECESSARY TO COMPLY WITH THE REQUIREMENTS OF PERMIT SCR100000 AND/OR SC'S WATER QUALITY STANDARDS, IMPLEMENTATION MUST BE COMPLETED BEFORE THE NEXT STORM EVENT WHENEVER PRACTICABLE. IF IMPLEMENTATION BEFORE THE NEXT STORM EVENT IS IMPRACTICABLE, THE SITUATION MUST BE DOCUMENTED IN THE SWPPP AND ALTERNATIVE BMPS MUST BE IMPLEMENTED AS SOON AS REASONABLY POSSIBLE.

19. A PRE-CONSTRUCTION CONFERENCE MUST BE HELD FOR EACH CONSTRUCTION SITE WITH AN APPROVED ON-SITE SWPPP PRIOR TO THE IMPLEMENTATION OF CONSTRUCTION ACTIVITIES. FOR NON-LINEAR PROJECTS THAT DISTURB 10 ACRES OR MORE, THIS CONFERENCE MUST BE HELD ON-SITE UNLESS THE DEPARTMENT HAS APPROVED OTHERWISE.

VII. EROSION, SEDIMENTATION & POLLUTION CONTROL NOTES

1. THE IMPLEMENTATION OF THESE EROSION SEDIMENT CONTROL (ESC) PLANS AND THE CONSTRUCTION, MAINTENANCE, REPLACEMENT, AND UPGRADING OF THESE ESC FACILITIES IS THE RESPONSIBILITY OF THE CONTRACTOR UNTIL ALL CONSTRUCTION IS COMPLETED AND APPROVED AND VEGETATION/LANDSCAPING IS ESTABLISHED.

2. THE ESC FACILITIES SHOWN ON THIS PLAN MUST BE CONSTRUCTED IN CONJUNCTION WITH ALL CLEARING AND GRADING ACTIVITIES, AND IN SUCH A MANNER AS TO INSURE THAT SEDIMENT AND SEDIMENT LADEN WATER DO NOT ENTER THE DRAINAGE SYSTEM, ROADWAYS, OR VIOLATE APPLICABLE WATER STANDARDS.

3. THE ESC FACILITIES SHOWN ON THIS PLAN ARE THE MINIMUM REQUIREMENTS FOR ANTICIPATED SITE CONDITIONS. DURING THE CONSTRUCTION PERIOD, THESE ESC FACILITIES SHALL BE UPGRADED AS NEEDED FOR UNEXPECTED STORM EVENTS AND TO ENSURE THAT SEDIMENT AND SEDIMENT LADEN WATER DO NOT LEAVE THE SITE.

4. THE ESC FACILITIES SHALL BE INSPECTED DAILY BY THE CONTRACTOR AND MAINTAINED AS NECESSARY TO ENSURE THEIR CONTINUED FUNCTIONING.

5. THE ESC FACILITIES ON INACTIVE SITES SHALL BE INSPECTED AND MAINTAINED A MINIMUM OF ONCE A MONTH OR WITHIN THE 24 HOURS FOLLOWING A MAJOR STORM EVENT.

6. AT NO TIME SHALL MORE THAN ONE FOOT OF SEDIMENT BE ALLOWED TO ACCUMULATE WITHIN A CATCH BASIN. ALL CATCH BASINS AND CONVEYANCE LINES SHALL BE CLEANED PRIOR TO PAVING AND PRIOR TO FINAL INSPECTION. THE CLEANING OPERATION SHALL NOT FLUSH SEDIMENT LADEN WATER INTO THE DOWNSTREAM SYSTEM.

7. STABILIZED CONSTRUCTION ENTRANCES SHALL BE INSTALLED AT THE BEGINNING OF CONSTRUCTION AND MAINTAINED FOR THE DURATION OF THE PROJECT. ADDITIONAL MEASURES MAY BE REQUIRED TO INSURE THAT ALL PAVED AREAS ARE KEPT CLEAN FOR THE DURATION OF THE PROJECT.

8. BEFORE COMMENCING ANY LAND DISTURBING ACTIVITY, THE EXISTING STORM WATER INLET(S) THAT RECEIVING RUNOFF FROM THE PROPOSED WORK AREA SHALL BE PROTECTED. THE TEMPORARY INLET PROTECTION MUST REMAIN IN PLACE UNTIL THE CONSTRUCTION ACTIVITY IS COMPLETED, THE STREET HAS BEEN SWEPT AND ANY EXPOSED SOILS ARE STABILIZED. THE CONTRACTOR IS ALSO RESPONSIBLE FOR REMOVING ANY TEMPORARY INLET PROTECTION INSTALLED; AFTER ALL DISTURBED AREAS ARE STABILIZED. TEMPORARY PROTECTION OF THE INLETS MAY BE ACCOMPLISHED BY ONE OR MORE OF THE FOLLOWING:

8.1. USE OF GRAVEL BAGS TO FILTER THE SEDIMENT FROM ANY RUNOFF. TO MAKE A GRAVEL BAG, USE A BAG MADE OF GEOTEXTILE FABRIC (NOT BURLAP) AND FILL WITH EITHER 3/4 INCH ROCK OR 1/4 INCH PEA GRAVEL.
8.2. USE OF SEDIMENT LOGS TO FILTER THE SEDIMENT FROM ANY RUNOFF (AVAILABLE THROUGH LOCAL EROSION CONTROL SUPPLIERS).
8.3. USE OF ABOVE OR UNDER-GRATE FILTER BAGS OR DEVICES TO FILTER THE SEDIMENT FROM ANY RUNOFF (AVAILABLE THROUGH EROSION CONTROL SUPPLIERS).

9. WATER MAY NOT BE DISCHARGED IN A MANNER THAT CAUSES EROSION, SEDIMENTATION, OR FLOODING ON THE SITE, ON DOWNSTREAM PROPERTIES, IN THE RECEIVING CHANNELS, OR IN ANY STORM WATER INLET. WHEN SITE DEWATERING, WATER PUMPED FROM THE SITE, INCLUDING TRENCHES, SHALL BE TREATED BY ONE OF THE FOLLOWING:

9.1. TEMPORARY SEDIMENTATION BASINS
9.2. SEDIMENT FILTERING BAGS

10. THE CONTRACTOR SHALL VERIFY THE SIZE AND LOCATION OF ALL EXISTING UTILITIES. EXISTING UTILITIES ARE ALL UTILITIES THAT EXIST ON THE PROJECT IN AN ORIGINAL, RELOCATED OR NEWLY INSTALLED POSITION. THE CONTRACTOR SHALL BE HELD RESPONSIBLE FOR THE COST OF REPAIRS TO DAMAGED UNDERGROUND OR OVERHEAD FACILITIES, EVEN IF THE UTILITY IS NOT SHOWN ON THE SITE DEVELOPMENT PLANS. THE CONTRACTOR SHALL CONTACT THE LOCAL UTILITIES PROTECTION CENTER TO COORDINATE THE MARKING OF EXISTING UTILITY LINES A MINIMUM OF 96 HOURS PRIOR TO COMMENCEMENT OF ANY WORK.

11. THE CONTRACTOR SHALL FLUSH ALL INLETS AND PIPE AT THE COMPLETION OF CONSTRUCTION TO REMOVE SILT AND DEBRIS. THE CLEANING AND FLUSHING OF INLETS AND PIPE (EXISTING AND PROPOSED) SHALL BE CONSIDERED PART OF THE COST FOR THE PROJECT.

12. EGRESS FROM THE SITE SHALL BE CONTROLLED SUCH THAT VEHICLES LEAVING THE SITE MUST TRAVERSE CONSTRUCTION EXITS TO REMOVE MUD FROM TIRES.

13. SCHEDULE CONSTRUCTION ACTIVITIES TO MINIMIZE THE EXPOSED AREA AND DURATION OF EXPOSURE. IN SCHEDULING, TAKE INTO ACCOUNT THE SEASON AND THE WEATHER FORECAST.

14. EROSION CONTROL MEASURES ARE THE MINIMUM REQUIRED. THE CONTRACTOR SHALL PROVIDE ADDITIONAL CONTROL MEASURES AS DICTATED BY ACTUAL FIELD CONDITIONS AT THE TIME OF CONSTRUCTION IN ORDER TO PREVENT EROSION AND CONTROL SEDIMENT. EROSION AND SEDIMENT CONTROL MEASURES WILL REMAIN IN PLACE AND BE MAINTAINED UNTIL THE ENTIRE PROJECT IS TERMINATED OR SUSPENDED FOR AND INDEFINITE LENGTH OF TIME, ALL DISTURBED AREAS SHALL BE PLANTED WITH PERMANENT VEGETATION.

15. THE DATA, TOGETHER WITH ALL OTHER INFORMATION SHOWN ON THESE PLANS, OR IN ANY WAY INDICATED THEREBY, WHETHER BY DRAWINGS OR NOTES, OR IN ANY OTHER MANNER, IS BASED UPON FIELD INVESTIGATIONS AND IS BELIEVED TO BE INDICATIVE OF ACTUAL CONDITIONS. HOWEVER, THE SAME IS SHOWN AS INFORMATION ONLY, IS NOT GUARANTEED AND DOES NOT BIND THOMAS & HUTTON, OR THE OWNER IN ANY WAY.

16. CONTRACTOR SHALL MAINTAIN SITE ON A DAILY BASIS TO PROVIDE FOR POSITIVE DRAINAGE. CONTRACTOR, AT HIS COST, SHALL GRADE SITE AND PROVIDE NECESSARY TEMPORARY DRAINAGE SWALES TO INSURE STORM WATER DOES NOT POND ON SITE.

17. SITE DRAINAGE SHALL BE ESTABLISHED TO PREVENT ANY PONDED WATER CONDITIONS WITHIN THE CONSTRUCTION AREA AND TO FACILITATE STORM WATER DISCHARGE.

18. THE ESCAPE OF SEDIMENT FROM THE SITE SHALL BE PREVENTED BY THE INSTALLATION OF EROSION AND SEDIMENT CONTROL MEASURES AND PRACTICES PRIOR TO, OR CONCURRENT WITH, LAND DISTURBING ACTIVITIES.

19. LIME RATES AND ANALYSIS:

19.1. AGRICULTURAL LIME SHALL BE APPLIED AT THE RATE SHOWN IN THE SEEDING SECTION UNLESS SOIL TESTS INDICATE OTHERWISE. GRADED AREAS REQUIRE LIME APPLICATION. IF LIME IS APPLIED WITHIN SIX MONTHS OF PLANTING PERMANENT PERENNIAL VEGETATION, ADDITIONAL LIME IS NOT REQUIRED

STORMWATER POLLUTION PREVENTION PLAN

TEMPORARY SEEDING - COASTAL

SPECIES	LBS/AC	JAN	FEB	MAR	APR	MAY	JUN	JUL	AUG	SEP	OCT	NOV	DEC
SANDY, DROUGHTY SITES													
BROWNTOP MILLET	40												
RYE, GRAIN	56												
RYEGRASS	50												
WELL DRAINED, CLAYEY/LOAMEY SITES													
BROWNTOP MILLET JAPANESE MILLET	40 40												
RYE, GRAIN OATS	56 75												
RYEGRASS	50												

PERMANENT SEEDING - COASTAL

SPECIES	LBS/AC	JAN	FEB	MAR	APR	MAY	JUN	JUL	AUG	SEP	OCT	NOV	DEC
SANDY, DROUGHTY SITES													
BROWNTOP MILLET BAHIAGRASS	10 40												
BROWNTOP MILLET BAHIAGRASS SERICEA LESPEDEZA	10 30 40												
BROWNTOP MILLET ATLANTIC COASTAL PANICGRASS	10 15 PLS												
BROWNTOP MILLET SWITCHGRASS (ALAMO) LITTLE BLUESTEM SERICEA LESPEDEZA	10 8 PLS 4 20												
BROWNTOP MILLET WEEPING LOVEGRASS	10 8												
WELL DRAINED, CLAYEY/LOAMEY SITES													
BROWNTOP MILLET BAHIAGRASS	10 40												
RYE, GRAIN BAHIAGRASS CLOVER, CRIMSON (ANNUAL)	10 40 5												
BROWNTOP MILLET BAHIAGRASS SERICEA LESPEDEZA	10 30 40												
BROWNTOP MILLET BERMUDA, COMMON SERICEA LESPEDEZA	10 10 40												
BROWNTOP MILLET BERMUDA, COMMON KOBE LESPEDEZA (ANNUAL)	10 12 10												
BROWNTOP MILLET BAHIAGRASS BERMUDA, COMMON SERICEA LESPEDEZA	10 20 6 40												
BROWNTOP MILLET SWITCHGRASS LITTLE BLUESTEM INDIANGRASS	10 8 PLS 3												

EROSION CONTROL LEGEND

DESCRIPTION	PLAN SYMBOL
SILT FENCE	
CLEARING LIMITS	CL
DIVERSION DIKE	DD
DIVERSION BERM	DB
TEMPORARY DIVERSION	TD
PERMANENT DIVERSION	PD
SUBSURFACE DRAIN	SSD
VEGETATED CHANNEL	
RIP RAP LINED CHANNEL	
ECB OR TRM LINED CHANNEL	
PAVED CHANNEL	PC
TREE PROTECTION	
SURFACE ROUGHENING	OR LG
TOP SOILING	
TEMPORARY SEEDING	TS
PERMANENT SEEDING	PS
MULCHING	M

EROSION CONTROL LEGEND

DESCRIPTION	PLAN SYMBOL
EROSION CONTROL BLANKET OR TURF REINFORCEMENT MAT	
FLEXIBLE GROWTH MATRIX	FGM
BONDED FIBER MATRIX	BFM
SODDING	SO
SLOPED SODDING	
STAKED SOD	
STAKED SOD AROUND INLET	OR
RIPRAP	
OUTLET PROTECTION - RIP RAP	
OUTLET PROTECTION - ECB OR TRM	
DUST CONTROL	DC
POLYACRYLAMIDE (PAM)	PAM
SEDIMENT BASIN	
SEDIMENT BASIN WITH SKIMMER	
SEDIMENT TRAP	
ROCK SEDIMENT DIKE	
SEDIMENT TUBE	

EROSION CONTROL LEGEND

DESCRIPTION	PLAN SYMBOL
ROCK CHECK DAM	OR
POROUS BAFFLES	
STABILIZED CONSTRUCTION ENTRANCE	
CONCRETE WASHOUT	
STORM DRAIN INLET PROTECTION - TYPE A FILTER FABRIC	A
STORM DRAIN INLET PROTECTION - TYPE A SEDIMENT TUBE	A
STORM DRAIN INLET PROTECTION - TYPE B HARDWARE FABRIC AND STONE	B
STORM DRAIN INLET PROTECTION - TYPE C BLOCK AND GRAVEL	C
STORM DRAIN INLET PROTECTION - TYPE D RIGID INLET FILTER	D
STORM DRAIN INLET PROTECTION - TYPE E SURFACE COURSE CURB INLET FILTER	E
STORM DRAIN INLET PROTECTION - TYPE F INLET TUBE	F
STORM DRAIN INLET PROTECTION - TYPE G IMPERVIOUS AREA	G
STORM DRAIN INLET PROTECTION - CATCH BASIN INSERT	I
PIPE SLOPE DRAINS	
TEMPORARY STREAM CROSSING	T
LEVEL SPREADER	

LIST OF ACRONYMS FOR SEDIMENT AND EROSION CONTROL

AASHTO	AMERICAN ASSOCIATION OF STATE HIGHWAY AND TRANSPORTATION OFFICIALS
AMD	ACRYLAMIDE POLYMER
BFM	BONDED FIBER MATRIX
BMP(S)	BEST MANAGEMENT PRACTICE(S)
CFS	CUBIC FEET PER SECOND
CMP	CORRUGATED METAL PIPE
DHEC	DEPARTMENT OF HEATH AND ENVIRONMENTAL CONTROL
ECB	EROSION CONTROL BLANKET
EPA	UNITED STATES ENVIRONMENTAL PROTECTION AGENCY
EPSC	EROSION PREVENTION AND SEDIMENTATION CONTROL
FDA	UNITED STATES FOOD AND DRUG ADMINISTRATION
FGM	FLEXIBLE GROWTH MATRIX
HDPE	HIGH DENSITY POLYETHYLENE
MS4	MUNICIPAL SEPARATE STORM SEWER SYSTEM
MSDS	MATERIAL SAFETY DATA SHEETS
NPDES	NATIONAL POLLUTANT DISCHARGE ELIMINATION SYSTEM
PAM	POLYACRYLAMIDE OR POLYMER
RCP	REINFORCED CONCRETE PIPE
SCS	SOIL CONSERVATION SERVICE
SWPPP	STORMWATER POLLUTION PREVENTION PROGRAM
TRM	TURF REINFORCEMENT MAT
VFS	VEGETATED FILTER STRIP

CONSTRUCTION SEQUENCE

CONSTRUCTION ACTIVITY	SCHEDULE CONSIDERATION
1 OBTAIN COPIES OF ALL PLAN APPROVALS AND OTHER APPLICABLE PERMITS.	CONTRACTOR TO HAVE ONSITE AT ALL TIMES DURING CONSTRUCTION.
2 FLAG THE WORK LIMITS AND BARRICADE TREES AND MARK BUFFER AREAS FOR PROTECTION.	HAVE LOCAL REGULATORY AGENCY INSPECT TREE BARRICADES.
3 HOLD PRE CONSTRUCTION CONFERENCE AT LEAST ONE WEEK PRIOR TO STARTING CONSTRUCTION.	REVIEW TREE PROTECTION (BARRICADE) WITH OWNER AND LOCAL REGULATORY AGENCY. TAKE PICTURES OF ALL PROTECTED TREES AND LOCATIONS WHERE SITE WORK TIES INTO EXISTING TO DOCUMENT PREDEVELOPMENT PROCEDURES.
4 INSTALL CONSTRUCTION ACCESS AND LAY DOWN AREAS.	STABILIZE BARE AREAS IMMEDIATELY AND INSTALL CONSTRUCTION EXITS / ENTRANCES.
5 CONSTRUCT PERIMETER SEDIMENT FENCES, TEMPORARY DIVERSION DITCH TO EXISTING POND	INSTALL PRINCIPAL BASINS AFTER CONSTRUCTION SITE IS ACCESSED. INSTALL ADDITIONAL TRAPS AND BARRIERS AS NEEDED DURING GRADING.
6 DEMOLISH EXISTING TRACK, FENCES, AND DRAINAGE STRUCTURES, AND OTHER STRUCTURES AS SHOWN ON THE EXISTING CONDITIONS PLAN SHEET. ADJUST TEMPORARY DIVERSION DITCHES AS NECESSARY AS DEMOLITION OCCURS.	ENSURE REQUIRED PERMITS FOR DEMOLITION IF REQUIRED ARE OBTAINED. ADJUST TEMPORARY DITCHES TO ENSURE POSITIVE DRAINAGE TO THE EXISTING STORM WATER POND.
7 CONSTRUCT SEDIMENT TRAPS AND BARRIERS - BASIN TRAPS, AND OUTLET PROTECTION.	INSTALL PRINCIPAL BASINS AFTER DEMOLITION OF TRACK HAS OCCURRED. INSTALL ADDITIONAL TRAPS AND BARRIERS AS NEEDED DURING GRADED.
8 ESTABLISH RUNOFF CONTROL - DIVERSIONS, PERIMETER DIKES, WATER BARS, AND OUTLET PROTECTION.	INSTALL KEY PRACTICES AFTER PRINCIPAL SEDIMENT TRAPS AND BEFORE LAND GRADING. INSTALL ADDITIONAL RUNOFF-CONTROL MEASURES DURING GRADING.
9 LAND CLEARING AND GRADING-SITE PREPARATION CUTTING, FILLING AND GRADING, SEDIMENTATION TRAPS, BARRIERS, DIVERSIONS, DRAINS, SURFACE ROUGHENING.	BEGIN MAJOR CLEARING AND GRADING AFTER PRINCIPAL SEDIMENT AND KEY RUNOFF-CONTROL MEASURES ARE INSTALLED. CLEAR BORROW AND DISPOSAL AREAS ONLY AS NEEDED. INSTALL ADDITIONAL CONTROL MEASURES AS GRADING PROGRESSES. MARK TREES AND BUFFER AREAS FOR PRESERVATION.
10 RUNOFF CONVEYANCE SYSTEM- INSTALL STORM DRAINS, STABILIZE BANKS, CHANNELS, INSTALL INLET AND OUTLET PROTECTION, SLOPE DRAINS.	WHERE NECESSARY, STABILIZE BANKS AS EARLY AS POSSIBLE. INSTALL PRINCIPAL RUNOFF CONVEYANCE SYSTEM WITH RUNOFF- CONTROL MEASURES. INSTALL REMAINDER OF SYSTEM AFTER GRADING.
11 INSTALL WASTEWATER COLLECTION, WATER DISTRIBUTION, AND STORM DRAINAGE SYSTEMS	APPLY TEMPORARY OR PERMANENT STABILIZATION MEASURES IMMEDIATELY ON ALL DISTURBED AREAS WHERE WORK IS DELAYED OR COMPLETE.
12 SURFACE STABILIZATION-TEMPORARY AND PERMANENT SEEDING, MULCHING, SODDING, RIP RAP.	APPLY TEMPORARY OR PERMANENT STABILIZATION MEASURES IMMEDIATELY ON ALL DISTURBED AREAS WHERE WORK IS DELAYED OR COMPLETE.
13 BUILDING CONSTRUCTION- BUILDINGS UTILITIES, ROADS, ETC.	INSTALL NECESSARY EROSION AND SEDIMENTATION CONTROL PRACTICES AS WORK TAKES PLACE.
14 LANDSCAPING AND FINAL STABILIZATION - TOPSOILING, TREES AND SHRUBS, PERMANENT SEEDING, MULCHING, SODDING, RIP RAP.	LAST CONSTRUCTION PHASE--STABILIZE ALL OPEN AREAS, INCLUDING BORROW AND SPOIL AREAS. REMOVE AND STABILIZE ALL TEMPORARY CONTROL MEASURES.

TETRA TECH
www.tetratech.com
240 Continental Drive, Suite 200
Newark, DE 19713
Tel: 302.738.7551 Fax: 302.454.5989

SOUTH CAROLINA LICENSED PROFESSIONAL ENGINEER No. 34575 M. DeSOUZA 2024/12/06

BARNWELL SCHOOL DISTRICT
OWNER
770 HAGOOD AVE
BARNWELL, SC 29812
Tel: 803 541 1300

TETRA TECH
ARCHITECT
MECHANICAL ENGINEER
PLUMBING ENGINEER
ELECTRICAL ENGINEER

240 CONTINENTAL DR
NEWARK, DE 19713
302 738 7551

THOMAS & HUTTON
CIVIL ENGINEER
1501 MAIN ST.
COLUMBIA, SC 29201
Tel: 803 451 0200

ZZ CONSULTING
STRUCTURAL ENGINEER
640 S. STATE ST.
SHELLEY, ID 83274
Tel: 208 357 5404

MARK	DATE	DESCRIPTION	BY
01	07/18/24	REVISED CONSTRUCTION DOC. SUBMITTAL FOR OSF REVIEW & APPROVAL	T&H
03	09/11/24	ISSUED FOR BID	T&H
04	12/06/24	ISSUED FOR CONSTRUCTION CONFORMANCE SET	T&H

BARNWELL SCHOOL DISTRICT
BARNWELL COUNTY MULTI-USE SAFE ROOM
EROSION CONTROL CHARTS

Project No.:	28810.0000
Designed By:	MCL
Drawn By:	MCL
Checked By:	MGD

C-301

Z:\28810\28810.0000\Engineering\Drawings\Construction Plans\28810.0000 - EC DT.dwg - Mar 3, 2021 - 2:31:54 PM

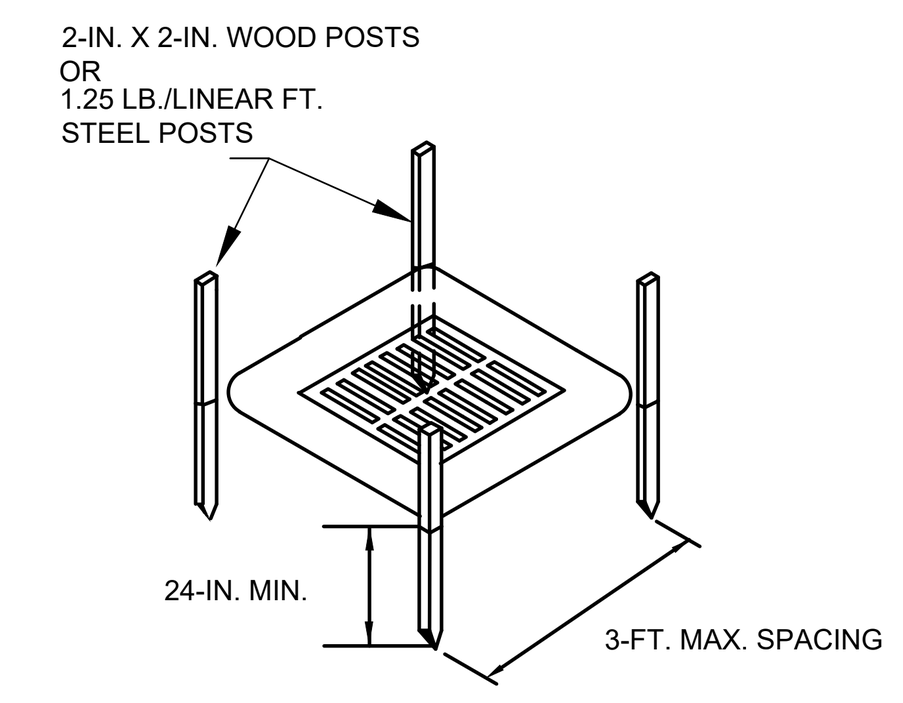

POST INSTALLATION DETAIL

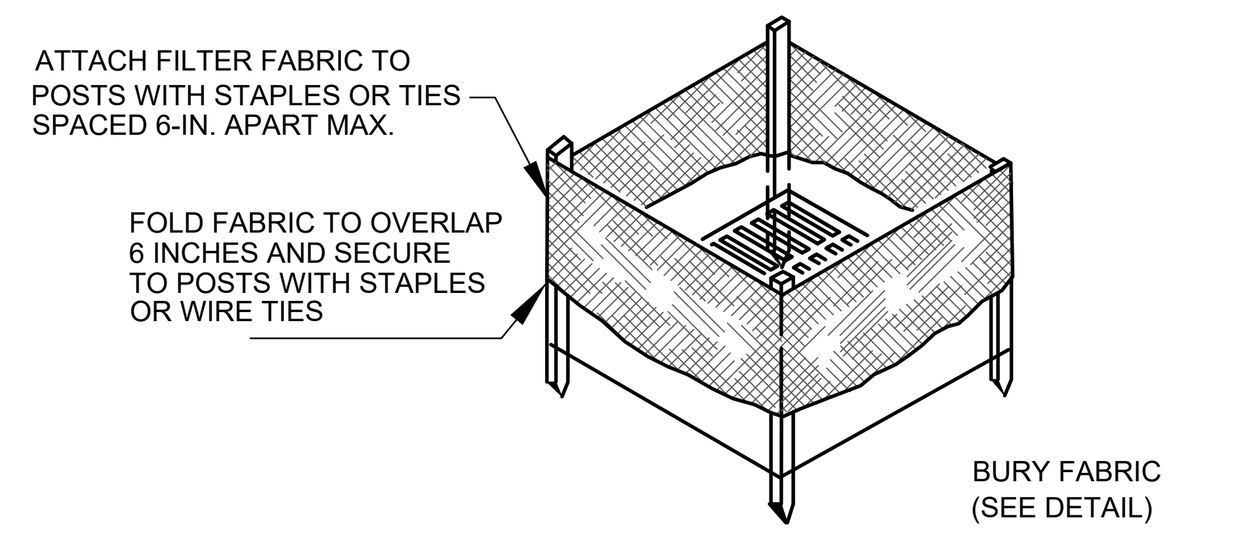

FILTER FABRIC INSTALLATION DETAIL

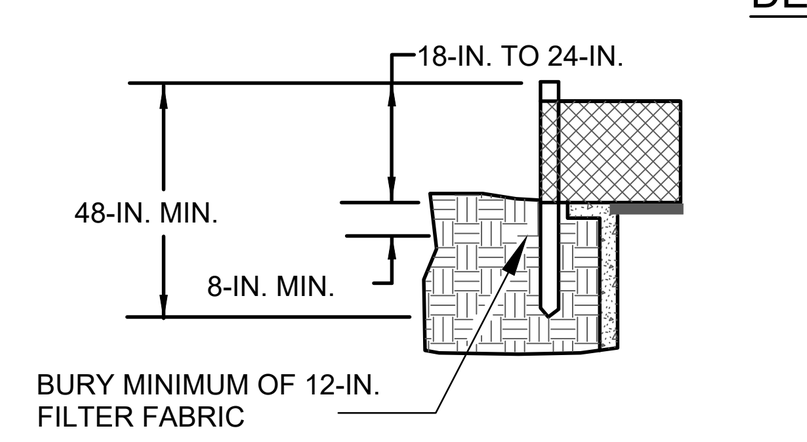

FILTER FABRIC BURIAL DETAIL

MATERIALS:
USE FILTER FABRIC THAT CONFORMS TO SCDOT STANDARD SPECIFICATIONS FOR HIGHWAY CONSTRUCTION (LATEST EDITION).

USE STEEL POSTS THAT MEET THE FOLLOWING MINIMUM PHYSICAL REQUIREMENTS:
BE COMPOSED OF HIGH STRENGTH STEEL WITH MINIMUM YIELD STRENGTH OF 50,000 PSI.
HAVE A STANDARD "T" SECTION WITH A NOMINAL FACE WIDTH OF 1.38-INCHES AND NOMINAL "T" LENGTH OF 1.48-INCHES.
WEIGH 1.25 POUNDS PER FOOT (± 8%).
BE PAINTED WITH A WATER BASED BAKED ENAMEL PAINT.

INSTALLATION:
EXCAVATE A TRENCH 6-INCHES WIDE AND 6-INCHES DEEP AROUND THE OUTSIDE PERIMETER OF THE INLET UNLESS THE FABRIC IS PNEUMATICALLY INSTALLED.

EXTEND THE FILTER FABRIC A MINIMUM OF 12-INCHES INTO THE TRENCH. BACKFILL THE TRENCH WITH SOIL OR CRUSHED STONE AND COMPACT OVER THE FILTER FABRIC UNLESS THE FABRIC IS PNEUMATICALLY INSTALLED.

USE STEEL POSTS WITH A MINIMUM POST LENGTH OF 60-INCHES CONSISTING OF STANDARD "T" SECTIONS WITH A WEIGHT OF 1.25 POUNDS PER FOOT (±8%). INSTALL THE FILTER FABRIC TO A MINIMUM HEIGHT OF 24-INCHES ABOVE GRADE. SPACE THE STEEL POSTS AROUND THE PERIMETER OF THE INLET A MAXIMUM OF 3-FEET APART AND DRIVE THEM INTO THE GROUND A MINIMUM OF 24-INCHES. CUT THE FILTER FABRIC FROM A CONTINUOUS ROLL TO THE LENGTH OF THE PROTECTED AREA TO AVOID THE USE OF JOINTS. WHEN JOINTS ARE NECESSARY, WRAP FILTER FABRIC TOGETHER ONLY AT A SUPPORT POST WITH BOTH ENDS SECURELY FASTENED TO THE POST, WITH A MINIMUM 6-INCH OVERLAP.

ATTACH FABRIC TO STEEL POSTS WITH HEAVY-DUTY PLASTIC TIES.

ATTACH AT LEAST FOUR (4) EVENLY SPACED TIES IN A MANNER TO PREVENT SAGGING OR TEARING OF THE FABRIC. IN ALL CASES, AFFIX TIES IN NO LESS THAN FOUR (4) PLACES.

INSPECTION AND MAINTENANCE:

SEDIMENT SHOULD BE REMOVED WHEN IT REACHES APPROXIMATELY 1/3 THE HEIGHT OF THE FENCE. TAKE CARE NOT TO DAMAGE OR UNDERCUT FABRIC WHEN REMOVING SEDIMENT. IF A SUMP IS USED, SEDIMENT SHOULD BE REMOVED WHEN IT FILLS APPROXIMATELY 1/3 THE DEPTH OF THE HOLE. MAINTAIN THE POOL AREA, ALWAYS PROVIDING ADEQUATE SEDIMENT STORAGE VOLUME FOR THE NEXT STORM.

STORM DRAIN INLET PROTECTION STRUCTURES SHOULD BE REMOVED ONLY AFTER THE DISTURBED AREAS ARE PERMANENTLY STABILIZED. REMOVE ALL CONSTRUCTION MATERIAL AND SEDIMENT, AND DISPOSE OF THEM PROPERLY. GRADE THE DISTURBED AREA TO THE ELEVATION OF THE DROP INLET STRUCTURE CREST. USE APPROPRIATE PERMANENT STABILIZATION METHODS TO STABILIZE BARE AREAS AROUND THE INLET.

A

FILTER FABRIC INLET PROTECTION (TYPE A)

NOT TO SCALE

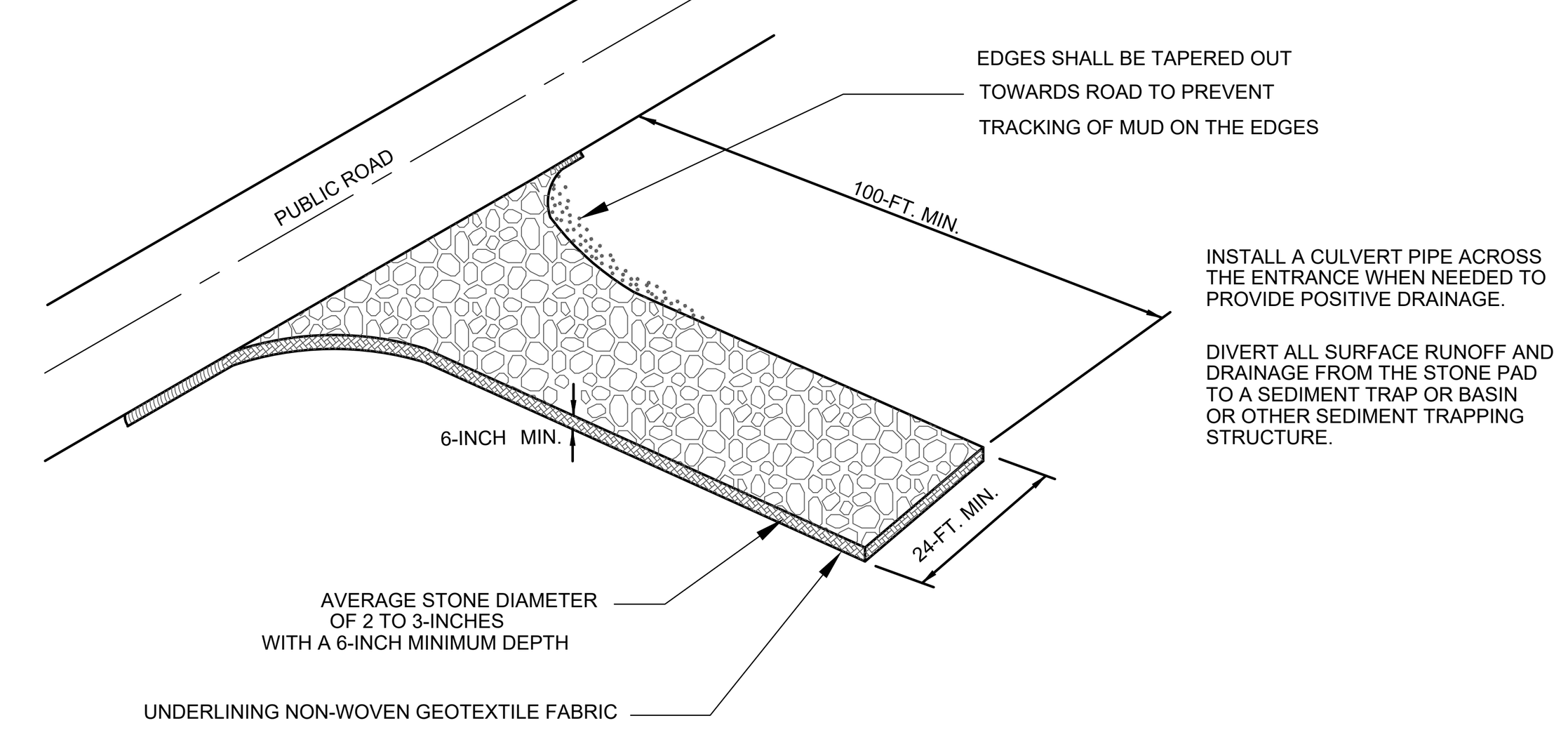

WHEN AND WHERE TO USE IT:
STABILIZED CONSTRUCTION ENTRANCES SHOULD BE USED AT ALL POINTS WHERE TRAFFIC WILL BE LEAVING A CONSTRUCTION SITE AND MOVING DIRECTLY ONTO A PUBLIC ROAD.

IMPORTANT CONSIDERATIONS:
IF WASHING IS USED, PROVISIONS MUST BE MADE TO INTERCEPT THE WASH WATER AND TRAP THE SEDIMENT BEFORE IT IS CARRIED OFFSITE. WASHDOWN FACILITIES SHALL BE REQUIRED AS DIRECTED BY SCDHEC AS NEEDED. WASHDOWN AREAS IN GENERAL MUST BE ESTABLISHED WITH CRUSHED GRAVEL AND DRAIN INTO A SEDIMENT TRAP OR SEDIMENT BASIN.

CONSTRUCTION ENTRANCES SHOULD BE USED IN CONJUNCTION WITH THE STABILIZATION OF CONSTRUCTION ROADS TO REDUCE THE AMOUNT OF MUD PICKED UP BY VEHICLES.

INSTALLATION:
REMOVE ALL VEGETATION AND ANY OBJECTIONABLE MATERIAL FROM THE FOUNDATION AREA.

DIVERT ALL SURFACE RUNOFF AND DRAINAGE FROM STONES TO A SEDIMENT TRAP OR BASIN.

INSTALL A NON-WOVEN GEOTEXTILE FABRIC PRIOR TO PLACING ANY STONE.

INSTALL A CULVERT PIPE ACROSS THE ENTRANCE WHEN NEEDED TO PROVIDE POSITIVE DRAINAGE.

THE ENTRANCE SHALL CONSIST OF 1-INCH TO 3-INCH D50 STONE PLACED AT A MINIMUM DEPTH OF 6-INCHES.

MINIMUM DIMENSIONS OF THE ENTRANCE SHALL BE 24-FEET WIDE BY 100-FEET LONG, AND MAY BE MODIFIED AS NECESSARY TO ACCOMMODATE SITE CONSTRAINTS.

THE EDGES OF THE ENTRANCE SHALL BE TAPERED OUT TOWARDS THE ROAD TO PREVENT TRACKING OF MUD AT THE EDGE OF THE ENTRANCE.

INSPECTION AND MAINTENANCE:
CHECK FOR MUD AND SEDIMENT BUILDUP AND PAD INTEGRITY. MAKE DAILY INSPECTIONS DURING PERIODS OF WET WEATHER. MAINTENANCE IS REQUIRED MORE FREQUENTLY IN WET WEATHER CONDITIONS. RESHAPE THE STONE PAD AS NEEDED FOR DRAINAGE AND RUNOFF CONTROL.

WASH OR REPLACE STONES AS NEEDED. THE STONE IN THE ENTRANCE SHOULD BE WASHED OR REPLACED WHENEVER THE ENTRANCE FAILS TO REDUCE MUD BEING CARRIED OFF-SITE BY VEHICLES.

FREQUENT WASHING WILL EXTEND THE USEFUL LIFE OF STONE.

IMMEDIATELY REMOVE MUD AND SEDIMENT TRACKED OR WASHED ONTO PUBLIC ROADS BY BRUSHING OR SWEEPING. FLUSHING SHOULD ONLY BE USED WHEN THE WATER CAN BE DISCHARGED TO A SEDIMENT TRAP OR BASIN.

REPAIR ANY BROKEN PAVEMENT IMMEDIATELY.

STABILIZED CONSTRUCTION ENTRANCE

NOT TO SCALE

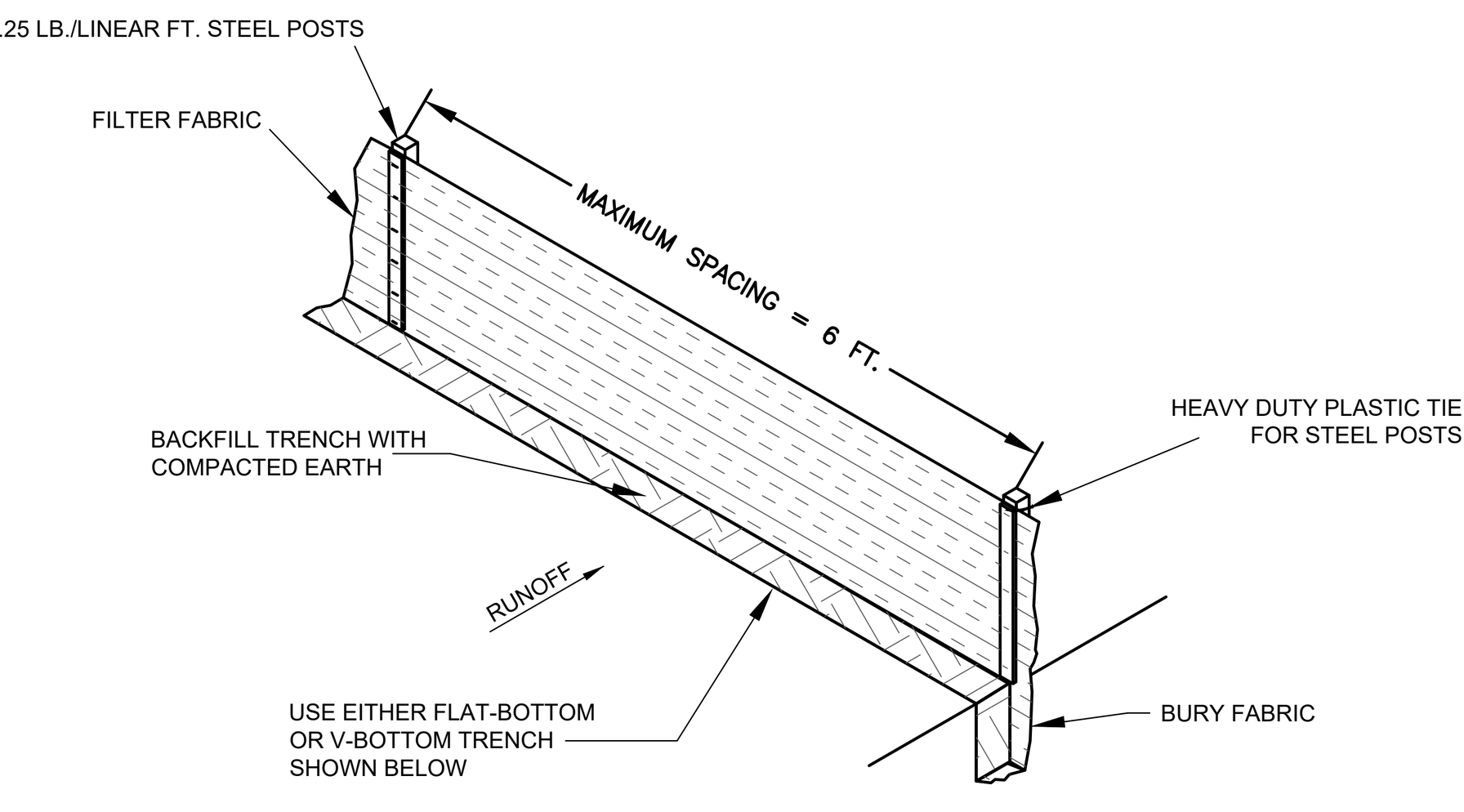

SILT FENCE INSTALLATION

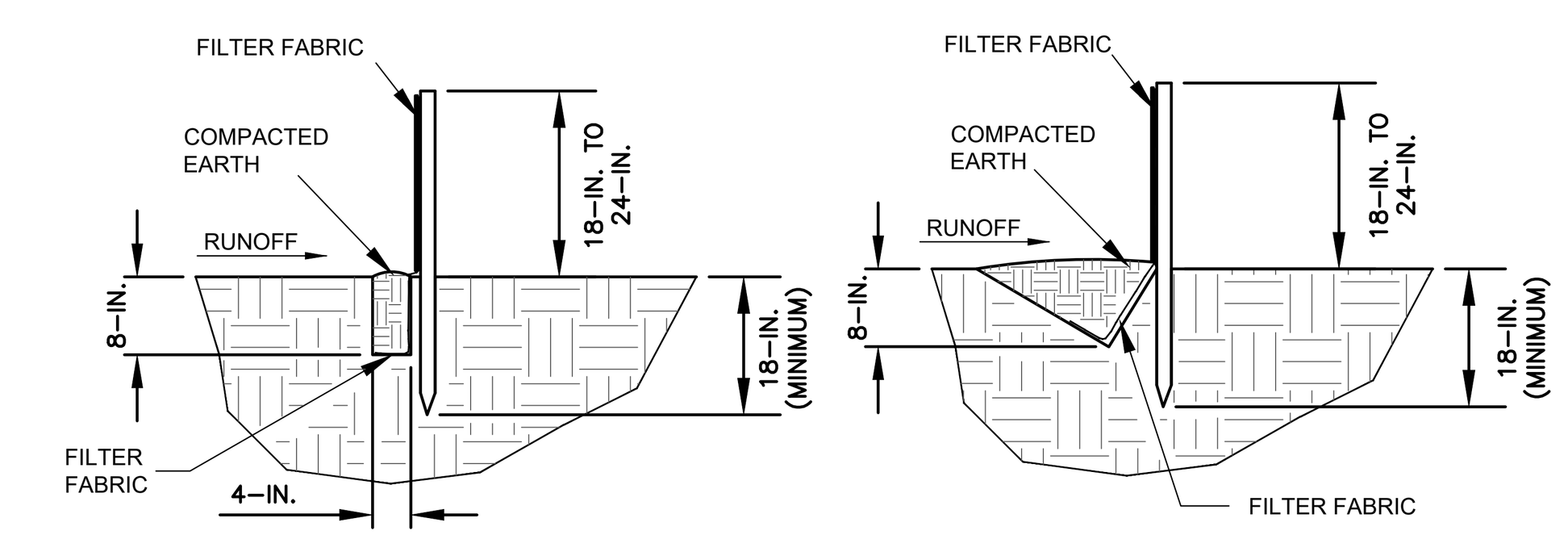

FLAT-BOTTOM TRENCH DETAIL

V-SHAPED TRENCH DETAIL

WHEN AND WHERE TO USE IT:
SILT FENCE IS APPLICABLE IN AREAS:

WHERE THE MAXIMUM SHEET OR OVERLAND FLOW PATH LENGTH TO THE FENCE IS 100-FEET.
WHERE THE MAXIMUM SLOPE STEEPNESS (NORMAL [PERPENDICULAR] TO FENCE LINE) IS 2H:1V.
THAT DO NOT RECEIVE CONCENTRATED FLOWS GREATER THAN 0.5 CFS.

DO NOT PLACE SILT FENCE ACROSS CHANNELS OR USE IT AS A VELOCITY CONTROL BMP.

MATERIALS:
STEEL POSTS
USE 48-INCH LONG STEEL POSTS THAT MEET THE FOLLOWING MINIMUM PHYSICAL REQUIREMENTS:
COMPOSED OF HIGH STRENGTH STEEL WITH MINIMUM YIELD STRENGTH OF 50,000 PSI.
HAVE A STANDARD "T" SECTION WITH A NOMINAL FACE WIDTH OF 1.38-INCHES AND NOMINAL "T" LENGTH OF 1.48-INCHES.
WEIGH 1.25 POUNDS PER FOOT (± 8%).
HAVE A SOIL STABILIZATION PLATE WITH A MINIMUM CROSS SECTION AREA OF 17-SQUARE INCHES ATTACHED TO THE STEEL POSTS.
PAINTED WITH A WATER BASED BAKED ENAMEL PAINT.

USE STEEL POSTS WITH A MINIMUM LENGTH OF 4-FEET, WEIGHING 1.25 POUNDS PER LINEAR FOOT (± 8%) WITH PROJECTIONS TO AID IN FASTENING THE FABRIC. EXCEPT WHEN HEAVY CLAY SOILS ARE PRESENT ON SITE, STEEL POSTS WILL HAVE A METAL SOIL STABILIZATION PLATE WELDED NEAR THE BOTTOM SUCH THAT WHEN THE POST IS DRIVEN TO THE PROPER DEPTH, THE PLATE WILL BE BELOW THE GROUND LEVEL FOR ADDED STABILITY.
THE SOIL PLATES SHOULD HAVE THE FOLLOWING CHARACTERISTICS:
BE COMPOSED OF MINIMUM 15 GAUGE STEEL.
HAVE A MINIMUM CROSS SECTION AREA OF 17-SQUARE INCHES.

GEOTEXTILE FILTER FABRIC:
FILTER FABRIC IS:
COMPOSED OF FIBERS CONSISTING OF LONG CHAIN SYNTHETIC POLYMERS COMPOSED OF AT LEAST 85% BY WEIGHT OF POLYOLEFINS, POLYESTERS, OR POLYAMIDES.
FORMED INTO A NETWORK SUCH THAT THE FILAMENTS OR YARNS RETAIN DIMENSIONAL STABILITY RELATIVE TO EACH OTHER.
FREE OF ANY TREATMENT OR COATING WHICH MIGHT ADVERSELY ALTER ITS PHYSICAL PROPERTIES AFTER INSTALLATION.
FREE OF DEFECTS OR FLAWS THAT SIGNIFICANTLY AFFECT ITS PHYSICAL AND/OR FILTERING PROPERTIES.
CUT TO A MINIMUM WIDTH OF 36 INCHES.

USE ONLY FABRIC APPEARING ON SCDOT APPROVAL SHEET #34 MEETING THE REQUIREMENTS OF THE MOST CURRENT EDITION OF THE SCDOT STANDARD SPECIFICATIONS FOR HIGHWAY CONSTRUCTION.

INSTALLATION:
EXCAVATE A TRENCH APPROXIMATELY 6-INCHES WIDE AND 6-INCHES DEEP WHEN PLACING FABRIC BY HAND. PLACE 12-INCHES OF GEOTEXTILE FABRIC INTO THE 6-INCH DEEP TRENCH, EXTENDING THE REMAINING 6-INCHES TOWARDS THE UPSLOPE SIDE OF THE TRENCH. BACKFILL THE TRENCH WITH SOIL OR GRAVEL AND COMPACT. BURY 12-INCHES OF FABRIC INTO THE GROUND WHEN PNEUMATICALLY INSTALLING SILT FENCE WITH A SLICING METHOD. PURCHASE FABRIC IN CONTINUOUS ROLLS AND CUT TO THE LENGTH OF THE BARRIER TO AVOID JOINTS. WHEN JOINTS ARE NECESSARY, WRAPPED THE FABRIC TOGETHER AT A SUPPORT POST WITH BOTH ENDS FASTENED TO THE POST, WITH A 6-INCH MINIMUM OVERLAP. INSTALL POSTS TO A MINIMUM DEPTH OF 24-INCHES. INSTALL POSTS A MINIMUM OF 1- TO 2- INCHES ABOVE THE FABRIC, WITH NO MORE THAN 3-FEET OF THE POST ABOVE THE GROUND. SPACE POSTS TO MAXIMUM 6-FEET CENTERS. ATTACH FABRIC TO WOOD POSTS USING STAPLES MADE OF HEAVY-DUTY WIRE AT LEAST 1-1/2-INCH LONG, SPACED A MAXIMUM OF 6-INCHES APART. STAPLE A 2-INCH WIDE LATHE OVER THE FILTER FABRIC TO SECURELY FASTEN IT TO THE UPSLOPE SIDE OF WOODEN POSTS. ATTACH FABRIC TO THE STEEL POSTS USING HEAVY-DUTY PLASTIC TIES THAT ARE EVENLY SPACED AND PLACED IN A MANNER TO PREVENT SAGGING OR TEARING OF THE FABRIC. IN CALL CASES, TIES SHOULD BE AFFIXED IN NO LESS THAN 4 PLACES. INSTALL THE FABRIC A MINIMUM OF 24-INCHES ABOVE THE GROUND. WHEN NECESSARY, THE HEIGHT OF THE FENCE ABOVE GROUND MAY BE GREATER THAN 24-INCHES. IN TIDAL AREAS, EXTRA SILT FENCE HEIGHT MAY BE REQUIRED. THE POST HEIGHT WILL BE TWICE THE EXPOSED POST HEIGHT. POST SPACING WILL REMAIN THE SAME AND EXTRA HEIGHT FABRIC WILL BE 4-, 5-, OR 6-FEET TALL. LOCATE SILT FENCE CHECKS EVERY 100 FEET MAXIMUM AND AT LOW POINTS. INSTALL THE FENCE PERPENDICULAR TO THE DIRECTION OF FLOW AND PLACE THE FENCE THE PROPER DISTANCE FROM THE TOE OF STEEP SLOPES TO PROVIDE SEDIMENT STORAGE AND ACCESS FOR MAINTENANCE AND CLEANOUT.

INSPECTION AND MAINTENANCE:
CHECK FOR SEDIMENT BUILDUP AND FENCE INTEGRITY. CHECK WHERE RUNOFF HAS ERODED A CHANNEL BENEATH THE FENCE, OR WHERE THE FENCE HAS SAGGED OR COLLAPSED BY FENCE OVERTOPPING. IF THE FENCE FABRIC TEARS, BEGINS TO DECOMPOSE, OR IN ANY WAY BECOMES INEFFECTIVE, REPLACE THE SECTION OF FENCE IMMEDIATELY. REMOVE SEDIMENT ACCUMULATED ALONG THE FENCE WHEN IT REACHES 1/3 THE HEIGHT OF THE FENCE, ESPECIALLY IF HEAVY RAINS ARE EXPECTED. REMOVE TRAPPED SEDIMENT FROM THE SITE OR STABILIZE IT ON SITE. REMOVE SILT FENCE WITHIN 30 DAYS AFTER FINAL STABILIZATION IS ACHIEVED OR

AFTER TEMPORARY BEST MANAGEMENT PRACTICES (BMPS) ARE NO LONGER NEEDED. PERMANENTLY STABILIZE DISTURBED AREAS RESULTING FROM FENCE REMOVAL.

SILT FENCE

NOT TO SCALE

ROCK SEDIMENT DIKE - GENERAL NOTES

1. Rock sediment dikes should not be placed in Waters of the State or USGS blue-line streams (unless approved by Federal Authorities).
2. A non-woven geotextile fabric shall be installed over the soil surface where the rock sediment dike is to be placed.
3. The body of a rock sediment dike shall be composed of 9-inch D50 riprap at a minimum.
4. The upstream face of the rock sediment dike shall be composed of a 1-foot thick layer of 3/4-inch to 1-inch D50 washed stone placed at a slope of 2H:1V.
5. Rock sediment dikes shall have a minimum top flow length of 3-feet (2-foot flow length through the riprap and 1-foot flow length through the washed stone).
6. The rock must be placed by hand or mechanical placement (no dumping of rock to form the sediment dike) to achieve proper dimensions.
7. A sediment sump shall be located on the upstream side of the structure to provide sediment storage. The upstream side of the sump shall have a slope of 5H:1V to inhibit erosion of the sediment storage area. The minimum depth of the sump shall be 2-feet.
8. Mark the sediment clean-out level of the sediment dike with a stake in the field.
9. Seed and mulch all disturbed areas.

ROCK SEDIMENT DIKE - INSPECTION AND MAINTENANCE

1. The key to a functional rock sediment dike is weekly inspection, routine maintenance and regular sediment removal.
2. Attention to sediment accumulations within the rock sediment dike is extremely important. Accumulated sediment deposition should be continually monitored in the trap and removed when necessary.
3. Remove accumulated sediment when it reaches 50% of the designed sediment storage volume as marked by the clean-out stake.
4. Removed sediment from the rock sediment dike shall be placed in stockpile storage areas or spread thinly across the disturbed area. Stabilize the removed sediment after it is relocated.
5. Regular inspections of rock sediment dikes should be conducted once every calendar week and, as recommended, within 24-hours after each rainfall event that produces ½-inch or more of precipitation.
6. All rock sediment dikes should be removed within 30 days after final stabilization is achieved. Dispose of all construction materials appropriately. Disturbed area resulting from removal shall be permanently stabilized.

South Carolina Department of Health and Environmental Control
ROCK SEDIMENT DIKE
STANDARD DRAWING NO. SC-12 PAGE 2 of 2
GENERAL NOTES
FEBRUARY 2014
DATE

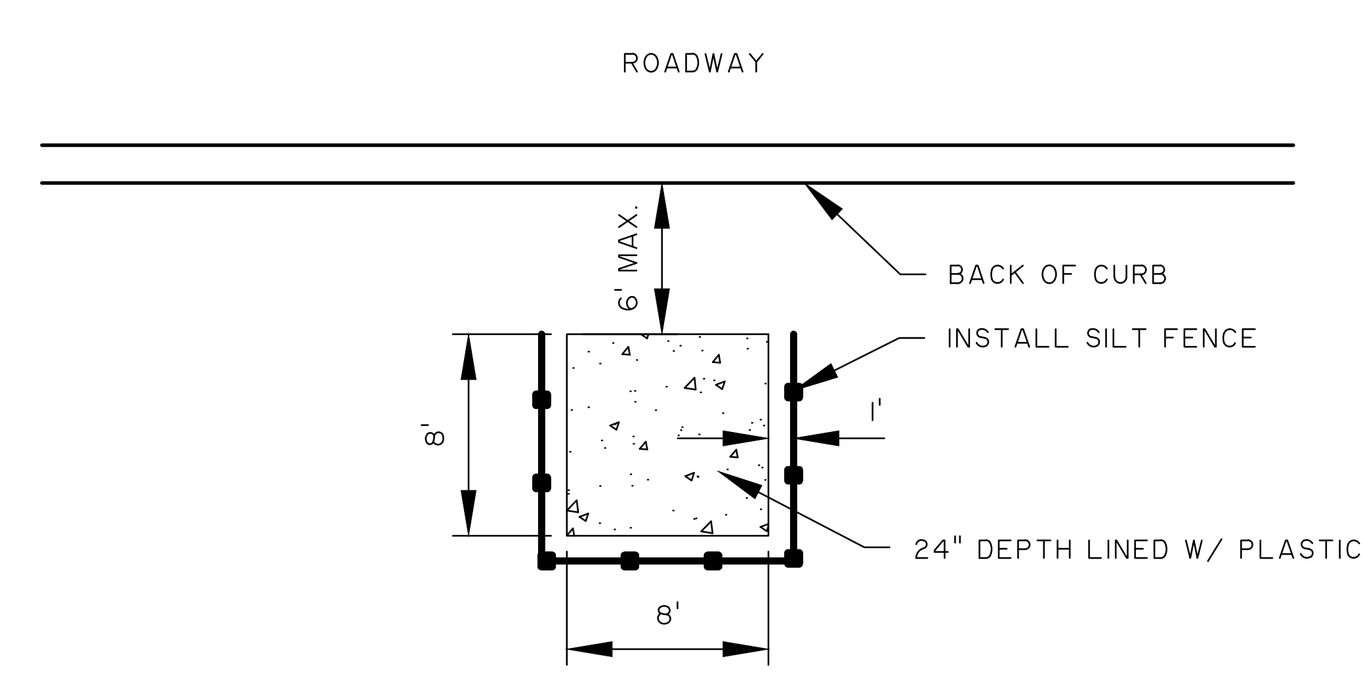

CONCRETE WASHOUT DETAIL

NOT TO SCALE

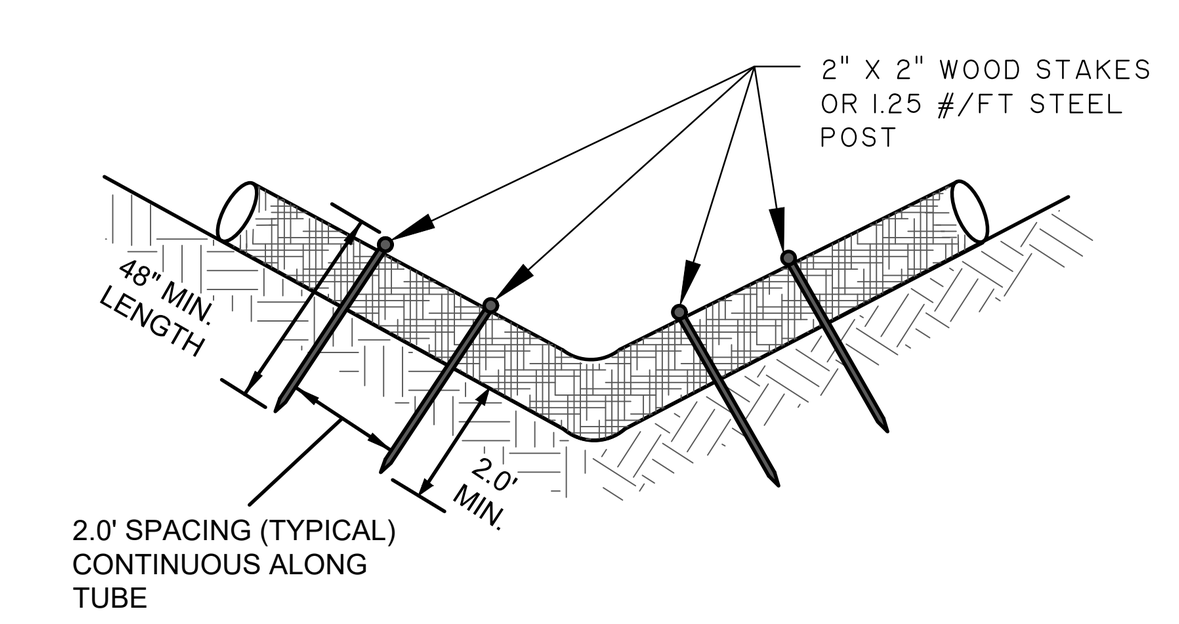

END VIEW OF DITCH

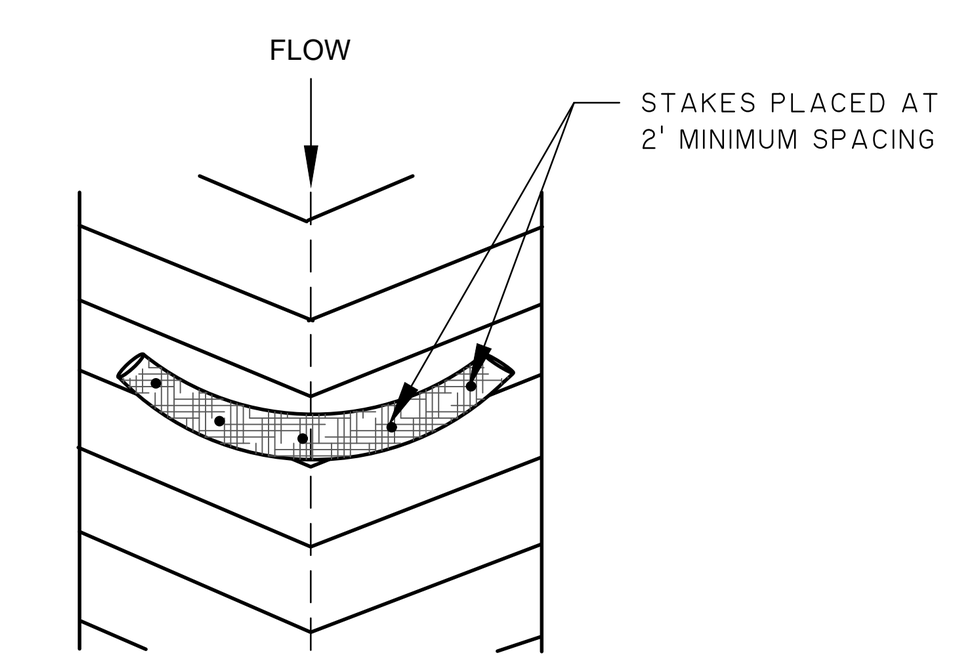

TOP VIEW OF DITCH

DESCRIPTION:
SEDIMENT TUBES ARE ELONGATED TUBES OF COMPACTED GEOTEXTILES, CURLED EXCELSIOR WOOD, NATURAL COCONUT FIBER OR HARDWOOD MULCH.
STRAW,
PINE NEEDLE AND LEAF MULCH-FILLED SEDIMENT TUBES ARE NOT PERMITTED UNDER THIS SPECIFICATION.

WHEN AND WHERE TO USE IT:
INSTALL SEDIMENT TUBES ALONG CONTOURS, IN DRAINAGE CONVEYANCE SWALES, AND AROUND INLETS TO HELP REDUCE THE EFFECTS OF SOIL EROSION BY ENERGY DISSIPATION AND RETAIN SEDIMENT.

MATERIALS:
SEDIMENT TUBES FOR DITCH CHECKS AND TYPE A INLET STRUCTURE FILTERS EXHIBIT THE FOLLOWING PROPERTIES:
PRODUCED BY A MANUFACTURER EXPERIENCED IN SEDIMENT TUBE MANUFACTURING.
COMPOSED OF COMPACTED GEOTEXTILES, CURLED EXCELSIOR WOOD, NATURAL COCONUT FIBERS, HARDWOOD MULCH OR A MIX OF THESE MATERIALS ENCLOSED BY A FLEXIBLE NETTING MATERIAL.
STRAW, STRAW FIBER, STRAW BALES, PINE NEEDLES AND LEAF MULCH ARE NOT ALLOWED UNDER THIS SPECIFICATION.
UTILIZES OUTER NETTING THAT CONSISTS OF SEAMLESS, HIGH-DENSITY POLYETHYLENE PHOTODEGRADABLE MATERIALS TREATED WITH ULTRAVIOLET STABILIZERS OR A SEAMLESS, HIGH-DENSITY POLYETHYLENE NON-DEGRADABLE MATERIALS. DIAMETER RANGING FROM 18-INCHES TO 24-INCHES.
CURLED EXCELSIOR WOOD, OR NATURAL COCONUT ROLLED EROSION CONTROL PRODUCTS (RECPS) THAT ARE ROLLED UP TO CREATE A SEDIMENT TUBE ARE NOT ALLOWED UNDER THIS SPECIFICATION.

INSTALLATION:
INSTALL OVER BARE SOIL, MULCHED AREAS OR EROSION CONTROL BLANKETS.
BE COMPOSED OF GEOTEXTILES, CURLED EXCELSIOR WOOD, NATURAL COCONUT FIBER OR HARDWOOD MULCH ENCLOSED BY A FLEXIBLE NETTING MATERIAL.
STRAW, STRAW FIBER, STRAW BALES, PINE NEEDLES AND LEAF MULCH ARE NOT ALLOWED.

THE MINIMUM DIAMETER SHOULD BE 18 INCHES.
SEDIMENT TUBES SHOULD BE STAKED USING WOODEN STAKES (2-INCH X 2-INCH) OR STEEL POSTS (STANDARD "U" OR "T" SECTIONS WITH A MINIMUM WEIGHT OF 1.25 POUNDS PER FOOT) A MINIMUM OF 48-INCHES IN LENGTH PLACED ON 2-FOOT CENTERS.

STAKES SHOULD BE INTERTWINED WITH THE OUTER MESH ON THE DOWNSTREAM SIDE AND DRIVEN IN THE GROUND TO A MINIMUM DEPTH OF 1.5 FEET LEAVING LESS THAN 1 FOOT OF STAKE EXPOSED ABOVE THE SEDIMENT TUBE. ALWAYS REFER TO THE MANUFACTURER'S RECOMMENDATIONS FOR THE STAKING DETAIL. INSTALL ALL SEDIMENT TUBES INSURING THAT NO GAPS EXIST BETWEEN THE SOIL AND THE BOTTOM OF THE SEDIMENT TUBE.
THE ENDS OF ADJACENT SEDIMENT TUBES SHOULD BE LAPPED 6-INCH TO PREVENT FLOW AND SEDIMENT FROM PASSING THROUGH THE FIELD JOINT.
IN NO SITUATIONS SHOULD SEDIMENT TUBES BE STACKED ON TOP OF ONE ANOTHER.

CONSTRUCT A TRENCH THAT IS 20% OF THE TUBE DIAMETER TO INSTALL THE TUBE IN.
AVOID DAMAGE TO SEDIMENT TUBES WHILE INSTALLING THEM. IF THE SEDIMENT TUBE BECOMES DAMAGED DURING INSTALLATION, A STAKE SHOULD BE PLACED ON BOTH SIDES OF THE DAMAGED AREA TERMINATING THE TUBE SEGMENT AND A NEW TUBE SEGMENT SHOULD BE INSTALLED.
SHOULD BE INSTALLED IN SWALES OR DRAINAGE DITCHES PERPENDICULAR TO THE FLOW OF WATER. SEDIMENT TUBES SHOULD CONTINUE UP THE SIDE SLOPES A MINIMUM OF 1 FOOT ABOVE THE DESIGN FLOW DEPTH. SEDIMENT TUBES SHOULD BE SPACED ACCORDING TO THE FOLLOWING TABLE.

SEDIMENT TUBE SPACING

SLOPE	MAXIMUM SEDIMENT TUBE SPACING
LESS THAN 2%	150-FEET
2%	100-FEET
3%	75-FEET
4%	50-FEET
5%	40-FEET
6%	30-FEET
GREATER THAN 6%	25-FEET

SEDIMENT TUBE LENGTH SELECTED SHOULD MINIMIZE THE NUMBER OF SEDIMENT TUBES NEEDED TO SPAN THE WIDTH OF THE DRAINAGE CONVEYANCE. IF THE DITCH CHECK LENGTH (PERPENDICULAR TO THE WATER FLOW) IS 15 FEET, THEN ONE 15 FOOT SEDIMENT TUBE IS PREFERRED COMPARED TO TWO OVERLAPPING 10 FOOT SEDIMENT TUBES.

SEDIMENT TUBES FOR DITCH CHECKS SHOULD REMAIN IN PLACE UNTIL FULLY ESTABLISHED VEGETATION AND ROOT SYSTEMS HAVE COMPLETELY DEVELOPED AND CAN SURVIVE ON THEIR OWN.

INSPECTION AND MAINTENANCE:
LARGE DEBRIS, TRASH, AND LEAVES SHOULD BE REMOVED.

IF EROSION CAUSES THE EDGES TO FALL TO A HEIGHT EQUAL TO OR BELOW THE HEIGHT OF THE CENTER, REPAIRS SHOULD BE MADE IMMEDIATELY.

REMOVE ACCUMULATED SEDIMENT FROM THE UPSTREAM SIDE OF THE SEDIMENT TUBE WHEN THE SEDIMENT HAS REACHED A HEIGHT OF APPROXIMATELY ONE-THIRD OF THE EXPOSED HEIGHT OF THE TUBE (MEASURED AT THE CENTER).

ACCUMULATED SEDIMENT SHOULD BE REMOVED PRIOR TO REMOVING SEDIMENT TUBES.

SEDIMENT TUBE REMOVAL SHOULD BE COMPLETED ONLY AFTER THE CONTRIBUTING DRAINAGE AREA HAS BEEN COMPLETELY STABILIZED. PERMANENT VEGETATION SHOULD REPLACE AREAS FROM WHICH GRAVEL, STONE, SEDIMENT TUBES, OR OTHER MATERIALS HAVE BEEN REMOVED.

SEDIMENT TUBES

NOT TO SCALE

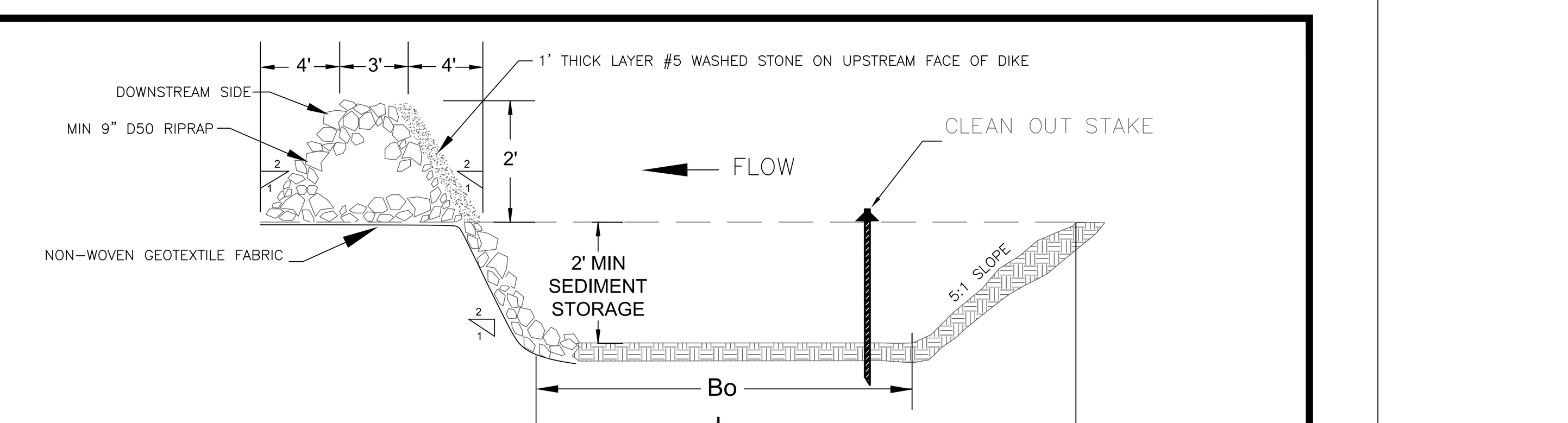

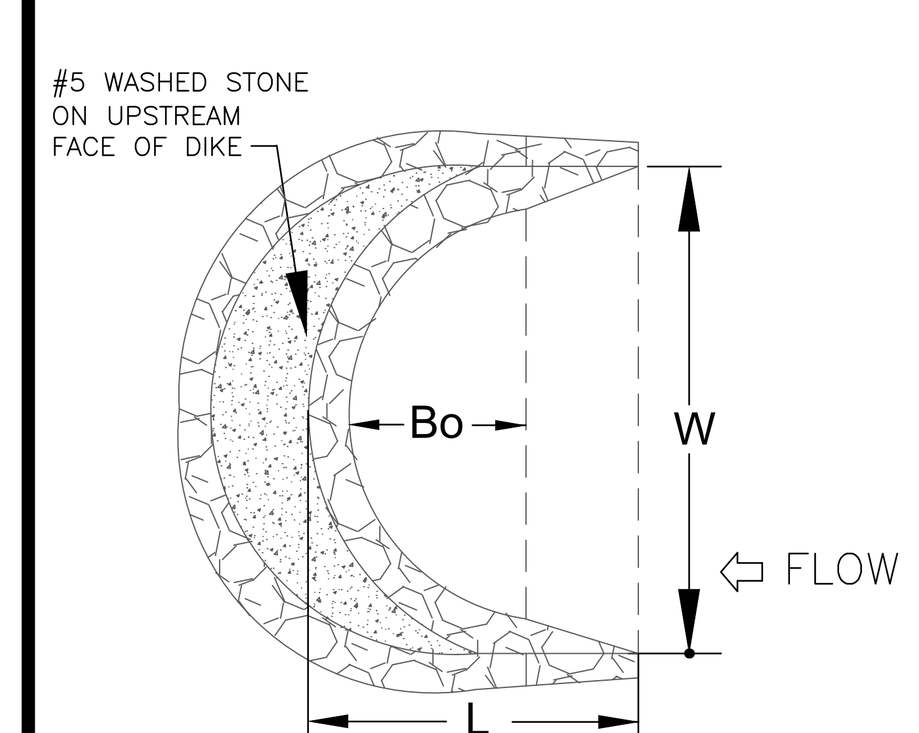

TYPICAL ROCK DIKE DIMENSIONS

W	L	Bo	MAX. DRAINAGE (ACRES)	TOTAL STORAGE VOL. (CU. FT.)	SEDIMENT STORAGE VOLUME (CU. FT.)
15'	17.5'	3.5'	0.5	1259	283
20'	20.0'	6.0'	1.0	1946	529
25'	22.5'	8.5'	1.5	2790	855
30'	25.0'	11.0'	2.0	3790	1257

MAXIMUM 2-ACRE DRAINAGE AREA TO DIKE

PLAN SYMBOL

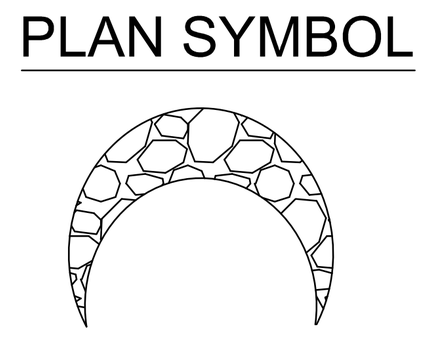

South Carolina Department of Health and Environmental Control
ROCK SEDIMENT DIKE
STANDARD DRAWING NO. SC-12 PAGE 1 of 2
NOT TO SCALE
FEBRUARY 2014
DATE

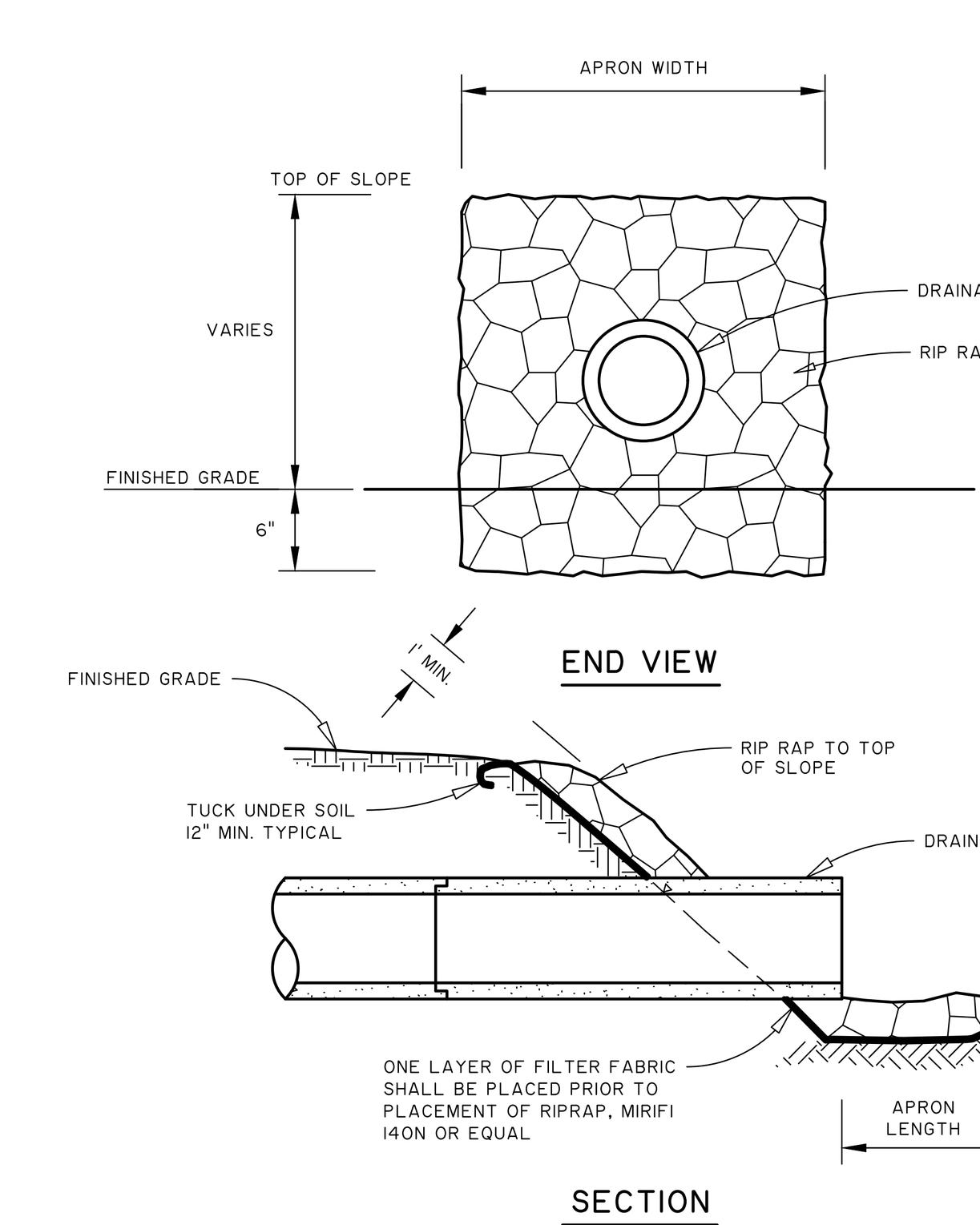

PIPE SIZE (INCHES)	APRON WIDTH (FEET)	APRON LENGTH (FEET)	QUANTITY (S.Y.)
15	6	18	12
18	6	18	12
24	8	22	20
30	10	28	31
36	12	32	43
42	14	36	68
48	16	44	78
54	18	52	104

RIP RAP DETAIL

NOT TO SCALE

TETRA TECH
www.tetratech.com
240 Continental Drive, Suite 200
Newark, DE 19713
Tel: 302.738.7551 Fax: 302.454.5989

BARNWELL SCHOOL DISTRICT
OWNER
770 HAGOOD AVE
BARNWELL, SC 29812
Tel: 803 541 1300

TETRA TECH
ARCHITECT
MECHANICAL ENGINEER
PLUMBING ENGINEER
ELECTRICAL ENGINEER

240 CONTINENTAL DR
NEWARK, DE 19713
302 738 7551

THOMAS & HUTTON
CIVIL ENGINEER
1501 MAIN ST.
COLUMBIA, SC 29201
Tel: 803 451 0200

ZZ CONSULTING
STRUCTURAL ENGINEER
640 S. STATE ST.
SHELLEY, ID 83274
Tel: 208 357 5404

MARK	DATE	DESCRIPTION	BY
01	07/18/24	REVISED CONSTRUCTION DOC. SUBMITTAL FOR OSF REVIEW & APPROVAL	T&H
03	09/11/24	ISSUED FOR BID	T&H
04	12/06/24	ISSUED FOR CONSTRUCTION CONFORMANCE SET	T&H

BARNWELL SCHOOL DISTRICT
BARNWELL COUNTY MULTI-USE SAFE ROOM
EROSION CONTROL - SWPPP DETAILS

Project No.:	28810.0000
Designed By:	MCL
Drawn By:	MCL
Checked By:	MGD

C-302

Z:\28810\28810.0000\Engineering\Drawings\Construction Plans\28810.0000 - EC DT.dwg - Mar 3, 2021 - 2:31:54 PM

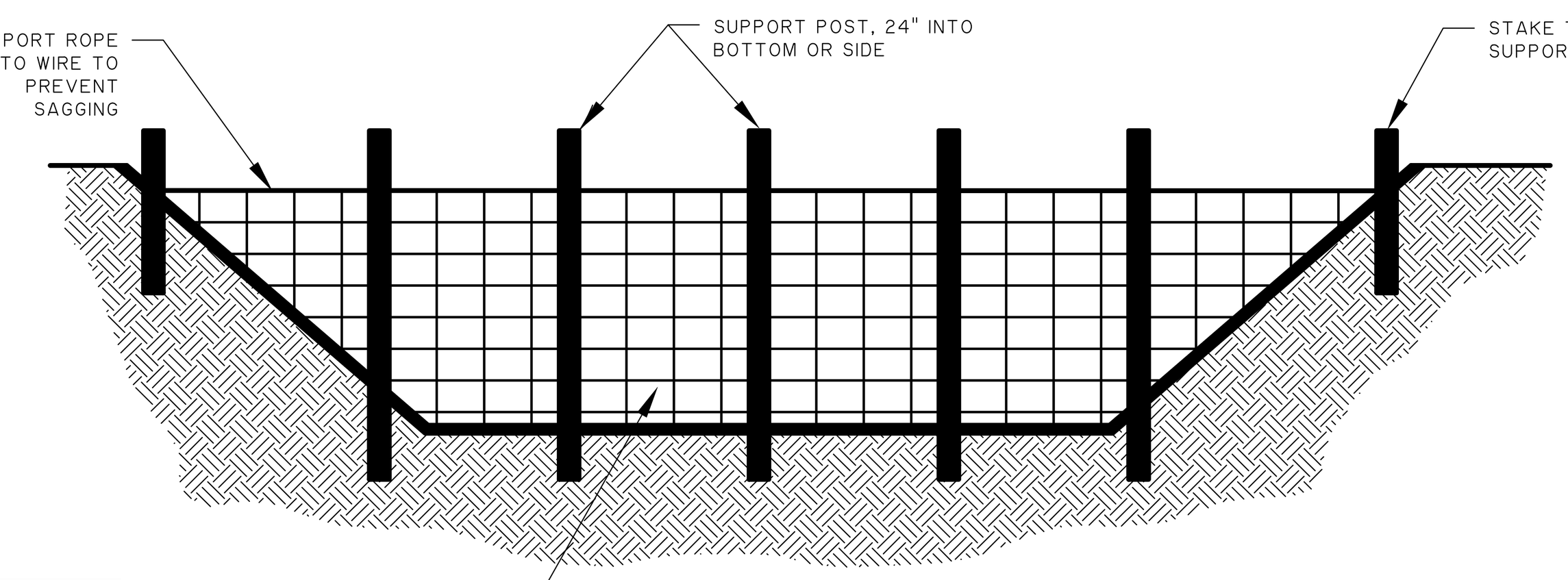

CONSTRUCTION SPECIFICATIONS:

1. INSTALL POSTS ACROSS THE WIDTH OF THE SEDIMENT TRAP.
2. STEEL POSTS SHOULD BE DRIVEN TO A DEPTH OF 24 INCHES, SPACED A MAXIMUM OF 4 FEET APART, AND INSTALLED UP THE SIDES OF THE BASIN AS WELL. THE TOP OF THE FABRIC SHOULD BE 6 INCHES HIGHER THAN THE INVERT OF THE SPILLWAY. TOPS OF BAFFLES SHOULD BE 2 INCHES LOWER THAN THE TOP OF THE BERMS.
3. INSTALL AT LEAST THREE ROWS OF BAFFLES BETWEEN THE INLET AND OUTLET DISCHARGE POINT.
4. WHEN USING POSTS, ADD A SUPPORT WIRE OR ROPE ACROSS THE TOP OF THE MEASURE TO PREVENT SAGGING.
5. WRAP POROUS MATERIAL, LIKE JUTE BACKED BY COIR MATERIAL, OVER THE TOP WIRE. THE FABRIC SHOULD HAVE FIVE TO TEN PERCENT OPENINGS IN THE WEAVE. ATTACH FABRIC TO A ROPE AND A SUPPORT STRUCTURE WITH ZIP TIES, WIRE, OR STAPLES.
6. THE BOTTOM SIDES OF THE FABRIC SHOULD BE ANCHORED IN A TRENCH OR PINNED WITH 8 INCH EROSION CONTROL MATTING STAPLES.
7. DO NOT SPLICE THE FABRIC, BUT USE A CONTINUOUS PIECE ACROSS THE BASIN.
8. AFTER THE CONTRIBUTING DRAINAGE AREA HAS BEEN PROPERLY STABILIZED, REMOVE ALL BAFFLE MATERIALS, AND UNSTABLE SEDIMENT DEPOSITS, BRING THE AREA TO GRADE, AND STABILIZE IT.

POROUS BAFFLE DETAIL

NOT TO SCALE

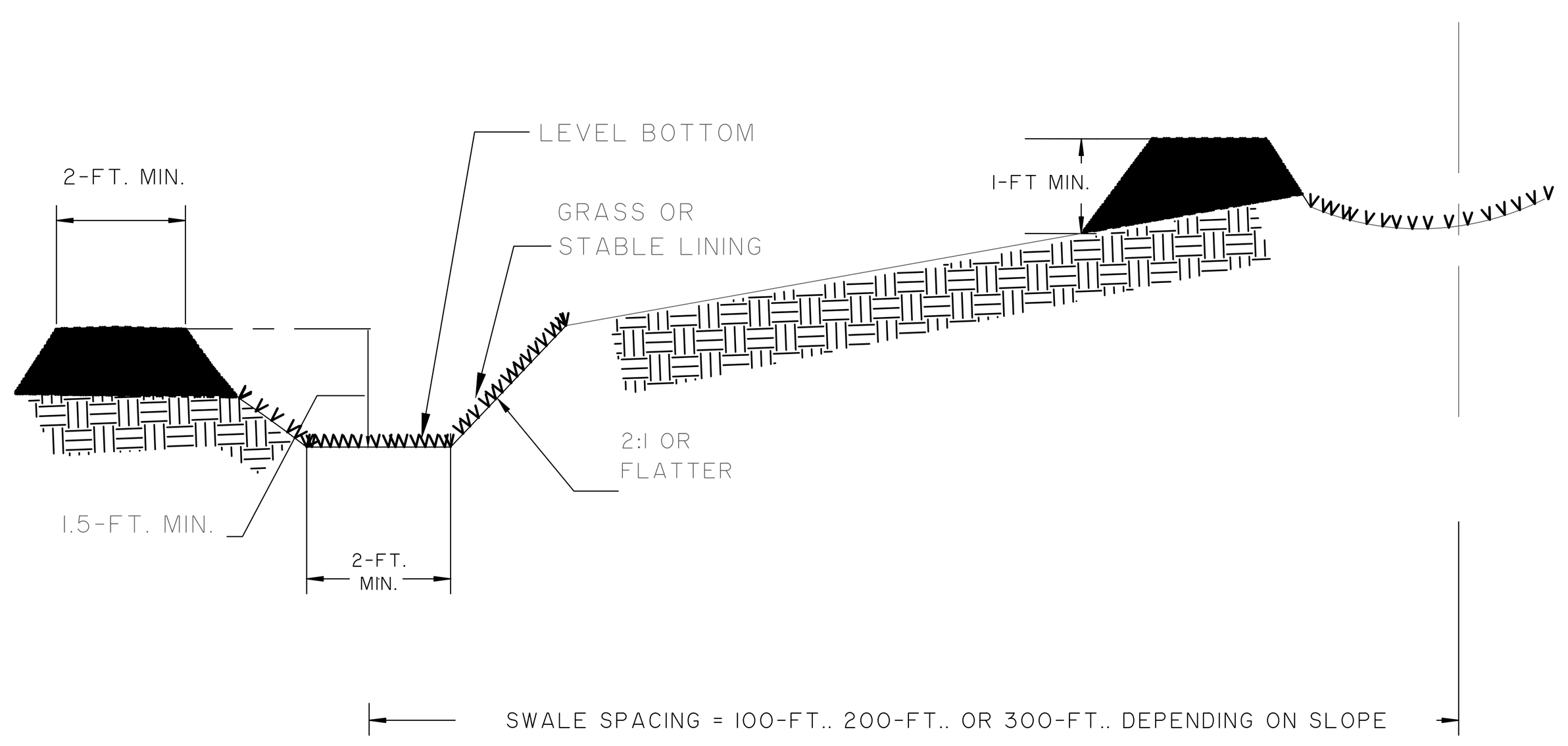

South Carolina Department of Health and Environmental Control

DIVERSION SWALE

STANDARD DRAWING NO. **RC-03 Page 1 of 2**

NOT TO SCALE JULY 31, 2005 DATE

DIVERSION SWALE

Installation

The bottom width should be a minimum of 2-feet, and the bottom should be level.

The depth should be a minimum of 1.5-feet and the side slopes should be 2H:1V or flatter.

The maximum grade shall be 5%, with positive drainage to a suitable outlet.

Slopes shall be stabilized immediately using vegetation, sod, and erosion control blankets or turf reinforcement mats to prevent erosion.

The upslope side of the swale should provide positive drainage so no erosion occurs at the outlet. Provide energy dissipation measures as necessary.

Sediment-laden runoff shall be directed to a sediment trapping facility.

Inspection and Maintenance:

Swales should be inspected, every seven (7) calendar days and within 24-hours after each rainfall event that produces ½-inches or more of precipitation and repairs made as necessary.

Damage caused by construction traffic or other activity must be repaired before the end of each working day.

South Carolina Department of Health and Environmental Control

DIVERSION SWALE

STANDARD DRAWING NO. **RC-03 PAGE 2 of 2**

GENERAL NOTES JULY 31, 2005 DATE

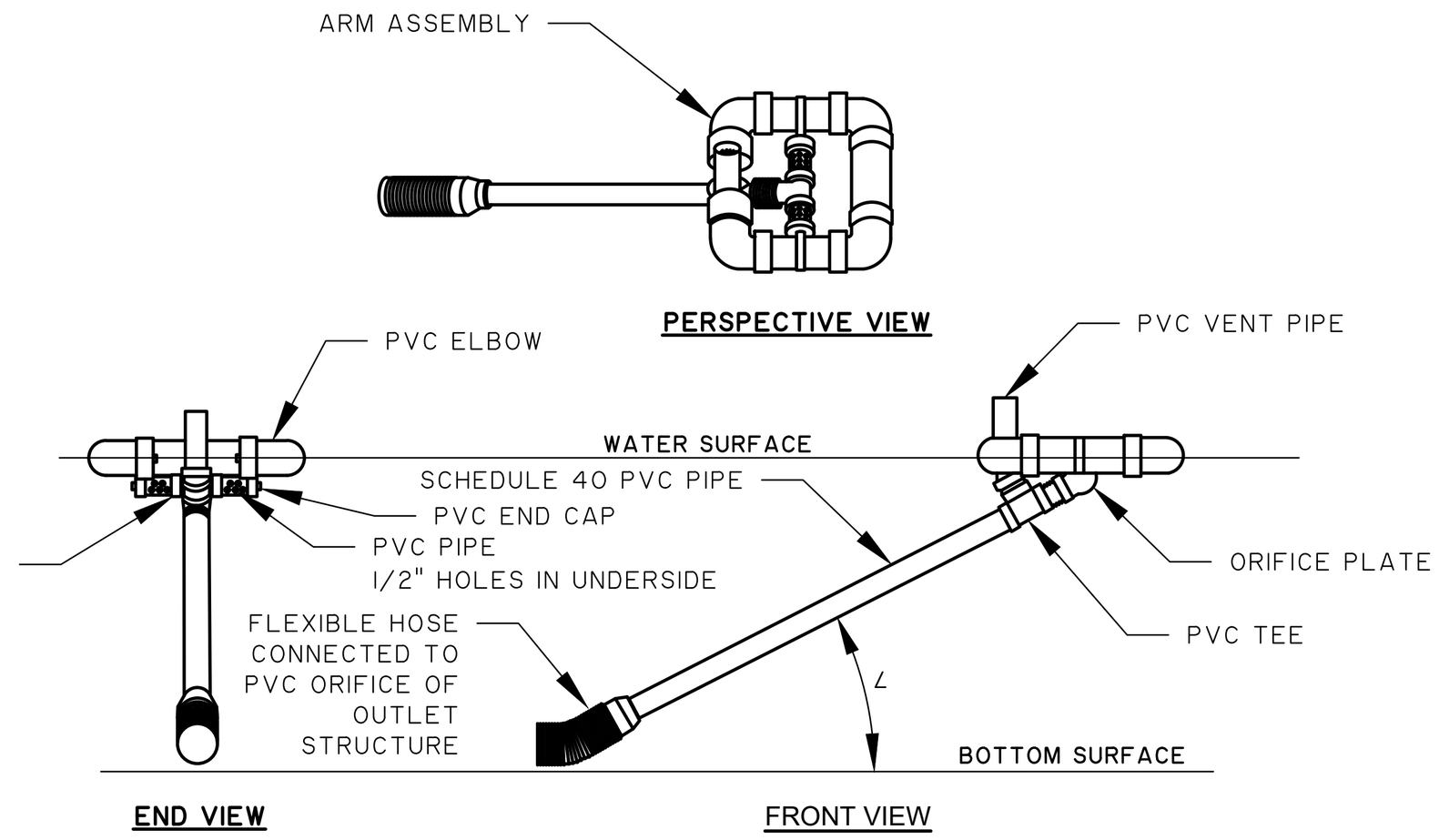

NOTES:
1. CONTRACTOR TO REMOVE SKIMMER UPON STABILIZATION OF THE CONTRIBUTING DRAINAGE AREA AND INSTALL PERMANENT PVC ORIFICE PER OUTLET STRUCTURE DETAILS.

DESIGN CRITERIA				
POND NUMBER	SKIMMER SIZE (IN)	ORIFICE RADIUS (IN)	ORIFICE DIA. (IN)	VOLUME (CF) *
A	6	2.75	5	126,593

*SKIMMER SIZE IS BASED ON THE VOLUME OF THE NEXT HIGHEST WEIR ELEVATION ABOVE NORMAL POOL WHICH IS GREATER THAN THE REQUIRED SEDIMENT BASIN VOLUME.

SKIMMER DETAIL

NOT TO SCALE

DRY SEDIMENT BASIN PLAN VIEW

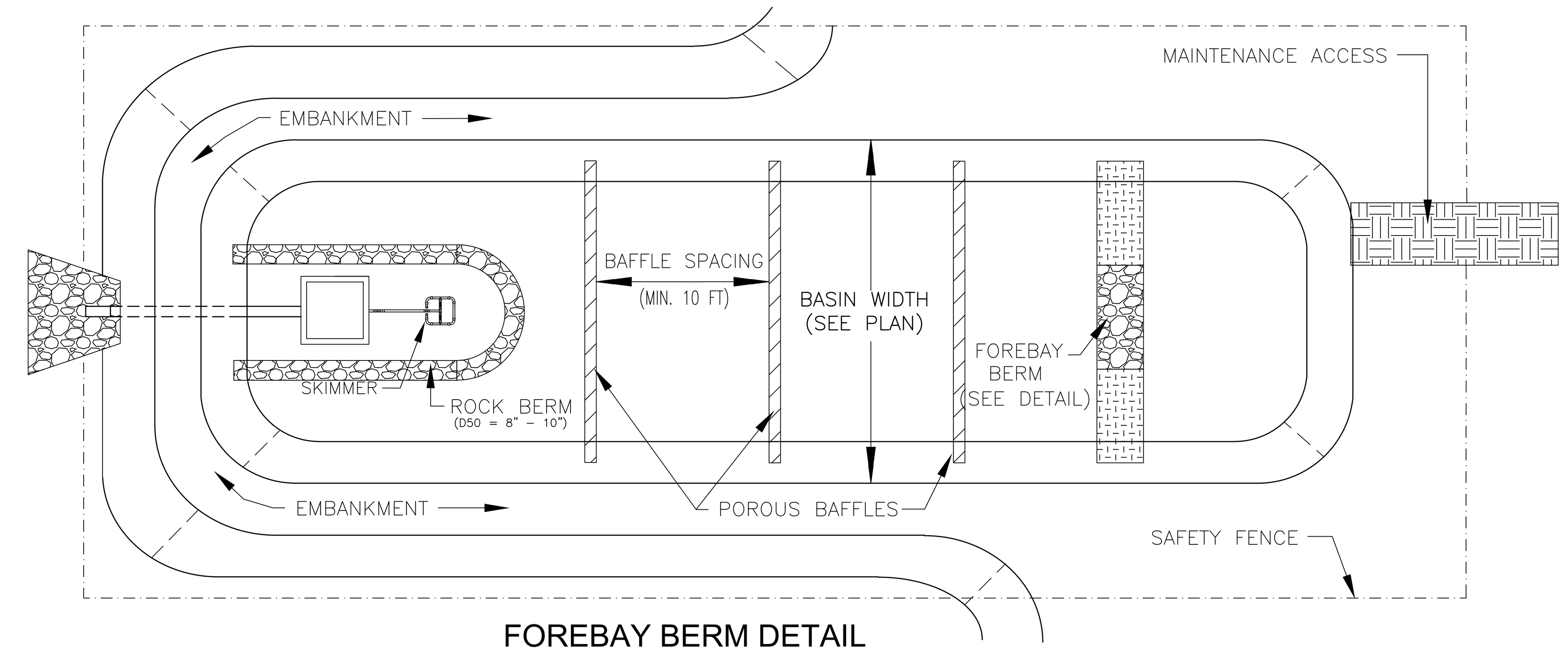

FOREBAY BERM DETAIL

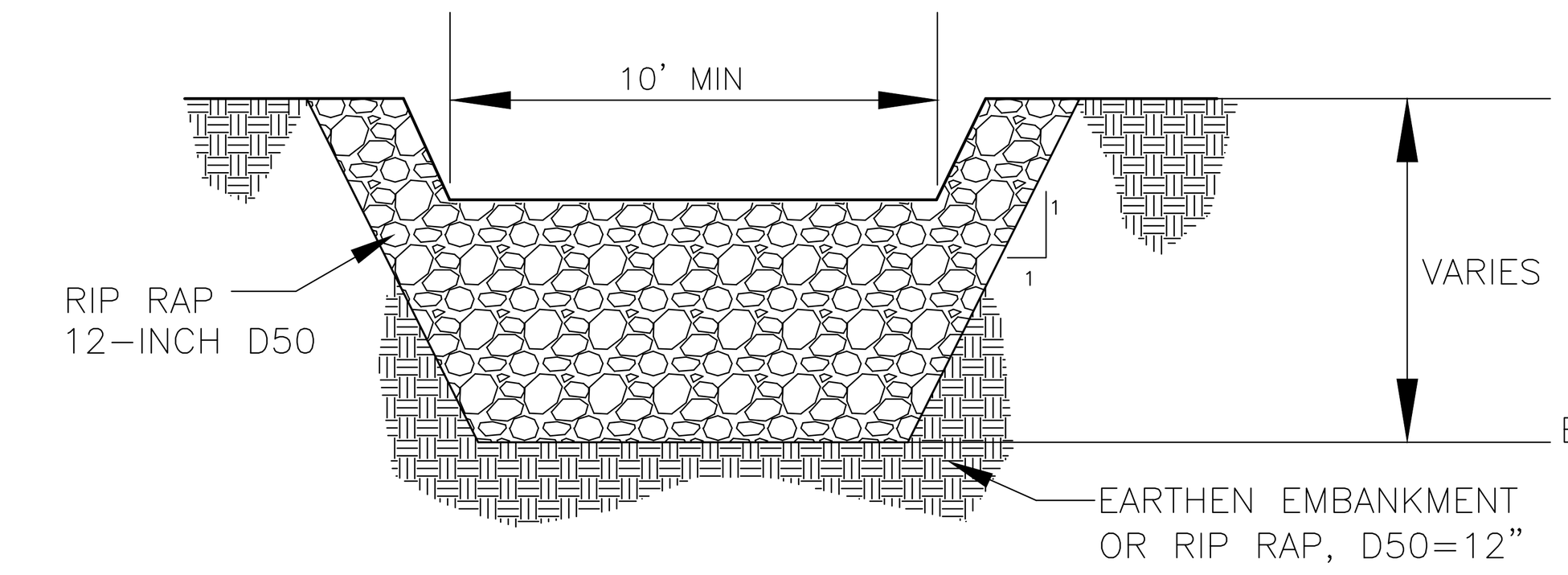

POND 1 (DRY) SECTIONAL VIEW

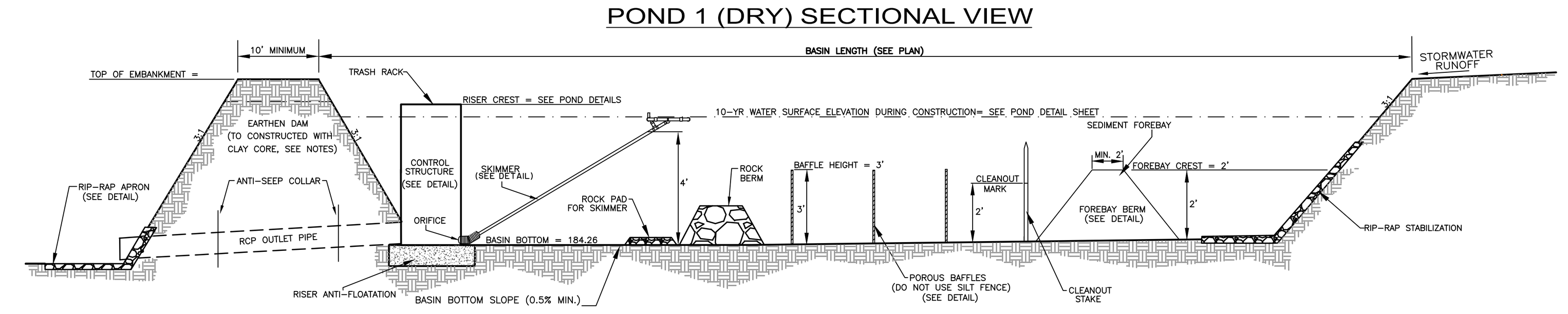

POND EMBANKMENT NOTES

1. THE GEOTECHNICAL ENGINEER WILL BE RESPONSIBLE FOR PROVIDING FINAL RECOMMENDATIONS FOR THE CONSTRUCTION OF THE EMBANKMENT INCLUDING FOUNDATION PREPARATION, SOIL SUITABILITY AND COMPACTION.
2. SOILS FOR FILL SHALL BE OF SUFFICIENT CLAY CONTENT AS TO REMAIN RELATIVELY IMPERVIOUS, BUT NOT OF SUCH HIGH CONTENT THAT SIGNIFICANT SWELLING AND SHRINKAGE OCCURS.
3. SOILS SHALL BE RELATIVELY FREE OF LIMESTONE AND HIGH SODIUM.
4. FOR THE FOUNDATION OF THE EMBANKMENT, REMOVE ALL ORGANICS AND TOPSOIL. IF THE FOUNDATION IS OVERLAIN WITH PERVIOUS SANDS OR GRAVELS, OR IN SOME CASES ROCK, INSTALL A CUTOFF TRENCH ALONG THE LENGTH OF THE CENTER OF THE EMBANKMENT AT LEAST 8' WIDE, OR THE WIDTH OF A BULLDOZER BLADE. THE CUTOFF TRENCH SHALL EXTEND AT LEAST 12" DOWN INTO THE UNDERLYING IMPERVIOUS MATERIAL, OR AS RECOMMENDED BY THE GEOTECHNICAL CONSULTANT. THE SIDE SLOPES SHALL BE NO STEEPER THAN 1.5:1. REPLACE MATERIAL IN THE TRENCH WITH SOIL AS RECOMMENDED BY THE GEOTECHNICAL CONSULTANT TO PREVENT SEEPAGE AND TO AN ELEVATION IN THE FILL OF THE EMBANKMENT AS RECOMMENDED BY THE GEOTECHNICAL CONSULTANT.
5. PLACE FILLS FOR THE EMBANKMENT IN A MINIMUM OF 8" LIFTS COMPACTED TO 98% OF THE MAXIMUM DRY DENSITY OR AS RECOMMENDED BY THE GEOTECHNICAL CONSULTANT.
6. INSTALL ANTI-SEEP COLLAR PER THE DETAIL A MINIMUM OF 24" INTO THE FILL FROM ANY PIPE THROUGH THE EMBANKMENT.

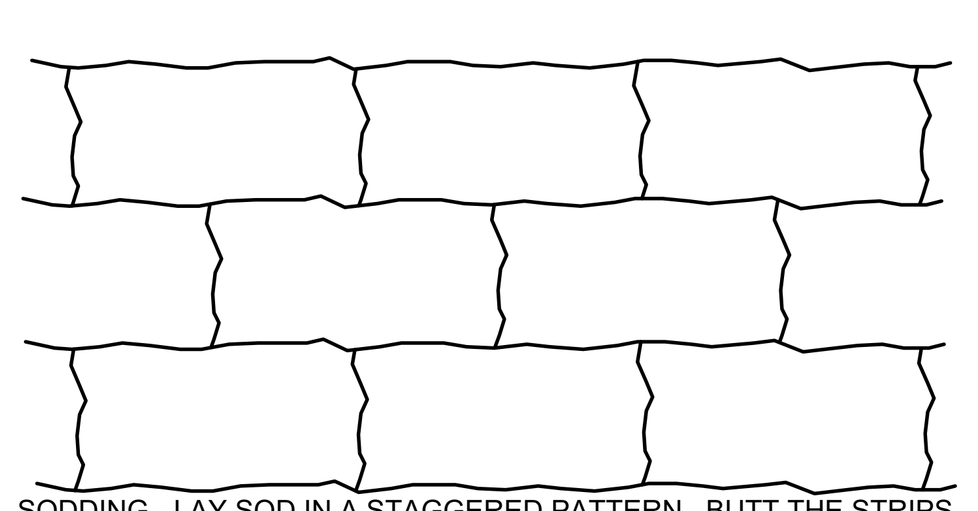

SODDING - LAY SOD IN A STAGGERED PATTERN. BUTT THE STRIPS TIGHTLY AGAINST EACH OTHER. DO NOT LEAVE SPACES AND DO NOT OVERLAP. A SHARPENED MASON'S TROWEL IS A HANDY TOOL FOR TUCKING DOWN THE ENDS AND TRIMMING PIECES.

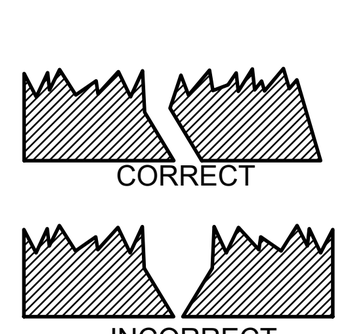

BUTTING - ANGLED ENDS CAUSED BY THE AUTOMATIC SOD CUTTER MUST BE MATCHED CORRECTLY

ROLL SOD IMMEDIATELY TO ACHIEVE FIRM CONTACT WITH THE SOIL. WATER TO A DEPTH OF 4" AS NEEDED. WATER WELL AS SOON AS THE SOD IS LAID. MOW WHEN THE SOD IS ESTABLISHED - IN 2 - 3 WEEKS. SET THE MOWER HIGH (2"-3").

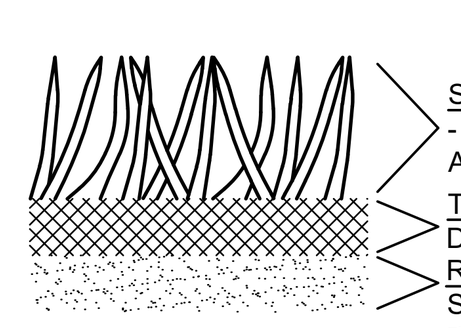

SHOOTS OR GRASS BLADES - GRASS SHOULD BE GREEN AND HEALTHY
THATCH - GRASS CLIPPINGS AND DEAD LEAVES, UP TO 1/2" THICK
ROOT ZONE - SOIL AND ROOTS SHOULD BE 1/2" TO 3/4" THICK, WITH DENSE ROOT MAT FOR STRENGTH

SPECIFICATIONS:
IF FEASIBLE, SOD SHOULD NOT BE LAID IN EXCESSIVELY WET OR DRY WEATHER.

DURING PERIODS OF HIGH TEMPERATURE, OR IF THE SOIL IS DRY, THE SOIL SHOULD BE LIGHTLY IRRIGATED IMMEDIATELY PRIOR TO LAYING THE SOD.

THE FIRST ROW OF SOD SHOULD BE LAID IN A STRAIGHT LINE WITH SUBSEQUENT ROWS PLACED PARALLEL TO AND BUTTING TIGHTLY AGAINST EACH OTHER. JOINTS SHOULD BE STAGGERED TO PROMOTE MORE UNIFORM GROWTH AND STRENGTH AND TO REDUCE THE CHANCE OF WASHOUTS UNDERNEATH THE SOD. CARE SHOULD BE EXERCISED TO INSURE THAT SOD IS NOT STRETCHED OR OVERLAPPED AND THAT ALL JOINTS ARE BUTTED TIGHT IN ORDER TO PREVENT VOIDS WHICH WOULD CAUSE DRYING OF THE ROOTS. SMALL GAPS OR VOIDS REMAINING AFTER THE SOIL IS LAID SHOULD BE FILLED WITH TOPSOIL.

PLACEMENT SHOULD BEGIN AT THE LOWER END OF SLOPES AND CHANNELS. ON SLOPES 3:1 OR GREATER, OR WHEREVER EROSION MAY BE A PROBLEM, SOD SHOULD BE SECURED BY PEGGING OR OTHER APPROVED METHODS. SOD SHOULD BE INSTALLED WITH THE LENGTH PERPENDICULAR TO THE SLOPE (ON THE CONTOUR).

AS SODDING IS COMPLETED, SOD SHOULD BE ROLLED OR TAMPED TO PROVIDE FIRM CONTACT BETWEEN ROOTS AND SOIL.

AFTER ROLLING, SOD SHOULD BE IRRIGATED TO A DEPTH SUFFICIENT THAT THE UNDERSIDE OF THE SOD PAD AND THE SOIL 4" BELOW THE SOD IS THOROUGHLY WET.

ESTABLISHMENT AND MAINTENANCE OF SOD:
DURING THE FIRST 3 - 4 WEEKS WATERING SHOULD BE PERFORMED AS OFTEN AS NECESSARY TO MAINTAIN MOIST SOIL TO A DEPTH OF AT LEAST 2 INCHES.

THE FIRST MOWING SHOULD NOT BE ATTEMPTED UNTIL THE SOD IS FIRMLY ROOTED, USUALLY 2 - 3 WEEK. THE MOWER SHOULD BE SET HIGH (2 -3 INCHES) FOR THE FIRST MOWING. NO MORE THAN 1/3 OF THE SHOOT (GRASS LEAF) SHOULD BE REMOVED IN ANY MOWING.

FERTILIZER SHOULD BE APPLIED, AS NECESSARY, TO OBTAIN AND MAINTAIN THE DESIRED GROWTH AND DENSITY. LIME SHOULD BE ADDED, AS NEEDED, TO MAINTAIN PROPER pH. SOIL SHOULD BE TESTED EVERY 1 - 2 YEARS TO DETERMINE FERTILIZER AND LIME REQUIREMENTS.

SO

SODDING

NOT TO SCALE

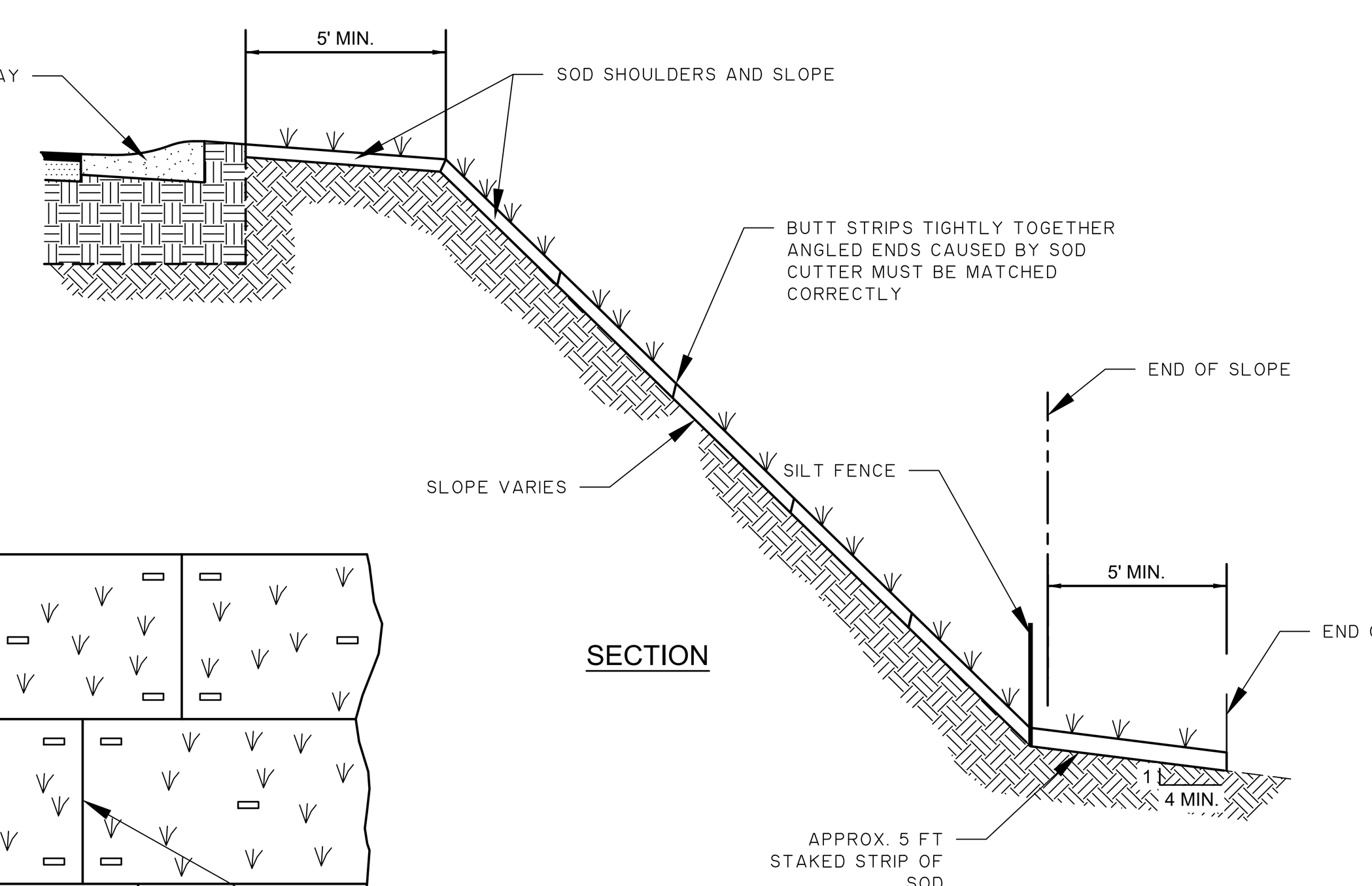

SECTION

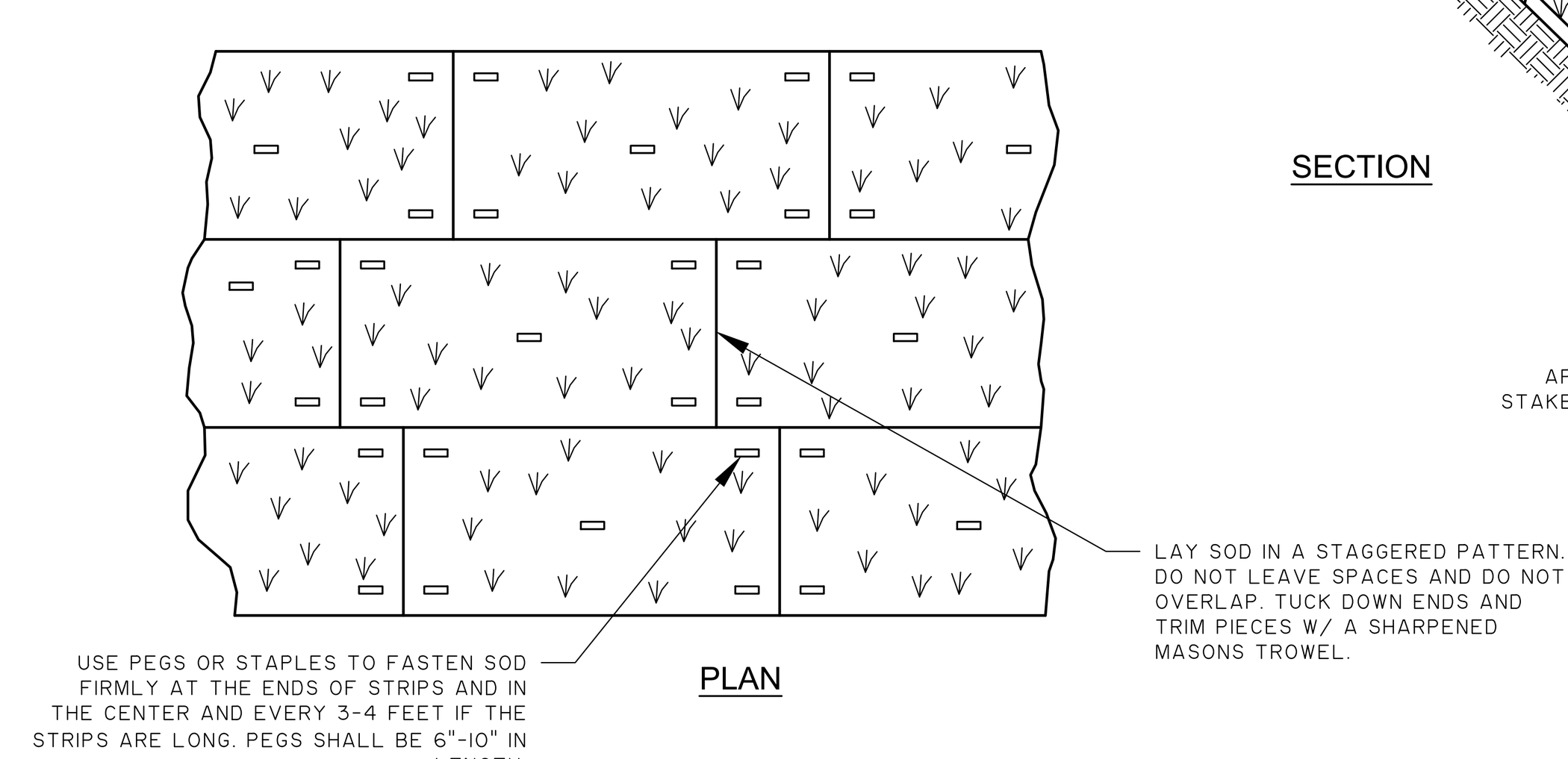

PLAN

INSTALLATION AND MAINTENANCE OF SOD SHALL BE IN ACCORDANCE WITH "EROSION AND SEDIMENT CONTROL PRACTICES FOR DEVELOPING AREAS" BY THE SOUTH CAROLINA RESOURCES CONSERVATION COMMISSION.

THE FIRST ROW OF SOD SHOULD BE LAID IN A STRAIGHT LINE WITH SUBSEQUENT ROWS PLACED PARALLEL TO AND BUTTING TIGHTLY AGAINST EACH OTHER. JOINTS SHOULD BE STAGGERED TO PROMOTE MORE UNIFORM GROWTH AND STRENGTH AND TO REDUCE THE CHANCE OF WASHOUTS UNDERNEATH THE SOD. CARE SHOULD BE EXERCISED TO INSURE THAT SOD IS NOT STRETCHED OR OVERLAPPED AND THAT ALL JOINTS ARE BUTTED TIGHT IN ORDER TO PREVENT VOIDS WHICH WOULD CAUSE DRYING OF THE ROOTS. SMALL GAPS OR VOIDS REMAINING AFTER THE SOIL IS LAID SHOULD BE FILLED WITH TOPSOIL.

PROVIDE STRONGLY ROOTED ST AUGUSTINE SOD, NOT LESS THAN 2 YEARS OLD AND FREE OF WEEDS AND UNDESIRABLE NATIVE GRASSES. PROVIDE ONLY SOD CERTIFIED BY THE CROP PEST COMMISSION CAPABLE OF GROWTH WHEN PLANTED (VIABLE NOT DORMANT), AND IN STRIPS OF NOT MORE THAN 18 INCHES WIDE AND 72 INCHES LONG.

SLOPED SODDING DETAIL

NOT TO SCALE

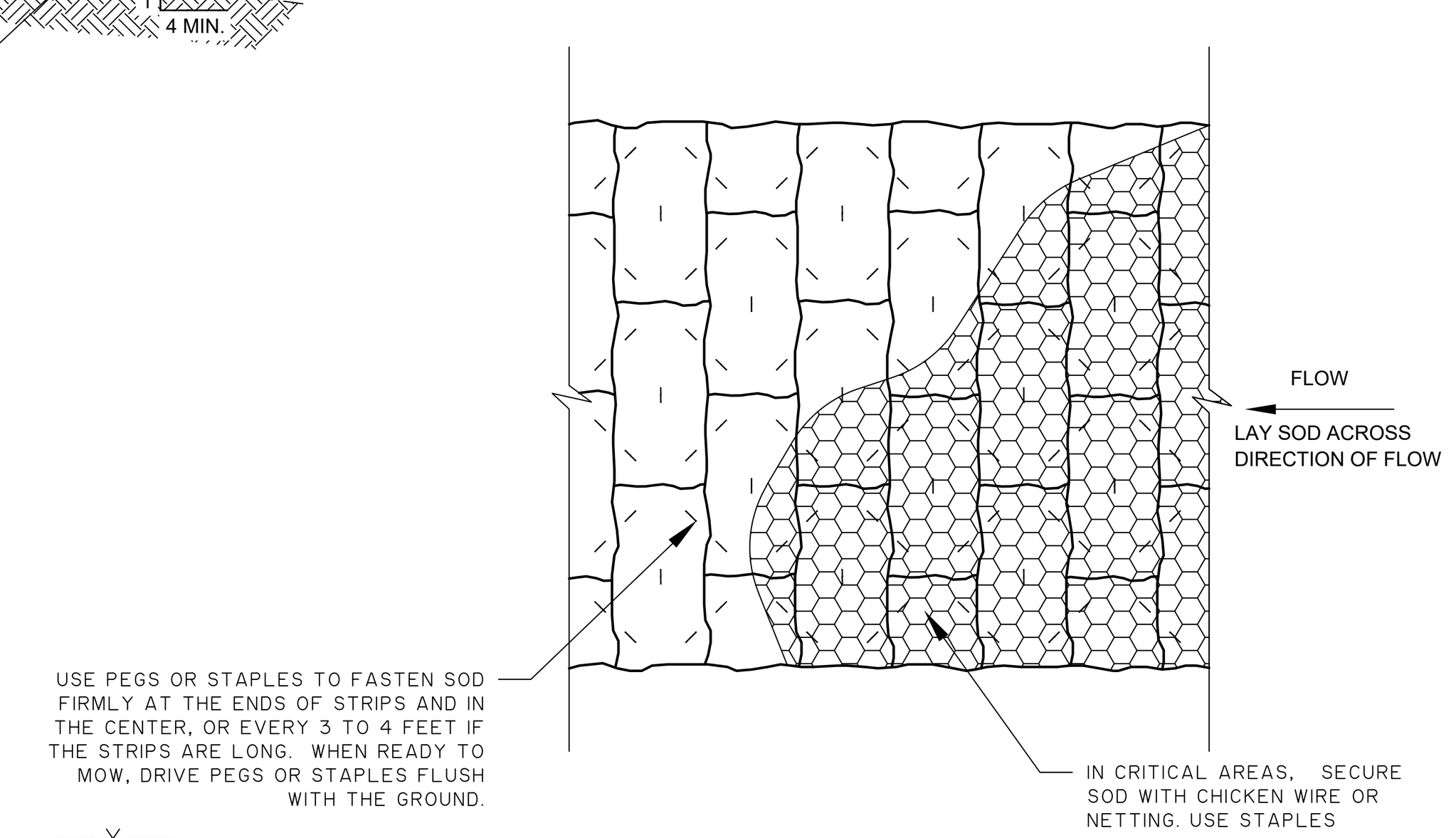

STAKED SOD INSTALLATION

NOT TO SCALE

TETRA TECH

www.tetratech.com
240 Continental Drive, Suite 200
Newark, DE 19713
Tel: 302.738.7551 Fax: 302.454.5989

SOUTH CAROLINA LICENSED PROFESSIONAL ENGINEER No. 34575 M. DeSOUZA 2024/12/06

BARNWELL SCHOOL DISTRICT
OWNER
770 HAGOOD AVE
BARNWELL, SC 29812
Tel: 803 541 1300

TETRA TECH
ARCHITECT
MECHANICAL ENGINEER
PLUMBING ENGINEER
ELECTRICAL ENGINEER

240 CONTINENTAL DR
NEWARK, DE 19713
302 738 7551

THOMAS & HUTTON
CIVIL ENGINEER
1501 MAIN ST.
COLUMBIA, SC 29201
Tel: 803 451 0200

ZZ CONSULTING
STRUCTURAL ENGINEER
640 S. STATE ST.
SHELLEY, ID 83274
Tel: 208 357 5404

MARK	DATE	DESCRIPTION	BY
01	07/18/24	REVISED CONSTRUCTION DOC. SUBMITTAL FOR OSF REVIEW & APPROVAL	T&H
02	08/26/24	REVISED EROSION CONTROL DETAILS	T&H
03	09/11/24	ISSUED FOR BID	T&H
04	12/06/24	ISSUED FOR CONSTRUCTION CONFORMANCE SET	T&H

BARNWELL SCHOOL DISTRICT

BARNWELL COUNTY MULTI-USE SAFE ROOM

EROSION CONTROL - SWPPP DETAILS

Project No.:	28810.0000
Designed By:	MCL
Drawn By:	MCL
Checked By:	MGD

C-303

Z:\28810\28810.0000\Engineering\Drawings\Construction Plans\28810.0000 - EC DT.dwg - Mar 3, 2021 - 2:31:54 PM

NOTE:
CONTRACTOR SHALL BE RESPONSIBLE FOR REDUCING AND CONTAINING SEDIMENT FROM ACCUMULATING ON OWENS STREET.
CONTINOUS STREET SWEEPING AND MONITORING WILL BE NECESSARY

TEMPORARY CONSTRUCTION ENTRANCE
CULVERT MAY BE NECESSARY TO ENSURE POSITIVE DRAINAGE

OWENS ST (S-353) 30' ROW

HWY 278 (US 278) 80' ROW

LIMITS OF DISTURBANCE

SILT FENCE

TEMPORARY SILT FENCE

TEMPORARY DIVERSION DITCH

ADJUST TEMPORARY DIVERSION DITCHES AS NECESSARY DURING DEMOLITION TO ENSURE POSITIVE DRAINAGE

CONCRETE WASHOUT

INSTALL HORSESHOE SEDIMENT DIKE

GRATE INLET (1.5x1.5)
FR: 189.87
IE: 187.92 (BEND)

GRATE INLET (1.5x1.5)
FR: 189.36
IE: 187.41 (BEND)

GRATE INLET (ROUND)
FR: 189.33
IE: 185.56 (BEND)

GRATE INLET (2x2)
FR: 191.89
IE: 190.76 (SW/NE)
IE: 189.66 (BOX)

GRATE INLET (1x1)
FR: NO TOP
IE: 188.47 (BOX)

GRATE INLET (2x2)
FR: 198.96
IE: 194.80 (BOX)

JUNCTION BOX
FR: 187.00
IE: 185.17 (SE)
IE: 184.26 (SW)

JUNCTION BOX
FR: 186.95
IE: INACCESS

24" RCP
IE: 187.11

24" RCP
IE: 182.42

SSMH
FR: 199.93
IE: 198.17

SSMH
FR: 200.10
IE: 196.70

SSMH
FR: 198.96
IE: 190.66

SSMH
FR: 186.54
IE: 180.99

SSMH
FR: 187.51
IE: 182.37

CURB INLET
FR: 193.40
IE: 190.09 (SW)
IE: 189.99 (BOX)

CURB INLET
FR: 192.06
IE: 188.57 (NW)
IE: 188.45 (NE)
IE: 188.02 (BOX)

CURB INLET
FR: 191.57
IE: 187.66 (SE)
IE: 187.56 (NW)
IE: 187.51 (BOX)

T&H CONTROL POINT
3" OPEN TOP PIPE SET
WITH PLASTIC CAP
STAMPED "T&H CONTROL"
N: 507,938.499
E: 1,689,678.223
ELEV.: 190.45 (NAVD88)

EXISTING FOOTBALL FIELD
EXISTING BLEACHERS
EXISTING BUILDING
ASPHALT TRACK
CONCRETE PAD
CONCRETE STAIRS
IRRIGATION METER
GOAL POST
BARNWELL SCHOOL DISTRICT 45
TMS#: 073-11-03-001

GRAPHIC SCALE
30 0 15 30 60 120
(IN FEET)
1 inch = 30 ft.

TETRA TECH
www.tetratech.com
240 Continental Drive, Suite 200
Newark, DE 19713
Tel: 302.738.7551 Fax: 302.454.5989

SOUTH CAROLINA LICENSED PROFESSIONAL ENGINEER
No. 33570
Matthew C. DeStefano

BARNWELL SCHOOL DISTRICT
OWNER
770 HAGOOD AVE
BARNWELL, SC 29812
Tel: 803 541 1300

TETRA TECH
ARCHITECT
MECHANICAL ENGINEER
PLUMBING ENGINEER
ELECTRICAL ENGINEER
240 CONTINENTAL DR
NEWARK, DE 19713
302 738 7551

THOMAS & HUTTON
CIVIL ENGINEER
1501 MAIN ST.
COLUMBIA, SC 29201
Tel: 803 451 0200

ZZ CONSULTING
STRUCTURAL ENGINEER
640 S. STATE ST.
SHELLEY, ID 83274
Tel: 208 357 5404

MARK	DATE	DESCRIPTION	BY
01	07/18/24	REVISED CONSTRUCTION DOC. SUBMITTAL FOR DSP REVIEW & APPROVAL	T&H
02	09/11/24	ADDED CAP #3	T&H
03	12/06/24	ADDED EVAC CONSTRUCTION CONFORMANCE SET	T&H

BARNWELL SCHOOL DISTRICT
BARNWELL COUNTY MULTI-USE SAFE ROOM

EROSION CONTROL PLAN - INITIAL

Project No.:	28810.0000
Designed By:	MCL
Drawn By:	MCL
Checked By:	MGD

C-400

Copyright Tetra Tech

8810\V28810.0000\Engineering\Drawings\Construction Plans\DD Plans\28810.0000 - SP.dwg - Jan 26, 2021 - 10:50:05 AM

NOTE:
CONTRACTOR SHALL BE RESPONSIBLE FOR REDUCING AND CONTAINING SEDIMENT FROM ACCUMULATING ON OWENS STREET.
CONTINOUS STREET SWEEPING AND MONITORING WILL BE NECESSARY

TEMPORARY SILT FENCE
LIMITS OF DISTURBANCE
TEMPORARY SEDIMENT TUBE (TYP.)
JB #PEDESTAL INLET B-1
TEMPORARY CONSTRUCTION ENTRANCE
CONCRETE WASHOUT
FES #B-O
12 SY OF RIPRAP
TEMPORARY BAFFLES
FES #C-1
12 SY OF RIPRAP
TEMPORARY BAFFLES
FOREBAY BERMS (TYP.)
SEDIMENT DIKE (TYP.)
CS #C-O
TYPE 9 CB #PEDESTAL INLET A-12A
TEMPORARY INLET PROTECTION TYPE "A" (TYP.)
GI #A-11A
YI #A-12B
YI #C-3
YI #C-2
8" CO #A-11C
8" CO #A-12C
12" X 8" WYE #A-11B
GI #A-1
TYPE 9 CB #A-4
GI #A-3
TEMPORARY SEEDING (TYP.)
GI #A-2
FES #A-O
24 SY OF RIPRAP
24 SY OF RIPRAP
DRY DETENTION BASIN
WITH A 6" SKIMMER
TOP OF POND 188.2'
BOTTOM OF POND 184.26'
2 YEAR PEAK STAGE: 186.71'
10 YEAR PEAK STAGE: 187.28'
100 YEAR PEAK STAGE: 188.06'
T&H CONTROL POINT
3" OPEN TOP PIPE SET
WITH PLASTIC CAP
STAMPED "T&H CONTROL"
N: 507,938.499
E: 1,889,678.223
ELEV.: 190.45 (NAVD88)
OWENS ST (S-353) 24' ROW
HWY 278 (US 278) 80' ROW
EXISTING FOOTBALL FIELD
EXISTING BLEACHERS
EXISTING BUILDING
CONCRETE STAIRS
SILT FENCE
BARNWELL SCHOOL DISTRICT 45
TMS#: 073-11-03-001
SSMH FR: 199.93 IE: 198.17
SSMH FR: 200.10 IE: 196.70
SSMH FR: 198.96 IE: 190.66
SSMH FR: 186.54 IE: 180.39
SSMH FR: 187.51 IE: 182.37
10" PEAR
(7") PEAR S=4.6%

GRAPHIC SCALE
30 0 15 30 60 120
(IN FEET)
1 inch = 30 ft.

TETRA TECH
www.tetratech.com
240 Continental Drive, Suite 200
Newark, DE 19713
Tel: 302.738.7551 Fax: 302.454.5989

SOUTH CAROLINA LICENSED PROFESSIONAL ENGINEER
No. 33570
Matthew DeSisto

BARNWELL SCHOOL DISTRICT
OWNER
770 HAGOOD AVE
BARNWELL, SC 29812
Tel: 803 541 1300

TETRA TECH
ARCHITECT
MECHANICAL ENGINEER
PLUMBING ENGINEER
ELECTRICAL ENGINEER
240 CONTINENTAL DR
NEWARK, DE 19713
302 738 7551

THOMAS & HUTTON
CIVIL ENGINEER
1501 MAIN ST.
COLUMBIA, SC 29201
Tel: 803 451 0200

ZZ CONSULTING
STRUCTURAL ENGINEER
640 S. STATE ST.
SHELLEY, ID 83274
Tel: 208 357 5404

MARK	DATE	DESCRIPTION	BY
01	07/15/24	REVISED CONSTRUCTION DOC. SUBMITTAL FOR DEP REVIEW & APPROVAL	T&H
02	08/05/24	REVISED PER COMMENTS FROM DEP REVIEW	T&H
03	08/26/24	ADDED EC NOTE	T&H
04	12/06/24	ISSUED FOR CONSTRUCTION DOCUMENTS SET	T&H

BARNWELL SCHOOL DISTRICT
BARNWELL COUNTY MULTI-USE SAFE ROOM
EROSION CONTROL PLAN - CONSTRUCTION

Project No.: 28810.0000
Designed By: MCL
Drawn By: MCL
Checked By: MGD

C-500

Copyright Tetra Tech

NOTE:
CONTRACTOR SHALL BE RESPONSIBLE FOR REDUCING AND CONTAINING SEDIMENT FROM ACCUMULATING ON OWENS STREET. CONTINOUS STREET SWEEPING AND MONITORING WILL BE NECESSARY

TEMPORARY SILT FENCE
SILT FENCE
LIMITS OF DISTURBANCE
TEMPORARY SEDIMENT TUBE (TYP.)
PROPOSED BUILDING
AREA: +/- 29,200 SF
FFE: 193.5
TEMPORARY CONSTRUCTION ENTRANCE
CONCRETE WASHOUT
CONCRETE STAIRS
EXISTING FOOTBALL FIELD
EXISTING BLEACHERS
EXISTING BUILDING
BARNWELL SCHOOL DISTRICT 45
TMS#: 073-11-03-001
OWENS ST (S-353) 30' ROW
HWY 278 (US 278) 80' ROW
TYPE 9 CB #PEDESTAL INLET A-1.2A
GI #A-1.1A
TYPE 9 CB #A-4
GI #A-3
YI #A-1.2B
JB #PEDESTAL INLET B-1
YI #C-2
YI #C-3
8" CO #A-1.1C
12" X 8" WYE #A-1.1B
8" CO #A-1.2C
GI #A-1
GI #A-2
TEMPORARY INLET PROTECTION TYPE "A" (TYP.)
TEMPORARY SEEDING
PERMANENT SEEDING
FES #C-1
FES #B-0
FES #A-0
12 SY OF RIPRAP
24 SY OF RIPRAP
FOREBAY BERM (TYP.)
SEDIMENT DIKE (TYP.)
TEMPORARY BAFFLES
CS #C-0
DRY DETENTION BASIN
WITH A 6" SKIMMER
TOP OF POND 188.2'
BOTTOM OF POND 184.26'
2 YEAR PEAK STAGE: 186.71'
10 YEAR PEAK STAGE: 187.28'
100 YEAR PEAK STAGE: 188.06'
SSMH FR: 199.93 IE: 198.17
SSMH FR: 200.10 IE: 196.70
SSMH FR: 198.96 IE: 190.66
SSMH FR: 186.54 IE: 180.99
SSMH FR: 187.51 IE: 182.37
T3
PS
TS
T&H CONTROL POINT
3" OPEN TOP PIPE SET
WITH PLASTIC CAP
STAMPED "T&H CONTROL"
N: 507,938.499
E: 1,889,678.223
ELEV.: 190.45 (NAVD88)

GRAPHIC SCALE
30 0 15 30 60 120
(IN FEET)
1 inch = 30 ft.

TETRA TECH
www.tetratech.com
240 Continental Drive, Suite 200
Newark, DE 19713
Tel: 302.738.7551 Fax: 302.454.5989

SOUTH CAROLINA PROFESSIONAL ENGINEER
No. 33570
11/20/2024
MICHAEL G. DESOUZA

BARNWELL SCHOOL DISTRICT
OWNER
770 HAGOOD AVE
BARNWELL, SC 29812
Tel: 803 541 1300

TETRA TECH
ARCHITECT
MECHANICAL ENGINEER
PLUMBING ENGINEER
ELECTRICAL ENGINEER
240 CONTINENTAL DR
NEWARK, DE 19713
302 738 7551

THOMAS & HUTTON
CIVIL ENGINEER
1501 MAIN ST.
COLUMBIA, SC 29201
Tel: 803 451 0200

ZZ CONSULTING
STRUCTURAL ENGINEER
640 S. STATE ST.
SHELLEY, ID 83274
Tel: 208 357 5404

MARK	DATE	DESCRIPTION	BY
01	07/18/24	REVISED CONSTRUCTION DOC. SUBMITTAL FOR CDP REVIEW & APPROVAL	T&H
02	08/09/24	REVISED EROSION CONTROL MEASURES	T&H
03	09/06/24	REVISED PER COMMENTS	T&H
04	11/20/24	ISSUED FOR CONSTRUCTION COORDINANCE SET	T&H

BARNWELL SCHOOL DISTRICT
BARNWELL COUNTY MULTI-USE SAFE ROOM
EROSION CONTROL PLAN - STABILIZATION

Project No.: 28810.0000
Designed By: MCL
Drawn By: MCL
Checked By: MGD

C-600

Copyright Tetra Tech

EXISTING FOOTBALL FIELD

EXISTING BLEACHERS

EXISTING BUILDING

CONCRETE STAIRS

SITE FENCE

PROPOSED GAS LINE CONNECTION
COORDINATE WITH PROVIDER FOR
METER AND INSTALLATION

BARNWELL SCHOOL DISTRICT 45
TMS#: 073-11-03-001

FH ASSEMBLY

4" CO #A-6

4" CO #A-7

4" CO #A-8

4" CO #A-9

4" PVC - SDR 26

4" PVC - SDR 26

4" PVC - SDR 26

4" PVC - SDR 26

6" PVC - SDR 26

6" CO #A-5

PROPOSED GAS LINE CONNECTION
(SEE MEP PLAN FOR CONNECTION)

ABOVE GROUND
FIRE/WATER TANK
REFER TO FIRE
PROTECTION/MEP
PLANS FOR DETAILING

PROPOSED BUILDING
AREA: +/- 29,200 SF
FFE: 193.5

CONNECTION TO
ABOVEGROUND FIRE TANK
REFER TO FIRE PROTECTION
DRAWINGS FOR CONTINUATION

3" DOMESTIC WATER SERVICE
(SEE MEP PLANS FOR CONNECTION)

FIRE DEPARTMENT CONNECTION
(SEE MEP PLAN FOR CONNECTION)

4" CO #A-3.1

4" CO #A-2.2

MH #A-3

6" PVC - SDR 26

OWENS ST (S-53) 30' ROW

4" CO #A-2.1

6" X 4" WYE #A-2

3" 45° BEND

FH ASSEMBLY

3" 45° BEND

6" 45° BEND

3" 22.5° BEND

6" 22.5° BEND

3.00' RPZ
TO BE LOCATED WITHIN ABOVE
GROUND HOTBOX (C2.7)

6.00' RPZ
TO BE LOCATED WITHIN
ABOVE GROUND HOTBOX (C2.7)

3" WM - TO BE FURNISHED
AND INSTALLED BY THE CITY OF BARNWELL

6" WM - TO BE FURNISHED
AND INSTALLED BY THE CITY OF BARNWELL

REPAIR ANY
DAMAGED ASPHALT

DOGHOUSE
#A-1 MH
FR: 187.06
INV. IN: 181.29 (E)

3" GV

6" GV

8" PVC

8" X 6" TS

SSMH
FR: 186.54
IE: 180.99

SSMH
FR: 187.51
IE: 182.37

SSMH
FR: 199.93
IE: 198.17

SSMH
FR: 200.10
IE: 196.70

SSMH
FR: 198.96
IE: 190.66

10" PEAR

17" PEAR SHAG

HWY 278 (US 278) 80' ROW

T&H CONTROL POINT
3" OPEN TOP PIPE SET
WITH PLASTIC CAP
STAMPED "T&H CONTROL"
N: 507,938.499
E: 1,889,678.223
ELEV.: 190.45 (NAVD88)

NOTES:
1. CLEANOUTS IN PAVEMENT ARE TO BE TRAFFIC RATED WITH CAST IRON TOP
2. COORDINATE THE INSTALLATION OF THE WATER LINE AND WATER METERS WITH THE CITY OF BARNWELL

GRAPHIC SCALE

30 0 15 30 60 120

(IN FEET)
1 inch = ft.30

TETRA TECH
www.tetratech.com
240 Continental Drive, Suite 200
Newark, DE 19713
Tel: 302.738.7551 Fax: 302.454.5989

SOUTH CAROLINA
LICENSED PROFESSIONAL ENGINEER
No. 33570
Matthew D. Gaillard
DeSOUTH

BARNWELL SCHOOL DISTRICT
OWNER
770 HAGOOD AVE
BARNWELL, SC 29812
Tel: 803 541 1300

TETRA TECH
ARCHITECT
MECHANICAL ENGINEER
PLUMBING ENGINEER
ELECTRICAL ENGINEER
240 CONTINENTAL DR
NEWARK, DE 19713
302 738 7551

THOMAS & HUTTON
CIVIL ENGINEER
1501 MAIN ST.
COLUMBIA, SC 29201
Tel: 803 451 0200

ZZ CONSULTING
STRUCTURAL ENGINEER
640 S. STATE ST.
SHELLEY, ID 83274
Tel: 208 357 5404

MARK	DATE	DESCRIPTION	BY
01	07/15/24	REVISED CONSTRUCTION DOC. SUBMITTAL FOR DEP REVIEW & APPROVAL	T&H
02	08/09/24	REVISED PER DEP & FINAL FOR BID	T&H
03	09/06/24	ADDENDUM #1	T&H
04	10/02/24	RELEASED FOR CONSTRUCTION (CHANGE BID)	T&H

BARNWELL SCHOOL DISTRICT
BARNWELL COUNTY MULTI-USE SAFE ROOM

UTILITY PLAN

Project No.:	28810.0000
Designed By:	MCL
Drawn By:	MCL
Checked By:	MGD

C-700

Copyright Tetra Tech

Z:\2881\0\28810.0000\Engineering\Drawings\Construction Plans\28810.0000 - UT.dwg - May 13, 2021 - 9:51:58 AM

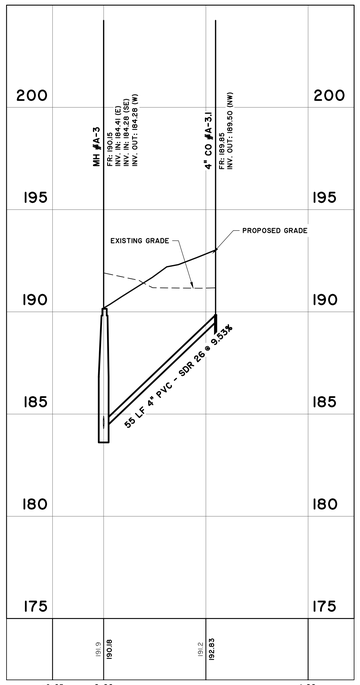

SANITARY SEWER LINE B
STATIONS: -0+25 - 1+00
SCALE: HORZ.: 1" = 30'
VERT.: 1" = 3'

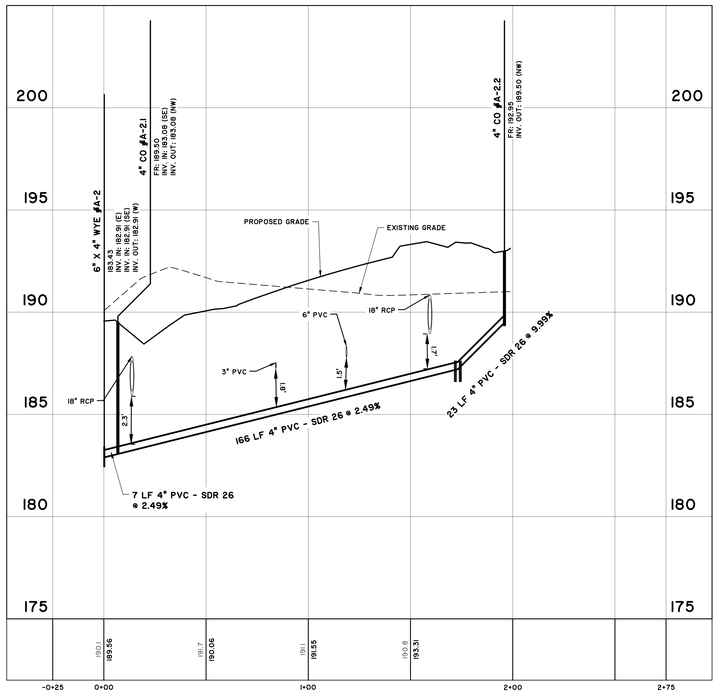

SANITARY SEWER LINE C
STATIONS: -0+25 - 2+75
SCALE: HORZ.: 1" = 30'
VERT.: 1" = 3'

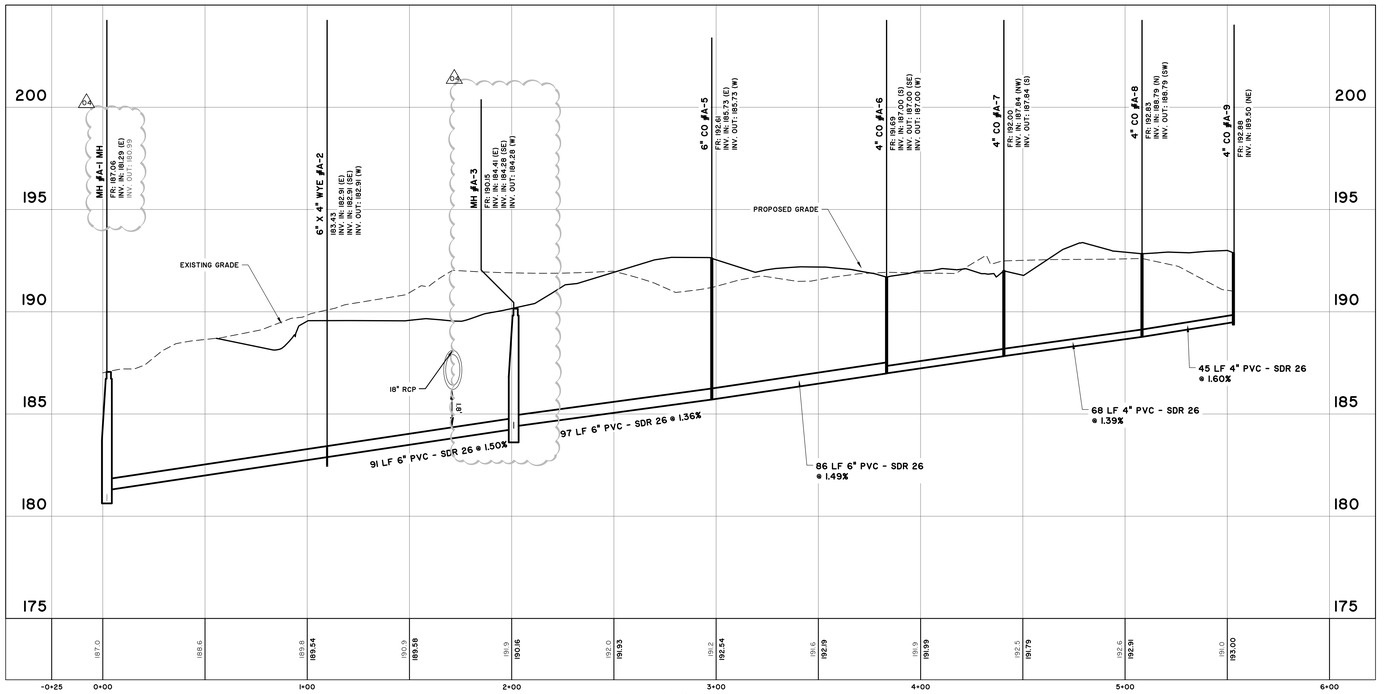

SANITARY SEWER LINE A
STATIONS: -0+25 - 6+00
SCALE: HORZ.: 1" = 30'
VERT.: 1" = 3'

TETRA TECH
www.tetratech.com
240 Continental Drive, Suite 200
Newark, DE 19713
Tel: 302.738.7551 Fax: 302.454.5989

NORTH CAROLINA
LICENSED PROFESSIONAL ENGINEER
No. 39578
MICHAEL DeSCOTTE
8/26/2024

BARNWELL SCHOOL DISTRICT
OWNER
770 HAGOOD AVE
BARNWELL, SC 29812
Tel: 803 541 1300

TETRA TECH
ARCHITECT
MECHANICAL ENGINEER
PLUMBING ENGINEER
ELECTRICAL ENGINEER
240 CONTINENTAL DR
NEWARK, DE 19713
302 738 7551

THOMAS & HUTTON
CIVIL ENGINEER
1501 MAIN ST.
COLUMBIA, SC 29201
Tel: 803 451 0200

ZZ CONSULTING
STRUCTURAL ENGINEER
640 S. STATE ST.
SHELLEY, ID 83274
Tel: 208 357 5404

MARK	DATE	DESCRIPTION	BY
01	07/16/24	REVISED CONSTRUCTION DOC. SUBMITTAL FOR DSP REVIEW & APPROVAL	TSH
03	08/11/24	ISSUED FOR BID	TSH
04	12/06/24	ISSUED FOR CONSTRUCTION CONFORMANCE SET	TSH

BARNWELL SCHOOL DISTRICT
BARNWELL COUNTY MULTI-USE SAFE ROOM

SANITARY SEWER PROFILE

Project No.:	28810.0000
Designed By:	MCL
Drawn By:	MCL
Checked By:	MGD

C-701

Copyright: Tetra Tech

Z:\28810\28810.0000\Engineering\Drawings\Construction Plans\28810.0000 - UT PR.dwg - Aug 26, 2024 - 3:07:12 PM

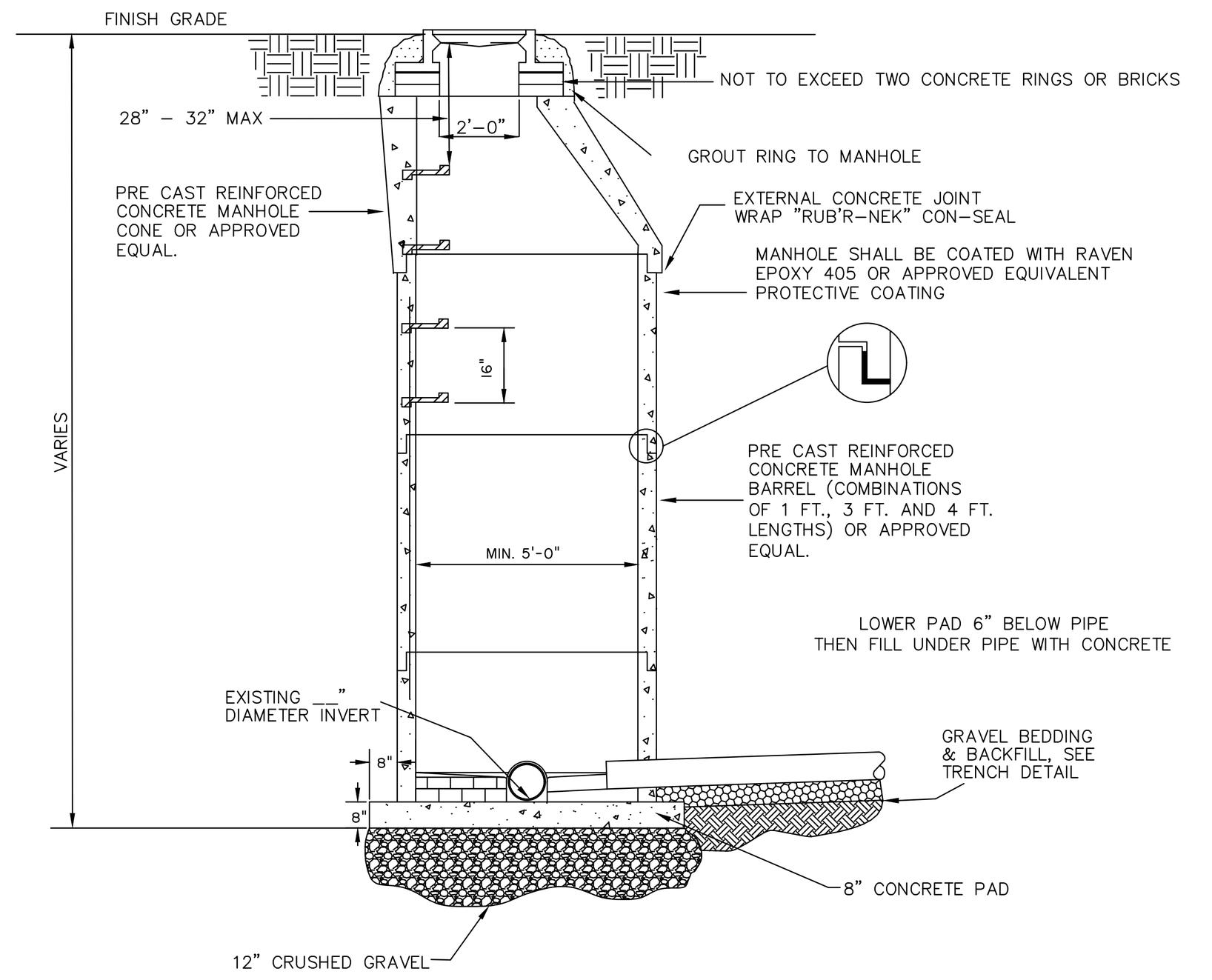

NOTES:
1. MANHOLES SHALL MEET OR EXCEED ASTM-C478
2. MINIMUM WALL THICKNESS SHALL BE 5"
3. ALL MANHOLE SECTIONS SHALL HAVE LIFTING HOLES PROVIDED
4. MANHOLE SECTION SHALL BE TONGUE AND GROOVED
5. STEPS SHALL BE CAST IN PLACE WITH A MAX. 16" O.C.
6. MASTIC OR 'O' RING WILL BE ACCEPTABLE
7. INLET AND OUTLET PIPES MUST BE AT PROPER ELEVATION WITH OPENING CAST IN MANHOLE BY MANUFACTURER
8. MANHOLES MAY BE CONSTRUCTED CONCENTRIC IF TOTAL HEIGHT IS 5' OR LESS
9. DISTANCE FROM BOTTOM OF TROUGH TO SHELF EDGE TO BE 70% DIAMETER OF OUTLET PIPE
10. 10% SLOPE ON SHELF - ALL DIRECTION
11. MIN. 15" WIDTH OF SHELF (BENCH)
12. DROP MANHOLE REQ'D. IF DIFFERENCE IN INCOMING SEWER ELEVATION AND MANHOLE INVERT IS EQUAL TO OR EXCEEDS 18"
13. ADJUST ELEVATION OF FRAME AS REQUIRED USING CONCRETE GRADE RINGS
14. TOP OF INLET PIPE MUST MEET THE CROWN ELEVATION OF THE EXISTING PIPE
15. MANHOLE SHALL BE COATED WITH RAVEN EPOXY 405 OR APPROVED EQUIVALENT PROTECTIVE COATING
16. ALL OPENINGS TO BE SEALED WITH NON SHRINK GROUT

CONTACT BCWS 72 HRS PRIOR FOR AN INSPECTION ON THE MANHOLE IMMEDIATELY AFTER IT IS INSTALLED

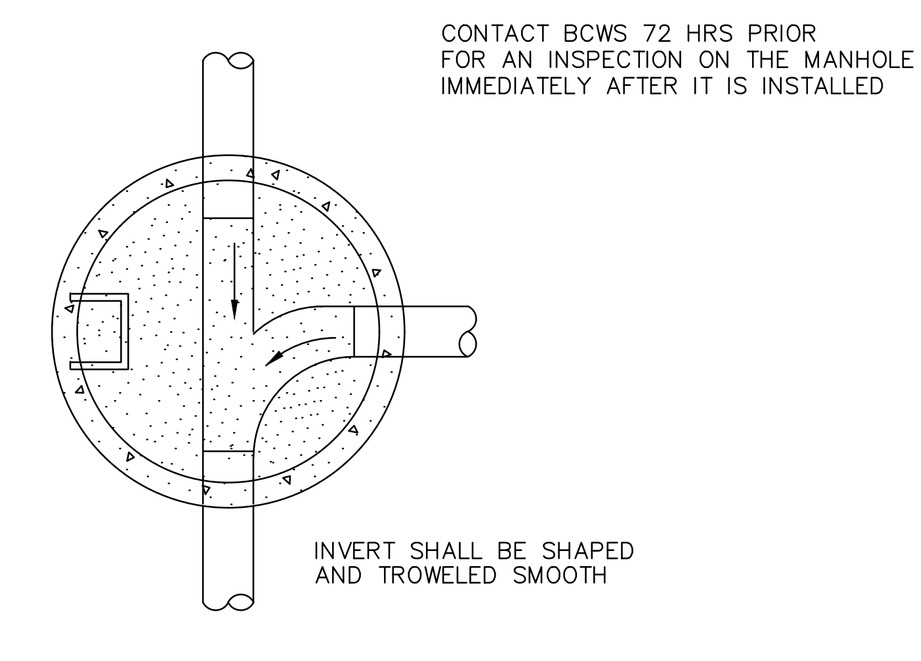

"DOGHOUSE TYPE" MANHOLE

NOT TO SCALE

04

Enclosure Selection-Manual Sizing

HOW TO SIZE A HOT BOX ENCLOSURE

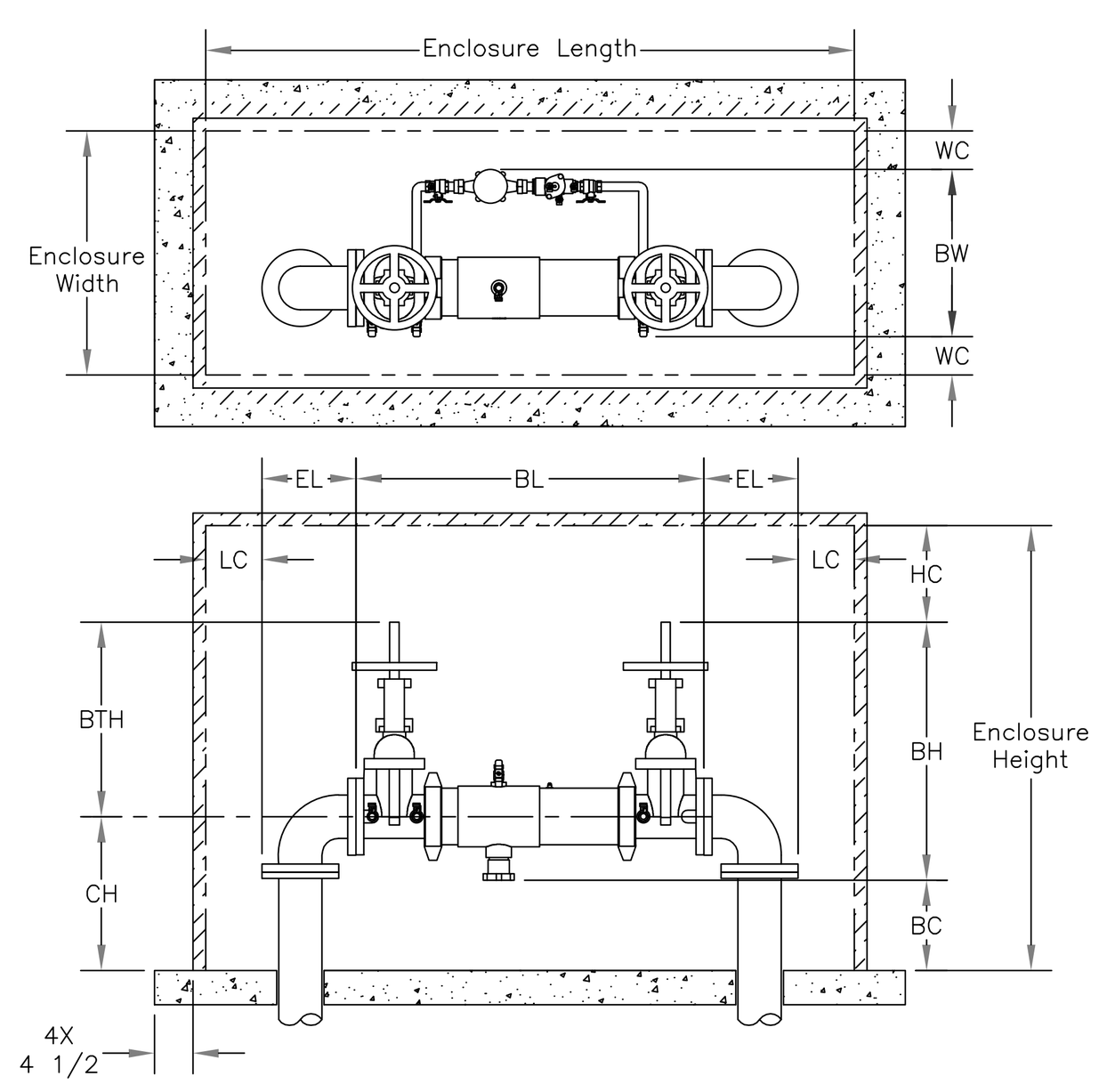

Formulas:

BW Backflow Width
WC Width Clearance
\+ WC Width Clearance
=Enclosure Width

BL Backflow Length
EL Elbow Length
EL Elbow Length
LC Length Clearance
\+ LC Length Clearance
=Enclosure Length

BH Backflow Height
BC Backflow Clearance
\+ HC Height Clearance
=Enclosure Height w/ bottom clearance

OR

BTH Backflow Top Height
CH Centerline Height
\+ HC Height Clearance
=Enclosure Height w/ centerline

Size	Elbow Length	Elbow Style
0.50	3.25	Threaded
0.75	3.75	Threaded
1.00	4.06	Threaded
1.50	5.13	Threaded
2.00	5.75	Threaded
2.50	8.50	Flanged
3.00	9.25	Flanged
4.00	11.00	Flanged
6.00	13.50	Flanged
8.00	15.75	Flanged
10.00	19.00	Flanged
12.00	21.50	Flanged

The elbow length on threaded elbows include a 2" pipe nipple for ease of attachment.

See the backflow manufacturers website for the backflow dimensions.

Hot Box suggests a minimum 3" clearance (each side) for 2" pipe and smaller and 6" clearance (each side) for 2 1/2" pipe and larger. These clearances can be adjusted to better fit a particular Hot Box enclosure.

HUBBELL Page 11 HOT BOX

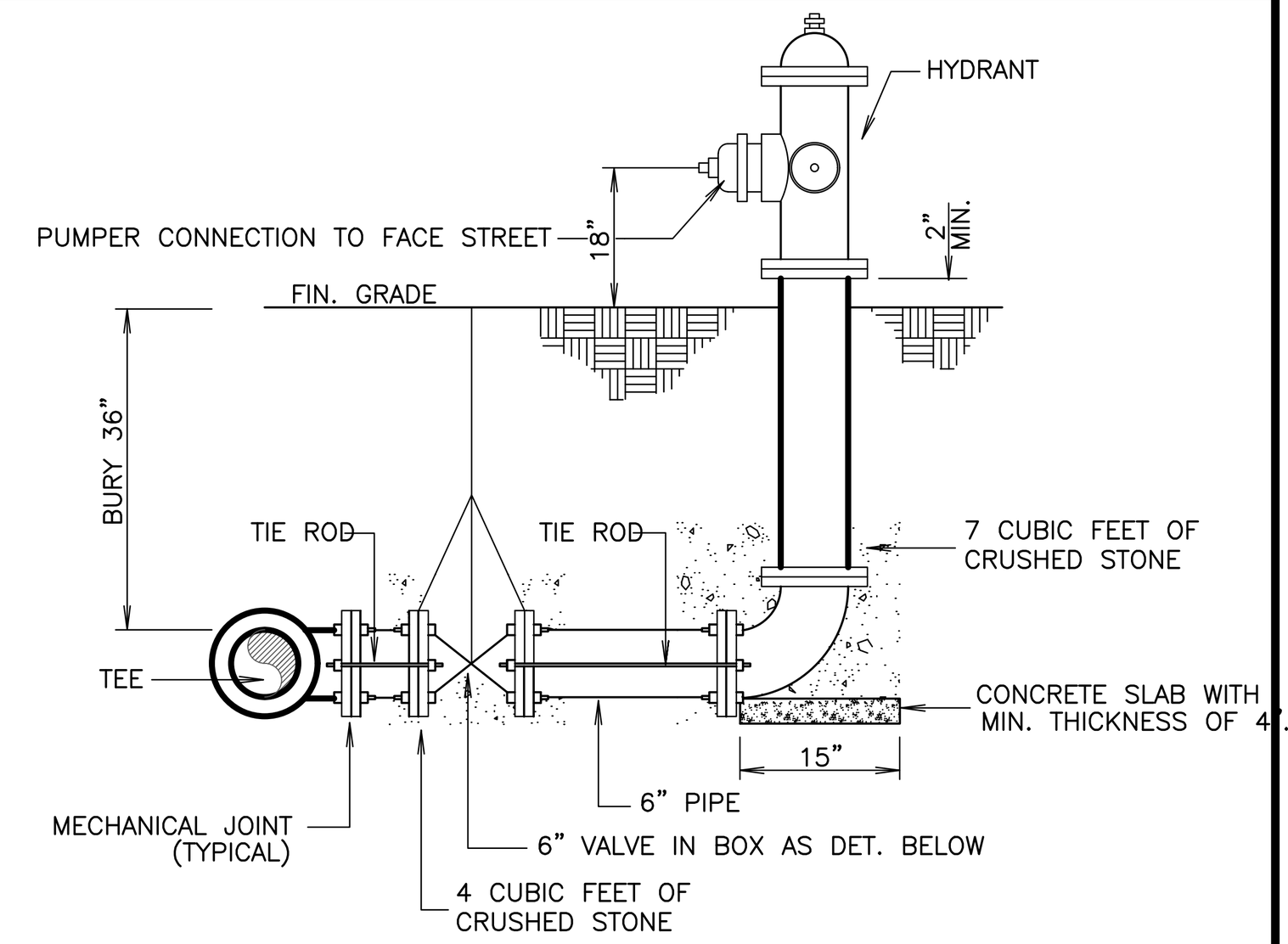

SECTION

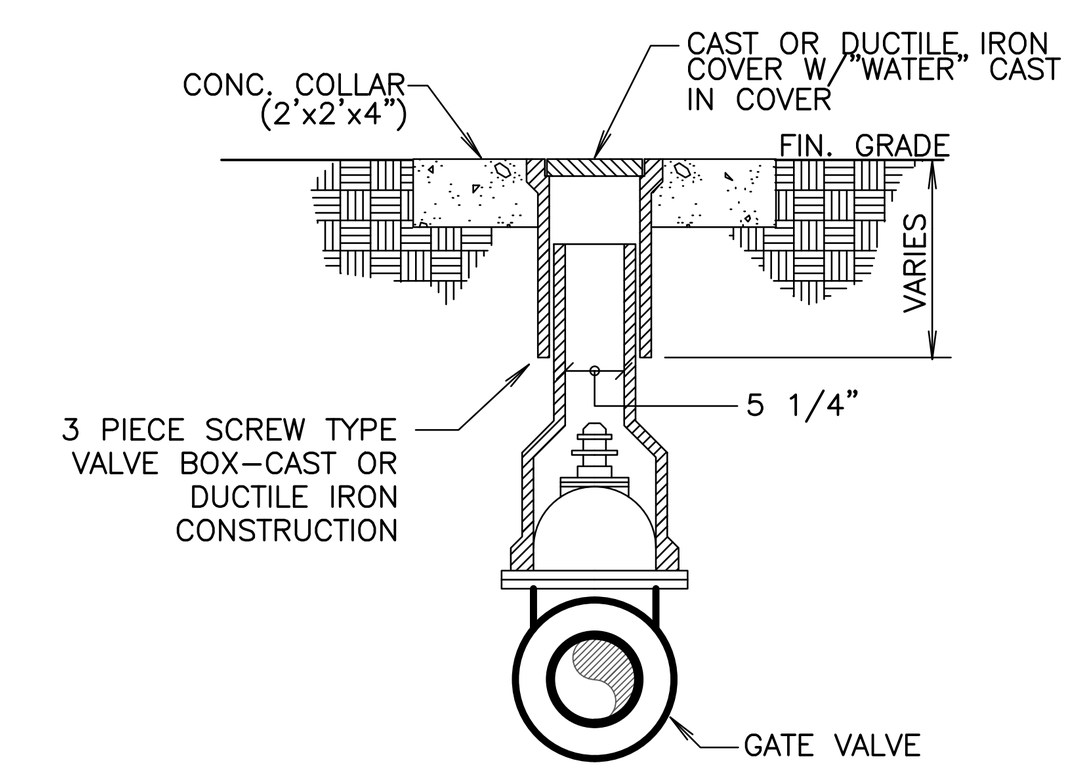

VALVE SECTION

W8
OCT. 2008
THOMAS & HUTTON ENGINEERING CO.

FIRE HYDRANT DETAIL

NOT TO SCALE

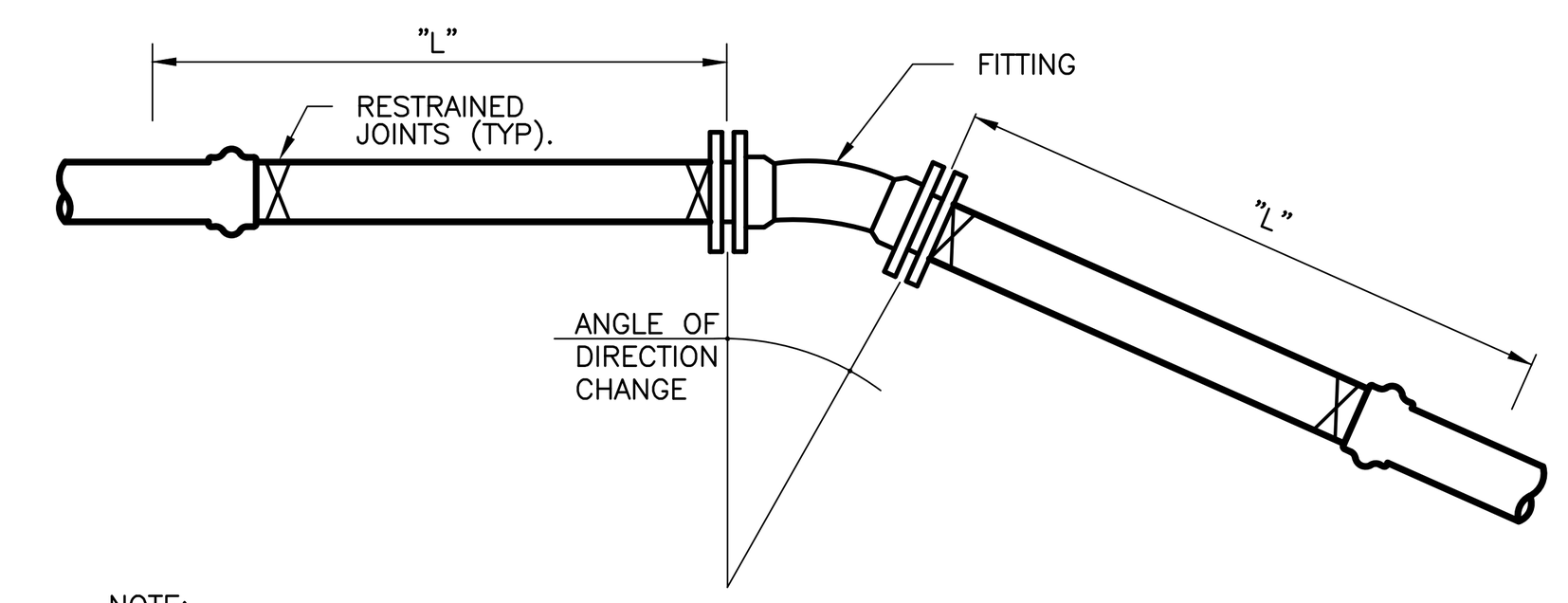

NOTE:
THE CONTRACTOR MAY ELECT TO USE RESTRAINED JOINTS IN LIEU OF CONCRETE THRUST BLOCKS. THE CONTRACTOR SHALL USE RESTRAINED JOINTS WHERE SPECIFIED.

PIPE DIA.	FITTING	("L") NUMBER OF RESTRAINED JOINTS
8"	90°	3
8"	45°	2
8"	22 1/2°	1
8"	11 1/4°	1

NOTE:
1. A FULL PIPE LENGTH IS REQUIRED AFTER LAST RESTRAINED JOINT.
2. A FULL PIPE LENGTH IS REQUIRED BETWEEN EACH RESTRAINED JOINT.
3. RESTRAINED JOINTS WITHIN CASINGS ARE NOT INCLUDED IN JOINTS REQUIRED.

W20
OCT. 2008
THOMAS & HUTTON ENGINEERING CO.

RESTRAINED JOINT DETAIL

NOT TO SCALE

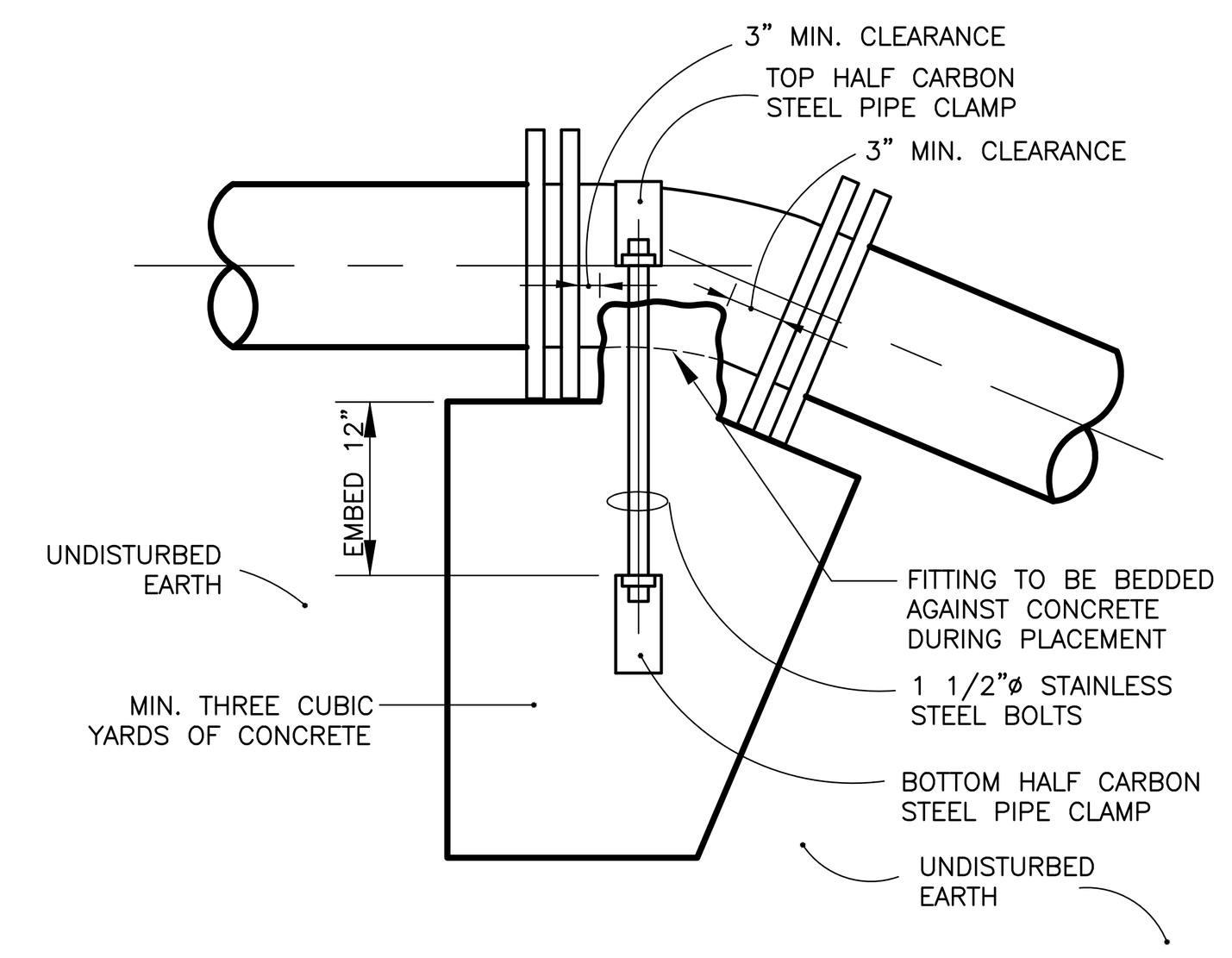

PLAN

W21
OCT. 2008
THOMAS & HUTTON ENGINEERING CO.

VERTICAL BEND DOWN THRUST BLOCK DETAIL

NOT TO SCALE

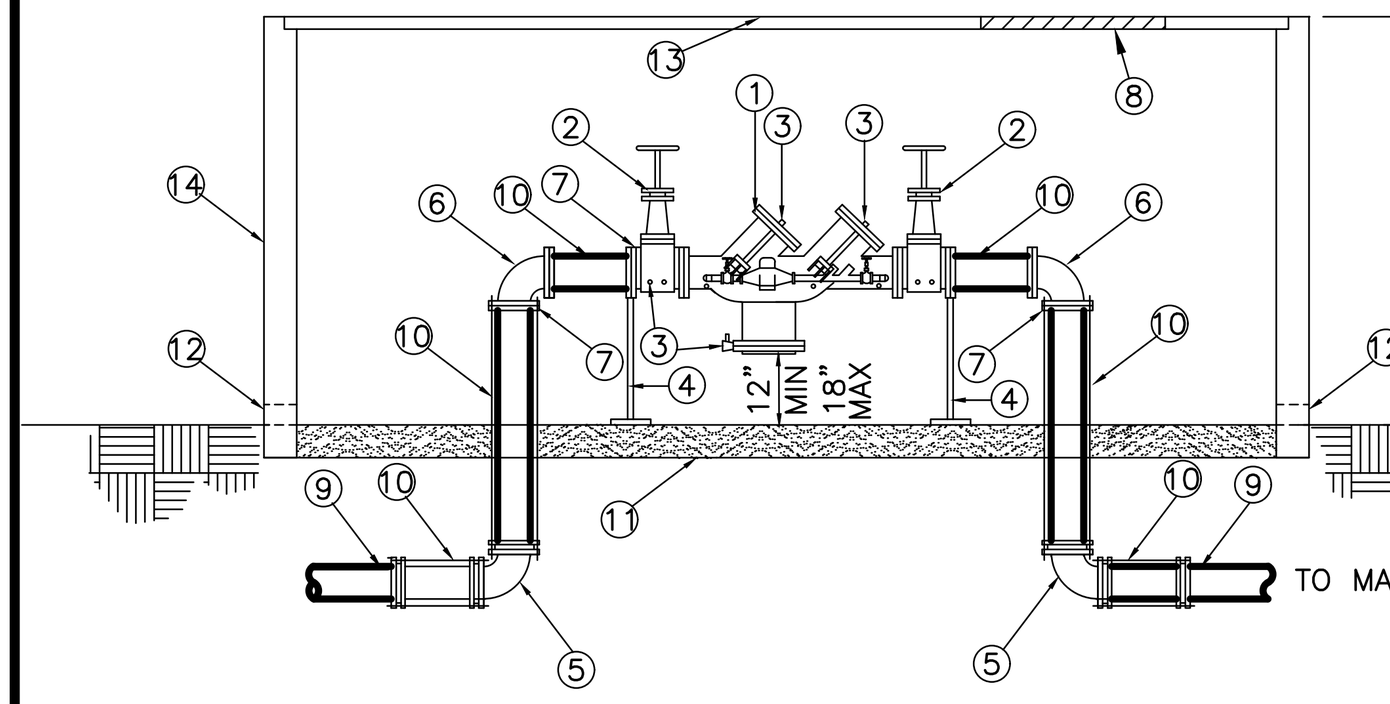

MATERIALS		
ITEM	QUAN.	DESCRIPTION
1	1	REDUCED PRESSURE ZONE DEVICE
2	2	O.S & Y RESILIENT GATE VALVES
3	4	TEST COCKS
4	2	2" SCH 40 GALV. PIPE STAND & BASE BOLTED TO FLANGE
5	2	MJ 45° OR 90° BENDS
6	2	FLANGED 45° OR 90° BENDS
7	2	FLANGE ADAPTERS
8		2' X 2' MIN. HATCH
9		DI OR PVC PIPE
10		DUCTILE IRON PIPE, CUT TO FIT
11		4" PEA GRAVEL IN BOTTOM OF PIT OR CONCRETE SLAB
12	2	DRAIN PORTS SIZE ACCORDING TO PIPE SIZE
13		3/8 ALUMINUM TREAD PLATE / HATCH COVER W/ SUPPORTS AS NECESSARY
14		BOX-CONCRETE BLOCK, POURED CONCRETE OR PREFABRICATED BOX

NOTES:

1. FOR FINAL ACCEPTANCE, ASSEMBLY MUST BE CENTERED IN ENCLOSURE.UNDER NO CONDITION WILL ANY CONNECTION BE ALLOWED BETWEEN THE SERVICE METER AND A BACKFLOW PREVENTER. BACKFLOW PREVENTER SHALL ALWAYS BE INSTALLED IMMEDIATELY DOWNSTREAM OF METER.

2. IF A PRESSURE MONITOR IS TO BE INSTALLED, ADD A TEE, VALVE, FITTINGS, AND MOUNT ON SUPPLY SIDE PRIOR TO BACKFLOW PREVENTER. UNDER NO CIRCUMSTANCE SHALL TEST PORTS BE MODIFIED OR UTILIZED FOR ANY USE, OTHER THAN BACKFLOW DEVICE TESTING.

3. ALL MECHANICAL JOINTS MUST BE RESTRAINED.

4. PROVIDE A MINIMUM CLEARANCE OF 12 INCHES BETWEEN THE INSIDE FACE OF THE ENCLOSURE AND THE PIPING AND VALVES.

W15
JUNE 2018
THOMAS & HUTTON ENGINEERING CO.

REDUCED PRESSURE BACKFLOW PREVENTER

NOT TO SCALE

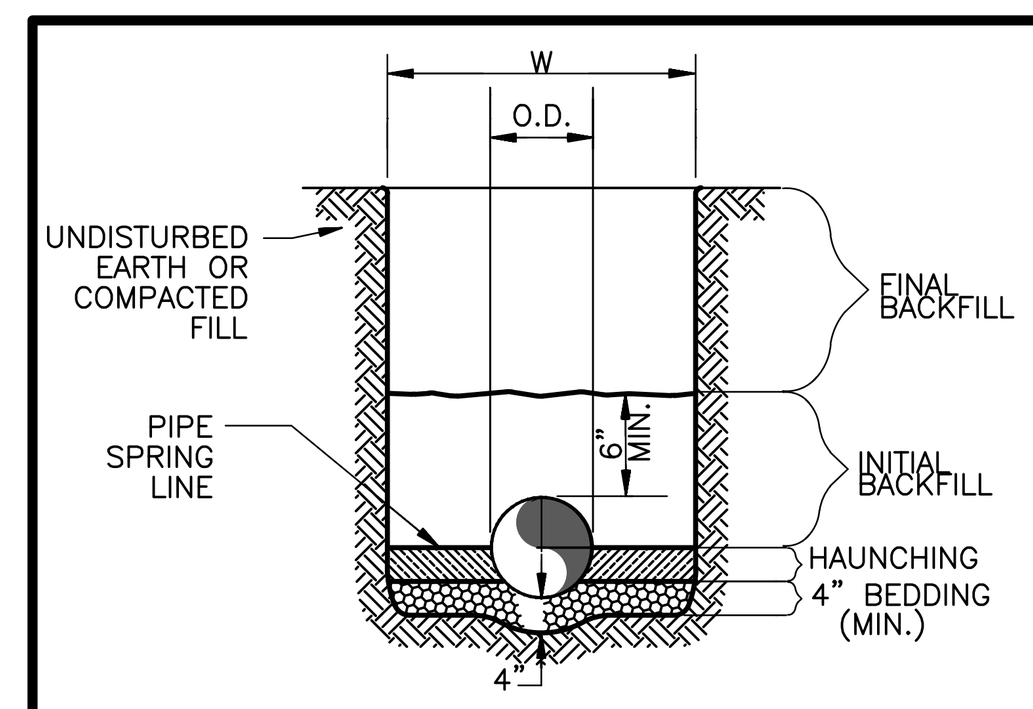

WATER LINE

NOT TO SCALE

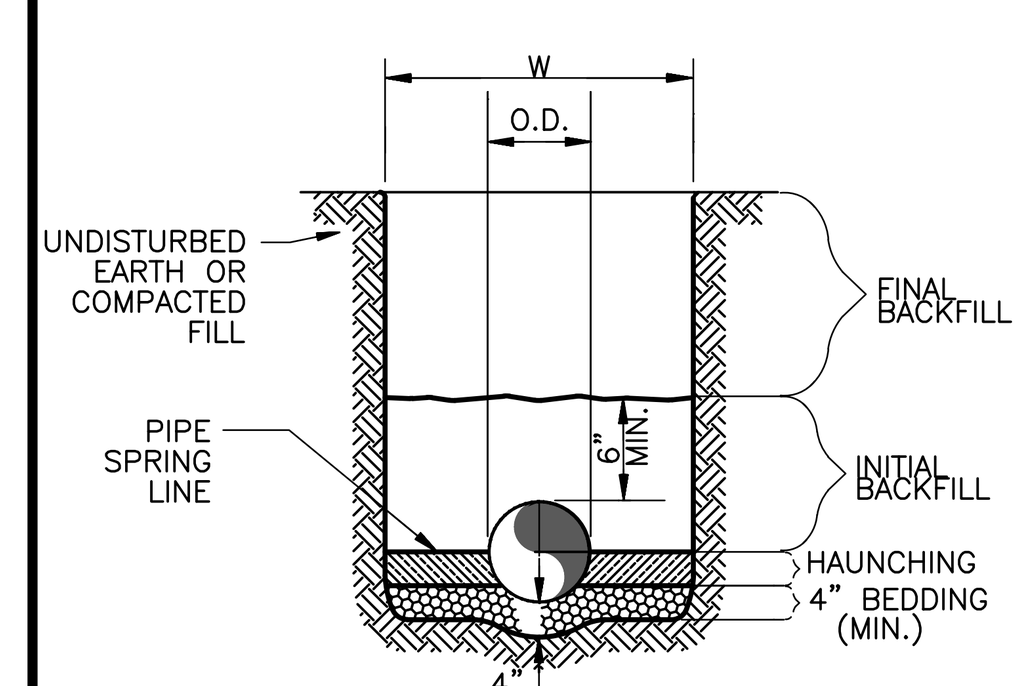

SANITARY SEWER

NOT TO SCALE

GENERAL NOTES

1. BEDDING SHALL BE CLASS I-A WORKED BY HAND. IF GROUNDWATER IS ANTICIPATED, THEN BEDDING SHALL BE CLASS I-B COMPACTED TO 85% STANDARD PROCTOR.
2. HAUNCHING SHALL BE WORKED AROUND THE PIPE BY HAND TO ELIMINATE VOIDS AND SHALL BE CLASS I-A OR CLASS I-B OR CLASS II COMPACTED TO 85% PROCTOR.
3. INITIAL BACKFILL SHALL BE CLASS I-A WORKED BY HAND, OR CLASS I-B OR CLASS II COMPACTED TO 85% STANDARD PROCTOR.
4. INITIAL BACKFILL NOT UNDER PAVED AREAS CAN BE CLASS III COMPACTED TO 90% STANDARD PROCTOR.
5. FINAL BACKFILL SHALL BE CLASS I, II, OR III COMPACTED AS NOTED IN NOTES 3 AND 4.
6. FINAL BACKFILL NOT UNDER PAVED AREAS CAN BE CLASS IV-A COMPACTED TO 95% STANDARD PROCTOR.
7. ALL MATERIALS ARE CLASSIFIED IN ACCORDANCE WITH ASTM D 2321-89.
8. ALL MATERIALS SHALL BE INSTALLED IN MAXIMUM 8" LOOSE LIFTS IN ACCORDANCE WITH ASTM D 698. CLASS III AND IV-A MATERIALS SHALL BE COMPACTED NEAR OPTIMUM MOISTURE CONTENT.
9. FILL SALVAGED FROM EXCAVATION SHALL BE FREE OF DEBRIS, ORGANICS AND ROCKS LARGER THAN 3".
10. ALL TRENCH EXCAVATIONS SHALL BE SLOPED, SHORED, SHEETED, BRACED, OR OTHERWISE SUPPORTED IN COMPLIANCE WITH OSHA REGULATIONS AND LOCAL ORDINANCES. (SEE SPECIFICATIONS)

PIPE DIA.	W
≤12"	O.D. OF PIPE + (12" TO 18")
>12"	≥ O.D. OF PIPE + 18"

W31
OCT. 2008
THOMAS & HUTTON ENGINEERING CO.

UTILITY TRENCH AND BEDDING

NOT TO SCALE

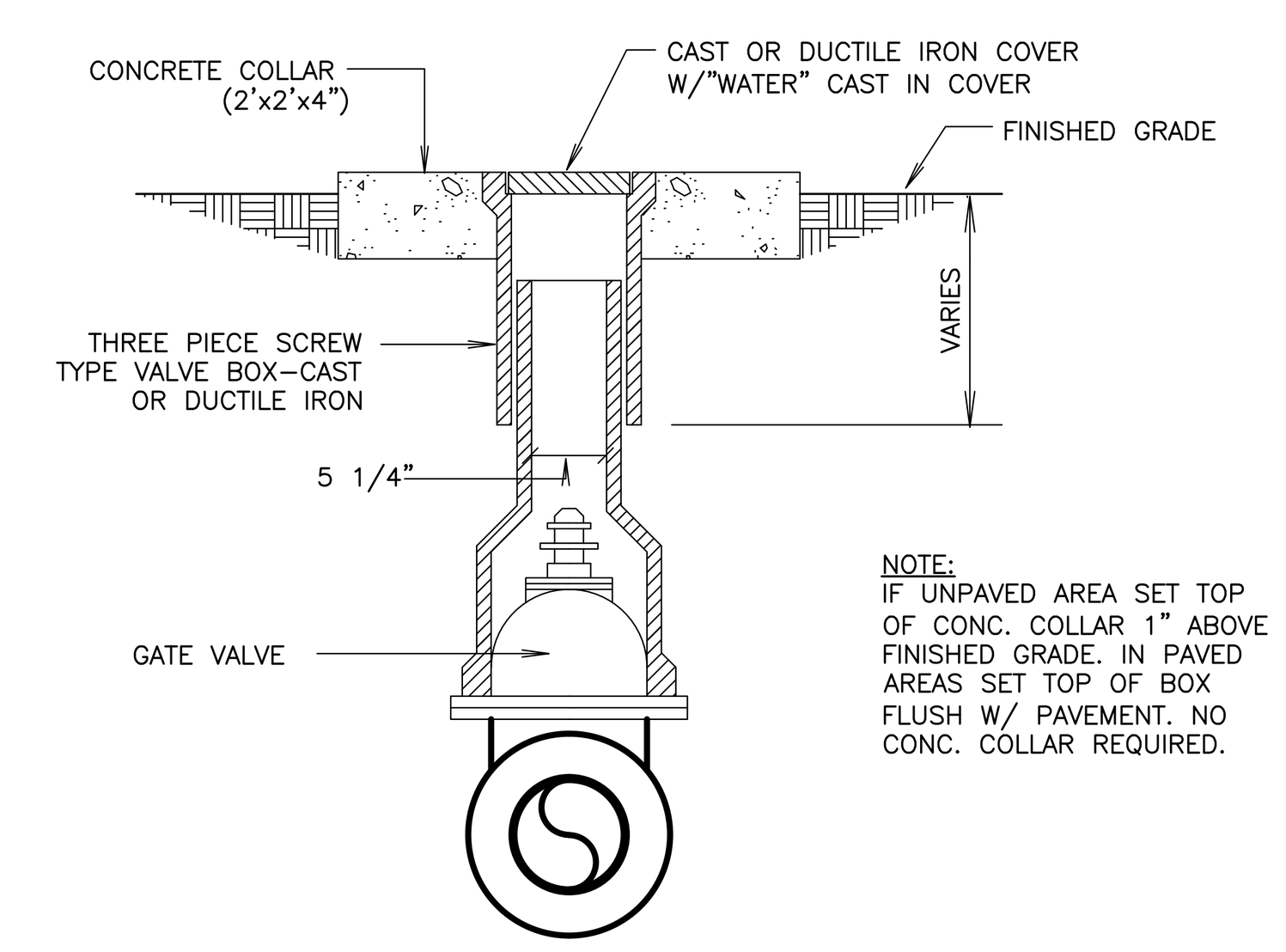

NOTE:
IF UNPAVED AREA SET TOP OF CONC. COLLAR 1" ABOVE FINISHED GRADE. IN PAVED AREAS SET TOP OF BOX FLUSH W/ PAVEMENT. NO CONC. COLLAR REQUIRED.

W10
OCT. 2008
THOMAS & HUTTON ENGINEERING CO.

VALVE BOX DETAIL

NOT TO SCALE

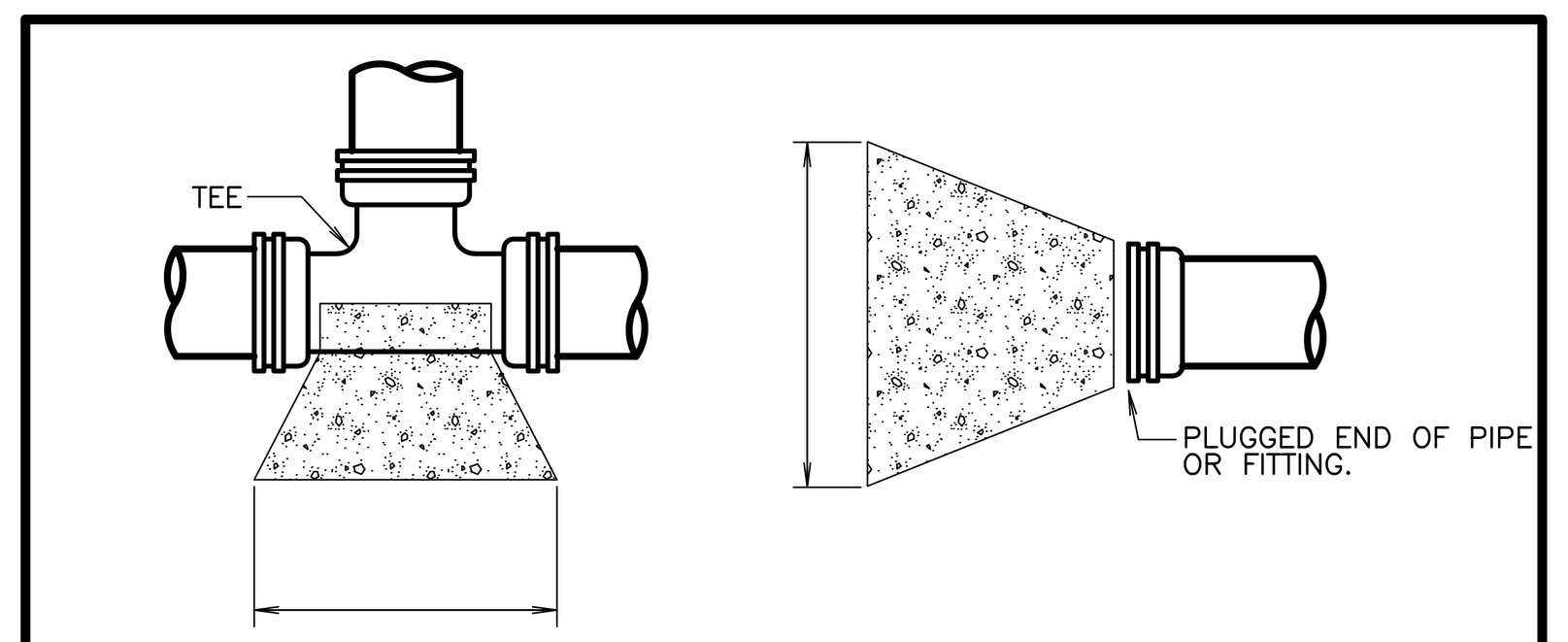

PIPE	AREA AGAINST UNDISTURBED SOIL
2"	1'-9" x 1'-9"
4"	2'-0" x 2'-0"
6"	2'-6" x 2'-6"
8"	3'-0" x 3'-0"
10"	3'-4" x 3'-4"
12"	4'-0" x 4'-0"

PIPE	AREA AGAINST UNDISTURBED SOIL
2"	1'-9" x 1'-9"
4"	2'-0" x 2'-0"
6"	2'-6" x 2'-6"
8"	3'-0" x 3'-0"
10"	3'-4" x 3'-4"
12"	4'-0" x 4'-0"

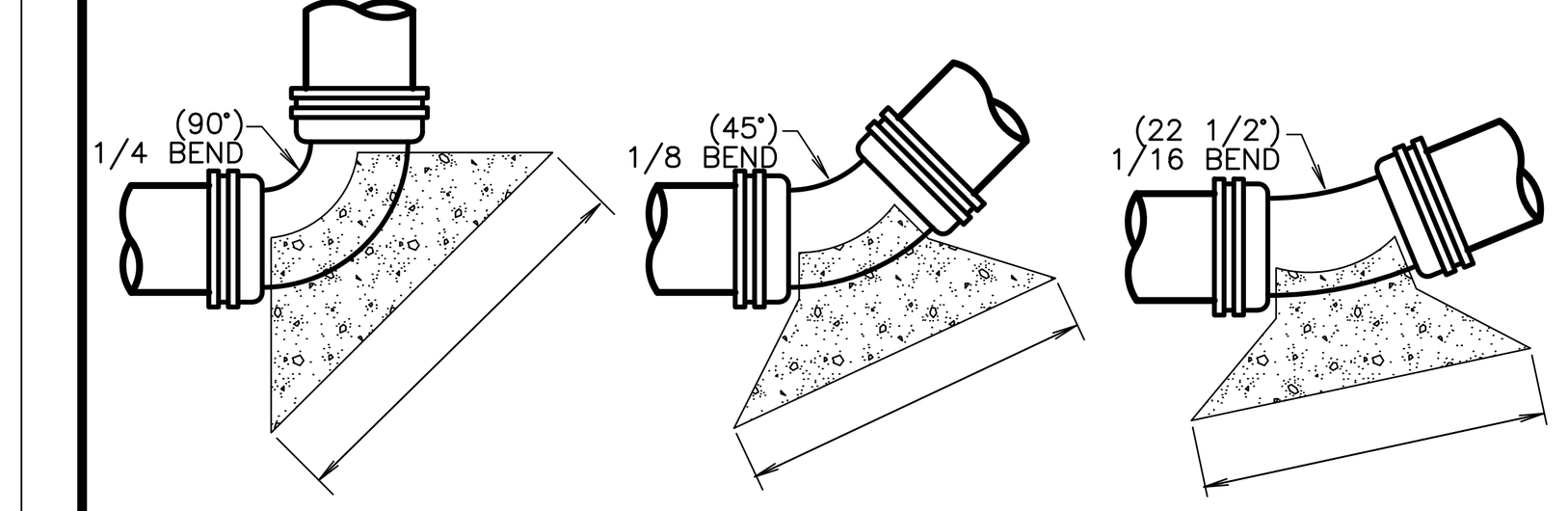

PIPE	AREA AGAINST UNDISTURBED SOIL
2"	1'-9" x 1'-9"
4"	2'-6" x 2'-6"
6"	3'-0" x 3'-0"
8"	3'-6" x 3'-6"
10"	3'-10" x 3'-10"
12"	4'-6" x 4'-6"

PIPE	AREA AGAINST UNDISTURBED SOIL
2"	1'-6" x 1'-6"
4"	1'-6" x 1'-6"
6"	2'-0" x 2'-0"
8"	2'-8" x 2'-8"
10"	2'-11" x 2'-11"
12"	3'-2" x 3'-2"

PIPE	AREA AGAINST UNDISTURBED SOIL
2"	1'-0" x 1'-0"
4"	1'-0" x 1'-0"
6"	1'-6" x 1'-6"
8"	1'-8" x 1'-8"
10"	1'-10" x 1'-10"
12"	2'-0" x 2'-0"

NOTE: ASSUME SOIL BEARING CAPACITY OF 1,000 POUNDS PER SQUARE FOOT. CONSULT ENGINEER IF ACTUAL CONDITIONS ARE DIFFERENT.

W1
OCT. 2008
THOMAS & HUTTON ENGINEERING CO.

REACTION BLOCK DETAILS

NOT TO SCALE

TETRA TECH
www.tetratech.com
240 Continental Drive, Suite 200
Newark, DE 19713
Tel: 302.738.7551 Fax: 302.454.5989

SOUTH CAROLINA LICENSED PROFESSIONAL ENGINEER No. 34576 MARK DeSOUZA 2024/12/06

CLIENT NAME
OWNER
Client Street Address
City-State-ZipCode
Tel: 000.000.0000

TETRA TECH
ARCHITECT
MECHANICAL ENGINEER
PLUMBING ENGINEER
ELECTRICAL ENGINEER
240 CONTINENTAL DR
NEWARK, DE 19713
302 738 7551

THOMAS & HUTTON
CIVIL ENGINEER
1501 MAIN ST.
COLUMBIA, SC 29201
Tel: 803 451 0200

ZZ CONSULTING
STRUCTURAL ENGINEER
640 S. STATE ST.
SHELLEY, ID 83274
Tel: 208 357 5404

MARK	DATE	DESCRIPTION	BY
01	07/18/24	REVISED CONSTRUCTION DOC. SUBMITTAL FOR OSF REVIEW & APPROVAL	T&H
02	08/26/24	REVISED HOTBOX DETAIL FOR RPZ	T&H
03	09/11/24	ISSUED FOR BID	T&H
04	12/06/24	ISSUED FOR CONSTRUCTION CONFORMANCE SET	T&H

BARNWELL SCHOOL DISTRICT
BARNWELL COUNTY MULITI-USE SAFE ROOM

UTILITY DETAILS

Project No.:	28810.0000
Designed By:	MCL
Drawn By:	MCL
Checked By:	MGD

C-702

Copyright: Tetra Tech

O:\28810.0000\Engineering\Drawings\Construction Plans\DD Plans\28810.0000 - PGD DT.dwg - Jan 26, 2021 - 11:28:24 AM

EXISTING FOOTBALL FIELD

EXISTING BLEACHERS

EXISTING BUILDING

CONCRETE STAIRS

SILT FENCE

RI #PEDESTAL INLET A-1.2A

8" AGGREGATE BASE COURSE

SMH #A-4

EXISTING
GRATE INLET (2x2)
FR: 198.96
IE: 194.80 (BOX)

SSMH
FR: 199.93
IE: 198.17

SSMH
FR: 200.10
IE: 196.70

SSMH
FR: 198.96
IE: 190.66

PROPOSED BUILDING
AREA: +/- 29,200 SF
FFE: 193.5

GI #A-1.1A

GI #A-3

GI #A-1

GI #A-2

JB #PEDESTAL INLET B-1

YI #A-1.2B

12" X 6" WYE #A-1.1B

MATCH EXISTING
PAVEMENT ELEVATIONS

18" CURB & GUTTER
MATCH EXISTING
PAVEMENT ELEVATIONS

MATCH EXISTING
CURB ELEVATIONS

ASPHALT PAVEMENT

FEATHER CURB
& GUTTER (TYP.)

TRANSITION FROM 6"
CURB AND GUTTER
TO FLUSH CURB

8" CO #A-1.2C

YI #C-3

UNDERSLAB
DRAINAGE TO CONNECT
TO YI #C-2

YI #C-2

8" CO #A-1.1C

ADA GRADING ZONE

TRANSITION FROM
6" CURB AND GUTTER
TO FLUSH CURB

FES #C-1

FES #B-0

FES #A-0

PROPOSED DETENTION BASIN
NOTE: POND HAS BEEN
SIZED FOR FULL BUILDOUT.

PERMANENT RIPRAP

CURB INLET
FR: 193.40
IE: 190.09 (SW)
IE: 189.99 (BOX)

CURB INLET
FR: 192.09
IE: 188.2 (SW)
IE: 188.45 (NE)
IE: 188.02 (BOX)

CURB INLET
FR: 191.51
IE: 187.46 (SE)
IE: 187.66 (NW)
IE: 187.51 (BOX)

EXISTING
3.00 DIA BOX
IE: INACCESS

SSMH
FR: 186.54
IE: 180.39

SSMH
FR: 187.51
IE: 182.37

OWENS ST (S-353) 80' ROW

HWY 278 (US 278) 80' ROW

T&H CONTROL POINT
¾" OPEN TOP PIPE SET
WITH PLASTIC CAP
STAMPED "T&H CONTROL"
N: 507,938.499
E: 1,889,678.223
ELEV.: 190.45 (NAVD88)

GRAPHIC SCALE
30 0 15 30 60 120
(IN FEET)
1 inch = 30 ft.

TETRA TECH
www.tetratech.com
240 Continental Drive, Suite 200
Newark, DE 19713
Tel: 302.738.7551 Fax: 302.454.5989

SOUTH CAROLINA
LICENSED PROFESSIONAL ENGINEER
No. 33570
MICHAEL GRISSETTE

BARNWELL SCHOOL DISTRICT
OWNER
770 HAGOOD AVE
BARNWELL, SC 29812
Tel: 803 541 1300

TETRA TECH
ARCHITECT
MECHANICAL ENGINEER
PLUMBING ENGINEER
ELECTRICAL ENGINEER
240 CONTINENTAL DR
NEWARK, DE 19713
302 738 7551

THOMAS & HUTTON
CIVIL ENGINEER
1501 MAIN ST.
COLUMBIA, SC 29201
Tel: 803 451 0200

ZZ CONSULTING
STRUCTURAL ENGINEER
640 S. STATE ST.
SHELLEY, ID 83274
Tel: 208 357 5404

MARK	DATE	DESCRIPTION	BY
01	07/19/24	ADDED CONSTRUCTION NOTES	T&H
02	08/05/24	ADDED BOOSTER PUMP STATION	T&H
03	09/06/24	ADDED CONSTRUCTION ENTRANCE	T&H
04	10/08/24	ADDED SCHOOL ZONE SIGNAGE	T&H
05	10/25/24	ADDED CONSTRUCTION ENTRANCE SIGNAGE	T&H

BARNWELL SCHOOL DISTRICT

BARNWELL COUNTY MULTI-USE SAFE ROOM

PAVING, GRADING, & DRAINAGE PLAN

Project No.:	28810.0000
Designed By:	MCL
Drawn By:	MCL
Checked By:	MGD

C-800

Copyright Tetra Tech

Z:\28810\28810.0000\Engineering\Drawings\Construction Plans\28810.0000 - PGD.dwg - May 13, 2021 - 9:59:32 AM

NOTE:
CONTRACTOR TO VERIFY PRIOR TO FIELD INSTALLATION THAT HEADWALLS, FLARED AND BEVELED END SECTIONS DO NOT PROJECT OUT OF THE FINISHED SLOPE AND GRADE

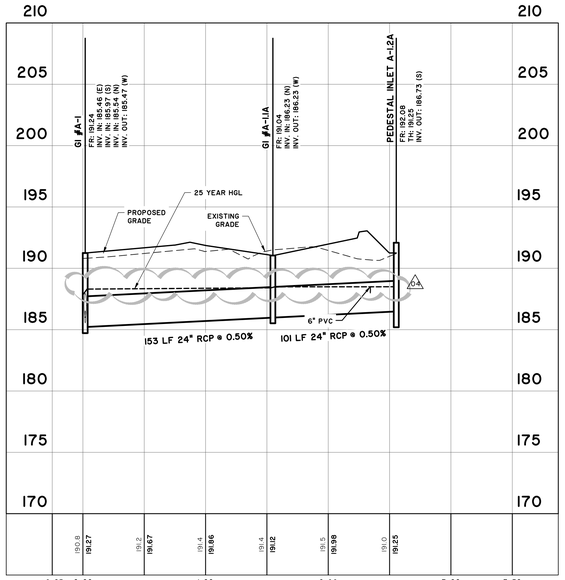

STORM DRAINAGE LINE A1.0
STATIONS: -0+25 - 3+50
SCALE: HORZ.: 1" = 50'
VERT.: 1" = 5'

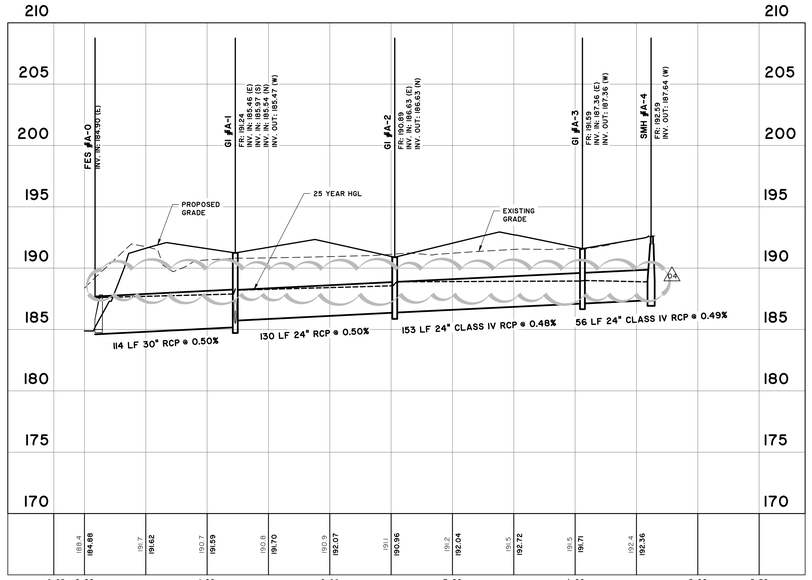

STORM DRAINAGE LINE A
STATIONS: -0+25 - 5+50
SCALE: HORZ.: 1" = 50'
VERT.: 1" = 5'

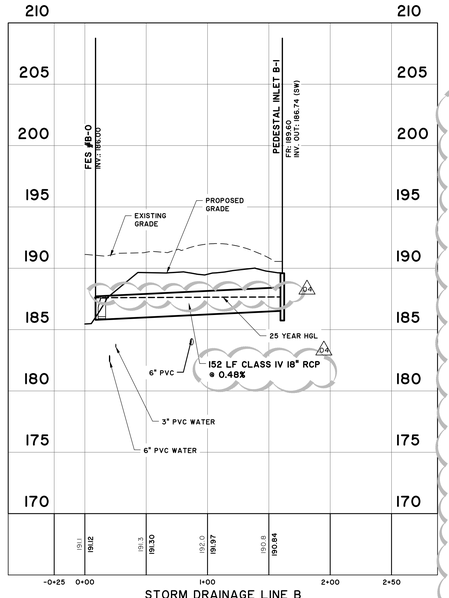

STORM DRAINAGE LINE B
STATIONS: -0+25 - 2+50
SCALE: HORZ.: 1" = 50'
VERT.: 1" = 5'

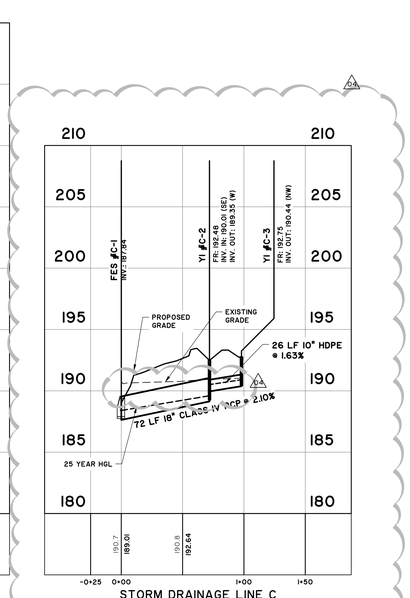

STORM DRAINAGE LINE C
STATIONS: -0+25 - 1+50
SCALE: HORZ.: 1" = 50'
VERT.: 1" = 5'

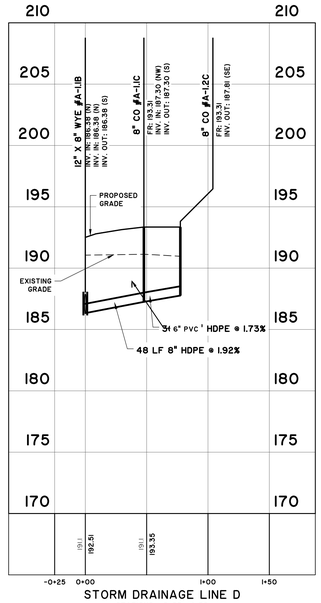

STORM DRAINAGE LINE D
STATIONS: -0+25 - 1+50
SCALE: HORZ.: 1" = 50'
VERT.: 1" = 5'

TETRA TECH
www.tetratech.com
240 Continental Drive, Suite 200
Newark, DE 19713
Tel: 302.738.7551 Fax: 302.454.5989

SOUTH CAROLINA PROFESSIONAL ENGINEER
No. 31570
Matthew DeSoucy

BARNWELL SCHOOL DISTRICT
OWNER
770 HAGOOD AVE
BARNWELL, SC 29812
Tel: 803 541 1300

TETRA TECH
ARCHITECT
MECHANICAL ENGINEER
PLUMBING ENGINEER
ELECTRICAL ENGINEER
240 CONTINENTAL DR
NEWARK, DE 19713
302 738 7551

THOMAS & HUTTON
CIVIL ENGINEER
1501 MAIN ST.
COLUMBIA, SC 29201
Tel: 803 451 0200

ZZ CONSULTING
STRUCTURAL ENGINEER
640 S. STATE ST.
SHELLEY, ID 83274
Tel: 208 357 5404

MARK	DATE	DESCRIPTION	BY
01	07/19/24	REVISED PER SCHOOL DISTRICT, SUBMITTAL FOR BID & PERMITTING	T&H
02	08/07/24	REVISED PER ADDENDUM #1 - MECHANICAL/ELECTRICAL CHANGES	T&H
03	09/27/24	REVISED PER BID	T&H
04	12/06/24	ISSUED FOR CONSTRUCTION / CHOOSE ONE SET	T&H

BARNWELL SCHOOL DISTRICT
BARNWELL COUNTY MULTI-USE SAFE ROOM

STORM DRAINAGE PROFILES

Project No.: 28810.0000
Designed By: MCL
Drawn By: MCL
Checked By: MGD

C-801

Copyright: Tetra Tech

Z:\28810\28810.0000\Engineering\Drawings\Construction Plans\28810.0000 - ST PR.dwg - Jun 4, 2021 - 9:47:30 AM

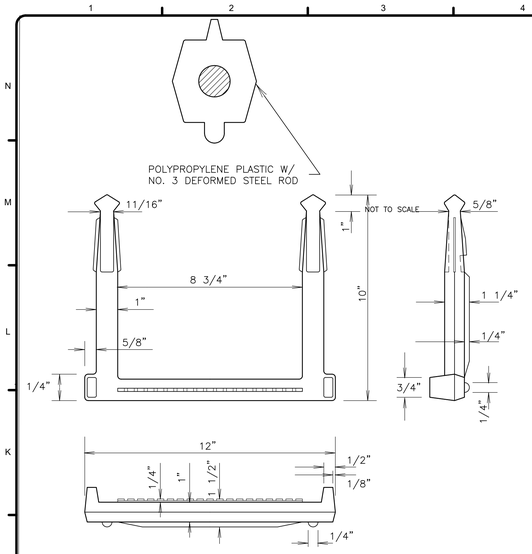

MANHOLE STEPS SHALL BE M.A. IND.,INC.
MODEL NO. PS1 OR AN APPROVED EQUAL

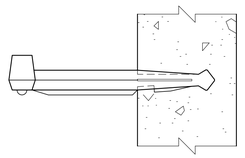

STEPS SHALL BE PLACED INTO WET CONCRETE WALL DURING MANUFACTURE, OR MORTARED INTO HOLES AFTER CONCRETE HAS SET.

NOTE: MANHOLE STEPS REQUIRED IN ALL BOXES OVER 4.5 FT IN DEPTH

MANHOLE STEP DETAIL

NOT TO SCALE

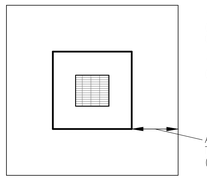

18" WIDE x 5" THK. CONC. APRON (APRON IS TO BE 18" WIDE OR TO EDGE OF BOX WHICH EVER IS GREATER)

1" EXPANSION JOINT (IF SURROUNDING PAVING IS CONC.)

ADJACENT PAVEMENT TO BE THICKENED TO 12" STARTING 5' EACH SIDE OF BOX (TYP. ONLY IN CONC. PAVEMENT AREAS)

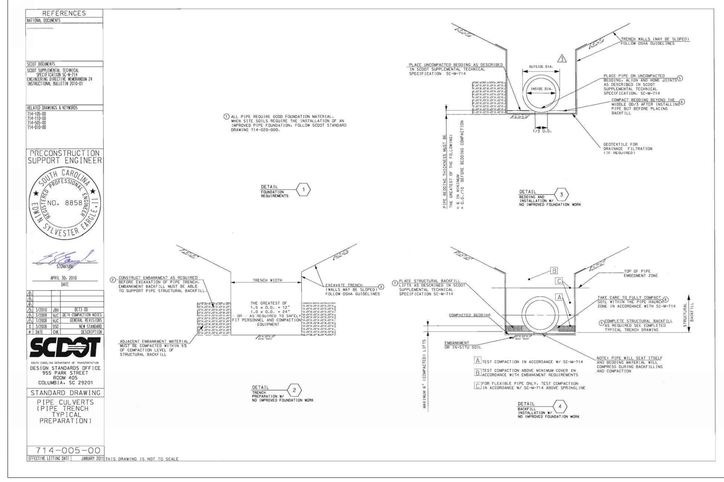

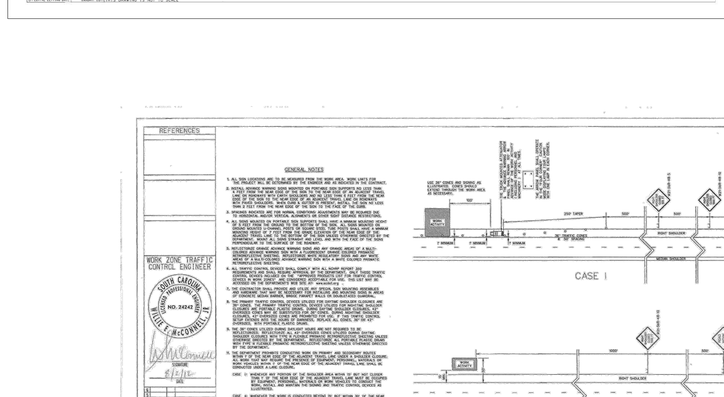

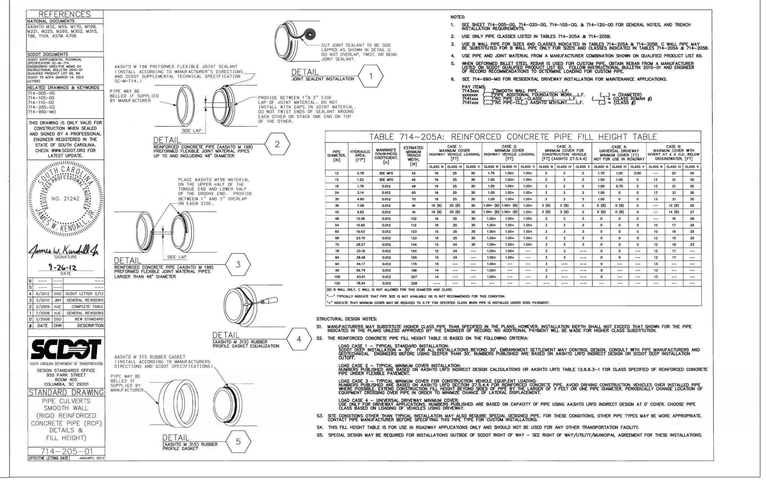

NOTE: PLEASE REFER TO THE MOST CURRENT EDITION OF THE SCDOT STANDARD DRAWINGS

REFERENCES
GENERAL NOTES
1. ALL NON-LIGHTING ARE TO BE WITHDRAWN FROM THE WORK AREA. WORK LIMITS FOR THIS PROJECT WILL BE DETERMINED BY THE ENGINEER AND AS INDICATED IN THE CONTRACT.
2. INSTALL ROADWAY SIGNING WHERE INDICATED ON PROPOSED SIGN SUPPORTS AS LISTED THAN 14 DAYS PRIOR TO CHANGE TO THE BOTTOM OF THE SIGN. ALL SIGNS MOUNTED AT LEAST ONE SEVEN FOOT FROM THE EDGE OF THE TRAVEL LANE OR SHOULDER WITH STATED DISTANCES AND AS DIRECTED BY THE ENGINEER. ALL SIGNS MOUNTED ON TEMPORARY SUPPORTS SHALL BE FREE FROM ANY OBSTRUCTIONS THAT MAY OBSCURE THE SIGN FACE FROM VIEW. ALL SIGNS SHALL BE PLACED PERPENDICULAR TO THE SURFACE OF THE ROADWAY.
3. ROADWAY SIGNING SHALL BE PLACED ON THE RIGHT SIDE OF THE TRAVEL AREA OF A MULTI-LANED ROADWAY WHERE SIGNS WITH A STANDARDIZED ORDERED MESSAGE, WHERE INSTALLED ON EXISTING, REFLECTORIZED, WHITE INCLUSIVE POST SIGN LINE AND WHITE, REFLECTORIZED, YELLOW

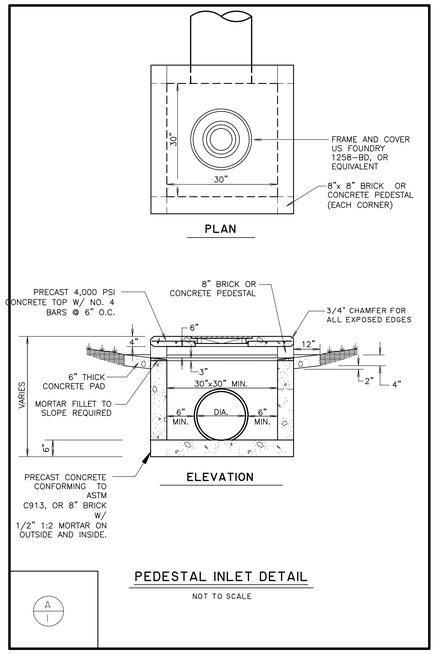

PEDESTAL INLET DETAIL

NOT TO SCALE

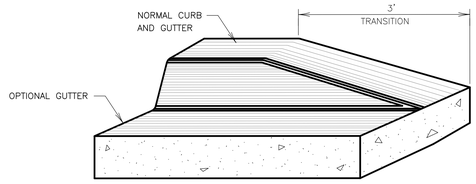

FEATHERING OF CURB AND GUTTER DETAIL

NOT TO SCALE

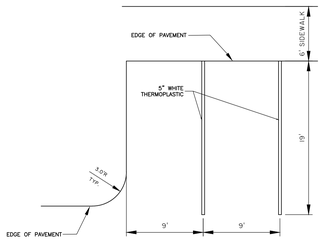

TYPICAL PARKING DETAIL

NOT TO SCALE

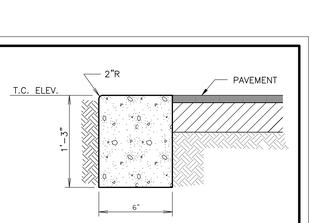

NOTES:
1. ALL CONCRETE SHALL BE 3,000 PSI.
2. PROVIDE CONTROL JOINTS EVERY TEN FEET (10').
3. PROVIDE EXPANSION JOINTS EVERY FIFTY FEET (50).
4. PROVIDE EXPANSION JOINT WHERE CURB ABUTS SIDEWALKS, OR OTHER STRUCTURES.
5. PROVIDE LIGHT BROOM FINISH.

FLUSH HEADER CURB

NOT TO SCALE

P24
OCT. 2008
THOMAS & HUTTON ENGINEERING CO.

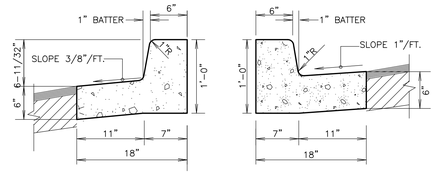

NOTES:
1. ALL CONCRETE SHALL BE 3,000 PSI.
2. PROVIDE CONTROL JOINTS EVERY TEN FEET (10').
3. PROVIDE EXPANSION JOINTS EVERY FIFTY FEET (50).
4. PROVIDE EXPANSION JOINT WHERE CURB ABUTS SIDEWALKS, OR OTHER STRUCTURES.
5. PROVIDE LIGHT BROOM FINISH.

18" STANDARD CURB & GUTTER

NOT TO SCALE

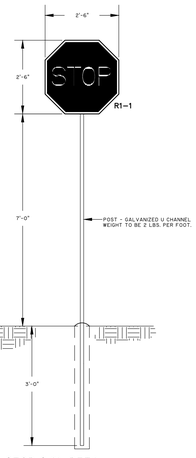

STOP SIGN DETAIL

NOT TO SCALE

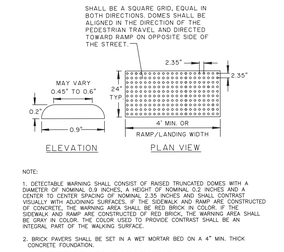

NOTE:
1. DETECTABLE WARNING SHALL CONSIST OF RAISED TRUNCATED DOMES WITH A DIAMETER OF NOMINAL 0.9 INCHES, A HEIGHT OF NOMINAL 0.2 INCHES AND A CENTER TO CENTER SPACING OF NOMINAL 2.35 INCHES AND SHALL CONTRAST VISUALLY WITH ADJOINING SURFACES. IF THE SIDEWALK AND RAMP ARE CONSTRUCTED OF CONCRETE, THE WARNING AREA SHALL BE RED BRICK IN COLOR. IF THE SIDEWALK AND RAMP ARE CONSTRUCTED OF RED BRICK, THE WARNING AREA SHALL BE GRAY IN COLOR. THE COLOR USED TO PROVIDE CONTRAST SHALL BE AN INTEGRAL PART OF THE WALKING SURFACE.
2. BRICK PAVERS SHALL BE SET IN A WET MORTAR BED ON A 4" MIN. THICK CONCRETE FOUNDATION.

DETECTABLE WARNING DETAIL

NOT TO SCALE

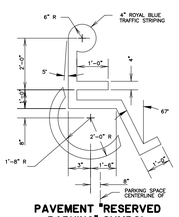

PAVEMENT "RESERVED PARKING" SYMBOL

NOT TO SCALE

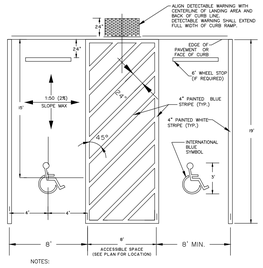

NOTES:
1. STRIPING AND CONSTRUCTION SHALL CONFORM TO ALL APPLICABLE FEDERAL, STATE AND LOCAL CODES AND SPECIFICATIONS.
2. 2% MAXIMUM SLOPE IN ALL DIRECTIONS WITHIN ACCESSIBLE PARKING SPACE AND ACCESS AISLE.
3. ONE IN EVERY 8 ACCESSIBLE SPACES SHALL BE SERVED BY AN 8' WIDE ACCESS AISLE AND SHALL BE DESIGNATED "VAN ACCESSIBLE". THESE ARE NOTED ON SHEET C4.1.

ACCESSIBLE PARKING SPACE STRIPING DETAIL

NOT TO SCALE

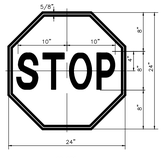

COLORS
LEGEND – WHITE REFLECTORIZED PAINT
BACKGROUND – RED REFLECTORIZED PAINT

STOP SIGN

NOT TO SCALE

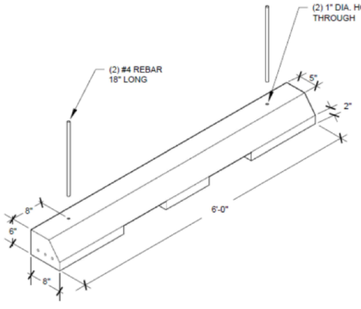

SECTION

WHEEL STOP DETAIL

NOT TO SCALE

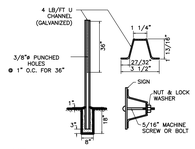

NOTE:
POST SHALL BE CAREFULLY CLEANED AND PHOSPHATED. IMMEDIATELY AFTER PHOSPHATING POST SHALL BE COATED WITH A MODIFIED POLYESTER PAINT BY ELECTRODEPOSITION AND THEN THOROUGHLY BAKED. COLOR IS PERMA-GREEN PER FED. STANDARD 595-A COLOR #14109 (DARK LIMIT V-)

SIGN POST DETAIL

NOT TO SCALE

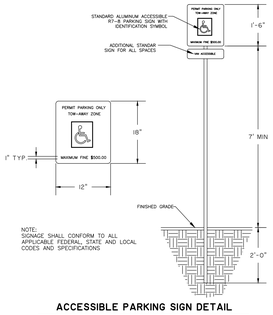

NOTE:
SIGNAGE SHALL CONFORM TO ALL APPLICABLE FEDERAL, STATE AND LOCAL CODES AND SPECIFICATIONS

ACCESSIBLE PARKING SIGN DETAIL

NOT TO SCALE



NO PARKING/ FIRE ACCESS LANE SIGN

NOT TO SCALE

NON TRAFFIC INSTALLATION

DRAIN BASIN

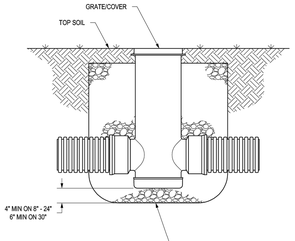

THE BACKFILL MATERIAL SHALL BE CRUSHED STONE OR OTHER GRANULAR MATERIAL MEETING THE REQUIREMENTS OF CLASS I, CLASS II, OR CLASS III MATERIAL AS DEFINED IN ASTM D2321. BEDDING & BACKFILL FOR SURFACE DRAINAGE INLETS SHALL BE PLACED & COMPACTED UNIFORMLY IN ACCORDANCE WITH ASTM D2321.

INLINE DRAIN

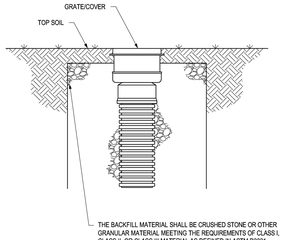

THE BACKFILL MATERIAL SHALL BE CRUSHED STONE OR OTHER GRANULAR MATERIAL MEETING THE REQUIREMENTS OF CLASS I, CLASS II, OR CLASS III MATERIAL AS DEFINED IN ASTM D2321. BEDDING & BACKFILL FOR SURFACE DRAINAGE INLETS SHALL BE PLACED & COMPACTED UNIFORMLY IN ACCORDANCE WITH ASTM D2321.

THIS PRINT DISCLOSES SUBJECT MATTER IN WHICH NYLOPLAST HAS PROPRIETARY RIGHTS. THE RECEIPT OR POSSESSION OF THIS PRINT DOES NOT CONFER, TRANSFER, OR LICENSE THE USE OF THE DESIGN OR TECHNICAL INFORMATION SHOWN HEREIN. REPRODUCTION OF THIS PRINT OR ANY INFORMATION CONTAINED HEREIN, OR MANUFACTURE OF ANY ARTICLE HEREFROM, FOR THE DISCLOSURE TO OTHERS IS FORBIDDEN, EXCEPT BY SPECIFIC WRITTEN PERMISSION FROM NYLOPLAST.

DRAWN BY CJA	MATERIAL	Nyloplast	3128 VERONA AVE BUFORD, GA 30518 PHN (770) 932-2443 FAX (770) 932-2490 www.nyloplast-us.com
DATE 9-30-09			
REVISED BY NMH	PROJECT NO./NAME	TITLE	DRAIN BASIN & INLINE DRAIN NON TRAFFIC INSTALLATION
DATE 03-11-16			
DWG SIZE A	SCALE 1:25 SHEET 1 OF 1	DWG NO.	7001-110-111 REV E

TETRA TECH
www.tetratech.com
240 Continental Drive, Suite 200
Newark, DE 19713
Tel: 302.738.7551 Fax: 302.454.5989

SOUTH CAROLINA PROFESSIONAL ENGINEER No. 33570 Matthew DeSisto

MARK	DATE	DESCRIPTION	BY
01	07/18/24	REVISED DISTRICT METHOD, SUBMITTAL FOR DSP REVIEW & APPROVAL	TJH
02	09/11/24	ISSUED FOR BID	TJH
03	10/08/24	ADDED ADA CONSTRUCTION DOCUMENTS SHEET	TJH

BARNWELL SCHOOL DISTRICT
OWNER
770 HAGOOD AVE
BARNWELL, SC 29812
Tel: 803 541 1300

TETRA TECH
ARCHITECT
MECHANICAL ENGINEER
PLUMBING ENGINEER
ELECTRICAL ENGINEER
240 CONTINENTAL DR
NEWARK, DE 19713
302 738 7551

THOMAS & HUTTON
CIVIL ENGINEER
1501 MAIN ST.
COLUMBIA, SC 29201
Tel: 803 451 0200

ZZ CONSULTING
STRUCTURAL ENGINEER
640 S. STATE ST.
SHELLEY, ID 83274
Tel: 208 357 5404

BARNWELL SCHOOL DISTRICT
BARNWELL COUNTY MULTI-USE SAFE ROOM
PAVING, GRADING, & DRAINAGE DETAILS

Project No.: 28810.0000
Designed By: MCL
Drawn By: MCL
Checked By: MGD

C-803

Copyright: Tetra Tech

C:\28810.0000\Engineering\Drawings\Construction Plans\DD Plans\28810.0000 - PGD DT.dwg - Jan 26, 2021 - 11:28:24 AM

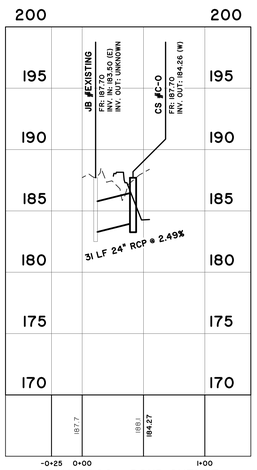

28810.0000 - POND OUTLET

STATIONS: -0+25 - 1+00

SCALE: HORZ.: 1" = 50'

VERT.: 1" = 5'

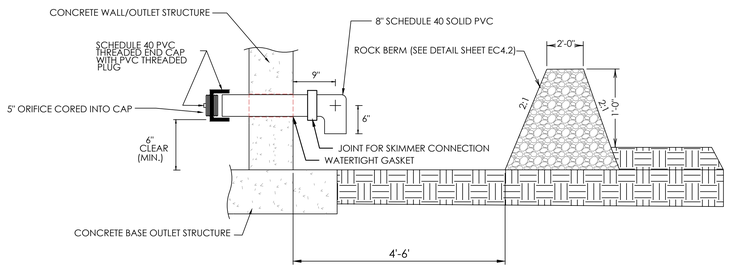

WATER QUALITY (WQ)

ORIFICE END-CAP AND ROCK BERM

NOT TO SCALE

NOTES:

1. OUTLET CONTROL STRUCTURE TO BE WATERTIGHT
2. LID TO BE ACCESSIBLE AND LOCKABLE
3. INTERIOR & EXTERIOR STEPS REQUIRED FOR MAINTENANCE ACCESS
4. STONE BEDDING AND SUBBASE TO BE COMPACTED AS OUTLINED IN SECTION 02720 OF THE SPECIFICATIONS
5. BOTTOM OF STRUCTURE TO BE GROUTED TO REDUCE STANDING WATER.

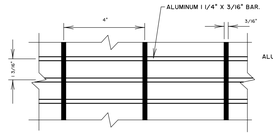

TOP BAR GRATING DETAIL

(SIDE SIMILAR EXCEPT FOR OPENING DIMENSION)

NOT TO SCALE

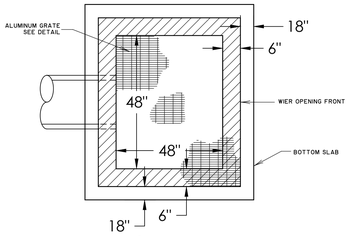

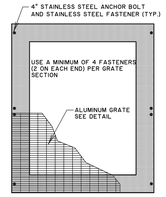

NOTES:

1. USE ALUMINUM I 1/4" X 3/16" BAR GRATING.
2. SECURE GRATE WITH 4" STAINLESS STEEL ANCHOR BOLTS AND STAINLESS STEEL FASTENERS DESIGNED TO HOLD BAR GRATING.
3. SHADED AREA CORRESPONDS TO TOP OF PRECAST CONCRETE BOX.

OUTFALL STRUCTURE GRATE

NOT TO SCALE

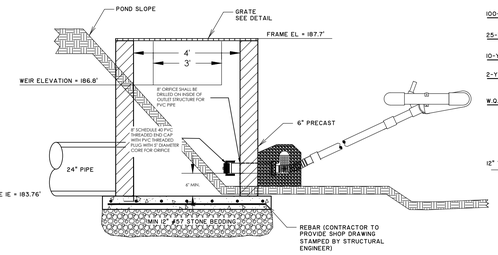

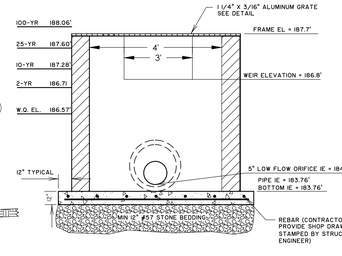

OUTLET CONTROL STRUCTURE NOTES:

1) WEIR TO BE LOCATED ON ONE FRONT AND ONE SIDE OF BOX
2) UPON STABILIZATION REMOVE SKIMMER AND REPLACE WITH PERFORATED PIPE. REFRESH GRAVEL

CONTROL STRUCTURE #C-0

NOT TO SCALE

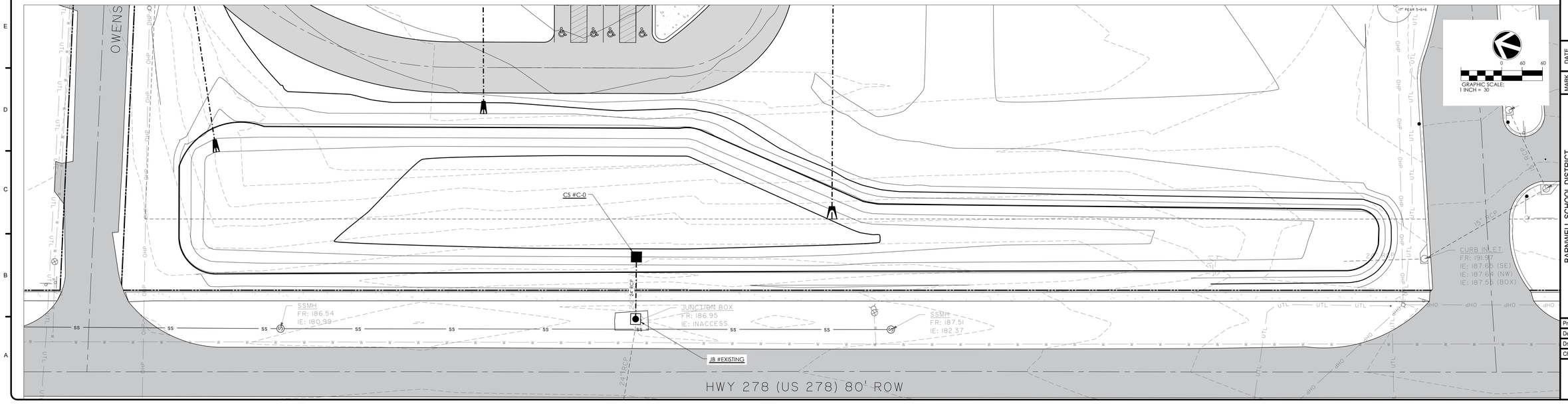

TETRA TECH
www.tetratech.com
240 Continental Drive, Suite 200
Newark, DE 19713
Fax: 302.454.3989
Tel: 302.738.7551

SOUTH CAROLINA LICENSED PROFESSIONAL ENGINEER No. 39515 MATTHEW G. DESOUK

BARNWELL SCHOOL DISTRICT
OWNER
770 HAGOOD AVE.
BARNWELL, SC 29812
Tel: 803 541 1300

TETRA TECH
ARCHITECT
MECHANICAL ENGINEER
PLUMBING ENGINEER
ELECTRICAL ENGINEER
240 CONTINENTAL DR
NEWARK, DE 19713
302 738 7551

THOMAS & HUTTON
CIVIL ENGINEER
1501 MAIN ST.
COLUMBIA, SC 29201
Tel: 803 451 0200

ZZ CONSULTING
STRUCTURAL ENGINEER
640 S. STATE ST.
SHELLEY, ID 83274
Tel: 208 357 5404

MARK	DATE	DESCRIPTION	BY
03	05/2025	ADDED POND DETAIL SHEET TO PLAN SET	TEH
02	09/2024	ISSUED FOR BID	TEH
01	7/2024	ISSUED FOR CONSTRUCTION DOCUMENTS SET	TEH

BARNWELL SCHOOL DISTRICT

BARNWELL COUNTY MULTI-USE SAFE ROOM

POND DETAILS

Project No.:	28810.0000
Designed By:	CVJ
Drawn By:	CVJ
Checked By:	MGD

C-804

Z:\28810\28810.0000\ENGINEERING\DRAWINGS\CONSTRUCTION PLANS\28810.0000 - POND-DT.DWG

NOTE:
NO BUS OR CAR STACKING
IN USE AT THIS SITE

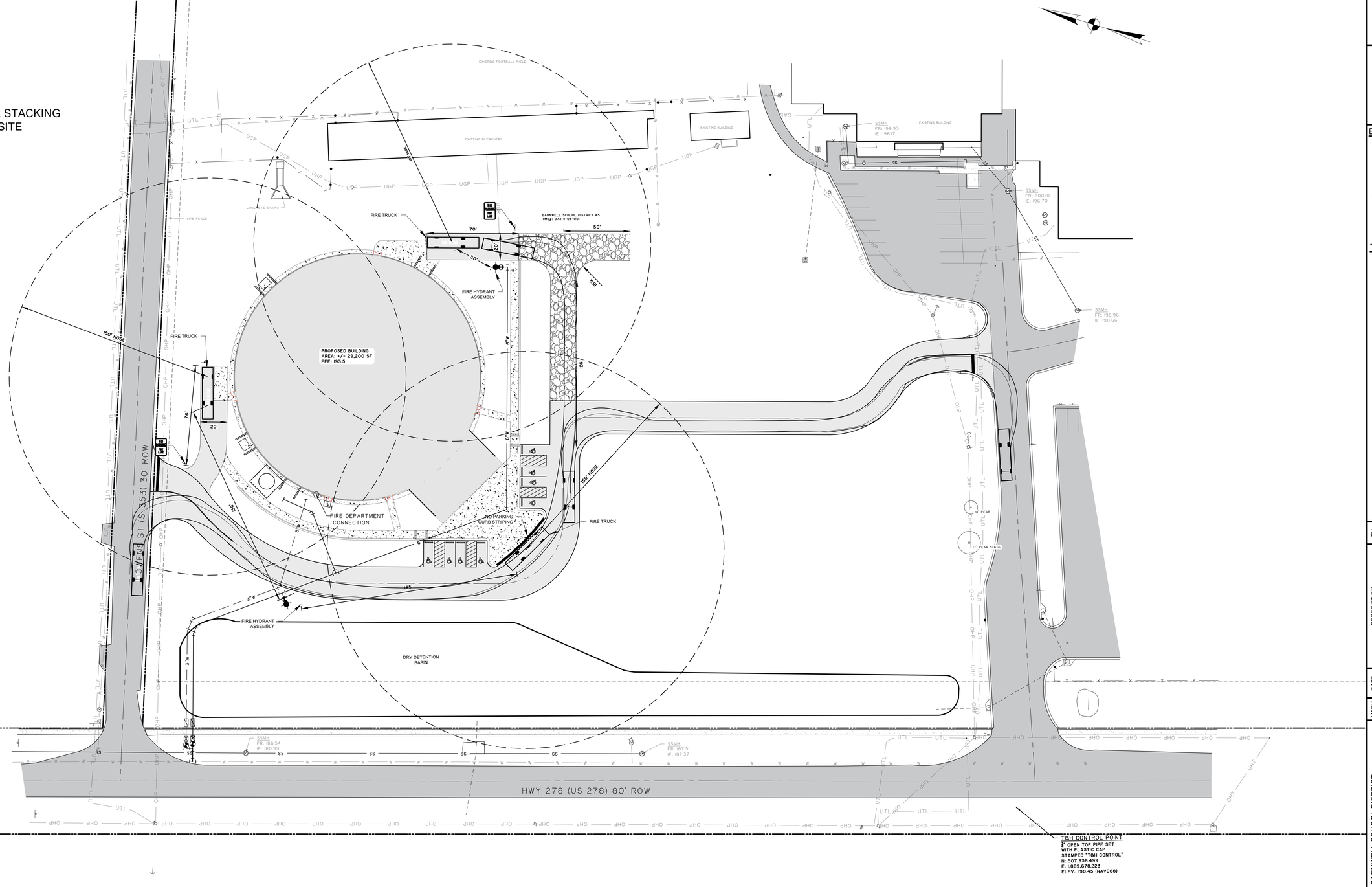

TETRA TECH
www.tetratech.com
240 Continental Drive, Suite 200
Newark, DE 19713
Tel: 302.738.7551 Fax: 302.454.5989

SOUTH CAROLINA LICENSED PROFESSIONAL ENGINEER No. 34545 MARK DeSOUZA

BARNWELL SCHOOL DISTRICT
OWNER
770 HAGOOD AVE
BARNWELL, SC 29812
Tel: 803 541 1300

TETRA TECH
ARCHITECT
MECHANICAL ENGINEER
PLUMBING ENGINEER
ELECTRICAL ENGINEER
240 CONTINENTAL DR
NEWARK, DE 19713
302 738 7551

THOMAS & HUTTON
CIVIL ENGINEER
1501 MAIN ST.
COLUMBIA, SC 29201
Tel: 803 451 0200

ZZ CONSULTING
STRUCTURAL ENGINEER
640 S. STATE ST.
SHELLEY, ID 83274
Tel: 208 357 5404

MARK	DATE	DESCRIPTION	BY
01	07/18/24	REVISED CONSTRUCTION DOC. SUBMITTAL FOR OSF REVIEW & APPROVAL	T&H
03	09/11/24	ISSUED FOR BID	T&H
04	12/06/24	ISSUED FOR CONSTRUCTION CONFORMANCE SET	T&H

BARNWELL SCHOOL DISTRICT
BARNWELL COUNTY MULTI-USE SAFE ROOM

FIRE TRUCK ACCESS PLAN

Project No.:	28810.0000
Designed By:	MCL
Drawn By:	MCL
Checked By:	MGD

C-900

Copyright: Tetra Tech

810.0000\Engineering\Drawings\Construction Plans\28810.0000 - Fire Truck Access Plan.dwg - Jul 30, 2021 - 11:40:25 AM

GENERAL

1. THE PRIMARY PURPOSE OF THESE STRUCTURAL DRAWINGS IS TO PROVIDE SAFETY THROUGH STRENGTH AND STABILITY, NOT NECESSARILY TO PREVENT ALL DAMAGE OR MAINTAIN NON-ESSENTIAL SERVICE FUNCTIONS.

2. THESE DRAWINGS DO NOT NECESSARILY SHOW PRECISE CONDITIONS. IT IS ASSUMED THAT CONSTRUCTION WILL BE PERFORMED BY CONTRACTORS EXPERIENCED IN THE TYPES OF WORK INVOLVED IN THIS PROJECT AND THAT HAVE A WORKING KNOWLEDGE OF THE APPLICABLE CODES, STANDARDS, AND CORRECT INDUSTRY ACCEPTED PRACTICES. WHERE EXACT CONDITIONS ARE NOT SHOWN, CONSTRUCTION SHALL BE OF THE SAME TYPE AND CHARACTER AS SHOWN FOR SIMILAR CONDITIONS, SUBJECT TO REVIEW OF THE STRUCTURAL ENGINEER. WHERE CONFLICTS BETWEEN GENERAL REQUIREMENTS AND SPECIFIC REQUIREMENTS OCCUR ON THESE DRAWINGS, THE SPECIFIC REQUIREMENTS SHALL APPLY.

3. THESE DRAWINGS REPRESENT THE FINISHED STRUCTURE AND, UNLESS NOTED OTHERWISE, ARE NOT INTENDED TO SPECIFY CONSTRUCTION OR FABRICATION MEANS, METHODS, TECHNIQUES, SEQUENCES, PROCEDURES, COORDINATION OF WORK, SHORING, TEMPORARY BRACING, FORM-WORK, ETC. IT IS THE CONTRACTOR'S RESPONSIBILITY TO ADEQUATELY BRACE THE STRUCTURE AGAINST WIND, SEISMIC, AND SOIL PRESSURE FORCES UNTIL THE STRUCTURE IS COMPLETE. WEIGHTS OF CONSTRUCTION MATERIALS ON FINISHED FLOORS AND ROOFS SHALL NOT EXCEED LIVE LOADS INDICATED ON THESE DRAWINGS.

4. DESIGN OF MISCELLANEOUS OR PREFABRICATED ITEMS SUCH AS STAIRS, LADDERS, RAILINGS, PARTITION WALLS, AND TRUSSES ARE NOT INCLUDED AND SHALL BE PROVIDED BY OTHERS.

5. THE STRUCTURAL ENGINEER SHALL REVIEW AND APPROVE CONTRACTOR SUBMITTALS SUCH AS SHOP DRAWINGS AND PRODUCT DATA FOR ITEMS SUCH AS PREFABRICATED COMPONENTS AND SPECIALTY ITEMS, BUT ONLY FOR GENERAL CONFORMANCE WITH STRUCTURAL INFORMATION GIVEN IN THE CONTRACT DOCUMENTS. SUBMITTALS SHALL INCLUDE ITEMS REQUIRED IN THE GENERAL STRUCTURAL NOTES. ITEMS DESIGNED BY A SPECIALTY ENGINEER SHALL INCLUDE STAMPED DRAWINGS AND CALCULATIONS. REVIEW SHALL NOT NECESSARILY INCLUDE DIMENSIONS, QUANTITIES, WEIGHTS, CONSTRUCTION OR FABRICATION MEANS, METHODS, TECHNIQUES, SEQUENCES, OR PROCEDURES, OR COORDINATION OF WORK WITH OTHER TRADES. REVIEW SHALL BE LIMITED TO DETERMINING THAT ITEMS ARE COMPATIBLE WITH THE PRIMARY STRUCTURAL SYSTEM AND NOT FOR ADEQUACY OF THE ITEM. THE CONTRACTOR IS SOLELY RESPONSIBLE FOR COMPLIANCE WITH CONTRACT DOCUMENTS.

6. SITE VISITS BY THE STRUCTURAL ENGINEER SHALL IN NO WAY CONSTITUTE INSPECTION. ALL REQUIRED INSPECTIONS SHALL BE PROVIDED BY THE BUILDING DEPARTMENT OR A QUALIFIED INDEPENDENT INSPECTION AGENCY.

7. THE CONTRACTOR SHALL BE RESPONSIBLE FOR VERIFICATION OF ALL DIMENSIONS AND ELEVATIONS WITH THE ARCHITECTURAL DRAWINGS, VERIFICATION OF ALL EXISTING CONDITIONS SHOWN, AND VERIFICATION OF INFORMATION TO BE COORDINATED WITH OTHERS. THE CONTRACTOR SHALL REPORT ANY UNCLEAR INFORMATION AND DISCREPANCIES WITH ARCHITECTURAL DRAWINGS OR OTHER REQUIREMENTS.

8. PRODUCTS AND MATERIALS SHALL BE PLACED, ERECTED, AND INSTALLED IN ACCORDANCE WITH MANUFACTURER RECOMMENDATIONS, MINIMUM CODE REQUIREMENTS, AND CORRECT INDUSTRY ACCEPTED PRACTICES, UNLESS NOTED OTHERWISE IN THESE DRAWINGS.

BASIS FOR DESIGN

STORM SAFE ROOM

1. BUILDING CODE: 2021 INTERNATIONAL BUILDING CODE
   2021 SOUTH CAROLINA STATE BUILDING CODE
   ICC-500-2020, HURRICANE SHELTER
   FEMA P-361

2. ROOF LOAD: 50 PSF LL
   15 PSF COLLATERAL PLUS ACTUAL ROOF WEIGHT

3. WIND: 160 MPH BASIC WIND SPEED (V_{ult})
   RISK CATEGORY IV, EXPOSURE C
   K_{zt} = 1.0, K_d = 1.0
   INTERNAL PRESSURE COEFF+ +/- 0.55

4. SEISMIC: Ie=1.25, RISK CATEGORY IV
   S_s=0.34g, S_1=0.11g, S_{DS}=0.347g, S_{D1}=0.182g
   SITE CLASS D, DESIGN CATEGORY C
   EQUIVALENT LATERAL FORCE PROCEDURE
   BASE SHEAR=0.078W
   R=5.0

5. IMPACT CRITERIA: 9 LB 2x4 PROJECTILE
   80 MPH VERTICAL SURFACES
   16 MPH HORIZONTAL SURFACES

ENTRY STRUCTURE

1. BUILDING CODE: 2021 INTERNATIONAL BUILDING CODE
   2021 SOUTH CAROLINA BUILDING CODE

2. ROOF LOAD: 20 PSF LIVE LOAD
   15 PSF DEAD LOAD

3. WIND: 130 MPH BASIC WIND SPEED (3 SECOND GUST)
   RISK CATEGORY III, EXPOSURE C
   INTERNAL PRESSURE COEFF+ +/- 0.18

4. SEISMIC: Ie=1.25, RISK CATEGORY= III
   S_s=0.34g, S_1=0.11g, S_{DS}=0.347g, S_{D1}=0.182g
   SITE CLASS D, DESIGN CATEGORY C
   EQUIVALENT LATERAL FORCE PROCEDURE
   BASE SHEAR=0.145g
   R=3.0

FOUNDATION

1. FOUNDATIONS HAVE BEEN DESIGNED IN ACCORDANCE WITH RECOMMENDATIONS PROVIDED BY TERRACON REPORT NO. 73205003 , DATED MARCH 16, 2021.

2. ALL SOIL PREPARATION RECOMMENDATIONS OF GEOTECHNICAL REPORT AND UPDATE LETTERS, INCLUDING EXCAVATION, GRADING, FILL, COMPACTION, MOISTURE BARRIER, TESTING, APPROVALS, OBSERVATIONS, AND INSPECTIONS SHALL BE COMPLETED PRIOR TO CONSTRUCTION OF FOUNDATIONS.

3. ALLOWABLE DEAD PLUS LIVE LOAD SOIL BEARING PRESSURE = 2,500 PSF, PER GEOTECHNICAL REPORT.

4. TRENCHES AND EXCAVATIONS ADJACENT TO FOUNDATIONS SHALL BE PROPERLY BACKFILLED AND COMPACTED.

5. ALL DISTURBED SOIL, WATER AND DEBRIS SHALL BE REMOVED FROM FOOTING EXCAVATIONS PRIOR TO CONCRETE PLACEMENT.

WIND COMPONENT AND CLADDING

1. PRESSURES SHOWN ARE ASD

2. NEGATIVE PRESSURE ACTS AWAY FROM BUILDING SURFACE. POSITIVE PRESSURE ACTS TOWARDS BUILDING SURFACE.

STORM SHELTER

WIND PRESSURE (PSF)	10 SF	20 SF	50 SF	100 SF
WALL AT LEAST 6'-0" AWAY FROM ANY CORNER	-107.96	-99.93	-85.68	-81.65
WALL WITHIN 6'-0" OF ANY CORNER	-121.96	-114.93	-106.68	-99.65
ROOF AT LEAST 73'-0" AWAY FROM EDGE	-30.65	-30.65	-30.65	-30.65
ROOF WITHIN 73'-0" OF FROM EDGE	+/-30	+/-30	+/-30	+/-30

ENTRY STRUCTURE

WIND PRESSURE (PSF)	10 SF	20 SF	50 SF	100 SF
WALL AT LEAST 5'-0" AWAY FROM ANY CORNER	-37.34	-36.33	-34.31	-32.29
WALL WITHIN 5'-0" OF ANY CORNER	-46.34	-43.33	-39.31	-36.29

SEE SHEET S-115 FOR ROOF UPLIFT PRESSURES

CONCRETE

1. ALL CONCRETE CONSTRUCTION SHALL BE PERFORMED IN ACCORDANCE WITH ACI 318 AND ACI 301, EXCEPT AS MODIFIED BY THE CONSTRUCTION DOCUMENTS.

2. MINIMUM 28-DAY CONCRETE STRENGTH, f'c, MAXIMUM NOMINAL AGGREGATES SIZE AND WATER TO CEMENTATION MATERIAL RATIO SHALL BE AS NOTED BELOW. ALL CONCRETE PERMANENTLY EXPOSED TO WEATHER SHALL HAVE AN AIR ENTRAINMENT OF 4% TO 6%.

CONCRETE USE	STRENGTH (PSI)	AGGREGATE SIZE	WATER TO CEMENT RATIO
FOUNDATION WALLS AND SLAB ON GRADE	4000	3/4" MAX.	0.45
FOOTINGS AND PIERS	4000	3/4" MAX.	0.45
CONCRETE OVER STEEL DECK	4000	1/2" MAX.	0.5

3. CONCRETE MIXES SHALL BE DESIGNED BY A CERTIFIED LABORATORY AND APPROVED BY THE ENGINEER. MIX DESIGNS FOR CONCRETE SLABS SHALL BE PROPORTIONED SO AS TO MINIMIZE SHRINKAGE.

4. ALL CONCRETE SHALL BE NORMAL WEIGHT OF 145 POUNDS PER CUBIC FOOT USING HARDROCK AGGREGATES.

5. WATER SOLUBLE CHLORIDE ION CONCENTRATIONS IN CONCRETE SHALL BE LIMITED PER ACI 318, SECTION 19.3, EXPOSURE CLASS "C1".

6. ALL CONCRETE EXPOSED TO FREEZE/THAW CYCLES OR DEICING CHEMICALS SHALL CONFORM TO ACI 318, SECTION 19.3.2.1, EXPOSURE CLASS "F1".

7. MAX. SLUMP SHALL BE 5 INCHES, (EXCEPTION: WHERE ADMIXTURES OR PLASTICIZERS, ETC. HAVE BEEN INCLUDED IN MIX DESIGN TO IMPROVE WORKABILITY, SLUMP LIMIT SHALL BE BASED ON ADMIXTURE MFR'S RECOMMENDATIONS). WATER SHALL BE CLEAN AND POTABLE.

8. PORTLAND CEMENT SHALL CONFORM TO ASTM C-150, TYPE I OR II CEMENT SHALL BE USED. CEMENT SHALL BE TYPE V WITH POZZOLAN WHERE CONCRETE IS IN CONTACT WITH SOIL CONTAINING VERY SEVERE SULFATE EXPOSURE.

9. CONCRETE MIXING, PLACEMENT AND QUALITY SHALL BE PER ACI 304, MECHANICALLY VIBRATE ALL CONCRETE WHEN PLACED. SLABS ON GRADE NEED TO BE VIBRATED ONLY AROUND AND UNDER FLOOR DUCTS OR SIMILAR ELEMENTS. REMOVE ALL DEBRIS FROM FORMS BEFORE PLACING CONCRETE. CONCRETE SHALL NOT BE DROPPED THROUGH REINFORCING STEEL SO AS TO CAUSE SEGREGATION OF AGGREGATES. UNCONFINED FALL OF CONCRETE SHALL NOT EXCEED 5 FEET.

10. ALL ITEMS TO BE CAST IN CONCRETE SUCH AS REINFORCING, DOWELS, BOLTS, ANCHORS, SLEEVES, ETC. SHALL BE SECURELY POSITIONED IN THE FORMS.

11. PROTECT CONCRETE FROM DAMAGE OR REDUCED STRENGTH DUE TO COLD OR HOT WEATHER IN ACCORDANCE WITH ACI 305 AND 306. CONTRACTOR SHALL TAKE SPECIAL CURING PRECAUTIONS TO MINIMIZE SHRINKAGE CRACKING OF CONCRETE SLABS.

12. CONCRETE SHALL BE CURED IN ACCORDANCE WITH ACI 318, SECTIONS 5.11 OR 5.12, WHICHEVER IS APPLICABLE UNLESS ALTERNATE METHODS HAVE BEEN APPROVED BY THE ARCHITECT AND ENGINEER. WHERE CURING COMPOUNDS HAVE BEEN APPROVED FOR SLAB CURING, CONTRACTOR SHALL BE RESPONSIBLE FOR VERIFYING COMPATIBILITY OF COMPOUNDS WITH ANTICIPATED FLOOR FINISH (e.g., RESILIENT TILE) PRIOR TO CURING COMPOUND APPLICATION.

13. SHOTCRETE:
   A. MINIMUM 28-DAY STRENGTH, f'c, SHALL BE 4000 PSI.
   B. SHOTCRETE PROPORTIONS SHALL BE SELECTED TO ACHIEVE STRENGTH REQUIREMENTS AND ALLOW PROPER PLACEMENT, COARSE AGGREGATE, IF USED, SHALL NOT EXCEED 3/8".
   C. ANY REBOUND OR ACCUMULATED LOOSE AGGREGATE SHALL BE REMOVED FROM THE SURFACES TO BE COVERED PRIOR TO PLACING THE INITIAL OR ANY SUCCEEDING LAYERS OF SHOTCRETE. REBOUND SHALL NOT BE REUSED AS AGGREGATE.
   D. SHOTCRETE PLACEMENT AND QUALITY SHALL BE PER ACI 506 AND ICBO ER-1131.

ANCHORED VENEER

1. ALL STEEL LINTELS, ANCHORS, AND HARDWARE SUPPORTING VENEER SHALL BE HOT-DIP GALVANIZED.

2. VENEER ANCHORS SHALL BE IN COMPLIANCE WITH ACI 530/ASCE 5/TMS 402 SECTION 6.2.2.5. PROVIDE AT LEAST ONE ANCHOR FOR EVERY 2.0 SQUARE FEET OF WALL AREA. SPACE ANCHORS AT A MAXIMUM OF 32"o.c. HORIZONTALLY AND 16"o.c. VERTICALLY. SPACE ANCHORS WITHIN 12" OF THE EDGE OF OPENINGS. ATTACH TO WOOD STUDS WITH (2) NO. 8 x 1 1/2" WOOD SCREWS (MIN.).

3. PROVIDE CONTINUOUS SINGLE WIRE JOINT REINFORCEMENT OF W1.7 (MIN.) WIRE SIZE AT A MAXIMUM OF SPACING OF 18"o.c. VERTICALLY. VENEER ANCHORS SHALL ENGAGE HORIZONTAL REINFORCEMENT.

4. VENEER SYSTEM SHALL BE DESIGNED TO RESIST WATER PENETRATION INTO THE STRUCTURE. JOINTS SHALL BE PROVIDED TO ACCOMMODATE DIFFERENTIAL MOVEMENT.

MASONRY

1. UNLESS NOTED OTHERWISE, MASONRY SHALL BE MEDIUM WEIGHT LOADBEARING CONCRETE MASONRY UNITS CONFORMING TO ASTM C90 PLACED IN RUNNING BOND. CONSTRUCTION SHALL COMPLY WITH IBC 2104.

2. MORTAR SHALL CONFORM TO ASTM C270 AND SHALL CONFORM TO ACI 530.1 TABLE 2, 1,900 PSI.

3. GROUT SHALL CONFORM TO ARTICLE 2.2 OF TMS 602/ACI 530.1/ASCE 6, 2,000 PSI MIN. SUFFICIENT WATER SHALL BE USED TO ALLOW GROUT TO FLOW INTO ALL JOINTS WITHOUT SEGREGATION. SOLID GROUT ALL CELLS CONTAINING REINFORCING. HOLD GROUT DOWN 1 1/2" BELOW MORTAR JOINT AT GROUT LIFT JOINTS.

4. MINIMUM ALLOWABLE MASONRY COMPRESSIVE STRENGTH, f'm, FOR MASONRY SHALL BE 1900 PSI. ALL CMU, GROUT, AND MORTAR SHALL CONFORM TO IBC 2105.2 TO ACHIEVE SPECIFIED COMPRESSIVE STRENGTH.

5. CONTRACTOR SHALL SUBMIT INFORMATION FOR REVIEW PRIOR TO CONSTRUCTION, INCLUDING TEST DATA AND MIX DESIGNS SHOWING THAT MASONRY CONFORMS TO STANDARDS, PLANS, AND CODE REQUIREMENTS.

6. REINFORCING BARS AND ANCHORS SHALL BE SECURELY TIED TO PREVENT DISPLACEMENT FROM PROPER POSITION.

7. MINIMUM VERTICAL WALL REINFORCING SHALL BE (1) #5 FULL-HEIGHT AT EDGE OF WALL OPENINGS, CORNERS, ENDS, EITHER SIDE OF CONTROL JOINTS, AND AT 32" o.c. PROVIDE DOWELS TO FOUNDATION TO MATCH AND LAP ALL VERTICAL WALL REINFORCING.

8. MINIMUM HORIZONTAL WALL REINFORCING SHALL BE (1) #5 AT TOP AND BOTTOM OF WALL OPENINGS, TOP OF PARAPET, FLOOR AND ROOF LINES, AND AT 32" o.c.

9. MOVEMENT JOINTS SHALL BE PROVIDED PER TYPICAL MASONRY WALL CONTROL JOINT DETAIL. JOINT LOCATIONS SHALL BE COORDINATED WITH ARCHITECT AND STRUCTURAL ENGINEER PRIOR TO CONSTRUCTION.

10. REFER TO TYPICAL DETAILS FOR TYPICAL OPENING IN MASONRY WALL, TYPICAL MASONRY WALL INTERSECTION, AND TYPICAL JAMB SCHEDULE.

REINFORCING STEEL

1. REINFORCING STEEL SHALL CONFORM TO REQUIREMENTS OF ASTM A615. REINFORCING SHALL BE GRADE 60 (FY = 60 KSI) DEFORMED BARS FOR ALL BARS #4 AND LARGER. REINFORCING MAY BE GRADE 40 (FY = 40 KSI) DEFORMED BARS FOR ALL #3 U.N.O. ON PLANS OR DETAILS. ALL REINFORCING TO BE WELDED SHALL BE ASTM A706, GRADE 60 LOW ALLOY WELDABLE STEEL.

2. WELDED WIRE FABRIC SHALL CONFORM TO THE REQUIREMENTS OF ASTM A185, LAPS IN WELDED WIRE FABRIC SHALL BE MADE SUCH THAT THE OVERLAP, MEASURED BETWEEN OUTERMOST CROSS WIRE OF EACH FABRIC SHEET, IS NOT LESS THAN THE SPACING OF CROSS WIRES PLUS 2 INCHES.

3. ALL DIMENSIONS SHOWING THE LOCATION OF REINFORCING STEEL NOT NOTED AS "CLEAR" OR "CLR" ARE TO CENTER OF STEEL. MIN. COVER FOR NON-PRESTRESSED CONCRETE REINFORCING SHALL BE AS FOLLOWS, U.N.O. ON PLANS OR DETAILS:

EXPOSURE CONDITION:	MINIMUM COVER :	TOLERANCES (+ / -) :
CAST AGAINST AND PERMANENTLY EXPOSED TO EARTH:	3"	3/8"
EXPOSED TO EARTH OR WEATHER: NO. 5 AND SMALLER: NO. 6 AND LARGER:	1 1/2" 2"	3/8" 3/8"
NOT EXPOSED TO WEATHER OR IN CONTACT WITH THE GROUND:		
ROOF SLAB STRUCTURAL SLABS AND WALLS BEAMS AND COLUMNS (PRIMARY REINFORCEMENT, TIES, STIRRUPS AND SPIRALS)	1" 3/4" 1 1/2"	1/8" 1/8" 3/8"
SLABS ON GRADE	1 1/2"	1/4"
SHELL ELEMENTS	3/4"	1/4"

4. LAP SPLICES OF REINFORCING STEEL IN THE SHELL SHALL BE ACCORDING TO THE LAP SCHEDULE BELOW. LAP SPLICES ARE BASED ON CLASS B SPLICES PER ACI 318. STAGGER LAP SPLICES A MIN. OF ONE LAP LENGTH. LAP SPLICES MAY BE CONTACT OR NON-CONTACT. WHERE NON-CONTACT SPLICES ARE USED, SPLICED BARS SHALL NOT BE SPACED MORE THAN 1/3 OF THE LAP LENGTH OR 6" APART, WHICHEVER IS SMALLER. NOT MORE THAN 1/3 OF THE REINFORCEMENT SHALL BE SPLICED AT ANY LOCATION. WHERE THIS CANNOT BE AVOIDED, USE INCREASED LAP LENGTH PER THE SCHEDULE BELOW.

SPLICE LENGTH

BAR	STANDARD LAP	INCREASED LAP
#3	18"	23"
#4	18"	23"
#5	23"	30"
#6	33"	43"
#7	51"	14"
#8	74"	96"
#9	94"	122"
#10	116"	150"
#11	142"	182"

5. IN THE DOME SHELL, HORIZONTAL BARS MAY BE FASTENED TO EITHER INSIDE OR OUTSIDE OF THE VERTICAL.

6. REINFORCEMENT BAR OF A DIFFERENT DIAMETER MAY BE SUBSTITUTED FOR THE SIZES INDICATED ONLY IF THE SUBSTITUTED BAR RESULTS IN THE SAME OR A GREATER CROSS SECTIONAL AREA. THE SPACING OF REBAR SHALL ALLOW PROPER CONCRETE PLACEMENT.

7. MECHANICAL SPLICE COUPLERS SHALL HAVE CURRENT ICC APPROVAL AND SHALL BE CAPABLE OF DEVELOPING 125% OF THE STRENGTH OF THE BAR.

8. ALL REINFORCING SHALL BE BENT COLD. BARS SHALL NOT BE UN-BENT AND RE-BENT. FIELD BENDING OF REBAR SHALL NOT BE ALLOWED UNLESS SPECIFICALLY NOTED.

9. VERTICAL DOWELS MAY BE BENT OVER ONE TIME PRIOR TO INFLATING FORM, STRAIGHTEN AND INCORPORATE INTO WALL REINFORCING LATER.

10. WIRE DEPTH GAGES SHALL BE INSTALLED IN A GRID PATTERN AS REQUIRED TO MAINTAIN AND CONTROL SHOTCRETE THICKNESS IN SHELL.

11. REINFORCING BAR SPACING SHOWN ON PLANS ARE MAX. ON CENTERS. ALL BARS SHALL BE DETAILED AND PLACED PER CRSI SPEC'S AND HANDBOOK. DOUEL ALL VERTICAL REINFORCING TO FOUNDATION. SECURELY TIE ALL BARS IN LOCATION BEFORE PLACING CONCRETE. MIN. CLEAR SPACING BETWEEN PARALLEL REINFORCEMENT SHALL BE THE LARGER OF 1-1/2 TIMES NOMINAL BAR DIA. OR 1-1/3 TIMES MAX. AGGREGATE SIZE OR 1-1/2".

AIRFORM CRITERIA

1. THE AIRFORM SHALL BE PVC IMPREGNATED IN A POLYESTER SCRIM AS MANUFACTURED BY SIEMENS, OR APPROVED EQUAL WITH THE FOLLOWING STRENGTH CHARACTERISTICS:

   1.1. TONGUE TEAR - 275 LBS MIN.
   1.2. TRAPEZOIDAL TEAR - 85 LBS MIN.
   1.3. GRAB TENSILE - 700 LBS MIN.
   1.4. STRIP TENSILE - 500 LBS MIN.
   1.5. FLAME RETARDANT: CFM TITLE 19 PR NFPA 701
   1.6. FABRIC WEIGHT SHALL BE 28 OZ PER SQUARE YARD MIN.

2. AFTER THE AIRFORM HAS BEEN INFLATED, BUT PRIOR TO DOME CONSTRUCTION, THE CONTRACTOR SHALL MEASURE THE INFLATED AIRFORM PROFILE FROM A UNIFORM HORIZONTAL DATUM. THE AIRFORM SHALL BE MEASURED IN TWO ORTHOGONAL DIRECTIONS, PASSING THROUGH THE CENTER OF THE DOME. MEASUREMENTS SHALL BE TAKEN 6 FEET o.c. THESE MEASUREMENTS SHALL BE OVERLAYED WITH THE DESIRED DOME SHAPE AND SUBMITTED TO THE ARCHITECT AND ENGINEER FOR APPROVAL PRIOR TO CONSTRUCTION.

STEEL

1. ALL DETAILING, FABRICATION, AND ERECTION SHALL CONFORM TO APPLICABLE AISC AND AWS SPECIFICATIONS AND CODES AND OSHA REQUIREMENTS.

2. THE FOLLOWING SPECIFICATIONS SHALL APPLY TO STEEL, UNLESS NOTED OTHERWISE:

SHAPE	SPECIFICATION, GRADE
ROLLED WIDE FLANGE	ASTM A992 (F_y=50 KSI, F_u=65 KSI)
BARS AND PLATES	ASTM A36 (F_y=36 KSI, F_u=58 KSI)
TUBES	ASTM A500 GRADE B (F_y=46 KSI, F_u=58 KSI)
PIPES	ASTM A53 GRADE B (F_y=35 KSI, F_u=60 KSI)
OTHER ROLLED SHAPES	ASTM A36 (F_y=36 KSI, F_u=58 KSI)
BOLTS	ASTM A325
WELDS	E70 OR E71T-8 SERIES ELECTRODES
ANCHOR BOLTS	ASTM A307 OR WELDABLE ASTM F1554

3. WELDS SHALL BE PER AWS SPECIFICATIONS. WELDS SHOWN AS SHOP WELDS MAY BE SHOP OR FIELD WELDS AT CONTRACTOR'S OPTION. ALL WELDS NOT NOTED, INCLUDING FOR STIFFENERS, MISC. PLATES, ETC., SHALL BE MINIMUM WELD SIZE PER AISC SPECIFICATION CHAPTER J.

4. ALL BOLTS SHALL BE SNUG-TIGHTENED BEARING TYPE X (THREADS EXCLUDED FROM SHEAR PLANE) UNLESS NOTED OTHERWISE. ALL HIGH STRENGTH BOLTS SHALL BE INSTALLED WITH NUTS CONFORMING TO ASTM A563 AND WASHERS CONFORMING TO ASTM F436.

5. HEADED STUDS SHALL BE NELSON HEADED ANCHORS (ICC ES ER-2614) OR APPROVED EQUIVALENT. STUDS SHALL BE AUTOMATICALLY END WELDED PER MANUFACTURER RECOMMENDATIONS FOR FULL CAPACITY.

6. GROUT BENEATH BEARING/BASE PLATES SHALL BE NONSHRINK GROUT WITH MINIMUM 28-DAY COMPRESSIVE STRENGTH OF 5,000 PSI. GROUT DEPTH SHALL BE SUFFICIENT TO BE PLACED WITH NO VOIDS.

7. THE CONTRACTOR SHALL BE RESPONSIBLE FOR ERECTION PROCEDURES AND SEQUENCES TO ACCOUNT FOR TEMPERATURE DIFFERENTIAL.

8. CONTRACTOR SHALL SUBMIT STEEL SHOP DRAWINGS FOR REVIEW PRIOR TO FABRICATION.

STEEL DECK

1. STEEL ROOF DECK SHALL BE 1 1/2" x 18 GA. VERCO WSB-36 PER ICBO ER-2018R OR 1 APPROVED EQUIVALENT. DECK SHALL BE GALVIZED OR PRIMER PAINTED STEEL CONFORMING TO CURRENT ASTM CRITERIA.

2. STRUCTURAL ENGINEER SHALL BE NOTIFIED IF ROOF SYSTEM CONFORMING TO FACTORY MUTUAL OR OTHER APPROVAL IS REQUIRED.

3. ROOF DECK SHALL BE ATTACHED TO SUPPORTS AND ALL FRAMING PERPENDICULAR TO DECK FLUTES w/1/2" EFFECTIVE DIA. ARC SPOT WELDS AT EACH DOWN FLUTE. DECK SHALL BE ATTACHED TO ALL FRAMING PARALLEL TO DECK x FLUTES w/ 5/8" DIA. PUDDLE WELDS AT 12"o.c. WELDING SHALL BE IN ACCORDANCE w/AWS D1.3. ROOF DECK INTERLOCKING SIDE LAP ATTACHMENT SHALL BE BUTTON PUNCHES AT 12"o.c. UNLESS NOTED OTHERWISE. .

4. STEEL DECK SHALL BEAR ON SUPPORTS A MINIMUM OF 2". DECK SPAN SHALL BE CONTINUOUS OVER (3) OR MORE SUPPORTS.

5. ALL STEEL DECK ACCESSORIES SUCH AS CLOSURE STRIPS, REINFORCING ANGLES, RIDGE PLATES, VALLEY PLATES, ETC., SHALL BE SUPPLIED AND INSTALLED.

6. CONTRACTOR SHALL SUBMIT SHOP DRAWINGS FOR REVIEW SHOWING DECK LAYOUT, ATTACHMENTS, ACCESSORIES, AND DECK PROPERTIES.

LIGHT GAGE STEEL FRAMING

1. ALL COLD-FORMED LIGHT GAUGE STEEL FRAMING SHALL BE FABRICATED AND ERECTED IN ACCORDANCE WITH MFR'S RECOMMENDATIONS AND IN ACCORDANCE WITH THE LATEST EDITION OF "SPECIFICATIONS FOR THE DESIGN OF COLD-FORMED STEEL STRUCTURAL MEMBERS" BY THE AMERICAN IRON AND STEEL INSTITUTE.

2. STRUCTURAL DRAWINGS TYPICALLY SHOW ONLY THE PRIMARY STRUCTURAL FRAMING ELEMENTS OF THE SYSTEM. CONTRACTOR SHALL PROVIDE ALL ACCESSORIES NOT NOTED INCLUDING TRACKS, WEB STIFFENERS, BLOCKING, LINTELS, CLIP ANGLES, REINFORCEMENTS, FASTENING DEVICES, BRACING, AND OTHER ACCESSORIES AS RECOMMENDED BY THE MFR. TO PROVIDE A COMPLETE FRAMING SYSTEM.

3. STEEL FOR 9", 6.8 AND 9.4 MIL STUDS AND JOISTS SHALL HAVE A MIN. YIELD STRENGTH OF 50 KSI. STEEL FOR ALL 43, 33 AND 18 MIL STUDS AND JOISTS, ALL GAGES OF TRACK, ALL DIAGONAL TENSION STRAPS OR BRACES, AND BRIDGING SHALL HAVE A MIN. YIELD STRENGTH OF 33 KSI. STEEL SHALL BE GALVANIZED OR THOROUGHLY COATED WITH RUST INHIBIT PAINT AT ALL LOCATIONS.

4. FASTENING OF COMPONENTS SHALL BE WITH SELF-TAPPING SCREWS OR WELDS. ALL WELDS OF GALVANIZED STEEL SHALL BE TOUCHED UP WITH ZINC-RICH PAINT. ALL WELDS OF CARBON SHEET STEEL SHALL BE TOUCHED UP WITH PAINT. ALL WELDING SHALL CONFORM WITH AWS SPECIFICATIONS FOR LIGHT GAUGE STEEL WELDINGS.

5. ALL STUDS SHALL BE SECURELY SEATED FOR FULL END BEARING ON TOP AND BOTTOM TRACK. U.N.O. PROVIDE DOUBLE STUDS AT ALL JAMBS, CORNERS, INTERSECTIONS, AND BEAM BEARING.

6. WALL STUD BRIDGING AS RECOMMENDED BY THE STUD MFR. SHALL BE INSTALLED TO PREVENT BOTH WEAK AXIS BENDING AND STUD ROTATION AT 4'-0" MAX. INTERVALS. WALLS 8'-0" AND SHORTER SHALL HAVE A SINGLE ROW OF BRIDGING AT MID-HEIGHT. IN ADDITION, BRIDGING SHALL BE PROVIDED AT ROOF LINES AND ELSEWHERE AS NOTED ON THE DRAWINGS. SOLID BLOCKING SHALL BE INSTALLED IN LIEU OF BRIDGING WHERE NOTED ON THE DRAWINGS. BLOCKING SHALL BE PROVIDED AT JOIST ENDS WHERE JOIST ENDS ARE NOT OTHERWISE RESTRAINED FROM ROTATION.

7. SCREWS SHALL BE SELF-TAPPING PAN HEAD, HEX HEAD, OR WAFER HEAD SHEET METAL SCREWS. SCREWS WHICH ARE REMOVED SHALL BE REPLACED BY A SCREW OF A LARGER DIA. WHERE THE REPLACEMENT IS MADE INTO AN EXISTING HOLE. REPLACE ALL SCREWS WHICH STRIP OUT MATERIAL. SCREWS SHALL BE SPACED NO CLOSER THAN 5/8 INCH O.C. AND WITH A MIN. FREE EDGE DISTANCE OF 1/2 INCH. CLIP ANGLES OR FLAT CLIPS USED FOR ATTACHMENTS SHALL BE 20 GAGE MIN, U.N.O. SIZE CLIP ANGLES AND FLAT CLIPS TO MAINTAIN MIN. SCREW SPACING AND EDGE DISTANCES NOTED ABOVE. ALL SCREWS #8 AND LARGER SHALL HAVE A MIN. HEAD SIZE OF 5/16 INCH.

8. STUDS SIZE WHERE NOT SPECIFICALLY NOTED ON DETAILS SHALL BE 1 5/8 INCH WIDE BY 3 1/2 INCH DEEP BY 33 MIL MIN. TRACK SIZE WHERE NOT SPECIFICALLY NOTED ON DETAILS SHALL BE 1" WIDE BY 3 1/2 INCH BY 33 MIL MIN.

9. JOISTS, STUDS, TRACK, ETC. SHALL HAVE STEEL THICKNESS AND EFFECTIVE SECTION PROPERTIES AS LISTED IN THE STEEL STUD MFRS ASSOCIATION MANUAL, ICBO ER NO. 4943P, OR EQUIVALENT.

SPECIAL INSPECTIONS

1. IN ADDITION TO INSPECTIONS REQUIRED BY THE BUILDING OFFICIAL, THE OWNER SHALL EMPLOY SPECIAL INSPECTORS PER IBC CHAPTER 17 TO PROVIDE SPECIAL INSPECTIONS DURING CONSTRUCTION ON THE TYPES OF WORK LISTED IN THIS SECTION.

2. THE SPECIAL INSPECTOR SHALL BE A QUALIFIED PERSON WHO SHALL DEMONSTRATE COMPETENCE, TO THE SATISFACTION OF THE BUILDING OFFICIAL, FOR INSPECTION OF THE PARTICULAR TYPE OF CONSTRUCTION OR OPERATION REQUIRING SPECIAL INSPECTION.

3. THE CONTRACTOR SHALL PROVIDE ADEQUATE NOTICE TO THE SPECIAL INSPECTOR AND PROVIDE ADEQUATE ACCESS TO WORK REQUIRING SPECIAL INSPECTION.

4. SPECIAL INSPECTORS SHALL KEEP RECORDS OF SPECIAL INSPECTIONS AND SHALL FURNISH INSPECTION REPORTS TO THE OWNER ENGINEER OF RECORD, CONTRACTOR, BUILDING OFFICIAL, AND OTHER DESIGNATED PERSONS. DISCREPANCIES SHALL BE BROUGHT TO THE IMMEDIATE ATTENTION OF THE CONTRACTOR FOR CORRECTION. IF THE DISCREPANCIES ARE NOT CORRECTED THEY SHALL BE BROUGHT TO THE ATTENTION OF THE ENGINEER AND BUILDING OFFICIAL. SPECIAL INSPECTORS SHALL SUBMIT FINAL REPORTS DOCUMENTING SPECIAL INSPECTIONS AND CORRECTIONS OF ANY DISCREPANCIES.

5. CONTINUOUS SPECIAL INSPECTION SHALL BE THE FULL-TIME OBSERVATION OF WORK BY THE SPECIAL INSPECTOR WHO IS PRESENT IN THE AREA WHERE THE WORK IS BEING PERFORMED. PERIODIC SPECIAL INSPECTION SHALL BE THE PART-TIME OR INTERMITTENT OBSERVATION OF WORK BY THE SPECIAL INSPECTOR WHO IS PRESENT IN THE AREA WHERE THE WORK HAS BEEN OR IS BEING PERFORMED AND AT THE COMPLETION OF THE WORK. SPECIAL INSPECTION SHALL BE FOR CONFORMANCE WITH APPROVED CONTRACT DOCUMENTS.

6. THE TYPES OF WORK TO BE CONTINUOUSLY OR PERIODICALLY INSPECTED BY THE SPECIAL INSPECTO

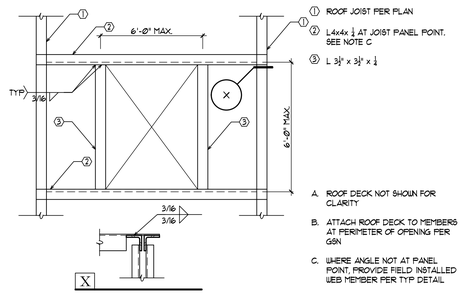

① ROOF JOIST PER PLAN

② L 4x4x ¼ AT JOIST PANEL POINT. SEE NOTE C

③ L 3½" x 3½" x ¼

A. ROOF DECK NOT SHOWN FOR CLARITY

B. ATTACH ROOF DECK TO MEMBERS AT PERIMETER OF OPENING PER G9N

C. WHERE ANGLE NOT AT PANEL POINT, PROVIDE FIELD INSTALLED WEB MEMBER PER TYP DETAIL

14 TYPICAL OPENING IN ROOF DECK

S4-101 — NO SCALE

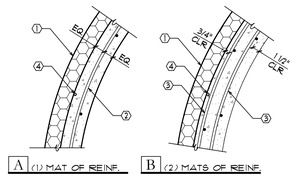

① URETHANE FOAM PER PLAN

② VERTICAL REINFORCING CENTERED IN SHELL THICKNESS. HORIZONTAL REINF. MAY BE INSIDE OR OUTSIDE VERTICAL

③ VERTICAL REINFORCING EACH FACE. HORIZONTAL REINFORCING SHALL BE ON INSIDE

④ CONDUIT AS REQUIRED

09 TYPICAL SHELL REINFORCING PLACEMENT

D4-109 — NO SCALE

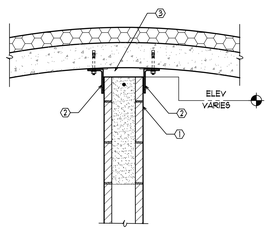

① 16" BOND BEAM MIN. WITH (1) #5 HORIZONTAL AT TOP OF WALL

② L5x3x¼x40'-8"(LLV) SPACED AT 4'-0" O.C. ATTACH TO DOME WITH (2) ½" DIA x 3" EMBEDMENT WEDGE ANCHORS

③ 1½" MIN, 3" MAX GAP

A. SHIM ANGLES AS REQUIRED TO SIT FLAT.

B. DOME REINFORCING NOT SHOWN FOR CLARITY

C. CUT MASONRY UNITS AS REQUIRED

10 NON BEARING CMU WALL AT DOME

10-502002 — NO SCALE

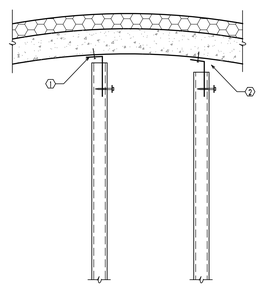

① 20 GAUGE DEFLECTION CLIP WITH (2) 3/16" X 1" THREADED CONCRETE ANCHORS

② 1" MAX GAP

A. SHOTPINS MAY BE USED IN PLACE OF THREADED ANCHORS

11 TYPICAL STUDWALL AT DOME

11-502002 — NO SCALE

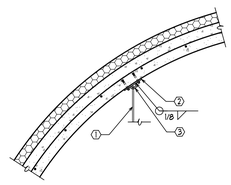

① EQUIPMENT PER ARCHITECTURAL

② ⧄3½"x3"x6" w/ (2) ¾" DIA WEDGE ANCHORS w/ 3¼" EMBEDMENT

③ ¾" DIA ROD OR 2"x2"x¼" PLATE

A. MAX ANCHOR CAPACITY: 2500 lbs.

B. ANCHORS SHALL BE HILTI KWIK BOLT TZ OR EQUIVALENT

12 SMALL EQUIPMENT ANCHOR

12-502002 — NO SCALE

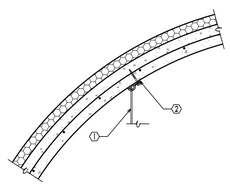

① EQUIPMENT PER ARCHITECTURAL, MECHANICAL OR ELECTRICAL DRAWINGS

② 16 GAUGE CLIP WITH ¼" DIA x 3" TAPCON+ SCREW ANCHOR

A. TAPCON+ ANCHOR SHALL BE INSTALLED PER ICC REPORT # ESR-3699

B. MAX ANCHOR CAPACITY: 500 lbs.

13 MISC. ANCHOR AT DOME

13-502002 — NO SCALE

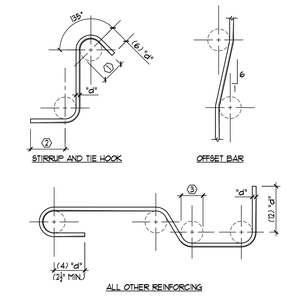

① MINIMUM FINISHED BEND DIA. FOR STIRRUPS AND TIES ONLY (4) "d" FOR #3 BAR AND SMALLER, (6) "d" FOR #4 THRU #8. TYPICAL

② (6) "d" FOR #5 AND SMALLER (12) "d" FOR #6 THRU #8

③ MINIMUM FINISHED BEND DIA FOR ALL REINFORCING EXCEPT STIRRUPS AND TIES (6) "d" UP TO #8 BAR, (8) "d" FOR #9 THRU #11, (12) "d" FOR #14 AND #18.

A. "d" = BAR DIA.

B. ALL REINFORCEMENT SHALL BE BENT COLD UNLESS NOTED OTHERWISE ON PLANS OR DETAILS

C. REINFORCING PARTIALLY EMBEDDED IN CONCRETE SHALL NOT BE FIELD BENT UNLESS SPECIFICALLY NOTED ON PLANS OR DETAILS

05 STANDARD REBAR BEND DETAILS

CC-12 — NO SCALE

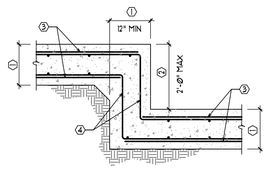

① FOOTING DEPTH

② WHERE STEP EXCEEDS 2'-0", USE MULTIPLE STEPS

③ FOOTING REINF. PER PLAN

④ BARS TO MATCH AND LAP FOOTING REINF.

A. WALL ABOVE AS OCCURS NOT SHOWN

B. SPACE MULTIPLE STEPS 4'-0" (MIN) APART

06 TYPICAL STEP IN FOOTING

F-34 — NO SCALE

① TOP AND BOTTOM HORIZONTAL REINFORCING

② CORNER BARS TO MATCH TOP AND BOTTOM HORIZONTAL REINFORCING

06 TYPICAL FOOTING INTERSECTION

F-133 — NO SCALE

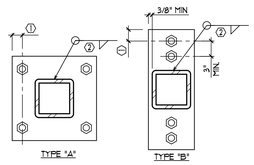

① AISC MIN. EDGE DISTANCE

② ¼" FOR BASE PLATE UP TO ¾" THICK, ⅜" FOR BASE PLATE MORE THAN ¾" THICK

A. SEE PLAN OR SCHEDULE FOR BASE PLATE DIMENSIONS

B. BASE CONNECTIONS MAY REQUIRE MORE THAN (4) ANCHOR BOLTS SHOWN. SEE PLAN OR SCHEDULE FOR SIZE, TYPE, AND NUMBER OF BOLTS

C. SPACE ANCHOR BOLTS EVENLY WHEN MORE THAN (4) BOLTS ARE REQUIRED

07 TYPICAL COLUMN BASE PLATE SCHEDULE

S4-101 — NO SCALE

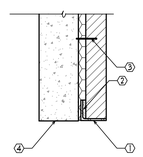

① GALVANIZED L4x4x¼ AT 8'-0" MAX OPENING. GALVANIZED 6x4x¼ AT 12'-0" MAX OPENING

② GROUT BETWEEN VENEER AND ANGLE

③ VENEER ANCHORAGE

④ STRUCTURAL WALL AS OCCURS

A. PROVIDE 6" MIN. BEARING FOR L4x4x¼. PROVIDE 12" MIN. BEARING FOR L6x4x⅜.

08 TYPICAL VENEER LINTEL ANGLE

MD-108 — NO SCALE

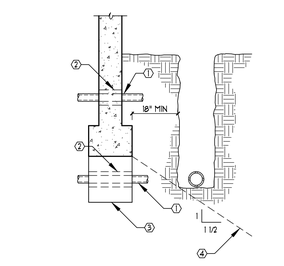

① UTILITY PIPE

② SLEEVE. SIZE TO PROVIDE 1/2" MIN. CLEARANCE AROUND UTILITY PIPE.

③ LEAN CONCRETE FILL. FORM SAME WIDTH AS FOOTING.

④ NO PIPE TRENCH EXCAVATION ALLOWED BELOW THIS LINE.

A. PIPES SHALL NOT PASS THRU NOR BE LOCATED BENEATH ISOLATED PAD FOOTINGS.

01 UTILITY PIPES AT FOOTING

F-129 — NO SCALE

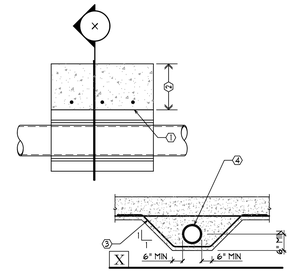

① CONT. WALL FOOTING

② NO PIPE PENETRATION THROUGH THIS PORTION OF FOOTING

③ #4 AT 12"o.c. TO LAP FOOTING REINF.

④ OVERSIZE PIPE SLEEVE AND/OR COMPRESSIBLE FOAM

02 TYPICAL PIPE PENETRATION AT FOOTING

F-101 — NO SCALE

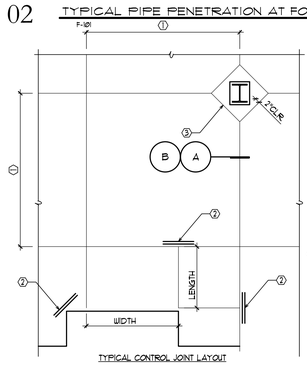

TYPICAL CONTROL JOINT LAYOUT

① JOINT SPACING PER SCHEDULE

② PROVIDE (2) 4"x48" MID-HEIGHT SLAB BARS ADJACENT TO ALL DISCONTINUOUS JOINT LOCATIONS

③ CLOSURE POUR AT COLUMN AS OCCURS

④ THE LENGTH TO WIDTH RATION OF CONTROL JOINT SECTIONS SHALL NOT EXCEED 1.5

⑤ DEPTH EQUAL TO ¼ SLAB THICKNESS

⑥ ¾" DIA. x12" SMOOTH DOWEL AT 24" o.c. WRAP OR GREASE ONE END TO PREVENT BOND TO CONCRETE. CENTER IN SLAB THICKNESS AT POUR JOINT

⑦ 2x4 CONTINUOUS TAPERED KEY

JOINT SPACING SCHEDULE	
SLAB THICKNESS	MAX SPACING
4"	10'
5"	12.5'
6"	15'

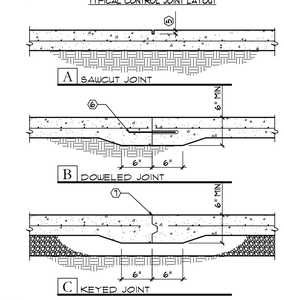

A. SAWCUTS SHALL BE MADE SOON ENOUGH TO PREVENT SHRINKAGE CRACKING, BUT NOT SO SOON AS TO CAUSE SPALLING

B. ZIP STRIP OR TOOLED JOINT MAY BE USED IN LIEU OF SAW CUT

C. DOWELED JOINTS NEED ONLY OCCUR AT EXPOSED EDGES OF DISCONTINUOUS SLAB PLACEMENT U.N.O.

03 TYPICAL CONTROL JOINT IN SLAB ON GRADE

F-171 — NO SCALE

MASONRY	
BAR SIZE	LENGTH
#3 GRADE 40	15
#3 GRADE 60	18
#4 GRADE 40	16
#4 GRADE 60	20
#5	30
#6	36
#7	42
#8	48
#9	54

A. LAP LENGTHS ARE IN INCHES

B. MAX. BAR SPACING AT SPLICED BARS SHALL BE ⅓ x LAP SPLICE LENGTH AND 8"

C. LAP LENGTHS ARE BASED ON UNCOATED REINFORCEMENT AND MIN. f'm= 1500 psi

04 TYPICAL REBAR LAP SPLICE SCHEDULE

04-502002 — NO SCALE

TETRA TECH
ENGINEERING BUSINESS NO. XXXX
www.tetratech.com
Tt-Tetra Tech Street Address
Tt-Tetra Tech City-State-ZIPCode
Tel: 000.000.0000 Fax: 000.000.0000

CHRISTOPHER S. ZIMMERLE — No. 38491 — REGISTERED PROFESSIONAL ENGINEER — STATE OF IDAHO — 12/9/2024

BARNWELL SCHOOL DISTRICT
OWNER
770 HAGOOD AVE.
BARNWELL, SD 29812
Tel: 503 541 1300

TETRA TECH
ARCHITECT
MECHANICAL ENGINEER
PLUMBING ENGINEER
ELECTRICAL ENGINEER
240 CONTINENTAL DR
NEWARK, DE 19713
302 738 7551

THOMAS & HUTTON
CIVIL ENGINEER
1501 MAIN ST.
COLUMBIA, SC 29201
Tel: 803 451 0200

ZZ CONSULTING
STRUCTURAL ENGINEER
114 S. STATE ST.
SHELLEY, ID 83274
Tel: 208 357 5404

MARK	DATE	DESCRIPTION	BY
1	07/19/2024	REVISED CONSTRUCTION DOC. SUBMITTAL FOR OSF REVIEW AND APPROVAL	
2	09/11/2024	ISSUED FOR BID	
	12/6/2024	ISSUED FOR CONSTRUCTION CONFORMANCE SET	

BARNWELL SCHOOL DISTRICT
MULTI-USE SAFE ROOM

TYPICAL DETAILS

Project No.:	S20202
Designed By:	CSZ
Drawn By:	SRM
Checked By:	CSZ

S-002

Copyright Tetra Tech

5/31/2012 9:32:13 AM File Path

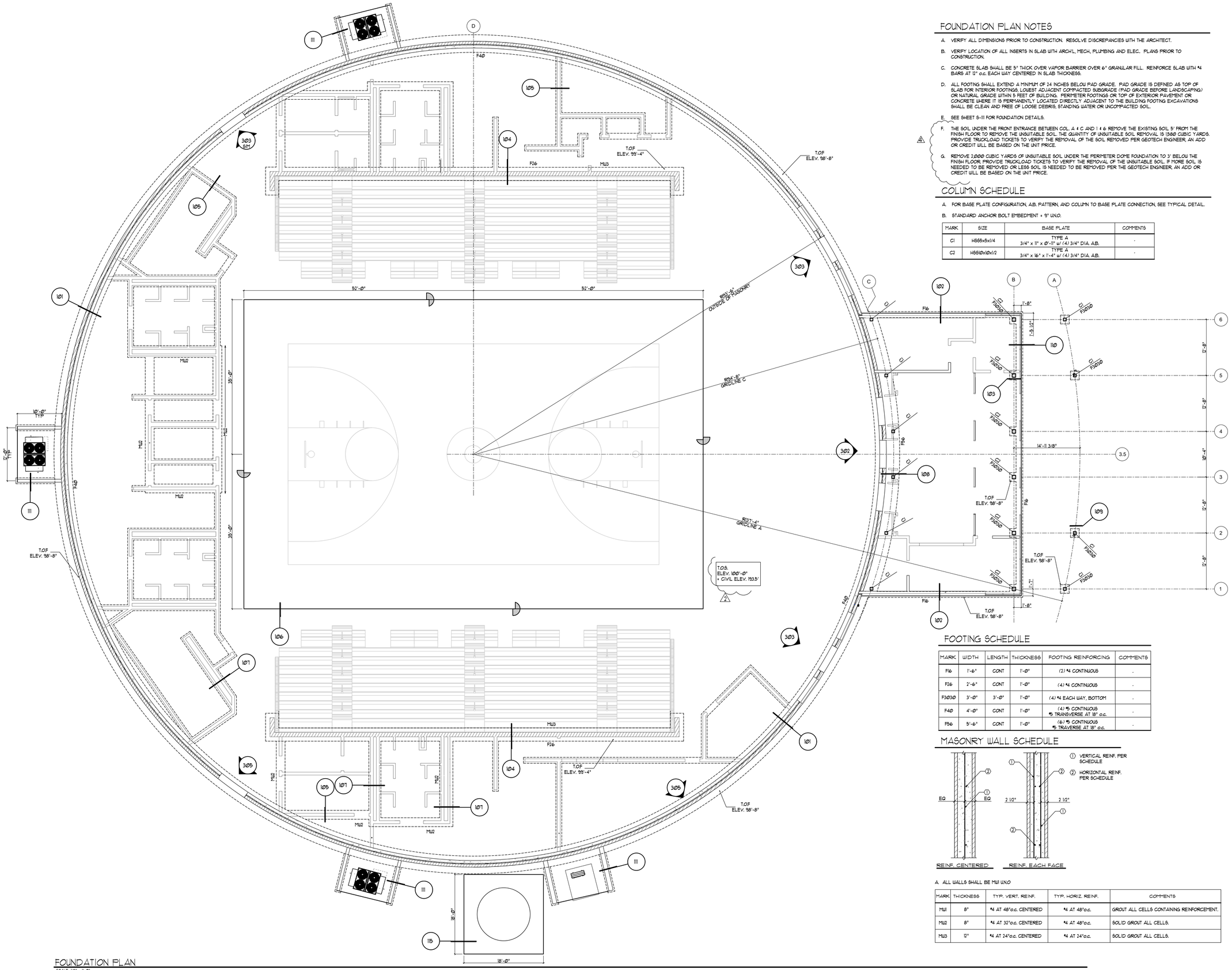

FOUNDATION PLAN NOTES

A. VERIFY ALL DIMENSIONS PRIOR TO CONSTRUCTION. RESOLVE DISCREPANCIES WITH THE ARCHITECT.

B. VERIFY LOCATION OF ALL INSERTS IN SLAB WITH ARCH'L, MECH, PLUMBING AND ELEC.. PLANS PRIOR TO CONSTRUCTION.

C. CONCRETE SLAB SHALL BE 5" THICK OVER VAPOR BARRIER OVER 6" GRANULAR FILL. REINFORCE SLAB WITH #4 BARS AT 12" o.c. EACH WAY CENTERED IN SLAB THICKNESS.

D. ALL FOOTING SHALL EXTEND A MINIMUM OF 24 INCHES BELOW PAD GRADE. PAD GRADE IS DEFINED AS TOP OF SLAB FOR INTERIOR FOOTINGS, LOWEST ADJACENT COMPACTED SUBGRADE (PAD GRADE BEFORE LANDSCAPING) OR NATURAL GRADE WITHIN 5 FEET OF BUILDING. PERIMETER FOOTINGS OR TOP OF EXTERIOR PAVEMENT OR CONCRETE WHERE IT IS PERMANENTLY LOCATED DIRECTLY ADJACENT TO THE BUILDING FOOTING EXCAVATIONS SHALL BE CLEAN AND FREE OF LOOSE DEBRIS, STANDING WATER OR UNCOMPACTED SOIL.

E. SEE SHEET S-111 FOR FOUNDATION DETAILS.

F. THE SOIL UNDER THE FRONT ENTRANCE BETWEEN COL. A 4 C AND 1 4 6 REMOVE THE EXISTING SOIL 5' FROM THE FINISH FLOOR TO REMOVE THE UNSUITABLE SOIL. THE QUANTITY OF UNSUITABLE SOIL REMOVAL IS 1580 CUBIC YARDS. PROVIDE TRUCKLOAD TICKETS TO VERIFY THE REMOVAL OF THE SOIL REMOVED PER GEOTECH ENGINEER, AN ADD OR CREDIT WILL BE BASED ON THE UNIT PRICE.

4

G. REMOVE 2,000 CUBIC YARDS OF UNSUITABLE SOIL UNDER THE PERIMETER DOME FOUNDATION TO 3' BELOW THE FINISH FLOOR PROVIDE TRUCKLOAD TICKETS TO VERIFY THE REMOVAL OF THE UNSUITABLE SOIL. IF MORE SOIL IS NEEDED TO BE REMOVED OR LESS SOIL IS NEEDED TO BE REMOVED PER THE GEOTECH ENGINEER, AN ADD OR CREDIT WILL BE BASED ON THE UNIT PRICE.

COLUMN SCHEDULE

A. FOR BASE PLATE CONFIGURATION, A.B. PATTERN, AND COLUMN TO BASE PLATE CONNECTION, SEE TYPICAL DETAIL.

B. STANDARD ANCHOR BOLT EMBEDMENT = 9" U.N.O.

MARK	SIZE	BASE PLATE	COMMENTS
C1	HSS5x5x1/4	TYPE A 3/4" x 11" x 0'-11" w/ (4) 3/4" DIA. A.B.	-
C2	HSS10x10x1/2	TYPE A 3/4" x 16" x 1'-4" w/ (4) 3/4" DIA. A.B.	-

FOOTING SCHEDULE

MARK	WIDTH	LENGTH	THICKNESS	FOOTING REINFORCING	COMMENTS
F16	1'-6"	CONT	1'-0"	(2) #4 CONTINUOUS	-
F26	2'-6"	CONT	1'-0"	(4) #4 CONTINUOUS	-
F3030	3'-0"	3'-0"	1'-0"	(4) #4 EACH WAY, BOTTOM	-
F40	4'-0"	CONT	1'-0"	(4) #5 CONTINUOUS #5 TRANSVERSE AT 18" o.c.	-
F56	5'-6"	CONT	1'-0"	(6) #5 CONTINUOUS #5 TRANSVERSE AT 18" o.c.	-

MASONRY WALL SCHEDULE

① VERTICAL REINF. PER SCHEDULE

② HORIZONTAL REINF. PER SCHEDULE

A. ALL WALLS SHALL BE MU1 U.N.O

MARK	THICKNESS	TYP. VERT. REINF.	TYP. HORIZ. REINF.	COMMENTS
MU1	8"	#4 AT 48"o.c. CENTERED	#4 AT 48"o.c.	GROUT ALL CELLS CONTAINING REINFORCEMENT.
MU2	8"	#4 AT 32"o.c. CENTERED	#4 AT 48"o.c.	SOLID GROUT ALL CELLS.
MU3	12"	#4 AT 24"o.c. CENTERED	#4 AT 24"o.c.	SOLID GROUT ALL CELLS.

FOUNDATION PLAN
SCALE: 1/8" = 1'-0"

TETRA TECH
ENGINEERING BUSINESS NO. XXXX
www.tetratech.com
Tt-Tetra Tech Street Address
Tt-Tetra Tech City-State-ZIPCode
Tel: 000.000.0000 Fax: 000.000.0000

REGISTERED PROFESSIONAL ENGINEER
CHRISTOPHER S. LOSS
No. 3491
12/9/2024

BARNWELL SCHOOL DISTRICT

OWNER
770 HAGOOD AVE.
BARNWELL, SD 29812
Tel: 503 541 1300

TETRA TECH
ARCHITECT
MECHANICAL ENGINEER
PLUMBING ENGINEER
ELECTRICAL ENGINEER
240 CONTINENTAL DR
NEWARK, DE 19713
302 738 7551

THOMAS & HUTTON
CIVIL ENGINEER
1501 MAIN ST.
COLUMBIA, SC 29201
Tel: 803 451 0200

ZZ CONSULTING
STRUCTURAL ENGINEER
114 S. STATE ST.
SHELLEY, ID 83274
Tel: 208 357 5404

MARK	DATE	DESCRIPTION	BY
1	07/18/2024	REVISED CONSTRUCTION DOC. SUBMITTAL FOR GSF REVIEW AND APPROVAL	
2	09/11/2024	ISSUED FOR BID	
3	09/19/2024	ISSUED FOR ADDENDUM #02	
4	11/01/2024	ISSUED FOR ADDENDUM 04	
	12/9/2024	ISSUED FOR CONSTRUCTION CONFORMANCE SET	

BARNWELL SCHOOL DISTRICT
MULTI-USE SAFE ROOM

FOUNDATION PLAN

Project No.:	S20202
Designed By:	CSZ
Drawn By:	SRM
Checked By:	CSZ

S-110

Copyright: Tetra Tech

5/31/2012 9:32:13 AM File Path

① SCREENWALL PER DETAIL III

② HSS6x6x1/4 BEAM

③ 1" x 3/16" BAR GRATE WITH 1" MAXIMUM OPENING SIZE

④ 3/4" DIA HEADED STUDS WITH 3"x3"x3/16" PLATE WASHED AND STANDARD NUT AT 18" o.c. AND WITHIN 6" OF EDGE OF GRATE

⑤ 3/4" DIA x 8" ANCHOR BOLTS WITH 3"x3"x3/16" PLATE WASHED AND STANDARD NUT AT 18" o.c. AND WITHIN 6" OF EDGE OF GRATE

A. ALL STEEL ITEMS SHALL BE GALVANIZED

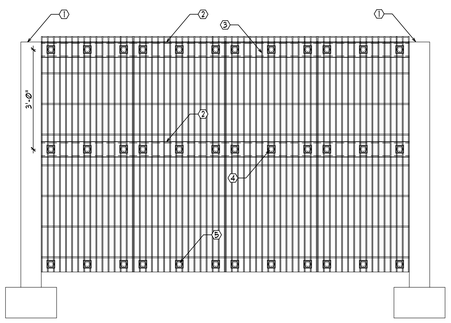

114 MECHANICAL UNIT PROTECTION FRONT

114-S20202 NO SCALE

① #4 AT 12" o.c. EACH WAY

② (6) (MINIMUM) EQUALLY SPACED 3/4" DIA. WEDGE ANCHORS.

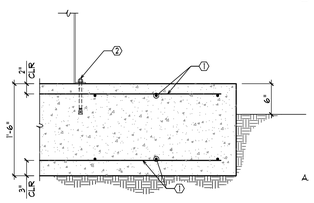

A. WEDGE ANCHORS SHALL BE STAINLESS STEEL AND EMBEDDED 6" MINIMUM.

B. WEDGE ANCHORS SHALL BE HILTI KWIK BOLT TZ2, ITW REDHEAD TRUBOLT, DEWALT POWER-STUD, OR APPROVED ALTERNATE.

115 PAD FOR WATER STORAGE TANK

114-S20202 NO SCALE

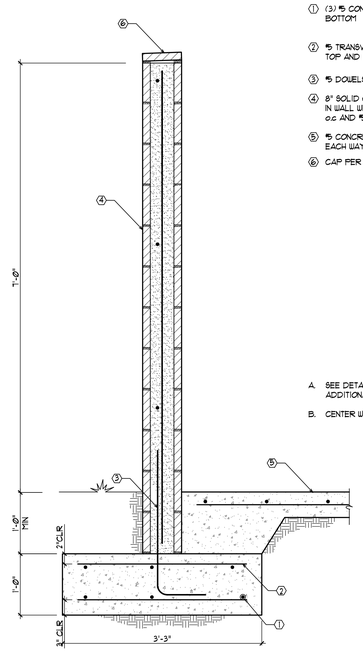

① (3) #5 CONTINUOUS TOP AND BOTTOM

② #5 TRANSVERSE BARS AT 18" o.c. TOP AND BOTTOM

③ #5 DOUELS AT 24" o.c

④ 8" SOLID GROUTED CMU CENTERED IN WALL WITH #5 VERTICAL AT 24" o.c AND #5 HORIZONTAL AT 32" o.c.

⑤ #5 CONCRETE WITH #4 AT 12" o.c. EACH WAY CENTERED IN SLAB

⑥ CAP PER ARCHITECTURAL

A. SEE DETAILS 112 AND 114 FOR ADDITIONAL FRAMING INFORMATION.

B. CENTER WALL ON FOOTING.

111 SCREEN WALL AT MECHANICAL UNIT

111-S20202 NO SCALE

① SCREENWALL PER DETAIL III

② HSS6x6x1/4 BEAM

③ 1" x 3/16" BAR GRATE WITH 1" MAXIMUM OPENING SIZE

④ 3/4" DIA HEADED STUDS WITH 3"x3"x3/16" PLATE WASHED AND STANDARD NUT AT 18" o.c. AND WITHIN 6" OF EDGE OF GRATE

⑤ 1" MAX GAP AT DOME WALL

A. ALL STEEL ITEMS SHALL BE GALVANIZED

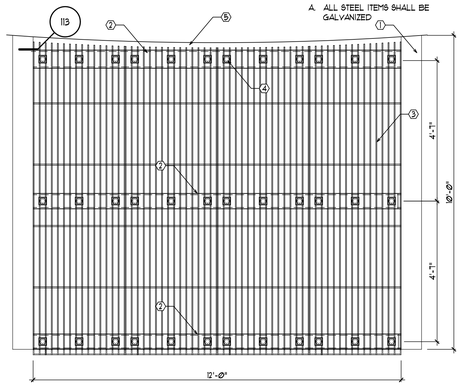

112 MECHANICAL UNIT PROTECTION ROOF

112-S20202 NO SCALE

① #4 NOSING BAR

② STEP PER PLAN. 5" MAX.

③ OPTIONAL CONSTRUCTION JOINT ROUGHEN TO 1/4" AMPLITUDE

A. ALTERNATE CONSTRUCTION JOINT SYSTEMS MAY BE USED WITH PRIOR WRITTEN APPROVAL FROM THE ENGINEER.

106 STEP IN SLAB AT GYM FLOOR

S20202-106 NO SCALE

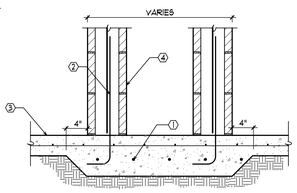

① #4 CONTINUOUS AT 12"o.c.

② #4 DOUELS TO MATCH WALL REINFORCEMENT. LAP 24" MIN.

③ SLAB ON GRADE PER PLAN

④ MASONRY WALL PER PLAN

107 DOUBLE MASONRY WALL AT SLAB

107-S20202 NO SCALE

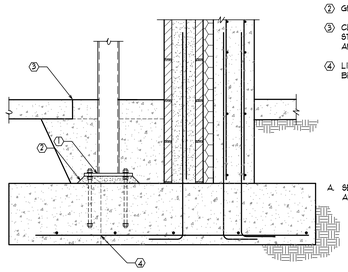

① BASE PLATE w/AB. BOLTS PER PLAN

② GROUT BELOW PLATE PER PLAN

③ CLOSURE POUR. PLACE AFTER STRUCTURAL DEAD LOAD IS APPLIED

④ LINE OF TYPICAL DOME FOOTING BEYOND

A. SEE DETAIL 101 FOR ADDITIONAL INFORMATION

108 COLUMN AT DOME WALL AT FOOTING

108-S20202 NO SCALE

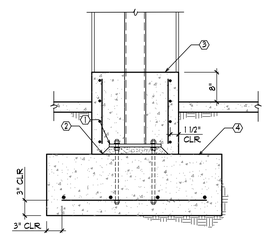

① BASE PLATE AND ANCHOR BOLTS PER PLAN

② GROUT BELOW PLATE PER GSN

③ 24" DIA CONCRETE PEDESTAL WITH #3 VERTICAL, AND #3 TIES AT 6" o.c. VERIFY DIMENSIONS WITH ARCHITECTURAL.

④ FOOTING PER PLAN

109 STEEL COLUMN AT FOOTING

109-S20202 NO SCALE

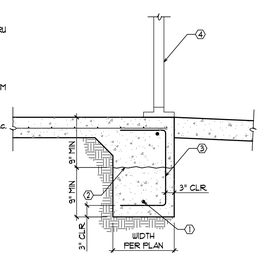

① REINFORCING PER PLAN

② OPTIONAL CONSTRUCTION JOINT. ROUGHEN SURFACE TO ¼" MIN. AMPLITUDE

③ #4 "C" DOUELS AT 48" o.c. PLACE ONE DOUEL WITHIN 12" EACH SIDE OF HOLDOWNS

④ STOREFRONT FRAMING PER ARCHITECTURAL

A. "C" DOUELS MAY BE OMITTED WHEN FOOTING IS MONOLITHIC CAST EXCEPT DOUELS AT HOLDOWNS STILL REQUIRED

110 TYPICAL TURNED DOWN EDGE FOOTING

110-S20202 NO SCALE

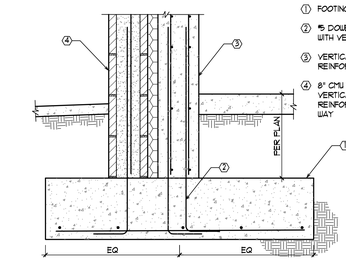

① FOOTING PER PLAN

② #5 DOUELS TO MATCH AND LAP WITH VERTICAL WALL REINFORCING

③ VERTICAL CONCRETE WALL WITH REINFORCING PER PLAN

④ 8" CMU SOLID GROUTED WITH #4 VERTICAL AND HORIZONTAL REINFORCING AT 48" o.c. EACH WAY

101 VERTICAL DOME WALL AT FOOTING

101-S20202 NO SCALE

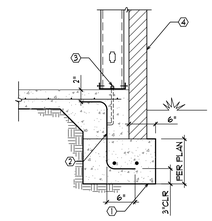

① FOOTING PER PLAN

② #4 Z BARS AT 24" o.c.

③ 1/2"xØ" ANCHOR BOLTS AT 36" o.c.

④ MASONRY VENEER PER ARCH'L

A. SEE ARCHITECTURAL FOR SHEATHING, AIR GAP, FLASHING, ETC.

102 STEEL STUD FRAMING AT FOUNDATION

101-S20202 NO SCALE

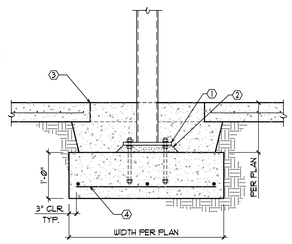

① BASE PLATE w/AB. BOLTS PER PLAN

② GROUT BELOW PLATE PER PLAN

③ CLOSURE POUR. PLACE AFTER STRUCTURAL DEAD LOAD IS APPLIED

④ REINFORCING PER PLAN

A. IF SLAB ON GRADE IS PLACED AFTER COLUMN IS SET, NO CLOSURE POUR REQUIRED

103 STEEL COLUMN AT FOOTING

103-S20202 NO SCALE

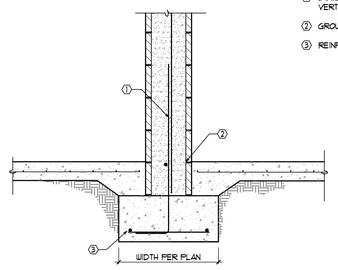

① DOUEL TO LAP AND MATCH VERTICAL REINFORCING

② GROUT SOLID BELOW GRADE

③ REINFORCEMENT PER PLAN

104 MASONRY WALL AT FOOTING

104-S20202 NO SCALE

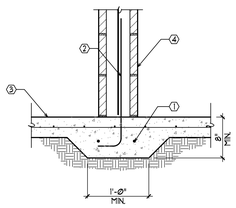

① (2) #4 CONTINUOUS

② #4 DOUELS TO MATCH WALL REINFORCEMENT. LAP 24" MIN.

③ SLAB ON GRADE PER PLAN

④ MASONRY WALL PER PLAN

105 MASONRY WALL AT SLAB

105-S20202 NO SCALE

TETRA TECH
ENGINEERING BUSINESS NO. XXXX
www.tetratech.com
Tt-Tetra Tech Street Address
Tt-Tetra Tech City-State-ZIP Code
Tel: 000.000.0000 Fax: 000.000.0000

CHRISTOPHER S. SLOTT
No. 38491
REGISTERED PROFESSIONAL ENGINEER
STATE OF IDAHO
12/09/2024

BARNWELL SCHOOL DISTRICT
OWNER
770 HAGOOD AVE.
BARNWELL, SD 29812
Tel: 503 541 1300

TETRA TECH
ARCHITECT
MECHANICAL ENGINEER
PLUMBING ENGINEER
ELECTRICAL ENGINEER
240 CONTINENTAL DR
NEWARK, DE 19713
302 738 7551

THOMAS & HUTTON
CIVIL ENGINEER
1501 MAIN ST.
COLUMBIA, SC 29201
Tel: 803 451 0200

ZZ CONSULTING
STRUCTURAL ENGINEER
114 S. STATE ST.
SHELLEY, ID 83274
Tel: 208 357 5404

MARK	DATE	DESCRIPTION	BY
1	07/18/2024	REVISED CONSTRUCTION DOC. SUBMITTAL FOR OSF REVIEW AND APPROVAL	
2	09/11/2024	ISSUED FOR BID	
3	10/02/2024	ISSUED FOR ADDENDUM #03	
	12/9/2024	ISSUED FOR CONSTRUCTION CONFORMANCE SET	

BARNWELL SCHOOL DISTRICT
MULTI-USE SAFE ROOM

FOUNDATION DETAILS

Project No.:	S20202
Designed By:	CSZ
Drawn By:	SRM
Checked By:	CSZ

S-III

Copyright: Tetra Tech

5/31/2012 9:32:13 AM File Path

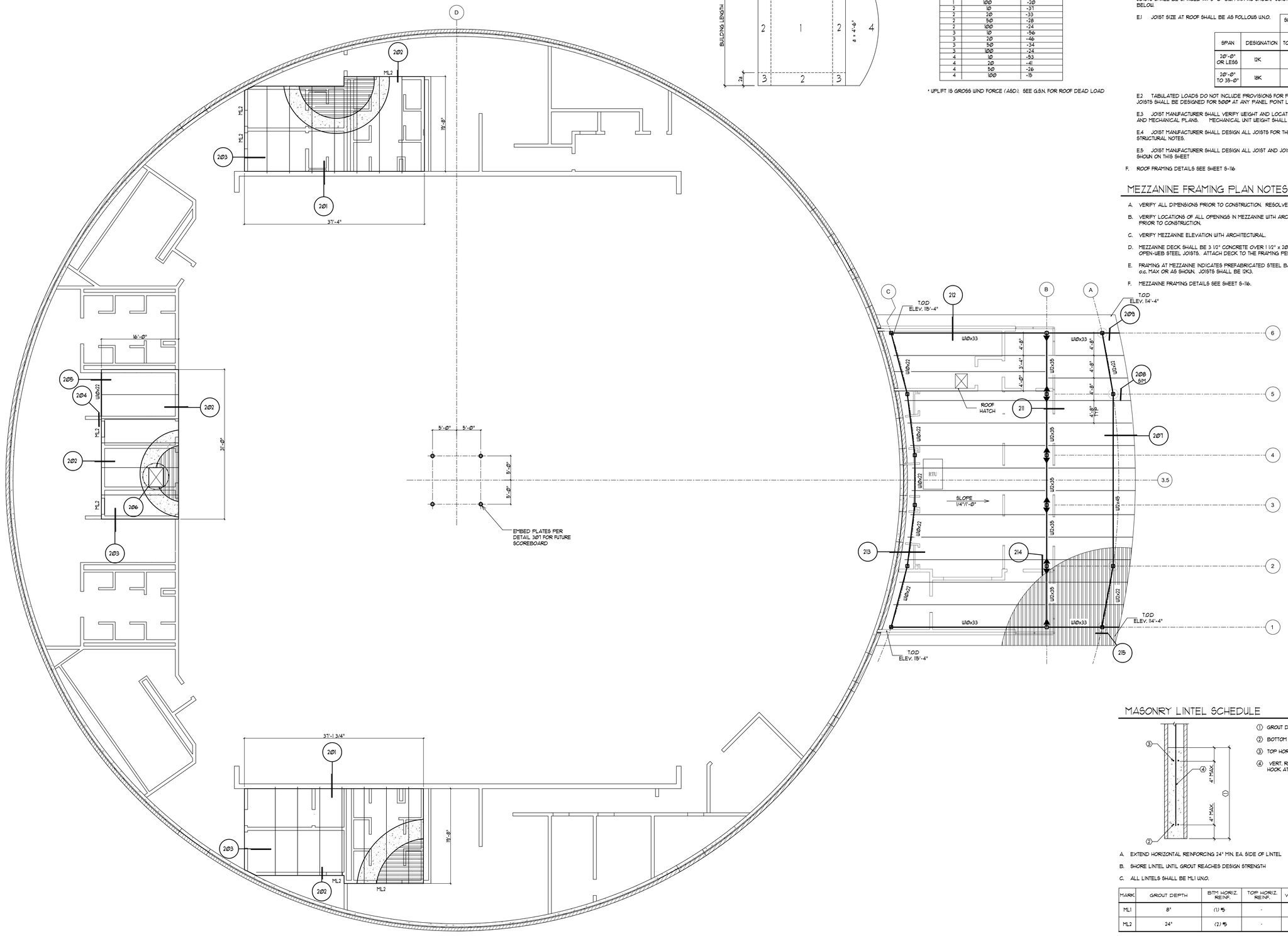

WIND UPLIFT SCHEMATIC AT ENTRY

ZONE	EFF. WIND AREA (SQUARE FEET)	UPLIFT (PSF)
1	10	-22
1	20	-21
1	50	-21
1	100	-20
2	10	-31
2	20	-33
2	50	-28
2	100	-24
3	10	-56
3	20	-46
3	50	-34
3	100	-24
4	10	-53
4	20	-41
4	50	-26
4	100	-15

* UPLIFT IS GROSS WIND FORCE (ASD). SEE G.S.N. FOR ROOF DEAD LOAD

ROOF FRAMING PLAN NOTES

A. VERIFY ALL DIMENSIONS PRIOR TO CONSTRUCTION. RESOLVE DISCREPANCIES WITH THE ARCHITECT

B. VERIFY LOCATIONS OF ALL OPENINGS IN ROOF WITH ARCHITECTURAL, MECHANICAL, PLUMBING AND ELECTRICAL PRIOR TO CONSTRUCTION.

C. VERIFY ROOF ELEVATION WITH ARCHITECTURAL.

D. ROOF DECK SHALL BE 1 1/2" x 20 GAUGE STEEL DECK. ATTACH DECK TO THE FRAMING PER THE GENERAL STRUCTURAL NOTES.

E. FRAMING AT ROOF, AS SHOWN, INDICATES PREFABRICATED STEEL BAR JOISTS AND OR STEEL JOIST GIRDERS. BAR JOISTS SHALL BE SPACED AT 5'-0" o.c. MAX AS SHOWN. JOISTS SHALL CONFORM TO THE REQUIREMENTS SHOWN BELOW.

E.1 JOIST SIZE AT ROOF SHALL BE AS FOLLOWS U.N.O.

SPAN	DESIGNATION	SUPERIMPOSED DESIGN LOADS (PLF) TOTAL LOAD	LIVE LOAD
20'-0" OR LESS	12K	200	100
20'-0" TO 35'-0"	18K	200	100

E.2 TABULATED LOADS DO NOT INCLUDE PROVISIONS FOR POINT LOADS FROM MECHANICAL UNITS, ETC. ALL JOISTS SHALL BE DESIGNED FOR 500# AT ANY PANEL POINT LOCATION IN ADDITION TO OTHER LOADS.

E.3 JOIST MANUFACTURER SHALL VERIFY WEIGHT AND LOCATION OF ALL MECHANICAL UNITS WITH ARCHITECTURAL AND MECHANICAL PLANS. MECHANICAL UNIT WEIGHT SHALL BE SHARED BY (2) JOISTS MIN.

E.4 JOIST MANUFACTURER SHALL DESIGN ALL JOISTS FOR THE DEFLECTION CRITERIA SPECIFIED IN THE GENERAL STRUCTURAL NOTES.

E.5 JOIST MANUFACTURER SHALL DESIGN ALL JOIST AND JOIST GIRDERS FOR WIND UPLIFT PER THE SCHEMATIC SHOWN ON THIS SHEET

F. ROOF FRAMING DETAILS SEE SHEET S-116

MEZZANINE FRAMING PLAN NOTES

A. VERIFY ALL DIMENSIONS PRIOR TO CONSTRUCTION. RESOLVE DISCREPANCIES WITH THE ARCHITECT.

B. VERIFY LOCATIONS OF ALL OPENINGS IN MEZZANINE WITH ARCHITECTURAL, MECHANICAL, PLUMBING AND ELECTRICAL PRIOR TO CONSTRUCTION.

C. VERIFY MEZZANINE ELEVATION WITH ARCHITECTURAL.

D. MEZZANINE DECK SHALL BE 3 1/2" CONCRETE OVER 1 1/2" x 20 GAUGE STEEL DECK (5" TOTAL THICKNESS) OVER OPEN-WEB STEEL JOISTS. ATTACH DECK TO THE FRAMING PER THE GENERAL STRUCTURAL NOTES.

E. FRAMING AT MEZZANINE INDICATES PREFABRICATED STEEL BAR JOISTS. BAR JOISTS SHALL BE SPACED AT 5'-0" o.c. MAX OR AS SHOWN. JOISTS SHALL BE 12K3.

F. MEZZANINE FRAMING DETAILS SEE SHEET S-116.

MASONRY LINTEL SCHEDULE

① GROUT DEPTH
② BOTTOM HORIZ. REINF.
③ TOP HORIZ. REINF.
④ VERT. REINF. w/STD HOOK AT BOTTOM

A. EXTEND HORIZONTAL REINFORCING 24" MIN. EA. SIDE OF LINTEL

B. SHORE LINTEL UNTIL GROUT REACHES DESIGN STRENGTH

C. ALL LINTELS SHALL BE ML1 U.N.O.

MARK	GROUT DEPTH	BTM HORIZ. REINF.	TOP HORIZ. REINF.	VERT. REINF.	COMMENTS
ML1	8"	(1) #5	-	-	-
ML2	24"	(2) #5	-	-	-

MEZZANINE AND LOW ROOF FRAMING PLAN

SCALE: 1/8" = 1'-0"

TETRA TECH
ENGINEERING BUSINESS NO. XXXX
www.tetratech.com
Tt-Tetra Tech Street Address
Tt-Tetra Tech City, State ZIP Code
Tel: 000.000.0000 Fax: 000.000.0000

CHRISTOPHER S. LOSS — No. 38491 — PROFESSIONAL ENGINEER — 12/18/2024

BARNWELL SCHOOL DISTRICT
OWNER
770 HAGOOD AVE.
BARNWELL, SD 29812
Tel: 503 541 1300

TETRA TECH
ARCHITECT
MECHANICAL ENGINEER
PLUMBING ENGINEER
ELECTRICAL ENGINEER
240 CONTINENTAL DR
NEWARK, DE 19713
302 738 7551

THOMAS & HUTTON
CIVIL ENGINEER
1501 MAIN ST.
COLUMBIA, SC 29201
Tel: 803 451 0200

ZZ CONSULTING
STRUCTURAL ENGINEER
114 S. STATE ST.
SHELLEY, ID 83274
Tel: 208 357 5404

MARK	DATE	DESCRIPTION	BY
1	07/18/2024	REVISED CONSTRUCTION DOC. SUBMITTAL FOR OSF REVIEW AND APPROVAL	
2	09/11/2024	ISSUED FOR BID	
	12/6/2024	ISSUED FOR CONSTRUCTION CONFORMANCE SET	

BARNWELL SCHOOL DISTRICT
MULTI-USE SAFE ROOM
MEZZANINE AND LOW ROOF FRAMING PLAN

Project No.:	S20202
Designed By:	CSZ
Drawn By:	SRM
Checked By:	CSZ

S-115

Copyright Tetra Tech

5/31/2012 9:32:13 AM File Path

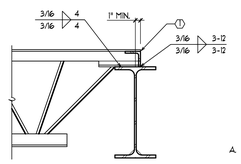

① 3/16" ANGLE TO MATHCH JOIST BEARING DEPTH , CONTINUOUS BETWEEN JOISTS.

A. CONCRETE OVER STEEL DECK NOT SHOWN FOR CLARITY

211 STEEL "K" JOIST AT STEEL BEAM

211-S1D1D1

NO SCALE

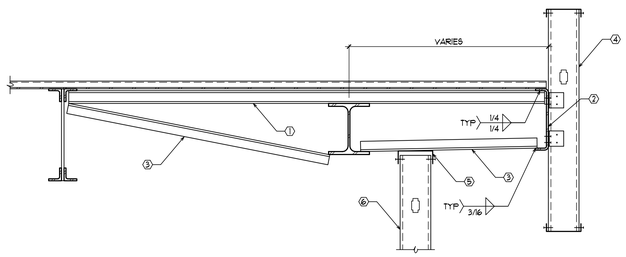

① 25K1 JOIST SUBSTITUTE AT 36" o.c.

② 1/4" BENT PLATE x 10'-0" MIN SECTIONS

2"
12"
2"

③ L 2x2x3/16 BRACE AT 36" o.c.

④ 6"x20 GAUGE PARAPET STUDS AT 16" o.c.

⑤ 2" DEFLECTION TRACK

⑥ STUDWALL PER PLANS

A. SEE ARCHITECTURAL FOR EXACT PARAPET CONFIGURATION

212 PARAPET AT JOIST OUTRIGGERS

212-S1D1D1

NO SCALE

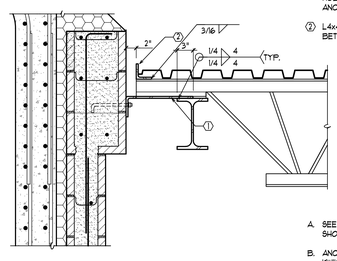

① BENT PLATE 5/16" x 5" x REQD x 1'-4" WITH 1 1/2" VERTICAL SLOTTED HOLES AND (2) 3/4" DIA x 8" ANCHOR BOLTS AT 48" o.c.

② L4x4x3/16 STRAIGHT SECTIONS BETWEEN JOISTS

A. SEE DETAIL 301 FOR INFORMATION SHOWN BUT NOT NOTED

B. ANCHOR BOLTS MAY BE HILTI KWIK BOLT 3 LIEDGE ANCHORS

213 ENTRY AT DOME

213-S1D1D1

NO SCALE

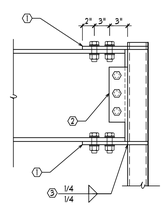

① 3/4" PLATE WITH (4) 3/8" DIA. A325X BOLTS TO BEAM FLANGE

② SHEAR PLATE CONNECTION PER TYPICAL SHEAR PLATE CONNECTION SCHEDULE.

③ 3 SIDES

A. ADJOINING FRAMING, STIFFENERS, ETC. AS OCCURS, NOT SHOWN FOR CLARITY

B. DOUBLE SIDED CONNECTION AS OCCURS

214 W-BEAM AT HSS COLUMN MOMENT CONNECTION

214-S1D1D1

NO SCALE

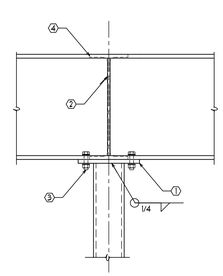

① CAP PLATE ¾"

② STIFFENER PLATE ½"

③ (4) ¾" DIA. THRU-BOLTS

④ BEAM AT OPPOSITE SIDE AS OCCURS

215 STEEL BEAM CONTINUOUS AT STEEL COLUMN

215-S1D1D1

NO SCALE

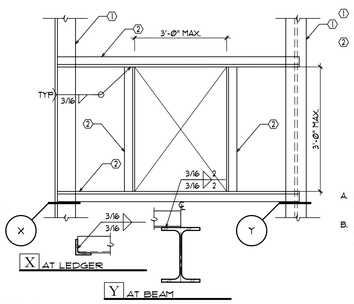

① FLOOR BEAM/LEDGER AS OCCURS PER PLAN.

② L4x4x ¼

A. FLOOR DECK NOT SHOWN FOR CLARITY

B. ATTACH FLOOR DECK TO MEMBERS AT PERIMETER OF OPENING PER GSN

206 TYPICAL SMALL OPENING IN FLOOR DECK

206-S1D1D1

NO SCALE

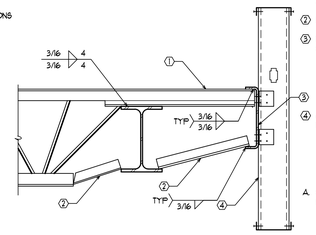

① EXTEND TOP CHORD OVER BEAM AS REQUIRED

② L2x2x3/16 BRACE AT EACH JOIST

③ 1/4" BENT PLATE x 10'-0" MIN. SECTIONS

2"
12"
2"

④ 6"x20 GAUGE PARAPET STUDS AT 16" o.c.

A. SEE ARCHITECTURAL FOR EXACT PARAPET CONFIGURATION

207 TOP CHORD EXTENSION AT BEAM

207-S1D1D1

NO SCALE

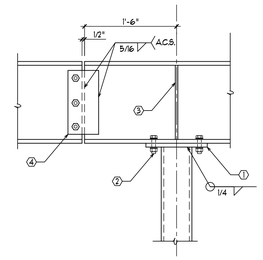

① ¾" CAP PLATE

② (4) ¾" DIA BOLTS ON BEAM GAGE

③ ¾" STIFFENER

④ ¾" PLATE w/(3) A325 THRU BOLTS SNUG TIGHT PER ANY AISC APPROVED METHOD

208 STEEL BEAM AT STEEL COLUMN

208-S1D1D1

NO SCALE

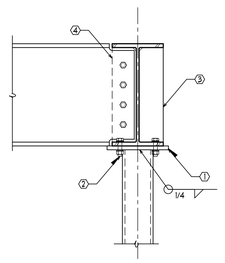

① ¾" CAP PLATE

② (4) ¾" DIA BOLTS ON BEAM GAGE

③ ⅜" STIFFENER

④ SHEAR PLATE, WITH SIZE AND NUMBER OF BOLTS PER TYPICAL SHEAR PLATE CONNECTION SCHEDULE

209 STEEL BEAM AT STEEL COLUMN

209-S1D1D1

NO SCALE

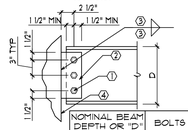

NOMINAL BEAM DEPTH OR "D"	BOLTS	PLATE	MIN WELD
8", 10"	(2) 3/4" DIA	5/16"	1/4"
12", 14"	(3) 3/4" DIA	3/8"	5/16"
16"	(4) 3/4" DIA	3/8"	5/16"
18"	(5) 3/4" DIA	3/8"	5/16"
21", 24"	(6) 3/4" DIA	3/8"	5/16"
27"	(7) 1" DIA	1/2"	3/8"
30"	(8) 1" DIA	1/2"	3/8"
33"	(9) 1" DIA	1/2"	3/8"
36"	(10) 1" DIA	1/2"	3/8"
40"	(11) 1" DIA	1/2"	3/8"
44"	(12) 1" DIA	1/2"	3/8"

① BOLTS PER GSN AND SCHEDULE BELOW

② SHEAR PLATE. SEE SCHEDULE BELOW FOR THICKNESS

③ WELD SIZE PER SCHEDULE BELOW

④ FACE OF SUPPORTING MEMBER

A. HOLES SHALL BE HORIZONTAL SHORT-SLOTTED IN SHEAR PLATE OR BEAM FLANGE. HOLES SHALL BE STANDARD IN MATING PIECE

210 TYPICAL SHEAR PLATE CONNECTION SCHEDULE

S4-103

NO SCALE

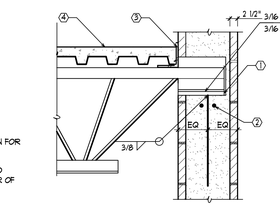

① PL 3/4x6'x 1'-4" W/(2)⅝x2'-0" DOWELS SPACED 8" APART

② (2) ⅝ CONT. (MIN)

③ L5x5x3/16 CONTINUOUS

④ CONCRETE OVER STEEL DECK PER PLAN

A. MASONRY WALL REINF. NOT SHOWN

B. GROUT BENEATH PLATE FOR FULL BEARING CONTACT.

201 STEEL JOIST AT MASONRY WALL POCKET

201-S1D1D1

NO SCALE

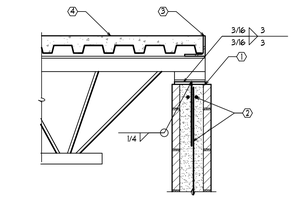

① BEARING PLATE 1/2"x6"x1'-0" w/(2) ⅝ x 16" DOWELS SPACED 8" APART

② MASONRY WALL REINFORCING PER PLAN OR SCHEDULE

③ L5x5x1/4 CONTINUOUS

④ CONCRETE OVER STEEL DECK PER PLAN

202 STEEL JOIST AT MASONRY WALL

201-S1D1D1

NO SCALE

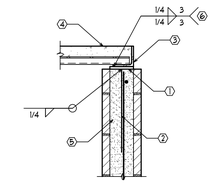

① EMBED PLATE ¾"x6"x0'-6" AT 32" o.c.

② 4x12" WELDABLE BAR AT EMBED PLATE

③ L5x5x1/4 CONTINUOUS

④ CONCRETE OVER STEEL DECK PER PLAN

⑤ 16" DEEP (MIN.) LINTEL AT TOP OF WALL

⑥ ANGLE TO EMBED PLATE

A. ATTACH STEEL DECK TO BRG PLATE PER GSN.

203 STEEL AT MASONRY WALL

203-S1D1D1

NO SCALE

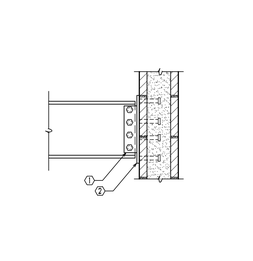

① SHEAR PLATE, SIZE AND NUMBER OF BOLTS PER TYPICAL SHEAR PLATE CONNECTION SCHEDULE.

② ¾" EMBED PLATE WITH (8) ¾" DIA x 6" HEADED STUDS

A. WALL REINFORCING NOT SHOWN FOR CLARITY.

B. ADJOINING FRAMING AS OCCURS NOT SHOWN FOR CLARITY.

204 STEEL BEAM AT MASONRY WALL

204-S1D1D1

NO SCALE

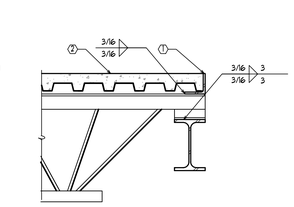

① L 5x5x1/4 CONTINUOUS

② CONCRETE OVER STEEL DECK PER PLAN

205 STEEL JOIST AT STEEL BEAM

205-S1D1D1

NO SCALE

TETRA TECH
ENGINEERING BUSINESS NO. XXXX
www.tetratech.com
Tt-Tetra Tech Street Address
Tt-Tetra Tech City-State-ZipCode
Tel: 000.000.0000 Fax: 000.000.0000

CHRISTOPHER M. ZIEGLER
No. 38491
LICENSED PROFESSIONAL ENGINEER
STRUCTURAL
12/19/2024

BARNWELL SCHOOL DISTRICT
OWNER
770 HAGOOD AVE.
BARNWELL, SD 29812
Tel: 503 541 1300

TETRA TECH
ARCHITECT
MECHANICAL ENGINEER
PLUMBING ENGINEER
ELECTRICAL ENGINEER
240 CONTINENTAL DR
NEWARK, DE 19713
302 738 7551

THOMAS & HUTTON
CIVIL ENGINEER
1501 MAIN ST.
COLUMBIA, SC 29201
Tel: 803 451 0200

ZZ CONSULTING
STRUCTURAL ENGINEER
114 S. STATE ST.
SHELLEY, ID 83274
Tel: 208 357 5404

MARK	DATE	DESCRIPTION	BY
1	07/19/2024	REVISED CONSTRUCTION DOC. SUBMITTAL FOR OSF REVIEW AND APPROVAL	
2	09/11/2024	ISSUED FOR BID	
	12/6/2024	ISSUED FOR CONSTRUCTION CONFORMANCE SET	

BARNWELL SCHOOL DISTRICT
MULTI-USE SAFE ROOM

FRAMING DETAILS

Project No.:	S20202
Designed By:	CSZ
Drawn By:	SRM
Checked By:	CSZ

S-116

Copyright: Tetra Tech

5/31/2012 9:32:13 AM File Path

DOME REINFORCING NOTES

A. VERIFY ALL DIMENSIONS PRIOR TO CONSTRUCTION.

B. HORIZONTAL BARS MAY BE FASTENED TO EITHER INSIDE OR OUTSIDE OF THE VERTICAL BARS. CENTER VERTICAL REINFORCING IN SHELL THICKNESS.

C. PLASTIC CONDUIT UP TO 3/4" DIAMETER MAY BE PLACED AGAINST THE FOAM OR FIRST LAYER OF SHOTCRETE. SEE TYPICAL DETAIL.

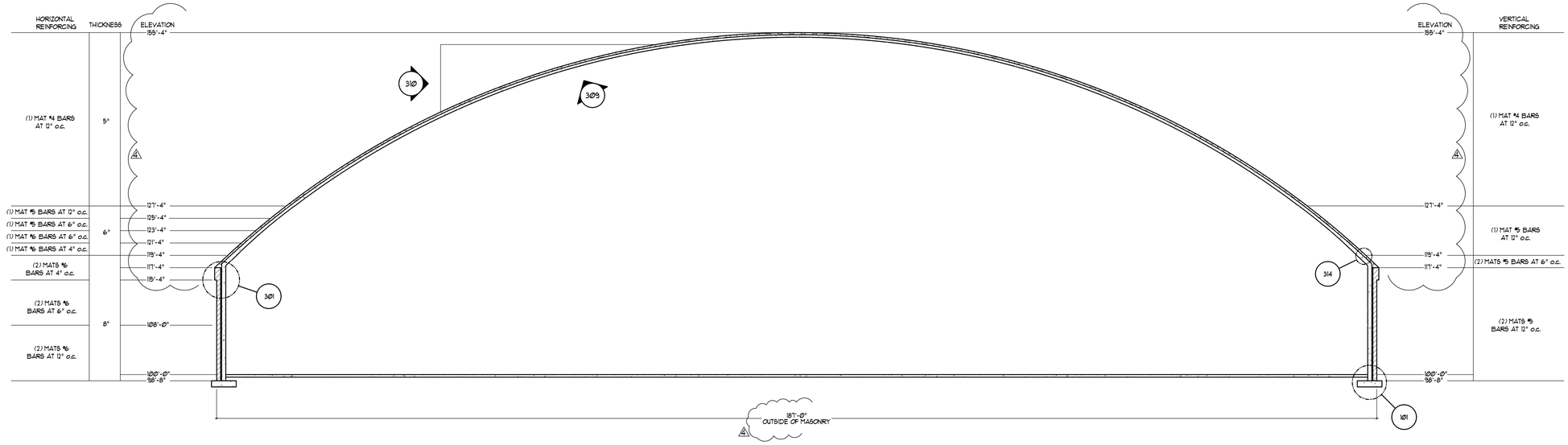

DOME REINFORCING SECTION

SCALE: 1/8" = 1'-0"

TETRA TECH
ENGINEERING BUSINESS NO. XXXX
www.tetratech.com
Tt-Tetra Tech Street Address
Tt-Tetra Tech City-State-ZipCode
Tel: 000.000.0000 Fax: 000.000.0000

SOUTH CAROLINA PROFESSIONAL ENGINEER
LICENSED PROFESSIONAL ENGINEER
No. 38491
CHRISTOPHER SCOTT
12/06/2024

BARNWELL SCHOOL DISTRICT

OWNER
770 HAGOOD AVE.
BARNWELL, SD 29812
Tel: 503 541 1300

TETRA TECH
ARCHITECT
MECHANICAL ENGINEER
PLUMBING ENGINEER
ELECTRICAL ENGINEER

240 CONTINENTAL DR
NEWARK, DE 19713
302 738 7551

THOMAS & HUTTON
CIVIL ENGINEER
1501 MAIN ST.
COLUMBIA, SC 29201
Tel: 803 451 0200

ZZ CONSULTING
STRUCTURAL ENGINEER
114 S. STATE ST.
SHELLEY, ID 83274
Tel: 208 357 5404

MARK	DATE	DESCRIPTION	BY
1	07/18/2024	REVISED CONSTRUCTION DOC. SUBMITTAL FOR OSF REVIEW AND APPROVAL	
2	09/11/2024	ISSUED FOR BID	
4	11/01/2024	ISSUED FOR ADDENDUM 04	
	12/6/2024	ISSUED FOR CONSTRUCTION CONFORMANCE SET	

BARNWELL SCHOOL DISTRICT

MULTI-USE SAFE ROOM

DOME REINFORCING SECTION

Project No.:	S20202
Designed By:	CSZ
Drawn By:	SRM
Checked By:	CSZ

S-301

Copyright: Tetra Tech

5/31/2012 9:32:13 AM File Path

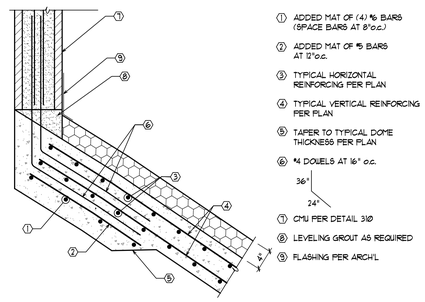

1. ADDED MAT OF (4) #5 BARS (SPACE BARS AT 8"o.c.)
2. ADDED MAT OF #5 BARS AT 12"o.c.
3. TYPICAL HORIZONTAL REINFORCING PER PLAN
4. TYPICAL VERTICAL REINFORCING PER PLAN
5. TAPER TO TYPICAL DOME THICKNESS PER PLAN
6. #4 DOWELS AT 16" o.c.
   36" | 24"
7. CMU PER DETAIL 310
8. LEVELING GROUT AS REQUIRED
9. FLASHING PER ARCH'L

312 DORMER SILL

312-S202101-312 NO SCALE

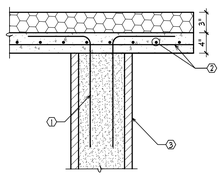

1. #4 DOWELS AT 16"o.c.
   24" | 36"
2. #4 BARS AT 12"o.c. EACH WAY IN DORMER
3. CMU PER DETAIL 312

313 CMU AT DORMER

313-S202101 NO SCALE

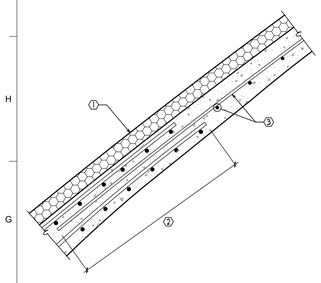

1. AIRFORM AND URETHANE FOAM PER PLAN
2. INCREASED LAP LENGTH PER G.S.N.
3. HORIZONTAL AND VERTICAL REINFORCING PER PLAN

314 TRANSITION TO SINGLE MAT OF REINFORCING

314-S202101 NO SCALE

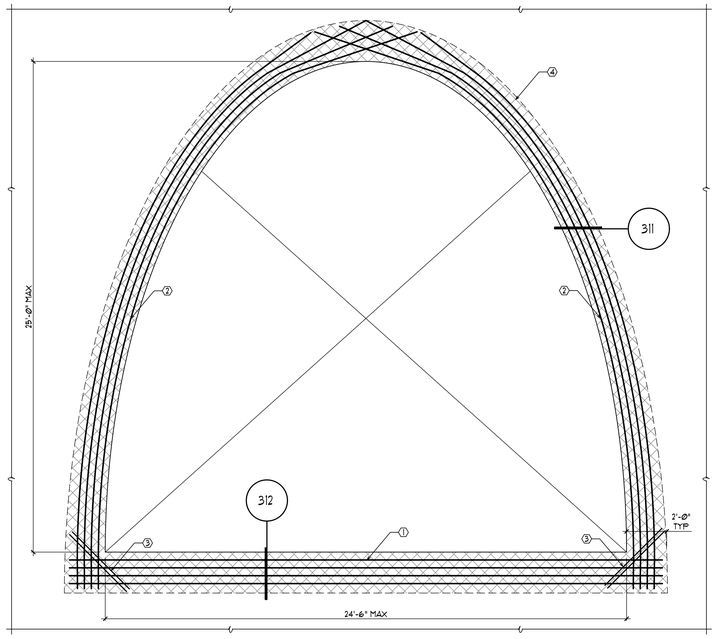

1. ADDED MAT OF (4) #5 HORIZONTAL BARS BELOW OPENING. EXTEND PAST EDGE OF OPENING 24"
2. ADDED MAT OF (4) #5 VERTICAL BARS, EXTEND PAST EDGE OF OPENING 24"
3. (2) #4x48" DIAGONAL BARS EACH MAT
4. INCREASE SHOTCRETE THICKNESS BY 4" AROUND OPENING (TOTAL THICKNESS VARIES)

A. SEE ARCH'L FOR EXACT CONFIGURATION

B. SEE DETAIL 312 FOR DORMER FACE

309 DORMER OPENING

S202101-309 NO SCALE

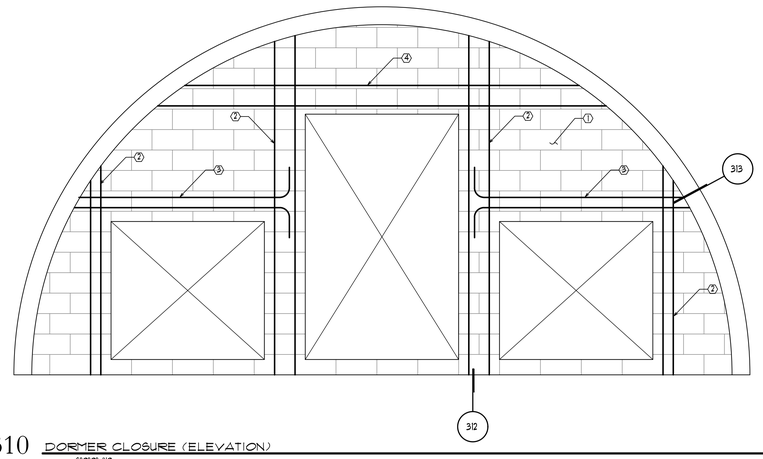

1. 8" SOLID GROUTED CMU WITH #5 BARS AT 24" o.c. EACH FACE
2. (2) #5 VERTICAL BARS EACH FACE AS SHOWN
3. (2) #5 HORIZONTAL BARS EACH FACE WITH STANDARD HOOK
4. (2) #5 HORIZONTAL BARS, EACH FACE.

310 DORMER CLOSURE (ELEVATION)

S202101-310 NO SCALE

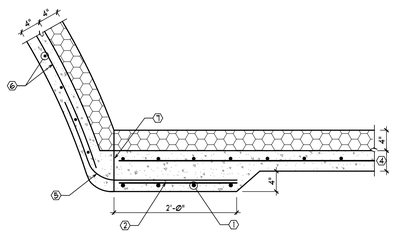

1. ADDED MAT OF (4) #5 BARS (SPACE BARS AT 8"o.c.)
2. ADDED MAT OF #5 BARS AT 12"o.c.
3. TYPICAL HORIZONTAL AND VERTICAL REINFORCING PER PLAN
4. DOME THICKNESS PER PLAN (THICKNESS VARIES)
5. #4 DOUEL AT 12"o.c.
   36" | 36"
6. #4 BARS AT 12"o.c. EACH WAY IN DORMER
7. CONSTRUCTION JOINT

311 DORMER JAMB

S202101-311 NO SCALE

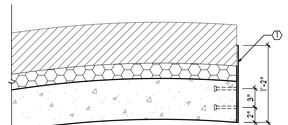

1. 1/4" PLATE ALL SIDES OF OPENING WITH (2) 1/2" DIA x 6" HEADED STUDS AT 24" o.c.

A. WALL REINFORCEMENT NOT SHOWN FOR CLARITY

B. SEE ARCHITECTURAL AND MECHANICAL PLANS FOR DOOR LOUVER CONFIGURED.

306 DOOR/LOUVER ATTACHMENT PLATE

S202101-306 NO SCALE

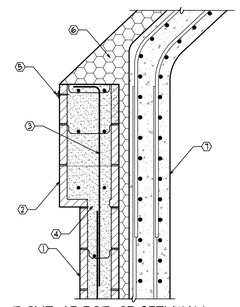

1. 8" CMU VENEER WALL WITH #4 AT 48" o.c. EACH WAY. SOLID GROUT ALL CELLS CONTAINING REINFORCING.
2. 12" CMU HEADER RING WITH (2) #5 EACH COURSE
3. #4 DOUEL AT 48" o.c.
   54" | 6"
4. BREAKOUT 6"x6" HOLE FOR GROUT
5. AIRFORM ATTACHMENT
6. FOAM INSULATION PER ARCHITECTURAL
7. CONCRETE THICKNESS AND REINFORCING PER SHEET S-301

301 DOME AT TOP OF STEMWALL

301-S202101 NO SCALE

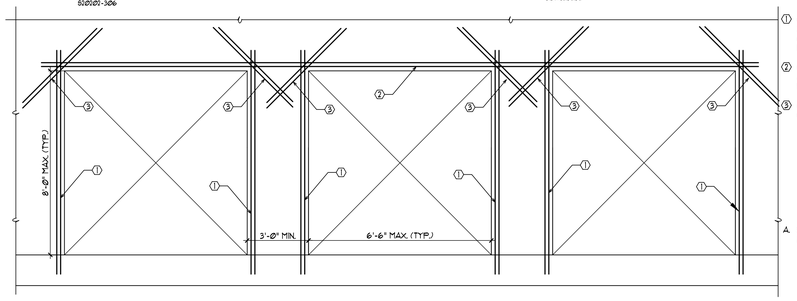

1. (2) #5 BARS EACH FACE EXTENDED 30" PAST OPENING. (SPACE AT 6" o.c.) MATCH AND LAP WITH FOOTING DOUELS
2. (2) #5 ADDED BARS EACH FACE ABOVE OPENING. EXTEND 36" PAST EDGE OF OPENING.
3. (2) #4 x 48" DIAGONAL BARS CENTERED IN WALL

A. SEE DETAIL 306 FOR ATTACHMENT PLATE AT OPENINGS

302 ENTRY DOOR OPENINGS IN STEMWALL

S202101-302 NO SCALE

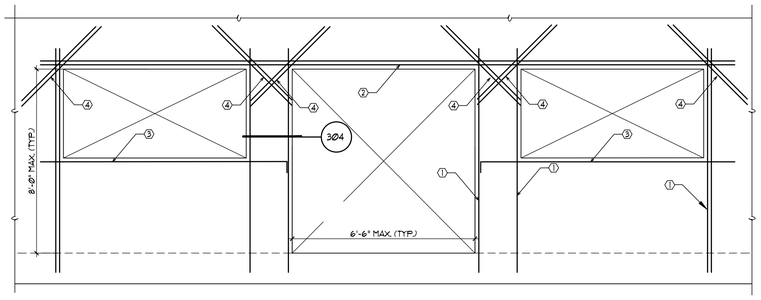

1. (2) #5 BARS EACH FACE EXTENDED 36" PAST OPENING. (SPACE AT 6" o.c.) MATCH AND LAP WITH FOOTING DOUELS
2. (2) #5 ADDED BARS EACH FACE ABOVE OPENING. EXTEND 36" PAST EDGE OF OPENING.
3. (1) #5 ADDED BARS EACH FACE BELOW OPENING . EXTEND PAST EDGE OF OPENING 36"
4. (2) #4 x 48" DIAGONAL BARS CENTERED IN WALL

A. SEE DETAIL 306 FOR ATTACHMENT PLATE AT OPENINGS

303 LOWER AND DOOR OPENINGS IN STEMWALL

S202101-303 NO SCALE

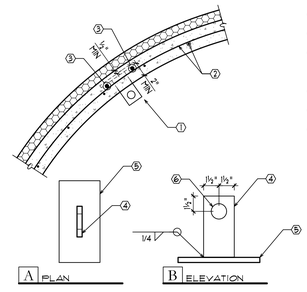

1. EMBED PLATE PER "A" AND "B"
2. TYPICAL DOME REINFORCING
3. (2) #4x36" ADDED BARS CROSSING THE BASE PLATE CENTERED AT KNIFE PLATE
4. KNIFE PL½"x3"x8"
5. BASE PL½"x4"x8"
6. 1½" DIA HOLE

A. VERIFY ACCEPTABLE LOCATIONS WITH THE ENGINEER.

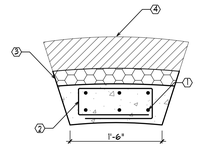

1. (3) #5 VERTICAL EACH FACE MATCH AND LAP WITH FOOTING DOUELS
2. #5 TIES AT 12" o.c. TIES MAY BE FIELD BENT DURING CONSTRUCTION
3. URETHANE FOAM PER PLAN
4. MASONRY VENEER PER PLAN

A. VENEER ANCHORAGE NOT SHOW FOR CLAITY

B. SEE DETAIL 306 FOR ATTACHMENT PLATE. NOT SHOUN FOR CLARITY

307 EMBEDDED EQUIPMENT ANCHOR PLATE

S202101-307 NO SCALE

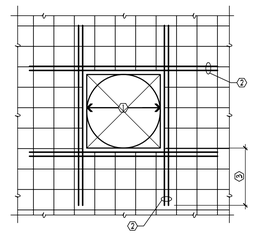

1. OPENING WIDTH OR DIAMETER 2'-0" MAX.
2. NUMBER OF ADDED BARS EQUAL TO THE NUMBER OF BARS INTERRUPTED BY OPENING, ROUND UP TO AN EQUAL NUMBER OF BARS EACH SIDE OF OPENING. MIN. (3) #4
3. EXTEND BARS PAST EDGE OF OPENING EQUAL TO LAP LENGTH OF BAR PER INCREASED LAP SCHEDULE (24" MIN.)

304 JAMB AT DOOR/LOUVER

S202101-304 NO SCALE

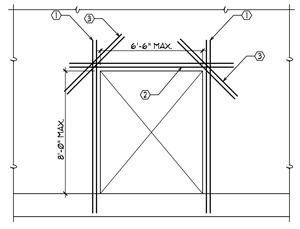

1. (2) #5 VERTICAL BARS EACH FACE EXTENDED 36" PAST OPENING. (SPACE BARS AT 6" O.C.) MATCH AND LAP WITH FOOTING DOUELS
2. (2) #5 ADDED HORIZONTAL BARS EACH FACE. EXTEND 36" PAST EDGE OF OPENING.
3. (2) #4x48" DIAGONAL BARS CENTERED IN WALL

A. SEE DETAIL 306 FOR ATTACHMENT PLATE AT OPENING.

308 TYPICAL SMALL OPENING IN SHELL

S202101-308 NO SCALE

305 SINGLE DOOR OPENING

S202101-305 NO SCALE

TETRA TECH
ENGINEERING BUSINESS NO. XXXX
www.tetratech.com
Tt-Tetra Tech Street Address
Tt-Tetra Tech City-State-ZipCode
Tel: 000.000.0000 Fax: 000.000.0000

CHRISTOPHER L. MOSS
LICENSED PROFESSIONAL ENGINEER
No. 38491
TERRITORIAL ENGINEER
12/06/2024

BARNWELL SCHOOL DISTRICT
OWNER
770 HAGOOD AVE.
BARNWELL, SD 29812
Tel: 503 541 1300

TETRA TECH
ARCHITECT
MECHANICAL ENGINEER
PLUMBING ENGINEER
ELECTRICAL ENGINEER
240 CONTINENTAL DR
NEWARK, DE 19713
302 738 7551

THOMAS & HUTTON
CIVIL ENGINEER
1501 MAIN ST.
COLUMBIA, SC 29201
Tel: 803 451 0200

ZZ CONSULTING
STRUCTURAL ENGINEER
114 S. STATE ST.
SHELLEY, ID 83274
Tel: 208 357 5404

MARK	DATE	DESCRIPTION	BY
1	07/18/2024	REVISED CONSTRUCTION DOC. SUBMITTAL FOR OSF REVIEW AND APPROVAL	
2	09/11/2024	ISSUED FOR BID	
	12/6/2024	ISSUED FOR CONSTRUCTION CONFORMANCE SET	

BARNWELL SCHOOL DISTRICT
MULTI-USE SAFE ROOM
DOME DETAILS

Project No.:	S20202
Designed By:	CSZ
Drawn By:	SRM
Checked By:	CSZ

S-302

Copyright Tetra Tech

5/31/2012 9:32:13 AM File Path

TYPICAL ABBREVIATIONS

s	
A	
ABDN	ABANDON
AFF	ABOVE FINISH FLOOR
AFG	ABOVE FINISH GRADE
ASC	ABOVE SUSPENDED CEILING
ACC	ACCESSIBLE
ACOUST	ACOUSTIC(AL)
ACP	ACOUSTICAL CEILING PANEL
ACT	ACOUSTICAL CEILING TILE
AP	ACOUSTICAL PANEL
AWT	ACOUSTICAL WALL TREATMENT
ADD	ADDITIONAL
ADH	ADHESIVE
ADJ	ADJACENT
ADMIN	ADMINISTRATION
AC	AIR CONDITIONING
ACU	AIR CONDITIONING UNIT
AHU	AIR HANDLING UNIT
AIB	AIR INFILTRATION BARRIER
ALT	ALTERNATE
ALUM	ALUMINUM
ACI	AMERICAN CONCRETE INSTITUTE
ADA	AMERICANS DISABILITIES ACT
AB	ANCHOR BOLT
ANOD	ANODIZE
ATFP	ANTI-TERRORISM / FORCE PROTECTION
APVD	APPROVED
APPROX	APPROXIMATE(LY)
ARCH	ARCHITECT(URAL)
AR	AS REQUIRED
ASPH	ASPHALT
ASSY	ASSEMBLY
ATTCHMT	ATTACHMENT
AUTO	AUTOMATIC
ACS	AUTOMATIC CONTROL SYSTEM
AVG	AVERAGE
B	
BB	BACKER BOARD
BSPL	BACKSPLASH
BALC	BALCONY
B	BASE
BL	BASELINE
BSMT	BASEMENT
BM	BEAM
BRG	BEARING
BFF	BELOW FINISH FLOOR
BET	BETWEEN
BTWN	BETWEEN
BIT	BITUMINOUS
BLKG	BLOCKING
BD	BOARD
BTM	BOTTOM
BC	BOTTOM OF CURB
BOF	BOTTOM OF FOOTING
BOS	BOTTOM OF STEEL
BRKT	BRACKET
BRK	BRICK
BRSH	BRICKSHELF
BHMA	BUILDER'S HARDWARE MANUFACTURER'S ASSOCIATION
BLDG	BUILDING
BP	BUILDING PAPER
BUR	BUILT UP ROOF
BLT IN	BUILT-IN
BN	BULLNOSE
C	
CAB	CABINET
CUH	CABINET UNIT HEATER
CPT	CARPET TILE
CSWK	CASEWORK
CIP	CAST IN PLACE
CI	CAST IRON
CS	CAST STONE
CLKG	CAULKING
CLG	CEILING
CEM	CEMENT
CBB	CEMENTITIOUS BACKER BOARD
CTR	CENTER
CL	CENTER LINE
CP	CENTER POINT
C-C	CENTER TO CENTER
CER	CERAMIC
CFT	CERAMIC FLOOR TILE
CT	CERAMIC TILE
CTB	CERAMIC TILE BASE
CWT	CERAMIC WALL TILE
CLRM	CLASSROOM
CO	CLEANOUT
CLR	CLEAR
CLO	CLOSET
CFMF	COLD FORM METAL
COL	COLUMN
COMM	COMMUNICATIONS
CONC	CONCRETE
CMU	CONCRETE MASONRY UNIT
CONF	CONFERENCE
CONST	CONSTRUCTION
CD	CONSTRUCTION DOCUMENT(S)
CONT	CONTINUOUS
CF	CONTRACTOR FURNISHED
CJ	CONTROL JOINT
COORD	COORDINATE
CG	CORNER GUARD
CORR	CORRIDOR
COV	COVER
D	
DP	DAMPPROOF(ING)
D	DEPTH
DET	DETAIL
DIA	DIAMETER
DIM	DIMENSION
DW	DISHWASHER
DO	DITTO
DIV STRIP	DIVIDER STRIP
DR	DOOR
DBL	DOUBLE
DN	DOWN
DS	DOWNSPOUT
DT	DRAIN TILE
DWG(S)	DRAWING(S)
DF	DRINKING FOUNTAIN
E	
EA	EACH
EWC	ELECTRIC WATER COOLER
ELEC	ELECTRIC(AL)
EL	ELEVATION
ELEV	ELEVATOR
ENCL	ENCLOSURE
EFS	ENTRANCE FLOORING SYSTEM
EQ	EQUAL
EQUIP	EQUIPMENT
EXIST	EXISTING
EPS	EXPANDED POLYSTYRENE
EXP	EXPANSION
EJ	EXPANSION JOINT
EJC	EXPANSION JOINT COVER
EXT	EXTERIOR
EIFS	EXTERIOR INSULATION FINISH SYSTEM
XPS	EXTRUDED POLYSTYRENE
F	
FOM	FACE OF MASONRY
FOS	FACE OF STUD
FF	FACTORY FINISH
FCU	FAN COIL UNIT
FT	FEET
FRP	FIBERGLASS REINFORCED PLASTIC
FIN	FINISH
F.F.	FINISH FLOOR
FEP	FINISHED END PANEL
FAAP	FIRE ALARM ANNUCIATIOR PANEL
FE	FIRE EXTINGUISHER
FEC	FIRE EXTINGUISHER CABINET
FR	FIRE RESISTANT
FRT	FIRE RETARDANT TREATED
FVC	FIRE VALVE CABINET
FIXT	FIXTURE
FLSH	FLASHING
FLR	FLOOR
FCO	FLOOR CLEAN OUT
FD	FLOOR DRAIN
FLUOR	FLUORESCENT
FTG	FOOTING
FRMG	FRAMING
FA	FRESH AIR
FUR	FURRING
G	
GA	GAGE, GAUGE
GALV	GALVANIZED
GI	GALVANIZED IRON
GL	GLASS
GR	GRADE
GYP BD	GYPSUM BOARD
GWB	GYPSUM WALL BOARD
H	
"H"	HANDICAP ACCESSIBLE
HDW	HARDWARE
HDWD	HARDWOOD
HTR	HEATER
HVAC	HEATING VENTILATION AND AIR CONDITIONING
HT	HEIGHT
HPC	HIGH PERFORMANCE COATING
HC	HOLLOW CORE
HM	HOLLOW METAL
HOR	HORIZONTAL
HB	HOSE BIBB
I	
ILO	IN LIEU OF
INFO	INFORMATION
ID	INSIDE DIAMETER
ICF	INSULATED CONCRETE FORM
INSUL	INSULATION
INT	INTERIOR
IBC	INTERNATIONAL BUILDING CODE
J	
JAN	JANITOR
JT	JOINT
K	
KIT	KITCHEN
KO	KNOCKOUT
L	
LAM	LAMINATE
LAV	LAVATORY
LIB	LIBRARY
LT	LIGHT
LKR	LOCKER
LP	LOW POINT
LVT	LUXURY VINYL TILE
M	
MT	MABLE THRESHOLD
MFGR/MANUF	MANUFACTURER
MAS	MASONRY
MO	MASONRY OPENING
MAT	MATERIAL
MAX	MAXIMUM
MECH	MECANICAL
MEP	MECHANICAL, ELECTRICAL & PLUMBING
MC	MEDICINE CABINET
MEMB	MEMBRANE
MTL	METAL
MEZZ	MEZZANINE
MIN	MINIMUM
MIR	MIRROR
MISC	MISCELLANEOUS
MTD	MOUNTED
MTG	MOUNTING
MOVE	MOVABLE
N	
NFPA	NATIONAL FIRE PROTECTION ASSOCIATION
NAT	NATURAL
NP	NO PAINT
NRC	NOISE REDUCTION COEFFICIENT
NOM	NOMINAL
N	NORTH
NIC	NOT IN CONTRACT
NTS	NOT TO SCALE
NO	NUMBER
O	
OFF	OFFICE
OC	ON CENTER
OPNG	OPENING
OPP	OPPOSITE
OH	OPPOSITE HAND
OSB	ORIENTED STRAND BARD
OD	OUTSIDE DIAMETER
OVHD	OVERHEAD
P	
P	PAINT
PS	PAINT EXPOSED STRUCTURE / DECK
PTD	PAINTED
PR	PAIR
PNL	PANEL
PH	PAPER HOLDER
PRKG	PARKING
PTN	PARTITION
PLAS	PLASTER
PLAM	PLASTIC LAMINATE
PLBG	PLUMBING
PLYWD	PLYWOOD
PTS	POINTS
POL	POLISHED
PCPL	PORTLAND CEMENT PLASTER
PSF	POUNDS PER SQUARE FOOT
PSI	POUNDS PER SQUARE INCH
PC	PRECAST
PREFAB	PREFABRICATED
PT	PRESSURE TREATED
PL	PROPERTY LINE
Q	
QTY	QUANTITY
QT	QUARRY TILE
QTB	QUARRY TILE BASE
R	
R	RADIUS
REC	RECESSED
RFM	RECESSED FLOOR MAT
RCP	REFLECTED CEILING PLAN
REFR	REFRIGERATOR
REQ'D	REQUIRED
RESIL	RESILIENT
RB	RESILIENT BASE
RSTRM	RESTROOM
RET	RETURN
REV	REVISE, REVISION
RD	ROOF DRAIN
RM	ROOM
RO	ROUGH OPENING
RS	RUBBER STAIR TREAD AND RISERS
RT	RUBBER TILE
RB	RUBBER WALL BASE
S	
SAN	SANITARY
SAN ST	SANITARY STACK
SCHED	SCHEDULE
SJ	SCORED JOINT
SCR	SCREEN
SLNT	SEALANT
S.CONC	SEALED CONCRETE
SLR	SEALER
SECT	SECTION
SA	SELF-ADHERED
SCU	SELF-CONTAINED UNIT
SHTHG	SHEATHING
SHT	SHEET
SV	SHEET VINYL
SHV	SHELVING
SHR	SHOWER
SIM	SIMILAR
SKLT	SKYLIGHT
SOG	SLAB ON GRADE
SC	SOUND CONTROL
STC	SOUND TRANSMISSION CLASS
SPEC	SPECIFICATIONS
SPLSH BLK	SPLASH BLOCK
SPR	SPRINKLER
SQ	SQUARE
SF	SQUARE FOOT
STN	STAIN(ED)
SS	STAINLESS STEEL
STD	STANDARD
SP	STANDPIPE
STL	STEEL
STOR	STORAGE
STRUCT	STRUCTURAL
SUSP	SUSPENDED
SYM	SYMMETRICAL
T	
TB	TACKBOARD
TEMP	TEMPERED
TER	TERRAZZO
THK	THICKNESS
TH	THRESHOLD
THRU	THROUGH
T	TILE
TBD	TO BE DETERMINED
TLT	TOILET
TPRT	TOILET PARTITION
T&B	TOP AND BOTTOM
TFF	TOP OF FINISH FLOOR
TOF	TOP OF FOOTING
TOM	TOP OF MASONRY
TOP	TOP OF PARAPET
TOS	TOP OF SLAB
T&G	TOUNGE AND GROOVE
TRN	TRANSOM
TRTD	TREATED
TYP	TYPICAL
U	
UL	UNDERWRITERS LABORATORY
UNFIN	UNFINISHED
UNO	UNLESS NOTED OTHERWISE
UR	URNINAL
V	
V VENT	VENT
VB	VAPOR RETARDER BARRIER
VNR	VENEER
V	VENT
VENT	VENTILATE
VIF	VERIFY IN FIELD
VERT	VERTICAL
VEST	VESTIBULE
VCT	VINYL COMPOSITION TILE
VCB	VINYL COVE BASE
VWC	VINYL WALL COVERING
VIT	VITREOUS
VOL	VOLUME
W	
WSCT	WAINSCOT
WOM	WALK OFF MAT
WM	WALL MOUNTED
WC	WALLCOVERING
WF	WATER FOUNTAIN
WH	WATER HEATER
WSHP	WATER SOURCE HEAT PUMP
WS	WATER STOP
WP	WATERPROOF
WT	WEIGHT
WB	WHITEBOARD
WxH	WIDTH x HEIGHT
W	WIDTH, WIDE, WEST
WG	WIRE GLASS
W/	WITH
W/O	WITHOUT
WD	WOOD
WDB	WOOD BASE
WDF	WOOD FLOORING
WK	WORK
&	AND
∟	ANGLE
@	AT
°	DEGREE
Ø	DIAMETER
=	EQUALS
-	MINUS
%	PERCENT
+	PLUS
±, +/-	PLUS OR MINUS

ANNOTATIONS LEGEND

ROOM TAG — ROOM NAME
0000 — ROOM NUMBER

0 / X — GRID / COLUMN LINE DESIGNATOR

N / PROJECT NORTH — NORTH ARROW

X / X-XXX / X — INTERIOR ELEVATION MARK; SHEET NUMBER WHERE ELEVATION IS LOCATED

X / X-XXX — EXTERIOR ELEVATION MARK; SHEET NUMBER WHERE ELEVATION IS LOCATED

X / X-XXX — SECTION MARK; SHEET NUMBER WHERE SECTION IS LOCATED

X / X-XXX — WALL SECTION MARK; SHEET NUMBER WHERE SECTION IS LOCATED

X / X-XXX — DETAIL CALLOUT MARK; SHEET NUMBER WHERE DETAIL IS DRAWN

P1.# — WALL TAG

100 — DOOR TAG

GB-1 — TOILET ACCESSORY TAG

00 — KEYNOTE: NEW WORK

0'-0" — SPOT ELEVATION

1 — REVISION TAG

INDICATES ADA ACCESSIBILITY

0 2' 4' 8' — GRAPHIC SCALE
SCALE: 1/4" = 1'-0"

X / X-XXX — VIEW NAME; SCALE: NTS — TYPICAL VIEW TITLE WITH REF. BUBBLE

GENERAL NOTES

1. ALL WORK SHALL COMPLY WITH APPLICABLE BUILDING CODES, ORDINANCES, AND REGULATORY AGENCIES.
2. CONTRACTOR SHALL FULLY ACQUAINT THEMSELF WITH THE CONDITIONS OF THE CONTRACT, LOCAL CONDITIONS RELATING TO LOCATION, ACCESSIBILITY, AND GENERAL CHARACTER OF THE CONSTRUCTION SITE, AS WELL AS, LOCAL LABOR CONDITIONS SO THAT HE UNDERSTANDS THE NATURE AND EXTENT, DIFFICULTIES, AND RESTRICTIONS RELATED TO THE EXECUTION OF WORK. NOTIFY THE ARCHITECT OF ALL DISCREPANCIES PRIOR TO COMMENCING WORK.
3. THE CONTRACTOR SHALL COORDINATE SCHEDULING, PROVISIONS FOR INSTALLATION, LOCATIONS, AND THE ACTUAL INSTALLATION OF ITEMS FURNISHED BY OWNER OR BY OTHERS.
4. THE CONTRACTOR SHALL VERIFY ALL DIMENSIONS IN THE FIELD AND IS RESPONSIBLE FOR ALL PHASES, INCLUDING BIDDING, FABRICATION, COORDINATION, AND CONSTRUCTION.
5. THE DRAWINGS INDICATE THE GENERAL EXTENT OF WORK. THE DRAWINGS ARE NOT INTENDED TO INDICATE OR DESCRIBE ALL WORK REQUIRED FOR THE FULL PERFORMANCE AND COMPLETION OF THE REQUIREMENTS OF THE CONTRACT DOCUMENTS. REPETITIVE FEATURES NOT NOTED ON THE DRAWINGS SHALL BE COMPLETELY PROVIDED AS IF DRAWN IN FULL.
6. MECHANICAL, ELECTRICAL, CIVIL, AND STRUCTURAL INFORMATION ON THE ARCHITECTURAL DRAWINGS IS PROVIDED FOR CLARITY AND/OR LOCATION PURPOSES ONLY. SEE RELEVANT DISCIPLINE DRAWINGS FOR SPECIFIC INFORMATION.
7. DO NOT SCALE DRAWINGS TO OBTAIN DIMENSIONS. DIMENSIONS ON DRAWINGS GOVERN. LARGE SCALE DRAWINGS GOVERN OVER SMALL SCALE DETAILS.
8. CHANGES IN DRAWINGS OR ACTUAL WORK SHALL BE ISSUED BY THE ARCHITECT.
9. PERFORM ALL WORK AND INSTALL MATERIALS IN STRICT ACCORDANCE TO APPLICABLE INDUSTRY AND MANUFACTURER'S PUBLISHED STANDARDS AND SPECIFICATIONS FOR QUALITY OF MATERIALS AND WORKMANSHIP, AS WELL AS REQUIREMENTS IN THESE DRAWINGS AND SPECIFICATION. ANY CONFLICTING REQUIREMENTS OF THE SOURCES LISTED ABOVE SHALL BE BROUGHT TO THE ARCHITECT'S ATTENTION PRIOR TO PROCEEDING WITH THE WORK.
10. MANUFACTURERS ARE REFERENCED TO ESTABLISH STYLE, SIZE, COLOR, AND MATERIAL CHARACTERISTICS, AND ARE NOT INTENDED TO LIMIT SELECTIONS FROM OTHER MANUFACTURERS. WHEN AN ALTERNATE SELECTION IS SUBMITTED, SUBMITTALS SHALL HAVE INCLUDED THE MATERIAL LISTED FOR COMPARISON.
11. THE CONTRACTOR SHALL EXAMINE ALL SURFACES TO DETERMINE THAT THEY ARE SOUND, DRY, CLEAN AND READY TO RECEIVE FINISHES PRIOR TO INSTALLATION. START OF INSTALLATION SHALL IMPLY ACCEPTANCE OF SUBSTRATE AND SHALL NOT BE GROUNDS FOR CLAIMS AGAINST IMPROPER PERFORMANCE OF INSTALLED MATERIALS. ADVISE ARCHITECT OF ANY EXISTING CONSTRUCTION NOT LEVEL, SMOOTH, AND PLUMB WITHIN INDUSTRY STANDARDS PRIOR TO START OF CONSTRUCTION.
12. DO NOT BEGIN WORK THAT MAY REQUIRE COORDINATION, SUCH AS CEILING INSTALLATION, PRIOR TO FINAL SUBMITTAL OF MECHANICAL AND ELECTRICAL COORDINATION DRAWINGS TO ARCHITECT, NOR PRIOR TO RESOLUTION AND APPROVAL OF COORDINATION ISSUES.
13. WORK DAMAGED DURING CONSTRUCTION OR NOT CONFORMING TO SPECIFIED STANDARDS, TOLERANCES, OR MANUFACTURER'S INSTRUCTIONS FOR INSTALLATION SHALL BE REPLACED, BY THE CONTRACTOR, AT NO ADDITIONAL CHARGE TO THE OWNER.
14. ANY AREA OUTSIDE THE LIMITS OF CONSTRUCTION DISTURBED BY OPERATIONS OF THE CONTRACTOR SHALL BE RESTORED AT THE CONTRACTOR'S EXPENSE.
15. EXISTING TO REMAIN OR NEW SITE ELEMENTS INCLUDING BUT NOT LIMITED TO: ALL CONCRETE WALKS, ASPHALT, CURBS, AND LANDSCAPING DAMAGED DURING CONSTRUCTION ARE TO BE REPAIRED BY THE CONTRACTOR AT NO ADDITIONAL COST TO THE OWNER.
16. EXIT DOORS, EGRESS DOORS, AND OTHER DOORS REQUIRED FOR MEANS OF EGRESS SHALL BE OPERABLE FROM THE INSIDE WITHOUT USE OF A KEY OR SPECIAL KNOWLEDGE OR EFFORT.
17. DIMENSIONS ARE FROM FACE OF MASONRY OR FACE OF METAL FRAMING, TYPICAL UNLESS NOTED OTHERWISE. MASONRY DIMENSIONS ARE NOMINAL. SEE STRUCTURAL DRAWINGS FOR LOCATIONS OF LATERAL BRACING, SLAB, FOUNDATION, AND SUBSURFACE DRAINAGE INFORMATION AND DETAILS.
18. GRID LINES INDICATE THE CENTER LINE OF PRIMARY COLUMNS ONLY. SEE STRUCTURAL DRAWINGS FOR EXACT LOCATIONS AND SIZES OF INDIVIDUAL COLUMNS.
19. BUILDING HEIGHTS AND ELEVATIONS ARE BASED UPON PROJECT FINISH ELEVATION OF 100' - 0" AT THE FIRST FLOOR. REFERENCE CIVIL DRAWINGS FOR FIRST FLOOR ELEVATIONS RELATIVE TO SEA LEVEL (DATUM 193.5')
20. UNLESS NOTED OTHERWISE, ALL ROUGH (RO) OPENINGS FOR DOORS IN STUD WALLS, NOT LOCATED BY DIMENSIONS ON PLANS OR IN DETAILS, SHALL BE 6" AWAY FROM FRAMING TO ADJACENT PERPENDICULAR WALL, FACE OF STUD. (TYP UNO)
21. UNLESS NOTED OTHERWISE, ALL MASONRY (MO) OPENINGS FOR DOORS IN MASONRY WALLS, NOT LOCATED BY DIMENSIONS ON PLANS OR IN DETAILS, SHALL BE 8" AWAY FROM FRAMING TO ADJACENT PERPENDICULAR WALL, FACE OF MASONRY.
22. ROOM AND DOOR NUMBERS SHOWN ON DRAWINGS ARE FOR CONSTRUCTION PURPOSES ONLY.
23. ALL WOOD IN CONTACT WITH CONCRETE OR MASONRY SHALL BE PRESERVATIVE TREATED WOOD. ALL WOOD ON EXTERIOR WALL AND ROOF TO BE MOISTURE RESISTANT.
24. ALL CONCEALED WOOD FRAMING, AND PLYWOOD SHEATHING SHALL BE FIRE RETARDANT TREATED (FRT). ALL WOOD BLOCKING IN FIRE RATED ASSEMBLIES TO BE FIRE RETARDANT. NON FRT BLOCKING, NAILERS, AND FURRING MAY BE USED WHERE INSTALLED IN ACCORDANCE WITH IBC SECTION 718, INCLUDING DIMENSIONAL WOOD BLOCKING, FIRE BLOCKING, REQUIREMENTS, ETC. WOOD BLOCKING INSTALLED IN ACCORDANCE WITH IBC SECTION 603 FOR HANDRAILS, MILLWORK, CABINETS, WINDOWS, AND DOORS, IS NOT REQUIRED TO BE FRT. AT COPINGS AND ROOFING TERMINATIONS, ALL BLOCKING SHALL BE PRESSURE TREATED (PT).
25. AT EXTERIOR MASONRY WALLS, CMU SHALL BE EXTENDED TIGHT TO FLOOR AND/OR ROOF DECKS, INCLUDING AROUND ALL PENETRATIONS SUCH AS BEAMS, JOIST ENDS, ETC. FILLING VOIDS IN EXTERIOR CMU BACK-UP WITH INSULATION IN LIEU OF A SOLID MASONRY ENCLOSURE WALL SHALL NOT BE PERMITTED.
26. VERTICAL COURSING FOR NEW MASONRY WALL CONSTRUCTION SHALL EQUAL EIGHT INCHES (8") FOR ONE CONCRETE MASONRY UNIT PLUS ONE MORTAR JOINT, AND THREE BRICK COURSE PLUS THREE MORTAR JOINTS, UNLESS NOTED OTHERWISE.
27. PROVIDE EXPANSION JOINTS (EXP) AND CONTROL JOINTS (CJ) IN ALL WORK AS PER PRODUCT MANUFACTURER'S STANDARDS.
28. PROVIDE MASONRY CONTROL JOINTS IN MASONRY WALL CONSTRUCTION AS INDICATED. WHERE NOT SHOWN, PROVIDE MAXIMUM SPACING BETWEEN JOINTS OF 20'/30'-0" AND MAXIMUM DISTANCE BETWEEN OUTSIDE CORNERS AND JOINTS OF 5'/10'-0", U.N.O. VERIFY FINAL MASONRY CONTROL JOINT LOCATIONS WITH ARCHITECT PRIOR TO STARTING WORK.
29. ALL MASONRY WEEP HOLES MUST BE LOCATED ABOVE GRADE, CONCRETE WALKS, PAVEMENT, MULCH, ETC. DO NOT COVER UNDER ANY CIRCUMSTANCES. CONTRACTOR IN CHARGE OF MASONRY WORK IS RESPONSIBLE FOR COORDINATING WITH ALL CIVIL WORK (TYPICAL).
30. INTERIOR PARTITION MOVEMENT CONTROL: PROVIDE CONTROL JOINTS IN GYPSUM BOARD PARTITIONS AND GYPSUM BOARD CEILINGS SHALL BE SPACED AS FOLLOWS, AND AS PER MANUFACTURER'S STANDARDS:
    - PARTITIONS: 30 FT. MAXIMUM IN EITHER DIRECTION
    - INTERIOR CEILINGS: 30 FT. MAXIMUM IN EITHER DIRECTION
    - EXTERIOR CEILINGS: 30 FT. MAXIMUM IN EITHER DIRECTION
31. INTERIOR STUD SPACING SHALL BE 16" ON CENTER, UNLESS NOTED OTHERWISE. PROVIDE STUD BRACING AS REQUIRED FOR METAL STUD PARTITIONS ABOVE 10'-0" AS PER MANUFACTURER'S RECOMMENDATION.
32. PROVIDE WATER-RESISTANT GYPSUM BOARD ON WALLS WITH OPERABLE PLUMBING FIXTURES, AND WITHIN 4'-0" OF DRINKING FOUNTAINS OR WATER COOLERS.
33. PROVIDE ACCESS PANELS AS REQUIRED BY APPLICABLE CODES AS REQUIRED FOR MECHANICAL EQUIPMENT AND PLUMBING WORK. ALL ACCESS PANEL LOCATIONS SHALL BE REVIEWED WITH THE ARCHITECT PRIOR TO PROCEEDING.
34. ALL INSULATION EXPOSED TO CEILING PLENUM IS TO BE FIRE AND DUST PROOF.
35. ALL DISSIMILAR MATERIALS SHALL BE ISOLATED FROM EACH OTHER TO AVOID GALVANIC CORROSION. WHERE TWO DISSIMILAR METALS MEET, PAINT FACE OF ONE WITH BITUMINOUS PAINT. PROVIDE SEALANT BETWEEN DISSIMILAR MATERIALS, SUCH AS GYPSUM BOARD AND MASONRY, MASONRY AND CONCRETE, COUNTERTOPS AND WALLS, ETC.
36. ALL EXTERIOR ENTRANCE DOORS AND FRAMES TO RECEIVE PERIMETER WEATHER STRIPPING AND THRESHOLDS AS PER SPECIFICATIONS.
37. CONTRACTOR IS RESPONSIBLE FOR KEEPING ALL WEEP JOINTS AROUND WINDOWS AND EXTRUDED ALUMINUM STOREFRONTS FREE OF SEALANT.
38. PROVIDE SEALANT BETWEEN INTERIOR AND EXTERIOR WINDOW AND STOREFRONT FRAME PERIMETERS AND SURROUNDING CONSTRUCTION, UNLESS NOTED OTHERWISE.
39. PROVIDE SEALANT BETWEEN HOLLOW METAL FRAME PERIMETERS AND SURROUNDING WALL CONSTRUCTION, UNLESS NOTED OTHERWISE.
40. ALL PENETRATIONS THROUGH RATED WALLS ARE TO BE SEALED TO MAINTAIN INTEGRITY OF WALL CONSTRUCTION AND RATING (ASTM E814 SYSTEM BY 3M, HILTI, OR SIMILAR). PIPE DUCTS AND BUSS DUCTS THAT PENETRATE FLOOR SLABS OR WALL PARTITIONS SHALL BE INSTALLED IN A MANNER THAT WILL PRESERVE THE MOISTURE RESISTANCE, FIRE RATING, AIR AND/OR VAPOR BARRIER, AND THE STRUCTURAL INTEGRITY OF THE BUILDING.
41. ALL PENETRATIONS THROUGH GYPSUM BOARD AND MASONRY SURFACES, INCLUDING BUT NOT LIMITED TO WINDOWS, DOORS, LOUVERS, VENTS, EXHAUST FANS, PIPE PENETRATIONS, CONDUIT, DUCTWORK, GRILLES, REGISTERS, DEVICE BOXES, HANGER RODS, ETC. SHALL HAVE THEIR COMMON JOINTS WITH GYPSUM BOARD AND/OR MASONRY CAULKED. ALL PENETRATIONS SHALL BE SEALED AROUND THE ENTIRE PERIMETER WITH SEALANT (BOTH ON EXTERIOR AND INTERIOR SIDES).
42. ALL INTERIOR PARTITIONS WHICH RECEIVE CERAMIC TILE SHALL BE 20 GA. MIN. AT 12" O.C. WITH HORIZONTAL COLD ROLLED STIFFENER CHANNELS AT 4'-0" O.C. MAX. AND EXTEND FROM FINISHED FLOOR TO STRUCTURE ABOVE. 20 GA. DIAGONAL STUD KICKERS MUST ALSO BE INSTALLED AT EVERY OTHER VERTICAL STUD ABOVE CEILING.
43. UNLESS OTHERWISE NOTED, ALL GYPSUM WALL BOARD IS TO RECEIVE ONE PRIMER COAT AND TWO COATS OF PAINT AS PER SPECIFICATION 09900.
44. IN ALL INSTANCES WHERE WORK IS BEING CORRECTED OR REPAIRED, CONTRACTOR IS TO REPAINT ENTIRE WALL TO NEAREST CORNER OR BREAKLINE WHERE WALL CHANGES DIRECTION.
45. CONTRACTOR SHALL REMOVE ANY STRAY PAINT, DIRT, OR STAINS INCURRED DURING THE CONSTRUCTION PROCESS. CONTRACTOR SHALL BE RESPONSIBLE FOR REMOVING ALL TEMPORARY EQUIPMENT COVERINGS USED DURING CONSTRUCTION, AND SHALL ALSO BE RESPONSIBLE FOR REMOVING THEIR TRASH OFF OF THE JOB SITE DAILY.
46. PROVIDE FINISHED END PANELS, FILLERS, SUPPORTS, ETC. REQUIRED FOR A COMPLETE CABINETRY INSTALLATION. PROVIDE CUTOUTS, ACCESS PANELS, AND REMOVABLE COMPONENTS AS REQUIRED BY FIELD CONDITIONS, SUCH AS ELECTRICAL OUTLETS, JUNCTION BOXES, CLEANOUTS, ETC.
47. CONTRACTOR TO VERIFY MOUNTING HEIGHTS OF ACCESSORIES, EQUIPMENT, DOOR HARDWARE, CASEWORK, SWITCHES, AND OUTLETS ALONG WALLS OR AT MILLWORK, COUNTERS, SHELVING SINKS, ETC. WHERE MOUNTING HEIGHTS ARE NOT INDICATED, MOUNT ITEMS IN ACCORDANCE WITH RECOGNIZED INDUSTRY STANDARDS, COORDINATE LOCATIONS WITH MANUFACTURER OR SUPPLIER, AND REFER MOUNTING HEIGHT QUESTIONS TO ARCHITECT FOR INTERPRETATION.
48. CONTRACTOR SHALL PROVIDE ALL MISCELLANEOUS FRAMING, SOLID BLOCKING, ETC. BEHIND ITEMS REQUIRING ANCHORING. PROVIDE FIRE TREATED WOOD BLOCKING OR METAL STRAPS BETWEEN FRAMING MEMBERS AS REQUIRED TO SUPPORT WEIGHT AND USE OF ITEMS TO BE SUPPORTED AS RECOMMENDED BY MANUFACTURER.
49. 2x6 CONTINUOUS WOOD BLOCKING SHALL BE PROVIDED AT GYPSUM BOARD PARTITIONS FOR ALL CABINET WORK AT TOP AND BOTTOM OF WALL MOUNTED UNITS AND UNDER COUNTER TOP LEVEL OF BASE CABINET. ALL OPEN FACE SHELVING UNITS SHALL HAVE CONCEALED ANCHOR BRACKETS.
50. FIRE EXTINGUISHER CABINETS TO BE MOUNTED AT 4'-0" A.F.F. TO TOP, MAXIMUM, AS PER ACCESSIBILITY REQUIREMENTS. FIRE EXTINGUISHERS WITH GROSS WEIGHT OVER 40LBS MUST BE MOUNTED AT 3'-6" MAX. CLEARANCE BETWEEN THE BOTTOM OF THE FLOOR AND THE EXTINGUISHER MAY NOT BE LESS THAN 4".
51. CONTRACTOR SHALL COMPLY WITH MANUFACTURER'S INSTRUCTIONS WHEN RELOCATING AND/OR INSTALLING ANY EQUIPMENT AND FURNISHINGS.
52. CONTRACTOR SHALL VERIFY FINAL EQUIPMENT LOCATIONS WITH OWNER PRIOR TO INSTALLATION.

TETRA TECH
www.tetratech.com
240 Continental Drive, Suite 200
Newark, DE 19713
Tel: 302.738.7551 Fax: 302.454-3989

STATE OF SOUTH CAROLINA
LINDA ANN DISABELLA
Newark, DE
No. 15092
REGISTERED ARCHITECT
12/06/2024

BARNWELL SCHOOL DISTRICT
OWNER
770 HAGOOD AVE
BARNWELL, SC 29812
Tel: 803 541 1300

TETRA TECH
ARCHITECT
MECHANICAL ENGINEER
PLUMBING ENGINEER
ELECTRICAL ENGINEER
240 Continental Drive, Suite
Newark, DE 19713
302.738.7551

THOMAS & HUTTON
CIVIL ENGINEER
1501 MAIN ST.
COLUMBIA, SC 29201
Tel: 803 451 0200

ZZ CONSULTING
STRUCTURAL ENGINEER
640 S. STATE ST
SHELLEY, ID 83274
Tel: 208 357 5404

MARK	DATE	DESCRIPTION	BY
	12/6/24	ISSUED FOR CONSTRUCTION CONFORMANCE SET	LAD

BARNWELL SCHOOL DISTRICT
MULTI-USE SAFE ROOM

ABBREVIATIONS, LEGENDS AND GENERAL NOTES

Project No.: 200-207015-20004
Designed By: JDR/MTR
Drawn By: JDR/JFMU
Checked By: MTR

A-001

Copyright: Tetra Tech

12/9/2024 2:00:19 PM BIM 360://200-207015-20004 - Barnwell Dome/A_BARN_DOME_v2019.rvt

TOILET ACCESSORY GENERAL NOTES

1. IT IS THE INTENT OF THE DESIGN THAT ALL ITEMS SHOWN ARE MOUNTED AT TYPICAL HEIGHTS FOR COMPLIANCE WITH THE GOVERNING AUTHORITIES; STATE OF DELAWARE ARCHITECTURAL ACCESSIBILITY STANDARDS, 2010 ADA STANDARDS FOR ACCESSIBLE DESIGN, AND ANSI A117.1-2017.
2. THE PURPOSE OF THIS SHEET IS TO ILLUSTRATE TYPICAL MOUNTING HEIGHTS AND CLEARANCES,WHERE APPLICABLE.
3. THIS SHEET MAY ILLUSTRATE ITEMS OR CONFIGURATIONS WHICH DO NOT OCCUR AS PART OF THE SCOPE OF WORK. REFER TO PLANS, ELEVATIONS, SECTIONS, AND SCHEDULES TO DETERMINE WHICH ITEMS AND CONFIGURATIONS APPLY TO THE WORK OF THIS PROJECT.
4. ALL DIMENSIONS SHOWN ARE TO T.O. OPERATING PART OF DEVICE, U.N.O.
5. ALL ACCESSORIES MOUNTING HEIGHTS SHOWN ARE FOR ACCESSORIES NOT MOUNTED ABOVE AN OBJECT, U.N.O.
6. OPERABLE PARTS OF ALL ACCESSIBLE DEVICES SHALL BE OPERABLE WITH ONE HAND AND SHALL NOT REQUIRE TIGHT GRASPING, PINCHING, OR TWISTING OF THE WRIST. THE FORCE TO ACTIVATE OPERABLE PARTS SHALL BE 5.0 POUNDS MAXIMUM. (ANSI A117.1-2017 SECTION 309.4)
7. PROVIDE IN-WALL BLOCKING AS REQUIRED FOR ALL SURFACE MOUNTED ITEMS.

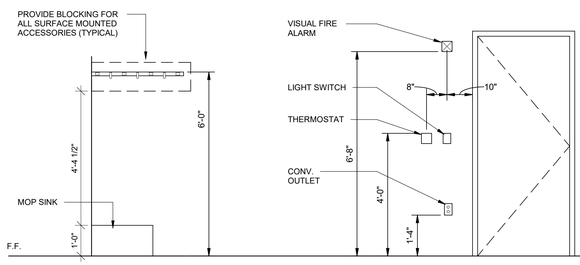

MOP / BROOM HOLDER

SWITCHES / DEVICES

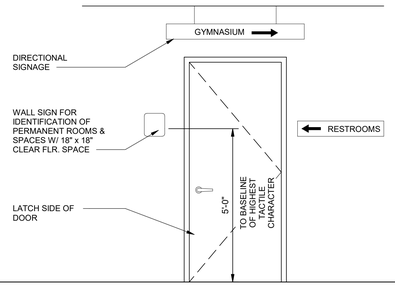

SIGNAGE LOCATION & MOUNTING HEIGHT

FIRE EXTINGUISHER NOTES:

1. NEITHER THE EXTINGUISHER HANDLE NOR THE CABINET HANDLE CAN BE MOUNTED HIGHER THAN 48" A.F.F. FOR APPLICATIONS THAT ALLOW FOR A UNOBSTRUCTED FORWARD OR PARALLEL APPROACH TO THE OBJECT.
2. IF WALL HUNG, FIRE EXTINGUISHERS SHALL NOT PROTRUDE MORE THAN 4" INTO THE PATH OF TRAVEL.

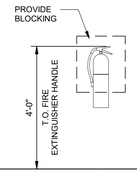

FIRE EXTINGUISHER WALL HUNG

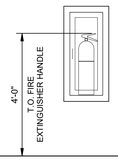

FIRE EXTINGUISHER IN RECESSED CABINET

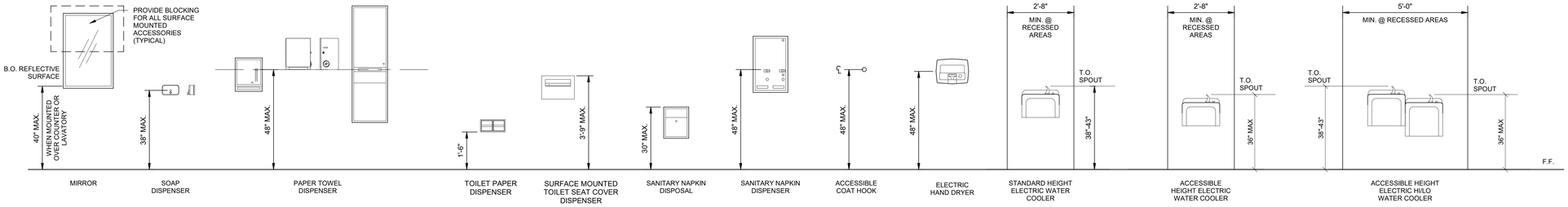

MIRROR | SOAP DISPENSER | PAPER TOWEL DISPENSER | TOILET PAPER DISPENSER | SURFACE MOUNTED TOILET SEAT COVER DISPENSER | SANITARY NAPKIN DISPOSAL | SANITARY NAPKIN DISPENSER | ACCESSIBLE COAT HOOK | ELECTRIC HAND DRYER | STANDARD HEIGHT ELECTRIC WATER COOLER | ACCESSIBLE HEIGHT ELECTRIC WATER COOLER | ACCESSIBLE HEIGHT ELECTRIC HI/LO WATER COOLER

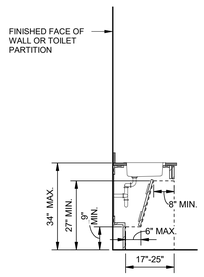

ACCESSIBLE LAVATORY WITH BASE CABINET

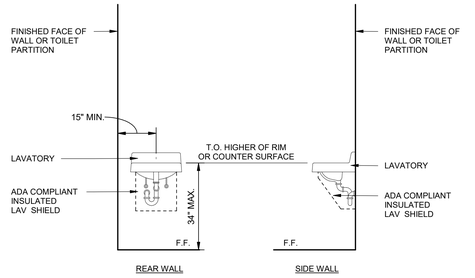

WALL MOUNT LAVATORY

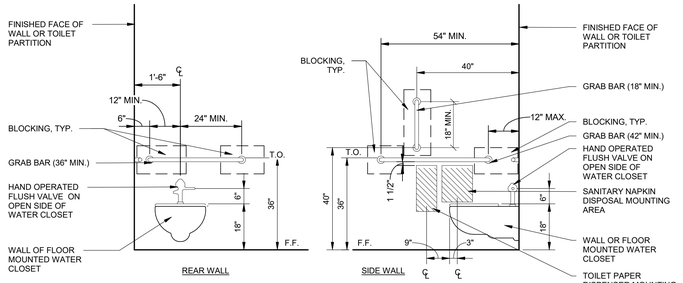

WHEEL CHAIR ACCESSIBLE COMPARTMENT OR TOILET ROOM

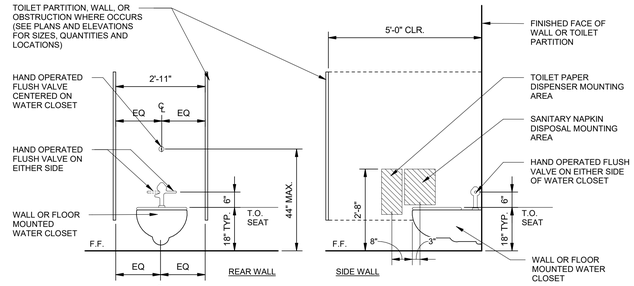

STANDARD WATER CLOSET COMPARTMENT

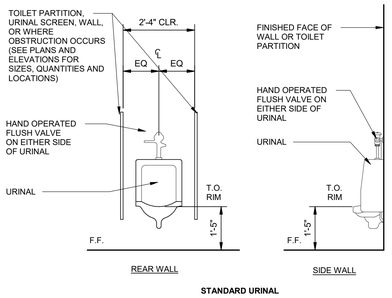

STANDARD URINAL

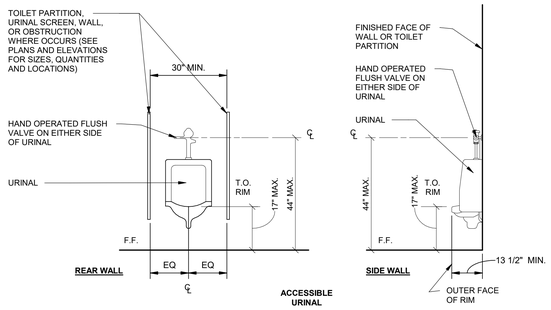

ACCESSIBLE URINAL

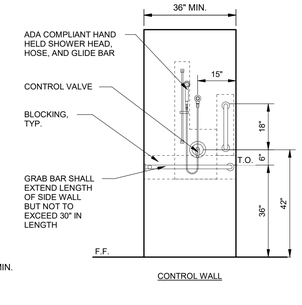

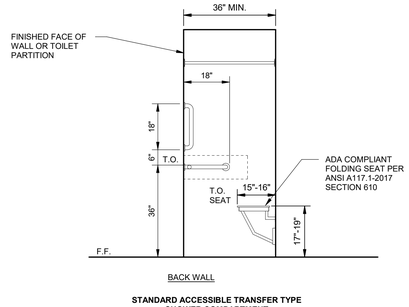

STANDARD ACCESSIBLE TRANSFER TYPE SHOWER COMPARTMENT

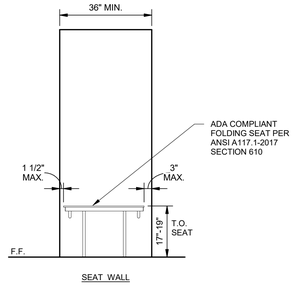

ACCESSORY MOUNTING HEIGHT STANDARDS

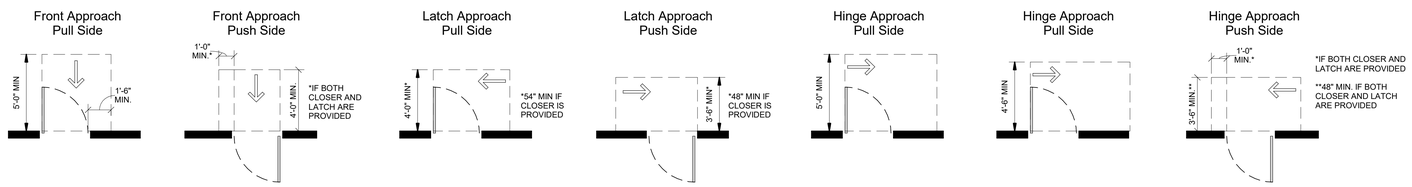

DOOR PULL CLEARANCE STANDARDS

TETRA TECH
www.tetratech.com
240 Continental Drive, Suite 200
Newark, DE 19713
Tel: 302.738.7551 Fax: 302.454.3989

STATE OF SOUTH CAROLINA
LINDA ANN DISABELLA
Newark, DE
No. 37292
REGISTERED ARCHITECT
12/06/2024

BARNWELL SCHOOL DISTRICT
OWNER
770 HAGOOD AVE
BARNWELL, SC 29812
Tel: 803 541 1300

TETRA TECH
ARCHITECT
MECHANICAL ENGINEER
PLUMBING ENGINEER
ELECTRICAL ENGINEER
240 Continental Drive, Suite
Newark, DE 19713
302.738.7551

THOMAS & HUTTON
CIVIL ENGINEER
1501 MAIN ST.
COLUMBIA, SC 29201
Tel: 803 451 0200

ZZ CONSULTING
STRUCTURAL ENGINEER
640 S. STATE ST
SHELLEY, ID 83274
Tel: 208 357 5404

MARK	DATE	DESCRIPTION	BY
	12/6/24	ISSUED FOR CONSTRUCTION CONFORMANCE SET	LAD

BARNWELL SCHOOL DISTRICT
MULTI-USE SAFE ROOM

ARCHITECTURAL STANDARDS

Project No.:	200-207015-20004
Designed By:	JDR/MTR
Drawn By:	JDR/JFMU
Checked By:	MTR

A-002

Copyright. Tetra Tech

12/9/2024 2:00:20 PM BIM 360://200-207015-20004 - Barnwell Dome/A_BARN_DOME_v2019.rvt

FLOOR PLAN LEGEND:

- NEW PARTITION AND DOOR
- FEC — FIRE EXTINGUISHER CABINET (FEC)
- FIRE EXTINGUISHER (WALL MOUNTED)
- P1.8 — PARTITION TYPE - SEE SHEET A-501

KEYNOTES

NOTE: ALL KEYNOTES MIGHT NOT BE LISTED OR USED ON SHEET

#	
11	STRUCTURAL STEEL COLUMN - SEE STRUCTURAL DRAWINGS. (TYP.)
13	TELESCOPING STANDS (BLEACHERS) - ELECTRICALLY OPERATED - SEE ELECTRICAL DRAWINGS.
18	CUSTOM PHENOLIC LOCKERS: TYPE "A": 18" WIDE X 24" DEEP X 72" HIGH / TYPE "B": 24" WIDE X 24" DEEP X 72"HIGH / TYPE "C": 24" WIDE X 24" DEEP X 72"HIGH ADA COMPLIANT UNIT.
25	CONDENSING UNIT - SEE MECHANICAL DWGS.
26	FIRE DEPARTMENT CONNECTION - SEE FIRE PROTECTION DRAWINGS.
27	FIRE ALARM - SEE ELECTRICAL DRAWINGS. (TYP.)
30	ELECTRICAL EQUIPMENT - SEE ELECTRICAL DRAWINGS.
34	CONTINUOUS 3'-0" WIDE REINFORCED CONCRETE SPLASH PAD. - SEE STRUCTURAL AND CIVIL DWGS FOR ADDITIONAL INFORMATION.
35	WALL MOUNTED FIRE EXTINGUISHER.
37	PORTABLE BASKETBALL GOAL.
38	18" WIDE WALL LADDER TO MECHANICAL MEZZANINE.
39	18" WIDE WALL LADDER TO ROOF HATCH ABOVE.
42	TICKET WINDOW IN ALUMINUM STOREFRONT SYSTEM - SEE STOREFRONT ELEVATIONS ON SHEET A-602 FOR ADDITIONAL INFO.
43	LINE OF SOFFIT ABOVE. (SHOWN DASHED)
44	LINE OF RAIN DIVERTER ABOVE. (SHOWN DASHED)
46	FIRE PROTECTION TEST CONECTION - SEE FIRE PROTECTION DRAWINGS.
47	INTAKE AIR LOUVER - SEE MECHANICAL DWGS.
50	GENERATOR CONNECTION - SEE ELECTRICAL DRAWINGS.
53	GYMNASIUM ROLL-UP DIVIDER CURTAIN- ELECTRICALLY OPERATED - SEE ELECTRICAL DRAWINGS.

GENERAL FLOOR PLAN - NOTES

1. SEE SHEET A-801 FOR FINISH PLAN AND FINISH SCHEDULE.
2. INTERIOR PARTITION TYPE TAGS APPLY TO THE ENTIRE LENGTH OF WALL INDICATED BY THAT TAG REGARDLESS OF OPENINGS WITHIN THAT WALL (TYP. U.N.O.) SEE PARTITION TYPES ON A-501.
3. ALL DIMENSIONS ARE TO FACE OF MASONRY, ROUGH FRAME, OR CENTERLINE OF COLUMN (TYP.) UNLESS NOTED OTHERWISE. CONTRACTOR SHALL VERIFY ALL DIMENSIONS PRIOR TO CONSTRUCTION AND NOTIFY ARCHITECT IMMEDIATELY OF ANY DISCREPENCIES.
4. ALL EXTERIOR WORK TO BE COMPLETED WITHOUT DISTURBING INTERIOR FINISHES, WALLS, OR OTHER CONSTRUCTION UNLESS SPECIFICALLY NOTED.
5. PERFORM WORK IN A CONTROLLED MANNER: WITHOUT UNNECESSARY CUTS; WITHOUT DAMAGE TO THE SITE, STRUCTURE, OR FEATURES; AND WITHOUT DAMAGE TO THE MATERIALS.
6. FOR GYMNASIUM COURT LAYOUT SEE SHEET A-802.
7. SLOPE ALL EXTERIOR CONCRETE AWAY FROM THE BUILDING.
8. ALL STORAGE CLOSETS TO RECIEVE SHELVING.
9. SEE STRUCTURAL DRAWINGS FOR ALL STRUCTURAL INFORMATION.
10. COLUMN GRIDS "D" AND "3.5" AT DOME INDICATE CENTERLINE OF DOME STRUCTURE
11. COORDINATE FINAL BLEACHER MANUFACTURER DIMENSIONS WITH FINAL MASONRY / GWB AND STUD WING WALLS
12. FINISH FLOOR ELEVATION SHOWN AS 0' - 0" ON ARCHITECTURAL DRAWINGS IS EQUAL TO DATUM ELEVATIONS 193.5 ON CIVIL DRAWINGS AND 100' - 0" ON STRUCTURAL DRAWINGS

NOTE:
DIMENSION REFERENCE POINT - CENTER OF DOME.

WATER TANK AND CONCRETE PAD. REFER TO STRUCTURAL DRAWINGS. THE WATER TANK IS A HURRICANE-PROOF STRUCTURE. THE STRUCTURAL SUPPORTS THAT SECURE THE TANK TO THE PAD WILL BE DESIGNED FOR HURRICANE WINDS/FORCES.

1 A-110 **FIRST FLOOR PLAN**
SCALE: 1/8" = 1'-0"

KEY PLAN

PROJECT NORTH / TRUE NORTH

SCALE: 1/8" = 1'-0"

TETRA TECH
www.tetratech.com
240 Continental Drive, Suite 200
Newark, DE 19713
Tel: 302.738.7551 Fax: 302.454-2989

STATE OF SOUTH CAROLINA
LINDA-ANN DISABELLA
Newark, DE
No. 37292
REGISTERED ARCHITECT
12/06/2024

BARNWELL SCHOOL DISTRICT
OWNER
770 HAGOOD AVE
BARNWELL, SC 29812
Tel: 803 541 1300

TETRA TECH
ARCHITECT
MECHANICAL ENGINEER
PLUMBING ENGINEER
ELECTRICAL ENGINEER
240 Continental Drive, Suite
Newark, DE 19713
302.738.7551

THOMAS & HUTTON
CIVIL ENGINEER
1501 MAIN ST.
COLUMBIA, SC 29201
Tel: 803 451 0200

ZZ CONSULTING
STRUCTURAL ENGINEER
640 S. STATE ST
SHELLEY, ID 83274
Tel: 208 357 5404

MARK	DATE	DESCRIPTION	BY
	12/6/24	ISSUED FOR CONSTRUCTION CONFORMANCE SET	LAD

BARNWELL SCHOOL DISTRICT
MULTI-USE SAFE ROOM
FIRST FLOOR PLAN

Project No.:	200-207015-20004
Designed By:	JDR/MTR
Drawn By:	JDR/JFMU
Checked By:	MTR

A-110

Copyright. Tetra Tech

12/9/2024 2:00:43 PM BIM 360://200-207015-20004 - Barnwell Dome/A_BARN_DOME_v2019.rvt

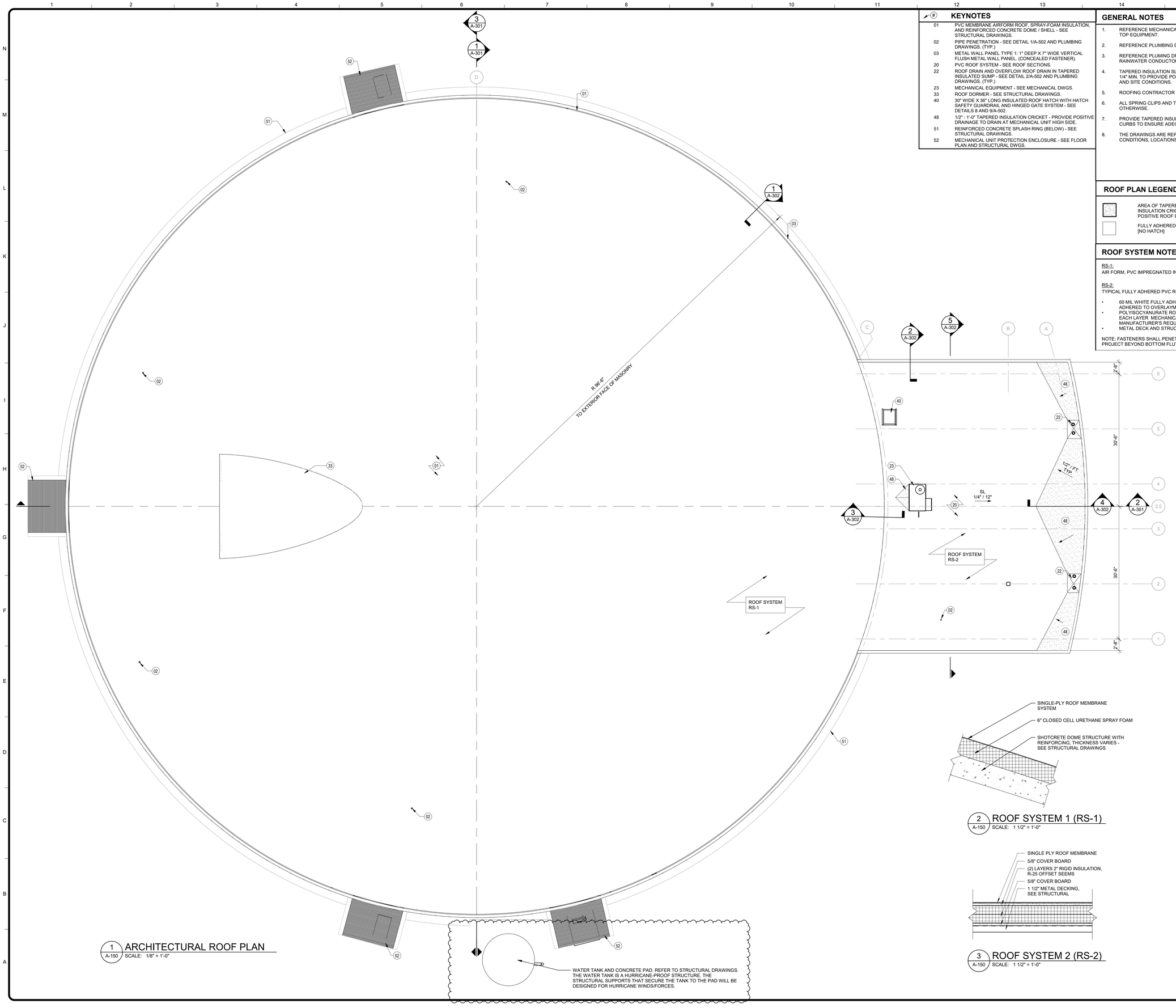

1 / A-150 ARCHITECTURAL ROOF PLAN
SCALE: 1/8" = 1'-0"

#	KEYNOTES
01	PVC MEMBRANE AIRFORM ROOF, SPRAY-FOAM INSULATION, AND REINFORCED CONCRETE DOME / SHELL - SEE STRUCTURAL DRAWINGS.
02	PIPE PENETRATION - SEE DETAIL 1/A-502 AND PLUMBING DRAWINGS. (TYP.)
03	METAL WALL PANEL TYPE 1: 1" DEEP X 7" WIDE VERTICAL FLUSH METAL WALL PANEL. (CONCEALED FASTENER).
20	PVC ROOF SYSTEM - SEE ROOF SECTIONS.
22	ROOF DRAIN AND OVERFLOW ROOF DRAIN IN TAPERED INSULATED SUMP - SEE DETAIL 2/A-502 AND PLUMBING DRAWINGS. (TYP.)
23	MECHANICAL EQUIPMENT - SEE MECHANICAL DWGS.
33	ROOF DORMER - SEE STRUCTURAL DRAWINGS.
40	30" WIDE X 36" LONG INSULATED ROOF HATCH WITH HATCH SAFETY GUARDRAIL AND HINGED GATE SYSTEM - SEE DETAILS 8 AND 9/A-502.
48	1/2" - 1'-0" TAPERED INSULATION CRICKET - PROVIDE POSITIVE DRAINAGE TO DRAIN AT MECHANICAL UNIT HIGH SIDE.
51	REINFORCED CONCRETE SPLASH RING (BELOW) - SEE STRUCTURAL DRAWINGS.
52	MECHANICAL UNIT PROTECTION ENCLOSURE - SEE FLOOR PLAN AND STRUCTURAL DWGS.

GENERAL NOTES

1. REFERENCE MECHANICAL AND ELECTRICAL DRAWINGS FOR COORDINATION OF ROOF TOP EQUIPMENT.
2. REFERENCE PLUMBING DRAWINGS FOR ROOF PIPE PENETRATIONS.
3. REFERENCE PLUMING DRAWINGS FOR COORDINATION OF ROOF DRAINS AND RAINWATER CONDUCTOR SIZES AND LOCATIONS.
4. TAPERED INSULATION SLOPES FOR ROOF TO BE 1/4" MIN. SLOPES AND CRICKETS TO BE 1/4" MIN. TO PROVIDE POSITIVE DRAINAGE AS PER MANUFACTURER'S REQUIREMENTS AND SITE CONDITIONS.
5. ROOFING CONTRACTOR TO STAGGER ALL JOINTS ON MULTI-LAYER INSULATION.
6. ALL SPRING CLIPS AND TERMINATION BARS ARE TO BE FASTENED 6" O.C. UNLESS NOTED OTHERWISE.
7. PROVIDE TAPERED INSULATION "CRICKETS" AT THE HIGH SLOPE SIDE AT EQUIPMENT CURBS TO ENSURE ADEQUATE DRAINAGE.
8. THE DRAWINGS ARE REPRESENTATIVE, AND MAY NOT INDICATE EXACT FIELD CONDITIONS, LOCATIONS OR QUANTITIES.

ROOF PLAN LEGEND & ABBREVIATIONS

AREA OF TAPERED INSULATION AND TAPERED INSULATION CRICKET, SLOPE AS REQUIRED FOR POSITIVE ROOF DRAINAGE.

FULLY ADHERED PVC ROOF SYSTEM (RS-1), TYPICAL U.N.O. [NO HATCH]

ROOF SYSTEM NOTES

RS-1:
AIR FORM, PVC IMPREGNATED IN A POLYESTER SCRIM MEMBRANE - SEE STRUCTURAL DRAWINGS

RS-2:
TYPICAL FULLY ADHERED PVC ROOF SYSTEM:

- 60 MIL WHITE FULLY ADHERED PVC SINGLE PLY MEMBRANE ROOFING: SEAMED AND FULLY ADHERED TO OVERLAYMENT PER ROOF SYSTEM MANUFACTURER'S REQUIREMENTS.
- POLYISOCYANURATE ROOF INSULATION: (2) LAYERS (MIN.) WITH STAGGERED JOINTS EACH LAYER MECHANICALLY ATTACHED TO THE ROOF DECK PER ROOF SYSTEM MANUFACTURER'S REQUIREMENTS. (MINIMUM LTTR VALUE R-25).
- METAL DECK AND STRUCTURE - SEE STRUCTURAL DRAWINGS.

NOTE: FASTENERS SHALL PENETRATE TOP FLUTE OF ROOF DECK ONLY. LENGTH NOT TO PROJECT BEYOND BOTTOM FLUTE.

2 / A-150 ROOF SYSTEM 1 (RS-1)
SCALE: 1 1/2" = 1'-0"

3 / A-150 ROOF SYSTEM 2 (RS-2)
SCALE: 1 1/2" = 1'-0"

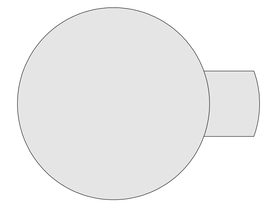

KEY PLAN

TRUE NORTH
PROJECT NORTH
0 4' 8' 16'
SCALE: 1/8" = 1'-0"

TETRA TECH
www.tetratech.com
240 Continental Drive, Suite 200
Newark, DE 19713
Tel: 302.738.7551 Fax: 302.454.3989

STATE OF SOUTH CAROLINA
LINDA ANN DISABELLA
Newark, DE
No. 37092
REGISTERED ARCHITECT
12/06/2024

BARNWELL SCHOOL DISTRICT
OWNER
770 HAGOOD AVE
BARNWELL, SC 29812
Tel: 803 541 1300

TETRA TECH
ARCHITECT
MECHANICAL ENGINEER
PLUMBING ENGINEER
ELECTRICAL ENGINEER
240 Continental Drive, Suite
Newark, DE 19713
302.738.7551

THOMAS & HUTTON
CIVIL ENGINEER
1501 MAIN ST.
COLUMBIA, SC 29201
Tel: 803 451 0200

ZZ CONSULTING
STRUCTURAL ENGINEER
640 S. STATE ST
SHELLEY, ID 83274
Tel: 208 357 5404

MARK	DATE	DESCRIPTION	BY
	12/6/24	ISSUED FOR CONSTRUCTION CONFORMANCE SET	LAD

BARNWELL SCHOOL DISTRICT
MULTI-USE SAFE ROOM

ARCHITECTURAL ROOF PLAN / DETAILS

Project No.:	200-207015-20004
Designed By:	JDR/MTR
Drawn By:	JDR/JFMU
Checked By:	MTR

A-150

Copyright Tetra Tech

12/9/2024 2:00:44 PM BIM 360://200-207015-20004 - Barnwell Domes/A_BARN_DOME_r2019.rvt

KEYNOTES

31	MECHANICAL LOUVER - SEE MECHANICAL DRAWINGS. (TYP.)
53	GYMNASIUM ROLL-UP DIVIDER CURTAIN- ELECTRICALLY OPERATED - SEE ELECTRICAL DRAWINGS.

RCP SYMBOLS LEGEND

- 2' x 4' ACT CEILING
- 2' x 2' ACT CEILING
- 7" WIDE METAL FLUSH SOFFIT SYSTEM
- 2 X 4 LIGHT FIXTURE
- 2 X 2 LIGHT FIXTURE
- RECESSED CAN LIGHT FIXTURE
- 4' LG LINEAR LIGHT FIXTURE
- (10'-6") CEILING HEIGHT
- (S) SPEAKER - SEE ELECTRICAL DRAWINGS
- (OS) OCCUPANCY SENSOR - SEE ELECTRCAL DRAWINGS
- WALL MOUNTED FIRE ALARM STROBE LIGHT
- RETURN AIR GRILLE - SEE MECHANICAL DRAWINGS.
- SUPPLY AIR GRILLE - SEE MECHANICAL DRAWINGS.
- WALL MOUNTED EXIT SIGN
- ROOF HATCH AND LADDER
- DATA ACCESS POINT
- EXT. WALL MOUNTED LIGHT FIXTURE
- STRUCTURAL COLUMN PROVIDE WALL ANGLE TRIM - SEE STRUCTURAL DRAWINGS
- (S) SMOKE DETECTOR
- DOME SECURITY CAMERA - SEE ELECTRICAL DRAWINGS
- WALL MOUNTED FIRE ALARM HORN STROBE
- CEILING MOUNTED FIRE ALARM HORN
- DUCTWORK - SEE MECHANICAL DRAWINGS.
- DUCT SOCK - SEE MECHANICAL DRAWINGS.
- INDUSTRIAL CEILING FAN (TYP.) - SEE HVAC DRAWINGS

REFLECTED CEILING PLAN NOTES

1. SEE MECHANICAL AND PLUMBING DRAWINGS FOR CEILING MOUNTED DUCTS, PIPES, ETC.
2. SEE ELECTRICAL DRAWINGS FOR ALL LIGHTING FIXTURE TYPES, LOCATIONS, AND HEIGHTS.
3. ALL CEILING TILES TO BE CENTERED IN ROOM UNLESS OTHERWISE NOTED.

CEILING TYPES

- X'-X" DESIGNATES BOTTOM OF CEILING A.F.F. AT THAT POINT.
- A1 ACOUSTICAL CEILING PANELS (2' - 0" x 4' - 0") SQUARE EDGE
- A2 ACOUSTICAL CEILING PANELS (2' - 0" x 2' - 0") SQUARE EDGE
- A3 MOISTURE RESISTANT ACOUSTICAL CEILING PANELS (2' - 0" x 4' - 0") SQUARE EDGE
- A4 ACOUSTICAL CEILING PANELS (2' - 0" x 2' - 0") SQUARE EDGE CLOUD WITH PERIMETER VERTICAL METAL EDGE TRIM.
- B PAINTED 5/8" TYP "X" GWB ON SUSPENDED METAL FURRING.
- C PAINTED EXPOSED STRUCTURE, HANGERS, FASTENERS, PIPING, AND MECHANICAL SYSTEMS. COORDINATE WITH FINISH PLANS AND SCHEDULE.
- D 1" DEEP X 7" WIDE FLUSH METAL SOFFIT PANEL
- E ONE HOUR FIRE RATED CEILING ASSEBLY, USG HORIZONTAL SHAFT WALL SYSTEM USING 400CH20-34 @ 24" O.C.. CEILING IS FOR FIRE SEPERATION ONLY. U415

KEY PLAN

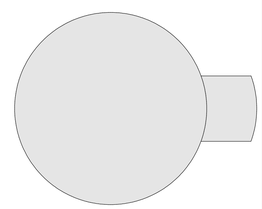

1 A-160 FIRST FLOOR REFLECTED CEILING PLAN
SCALE: 1/8" = 1'-0"

TETRA TECH
www.tetratech.com
240 Continental Drive, Suite 200
Newark, DE 19713
Tel: 302.738.7551 Fax: 302.454-3989

STATE OF SOUTH CAROLINA
LINDA ANN DISABELLA
Newark, DE
No. 37292
REGISTERED ARCHITECT
12/06/2024

BARNWELL SCHOOL DISTRICT
OWNER
770 HAGOOD AVE
BARNWELL, SC 29812
Tel: 803 541 1300

TETRA TECH
ARCHITECT
MECHANICAL ENGINEER
PLUMBING ENGINEER
ELECTRICAL ENGINEER
240 Continental Drive, Suite
Newark, DE 19713
302.738.7551

THOMAS & HUTTON
CIVIL ENGINEER
1501 MAIN ST.
COLUMBIA, SC 29201
Tel: 803 451 0200

ZZ CONSULTING
STRUCTURAL ENGINEER
640 S. STATE ST
SHELLEY, ID 83274
Tel: 208 357 5404

MARK	DATE	DESCRIPTION	BY
	12/6/24	ISSUED FOR CONSTRUCTION CONFORMANCE SET	LAD

BARNWELL SCHOOL DISTRICT
MULTI-USE SAFE ROOM

FIRST FLOOR REFLECTED CEILING PLAN / DETAILS

Project No.:	200-207015-20004
Designed By:	JDR/MTR
Drawn By:	JDR/JFMU
Checked By:	MTR

A-160

Copyright: Tetra Tech

12/9/2024 2:00:50 PM BIM 360://200-207015-20004 - Barnwell Dome/A_BARN_DOME_v2019.rvt

KEYNOTES

#	
01	PVC MEMBRANE AIRFORM ROOF, SPRAY-FOAM INSULATION, AND REINFORCED CONCRETE DOME / SHELL - SEE STRUCTURAL DRAWINGS.
02	PIPE PENETRATION - SEE DETAIL 1/A-502 AND PLUMBING DRAWINGS. (TYP.)
03	METAL WALL PANEL TYPE 1: 1" DEEP X 7" WIDE VERTICAL FLUSH METAL WALL PANEL. (CONCEALED FASTENER).
04	MASONRY FORMWALL - SEE WALL SECTIONS FOR ADDITIONAL INFORMATION.
05	METAL WALL PANEL TYPE 2: 1 3/8" DEEP HORIZONTAL BOX RIB 1 (CONCEALED FASTENER).
06	4" SPLIT FACE CMU VENEER - COLOR 1
07	8" SPLIT FACE CMU - COLOR 2
08	8" SPLIT FACE CMU BAND - COLOR 1
10	ALUMINUM STOREFRONT SYSTEM WITH 1" INSULATED GLASS.
23	MECHANICAL EQUIPMENT - SEE MECHANICAL DWGS.
25	CONDENSING UNIT - SEE MECHANICAL DWGS.
26	FIRE DEPARTMENT CONNECTION - SEE FIRE PROTECTION DRAWINGS.
30	ELECTRICAL EQUIPMENT - SEE ELECTRICAL DRAWINGS.
31	MECHANICAL LOUVER - SEE MECHANICAL DRAWINGS. (TYP.)
33	ROOF DORMER - SEE STRUCTURAL DRAWINGS.
40	30" WIDE X 36" LONG INSULATED ROOF HATCH WITH HATCH SAFETY GUARDRAIL AND HINGED GATE SYSTEM - SEE DETAILS 8 AND 9/A-502.
42	TICKET WINDOW IN ALUMINUM STOREFRONT SYSTEM - SEE STOREFRONT ELEVATIONS ON SHEET A-602 FOR ADDITIONAL INFO.
49	WALL MOUNTED LIGHT FIXTURE - SEE ELECTRICAL DRAWINGS.
54	OVERFLOW LAMBS TONGUE - SEE PLUMBING DRAWINGS.
55	PROVIDE PRE-CAST CONCRETE ON TOP OF THE MASONRY MECHANICAL PROTECTION WALLS FOR ALL THE ELEVATIONS.

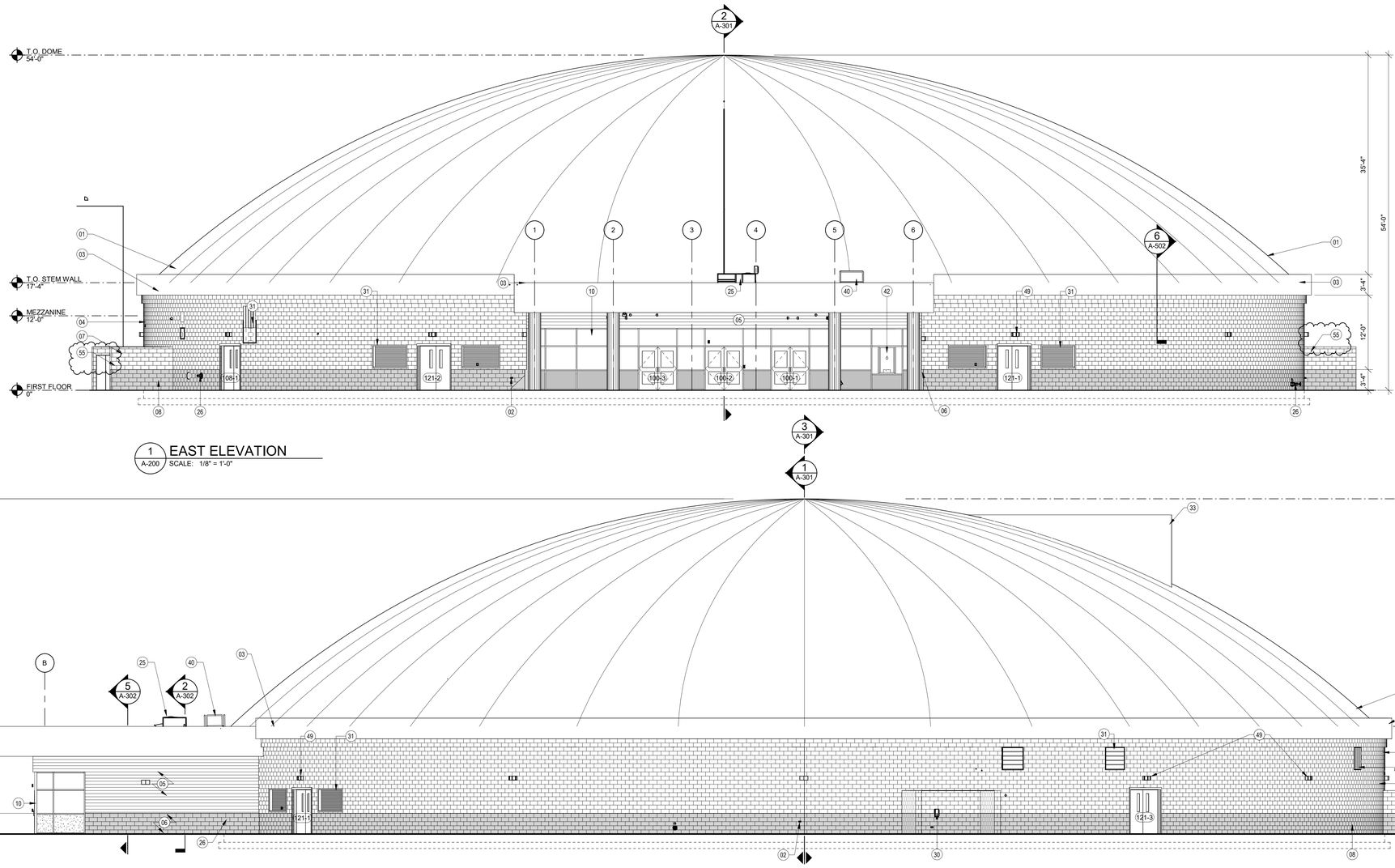

1 A-200 EAST ELEVATION
SCALE: 1/8" = 1'-0"

2 A-200 NORTH ELEVATION
SCALE: 1/8" = 1'-0"

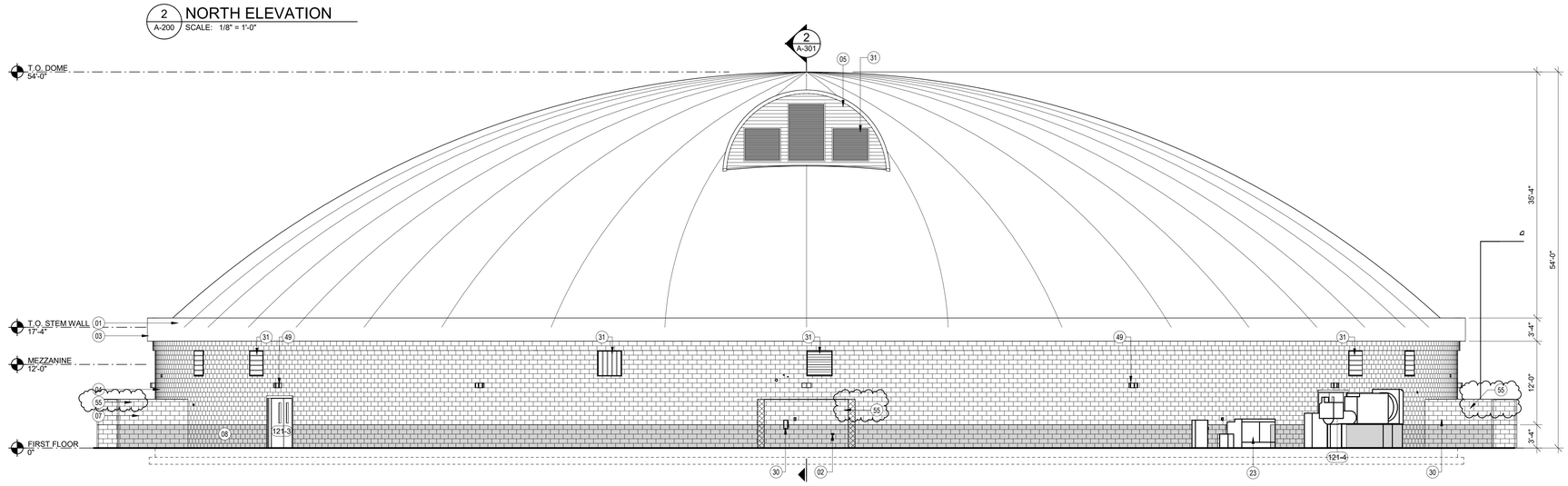

3 A-200 WEST ELEVATION
SCALE: 1/8" = 1'-0"

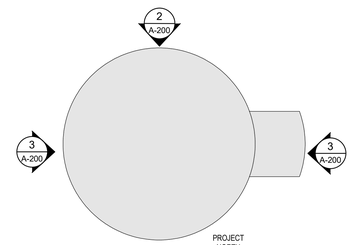

KEY PLAN

TRUE NORTH
PROJECT NORTH
0 4' 8' 16'
SCALE: 1/8" = 1'-0"

TETRA TECH
www.tetratech.com
240 Continental Drive, Suite 200
Newark, DE 19713
Tel: 302.738.7551 Fax: 302.454-3899

STATE OF SOUTH CAROLINA
LINDA ANN DISABELLA
Newark, DE
No. 37292
REGISTERED ARCHITECT
12/06/2024

BARNWELL SCHOOL DISTRICT
OWNER
770 HAGOOD AVE
BARNWELL, SC 29812
Tel: 803 541 1300

TETRA TECH
ARCHITECT
MECHANICAL ENGINEER
PLUMBING ENGINEER
ELECTRICAL ENGINEER
240 Continental Drive, Suite
Newark, DE 19713
302.738.7551

THOMAS & HUTTON
CIVIL ENGINEER
1501 MAIN ST.
COLUMBIA, SC 29201
Tel: 803 451 0200

ZZ CONSULTING
STRUCTURAL ENGINEER
640 S. STATE ST.
SHELLEY, ID 83274
Tel: 208 357 5404

MARK	DATE	DESCRIPTION	BY
	12/6/24	ISSUED FOR CONSTRUCTION CONFORMANCE SET	LAD

BARNWELL SCHOOL DISTRICT
MULTI-USE SAFE ROOM

EXTERIOR BUILDING ELEVATIONS

Project No.:	200-207015-20004
Designed By:	JDR/MTR
Drawn By:	JDR/JFMU
Checked By:	MTR

A-200

Copyright. Tetra Tech

12/9/2024 2:01:11 PM BIM 360://200-207015-20004 - Barnwell Dome\A_BARN_DOME_v2019.rvt

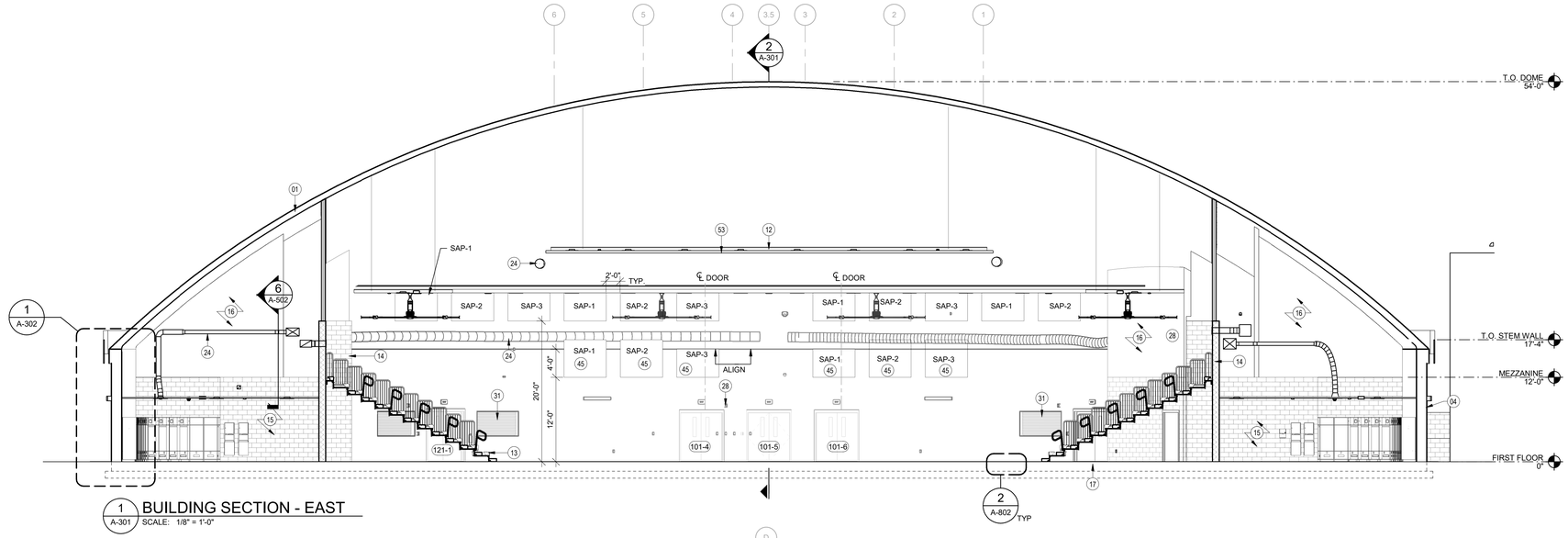

1 A-301 **BUILDING SECTION - EAST**
SCALE: 1/8" = 1'-0"

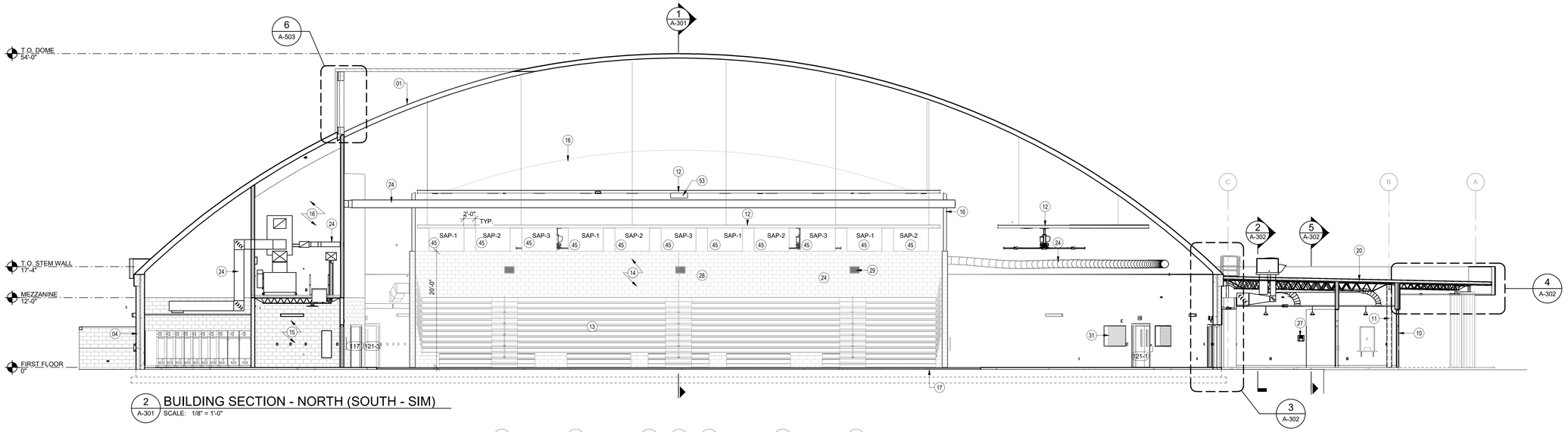

2 A-301 **BUILDING SECTION - NORTH (SOUTH - SIM)**
SCALE: 1/8" = 1'-0"

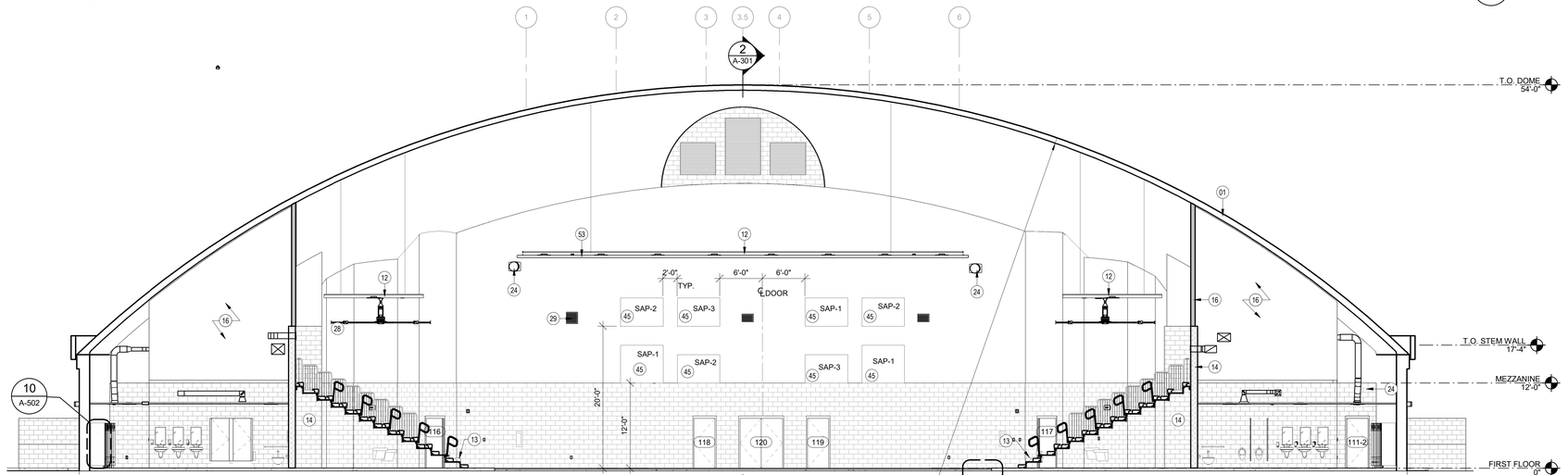

3 A-301 **BUILDING SECTION WEST**
SCALE: 1/8" = 1'-0"

KEYNOTES

#	
01	PVC MEMBRANE AIRFORM ROOF, SPRAY-FOAM INSULATION, AND REINFORCED CONCRETE DOME / SHELL - SEE STRUCTURAL DRAWINGS.
02	PIPE PENETRATION - SEE DETAIL 1/A-502 AND PLUMBING DRAWINGS. (TYP.)
04	MASONRY FORMWALL - SEE WALL SECTIONS FOR ADDITIONAL INFORMATION.
10	ALUMINUM STOREFRONT SYSTEM WITH 1" INSULATED GLASS.
11	STRUCTURAL STEEL COLUMN - SEE STRUCTURAL DRAWINGS. (TYP.)
12	2' x 2' ACT CEILING CLOUD WITH PERIMETER VERTICAL METAL EDGE TRIM.
13	TELESCOPING STANDS (BLEACHERS) - ELECTRICALLY OPERATED - SEE ELECTRICAL DRAWINGS.
14	PAINTED 12" CMU PARTITION.
15	PAINTED 8" CMU PARTITION.
16	PAINTED GYPSUM WALL BOARD ON METAL STUD WALL - ALL WALLS ABOVE CMU (TYP.)
17	REINFORCED CONCRETE SLAB ON GRADE - SEE STRUCTURAL DRAWINGS.
20	PVC ROOF SYSTEM - SEE ROOF SECTIONS.
24	MECHANICAL DUCTWORK - SEE MECHANICAL DWGS.
27	FIRE ALARM - SEE ELECTRICAL DRAWINGS. (TYP.)
28	FIRE ALARM STROBE - SEE ELECTRICAL DRAWINGS. (TYP.)
29	RETURN DIFFUSER - SEE MECHANICAL DRAWINGS. (TYP.)
31	MECHANICAL LOUVER - SEE MECHANICAL DRAWINGS. (TYP.)
45	4'-0" H. X 6'-0" W. SOUND ABSORBING WALL PANEL - SAP
53	GYMNASIUM ROLL-UP DIVIDER CURTAIN- ELECTRICALLY OPERATED - SEE ELECTRICAL DRAWINGS.

NOTE: SEE FINISH SCHEDULE AND TECH SPECS. FOR ADDITIONAL INFORMATION

0 4' 8' 16'
SCALE: 1/8" = 1'-0"

TETRA TECH
www.tetratech.com
240 Continental Drive, Suite 200
Newark, DE 19713
Tel: 302.738.7551 Fax: 302.454.3589

STATE OF SOUTH CAROLINA
LINDA-ANN DISABELLA
Newark, DE
No. 37292
REGISTERED ARCHITECT
12/06/2024

BARNWELL SCHOOL DISTRICT
OWNER
770 HAGOOD AVE
BARNWELL, SC 29812
Tel: 803 541 1300

TETRA TECH
ARCHITECT
MECHANICAL ENGINEER
PLUMBING ENGINEER
ELECTRICAL ENGINEER
240 Continental Drive, Suite
Newark, DE 19713
302.738.7551

THOMAS & HUTTON
CIVIL ENGINEER
1501 MAIN ST.
COLUMBIA, SC 29201
Tel: 803 451 0200

ZZ CONSULTING
STRUCTURAL ENGINEER
640 S. STATE ST.
SHELLEY, ID 83274
Tel: 208 357 5404

MARK	DATE	DESCRIPTION	BY
	12/6/24	ISSUED FOR CONSTRUCTION CONFORMANCE SET	LAD

BARNWELL SCHOOL DISTRICT
MULTI-USE SAFE ROOM
BUILDING SECTIONS

Project No.:	200-207015-20004
Designed By:	JDR/MTR
Drawn By:	JDR/JFMU
Checked By:	MTR

A-301

Copyright. Tetra Tech

12/9/2024 2:01:17 PM BIM 360://200-207015-20004 - Barnwell Dome/A_BARN_DOME_v2019.rvt

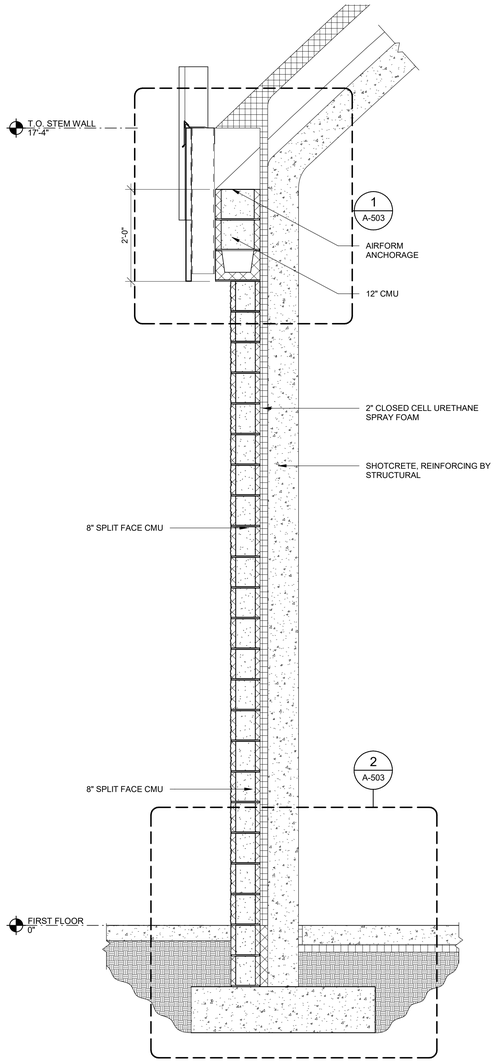

1 EXTERIOR WALL SECTION
A-302 SCALE: 3/4" = 1'-0"

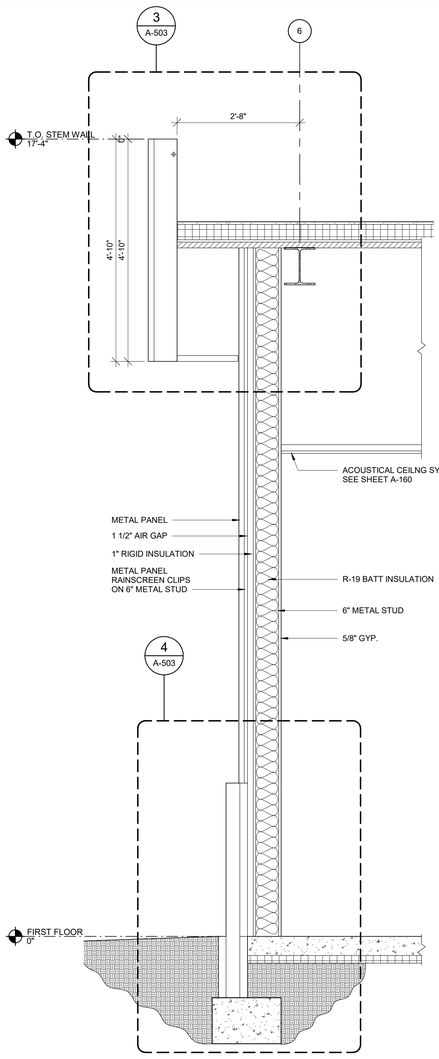

2 LOBBY WALL SECTION
A-302 SCALE: 3/4" = 1'-0"

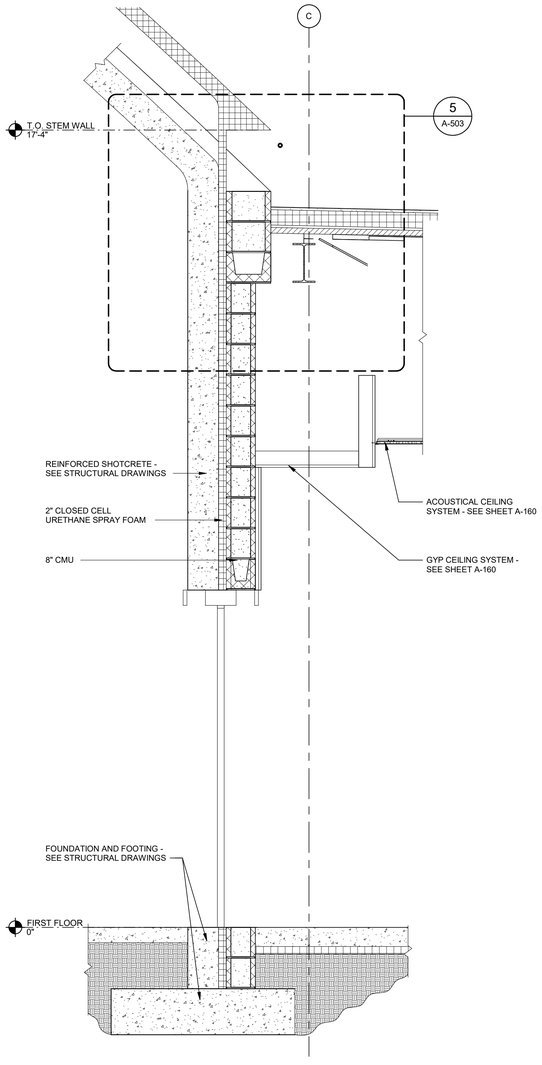

3 LOBBY CONNECTION TO DOME
A-302 SCALE: 3/4" = 1'-0"

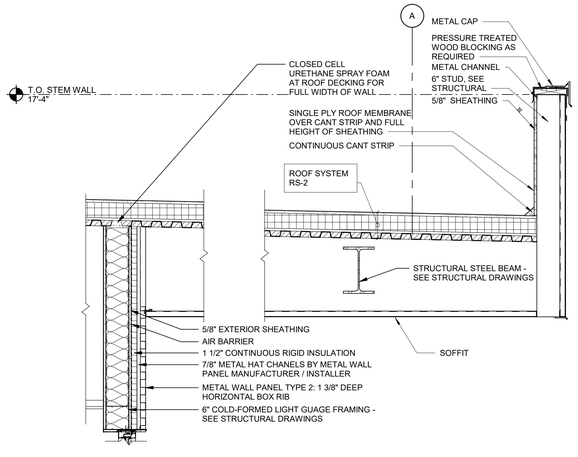

4 LOBBY CANOPY
A-302 SCALE: 3/4" = 1'-0"

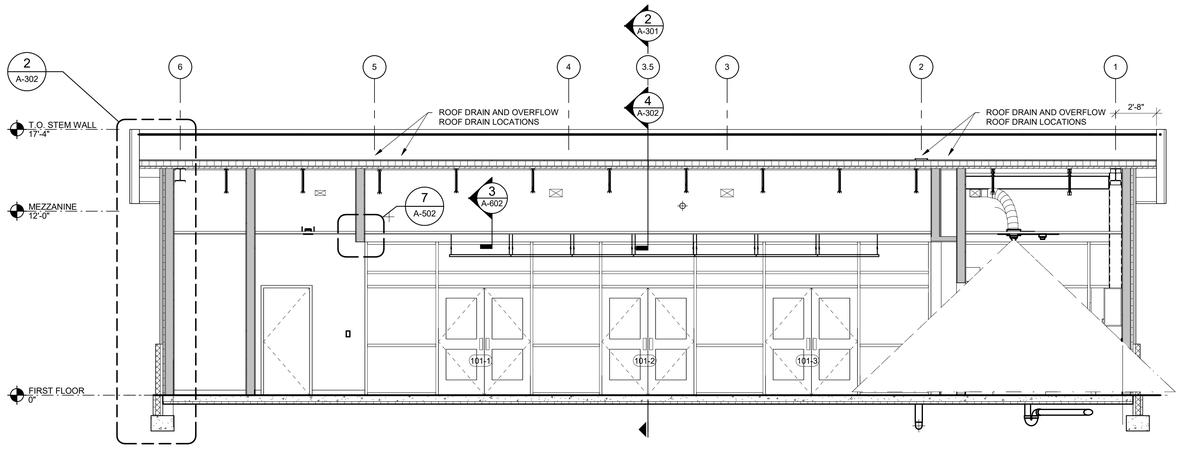

5 LOBBY SECTION - NORTH SOUTH
A-302 SCALE: 1/4" = 1'-0"

0 8" 1'-4" 2'-8"
SCALE: 3/4" = 1'-0"

0 2' 4' 8'
SCALE: 1/4" = 1'-0"

TETRA TECH
www.tetratech.com
240 Continental Drive, Suite 200
Newark, DE 19713
Tel: 302.738.7551 Fax: 302.454.3989

STATE OF SOUTH CAROLINA
LINDA ANN DISABELLA
Newark, DE
No. 37292
REGISTERED ARCHITECT
12/06/2024

BARNWELL SCHOOL DISTRICT
OWNER
770 HAGOOD AVE
BARNWELL, SC 29812
Tel: 803 541 1300

TETRA TECH
ARCHITECT
MECHANICAL ENGINEER
PLUMBING ENGINEER
ELECTRICAL ENGINEER
240 Continental Drive, Suite
Newark, DE 19713
302.738.7551

THOMAS & HUTTON
CIVIL ENGINEER
1501 MAIN ST.
COLUMBIA, SC 29201
Tel: 803 451 0200

ZZ CONSULTING
STRUCTURAL ENGINEER
640 S. STATE ST
SHELLEY, ID 83274
Tel: 208 357 5404

MARK	DATE	DESCRIPTION	BY
	12/6/24	ISSUED FOR CONSTRUCTION CONFORMANCE SET	LAD

BARNWELL SCHOOL DISTRICT
MULTI-USE SAFE ROOM

WALL SECTIONS / PARTIAL BUILDING SECTIONS

Project No.:	200-207015-20004
Designed By:	JDR/MTR
Drawn By:	JDR/JFMU
Checked By:	MTR

A-302

Copyright: Tetra Tech

12/9/2024 2:01:19 PM BIM 360://200-207015-20004 - Barnwell Dome/A_BARN_DOME_v2019.rvt

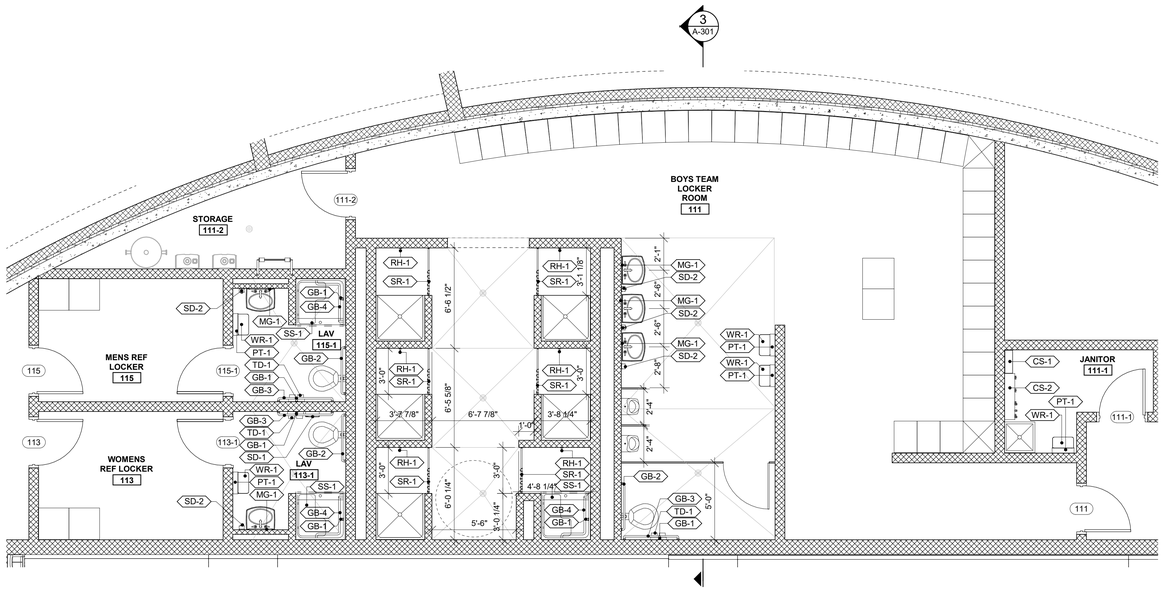

1 A-401 BOYS TEAM LOCKER ROOM ENLARGED PLAN
SCALE: 1/4" = 1'-0"

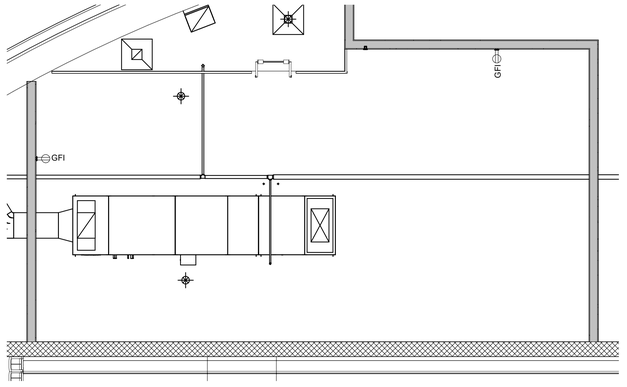

3 A-401 MEZZANINE - NORTH PLAN
SCALE: 1/4" = 1'-0"

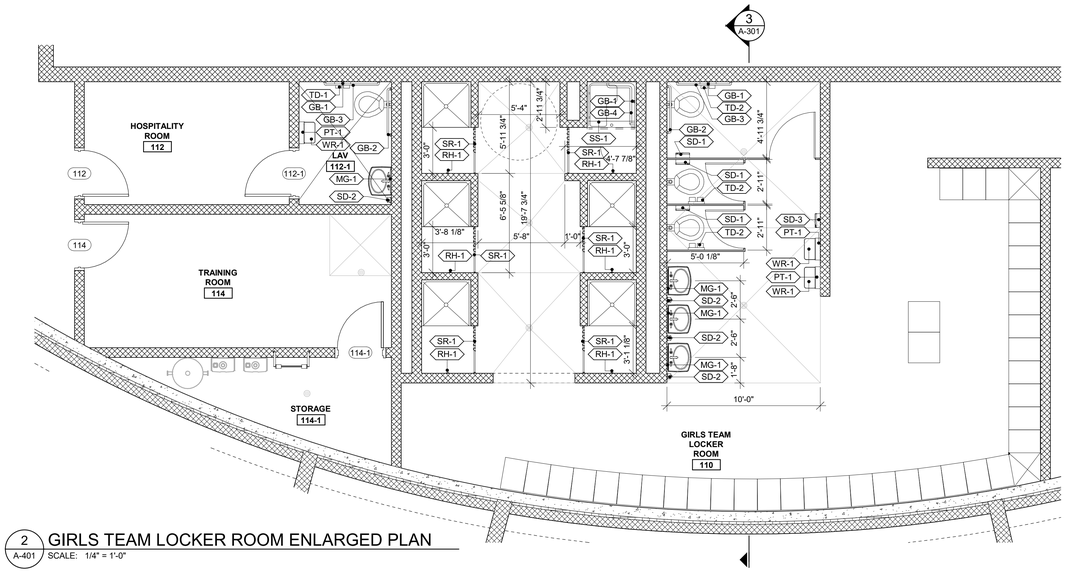

2 A-401 GIRLS TEAM LOCKER ROOM ENLARGED PLAN
SCALE: 1/4" = 1'-0"

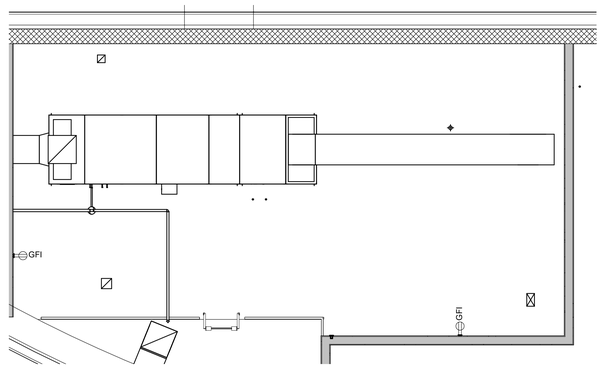

4 A-401 MEZZANINE - SOUTH PLAN
SCALE: 1/4" = 1'-0"

KEY PLAN

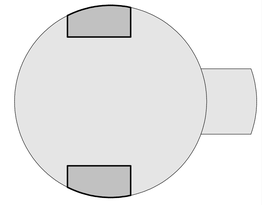

PROJECT NORTH
TRUE NORTH

SCALE: 1/2" = 1'-0"
SCALE: 1/4" = 1'-0"

RESTROOM ACCESSORY SCHEDULE

GB - #

Mark	DESCRIPTION	COMMENTS
BC-1	SURFACE MOUNTED BABY CHANGING STATION	ADA COMPLIANT
CS-1	CUSTODIAL UTILITY SHELF (16"L X 6"D)	ADA COMPLIANT
CS-2	MOP & BROOM HOLDER	ADA COMPLIANT
GB-1	18" GRAB BAR	ADA COMPLIANT
GB-2	36" GRAB BAR	ADA COMPLIANT
GB-3	42" GRAB BAR	ADA COMPLIANT
GB-4	TWO WAY HORIZ. GRAB BAR - 18" X 30"	ADA COMPLIANT
MG-1	18" X 30" MIRROR	ADA COMPLIANT
PT-1	PAPER TOWEL DISPENSER	FURNISHED BY OWNER, INSTALLED BY CONTRACTOR.
RH-1	ROBE HOOK	ADA COMPLIANT
SD-1	SANITARY NAPKIN DISPOSAL	SURFACE MOUNTED, ADA COMPLIANT
SD-2	AUTOMATIC SOAP DISPENSER (BATTERY OPERATED)	FURNISHED BY OWNER, INSTALLED BY CONTRACTOR.
SD-3	SANITARY NAPKIN DISPENSER	SURFACE MOUNTED, ADA COMPLIANT
SR-1	CONCEALED MOUNTED, 1" DIAMETER, SATIN FINISH STAINLESS STEEL CURTAIN ROD W/VINYL SHOWER CURTAIN (72" H) & SS SHOWER HOOKS.	SHOWER ROD AND CURTAIN
SS-1	FOLDING SHOWER SEAT	ADA COMPLIANT
TD-1	TOILET TISSUE DISPENSER - WALL MOUNT	FURNISHED BY OWNER, INSTALLED BY CONTRACTOR.
TD-2	TOILET TISSUE DISPENSER - PARTITION MOUNT	FURNISHED BY OWNER, INSTALLED BY CONTRACTOR.
WR-1	WASTE RECEPTACLE	SURFACE MOUNTED, ADA COMPLIANT

LOCKER ROOM NOTES

1. ALL DIMENSIONS ARE TAKEN FROM FACE OF WALL / TOILET PARTITION OR CENTER LINE OF PLUMBING FIXTURE / ACCESSORY ITEM. SEE SHEET A-002 FOR ARCHITECTURAL STANDARDS ON FIXTURE LOCATIONS AND SPACING.
2. ALL SINGLE TOILET ROOMS SHALL HAVE A FLOOR DRAIN. COORDINATE FLOOR DRAINS WITH PLUMBING DRAWINGS.
3. ALL SINGLE TOILET ROOM DOORS, AND ALL GANG TOILET STALL DOORS SHALL RECEIVE (1) COAT HOOK EACH.
4. TOILET ROOM ACCESSORIES TO BE MOUNTED AS PER MANUFACTURER'S INSTRUCTIONS FOR BARRIER-FREE REQUIREMENTS.
5. PROVIDE LAVATORY GUARDS AT ALL WALL HUNG LAVATORIES. REFER TO SPECIFICATIONS.
6. PROVIDE MOCK-UP OF ALL MOUNTED ACCESSORIES FOR OWNER APPROVAL.
7. REFERENCE SHEET A-110 FOR PARTITION TYPES AND MOUNTING CONDITIONS.
8. ALL ACCESSORIES TO BE STAINLESS STEAL UNLESS NOTED OTHERWISE.
9. REFERENCE FINISH SCHEDULE ON SHEET A-801 FOR TILE SPECIFICATIONS.

TETRA TECH
www.tetratech.com
240 Continental Drive, Suite 200
Newark, DE 19713
Tel: 302.738.7551 Fax: 302.454-3989

STATE OF SOUTH CAROLINA
LINDA ANN DISABELLA
Newark, DE
No. 37092
REGISTERED ARCHITECT
12/06/2024

BARNWELL SCHOOL DISTRICT
OWNER
770 HAGOOD AVE
BARNWELL, SC 29812
Tel: 803 541 1300

TETRA TECH
ARCHITECT
MECHANICAL ENGINEER
PLUMBING ENGINEER
ELECTRICAL ENGINEER
240 Continental Drive, Suite
Newark, DE 19713
302.738.7551

THOMAS & HUTTON
CIVIL ENGINEER
1501 MAIN ST.
COLUMBIA, SC 29201
Tel: 803 451 0200

ZZ CONSULTING
STRUCTURAL ENGINEER
640 S. STATE ST
SHELLEY, ID 83274
Tel: 208 357 5404

MARK	DATE	DESCRIPTION	BY
	12/6/24	ISSUED FOR CONSTRUCTION CONFORMANCE SET	LAD

BARNWELL SCHOOL DISTRICT
MULTI-USE SAFE ROOM

HOME TEAM LOCKER ROOMS & MEZZANINE NORTH & SOUTH ENLARGED PLANS

Project No.:	200-207015-20004
Designed By:	LG/MTR
Drawn By:	JDR/JFMU
Checked By:	MTR

Copyright: Tetra Tech

A-401

12/9/2024 2:01:24 PM BIM 360://200-207015-20004 - Barnwell Dome/A_BARN_DOME_v2019.rvt

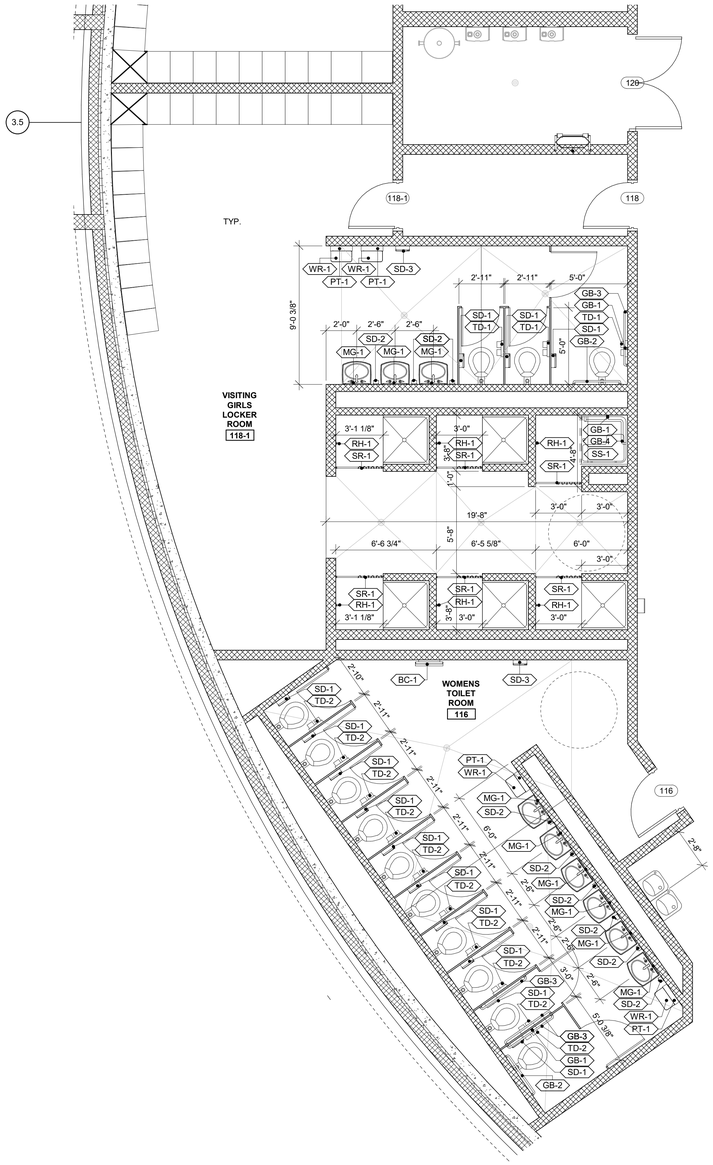

1 A-402 VISITING GIRLS LOCKER ROOM & WOMENS TOILET ROOM ENLARGED PLAN
SCALE: 1/4" = 1'-0"

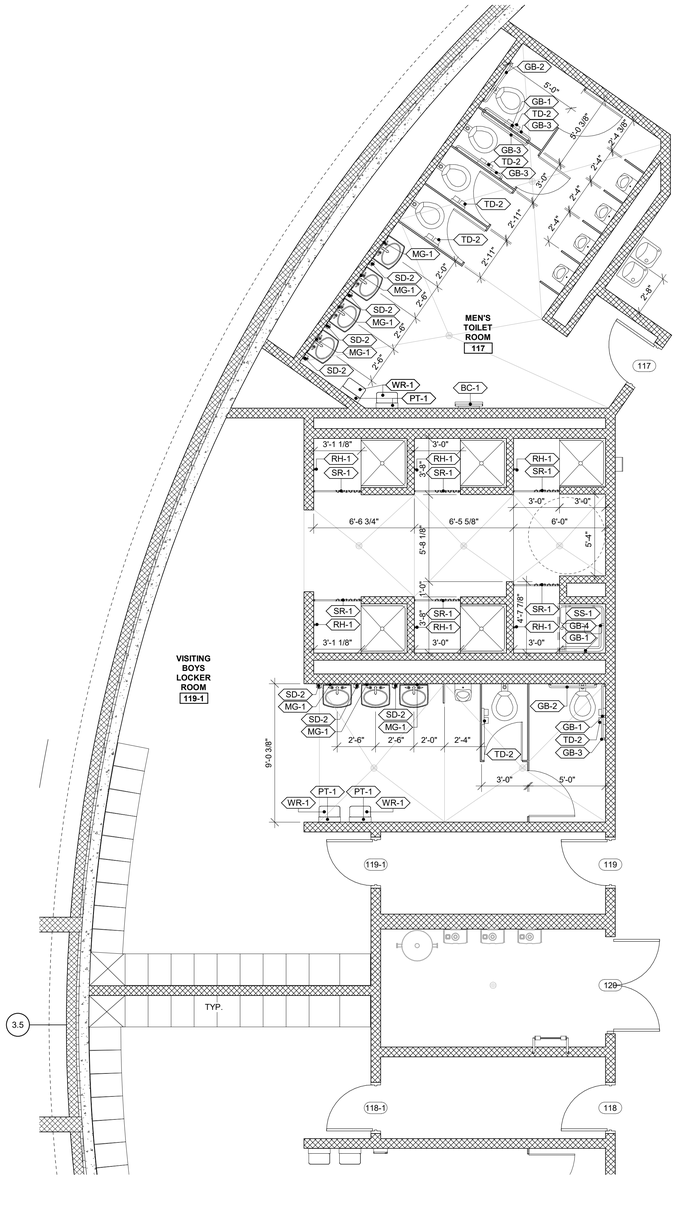

2 A-402 VISITING BOYS LOCKER ROOM & MENS TOILET ROOM ENLARGED PLAN
SCALE: 1/4" = 1'-0"



3 A-402 MEZZANINE - WEST PLAN
SCALE: 1/4" = 1'-0"

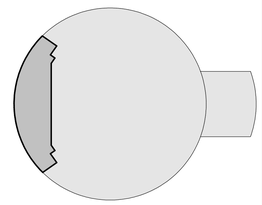

KEY PLAN

PROJECT NORTH
TRUE NORTH

SCALE: 1/2" = 1'-0"
SCALE: 1/4" = 1'-0"

GB - #

RESTROOM ACCESSORY SCHEDULE

Mark	DESCRIPTION	COMMENTS
BC-1	SURFACE MOUNTED BABY CHANGING STATION	ADA COMPLIANT
CS-1	CUSTODIAL UTILITY SHELF (16"L X 6"D)	ADA COMPLIANT
CS-2	MOP & BROOM HOLDER	ADA COMPLIANT
GB-1	18" GRAB BAR	ADA COMPLIANT
GB-2	36" GRAB BAR	ADA COMPLIANT
GB-3	42" GRAB BAR	ADA COMPLIANT
GB-4	TWO WAY HORIZ. GRAB BAR - 18" X 30"	ADA COMPLIANT
MG-1	18" X 30" MIRROR	ADA COMPLIANT
PT-1	PAPER TOWEL DISPENSER	FURNISHED BY OWNER, INSTALLED BY CONTRACTOR.
RH-1	ROBE HOOK	ADA COMPLIANT
SD-1	SANITARY NAPKIN DISPOSAL	SURFACE MOUNTED, ADA COMPLIANT
SD-2	AUTOMATIC SOAP DISPENSER (BATTERY OPERATED)	FURNISHED BY OWNER, INSTALLED BY CONTRACTOR.
SD-3	SANITARY NAPKIN DISPENSER	SURFACE MOUNTED, ADA COMPLIANT
SR-1	CONCEALED MOUNTED, 1" DIAMETER, SATIN FINISH STAINLESS STEEL CURTAIN ROD W/VINYL SHOWER CURTAIN (72" H) & SS SHOWER HOOKS.	SHOWER ROD AND CURTAIN
SS-1	FOLDING SHOWER SEAT	ADA COMPLIANT
TD-1	TOILET TISSUE DISPENSER - WALL MOUNT	FURNISHED BY OWNER, INSTALLED BY CONTRACTOR.
TD-2	TOILET TISSUE DISPENSER - PARTITION MOUNT	FURNISHED BY OWNER, INSTALLED BY CONTRACTOR.
WR-1	WASTE RECEPTACLE	SURFACE MOUNTED, ADA COMPLIANT

LOCKER ROOM NOTES

1. ALL DIMENSIONS ARE TAKEN FROM FACE OF WALL / TOILET PARTITION OR CENTER LINE OF PLUMBING FIXTURE / ACCESSORY ITEM. SEE SHEET A-002 FOR ARCHITECTURAL STANDARDS ON FIXTURE LOCATIONS AND SPACING.
2. ALL SINGLE TOILET ROOMS SHALL HAVE A FLOOR DRAIN. COORDINATE FLOOR DRAINS WITH PLUMBING DRAWINGS.
3. ALL SINGLE TOILET ROOM DOORS, AND ALL GANG TOILET STALL DOORS SHALL RECEIVE (1) COAT HOOK EACH.
4. TOILET ROOM ACCESSORIES TO BE MOUNTED AS PER MANUFACTURER'S INSTRUCTIONS FOR BARRIER-FREE REQUIREMENTS.
5. PROVIDE LAVATORY GUARDS AT ALL WALL HUNG LAVATORIES. REFER TO SPECIFICATIONS.
6. PROVIDE MOCK-UP OF ALL MOUNTED ACCESSORIES FOR OWNER APPROVAL.
7. REFERENCE SHEET A-110 FOR PARTITION TYPES AND MOUNTING CONDITIONS.
8. ALL ACCESSORIES TO BE STAINLESS STEAL UNLESS NOTED OTHERWISE.
9. REFERENCE FINISH SCHEDULE ON SHEET A-801 FOR TILE SPECIFICATIONS.

TETRA TECH
www.tetratech.com
240 Continental Drive, Suite 200
Newark, DE 19713
Tel: 302.738.7551 Fax: 302.454-3989

STATE OF SOUTH CAROLINA
LINDA ANN DISABELLA
Newark, DE
No. 15092
REGISTERED ARCHITECT
12/06/2024

BARNWELL SCHOOL DISTRICT
OWNER
770 HAGOOD AVE
BARNWELL, SC 29812
Tel: 803 541 1300

TETRA TECH
ARCHITECT
MECHANICAL ENGINEER
PLUMBING ENGINEER
ELECTRICAL ENGINEER
240 Continental Drive, Suite
Newark, DE 19713
302.738.7551

THOMAS & HUTTON
CIVIL ENGINEER
1501 MAIN ST.
COLUMBIA, SC 29201
Tel: 803 451 0200

ZZ CONSULTING
STRUCTURAL ENGINEER
640 S. STATE ST
SHELLEY, ID 83274
Tel: 208 357 5404

MARK	DATE	DESCRIPTION	BY
	12/6/24	ISSUED FOR CONSTRUCTION CONFORMANCE SET	LAD

BARNWELL SCHOOL DISTRICT
MULTI-USE SAFE ROOM

VISITING TEAM LOCKER ROOMS - TOILET ROOMS & MEZZANINE WEST ENLARGED PLANS

Project No.: 200-207015-20004
Designed By: JDR/MTR
Drawn By: JDR/JFMU
Checked By: MTR

A-402

Copyright. Tetra Tech

12/9/2024 2:01:28 PM BIM 360://200-207015-20004 - Barnwell Dome/A_BARN_DOME_v2019.rvt

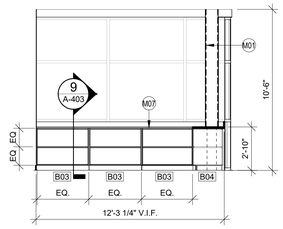

1 A-403 CONCESSIONS - EAST
SCALE: 1/4" = 1'-0"

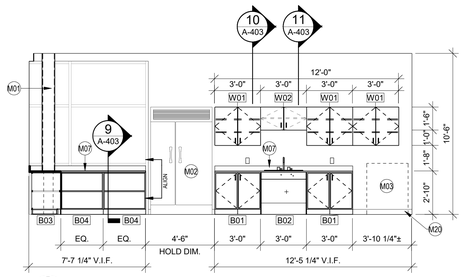

2 A-403 CONCESSIONS - SOUTH
SCALE: 1/4" = 1'-0"

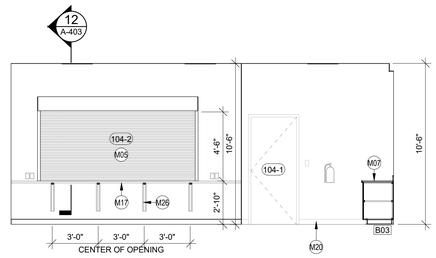

3 A-403 CONCESSIONS - NORTH
SCALE: 1/4" = 1'-0"

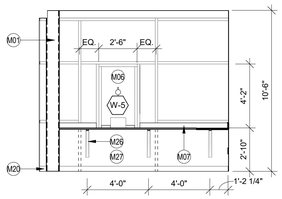

4 A-403 TICKET BOOTH - EAST
SCALE: 1/4" = 1'-0"

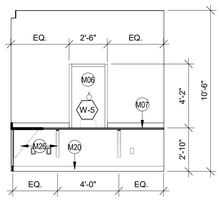

5 A-403 TICKET BOOTH - SOUTH
SCALE: 1/4" = 1'-0"

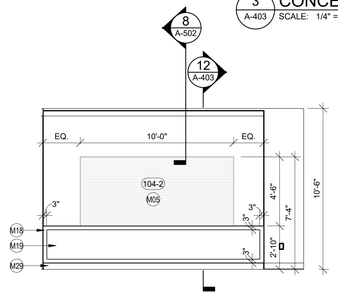

6 A-403 LOBBY 101 - SOUTH
SCALE: 1/4" = 1'-0"

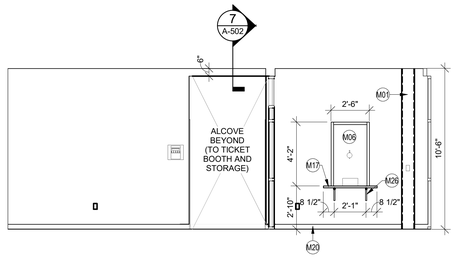

7 A-403 LOBBY 101 - NORTH
SCALE: 1/4" = 1'-0"

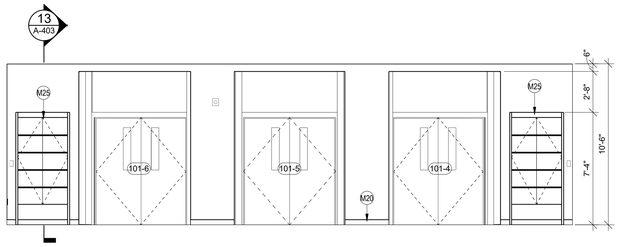

8 A-403 LOBBY 101 - WEST
SCALE: 1/4" = 1'-0"

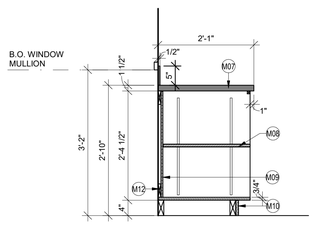

9 A-403 TYP OPEN BASE CABINET
SCALE: 3/4" = 1'-0"

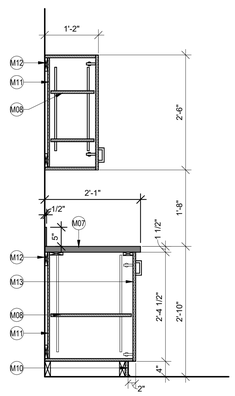

10 A-403 TYP BASE CABINET AND WALL CABINET
SCALE: 3/4" = 1'-0"

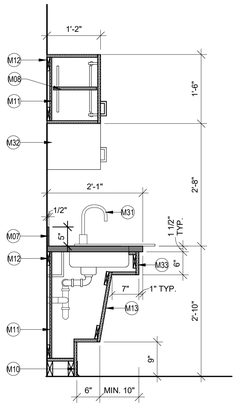

11 A-403 ADA SINK DETAIL
SCALE: 3/4" = 1'-0"

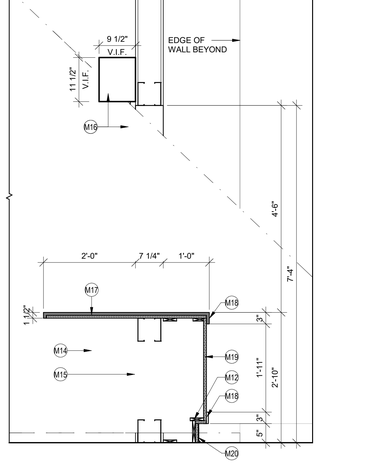

12 A-403 CONSESSIONS TRANSACTION COUNTER
SCALE: 3/4" = 1'-0"

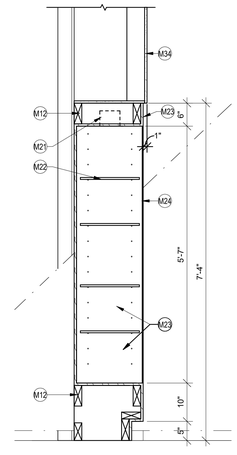

13 A-403 TROPHY CASE
SCALE: 3/4" = 1'-0"

CASEWORK SCHEDULE	
MARK	DESCRIPTION
B01	BASE CABINET W/DOUBLE DOOR 3' - 0" W. FINISH: P.LAM. 4" P.LAM. RECESSED BASE
B02	BASE CABINET - ADA ACCESSIBLE 3' - 0" W. FINISH: P.LAM. 4" P.LAM. BASE
B03	OPEN BASE CABINET. 40"W x 32-1/2"H.
B04	OPEN BASE CABINET. 33"W x 32-1/2"H.
W01	WALL CABINET W / DOUBLE DOOR 3' - 0" W. FINISH: P.LAM.
W02	WALL CABINET W / DOUBLE DOOR 3' - 0" W. FINISH: P.LAM.

MILLWORK NOTES

1. SEE FINISH PLANS AND SCHEDULE FOR ACCENT PAINT AND BASE INFORMATION.
2. SEE MILLWORK DETAILS AND SPECIFICATIONS FOR ADDITIONAL INFORMATION ON PLASTIC LAMINATE.
3. ALL STANDARD MILLWORK DIMENSIONS ARE TO BE MODIFIED TO CORRESPOND WITH THE DIMENSIONS NOTED ON THE DRAWINGS. FIELD VERIFY ALL DIMENSIONS PRIOR TO FABRICATION OF CABINETS.
4. PROVIDE FULL DEPTH SHELVES AT BASE, WALL, AND TALL CABINETS, TYPICAL UNLESS NOTED OTHERWISE.
5. PROVIDE FINISHED END PANELS (FEP), BACK EXTENSIONS, SCRIBES, FILLERS, SUPPORTS, ETC. REQUIRED FOR A COMPLETE CABINETRY INSTALLATION ON ALL CABINETS. FILLER PANELS ARE NOT TO EXCEED 3" WIDE, UNLESS NOTED OTHERWISE. PROVIDE TOP AND BOTTOM FILLER PANELS AT ALL BASE AND WALL UNITS. SUBMIT SHOP DRAWINGS SHOWING DETAILS OF THESE CONDITIONS.
6. PROVIDE CABINETS WITH FINISHED END PANEL, INCLUDING BUT NOT LIMITED TO, LOCATIONS OF ADJACENT CABINETS OR EQUIPMENT WITH A DEPTH LESS THAN CABINET OR EQUIPMENT.
7. PROVIDE COUNTERTOP CUTOUTS FOR SINK AND FAUCETS, ACCESS PANELS, AND REMOVABLE COMPONENTS AS REQUIRED BY NEW CONDITIONS, SUCH AS ELECTRICAL OUTLETS, JUNCTION BOXES, CLEANOUTS, ETC. COORDINATE ALL LOCATIONS WITH PLUMBING, MECHANICAL, AND ELECTRICAL. SCRIBE TO FIT.
8. PROVIDE 2" GROMMETS AT OPEN BASE COUNTERS 30" O.C.
9. PROVIDE BLOCKING AT NEW GYPSUM BOARD WALLS PER A.W.I.'s PREMIUM GRADE REQUIREMENTS FOR SUPPORT OF WALL OR TALL MOUNTED UNITS.
10. PROVIDE LOCKS AT ALL NEW CASEWORK DOORS.
11. PROVIDE REMOVABLE BACK IN SHELVING CASEWORK ALONG WINDOW WALL AND PLUMBING OR VALVE LOCATIONS. VERIFY POSITION OF VALVES PRIOR TO FABRICATION OF CABINETS. COORDINATE WITH M.E.P.

KEYNOTES

M01	PAINTED STEEL COLUMN - SEE STRUCTURAL DRAWINGS
M02	4' - 0" W. REFRIG. - FURNISHED BY OWNER, INSTALLED BY G.C.
M03	LOCATION FOR TRASH RECEPTACLES - FURNISHED BY OWNER
M05	OVERHEAD ROLLING COUNTER DOOR - SEE SPECIFICATIONS
M06	TICKET WINDOW - SEE SPECIFICATIONS
M07	P-LAMINATE COUNTERTOP AND 4" BACKSPLASH WITH CONT. CLEAR SEALANT AT SEAM
M08	ADJ. P-LAMINATE SHELF WITH EDGE BANDING TO MATCH
M09	1/2" P-LAMINATE BACK PANEL
M10	RECESSED P-LAMINATE BASE
M11	1/2" MELAMINE BACK PANEL
M12	WOOD BLOCKING, AS REQUIRED. (TYP.)
M13	P-LAMINATE ON 3/4" MDF W / EDGE BANDING TO MATCH
M14	P-LAMINATE ON 5/8" PLYWOOD LAMINATED SUBSTRATE
M15	P-LAMINATE ON 2" X 2" WOOD CLEAT
M16	ROLLING COUNTER DOOR SYSTEM W / FACE OF WALL BRACKETS
M17	1 1/2" SOLID SURFACE CONT. COUNTERTOP
M18	SOLID SURFACE CONTINUOUS FRAME
M19	P-LAMINATE INSET PANEL
M20	RUBBER BASE, TYP.
M21	LED CABINET RECESSED DOWN LIGHT
M22	1/2" TEMPERED CLEAR GLASS SHELVES ON ADJ. CHROME SHELF PINS RECESSED IN SIDE PANELS 2" O.C.
M23	P-LAMINATE TROPHY CASE. ALL EXPOSED SURFACES TO BE PLASTIC LAMINATE
M24	1/2" TEMPERED CLEAR GLASS DOUBLE DOORS ON CONCEALED HINGES WITH CABINET LOCK
M25	LOCKABLE P-LAMINATE & GLASS TROPHY CASE
M26	P-LAMINATE SUPPORTS @ 4'-0" O.C. (MAX.)
M27	PAINTED GYP ON METAL STUDS
M29	5" RECESSED P-LAMINATE TOE KICK
M31	ACCESSIBLE SINK AND FIXTURE PER SPECS
M32	F.E.P. OF CABINET BEYOND
M33	FIXED DRAWER PANEL
M34	5/8" GWB

TETRA TECH
www.tetratech.com
240 Continental Drive, Suite 200
Newark, DE 19713
Tel: 302.738.7551 Fax: 302.454-3989

STATE OF SOUTH CAROLINA
LINDA ANN DISABELLA
Newark, DE
No. 37292
REGISTERED ARCHITECT
12/06/2024

BARNWELL SCHOOL DISTRICT
OWNER
770 HAGOOD AVE
BARNWELL, SC 29812
Tel: 803 541 1300

TETRA TECH
ARCHITECT
MECHANICAL ENGINEER
PLUMBING ENGINEER
ELECTRICAL ENGINEER
240 Continental Drive, Suite
Newark, DE 19713
302.738.7551

THOMAS & HUTTON
CIVIL ENGINEER
1501 MAIN ST.
COLUMBIA, SC 29201
Tel: 803 451 0200

ZZ CONSULTING
STRUCTURAL ENGINEER
640 S. STATE ST
SHELLEY, ID 83274
Tel: 208 357 5404

MARK	DATE	DESCRIPTION	BY
	12/6/24	ISSUED FOR CONSTRUCTION CONFORMANCE SET	LAD

BARNWELL SCHOOL DISTRICT
MULTI-USE SAFE ROOM

INTERIOR ELEVATIONS

Project No.:	200-207015-20004
Designed By:	JDR/MTR
Drawn By:	JDR/JFMU
Checked By:	MTR

A-403

SCALE: 3/4" = 1'-0"

SCALE: 1/4" = 1'-0"

Copyright Tetra Tech

12/9/2024 2:01:33 PM BIM 360://200-207015-20004 - Barnwell Dome/A_BARN_DOME_r2019.rvt

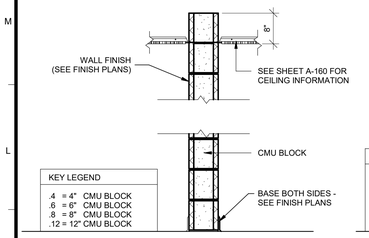

1 PARTITION TYPE P1
A-501 SCALE: 3/4" = 1'-0"

NOTE: WHERE THIS WALL IS EXPOSED TO AN OPEN CEILING AREA, THE CMU WILL BE 12' HIGH WITH METAL STUD AND DRYWALL TO THE ROOF STRUCTURE ABOVE. THE SAME AS WALL TYPE P2.

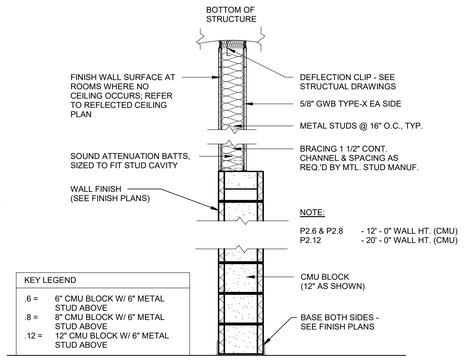

2 PARTITION TYPE P2
A-501 SCALE: 3/4" = 1'-0"

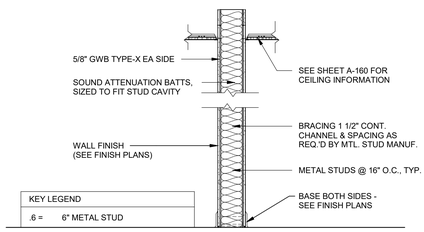

3 PARTITION TYPE P3
A-501 SCALE: 3/4" = 1'-0"

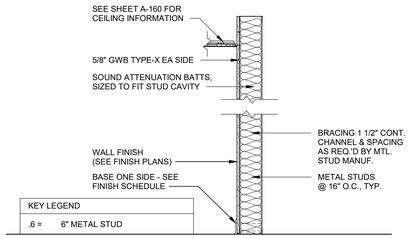

4 PARTITION TYPE P4
A-501 SCALE: 3/4" = 1'-0"

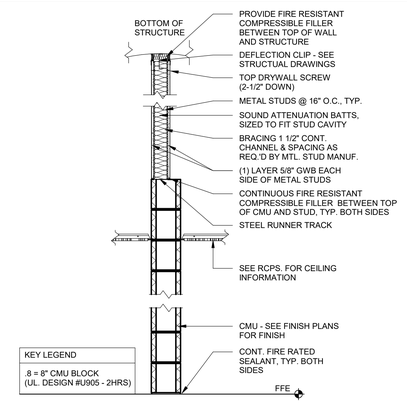

5 PARTITION TYPE P5
A-501 SCALE: 3/4" = 1'-0"

NOTE: DRYWALL MUST MEET THE REQUIREMENTS OF (UL DESIGN #U403-2HRS).

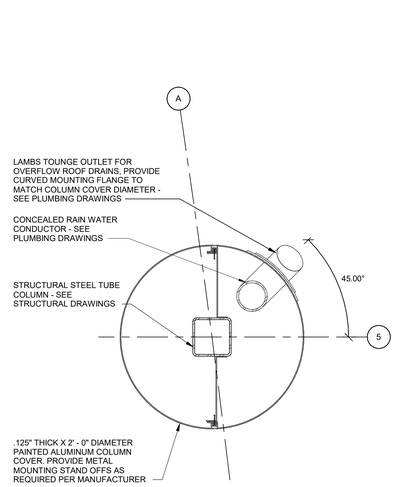

6 COLUMN COVER - VESTIBULE
A-501 SCALE: 1 1/2" = 1'-0"

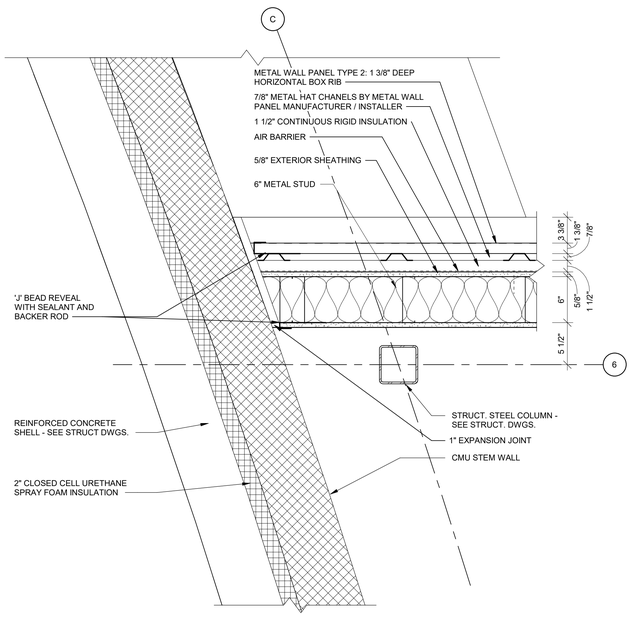

7 FORMWALL / ENTRY WALL CONNECTION
A-501 SCALE: 1 1/2" = 1'-0"

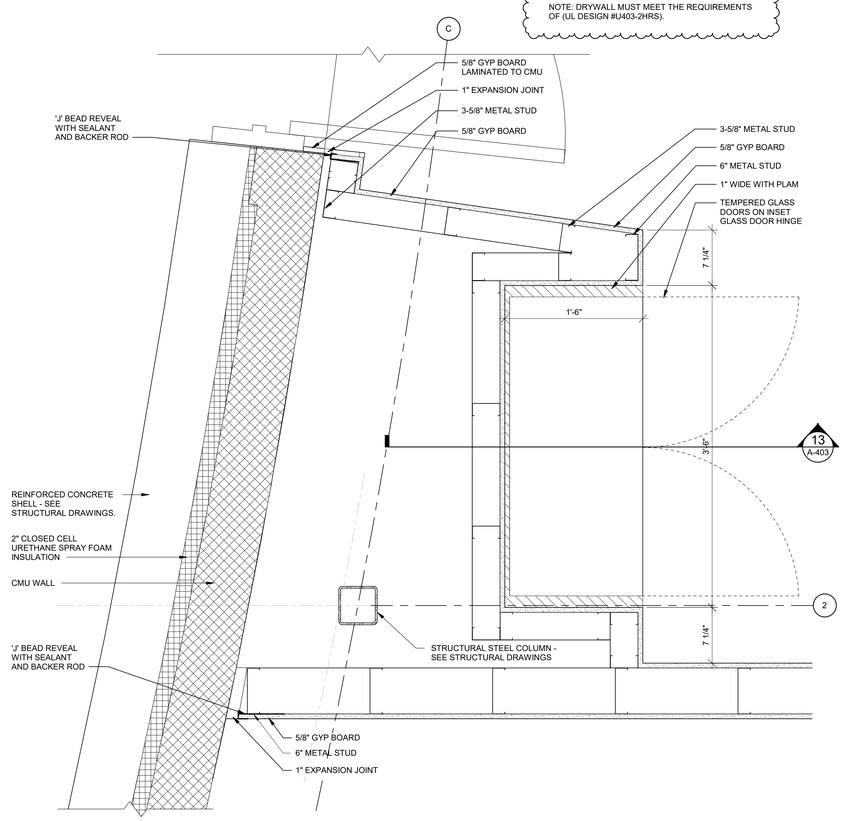

8 FORMWALL / STUD WALL CONNECTION DETAIL & TROPHY CASE
A-501 SCALE: 1 1/2" = 1'-0"

0 4" 8" 1'-4"
SCALE: 1 1/2" = 1'-0"

0 8" 1'-4" 2'-8"
SCALE: 3/4" = 1'-0"

TETRA TECH
www.tetratech.com
240 Continental Drive, Suite 200
Newark, DE 19713
Tel: 302.738.7551 Fax: 302.454-3989

LINDA ANN DISABELLA
Newark, DE
No. 15292
REGISTERED ARCHITECT
12/06/2024

BARNWELL SCHOOL DISTRICT
OWNER
770 HAGOOD AVE
BARNWELL, SC 29812
Tel: 803 541 1300

TETRA TECH
ARCHITECT
MECHANICAL ENGINEER
PLUMBING ENGINEER
ELECTRICAL ENGINEER
240 Continental Drive, Suite
Newark, DE 19713
302.738.7551

THOMAS & HUTTON
CIVIL ENGINEER
1501 MAIN ST.
COLUMBIA, SC 29201
Tel: 803 451 0200

ZZ CONSULTING
STRUCTURAL ENGINEER
640 S. STATE ST.
SHELLEY, ID 83274
Tel: 208 357 5404

MARK	DATE	DESCRIPTION	BY
	12/6/24	ISSUED FOR CONSTRUCTION CONFORMANCE SET	LAD

BARNWELL SCHOOL DISTRICT
MULTI-USE SAFE ROOM

PARTITION TYPES AND ARCHITECTURAL DETAILS

Project No.:	200-207015-20004
Designed By:	JDR/MTR
Drawn By:	JDR/JFMU
Checked By:	MTR

A-501

Copyright Tetra Tech

12/9/2024 2:01:35 PM BIM 360://200-207015-20004 - Barnwell Dome/A_BARN_DOME_v2019.rvt

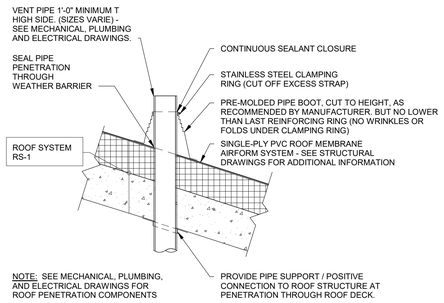

1 A-502 **PIPE PENETRATION**
SCALE: 1 1/2" = 1'-0"

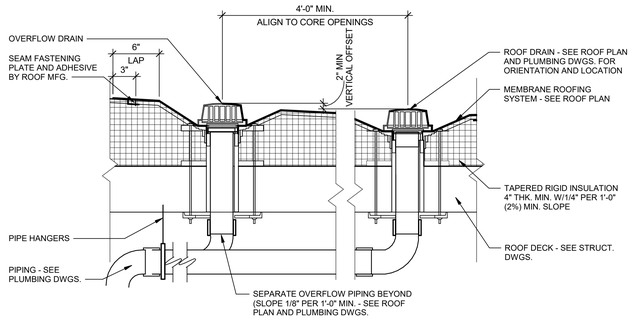

2 A-502 **ROOF DRAIN AND OVERFLOW**
SCALE: 1 1/2" = 1'-0"

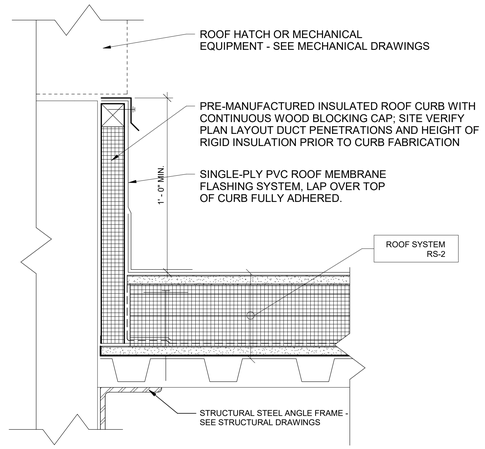

3 A-502 **MECHANICAL CURB**
SCALE: 3" = 1'-0"

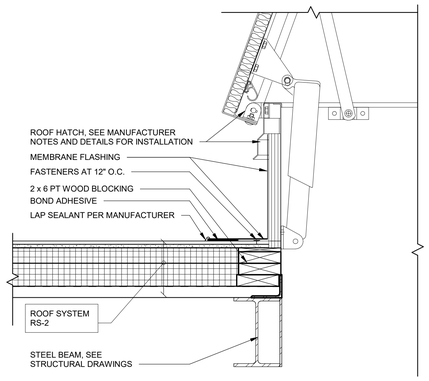

4 A-502 **ROOF HATCH DETAIL**
SCALE: 1 1/2" = 1'-0"

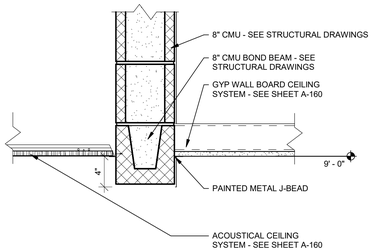

5 A-502 **ACT TO GYP BULKHEAD**
SCALE: 1 1/2" = 1'-0"

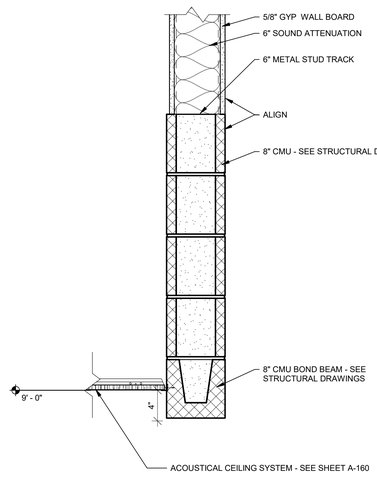

6 A-502 **ACT AT CMU BULKHEAD**
SCALE: 1 1/2" = 1'-0"

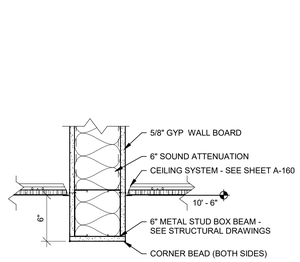

7 A-502 **ACT TO ACT BULKHEAD**
SCALE: 1 1/2" = 1'-0"

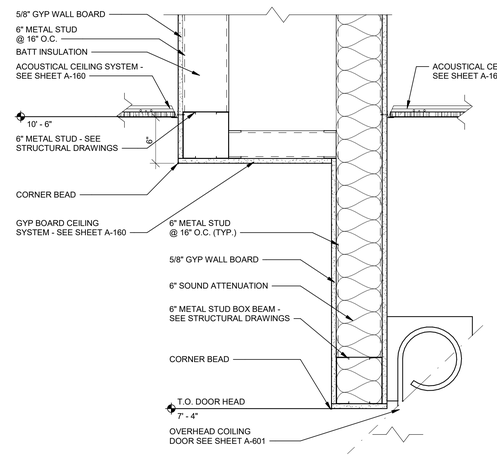

8 A-502 **SOFFIT @ CONCESSIONS**
SCALE: 1 1/2" = 1'-0"

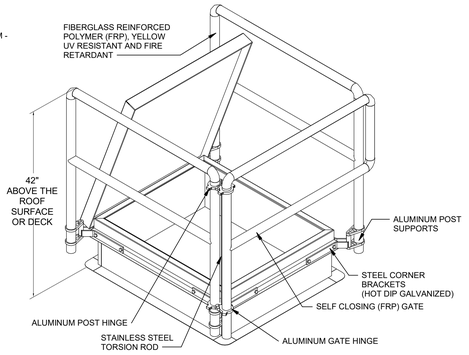

NOTES:
1. BASIS OF DESIGN OR APPROVED ARCHITECTURAL EQUIVALENT: MANUFACTURER: BILCO, MODEL(S): BIL-GUARD TYPE S, E, F HATCH RAIL SYSTEM FOR SINGLE LEAF ROOF SCUTTLE

9 A-502 **ROOF HATCH RAILING DETAIL**
SCALE: 1 1/2" = 1'-0"

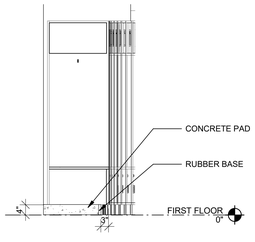

10 A-502 **LOCKER SECTION**
SCALE: 1/2" = 1'-0"

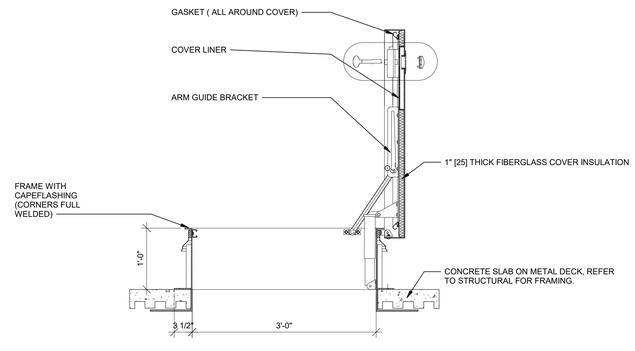

11 A-502 **HATCH SECTION DETAIL**
SCALE: 1" = 1'-0"

SCALE: 3" = 1'-0" (0, 2", 4", 8")
SCALE: 1 1/2" = 1'-0" (0, 1', 2', 4')
SCALE: 1 1/2" = 1'-0" (0, 4", 8", 1'-4")

TETRA TECH
www.tetratech.com
240 Continental Drive, Suite 200
Newark, DE 19713
Tel: 302.738.7551 Fax: 302.454.3989

STATE OF SOUTH CAROLINA
LINDA ANN DISABELLA
Newark, DE
No. 37292
REGISTERED ARCHITECT
12/06/2024

BARNWELL SCHOOL DISTRICT
OWNER
770 HAGOOD AVE
BARNWELL, SC 29812
Tel: 803 541 1300

TETRA TECH
ARCHITECT
MECHANICAL ENGINEER
PLUMBING ENGINEER
ELECTRICAL ENGINEER
240 Continental Drive, Suite
Newark, DE 19713
302.738.7551

THOMAS & HUTTON
CIVIL ENGINEER
1501 MAIN ST.
COLUMBIA, SC 29201
Tel: 803 451 0200

ZZ CONSULTING
STRUCTURAL ENGINEER
640 S. STATE ST.
SHELLEY, ID 83274
Tel: 208 357 5404

MARK	DATE	DESCRIPTION	BY
	12/6/24	ISSUED FOR CONSTRUCTION CONFORMANCE SET	LAD

BARNWELL SCHOOL DISTRICT
MULTI-USE SAFE ROOM

ARCHITECTURAL DETAILS

Project No.: 200-207015-20004
Designed By: JDR/MTR
Drawn By: JDR/JFMU
Checked By: MTR

A-502

Copyright: Tetra Tech

12/9/2024 2:01:38 PM BIM 360://200-207015-20004 - Barnwell Domes/A_BARN_DOME_v2019.rvt

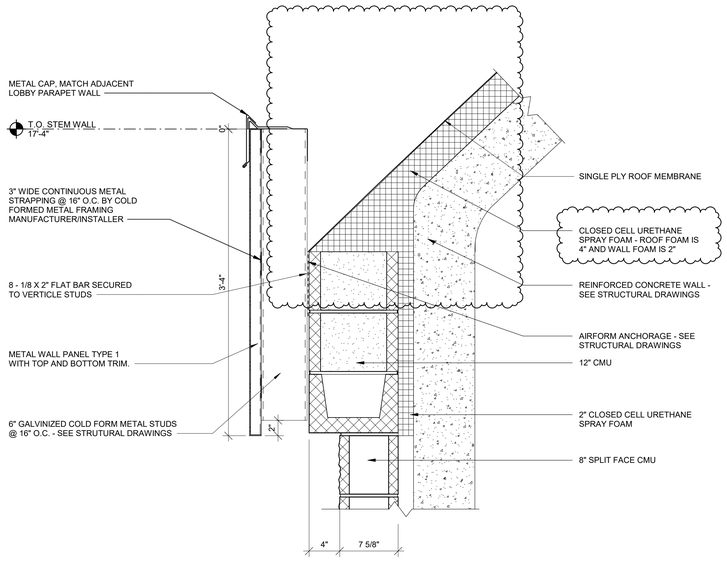

1 A-503 TOP OF STEM WALL
SCALE: 1 1/2" = 1'-0"

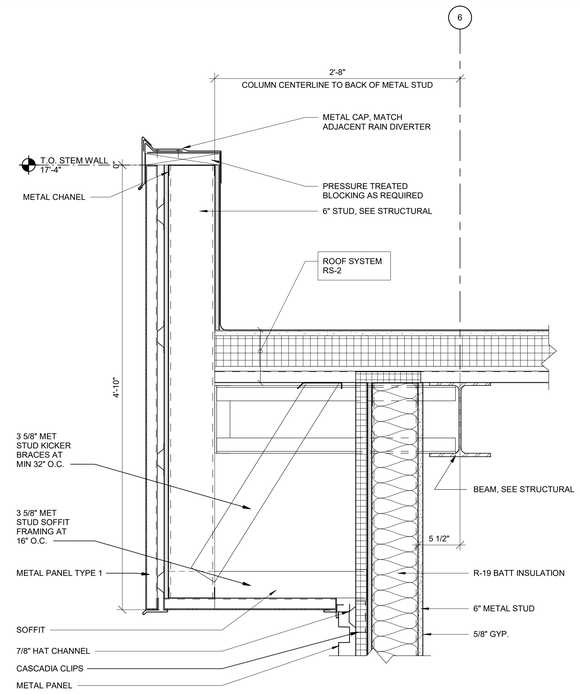

3 A-503 LOBBY SOFFIT AND PARAPET
SCALE: 1 1/2" = 1'-0"

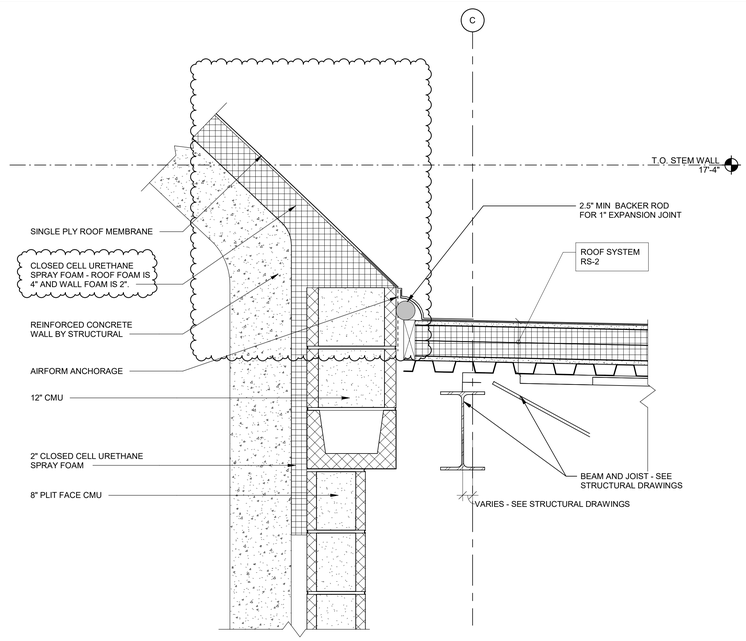

5 A-503 LOBBY CONNECTION TO DOME - LOW ROOF
SCALE: 1 1/2" = 1'-0"

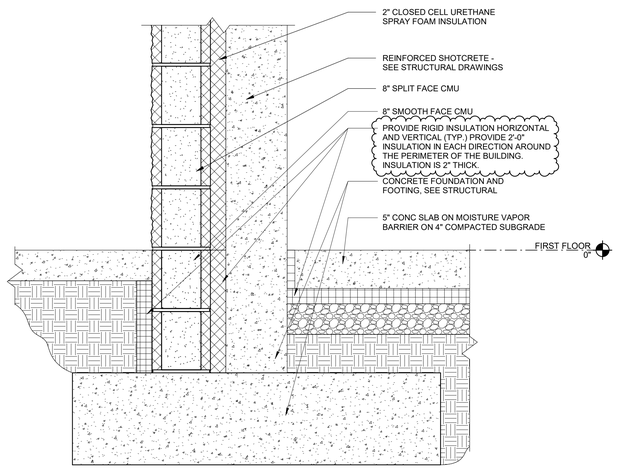

2 A-503 STEM WALL FOUNDATION
SCALE: 1 1/2" = 1'-0"

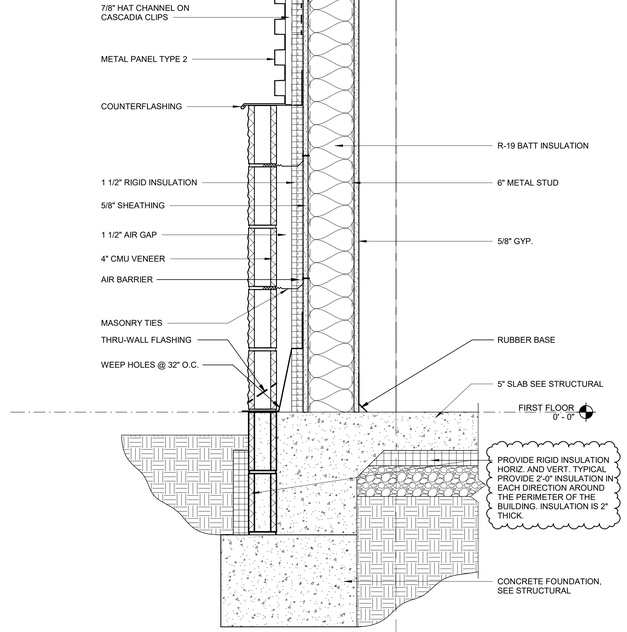

4 A-503 LOBBY FOUNDATION AND SILL
SCALE: 1 1/2" = 1'-0"

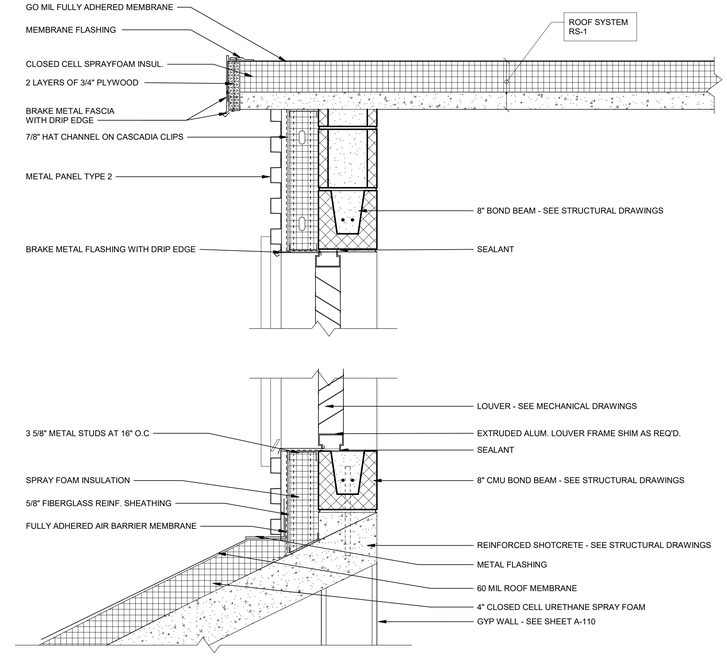

6 A-503 DORMER SECTION
SCALE: 1 1/2" = 1'-0"

0 4" 8" 1'-4"
SCALE: 1 1/2" = 1'-0"

TETRA TECH
www.tetratech.com
240 Continental Drive, Suite 200
Newark, DE 19713
Tel: 302.738.7551 Fax: 302.454.3989

STATE OF SOUTH CAROLINA
LINDA ANN DISABELLA
Newark, DE
No. 37092
REGISTERED ARCHITECT
12/06/2024

BARNWELL SCHOOL DISTRICT
OWNER
770 HAGOOD AVE
BARNWELL, SC 29812
Tel: 803 541 1300

TETRA TECH
ARCHITECT
MECHANICAL ENGINEER
PLUMBING ENGINEER
ELECTRICAL ENGINEER
240 Continental Drive, Suite
Newark, DE 19713
302.738.7551

THOMAS & HUTTON
CIVIL ENGINEER
1501 MAIN ST.
COLUMBIA, SC 29201
Tel: 803 451 0200

ZZ CONSULTING
STRUCTURAL ENGINEER
640 S. STATE ST.
SHELLEY, ID 83274
Tel: 208 357 5404

MARK	DATE	DESCRIPTION	BY
	12/6/24	ISSUED FOR CONSTRUCTION CONFORMANCE SET	LAD

BARNWELL SCHOOL DISTRICT
MULTI-USE SAFE ROOM

SECTION DETAILS

Project No.:	200-207015-20004
Designed By:	JDR/MTR
Drawn By:	JDR/JFMU
Checked By:	MTR

A-503

Copyright: Tetra Tech

12/9/2024 2:01:41 PM BIM 360://200-207015-20004 - Barnwell Dome/A_BARN_DOME_v2019.rvt

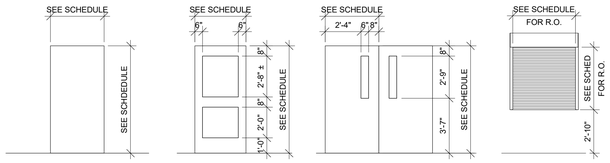

DOOR TYPES

SCALE: 1/4" = 1'-0"

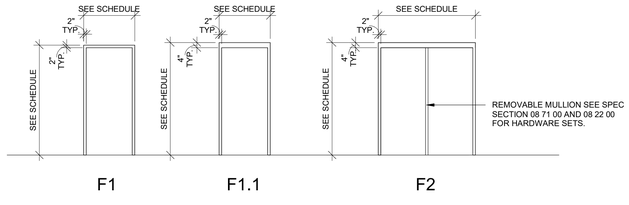

FRAME TYPES

SCALE: 1/4" = 1'-0"

NOTE: FOR "W" FRAME TYPES SEE STOREFRONT ELEVATIONS, SHEET A-602

DOOR SCHEDULE - MASTER

NUMBER	DOOR TYPE	DOOR QTY	DOOR WIDTH	DOOR HEIGHT	DOOR THK	DOOR MAT.	DOOR FIN	FRAME TYPE	FRAME MAT.	FRAME FIN.	GLAZING TYPE	FIRE RATING	DETAILS H	DETAILS J	DETAILS T	COMMENTS
100-1	G1	(2)	3'-0"	7'-0"	1 3/4"	ALUM	FF	W1	ALUM	FF	GL-1	-	-	-	-	
100-2	G1	(2)	3'-0"	7'-0"	1 3/4"	ALUM	FF	W1	ALUM	FF	GL-1	-	-	-	-	5
100-3	G1	(2)	3'-0"	7'-0"	1 3/4"	ALUM	FF	W1	ALUM	FF	GL-1	-	-	-	-	
101-1	G1	(2)	3'-0"	7'-0"	1 3/4"	ALUM	FF	W2	ALUM	FF	GL-3	-	-	-	-	
101-2	G1	(2)	3'-0"	7'-0"	1 3/4"	ALUM	FF	W2	ALUM	FF	GL-3	-	-	-	-	
101-3	G1	(2)	3'-0"	7'-0"	1 3/4"	ALUM	FF	W2	ALUM	FF	GL-3	-	-	-	-	
101-4	N	(2)	3'-0"	7'-0"	1 3/4"	FRP	FF	F2	ALUM	FF	GL-4	-	1/A-601 SIM	2/A-601 SIM	3/A-601 SIM	1, 2
101-5	N	(2)	3'-0"	7'-0"	1 3/4"	FRP	FF	F2	ALUM	FF	GL-4	-	1/A-601 SIM	2/A-601 SIM	3/A-601 SIM	1, 2
101-6	N	(2)	3'-0"	7'-0"	1 3/4"	FRP	FF	F2	ALUM	FF	GL-4	-	1/A-601 SIM	2/A-601 SIM	3/A-601 SIM	1, 2
102	F	(1)	3'-0"	7'-0"	1 3/4"	HM	PT-1	F1	HM	PT-1	-	-	6/A-601	7/A-601	-	6
103	F	(1)	3'-6"	7'-0"	1 3/4"	HM	PT-1	F1	HM	PT-1	-	-	6/A-601	7/A-601	-	-
104-1	F	(1)	3'-0"	7'-0"	1 3/4"	HM	PT-1	F1	HM	PT-1	-	-	6/A-601	7/A-601	-	-
104-2	OC	(1)	10'-0"	4'-6"		SS	FF	-	ALUM	FF	-	-	-	-	-	4,7
105	F	(1)	3'-0"	7'-0"	1 3/4"	HM	PT-1	F1	HM	PT-1	-		6/A-601	7/A-601	-	-
106	F	(1)	3'-0"	7'-0"	1 3/4"	HM	PT-1	F1.1	HM	PT-1	-	45 MIN	4/A-601	5/A-601	-	-
107	F	(1)	3'-0"	7'-0"	1 3/4"	HM	PT-1	F1.1	HM	PT-1	-	-	4/A-601	5/A-601	-	-
108-1	F	(2)	3'-0"	7'-2"	1 3/4"	FRP	FF	F2	ALUM	FF	-	-	1/A-601	2/A-601	3/A-601	1
108-2	F	(1)	3'-0"	7'-0"	1 3/4"	HM	PT-1	F1.1	HM	PT-1	-	45 MIN	4/A-601	5/A-601	-	-
109	F	(2)	3'-0"	7'-0"	1 3/4"	HM	PT-1	F2	HM	PT-1	-	-	4/A-601	5/A-601	-	3
110	F	(1)	3'-0"	7'-0"	1 3/4"	HM	PT-1	F1.1	HM	PT-1	-	-	4/A-601	5/A-601	-	-
111	F	(1)	3'-0"	7'-0"	1 3/4"	HM	PT-1	F1.1	HM	PT-1	-	-	4/A-601	5/A-601	-	-
111-1	F	(1)	3'-0"	7'-0"	1 3/4"	HM	PT-1	F1.1	HM	PT-1	-	-	4/A-601	5/A-601	-	-
111-2	F	(1)	3'-0"	7'-0"	1 3/4"	HM	PT-1	F1.1	HM	PT-1	-	-	4/A-601	5/A-601	-	-
112	F	(1)	3'-0"	7'-0"	1 3/4"	HM	PT-1	F1.1	HM	PT-1	-	-	4/A-601	5/A-601	-	-
112-1	F	(1)	3'-0"	7'-0"	1 3/4"	HM	PT-1	F1.1	HM	PT-1	-	-	4/A-601	5/A-601	-	-
113	F	(1)	3'-0"	7'-0"	1 3/4"	HM	PT-1	F1.1	HM	PT-1	-	-	4/A-601	5/A-601	-	-
113-1	F	(1)	3'-0"	7'-0"	1 3/4"	HM	PT-1	F1.1	HM	PT-1	-	-	4/A-601	5/A-601	-	-
114	F	(1)	3'-0"	7'-0"	1 3/4"	HM	PT-1	F1.1	HM	PT-1	-	-	4/A-601	5/A-601	-	-
114-1	F	(1)	3'-0"	7'-0"	1 3/4"	HM	PT-1	F1.1	HM	PT-1	-	-	4/A-601	5/A-601	-	-
115	F	(1)	3'-0"	7'-0"	1 3/4"	HM	PT-1	F1.1	HM	PT-1	-	-	4/A-601	5/A-601	-	-
115-1	F	(1)	3'-0"	7'-0"	1 3/4"	HM	PT-1	F1.1	HM	PT-1	-	-	4/A-601	5/A-601	-	-
116	F	(1)	3'-0"	7'-0"	1 3/4"	HM	PT-1	F1.1	HM	PT-1	-	-	4/A-601	5/A-601	-	-
117	F	(1)	3'-0"	7'-0"	1 3/4"	HM	PT-1	F1.1	HM	PT-1	-	-	4/A-601	5/A-601	-	-
118	F	(1)	3'-0"	7'-0"	1 3/4"	HM	PT-1	F1.1	HM	PT-1	-	-	4/A-601	5/A-601	-	-
118-1	F	(1)	3'-0"	7'-0"	1 3/4"	HM	PT-1	F1.1	HM	PT-1	-	-	4/A-601	5/A-601	-	-
119	F	(1)	3'-0"	7'-0"	1 3/4"	HM	PT-1	F1.1	HM	PT-1	-	-	4/A-601	5/A-601	-	-
119-1	F	(1)	3'-0"	7'-0"	1 3/4"	HM	PT-1	F1.1	HM	PT-1	-	-	4/A-601	5/A-601	-	-
120	F	(2)	3'-0"	7'-0"	1 3/4"	HM	PT-1	F2	HM	PT-1	-	-	4/A-601	5/A-601	-	3
121-1	F	(2)	3'-0"	7'-2"	1 3/4"	FRP	FF	F2	ALUM	FF	-	-	1/A-601	2/A-601	3/A-601	1
121-2	F	(2)	3'-0"	7'-2"	1 3/4"	FRP	FF	F2	ALUM	FF	-	-	1/A-601	2/A-601	3/A-601	1
121-3	F	(2)	3'-0"	7'-2"	1 3/4"	FRP	FF	F2	ALUM	FF	-	-	1/A-601	2/A-601	3/A-601	1
121-4	F	(2)	3'-6"	8'-0"	1 3/4"	FRP	FF	F2	ALUM	FF	-	-	1/A-601	2/A-601	3/A-601	1

DOOR SCHEDULE ABBREVIATIONS:

ALUM	ALUMINUM	HM	HOLLOW METAL
F	FLUSH DOOR OR FRAME TYPE	N	NARROW-LITE DOOR
FF	FACTORY FINISH	OC	OVERHEAD COILING COUNTER SHUTTER
FRP	FIBERGLASS REINFORCED PLASTIC	PT	PAINT(ED)
GL	GLASS	R.O.	ROUGH OPENING
		SS	STAINLESS STEEL

DOORS, FRAMES, AND HARDWARE NOTES

1. HANDLES, PULLS, LATCHES, LOCKS, AND OTHER OPERABLE PARTS ON ACCESSIBLE DOORS ANS GATES SHALL HAVE A SHAPE THAT IS EASY TO GRASP WITH ONE HAND AND DOES NOT REQUIRE TIGHT GRASPING, PINCHING OR TWISTING OF THE WRIST TO OPERATE. (ANSI A117.1-2017 SECTION 404.2.6)
2. DOOR CLOSERS SHALL BE ADJUSTED SO THAT FROM AN OPEN POSITION OF 90 DEGREES, THE TIME REQUIRED TO MOVE THE DOOR TO AN OPEN POSITION OF 12 DEGREES SHALL BE 5 SECONDS MINIMUM. (ANSI A117.1-2017 SECTION 404.2.7.1)
3. ALL INTERIOR HINGED DOORS, OTHER THAN FIRE DOORS, SHALL HAVE 5.0 POUNDS MAXIMUM FORCE FOR PUSHING OR PULLING OPEN. (ANSI A117.1-2017 SECTION 404.2.8.1)
4. IF DOOR THRESHOLDS ARE PROVIDED THEY SHALL BE 1/2" MAXIMUM HEIGHT. RAISED THRESHOLDS AND CHANGES IN LEVELS AT DOORWAYS SHALL COMPLY WITH ANSI A117.1-2017 SECTIONS 302 AND 303)
5. ALL WIRING CONDUIT IDENTIFIED ON THE DRAWINGS, OR REQUIRED FOR THE INSTALLATION OF ELECTRONIC COMPONENTS, THAT IS WITHIN HOLLOW METAL FRAMES SHALL BE PROVIDED AS PART OF THE HOLLOW METAL FRAME, WITH TERMINATIONS APPROPRIATE FOR EXTENSION BY OTHER TRADES.
6. ALL GLASS IN DOORS, HOLLOW METAL FRAMES, AND STOREFRONT FRAMES WILL BE TEMPERED GLASS UNLESS NOTED OTHERWISE IN SCHEDULES.
7. SEE SPECIFICATIONS SECTION 08 41 13 FOR ALUMINUM DOOR AND FRAME FINISH.
8. SEE FINISH SCHEDULE ON SHEET A-801 FOR PAINT COLOR SELECTIONS AND ADDITIONAL INFORMATION.
9. STOREFRONT NOTES SEE A-602

DOOR SCHEDULE COMMENTS

1. ALL FRP DOORS AND ALUMINUM FRAME ASSEMBLY AT DOME STEM WALL (EXTERIOR OR AT LOOBY 101 TO MULTIPURPOSE SAFE ROOM) TO BE HURRICANE RATED.
2. PROVIDE MAGNETIC HOLD OPENS WHERE INDICATED. SEE DOOR HARDWARE SPECIFICATION SECTION 08 71 00
3. LEFT HAND LEFT ACTIVE, PROVIDE CONCEALED FLUSH BOLTS ON RIGHT HAND LEAF.
4. ALUMINUM OVERHEAD COILING COUNTER SHUTTER (MANUALLY OPERATED).
5. CARD READER - SEE SPECIFICATION SECTION 08 71 00 & 08 22 00 DOOR HARDWARE AND ELECTRICAL DRAWINGS.
6. PROVIDE WIDE ANGLE DOOR PEEP-HOLE VIEWER SEE SPECIFICATION SECTION 08 71 00
7. THE OVERHEADCOUNTER COILING DOOR 104-2 SHOULD BE MOUNTED TO THE FACE OF THE WALL ON THE CONCESSION SIDE. THE FINISH IS STAINLESS STEEL.

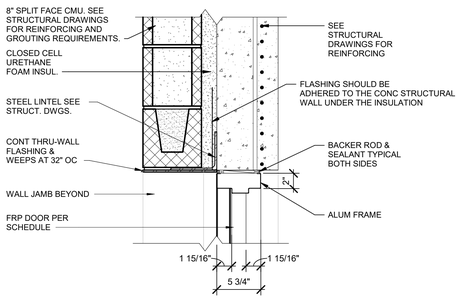

1 A-601 EXT. FRP HEAD @ STEM WALL

SCALE: 1 1/2" = 1'-0"

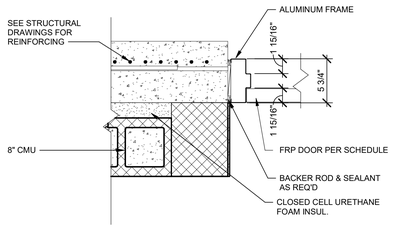

2 A-601 EXT. FRP JAMB @ STEM WALL

SCALE: 1 1/2" = 1'-0"

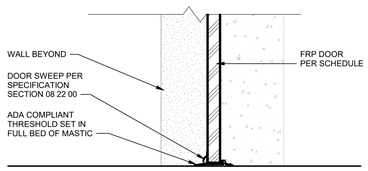

3 A-601 EXT. FRP SILL @ STEM WALL

SCALE: 1 1/2" = 1'-0"

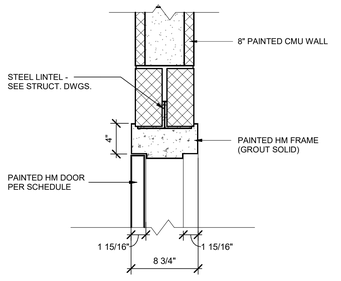

4 A-601 INT. HM HEAD @ CMU PARTITION

SCALE: 1 1/2" = 1'-0"

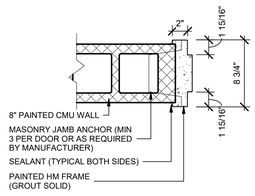

5 A-601 INT. HM JAMB @ CMU PARTITION

SCALE: 1 1/2" = 1'-0"

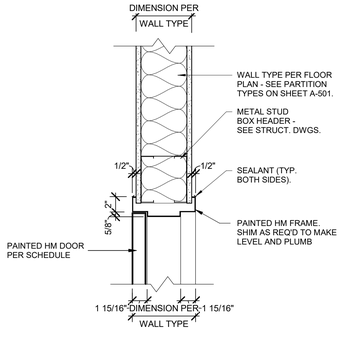

6 A-601 INT. HM HEAD @ GWB PARTITION

SCALE: 1 1/2" = 1'-0"

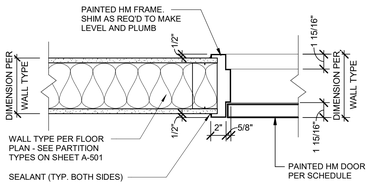

7 A-601 INT. HM JAMB @ GWB PARTITION

SCALE: 1 1/2" = 1'-0"

TETRA TECH
www.tetratech.com
240 Continental Drive, Suite 200
Newark, DE 19713
Tel: 302.738.7551 Fax: 302.454.3989

STATE OF SOUTH CAROLINA
LINDA ANN DISABELLA
Newark, DE
No. 37292
REGISTERED ARCHITECT
12/06/2024

BARNWELL SCHOOL DISTRICT
OWNER
770 HAGOOD AVE
BARNWELL, SC 29812
Tel: 803 541 1300

TETRA TECH
ARCHITECT
MECHANICAL ENGINEER
PLUMBING ENGINEER
ELECTRICAL ENGINEER
240 Continental Drive, Suite
Newark, DE 19713
302.738.7551

THOMAS & HUTTON
CIVIL ENGINEER
1501 MAIN ST.
COLUMBIA, SC 29201
Tel: 803 451 0200

ZZ CONSULTING
STRUCTURAL ENGINEER
640 S. STATE ST
SHELLEY, ID 83274
Tel: 208 357 5404

MARK	DATE	DESCRIPTION	BY
	12/6/24	ISSUED FOR CONSTRUCTION CONFORMANCE SET	LAD

BARNWELL SCHOOL DISTRICT
MULTI-USE SAFE ROOM

DOOR SCHEDULE, DOOR DETAILS, AND DOOR/FRAME TYPES

Project No.:	200-207015-20004
Designed By:	JDR/MTR
Drawn By:	JDR/JFMU
Checked By:	MTR

0 4" 8" 1'-4"
SCALE: 1 1/2" = 1'-0"

0 2' 4' 8'
SCALE: 1/4" = 1'-0"

A-601

Copyright: Tetra Tech

12/9/2024 2:01:42 PM BIM 360://200-207015-20004 - Barnwell Dome/A_BARN_DOME_v2019.rvt

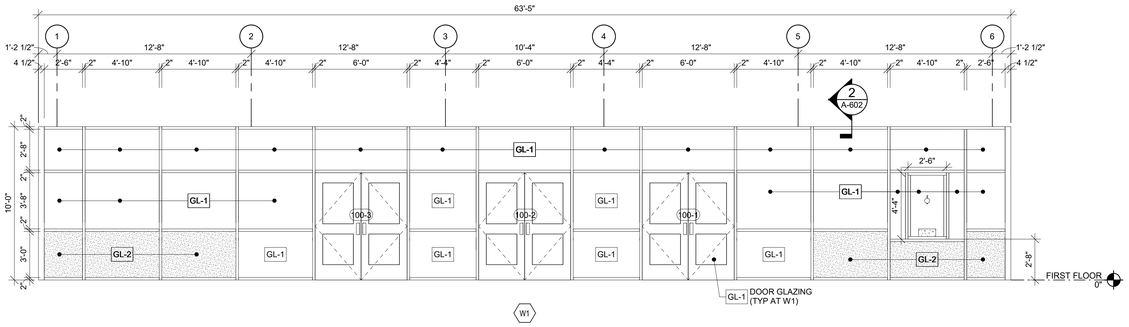

W1 EXTERIOR STOREFRONT - EAST
A-602 SCALE: 1/4" = 1'-0"

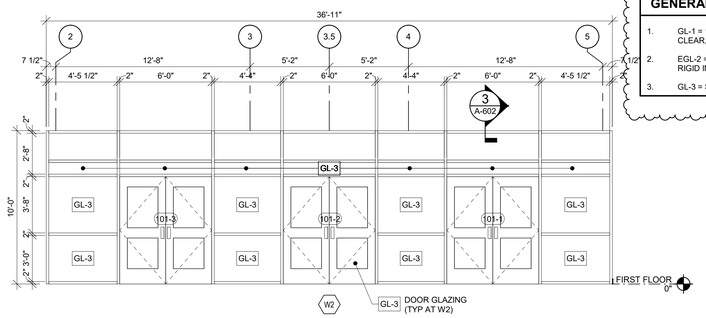

W2 VESTIBULE STORE FRONT
A-602 SCALE: 1/4" = 1'-0"

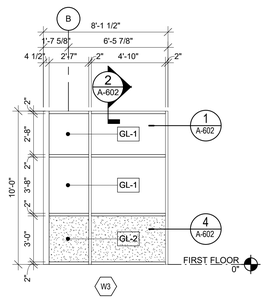

W3 EXTERIOR STOREFRONT - NORTH
A-602 SCALE: 1/4" = 1'-0"

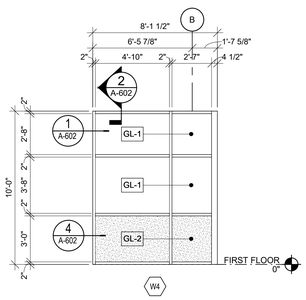

W4 EXTERIOR STOREFRONT - SOUTH
A-602 SCALE: 1/4" = 1'-0"

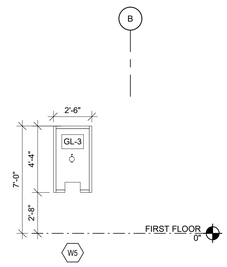

W5 TICKET BOOTH WINDOW
A-602 SCALE: 1/4" = 1'-0"

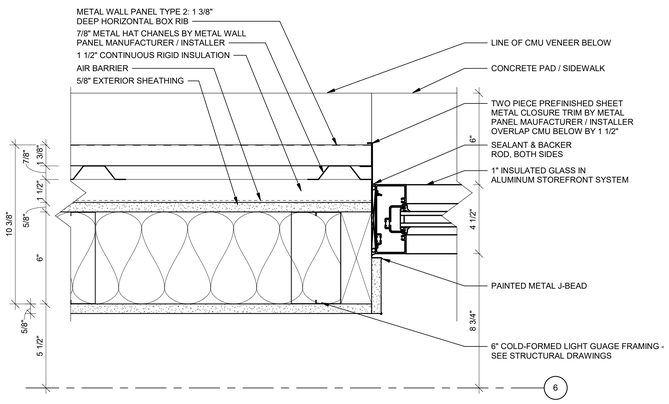

1 STOREFRONT - JAMB @ METAL PANEL
A-602 SCALE: 3" = 1'-0"

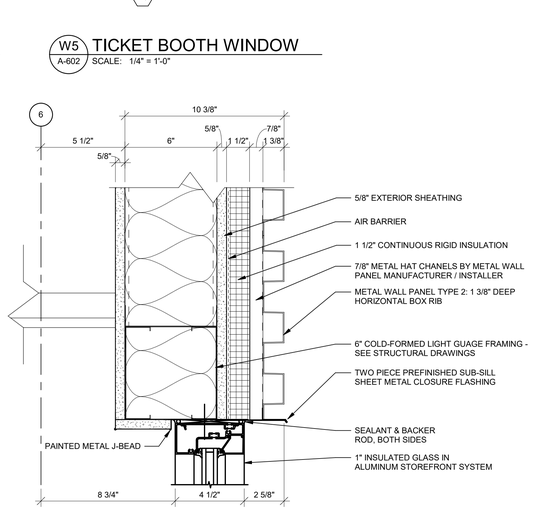

2 STOREFRONT - HEAD - EXTERIOR
A-602 SCALE: 3" = 1'-0"

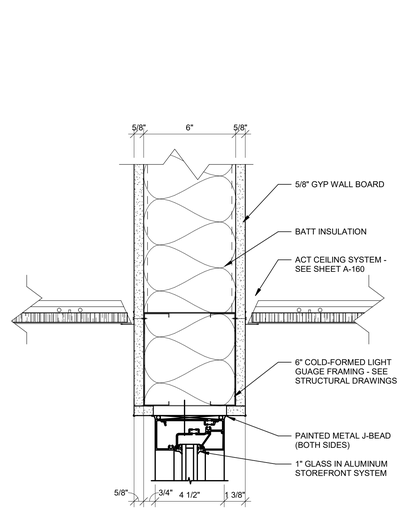

3 STOREFRONT - HEAD - INTERIOR
A-602 SCALE: 3" = 1'-0"

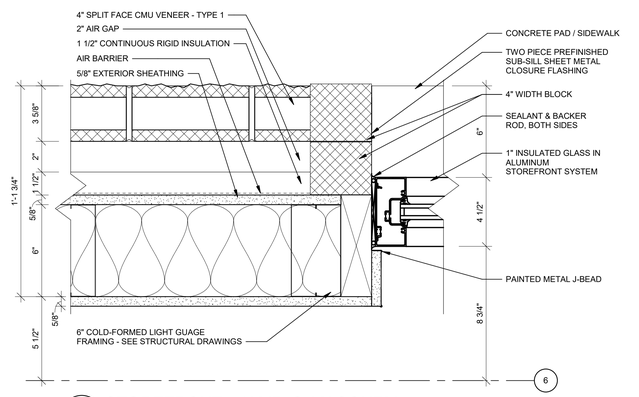

4 STOREFRONT - JAMB @ MASONRY
A-602 SCALE: 3" = 1'-0"

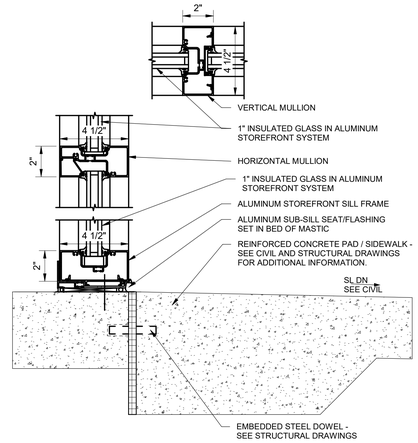

5 STOREFRONT - MULLION AND SILL
A-602 SCALE: 3" = 1'-0"

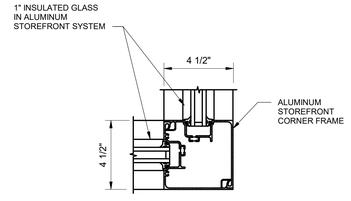

6 STOREFRONT - JAMB @ CORNER
A-602 SCALE: 3" = 1'-0"

0 2" 4" 8"
SCALE: 3" = 1'-0"

0 4" 8" 1'-4"
SCALE: 1 1/2" = 1'-0"

GENERAL STOREFRONT ELEVATIONS - NOTES

1. GL-1 = 1" INSULATED LAMINATED GLASS, INTERIOR 1/4" CLEAR, EXTERIOR 1/4" CLEAR LOW
2. EGL-2 = 1" INSULATED LAMINATED SPANDREL GLASS WITH 1" RIGID INSULATION
3. GL-3 = SINGLE PANE LAMINATED GLASS

TETRA TECH
www.tetratech.com
240 Continental Drive, Suite 200
Newark, DE 19713
Tel: 302.738.7551 Fax: 302.454-3989

STATE OF SOUTH CAROLINA
LINDA ANN DISABELLA
Newark, DE
No. 37292
REGISTERED ARCHITECT
12/06/2024

BARNWELL SCHOOL DISTRICT
OWNER
770 HAGOOD AVE
BARNWELL, SC 29812
Tel: 803 541 1300

TETRA TECH
ARCHITECT
MECHANICAL ENGINEER
PLUMBING ENGINEER
ELECTRICAL ENGINEER
240 Continental Drive, Suite
Newark, DE 19713
302.738.7551

THOMAS & HUTTON
CIVIL ENGINEER
1501 MAIN ST.
COLUMBIA, SC 29201
Tel: 803 451 0200

ZZ CONSULTING
STRUCTURAL ENGINEER
640 S. STATE ST.
SHELLEY, ID 83274
Tel: 208 357 5404

MARK	DATE	DESCRIPTION	BY
	12/6/24	ISSUED FOR CONSTRUCTION CONFORMANCE SET	LAD

BARNWELL SCHOOL DISTRICT
MULTI-USE SAFE ROOM

STOREFRONT ELEVATIONS

Project No.:	200-207015-20004
Designed By:	JDR/MTR
Drawn By:	JDR/JFMU
Checked By:	MTR

A-602

Copyright: Tetra Tech

12/9/2024 2:01:45 PM BIM 360://200-207015-20004 - Barnwell Dome/A_BARN_DOME_v2019.rvt

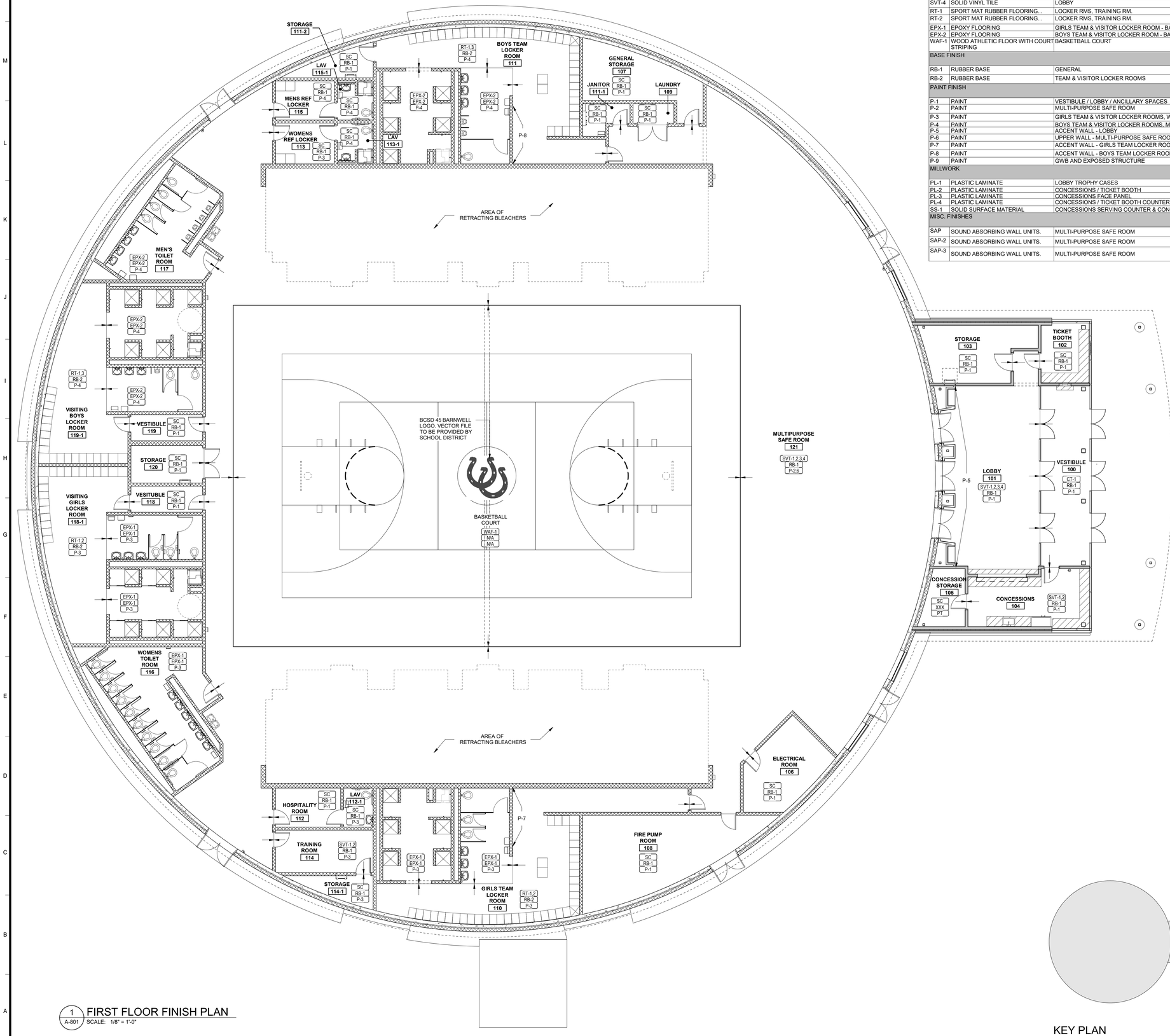

1 A-801 FIRST FLOOR FINISH PLAN
SCALE: 1/8" = 1'-0"

KEY PLAN

FINISH CODE DESIGNATIONS		TYP. LOCATION	BASIS OF DESIGN
FLOOR FINISH			
CT-1	MODULAR ENTRYWAY CARPET TILE	VESTIBULE	TARKETT, ABRASIVE ACTION II, 24" X 24" CARPET TILE, COLOR: TBD
SVT-1	SOLID VINYL TILE	LOBBY	TARKETT, IQ OPTIMA - 12" X 24" TILES, COLOR: TBD
SVT-2	SOLID VINYL TILE	LOBBY	TARKETT, IQ OPTIMA, 12" X 24" TILES, COLOR: TBD
SVT-3	SOLID VINYL TILE	LOBBY	TARKETT, IQ OPTIMA, 12" X 24" TILES, COLOR: TBD
SVT-4	SOLID VINYL TILE	LOBBY	TARKETT, IQ OPTIMA, 12" X 24" TILES, COLOR: TBD
RT-1	SPORT MAT RUBBER FLOORING...	LOCKER RMS, TRAINING RM.	GRANITE FLEX PLUS, RED/GREY - 25
RT-2	SPORT MAT RUBBER FLOORING...	LOCKER RMS, TRAINING RM.	GRANITE FLEX PLUS, GRY/GREY - Q9
EPX-1	EPOXY FLOORING	GIRLS TEAM & VISITOR LOCKER ROOM - BATHROOM / SHOWER	STONHARD , STONETEC QBF, COLOR: TBD
EPX-2	EPOXY FLOORING	BOYS TEAM & VISITOR LOCKER ROOM - BATHROOM / SHOWER	STONHARD , STONETEC QBF, COLOR: TBD
WAF-1	WOOD ATHLETIC FLOOR WITH COURT STRIPING	BASKETBALL COURT	ROBBINS, BIO-CHANNEL, STAR
BASE FINISH			
RB-1	RUBBER BASE	GENERAL	ROPPE, PINNACLE, 4" COVE, COLOR:TBD
RB-2	RUBBER BASE	TEAM & VISITOR LOCKER ROOMS	ROPPE, PINNACLE, 4" COVE, COLOR:TBD
PAINT FINISH			
P-1	PAINT	VESTIBULE / LOBBY / ANCILLARY SPACES	SHERWIN WILLIAMS, SATIN FINISH, COLOR: TBD
P-2	PAINT	MULTI-PURPOSE SAFE ROOM	SHERWIN WILLIAMS, SATIN FINISH, COLOR: TBD
P-3	PAINT	GIRLS TEAM & VISITOR LOCKER ROOMS, WOMEN'S TOILET RM, HOSPITALITY RM.	
P-4	PAINT	BOYS TEAM & VISITOR LOCKER ROOMS, MEN'S TOILET RM.	SHERWIN WILLIAMS, SATIN FINISH, COLOR: TBD
P-5	PAINT	ACCENT WALL - LOBBY	SHERWIN WILLIAMS, SATIN FINISH, COLOR: TBD
P-6	PAINT	UPPER WALL - MULTI-PURPOSE SAFE ROOM	SHERWIN WILLIAMS, SATIN FINISH, COLOR: TBD
P-7	PAINT	ACCENT WALL - GIRLS TEAM LOCKER ROOM	SHERWIN WILLIAMS, SATIN FINISH, COLOR: TBD
P-8	PAINT	ACCENT WALL - BOYS TEAM LOCKER ROOM	SHERWIN WILLIAMS, SATIN FINISH, COLOR: TBD
P-9	PAINT	GWB AND EXPOSED STRUCTURE	SHERWIN WILLIAMS, FAAT FINISH, COLOR: TBD
MILLWORK			
PL-1	PLASTIC LAMINATE	LOBBY TROPHY CASES	WILSONART
PL-2	PLASTIC LAMINATE	CONCESSIONS / TICKET BOOTH	WILSONART
PL-3	PLASTIC LAMINATE	CONCESSIONS FACE PANEL	WILSONART
PL-4	PLASTIC LAMINATE	CONCESSIONS / TICKET BOOTH COUNTERTOP	WILSONART
SS-1	SOLID SURFACE MATERIAL	CONCESSIONS SERVING COUNTER & CONCESSIONS FACE BORDER	WILSONART
MISC. FINISHES			
SAP	SOUND ABSORBING WALL UNITS.	MULTI-PURPOSE SAFE ROOM	SOUND SOAK, FABRIC: ARCHITECT TO SELECT FROM MANUF. FULL...
SAP-2	SOUND ABSORBING WALL UNITS.	MULTI-PURPOSE SAFE ROOM	SOUND SOAK, FABRIC: ARCHITECT TO SELECT FROM MANUF. FULL...
SAP-3	SOUND ABSORBING WALL UNITS.	MULTI-PURPOSE SAFE ROOM	SOUND SOAK, FABRIC: ARCHITECT TO SELECT FROM MANUF. FULL RANGE.

FINISH NOTES

1. ALL FINISH PRODUCTS ARE TO BE INSTALLED IN ACCORDANCE WITH CONTRACT SPECIFICATIONS AND MANUFACTURERS INSTRUCTIONS. SEE TECH SPECIFICATION DIVISION-09
2. SEE INTERIOR ELEVATIONS FOR ADDITIONAL INFORMATION.
3. ACCENT WALLS TO BE PAINTED TO CORNER OR BREAKLINE WHERE WALL CHANGES DIRECTION. REFERENCE FINISH PLANS FOR MORE INFORMATION.
4. ALL EXPOSED STRUCTURES, INCLUDING BUT NOT LIMITED TO: PIPING AND FIREPROOFING, CONDUIT, AND ALL ASSOCIATED EQUIPMENT ARE TO BE PAINTED.
5. APPLY PAINT TO ITEMS, INCLUDING BUT NOT LIMITED TO: FEC'S, LADDERS, DOOR FRAMES - BOTH SIDES, GLAZING FRAMES IN DOORS AND IN WALLS, STAIR RAILINGS, HAND AND GUARD RAILINGS.
6. SOFFIT AND GYP BOARD CEILINGS TO BE PAINTED, UNLESS NOTED OTHERWISE
7. SEE STRUCTURAL DRAWINGS FOR LOCATIONS OF SLAB.
8. FLOOR MATERIALS, INCLUDING BUT NOT LIMITED TO CARPET,TILE, AND RUBBER FLOOR TILES, ARE TO RUN WALL TO WALL, UNDER ALL FURNITURE, MOVEABLE EQUIPMENT, SHELVING UNITS, MILLWORK, PLUMBING, AND FLOOR FIXTURES, INCLUDING ALL UNITS AT PERIMETER WALLS.
9. FLOORING INSTALLER IS TO FIELD VERIFY ALL CONTROL JOINT LOCATIONS IN CONCRETE SLAB. LOCATE CONTROL JOINTS IN NEW FLOOR FINISH MATERIAL DIRECTLY ABOVE SLAB JOINTS OR AS RECOMMENDED BY FLOORING MATERIAL MANUFACTURER. SEE FINISH DRAWINGS AND SPECIFICATIONS FOR FLOOR MATERIALS.
10. FLOORING INSTALLER IS TO COORDINATE FLOOR PATTERNS WITH CONTROL JOINT PRIOR TO SUBMISSION OF REQUIRED FLOOR PATTERN DRAWINGS.
11. IN THE EVENT THAT DISCREPANCIES ARE FOUND BETWEEN THE FINISH PLANS, REFLECTIVE CEILING PLANS, AND THE FINISH SCHEDULE, ARCHITECT SHALL BE NOTIFIED OF ANY DISCREPANCIES AND CLARIFICATION PRIOR TO PROCUREMENT AND INSTALLATION OF FINISHES.

FINISHES LEGEND

- DENOTES FINISH MATERIAL
- DENOTES FINISH FLOOR SPAN DIRECTION
- DENOTES FLOOR MATERIAL CHANGE
- DENOTES MILLWORK

FINISH ABBREVIATIONS:

CT	CARPET TILE	SVT	SOLID VINYL TILE
EPX	EPOXY FLOORING	RB	RUBBER BASE
RT	RUBBER FLOOR TILE	P	PAINT
SC	SEALED CONCRETE	PL	PLASTIC LAMINATE
WAF	WOOD ATHLETIC FLOOR	SS	SOLID SURFACE MATERIAL

PROJECT NORTH
TRUE NORTH
0 4' 8' 16'
SCALE: 1/8" = 1'-0"

TETRA TECH
www.tetratech.com
240 Continental Drive, Suite 200
Newark, DE 19713
Tel: 302.738.7551 Fax: 302.454.3989

STATE OF SOUTH CAROLINA
LINDA ANN DISABELLA
Newark, DE
No. 37092
REGISTERED ARCHITECT
12/06/2024

BARNWELL SCHOOL DISTRICT
OWNER
770 HAGOOD AVE
BARNWELL, SC 29812
Tel: 803 541 1300

TETRA TECH
ARCHITECT
MECHANICAL ENGINEER
PLUMBING ENGINEER
ELECTRICAL ENGINEER
240 Continental Drive, Suite
Newark, DE 19713
302.738.7551

THOMAS & HUTTON
CIVIL ENGINEER
1501 MAIN ST.
COLUMBIA, SC 29201
Tel: 803 451 0200

ZZ CONSULTING
STRUCTURAL ENGINEER
640 S. STATE ST
SHELLEY, ID 83274
Tel: 208 357 5404

MARK	DATE	DESCRIPTION	BY
	12/6/24	ISSUED FOR CONSTRUCTION CONFORMANCE SET	LAD

BARNWELL SCHOOL DISTRICT
MULTI-USE SAFE ROOM
FINISH PLAN AND FINISH SCHEDULE

Project No.:	200-207015-20004
Designed By:	JDR/MTR
Drawn By:	JDR/JFMU
Checked By:	MTR

A-801

Copyright. Tetra Tech

12/9/2024 2:01:53 PM BIM 360://200-207015-20004 - Barnwell Dome/A_BARN_DOME_v2019.rvt

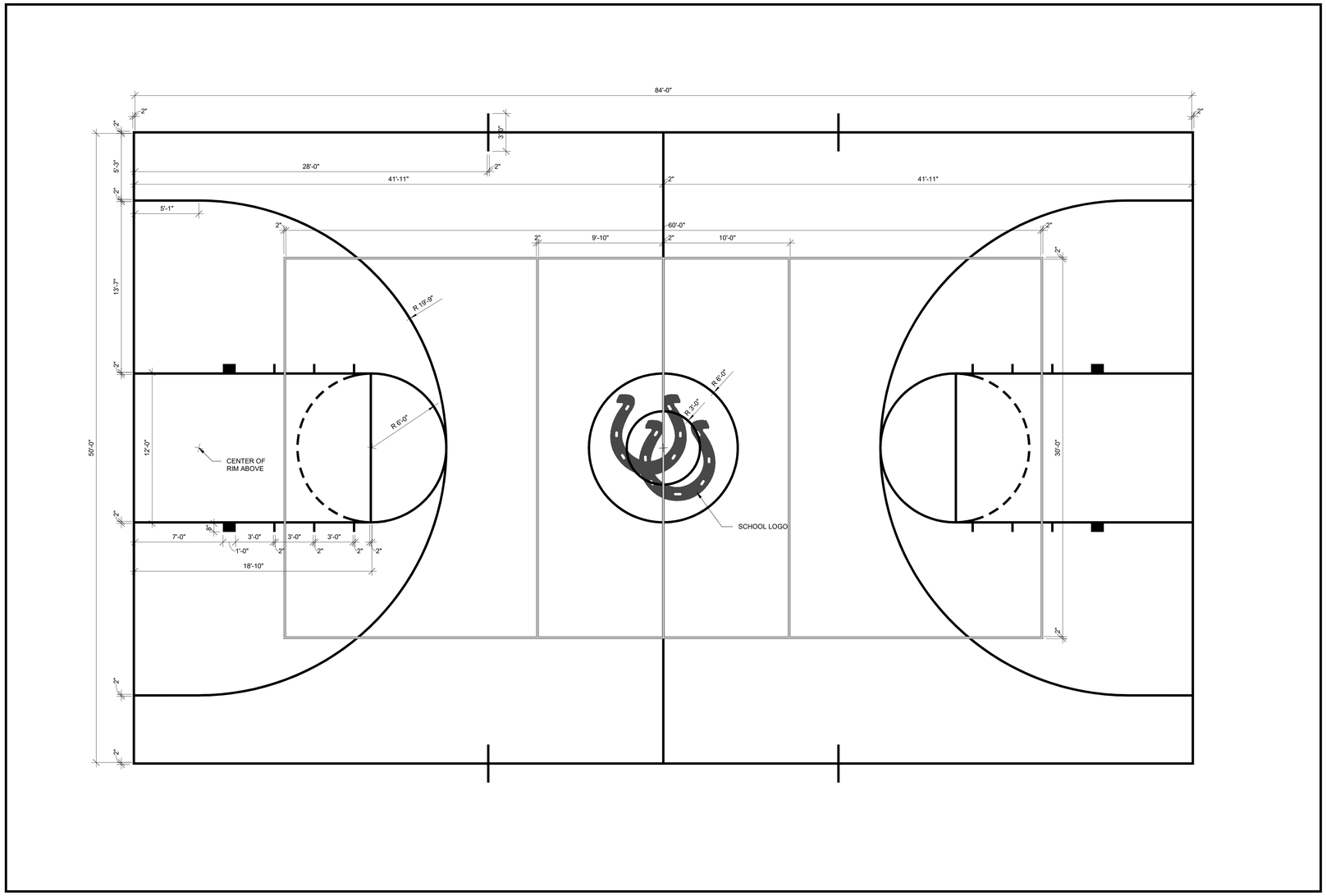

1 A-802 STRIPING PLAN
SCALE: 1/4" = 1'-0"

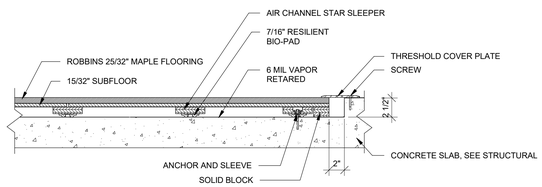

2 A-802 RECESSED SLAB EDGE DETAIL
SCALE: 1 1/2" = 1'-0"

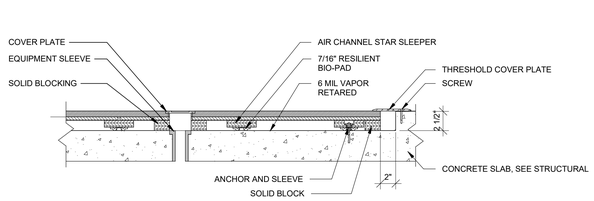

3 A-802 PLAYING COURT SLEEVE DETAIL
SCALE: 1 1/2" = 1'-0"

0 4" 8" 1'-4"
SCALE: 1 1/2" = 1'-0"

0 2' 4' 8'
SCALE: 1/4" = 1'-0"

TETRA TECH
www.tetratech.com
240 Continental Drive, Suite 200
Newark, DE 19713
Tel: 302.738.7551 Fax: 302.454.3989

STATE OF SOUTH CAROLINA
LINDA ANN DISABELLA
Newark, DE
No. 37292
REGISTERED ARCHITECT
12/06/2024

BARNWELL SCHOOL DISTRICT
OWNER
770 HAGOOD AVE.
BARNWELL, SC 29812
Tel: 803 541 1300

TETRA TECH
ARCHITECT
MECHANICAL ENGINEER
PLUMBING ENGINEER
ELECTRICAL ENGINEER
240 Continental Drive, Suite
Newark, DE 19713
302.738.7551

THOMAS & HUTTON
CIVIL ENGINEER
1501 MAIN ST.
COLUMBIA, SC 29201
Tel: 803 451 0200

ZZ CONSULTING
STRUCTURAL ENGINEER
640 S. STATE ST.
SHELLEY, ID 83274
Tel: 208 357 5404

MARK	DATE	DESCRIPTION	BY
	12/6/24	ISSUED FOR CONSTRUCTION CONFORMANCE SET	LAD

BARNWELL SCHOOL DISTRICT
MULTI-USE SAFE ROOM

BASKETBALL COURT STRIPING PLAN / DETAILS

Project No.:	200-207015-20004
Designed By:	JDR/MTR
Drawn By:	JDR/JFMU
Checked By:	MTR

A-802

Copyright: Tetra Tech

12/9/2024 2:01:54 PM BIM 360://200-207015-20004 - Barnwell Dome/A_BARN_DOME_v2019.rvt

MECHANICAL LEGEND

20x12 SA	DUCT SIZE & SYSTEM ABBREVIATION FIRST FIGURE IS DIMENSION SHOWN ON PLAN
	DUCT SECTION, POSITIVE PRESSURE
	DUCT SECTION, NEGATIVE PRESSURE
	NEW DUCTWORK
	FLEXIBLE DUCTWORK
	DUCT TRANSITION
	RECT. TO ROUND TRANSITION
	BRANCH DUCTWORK
	TURNING VANES
	CEILING DIFFUSER - SUPPLY
	CEILING DIFFUSER - RETURN
	CEILING DIFFUSER - EXHAUST
	LOUVER AND SCREEN
	FIRE DAMPER, PROVIDE ACCESS DOOR
	VOLUME DAMPER
60	BACKDRAFT DAMPER
	SUPPLY/INTAKE AIRFLOW DIRECTION
	EXHAUST AIRFLOW DIRECTION
	GRILLE OR REGISTER, SIDEWALL
	PIPE CAP
	PIPE CONNECTION, BOTTOM
	PIPE CONNECTION, TOP
	PIPE ELBOW, TURNED UP
	PIPE ELBOW, TURNED DOWN
	PIPE TEE
	ANCHOR, INTERMEDIATE
	PLUG VALVE
	PRESSURE GAUGE
	DOOR UNDERCUT
HVAC - #	EQUIPMENT TAG
BOD: 4' - 7"	BOTTOM OF DUCT ELEVATION TAG
#	KEYNOTE

	MANUAL AIR VENT
	AUTOMATIC AIR VENT
T	THERMOSTAT
CO2	CARBON DIOXIDE SENSOR
CO	CARBON MONOXIDE SENSOR
M	MOTORIZED DAMPER
S	EMERGENCY SHUTDOWN SWITCH
DP	DIFFERENTIAL PRESSURE SENSOR
SE	DUCT SMOKE DETECTOR
H	HUMIDISTAT

NOTES:

1. THIS LEGEND IS FOR REFERENCE ONLY
2. ALL SYMBOLS WHICH APPEAR WITHIN THE LEGEND MAY NOT APPLY TO THIS PROJECT.

MECHANICAL ABBREVIATIONS

AAV	AUTOMATIC AIR VENT
ABS	ABSOLUTE
AD	ACCESS DOOR
ADJ	ADJUSTABLE
AFF	ABOVE FINISHED FLOOR
AFG	ABOVE FINISHED GRADE
AHU	AIR HANDLING UNIT
AP	ACCESS PANEL
APD	AIR PRESSURE DROP
APPROX	APPROXIMATE
BAS	BUILDING AUTOMATION SYSTEM
BFF	BELOW FINISHED FLOOR
BHP	BREAK HORSEPOWER
CAP	CAPACITY
CF	CEILING FAN
CONC	CONCRETE
COND	CONDENSATE
CONN	CONNECTION
CONT	CONTINUATION
CP-1	CONTROL PANEL WITH DESIGNATION
CU	CONDENSING UNIT
DB	DRY BULB
DEG	DEGREES
DEMO	DEMOLITION
DIA	DIAMETER
DN	DOWN
DWG	DRAWING
EA	EXHAUST AIR
EAG	EXHAUST AIR GRILLE
EAT	ENTERING AIR TEMPERATURE
EF	EXHAUST FAN
EMCS	ENERGY MANAGEMENT AND CONTROL SYSTEM
ENT	ENTERING
ERV	ENERGY RECOVERY VENTILATOR
ESP	EXTERNAL STATIC PRESSURE
EXH	EXHAUST
F	FAHRENHEIT
FD	FIRE DAMPER
FLEX	FLEXIBLE
FPM	FEET PER MINUTE
GM	GAS METER
HP	HORSEPOWER
ID	INSIDE DIAMETER/DIMENSION
IE	INVERT ELEVATION
IN	INCH
L	LOUVER
LAT	LEAVING AIR TEMPERATURE
LVL	LEVEL
M	METER
MAX	MAXIMUM
MEZZ	MEZZANINE
MFR	MANUFACTURER
MIN	MINIMUM
MISC	MISCELLANEOUS
N/A	NOT APPLICABLE
NG	NATURAL GAS
NTS	NOT TO SCALE
OA	OUTDOOR AIR
OD	OUTSIDE DIAMETER
OED	OPEN ENDED DUCT
PD	PRESSURE DROP
PSI	POUNDS PER SQUARE INCH
R	RADIUS
RA	RETURN AIR
RAG	RETURN AIR GRILLE
REFRIG	REFRIGERANT
RL	REFRIGERANT LIQUID LINE
RPM	REVOLUTIONS PER MINUTE
RS	REFRIGERANT SUCTION LINE
SA	SUPPLY AIR
SAG	SUPPLY AIR GRILLE
SF	SUPPLY FAN
SPEC	SPECIFICATION
STD	STANDARD
T	THERMOMETER
TA	TRANSFER AIR
TEMP	TEMPERATURE
TSP	TOTAL STATIC PRESSURE
TSTAT	THERMOSTAT
TYP	TYPICAL
VFD	VARIABLE FREQUENCY DRIVE
W	WATT
WB	WET BULB
WMS	WIRE MESH SCREEN
Ø	DIAMETER

GENERAL MECHANICAL NOTES

1. ALL MECHANICAL WORK SHALL BE IN STRICT COMPLIANCE WITH THE LATEST APPLICABLE EDITION OF THE INTERNATIONAL MECHANICAL AND PLUMBING CODE AND APPLICABLE PROVISIONS OF THE INTERNATIONAL FUEL GAS CODE (IFGC).
2. THESE DRAWINGS ARE SCHEMATIC IN NATURE AND ARE NOT INTENDED TO SHOW ALL POSSIBLE CONDITIONS. IT IS INTENDED THAT A COMPLETE SYSTEM BE PROVIDED WITH ALL NECESSARY EQUIPMENT, APPURTENANCES, AND CONTROLS, COMPLETELY COORDINATED WITH ALL DISCIPLINES. ALL PARAMETERS GIVEN IN THESE DOCUMENTS SHALL BE STRICTLY CONFORMED WITH. ANY ITEMS AND LABOR REQUIRED FOR A COMPLETE SYSTEM IN ACCORDANCE WITH ALL APPLICABLE CODES, STANDARDS, AND THESE CONTRACT DOCUMENTS SHALL BE FURNISHED WITHOUT OCCURRING ANY ADDITIONAL COST TO THE OWNER. CAREFULLY REVIEW ALL CONTRACT DOCUMENTS AND THE DESIGN OF OTHER TRADES BEFORE PREPARING SHOP DRAWINGS.
3. COORDINATE EQUIPMENT AND PIPING WITH ALL OTHER DISCIPLINES AND TRADES. MAKE ALL OFFSETS AND TRANSITIONS TO COORDINATE WITH OTHER TRADES WITHOUT ANY ADDITIONAL EXPENSE TO THE OWNER.
4. COORDINATE THE EXACT LOCATION AND SIZE OF ALL ROOF, WALL, AND SLAB PENETRATIONS WITH THE ARCHITECTURAL AND STRUCTURAL DRAWINGS.
5. MAINTAIN PIPING A MINIMUM OF 8'-0" AFF IN ALL MECHANICAL ROOMS. ALL PIPING SHALL BE LOCATED AS HIGH AS POSSIBLE.
6. MOUNT THERMOSTATS WHERE INDICATED ON PLANS, 4'-0" AFF UNLESS NOTED OTHERWISE.
7. COORDINATE WITH ELECTRICAL CONTRACTOR TO VERIFY CONTROL VOLTAGES WITH EQUIPMENT AND PROVIDE ACCORDINGLY.
8. REFRIGERANT LIQUID AND SUCTION LINES TO BE SIZED PER MANUFACTURER'S RECOMMENDATION. UV-STABLE JACKET SHALL BE PROVIDED ON OUTDOOR INSULATED REFRIGERANT PIPING.

TETRA TECH
www.tetratech.com
240 Continental Drive, Suite 200
Newark, DE 19713
Tel: 302.738.7551 Fax: 302.454.3989

SOUTH CAROLINA PROFESSIONAL ENGINEER No. 35480 ROBERT LEBER
12/12/2024

BARNWELL SCHOOL DISTRICT 45
OWNER
770 HAGOOD AVE.
BARNWELL, SC 29812
Tel: 803 541 1300

TETRA TECH
ARCHITECT
MECHANICAL ENGINEER
PLUMBING ENGINEER
ELECTRICAL ENGINEER
240 Continental Drive, Suite
Newark, DE 19713
302.738.7551

THOMAS & HUTTON
CIVIL ENGINEER
1501 MAIN ST.
COLUMBIA, SC 29201
Tel: 803 451 0200

ZZ CONSULTING
STRUCTURAL ENGINEER
640 S. STATE ST
SHELLEY, ID 83274
Tel: 208 357 5404

MARK	DATE	DESCRIPTION	BY
	12/26/24	ISSUED FOR CONSTRUCTION CONFORMANCE SET	DB

BARNWELL SCHOOL DISTRICT 45
MULTI-USE SAFE ROOM

ABBREVIATIONS, LEGENDS AND GENERAL NOTES

Project No.:	200-207015-20004
Designed By:	PAD
Drawn By:	APS
Checked By:	RM

M-001

Copyright. Tetra Tech

12/11/2024 8:14:58 AM BIM 360://200-207015-20004 - Barnwell Dome/M&P_BARN_DOME_r2019.rvt

KEY NOTES:

1. CO2 MONITOR INSTALLED AT 4'-0" AFF. MONITOR TO ALERT THE BAS IF THE ZONE SENSED CO2 CONCENTRATION EXCEEDS 1000 PPM (ADJ.) SETPOINT BY MORE THAN 10%.

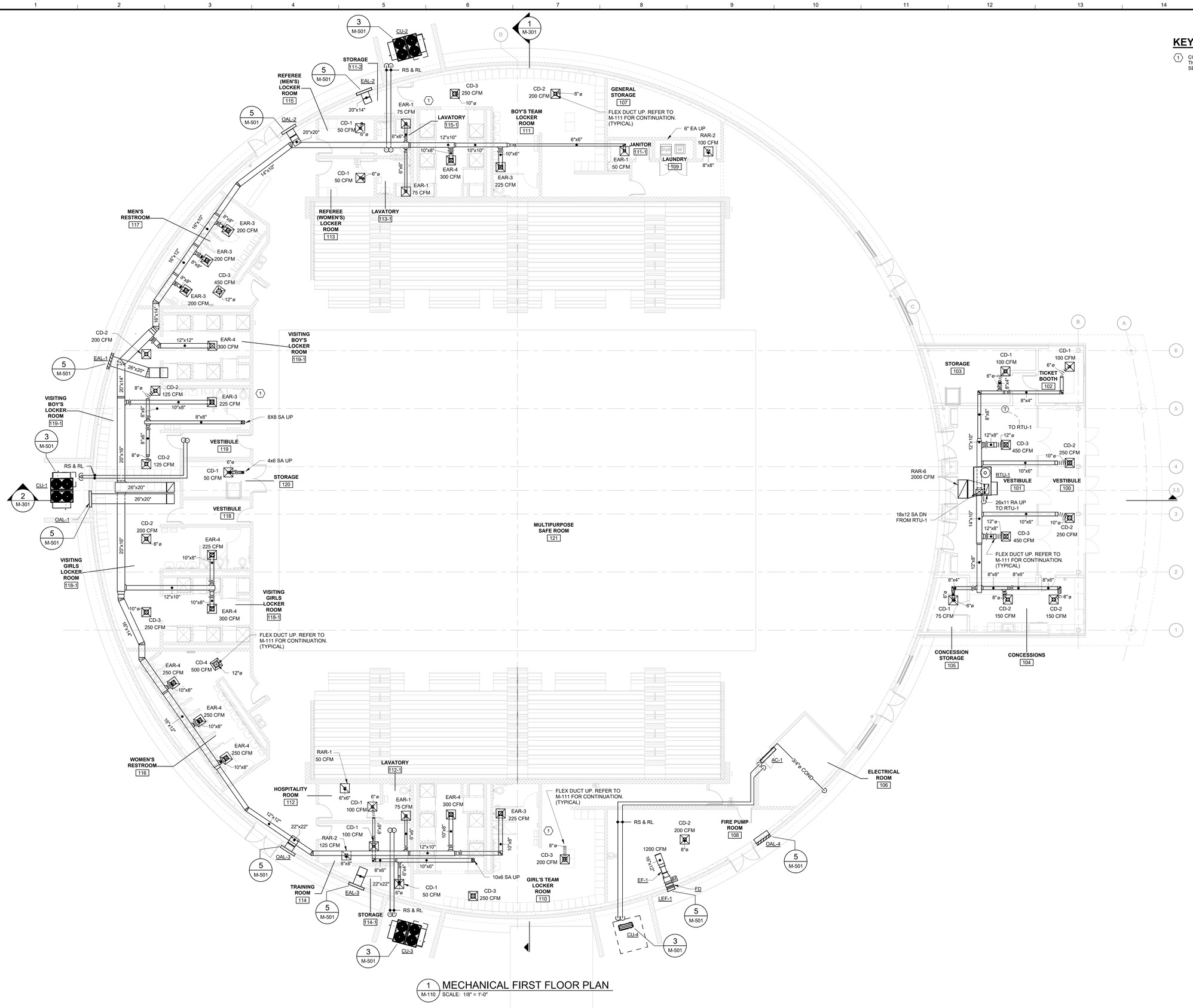

1 M-110 MECHANICAL FIRST FLOOR PLAN
SCALE: 1/8" = 1'-0"

TRUE NORTH
PROJECT NORTH
0 4' 8' 16'
SCALE: 1/8" = 1'-0"

TETRA TECH
www.tetratech.com
240 Continental Drive, Suite 200
Newark, DE 19713
Tel: 302.738.7551 Fax: 302.454.3989

SOUTH CAROLINA PROFESSIONAL ENGINEER No. 35480 ROBERT LEBER

12/12/2024

BARNWELL SCHOOL DISTRICT 45
OWNER
770 HAGOOD AVE
BARNWELL, SC 29812
Tel: 803 541 1300

TETRA TECH
ARCHITECT
MECHANICAL ENGINEER
PLUMBING ENGINEER
ELECTRICAL ENGINEER
240 Continental Drive, Suite
Newark, DE 19713
302.738.7551

THOMAS & HUTTON
CIVIL ENGINEER
1501 MAIN ST.
COLUMBIA, SC 29201
Tel: 803 451 0200

ZZ CONSULTING
STRUCTURAL ENGINEER
640 S. STATE ST
SHELLEY, ID 83274
Tel: 208 357 5404

MARK	DATE	DESCRIPTION	BY
	12/26/24	ISSUED FOR CONSTRUCTION CONFORMANCE SET	DB

BARNWELL SCHOOL DISTRICT 45
MULTI-USE SAFE ROOM
MECHANICAL FIRST FLOOR PLAN

Project No.:	200-207015-20004
Designed By:	PAD
Drawn By:	APS
Checked By:	RM

M-110

Copyright: Tetra Tech

12/11/2024 8:15:13 AM BIM 360://200-207015-20004 - Barnwell Dome/M&P_BARN_DOME_v2019.rvt

KEY NOTES:

1. PROVIDE CO2 SENSORS TO MODULATE OA.

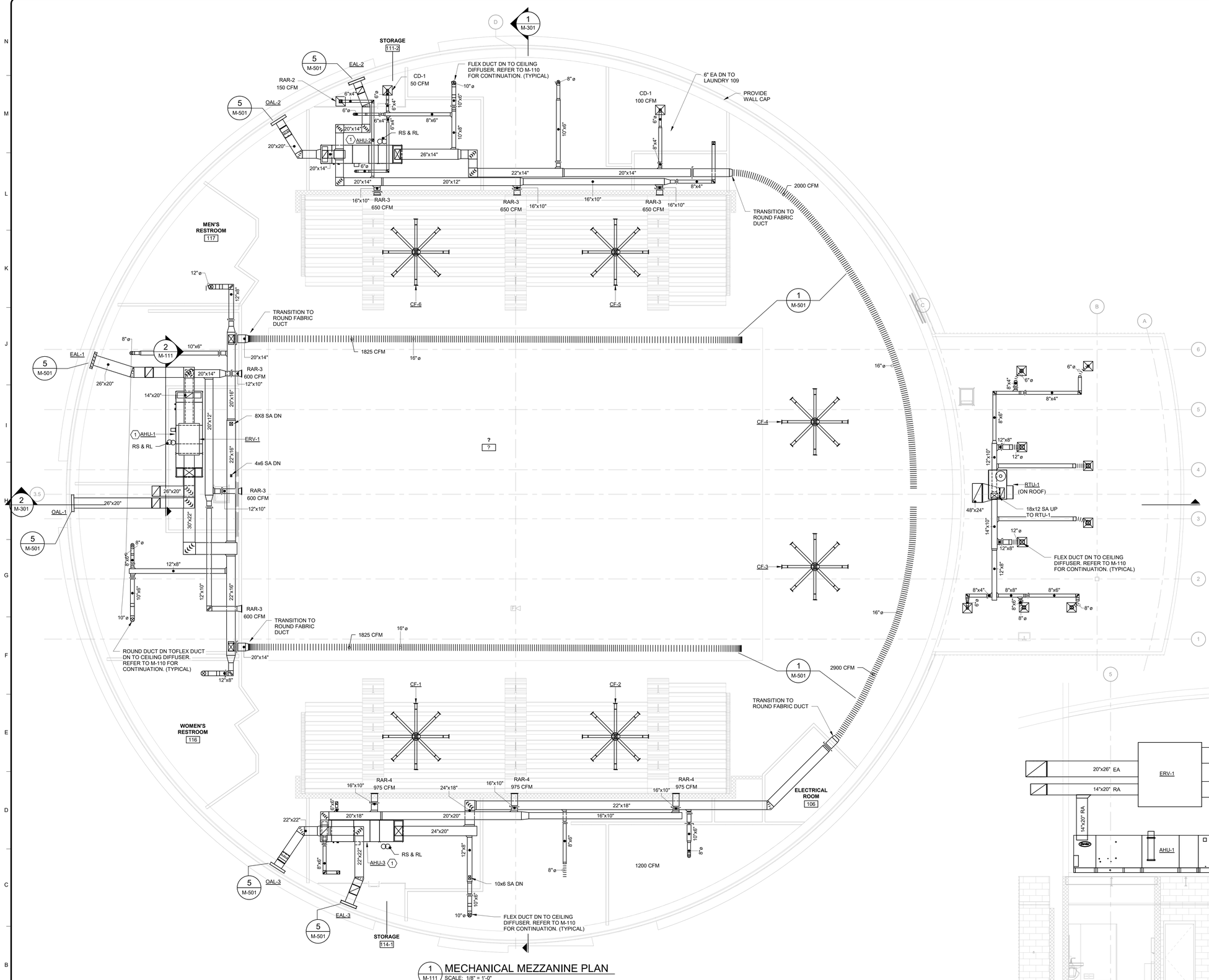

1 MECHANICAL MEZZANINE PLAN
M-111 SCALE: 1/8" = 1'-0"

2 AHU-1 ELEVATION
M-111 SCALE: 1/4" = 1'-0"

TRUE NORTH
PROJECT NORTH
SCALE: 1/8" = 1'-0"
SCALE: 1/4" = 1'-0"

TETRA TECH
www.tetratech.com
240 Continental Drive, Suite 200
Newark, DE 19713
Tel: 302.738.7551 Fax: 302.454.3989

SOUTH CAROLINA PROFESSIONAL ENGINEER No. 35480 ROBERT LEBER

12/12/2024

BARNWELL SCHOOL DISTRICT 45
OWNER
770 HAGOOD AVE.
BARNWELL, SC 29812
Tel: 803 541 1300

TETRA TECH
ARCHITECT
MECHANICAL ENGINEER
PLUMBING ENGINEER
ELECTRICAL ENGINEER
240 Continental Drive, Suite
Newark, DE 19713
302.738.7551

THOMAS & HUTTON
CIVIL ENGINEER
1501 MAIN ST.
COLUMBIA, SC 29201
Tel: 803 451 0200

ZZ CONSULTING
STRUCTURAL ENGINEER
640 S. STATE ST.
SHELLEY, ID 83274
Tel: 208 357 5404

MARK	DATE	DESCRIPTION	BY
	12/26/24	ISSUED FOR CONSTRUCTION CONFORMANCE SET	DB

BARNWELL SCHOOL DISTRICT 45
MULTI-USE SAFE ROOM
MECHANICAL MEZZANINE PLAN

Project No.:	200-207015-20004
Designed By:	PAD
Drawn By:	APS
Checked By:	RM

M-111

12/11/2024 8:15:16 AM BIM 360://200-207015-20004 - Barnwell Dome/M&P_BARN_DOME_v2019.rvt

Copyright: Tetra Tech

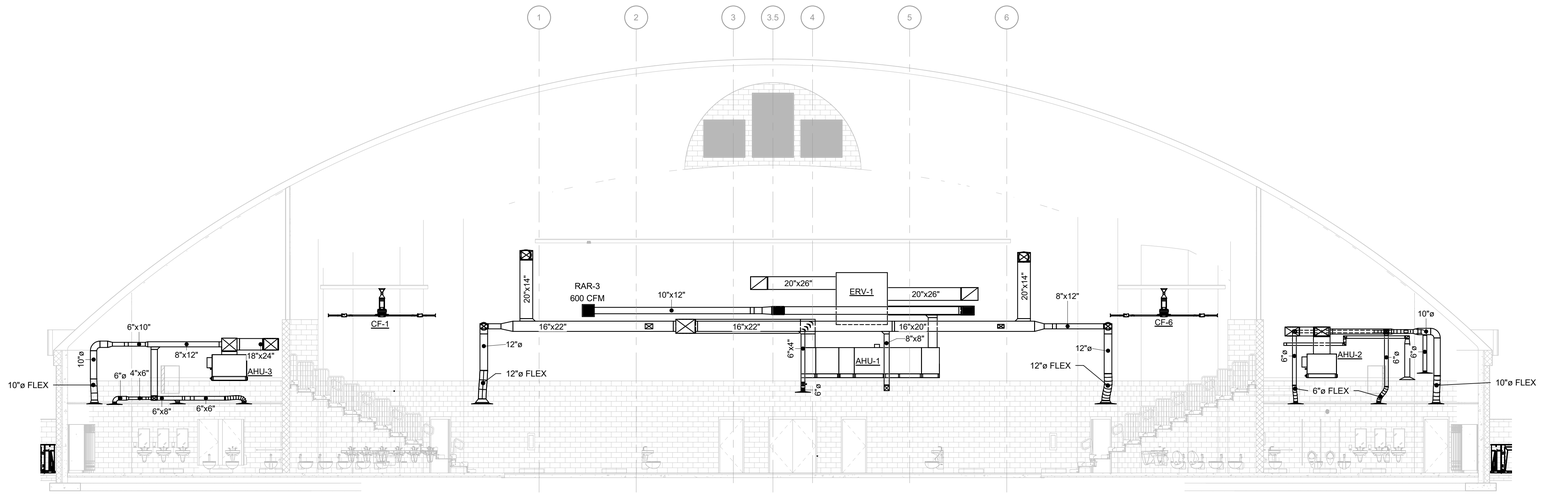

1 M-301 WEST BUILDING SECTION
SCALE: 1/8" = 1'-0"

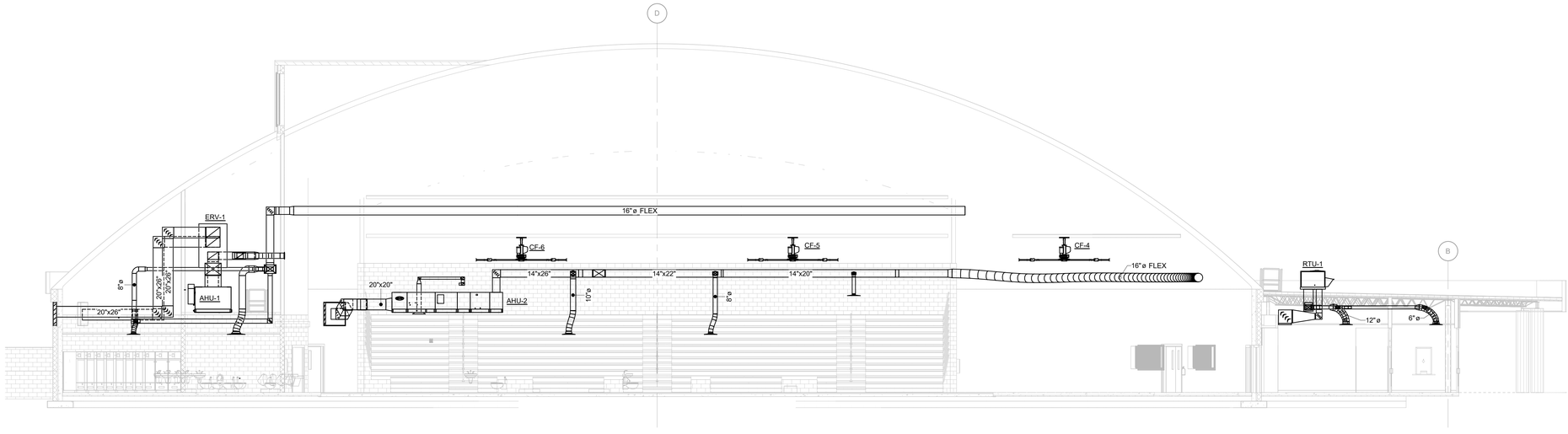

2 M-301 NORTH BUILDING SECTION
SCALE: 1/8" = 1'-0"

TETRA TECH
www.tetratech.com
240 Continental Drive, Suite 200
Newark, DE 19713
Tel: 302.738.7551 Fax: 302.454.3989

SOUTH CAROLINA LICENSED PROFESSIONAL ENGINEER No. 35480 ROBERT LEBO

12/12/2024

BARNWELL SCHOOL DISTRICT 45
OWNER
770 HAGOOD AVE.
BARNWELL, SC 29812
Tel: 803 541 1300

TETRA TECH
ARCHITECT
MECHANICAL ENGINEER
PLUMBING ENGINEER
ELECTRICAL ENGINEER
240 Continental Drive, Suite
Newark, DE 19713
302.738.7551

THOMAS & HUTTON
CIVIL ENGINEER
1501 MAIN ST.
COLUMBIA, SC 29201
Tel: 803 451 0200

ZZ CONSULTING
STRUCTURAL ENGINEER
640 S. STATE ST.
SHELLEY, ID 83274
Tel: 208 357 5404

MARK	DATE	DESCRIPTION	BY
	12/26/24	ISSUED FOR CONSTRUCTION CONFORMANCE SET	DB

BARNWELL SCHOOL DISTRICT 45

MULTI-USE SAFE ROOM

MECHANICAL SECTIONS

Project No.:	200-207015-20004
Designed By:	PAD
Drawn By:	APS
Checked By:	RM

M-301

Copyright. Tetra Tech

12/11/2024 8:15:27 AM BIM 360://200-207015-20004 - Barnwell Dome/M&P_BARN_DOME_r2019.rvt

ADC TENSIONED DUCT SYSTEMS

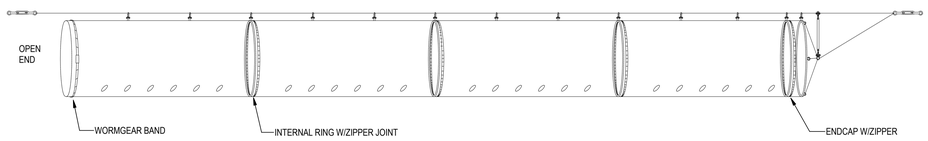

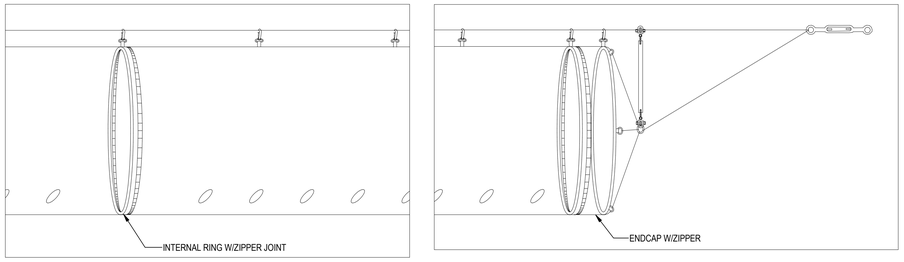

NOTES:
1. HANGERS SHALL BE INSTALLED AT EVERY CHANGE OF DIRECTION AND NO MORE THAN 10'-0" APART.
2. COORDINATE WITH STRUCTURAL ENGINEER FOR UPPER ATTACHMENTS.
3. REFER TO SPECIFICATIONS FOR DUCT SUPPORT.

1 FABRIC DUCT SUSPENSION
N.T.S.

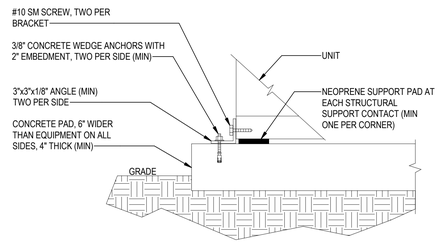

NOTES:
1. COORDINATE ANCHORAGE REQUIREMENTS WITH STRUCTURAL DESIGN.

3 CONDENSING UNIT-PAD MOUNTED
N.T.S.

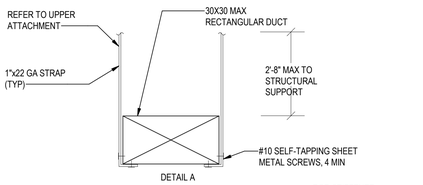

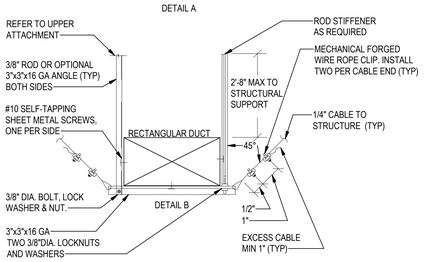

NOTES:
1. MAXIMUM SPACING OF HANGERS SHALL BE 5'-0".
2. IF A FLEXIBLE CONNECTION IS INSTALLED BETWEEN THE MECHANICAL EQUIPMENT AND THE DUCT, THEN THIS DETAIL MAY BE USED. OTHERWISE, USE DETAIL B BELOW.
3. SEISMIC RESTRAINT CABLES MAY BE OMITTED WHERE:
   A. THERE IS A FLEXIBLE CONNECTION BETWEEN THE MECHANICAL EQUIPMENT AND
   B. RECTANGULAR DUCT IS LESS THAN 6 SQUARE FEET IN AREA OR
   C. DUCT OF ANY SIZE IS SUPPORTED WITHIN 12" OF STRUCTURE AS MEASURED FROM THE TOP OF DUCT TO THE BOTTOM OF STRUCTURE.
4. WHERE SEISMIC RESTRAINTS ARE REQUIRED,
   A. PROVIDE TRANSVERSE BRACING AT 30 FT AND
   B. LONGITUDINAL BRACING AT 60 FT.
5. VERTICAL HANGERS, DIAGONAL AND HORIZONTAL BRACES TO BE SIZED IN ACCORDANCE WITH SMACNA SEISMIC RESTRAINT MANUAL TABLE 5-1 AND 5-2.
6. REFER TO STRUCTURAL DETAILS FOR ADDITIONAL INFORMATION NOT SHOWN HERE.
7. INSTALL ROD STIFFENER AS REQUIRED. REFER TO STRUCTURAL DESIGN FOR ADDITIONAL ATTACHMENT REQUIREMENTS. REFER TO HILTI ICC#ESR-1917 PRE-APPROVAL. DUCT HANGERS AND SUPPORTS SHALL COMPLY WITH PRE-APPROVED B-LINE "SEISMIC RESTRAINT SYSTEM".

6 RECTANGULAR DUCT SUPPORT
N.T.S.

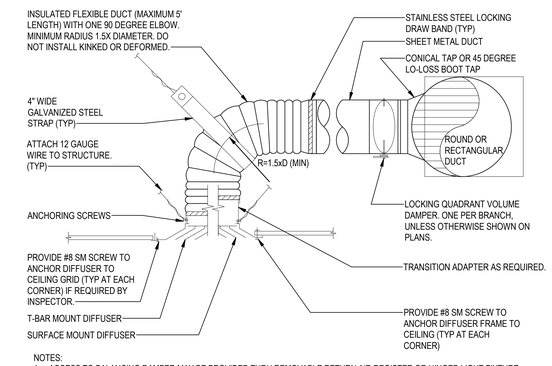

NOTES:
1. ACCESS TO BALANCING DAMPER MAY BE PROVIDED THRU REMOVABLE RETURN AIR REGISTER OR HINGED LIGHT FIXTURE.
2. FOR INACCESSIBLE CEILING USE REMOTE FLEXIBLE STEEL SHAFT DAMPER OPERATOR OR PROVIDE 18"x18" (MIN) ACCESS DOOR.
3. DIFFUSER FRAME SHALL MATCH ARCHITECTURAL CEILING TYPE.
4. IF FLEXIBLE DUCT SIZE INDICATED ON PLAN IS LARGER OR SMALLER THAN DIFFUSER NECK OR IF DIFFUSER NECK IS SQUARE OR RECTANGULAR PROVIDE TRANSITION FITTING AT DIFFUSER NECK.
5. REFER TO STRUCTURAL DESIGN FOR ATTACHMENT REQUIREMENTS AND ADDITIONAL SUPPORT OPTIONS.

2 CEILING DIFFUSER MOUNTING-FLEXIBLE
N.T.S.

NOTE 1:
DAMPER SLEEVE TO BE MIN. 26 Ga. UP TO A MAXIMUM 10 Ga. (SLEEVE THICKNESS MUST BE EQUAL TO OR THICKER THAN THE DUCT THICKNESS)

NOTE 2:
1-1/2" X 1-1/2" x 16Ga. MOUNTING ANGLES (FOUR SIDES) FASTENED TO SLEEVE WITH No. 10 BOLTS OR SCREWS, 3/16" RIVETS, OR SPOT WELDS SPACED 6" O.C. MOUNTING ANGLES MUST OVERLAP THE WALL OR FLOOR A MINIMUM OF 1" AND COVER CORNERS OF OPENINGS.

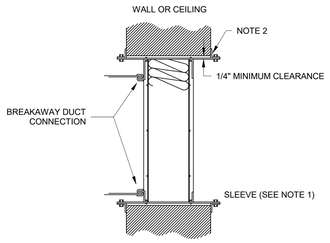

4 FIRE DAMPER DETAIL
NTS

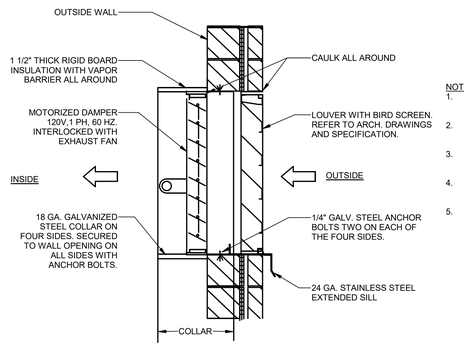

NOTES:
1. FOR LOCATION AND SIZE OF THE WALL OPENINGS, SEE PLANS.
2. LOUVER/DAMPER ASSEMBLIES TO BE ASSEMBLED AT LOUVER MANUFACTURER FACTORY.
3. EXTENDED SILL TO BE PROVIDED BY LOUVER MANUFACTURER.
4. MOTOR ACTUATORS TO BE SIZED AND INSTALLED BY LOUVER MANUFACTURER. INSTALLATION OF LOUVER TO BE IN ACCORDANCE WITH LOUVER MANUFACTURER'S RECOMMENDATIONS.

5 LOUVER/DAMPER DETAIL
N.T.S.

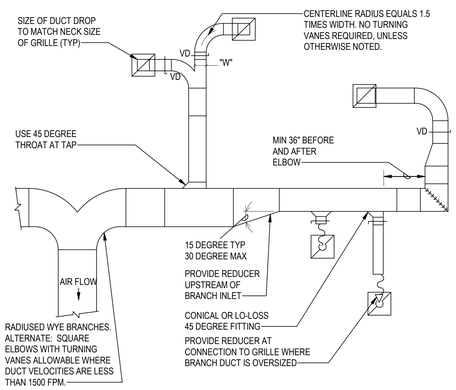

NOTES:
1. PROVIDE DUCT LINER AND/OR EXTERNAL DUCT INSULATION AS NOTED ON PLANS OR IN SPECIFICATIONS.
2. PROVIDE HANGERS AND SEISMIC BRACING PER SMACNA AND BUILDING CODE.
3. LOCATE MANUAL BALANCING DAMPERS IMMEDIATELY DOWNSTREAM OF EACH DUCT TAP.
4. MAINTAIN MINIMUM 36" CLEARANCE BETWEEN LEADING OR TRAILING ELBOW JOINT AND DUCT TAP FITTINGS.
5. TURNING VANES REQUIRED ON RECTANGULAR DUCT SYSTEM ELBOWS. SINGLE THICKNESS VANES UP TO 25" HEIGHT AND DOUBLE THICKNESS VANES IN DUCTS GREATER THAN 25" HEIGHT. RADIUSED ELBOWS MAY BE USED AS AN ALTERNATE.
6. NO TURNING VANES REQUIRED ON DUCT SIZES LESS THAN 180 SQ. IN. IF DUCT VELOCITY IS LESS THAN 1500 FPM.

7 RETURN/EXHAUST DUCT FITTINGS
N.T.S.

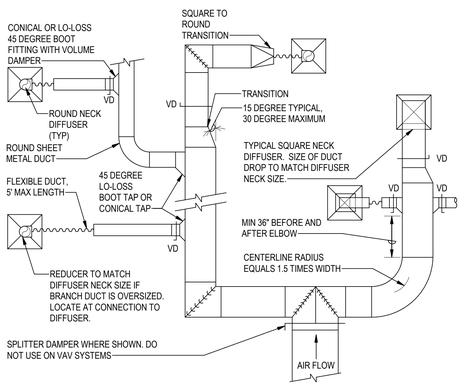

NOTES:
1. PROVIDE DUCT LINER AND/OR EXTERNAL DUCT INSULATION AS NOTED ON PLANS OR IN SPECIFICATIONS.
2. PROVIDE HANGERS AND SEISMIC BRACING PER SMACNA AND BUILDING CODE REQUIREMENTS.
3. LOCATE MANUAL BALANCING DAMPERS IMMEDIATELY DOWNSTREAM OF EACH DUCT TAP.
4. CUSHION HEADS OR BULLHEAD TEES ARE NOT ALLOWED.
5. MAINTAIN MINIMUM 36" CLEARANCE BETWEEN LEADING OR TRAILING ELBOW JOINT AND DUCT TAP FITTINGS.
6. RADIUSED ELBOWS OR TURNING VANES REQUIRED ON RECTANGULAR DUCT SYSTEM ELBOWS. SINGLE THICKNESS VANES UP TO 25" HEIGHT AND DOUBLE THICKNESS VANES IN DUCTS GREATER THAN 25" HEIGHT.

8 SUPPLY DUCT FITTINGS
N.T.S.

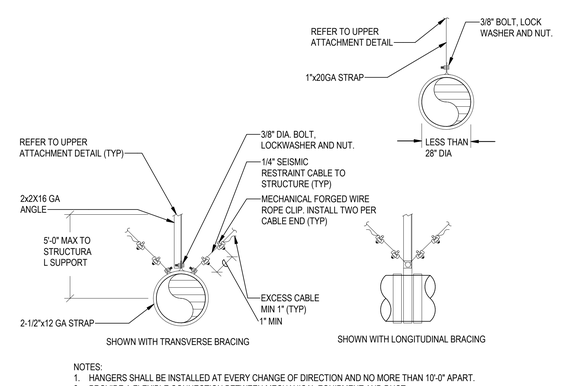

NOTES:
1. HANGERS SHALL BE INSTALLED AT EVERY CHANGE OF DIRECTION AND NO MORE THAN 10'-0" APART.
2. PROVIDE A FLEXIBLE CONNECTION BETWEEN MECHANICAL EQUIPMENT AND DUCT.
3. STRAP MAY BE REDUCED TO 1"x22 GA FOR DUCT 24" DIA. AND LESS IN DIAMETER.
4. SEISMIC RESTRAINT CABLES MAY BE OMITTED WHERE DUCT IS SUPPORTED WITHIN 12" OF STRUCTURE AS MEASURED FROM THE TOP OF DUCT TO THE BOTTOM OF STRUCTURE.
5. VERTICAL HANGERS, DIAGONAL AND HORIZONTAL BRACES TO BE SIZED IN ACCORDANCE WITH SMACNA SEISMIC RESTRAINT MANUAL.
6. COORDINATE WITH STRUCTURAL ENGINEER FOR UPPER ATTACHMENTS.
7. WHERE SEISMIC CABLE RESTRAINTS ARE REQUIRED,
   A. PROVIDE SEISMIC CABLE TRANSVERSE BRACING AT 30 FT AND
   B. SEISMIC CABLE LONGITUDINAL BRACING AT 60 FT.
   C. SEISMIC CABLE RESTRAINTS ARE NOT REQUIRED AT EVERY HANGER LOCATION.

9 ROUND RIGID DUCT SUPPORT
N.T.S.

TETRA TECH
www.tetratech.com
240 Continental Drive, Suite 200
Newark, DE 19713
Tel: 302.738.7551 Fax: 302.454-3989

SOUTH CAROLINA PROFESSIONAL ENGINEER
No. 35480
ROBERT LEBER
12/12/2024

BARNWELL SCHOOL DISTRICT 45
OWNER
770 HAGOOD AVE.
BARNWELL, SC 29812
Tel: 803 541 1300

TETRA TECH
ARCHITECT
MECHANICAL ENGINEER
PLUMBING ENGINEER
ELECTRICAL ENGINEER
240 Continental Drive, Suite
Newark, DE 19713
302.738.7551

THOMAS & HUTTON
CIVIL ENGINEER
1501 MAIN ST.
COLUMBIA, SC 29201
Tel: 803 451 0200

ZZ CONSULTING
STRUCTURAL ENGINEER
640 S. STATE ST
SHELLEY, ID 83274
Tel: 208 357 5404

MARK	DATE	DESCRIPTION	BY
	12/26/24	ISSUED FOR CONSTRUCTION CONFORMANCE SET	DB

BARNWELL SCHOOL DISTRICT 45
MULTI-USE SAFE ROOM

MECHANICAL DETAILS

Project No.:	200-207015-20004
Designed By:	PAD
Drawn By:	APS
Checked By:	RM

M-501

Copyright: Tetra Tech

12/11/2024 8:15:28 AM BIM 360://200-207015-20004 - Barnwell Dome\M&P_BARN_DOME_v2019.rvt

PACKAGED ROOFTOP UNIT SCHEDULE

MARK	MODEL NO.	MANUFACTURER	AREA SERVED	SUPPLY FAN				EVAPORATOR						ELECTRIC HEAT				OUTSIDE AIR		ELECTRICAL			REMARKS
				CFM	Static Pressure IN. WG. External	MOTOR		AIR TEMP. deg F ENT		AIR TEMP. deg F LVG		SENS MBH	TOTAL MBH	AIR TEMP. deg F		INPUT MBH	OUTPUT MBH	MIN.	MAX	Volts	Phase	Hertz	
						RPM	HP	DB	WB	DB	WB			ENT	LVG								
RTU-1	50GCQM05D7A6-2F3CO	CARRIER	ENTRY	2175	1.0	1883	1.0	79.5	68.5	60.4	59.4	87.3	61.6	40.0	85.3	66.0	66.0	400	2175	460	3	60	PROVIDE MERV 13 FILTERS AND UV LIGHTS. SEER 16.2

AIR HANDLING UNIT SCHEDULE

MARK	MODEL NO.	MANUFACTURER	AREA SERVED	SUPPLY FAN				COOLING RATING						GAS HEAT				EFFICIENCY (%)	OUTSIDE AIR CFM		ELECTRICAL			REMARKS
				CFM	RPM	Static Pressure IN. WG. External	HP	AIR TEMP. deg F ENT		AIR TEMP. deg F LVG		SENS. MBH	TOTAL MBH	AIR TEMP. deg F		INPUT MBH	OUTPUT MBH		MIN.	MAX.	Volts	Phase	Hertz	
								DB	WB	DB	WB			ENT	LVG									
AHU-1	39MN-12W	CARRIER	GYM	5550	2558	2.0	7.5	82.0	71.0	52.4	57.3	149.2	253.2	52.0	90.0	200.0	160.0	80	3400	5500	460	3	60	PROVIDE MERV 13 FILTERS AND UV LIGHTS.
AHU-2	39MN-06W	CARRIER	GYM	2700	2636	2.0	5.0	87.2	70.8	57.4	57.8	85.9	118.6	33.6	89.0	200.0	160.0	80	725	2700	460	3	60	PROVIDE MERV 13 FILTERS AND UV LIGHTS.
AHU-3	39MN-06W	CARRIER	GYM	3800	2483	2.0	3.0	84.1	68.7	56.6	57.1	107.6	141.9	40.5	95.9	200.0	160.0	80	800	3800	460	3	60	PROVIDE MERV 13 FILTERS AND UV LIGHTS.

ENERGY RECOVERY UNIT SCHEDULE

MARK	MODEL NO.	MANUFACTURER	SYSTEM SERVED	SUPPLY FAN SECTION			HEAT EXCHANGER SECTION													EXHAUST FAN SECTION			ELECTRICAL			REMARKS
							OUTSIDE AIR SIDE							EXHAUST AIR SIDE												
							WINTER			SUMMER				WINTER			SUMMER									
				CFM	Static Pressure IN. WG. External	MOTOR HP	EAT °F	LAT °F	APD IN. WG	EAT °F		LAT °F		APD IN. WG	EAT °F	LAT °F	APD IN. WG	EAT °F		LAT °F		APD IN. WG	CFM	Static Pressure IN. WG. External	MOTOR HP	Volts	Phase	Hertz	
										DB	WB	DB	WB					DB	WB	DB	WB							
ERV-1	CWVDJEEIH40X0FOAEF	MICRO MTL CORP.	AHU-1, AHU-2 & AHU-3	3400	0.5	5.0	23.0	52.1	0.5	95.0	78.0	82.1	71.5	0.5	42.4	42.3	0.5	82.1	71.1	87.8	71.2	0.5	3400	0.5	5.0	460	3	60	

CONDENSING UNIT SCHEDULE

REF NO.	MODEL NO.	MANUFACTURER	SERVES	TONS	AMBIENT TEMP. ° F	COOLING CAPACITY MBH	ELECTRICAL			REMARKS
							V	PH	HZ	
CU-1	38AUDA25A0A6-OAOAO	CARRIER	AHU-1	20.0	95.0	242.3	460	3	60	EER 13.6
CU-2	38AUDA12A0A6-OAOAO	CARRIER	AHU-2	10.0	95.0	111.8	460	3	60	EER 12.4
CU-3	38AUDA14A0A6-OAOAO	CARRIER	AHU-3	12.5	95.0	139.5	460	3	60	EER 11.5
CU-4	AM036TXMDCH/AA	SAMSUNG	AC-1	3.0	95.0	38	208	1	60	SEER 17.20, EER 11.20

AIR CONDITIONING UNIT (AC)

MARK	MANUFACTURER	MODEL NO.	LOCATION	AIR FLOW (CFM) (LOW)	COOLING (MBH)	HEATING (MBH)	ELECTRICAL			FAN OUTPUT (W)	WEIGHT (LBS)	REMARKS
							VOLTS	PHASE	HZ			
AC-1	SAMSUNG	AM032MNQDCH/AA	ELECTRICAL ROOM	600	31.7	33.4	208	1	60	76	40.8	SEER 17.20, EER 11.20

LOUVER SCHEDULE

REF NO.	MANUFACTURER	MODEL NO.	SERVES	SIZE	CFM	FREE AREA SQUARE FEET	PRESS. DROP	VELOCITY FPM	REMARKS
OAL-1	RUSKIN	ELF375DXD	AHU-1	42X42	5550	5.68	0.22	968	-
OAL-2	RUSKIN	ELF375DXD	AHU-2	42X42	2700	5.68	0.06	475	-
OAL-3	RUSKIN	ELF375DXD	AHU-3	42X42	3750	5.68	0.10	660	-
OAL-4	RUSKIN	ELF375DXD	FIRE PUMP ROOM	42X42	1000	5.68	-	-	-
EAL-1	RUSKIN	ELF375DXD	AHU-1	42X42	5550	5.68	0.22	968	-
EAL-2	RUSKIN	ELF375DXD	AHU-2	42X42	2700	5.68	0.06	475	-
EAL-3	RUSKIN	ELF375DXD	AHU-3	42X42	3750	5.68	0.10	660	-
LEF-1	RUSKIN	ELF375DXD	EF-1	42X42	1200	5.68	-	-	-

CEILING DIFFUSER SCHEDULE

REF NO.	MANUFACTURER	SIZE	CFM RANGE	NECK SIZE	BLOW	MODEL NO.	REMARKS
CD-1	E.H. PRICE	6 X 6	0 - 125	6"	4-WAY	SMDA	White Finish, 24 x 24 Lay-in Type 36
CD-2	E.H. PRICE	9 X 9	126 - 275	8"	4-WAY	SMDA	White Finish, 24 x 24 Lay-in Type 36
CD-3	E.H. PRICE	12 X 12	276 - 500	10"	4-WAY	SMDA	White Finish, 24 x 24 Lay-in Type 36
CD-4	E.H. PRICE	15 X 15	501 - 775	12"	4-WAY	SMDA	White Finish, 24 x 24 Lay-in Type 36

RETURN REGISTER SCHEDULE

REF NO.	MANUFACTURER	SIZE	CFM RANGE	NECK SIZE	MODEL NO.	REMARKS
RAR-1	E.H. PRICE	6 X 6	0 - 75	6 X 6	530D	White Finish, 24 x 24 Lay-in Type TB
RAR-2	E.H. PRICE	8 X 8	76 - 150	8 X 8	530D	White Finish, 24 x 24 Lay-in Type TB
RAR-3	E.H. PRICE	16 X16	325 - 650	16 X 16	530D	White Finish, 24 x 24 Lay-in Type TB
RAR-4	E.H. PRICE	20 X 20	826 - 1100	20 X 20	530D	White Finish, 24 x 24 Lay-in Type TB
RAR-5	E.H. PRICE	22 X 22	1101 - 1250	22 X 22	530D	White Finish, 24 x 24 Lay-in Type TB
RAR-6	E.H. PRICE	48 X 24	1750	48 X 24	530D	White Finish, 24 x 24 Lay-in Type TB

EXHAUST REGISTER SCHEDULE

REF NO.	MANUFACTURER	SIZE	CFM RANGE	NECK SIZE	MODEL NO.	REMARKS
EAR-1	E.H. PRICE	6 X 6	0 - 75	6 X 6	530D	White Finish, 24 x 24 Lay-in Type TB
EAR-2	E.H. PRICE	8 X 8	76 - 150	8 X 6	530D	White Finish, 24 x 24 Lay-in Type TB
EAR-3	E.H. PRICE	10 X 10	151 - 225	10 X 10	530D	White Finish, 24 x 24 Lay-in Type TB
EAR-4	E.H. PRICE	12 X 12	226 350	12 X 12	530D	White Finish, 24 x 24 Lay-in Type TB

EXHAUST FAN SCHEDULE

REF NO.	MANUFACTURER	MODEL NO.	AREA SERVED	CFM	RPM	E.S.P. IN. WG.	MOTOR HP	ELECTRICAL			REMARKS
								V	PH	HZ	
EF-1	GREENHECK	AX-31-160-0421	FIRE PUMP RM 122	1,200	3500	1.0	3/4	120	1	60	PROVIDE WITH DAMPER

CEILING FAN SCHEDULE

REF NO.	MANUFACTURER	SIZE DIA.	ELECTRICAL				REMARKS
			V	PH	HZ	AMPS	
CF-1	BIG ASS FANS	14 FT	110	1	60	10	PROVIDE MOUNTING KITS TO HANG FROM DOME. PROVIDE WIRED WALL CONTROLLER.
CF-2	BIG ASS FANS	14 FT	110	1	60	10	PROVIDE MOUNTING KITS TO HANG FROM DOME. PROVIDE WIRED WALL CONTROLLER.
CF-3	BIG ASS FANS	14 FT	110	1	60	10	PROVIDE MOUNTING KITS TO HANG FROM DOME. PROVIDE WIRED WALL CONTROLLER.
CF-4	BIG ASS FANS	14 FT	110	1	60	10	PROVIDE MOUNTING KITS TO HANG FROM DOME. PROVIDE WIRED WALL CONTROLLER.
CF-5	BIG ASS FANS	14 FT	110	1	60	10	PROVIDE MOUNTING KITS TO HANG FROM DOME. PROVIDE WIRED WALL CONTROLLER.
CF-6	BIG ASS FANS	14 FT	110	1	60	10	PROVIDE MOUNTING KITS TO HANG FROM DOME. PROVIDE WIRED WALL CONTROLLER.

TETRA TECH
www.tetratech.com
240 Continental Drive, Suite 200
Newark, DE 19713
Tel: 302.738.7551 Fax: 302.454-3988

SOUTH CAROLINA PROFESSIONAL ENGINEER
No. 35480
ROBERT LEBER
12/12/2024

BARNWELL SCHOOL DISTRICT 45
OWNER
770 HAGOOD AVE.
BARNWELL, SC 29812
Tel: 803 541 1300

TETRA TECH
ARCHITECT
MECHANICAL ENGINEER
PLUMBING ENGINEER
ELECTRICAL ENGINEER
240 Continental Drive, Suite
Newark, DE 19713
302.738.7551

THOMAS & HUTTON
CIVIL ENGINEER
1501 MAIN ST.
COLUMBIA, SC 29201
Tel: 803 451 0200

ZZ CONSULTING
STRUCTURAL ENGINEER
640 S. STATE ST.
SHELLEY, ID 83274
Tel: 208 357 5404

MARK	DATE	DESCRIPTION	BY
	12/26/24	ISSUED FOR CONSTRUCTION CONFORMANCE SET	DB

BARNWELL SCHOOL DISTRICT 45
MULTI-USE SAFE ROOM

MECHANICAL SCHEDULES

Project No.:	200-207015-20004
Designed By:	PAD
Drawn By:	APS
Checked By:	RM

M-601

Copyright: Tetra Tech

12/11/2024 8:15:29 AM BIM 360://200-207015-20004 - Barnwell Dome/M&P_BARN_DOME_v2019.rvt

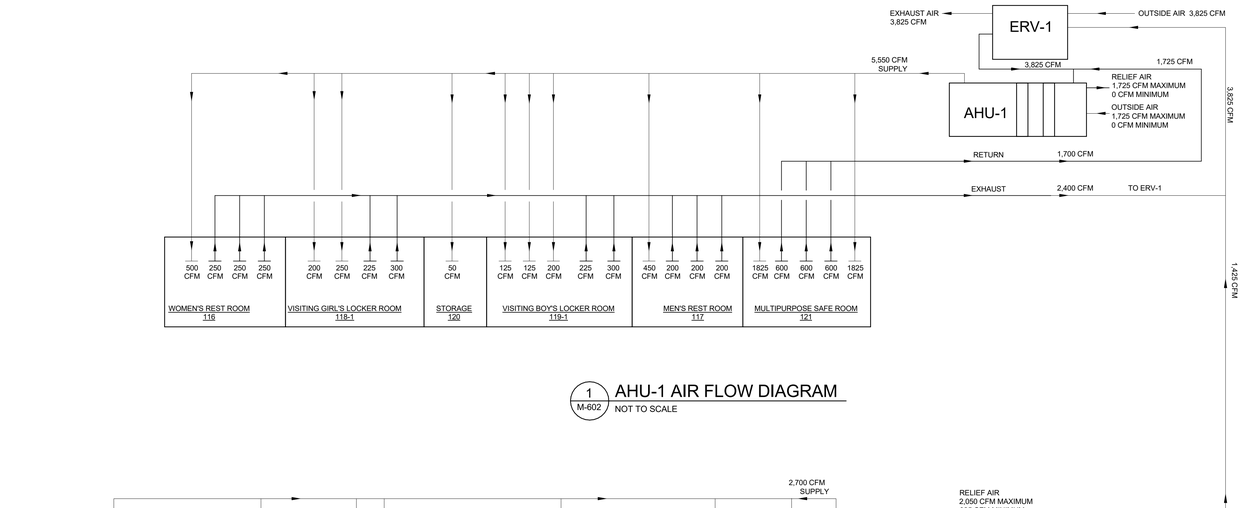

1 M-602 AHU-1 AIR FLOW DIAGRAM
NOT TO SCALE

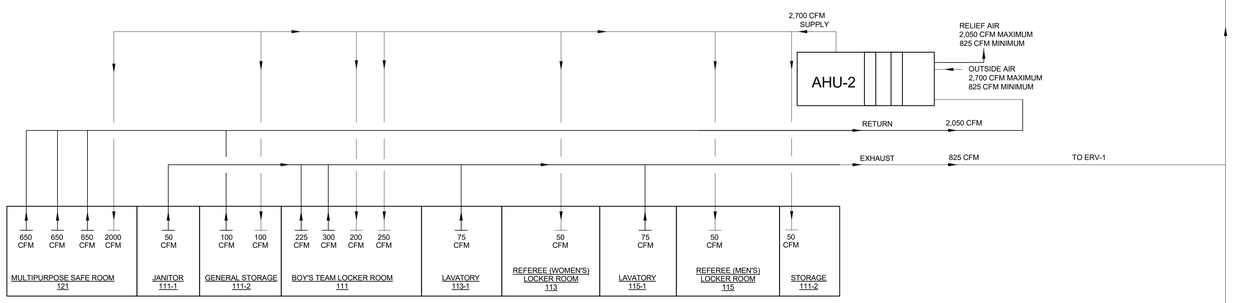

2 M-602 AHU-2 AIR FLOW DIAGRAM
NOT TO SCALE

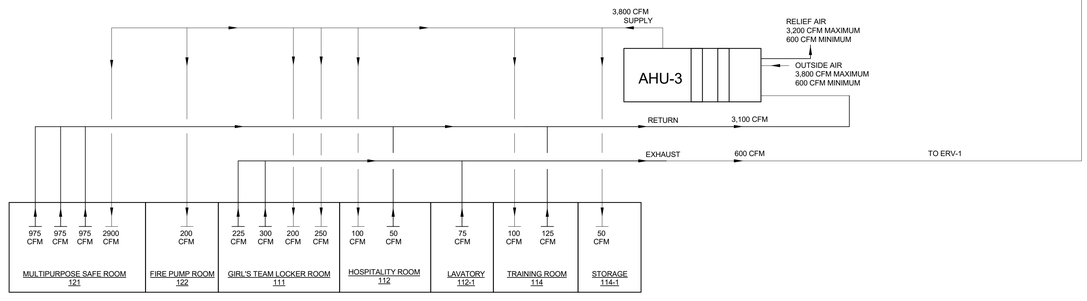

3 M-602 AHU-3 AIR FLOW DIAGRAM
NOT TO SCALE

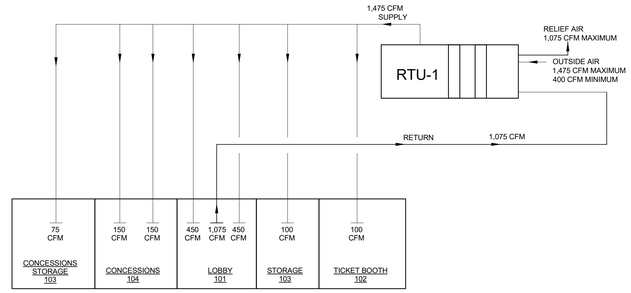

4 M-602 RTU-1 AIR FLOW DIAGRAM
NOT TO SCALE

TETRA TECH
www.tetratech.com
240 Continental Drive, Suite 200
Newark, DE 19713
Tel: 302.738.7551 Fax: 302.454.3989

SOUTH CAROLINA PROFESSIONAL ENGINEER
No. 35480
ROBERT LEBER

12/12/2024

BARNWELL SCHOOL DISTRICT 45
OWNER
770 HAGOOD AVE
BARNWELL, SC 29812
Tel: 803 541 1300

TETRA TECH
ARCHITECT
MECHANICAL ENGINEER
PLUMBING ENGINEER
ELECTRICAL ENGINEER
240 Continental Drive, Suite
Newark, DE 19713
302.738.7551

THOMAS & HUTTON
CIVIL ENGINEER
1501 MAIN ST.
COLUMBIA, SC 29201
Tel: 803 451 0200

ZZ CONSULTING
STRUCTURAL ENGINEER
640 S. STATE ST
SHELLEY, ID 83274
Tel: 208 357 5404

MARK	DATE	DESCRIPTION	BY
	12/26/24	ISSUED FOR CONSTRUCTION CONFORMANCE SET	DB

BARNWELL SCHOOL DISTRICT 45
MULTI-USE SAFE ROOM
AIRFLOW DIAGRAMS

Project No.:	200-207015-20004
Designed By:	PAD
Drawn By:	APS
Checked By:	RM

M-701

Copyright. Tetra Tech

12/11/2024 8:15:29 AM BIM 360://200-207015-20004 - Barnwell Dome/M&P_BARN_DOME_r2019.rvt

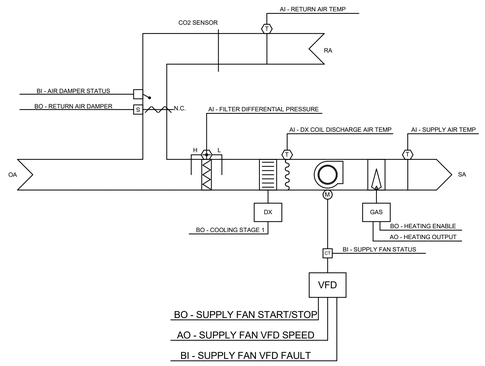

AIR HANDLING UNIT (AHU-1, AHU-2 & AHU-3)

POINT NAME	HARDWARE POINTS AI	AO	BI	BO	SOFTWARE POINTS AV	BV	SCHED	TREND	ALARM	SHOW ON GRAPHIC
DX COIL DISCHARGE AIR TEMP	X							X		X
FILTER DIFFERENTIAL PRESSURE	X							X		
RETURN AIR TEMP	X							X		X
SUPPLY AIR TEMP	X							X		X
HEATING OUTPUT		X						X		X
SUPPLY FAN STATUS			X					X		X
COOLING STAGE 1				X				X		X
HEATING ENABLE				X				X		X
SUPPLY FAN START/STOP				X				X		X
SUPPLY AIR TEMP SETPOINT					X			X		X
EMERGENCY SHUTDOWN						X		X	X	X
SCHEDULE							X			
COMPRESSOR RUNTIME EXCEEDED									X	
RETURN AIR DAMPER									X	
RETURN AIR DAMPER STATUS									X	
HIGH DX COIL DISCHARGE AIR TEMP									X	
HIGH SUPPLY AIR TEMP									X	
LOW DX COIL DISCHARGE AIR TEMP									X	
LOW SUPPLY AIR TEMP									X	
FILTER CHANGE REQUIRED									X	X
SUPPLY FAN FAILURE									X	
SUPPLY FAN IN HAND									X	
SUPPLY FAN RUNTIME EXCEEDED									X	
TOTALS	4	1	1	3	1	1	1	11	12	11
	TOTAL HARDWARE (9)				TOTAL SOFTWARE (26)					

RUN CONDITIONS - SCHEDULED:
THE UNIT SHALL RUN ON OCCUPANCY SCHEDULE.

EMERGENCY SHUTDOWN:
THE UNIT SHALL SHUT DOWN AND GENERATE AN ALARM UPON RECEIVING AN EMERGENCY SHUTDOWN SIGNAL.

SUPPLY FAN:
THE SUPPLY FAN SHALL RUN ANYTIME THE UNIT IS COMMANDED TO RUN. TO PREVENT SHORT CYCLING, THE SUPPLY FAN SHALL HAVE A USER DEFINABLE (ADJ.) MINIMUM RUNTIME, UNLESS SHUTDOWN ON SAFETIES.

ALARMS SHALL BE PROVIDED AS FOLLOWS:

- SUPPLY FAN FAILURE: COMMANDED ON, BUT THE STATUS IS OFF.
- SUPPLY FAN IN HAND: COMMANDED OFF, BUT THE STATUS IS ON.
- SUPPLY FAN RUNTIME EXCEEDED: STATUS RUNTIME EXCEEDS A USER DEFINABLE LIMIT (ADJ.).

DX COIL DISCHARGE AIR TEMPERATURE SETPOINT - FIXED:
THE CONTROLLER SHALL MONITOR THE DX COIL DISCHARGE AIR TEMPERATURE DURING COOLING MODE AND SHALL MAINTAIN A FIXED DX COIL DISCHARGE AIR TEMPERATURE OF 55°F (ADJ.).

SUPPLY AIR TEMPERATURE SETPOINT:
THE CONTROLLER SHALL MONITOR THE SUPPLY AIR TEMPERATURE AND SHALL MAINTAIN:

- 72°F (ADJ.) SUPPLY AIR TEMPERATURE DURING COOLING MODE.
- 70°F (ADJ.) SUPPLY AIR TEMPERATURE DURING HEATING MODE.

COOLING STAGE:
THE CONTROLLER SHALL MEASURE THE SUPPLY AIR TEMPERATURE AND STAGE THE COOLING TO MAINTAIN ITS COOLING DISCHARGE SETPOINT. TO PREVENT SHORT CYCLING, THE STAGE SHALL HAVE A USER DEFINABLE (ADJ.) MINIMUM RUNTIME.

THE COOLING SHALL BE ENABLED WHENEVER:

- OUTSIDE AIR TEMPERATURE IS GREATER THAN 60°F (ADJ.)
- AND THE DX COIL DISCHARGE AIR TEMPERATURE IS ABOVE THE COOLING DX COIL DISCHARGE AIR TEMPERATURE SETPOINT.
- AND THE FAN STATUS IS ON.

GAS HEATING:
THE CONTROLLER SHALL MEASURE THE SUPPLY AIR TEMPERATURE AND MODULATE THE HEATING TO MAINTAIN ITS HEATING SETPOINT. TO PREVENT SHORT CYCLING, THE HEATER SHALL HAVE A USER DEFINABLE (ADJ.) MINIMUM RUNTIME.

THE HEATING SHALL BE ENABLED WHENEVER:

- OUTSIDE AIR TEMPERATURE IS LESS THAN 55°F (ADJ.).
- AND THE SUPPLY AIR TEMPERATURE IS BELOW HEATING SETPOINT.
- AND THE FAN STATUS IS ON.

FILTER DIFFERENTIAL PRESSURE MONITORS:
THE CONTROLLERS SHALL MONITOR THE DIFFERENTIAL PRESSURE ACROSS THE FILTER.

ALARMS SHALL BE PROVIDED AS FOLLOWS:

- FILTER CHANGE REQUIRED: FILTER DIFFERENTIAL PRESSURE EXCEEDS A USER DEFINABLE LIMIT (ADJ.).

AIR TEMPERATURE MONITORING:
THE CONTROLLER SHALL MONITOR THE SUPPLY AIR TEMPERATURE.

ALARMS SHALL BE PROVIDED AS FOLLOWS:

- HIGH SUPPLY AIR TEMP: IF THE SUPPLY AIR TEMPERATURE IS GREATER THAN 80°F (ADJ.).
- LOW SUPPLY AIR TEMP: IF THE SUPPLY AIR TEMPERATURE IS LESS THAN 65°F (ADJ.).
- HIGH DX COIL DISCHARGE AIR TEMP: IF THE DX COIL DISCHARGE AIR TEMPERATURE IS GREATER THAN 60°F (ADJ.).
- LOW DX COIL DISCHARGE AIR TEMP: IF THE DX COIL DISCHARGE AIR TEMPERATURE IS LESS THAN 50°F (ADJ.).

SCHEDULE:
OCCUPIED: M-F: 7:30 AM - 4:00 PM
UNOCCUPIED SETPOINTS: COOLING 80°F
HEATING 62°F

1 M-901 AIR HANDLING UNITS - AHU-1,2 & 3 CONTROLS
SCALE: 1/8" = 1'-0"

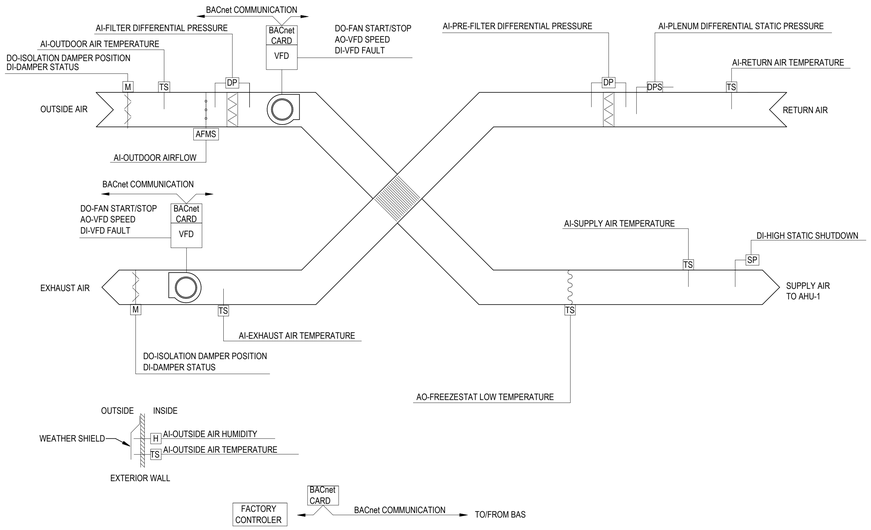

NOTES:
1. REFER TO PLANS AND UNIT SCHEDULE FOR QUANTITY OF FANS AND SYSTEM COMPONENTS.
2. REFER TO SEQUENCE OF OPERATION FOR ADDITIONAL REQUIREMENTS.
3. EACH FAN SHALL BE PROVIDED WITH A VFD. PROVIDE BACNET COMMUNICATION BUS INTERFACE TO PICK UP ALL VFD INFORMATION, INCLUDING FAULT INPUTS. MINIMUM HARD WIRED POINTS WILL BE START/STOP AND SPEED CONTROL.
4. HIGH STATIC TRIP SHALL REQUIRE MANUAL RESET AT STATIC SENSOR.
5. SCHEDULE: OCCUPIED: M-F 7:30 AM - 4:00 PM. UNOCCUPIED SETPOINTS: COOLING 80°F, HEATING 62°F.

2 M-901 AHU-1 HEAT RECOVERY VENTILATOR CONTROLS
SCALE: 1/8" = 1'-0"

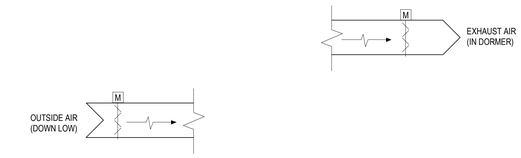

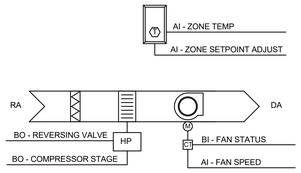

3 M-901 ROOFTOP HEAT PUMP UNIT CONTROLS
SCALE: 1/8" = 1'-0"

ROOFTOP HEAT PUMP (RTU-1)

RUN CONDITIONS: ON OCCUPANCY SCHEDULE

SHALL BE ENABLED TO RUN AS NEEDED TO MAINTAIN:

- A 75°F (ADJ.) COOLING SETPOINT
- A 70°F (ADJ.) HEATING SETPOINT.

ALARMS SHALL BE PROVIDED AS FOLLOWS:

- HIGH ZONE TEMP: IF THE ZONE TEMPERATURE IS GREATER THAN THE COOLING SETPOINT BY A USER DEFINABLE AMOUNT (ADJ.).
- LOW ZONE TEMP: IF THE ZONE TEMPERATURE IS LESS THAN THE HEATING SETPOINT BY A USER DEFINABLE AMOUNT (ADJ.).

ZONE SETPOINT ADJUST:
THE OCCUPANT SHALL BE ABLE TO ADJUST THE ZONE TEMPERATURE HEATING AND COOLING SETPOINTS AT THE ZONE SENSOR.

FAN:
THE FAN SHALL RUN ANYTIME THE UNIT IS COMMANDED TO RUN, UNLESS SHUTDOWN ON SAFETIES. THE FAN SPEEDS SHALL BE INDEXED

PER THE UNIT'S INTERNAL CONTROL SEQUENCE. THE UNIT SHALL PROVIDE THE FOLLOWING STATUS OUTPUTS TO THE DDC SYSTEM:

- FAN STATUS
- FAN SPEED

HEATING AND COOLING - VARIABLE SPEED COMPRESSOR:
THE CONTROLLER SHALL MEASURE THE ZONE TEMPERATURE AND CYCLE THE COMPRESSOR TO MAINTAIN ITS SETPOINT. TO PREVENT SHORT CYCLING, THE COMPRESSOR SHALL HAVE A USER DEFINABLE (ADJ.) MINIMUM RUNTIME. THE COMPRESSOR SHALL RUN SUBJECT TO ITS OWN INTERNAL SAFETIES AND CONTROLS.

THE HEATING SHALL BE ENABLED WHENEVER:

- THE ZONE TEMPERATURE IS BELOW THE HEATING SETPOINT
- AND THE FAN IS ON.
- AND THE REVERSING VALVE IS IN HEAT MODE.

THE COOLING SHALL BE ENABLED WHENEVER:

- THE ZONE TEMPERATURE IS ABOVE THE COOLING SETPOINT
- AND THE FAN IS ON.
- AND THE REVERSING VALVE IS IN COOL MODE.

ON MODE CHANGE, THE COMPRESSOR SHALL BE DISABLED AND REMAIN OFF UNTIL AFTER THE

REVERSING VALVE HAS CHANGED POSITION..

ALARMS SHALL BE PROVIDED AS FOLLOWS:

- COMPRESSOR RUNTIME EXCEEDED: THE COMPRESSOR RUNTIME EXCEEDS A USER DEFINABLE LIMIT (ADJ.).

FAN STATUS:
THE CONTROLLER SHALL MONITOR THE FAN STATUS.

ALARMS SHALL BE PROVIDED AS FOLLOWS:

- FAN FAILURE: COMMANDED ON, BUT THE STATUS IS OFF.
- FAN IN HAND: COMMANDED OFF, BUT THE STATUS IS ON.
- FAN RUNTIME EXCEEDED: FAN STATUS RUNTIME EXCEEDS A USER DEFINABLE LIMIT (ADJ.)

ROOFTOP HEAT PUMP (RTU-1)

POINT NAME	HARDWARE POINTS AI	AO	BI	BO	SOFTWARE POINTS AV	BV	SCHED	TREND	ALARM	SHOW ON GRAPHIC
FAN SPEED	X							X		X
ZONE SETPOINT ADJUST	X									X
ZONE TEMP	X							X		X
FAN STATUS			X					X		X
COMPRESSOR STAGE				X				X		X
REVERSING VALVE				X				X		X
COOLING SETPOINT					X			X		X
HEATING SETPOINT					X			X		X
COMPRESSOR RUNTIME EXCEEDED									X	
FAN FAILURE									X	
FAN IN HAND									X	
FAN RUNTIME EXCEEDED									X	
HIGH ZONE TEMP									X	
LOW ZONE TEMP									X	
TOTALS	3	0	1	2	2	0	0	7	7	8
	TOTAL HARDWARE (6)				TOTAL SOFTWARE (16)					

NATURAL VENTILATION SYSTEM

THE OUTSIDE INTAKE DAMPERS (LOW) AND EXHAUST AIR DAMPERS (HIGH) ARE NORMALLY CLOSED. UPON A LOSS OF POWER, THESE DAMPERS WILL FAIL OPEN.

UPON POWER RESTORATION, AND A RESTART OF THE NORMAL HVAC SYSTEM AHU-1, AS A MINIMUM, THESE DAMPERS WILL CLOSE.

4 M-901 NATURAL VENTILATION SYSTEM CONTROLS
SCALE: 1/8" = 1'-0"

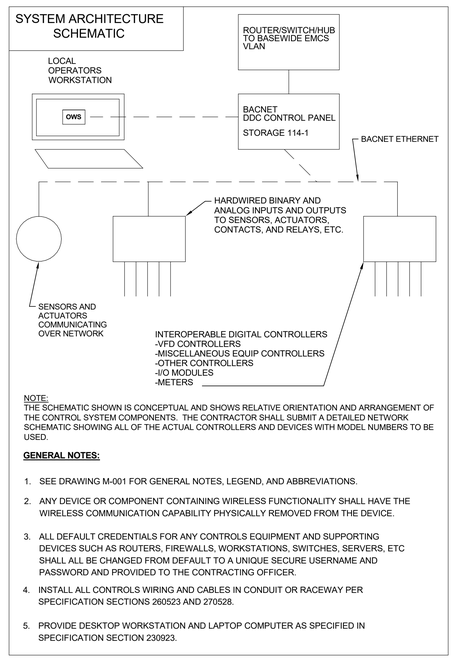

NOTE:
THE SCHEMATIC SHOWN IS CONCEPTUAL AND SHOWS RELATIVE ORIENTATION AND ARRANGEMENT OF THE CONTROL SYSTEM COMPONENTS. THE CONTRACTOR SHALL SUBMIT A DETAILED NETWORK SCHEMATIC SHOWING ALL OF THE ACTUAL CONTROLLERS AND DEVICES WITH MODEL NUMBERS TO BE USED.

GENERAL NOTES:

1. SEE DRAWING M-001 FOR GENERAL NOTES, LEGEND, AND ABBREVIATIONS.
2. ANY DEVICE OR COMPONENT CONTAINING WIRELESS FUNCTIONALITY SHALL HAVE THE WIRELESS COMMUNICATION CAPABILITY PHYSICALLY REMOVED FROM THE DEVICE.
3. ALL DEFAULT CREDENTIALS FOR ANY CONTROLS EQUIPMENT AND SUPPORTING DEVICES SUCH AS ROUTERS, FIREWALLS, WORKSTATIONS, SWITCHES, SERVERS, ETC SHALL ALL BE CHANGED FROM DEFAULT TO A UNIQUE SECURE USERNAME AND PASSWORD AND PROVIDED TO THE CONTRACTING OFFICER.
4. INSTALL ALL CONTROLS WIRING AND CABLES IN CONDUIT OR RACEWAY PER SPECIFICATION SECTIONS 260523 AND 270528.
5. PROVIDE DESKTOP WORKSTATION AND LAPTOP COMPUTER AS SPECIFIED IN SPECIFICATION SECTION 230923.

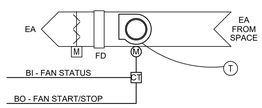

ON A RISE IN TEMPERATURE ABOVE 85°F, THE INTAKE DAMPER SHALL OPEN, EXHAUST DAMPER SHALL OPEN AND EXHAUST FAN WILL START.

EXHAUST FAN

RUN CONDITIONS :
EF-1 - ON SPACE THERMOSTATS SET AT 75°F.

FAN STATUS:
THE CONTROLLER SHALL MONITOR THE FAN STATUS.

ALARMS SHALL BE PROVIDED AS FOLLOWS:

- FAN FAILURE: COMMANDED ON, BUT THE STATUS IS OFF.
- FAN IN HAND: COMMANDED OFF, BUT THE STATUS IS ON.
- FAN RUNTIME EXCEEDED: FAN STATUS RUNTIME EXCEEDS A USER DEFINABLE LIMIT (ADJ.).

EXHAUST FAN

POINT NAME	HARDWARE POINTS AI	AO	BI	BO	SOFTWARE POINTS AV	BV	SCHED	TREND	ALARM	SHOW ON GRAPHIC
FAN STATUS			X					X		X
FAN START/STOP				X				X		X
FAN FAILURE									X	X
FAN IN HAND									X	X
FAN RUNTIME EXCEEDED									X	X
TOTALS	0	0	1	1	0	0	0	2	3	5
	TOTAL HARDWARE (2)				TOTAL SOFTWARE (5)					

5 M-901 EXHAUST FAN CONTROLS
SCALE: 1/8" = 1'-0"

TETRA TECH
www.tetratech.com
240 Continental Drive, Suite 200
Newark, DE 19713
Tel: 302.738.7551 Fax: 302.454-3989

SOUTH CAROLINA PROFESSIONAL ENGINEER
No. 35480
ROBERT LEBEL
12/12/2024

BARNWELL SCHOOL DISTRICT 45
OWNER
770 HAGOOD AVE
BARNWELL, SC 29812
Tel: 803 541 1300

TETRA TECH
ARCHITECT
MECHANICAL ENGINEER
PLUMBING ENGINEER
ELECTRICAL ENGINEER
240 Continental Drive, Suite
Newark, DE 19713
302.738.7551

THOMAS & HUTTON
CIVIL ENGINEER
1501 MAIN ST.
COLUMBIA, SC 29201
Tel: 803 451 0200

ZZ CONSULTING
STRUCTURAL ENGINEER
640 S. STATE ST
SHELLEY, ID 83274
Tel: 208 357 5404

MARK	DATE	DESCRIPTION	BY
	12/26/24	ISSUED FOR CONSTRUCTION CONFORMANCE SET	DB

BARNWELL SCHOOL DISTRICT 45
MULTI-USE SAFE ROOM
MECHANICAL CONTROLS

Project No.:	200-207015-20004
Designed By:	PAD
Drawn By:	APS
Checked By:	RM

M-901

Copyright: Tetra Tech

12/11/2024 8:15:30 AM BIM 360://200-207015-20004 - Barnwell Dome/M&P_BARN_DOME_v2019.rvt

PLUMBING LEGEND

- SANITARY SEWER PIPING
- COLD WATER PIPING
- HOT WATER PIPING
- HOT WATER RECIRCULATION PIPING
- VENT PIPING
- STORM PIPING
- HIDDEN / UNDERGROUND PIPING

- VENT THROUGH ROOF
- CLEANOUT, EXPOSED
- CLEANOUT
- DOUBLE YARD CLEANOUT
- FLOOR DRAIN
- TPL — TRAP PRIMER LINE
- HB — HOSE BIBB W/INTEGRAL VACUUM BREAKER (INTERIOR SURFACE)
- WH — WALL HYDRANT W/INTEGRAL VACUUM BREAKER (EXTERIOR SURFACE)
- PIPE CAP
- PIPE CONNECTION, BOTTOM
- PIPE CONNECTION, TOP
- PIPE ELBOW, TURNED UP
- PIPE ELBOW, TURNED DOWN
- PIPE TEE
- ANCHOR, INTERMEDIATE
- BUTTERFLY VALVE
- GATE VALVE
- BALL VALVE
- CHECK VALVE
- STRAINER VALVE
- STRAINER (BLOW-OFF)
- GAS COCK/GAS STOP
- THERMOMETER
- BALANCING VALVE
- THERMOSTATIC MIXING VALVE
- SOLENOID VALVE
- RELIEF VALVE
- WATER HAMMER ARRESTER/SHOCK ABSORBER
- UNION
- PUMP (SCHEMATIC)
- W — WATER METER
- BFP — BACK FLOW PREVENTER
- M — GAS METER
- SK - # — FIXTURE TAG
- # — KEYNOTE
- 3/4"ø HW — PIPE SIZE AND SYSTEM TAG

NOTES:

1. THIS LEGEND IS FOR REFERENCE ONLY
2. ALL SYMBOLS WHICH APPEAR WITHIN THE LEGEND MAY NOT APPLY TO THIS PROJECT.

PLUMBING ABBREVIATIONS

AFF	ABOVE FINISHED FLOOR
AFG	ABOVE FINISHED GRADE
APPROX	APPROXIMATE
BFF	BELOW FINISHED FLOOR
BFP	BACKFLOW PREVENTER
BV	BALANCING VALVE
CA	COMPRESSED AIR
CAP	CAPACITY
CO	CLEAN OUT
COND	CONDENSATE
CONN	CONNECTION
CONT	CONTINUATION
D	DRAIN
DCW	DOMESTIC COLD WATER
DEG	DEGREES
DEMO	DEMOLITION
DIA	DIAMETER
DN	DOWN
DS	DOWNSPOUT
DWG	DRAWING
EA	EACH
EEW	EMERGENCY EYE/FACE WASH
ENT	ENTERING
ESS	EMERGENCY SAFETY SHOWER
ET	EXPANSION TANK
F	FAHRENHEIT
FCO	FLOOR CLEAN OUT
FD	FLOOR DRAIN
FH	FIRE HYDRANT
FM	FLOW METER
FPH	FREEZE PROOF HYDRANT
FPM	FEET PER MINUTE
GAL	GALLONS
GD	GARBAGE DISPOSAL
GM	GAS METER
GPM	GALLONS PER MINUTE
GWH	GAS WATER HEATER
HB	HOSE BIBB
HD	HEAD
HO	HUB OUTLET
HP	HORSEPOWER
HW	HOT WATER
HWR	HOT WATER RETURN
ID	INSIDE DIAMETER/DIMENSION
IE	INVERT ELEVATION
IMVB	ICE MAKER VALVE BOX
IN	INCH
IW	INDUSTRIAL WASTE
IWH	INSTANTANEOUS WATER HEATER
LAV	LAVATORY
M	METER
MAX	MAXIMUM
MEZZ	MEZZANINE
MFR	MANUFACTURER
MIN	MINIMUM
MISC	MISCELLANEOUS
N/A	NOT APPLICABLE
NG	NATURAL GAS
NPW	NON-POTABLE WATER
NTS	NOT TO SCALE
OD	OUTSIDE DIAMETER
PCV	PRESSURE CONTROL VALVE
PD	PRESSURE DROP
PG	PRESSURE GAUGE
PRV	PRESSURE REDUCING VALVE
PSI	POUNDS PER SQUARE INCH
PVC	POLYVINYL CHLORIDE
PW	POTABLE WATER
R	RADIUS
RD	ROOF DRAIN
RP	RECIRCULATION PUMP
RPBP	REDUCED PRESSURE BACKFLOW PREVENTER
RPM	REVOLUTIONS PER MINUTE
SAN	SANITARY SEWER PIPING
SK	SINK
SP	SUMP PUMP
SPEC	SPECIFICATION
ST	STORM
STD	STANDARD
SW	SERVICE WATER
TBD	TO BE DETERMINED
TCV	TEMPERING VALVE
TD	TRENCH DRAIN
TEMP	TEMPERATURE
TMV	THERMOSTATIC MIXING VALVE
TP	TRAP PRIMER
TW	TEPID WATER
TYP	TYPICAL
UR	URINAL
V	VENT
VIF	VERIFY IN FIELD
VS	VENT STACK
VTR	VENT THRU ROOF
WB	WASHER BOX
WC	WATER CLOSET
WCO	WALL CLEAN OUT
WG	WATER GAUGE
WH	WALL HYDRANT
WPD	WATER PRESSURE DROP
Ø	DIAMETER

GENERAL PLUMBING NOTES

1. ALL EQUIPMENT AND PIPING SHALL BE INSTALLED IN COMPLIANCE WITH THE LATEST APPLICABLE EDITION OF THE INTERNATIONAL PLUMBING CODE, LOCAL UTILITIES, AND APPLICABLE PROVISIONS OF THE INTERNATIONAL FUEL GAS CODE (IFGC).
2. THESE DRAWINGS ARE SCHEMATIC IN NATURE AND ARE NOT INTENDED TO SHOW ALL POSSIBLE CONDITIONS. IT IS INTENDED THAT A COMPLETE SYSTEM BE PROVIDED WITH ALL NECESSARY EQUIPMENT, VALVES, AND FITTINGS, COMPLETELY COORDINATED WITH ALL DISCIPLINES. ALL PARAMETERS GIVEN IN THESE DOCUMENTS SHALL BE STRICTLY CONFORMED WITH. ANY ITEMS AND LABOR REQUIRED FOR A COMPLETE SYSTEM IN ACCORDANCE WITH ALL APPLICABLE CODES, STANDARDS, AND THESE CONTRACT DOCUMENTS SHALL BE FURNISHED WITHOUT OCCURING ANY ADDITIONAL COST TO THE OWNER. CAREFULLY REVIEW ALL CONTRACT DOCUMENTS AND THE DESIGN OF OTHER TRADES BEFORE PREPARING SHOP DRAWINGS.
3. THE CONTRACTOR IS RESPONSIBLE FOR COORDINATION WITH OTHER TRADES TO MINIMIZE SPATIAL CONFLICTS.
4. INSTALL BOTTOM OF ALL EXTERIOR WALL HYDRANTS AT 24" ABOVE FINISH GRADE ELEVATION.
5. ALL INTERIOR FLOOR DRAINS AND OPEN RECEPTACLES WITH TRAPS SHALL BE PROTECTED BY A TRAP PRIMER (SEE SPECIFICATIONS AND PLANS FOR LOCATION AND TYPE.) PROVIDE 1/2" SLOPED LINE TO FLOOR DRAIN. SEE DETAILS SHEET.
6. WATER LINES SHALL NOT BE ROUTED ABOVE ANY ELECTRICAL ROOM OR ELECTRICAL PANELS OR SERVER/TELEPHONE ROOMS.
7. CONTRACTOR SHALL VERIFY ALL FIELD CONDITIONS AND DIMENSIONS BEFORE CONSTRUCTION BEGINS, INCLUDING SEWER, DRAIN, AND CONDUIT INV. ELEV. CONTACT OWNER OR OWNER'S REP SHOULD DISCREPANCIES OCCUR.
8. AS-BUILT DRAWING MARKUPS SHALL BE MAINTAINED AT THE JOB SITE AND SHALL BE SUBMITTED PRIOR TO FINAL PAYMENT FOR THE CREATION OF FINAL RECORD DRAWINGS. AS-BUILT MARKUPS SHALL BE ACCURATE AND LEGIBLE.

NATURAL GAS PIPING NOTES

1. ALL NEW EXPOSED GAS PIPING SHALL BE PRIMED AND PAINTED. ALL NEW GAS PIPING WITHIN FINISHED SPACES SHALL BE PAINTED YELLOW AND LABELED IN ACCORDANCE WITH APPLICABLE CODE.
2. COORDINATE NEW METER LOCATION FOR BUILDING WITH LOCAL UTILITIES.
3. ALL GAS PIPING SHALL BE LABELED AT BEGINNING, ALL ENDS, AND AT 6' INTERVALS DESIGNATING GAS & PRESSURE. LABELS SHALL BE PER SPECIFICATIONS.
4. PROVIDE/INSTALL THROUGH WALL PIPE PENETRATIONS AS REQUIRED WHERE PIPE ENTERS BUILDING. SLEEVE AND SEAL.

TETRA TECH
www.tetratech.com
240 Continental Drive, Suite 200
Newark, DE 19713
Tel: 302.738.7551 Fax: 302.454.3989

SOUTH CAROLINA LICENSED PROFESSIONAL ENGINEER
No. 38441
ERIC D. MONDOR
12/12/2024

BARNWELL SCHOOL DISTRICT 45
OWNER
770 HAGOOD AVE.
BARNWELL, SC 29812
Tel: 803 541 1300

TETRA TECH
ARCHITECT
MECHANICAL ENGINEER
PLUMBING ENGINEER
ELECTRICAL ENGINEER
240 Continental Drive, Suite
Newark, DE 19713
302.738.7551

THOMAS & HUTTON
CIVIL ENGINEER
1501 MAIN ST.
COLUMBIA, SC 29201
Tel: 803 451 0200

ZZ CONSULTING
STRUCTURAL ENGINEER
640 S. STATE ST
SHELLEY, ID 83274
Tel: 208 357 5404

MARK	DATE	DESCRIPTION	BY
	12/26/24	ISSUED FOR CONSTRUCTION CONFORMANCE SET	DB

BARNWELL SCHOOL DISTRICT 45

MULTI-USE SAFE ROOM

ABBREVIATIONS, LEGENDS AND GENERAL NOTES

Project No.:	200-207015-20004
Designed By:	APS
Drawn By:	APS
Checked By:	RM

P-001

Copyright: Tetra Tech

12/11/2024 8:16:53 AM BIM 360://200-207015-20004 - Barnwell Dome/M&P_BARN_DOME_v2019.rvt

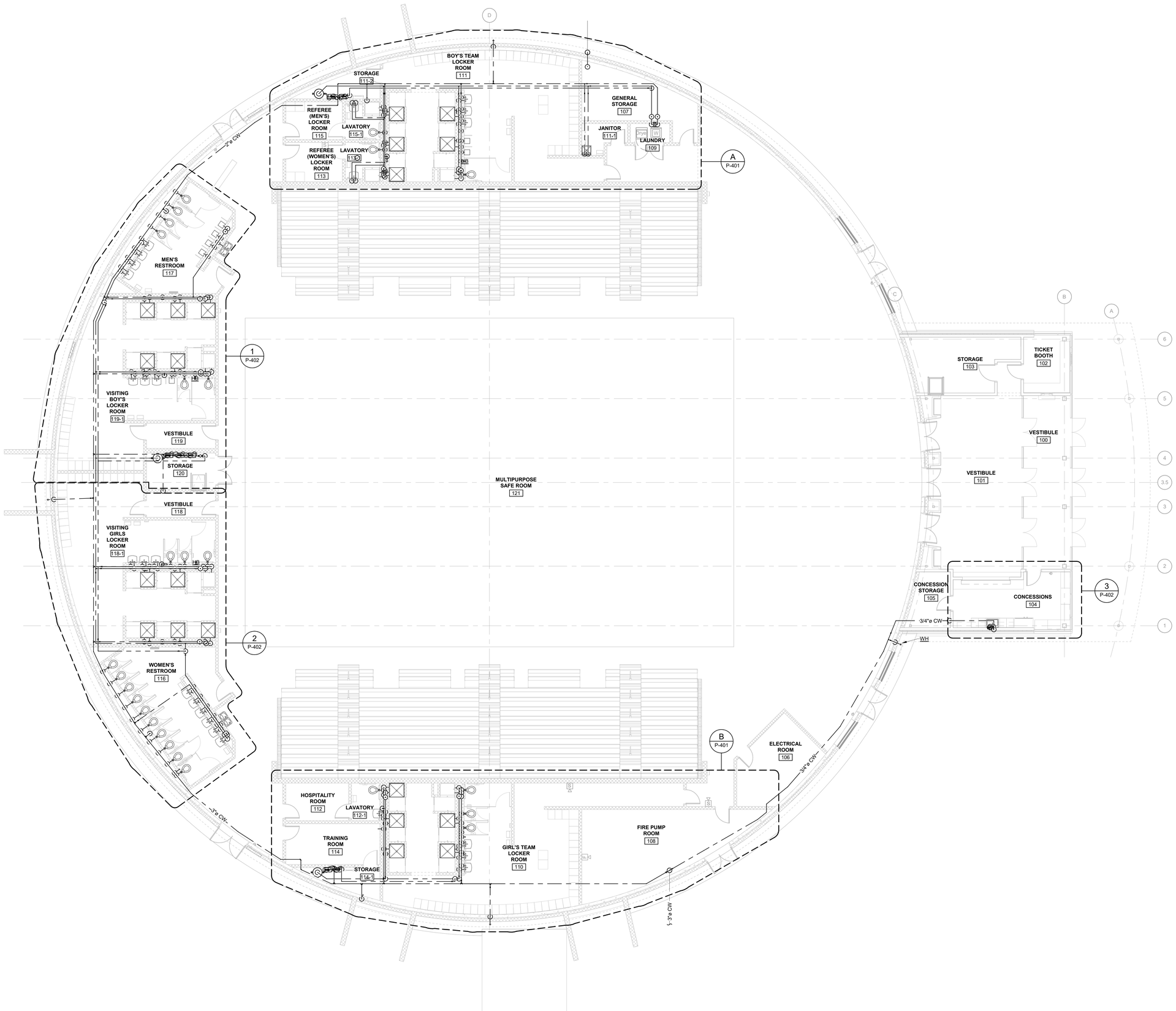

1 P-110 FIRST FLOOR OVERALL PRESSURE PIPING PLAN
SCALE: 1/8" = 1'-0"

TRUE NORTH
PROJECT NORTH
0 4' 8' 16'
SCALE: 1/8" = 1'-0"

TETRA TECH
www.tetratech.com
240 Continental Drive, Suite 200
Newark, DE 19713
Tel: 302.738.7551 Fax: 302.454.3989

SOUTH CAROLINA LICENSED ENGINEER ERIC D. MONDOR No. 38441

12/12/2024

BARNWELL SCHOOL DISTRICT 45
OWNER
770 HAGOOD AVE
BARNWELL, SC 29812
Tel: 803 541 1300

TETRA TECH
ARCHITECT
MECHANICAL ENGINEER
PLUMBING ENGINEER
ELECTRICAL ENGINEER
240 Continental Drive, Suite
Newark, DE 19713
302.738.7551

THOMAS & HUTTON
CIVIL ENGINEER
1501 MAIN ST.
COLUMBIA, SC 29201
Tel: 803 451 0200

ZZ CONSULTING
STRUCTURAL ENGINEER
640 S. STATE ST.
SHELLEY, ID 83274
Tel: 208 357 5404

MARK	DATE	DESCRIPTION	BY
	12/26/24	ISSUED FOR CONSTRUCTION CONFORMANCE SET	DB

BARNWELL SCHOOL DISTRICT 45
MULTI-USE SAFE ROOM

PLUMBING FIRST FLOOR OVERALL PRESSURE PIPING PLAN

Project No.:	200-207015-20004
Designed By:	APS
Drawn By:	APS
Checked By:	RM

P-110

Copyright: Tetra Tech

12/11/2024 8:17:03 AM BIM 360://200-207015-20004 - Barnwell Dome/M&P_BARN_DOME_v2019.rvt

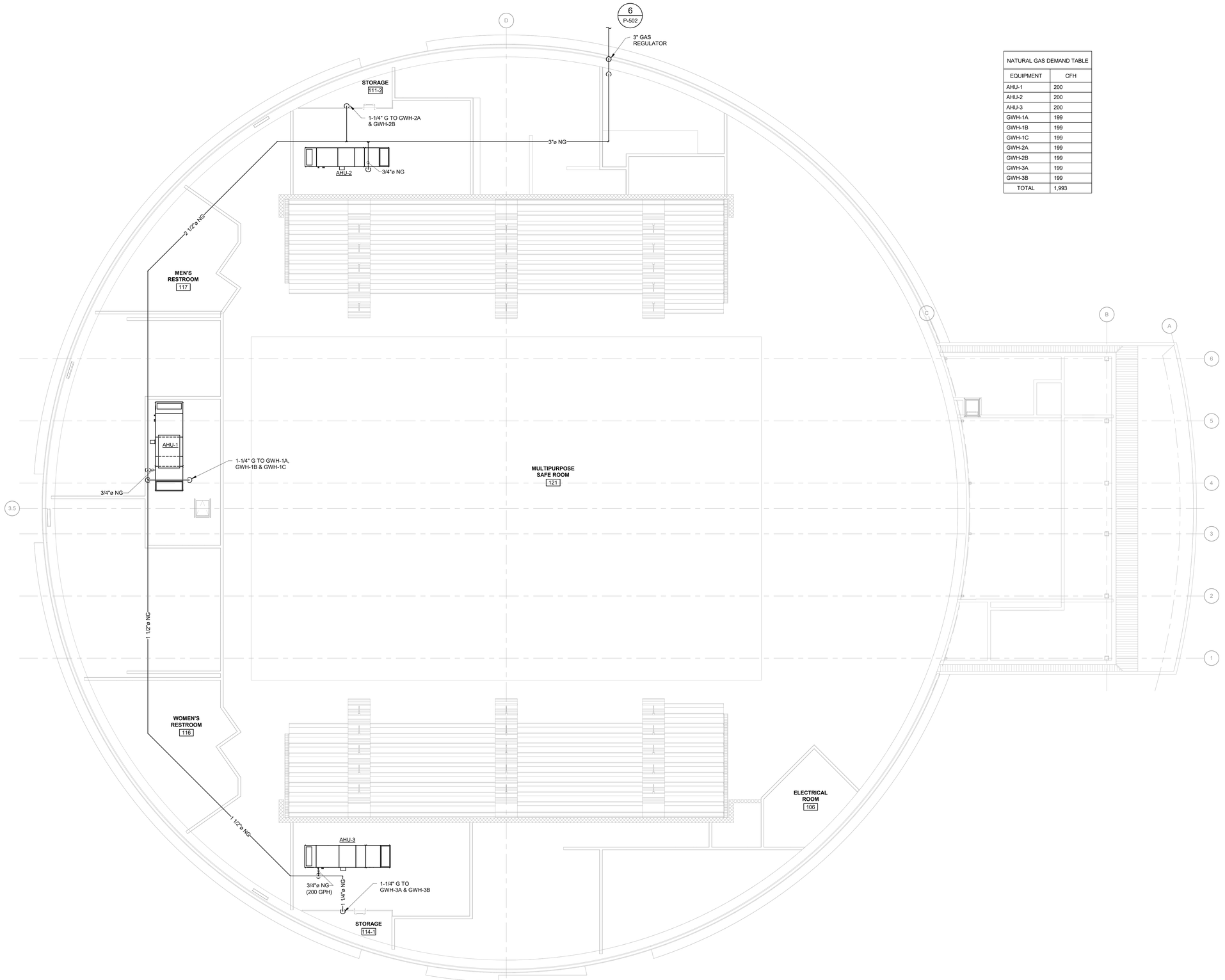

NATURAL GAS DEMAND TABLE	
EQUIPMENT	CFH
AHU-1	200
AHU-2	200
AHU-3	200
GWH-1A	199
GWH-1B	199
GWH-1C	199
GWH-2A	199
GWH-2B	199
GWH-3A	199
GWH-3B	199
TOTAL	1,993

1 P-111 MECHANICAL PLATFORM NATURAL GAS PIPING PLAN
SCALE: 1/8" = 1'-0"

TRUE NORTH
PROJECT NORTH

0 4' 8' 16'
SCALE: 1/8" = 1'-0"

TETRA TECH
www.tetratech.com
240 Continental Drive, Suite 200
Newark, DE 19713
Tel: 302.738.7551 Fax: 302.454.3989

SOUTH CAROLINA LICENSED ENGINEER
No. 38441
ERIC D. MONDOR

12/12/2024

BARNWELL SCHOOL DISTRICT 45
OWNER
770 HAGOOD AVE.
BARNWELL, SC 29812
Tel: 803 541 1300

TETRA TECH
ARCHITECT
MECHANICAL ENGINEER
PLUMBING ENGINEER
ELECTRICAL ENGINEER
240 Continental Drive, Suite
Newark, DE 19713
302.738.7551

THOMAS & HUTTON
CIVIL ENGINEER
1501 MAIN ST.
COLUMBIA, SC 29201
Tel: 803 451 0200

ZZ CONSULTING
STRUCTURAL ENGINEER
640 S. STATE ST.
SHELLEY, ID 83274
Tel: 208 357 5404

MARK	DATE	DESCRIPTION	BY
	12/26/24	ISSUED FOR CONSTRUCTION CONFORMANCE SET	DB

BARNWELL SCHOOL DISTRICT 45
MULTI-USE SAFE ROOM

PLUMBING MECHANICAL PLATFORM NATURAL GAS PIPING PLAN

Project No.:	200-207015-20004
Designed By:	APS
Drawn By:	APS
Checked By:	RM

P-111

Copyright. Tetra Tech

12/11/2024 8:17:04 AM BIM 360://200-207015-20004 - Barnwell Dome/M&P_BARN_DOME_v2019.rvt

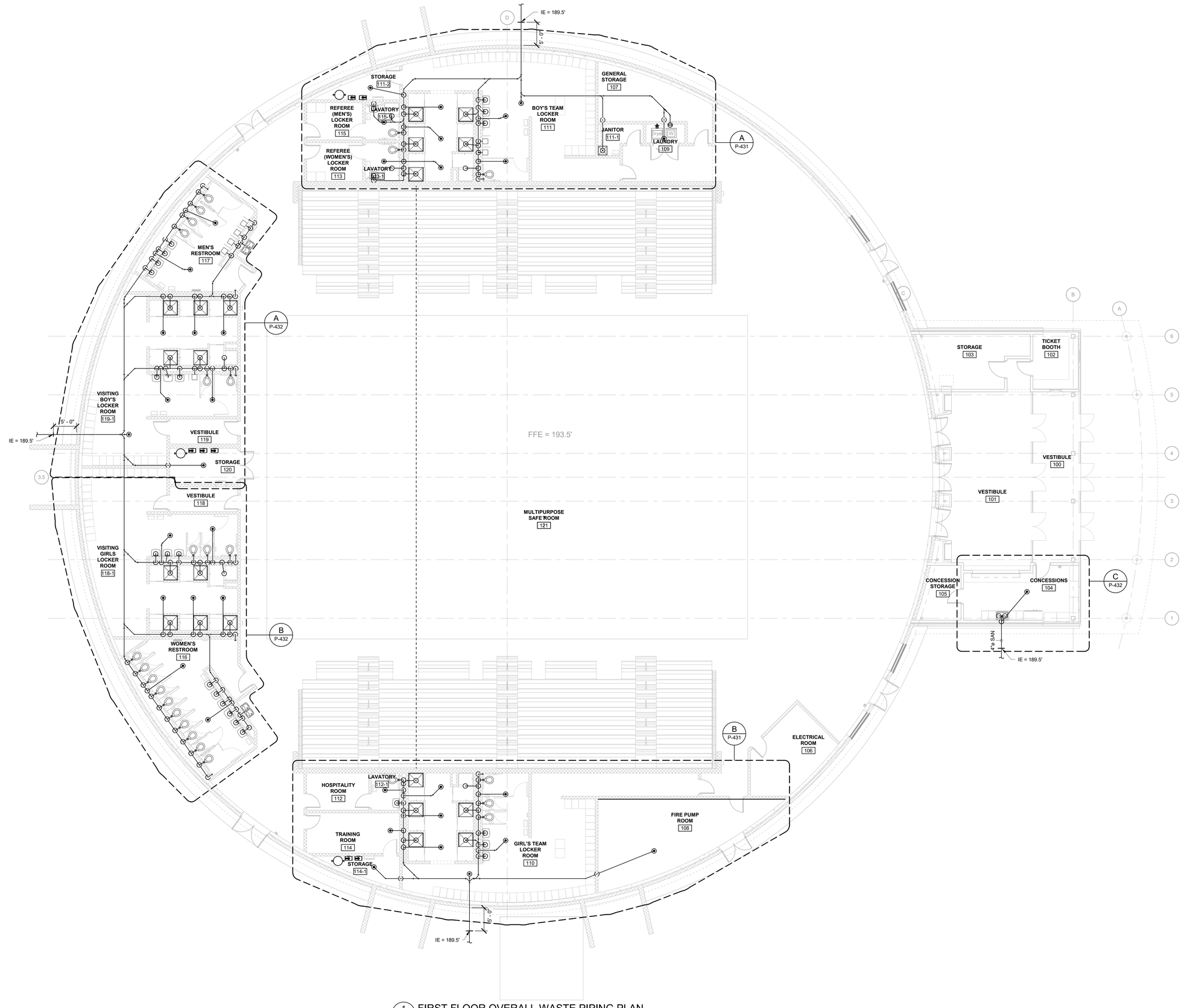

1 P-131 FIRST FLOOR OVERALL WASTE PIPING PLAN
SCALE: 1/8" = 1'-0"

TRUE NORTH
PROJECT NORTH
0 4' 8' 16'
SCALE: 1/8" = 1'-0"

TETRA TECH
www.tetratech.com
240 Continental Drive, Suite 200
Newark, DE 19713
Tel: 302.738.7551 Fax: 302.454.3989

SOUTH CAROLINA LICENSED ENGINEER
No. 38441
ERIC D. MONDOR
12/12/2024

BARNWELL SCHOOL DISTRICT 45
OWNER
770 HAGOOD AVE
BARNWELL, SC 29812
Tel: 803 541 1300

TETRA TECH
ARCHITECT
MECHANICAL ENGINEER
PLUMBING ENGINEER
ELECTRICAL ENGINEER
240 Continental Drive, Suite
Newark, DE 19713
302.738.7551

THOMAS & HUTTON
CIVIL ENGINEER
1501 MAIN ST.
COLUMBIA, SC 29201
Tel: 803 451 0200

ZZ CONSULTING
STRUCTURAL ENGINEER
640 S. STATE ST
SHELLEY, ID 83274
Tel: 208 357 5404

MARK	DATE	DESCRIPTION	BY
	12/26/24	ISSUED FOR CONSTRUCTION CONFORMANCE SET	DB

BARNWELL SCHOOL DISTRICT 45
MULTI-USE SAFE ROOM

PLUMBING FIRST FLOOR OVERALL WASTE PIPING PLAN

Project No.:	200-207015-20004
Designed By:	APS
Drawn By:	APS
Checked By:	RM

P-131

Copyright: Tetra Tech

12/11/2024 8:17:14 AM BIM 360://200-207015-20004 - Barnwell Dome/M&P_BARN_DOME_v2019.rvt

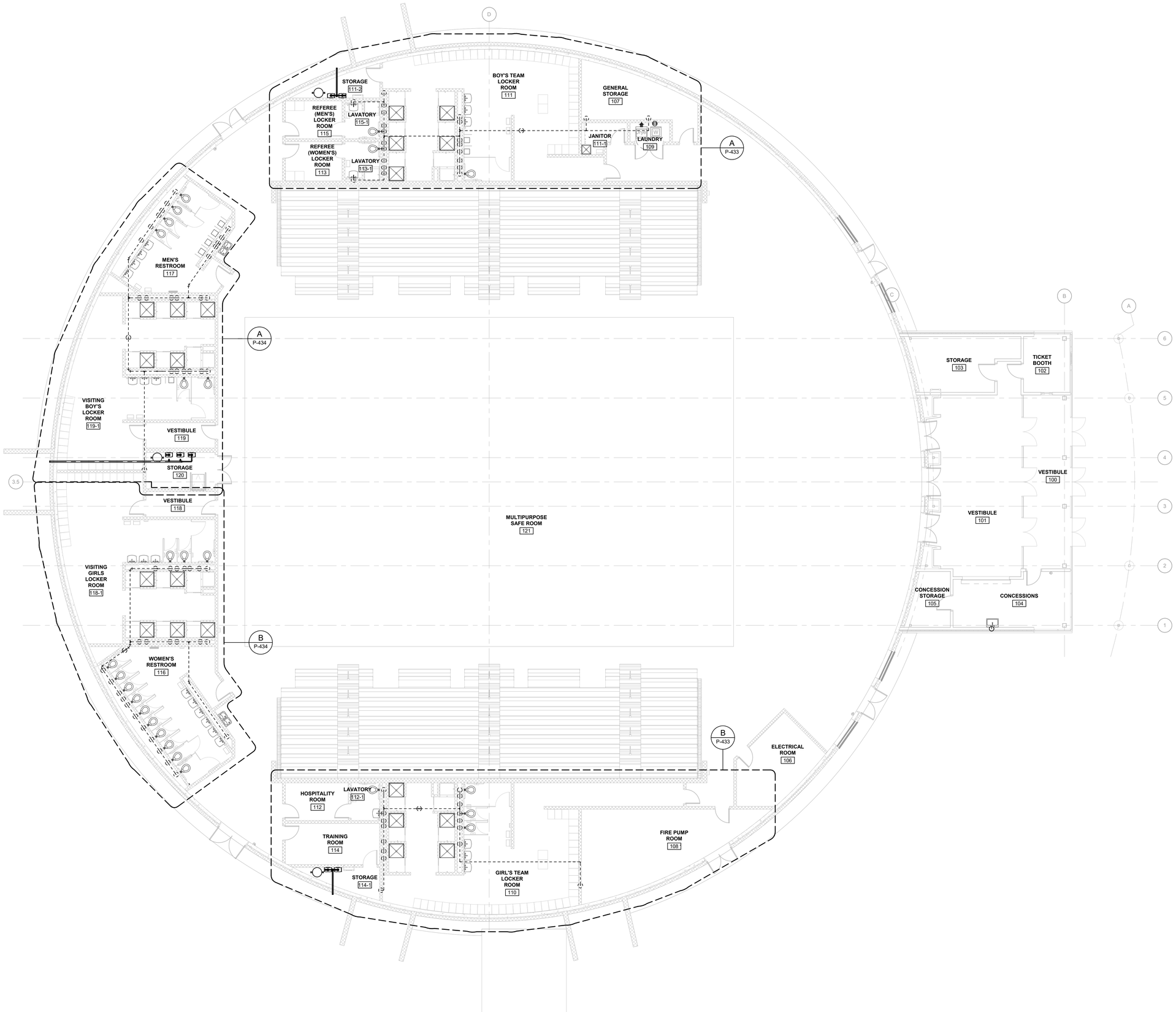

1 P-132 FIRST FLOOR VENT PIPING PLAN
SCALE: 1/8" = 1'-0"

TRUE NORTH
PROJECT NORTH

0 4' 8' 16'
SCALE: 1/8" = 1'-0"

TETRA TECH
www.tetratech.com
240 Continental Drive, Suite 200
Newark, DE 19713
Tel: 302.738.7551 Fax: 302.454.3989

SOUTH CAROLINA LICENSED ENGINEER
No. 38441
ERIC D. MONDOR

12/12/2024

BARNWELL SCHOOL DISTRICT 45
OWNER
770 HAGOOD AVE.
BARNWELL, SC 29812
Tel: 803 541 1300

TETRA TECH
ARCHITECT
MECHANICAL ENGINEER
PLUMBING ENGINEER
ELECTRICAL ENGINEER
240 Continental Drive, Suite
Newark, DE 19713
302.738.7551

THOMAS & HUTTON
CIVIL ENGINEER
1501 MAIN ST.
COLUMBIA, SC 29201
Tel: 803 451 0200

ZZ CONSULTING
STRUCTURAL ENGINEER
640 S. STATE ST
SHELLEY, ID 83274
Tel: 208 357 5404

MARK	DATE	DESCRIPTION	BY
	12/26/24	ISSUED FOR CONSTRUCTION CONFORMANCE SET	DB

BARNWELL SCHOOL DISTRICT 45
MULTI-USE SAFE ROOM

PLUMBING FIRST FLOOR VENT PIPING PLAN

Project No.:	200-207015-20004
Designed By:	APS
Drawn By:	APS
Checked By:	RM

P-132

Copyright: Tetra Tech

12/11/2024 8:17:23 AM BIM 360://200-207015-20004 - Barnwell Dome/M&P_BARN_DOME_v2019.rvt

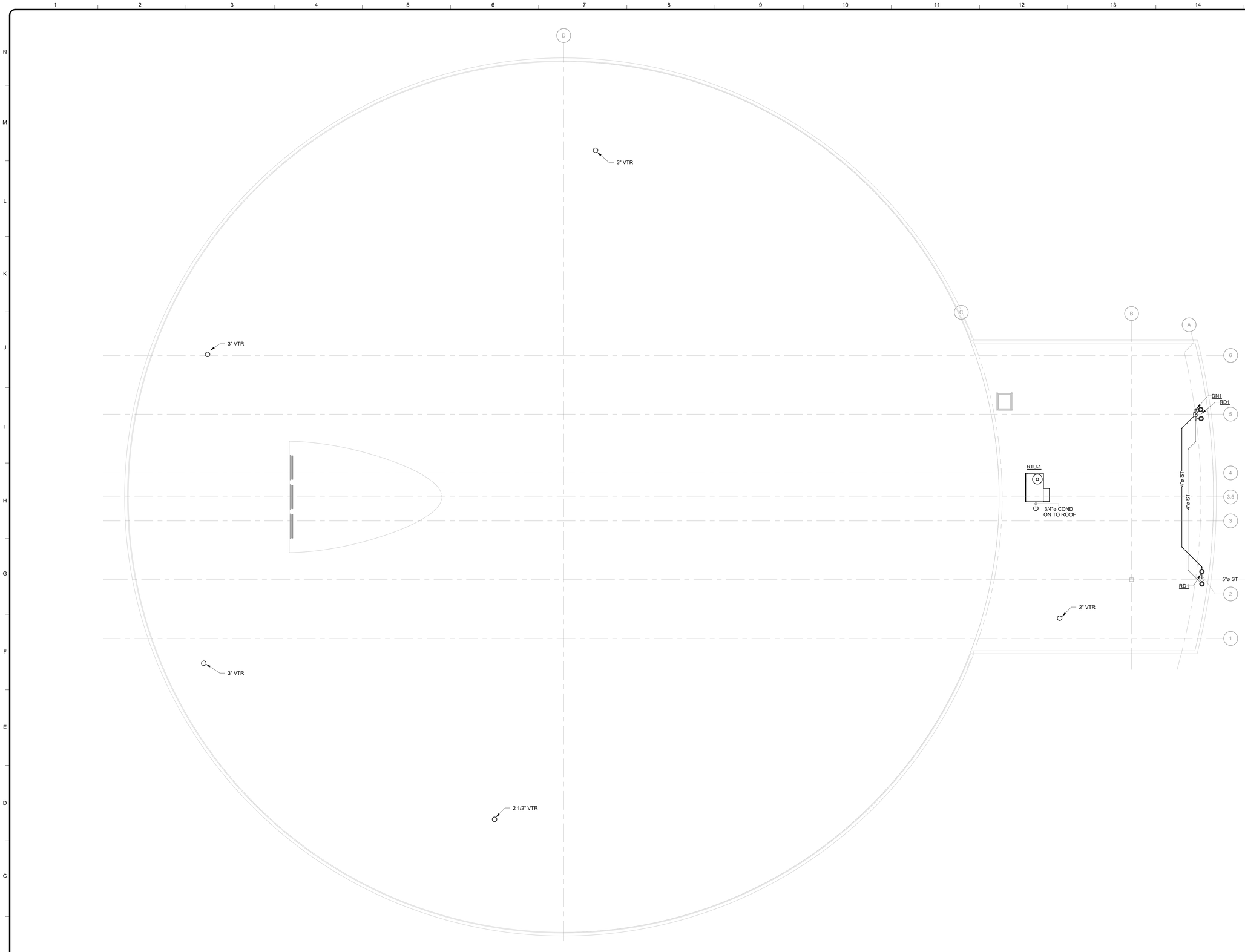

1 P-141 PLUMBING ROOF PLAN
SCALE: 1/8" = 1'-0"

TRUE NORTH
PROJECT NORTH

0 4' 8' 16'
SCALE: 1/8" = 1'-0"

TETRA TECH
www.tetratech.com
240 Continental Drive, Suite 200
Newark, DE 19713
Tel: 302.738.7551 Fax: 302.454.3989

SOUTH CAROLINA LICENSED ARCHITECT
No. 38441
ERIC D. MONDOR

12/12/2024

BARNWELL SCHOOL DISTRICT 45
OWNER
770 HAGOOD AVE.
BARNWELL, SC 29812
Tel: 803 541 1300

TETRA TECH
ARCHITECT
MECHANICAL ENGINEER
PLUMBING ENGINEER
ELECTRICAL ENGINEER
240 Continental Drive, Suite
Newark, DE 19713
302.738.7551

THOMAS & HUTTON
CIVIL ENGINEER
1501 MAIN ST.
COLUMBIA, SC 29201
Tel: 803 451 0200

ZZ CONSULTING
STRUCTURAL ENGINEER
640 S. STATE ST.
SHELLEY, ID 83274
Tel: 208 357 5404

MARK	DATE	DESCRIPTION	BY
	12/26/24	ISSUED FOR CONSTRUCTION CONFORMANCE SET	DB

BARNWELL SCHOOL DISTRICT 45
MULTI-USE SAFE ROOM

PLUMBING ROOF PLAN

Project No.:	200-207015-20004
Designed By:	APS
Drawn By:	APS
Checked By:	RM

P-141

Copyright. Tetra Tech

12/11/2024 8:17:24 AM BIM 360://200-207015-20004 - Barnwell Dome/M&P_BARN_DOME_r2019.rvt

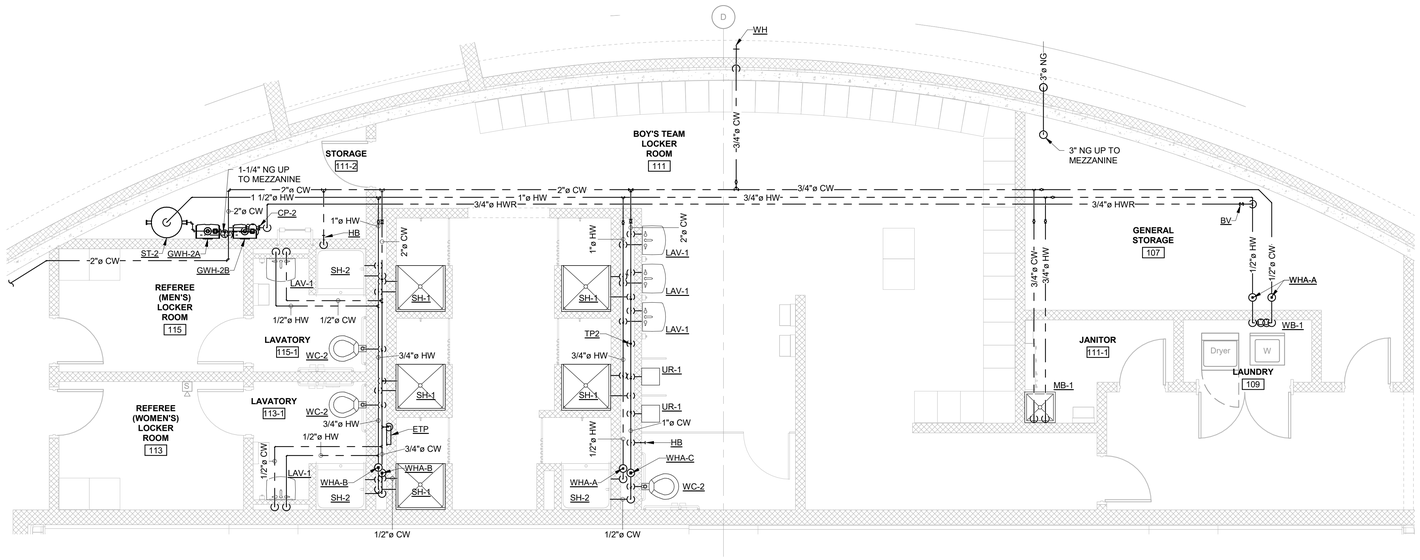

A P-401 ENLARGED HOME TEAM BOYS LOCKER ROOM PRESSURE PIPING PLAN

SCALE: 1/4" = 1'-0"

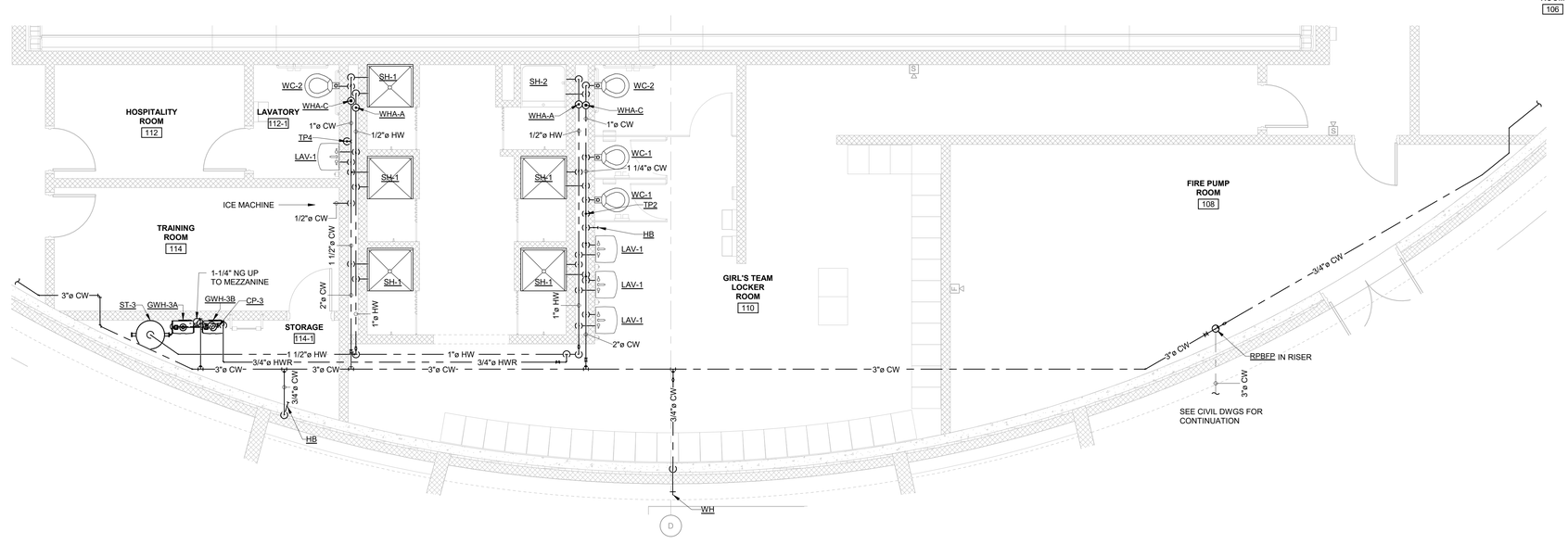

B P-401 ENLARGED HOME TEAM GIRLS LOCKER ROOM PRESSURE PIPING PLAN

SCALE: 1/4" = 1'-0"

TRUE NORTH

PROJECT NORTH

0 2' 4' 8'

SCALE: 1/4" = 1'-0"

TETRA TECH
www.tetratech.com
240 Continental Drive, Suite 200
Newark, DE 19713
Tel: 302.738.7551 Fax: 302.454.3989

SOUTH CAROLINA LICENSED ENGINEER ERIC D. MONDOR No. 38441

12/12/2024

BARNWELL SCHOOL DISTRICT 45
OWNER
770 HAGOOD AVE
BARNWELL, SC 29812
Tel: 803 541 1300

TETRA TECH
ARCHITECT
MECHANICAL ENGINEER
PLUMBING ENGINEER
ELECTRICAL ENGINEER
240 Continental Drive, Suite
Newark, DE 19713
302.738.7551

THOMAS & HUTTON
CIVIL ENGINEER
1501 MAIN ST.
COLUMBIA, SC 29201
Tel: 803 451 0200

ZZ CONSULTING
STRUCTURAL ENGINEER
640 S. STATE ST
SHELLEY, ID 83274
Tel: 208 357 5404

MARK	DATE	DESCRIPTION	BY
	12/26/24	ISSUED FOR CONSTRUCTION CONFORMANCE SET	DB

BARNWELL SCHOOL DISTRICT 45

MULTI-USE SAFE ROOM

PLUMBING ENLARGED FIRST FLOOR PRESS. PIPING PLANS

Project No.:	200-207015-20004
Designed By:	APS
Drawn By:	APS
Checked By:	RM

P-401

Copyright. Tetra Tech

12/11/2024 8:17:28 AM BIM 360://200-207015-20004 - Barnwell Dome/M&P_BARN_DOME_r2019.rvt

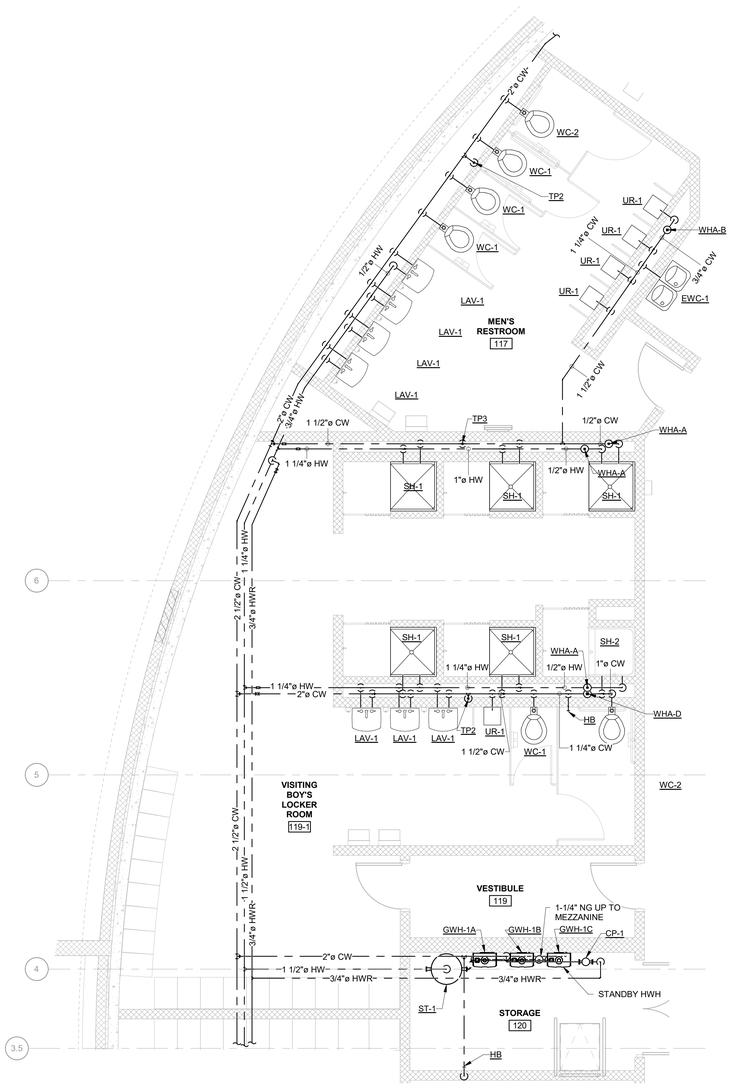

1 P-402 ENLARGED VISITING TEAM BOYS LOCKER ROOM/GANG TOILET PRESS. PIPING PLAN
SCALE: 1/4" = 1'-0"

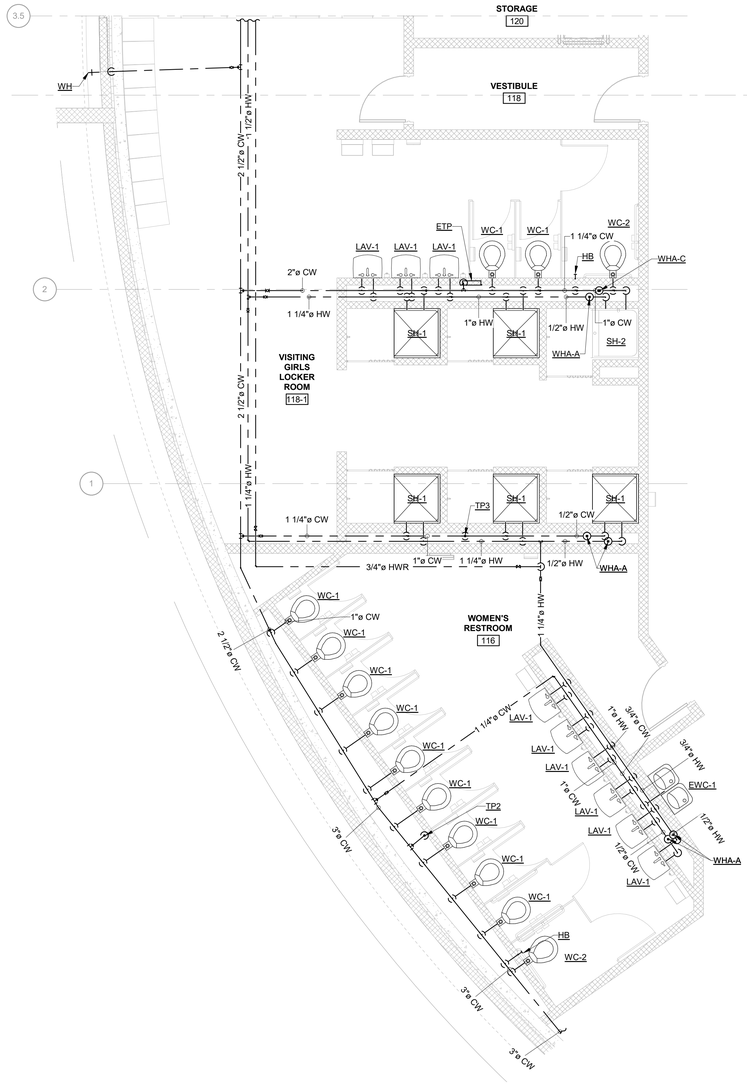

2 P-402 ENLARGED VISITING TEAM GIRLS LOCKER ROOM/GANG TOILET PRESS. PIPING PLAN
SCALE: 1/4" = 1'-0"

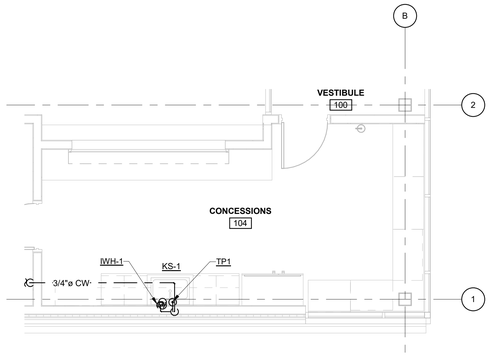

3 P-402 ENLARGED CONCESSIONS - PRESSURE PIPING PLAN
SCALE: 1/4" = 1'-0"

TRUE NORTH
PROJECT NORTH

0 2' 4' 8'
SCALE: 1/4" = 1'-0"

TETRA TECH
www.tetratech.com
240 Continental Drive, Suite 200
Newark, DE 19713
Tel: 302.738.7551 Fax: 302.454.5989

SOUTH CAROLINA PROFESSIONAL ENGINEER No. 38441 ERIC D. MONDOR
12/12/2024

BARNWELL SCHOOL DISTRICT 45
OWNER
770 HAGOOD AVE.
BARNWELL, SC 29812
Tel: 803 541 1300

TETRA TECH
ARCHITECT
MECHANICAL ENGINEER
PLUMBING ENGINEER
ELECTRICAL ENGINEER
240 Continental Drive, Suite
Newark, DE 19713
302.738.7551

THOMAS & HUTTON
CIVIL ENGINEER
1501 MAIN ST.
COLUMBIA, SC 29201
Tel: 803 451 0200

ZZ CONSULTING
STRUCTURAL ENGINEER
640 S. STATE ST.
SHELLEY, ID 83274
Tel: 208 357 5404

MARK	DATE	DESCRIPTION	BY
	12/26/24	ISSUED FOR CONSTRUCTION CONFORMANCE SET	DB

BARNWELL SCHOOL DISTRICT 45
MULTI-USE SAFE ROOM

PLUMBING ENLARGED FIRST FLOOR PRESS. PIPING PLANS

Project No.:	200-207015-20004
Designed By:	APS
Drawn By:	APS
Checked By:	RM

P-402

Copyright: Tetra Tech

12/11/2024 8:17:34 AM BIM 360://200-207015-20004 - Barnwell Dome/M&P_BARN_DOME_v2019.rvt

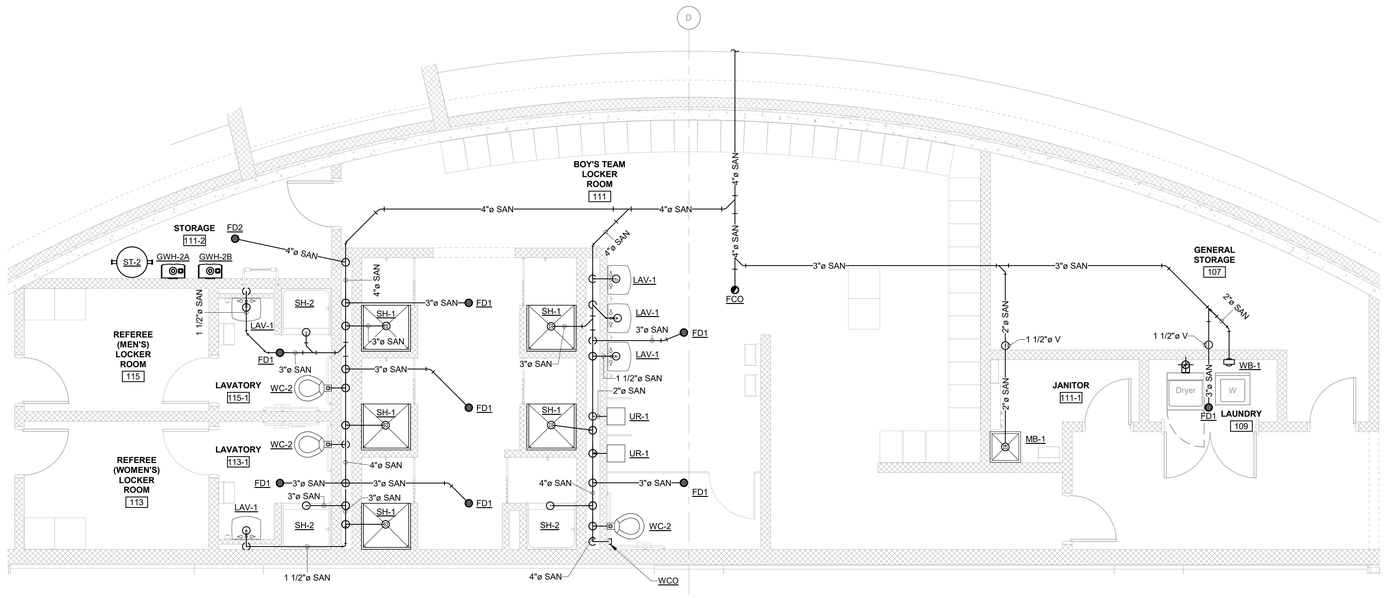

A P-431 ENLARGED HOME TEAM BOYS LOCKER ROOM WASTE PIPING PLAN
SCALE: 1/4" = 1'-0"

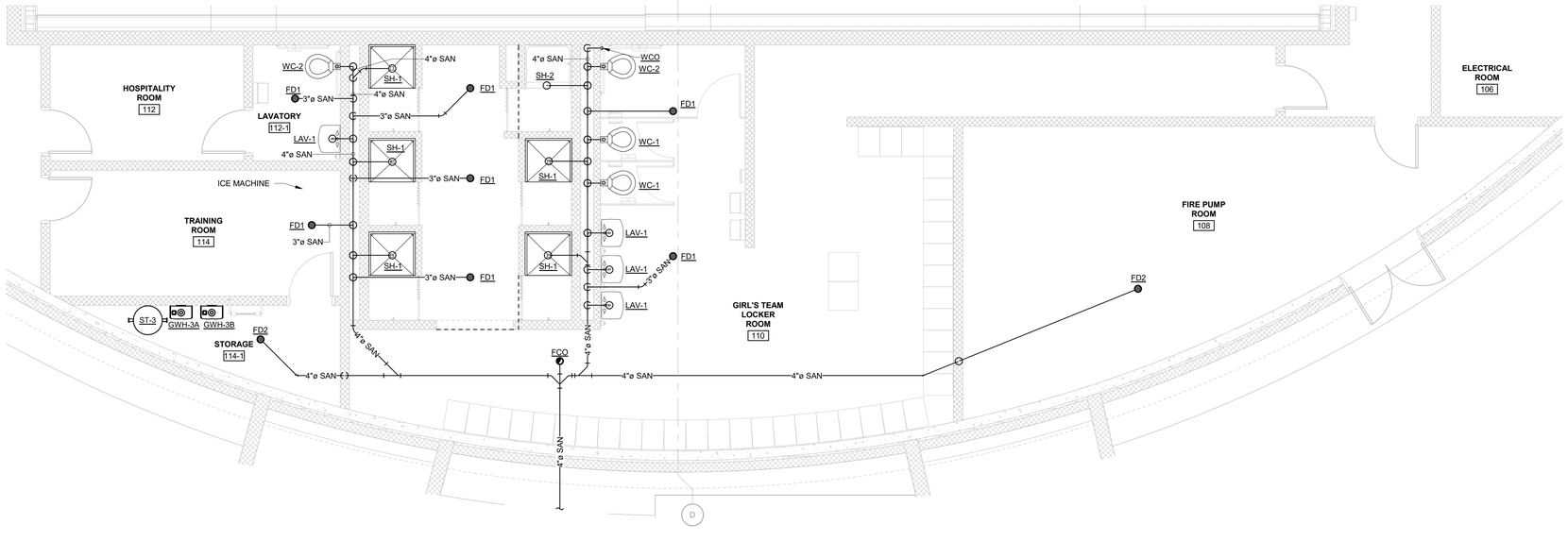

B P-431 ENLARGED HOME TEAM GIRLS LOCKER ROOM WASTE PIPING PLAN
SCALE: 1/4" = 1'-0"

TRUE NORTH
PROJECT NORTH
0 2' 4' 8'
SCALE: 1/4" = 1'-0"

TETRA TECH
www.tetratech.com
240 Continental Drive, Suite 200
Newark, DE 19713
Tel: 302.738.7551 Fax: 302.454.3989

SOUTH CAROLINA LICENSED ENGINEER ERIC D. MONDOR No. 38441
12/12/2024

BARNWELL SCHOOL DISTRICT 45
OWNER
770 HAGOOD AVE.
BARNWELL, SC 29812
Tel: 803 541 1300

TETRA TECH
ARCHITECT
MECHANICAL ENGINEER
PLUMBING ENGINEER
ELECTRICAL ENGINEER
240 Continental Drive, Suite
Newark, DE 19713
302.738.7551

THOMAS & HUTTON
CIVIL ENGINEER
1501 MAIN ST.
COLUMBIA, SC 29201
Tel: 803 451 0200

ZZ CONSULTING
STRUCTURAL ENGINEER
640 S. STATE ST.
SHELLEY, ID 83274
Tel: 208 357 5404

MARK	DATE	DESCRIPTION	BY
	12/26/24	ISSUED FOR CONSTRUCTION CONFORMANCE SET	DB

BARNWELL SCHOOL DISTRICT 45
MULTI-USE SAFE ROOM

PLUMBING ENLARGED FIRST FLOOR WASTE PIPING PLAN

Project No.:	200-207015-20004
Designed By:	APS
Drawn By:	APS
Checked By:	RM

P-431

Copyright. Tetra Tech

12/11/2024 8:17:37 AM BIM 360://200-207015-20004 - Barnwell Dome/M&P_BARN_DOME_r2019.rvt

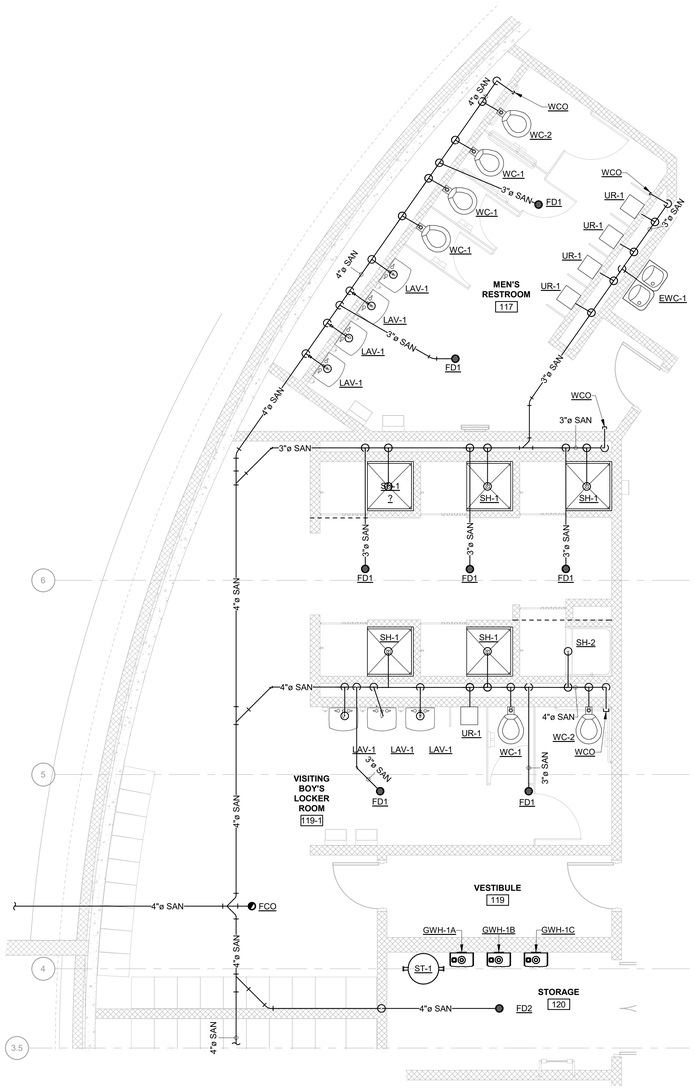

A P-432 ENLARGED VISITING TEAM BOYS LOCKER ROOM/GANG TOILET WASTE PIPING PLAN
SCALE: 1/4" = 1'-0"

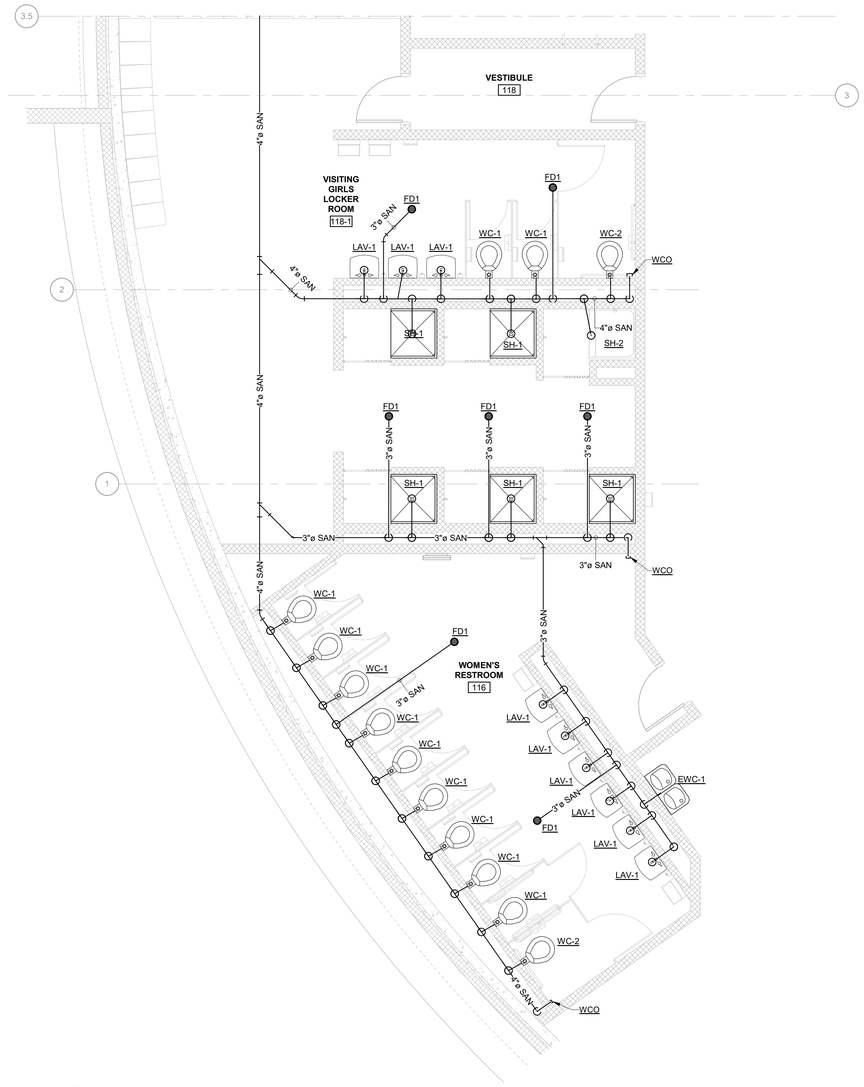

B P-432 ENLARGED VISITING TEAM GIRLS LOCKER ROOM/GANG TOILET WASTE PIPING PLAN
SCALE: 1/4" = 1'-0"

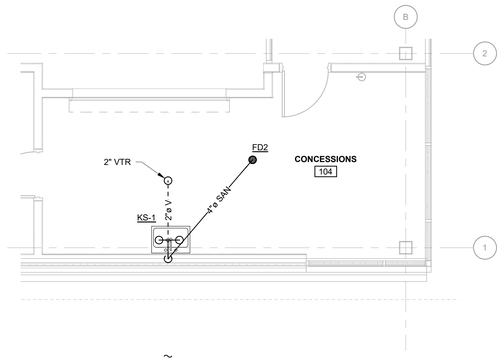

C P-432 ENLARGED CONCESSSIONS - SANITARY PLAN
SCALE: 1/4" = 1'-0"

TRUE NORTH
PROJECT NORTH
0 2' 4' 8'
SCALE: 1/4" = 1'-0"

TETRA TECH
www.tetratech.com
240 Continental Drive, Suite 200
Newark, DE 19713
Tel: 302.738.7551 Fax: 302.454-3988

SOUTH CAROLINA LICENSED ENGINEER ERIC D. MONDOR No. 38441
12/12/2024

BARNWELL SCHOOL DISTRICT 45
OWNER
770 HAGOOD AVE.
BARNWELL, SC 29812
Tel: 803 541 1300

TETRA TECH
ARCHITECT
MECHANICAL ENGINEER
PLUMBING ENGINEER
ELECTRICAL ENGINEER
240 Continental Drive, Suite
Newark, DE 19713
302.738.7551

THOMAS & HUTTON
CIVIL ENGINEER
1501 MAIN ST.
COLUMBIA, SC 29201
Tel: 803 451 0200

ZZ CONSULTING
STRUCTURAL ENGINEER
640 S. STATE ST.
SHELLEY, ID 83274
Tel: 208 357 5404

MARK	DATE	DESCRIPTION	BY
	12/26/24	ISSUED FOR CONSTRUCTION CONFORMANCE SET	DB

BARNWELL SCHOOL DISTRICT 45
MULTI-USE SAFE ROOM

PLUMBING ENLARGED FIRST FLOOR WASTE PIPING PLAN

Project No.:	200-207015-20004
Designed By:	APS
Drawn By:	APS
Checked By:	RM

P-432

Copyright: Tetra Tech

12/11/2024 8:17:43 AM BIM 360://200-207015-20004 - Barnwell Dome\M&P_BARN_DOME_v2019.rvt

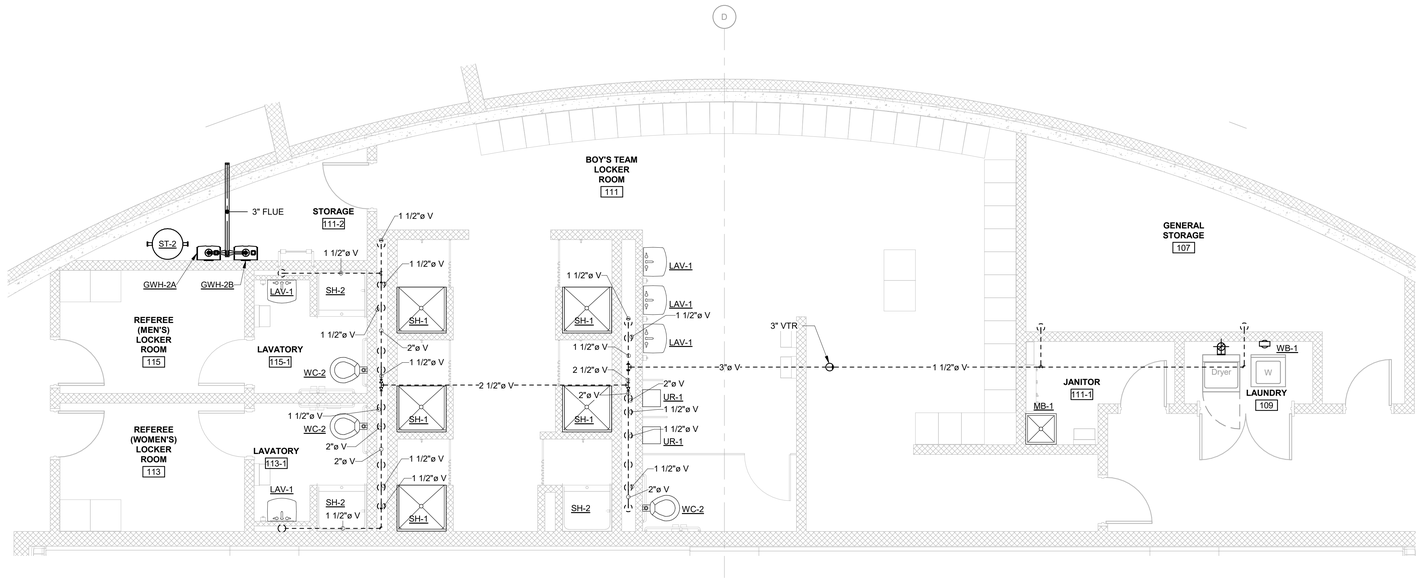

A P-433 ENLARGED HOME TEAM BOYS LOCKER ROOM VENT PIPING PLAN
SCALE: 1/4" = 1'-0"

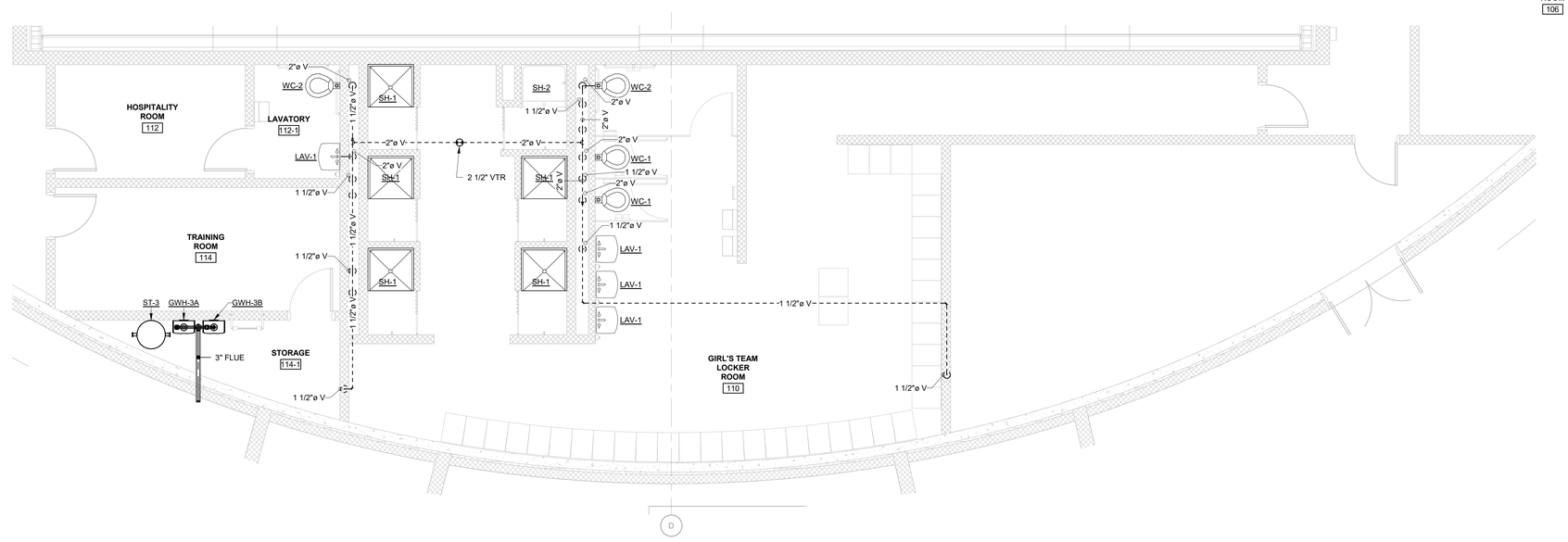

B P-433 ENLARGED HOME TEAM GIRLS LOCKER ROOM VENT PIPING PLAN
SCALE: 1/4" = 1'-0"

TETRA TECH
www.tetratech.com
240 Continental Drive, Suite 200
Newark, DE 19713
Tel: 302.738.7551 Fax: 302.454.3988

SOUTH CAROLINA PROFESSIONAL ENGINEER No. 38441 ERIC D. MONDOR
12/12/2024

BARNWELL SCHOOL DISTRICT 45
OWNER
770 HAGOOD AVE.
BARNWELL, SC 29812
Tel: 803 541 1300

TETRA TECH
ARCHITECT
MECHANICAL ENGINEER
PLUMBING ENGINEER
ELECTRICAL ENGINEER
240 Continental Drive, Suite
Newark, DE 19713
302.738.7551

THOMAS & HUTTON
CIVIL ENGINEER
1501 MAIN ST.
COLUMBIA, SC 29201
Tel: 803 451 0200

ZZ CONSULTING
STRUCTURAL ENGINEER
640 S. STATE ST.
SHELLEY, ID 83274
Tel: 208 357 5404

MARK	DATE	DESCRIPTION	BY
	12/26/24	ISSUED FOR CONSTRUCTION CONFORMANCE SET	DB

BARNWELL SCHOOL DISTRICT 45
MULTI-USE SAFE ROOM

PLUMBING ENLARGED FIRST FLOOR VENT PIPING PLAN

Project No.:	200-207015-20004
Designed By:	APS
Drawn By:	APS
Checked By:	RM

P-433

TRUE NORTH
PROJECT NORTH
0 2' 4' 8'
SCALE: 1/4" = 1'-0"

Copyright. Tetra Tech

12/11/2024 8:17:46 AM BIM 360://200-207015-20004 - Barnwell Dome/M&P_BARN_DOME_r2019.rvt

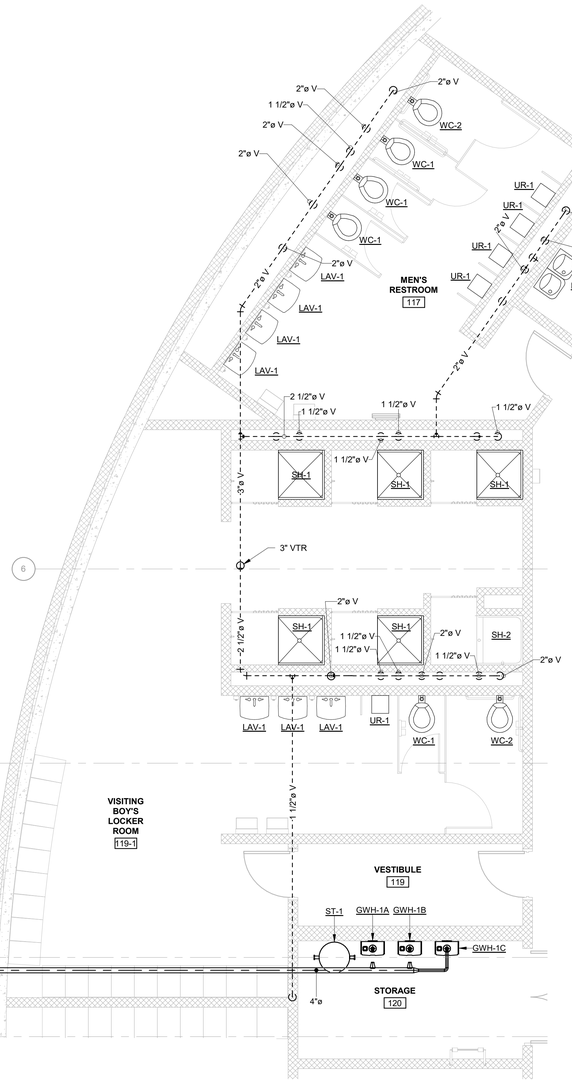

A P-434 ENLARGED VISITING TEAM BOYS LOCKER ROOM/GANG TOILET VENT PIPING PLAN

SCALE: 1/4" = 1'-0"

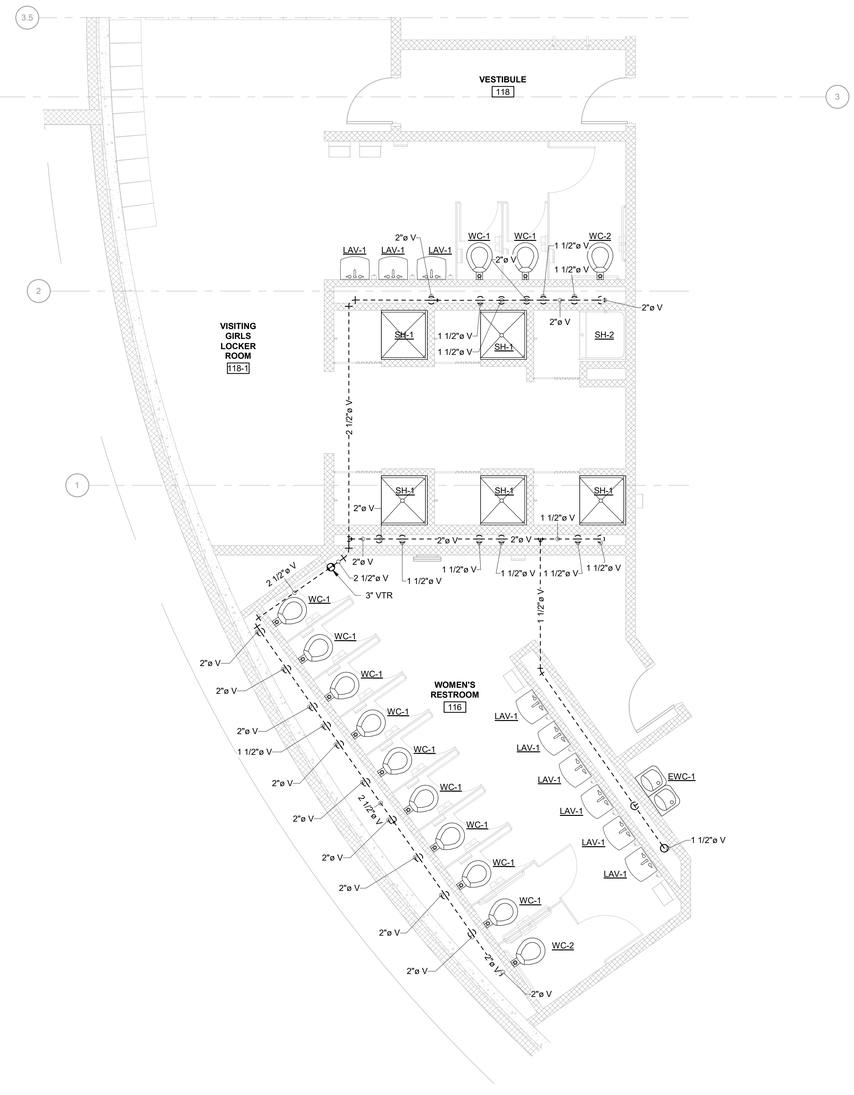

B P-434 ENLARGED VISITING TEAM GIRLS LOCKER ROOM/GANG TOILET VENT PIPING PLAN

SCALE: 1/4" = 1'-0"

TRUE NORTH

PROJECT NORTH

0 2' 4' 8'

SCALE: 1/4" = 1'-0"

TETRA TECH
www.tetratech.com
240 Continental Drive, Suite 200
Newark, DE 19713
Tel: 302.738.7551 Fax: 302.454.3988

SOUTH CAROLINA LICENSED ENGINEER No. 38441 ERIC D. MONDOR

12/12/2024

BARNWELL SCHOOL DISTRICT 45
OWNER
770 HAGOOD AVE.
BARNWELL, SC 29812
Tel: 803 541 1300

TETRA TECH
ARCHITECT
MECHANICAL ENGINEER
PLUMBING ENGINEER
ELECTRICAL ENGINEER
240 Continental Drive, Suite
Newark, DE 19713
302.738.7551

THOMAS & HUTTON
CIVIL ENGINEER
1501 MAIN ST.
COLUMBIA, SC 29201
Tel: 803 451 0200

ZZ CONSULTING
STRUCTURAL ENGINEER
640 S. STATE ST.
SHELLEY, ID 83274
Tel: 208 357 5404

MARK	DATE	DESCRIPTION	BY
	12/26/24	ISSUED FOR CONSTRUCTION CONFORMANCE SET	DB

BARNWELL SCHOOL DISTRICT 45
MULTI-USE SAFE ROOM

PLUMBING ENLARGED FIRST FLOOR VENT PIPING PLAN

Project No.:	200-207015-20004
Designed By:	APS
Drawn By:	APS
Checked By:	RM

P-434

Copyright: Tetra Tech

12/11/2024 8:17:51 AM BIM 360://200-207015-20004 - Barnwell Dome/M&P_BARN_DOME_v2019.rvt

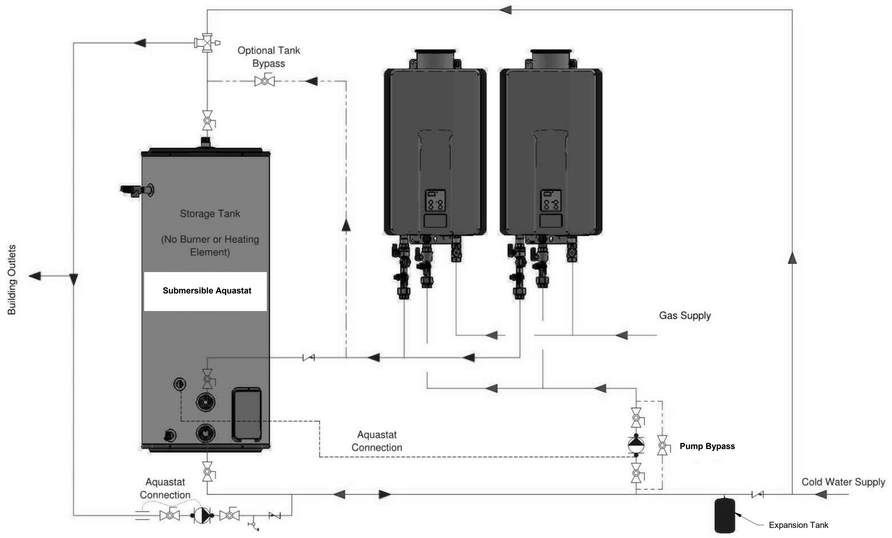

1 DOMESTIC HOT WATER HEATER DETAIL
N.T.S.

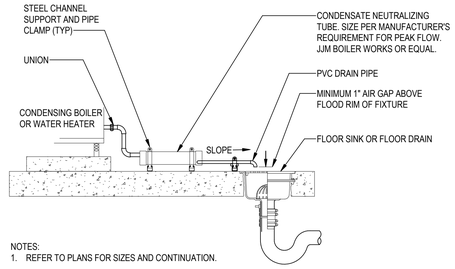

NOTES:
1. REFER TO PLANS FOR SIZES AND CONTINUATION.

2 CONDENSATE NEUTRALIZER
N.T.S.

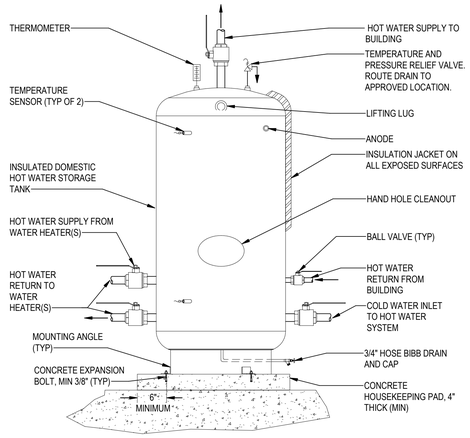

NOTES:
1. COORDINATE WITH STRUCTURAL DESIGN FOR CONCRETE ATTACHMENT.
2. INSULATE TANK AND FITTINGS.

3 HOT WATER STORAGE TANK
N.T.S.

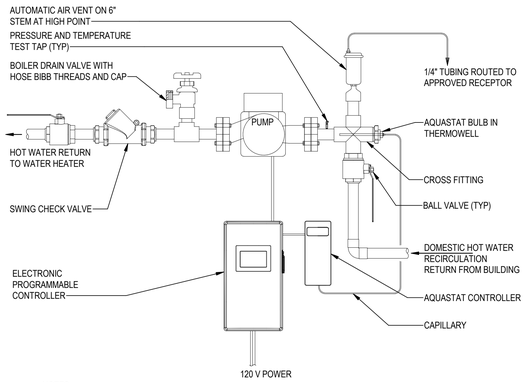

NOTES:
1. INSULATE ALL FITTINGS, VALVES, CHECK VALVE, PIPE AND PUMP BODY. EXTEND MEASUREMENT PORT TO EXTERIOR OF INSULATION.
2. RECIRCULATION BOOSTER PUMP SHALL BE LEAD-FREE CONSTRUCTION.
3. PROGRAMMABLE CONTROLLER SHALL BE SET TO ALLOW PUMP OPERATION ONLY DURING OCCUPIED HOURS.
4. AQUASTAT CONTROLLER SHALL BE SET TO DISENGAGE THE PUMP WHEN THE RETURN WATER TEMPERATURE IS ABOVE 95 DEGREES F (ADJUSTABLE) OR AS ALLOWED BY LOCAL ENERGY CODE.
5. PROVIDE AUTOMATIC AIR VENT AS REQUIRED BY LOCAL ENERGY CODE TO REDUCE CAVITATION. ROUTE DRAIN LINE TO APPROVED DRAINAGE RECEPTOR. INSTALL AIR VENT WITHIN 48" OF PUMP INLET.
6. PROVIDE HOSE BIBB AS REQUIRED BY LOCAL ENERGY CODE FOR MAINTENANCE AIR BLEEDING AND PRIMING.

4 HW RECIRC PUMP-HORIZONTAL
N.T.S.

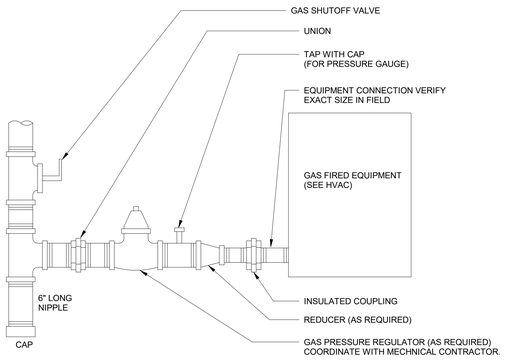

NOTE:
PRIME & PAINT ALL PIPING TO MATCH NEAREST STRUCTURE. ARCHITECT TO APPROVE LABEL AT 6'-0" O.C.

5 GAS FIRED EQUIPMENT CONNECTION
N.T.S.

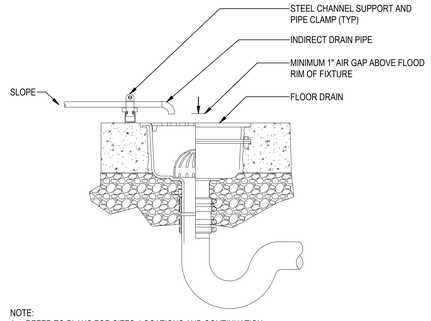

NOTE:
1. REFER TO PLANS FOR SIZES, LOCATIONS AND CONTINUATION.

6 INDIRECT WASTE AIR GAP
N.T.S.

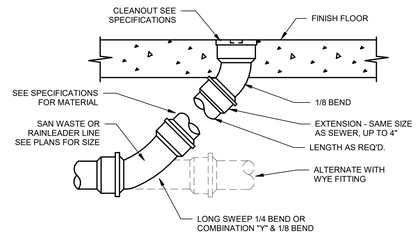

7 FLOOR CLEANOUT DETAIL
N.T.S.

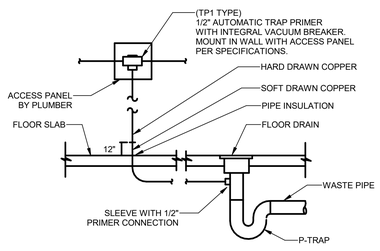

8 FLOOR DRAIN TRAP PRIMER
N.T.S.

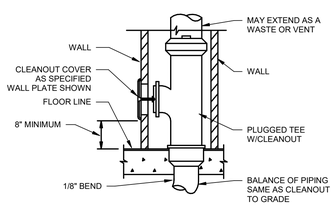

9 WALL CLEANOUT DETAIL
N.T.S.

TETRA TECH
www.tetratech.com
240 Continental Drive, Suite 200
Newark, DE 19713
Tel: 302.738.7551 Fax: 302.454.3989

SOUTH CAROLINA LICENSED ENGINEER ERIC D. MONDOR No. 38441
12/12/2024

BARNWELL SCHOOL DISTRICT 45
OWNER
770 HAGOOD AVE.
BARNWELL, SC 29812
Tel: 803 541 1300

TETRA TECH
ARCHITECT
MECHANICAL ENGINEER
PLUMBING ENGINEER
ELECTRICAL ENGINEER
240 Continental Drive, Suite
Newark, DE 19713
302.738.7551

THOMAS & HUTTON
CIVIL ENGINEER
1501 MAIN ST.
COLUMBIA, SC 29201
Tel: 803 451 0200

ZZ CONSULTING
STRUCTURAL ENGINEER
640 S. STATE ST.
SHELLEY, ID 83274
Tel: 208 357 5404

MARK	DATE	DESCRIPTION	BY
	12/26/24	ISSUED FOR CONSTRUCTION CONFORMANCE SET	DB

BARNWELL SCHOOL DISTRICT 45
MULTI-USE SAFE ROOM

PLUMBING DETAILS

Project No.:	200-207015-20004
Designed By:	APS
Drawn By:	APS
Checked By:	RM

P-501

Copyright: Tetra Tech

12/11/2024 8:17:52 AM BIM 360://200-207015-20004 - Barnwell Dome/M&P_BARN_DOME_v2019.rvt

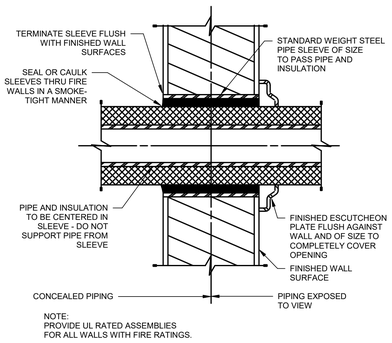

1 PIPE SLEEVE THRU INTERIOR WALL
N.T.S.

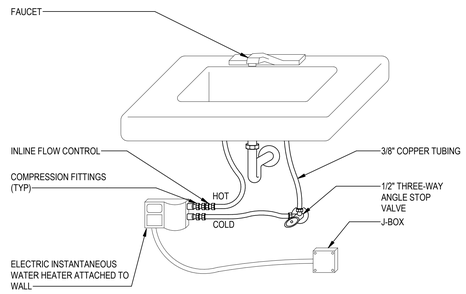

NOTES:
1. REFER TO PLANS FOR SCHEDULE AND LOCATION. INSTALL PER MANUFACTURER'S INSTRUCTIONS.
2. FOR ADA COMPLIANCE INSULATE EXPOSED WATER PIPES,DRAIN PIPE, VALVES AND FITTINGS. THERE SHALL BE NO SHARP OR ABRASIVE SURFACES UNDER THE SINK.

2 INSTANTANEOUS WATER HEATER
N.T.S.

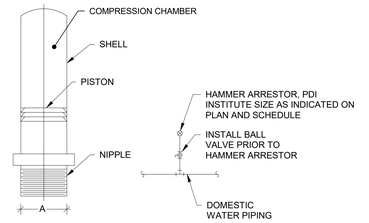

P.D.I. SYMBOL	FIXTURE UNIT RATING	A SIZE
A	1 - 11	1/2"
B	12 - 32	3/4"
C	33 - 60	1"
D	61 - 113	1-1/4"
E	114 - 154	1-1/2"
F	155 - 330	2"

3 WATER HAMMER ARRESTER DETAIL
N.T.S.

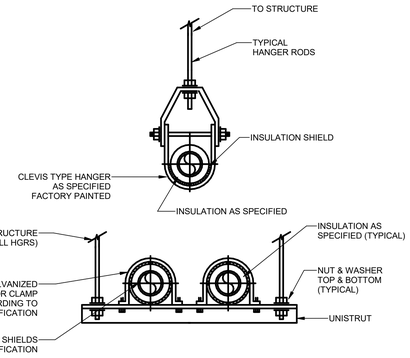

4 PIPE HANGER CLEVIS/TRAPEZE
N.T.S.

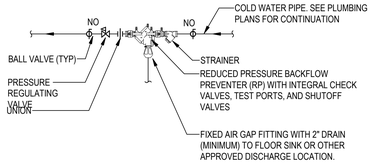

NOTES:
1. PROVIDE FOR ALL CONNECTIONS BETWEEN DOMESTIC COLD WATER AND HVAC SYSTEM SERVICES.
2. INSULATE AND HEAT TRACE ALL PIPING AND FITTINGS LOCATED OUTSIDE THE BUILDING IN FREEZING CLIMATES. COORDINATE WITH ELECTRICAL DESIGN.

5 REDUCED PRESSURE BACKFLOW PREVENTER
N.T.S.

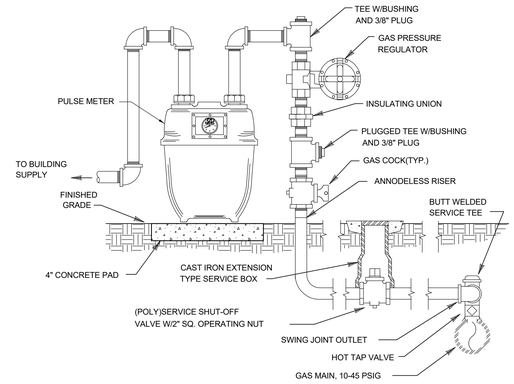

NOTE: LINE SIZES AS CALLED FOR ON SITE PLAN

6 GAS SERVICE ENTRANCE DETAIL
N.T.S.

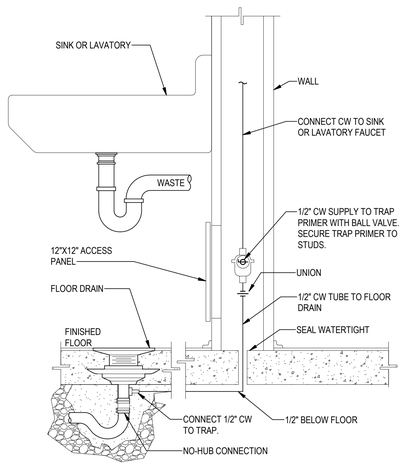

NOTES:
1. NON-POWERED UNDER-LAV TRAP PRIMER. TRAP PRIMER TO MOUNTED IN LINE WITH COLD WATER SERVICE TO FAUCET. MOUNT TRAP PRIMER A MINIMUM OF 12" ABOVE FINISHED FLOOR. PROVIDE ACCESS DOOR TO VALVES AND FITTINGS IN WALL.

7 FLOOR DRAIN WITH TRAP PRIMER
N.T.S.

TETRA TECH
www.tetratech.com
240 Continental Drive, Suite 200
Newark, DE 19713
Tel: 302.738.7551 Fax: 302.454.3989

SOUTH CAROLINA LICENSED No. 38441 ENGINEER ERIC D. MONDAY

12/12/2024

BARNWELL SCHOOL DISTRICT 45
OWNER
770 HAGOOD AVE.
BARNWELL, SC 29812
Tel: 803 541 1300

TETRA TECH
ARCHITECT
MECHANICAL ENGINEER
PLUMBING ENGINEER
ELECTRICAL ENGINEER
240 Continental Drive, Suite
Newark, DE 19713
302.738.7551

THOMAS & HUTTON
CIVIL ENGINEER
1501 MAIN ST.
COLUMBIA, SC 29201
Tel: 803 451 0200

ZZ CONSULTING
STRUCTURAL ENGINEER
640 S. STATE ST
SHELLEY, ID 83274
Tel: 208 357 5404

MARK	DATE	DESCRIPTION	BY
	12/26/24	ISSUED FOR CONSTRUCTION CONFORMANCE SET	DB

BARNWELL SCHOOL DISTRICT 45
MULTI-USE SAFE ROOM

PLUMBING DETAILS

Project No.:	200-207015-20004
Designed By:	APS
Drawn By:	APS
Checked By:	RM

P-502

Copyright: Tetra Tech

12/11/2024 6:17:52 AM BIM 360://200-207015-20004 - Barnwell Dome/M&P_BARN_DOME_v2019.rvt

PLUMBING FIXTURE SCHEDULE

MARK	DESCRIPTION	MANUFACTURER OR APPROVED EQUAL	MODEL	CONNECTIONS				NOTES
				CW	HW	WASTE	VENT	
WC-1	WATER CLOSET, WALL MOUNTED (1.28 GPF)	AMERICAN STANDARD	3351.101	1"		4"	2"	AMERICAN STANDARD FLUSH VALVE: 6047.121.002, SEAT: 5901.100
WC-2	WATER CLOSET, WALL MOUNTED, H.C. (1.28 GPF)	AMERICAN STANDARD	3351.101	1"	-	4"	2"	AMERICAN STANDARD FLUSH VALVE: 6047.121.002, SEAT: 5901.100
UR-1	URINAL, WALL MOUNTED, H.C. (0.5 GPF)	AMERICAN STANDARD	6590.001	3/4"	-	2"	1-1/2"	SLOAN FLUSH VAVLE: 6045.051.002
LAV-1	WALL MOUNTED LAVATORY, H.C. (0.5 GPM)	AMERICAN STANDARD	9141.011	1/2"	1/2"	1-1/2"	1-1/2"	SPEAKMAN FAUCET: SC-4072-E-LD. PROVIDE TEMPERATURE LIMITING DEVICE. 110°F MAX.
KS-1	KITCHEN SINK (1.5 GPM)	ELKAY	LR3322	3/4"	3/4"	2"	1-1/2"	AMERICAN STANDARD FAUCET: 4175.700
MB-1	MOP BASIN, FLOOR MOUNTED (2.2 GPM)	FIAT	TSB3010	1/2"	1/2"	3"	1-1/2"	SPEAKMAN FAUCET: SC-5811
SH-1	SHOWER (1.5 GPM), 36X36 BASIN	DELTA	T14294	3/4"	3/4"	3"	1-1/2"	-
SH-2	SHOWER, HC (1.5 GPM), 36X36 BASIN	DELTA	T14294	3/4"	3/4"	3"	1-1/2"	INCLUDE HAND SHOWER
EWC-1	BI-LEVEL WATER COOLER, H.C. (8 GPH)	HALSEY TAYLOR	HTHB-HACG8BLSS-WF	1/2"	-	1-1/2"	1-1/2"	PROVIDE WITH BOTTLE FILLING STATION
WB-1	WASHER OUTLET BOX	IPS CORP.	MWB13	1/2"	1/2"	2"	-	1/2" SWEAT, QUARTER TURN VALVES
FD1	FLOOR DRAIN, 5" STRAINER	ZURN	ZN415B	-	-	3"	1-1/2"	WITH TRAP PRIMER CONNECTION
FD2	FLOOR DRAIN, 6" STRAINER	ZURN	ZN415B	-	-	4"	1-1/2"	WITH TRAP PRIMER CONNECTION
HB	HOSE BIBB	ZURN	Z1341	3/4"	-	-	-	WITH INTEGRAL VACUUM BREAKER
WH	NON-FREEZE WALL HYDRANT	ZURN	Z1321	3/4"	-	-	-	WITH INTEGRAL VACUUM BREAKER
TP1	TRAP PRIMER	ZURN	Z1022	1/2"	-	-	-	-
TP2	TRAP PRIMER	ZURN	Z1022	1/2"	-	-	-	2 OUTLET DISTRIBUTION SYSTEM
TP3	TRAP PRIMER	ZURN	Z1022	1/2"	-	-	-	3 OUTLET DISTRIBUTION SYSTEM
TP4	TRAP PRIMER	ZURN	Z1022	1/2"	-	-	-	4 OUTLET DISTRIBUTION SYSTEM
ETP	ELECTRONIC TRAP PRIMER	ZURN	Z1020	1/2"	-	-	-	5 OUTLET DISTRIBUTION SYSTEM
RD1	ROOF DRAIN (COMBINATION)	ZURN	Z199	-	-	4"	-	-
DN1	DOWNSPOUT NOZZLE	ZURN	Z191	-	-	5"	-	-
FCO	FLOOR CLEANOUT	ZURN	ZN1400	-	-	-	-	-
WCO	WALL CLEANOUT	ZURN	Z1446	-	-	-	-	-
RPBP	REDUCED PRESSURE BACKFLOW PREVENTER	ZURN	375	3"	-	-	-	-
TMV	THERMOSTATIC MIXING VALVE	POWERS CONTROLS	LFMM434	1-1/4"	1-1/4"	-	-	MIXING TEMPERATURE SET TO 110°F, 1-1/4" INLET, 1-1/2" OUTLET, TEMP/PRESS. GAUGE ON OUTLET
WHA-X	WATER HAMMER ARRESTER	ZURN	1260XL	-	-	-	-	REFER TO DETAIL 3 ON P-502 AND RISERS FOR SIZES

NOTES:
1. H.C. DENOTES HANDICAPPED, INSTALL PER ADA REQUIREMENTS.
2. PRODUCT BRANDS SHOWN ON DRAWINGS ARE FOR INFORMATIONAL PURPOSES ONLY AND SHALL NOT BE CONSTRUED AS THE ONLY PRODUCT AVAILABLE. OTHER BRAND SELECTED SHALL MEET THE PERFORMANCE AND MATERIAL SPECIFICATIONS OF PRODUCTS LISTED.

CIRCULATING PUMP SCHEDULE

MARK	MANUFACTURER / MODEL	GPM	TD HEAD IN FT.	ELECTRICAL				SERVING	LOCATION	REMARKS
				HP	V	PH	HZ			
CP-1	GRUNDFOS / MAGNA3 32-60 F (N)	4	20	1/25	115	1	60	90° F RETURN	STORAGE 120	STAINLESS STEEL HOUSING AND BAS CONTROLS
CP-2	GRUNDFOS / MAGNA3 32-60 F (N)	4	20	1/25	115	1	60	90° F RETURN	STORAGE 111-2	STAINLESS STEEL HOUSING AND BAS CONTROLS
CP-3	GRUNDFOS / MAGNA3 32-60 F (N)	4	20	1/25	115	1	60	90° F RETURN	STORAGE 114-1	STAINLESS STEEL HOUSING AND BAS CONTROLS

GAS-FIRED WATER HEATER SCHEDULE

MARK	LOCATION	MAXIMUM MBH	RECOVERY CAPACITY (GPH)	EFFICIENCY (%)	DISCHARGE TEMP. °F	TEMP. RISE °F	ELECTRICAL	NATURAL GAS			MANUFACTURER/MODEL
							VOLTS/ PHASE	CFH	PRESSURE IN W.C.	FLUE SIZE	
GWH-1A	STORAGE ROOM 111-2	199	279	97	140°	100°	120/1	199	11"	2"	RINNAI: CX199i
GWH-1B	STORAGE ROOM 111-2	199	279	97	140°	100°	120/1	199	11"	2"	RINNAI: CX199i
GWH-1C	STORAGE ROOM 111-2	199	279	97	140°	100°	120/1	199	11"	2"	RINNAI: CX199i
GWH-2A	STORAGE ROOM 121	199	279	97	140°	100°	120/1	199	11"	2"	RINNAI: CX199i
GWH-2B	STORAGE ROOM 121	199	279	97	140°	100°	120/1	199	11"	2"	RINNAI: CX199i
GWH-3A	STORAGE ROOM 114-1	199	279	97	140°	100°	120/1	199	11"	2"	RINNAI: CX199i
GWH-3B	STORAGE ROOM 114-1	199	279	97	140°	100°	120/1	199	11"	2"	RINNAI: CX199i

NOTES:
1. PROVIDE OPTIONAL CONCENTRIC VENT KIT.
2. PROVIDE CONDENSATE NEUTRALIZATION KIT.
3. PIPING TO AND FROM EACH WATER HEATER AND HOT WATER STORAGE TANK SHALL BE ROUTED HORIZONTALLY AND DOWNWARD A MINIMUM OF 2 FEET BEFORE TURNING IN AN UPWARD DIRECTION.

EXPANSION TANK SCHEDULE

MARK	SERVICE	MANUFACTURER / MODEL	TOTAL VOLUME (GALLONS)	ACCEPT. VOLUME (GALLONS)	MAXIMUM PRESSURE (PSIG)	CONNECTION SIZE	LOCATION	REMARKS
ET-1	DOMESTIC HOT WATER	AMTROL / ST-25V	10.3	10.3	150	3/4"	STORAGE 111-2	15" DIA. x 19"H, ASME-STAMPED, 50 PSIG PRECHARGED
ET-2	DOMESTIC HOT WATER	AMTROL / ST-25V	10.3	10.3	150	3/4"	STORAGE 121	15" DIA. x 19"H, ASME-STAMPED, 50 PSIG PRECHARGED
ET-3	DOMESTIC HOT WATER	AMTROL / ST-25V	10.3	10.3	150	3/4"	STORAGE 114-1	15" DIA. x 19"H, ASME-STAMPED, 50 PSIG PRECHARGED

INSTANTANEOUS WATER HEATER SCHEDULE

MARK	MANUFACTURER	MODEL NO.	MINIMUM OPERATING PRESSURE (PSI)	MAXIMUM OPERATING PRESSURE (PSI)	OPERATING WEIGHT (LBS.)	RISE AT 0.5 GPM °F	ELECTRICAL CHAR.					APPROXIMATE SIZE
							KW	AMPS	VOLTS	PH.	HZ	
IWH-1	EEMAX	SP4277	25.0	150.0	4.0	56.0	4.1	14.8	277	1	60	9.67"x5.22"x3"

STORAGE WATER HEATER TANK SCHEDULE

MARK	LOCATION	STORAGE CAPACITY (GAL.)	DOMESTIC WATER TEMP. (°F)		HEATING SURFACE (SQ. FT.)	PRESSURE RELIEF (PSI)	MANUFACTURER/MODEL
			EWT	LWT			
ST-1	STORAGE 120	119	140.0	140.0	NONE	125	RINNAI/ST119
ST-2	STORAGE 112	119	140.0	140.0	NONE	125	RINNAI/ST119
ST-3	STORAGE 141	119	140.0	140.0	NONE	125	RINNAI/ST119

TETRA TECH
www.tetratech.com
240 Continental Drive, Suite 200
Newark, DE 19713
Tel: 302.738.7551 Fax: 302.454-3988

SOUTH CAROLINA LICENSED ARCHITECT No. 38441 ERIC D. MONDOR

12/12/2024

BARNWELL SCHOOL DISTRICT 45
OWNER
770 HAGOOD AVE.
BARNWELL, SC 29812
Tel: 803 541 1300

TETRA TECH
ARCHITECT
MECHANICAL ENGINEER
PLUMBING ENGINEER
ELECTRICAL ENGINEER
240 Continental Drive, Suite
Newark, DE 19713
302.738.7551

THOMAS & HUTTON
CIVIL ENGINEER
1501 MAIN ST.
COLUMBIA, SC 29201
Tel: 803 451 0200

ZZ CONSULTING
STRUCTURAL ENGINEER
640 S. STATE ST.
SHELLEY, ID 83274
Tel: 208 357 5404

MARK	DATE	DESCRIPTION	BY
	12/26/24	ISSUED FOR CONSTRUCTION CONFORMANCE SET	DB

BARNWELL SCHOOL DISTRICT 45
MULTI-USE SAFE ROOM

PLUMBING SCHEDULES

Project No.:	200-207015-20004
Designed By:	APS
Drawn By:	APS
Checked By:	RM

P-601

Copyright: Tetra Tech

12/11/2024 8:17:53 AM BIM 360://200-207015-20004 - Barnwell Dome/M&P_BARN_DOME_v2019.rvt

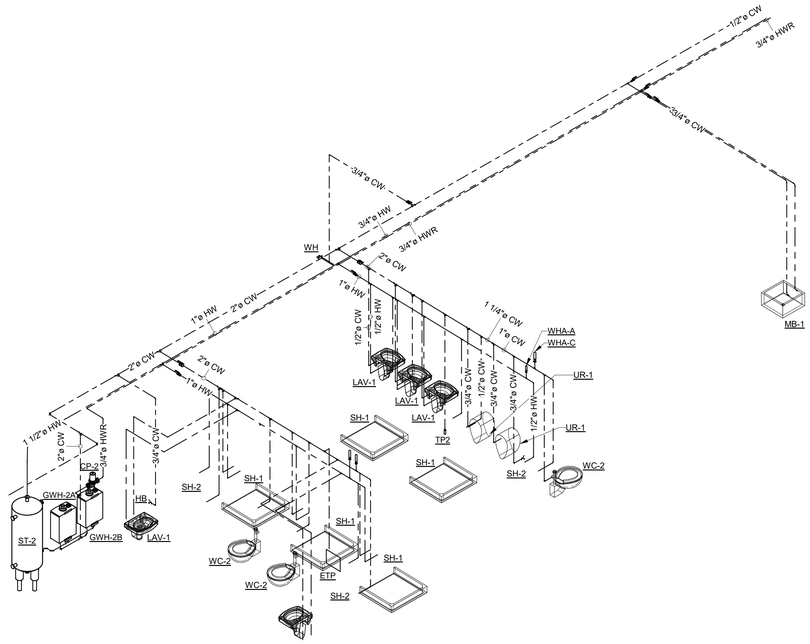

1 P-901 BOY'S TEAM LOCKER ROOM - PRESSURE PIPING RISER DIAGRAM
SCALE:

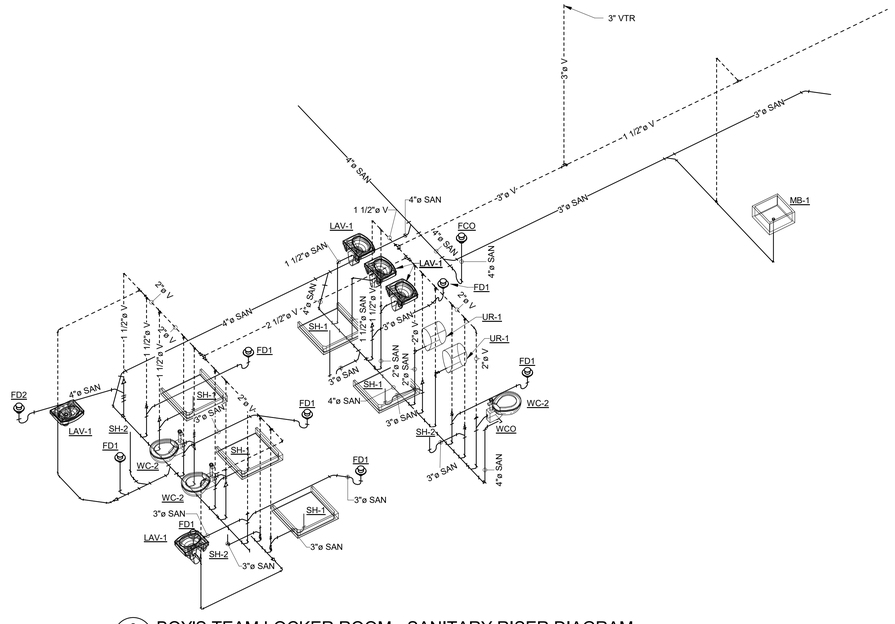

2 P-901 BOY'S TEAM LOCKER ROOM - SANITARY RISER DIAGRAM
SCALE:

TETRA TECH
www.tetratech.com
240 Continental Drive, Suite 200
Newark, DE 19713
Tel: 302.738.7551 Fax: 302.454.3989

SOUTH CAROLINA LICENSED PROFESSIONAL ENGINEER
No. 38441
ERIC D. MONDOR

12/12/2024

BARNWELL SCHOOL DISTRICT 45
OWNER
770 HAGOOD AVE.
BARNWELL, SC 29812
Tel: 803 541 1300

TETRA TECH
ARCHITECT
MECHANICAL ENGINEER
PLUMBING ENGINEER
ELECTRICAL ENGINEER
240 Continental Drive, Suite
Newark, DE 19713
302.738.7551

THOMAS & HUTTON
CIVIL ENGINEER
1501 MAIN ST.
COLUMBIA, SC 29201
Tel: 803 451 0200

ZZ CONSULTING
STRUCTURAL ENGINEER
640 S. STATE ST.
SHELLEY, ID 83274
Tel: 208 357 5404

MARK	DATE	DESCRIPTION	BY
	12/26/24	ISSUED FOR CONSTRUCTION CONFORMANCE SET	DB

BARNWELL SCHOOL DISTRICT 45
MULTI-USE SAFE ROOM

PLUMBING RISER DIAGRAMS

Project No.:	200-207015-20004
Designed By:	APS
Drawn By:	APS
Checked By:	RM

P-901

Copyright. Tetra Tech

12/11/2024 8:17:54 AM BIM 360://200-207015-20004 - Barnwell Dome/M&P_BARN_DOME_r2019.rvt

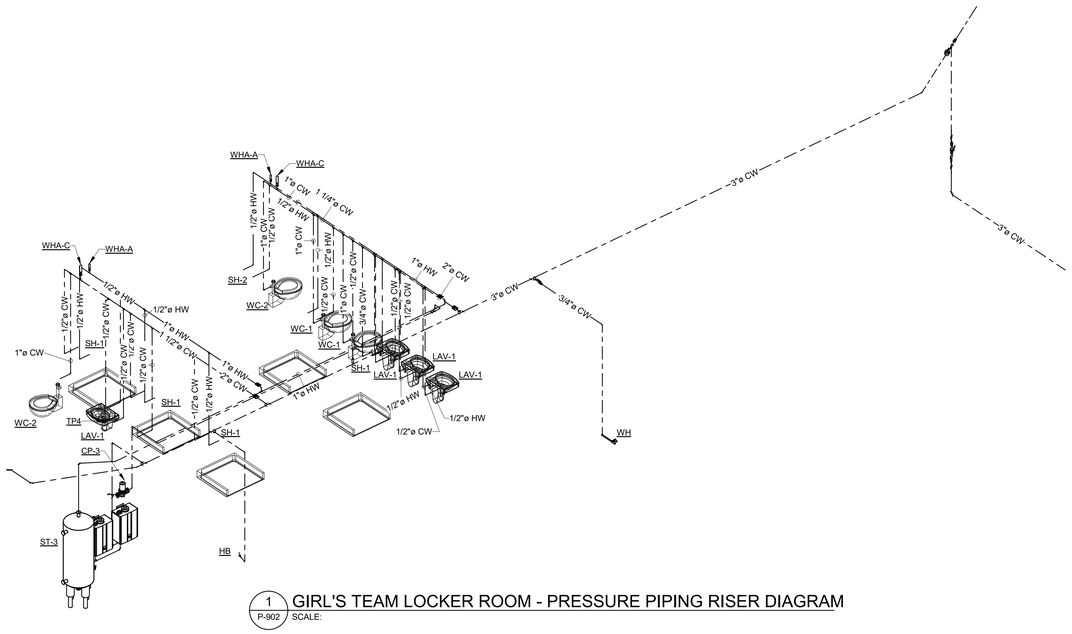

1 P-902 GIRL'S TEAM LOCKER ROOM - PRESSURE PIPING RISER DIAGRAM
SCALE:

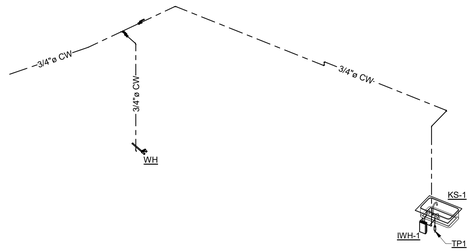

3 P-902 CONCESSIONS - PRESSURE PIPING RISER DIAGRAM
SCALE:

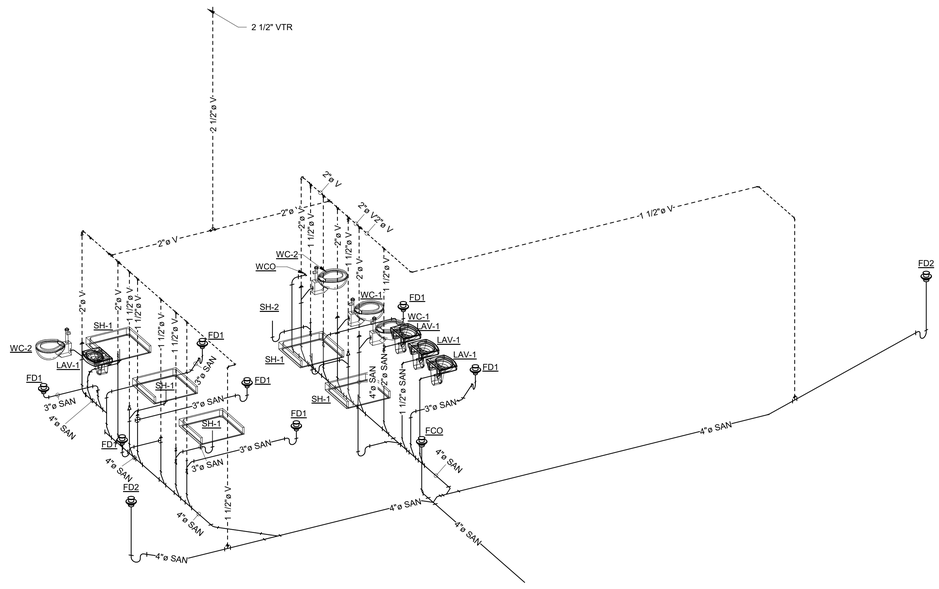

2 P-902 GIRL'S TEAM LOCKER ROOM - SANITARY RISER DIAGRAM
SCALE:

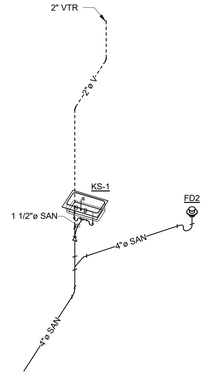

4 P-902 CONCESSIONS - SANITARY RISER DIAGRAM
SCALE:

TETRA TECH
www.tetratech.com
240 Continental Drive, Suite 200
Newark, DE 19713
Tel: 302.738.7551 Fax: 302.454.3989

SOUTH CAROLINA LICENSED PROFESSIONAL ENGINEER
No. 38441
ERIC D. MONDOR

12/12/2024

BARNWELL SCHOOL DISTRICT 45
OWNER
770 HAGOOD AVE.
BARNWELL, SC 29812
Tel: 803 541 1300

TETRA TECH
ARCHITECT
MECHANICAL ENGINEER
PLUMBING ENGINEER
ELECTRICAL ENGINEER
240 Continental Drive, Suite
Newark, DE 19713
302.738.7551

THOMAS & HUTTON
CIVIL ENGINEER
1501 MAIN ST.
COLUMBIA, SC 29201
Tel: 803 451 0200

ZZ CONSULTING
STRUCTURAL ENGINEER
640 S. STATE ST
SHELLEY, ID 83274
Tel: 208 357 5404

MARK	DATE	DESCRIPTION	BY
	12/26/24	ISSUED FOR CONSTRUCTION CONFORMANCE SET	DB

BARNWELL SCHOOL DISTRICT 45
MULTI-USE SAFE ROOM

PLUMBING RISER DIAGRAMS

Project No.:	200-207015-20004
Designed By:	APS
Drawn By:	APS
Checked By:	RM

P-902

Copyright. Tetra Tech

12/11/2024 8:17:58 AM BIM 360://200-207015-20004 - Barnwell Dome/M&P_BARN_DOME_r2019.rvt

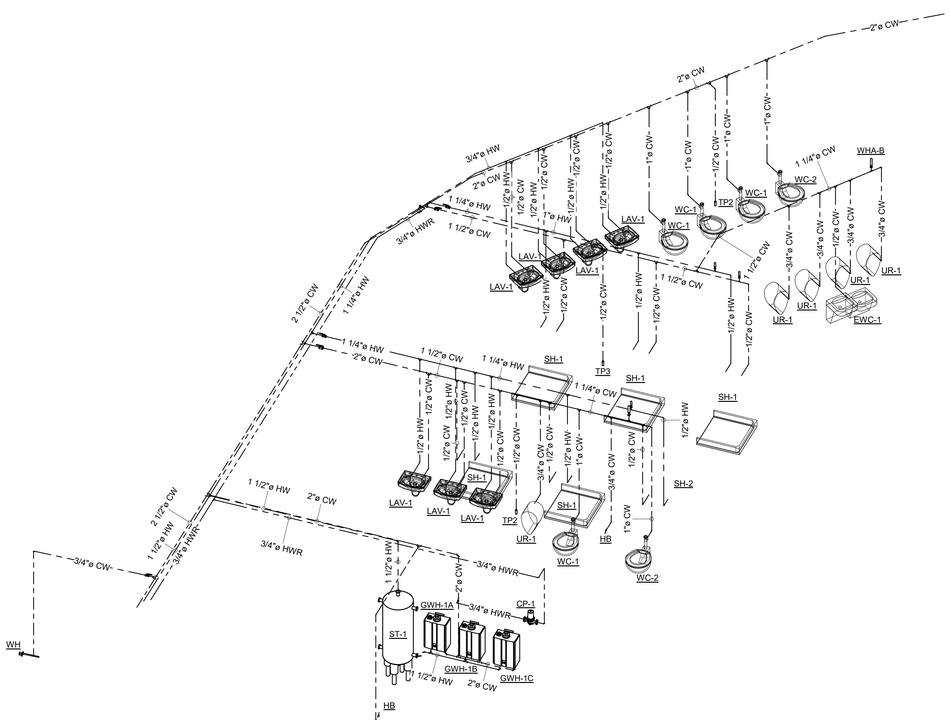

1 P-903 VISITING BOY'S LOCKER ROOM - PRESSURE PIPING RISER DIAGRAM

SCALE:

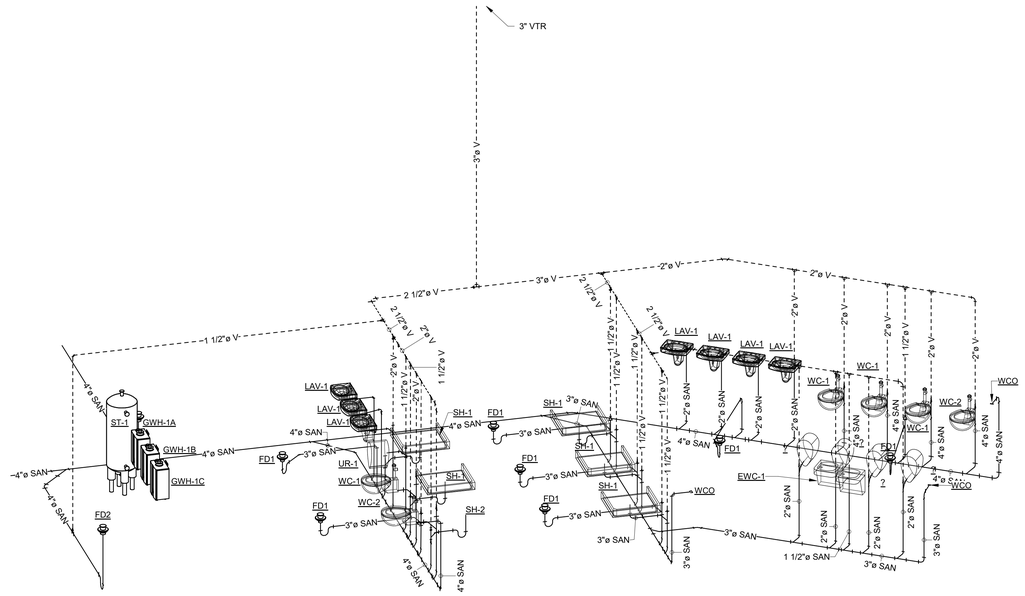

2 P-903 VISITING BOY'S LOCKER ROOM - SANITARY RISER DIAGRAM

SCALE:

TETRA TECH
www.tetratech.com
240 Continental Drive, Suite 200
Newark, DE 19713
Tel: 302.738.7551 Fax: 302.454.3989

SOUTH CAROLINA LICENSED ENGINEER
No. 38441
ERIC D. MONDOR

12/12/2024

BARNWELL SCHOOL DISTRICT 45
OWNER
770 HAGOOD AVE.
BARNWELL, SC 29812
Tel: 803 541 1300

TETRA TECH
ARCHITECT
MECHANICAL ENGINEER
PLUMBING ENGINEER
ELECTRICAL ENGINEER
240 Continental Drive, Suite
Newark, DE 19713
302.738.7551

THOMAS & HUTTON
CIVIL ENGINEER
1501 MAIN ST.
COLUMBIA, SC 29201
Tel: 803 451 0200

ZZ CONSULTING
STRUCTURAL ENGINEER
640 S. STATE ST
SHELLEY, ID 83274
Tel: 208 357 5404

MARK	DATE	DESCRIPTION	BY
	12/26/24	ISSUED FOR CONSTRUCTION CONFORMANCE SET	DB

BARNWELL SCHOOL DISTRICT 45
MULTI-USE SAFE ROOM

PLUMBING RISER DIAGRAMS

Project No.:	200-207015-20004
Designed By:	APS
Drawn By:	APS
Checked By:	RM

P-903

Copyright: Tetra Tech

12/11/2024 8:17:59 AM BIM 360://200-207015-20004 - Barnwell Dome/M&P_BARN_DOME_v2019.rvt

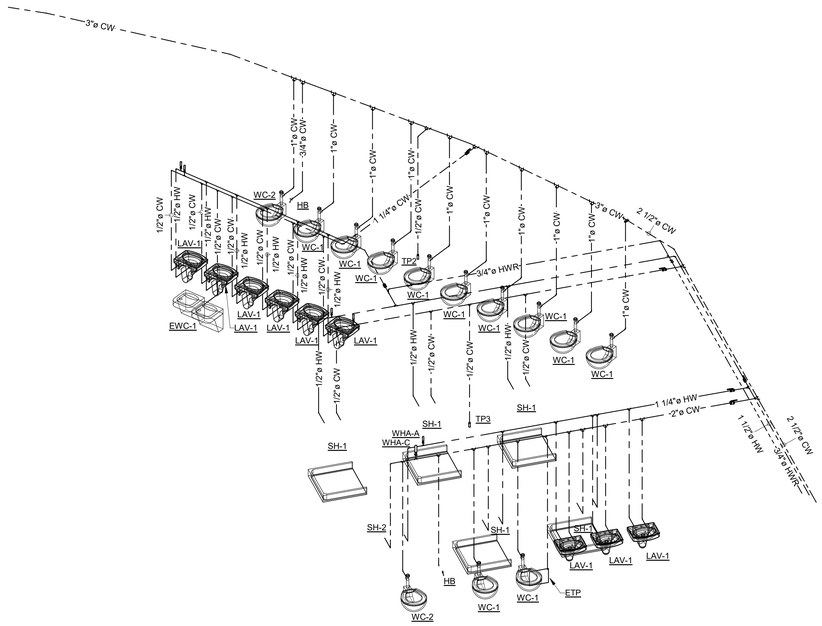

1 VISITING GIRL'S LOCKER ROOM - PRESSURE PIPING RISER DIAGRAM
P-904 SCALE:

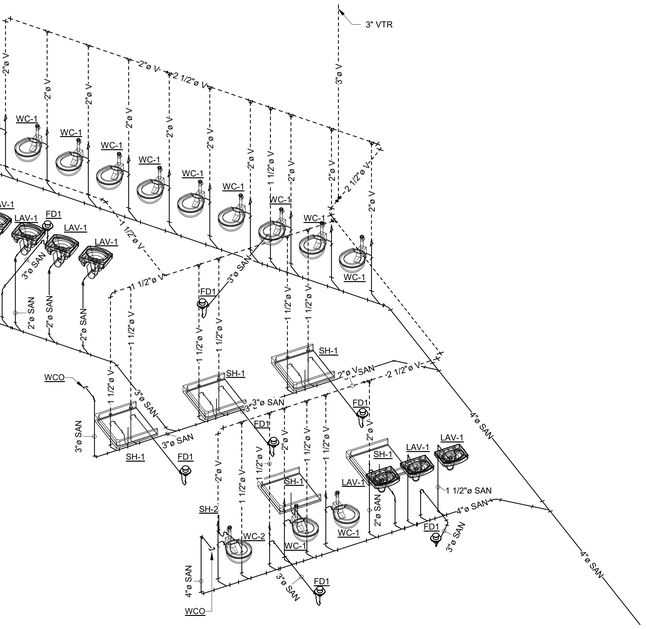

2 VISITING GIRL'S LOCKER ROOM - SANITARY RISER DIAGRAM
P-904 SCALE:

TETRA TECH
www.tetratech.com
240 Continental Drive, Suite 200
Newark, DE 19713
Tel: 302.738.7551 Fax: 302.454.3989

SOUTH CAROLINA LICENSED PROFESSIONAL ENGINEER
No. 38441
ERIC D. MONDOR

12/12/2024

BARNWELL SCHOOL DISTRICT 45
OWNER
770 HAGOOD AVE
BARNWELL, SC 29812
Tel: 803 541 1300

TETRA TECH
ARCHITECT
MECHANICAL ENGINEER
PLUMBING ENGINEER
ELECTRICAL ENGINEER
240 Continental Drive, Suite
Newark, DE 19713
302.738.7551

THOMAS & HUTTON
CIVIL ENGINEER
1501 MAIN ST.
COLUMBIA, SC 29201
Tel: 803 451 0200

ZZ CONSULTING
STRUCTURAL ENGINEER
640 S. STATE ST
SHELLEY, ID 83274
Tel: 208 357 5404

MARK	DATE	DESCRIPTION	BY
	12/6/24	ISSUED FOR CONSTRUCTION CONFORMANCE SET	DB

BARNWELL SCHOOL DISTRICT 45
MULTI-USE SAFE ROOM

PLUMBING RISER DIAGRAMS

Project No.:	200-207015-20004
Designed By:	APS
Drawn By:	APS
Checked By:	RM

P-904

Copyright: Tetra Tech

12/11/2024 8:18:01 AM BIM 360://200-207015-20004 - Barnwell Dome/M&P_BARN_DOME_v2019.rvt

FIRE PROTECTION LEGEND

SYMBOL	DESCRIPTION
———	PIPING
	CHECK VALVE
FS	FLOW SWITCH WITH ADJUSTABLE RETARD
	PRESSURE GAUGE WITH COCK
	FIRE HYDRANT
AHJ	AUTHORITY HAVING JURISDICTION
SPDT	SINGLE POLE DOUBLE THROW
FM	FACTORY MUTUAL
UG	UNDERGROUND
UL	UNDERWRITERS LABORATORY
UT	UNDERGROUND TANK
NFPA	NATIONAL FIRE PROTECTION ASSOCIATION
IN	INCHES
PSI	POUNDS PER SQUARE INCH
FDC	FIRE DEPARTMENT CONNECTION
GPM	GALLONS PER MINUTE
TS	TAMPER SWITCH
BFP	BACKFLOW PREVENTER
FM	FIRE MAIN
RAC	RUN ABOVE CEILING
PS	PRESSURE SWITCH
	FIRE DEPARTMENT CONNECTION
	GATE VALVE
DCVA	DOUBLE CHECK VALVE ASSEMBLY
	POST-INDICATOR VALVE (PIV)

FIRE PROTECTION NOTES

A. INSTALL SYSTEM IN ACCORDANCE WITH NFPA 13, NFPA 24, NFPA 20, NFPA 22, SOUTH CAROLINA FIRE PREVENTION CODE, AND THE REQUIREMENTS OF THE LOCAL AUTHORITY HAVING JURISDICTION. ALL MATERIALS SHALL BE FM/UL LISTED FOR USE IN FIRE PROTECTION SYSTEMS.

B. ABOVE GROUND PIPING SHALL BE SCHEDULE 40 BLACK STEEL. UNDERGROUND PIPING SHALL BE IN ACCORDANCE WITH THE SPECIFICATIONS.

C. HANGER LOCATIONS SHALL BE COORDINATED WITH THE BUILDING STRUCTURAL STEEL, SUPPORT PIPING IN ACCORDANCE WITH NFPA-13. PROVIDE ALL MISCELLANEOUS STEEL FRAMING AS REQUIRED TO SUPPORT PIPING FROM STRUCTURE. HANG ALL PIPING TIGHT TO STRUCTURE FOR MAXIMUM WORKING CLEARANCE IN SPACE.

D. PROVIDE CHROME ESCUTCHEONS WHERE PIPING PENETRATES WALLS IN EXPOSED AREAS.

E. SPRINKLERS SHALL BE FROM A SINGLE MANUFACTURER.

F. ALL MEASUREMENTS AND ELEVATIONS SHALL BE ESTABLISHED BY THE CONTRACTOR PRIOR TO FABRICATION OF PIPE AND COORDINATED WITH THE BUILDING STRUCTURE, DUCTWORK SHOP DRAWINGS AND THE WORK OF OTHER TRADES. PROVIDE OFFSETS WHERE REQUIRED DUE TO OBSTRUCTIONS OR INTERFERENCE AT NO ADDITIONAL COST TO THE OWNER.

G. THE CONTRACTOR SHALL PREPARE FABRICATION / WORKING PLANS AS DEFINED BY NFPA 13 WHICH CLEARLY INDICATE ALL CUT PIPE DIMENSIONS, HANGER TYPES AND LOCATIONS, ANY TRAPPED SECTIONS OF PIPING, AND DEVIATIONS FROM THIS LAYOUT REQUIRED FOR COORDINATION. PROVIDE AUXILIARY DRAINS FOR ANY TRAPPED PIPING.

H. ALL NORMALLY OPEN VALVES ON THE FIRE PROTECTION SYSTEM SHALL BE ELECTRICALLY SUPERVISED. TIE-IN OF FLOW SWITCH AND TAMPER SWITCHES TO FIRE ALARM SYSTEM SHALL BE PERFORMED UNDER DIVISION 28

I. REFER TO THE NOTES ON THE DRAWINGS FOR DENSITIES AND AREA OF APPLICATION.

J. ALL SPRINKLER PIPING SHALL BE PAINTED RED, WITH ONE PRIMER COAT AND TWO ADDITIONAL COATS OF PAINT.

K. CONNECT FIRE MAIN TO EXISTING SITE WATER. SEE CIVIL DRAWINGS FOR SITE PIPING.

L. TEST SYSTEMS IN ACCORDANCE WITH NFPA-13 AND 24 AND REQUIREMENTS OF AUTHORITY HAVING JURISDICTION (AHJ) AND PREPARE "CONTRACTORS MATERIAL AND TEST CERTIFICATE" AS PRESCRIBED BY NFPA-13 AND NFPA-24.

M. PROVIDE SPRINKLER HEAD CABINET WITH EACH TYPE AND TEMPERATURE RATING USED ON THE PROJECT, MINIMUM QUANTITY AS PER NFPA-13

N. LABEL DRAIN PIPING, INSPECTOR'S TEST, MAIN DRAIN, FIRE DEPARTMENT CONNECTION, RISER SHUT-OFF VALVE AND SIMILAR COMPONENTS.

O. ALL PIPE SIZES ARE INDUSTRY STANDARD ASTM A53 PIPE DESIGNATED BY THEIR NOMINAL DIAMETER.

P. THE BUILDING SHALL BE FULLY SPRINKLED, UNLESS OTHER WISE NOTED ON THE DRAWINGS.

Q. PIPE SIZES INDICATED ARE THE MINIMUM ALLOWABLE. ACTUAL SIZES TO BE BASED UPON CONTRACTOR'S HYDRAULIC CALCULATIONS.

R. THE FIRE PROTECTION SYSTEM SHALL BE FULLY DESIGNED AND INSTALLED BY THE AWARDED FIRE SPRINKLER CONTRACTOR.

S. PROVIDE AN AUTOMATIC WET PIPE FIRE SUPPRESION SYSTEM AND FIRE MAIN. THE SYSTEM SHALL INCLUDE PIPING, HANGERS, FITTINGS, VALVES, ALARM GONGS, INDICATING VALVES, PUMPS, CONTROLS, SPRINKLER HEADS, INSPECTOR TEST STATIONS, DOUBLE CHECK VALVE ASSEMBLY, ETC. AND ALL APPURTENANCES NECESSARY FOR A COMPLETE OPERABLE SYSTEM. INSTALLER SHALL VERIFY ALL DIMENSIONS AND CONDITIONS IN THE FIELD PRIOR TO START OF CONSTRUCTION OR FABRICATION OF PIPING.

T. THE LOCATIONS OF UTILITIES ARE SHOWN IN AN APPROXIMATE WAY ONLY AND HAVE NOT BEEN INDPENDENTLY VERIFIED BY THE OWNER OR ITS REPRESENTATIVE. THE INSTALLER SHALL DETERMINE THE EXACT LOCATION OF ALL BULDING UTILITIES BEFORE COMMENCING WORK AND AGREES TO BE FULLY RESPONSIBLE FOR ANY AND ALL DAMAGES WHICH MIGHT BE OCCASIONED BY THE INSTALLER FAILURE TO EXACTLY LOCATE AND PRESERVE ANY AND ALL ABOVEGROUND BUILDING UTILITIES.

U. VALVING IS OFFSET FOR DRAWING PURPOSES. RISE NEAR WALL. SET VALVES FOR OPERATION FROM THE FLOOR.

V. SPRINKLER SYSTEM MAIN AND BRANCH PIPING SHALL BE LOCATED CLEAR OF LIGHTING, DUCTWORK, WATER & DRAIN PIPING AND THEIR SUPPORTS AS REQUIRED BY EXISTING AND PROPOSED FIELD CONDITIONS.

W. PROVIDE SLEEVES WITH FIRESTOP SEALANT AT ALL WALL PENETRATIONS.

X. THE SPRINKLER INSTALLER SHALL COORDINATE LOCATIONS OF SPRINKLERS IN NEW GRID CEILINGS WITH OTHER TRADES BEFORE STARTING WORK. CENTER OF TILE REQUIRED.

Y. DRAWINGS ARE BASED ON ROOM IDENTIFICATION ASSIGNED BY THE ARCHITECT TO IDENTIFY ALL ROOMS AND SPACES.

Z. THE SPRINKLER INSTALLER SHALL PREPARE COORDINATION DRAWINGS COORDINATING THEIR WORK WITH THAT OF MECHANICAL, ELECTRICAL AND STRUCTURAL TRADES. DRAWINGS SHALL BE SUBMITTED TO, AND ACCEPTED BY THE ARCHITECT AND ENGINEER BEFORE STARTING SPRINKLER SYSTEM WORK.

AA. SPRINKLER SYSTEM WORK SHALL BE IN ACCORDANCE WITH REQUIREMENTS OF NFPA 13.

BB. REFER TO SPECIFICATIONS FOR FURTHER COORDINATION OF WORK.

CC. CONNECT 6" FIRE SERVICE ON SITE MAIN. EXTEND INTO BUILDING AS INDICATED ON DRAWING. THE FIRE SERVICE MAIN SHALL BE PROVIDED WITH A POST-INDICATOR VALVE (PIV) LOCATED A MINIMUM DISTANCE OF 40 FEET FROM THE BUILDING, OR EQUAL TO THE HEIGHT OF THE WALL OF THE BUILDING FACING THE PIV, WHICHEVER IS LESS. PROVIDE WEATHERPROOF VALVE SUPERVISORY SWITCH ON PIV.

DD. COORDINATE LOCATION OF FIRE DEPT. CONNECTION WITH ARCHITECT AND GENERAL CONTRACTOR BEFORE STARTING WORK.

EE. PROVIDE ALARM CONNECTION TO NEW FIRE ALARM SYSTEM PANEL FROM NEW RISER ALARM SWITCH. WIRING IS TO BE DONE BY FIRE ALARM CONTRACTOR.

FF. THIS IS A DEFERRED SUBMITTAL AND THE CONTRACTOR WILL HAVE TO SUBMIT A FINAL DESIGN WITH STAMPED DRAAWINGS AND HYDRAULIC CALCULATIONS.

Fire Sprinkler System Specification Sheet
(Per §40-18-250)

Project Data

Project name: Barnwell School District 45 Multi-Use Safe Room

Location in South Carolina:	Address (street # & name): To be determined		State Project: ■ Yes ☐ No
	City: Barnwell	County: Barnwell	State Project #: TBD

Water Supply Information
(Flow test data must be less than 1 year old per §40-10-250(A)(1))

Date test conducted: 03 / 01 / 2021	Static pressure (psi): 56	Residual pressure (psi): 8	Flow (gpm): 650
Distances of test gauges relative to the base of the riser:	Horizontal (ft): 500	Vertical (elevation difference in ft): 0	
Source of water supply:	☐ Municipal dead-end ■ Municipal circulation ☐ existing fire pump ☐ Other:		Pipe Size (in.): 6
Test data by/from:	Name: not provided	Title: not provided	
	Organization: Thomas and Hutton		Phone: 803-451-6789
Fire pump: ■ New ☐ Existing ☐ No Pump	Rated Pressure (psi): 70	Churn Pressure (psi): 98	
	Rated Capacity (gpm): 400	Pressure @ 150% flow (psi): 45.5	
On-site water storage: ■ Yes ☐ No	■ New ☐ Existing ■ Tank ☐ Other:	Capacity (gal): 25,000	

NFPA Hazard Classification
(Attach continuation page when necessary)

Area #	Hazard Class or Code Reference	Description of Hazard Protected (including occupancy use group, and details of storage arrangement as applicable (including commodity class, rack arrangement/type, ceiling and storage height.))
1	Light Hazard	Multipurpose room, restrooms, locker rooms, vestibule, concessions, training room
2	Ordinary Hazard Group 1	Electrical and mechanical room, janitorial, laundry
3	Ordinary Hazard Group 2	Small storage rooms, low pile storage

Design Parameters
(Attach continuation page when necessary)

Area #	System Type	Density(gpm/ft²)/Area(ft²), or Other (Reference code sections)	Inside Hose (gpm)	Outside Hose (gpm)
1	Wet	0.10 gpm/ft2 over 1950 ft2	0	100
2	Wet	0.15 gpm/ft2 over 1950 ft2	0	250
3	Wet	0.20 gpm/ft2 over 1950 ft2	0	250

Seismic Design Data: S_{DS}=0.341g **Site Classification**=D **Seismic Design Category**=C

Codes and Standards
(Attach continuation page when necessary)

Applicable Codes, Standards, & Editions (i.e. 2018 IBC, 2016 NFPA 13, etc.) **for the Scope of Work on the Fire Sprinkler System**

2021 SCBC, 2019 NFPA 13, 2019 NFPA 20, 2018 NFPA 22, 2019 NFPA 24

Scope of work (i.e. sprinkler system A.G. from 1'-0" A.F.F., U.G. from tap to 5'-0" outside, etc.) and **notes** (attach continuation page when necessary):
See notes on page 2.

Specifier's Information

Name: Eric D. Mondor, PE
Engineering services provided through a firm: ■ Yes ☐ No
Firm name: Cosentini Associates, Inc.
Address: 101 Federal Street Suite 600
City: Boston
State: MA Zip: 02110
Phone: 839-849-0162 Fax: n/a
E-mail: emondor@cosentini.com

Certificate of Authorization — Professional Engineer's Seal

Revision No.: 1 Page 1 of 2 Signature:
Date: 09/09/2024

Form Version: July 1, 2021

Fire Sprinkler System Specification Sheet (Continuation)
(Per §40-18-250)

Project Data

Project name: Barnwell School District 45 Multi-Use Safe Room

Location in South Carolina:	Address (street # & name): To be determined		State Project: ■ Yes ☐ No
	City: Barnwell	County: Barnwell	State Project #: TBD

NFPA Hazard Classification
(Attach additional continuation pages when necessary)

Area #	Hazard Class or Code Reference	Description of Hazard Protected (including occupancy use group, and details of storage arrangement as applicable (including commodity class, rack arrangement/type, ceiling and storage height.))
4	Extra Hazard Group 2	Diesel fire pump room

Design Parameters
(Attach additional continuation pages when necessary)

Area #	System Type	Density(gpm/ft²)/Area(ft²), or Other (reference code sections)	Inside Hose (gpm)	Outside Hose (gpm)
4	Wet	0.40 gpm/ft2 room design	0	500

Additional notes and/or additional scope of work (Attach additional continuation pages when necessary

1. Scope of work begins at connection to municipal water system.
2. Provide corrosion resistant sprinklers in shower and locker room areas.
3. Low pile storage per NFPA 13 4.3.1.7.1
   a. Solid piled and shelf storage of Class I-IV commodities up to 12 ft
   b. Rack storage of Class I-IV commodities up to 10 ft
   c. Solid piled and shelf storage of Group A plastic up to 5 ft
4. Design area may be reduced as permitted by NFPA 13 19.3.3.2.3.1 when using quick response sprinklers.
5. Design area increased by 30% due to sloped ceiling (NFPA 13 19.3.3.2.4).
6. Design area for extra hazard occupancy reduced to 2000 ft2 for use of K-11.2 sprinklers (NFPA 13 19.3.3.2.7).
7. Locate sprinklers around high volume low speed fans per NFPA 13 19.2.7.
4. This form will be updated with street address once it is assigned.
5. This form will be updated with new flow test information prior to preparation of shop drawings.

Specifier's Information

Name: Eric D. Mondor, PE
Engineering services provided through a firm: ■ Yes ☐ No
Firm name: Cosentini Associates, Inc.
Address: 101 Federal Street Suite 600
City: Boston
State: MA Zip: 02110
Phone: 839-849-0162 Fax: n/a
E-mail: emondor@cosentini.com

Certificate of Authorization — Professional Engineer's Seal

Revision No.: 1 Page 2 of 2 Signature:
Date: 09/09/2024

Form Version: July 1, 2021

TETRA TECH
www.tetratech.com
240 Continental Drive, Suite 200
Newark, DE 19713
Tel: 302.738.7551 Fax: 302.454.3989

COSENTINI ASSOCIATES INC. SOUTH CAROLINA No. 29 CERTIFICATE OF AUTHORIZATION

SOUTH CAROLINA No. 38441 REGISTERED PROFESSIONAL ENGINEER ERIC D. MONDOR 12/11/2024

BARNWELL SCHOOL DISTRICT 45
OWNER
770 HAGOOD AVE
BARNWELL, SC 29812
Tel: 803 541 1300

TETRA TECH
ARCHITECT
MECHANICAL ENGINEER
PLUMBING ENGINEER
ELECTRICAL ENGINEER
240 Continental Drive, Suite
Newark, DE 19713
302.738.7551

THOMAS & HUTTON
CIVIL ENGINEER
1501 MAIN ST.
COLUMBIA, SC 29201
Tel: 803 451 0200

ZZ CONSULTING
STRUCTURAL ENGINEER
640 S. STATE ST.
SHELLEY, ID 83274
Tel: 208 357 5404

MARK	DATE	DESCRIPTION	BY
	12/26/24	ISSUED FOR CONSTRUCTION CONFORMANCE SET	DB

BARNWELL SCHOOL DISTRICT 45
MULTI-USE SAFE ROOM

LEGEND, ABBREVIATIONS AND NOTES

Project No.: 200-207015-20004
Designed By: NM
Drawn By: NM
Checked By: RM

FP001

Copyright: Tetra Tech

12/11/2024 8:13:28 AM BIM 360://200-207015-20004 - Barnwell Dome/M&P_BARN_DOME_v2019.rvt

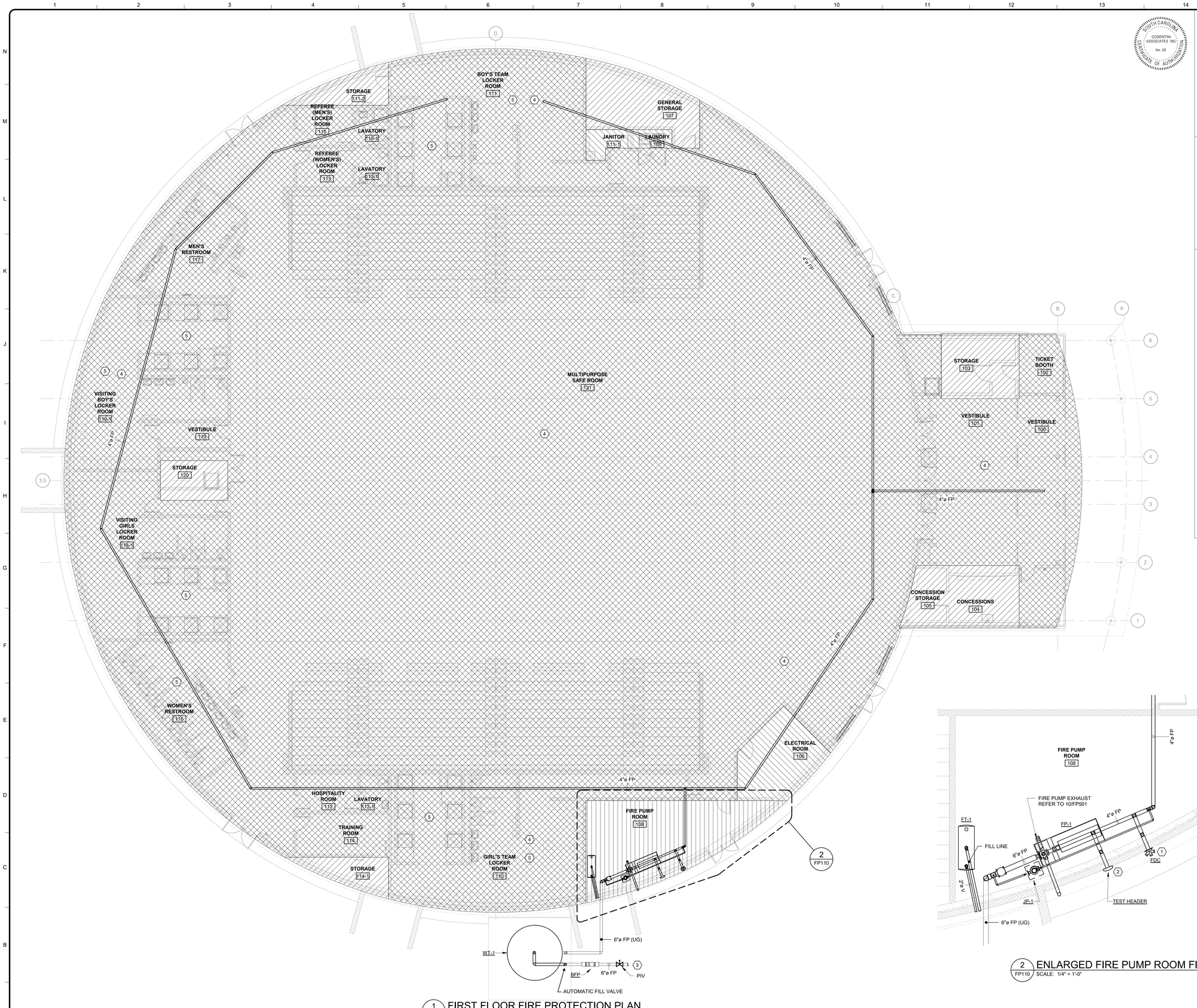

1 FP110 FIRST FLOOR FIRE PROTECTION PLAN
SCALE: 1/8" = 1'-0"

2 FP110 ENLARGED FIRE PUMP ROOM FIRE PROTECTION PLAN
SCALE: 1/4" = 1'-0"

COSENTINI ASSOCIATES INC
SOUTH CAROLINA
No. 29
CERTIFICATE OF AUTHORIZATION

GENERAL PLAN NOTES:

A. FOR GENERAL FIRE PROTECTION NOTES AND LEGEND, REFER TO SHEET FP001.

B. SPRINKLERS SHALL BE INSTALLED WITH DEFLECTOR PARALLEL TO THE SLOPE OF THE ROOF.

C. PROVIDE AN AUTOMATIC AIR VENT AT SYSTEM HIGH POINT IN ACCORDANCE WITH NFPA 13.

D. DO NOT RUN SPRINKLER PIPING THROUGH ELECTRICAL ROOM OR DIRECTLY ABOVE ELECTRICAL PANELS AND EQUIPMENT.

E. PROVIDE SPRINKLERS BELOW ALL OBSTRUCTIONS GREATER THAN 4 FT. WIDE (I.E. DUCTWORK, EQUIPMENT, ETC.

KEY NOTES:

1. FIRE DEPARTMENT CONNECTION (FDC). COORDINATE LOCATION WITH ARCHITECT AND GENERAL CONTRACTOR BEFORE STARTING WORK.
2. TEST HEADER CONNECTION. PROVIDE ONE HOSE VALVE CONNECTION FOR EACH 250 GPM OF SYSTEM DEMAND OR FRACTION THEREOF. COORDINATE LOCATION WITH ARCHITECT AND GENERAL CONTRACTOR BEFORE STARTING WORK.
3. 6" INCOMING FIRE MAIN. INSULATE AND HEAT TRACE ALL EXPOSED FIRE WATER PIPING.
4. PROVIDE SPRINKLER COVERAGE THROUGHOUT BUILDING.
5. PROVIDE CORROSION RESISTANT SPRINKLERS IN SHOWER AND LOCKER ROOMS.

HAZARD CLASSIFICATION LEGEND:

HYDRAULICALLY DESIGN THE SYSTEM TO THE FOLLOWING CRITERIA IN ACCORDANCE WITH NFPA 13:

WET-PIPE SPRINKLER
HAZARD CLASSIFICATION: LIGHT HAZARD
CEILING HEIGHT: UP TO 50 FT
MINIMUM DENSITY: 0.1 GPM/FT²
DESIGN AREA: 1,950 FT²
EXTERIOR HOSE ALLOWANCE: 100 GPM
MAX. COVERAGE PER SPRINKLER: 225 FT²
SPRINKLER TYPE: QUICK RESPONSE
MIN. K-FACTOR: 5.6

WET-PIPE SPRINKLER
HAZARD CLASSIFICATION: ORDINARY HAZARD 1
CEILING HEIGHT: UP TO 50 FT
MINIMUM DENSITY: 0.15 GPM/FT²
DESIGN AREA: 1,950 FT²
EXTERIOR HOSE ALLOWANCE: 250 GPM
MAX. COVERAGE PER SPRINKLER: 130 FT²
SPRINKLER TYPE: QUICK RESPONSE
MIN. K-FACTOR: 5.6

WET-PIPE SPRINKLER
HAZARD CLASSIFICATION: ORDINARY HAZARD 2
CEILING HEIGHT: UP TO 50 FT
MINIMUM DENSITY: 0.20 GPM/FT²
DESIGN AREA: 1,950 FT²
EXTERIOR HOSE ALLOWANCE: 250 GPM
MAX. COVERAGE PER SPRINKLER: 130 FT²
SPRINKLER TYPE: QUICK RESPONSE
MIN. K-FACTOR: 5.6

WET-PIPE SPRINKLER
HAZARD CLASSIFICATION: EXTRA HAZARD 2
CEILING HEIGHT: UP TO 50 FT
MINIMUM DENSITY: 0.40 GPM/FT²
DESIGN AREA: 2,600 FT²
EXTERIOR HOSE ALLOWANCE: 500 GPM
MAX. COVERAGE PER SPRINKLER: 100 FT²
SPRINKLER TYPE: STANDARD RESPONSE
MIN. K-FACTOR: 11.2

TETRA TECH
www.tetratech.com
240 Continental Drive, Suite 200
Newark, DE 19713
Tel: 302.738.7551 Fax: 302.454.3989

SOUTH CAROLINA PROFESSIONAL ENGINEER
No. 38441
ERIC D. MONDOR
12/11/2024

BARNWELL SCHOOL DISTRICT 45
OWNER
770 HAGOOD AVE.
BARNWELL, SC 29812
Tel: 803 541 1300

TETRA TECH
ARCHITECT
MECHANICAL ENGINEER
PLUMBING ENGINEER
ELECTRICAL ENGINEER
240 Continental Drive, Suite
Newark, DE 19713
302.738.7551

THOMAS & HUTTON
CIVIL ENGINEER
1501 MAIN ST.
COLUMBIA, SC 29201
Tel: 803 451 0200

ZZ CONSULTING
STRUCTURAL ENGINEER
640 S. STATE ST.
SHELLEY, ID 83274
Tel: 208 357 5404

MARK	DATE	DESCRIPTION	BY
	12/26/24	ISSUED FOR CONSTRUCTION CONFORMANCE SET	DB

BARNWELL SCHOOL DISTRICT 45
MULTI-USE SAFE ROOM

FIRE PROTECTION FIRST FLOOR PLAN

Project No.:	200-207015-20004
Designed By:	APS
Drawn By:	APS
Checked By:	RM

FP110

TRUE NORTH
PROJECT NORTH
0 4' 8' 16'
SCALE: 1/8" = 1'-0"

Copyright: Tetra Tech

12/11/2024 8:13:39 AM BIM 360://200-207015-20004 - Barnwell Dome/M&P_BARN_DOME_v2019.rvt

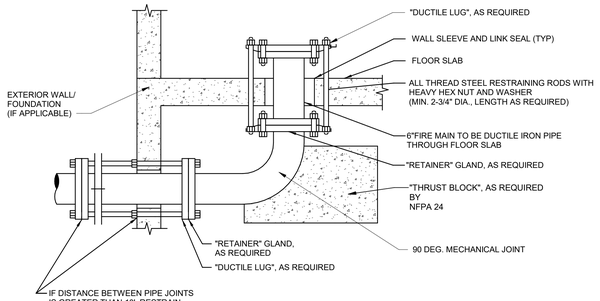

NOTES:

1. THE PURPOSE OF THIS DETAIL IS TO RESTRAIN THE FIRE MAIN COMING THROUGH THE FLOOR SLAB TO THE DEGREE NECESSARY TO ENSURE PIPE AND JOINT INTEGRITY DURING TESTING AND NORMAL CONDITIONS.
2. WATER MAIN TO BE DUCTILE IRON PIPE, CEMENT LINED, CLASS 52. REFER TO SPECIFICATIONS.
3. PROVIDE FIRE MAIN SERVICE ENTRY IN ACCORDANCE WITH THE REQUIREMENTS OF NFPA 24. FIRE SUPPRESSION CONTRACTOR TO COORDINATE PIPING PRESSURE TESTING WITH THE ARCHITECT AND GENERAL CONTRACTOR.

1 FIRE MAIN PIPE RESTRAINT
N.T.S.

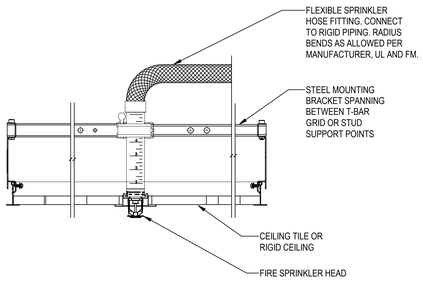

NOTES:

1. REFER TO PLANS FOR SIZES AND CONTINUATION.
2. THE MAXIMUM UNSUPPORTED WATER-FILLED WEIGHT OF THE FLEXIBLE HOSE, MAXIMUM 6' (1.8 M) LONG, WITH SPRINKLER HEAD AND MOUNTING BRACKETS SHALL NOT EXCEED 13 LBS (5.9 KG) TRANSFERRED TO THE CEILING SYSTEM.

5 FLEXIBLE FIRE SPRINKLER DROP
1/8" = 1'-0"

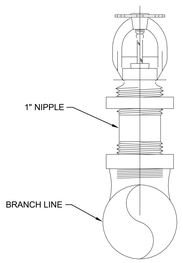

2 TYPICAL UP-RIGHT SPRINKLER HEAD
12" = 1'-0"

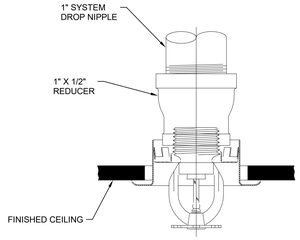

3 TYPICAL SEMI-RECESSED PENDENT SPRINKLER HEAD
12" = 1'-0"

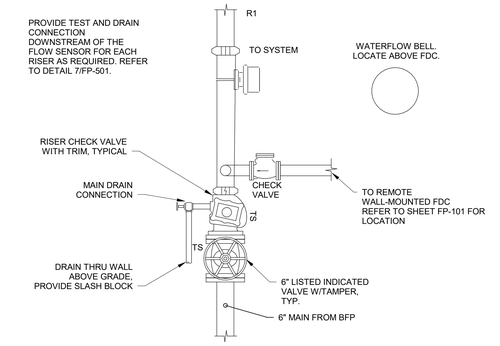

4 FIRE SPRINKLER RISER
N.T.S.

1 & 2 HOUR FIRE-RATED PIPE/TUBING PENETRATION SYSTEM NO. W-J-1028

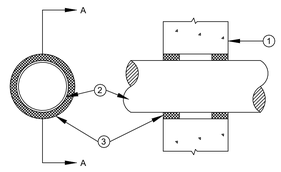

1. ALL ASSEMBLY- MIN 2-1/2 IN. THICK REINFORCED LIGHTWEIGHT OR NORMAL WEIGHT (100-150 PCF) CONCRETE. WALL MAY ALSO BE CONSTRUCTED OF ANY UL CLASSIFIED CONCRETE BLOCKS. MAX DIAM. OF OPENING IS 12-1/2 IN.
2. THROUGH-PENETRANT: ONE METALLIC PIPE TO BE CENTERED WITHIN THE FIRE STOP SYSTEM. THE ANNULAR SPACE BETWEEN CONDUIT AND PERIPHERY OF OPENING SHALL BE MIN 1/2 IN. TO MAX 7/8 IN. CONDUIT TO BE RIGIDLY SUPPORTED ON BOTH SIDES OF WALL ASSEMBLY. THE FOLLOWING TYPE OF PIPE OR TUBING MAY BE USED STEEL PIPE NOMINAL 10 IN. DIAMETER (OR SMALLER) SCHEDULE 10 (OR HEAVIER STEEL PIPE).
3. FILL, VOID, OR CAVITY MATERIAL (SEALANT): MIN 5/8 IN. OR 1-1/4 IN. THICKNESS OF UL LISTED FILL MATERIAL APPLIED WITHIN THE ANNULUS, FLUSH WITH BOTH SURFACE OF WALL FOR 1 HR AND 2 HR FIRE-RATED WALLS, RESPECTIVELY.

6 FIRE RATED PIPE PENETRATION
N.T.S.

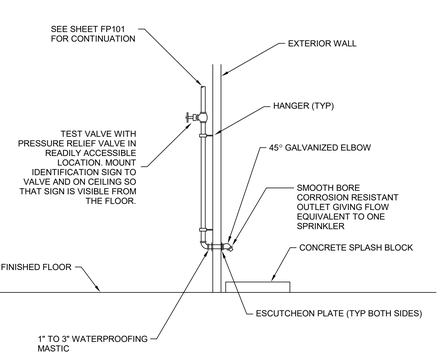

7 SYSTEM TEST CONNECTION ON WET PIPE SYSTEM
N.T.S.

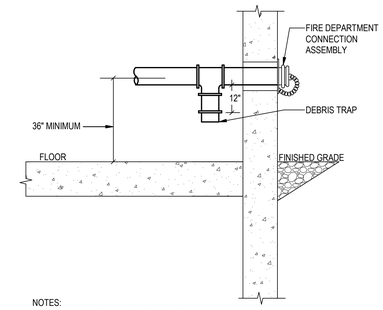

NOTES:

1. REFER TO STRUCTURAL DESIGN FOR ATTACHMENT REQUIREMENTS AND ADDITIONAL SUPPORT OPTIONS.

8 FIRE DEPARTMENT CONNECTION
1/8" = 1'-0"

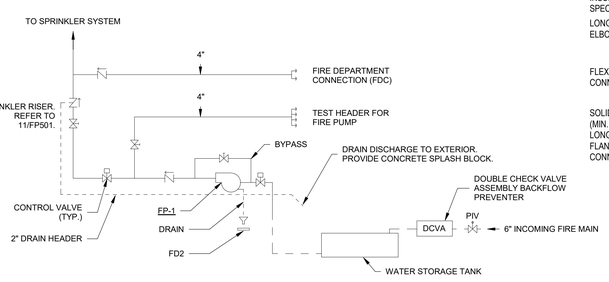

9 FIRE SPRINKLER RISER SCHEMATIC
N.T.S.

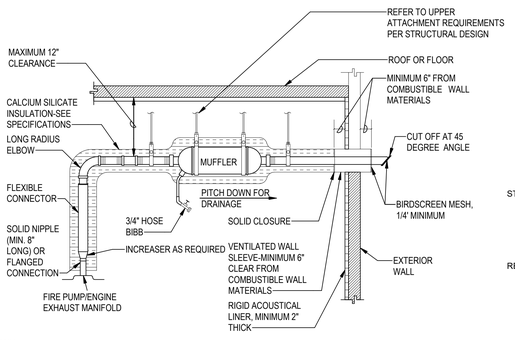

NOTES:

1. MUFFLER SHALL BE INSTALLED BY MECHANICAL DIVISION 23.
2. ALL SUPPORTS SHALL BE COORDINATED WITH STRUCTURAL DESIGN.

10 FIRE PUMP EXHAUST MUFFLER
NONE

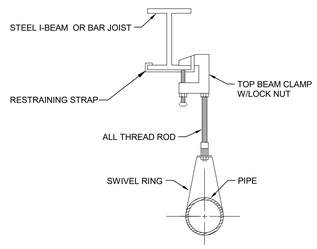

11 BOTTOM BEAM CLAMP
N.T.S.

DIESEL FIRE PUMP SCHEDULE

MARK	MANUFACTURER	MODEL NO.	SYSTEM SERVED	GPM	RATED PRESSURE (PSIG)	MOTOR		ELECTRICAL	REMARKS
						HP	RPM	VOLTS	
FP-1	PENTAIR	3-384-11	BUILDING	400	70.0	42	2100	-	FIRE PUMP
FP-2	AURORA	PVM1-7	SPRINKLER SYSTEM	5	77.0	0.75	-	230/460	JOCKEY PUMP

DIESEL FUEL TANK SCHEDULE

MARK	LOCATION	STORAGE CAPACITY (GAL.)	DIMENSIONS		VENT	MANUFACTURER
			DIA. (IN.)	LENGTH (IN.)		
FT-1	FIRE PUMP ROOM	61.0	21	56	2"	PENTAIR

ABOVEGROUND WATER STORAGE TANK SCHEDULE

MARK	LOCATION	STORAGE CAPACITY (GAL.)	DIMENSIONS		MANUFACTURER/MODEL NO.
			DIA. (FT.)	LENGTH (FT.)	
WT-1	FIRE PUMP ROOM	25,000	12.0	30	HIGHLAND/HT-1129

TETRA TECH
www.tetratech.com
240 Continental Drive, Suite 200
Newark, DE 19713
Tel: 302.738.7551 Fax: 302.454-3988

SOUTH CAROLINA LICENSED PROFESSIONAL ENGINEER
No. 38441
12/11/2024
ERIC D. MONDOR

COSENTINI ASSOCIATES INC.
No. 29
CERTIFICATE OF AUTHORIZATION

BARNWELL SCHOOL DISTRICT 45
OWNER
770 HAGOOD AVE
BARNWELL, SC 29812
Tel: 803 541 1300

TETRA TECH
ARCHITECT
MECHANICAL ENGINEER
PLUMBING ENGINEER
ELECTRICAL ENGINEER
240 Continental Drive, Suite
Newark, DE 19713
302.738.7551

THOMAS & HUTTON
CIVIL ENGINEER
1501 MAIN ST.
COLUMBIA, SC 29201
Tel: 803 451 0200

ZZ CONSULTING
STRUCTURAL ENGINEER
640 S. STATE ST
SHELLEY, ID 83274
Tel: 208 357 5404

MARK	DATE	DESCRIPTION	BY
	12/26/24	ISSUED FOR CONSTRUCTION CONFORMANCE SET	DB

BARNWELL SCHOOL DISTRICT 45
MULTI-USE SAFE ROOM

FIRE PROTECTION DETAILS AND SCHEDULES

Project No.: 200-207015-20004
Designed By: APS
Drawn By: APS
Checked By: RM

FP501

Copyright: Tetra Tech

12/11/2024 8:13:40 AM BIM 360://200-207015-20004 - Barnwell Dome/M&P_BARN_DOME_v2019.rvt

ELECTRICAL LEGEND

———	NEW WORK
—OH——OH—	OVERHEAD ELECTRICAL
—UE——UE—	UNDERGROUND ELECTRICAL
—W——W—	WATER
—S——S—	SEWER/SANITARY
—G——G—	GAS
—X——X—	FENCE
— — — —	UNDERGROUND
#	KEY NOTE HEX
	CONNECT NEW TO EXISTING
X / X-###	DETAIL/EQUIPMENT BUBBLE
A #	2'x2' LAY-IN GRID FIXTURE FIXTURE LETTER DENOTE TYPE; # DENOTES CIRCUIT 'E' DENOTES EMERGENCY FIXTURE
A #	2'x4' LAY-IN GRID FIXTURE FIXTURE LETTER DENOTE TYPE; # DENOTES CIRCUIT 'E' DENOTES EMERGENCY FIXTURE
A #	4' LINEAR PENDANT FIXTURE FIXTURE LETTER DENOTE TYPE; # DENOTES CIRCUIT 'E' DENOTES EMERGENCY FIXTURE
A #	4' LINEAR PENDANT FIXTURE FIXTURE LETTER DENOTE TYPE; # DENOTES CIRCUIT 'E' DENOTES EMERGENCY FIXTURE
A #	DOWNLIGHT: DISPLAY CASE FIXTURE FIXTURE LETTER DENOTE TYPE; # DENOTES CIRCUIT
A #	5" RECESSED CANOPY FIXTURE FIXTURE LETTER DENOTE TYPE; # DENOTES CIRCUIT 'E' DENOTES EMERGENCY FIXTURE
A #	DOWNLIGHT FIXTURE FIXTURE LETTER DENOTE TYPE; # DENOTES CIRCUIT 'E' DENOTES EMERGENCY FIXTURE
A #	WALLPACK FIXTURE W/ PHOTOCELL FIXTURE LETTER DENOTE TYPE; # DENOTES CIRCUIT 'E' DENOTES EMERGENCY FIXTURE
	EXIT FIXTURE: WALL MOUNTED
	EXIT FIXTURE: CEILING MOUNTED
S_3	LIGHTING SWITCH: '3' DENOTES 3-WAY
S_M	MOTOR RATED SWITCH
S_{OS}	LIGHTING SWITCH W/ OCCUPANCY SENSOR
S_{LV}	MOTOR RATED SWITCH
$S_{LV/K}$	LIGHTING SWITCH W/ OCCUPANCY SENSOR
OS	OCCUPANCY SENSOR
	MAIN DISTRIBUTION PANEL
	BRANCH CIRCUIT PANEL
	TRANSFORMER
	DUPLEX RECEPTACLE: 20A, 125V, 1P GROUNDING CH - COUNTER HEIGHT REF - REFRIGERATOR # - DENOTES MOUNTING HEIGHT
GFCI/GFI	DUPLEX RECEPTACLE: 20A, 125V, 1P GROUNDING, GROUND FAULT CIRCUIT INTERRUPTER
30/3	NON-FUSED, HP-RATED DISCONNECT SWITCH VOLTAGE RATING AS REQUIRED, "30" INDICATES AVERAGE RATING, "3" INDICATES NUMBER OF POLES (TYP.)
30/3	COMBINATION FUSED DISCONNECT SWITCH WITH INTEGRAL MAGNETIC MOTOR STARTER . DISCONNECT SIZE AND FUSE RATING AS INDICATED.
J	JUNCTION BOX
E	EMERGENCY STOP- PUSH BUTTON STATION
T	THERMOSTAT
M	METER
	MOTOR OR EQUIPMENT LOAD
	GROUNDING SYSTEM (3/4" DIA. ROD x 10'-0"L)
	CIRCUIT BREAKER
	GYMNASIUM FLOOR BOX: SINGLE DUPLEX AND DATA PORT
ANN	GENERATOR REMOTE ANNUNCIATOR

GROUNDING LEGEND

G	GROUND RING
	AIR TERMINAL
	GROUND ROD
	CABLE TO CABLE CONNECTION
	CABLE TO REBAR CONNECTION
	GROUND ROD TEST WELL

TELECOMMUNICATIONS AND SECURITY

	2-PORT DATA OUTLET
S	PUBLIC ADDRESS SPEAKER
AP	WIRELESS ACCESS POINT
360	SECURITY CAMERA: 360° FOV, POE
	GYMNASIUM FLOOR BOX: SINGLE DUPLEX AND DATA PORT
CR	ELECTRONIC ACCESS CONTROL CARD READER
EH	ELECTRIFIED HINGE
ES	ELECTRIC STRIKE
DC	DOOR CONTACT

ELECTRICAL ABBREVIATIONS

ATS	AUTOMATIC TRANSFER SWITCH
CB/C.B.	CIRCUIT BREAKER
CIRC.	CIRCUIT
C.T.	CURRENT TRANSFORMER
CTRL	CONTROL/CONTROLLER
DISC.	DISCONNECT SWITCH
DN	DOWN
DP	DISTRIBUTION PANEL
EDP	EMERGENCY DISTRIBUTION PANEL
EHH#	ELECTRICAL HANDHOLE
ERP	EMERGENCY RECEPTACLE PANEL
EQUIP	EQUIPMENT
ER	EXISTING TO REMAIN
EUH	ELECTRIC UNIT HEATER
EX	EXISTING
EXR	EXISTING TO REMAIN
E.O.L.	END OF LINE RESISTOR
FAAP	FIRE ALARM ANNUNCIATOR PANEL
FACP	FIRE ALARM CONTROL PANEL
FHH#	FIBER HANDHOLE
FOV	FIELD OF VIEW
GFCI	GROUND FAULT CIRCUIT INTERRUPTER (PERSONNEL)
IC/ I.C.	INTERRUPTING CURRENT
LP	LIGHTING PANEL (480V)
MCC	MOTOR CONTROL CENTER
MDP	MAIN DISTRIBUTION PANEL (480V)
MV	MEDIUM VOLTAGE
O/H, OH	OVERHEAD
OS	OCCUPANCY SENSOR
PAS	PUBLIC ADDRESS SYSTEM
POE	POWER OVER ETHERNET
PP	POWER PANEL (480V)
PSEG	PUBLIC SERVICE ENTERPRISES GROUP OF NEW YORK
RP	RECEPTACLE PANEL (208/120V)
SPPOC	SERVICE PROVIDE POINT OF CONNECTION
T	TRANSFORMER
TELCO	TELEPHONE COMPANY
U/G; UG	UNDERGROUND
U.O.N.	UNLESS OTHERWISE NOTED
U.N.O.	UNLESS NOTED OTHERWISE
UPS	UNINTERRUPTIBLE POWER SUPPLY
WP	WEATHERPROOF

GENERAL NOTES

1. ALL CEILING MOUNTED ITEMS (DETECTORS, SPEAKERS, ETC.) ARE TO BE CENTERED WITHIN THE PATTERN OF THE CEILING PANEL. A 2'X4' PANEL SCORED TO SIMULATE A 2'X2' PATTERN SHALL HAVE THE ITEMS CENTERED IN THE 2'X2' PORTION. IF HALF OF A 2X4 TILE IS OCCUPIED BY A 2X2 LIGHTING FIXTURE OR DIFFUSER, DEVICE SHALL BE CENTERED IN UNOCCUPIED 2X2 PORTION.
2. MOUNTING HEIGHTS INDICATED FOR DEVICES AROUND CASEWORK SHOWN FOR REFERENCE ONLY. COORDINATE MOUNTING HEIGHTS AND LOCATIONS OF ALL DEVICES AROUND CASEWORK WITH APPROVED CASEWORK SUBMITTALS PRIOR TO ROUGH-IN.
3. PROPERLY IDENTIFY ALL CIRCUITS AT PANELS AND J-BOXES AND IN ACCORDANCE WITH PROJECT SPECIFICATIONS.
4. ALL DEVICES SHALL BE RECESSED WHERE IN NEW CONSTRUCTION.
5. DURING THE INSTALLATION OF VERTICAL SURFACE RACEWAY CONTRACTOR WILL ENCOUNTER MOLDING WHICH WILL REQUIRE CUTTING, PATCHING AND SHIMMING. COORDINATE WITH GC AND OWNER PRIOR TO INSTALLATION.
6. INSTALL CHAIN-HUNG LIGHT FIXTURES AFTER ALL MECHANICAL AND PLUMBING EQUIPMENT, PIPING AND DUCTWORK HAVE BEEN INSTALLED.
7. COORDINATE MOUNTING HEIGHT AND LOCATION OF ALL LIGHT FIXTURES WITH ARCHITECTURAL ELEVATIONS AND CONCEAL ALL CIRCUITRY WITHIN BUILDING WHERE POSSIBLE.
8. UNO ON THE CONTRACT DOCUMENTS, THE FOLLOWING LIST REPRESENTS THE TYPICAL MOUNTING HEIGHTS FOR THE DEVICES SHOWN:

   a. SWITCHES..48"(TO TOP)
   b. RECEPTACLES..16" (COUNTER HEIGHT 2" ABOVE COUNTER OR BACKSPLASH)
   c. COMPUTER RECEPTACLES...16"
   d. WALL(W) TELE. ....48" (TO TOP)
   e. TELEPHONE OUTLETS (UNLABELED)...............................16"
   f. TELEVISION OUTLETS...72"
   g. FIRE ALARM PULL STATIONS...48"(TO TOP)
   h. FIRE ALARM AUDIO/VISUAL UNITS....................................90"
   * (OR 6" BELOW CEILING, WHICHEVER IS LOWER.)
   d. POWER PANELS...72"(TO TOP)
   e. DISCONNECT SWITCHES...60"(TO TOP)
   f. MOTOR STARTERS...60"(TO TOP)

9. THE HEIGHTS INDICATED SHALL BE NOMINAL TO THE BOTTOM OF THE BOX (UNO), MAINTAIN HEIGHT CONSISTENCY BETWEEN SURFACE AND FLUSH MOUNTED DEVICES.
10. APPLICABLE CODES:
    - 2021 SOUTH CAROLINA BUILDING CODE
    - 2021 SOUTH CAROLINA FIRE CODE
    - 2021 SOUTH CAROLINA PLUMBING CODE
    - 2021 SOUTH CAROLINA MECHANICAL CODE
    - 2020 NATIONAL ELECTRICAL CODE (NFPA 70) WITH SC MODIFICATIONS
    - 2009 INTERNATIONAL ENERGY CONSERVATION CODE
    - ADA STANDARDS FOR ACCESSIBLE DESIGN
11. CIRCUITS SHALL BE A MINIMUM OF 2#12,1#12G - 3/4"C UNLESS OTHERWISE NOTED.
12. CONTRACTOR SHALL PROVIDE UL FIRE-RATED SEALANTS AROUND ALL PENETRATIONS THROUGH FIRE RATED WALLS. REFER TO ARCHITECTURAL DRAWINGS FOR INFORMATION ON FIRE RATED WALLS.
13. CONDUCTORS NOT ROUTED IN A RACEWAY ABOVE CEILING SHALL BE PLENUM RATED.
14. LOCAL DISCONNECTS FOR MECHANICAL EQUIPMENT TO BE LOCKABLE IN THE OFF POSITION.
15. ELECTRICAL EQUIPMENT / DEVICES LOCATED ON THE EXTERIOR OF THE BUILDING SHALL BE RATED NEMA 3R, UNO.
16. INTERIOR LOW VOLTAGE WIRING MAY BE ROUTED EXPOSED ABOVE DROP CEILING OR ABOVE 8'-0" AFF IN SPACES WITH OPEN CEILINGS. IN ALL OTHER AREAS, LOW VOLTAGE WIRING SHALL BE AT MINIMUM ROUTED IN RGS. WHERE EXPOSED IN A RETURN AIR PLENUM, WIRING SHALL BE PLENUM RATED.
17. LOCAL DISCONNECTS SERVING MECHANICAL EQUIPMENT SHALL BE PAD-LOCKABLE IN THE OFF POSITION AND BE RATED NEMA 4 WHERE LOCATED OUTSIDE.

PLAN SYMBOLS

CALLOUTS

BUILDING, WALL SECTION SYMBOL

- LETTER OR NUMBER INDICATES SECTION
- SHEET NUMBER WHERE SECTION IS DRAWN

- LETTER OR NUMBER INDICATES SECTION
- SHEET NUMBER WHERE FIRST KEYED
- SHEET NUMBER WHERE SECTION IS DRAWN

IDENTIFICATION

	CONSTRUCTION GRID LINE IDENTIFICATION
?	KEYED NOTE IDENTIFICATION
?	REVISION IDENTIFICATION
ROOM / NUMBER	ROOM NAME AND NUMBER
	NORTH ARROW

LIGHTING FIXTURE SCHEDULE

TYPE	DESCRIPTION	VOLTAGE	WATTAGE	MODEL	MANUFACTURER	QUANTITY
A1	SRP SCALER™ EDGE-LIT FLAT PANEL	MVOLT	41 W	SRP-40VL-G-EDU-FK22	COLUMBIA LIGHTING	32
A1E	SRP SCALER™ EDGE-LIT FLAT PANEL W/ BATTERY BACKUP	MVOLT	41 W	SRP-40VL-G-EDU-ELL14H2-FK22	COLUMBIA LIGHTING	19
A2	SRP SCALER™ EDGE-LIT FLAT PANEL	MVOLT	41 W	SRP-50VL-G-EDU-FK22	COLUMBIA LIGHTING	73
A2E	SRP SCALER™ EDGE-LIT FLAT PANEL W/ BATTERY BACKUP	MVOLT	41 W	SRP-50VL-G-EDU-ELL14H2-FK22	COLUMBIA LIGHTING	14
B	SRP SCALER™ EDGE-LIT FLAT PANEL	MVOLT	33 W	SRP24-35MW-G-EDU-FK24	COLUMBIA LIGHTING	23
BE	SRP SCALER™ EDGE-LIT FLAT PANEL W/ BATTERY BACKUP	MVOLT	33 W	SRP24-35MW-G-EDU-ELL14H2-FK24	COLUMBIA LIGHTING	21
C1	LOW PROFILE LED WRAPAROUND	MVOLT	20 W	BLWP4 20L ADP GZ10 LP835 PAF	ACUITY BRANDS LIGHTING	8
C1E	LOW PROFILE LED WRAPAROUND W/ BATTERY BACKUP	MVOLT	20 W	BLWP4 20L ADP GZ10 LP835 EL7L PAF	ACUITY BRANDS LIGHTING	7
C2	LOW PROFILE LED WRAPAROUND	MVOLT	44 W	BLWP4 48L ADP GZ10 LP835 PAF	ACUITY BRANDS LIGHTING	5
C2E	LOW PROFILE LED WRAPAROUND W/ BATTERY BACKUP	MVOLT	44 W	BLWP4 48L ADP GZ10 LP835 EL14L PAF	ACUITY BRANDS LIGHTING	13
D	6" LED DOWNLIGHT (WET LOCATION RATED)	MVOLT	18 W	LDN6-35/15-LO6WR-LD-MVOLT-TRW	ACUITY BRANDS LIGHTING	37
DE	6" LED DOWNLIGHT (WET LOCATION RATED) W/ BATTERY BACKUP	MVOLT	18 W	LDN6-35/15-LO6WR-LD-MVOLT-TRW-EL	ACUITY BRANDS LIGHTING	10
F	1" LED DISPLAY CASE FIXTURE	MVOLT	1 W	TR-SA-C-S-106-35-54-1000-S00B-F-HLG-80H-12	KKDC LIGHTING	8
G	DIRECT/INDIRECT LINEAR FIXTURE	MVOLT	17 W	J2-WL-20L835-1D-UNV-STD-DLEDW-AC48-T1-XX	COOPER LIGHTING	12
GE	DIRECT/INDIRECT LINEAR FIXTURE W/ BATTERY BACKUP	MVOLT	17 W	J2-WL-20L835-1D-UNV-STD-B10-DLEDW-AC48-T1-XX	COOPER LIGHTING	9
HE	ARCHITECTURAL WALL LUMINAIRE	MVOLT	33 W	ENT-SA1C-740-277-T4FT-BK-EBP-TR-AHD145-BPC	COOPER LIGHTING	13
J	5" LED DOWNLIGHT (WET LOCATION RATED)	MVOLT	20 W	5811-1SA-T -20L-8040-WU-SS	LF ILLUMINATION LLC	6
JE	5" LED DOWNLIGHT (WET LOCATION RATED) W/ REMOTE BATTERY BACKUP	MVOLT	20 W	5811-1SA-T -20L-8040-WU-SS-EM	LF ILLUMINATION LLC	5
K	24" LED VANITY FIXTURE	MVOLT	18 W	FMVTSL 24IN MVOLT 30K 90CRI BN	ACUITY BRANDS LIGHTING	16
L1	PERIMETER DIRECT WALL WASH	MVOLT	181 W	S79PF-2-L35-14FT2.25IN-UDD-1D-W	COOPER LIGHTING	1
L2	PERIMETER DIRECT WALL WASH	MVOLT	232 W	S79PF-2-L35-32FT0IN-UDD-1D-W	COOPER LIGHTING	1
X	INTEGRATED EXIT / UNIT COMBO; INTEGRAL BATTERY BALLASTS	MVOLT	5 W	LQM S W 3 R 120/277 EL N SD	LITHONIA	11

TETRA TECH
www.tetratech.com
240 Continental Drive, Suite 200
Newark, DE 19713
Tel: 302.738.7551 Fax: 302.454.5989

SOUTH CAROLINA PROFESSIONAL ENGINEER LICENSED No. 21834 R. SHANE RITTER 12/06/24

BARNWELL SCHOOL DISTRICT 45
OWNER
770 HAGOOD AVE.
BARNWELL, SC 29812
Tel: 803 541 1300

TETRA TECH
ARCHITECT
MECHANICAL ENGINEER
PLUMBING ENGINEER
ELECTRICAL ENGINEER
240 Continental Drive, Suite
Newark, DE 19713
302.738.7551

THOMAS & HUTTON
CIVIL ENGINEER
1501 MAIN ST.
COLUMBIA, SC 29201
Tel: 803 451 0200

ZZ CONSULTING
STRUCTURAL ENGINEER
640 S. STATE ST.
SHELLEY, ID 83274
Tel: 208 357 5404

MARK	DATE	DESCRIPTION	BY
	12/06/24	ISSUED FOR CONSTRUCTION CONFORMANCE SET	

BARNWELL SCHOOL DISTRICT 45
MULTI-USE SAFE ROOM
ELECTRICAL LEGEND, ABBREVIATIONS AND GENERAL NOTES

Project No.:	213-207015-24001
Designed By:	JJ/RLH
Drawn By:	RLH
Checked By:	JJ

E-001

Copyright: Tetra Tech

12/4/2024 3:40:10 PM BIM 360://200-207015-20004 - Barnwell Dome/E_BARN_DOME_v2019.rvt

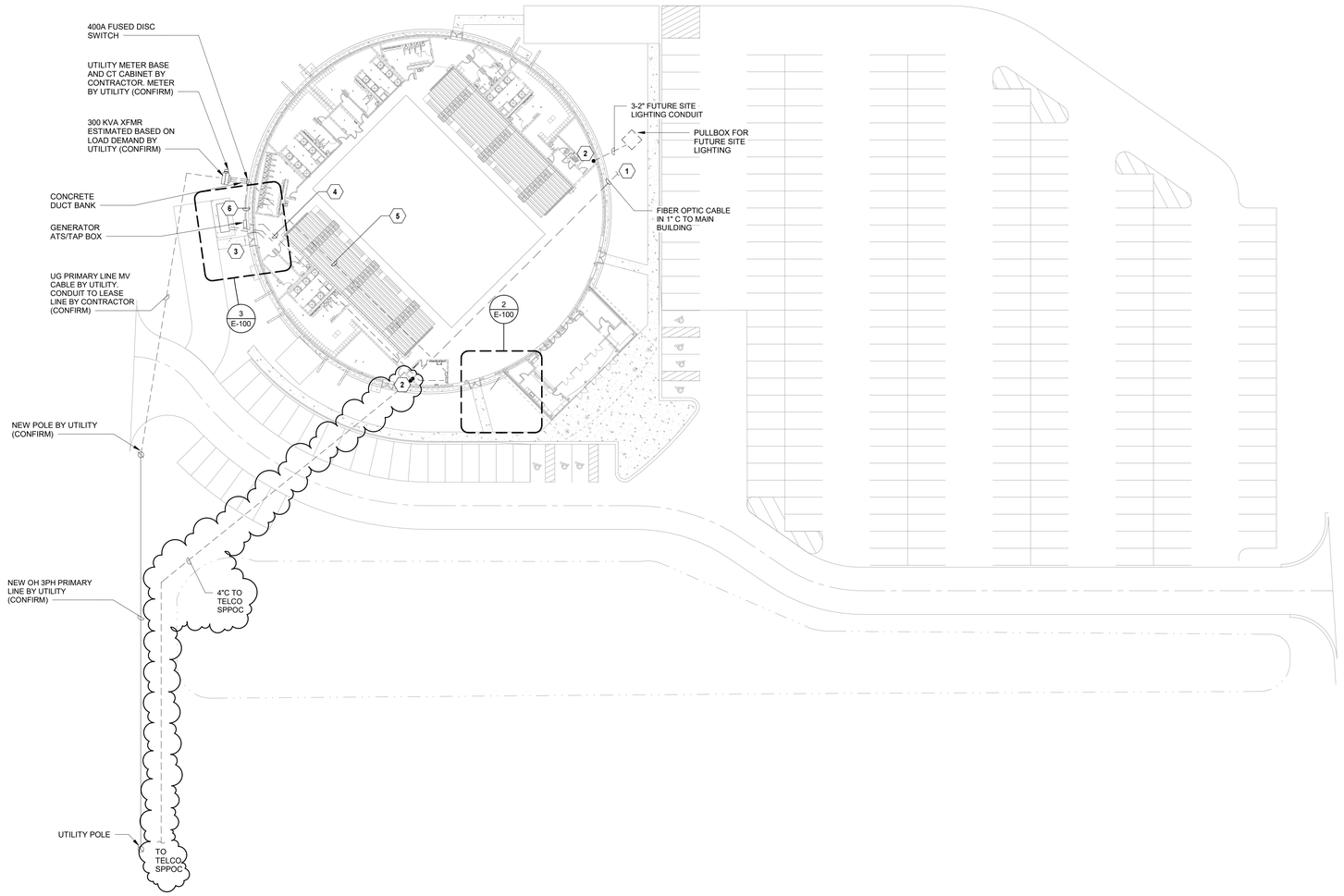

1 E-100 ELECTRICAL SITE PLAN
SCALE: 1" = 30'-0"

KEY NOTES

1. CONTRACTOR SHALL COORINATE LOCATION OF TERMINATION OF FIBER OPTIC LINE TO MAIN BUILDING WITH OWNER PRIOR TO INSTALLATION. PROVIDE ALL APPURTENANCES NECESSARY FOR A FULLY WORKING COMMUNICATION LINK BETWEEN THE MAIN BUILDING AND THE SAFE SITE.
2. STUB CONDUIT UP 6" AFF.
3. GENERATOR ATS/TAP BOX AND INDICATED ROUTING OF FEEDERS IS BASE BID. SEE 3/E-100 FOR PERMANENT GENERATOR BID OPTION. SEE 3/E-601 FOR ADDITIONAL INFORMATION.
4. UNDERGROUND CONDUIT FROM GENERATOR TAP BOX TO ELECTRICAL ROOM 106. SEE E-601 FOR QUANTITY OF CONDUITS AND CONDUCTORS. QUANTITY AND TERMINATION POINT VARIES BETWEEN BASE BID AND PERMANENT GENERATOR BID OPTION.
5. UNDERGROUND CONDUIT AND CONDUCTOR DIRECTLY FROM SERVICE DISCONNECT TO ATS IS PART OF THE PERMANENT GENERATOR BID OPTION. SEE 3/E-601 FOR QUANTITY OF CONDUITS AND CONDUCTORS.
6. CONDUIT AND CONDUCTORS BETWEEN SERVICE DISCONNECT AND ATS/TAP BOX IS BASE BID. REMOVE IF PERMANENT GENERATOR BID OPTION IS SELECTED.
7. REFER TO 3/E-601 FOR CONDUIT AND CONDUCTOR SIZES.
8. CONTROL CABLES FROM GENERATOR TO ATS1, REMOTE ANNUNCIATOR AND EMERGENCY STOP (E-STOP).
9. BRANCH CIRCUITS FROM GENERATOR AUXILIARY SYSTEMS TO CP1. AUXILIARY SYSTEMS INCLUDE: - BATTERY CHARGER - BATTERY HEATER - CONVENIENCE REC AND ENCLOSURE LIGHTING - CONTROL PANEL POWER AND ANTI-CONDENSATION HEATER - JACKET WATER HEATER
10. BRANCH CIRCUIT CONDUITS MAY BE COMBINED TO REDUCE QUANTITY OF CONDUITS INSTALLED WHERE IN COMPLIANCE WITH NEC CONDUIT FILL RATIO AND CONDUCTOR DERATING REQUIREMENTS.
11. CONTROL CABLE CONDUITS MAY BE COMBINED TO REDUCE QUANTITY OF CONDUITS INSTALLED WHERE IN COMPLIANCE WITH NEC CONDUIT FILL RATIOS.

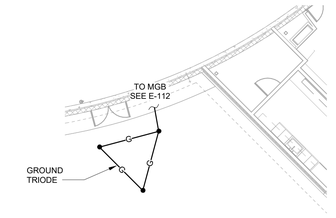

2 E-100 ELECTRICAL SITE PLAN - GROUNDING
SCALE: 1" = 10'-0"

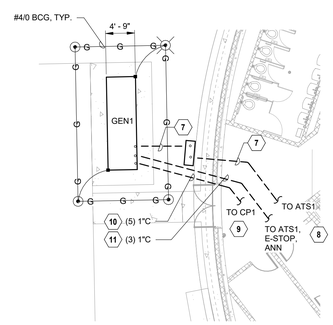

3 E-100 ELECTRICAL SITE PLAN PERMANENT GENERATOR BID OPTION
SCALE: 1" = 10'-0"

TETRA TECH
www.tetratech.com
240 Continental Drive, Suite 200
Newark, DE 19713
Tel: 302.738.7551 Fax: 302.454.3999

RICHARD CARROLL RITTER
No. 21834
12/06/24
RICHARD CARROLL RITTER

BARNWELL SCHOOL DISTRICT 45
OWNER
770 HAGOOD AVE.
BARNWELL, SC 29812
Tel: 803 541 1300

TETRA TECH
ARCHITECT
MECHANICAL ENGINEER
PLUMBING ENGINEER
ELECTRICAL ENGINEER
240 Continental Drive, Suite
Newark, DE 19713
302.738.7551

THOMAS & HUTTON
CIVIL ENGINEER
1501 MAIN ST.
COLUMBIA, SC 29201
Tel: 803 451 0200

ZZ CONSULTING
STRUCTURAL ENGINEER
640 S. STATE ST.
SHELLEY, ID 83274
Tel: 208 357 5404

MARK	DATE	DESCRIPTION	BY
	12/06/24	ISSUED FOR CONSTRUCTION CONFORMANCE SET	

BARNWELL SCHOOL DISTRICT 45
MULTI-USE SAFE ROOM
ELECTRICAL SITE PLAN

Project No.: 213-207015-24001
Designed By: JJ/RLH
Drawn By: RLH
Checked By: JJ

E-100

SCALE: 1" = 10'
SCALE: 1" = 30'

Copyright: Tetra Tech

12/4/2024 3:40:12 PM BIM 360://20-207015-20004 - Barnwell Dome/E_BARN_DOME_v2019.rvt

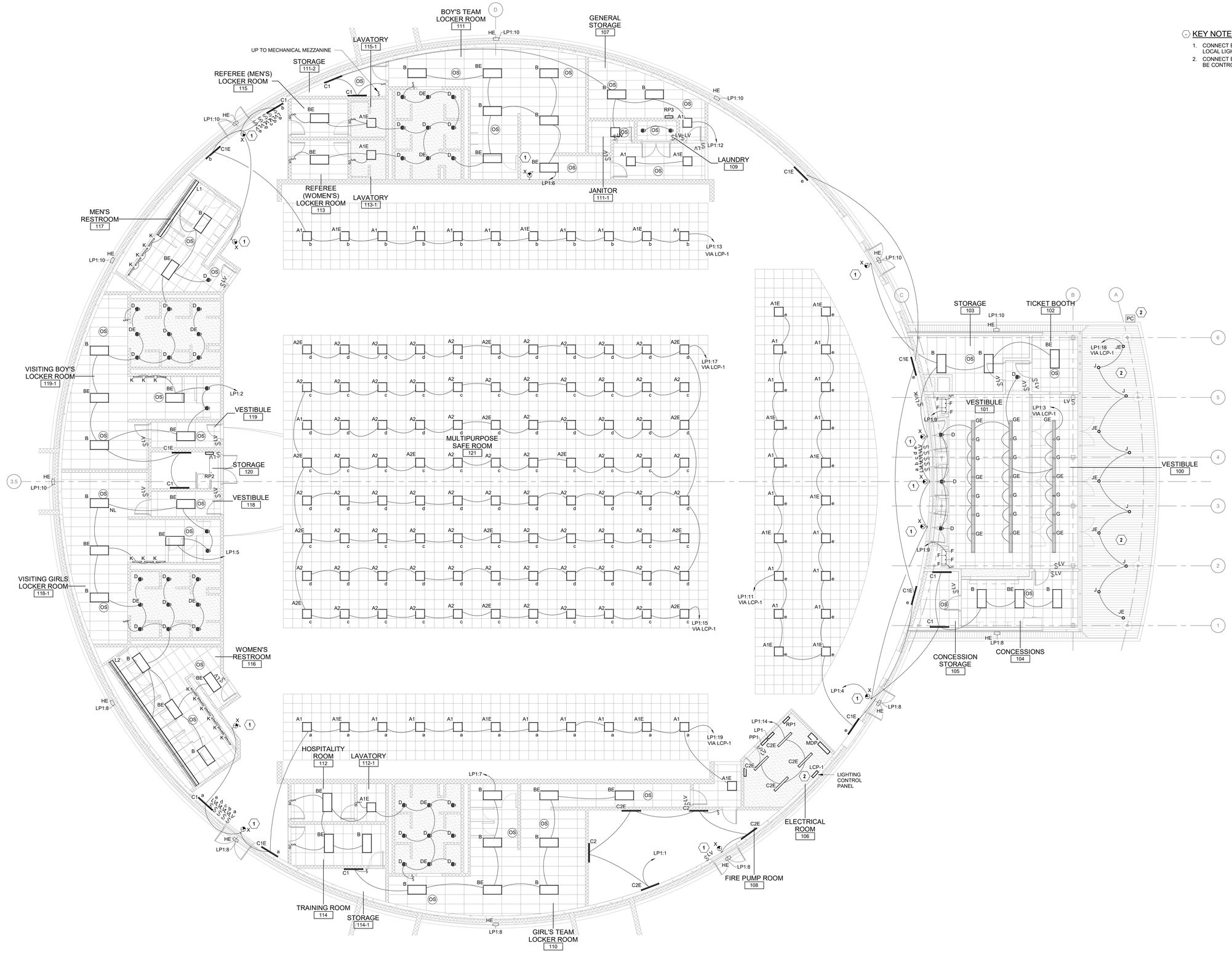

1 E-110 FIRST FLOOR LIGHTING PLAN
SCALE: 1/8" = 1'-0"

KEY NOTES

1. CONNECT EXIT LIGHTING TO THE UNSWITCHED SIDE OF THE LOCAL LIGHTING CIRCUIT.
2. CONNECT EXTERIOR FIXTURES TO LIGHTING CONTROL PANEL TO BE CONTROLLED BY PHOTOCELL.

TETRA TECH
www.tetratech.com
240 Continental Drive, Suite 200
Newark, DE 19713
Tel: 302.738.7551 Fax: 302.454.5989

SOUTH CAROLINA PROFESSIONAL ENGINEER No. 21834 12/06/24 R. SHANE RITTER

BARNWELL SCHOOL DISTRICT 45
OWNER
770 HAGOOD AVE.
BARNWELL, SC 29812
Tel: 803 541 1300

TETRA TECH
ARCHITECT
MECHANICAL ENGINEER
PLUMBING ENGINEER
ELECTRICAL ENGINEER
240 Continental Drive, Suite
Newark, DE 19713
302.738.7551

THOMAS & HUTTON
CIVIL ENGINEER
1501 MAIN ST.
COLUMBIA, SC 29201
Tel: 803 451 0200

ZZ CONSULTING
STRUCTURAL ENGINEER
640 S. STATE ST.
SHELLEY, ID 83274
Tel: 208 357 5404

MARK	DATE	DESCRIPTION	BY
	12/06/24	ISSUED FOR CONSTRUCTION CONFORMANCE SET	

BARNWELL SCHOOL DISTRICT 45
MULTI-USE SAFE ROOM
FIRST FLOOR LIGHTING PLAN

Project No.:	213-207015-24001
Designed By:	JJ/RLH
Drawn By:	RLH
Checked By:	JJ

E-110

PROJECT NORTH
TRUE NORTH
0 4' 8' 16'
SCALE: 1/8" = 1'-0"

Copyright: Tetra Tech

12/4/2024 3:40:17 PM BIM 360://200-207015-20004 - Barnwell Dome/E_BARN_DOME_v2019.rvt

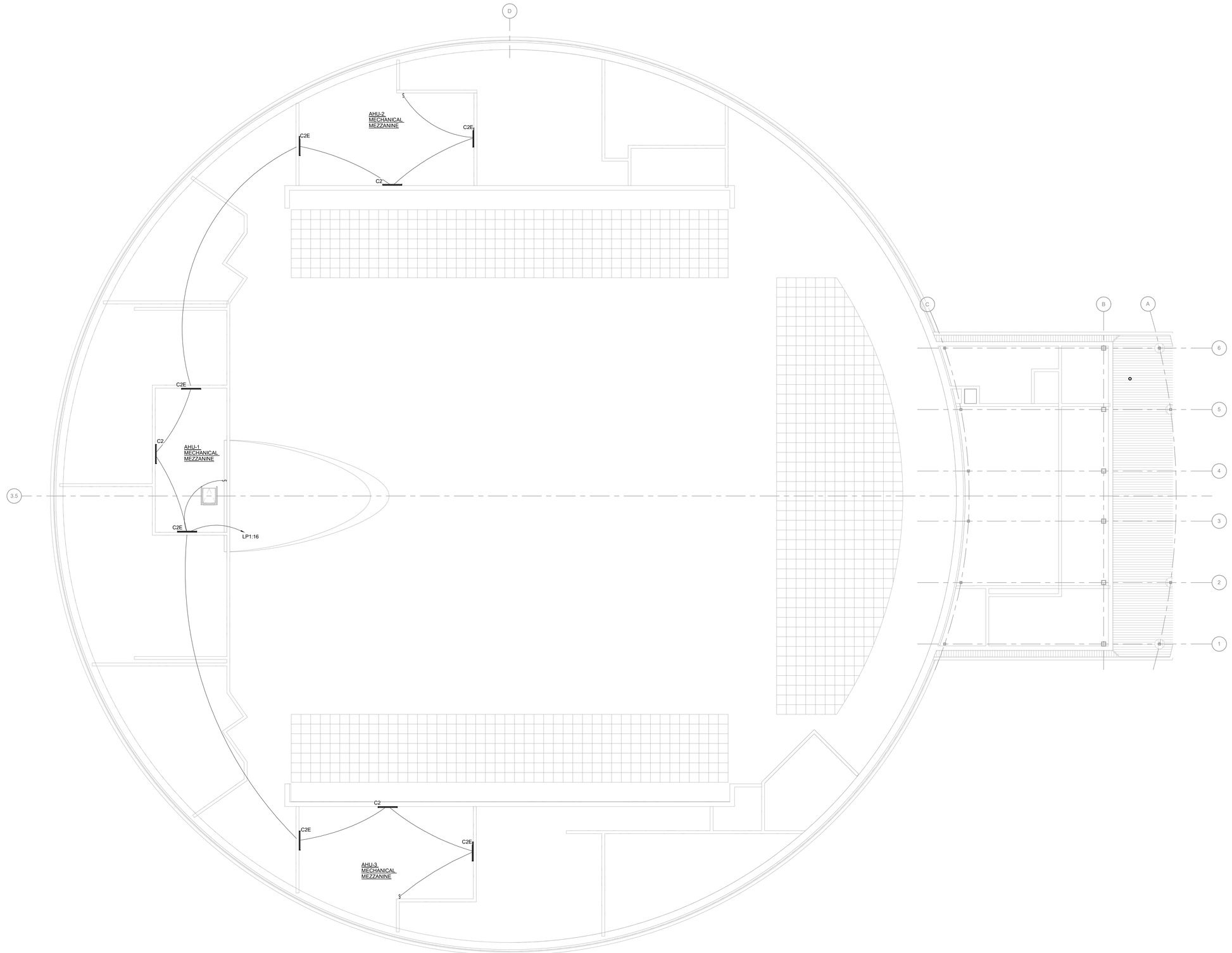

1 MEZZANINE LIGHTING PLAN
E-111 SCALE: 1/8" = 1'-0"

PROJECT NORTH
TRUE NORTH

0 4' 8' 16'
SCALE: 1/8" = 1'-0"

TETRA TECH
www.tetratech.com
240 Continental Drive, Suite 200
Newark, DE 19713
Tel: 302.738.7551 Fax: 302.454.5989

SOUTH CAROLINA
No. 21834
12/06/24
LICENSED PROFESSIONAL ENGINEER
R. SHANE RITTER

BARNWELL SCHOOL DISTRICT 45
OWNER
770 HAGOOD AVE.
BARNWELL, SC 29812
Tel: 803 541 1300

TETRA TECH
ARCHITECT
MECHANICAL ENGINEER
PLUMBING ENGINEER
ELECTRICAL ENGINEER
240 Continental Drive, Suite
Newark, DE 19713
302.738.7551

THOMAS & HUTTON
CIVIL ENGINEER
1501 MAIN ST.
COLUMBIA, SC 29201
Tel: 803 451 0200

ZZ CONSULTING
STRUCTURAL ENGINEER
640 S. STATE ST.
SHELLEY, ID 83274
Tel: 208 357 5404

MARK	DATE	DESCRIPTION	BY
	12/06/24	ISSUED FOR CONSTRUCTION CONFORMANCE SET	

BARNWELL SCHOOL DISTRICT 45
MULTI-USE SAFE ROOM
MEZZANINE LIGHTING PLAN

Project No.:	213-207015-24001
Designed By:	JJ/RLH
Drawn By:	RLH
Checked By:	JJ

E-111

Copyright: Tetra Tech

12/4/2024 3:40:18 PM BIM 360://200-207015-20004 - Barnwell Dome/E_BARN_DOME_v2019.rvt

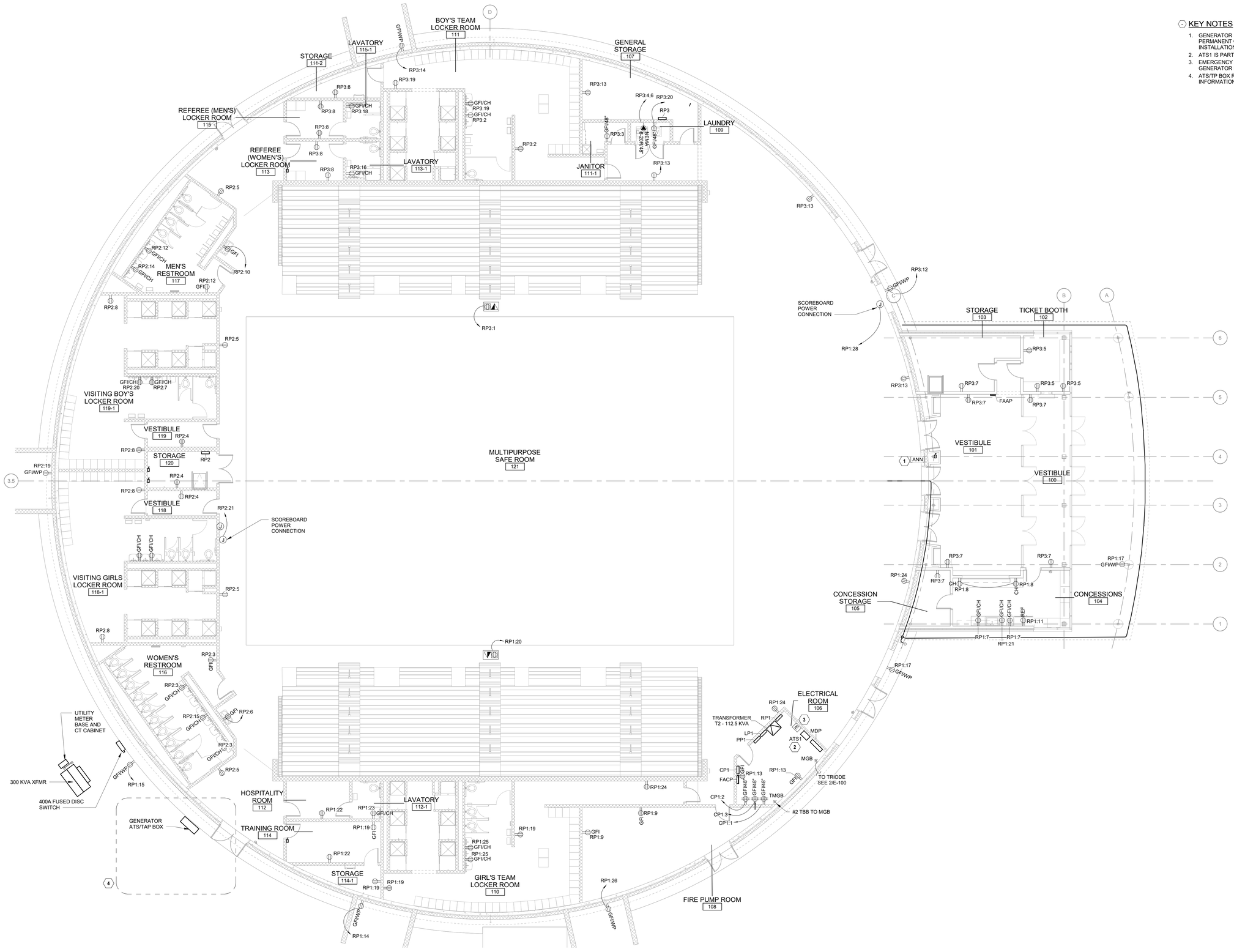

1 FIRST FLOOR POWER PLAN
E-112 SCALE: 1/8" = 1'-0"

KEY NOTES

1. GENERATOR REMOTE ANNUNCIATOR PANEL IS PART OF THE PERMANENT GENERATOR BID OPTION. COORDINATE EXACT INSTALLATION LOCATION WITH OWNER.
2. ATS1 IS PART OF THE PERMANENT GENERATOR BID OPTION.
3. EMERGENCY STOP BUTTON IS PART OF THE PERMANENT GENERATOR BID OPTION.
4. ATS/TP BOX REPRESENTS BASE BID. SEE 3/E-100 AND 3/E-601 FOR INFORMATION ON PERMANENT GENERATOR BID OPTION.

TETRA TECH
www.tetratech.com
240 Continental Drive, Suite 200
Newark, DE 19713
Tel: 302.738.7551 Fax: 302.454.5989

NORTH CAROLINA PROFESSIONAL ENGINEER No. 21834 12/06/24 SHANE RITTER

BARNWELL SCHOOL DISTRICT 45
OWNER
770 HAGOOD AVE.
BARNWELL, SC 29812
Tel: 803 541 1300

TETRA TECH
ARCHITECT
MECHANICAL ENGINEER
PLUMBING ENGINEER
ELECTRICAL ENGINEER
240 Continental Drive, Suite
Newark, DE 19713
302.738.7551

THOMAS & HUTTON
CIVIL ENGINEER
1501 MAIN ST.
COLUMBIA, SC 29201
Tel: 803 451 0200

ZZ CONSULTING
STRUCTURAL ENGINEER
640 S. STATE ST.
SHELLEY, ID 83274
Tel: 208 357 5404

MARK	DATE	DESCRIPTION	BY
	12/06/24	ISSUED FOR CONSTRUCTION CONFORMANCE SET	

BARNWELL SCHOOL DISTRICT 45
MULTI-USE SAFE ROOM
FIRST FLOOR POWER PLAN

Project No.:	213-207015-24001
Designed By:	JJ/RLH
Drawn By:	RLH
Checked By:	JJ

E-112

PROJECT NORTH
TRUE NORTH
0 4' 8' 16'
SCALE: 1/8" = 1'-0"

Copyright: Tetra Tech

12/4/2024 3:40:21 PM BIM 360://200-207015-20004 - Barnwell Dome/E_BARN_DOME_v2019.rvt

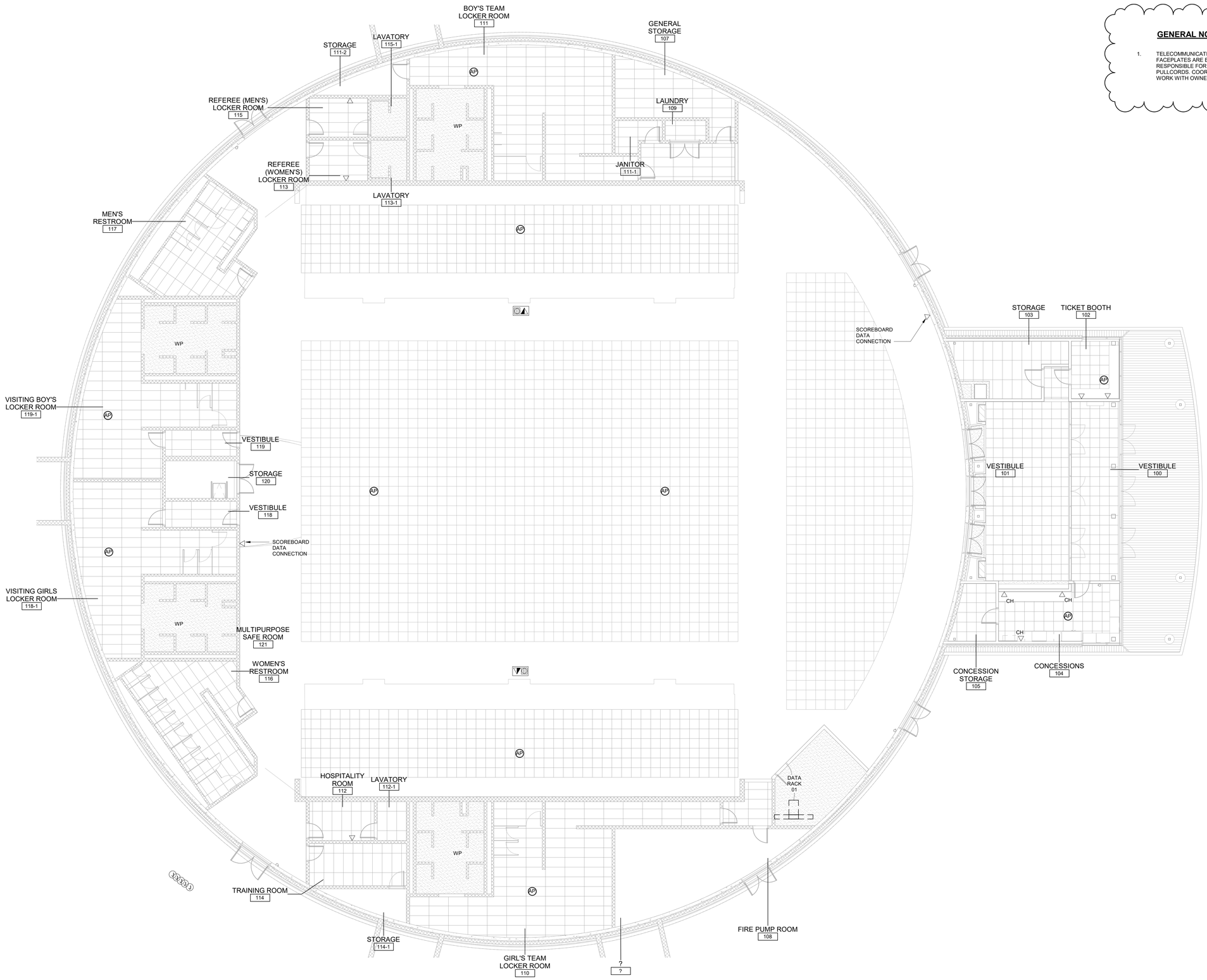

1 E-113 FIRST FLOOR COMMUNICATIONS PLAN
SCALE: 1/8" = 1'-0"

GENERAL NOTE:

1. TELECOMMUNICATIONS JACKS, CABLES, AND FACEPLATES ARE BY OTHERS. CONTRACTOR SHALL BE RESPONSIBLE FOR BOXES, PATHWAY, CONDUITS, AND PULLCORDS. COORDINATE TELECOMMUNICATIONS WORK WITH OWNER PRIOR TO ROUGH-IN.

TETRA TECH
www.tetratech.com
240 Continental Drive, Suite 200
Newark, DE 19713
Tel: 302.738.7551 Fax: 302.454.5989

NORTH CAROLINA PROFESSIONAL ENGINEER No. 21834 12/06/24 R. SHANE RITTER

BARNWELL SCHOOL DISTRICT 45
OWNER
770 HAGOOD AVE.
BARNWELL, SC 29812
Tel: 803 541 1300

TETRA TECH
ARCHITECT
MECHANICAL ENGINEER
PLUMBING ENGINEER
ELECTRICAL ENGINEER
240 Continental Drive, Suite
Newark, DE 19713
302.738.7551

THOMAS & HUTTON
CIVIL ENGINEER
1501 MAIN ST.
COLUMBIA, SC 29201
Tel: 803 451 0200

ZZ CONSULTING
STRUCTURAL ENGINEER
640 S. STATE ST.
SHELLEY, ID 83274
Tel: 208 357 5404

MARK	DATE	DESCRIPTION	BY
	12/06/24	ISSUED FOR CONSTRUCTION CONFORMANCE SET	

BARNWELL SCHOOL DISTRICT 45
MULTI-USE SAFE ROOM
FIRST FLOOR COMMUNICATIONS PLAN

Project No.:	213-207015-24001
Designed By:	JJ/RLH
Drawn By:	RLH
Checked By:	JJ

E-113

PROJECT NORTH
TRUE NORTH
0 4' 8' 16'
SCALE: 1/8" = 1'-0"

Copyright: Tetra Tech

12/4/2024 3:40:23 PM BIM 360://200-207015-20004 - Barnwell Dome/E_BARN_DOME_v2019.rvt

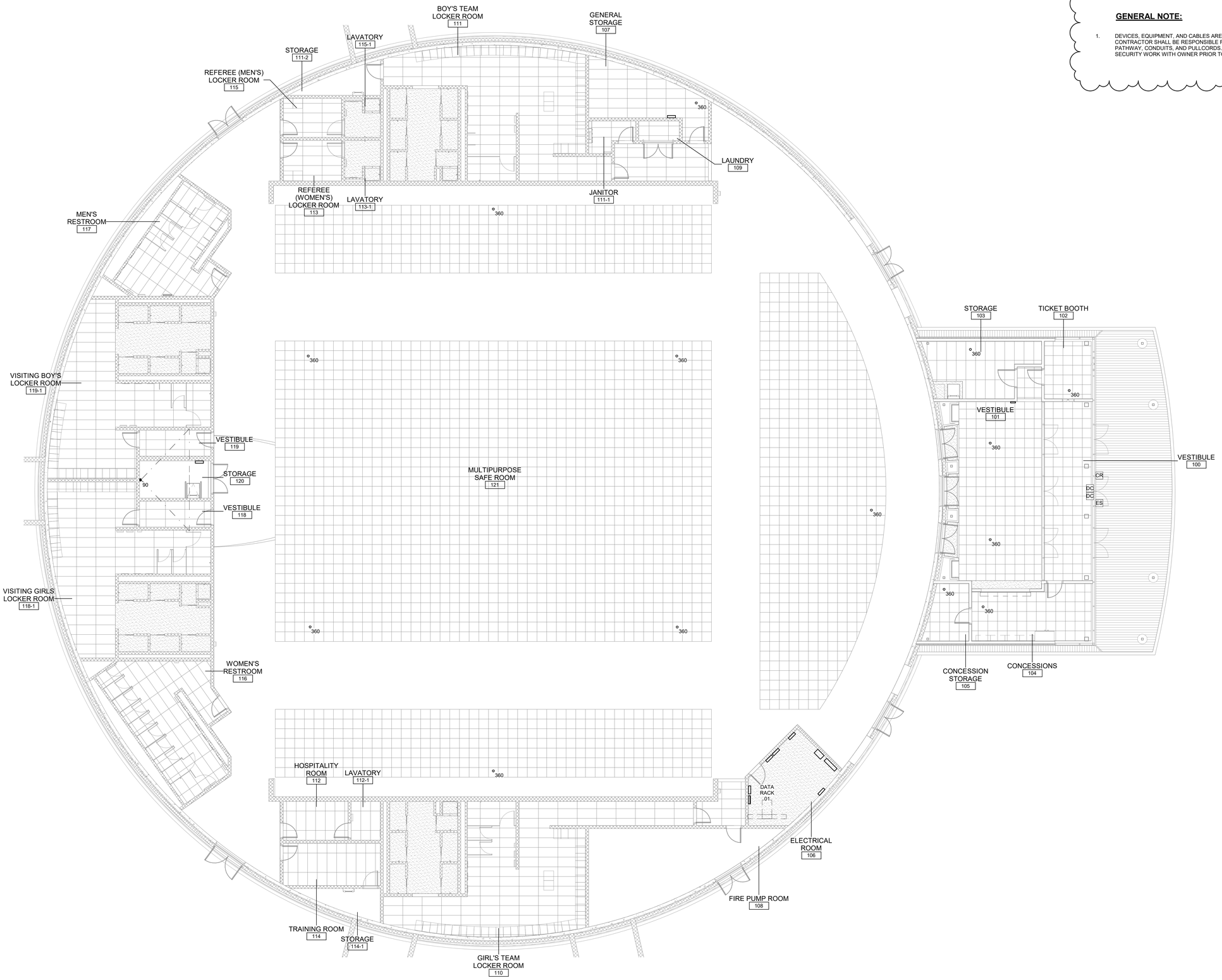

1 E-114 FIRST FLOOR SECURITY PLAN
SCALE: 1/8" = 1'-0"

GENERAL NOTE:

1. DEVICES, EQUIPMENT, AND CABLES ARE BY OTHERS. CONTRACTOR SHALL BE RESPONSIBLE FOR BOXES, PATHWAY, CONDUITS, AND PULLCORDS. COORDINATE SECURITY WORK WITH OWNER PRIOR TO ROUGH-IN.

TETRA TECH
www.tetratech.com
240 Continental Drive, Suite 200
Newark, DE 19713
Tel: 302.738.7551 Fax: 302.454.5989

SOUTH CAROLINA PROFESSIONAL ENGINEER No. 21834 12/06/24 R. SHANE RITTER

BARNWELL SCHOOL DISTRICT 45
OWNER
770 HAGOOD AVE.
BARNWELL, SC 29812
Tel: 803 541 1300

TETRA TECH
ARCHITECT
MECHANICAL ENGINEER
PLUMBING ENGINEER
ELECTRICAL ENGINEER
240 Continental Drive, Suite
Newark, DE 19713
302.738.7551

THOMAS & HUTTON
CIVIL ENGINEER
1501 MAIN ST.
COLUMBIA, SC 29201
Tel: 803 451 0200

ZZ CONSULTING
STRUCTURAL ENGINEER
640 S. STATE ST.
SHELLEY, ID 83274
Tel: 208 357 5404

MARK	DATE	DESCRIPTION	BY
	12/06/24	ISSUED FOR CONSTRUCTION CONFORMANCE SET	

BARNWELL SCHOOL DISTRICT 45
MULTI-USE SAFE ROOM
FIRST FLOOR SECURITY PLAN

Project No.:	213-207015-24001
Designed By:	JJ/RLH
Drawn By:	RLH
Checked By:	Checker

E-114

PROJECT NORTH
TRUE NORTH
0 4' 8' 16'
SCALE: 1/8" = 1'-0"

Copyright: Tetra Tech

12/4/2024 3:40:25 PM BIM 360://200-207015-20004 - Barnwell Dome/E_BARN_DOME_v2019.rvt

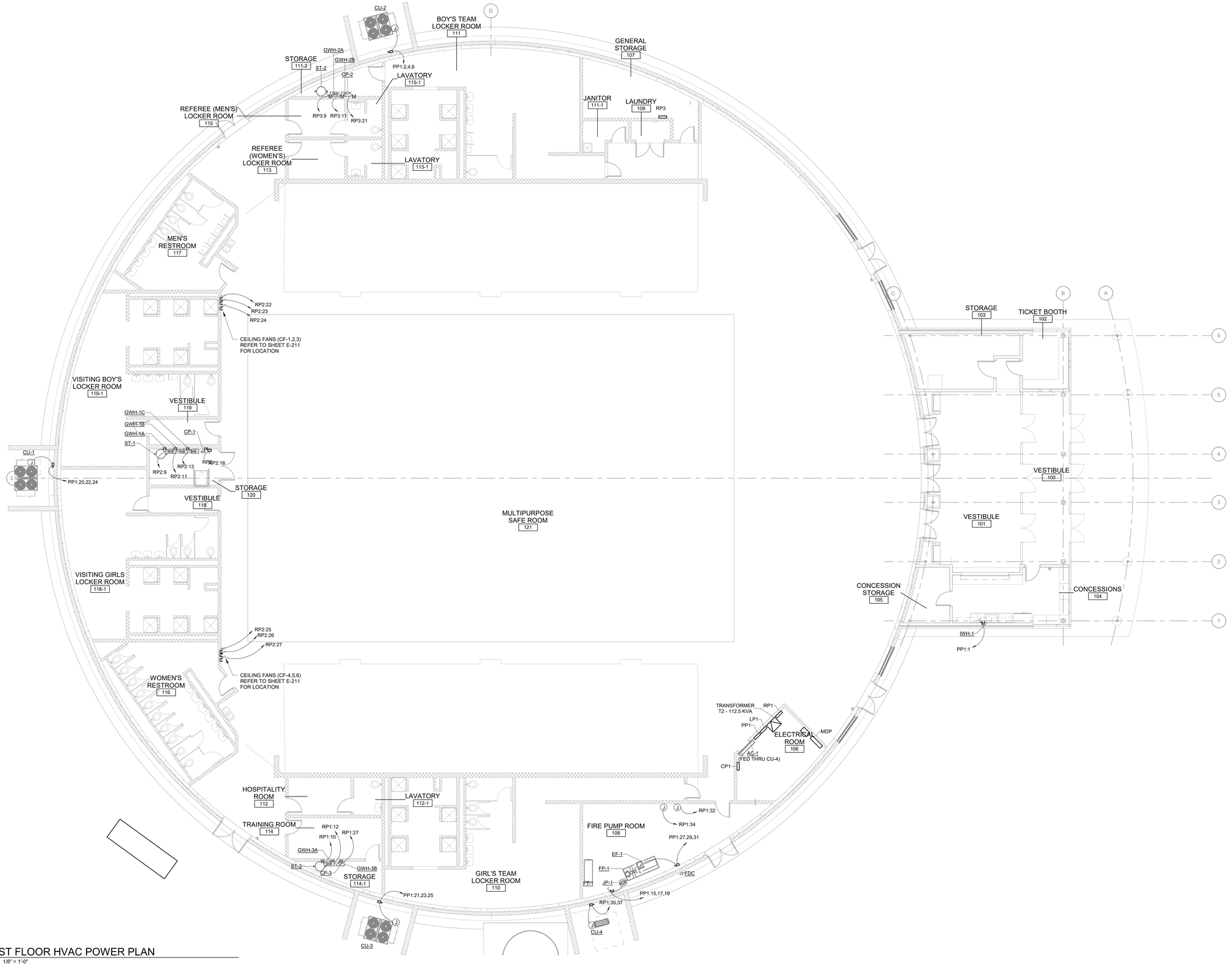

1 E-210 FIRST FLOOR HVAC POWER PLAN
SCALE: 1/8" = 1'-0"

PROJECT NORTH
TRUE NORTH
0 4' 8' 16'
SCALE: 1/8" = 1'-0"

TETRA TECH
www.tetratech.com
240 Continental Drive, Suite 200
Newark, DE 19713
Tel: 302.738.7551 Fax: 302.454.3999

SARAH CARO ANDERSON
No. 21834
12/06/24
DIANE RITTER

BARNWELL SCHOOL DISTRICT 45
OWNER
770 HAGOOD AVE.
BARNWELL, SC 29812
Tel: 803 541 1300

TETRA TECH
ARCHITECT
MECHANICAL ENGINEER
PLUMBING ENGINEER
ELECTRICAL ENGINEER
240 Continental Drive, Suite
Newark, DE 19713
302.738.7551

THOMAS & HUTTON
CIVIL ENGINEER
1501 MAIN ST.
COLUMBIA, SC 29201
Tel: 803 451 0200

ZZ CONSULTING
STRUCTURAL ENGINEER
640 S. STATE ST.
SHELLEY, ID 83274
Tel: 208 357 5404

MARK	DATE	DESCRIPTION	BY
	12/06/24	ISSUED FOR CONSTRUCTION CONFORMANCE SET	

BARNWELL SCHOOL DISTRICT 45
MULTI-USE SAFE ROOM

FIRST FLOOR HVAC POWER PLAN

Project No.:	213-207015-24001
Designed By:	JJ/RLH
Drawn By:	RLH
Checked By:	JJ

E-210

Copyright: Tetra Tech

12/4/2024 3:40:35 PM BIM 360://200-207015-20004 - Barnwell DomeE_BARN_DOME_v2019.rvt

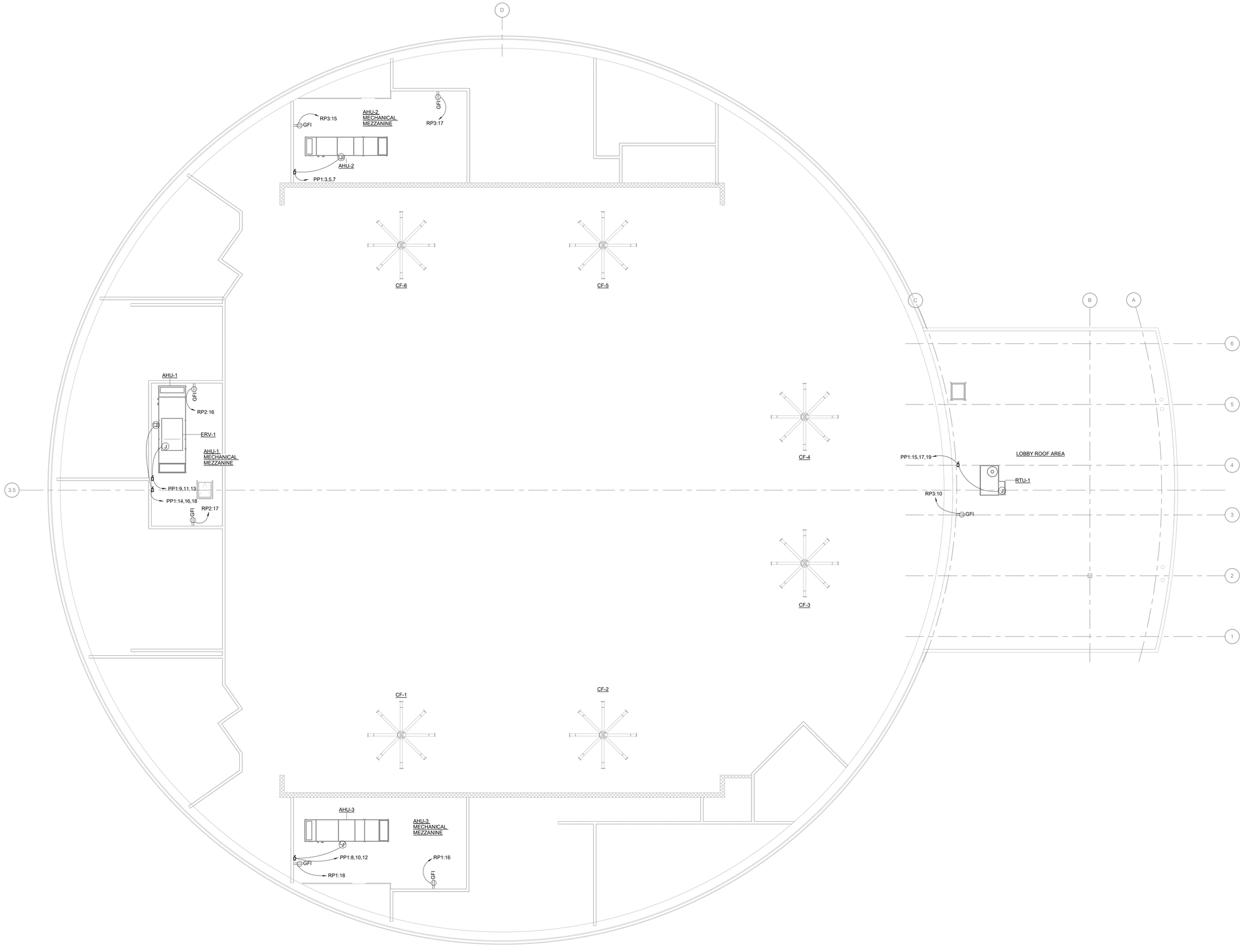

1 E-211 MEZZANINE AND PARTIAL ROOF HVAC POWER PLAN
SCALE: 1/8" = 1'-0"

TRUE NORTH
PROJECT NORTH
0 4' 8' 16'
SCALE: 1/8" = 1'-0"

TETRA TECH
www.tetratech.com
240 Continental Drive, Suite 200
Newark, DE 19713
Tel: 302.738.7551 Fax: 302.454.5989

SOUTH CAROLINA
No. 21834
12/06/24
R. SHANE RITTER

BARNWELL SCHOOL DISTRICT 45
OWNER
770 HAGOOD AVE.
BARNWELL, SC 29812
Tel: 803 541 1300

TETRA TECH
ARCHITECT
MECHANICAL ENGINEER
PLUMBING ENGINEER
ELECTRICAL ENGINEER
240 Continental Drive, Suite
Newark, DE 19713
302.738.7551

THOMAS & HUTTON
CIVIL ENGINEER
1501 MAIN ST.
COLUMBIA, SC 29201
Tel: 803 451 0200

ZZ CONSULTING
STRUCTURAL ENGINEER
640 S. STATE ST.
SHELLEY, ID 83274
Tel: 208 357 5404

MARK	DATE	DESCRIPTION	BY
	12/06/24	ISSUED FOR CONSTRUCTION CONFORMANCE SET	

BARNWELL SCHOOL DISTRICT 45
MULTI-USE SAFE ROOM
MEZZANINE AND PARTIAL ROOF HVAC POWER PLAN

Project No.:	213-207015-24001
Designed By:	JJ/RLH
Drawn By:	RLH
Checked By:	JJ

E-211

Copyright: Tetra Tech

12/4/2024 3:40:36 PM BIM 360://200-207015-20004 - Barnwell Dome/E_BARN_DOME_v2019.rvt

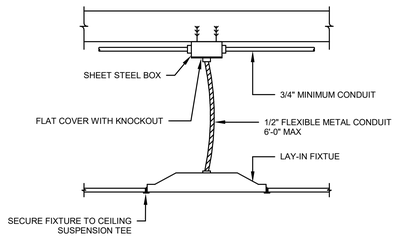

1 E-501 LAY-IN LED TROFFER DETAIL
SCALE: NTS

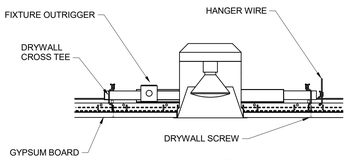

NOTE:
1. SEE LAY-IN MOUNTING LED LIGHT DETAIL FOR CONDUIT AND JUUNCTION BOX DETAILS.

2 E-501 RECESSED DOWN LIGHT DETAIL
SCALE: NTS

WALL SENSOR OCCUPANCY MODE

1. WHEN SENSOR ACTIVATES LOADS TURN ON.
2. SWITCHES CAN BE USED TO TURN LOADS ON OR OFF.

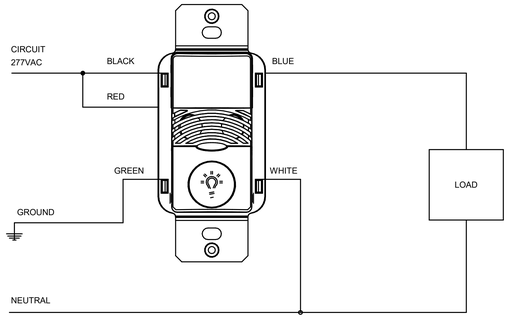

3 E-501 WALL OCCUPANCY/VACANCY SENSOR WIRING DIAGRAM
SCALE: NTS

OAC AUTOMATIC MODE OPERATION:

1. WHEN SENSORS ACTIVATE LOAD TURNS ON.
2. LOAD TURNS OFF WHEN SENSOR TIMES OUT.

RECOMMENDED WIRE:
18-3 AWG STRANDED WIRE SHIELDED OR NON/SHIELDED

NOTES
1. SP20-MV SWITCHPACK SHOWN. 120/277VAC 20AMP RATING.

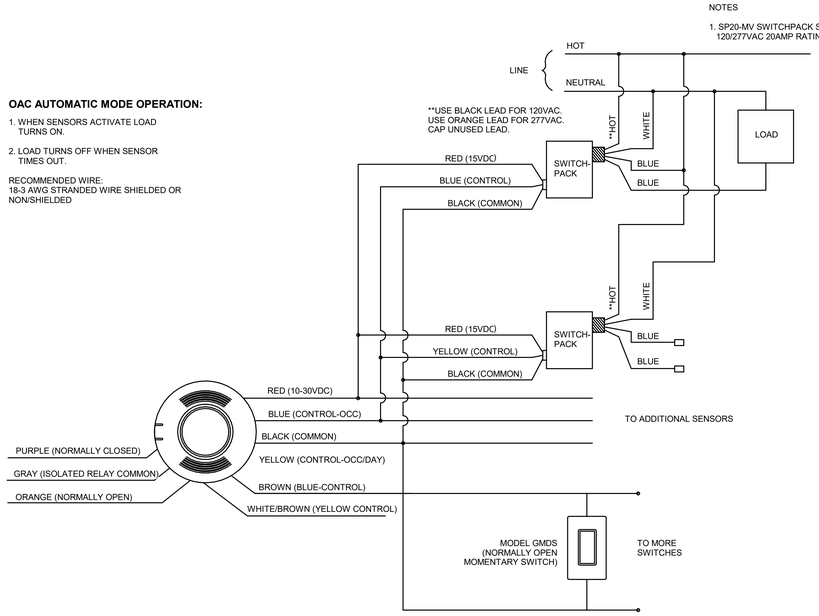

4 E-501 MULTIPLE CEILING OCCUPANCY SENSORS WIRING DIAGRAM
SCALE: NTS

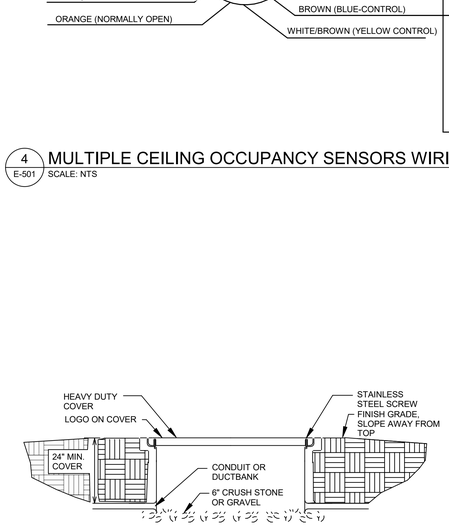

BOX DETAIL NOTES:

1. POWER PULL BOX - 24" X 24" X 24" EQUAL TO QUAZITE PG2424BG24 W/ PG2424CG00 COVER.
2. ALL METAL PARTS SHALL BE STAINLESS STEEL.
3. PROVIDE LOGO IN COVER OF EACH PULL BOX (ELECTRIC)
4. PULL BOXES SHALL BE RATED AT 5000 LBS. OVER A 10"SQ.
5. PULL BOXES SHALL BE RESISTANT BE SUNLIGHT EXPOSURE & WEATHERING
6. PULL BOXES SHALL BE GRAY

6 E-501 UNDERGROUND PULL BOX DETAIL
SCALE: NTS

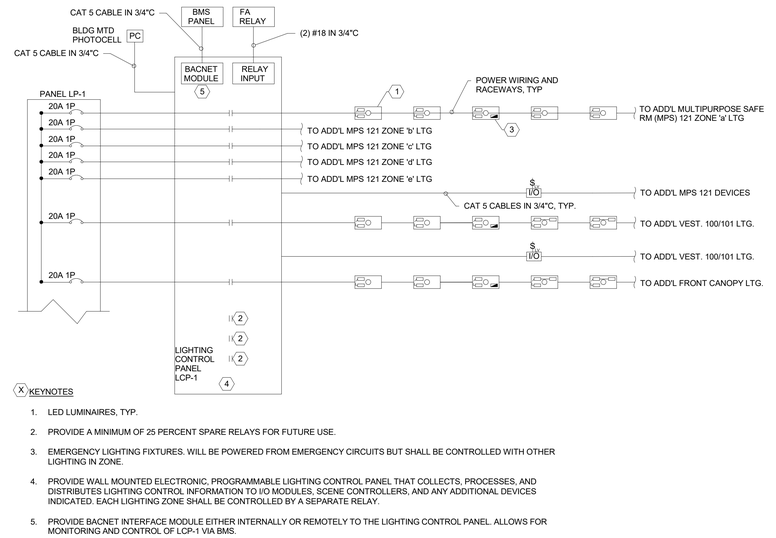

X KEYNOTES

1. LED LUMINAIRES, TYP.
2. PROVIDE A MINIMUM OF 25 PERCENT SPARE RELAYS FOR FUTURE USE.
3. EMERGENCY LIGHTING FIXTURES. WILL BE POWERED FROM EMERGENCY CIRCUITS BUT SHALL BE CONTROLLED WITH OTHER LIGHTING IN ZONE.
4. PROVIDE WALL MOUNTED ELECTRONIC, PROGRAMMABLE LIGHTING CONTROL PANEL THAT COLLECTS, PROCESSES, AND DISTRIBUTES LIGHTING CONTROL INFORMATION TO I/O MODULES, SCENE CONTROLLERS, AND ANY ADDITIONAL DEVICES INDICATED. EACH LIGHTING ZONE SHALL BE CONTROLLED BY A SEPARATE RELAY.
5. PROVIDE BACNET INTERFACE MODULE EITHER INTERNALLY OR REMOTELY TO THE LIGHTING CONTROL PANEL. ALLOWS FOR MONITORING AND CONTROL OF LCP-1 VIA BMS.
6. PROVIDE RELAY INPUT MODULE EITHER INTERNALLY OR REMOTELY FROM THE LIGHTING CONTROL PANEL. ALLOWS FOR RECEIVING FIRE ALARM ADDRESSABLE RELAY OUTPUTS.

5 E-501 TYPICAL LCP CONTROL DIAGRAM
SCALE: NTS

TETRA TECH
www.tetratech.com
240 Continental Drive, Suite 200
Newark, DE 19713
Tel: 302.738.7551 Fax: 302.454.3999

RICHARD CARROLL HUTTON
No. 21834
12/06/24
DIANE RITTER

BARNWELL SCHOOL DISTRICT 45
OWNER
770 HAGOOD AVE.
BARNWELL, SC 29812
Tel: 803 541 1300

TETRA TECH
ARCHITECT
MECHANICAL ENGINEER
PLUMBING ENGINEER
ELECTRICAL ENGINEER
240 Continental Drive, Suite
Newark, DE 19713
302.738.7551

THOMAS & HUTTON
CIVIL ENGINEER
1501 MAIN ST.
COLUMBIA, SC 29201
Tel: 803 451 0200

ZZ CONSULTING
STRUCTURAL ENGINEER
640 S. STATE ST.
SHELLEY, ID 83274
Tel: 208 357 5404

MARK	DATE	DESCRIPTION	BY
	12/06/24	ISSUED FOR CONSTRUCTION CONFORMANCE SET	

BARNWELL SCHOOL DISTRICT 45
MULTI-USE SAFE ROOM

ELECTRICAL DETAILS

Project No.:	213-207015-24001
Designed By:	JJ/RLH
Drawn By:	RLH
Checked By:	JJ

E-501

Copyright: Tetra Tech

12/4/2024 3:40:36 PM BIM 360://200-207015-20004 - Barnwell DomeE_BARN_DOME_v2019.rvt

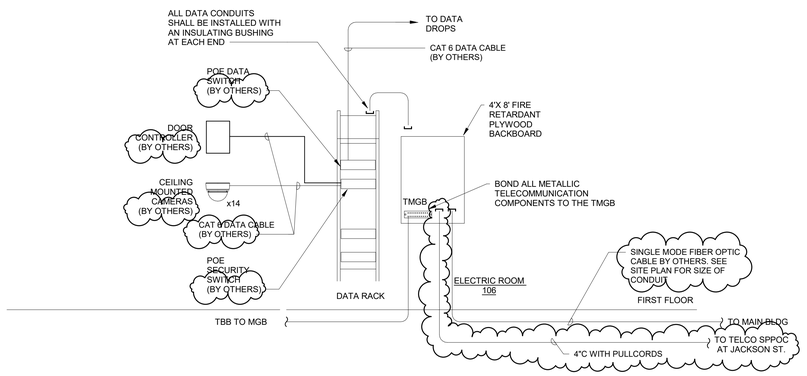

1 E-502 TELECOMMUNICATION AND SECURITY RISER DIAGRAM
SCALE: NTS

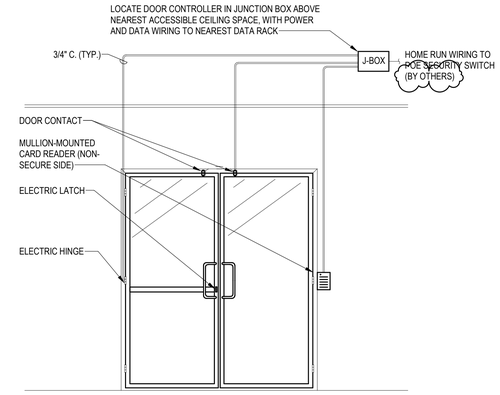

2 E-502 DOUBLE GLASS DOOR ACCESS CONTROL DETAIL
SCALE: NTS

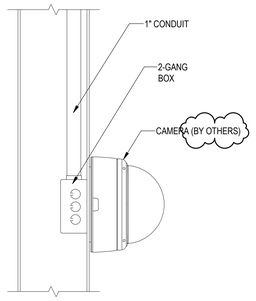

3 E-502 WALL CAMERA MOUNTING DETAIL
SCALE: NTS

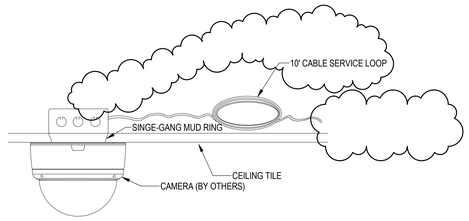

4 E-502 CEILING TILE CAMERA MOUNTING DETAIL (ACCESSIBLE CEILING)
SCALE: NTS

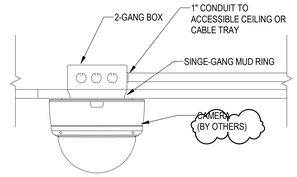

5 E-502 GYPBOARD CEILING CAMERA MOUNTING DETAIL (NON-ACCESSIBLE CEILING)
SCALE: NTS

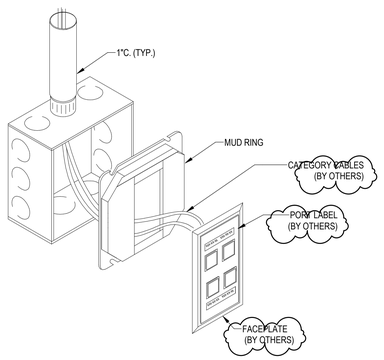

6 E-502 TYICAL STANDARD DATA OUTLET
SCALE: NTS

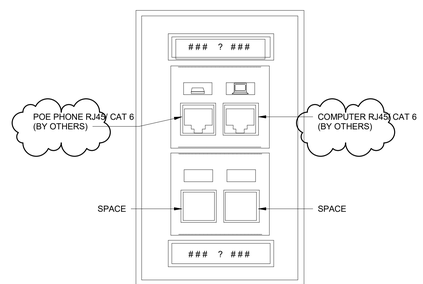

7 E-502 TYPICAL DATA OUTLET LAYOUT DETAIL
SCALE: NTS

TETRA TECH
www.tetratech.com
240 Continental Drive, Suite 200
Newark, DE 19713
Tel: 302.738.7551 Fax: 302.454.5989

NORTH CAROLINA PROFESSIONAL ENGINEER No. 21834 12/06/24 R. SHANE RITTER

BARNWELL SCHOOL DISTRICT 45
OWNER
770 HAGOOD AVE.
BARNWELL, SC 29812
Tel: 803 541 1300

TETRA TECH
ARCHITECT
MECHANICAL ENGINEER
PLUMBING ENGINEER
ELECTRICAL ENGINEER
240 Continental Drive, Suite
Newark, DE 19713
302.738.7551

THOMAS & HUTTON
CIVIL ENGINEER
1501 MAIN ST.
COLUMBIA, SC 29201
Tel: 803 451 0200

ZZ CONSULTING
STRUCTURAL ENGINEER
640 S. STATE ST.
SHELLEY, ID 83274
Tel: 208 357 5404

MARK	DATE	DESCRIPTION	BY
	12/06/24	ISSUED FOR CONSTRUCTION CONFORMANCE SET	

BARNWELL SCHOOL DISTRICT 45
MULTI-USE SAFE ROOM
ELECTRICAL DETAILS

Project No.:	213-207015-24001
Designed By:	JJ/RLH
Drawn By:	RLH
Checked By:	Checker

E-502

Copyright: Tetra Tech

12/4/2024 3:40:37 PM BIM 360://200-207015-20004 - Barnwell Dome/E_BARN_DOME_v2019.rvt

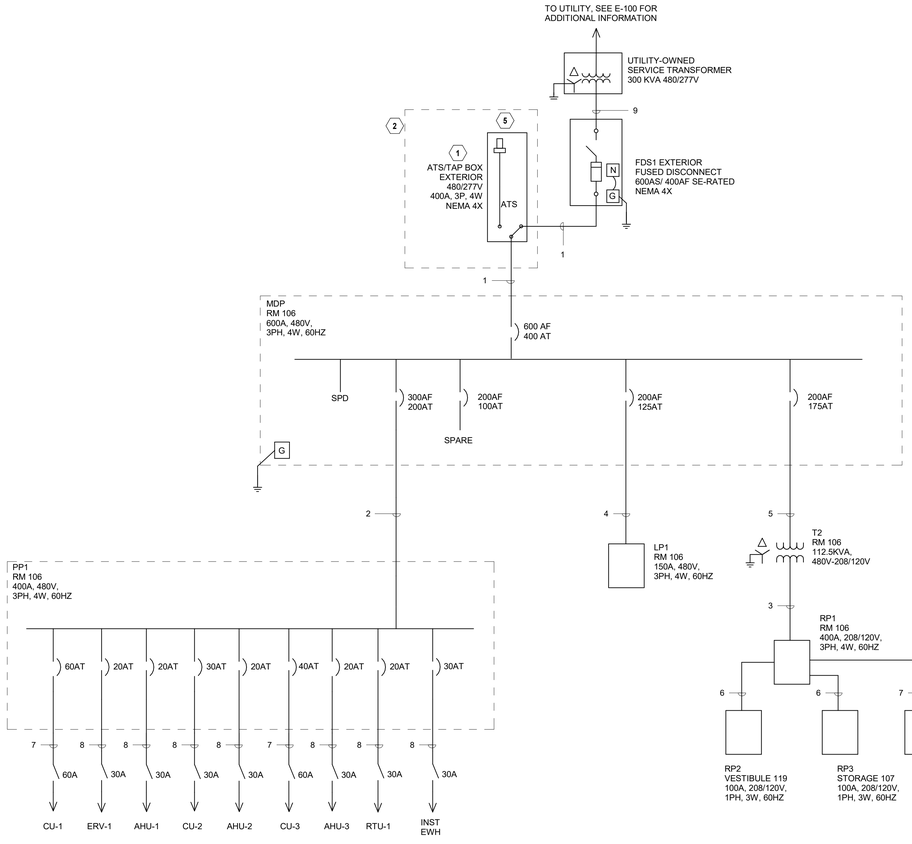

1 SINGLE LINE DIAGRAM
E-601 SCALE: NOT TO SCALE

KEY NOTES

1. ATS/GENERATOR TAP BOX WITH TWO-WIRE AUTO-START CAPABILITY AND BATTERY CHARGER RECEPTACLE. BASIS OF DESIGN IS TRYSTAR MODEL #TATS1-045W-LLM-ACI.
2. EQUIPMENT SHOWN IN DASHED LINES IS BASE BID. REFER TO 3/E-601 FOR PERMANENT GENERATOR BID OPTION. SEE 3/E-100 FOR ADDITIONAL INFORMATION.
3. MANUAL TRANSFER GENERATOR DOCKING STATION. PROVIDE WITH PHASE ROTATION MONITOR AND TWO SETS OF CAMLOCK CONNECTORS. BASIS OF DESIGN IS TRYSTAR MODEL #TMTS5-045W-LLM-A.
4. LOAD BANK CONNECTION.
5. PORTABLE GENERATOR CONNECTION.

CABLE SCHEDULE				
KEY #	SETS	WIRE	CONDUIT	AMPS
1	2	4-#500KCMIL & #2/0G	4"	760A
2	1	4-#300 & #4G	3"	285A
3	1	4-#500 & #4G	4"	380A
4	1	4-#3/0 & #6G	2-1/2"	200A
5	1	3-#3/0 & #6G	2-1/2"	200A
6	1	4-#1/0 & #6G	2"	150A
7	1	4-#4 & #8G	1-1/2"	70A
8	1	3-#8 & #10G	1"	40A
9	2	4-#500 KCMIL	4"	760A
10	2	4-#350 KCMIL & #1G	4"	620A

2 CABLE SCHEDULE
E-601 SCALE: NOT TO SCALE

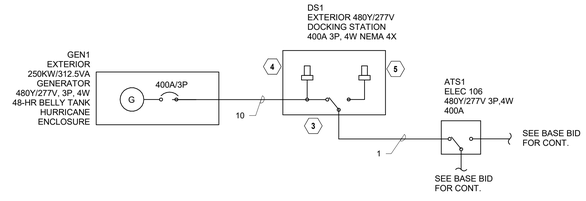

3 SINGLE LINE DIAGRAM - PERMANENT GENERATOR BID OPTION
E-601 SCALE: 12" = 1'-0"

TETRA TECH
www.tetratech.com
240 Continental Drive, Suite 200
Newark, DE 19713
Tel: 302.738.7551 Fax: 302.454.3999

NORTH CAROLINA PROFESSIONAL ENGINEER SEAL No. 21834 12/06/24 SHANE RITTER

BARNWELL SCHOOL DISTRICT 45
OWNER
770 HAGOOD AVE.
BARNWELL, SC 29812
Tel: 803 541 1300

TETRA TECH
ARCHITECT
MECHANICAL ENGINEER
PLUMBING ENGINEER
ELECTRICAL ENGINEER
240 Continental Drive, Suite
Newark, DE 19713
302.738.7551

THOMAS & HUTTON
CIVIL ENGINEER
1501 MAIN ST.
COLUMBIA, SC 29201
Tel: 803 451 0200

ZZ CONSULTING
STRUCTURAL ENGINEER
640 S. STATE ST.
SHELLEY, ID 83274
Tel: 208 357 5404

MARK	DATE	DESCRIPTION	BY
	12/06/24	ISSUED FOR CONSTRUCTION CONFORMANCE SET	

BARNWELL SCHOOL DISTRICT 45
MULTI-USE SAFE ROOM

SINGLE LINE DIAGRAM

Project No.: 213-207015-24001
Designed By: JJ/RLH
Drawn By: RLH
Checked By: JJ

E-601

Copyright. Tetra Tech

12/4/2024 3:40:37 PM BIM 360://200-207015-20004 - Barnwell DomeE_BARN_DOME_v2019.rvt

Switchboard: MDP

Location: ELECTRICAL ROOM 106 **Volts:** 480Y/277V **A.I.C. Rating:** 18KAIC
Supply From: UTILITY XFMR **Phases:** 3 **Mains Type:** MCB
Mounting: SURFACE **Wires:** 4 **Mains Rating:** 600 A
Enclosure: Type 1 **MCB Rating:** 400 A

Notes:

CKT	Circuit Description	# of Poles	Frame Size	Trip Rating	Load	Remarks
1	PP1	3	300 A	200 A	97296 VA	
2	LP1	3	200 A	125 A	12196 VA	
3	TRANSFORMER T2 - 112.5 KVA	3	200 A	175 A	36144 VA	
4	Spare	1	--	100 A	0 VA	
5	Spare	1	--	60 A	0 VA	
6	Spare	1	--	30 A	0 VA	
7	Space	--	--	--	0 VA	--
8	Space	--	--	--	0 VA	--
9	Space	--	--	--	0 VA	--
10	Space	--	--	--	0 VA	--
11	Space	--	--	--	0 VA	--
12	Space	--	--	--	0 VA	--
				Total Conn. Load:	145128 VA	
				Total Amps:	175 A	

Legend:

Load Classification	Connected Load	Demand Factor	Estimated Demand	Panel Totals	
Other	12626 VA	100.00%	12626 VA		
Power	100786 VA	100.00%	100786 VA	**Total Conn. Load:**	145128 VA
Lighting	11226 VA	125.00%	14033 VA	**Total Est. Demand:**	142286 VA
Receptacle	21048 VA	73.76%	15524 VA	**Total Conn. Current:**	175 A
				Total Est. Demand Current:	171 A

Notes:

Branch Panel: PP1

Location: ELECTRICAL ROOM 106 **Volts:** 480Y/277V **A.I.C. Rating:** 18KAIC
Supply From: MDP **Phases:** 3 **Mains Type:** MLO
Mounting: SURFACE **Wires:** 4 **Mains Rating:** 400 A
Enclosure: Type 1

Notes:

CKT	Circuit Description	Trip	Poles	A		B		C		Poles	Trip	Circuit Description	CKT
1	INSTANTANEOUS WATER HEATER (IWH)	30 A	1	4.10	3.47					3	30 A	CU-2	2
3	AHU-2	20 A	3			2.00	3.47			--	--	--	4
5	--	--	--					2.00	3.47	--	--	--	6
7	--	--	--	2.00	2.00					3	20 A	AHU-3	8
9	ERV-1	20 A	3			2.30	2.00			--	--	--	10
11	--	--	--					2.30	2.00	--	--	--	12
13	--	--	--	2.30	3.50					3	20 A	AHU-1	14
15	RTU-1	20 A	3			3.50	3.50			--	--	--	16
17	--	--	--					3.50	3.50	--	--	--	18
19	--	--	--	3.50	7.00					3	60 A	CU-1	20
21	CU-3	40 A	3			4.47	7.00			--	--	--	22
23	--	--	--					4.47	7.00	--	--	--	24
25	--	--	--	4.47									26
27	EF-1	20 A	3			2.50	0.00			1	20 A	Spare	28
29	--	--	--					2.50	0.00	1	20 A	Spare	30
31	--	--	--	2.50	0.00					1	20 A	Spare	32
33	Spare	20 A	1			0.00	0.00			1	20 A	Spare	34
35	Spare	20 A	1					0.00	0.00	1	20 A	Spare	36
37	Spare	20 A	1	0.00	0.00					1	20 A	Spare	38
39	Spare	20 A	1			0.00							40
41	Spare	20 A	1					0.00					42
			Total Load:	34.83 kVA		31.73 kVA		30.73 kVA					
			Total Amps:	126 A		115 A		111 A					

Legend:

Load Classification	Connected Load	Demand Factor	Estimated Demand	Panel Totals	
Other	5100 VA	100.00%	5100 VA		
Power	92196 VA	100.00%	92196 VA	**Total Conn. Load:**	97.30 kVA
				Total Est. Demand:	97.30 kVA
				Total Conn. Current:	117 A
				Total Est. Demand Current:	117 A

Notes:

Branch Panel: LP1

Location: ELECTRICAL ROOM 106 **Volts:** 480Y/277V **A.I.C. Rating:** 18KAIC
Supply From: MDP **Phases:** 3 **Mains Type:** MLO
Mounting: SURFACE **Wires:** 4 **Mains Rating:** 150 A
Enclosure: Type 1

Notes:

CKT	Circuit Description	Trip	Poles	A		B		C		Poles	Trip	Circuit Description	CKT
1	LIGHTING-FIRE PUMP ROOM	20 A	1	0.23	0.72					1	20 A	LIGHTING-ROOMS 117,119,119-1, 120	2
3	LIGHTING-VESTIBULE 100 & LOBBY 101	20 A	1			0.43	0.33			1	20 A	LIGHTING-ROOMS 102,103,104,105 & EXIT...	4
5	LIGHTING-ROOMS 116,118 & 118-1	20 A	1					0.74	0.58	1	20 A	LIGHTING-ROOMS 111,111-2,113,113-1,115 &...	6
7	LIGHTING-ROOMS 110, 112, 112-1, 114, 114-1	20 A	1	0.64	0.20					1	20 A	EXTERIOR WALLPACK LIGHTING	8
9	LIGHTING-LOBBY DISPLAY CASE	20 A	1			0.80	0.23			1	20 A	EXTERIOR LIGHTING	10
11	LIGHTING-MULTIPURPOSE ROOM 121	20 A	1					1.07	0.28	1	20 A	LIGHTING-STORAGE 107,109,111-1, 111-2	12
13	LIGHTING-MULTIPURPOSE ROOM 121	20 A	1	0.68	0.18					1	20 A	LIGHTING-ELECTRICAL ROOM	14
15	LIGHTING-MULTIPURPOSE ROOM 121	20 A	1			2.00	0.40			1	20 A	LIGHTING-MECHANICAL MEZZANINE	16
17	LIGHTING-MULTIPURPOSE ROOM 121	20 A	1					2.00	0.22	1	20 A	EXTERIOR CANOPY LIGHTING	18
19	LIGHTING-MULTIPURPOSE ROOM 121	20 A	1	0.64	0.00					1	20 A	Spare	20
21	Spare	20 A	1			0.00	0.00			1	20 A	Spare	22
23	Spare	20 A	1					0.00	0.00	1	20 A	Spare	24
25	Spare	20 A	1	0.00	0.00					1	20 A	Spare	26
27	Spare	20 A	1			0.00	0.00			1	20 A	Spare	28
29	Spare	20 A	1					0.00	0.00	1	20 A	Spare	30
31	Space	--	--	0.00	0.00					--	--	Space	32
33	Space	--	--			0.00	0.00			--	--	Space	34
35	Space	--	--					0.00	0.00	--	--	Space	36
37	Space	--	--	0.00	0.00					--	--	Space	38
39	Space	--	--			0.00	0.00			--	--	Space	40
41	Space	--	--					0.00	0.00	--	--	Space	42
			Total Load:	3.25 kVA		4.09 kVA		4.86 kVA					
			Total Amps:	12 A		15 A		18 A					

Legend:

Load Classification	Connected Load	Demand Factor	Estimated Demand	Panel Totals	
Other	1020 VA	100.00%	1020 VA		
Lighting	11226 VA	125.00%	14033 VA	**Total Conn. Load:**	12.20 kVA
				Total Est. Demand:	15.00 kVA
				Total Conn. Current:	15 A
				Total Est. Demand Current:	18 A

Notes:

Branch Panel: RP1

Location: ELECTRICAL ROOM 106 **Volts:** 208Y/120V **A.I.C. Rating:** 10KAIC
Supply From: TRANSFORMER T2 - 112.5 KVA **Phases:** 3 **Mains Type:** MCB
Mounting: SURFACE **Wires:** 4 **Mains Rating:** 400 A
Enclosure: Type 1 **MCB Rating:** 300 A

Notes:

CKT	Circuit Description	Trip	Poles	A		B		C		Poles	Trip	Circuit Description	CKT
1	RP2	100 A	3	3.82	3.96					3	100 A	RP3	2
3	--	--	--			4.14	2.78			--	--	--	4
5	--	--	--					3.58	3.02	--	--	--	6
7	RECEPT-CONCESSIONS 104	20 A	1	0.36	0.36					1	20 A	RECEPT-CONCESSIONS 104	8
9	RECEPT-FIRE PUMP ROOM	20 A	1			0.36	0.02			1	20 A	GWH-3A	10
11	RECEPT-REF CONCESSIONS 104	20 A	1					0.65	0.02	1	20 A	GWH-3B	12
13	RECEPT-ELECTRICAL ROOM	20 A	1	0.36	0.18					1	20 A	RECEPT-NEAR CU-3	14
15	RECEPT-NEAR TRANSFORMER	20 A	1			0.18	0.18			1	20 A	RECEPT-MEZZANINE AHU-3	16
17	RECEPT-WEATHERPROOF EXTERIOR	20 A	1					0.36	0.18	1	20 A	RECEPT-MEZZANINE AHU-3	18
19	RECEPT-LAVATORY 114-1	20 A	1	0.72	0.18					1	20 A	RECEPT FLOOR BOX- MULTIPURPOSE 121	20
21	RECEPT-CONCESSIONS 104	20 A	1			0.18	0.36			1	20 A	RECEPT-ROOMS 112 & 114	22
23	RECEPT-LAVATORY 112-1	20 A	1					0.18	0.54	1	20 A	RECEPT-SAFE ROOM 121	24
25	RECEPT-LOCKER ROOM 110	20 A	1	0.36	0.18					1	20 A	RECEPT-NEAR CU-4	26
27	CIRCULATING PUMP CP-3	20 A	1			0.13	0.50			1	20 A	SCOREBOARD EAST	28
29	CP1	60 A	3					1.87					30
31	--	--	--	0.50	0.40					1	20 A	FIRE PUMP CONTROLLER	32
33	--	--	--			0.14	0.40			1	20 A	JACKET HEATER	34
35	CU-4	40 A	2					2.50	0.00	1	20 A	Spare	36
37	--	--	--	2.50	0.00					1	20 A	Spare	38
39	Spare	20 A	1			0.00	0.00			1	20 A	Spare	40
41	Spare	20 A	1					0.00	0.00	1	20 A	Spare	42
			Total Load:	13.88 kVA		9.37 kVA		12.90 kVA					
			Total Amps:	120 A		78 A		112 A					

Legend:

Load Classification	Connected Load	Demand Factor	Estimated Demand	Panel Totals	
Other	6506 VA	100.00%	6506 VA		
Power	8590 VA	100.00%	8590 VA	**Total Conn. Load:**	36.14 kVA
Receptacle	21048 VA	73.76%	15524 VA	**Total Est. Demand:**	30.62 kVA
				Total Conn. Current:	100 A
				Total Est. Demand Current:	85 A

Notes:

Branch Panel: RP2

Location: STORAGE 120 **Volts:** 208Y/120V **A.I.C. Rating:** 10KAIC
Supply From: RP1 **Phases:** 3 **Mains Type:** MCB
Mounting: RECESSED **Wires:** 4 **Mains Rating:** 100 A
Enclosure: Type 1 **MCB Rating:** 100 A

Notes:

CKT	Circuit Description	Trip	Poles	A		B		C		Poles	Trip	Circuit Description	CKT
1	RECEPT-LOCKER ROOM 118-1	20 A	1	0.18	0.18					1	20 A	RECEPT-LOCKER ROOM 118-1	2
3	RECEPT-RESTROOM 116	20 A	1			0.54	0.54			1	20 A	RECEPT-VESTIBULE 118 & 119 & STORAGE...	4
5	RECEPT-SAFE ROOM 121	20 A	1					0.72	0.18	1	20 A	RECEPT-WATER FOUNTAIN SAFE ROOM 121	6
7	RECEPT-LOCKER ROOM 119-1	20 A	1	0.18	0.72					1	20 A	RECEPT-LOCKER ROOM 118-1 & 119-1	8
9	GWH-1A	20 A	1			0.02	0.18			1	20 A	RECEPT-WATER FOUNTAIN SAFE ROOM 121	10
11	GWH-1B	20 A	1					0.02	0.36	1	20 A	RECEPT-RESTROOM 117	12
13	GWH-1C	20 A	1	0.02	0.18					1	20 A	RECEPT-RESTROOM 117	14
15	RECEPT-RESTROOM 116	20 A	1			0.18	0.18			1	20 A	RECEPT-MEZZANINE AHU-1	16
17	RECEPT-MEZZANINE AHU-1	20 A	1					0.18	0.13	1	20 A	CIRCULATING PUMP CP-1	18
19	RECEPT-NEAR CU-1	20 A	1	0.18	0.18					1	20 A	RECEPT-LOCKER ROOM 119-1	20
21	SCOREBOARD WEST	20 A	1			0.50	1.00			1	20 A	CF-1	22
23	CF-2	20 A	1					1.00	1.00	1	20 A	CF-3	24
25	CF-6	20 A	1	1.00	1.00					1	20 A	CF-5	26
27	CF-4	20 A	1			1.00	0.00			1	20 A	Spare	28
29	Spare	20 A	1					0.00	0.00	1	20 A	Spare	30
31	Spare	20 A	1	0.00	0.00					1	20 A	Spare	32
33	Space	--	--			0.00	0.00			--	--	Space	34
35	Space	--	--					0.00	0.00	--	--	Space	36
37	Space	--	--	0.00	0.00					--	--	Space	38
39	Space	--	--			0.00	0.00			--	--	Space	40
41	Space	--	--					0.00	0.00	--	--	Space	42
			Total Load:	3.82 kVA		4.14 kVA		3.58 kVA					
			Total Amps:	32 A		35 A		30 A					

Legend:

Load Classification	Connected Load	Demand Factor	Estimated Demand	Panel Totals	
Other	6181 VA	100.00%	6181 VA		
Power	500 VA	100.00%	500 VA	**Total Conn. Load:**	11.54 kVA
Receptacle	4860 VA	100.00%	4860 VA	**Total Est. Demand:**	11.54 kVA
				Total Conn. Current:	32 A
				Total Est. Demand Current:	32 A

Notes:

Branch Panel: RP3

Location: GENERAL STORAGE 107 **Volts:** 208Y/120V **A.I.C. Rating:** 10KAIC
Supply From: RP1 **Phases:** 3 **Mains Type:** MCB
Mounting: Surface **Wires:** 4 **Mains Rating:** 100 A
Enclosure: Type 1 **MCB Rating:** 100 A

Notes:

CKT	Circuit Description	Trip	Poles	A		B		C		Poles	Trip	Circuit Description	CKT
1	RECEPT FLOOR BOX- MULTIPURPOSE 121	20 A	1	0.18	0.36					1	20 A	RECEPT-LOCKER ROOM 111	2
3	RECEPT-JANITOR 111-1	20 A	1			0.18	1.92			2	20 A	RECEPT- DRYER LAUNDRY 109	4
5	RECEPT-TICKET BOOTH 102	20 A	1					0.54	1.92	--	--	--	6
7	RECEPT-STORAGE 103 & 105	20 A	1	1.08	0.90					1	20 A	RECEPT-LOCKER 113,115 & STORAGE 111-2	8
9	GWH-2A	20 A	1			0.02	0.18			1	20 A	RECEPT-NEAR RTU-1	10
11	GWH-2B	20 A	1					0.02	0.18	1	20 A	RECEPT-WEATHERPROOF EXTERIOR	12
13	RECEPT-STORAGE 107 & SAFE ROOM 121	20 A	1	0.72	0.18					1	20 A	RECEPT-NEAR CU-2	14
15	RECEPT-MEZZANINE AHU-2	20 A	1			0.18	0.18			1	20 A	RECEPT-LAVATORY 113-1	16
17	RECEPT-MEZZANINE AHU-2	20 A	1					0.18	0.18	1	20 A	RECEPT-LAVATORY 115-1	18
19	RECEPT-LOCKER ROOM 111	20 A	1	0.36	0.18					1	20 A	RECEPT-LAUNDRY 109	20
21	CIRCULATING PUMP CP-2	20 A	1			0.13	0.00			1	20 A	Spare	22
23	Spare	20 A	1					0.00	0.00	1	20 A	Spare	24
25	Spare	20 A	1	0.00	0.00					1	20 A	Spare	26
27	Spare	20 A	1			0.00	0.00			1	20 A	Spare	28
29	Spare	20 A	1					0.00	0.00	1	20 A	Spare	30
31	Spare	20 A	1	0.00	0.00					1	20 A	Spare	32
33	Space	--	--			0.00	0.00			--	--	Space	34
35	Space	--	--					0.00	0.00	--	--	Space	36
37	Space	--	--	0.00	0.00					--	--	Space	38
39	Space	--	--			0.00	0.00			--	--	Space	40
41	Space	--	--					0.00	0.00	--	--	Space	42
			Total Load:	3.96 kVA		2.78 kVA		3.02 kVA					
			Total Amps:	33 A		23 A		25 A					

Legend:

Load Classification	Connected Load	Demand Factor	Estimated Demand	Panel Totals	
Other	162 VA	100.00%	162 VA		
Power	180 VA	100.00%	180 VA	**Total Conn. Load:**	9.76 kVA
Receptacle	9420 VA	100.00%	9420 VA	**Total Est. Demand:**	9.76 kVA
				Total Conn. Current:	27 A
				Total Est. Demand Current:	27 A

Notes:

Branch Panel: CP1

Location: ELECTRICAL ROOM 106 **Volts:** 208Y/120V **A.I.C. Rating:** 10KAIC
Supply From: RP1 **Phases:** 3 **Mains Type:** MCB
Mounting: SURFACE **Wires:** 4 **Mains Rating:** 60 A

CKT	Circuit Description	Trip	Poles	A		B		C		Poles	Trip	Circuit Description	CKT
1	RECEPT (DATA RACK)-ELECTRICAL ROOM	20 A	1	0.36	0.36					1	20 A	RECEPT (DATA RACK)-ELECTRICAL ROOM	2
3	RECEPT (DATA RACK)-ELECTRICAL ROOM	20 A	1			0.36	0.14			2	20 A	JACKET WATER HEATER	4
5	Spare	20 A	1					0	0.14	--	--	--	6
7	Spare	20 A	1	0	0					1	20 A	Spare	8
9	Spare	20 A	1			0	0			1	20 A	Spare	10
11	Spare	20 A	1					0	0	1	20 A	Spare	12
13	BATTERY CHARGER	20 A	1	0.2	0.5					1	20 A	CNTRL PNL & HEATER	14
15	Spare	20 A	1			0	0			1	20 A	Spare	16
17	Spare	20 A	1					0	0	1	20 A	Spare	18
19	BATTERY HEATER	20 A	1	0.2	0.25					1	20 A	GEN LIGHTING & RECPT.	20
21	Spare	20 A	1			0	0			1	20 A	Spare	22
23	Spare	20 A	1					0	0	1	20 A	Spare	24
			Total Load:	1870 VA		500 VA		140 VA					
			Total Amps:	16 A		5 A		1 A					

Load Classification	Connected Load	Demand Factor	Estimated Demand	Panel Totals	
Power	1430 VA	100.00%	1430 VA		
Receptacle	1080 VA	100.00%	1080 VA	**Total Conn. Load:**	2510 VA
				Total Est. Demand:	2510 VA
				Total Conn. Current:	7 A
				Total Est. Demand Current:	7 A

TETRA TECH
www.tetratech.com
240 Continental Drive, Suite 200
Newark, DE 19713
Tel: 302.738.7551 Fax: 302.454.5989

SOUTH CAROLINA LICENSED PROFESSIONAL ENGINEER No. 21834 12/06/24 R. SHANE RITTER

BARNWELL SCHOOL DISTRICT 45
OWNER
770 HAGOOD AVE.
BARNWELL, SC 29812
Tel: 803 541 1300

TETRA TECH
ARCHITECT
MECHANICAL ENGINEER
PLUMBING ENGINEER
ELECTRICAL ENGINEER
240 Continental Drive, Suite
Newark, DE 19713
302.738.7551

THOMAS & HUTTON
CIVIL ENGINEER
1501 MAIN ST.
COLUMBIA, SC 29201
Tel: 803 451 0200

ZZ CONSULTING
STRUCTURAL ENGINEER
640 S. STATE ST.
SHELLEY, ID 83274
Tel: 208 357 5404

MARK	DATE	DESCRIPTION	BY
	12/06/24	ISSUED FOR CONSTRUCTION CONFORMANCE SET	

BARNWELL SCHOOL DISTRICT 45
MULTI-USE SAFE ROOM
ELECTRICAL PANEL SCHEDULES

Project No.: 213-207015-24001
Designed By: JJ/RLH
Drawn By: RLH
Checked By: JJ

E-602

Copyright: Tetra Tech

12/4/2024 3:40:38 PM BIM 360://200-207015-20004 - Barnwell Dome/E_BARN_DOME_v2019.rvt

LEGEND AND ABBREVIATIONS

——→	NEW WIRING RUN IN FLOOR CONSTRUCTION AND/OR UNDERGROUND
◇	NEW WORK NOTES
FACP	FIRE ALARM CONTROL PANEL
FAAP	FIRE ALARM ANNUNCIATOR PANEL
H	HEAT DETECTOR
S	SMOKE DETECTOR
C	CARBON MONOXIDE DETECTOR
S	MASS NOTIFICATION SPEAKER
F	MANUAL PULLSTATION
F 30	AUDIO/ VISUAL DEVICE (SPEAKER/ STROBE); WALL MOUNTED; NUMBER INDICATES CANDELA RATING
F 30 C	AUDIO/ VISUAL DEVICE (SPEAKER/ STROBE); CEILING MOUNTED; NUMBER INDICATES CANDELA RATING
S 15	VISUAL ONLY STROBE DEVICE; NUMBER INDICATES CANDELA RATING
FS	SPRINKLER SYSTEM FLOW SWITCH (BY OTHERS)
TS	SPRINKLER SYSTEM TAMPER SWITCH (BY OTHERS)
ZAM	ZONE ADDRESS MODULE
DD	DUCT MOUNTED SMOKE DETECTOR
SI	STATUS INDICATOR (REMOTE TEST SWITCH)
M	VALVE MONITOR
C	EXTERIOR FIRE ALARM BELL W/ CONTROL MODULE
CTRL	CONTROL/CONTROLLER
DACT	DIGITAL ALARM COMMUNICATOR TRANSMITTER
E.O.L.	END OF LINE RESISTOR
FAAP	FIRE ALARM ANNUNCIATOR PANEL
FACP	FIRE ALARM CONTROL PANEL
NAC	NOTIFICATION APPLIANCE CIRCUIT
MNS	MASS NOTIFICATION SYSTEM
PAS	PUBLIC ADDRESS SYSTEM
SLC	SIGNAL LINE CIRCUIT
SPD	SURGE PROTECTION DEVICE
WP	WEATHER PROOF

FIRE ALARM SYSTEM REQUIREMENTS

1. PROVIDE AN ADDRESSABLE COMBINATION FIRE ALARM SYSTEM/ MASS NOTIFICATION SYSTEM IN ACCORDANCE WITH NFPA 72 AND NFPA 101. THE FIRE ALARM SYSTEM SHALL BE COMPATIBLE WITH THE MASS NOTIFICATION SYSTEM RECEIVER AND BE ABLE TO RELAY OUTPUTS FROM RECEIVER OVER THE VOICE EVACUATION SYSTEM TO THE SPEAKERS. THE CONTRACTOR SHALL ENSURE RECEIVER IS COMPATIBLE WITH MAIN SCHOOL BUILDING MASS NOTIFICATION SYSTEM. MASS NOTIFICATION SIGNALS SHALL TAKE PRECEDENCE OVER FIRE ALARM SIGNALS.
2. FIRE ALARM SYSTEM SHALL MONITOR ALL SPRINKLER SYSTEM ALARM SUPERVISORY AND TROUBLE CONDITIONS.
3. AIR HANDLING UNITS OVER 2000 CFM SHALL HAVE DUCT SMOKE DETECTORS INSTALLED.
4. PROVIDE CLASS A, LEVEL 0 WIRING PER NFPA 72.
5. SYSTEM OPERATION AND MAINTENANCE PROCEDURES, MANUALS, SYSTEM DOCUMENTATION AND INSTRUCTION OF OWNER'S OPERATING PERSONAL SHALL BE PROVIDED PER NFPA 72.
6. ROOM CANDELA RATING SHALL COMPLY WITH TABLES 18.5.5.4.1(a) AND 18.5.5.4.1 (b) IN NFPA 72. AUDIO LEVEL SHALL COMPLY WITH SECTION 18.4 IN NFPA 72. AUDIO AND VISUAL RATINGS SHALL MEET OR EXCEED NFPA REQUIREMENTS.
7. PROVIDE REMOTE POWER SUPPLIES AS REQUIRED FOR NOTIFICATION APPLIANCE CIRCUITS, NOT TO EXCEED 80% OF CAPACITY.
8. PROVIDE SMOKE DETECTOR ABOVE EACH REMOTE POWER SUPPLY PANEL.
9. SMOKE DETECTOR LAYOUT SHALL COMPLY WITH SECTION 17.7 IN NFPA 72. ADDITIONAL SMOKE DETECTORS SHALL BE PROVIDED TO REMOVE SMOKE STRATIFICATION.
10. PROVIDE BATTERY, CURRENT LOAD AND VOLTAGE DROP CALCULATIONS PER NFPA.
11. SEAL AROUND PIPES & CONDUITS IN MASONRY AND DRYWALL WALLS.
12. EXTERIOR DEVICES SHALL BE SUBJECT TO ENVIRONMENTAL FACTORS INCLUDING BUT NOT LIMITED TO: HUMIDITY, TEMPERATURE AND CORROSIVE ATMOSPHERES (INCLUDING COASTAL SALT AIR).
13. FIRE ALARM WIRING SHALL BE MINIMUM # 14 AWG AND PLENUM RATED.
14. FIRE ALARM CONTRACTOR SHALL BE RESPONSIBLE FOR CHARGES INVOLVED IN OBTAINING APPROVAL AND CERTIFICATION FROM STATE ELECTRICAL INSPECTOR FOR A COMPLETE SYSTEM. CERTIFIED CONTRACTOR TO PAY FEES REQUIRED
15. EXACT QUANTITIES OF DEVICES AND LOCATIONS SHALL COMPLY WITH NFPA GUIDELINES AND MEET APPROVAL OF THE STATE ELECTRICAL INSPECTOR. FIRE ALARM CONTRACTOR SHALL HAVE SHOP DRAWINGS APPROVED BY THE STATE ELECTRICAL INSPECTOR PRIOR TO COMMENCEMENT OF WORK.
16. SYSTEM TESTING SHALL COMPLY WITH NFPA 72.
17. PROVIDE A COMPLETE AND FUNCTIONING FIRE ALARM SYSTEM WITH INDICATING AND INITIATING DEVICES PER NFPA 1, 72, 101 AND THE LOCAL AHJ.
18. TESTING AND INSPECTIONS SHALL BE DONE AFTER HOURS. COORDINATE WITH BUILDING OFFICIALS AND THE FIRE MARSHALL FOR AFTER-HOUR INSPECTIONS. CONTRACTOR SHALL TEST THE FIRE ALARM AFTER THE WORK IS COMPLETED. SYSTEM TO BE TESTED BY DTE AND AHJ AFTER COMPLETION.
19. ANTI-TAMPER DEVICES AND TAMPER NOTIFICATION IS NOT REQUIRED ON MANUAL PULL STATIONS AT BUILDING EXITS.
20. DEVICES INDICATED ON PLANS AND DETAILS SHALL BE INSTALLED AND CONNECTED FOR PROPER OPERATION OF SYSTEM. CONTRACTOR SHALL PROVIDE FINAL COORDINATION OF NEW FIRE ALARM DEVICES WITH OWNER FURNISHED EQUIPMENT AND STORAGE RACKS.
21. MOUNT SMOKE DETECTORS LOCATED IN EXPOSED AREAS WITH NO CEILINGS AT UNDERSIDE OF ROOF DECK AND NOT BOTTOM OF JOISTS.
22. THE FIRE ALARM CONTRACTOR SHALL SUBMIT SHOP DRAWINGS FOR REVIEW AND APPROVAL PRIOR TO SYSTEM INSTALLATION. THESE SHOP DRAWINGS SHALL INCLUDE THE FOLLOWING AT A MINIMUM:
    - A. A FLOOR PLAN THAT INDICATES ALL OF THE ROOMS.
    - B. THE LOCATION OF ALL FIRE ALARM DEVICES.
    - C. LOCATIONS OF NOTIFICATION APPLIANCES, INCLUDING CANDELA RATING FOR VISIBLE APPLIANCES.
    - D. LOCATION OF THE FIRE ALARM CONTROL UNIT, TRANSFORMERS AND POWER SUPPLIES.
    - E. ANNUNCIATORS, IF ANY.
    - F. POWER CONNECTION.
    - G. BATTERY CALCULATIONS.
    - H. CONDUIT TYPE AND SIZES.
    - I. VOLTAGE DROP CALCULATIONS.
    - J. MANUFACTURER'S DATA SHEETS FOR ALL EQUIPMENT.
    - K. DETAILS OF CEILING HEIGHTS AND CONSTRUCTION.
    - L. THE INTERFACE FOR ALL FIRE SAFETY CONTROL FUNCTIONS.
    - M. CLASSIFICATION OF THE SUPERVISING STATION.

FIRE ALARM SYSTEM OPERATION

1. THE ACTIVATION OF A MANUAL PULL STATION, SMOKE DETECTOR OR DUCT DETECTOR SHALL CAUSE ALL FIRE ALARM STROBES TO FLASH AND THE SPEAKERS TO SOUND A GENERAL ALARM. MAGNETIC DOOR HOLDS SHALL BE RELEASED. THE FIRE ALARM PANEL SHALL INDICATE AN ALARM CONDITION ON THE FRONT PANEL.

2. THE SPEAKERS SHALL SOUND A CODE 3 TEMPORAL PATTERN FOLLOWED BY AN EVACUATION MESSAGE AS FOLLOWS: "ATTENTION". "ATTENTION". "AN EMERGENCY HAS BEEN REPORTED IN THE BUILDING". "PLEASE WALK TO THE NEAREST EXIT AND LEAVE THE BUILDING". "WALK TO THE EXIT".

3. THIS SEQUENCE SHALL REPEAT THREE TIMES, THEN THE CODE 3 TEMPORAL PATTERN AND VISIBLE NOTIFICATION WILL CONTINUE UNTIL THE SYSTEM IS SILENCED OR RESET.

4. THE VOICE EVACUATION MESSAGE OR THE CODE 3 TEMPORAL PATTERN CAN BE INTERRUPTED MANUALLY BY KEYING THE SYSTEM MICROPHONE OR REMOTE MICROPHONE AND VERBALLY GIVING EVACUATION INSTRUCTIONS.

5. A SYSTEM TROUBLE SHALL ACTIVATE WHEN THERE IS AN OPEN OR GROUND IN THE SYSTEM WIRING. THE FIRE ALARM PANEL AND ANNUNCIATOR SHALL INDICATE A TROUBLE AND SEND A TROUBLE SIGNAL TO THE REMOTE STATION MONITORING PANEL.

TETRA TECH
www.tetratech.com
240 Continental Drive, Suite 200
Newark, DE 19713
Tel: 302.738.7551 Fax: 302.454.3999

NORTH CAROLINA REGISTERED LANDSCAPE ARCHITECT No. 21834 12/06/24 DUANE RITTER

BARNWELL SCHOOL DISTRICT 45
OWNER
770 HAGOOD AVE.
BARNWELL, SC 29812
Tel: 803 541 1300

TETRA TECH
ARCHITECT
MECHANICAL ENGINEER
PLUMBING ENGINEER
ELECTRICAL ENGINEER
240 Continental Drive, Suite
Newark, DE 19713
302.738.7551

THOMAS & HUTTON
CIVIL ENGINEER
1501 MAIN ST.
COLUMBIA, SC 29201
Tel: 803 451 0200

ZZ CONSULTING
STRUCTURAL ENGINEER
640 S. STATE ST.
SHELLEY, ID 83274
Tel: 208 357 5404

MARK	DATE	DESCRIPTION	BY
	12/06/24	ISSUED FOR CONSTRUCTION CONFORMANCE SET	

BARNWELL SCHOOL DISTRICT 45
MULTI-USE SAFE ROOM

FIRE ALARM LEGEND, ABBREVIATION AND GENERAL NOTES

Project No.:	213-207015-24001
Designed By:	JJ/RLH
Drawn By:	RLH
Checked By:	JJ

FA001

Copyright: Tetra Tech

12/4/2024 3:40:39 PM BIM 360://200-207015-20004 - Barnwell DomeE_BARN_DOME_v2019.rvt

GENERAL NOTE:

1. MASS NOTIFICATION SPEAKER WILL OPERATE IDENTICALLY TO THE FIRE ALARM SPEAKERS. ALL SPEAKERS WILL BE SHARED FOR FIRE ALARM AND MASS NOTIFICATION ALERTING PURPOSES. WHERE SPEAKER/STROBE DEVICES AND SPEAKER-ONLY DEVICES ARE PLACED SUCH THAT AUDIBLE COVERAGE MAY BE REDUNDANT, QUANTITY OF DEVICES IS PERMITTED TO BE REDUCED SO LONG AS VOICE INTELLIGIBILITY IS MAINTAINED

CU-2
LAVATORY 115-1
STORAGE 111-2
BOY'S TEAM LOCKER ROOM 111
GENERAL STORAGE 107
REFEREE (MEN'S) LOCKER ROOM 115
JANITOR 111-1
LAUNDRY 109
RP3
REFEREE (WOMEN'S) LOCKER ROOM 113
LAVATORY 113-1
MEN'S RESTROOM 117
VISITING BOY'S LOCKER ROOM 119-1
VESTIBULE 119
CU-1
ST-1
RP2
STORAGE 120
VESTIBULE 118
VISITING GIRLS LOCKER ROOM 118-1
MULTIPURPOSE SAFE ROOM 121
WOMEN'S RESTROOM 116
LAVATORY 112-1
HOSPITALITY ROOM 112
TRAINING ROOM 114
STORAGE 114-1
GIRL'S TEAM LOCKER ROOM 110
FIRE PUMP ROOM 108
FDC
FIRE ALARM BELL
ELECTRICAL ROOM 106
FACP
STORAGE 103
TICKET BOOTH 102
FAAP
VESTIBULE 101
VESTIBULE 100
CONCESSION STORAGE 105
CONCESSIONS 104

1 FA110 FIRST FLOOR FIRE ALARM PLAN
SCALE: 1/8" = 1'-0"

PROJECT NORTH
TRUE NORTH
0 4' 8' 16'
SCALE: 1/8" = 1'-0"

TETRA TECH
www.tetratech.com
240 Continental Drive, Suite 200
Newark, DE 19713
Tel: 302.738.7551 Fax: 302.454.3989

RICHARD CARROLL ROBINSON
No. 21834
12/06/24
SHANE RITTER

BARNWELL SCHOOL DISTRICT 45
OWNER
770 HAGOOD AVE.
BARNWELL, SC 29812
Tel: 803 541 1300

TETRA TECH
ARCHITECT
MECHANICAL ENGINEER
PLUMBING ENGINEER
ELECTRICAL ENGINEER
240 Continental Drive, Suite
Newark, DE 19713
302.738.7551

THOMAS & HUTTON
CIVIL ENGINEER
1501 MAIN ST.
COLUMBIA, SC 29201
Tel: 803 451 0200

ZZ CONSULTING
STRUCTURAL ENGINEER
640 S. STATE ST.
SHELLEY, ID 83274
Tel: 208 357 5404

MARK	DATE	DESCRIPTION	BY
	12/06/24	ISSUED FOR CONSTRUCTION CONFORMANCE SET	

BARNWELL SCHOOL DISTRICT 45
MULTI-USE SAFE ROOM
FIRST FLOOR FIRE ALARM PLAN

Project No.: 213-207015-24001
Designed By: JJ/RLH
Drawn By: RLH
Checked By: JJ

FA110

Copyright: Tetra Tech

12/4/2024 3:40:48 PM BIM 360://200-207015-20004 - Barnwell Dome/E_BARN_DOME_v2019.rvt

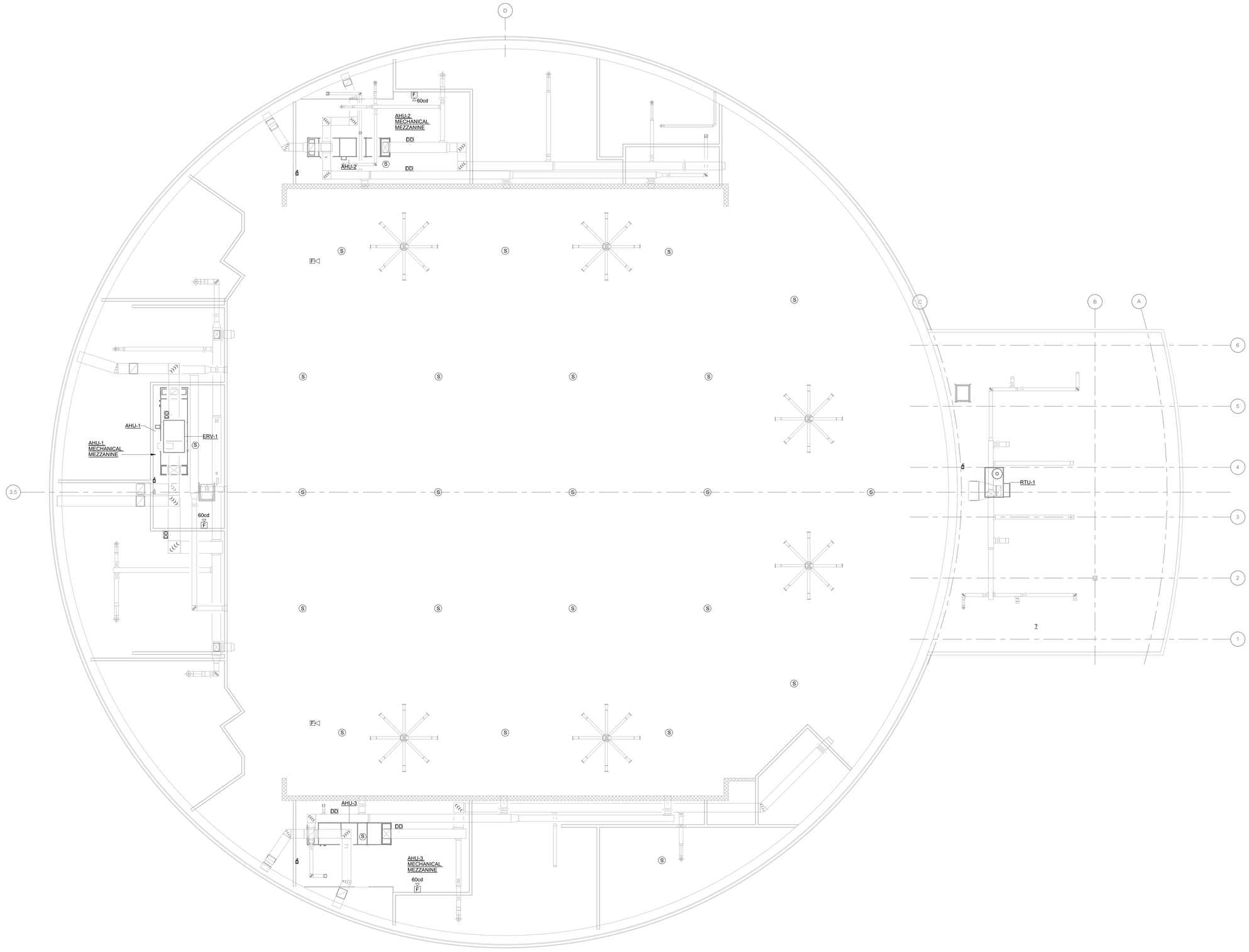

1 FA111 MEZZANINE HVAC POWER PLAN
SCALE: 1/8" = 1'-0"

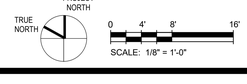

TETRA TECH
www.tetratech.com
240 Continental Drive, Suite 200
Newark, DE 19713
Tel: 302.738.7551 Fax: 302.454.5989

BARNWELL SCHOOL DISTRICT 45
OWNER
770 HAGOOD AVE.
BARNWELL, SC 29812
Tel: 803 541 1300

TETRA TECH
ARCHITECT
MECHANICAL ENGINEER
PLUMBING ENGINEER
ELECTRICAL ENGINEER

240 Continental Drive, Suite
Newark, DE 19713
302.738.7551

THOMAS & HUTTON
CIVIL ENGINEER
1501 MAIN ST.
COLUMBIA, SC 29201
Tel: 803 451 0200

ZZ CONSULTING
STRUCTURAL ENGINEER
640 S. STATE ST.
SHELLEY, ID 83274
Tel: 208 357 5404

MARK	DATE	DESCRIPTION	BY
	12/06/24	ISSUED FOR CONSTRUCTION CONFORMANCE SET	

BARNWELL SCHOOL DISTRICT 45
MULTI-USE SAFE ROOM
MEZZANINE FIRE ALARM/MNS PLAN

Project No.:	213-207015-24001
Designed By:	JJ/RLH
Drawn By:	RLH
Checked By:	JJ

FA111

Copyright: Tetra Tech

12/4/2024 3:40:50 PM BIM 360://200-207015-20004 - Barnwell Dome/E_BARN_DOME_v2019.rvt

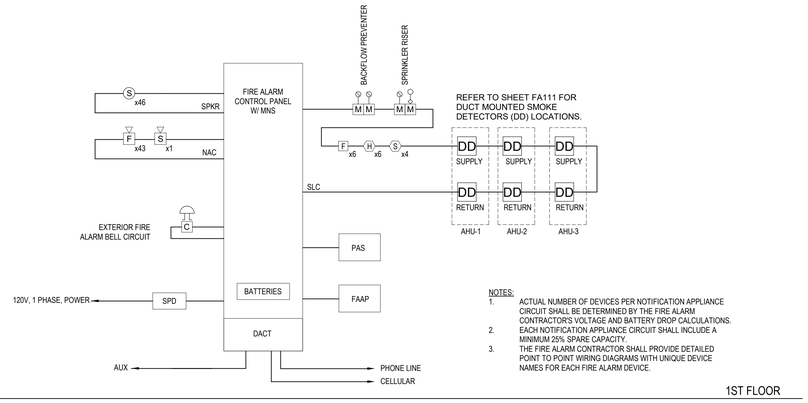

NOTES:
1. ACTUAL NUMBER OF DEVICES PER NOTIFICATION APPLIANCE CIRCUIT SHALL BE DETERMINED BY THE FIRE ALARM CONTRACTOR'S VOLTAGE AND BATTERY DROP CALCULATIONS.
2. EACH NOTIFICATION APPLIANCE CIRCUIT SHALL INCLUDE A MINIMUM 25% SPARE CAPACITY.
3. THE FIRE ALARM CONTRACTOR SHALL PROVIDE DETAILED POINT TO POINT WIRING DIAGRAMS WITH UNIQUE DEVICE NAMES FOR EACH FIRE ALARM DEVICE.

1ST FLOOR

1 FA601 FIRE ALARM RISER DIAGRAM
SCALE: N.T.S.

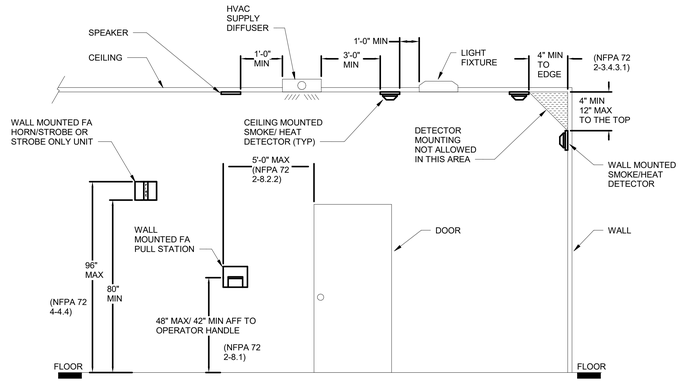

2 FA601 MOUNTING REQUIREMENTS FOR FIRE ALARM DEVICES
SCALE: N.T.S.

TETRA TECH
www.tetratech.com
240 Continental Drive, Suite 200
Newark, DE 19713
Tel: 302.738.7551 Fax: 302.454.5989

SHANE RITTER
No. 21834
12/06/24

BARNWELL SCHOOL DISTRICT 45
OWNER
770 HAGOOD AVE.
BARNWELL, SC 29812
Tel: 803 541 1300

TETRA TECH
ARCHITECT
MECHANICAL ENGINEER
PLUMBING ENGINEER
ELECTRICAL ENGINEER
240 Continental Drive, Suite
Newark, DE 19713
302.738.7551

THOMAS & HUTTON
CIVIL ENGINEER
1501 MAIN ST.
COLUMBIA, SC 29201
Tel: 803 451 0200

ZZ CONSULTING
STRUCTURAL ENGINEER
640 S. STATE ST.
SHELLEY, ID 83274
Tel: 208 357 5404

MARK	DATE	DESCRIPTION	BY
	12/06/24	ISSUED FOR CONSTRUCTION CONFORMANCE SET	

BARNWELL SCHOOL DISTRICT 45
MULTI-USE SAFE ROOM
FIRE ALARM RISER DIAGRAM AND DETAILS

Project No.:	213-207015-24001
Designed By:	JJ/RLH
Drawn By:	RLH
Checked By:	JJ

FA601

Copyright: Tetra Tech

12/4/2024 3:40:50 PM BIM 360://200-207015-20004 - Barnwell Dome/E_BARN_DOME_v2019.rvt