EAST CENTRAL HIGH SCHOOL
CAFETERIA REMODEL
TULSA PUBLIC SCHOOLS
12150 E 11TH STREET , TULSA , OK 74128

INDEX TO DRAWINGS:

GENERAL NOTES:

1. THE INTENT OF THE CONTRACT DOCUMENTS IS TO INCLUDE ALL ITEMS NECESSARY FOR THE PROPER EXECUTION AND COMPLETION OF THE WORK. THE CONTRACT DOCUMENTS ARE COMPLEMENTARY, AND WHAT IS REQUIRED BY ONE SHALL BE AS BINDING AS IF REQUIRED BY ALL.
2. BEFORE STARTING EACH PORTION OF THE WORK, CAREFULLY STUDY AND COMPARE THE VARIOUS CONTRACT DOCUMENTS RELATIVE TO THAT PORTION OF THE WORK. TAKE FIELD MEASUREMENTS OF EXISTING CONDITIONS RELATED TO THAT PORTION OF THE WORK, AND OBSERVE ANY CONDITIONS AT THE SITE AFFECTING IT. THESE OBLIGATIONS ARE FOR THE PURPOSE OF FACILITATING COORDINATION AND CONSTRUCTION. PROPMPTLY REPORT TO ARCHITECTE ERRORS, INCONSISTENCES AND OMISSONS DISCOVERED BY OR MADE KNOWN TO THE CONTRACTOR, AS A REQUEST FOR INFORMATION (RFI) IN SUCH FORM AS THE ARCITECT MAY REQUIRE.
3. THE CONTRACTOR SHALL BE SOLELY RESPONSIBLE FOR, AND HAVE CONTROL OVER, CONSTRUCTION MEANS, METHODS, TECHNIQUES, SEQUENCES, AND PROCEDURES, AND COORDINATING ALL PORTIONS OF THE WORK.
4. THE CONTRACTOR SHALL BE RESPONSIBLE FOR CUTTING, FITTING OR PATCHING REQUIRED TO COMPLETE THE WORK AND TO MAKE ITS PARTS FIT TOGETHER PROPPERLY. AREAS REQUIRING CUTTING AND PATCHING, SHALL BE RESTORED TO CONDITIONS EXISTING PRIOR TO CUTTING, FITTING AND PATCHING, UNLESS OTHERWISE REQUIRED BY CONTRACT DOCUMENTS.
5. UNLESS OTHERWISE NOTED DIMENSIONS ARE TO FACE OF FRAMING, MASONRY AND FACE OF CONCRETE. DIMENSIONS MARKED "CLEAR" SHALL BE MAINTAINED AND SHALL ALLOW FOR THICKNESS OF FINISHES.
6. EXISTING AND PROPOSED ELEVATION HEIGHTS OCCUR FROM THE LEVEL INDICATED IN THE DOCUMENTS.

SCOPE OF WORK NOTES:

1. KITCHEN EQUIPMENT WILL BE REMOVED AND REPLACED UNDER A SEPARATE CONTRACT. THE LOCATION OF THESE ITEMS ARE SHOWN IN THESE DOCUMENTS FOR COORDINATION AND UTILITY CONNECTION PURPOSES ONLY.

KEY PLAN

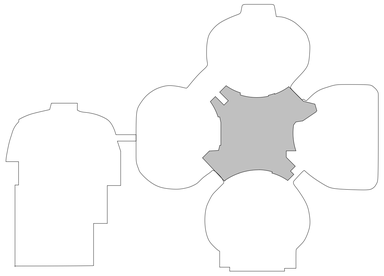

KEY PLAN
SCALE 1" = 100'-0"
NORTH

PROJECT TEAM:

OWNER:
TULSA PUBLIC SCHOOLS
3027 SOUTH NEW HAVEN AVENUE
TULSA, OKLAHOMA 74114
[P] 918.746.6800
WWW.TULSASCHOOLS.ORG

ARCHITECT/ INTERIORS:
KKT ARCHITECTS, INC.
2200 SOUTH UTICA PLACE, SUITE 200
TULSA, OKLAHOMA 74114
[P] 918.744.4270 \ [F] 918.744.7849
WWW.KKTARCHITECTS.COM
C OF A #534 EXPIRES 6/30/25

STRUCTURAL:
CEC, CO.
4555 W. MEMORIAL RD,
OKLAHOMA CITY, OKLAHOMA 73142
[P]405.753.4200
INFO@CONNECTCEC.COM

MECHANICAL/ ELECTRICAL/ PLUMBING:
CEC, CO.
4555 W. MEMORIAL RD,
OKLAHOMA CITY, OKLAHOMA 73142
[P]405.753.4200
INFO@CONNECTCEC.COM

CONSTRUCTION MANAGER:
TRIGON INC
11345 E 60TH PLACE
TULSA, OKLAHOMA 74146
[P] 918.252.7162
WWW.TRIGONINC.COM

STATE OF OKLAHOMA
SARAH J. GOULD
No. 6367
LICENSED ARCHITECT
10/18/24

REV. DATE	#	DESCRIPTION
10-18-2024		CONST. DOCUMENTS

COVER SHEET

G001

ABBREVIATIONS

AB	ANCHOR BOLT
ACST	ACOUSTIC(AL)
ADDL	ADDITIONAL
ADDN	ADDITION
ADH	ADHESIVE
ADJ	ADJACENT, ADJOINING, ADJUSTABLE
AED	AUTOMATED EXTERNAL DEFIBRILLATOR
AFF	ABOVE FINISH FLOOR
ALT	ALTERNATE
ALUM	ALUMINUM
ANCH	ANCHOR
ANOD	ANODIZE(D)
AP	ACCESS PANEL
APC	ACOUSTICAL PANEL CEILING
APPROX	APPROXIMATE
ASPH	ASPHALT
AUTO	AUTOMATIC
AVG	AVERAGE
AWT	ACOUSTICAL WALL TREATMENT
BC	BRICK COLOR
BCS	BABY CHANGING STATION
BD	BOARD
BITUM	BITUMINOUS
BLDG	BUILDING
BLKG	BLOCKING (WOOD)
BOT	BOTTOM
BRDG	BRIDGING
BRG	BEARING
BRK PV	BRICK PAVERS
BRKT	BRACKET
BSMT	BASEMENT
BTWN	BETWEEN
BUR	BUILT UP ROOFING
CAB	CABINET
CB	CHALKBOARD
CC	CUBICLE CURTAIN
CCT	CUBICLE CURTAIN TRACK
CFMF	COLD-FORMED METAL FRAMING
CG	CORNER GUARD
CH	COAT HOOK
CIP CONC	CAST-IN-PLACE CONCRETE
CJ	CONTROL JOINT, CONSTRUCTION JOINT
CLG	CEILING
CLR	CLEAR
CMU	CONCRETE MASONRY UNIT
CNTR	COUNTER
CO	CLEAN OUT, CASED OPENING
COL	COLUMN
COMB	COMBINATION, COMBINED

COMPT	COMPARTMENT
CONC	CONCRETE
CONC CTG	CONCRETE COATING
COND	CONDITION
CONT	CONTINUOUS
CONTR	CONTRACTOR
CORR	CORRIDOR
CPRS	COMPRESSIBLE
CPT	CARPET
CR	CLOSET ROD
CRS	COLD-ROLLED STEEL
CTR	CENTER(S)
CW	CURTAINWALL
D	DEEP, DEPTH
DC	DISPLAY CASE
DET	DETAIL
DETN	DETENTION
DF	DRINKING FOUNTAIN
DIA	DIAMETER
DIM	DIMENSION
DN	DOWN
DP	DECORATIVE PANEL
DR	DOOR
DS	DOWNSPOUT
DWG	DRAWING(S)
EA	EACH
EHD	ELECTRIC HAND DRYER
EJ	EXPANSION JOINT
EL	ELEVATION
ELEC	ELECTRIC, ELECTRICAL
ELEV	ELEVATOR
EMBED	EMBEDMENT
EMER	EMERGENCY
EPDM	ETHYLENE PROPYLENE DIENE MONOMER
EQ	EQUAL
EQUIP	EQUIPMENT
ES	EXPOSED STRUCTURE
EW	EACH WAY
EWC	ELECTRIC WATER COOLER
EWH	ELECTRIC WATER HEATER
EXIST	EXISTING
EXP	EXPANSION
EXT	EXTERIOR
FAB	FABRIC
FD	FLOOR DRAIN
FDTN	FOUNDATION
FE	FIRE EXTINGUISHER
FEC	FIRE EXTINGUISHER CABINET
FF	FINISH FACE

FHC	FIRE HOSE CABINET
FIN	FINISH
FLASH	FLASHING
FLR	FLOOR
FP	FLAGPOLE
FRP	FIBERGLASS REINFORCED PLASTIC
FTG	FOOTING
FURG C	FURRING CHANNEL
FURN	FURNISH
FWC	FABRIC WALLCOVERING
GA	GAGE, GAUGE
GALV	GALVANIZED
GB	GRAB BAR
GC	GENERAL CONTRACTOR
GFRC	GLASS-FIBER REINFORCED CONCRETE
GL	GLASS
GL BLK	GLASS BLOCK
GLZ CMU	GLAZED CONCRETE MASONRY UNIT
GRFG	GLASS-FIBER REINFORCED GYPSUM
GT	GROUT
GWH	GAS FIRED WATER HEATER
GYP BD	GYPSUM BOARD
H	HIGH, HATCH (ROOF)
HB	HOSE BIB
HDNR	HARDENER
HDNR	HARDENER
HDW	HARDWARE
HDWD	HARDWOOD
HM	HOLLOW METAIL
HORIZ	HORIZONTAL
HR	HANDRAIL
HT	HEIGHT
HTG	HEATING
HVAC	HEATING, VENTILATION, AND AIR CONDITIONING
ID	INSIDE DIAMETER, INSIDE DIMENSION
IF	INSIDE FACE
INCL	INCLUDE(D)
INSUL	INSULATION
INT	INTERIOR
INV	INVERT
JT	JOINT
KD	KNOCKED DOWN
KOP	KNOCK OUT PANEL
L	LONG, ANGLE
LAM	LAMINATE(D)
LAV	LAVATORY
LH	LEFT HAND
LINO	LINOLEUM
LKR	LOCKER

LL	LIVE LOAD, LOW LEVEL
LLH	LONG LEG HORIZONTAL
LLV	LONG LEG VERTICAL
LT	LIGHT
LVL	LEVEL
LVR	LOUVER
MAS	MASONRY
MATL	MATERIAL
MAX	MAXIMUM
MB	MARKERBOARD
MBH	MOP/BROOM HOLDER
MECH	MECHANICAL
MED	MEDIUM
MEZZ	MEZZANINE
MFR	MANUFACTURER
MH	MANHOLE
MI	MIRROR
MIN	MINIMUM, MINUTE
MISC	MISCELLANEOUS
MO	MASONRY OPENING
MOD	MODEL, MODULE, MODULAR
MSB	MOP SERVICE BASIN
MT	MOUNT
MTL	METAIL
NDU	NEEDLE DISPOSAL UNIT
NIC	NOT IN CONTRACT
NO	NUMBER
NOM	NOMINAL
NTS	NOT TO SCALE
OA	OVERALL
OC	ON CENTER
OD	OUTSIDE DIAMETER, OUTSIDE DIMENSION
OF	OUTSIDE FACE
OFD	OVERFLOW DRAIN
OH	OVERHEAD
OH DR	OVERHEAD DOOR
OP	OPERABLE PARTITION
OPH	OPPOSITE HAND
OPNG	OPENING
OPP	OPPOSITE
OS	OVERFLOW SCUPPER
PC	PORTLAND CEMENT
PCC	PRECAST CONCRETE
PERIM	PERIMETER
PJ	PROJECTOR
PL	PLATE
PLAM	PLASTIC LAMINATE
PLAS	PLASTER
PLBG	PLUMBING

PLYWD	PLYWOOD
PS	PROJECTION SCREEN
PSF	POUNDS PER SQUARE FOOT
PSI	POUNDS PER SQUARE INCH
PT	PAINT
PTD	PAPER TOWEL DISPENSER
PTDR	PAPER TOWEL DISPENSER & RECEPTACLE
PTN	PARTITION
PTR	PAPER TOWEL RECEPTACLE
PVC	POLYVINYL CHLORIDE
PVG	PAVING
QT	QUARRY TILE
R	RISER, RADIUS, THERMAL RESISTANCE (R-VALUE)
RB	RESILIENT BASE
RCP	REFLECTED CEILING PLAN
RD	ROOF DRAIN, ROAD
REF	REFERENCE, REFRIGERATOR
REINF	REINFORCE
REQD	REQUIRED
RF	RESILIENT FLOORING
RFG	ROOFING
RH	RIGHT HAND
RO	ROUGH OPENING
RSF	RESINOUS FLOORING
RST	REINFORCING STEEL
RTF	RESILIENT TILE FLOOR
RV	ROOF VENT, ROOF VENTILATOR
SC	SEALED CONCRETE
SCHED	SCHEDULE
SCR	SHOWER CURTAIN ROD
SCWD	SOLID CORE WOOD DOOR
SD	SOAP DISPENSER
SECT	SECTION
SF	STOREFRONT
SH	SHINGLES, SINGLE HUNG (WINDOW)
SHT	SHEET
SHTHG	SHEATHING
SHV	SHELVING
SLNT	SEALANT
SND	SANITARY NAPKIN DISPENSER
SNDU	SANITARY NAPKIN DISPOSAL UNIT
SOG	SLAB ON GRADE
SPCG	SPACING
SPEC	SPECIFICATION
SPKR	SPEAKER
SQ	SQUARE
SQ IN	SQUARE INCH
SS	SERVICE SINK, SOLID SURFACING
SST	STAINLESS STEEL, SHOWER SEAT

ST	STAIN, STAIRS, STREET
STD	STANDARD
STL	STEEL
STL JST	STEEL JOIST
STL LNTL	STEEL LINTEL
STL PL	STEEL PLATE
STL RF DK	STEEL ROOF DECK
STL TR	STEEL TRUSS
STRUCT	STRUCTURAL
SUSP	SUSPEND(ED)
SV	SHEET VINYL
SWP	SHEET WALL PROTECTION
SYMM	SYMMETRICAL
SYNTH	SYNTHETIC
T	TILE, TREAD
T&G	TONGUE AND GROOVE
T/S	TUB/SHOWER
TB	TOWEL BAR
TD	TRENCH DRAIN
TER	TERRAZZO
THK	THICKNESS
TK BD	TACKBOARD
TOB	TOP OF BEAM
TOC	TOP OF CONCRETE, TOP OF CURB
TOF	TOP OF FOOTING
TOM	TOP OF MASONRY
TOS	TOP OF SLAB, TOP OF STEEL
TOW	TOP OF WALL
TP	TOILET PARTITION
TPH	TOILET PAPER HOLDER
TR	TOWEL RACK
TS	TUBE STEEL, TRANSITION STRIP
TYP	TYPICAL
UNO	UNLESS NOTED OTHERWISE
VCT	VINYL COMPOSITION TILE
VERT	VERTICAL
VIF	VERIFY IN FIELD
VWC	VINYL WALL COVERING
W	WIDE, WEST
W/	WITH
W/O	WITHOUT
WC	WALL COVERING
WD	WOOD, WOOD DOOR
WDW	WINDOW
WG	WALL GUARD (INCLUDES BUMPER GUARDS, CHAIR RAILS, CRASH RAILS, ETC.)
WP	WALL PATTERN, WATERPROOFING
WT	WEIGHT, WINDOW TREATMENT
WWF	WELDED WIRE FABRIC

ICC - A117.1 - 2009

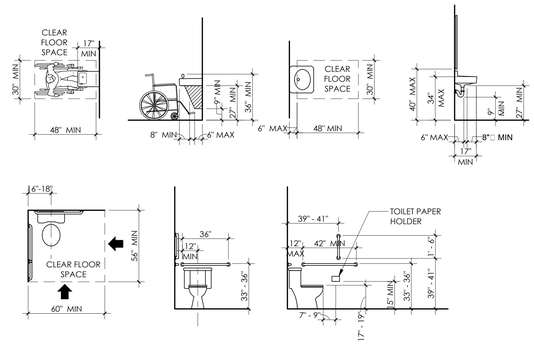

SYMBOL LEGEND

0	COLUMN GRID
	MATCHLINE
NORTH	NORTH ARROW
ROOM NAME 444A	ROOM NAME AND NUMBER
ROOM NAME 101 Wall Finish Base Finish Floor Finish	ROOM NAME, NUMBER AND FINISHES
444A	ROOM NUMBER (CEILING PLAN TAG)
A4/A444	DETAIL REFERENCE
A/A310	ELEVATION REFERENCE
1 A2.2 SIM	SECTION CUT REFERENCE
A/A310	WALL SECTION/MILLWORK DETAIL REFERENCE
444A	DOOR NUMBER
Q	APPLIANCE TYPE
A48	PARTITION TYPE
X	ACCESSORY TYPE
AA	WINDOW TYPE
1	KEYNOTE
1	REVISION NUMBER
ITEM ELEVATION	SPOT ELEVATION (SECTION)
ELEVATION	SPOT ELEVATION CALLOUT (SECTION)
CDS W D H	MILLWORK TYPE

KKT
ARCHITECTURE \ INTERIORS \ ENGINEERING

KKT ARCHITECTS, INC.
2200 SOUTH UTICA PLACE, SUITE 200
TULSA, OKLAHOMA 74114
[P] 918.744.4270 \ [F] 918.744.7849
WWW.KKTARCHITECTS.COM
CERTIFICATE OF AUTHORIZATION

EAST CENTRAL HIGH SCHOOL CAFETERIA REMODEL

TULSA PUBLIC SCHOOLS

12150 E 11TH ST,
TULSA, OK
74128

STATE OF OKLAHOMA
SARAH J. GOULD
No. 6367
LICENSED ARCHITECT
10/18/24

REV. DATE	#	DESCRIPTION
10-18-2024		CONST. DOCUMENTS

GENERAL NOTES

G002

CODE SUMMARY

PROJECT NAME:	EAST CENTRAL HIGH SCHOOL CAFETERIA REMODEL
PROJECT ADDRESS:	12150 E 11TH TULSA, OK 74128
EXISTING USE:	GROUP E - EDUCATION

APPLICABLE CODES:	MODEL CODE	AMENDMENTS
BUILDING CODE:	2018 INTERNATIONAL BUILDING CODE	CITY OF TULSA TITLE 51
ACCESSIBILITY CODE:	2018 INTERNATIONAL EXISTING BUILDING CODE 2009 ICC - ANSI A 117.1 ACCESSIBLE & USABLE BUILDINGS & FACILITIE, AND 2010 ADA STANDARDS FOR ACCESSIBLE DESIGN	CITY OF TULSA TITLE 51 NONE
FIRE CODE:	2018 INTERNATIONAL FIRE CODE	CITY OF TULSA TITLE 14
FIRE ALARM CODE:	2016 NFPA 72 - NATIONAL FIRE ALARM AND SIGNALING CODE	NONE
PLUMBING CODE:	2018 INTERNATIONAL PLUMBING CODE	CITY OF TULSA TITLE 56
FUEL GAS CODE:	2018 INTERNATIONAL FUEL GAS CODE	CITY OF TULSA TITLE 59
MECHANICAL CODE:	2018 INTERNATIONAL MECHANICAL CODE	CITY OF TULSA TITLE 59
ELECTRICAL CODE:	2020 NFPA 70 - NATIONAL ELECTRICAL CODE	CITY OF TULSA TITLE 52
FOOD SERVICE:	TULSA COUNTY HEALTH DEPARTMENT CODE	

CONSTRUCTION TYPE: TYPE I-B

FIRE PROTECTION SYSTEMS PROVIDED:

FIRE SUPPRESSION: NOT REQUIRED - EXISTING CONSTRUCTION NOT PROVIDED WITH SPRINKLERS. SCOPE OF WORK DOES NOT EXPAND BUILDING OR MODIFY MORE THAN FIFTY PERCENT (50%) OF STRUCTURE.

FIRE ALARM SYSTEM: PROVIDED PER 907.2.3 - MODIFY EXISTING SYSTEM AS REQUIRED.

CHAPTER 3: OCCUPANCY AND USE

PRIMARY OCCUPANCY (IBC CHAPTER 3):	EDUCATIONAL – GROUP E	[SECTION 305.1]
ACCESSORY USES (IBC CHAPTER 3 & SECTION 508.2):	ASSEMBLY – GROUP A-2 (CAFETERIA) ASSEMBLY – GROUP A-3 (LIBRARY) BUSINESS – GROUP B (OFFICES) STORAGE (MODERATE HAZARD) – GROUP S-1	[SECTION 303.3] [SECTION 303.4] [SECTION 304.1] [SECTION 311.1]
GROUP E ASSEMBLY USE (IBC SECTION 303.1.3):	ASSEMBLY USES ASSOCIATED WITH GROUP E - EDUCATIONAL OCCUPANCIES ARE NOT CONSIDERED SEPARATE OCCUPANCIES	
ACCESSORY USE AREAS (IBC SECTION 508.2.3):	ACCESSORY USES MAY NOT EXCEED 10% OF THE FLOOR AREA OF THE STORY THEY OCCUPY FOR EACH ACCESSORY USE AND MAY NOT EXCEED THE NON-SPRINKLERED TABULAR AREA ALLOWED IN TABLE 506.2. ACCESSORY USES CLASSIFIED AS GROUP E - EDUCATIONAL: OFFICES, BREAKROOM/TEACHER'S LOUNGE	
SEPARATION OF ACC. USES (IBC SECTION 508.2.4):	NO SEPARATION IS REQUIRED BETWEEN MAIN USE AND ACCESSORY USES.	

CHAPTER 5: GENERAL BUILDING AREAS AND HEIGHTS

BASIC CODE INFORMATION

CONSTRUCTION TYPE = I-B

OCCUPANCY = GROUP E - EDUCATIONAL

FIRE SPRINKLERS PROVIDED? = NO

TABULAR ALLOWABLE AREAS AND HEIGHTS:	ACTUAL	ALLOWABLE	TABULAR REFERENCE	COMPLIES? (Y/N)
HEIGHT (FEET ABOVE GRADE PLANE) =	52'-6"	55 FEET	TABLE 504.3	YES
S_a HEIGHT (STORIES ABOVE GRADE PLANE) =	4 STORIES	5 STORIES	TABLE 504.4	YES
$A_{(a)(c)}$ AREA (NS, GROUP E) =	N/A	UNLIMITED SF	TABLE 506.2	YES

THE STRUCTURE IS EXISTING AND IS:

1. NOT BEING EXPANDED.
2. NOT HAVING MORE THAN 50% OF THE TOTAL GROSS FLOOR AREA OF THE FLOOR WHER WORK IS OCCURRING MODIFIED.

CHAPTER 6: TYPES OF CONSTRUCTION (AND FIRE RESISTANCE RATINGS)

CONSTRUCTION TYPE = I-B. (IBC SECTION 602.2)

FIRE PROTECTION REQUIREMENTS (IBC TABLE 601, U.N.O.)

ELEMENT	REQUIRED RATING	PROVIDED RATING	NOTES
PRIMARY STRUCTURAL FRAME	2 HOURS	2 HOURS	NC
(INCLUDES COLUMNS, BEAMS & GIRDERS CONNECTED TO COLUMNS)			
BEARING WALLS			
EXTERIOR (PER TABLE 602)	2 HOURS	2 HOURS	NC / >30' FSD
INTERIOR	2 HOURS	2 HOURS	NC
NON-BEARING WALLS			
EXTERIOR (PER TABLE 602)	0 HOURS	0 HOURS	NC
INTERIOR	0 HOURS	0 HOURS	NC
FLOOR CONSTRUCTION	2 HOURS	2 HOURS	NC
(INCLUDES ASSOCIATED SECONDARY FRAMING)			
ROOF CONSTRUCTION	1 HOURS	1 HOURS	NC
(INCLUDES ASSOCIATED SECONDARY FRAMING)			

NC = NON-COMBUSTIBLE

FSD = FIRE SEPARATION DISTANCE TO PROPERTY LINES OR OPEN PUBLIC SPACES/RIGHTS OF WAY

SECTION 603 - COMBUSTIBLE MATERIALS IN TYPES I AND II CONSTRUCTION

LIMITED QUANTITIES OF COMBUSTIBLE MATERIALS SHALL BE PERMITTED IN BUILDINGS OF TYPE I OR II CONSTRUCTION, PROVIDED THYE ARE LIMITED TO AND IN ACCORDANCE WITH SECTIONS 603.1.1 THROUGH 603.1.3.

CHAPTER 7: FIRE AND SMOKE PROTECTION FEATURES

SECTION 705 - EXTERIOR WALLS

EXTERIOR BALCONIES EXTENDING BEYOND THE EXTERIOR WALL SHALL CONFORM TO THE REQUIREMENTS OF THIS ECTION AND SECTION 1405. (IBC SECTION 705.2)

EXTERIOR WALLS SHALL BE FIRE-RESISTANCE RATED IN ACCORDANCE WITH TABLES 601 AND 602 AND SECTION 705. (IBC SECTION 705.5)

TABLE 705.8 MAXIMUM AREA OF EXTERIOR WALL OPENINGS BASED ON FSD AND DEGREE OF OPENING PROTECTION, WHERE THE FIRE SEPARATION DISTANCE IS ≥ 30' = NO LIMIT FOR AREA OF OPENINGS ON THE SUBJECT WALL. (IBC SECTION 705.8)

SECTION 707 - FIRE BARRIERS

THE FIRE RESISTANCE RATING OF THE FIRE BARRIER ENCLOSING AN EXIT STAIRWAY OR ELEVATOR SHAFT ENCLOSURE SHALL COMPLY WITH SECTION 713.4. A 2-HOUR RATING IS REQUIRED WHEN CONNECTING 4 STORIES OR MORE. (IBC SECTIONS 707.3.1, 707.3.2)

WHERE EXTERIOR WALLS SERVE AS A PORTION OF THE REQUIRED FIRE-RESISTANCE RATED ENCLOSURE, FOLLOW THE REQUIREMENTS FOR SECTION 705 FOR EXTERIOR WALLS. (IBC SECTION 707.4)

FIRE BARRIERS ARE TO CONTINUE FROM THE FLOOR/SLAB ASSEMBLY BELOW TO THE FLOOR DECK/ASSEMBLY OR ROOF DECK/ASSEMBLY ABOVE AND CONTINUE THROUGH ANY CONCEALED SPACES SUCH AS PLENUMS, SOFFITS OR ATTICS. (IBC SECTION 707.5)

OPENINGS ARE TO BE LIMITED IN SIZE AND AGGREGATE WIDTH BY PERCENTAGE OF THE WALL IN WHICH THEY ARE LOCATED, THE MAXIMUM ALLOWABLE OPENING SIZE IS 156 SF AND THE AGGREGATE WIDTH PERMITTED IS 25% OF THE WALL IN WHICH THEY ARE LOCATED. OPENINGS ARE TO BE PROTECTED PER THE REQUIREMENTS OF SECTION 716 AND TABLE 716.1(2). ADDITIONAL OPENING PROTECTIVE REQUIREMENTS ARE FOUND IN SECTIONS 1019, 1023.4 AND 1024.5. (IBC SECTION 707.6)

PROTECTIONS OF THE FOLLOWING ITEMS PER THE LISTED IBC SECTION ARE TO COMPLY WITH THE SECTIONS LISTED:

707.7	PENETRATIONS -	REFER TO IBC SECTION 714
707.8	JOINTS -	REFER TO IBC SECTION 715
707.9	VOIDS AT INTERSECTIONS	
707.10	DUCTS AND AIR TRANSFER OPENINGS -	REFER TO IBC SECTION 717

PENETRATIONS INTO ENLOSURES FOR EXIT ACCESS STAIRWAYS AND RAMPS ARE ONLY ALLOWED AS PERMITTED PER SECTIONS 1019 AND 1023.5. (IBC SECTION 707.7.1)

SECTION 708 - FIRE PARTITIONS

THE FIRE RESISTANCE RATING OF A FIRE PARTITION WHERE REQUIRED PER THE IBC SECTIONS NOTED IN IBC SECTION 708.1.1 THROUGH 708.1.5 SHALL BE A 1-HOUR RATING. (IBC SECTION 708.3)

FIRE PARTITIONS ARE TO CONTINUE FROM THE TOP OF THE FOUNDAION OR FLOOR/SLAB ASSEMBLY BELOW AND BE SECURELY ATTACHED TO THE FLOOR DECK/ASSEMBLY OR ROOF DECK/ASSEMBLY ABOVE AND CONTINUE THROUGH ANY CONCEALED SPACES SUCH AS PLENUMS, SOFFITS OR ATTICS. (IBC SECTION 707.5)

OPENINGS ARE TO BE LIMITED IN SIZE AND AGGREGATE WIDTH BY PERCENTAGE OF THE WALL IN WHICH THEY ARE LOCATED, THE MAXIMUM ALLOWABLE OPENING SIZE IS 156 SF AND THE AGGREGATE WIDTH PERMITTED IS 25% OF THE WALL IN WHICH THEY ARE LOCATED. OPENINGS ARE TO BE PROTECTED PER THE REQUIREMENTS OF SECTION 716 AND TABLE 716.1(2). ADDITIONAL OPENING PROTECTIVE REQUIREMENTS ARE FOUND IN SECTIONS 1019, 1023.4 AND 1024.5. (IBC SECTION 707.6)

PROTECTIONS OF THE FOLLOWING ITEMS PER THE LISTED IBC SECTION ARE TO COMPLY WITH THE SECTIONS LISTED:

707.7	PENETRATIONS -	REFER TO IBC SECTION 714
707.8	JOINTS -	REFER TO IBC SECTION 715
707.9	VOIDS AT INTERSECTIONS	
707.10	DUCTS AND AIR TRANSFER OPENINGS -	REFER TO IBC SECTION 717

SECTION 713 - SHAFT ENCLOSURES

SHAFT ENCLOSURES SHALL BE CONSTRUCTED AS FIRE BARRIERS OR HORIZONTAL ASSEMBLIES OR BOTH. (IBC SECTION 713.2) THE FIRE RESISTANCE RATING OF THE SHAFT ENCLOSURE SHALL NOT BE LESS THAN 2 HOURs WHERE CONNECTING FOUR OR MORE STORIES. (IBC SECTION 713.4) THE CONTINUITY OF THE SHAFT ENCLOSURE FIRE BARRIERS SHALL BE PER IBC SECTION 707.5. (IBC SECTION 713.5)

OPENINGS ARE TO BE PROTECTED PER THE REQUIREMENTS OF SECTION 716 AND TABLE 716.1(2) FOR FIRE BARRIERS. DOORS SHALL BE SELF- OR AUTOMATIC-CLOSING IN ACCORDANCE WITH SECTION 716.2.6.6. (IBC SECTION 713.7)

NO OPENINGS OR PENETRATIONS ARE PERMITTED IN THE SHAFE ENCLOSURE OTHER THAN THOSE NECESSARY FOR THE PURPOSE OF THE SHAFT. (IBC SECTIONS 713.7.1, 713.8.1)

PROTECTIONS OF THE FOLLOWING ITEMS PER THE LISTED IBC SECTION ARE TO COMPLY WITH THE SECTIONS LISTED:

713.8	PENETRATIONS -	REFER TO SECTION 714
713.9	JOINTS -	REFER TO SECTION 715
713.10	DUCTS AND AIR TRANSFER OPENINGS -	REFER TO SECTION 717

SHAFTS SHALL EXTEND TO THE BOITOM FLOOR SLAB OF THE BUILDING OR BE ECLOSED AT THE BOTTOM WITH ENCLOSURES CONSTRUCTED WITH THE SAME FIRE-RESISTANCE RATING AS THE SHAFT FIRE BARRIERS. (IBC SECTION 713.11)

SECTION 714 - PENETRATIONS

PENETRATION FIRESTOPPING SYSTEMS ARE TO BE INSTALLED AND TESTED IN ACCORDANCE WITH ASTM E 814 OR UL 1479. THE RATING FOR SUCH SYSTEMS SHALL BE EQUAL TO OR GREATER THAN THE FIRE RESISTANCE RATING OF THE WALL/BARRIER/HORIZONTAL ASSEMBLY PENETRATED. (IBC SECTIONS 714.3.1.2/714.4.1.2)

SECTION 715 - FIRE-RESISTANT JOINT SYSTEMS

FIRE-RESISTANT JOINT SYSTEMS SHALL BE INSTALLED SECURELY SUCH THAT IT WILL NOT LOOSEN OR DISLODGE DURING A FIRE CONDITION (SECTION 715.2) AND SHALL BE TESTED IN ACCORDANCE ASTM E 1966 OR UL 2079. (IBC SECTION 715.3)

SECTION 716 - OPENING PROTECTIVES

APPROVED FIRE DOORS OR ASSEMBLIES SHALL BE CONSTRUCTED OF AMY MATERIAL OR COMPONENT THAT CONFORMS TO THE TESTING REQUIREMENTS FOR THE SPECIFIC TYPE OF DOOR. (IBC SECTION 716.5) ALL COMPONENTS USED IN THE DOOR ASSEMBLY INCLUDING, BUT NOT LIMITED TO THE DOOR LEAF, FRAME, HARDWARE, CLOSERS, PANIC DEVICES, SHALL BE LABELED BY AN APPROVED TESTING AGENCY CONFORMING TO NFPA 80.

SIDE-HINGED OR PIVOT SWINGING DOORS: TESTED IN ACCORDANCE WITH NFPA 252 OR UL 10C. (IBC SECTION 716.5.1)

OTHER DOOR ASSEMBLIES: TESTED IN ACCORDANCE WITH NFPA 252 OR UL 10B. (IBC SECTION 716.5.2)

ALL ASSEMBLIES TO BE TESTED PER UL 1784 FOR SMOKE AND DRAFT CONTROL. LOUVERS SHALL BE PROHIBITED IN THESE ASSEMBLIES. (IBC SECTION 716.5.3.1)

FIRE DOOR ASSEMBLIES IN INTERIOR EXIT STAIRWAYS MAY CONTAIN GLAZING IN EXCESS OF 100 SQ. IN. OF FIRE-RESISTANCE-RATED GLAZING, PROVIDED THE DOOR AND LISTED GLAZING TRANSMITS A TEMPERATURE RISE OF NOT MORE THAN 450°F AT THE END OF A 30-MINUTE STANDARD FIRE EXPOSURE TEST. (IBC SECTIONS716.5.5/716.5.5.1)

ALL DOOR ASSEMBLIES SHALL HAVE A PERMANENTLY AFFIXED LABEL FROM AN APPROVED TESTING AGENCY CONFORMING TO NFPA 80. (IBC SECTION 716.5.7)

FIRE DOORS SHALL BE AUTOMATIC- OR SELF-CLOSING AND LATCHING. (IBC SECTION 716.5.9)

SECTION 717 - DUCTS AND AIR TRANSFER OPENINGS

SMOKE DAMPERS WHERE REQUIRED IN SMOKE BARRIERS PER SECTIONS 717.5.5 ARE TO BE PROVIDED AND INSTALLED IN ACCORDANCE WITH THE PROVISIONS OF IBC SECTION 717.

CHAPTER 8: INTERIOR FINISHES

SECTION 803.1 - FLAME SPREAD AND SMOKE DEVELOPED INDEX

CLASS A =	FLAME SPREAD INDEX:	0-25	SMOKE DEVELOPED INDEX:	0-450
CLASS B =	FLAME SPREAD INDEX:	26-75	SMOKE DEVELOPED INDEX:	0-450
CLASS C =	FLAME SPREAD INDEX:	76-200	SMOKE DEVELOPED INDEX:	0-450

TABLE 803.13 - FLAMESPREAD AND SMOKE DEVELOPED INDEX REQUIREMENTS

OCCUPANCY: GROUP E - EDUCATIONAL

SPRINKLERED: NO

MATERIAL FINISH CLASSIFICATIONS REQUIRED:

INTERIOR EXIT STAIRWAYS/RAMPS AND EXIT PASSAGEWAYS:	**CLASS A**
CORRIDORS AND ENCLOSURES FOR EXIT ACCESS STAIRWAYS/RAMPS:	**CLASS B**
ROOMS AND ENCLOSED SPACES:	**CLASS C**

CHAPTER 9: FIRE PROTECTION AND LIFE SAFETY SYSTEMS

CHAPTER 9: FIRE PROTECTION AND LIFE SAFETY SYSTEMS

THE PROVISIONS OF IBC CHAPTER 9 SHALL GOVERN THE INSTALLATION, REPAIR, MODIFICATION, OPERATION AND MONITORING OF ALL FIRE SUPPRESSION, EXTINGUISHING AND ALARM SYSTEMS.

SECTION 906 - PORTABLE FIRE EXTINGUISHERS

PORTABLE FIRE EXTINGUISHER ARE REQUIRED PER IBC SECTION 906.1 AND INSTALLED PER IBC SECTIONS 906.5 THROUGH 906.10. QUANTITIES REQUIRED PER IBC TABLE 906.3(1) FOR AN ORDINARY (MODERATE) HAZARD OCCUPANCY & NFPA 10.

PROVIDE TYPE K FIRE EXTINGUISHERS IN KITCHEN AREAS OF THE CAFETERIA WITHIN 20 FEET OF ANY APPLIANCE WHERE SOLID FUELS. COOKING FATS, OR COOKING OILS (EITHER ANIMAL OR VEGETABLE) ARE USED (IBC SECTION 906.4).

THE AUTHORITY HAVING JURISDICTION SHALL APPROVE EXTINGUISHER/EXTINGUISHER CABINET LOCATIONS - REFER TO LIFE SAFETY PLANS. IF MORE EXTINGUISHERS ARE REQUESTED AT OCCUPANCY INSPECTION, THE CONTRACTOR IS TO INSTALL THEM AS REQUIRED.

SECTION 907 – FIRE ALARM AND DETECTION SYSTEMS

AN APPROVED FIRE ALARM SYSTEM IS REQUIRED PER IBC SECTION 907.2.1 AND 907.2.3 FOR GROUP GROUP E - EDUCATIONAL OCCUPANCIES AS THE OCCUPANT LOAD EXCEEDS 300, THE FIRE AREA EXCEEDS 12,000 SF IN SIZE, AND A FIRE AREA OCCURS ABOVE THE LEVEL OF EXIT DISCHARGE. OCCUPANT NOTIFICATION SYSTEMS SHAL BE PROVIDED PER IBC SECTION 907.5.

CHAPTER 10: MEANS OF EGRESS

SECTION 1003 - GENERAL MEANS OF EGRESS

THE GENERAL REQUIREMENTS OF SECTION 1003 APPLY TO ALL THREE ASPECTS OF THE MEANS OF EGRESS SYSTEMS: THE EXIT ACCESS, THE EXIT AND THE EXIT DISCHARGE. IN ADDITION, COMPLIANCE WITH DETAILED REQUIREMENTS ELSEWHERE IN CHAPTER 10 ARE REQUIRED AS WELL. (SECTION 1003.1)

SECTION 1004 - OCCUPANT LOAD

REFER TO SHEET G004 FOR OCCUPANT LOAD CALCULATIONS.

SECTION 1005 - MEANS OF EGRESS SIZING

THE REQUIRED OCCUPANT LOAD FACTOR FOR EGRESS WIDTH ARE AS FOLLOWS:

FOR STAIRS/RAMPS:	**0.30" / OCCUPANT**	[SECTION 1005.3.1]
FOR ALL OTHER EGRESS COMPONENTS:	**0.20" / OCCUPANT**	[SECTION 1005.3.2]

WHERE MORE THAN ONE EXIT IS PRESENT, THE LOSS OF ONE SINGLE EXIT SHALL NOT REDUCE THE REQUIRED EGRESS WIDTH CAPACITY TO LESS THAN 50%. (SECTION 1005.5)

REQUIRED EGRESS WIDTH

CAFETERIA	728.48 OCC. x 0.2" =146"	146"/ 5 EXITS =	30" EA

ACTUAL WIDTH PROVIDED = REFER TO A/G004

SECTION 1006 - NUMBER OF EXITS AND EXIT ACCESS DOORWAYS

MAXIMUM COMMON PATH OF EGRESS TRAVEL DISTANCE FOR SPACES WITH ONE EXIT IN A NON-SPRINKLED BUILDING (TABLE 1006.2.1)

GROUPS E (OL > 30) = 75 FEET

GROUPS E (OL < 30) = 75 FEET

MINUTIMUM NUMBER OF EXITS OR ACCESS TO EXITS PER STORY (TABLE 1006.3.1)

501-1000 OCCUPANTS = 3 EXITS

SECTION 1007 - EXIT AND EXIT ACCESS CONFIGURATION

MULTIPLE EXITS FROM A SPACE OR STORY OF A BUILDING MUST BE SEPARATED BY A MINIMUM OF 1/2 THE DIAGONAL DISTANCE OF THE ROOM OR STORY THEY SERVE. (SECTION 1007.1.1)

SECTION 1008 - MEANS OF EGRESS ILLUMINATION

ILLUMINATION OF EGRESS PATHS INCLUDING ALL THREE PHASES OF THE MEANS OF EGRESS SHALL BE ILLUMINATED TO 1 FOOTCANDLE (11 LUX) AT THE WALKING SURFACE. (SECTION 1008.2.1)

EMERGENCY EGRESS ILLUMINATION SHALL BE PROVIDED BACKUP POWER FOR A MINIMUM OF 90 MINUTES, AND INSTALLED IN ACCORDANCE WITH SECTION 2702. (SECTIONS 1008.3/1008.3.4)

SECTION 1009 - ACCESSIBLE MEANS OF EGRESS

WHERE MORE THAN ONE MEANS OF EGRESS ARE REQUIRED BY SECTIONS 1006.2 OR 1006.3 FOR AN ACCESSIBLE SPACE, THE SPACE SHALL BE SERVED BY NO LESS THAN TWO ACCESSIBLE MEANS OF EGRESS.

EACH REQUIRED ACCESSIBLE MEANS OF EGRESS SHALL BE CONTINUOUS TO A PUBLIC WAY. (SECTION 1009.2)

SECTION 1010 - DOORS, GATES AND TURNSTILES

ALL DOORS WITHIN THE BUILDING COMPLY WITH SECTION 1010.

SECTION 1011 - STAIRWAYS

ALL STAIRS WITHIN THE BUILDING COMPLY WITH SECTION 1011. REFER TO EGRESS WIDTH SIZING IN SECTION 1005 ABOVE FOR STAIR REQUIRED/PROVIDED WIDTHS.

HAND RAILS (SECTION 1014) AND GUARDS (SECTION 1015) ARE PROVIDED AT THE STAIRWAYS AS PRESCRIBED WITHIN THE CODE.

SECTION 1013 - EXIT SIGNS

ALL EXITS AND EXIT ACCESS DOORS SHALL BE MARKED BY AN APPROVED EXIT SIGN INSTALLED SUCH THAT THEY ARE READILY APPARENT, CLEAR AND INDICATE THE DIRECTION OF EGRESS. EXIT SIGNAGE IS NOT REQUIRED IN ROOMS OR SPACES THAT REQUIRE ONLY ONE EXIT OR EXIT ACCESS. (1013.1, EXCEPTION 1)

TACTILE EXIT SIGNS IN CONFORMANCE WITH THE ICC-ANSI A117.1 SHALL BE INSTALLED ADJACENT TO ACCESS TO ANY EXIT, EXIT PASSAGEWAY, EXIT STAIRWAY, RAMP OR EXIT DISCHARGE. (SECTION 1013.4)

INTERNALLY LIT EXIT SIGNAGE SHALL COMPLY WITH SECTION 1013.5 AND LISTED IN ACCORDANCE WITH UL 924.

EXIT SIGNS SHALL BE LIT AT ALL TIMES, WITH A ILLUMINATION INTENSITY OF NOT LESS THAN 5 FOOTCANDLES (54 LUX). COMPLY WITH THE GRAPHICS REQUIREMENTS OF SECTION 1013.6.1 AND SHALL REMAIN LIT WITH BACKUP POWER FOR A MINIMUM OF 90 MINUTES IN THE EVENT OF POWER LOSS. EMERGENCY POWER MAY BE SUPPLIED ANY APPROVED BACKUP SOURCE PERMITTED IN THE CODE. (SECTIONS 1013.6, 1013.6.1 THROUGH 1013.6.3.)

SECTION 1016 - EXIT ACCESS

EXIT ACCESS ARRANGEMENT SHALL COMPLY TO THE PROVISIONS OF SECTIONS 1016 THROUGH 1021 AS REQUIRED. (SECTION 1016.1)

EXIT ACCESS SHALL NOT PASS THROUGH ADJOINING OR INTERVENING ROOMS OR SPACES UNLESS THE SPACES ARE ACCESSORY TO ONE OR THE OTHER, NOT A GROUP H OCCUPANCY AND PROVIDE A DISCERNABLE PATH TO AN EXIT. EXIT ACCESS MAY NOT PASS THROUGH A SPACE THAT CAN BE LOCKED TO PREVENT EGRESS. EGRESS SHALL NOT PASS THROUGH KITCHEN SPACES, STORAGE ROOMS, CLOSETS OR SPACES USED FOR SIMILAR PURPOSES. (SECTIONS 1016.2.2, 1016.2.3, AND 1016.2.5)

SECTION 1017 - EXIT ACCESS TRAVEL DISTANCE

MAXIMUM TRAVEL DISTANCE FOR SPACES IN A NON-SPRINKLED BUILDING PER TABLE 1017.2:

GROUP E = **200 FEET**

SECTION 1020 - CORRIDORS

A 1-HOUR FIRE RESISTANCE RATING OF CORRIDOR WALLS IS REQUIRED IN A NON-SPRINKLED, GROUP E OCCUPANCY WHEN THE OCCUPANT LOAD SERVED IS 30 OR MORE. (TABLE 1020.1)

THE MINIMUM CORRIDOR WIDTH IS 72" FOR CORRIDORS IN A GROUP E OCCUPANCY WHEN SERVING 100 OR MORE OCCUPANTS. (TABLE 1020.2)

SECTION 1022 - EXITS

EXITS PROVIDED COMPLY WITH SECTIONS 1022 THOUGH 1027 AND APPLICABLE REQUIREMENTS OF SECTION 1003 THROUGH 1015, AND MAY NOT BE USED FOR ANY PURPOSE THAT INTERFERES WITH ITS FUNCTION AS A MEANS OF EGRESS.

KKT
ARCHITECTURE \ INTERIORS \ ENGINEERING

KKT ARCHITECTS, INC.
2200 SOUTH UTICA PLACE, SUITE 200
TULSA, OKLAHOMA 74114
[P] 918.744.4270 \ [F] 918.744.7849
WWW.KKTARCHITECTS.COM
CERTIFICATE OF AUTHORIZATION

EAST CENTRAL HIGH SCHOOL CAFETERIA REMODEL

TULSA PUBLIC SCHOOLS

12150 E 11TH ST,
TULSA, OK
74128

STATE OF OKLAHOMA
SARAH J. GOULD
No. 6367
LICENSED PROFESSIONAL ARCHITECT
10/18/24

REV. DATE	#	DESCRIPTION
10-18-2024		CONST. DOCUMENTS

CODE SUMMARY

G003

CODE OCCUPANCY

ROOM NUMBER	ROOM NAME	ROOM AREA (SF)	LOAD FACTOR	OCCUPANCY (OCC.)
100	STORAGE	429	300	1.43
101	CAFETERIA ENTRY 1	536	15	35.71
102	HALLWAY	273	5	54.69
103	STORAGE 3	132	300	0.44
104	FREEZER 2	156	300	0.52
105	FREEZER 1	163	300	0.54
106	HALLWAY	211	200	1.05
107	OFFICE	165	150	1.10
108	HALLWAY	391	5	78.13
109	STORAGE 1	206	300	0.69
110	SERVING LINE	1212	15	80.81
111	CAFETERIA SEATING 1	2948	15	196.52
112	KITCHEN 3	593	200	2.97
113	DISHWASHING	525	200	2.63
114	ELECTRICAL	58	300	0.19
115	LAUNDRY	71	300	0.24
116	KITCHEN 2	497	200	2.48
117	KITCHEN 1	265	200	1.33
118	CAFETERIA ENTRY 2	268	15	17.84
119	CAFETERIA SEATING 2	3382	15	225.46
120	CAFETERIA ENTRY 3	321	15	21.37
121	STORAGE	448	300	1.49
122	STORAGE	75	300	0.25
123	STORAGE	178	300	0.59
		13501	4250	728.48

CODE PLAN LEGEND:

OCCUPANCY GROUPS

- ASSEMBLY (A-2)
- BUSINESS (B)
- STORAGE (S-1)
- OUT OF SCOPE
- 2-HOUR FIRE BARRIER

EGRESS LIGHTING LEGEND:

- *E — EMERGENCY LIGHT *E=EXISTING, WHERE SHOWN ON PLAN
- *E — EXIT LIGHT *E= EXISTING, WHERE SHOWN ON PLAN
- FEC — FIRE EXTINGUISHER CABINET

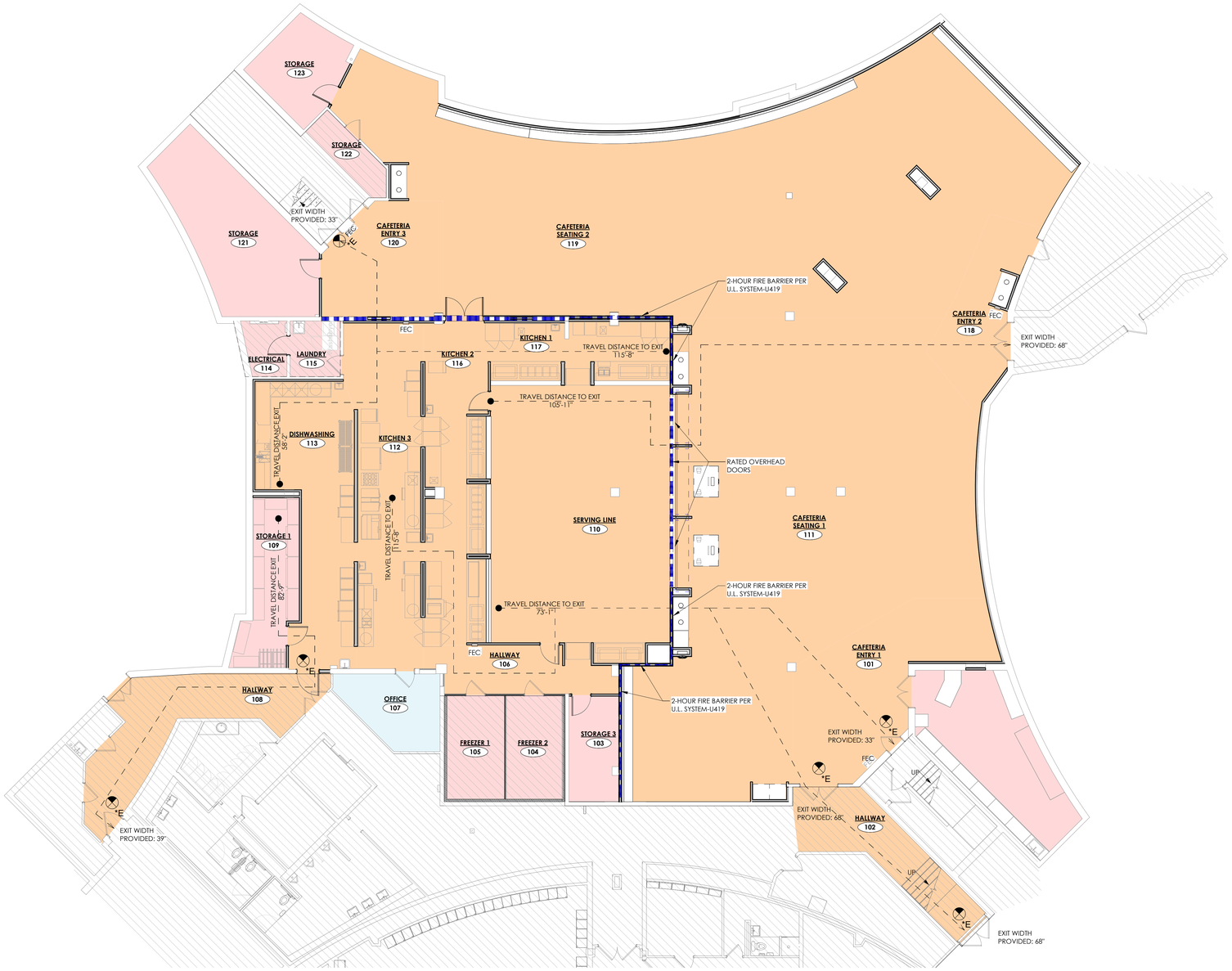

A CODE PLAN
SCALE 1/8" = 1'-0"
NORTH

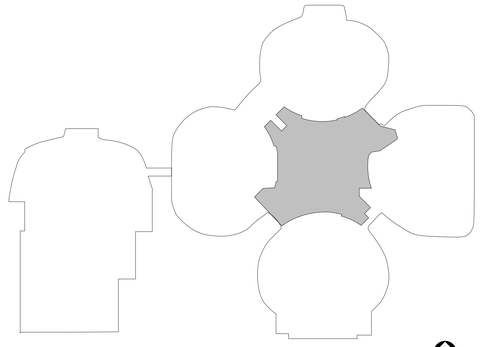

NORTH

KKT
ARCHITECTURE \ INTERIORS \ ENGINEERING

KKT ARCHITECTS, INC.
2200 SOUTH UTICA PLACE, SUITE 200
TULSA, OKLAHOMA 74114
[P] 918.744.4270 \ [F] 918.744.7849
WWW.KKTARCHITECTS.COM
CERTIFICATE OF AUTHORIZATION

EAST CENTRAL HIGH SCHOOL CAFETERIA REMODEL

TULSA PUBLIC SCHOOLS

12150 E 11TH ST,
TULSA, OK
74128

STATE OF OKLAHOMA
SARAH J. GOULD
No. 6367
LICENSED PROFESSIONAL ARCHITECT
10/18/24

REV. DATE	#	DESCRIPTION
10-18-2024		CONST. DOCUMENTS

CODE PLANS AND SCHEDULES

G004

S:\Users\sarahgoulden\Documents\Revit
2022 Local Files\22-0001_ECHS_Central_Revit
Revit(Arch)_sarahgoulden@PLSTY41

GENERAL NOTES

OVERALL NOTES

1. **PRIOR TO BEGINNING ANY WORK OR ORDERING ANY MATERIALS, THE CONTRACTOR SHALL COORDINATE THE STRUCTURAL DRAWINGS WITH THE DRAWINGS FROM THE ARCHITECT AND ALL OTHER TRADES. NOTIFY THE ARCHITECT AND THE STRUCTURAL ENGINEER OF RECORD OF ANY DISCREPANCIES OR POSSIBLE DEFICIENCIES.**
2. PRIOR TO STARTING WORK, THE CONTRACTOR SHALL VERIFY THE EXISTING SITE CONDITIONS AND CONSTRAINTS AS WELL AS EXISTING BUILDING LOCATION, DIMENSIONS, AND ELEVATIONS, IF ANY.
3. THE CONSTRUCTION DOCUMENTS REPRESENT THE FINISHED STRUCTURE. ALL TEMPORARY BRACING, SHORING, SUPPORTS, ETC. ARE THE RESPONSIBILITY OF THE CONTRACTOR.
4. NO FIELD REVISIONS OR MODIFICATIONS TO ANY STRUCTURAL COMPONENT SHALL BE PERFORMED WITHOUT PRIOR APPROVAL BY THE ENGINEER OF RECORD.
5. PLANS AND DETAILS SHALL NOT BE SCALED FOR DETERMINATION OF LENGTHS, QUANTITIES, OR CONFIGURATION OF MATERIALS.
6. THE CONTRACTOR SHALL SUPPLY ALL ITEMS FOR ATTACHING MECHANICAL AND ELECTRICAL EQUIPMENT TO THE STRUCTURE TO RESIST ALL LOADS, INCLUDING SEISMIC FORCES. COORDINATE THE LOCATION(S) AND REQUIRED ATTACHMENT(S) WITH THE STRUCTURE. REFER TO THE ELECTRICAL AND MECHANICAL DOCUMENTS FOR ADDITIONAL REQUIREMENTS.

SHOP DRAWING NOTES

1. SHOP DRAWINGS SHALL BE ORIGINAL DRAWINGS PREPARED BY THE CONTRACTOR, SUBCONTRACTOR, OR COMPONENT MANUFACTURER. REPRODUCTION OF THE DRAWINGS FOR USE AS SHOP DRAWINGS IS NOT PERMITTED AND WILL BE REJECTED WITHOUT BEING REVIEWED. IF THE CONTRACTOR REQUESTS CEC'S ELECTRONIC FILES TO ASSIST IN THEIR PREPARATION OF SHOP DRAWINGS, THE CONTRACTOR SHALL FIRST BE REQUIRED TO SIGN AN AGREEMENT SUPPLIED BY CEC PROVIDING THE TERMS AND CONDITIONS OF THAT USE.
2. SHOP DRAWINGS SUBMITTED FOR REVIEW SHALL HAVE THE CONTRACTOR'S STAMP CERTIFYING THE GENERAL CONTRACTOR'S REVIEW OF THE SHOP DRAWINGS PRIOR TO SUBMITTING THE DOCUMENTS TO THE ENGINEER OF RECORD. AT A MINIMUM, THIS REVIEW SHALL CONSIST OF VERIFICATION OF ALL DIMENSIONS, FIELD MEASUREMENTS, CONSTRUCTION CRITERIA, AND COORDINATION WITH OTHER TRADES. SHOP DRAWINGS SUBMITTED WITHOUT THE CONTRACTOR'S STAMP WILL BE REJECTED WITHOUT BEING REVIEWED.
3. SHOP DRAWINGS SHALL BE SUBMITTED ELECTRONICALLY AS PDF DOCUMENTS. ELECTRONIC SUBMITTALS WILL BE RETURNED TO THE CONTRACTOR IN A PDF FORMAT. HARD COPY SUBMITTALS, IF SUBMITTED, WILL BE SCANNED BY CEC AND REVIEW ELECTRONICALLY. NO HARD COPIES WILL BE MARKED UP BY CEC OR RETURNED TO THE CONTRACTOR.
4. EXPECTED SHOP DRAWINGS AND SUBMITTALS FOR REVIEW INCLUDE, BUT ARE NOT LIMITED TO THE FOLLOWING:
   a. ANCHOR ROD LAYOUT AND SHOP DRAWINGS
   b. STRUCTURAL STEEL SHOP DRAWINGS
   c. STRUCTURAL STEEL CONNECTION CALCULATIONS

05 1200 - STRUCTURAL STEEL NOTES

1. U.N.O., FABRICATION AND ERECTION OF STRUCTURAL STEEL SHALL BE IN ACCORDANCE WITH ANSI/AISC 360 "SPECIFICATION FOR STRUCTURAL STEEL BUILDINGS," EDITION REFERENCED IN THE DESIGN CRITERIA, AISC 303 "CODE OF STANDARD PRACTICE FOR STEEL BUILDINGS AND BRIDGES," EDITION REFERENCED IN THE DESIGN CRITERIA, AND THE STANDARDS OF THE AMERICAN WELDING SOCIETY.
2. ALL STRUCTURAL STEEL SHALL BE DETAILED AND FABRICATED BY A FABRICATOR WITH EITHER AN AISC STD CERTIFICATION OR AN IAS AC172 CERTIFICATION. IF THE STEEL FABRICATOR DOES NOT HAVE THE REQUIRED CERTIFICATION, THE FABRICATOR SHALL PAY FOR THE "IN-PLANT" INSPECTIONS ASSOCIATED WITH THE SPECIAL INSPECTION REQUIREMENTS OF THE IBC CODE.
3. STRUCTURAL STEEL SHALL CONFORM TO THE FOLLOWING MINIMUM REQUIREMENTS, U.N.O.:
   HSS TUBES ASTM A500 GRADE C Fy = 46 KSI
4. ALL BOLTED CONNECTIONS FOR STRUCTURAL STEEL MEMBERS SHALL CONSIST OF ASTM F3125/F3125M, TYPE 1, WITH MATCHING COMPATIBLE ASTM A563 OR ASTM A563M NUTS AND ASTM F436/F436M WASHERS.
5. ALL SHEAR STUD CONNECTORS SHALL CONSIST OF ASTM A108 MATERIAL.
6. ALL WELDING SHALL CONFORM TO THE AMERICAN WELDING SOCIETY STANDARDS. ALL SHOP AND FIELD WELDS SHALL USE E70XX ELECTRODES. ALL WELDS SHALL BE PERFORMED BY A CERTIFIED WELDER AND CONFORM TO AISC AND AWS STANDARDS. ALL SHOP AND FULL PENETRATION BUTT WELDS SHALL BE INSPECTED BY ULTRASONIC TESTING UNLESS PROHIBITED BY THE GEOMETRY OF THE CONNECTION. IF ULTRASONIC TESTING CANNOT BE PERFORMED, X-RAY TESTING SHALL BE USED AT THE APPROVAL OF THE ARCHITECT/ENGINEER OF RECORD.
7. STRUCTURAL STEEL SHALL NOT BE MODIFIED OR SPLICED OTHER THAN WHERE NOTED ON THE DRAWINGS WITHOUT APPROVAL OF THE ENGINEER OF RECORD.
8. STEEL BEAMS SHALL BE ERECTED WITH THEIR NATURAL CAMBER UP.
9. SHOP PRIME STRUCTURAL STEEL MEMBERS. DO NOT PRIME SURFACES THAT WILL BE FIREPROOFED, FIELD WELDED, IN CONTACT WITH CONCRETE, OR HIGH STRENGTH BOLTED. AFTER ERECTION, PRIME WELDS, DAMAGED SHOP PRIMER, DAMAGED GALVANIZING, AND SURFACES NOT SHOP PRIMED, EXCEPT SURFACES SPECIFIED NOT TO BE PRIMED.
10. ALLOW FOR ERECTION LOADS AND PROVIDE SUFFICIENT TEMPORARY BRACING TO MAINTAIN STRUCTURE IN SAFE CONDITION, PLUMB, AND IN TRUE ALIGNMENT UNTIL COMPLETION OF ERECTION AND INSTALLATION OF PERMANENT BRACING.

DESIGN CRITERIA

APPLICABLE CODES AND STANDARDS

IBC 2018	INTERNATIONAL BUILDING CODE
ASCE 7-16	MINIMUM DESIGN LOADS FOR BUILDINGS AND OTHER STRUCTURES
AISC 303-16	CODE OF STANDARD PRACTICE FOR STEEL BUILDINGS AND BRIDGES
AISC 360-16	SPECIFICATION FOR STRUCTURAL STEEL BUILDINGS

DEAD LOAD

SELF WEIGHT OF STRUCTURE	ACTUAL WEIGHT OF MATERIALS
MAXIMUM SELF WEIGHT TO USE WITH ROOF WIND UPLIFT	7 PSF
ROOF COLLATERAL DEAD LOAD	20 PSF
FLOOR COLLATERAL DEAD LOAD	15 PSF

LIVE LOAD

MANUFACTURING (LIGHT)	125 PSF (NON-REDUCIBLE)

RISK CATEGORY

MANUFACTURER DESIGNED BUILDING	III

FOUNDATION DESIGN

THE FOUNDATION ELEMENTS OF THE BUILDING HAVE BEEN ANALYSED BASED ON THE INTERNATIONAL BUILDING CODE MINIMUMS SINCE THE ORIGINAL GEOTECH WAS NOT AVIALABLE.

GEOTECHNICAL ENGINEER	N/A
REPORT NUMBER	N/A
REPORT DATE	N/A

SLAB-ON-GRADE

MODULUS OF SUBGRADE REACTION, k	100 PCI (ASSUMED)

SHALLOW FOUNDATIONS

ALLOWABLE BEARING PRESSURE	1,500 PSF (ASSUMED)

STRUCTURAL ABBREVIATIONS

Ø	- DIAMETER	IBC	- INTERNATIONAL BUILDING CODE
°	- DEGREE		
&	- AND	IN-K	- INCH KIPS
@	- AT	INT	- INTERIOR
±	- PLUS OR MINUS		
		J.B.	- JOIST BEARING
A.B.	- ANCHOR BOLT(S)	JST	- JOIST
ACI	- AMERICAN CONCRETE INSTITUTE		
		KIP	- 1000 POUNDS
ADJ	- ADJACENT	KSF	- KIPS PER SQUARE FOOT
AISC	- AMERICAN INSTITUTE OF STEEL CONSTRUCTION	LB	- POUND
AISI	- AMERICAN IRON AND STEEL INSTITUTE	LLH	- LONG LEG HORIZONTAL
		LLV	- LONG LEG VERTICAL
ARCH'L	- ARCHITECTURAL	LO	- LOW
ASCE	- AMERICAN SOCIETY OF CIVIL ENGINEERS	MANUF	- MANUFACTURER
		MAX	- MAXIMUM
ASTM	- AMERICAN SOCIETY OF TESTING AND MATERIALS	MECH'L	- MECHANICAL
		MIN	- MINIMUM
AWS	- AMERICAN WELDING SOCIETY	MPII	- MANUFACTURER'S PRINTED INSTALLATION INSTRUCTIONS
BAL	- BALANCE		
BLDG	- BUILDING		
BM	- BEAM	N.E.	- NORTHEAST
B.O	- BOTTOM OF	N.W.	- NORTHWEST
BOTT	- BOTTOM	NO.	- NUMBER
BRG	- BEARING		
BTWN	- BETWEEN	O.C.	- ON-CENTER
		O.H.	- OPPOSITE HAND (REVERSED)
CANT	- CANTILEVER	O. TO O.	- OUT-TO-OUT
CFMF	- COLD FORMED METAL FRAMING		
C.J.	- CONSTRUCTION JOINT	P/C	- PRECAST
C. TO C.	- CENTER-TO-CENTER	PEMB	- PRE-ENGINEERED METAL BUILDING
CTR	- CENTER		
℄	- CENTERLINE	PL	- PLATE
CLR	- CLEAR	PSF	- POUNDS PER SQUARE FOOT
COL	- COLUMN	PSI	- POUNDS PER SQUARE INCH
CONC	- CONCRETE		
CONNX	- CONNECTION	REINF	- REINFORCING
CONT	- CONTINUOUS	REQ'D	- REQUIRED
DBE	- DECK BEARING ELEVATION	S.E.	- SOUTHEAST
DBL	- DOUBLE	S.J.	- SAWED JOINT
D.B.A.	- DEFORMED BAR ANCHOR	SHT	- SHEET
DN	- DOWN	SIM	- SIMILAR
DTL	- DETAIL	S.O.G.	- SLAB-ON-GRADE
DWG	- DRAWING	SP	- SPACE(S) OR SPACING
DWL	- DOWEL	STD	- STANDARD
		STL	- STEEL
EA	- EACH	STR'L	- STRUCTURAL
E.J.	- EXPANSION JOINT	S.W.	- SOUTHWEST
ELEV.	- ELEVATION		
ELEC'L	- ELECTRICAL	T.O.	- TOP OF
EOS	- EDGE OF SLAB	THRU	- THROUGH
EQ	- EQUAL	TYP	- TYPICAL
E.W.	- EACH WAY		
EXT	- EXTERIOR	USGS	- UNITED STATES GEOLOGICAL SURVEY
FIN. FLR.	- FINISHED FLOOR		
FT	- FOOT (OR FEET)	U.N.O.	- UNLESS NOTED OTHERWISE
FV	- FIELD VERIFY		
		VERT	- VERTICAL
GA	- GAGE	W/	- WITH
GALV	- GALVANIZED	W/C	- WATER/CEMENT
G.B.	- GRADE BEAM	W/O	- WITHOUT
		W.P.	- WORKING POINT
H.S.	- HIGH STRENGTH	WWR	- WELDED WIRE REINFORCEMENT
HI	- HIGH		
HK	- HOOK		
HORZ	- HORIZONTAL		

KKT
ARCHITECTURE \ INTERIORS \ ENGINEERING

KKT ARCHITECTS, INC.
2200 SOUTH UTICA PLACE, SUITE 200
TULSA, OKLAHOMA 74114
[P] 918.744.4270 \ [F] 918.744.7849
WWW.KKTARCHITECTS.COM
CERTIFICATE OF AUTHORIZATION

CEC
CEC CORPORATION
WWW.CONNECTCEC.COM
OK CA#: 32 EXP.: 2026-06-30
CEC PROJECT 240417

EAST CENTRAL HIGH SCHOOL CAFETERIA REMODEL

TULSA PUBLIC SCHOOLS

12150 E. 11TH
TULSA, OK
74128

LICENSED PROFESSIONAL ENGINEER
JACOB EMMITT ALLEN JOHNSON
10/21/24
34635
OKLAHOMA

REV. DATE	#	DESCRIPTION
10/21/2024	-	100% CD

GENERAL NOTES

S1.1

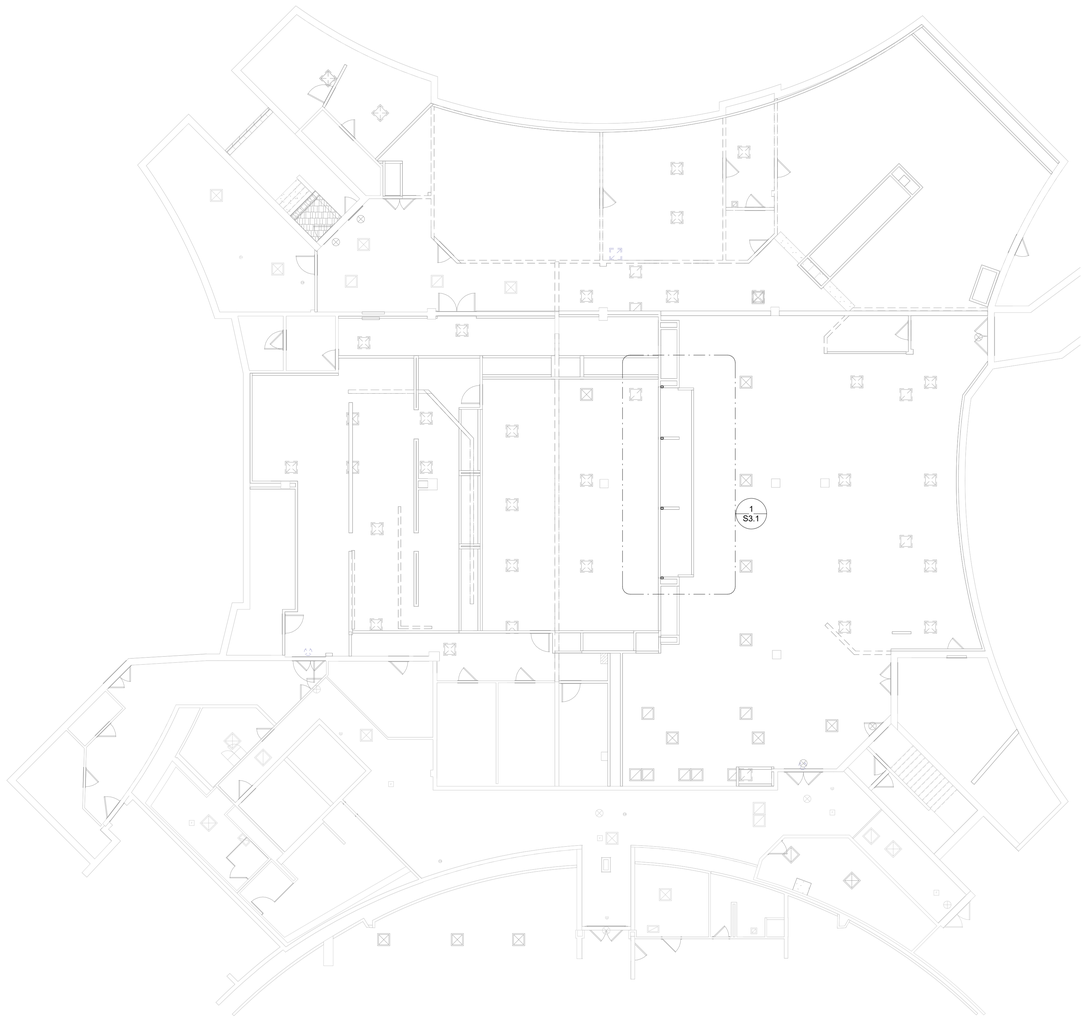

1 OVERALL PLAN
SCALE : 1" = 10'-0"

KKT
ARCHITECTURE \ INTERIORS \ ENGINEERING

KKT ARCHITECTS, INC.
2200 SOUTH UTICA PLACE, SUITE 200
TULSA, OKLAHOMA 74114
[P] 918.744.4270 \ [F] 918.744.7849
WWW.KKTARCHITECTS.COM
CERTIFICATE OF AUTHORIZATION

CEC
CEC CORPORATION
WWW.CONNECTCEC.COM
OK CA# 32 EXP: 2026-06-30
CEC PROJECT 240417

EAST CENTRAL HIGH SCHOOL CAFETERIA REMODEL

TULSA PUBLIC SCHOOLS

12150 E. 11TH
TULSA, OK
74128

LICENSED PROFESSIONAL ENGINEER
JACOB EMMITT ALLEN JOHNSON
10/21/24
34635
OKLAHOMA

REV.	DATE	#	DESCRIPTION
	10/21/24	-	100% CD

OVERALL PLAN

S2.1

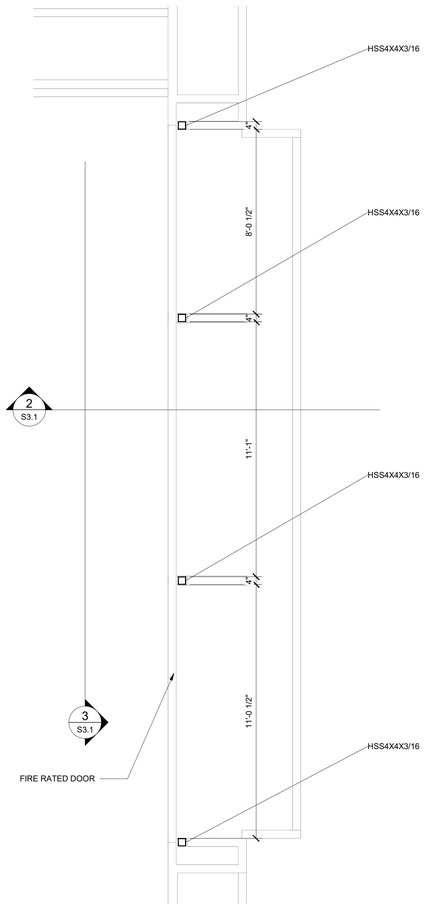

1 ENLARGED FIRE DOOR PLAN
SCALE : 3/8" = 1'-0"

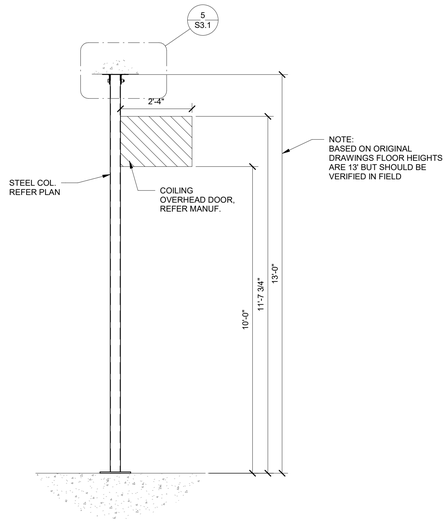

2 FIRE DOOR DETAIL
SCALE : 1/2" = 1'-0"

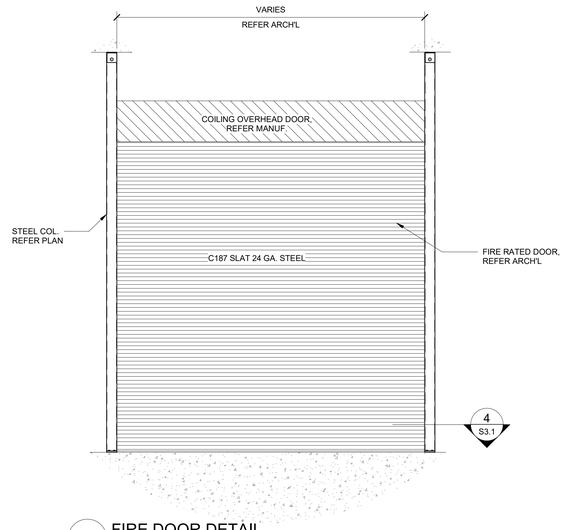

3 FIRE DOOR DETAIL
SCALE : 1/2" = 1'-0"

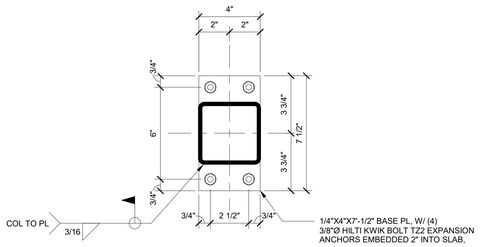

4 BASEPLATE (BP)
SCALE : 3" = 1'-0"

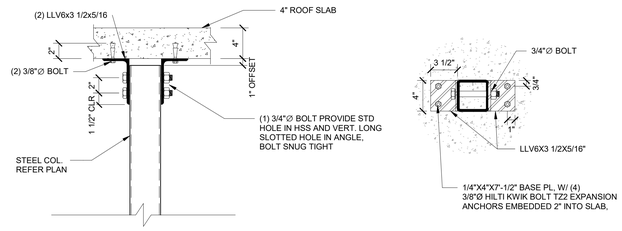

5 SLIP CONNECTION DETAIL
SCALE : 1 1/2" = 1'-0"

KKT
ARCHITECTURE \ INTERIORS \ ENGINEERING

KKT ARCHITECTS, INC.
2200 SOUTH UTICA PLACE, SUITE 200
TULSA, OKLAHOMA 74114
[P] 918.744.4270 \ [F] 918.744.7849
WWW.KKTARCHITECTS.COM
CERTIFICATE OF AUTHORIZATION

CEC
CEC CORPORATION
WWW.CONNECTCEC.COM
OK CA#: 32 EXP.: 2026-06-30
CEC PROJECT 240417

EAST CENTRAL HIGH SCHOOL CAFETERIA REMODEL

TULSA PUBLIC SCHOOLS

12150 E. 11TH
TULSA, OK
74128

LICENSED PROFESSIONAL ENGINEER
JACOB EMMITT ALLEN JOHNSON
10/21/24
34635
OKLAHOMA

REV. DATE	#	DESCRIPTION
10/21/24	.	100% CD

FRAMING DETAILS

S3.1

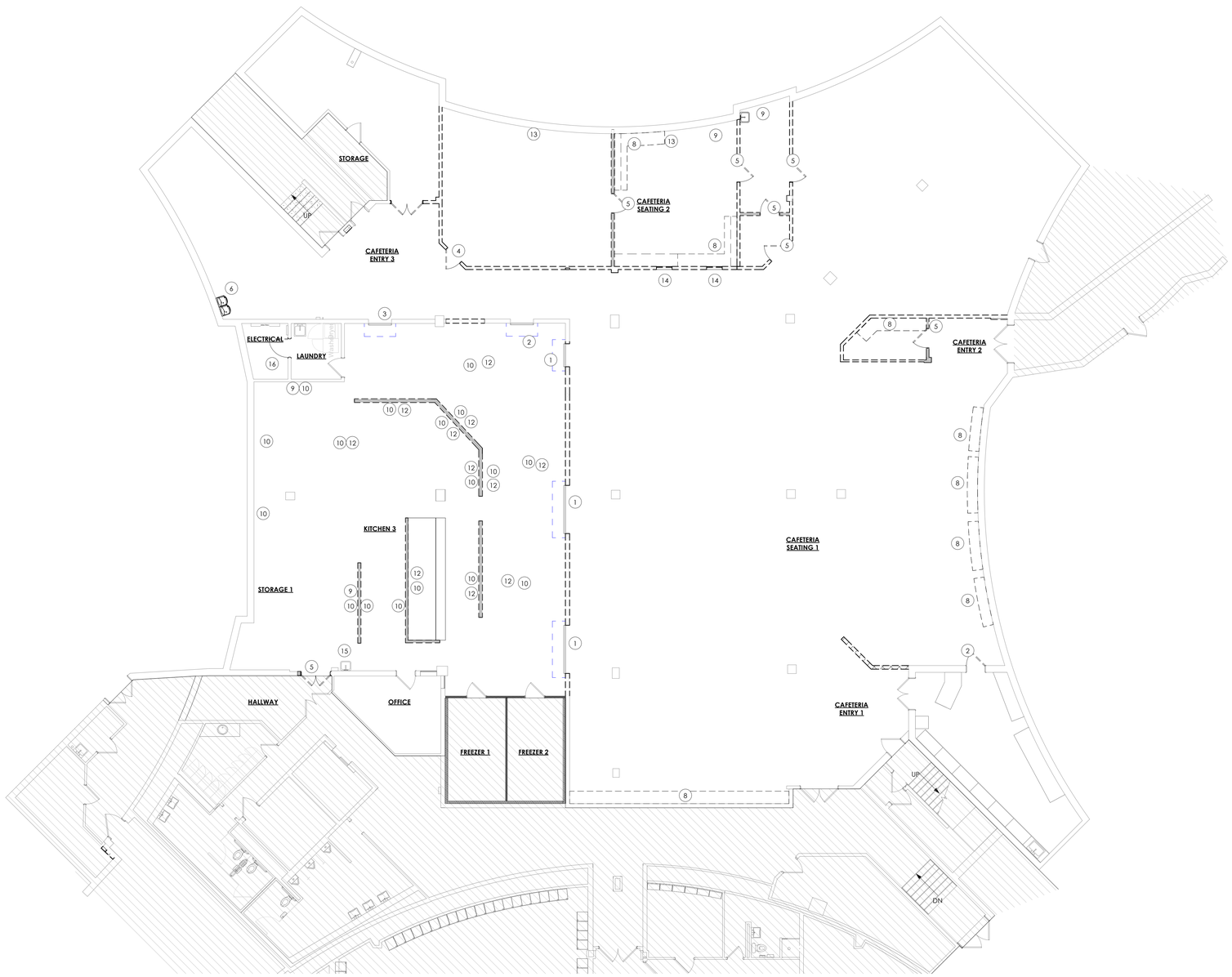

A **DEMOLITION PLAN - OVERALL**
SCALE 1/8" = 1'-0"
NORTH

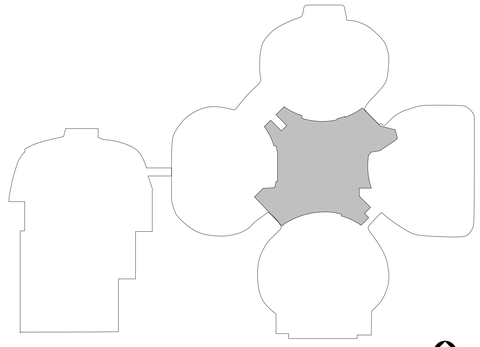

NORTH

DEMO FLOOR PLAN KEYNOTES:

1. EXISTING OVERHEAD DOOR AND FRAME TO BE REMOVED.
2. EXISTING DOOR TO BE REMOVED. FILL IN HOLE WITH MATERIALS THAT MATCH THE SURROUNDING WALLS.
3. REMOVE EXISTING POWER FOR OVERHEAD DOOR OPERATOR AND RETAIN FOR REINSTALLATION.
4. EXISTING DOOR SGL TO BE REMOVED; RETAIN FOR REUSE.
5. EXISTING DOOR SGL TO BE REMOVED.
6. EXISTING DRINKING FOUNTAINS TO BE REMOVED
7. EXISTING SERVICE DOOR AND COUNTERTOP TO BE REMOVED.
8. EXISTING MILLWORK AND ASSOCIATED PLUMBING INDICATED TO BE REMOVED.
9. EXISTING SINK TO BE REMOVED.
10. *EXISTING KITCHEN EQUIPMENT, INCLUDING, STAINLESS STEEL TABLES, TO BE REMOVED AND RETAINED FOR OWNER.
11. EXISTING FLOOR DRAINS TO BE REMOVED; COORDINATE WITH PLUMBING, TYPICAL.
12. EXISTING CONCRETE CURB UNDER KITCHEN EQUIPMENT TO BE REMOVED.
13. REMOVE PARTIAL WALL FURR OUT
14. EXISTING WINDOW TO BE REMOVED.
15. EXISTING SINK TO BE REMOVED AND KEEP FOR REINSTALLATION.
16. EXISTING DOOR TO BE REMOVED THEN REINSTALLED WITH A FLIPPED SWING.

* CAP PLUMBING AND POWER AT REMOVED FIXTURES AND EQUIPMENT.

DEMO PLAN LEGEND

- EXISTING WALLS TO BE DEMOLISHED
- EXISTING CMU WALLS TO BE DEMOLISHED
- EXISTING WALLS TO REMAIN
- EXISTING DOOR TO BE DEMOLISHED
- EXISTING DOOR TO REMAIN
- EXISTING DOOR OVERHEAD ROLLING TO BE DEMOLISHED
- EXISTING DOOR OVERHEAD ROLLING TO REMAIN
- EXISTING WINDOW TO BE DEMOLISHED
- EXISTING WINDOW TO REMAIN
- KEYNOTE
- AREA NOT IN SCOPE

DEMO GENERAL NOTES:

1. REMOVE ALL FLOORING AND WALL BASE IN AREA OF WORK.
2. REMOVE ALL WALL MOUNTED BOARDS, ACCESSORIES AND WIRE MOULD IN AREA OF WORK.
3. REMOVE ALL FRP PANELING, WALL PROTECTION AND WALL TILE IN AREA OF WORK.
4. REMOVE CLOCKS, TELEVISIONS AND WALL MOUNTED EQUIPMENT IN AREA OF WORK AND RETURN TO OWNER.
5. REMOVE ALL SIGNAGE IN AREA OF WORK AND RETURN TO OWNER.
6. SALVAGE AED & FE TAKEN FROM DEMOLISHED WALLS AND STORE FOR LATER USE.

KKT
ARCHITECTURE \ INTERIORS \ ENGINEERING

KKT ARCHITECTS, INC.
2200 SOUTH UTICA PLACE, SUITE 200
TULSA, OKLAHOMA 74114
[P] 918.744.4270 \ [F] 918.744.7849
WWW.KKTARCHITECTS.COM
CERTIFICATE OF AUTHORIZATION

EAST CENTRAL HIGH SCHOOL CAFETERIA REMODEL

TULSA PUBLIC SCHOOLS

12150 E 11TH ST,
TULSA, OK
74128

STATE OF OKLAHOMA
SARAH J. GOULD
No. 6357
LICENSED PROFESSIONAL ARCHITECT
10/18/24

REV. DATE	#	DESCRIPTION
10-18-2024	·	CONST. DOCUMENTS

DEMOLITION PLAN - OVERALL

AD101

C:\Users\sgoulds\AppData\Local\Temp\acpublish_25128\AD101_DEMOLITION PLAN - OVERALL.dwg
Saved: 10/18/2024 3:19:37 PM
Plotted: 10/18/2024 3:19:37 PM
Plotted by: sgoulds
Plot Style: KKT.ctb
Layout: AD101_DEMOLITION PLAN - OVERALL
Xrefs: Xref_Floor_Plan_Base_Model_Rev1
Xrefs: Xref_Floor_Plan_Base_Model_Rev1

FLOOR PLAN LEGEND:

- NEW METAL STUD AND GYPSUM BOARD WALL
- NEW CMU WALL
- NEW LOW WALLS (VERIFY EXACT HEIGHT)
- EXISTING WALLS TO REMAIN
- NEW CMU COLUMNS
- 444A — EXISTING DOOR TO BE DEMOLISHED
- EXISTING DOOR TO REMAIN, REFER TO DOOR SCHEDULE
- 1 — KEYNOTE
- F.E. — FIRE EXTINGUISHER CABINET W/ EXTINGUISHER, RE: SPECIFICATIONS
- T.V — TELEVISION, O.F.C.I

FLOOR PLAN KEY NOTES:

1. REINSTALL OVERHEAD DOOR OPERATOR AND ASSOCIATED POWER.
2. INSTALL PA SYSTEM. COORDINATE FINAL LOCATION WITH OWNER.
3. INFILL EXISTING LOW WALL WITH 5/8" GYP BOARD ON 3 5/8" METAL STUDS AT 16" O.C. PAINT TO MATCH ADJACENT EXISTING WALLS

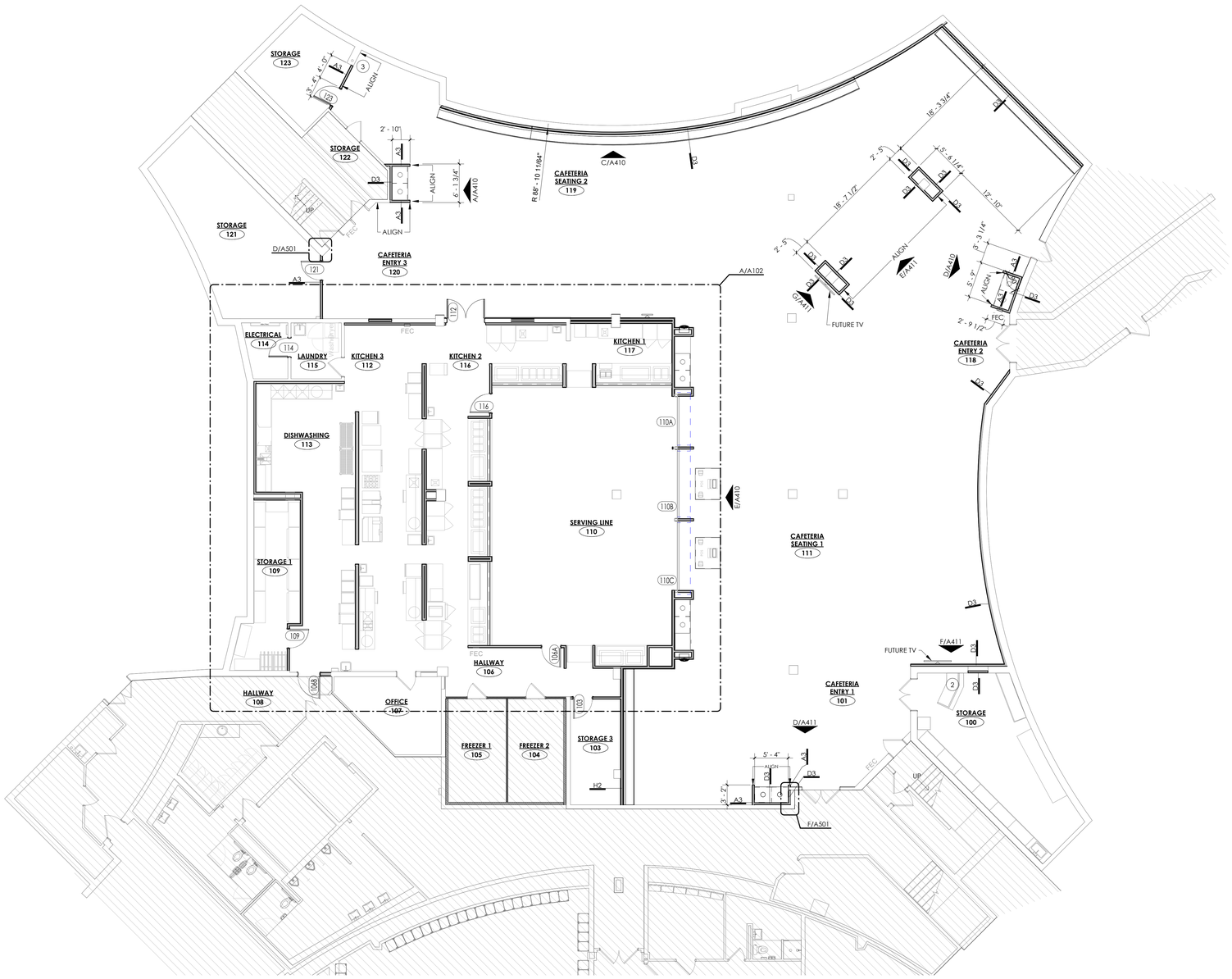

A BASEMENT FLOOR PLAN - CAFETERIA

SCALE 1/8" = 1'-0"

NORTH

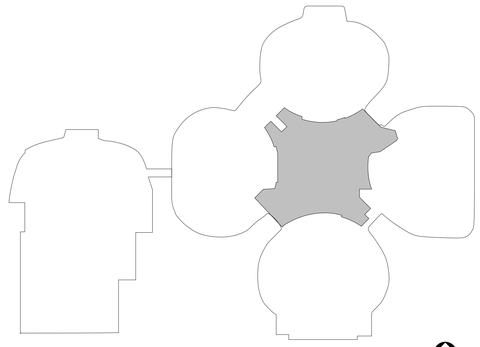

NORTH

KKT
ARCHITECTURE \ INTERIORS \ ENGINEERING

KKT ARCHITECTS, INC.
2200 SOUTH UTICA PLACE, SUITE 200
TULSA, OKLAHOMA 74114
[P] 918.744.4270 \ [F] 918.744.7849
WWW.KKTARCHITECTS.COM
CERTIFICATE OF AUTHORIZATION

EAST CENTRAL HIGH SCHOOL CAFETERIA REMODEL

TULSA PUBLIC SCHOOLS

12150 E 11TH ST,
TULSA, OK
74128

STATE OF OKLAHOMA
SARAH J. GOULD
No. 6367
LICENSED PROFESSIONAL ARCHITECT
10/18/24

REV. DATE	#	DESCRIPTION
10-18-2024		CONST. DOCUMENTS

FIRST FLOOR PLAN OVERALL

A101

FLOOR PLAN LEGEND:

- NEW METAL STUD AND GYPSUM BOARD WALL
- NEW CMU WALL
- NEW LOW WALLS (VERIFY EXACT HEIGHT)
- EXISTING WALLS TO REMAIN
- NEW CMU COLUMNS
- 444A — EXISTING DOOR TO BE DEMOLISHED
- EXISTING DOOR TO REMAIN, REFER TO DOOR SCHEDULE
- 1 — KEYNOTE
- F.E. — FIRE EXTINGUISHER CABINET W/ EXTINGUISHER, RE: SPECIFICATIONS
- T.V — TELEVISION, O.F.C.I

FLOOR PLAN KEY NOTES:

1. REINSTALL OVERHEAD DOOR OPERATOR AND ASSOCIATED POWER.
2. INSTALL PA SYSTEM, COORDINATE FINAL LOCATION WITH OWNER.
3. INFILL EXISTING LOW WALL WITH 5/8" GYP BOARD ON 3 5/8" METAL STUDS AT 16" O.C. PAINT TO MATCH ADJACENT EXISTING WALLS

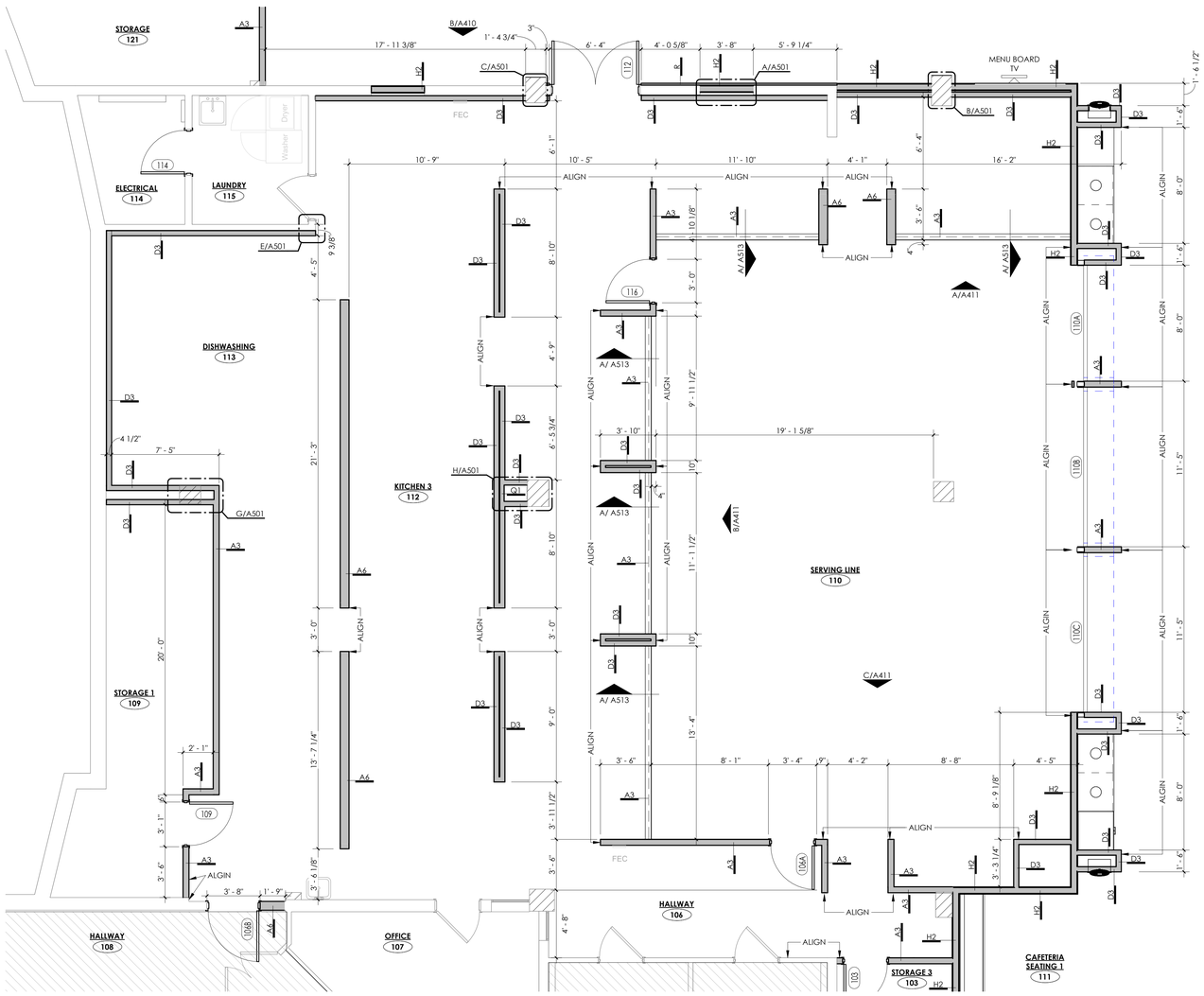

A BASEMENT ENLARGED FLOOR PLAN
SCALE 1/4" = 1'-0"

NORTH

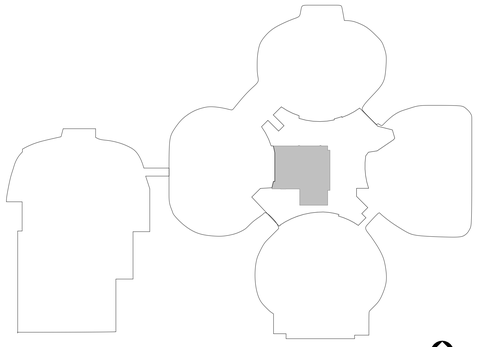

NORTH

KKT
ARCHITECTURE \ INTERIORS \ ENGINEERING

KKT ARCHITECTS, INC.
2200 SOUTH UTICA PLACE, SUITE 200
TULSA, OKLAHOMA 74114
[P] 918.744.4270 \ [F] 918.744.7849
WWW.KKTARCHITECTS.COM
CERTIFICATE OF AUTHORIZATION

EAST CENTRAL HIGH SCHOOL CAFETERIA REMODEL

TULSA PUBLIC SCHOOLS

12150 E 11TH ST,
TULSA, OK
74128

STATE OF OKLAHOMA
SARAH J. GOUTS
No. 6367
LICENSED ARCHITECT
10/18/24

REV. DATE	#	DESCRIPTION
10-18-2024		CONST. DOCUMENTS

FIRST FLOOR PLAN-ENLARGED KITCHEN

A102

GENERAL NOTES

1. SUSPENDED GYPSUM BOARD CEILINGS TO BE 5/8" GYPSUM BOARD ON METAL FURRING CHANNELS SPACED AT 16" O.C. ATTACHED WITH METAL FURRING CHANNEL CLIPS TO 1-1/2" METAL CHANNELS, SPACED 4'-0" MAXIMUM.
2. THE LOCATION OF ANY CEILING ACCESS PANELS REQUIRED IN GYPSUM BOARD CEILINGS SHALL BE COORDINATED WITH THE ARCHITECT. ALL PANELS SHALL BE PAINTED TO MATCH SURROUNDING CEILINGS.
3. CEILING MOUNTED SPRINKLER HEADS, SPEAKERS, EXIT SIGNAGE, ETC. ARE TO BE CENTERED IN CEILING TILES. COORDINATE WITH ARCHITECT WHERE NOT POSSIBLE.
4. SUSPENDED OR SURFACE MOUNT UTILITY LIGHT FIXTURES TO BE CENTERED IN ROOM U.N.O.
5. GYPSUM BOARD CEILINGS TO BE PAINTED P1 U.N.O.
6. PROVIDE MOISTURE RESISTANT GYPSUM BOARD CEILINGS WITH EPOXY PAINT AT ALL SHOWER ROOMS/AREAS.
7. ALL EXPOSED STEEL STRUCTURAL ELEMENTS, DUCTWORK, CONDUITS, PIPING, SLOTTED METAL FRAMING SYSTEM & SUPPORTS TO BE PAINTED P2.
8. EXPOSED UNDERSIDE OF STAIRS TO BE PAINTED P2.
9. NO CEILING TILE TO BE LESS THAN 3" IN DIMENSION. CEILING GRID TO BE ATTACHED TO WALL AT 4'-0" MAXIMUM SPACING.
10. ALL SPRINKLER HEADS TO BE PREFINISHED TO MATCH CEILING FINISH.

KEY NOTES

1. EXISTING KITCHEN HOOD TO BE REMOVED FOR RELOCATION.

RCP LEGEND

- NEW ACOUSTIC CEILING TILE (2' x 4')
- EXISTING GYPSUM BOARD CEILING
- NEW GYPSUM BOARD CEILING
- OUT OF SCOPE
- EXIT LIGHT
- NEW TROFFER LIGHT
- XXX — CEILING FINISH RE:FINISH SCHEDULE FOR FINISHES

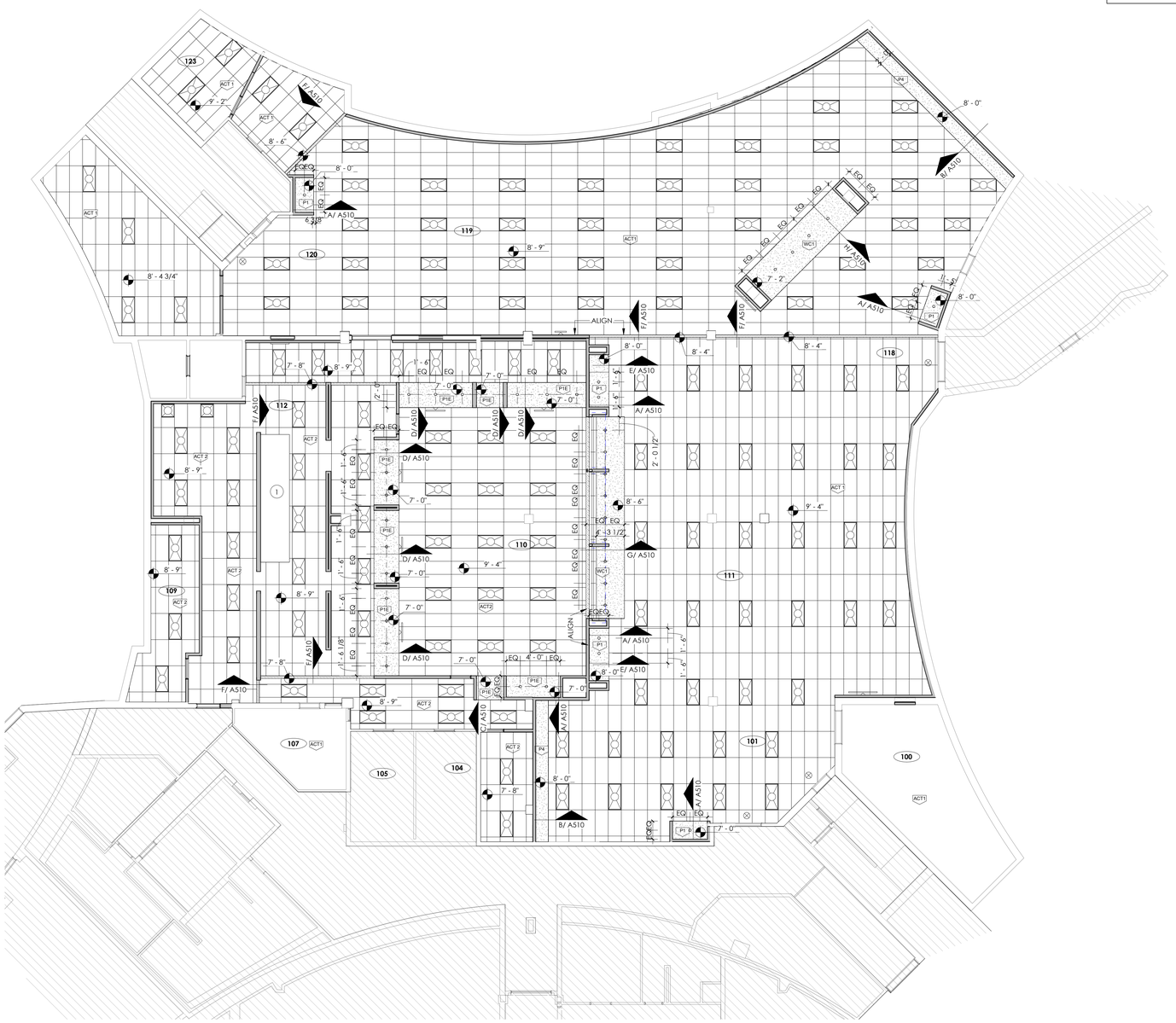

A FIRST FLOOR REFLECTED CEILING PLAN - OVERALL

SCALE 1/8" = 1'-0"

NORTH

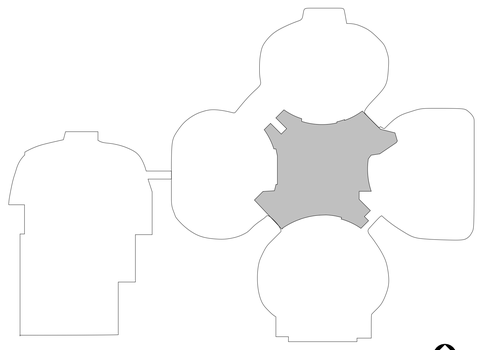

NORTH

KKT
ARCHITECTURE \ INTERIORS \ ENGINEERING

KKT ARCHITECTS, INC.
2200 SOUTH UTICA PLACE, SUITE 200
TULSA, OKLAHOMA 74114
[P] 918.744.4270 \ [F] 918.744.7849
WWW.KKTARCHITECTS.COM
CERTIFICATE OF AUTHORIZATION

EAST CENTRAL HIGH SCHOOL CAFETERIA REMODEL

TULSA PUBLIC SCHOOLS

12150 E 11TH ST,
TULSA, OK
74128

STATE OF OKLAHOMA
SARAH J. GOULD
No. 6357
LICENSED PROFESSIONAL ARCHITECT
10/18/24

REV. DATE	#	DESCRIPTION
10-18-2024		CONST. DOCUMENTS

FIRST FLOOR REFLECTED CEILING PLAN - OVERALL

A111

C:\Users\sarahgoulden\Documents\Revit
2024 Sandbox_sarahgoulden_central
Revit (Arch)_sarahgoulden.rvt

FINISH PLAN LEGEND:

PAINT:

P1 SHERWIN WILLIAMS
COLOR: PURE WHITE
NUMBER: SW 7005
FINISH: FLAT

P1E SHERWIN WILLIAMS
COLOR: PURE WHITE
NUMBER: SW 7005
FINISH: EPOXY

P2 SHERWIN WILLIAMS
COLOR: GRIZZLE GRAY
NUMBER: SW 7068
FINISH: SATIN

P3 SHERWIN WILLIAMS
COLOR: PASSIVE
NUMBER: SW 7064
FINISH: EGGSHEL

P4 SHERWIN WILLIAMS
COLOR: SHOWSTOPPER
NUMBER: SW 7588
FINISH: EGGSHEL

WALL PROTECTION:

WP1 WOLF GORDON
COLLECTION: RAMPART
STYLE: RESHAM
COLOR: GRIS

WP2 WOLF GORDON
COLLECTION: RAMPART
STYLE: RESHAM
COLOR: STEEL

WALLCOVERING:

WC1 KOROSEAL
STYLE: REATEC
COLOR: BC-5473

WC2 COLLEGIATE LOGO" CUSTOM VINYL WALLCOVERING
3MJ180CVS VINYL, AND
3M8520 MATTE LAMINATE

WC3 MDC WALL COVERING
DESERT PEAK BLACK ROCK
W20P03

RUBBER BASE:

B1 ROPPE
SERIES: TRADITIONAL
PROFILE: WALL BASE 4"
COLOR: 100 BLACK

FRP:

FRP1 MARLITE
PRODUCT: SYMMETRIX W/SANI-COAT, SMARTSEAM SUBWAY PATTERN RUN HORIZONTALLY
COLOR: WHITE WITH WHITE GROUT LINES
C100 G63

FRP2 MARLITE
PRODUCT: SMOOTH S100 CLASS A
COLOR: WHITE

LVT:

LVT1 TARKETT
STYLE: PCBE COLOR BEAM
COLOR: C119 DUKE
SIZE: 9" x 36"

LVT2 TARKETT
STYLE: PCBE COLOR BEAM
COLOR: C121 FLANNEL
SIZE: 9" x 36"

LVT3 TARKETT
STYLE: PCBE COLOR BEAM
COLOR: C110 RUBY
SIZE: 9" x 36"

TILE:

T1 ATLAS CONCORDE
COLLECTION: FRAY
COLOR: GRAY
SIZE: 12" x 24"
NOTES: INSTALL HORIZONTAL, 1/3 OFFSET

T2 ATLAS CONCORDE
COLLECTION: FRAY
COLOR: BLACK
SIZE: 12" x 24"
NOTES: INSTALL HORIZONTAL, 1/3 OFFSET

T3 AMERICAN OLEAN
COLLECTION: COLOR STORY
COLOR: SCARLET 0010
FINISH: GLOSSY
SIZE: 2" x 8"
GROUT: TBD

T4 AMERICAN OLEAN
COLLECTION: COLOR STORY
COLOR: SCARLET 0013
FINISH: MATTE
SIZE: 2" x 8"

T5 AMERICAN OLEAN
COLLECTION: COLOR STORY NEUTRAL
COLOR: ICE WHITE 0025
FINISH: GLOSSY
SIZE: 2" x 8"
NOTES: INSTALL HORIZONTAL, RUNNING 1/3 OFFSET

FLUID APPLIED FLOORING:

EP1 DURAFLEX
PRODUCT: POLY-CRETE SL8
COLOR: SLATE GREY
FINISH: ARMOR TOP LIGHT GREY GLOSS WITH GRIT AND ACCELERA TOPCOAT
NOTES: 4" INTEGRAL COVE BASE

SOLID SURFACE:

SS1 CORIAN
PATTERN: DOMINO TERRAZZO
EDGE: BEVELED

PLASTIC LAMINATE:

PL1 WILSONART
PATTERN: NEOWALNUT 7991K-28
FINISH: GLOSS LINE

UPHOLSTERY:

UPH1 PALLAS TEXTILES
PATTERN: DEJA VU
COLOR: FLASH 27.273.178

UPH2 PALLAS TEXTILES
PATTERN: UNRAVELED
COLOR: CARBON 27.168.122

ACOUSTICAL CEILING TILE:

ACT1 ARMSTRONG
STYLE: HUMIGUARD PLUS - FINE FISSURED W/ BIOBLOCK PAINT ON FACE AND BACK OF PANELS
COLOR: WHITE
SIZE: 2' x 4'
MODEL: #605
GRID: 15/16"
NOTES: USE AT CAFETERIA

ACT2 ARMSTRONG
STYLE: CERAMAGUARD W/ BIOBLOCK/BIOSHIELD AND HUMIGUARD MAX
COLOR: WHITE
SIZE: 2' x 4'
MODEL: #60
GRID: 15/16"
NOTES: USE AT KITCHEN

CORNERGUARDS

CG1 KOROGRAD
STAINLESS STEEL

FINISH NOTES:

1. SUBMIT FINISH SAMPLES TO ARCHITECT FOR APPROVAL
2. FOLLOW MANUFACTURER'S INSTRUCTIONS FOR ABUTTING FLOOR MATERIALS OF VARYING THICKNESS. TRANSITIONS SHALL BE NO MORE THAN 1/4" HEIGHT VARIATION.
3. IN AREAS WITH MILLWORK, THE FLOORING SHALL EXTEND BENEATH THE MILLWORK. COORDINATE THE INSTALLATION OF THE FLOOR BASE AROUND MILLWORK.
4. REFERENCE INTERIOR ELEVATIONS SHEETS (A410 AND A411) & SECTION/DETAIL SHEETS (A501, A512, AND A513) FOR LOCATION OF MILLWORK FINISHES, MILLWORK NOTES AND HARDWARE NOTES.
5. FOR AREAS THAT LIST MORE THAN ONE MATERIAL OR FINISH, OR ARE NOT SHOWN ON PLAN, CONTRACTOR SHALL REFERENCE INTERIOR ELEVATIONS, SECTIONS, DETAILS, REFLECTED CEILING PLANS, & FINISH PLANS FOR MATERIAL OR FINISH INSTALLATION LOCATIONS &/OR TRANSITIONS.
6. REFERENCE REFLECTED CEILING PLAN SHEET (A111A AND A111B) FOR CEILING FINISH LOCATIONS.
7. EXISTING CONCRETE SLAB TO BE LEVELED AND FILLED AS REQUIRED FOR LEVEL INSTALLATION OF NEW FLOORING.
8. DO NOT INSTALL B1 OR EB1 BASE OVER TILE WALL FINISH.
9. PAINT EXISTING HOLLOW METAL DOORS AND FRAMES PAINT NEW HM FRAMES, P2. COORDINATE FINAL COLOR IN LOCATIONS THAT ABUT AREAS NOT INCLUDED IN CURRENT SCOPE.
10. DO NOT INSTALL TILE BEHIND MILLWORK.
11. PROVIDE A LEVEL 5 FINISH AT ALL WALLS TO RECEIVE WALL COVERING, WC1-WC3.
12. ALL CMU WALLS RECEIVING WALL PROTECTION FINISH TO USE WOLF GORDON RAMPART STRONGHOLD SUBSTRATE.

SYMBOLS:

ROOM NAME 101 (Wall Finish / Base Finish / Floor Finish) — ROOM FINISH TAG

F1 — CHANGE IN FINISH

FLOORING DIRECTION

CHANGE IN FLOOR FINISH WHICH REQUIRES TRANSITION, RE: LEGEND THIS SHEET

EX. — EXISTING FINISH TO REMAIN.

TRANSITION LEGEND:

TILE WAINSCOT CAP, EXPOSED TILE EDGES, AND OUTSIDE TILE CORNERS- SCHLUTER RONDEC (SATIN ANODIZED ALUMINUM)

WALL TILE TO FLOOR- SCHLUTER DILEX AHKA (SATIN ANODIZED ALUMINUM)

LVT TO EPOXY FLOOR OR EXISTING FLOORING- JOHNSONITE SLT-63-J

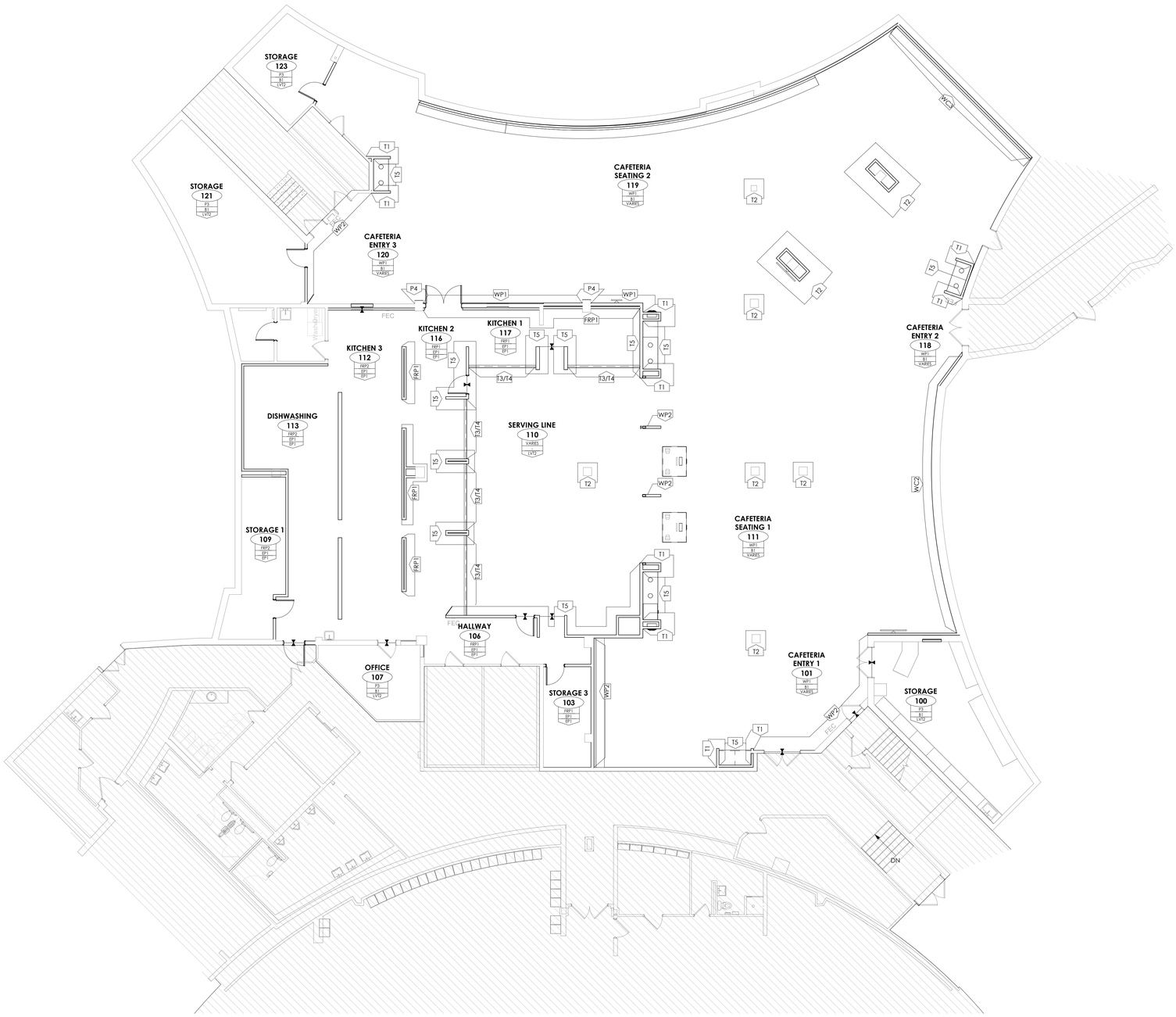

A FINISH PLAN OVERALL
SCALE 1/8" = 1'-0"

NORTH

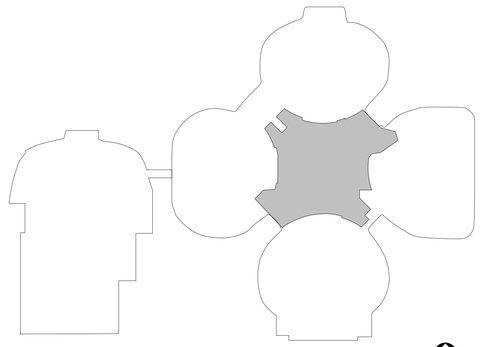

NORTH

KKT
ARCHITECTURE \ INTERIORS \ ENGINEERING

KKT ARCHITECTS, INC.
2200 SOUTH UTICA PLACE, SUITE 200
TULSA, OKLAHOMA 74114
[P] 918.744.4270 \ [F] 918.744.7849
WWW.KKTARCHITECTS.COM
CERTIFICATE OF AUTHORIZATION

EAST CENTRAL HIGH SCHOOL CAFETERIA REMODEL

TULSA PUBLIC SCHOOLS

12150 E 11TH ST,
TULSA, OK
74128

STATE OF OKLAHOMA
SARAH J. GOULD
No. 6367
LICENSED PROFESSIONAL ARCHITECT
10/18/24

REV. DATE	#	DESCRIPTION
10-18-2024	·	CONST. DOCUMENTS

FINISH PLAN

A120

C:\Users\sgoulder\Autodesk Documents\Revit
Projects\East Central Cafeteria
Remodel_central_sgoulder.rvt

FLOOR PATTERN FINISH NOTES:

1. COLORS TO BE INSTALLED AS FOLLOWS:
   25% RUBY, 25% DUKE, 50% FLANNEL.
2. REFER TO FLOOR PATTERN FINISH PLAN FOR DIMENSIONS TO LOCATE START AND FINISH OF MIXED PATTERN.

A FLOOR PATTERN FINISH PLAN
SCALE 1/8" = 1'-0"

NORTH

KKT
ARCHITECTURE \ INTERIORS \ ENGINEERING

KKT ARCHITECTS, INC.
2200 SOUTH UTICA PLACE, SUITE 200
TULSA, OKLAHOMA 74114
[P] 918.744.4270 \ [F] 918.744.7849
WWW.KKTARCHITECTS.COM
CERTIFICATE OF AUTHORIZATION

EAST CENTRAL HIGH SCHOOL CAFETERIA REMODEL

TULSA PUBLIC SCHOOLS

12150 E 11TH ST,
TULSA, OK
74128

STATE OF OKLAHOMA
SARAH J. GOULD
No. 6367
LICENSED
10/18/24

REV. DATE	#	DESCRIPTION
10-18-2024		CONST. DOCUMENTS

FINISH FLOOR

A121

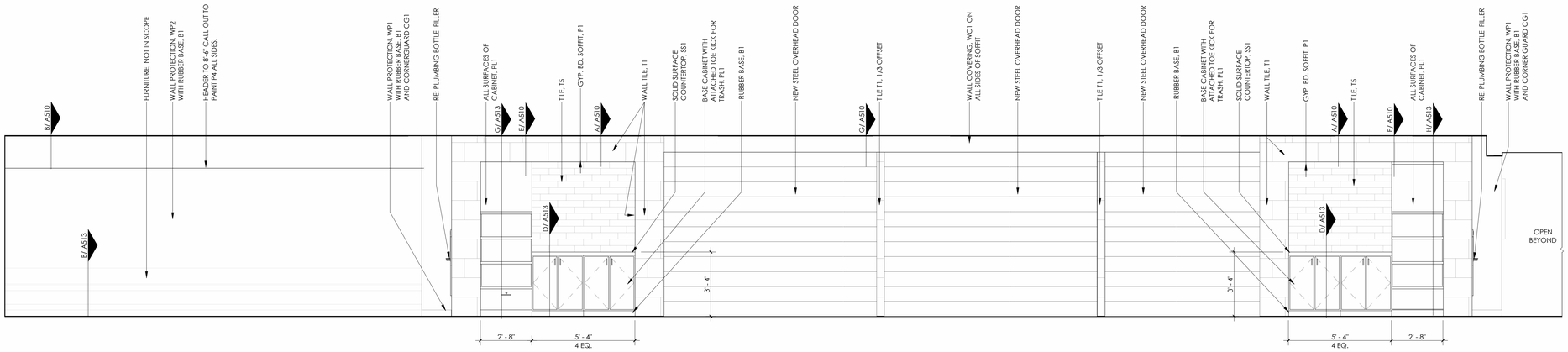

E CAFETERIA SEATING 6

SCALE 3/8" = 1'-0"

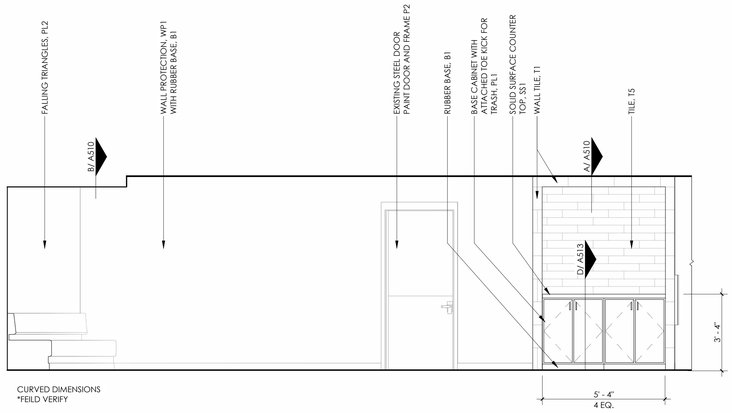

D CAFETERIA SEATING 5

SCALE 3/8" = 1'-0"

C CAFETERIA SEATING 4

SCALE 3/8" = 1'-0"

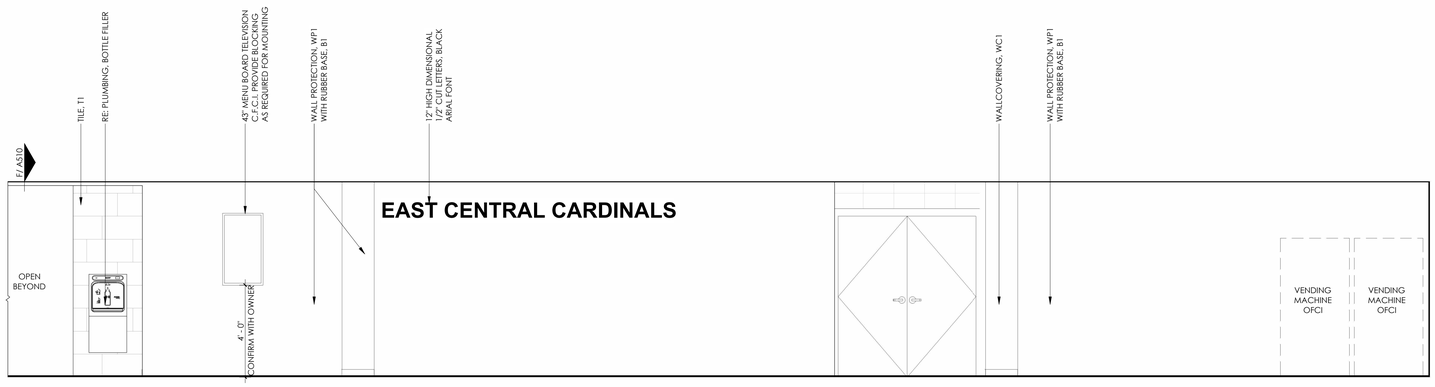

B CAFETERIA SEATING 1

SCALE 3/8" = 1'-0"

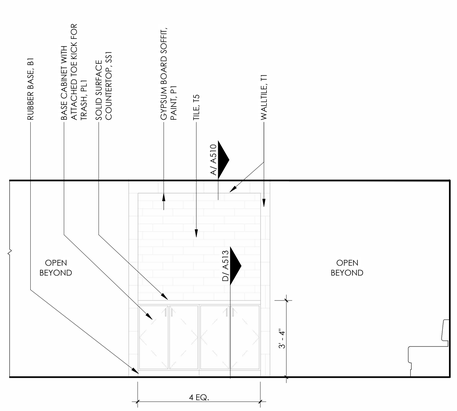

A CAFETERIA SEATING 2

SCALE 3/8" = 1'-0"

C:\Users\sarah.goulter\Documents\Revit
Central 2024_sarah.goulter.rvt
Revit\Arch_sarah.goulter.rvt\{3D\}

KKT
ARCHITECTURE \ INTERIORS \ ENGINEERING

KKT ARCHITECTS, INC.
2200 SOUTH UTICA PLACE, SUITE 200
TULSA, OKLAHOMA 74114
[P] 918.744.4270 \ [F] 918.744.7849
WWW.KKTARCHITECTS.COM
CERTIFICATE OF AUTHORIZATION

EAST CENTRAL HIGH SCHOOL CAFETERIA REMODEL

TULSA PUBLIC SCHOOLS

12150 E 11TH ST,
TULSA, OK
74128

STATE OF OKLAHOMA
SARAH J. GOULTER
No. 6367
LICENSED ARCHITECT
10/18/24

REV. DATE	#	DESCRIPTION
10-18-2024		CONST. DOCUMENTS

INTERIOR ELEVATIONS

A410

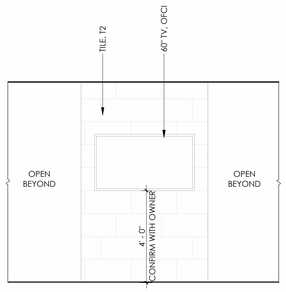

G TV COLUMN
SCALE 3/8" = 1'-0"

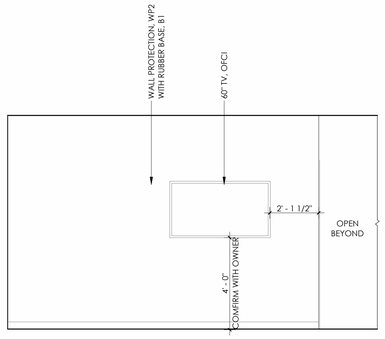

F CAFETERIA SEATING 8
SCALE 3/8" = 1'-0"

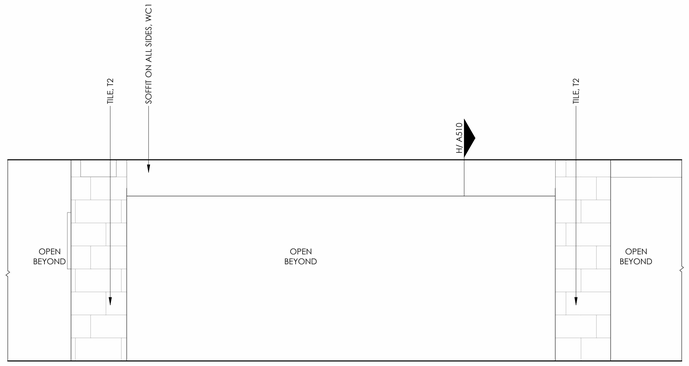

E Double Wrapped Columns Elevation
SCALE 3/8" = 1'-0"

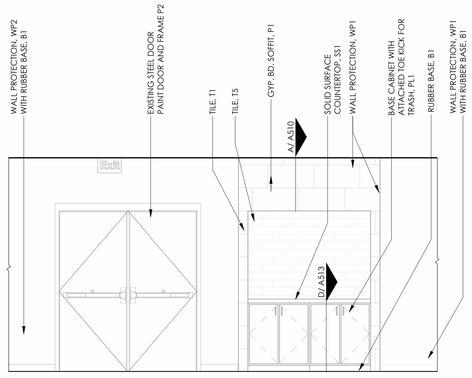

D CAFETERIA SEATING 7
SCALE 3/8" = 1'-0"

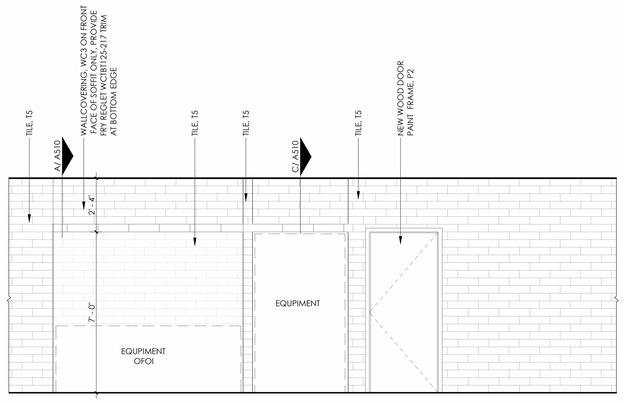

C SERVING AREA 3
SCALE 3/8" = 1'-0"

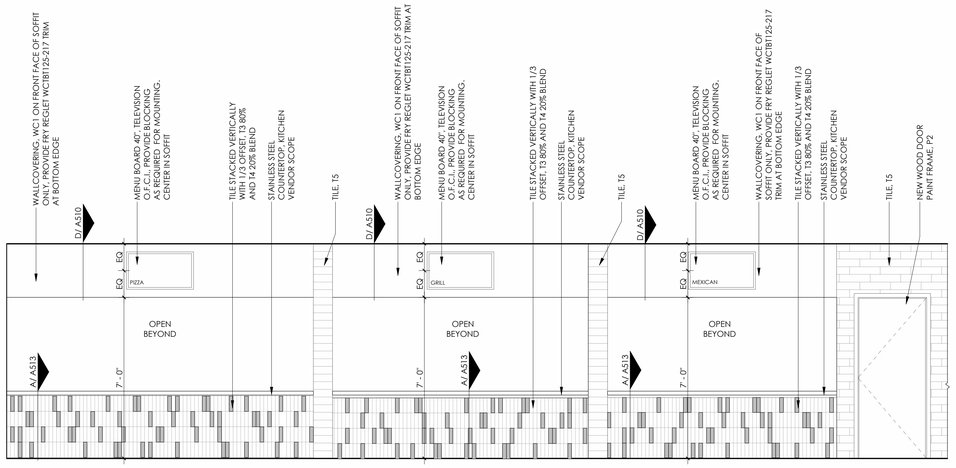

B SERVING AREA 2
SCALE 3/8" = 1'-0"

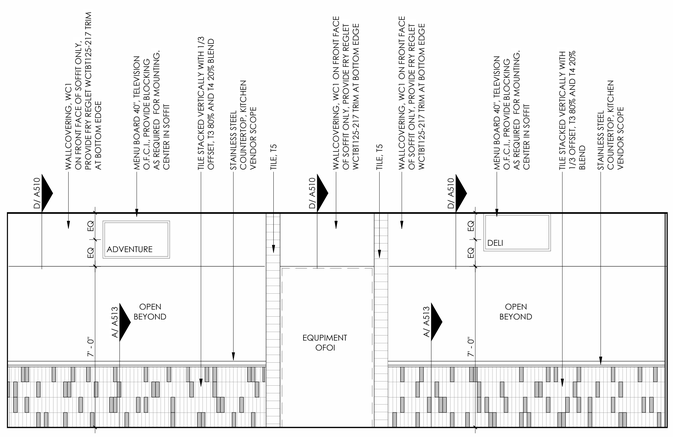

A SERVING AREA 1
SCALE 3/8" = 1'-0"

KKT
ARCHITECTURE \ INTERIORS \ ENGINEERING

KKT ARCHITECTS, INC.
2200 SOUTH UTICA PLACE, SUITE 200
TULSA, OKLAHOMA 74114
[P] 918.744.4270 \ [F] 918.744.7849
WWW.KKTARCHITECTS.COM
CERTIFICATE OF AUTHORIZATION

EAST CENTRAL HIGH SCHOOL CAFETERIA REMODEL

TULSA PUBLIC SCHOOLS

12150 E 11TH ST,
TULSA, OK
74128

STATE OF OKLAHOMA
SARAH J. GOULD
No. 6357
CERTIFICATE OF AUTHORITY
EXPIRES 6/30/24
10/18/24

REV. DATE	#	DESCRIPTION
10-18-2024		CONST. DOCUMENTS

INTERIOR ELEVATIONS

A411

C:\Users\sarahgoulds\Documents\Revit
2024 Revit Central File
Rev1(Arch)_sarahgoulds@tps.org

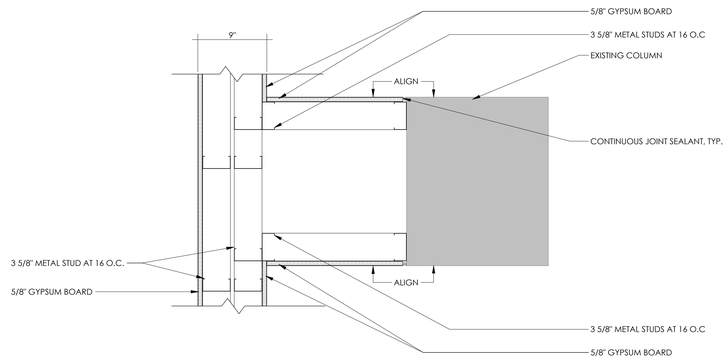

H COLUMN TO FURRING PARTITIONS

SCALE 1 1/2" = 1'-0"

NORTH

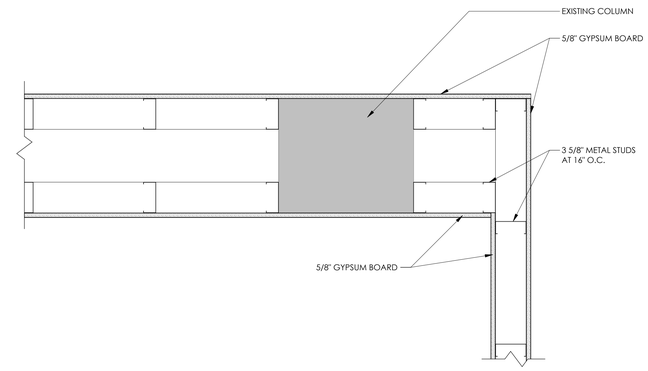

G WRAPPED COLUMN DETAIL

SCALE 1 1/2" = 1'-0"

NORTH

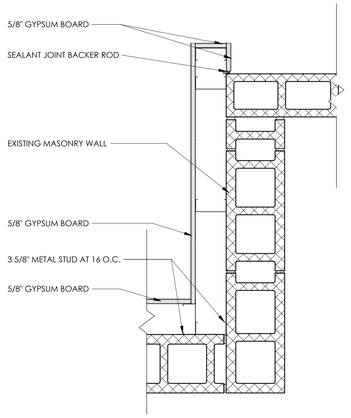

F TRASH CAN WALL DETAIL

SCALE 1 1/2" = 1'-0"

NORTH

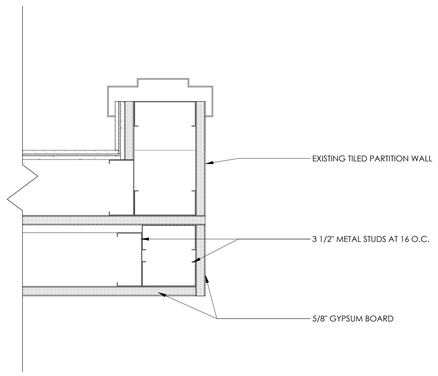

E DOOR TO FURRING PARTITION

SCALE 3" = 1'-0"

NORTH

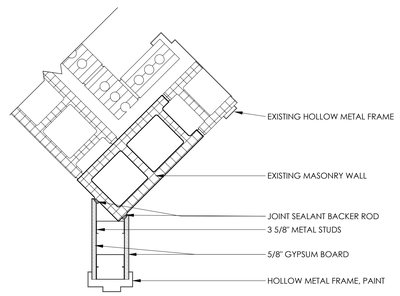

D DIAGONAL DOOR TO PARTITION

SCALE 1 1/2" = 1'-0"

NORTH

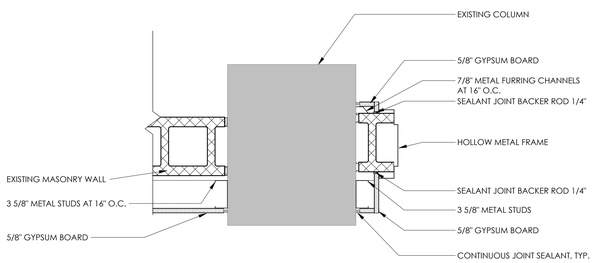

C COLUMN IN CMU TO PARTITION

SCALE 1 1/2" = 1'-0"

NORTH

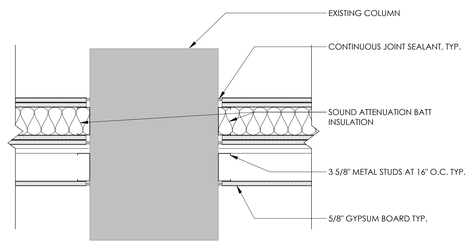

B PART.-COL.-PART. DETAIL

SCALE 1 1/2" = 1'-0"

NORTH

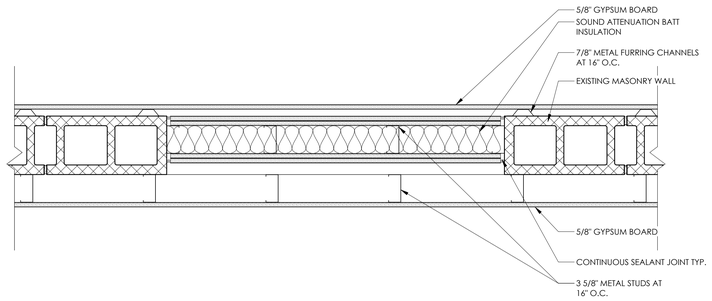

A CMU WALL INFILL DETAIL

SCALE 1 1/2" = 1'-0"

NORTH

KKT
ARCHITECTURE \ INTERIORS \ ENGINEERING

KKT ARCHITECTS, INC.
2200 SOUTH UTICA PLACE, SUITE 200
TULSA, OKLAHOMA 74114
[P] 918.744.4270 \ [F] 918.744.7849
WWW.KKTARCHITECTS.COM
CERTIFICATE OF AUTHORIZATION

EAST CENTRAL HIGH SCHOOL CAFETERIA REMODEL

TULSA PUBLIC SCHOOLS

12150 E 11TH ST,
TULSA, OK
74128

STATE OF OKLAHOMA
SARAH J. GOULD
No. 6367
LICENSED PROFESSIONAL ARCHITECT
10/18/24

REV. DATE	#	DESCRIPTION
10-18-2024		CONST. DOCUMENTS

EXTERIOR AND INTERIOR DETAILS

A501

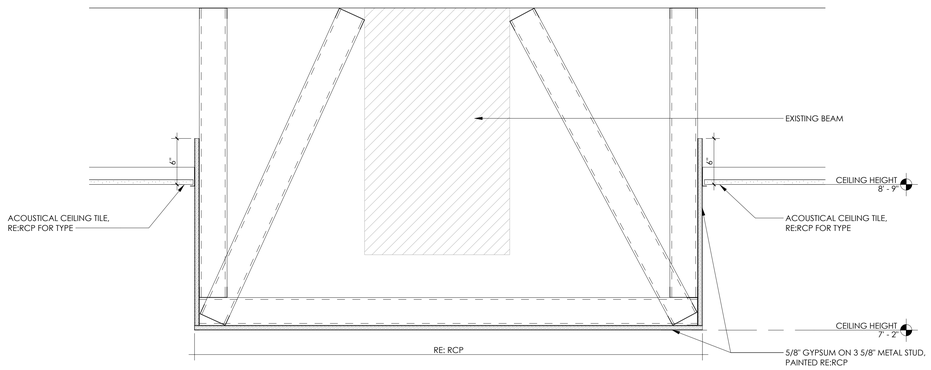

H SOFFIT DETAIL AT BEAM
SCALE 1 1/2" = 1'-0"

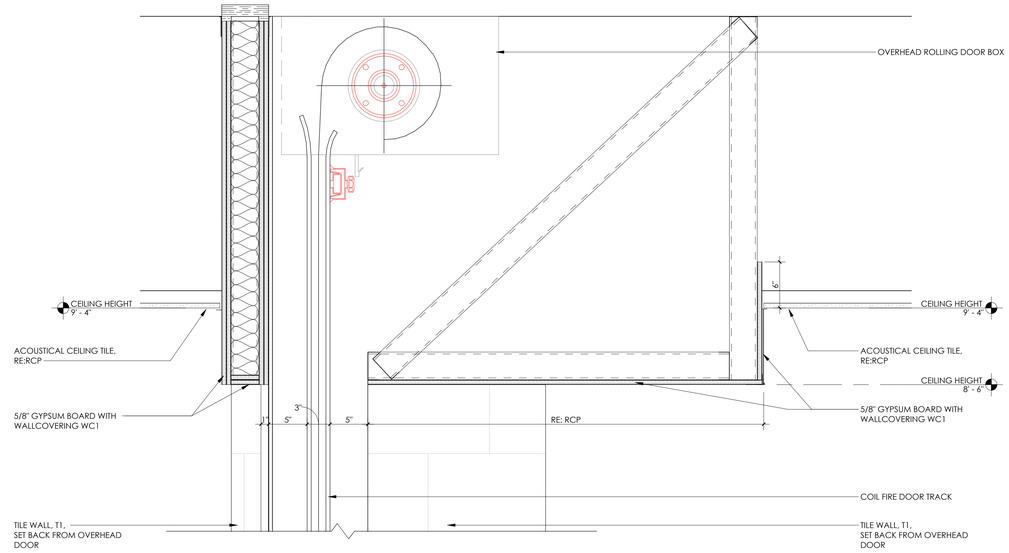

G SOFFIT DETAIL AT SERVING LINE ENTRANCE
SCALE 1 1/2" = 1'-0"

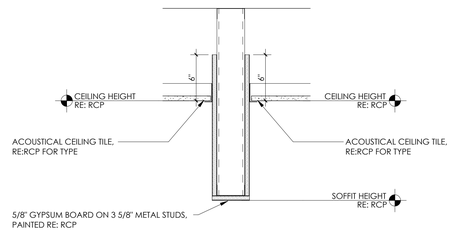

F SOFFIT HEADER DETAIL
SCALE 1 1/2" = 1'-0"

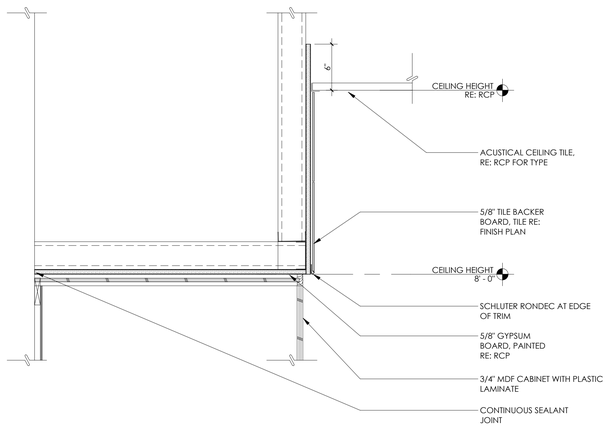

E SOFFIT DETAIL AT MILLWORK
SCALE 1 1/2" = 1'-0"

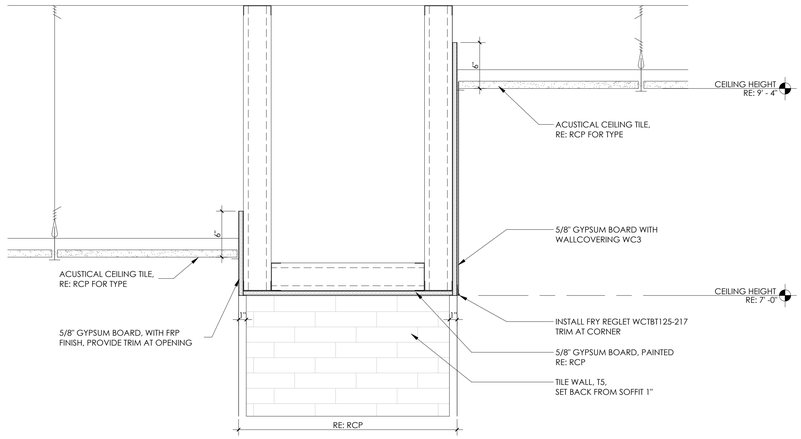

D SOFFIT DETAIL AT SERVING WEST
SCALE 1 1/2" = 1'-0"

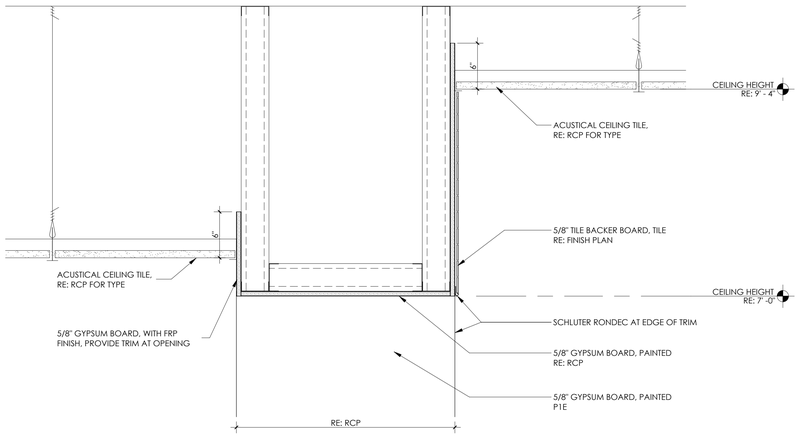

C SOFFIT DETAIL AT SERVING
SCALE 1 1/2" = 1'-0"

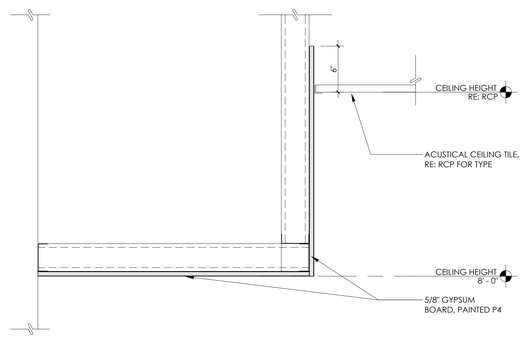

B SOFFIT DETAIL AT CAFETERIA SEATING
SCALE 1 1/2" = 1'-0"

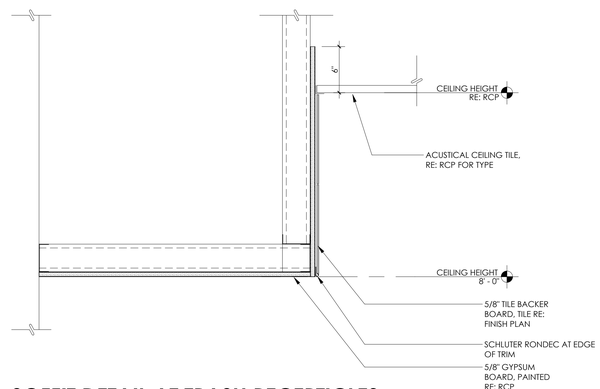

A SOFFIT DETAIL AT TRASH RECEPTICLES
SCALE 1 1/2" = 1'-0"

C:\Users\abigail.webber\Documents\Revit
2024\[illegible]_Cafeteria
Remo (Arch)_abigail.webber3FU3Y.rvt

KKT
ARCHITECTURE \ INTERIORS \ ENGINEERING

KKT ARCHITECTS, INC.
2200 SOUTH UTICA PLACE, SUITE 200
TULSA, OKLAHOMA 74114
[P] 918 . 744 . 4270 \ [F] 918 . 744 . 7849
WWW.KKTARCHITECTS.COM
CERTIFICATE OF AUTHORIZATION

EAST CENTRAL HIGH SCHOOL CAFETERIA REMODEL

TULSA PUBLIC SCHOOLS

12150 E 11TH ST,
TULSA, OK
74128

STATE OF OKLAHOMA
SARAH J. GOULD
No. 6367
TULSA OKLA
LICENSED ARCHITECT
10/18/24

REV. DATE	#	DESCRIPTION
10-18-2024	·	CONST. DOCUMENTS

RCP SOFFIT DETAILS

A510

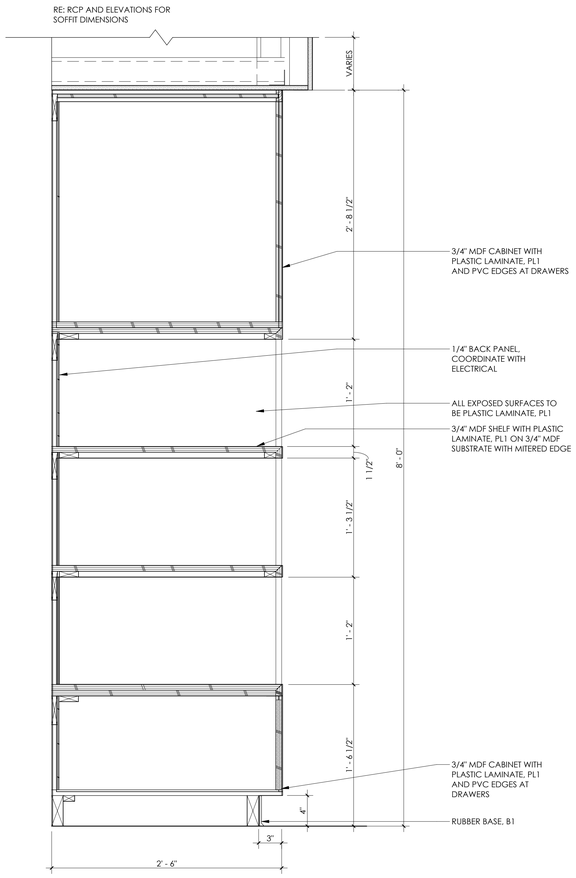

H MICROWAVE SECTION W DRAWER

SCALE 1 1/2" = 1'-0"

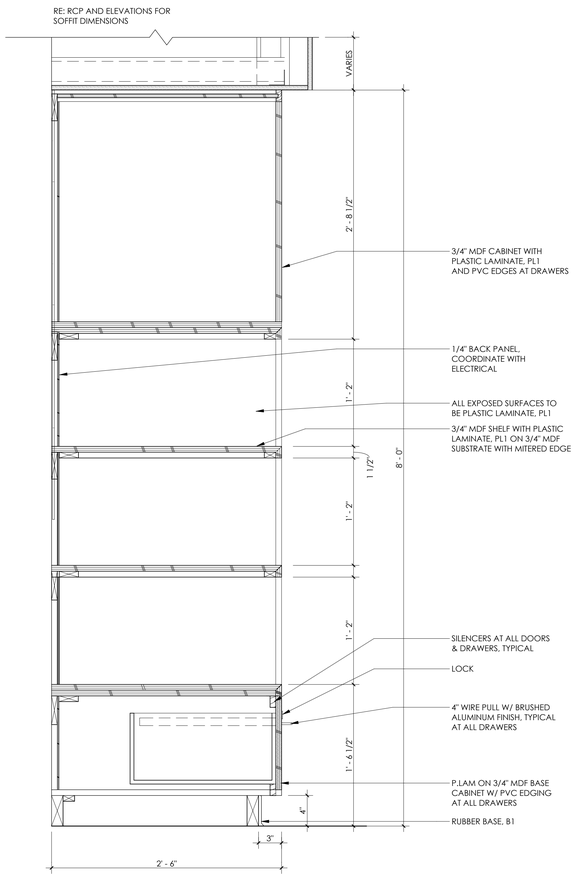

G MICROWAVE SECTION W/DRAWER

SCALE 1 1/2" = 1'-0"

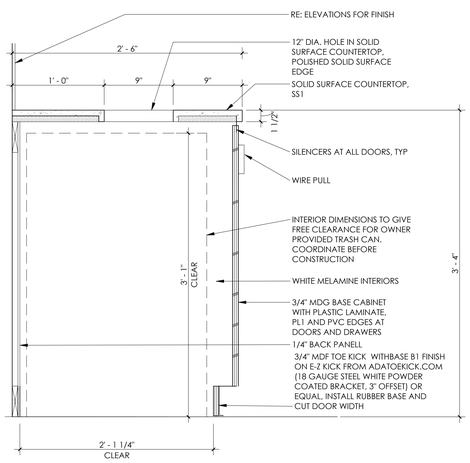

D TRASH RECEPTACLE

SCALE 1 1/2" = 1'-0"

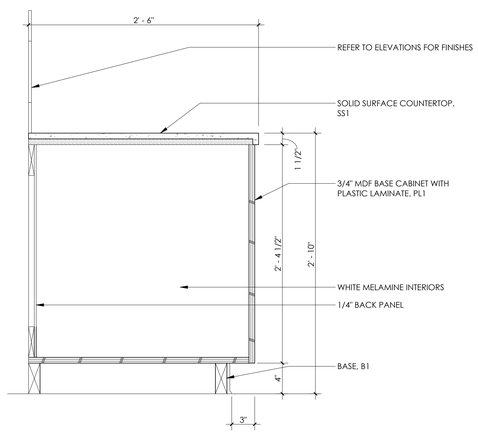

C BASE CABINET

SCALE 1 1/2" = 1'-0"

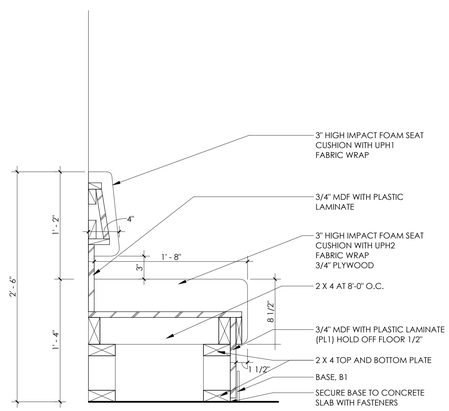

B ENLARGED SECTION DETAIL - SEATING

SCALE 1 1/2" = 1'-0"

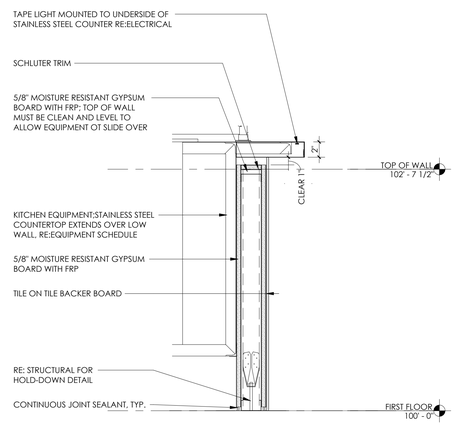

A COUNTER SECTION CUT

SCALE 1 1/2" = 1'-0"

KKT
ARCHITECTURE \ INTERIORS \ ENGINEERING

KKT ARCHITECTS, INC.
2200 SOUTH UTICA PLACE, SUITE 200
TULSA, OKLAHOMA 74114
[P] 918.744.4270 \ [F] 918.744.7849
WWW.KKTARCHITECTS.COM
CERTIFICATE OF AUTHORIZATION

EAST CENTRAL HIGH SCHOOL CAFETERIA REMODEL

TULSA PUBLIC SCHOOLS

12150 E 11TH ST,
TULSA, OK
74128

STATE OF OKLAHOMA
SARAH J. GOULD
No. 6367
LICENSED ARCHITECT
10/18/24

REV. DATE	#	DESCRIPTION
10-18-2024		CONST. DOCUMENTS

MILLWORK DETAILS

A513

PARTITION TYPE NOTES

1. SMOKE AND FIRE RATED PARTITIONS - SUBMITTAL REQUIREMENTS:
   - A. SUBMIT UL LISTED ASSEMBLY DETAILS FOR EACH WALL ASSEMBLY INCLUDING HEAD-OF-WALL JOINT, BOTTOM-OF-WALL JOINT, AND PENETRATIONS THROUGH RATED ASSEMBLY.
   - B. SUBMITTAL TO INCLUDE PRODUCT DATA AND ACCESSORIES REQUIRED FOR EACH UL LISTED ASSEMBLY DETAIL.
   - C. REFER TO FIRESTOP SPECIFICATIONS FOR A COMPLETE LIST OF REQUIREMENTS.
2. DRYWALL CONTROL JOINTS SHALL BE INSTALLED PER GA-216 AND AS SHOWN ON DRAWINGS.
3. INSTALL CORNER BEADS AT OUTSIDE CORNERS OF GYPSUM BOARD PARTITIONS AND INSTALL "J" BEADS AT JOINTS WHERE GYPSUM BOARD ABUTS A DIFFERENT MATERIAL.
4. TILE BACKERBOARD SHALL BE USED AT WALLS TO RECEIVE TILE. RE: FINISH PLANS AND INTERIOR ELEVATIONS FOR TILE LOCATIONS.
5. MOISTURE RESISTANT GYPSUM BOARD SHALL BE USED AT THE FOLLOWING NON-TILED LOCATIONS.
   - A. WET WALLS (WALLS WITH PLUMBING PENETRATIONS)
   - B. JANITOR CLOSETS
   - C. LOCATIONS TO RECEIVE FRP
6. FIREBLOCKING REQUIRED IN WALL AT SAME HEIGHT OF CEILING AT WALL WHERE GYPSUM BOARD DOESN'T GO TO DECK.

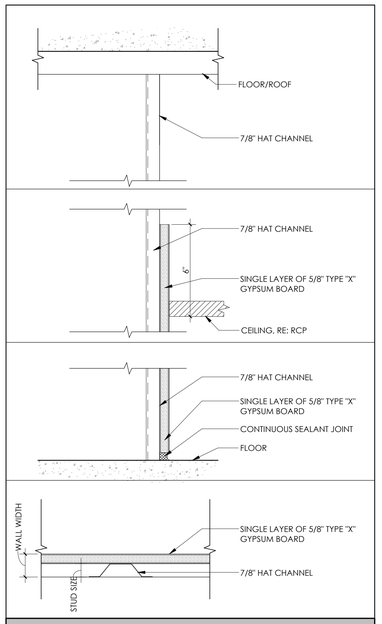

PARTITION TYPE "R"

MARK	WALL WIDTH	STUD SIZE	STUD SPACING	STUD FULL HEIGHT	FIRE PROTECTION FIRE RATING	FIRE PROTECTION UL NO	FIRE PROTECTION DESIGN NO	SOUND ATTENUATION BATT INSUL	STC
R	1 1/2"	7/8"	16" O.C.		NON-RATED			No	

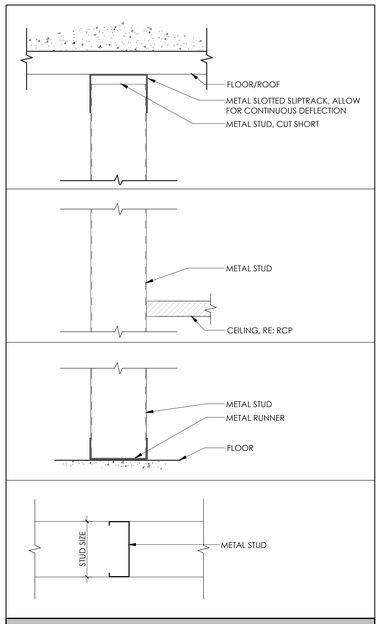

PARTITION TYPE "Q"

MARK	WALL WIDTH	STUD SIZE	STUD SPACING	STUD FULL HEIGHT	FIRE PROTECTION FIRE RATING	FIRE PROTECTION UL NO	FIRE PROTECTION DESIGN NO	SOUND ATTENUATION BATT INSUL	STC
Q1	3 5/8"	3 5/8"	16" O.C.		NON-RATED			No	

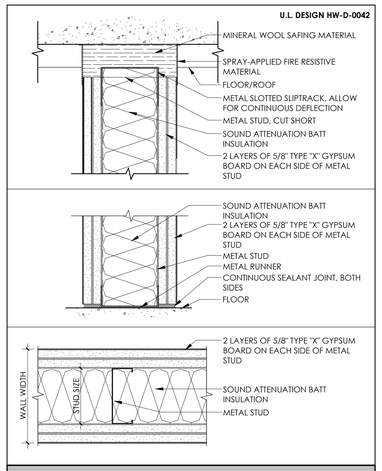

PARTITION TYPE "H"

MARK	WALL WIDTH	STUD SIZE	STUD SPACING	STUD FULL HEIGHT	FIRE PROTECTION FIRE RATING	FIRE PROTECTION UL NO	FIRE PROTECTION DESIGN NO	SOUND ATTENUATION BATT INSUL	STC
H2	6 1/8"	3 5/8"	16" O.C.	Yes	2 Hour			Yes	

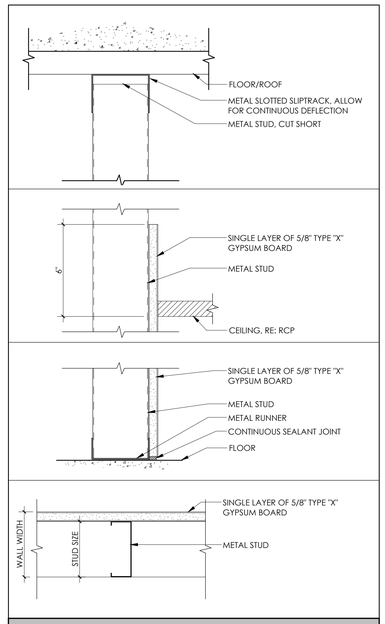

PARTITION TYPE "D"

MARK	WALL WIDTH	STUD SIZE	STUD SPACING	STUD FULL HEIGHT	FIRE PROTECTION FIRE RATING	FIRE PROTECTION UL NO	FIRE PROTECTION DESIGN NO	SOUND ATTENUATION BATT INSUL	STC
D3	<varies>	3 5/8"	16" O.C.		NON-RATED			No	

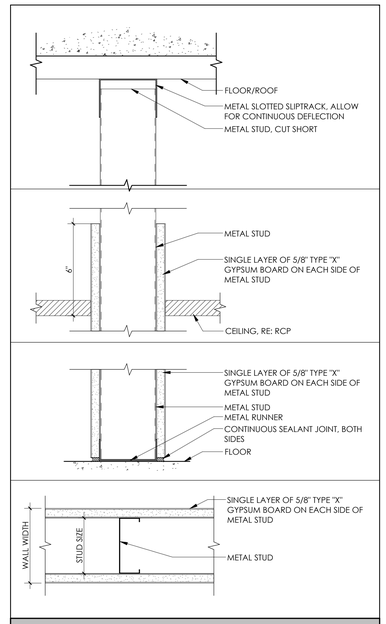

PARTITION TYPE "A"

MARK	WALL WIDTH	STUD SIZE	STUD SPACING	STUD FULL HEIGHT	FIRE PROTECTION FIRE RATING	FIRE PROTECTION UL NO	FIRE PROTECTION DESIGN NO	SOUND ATTENUATION BATT INSUL	STC
A3	4 7/8"	3 5/8"	16" O.C.	Yes	NON-RATED			No	
A6	7 1/4"	6"	16" O.C.	Yes	NON-RATED			No	

KKT
ARCHITECTURE \ INTERIORS \ ENGINEERING

KKT ARCHITECTS, INC.
2200 SOUTH UTICA PLACE, SUITE 200
TULSA, OKLAHOMA 74114
[P] 918.744.4270 \ [F] 918.744.7849
WWW.KKTARCHITECTS.COM
CERTIFICATE OF AUTHORIZATION

EAST CENTRAL HIGH SCHOOL CAFETERIA REMODEL

TULSA PUBLIC SCHOOLS

12150 E 11TH ST,
TULSA, OK
74128

STATE OF OKLAHOMA
SARAH J. GOULD
No. 6367
LICENSED PROFESSIONAL ARCHITECT
10/18/24

REV. DATE	#	DESCRIPTION
10-18-2024		CONST. DOCUMENTS

PARTITION TYPES

A601

C:\Users\sarahgoulden\Documents\Revit
2024 Tulsa Public Schools
Remo(Arch)_sarahgoulden@PUSTY.rvt

DOOR SCHEDULE

DOOR #	ASSEMBLY RATING	DOOR SIZE	DOOR TYPE	DOOR MATERIAL	DOOR FINISH	FRAME TYPE	FRAME MATERIAL	FRAME FINISH	DETAIL HEAD	DETAIL JAMB	REMARKS
103		3' - 0" X 7' - 0"	F	WD	FACTORY	1	HM	PAINT	B/A602	A/A602	
106A		3' - 0" X 7' - 0"	F	WD	FACTORY	1	HM	PAINT	B/A602	A/A602	
106B		3' - 6" X 7' - 0"	F	HM	PAINT	1	HM	PAINT	B/A602	A/A602	
109		3' - 0" X 7' - 0"	F	HM	PAINT	1	HM	PAINT	B/A602	A/A602	
110A	90 MIN	8' - 0" X 11' - 0"	OH	STEEL	FACTORY	-	STEEL	-	-	-	
110B	90 MIN	11' - 0" X 11' - 0"	OH	STEEL	FACTORY	-	STEEL	-	-	-	
110C	90 MIN	11' - 0" X 11' - 0"	OH	STEEL	FACTORY	-	STEEL	-	-	-	
112	90 MIN	PR 3' - 0" X 7' - 0"	F	WD	FACTORY	1	HM	PAINT			
114		3' - 0" X 7' - 0"	F	HM	PAINT	1	HM	PAINT	B/A602	A/A602	
116		3' - 0" X 7' - 0"	F	WD	FACTORY	1	HM	PAINT	B/A602	A/A602	
121		3' - 0" X 7' - 0"	F	WD	FACTORY	1	HM	PAINT	B/A602	A/A602	
123		3' - 0" X 7' - 0"	F	WD	FACTORY	1	HM	PAINT	B/A602	A/A602	

DOOR TYPES

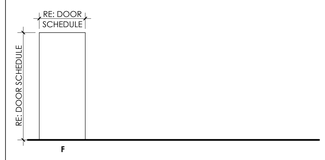

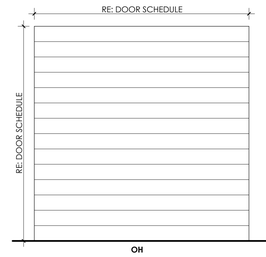

HM FRAME TYPES

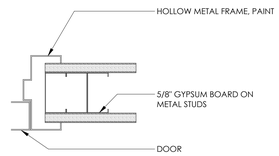

A ENLARGED JAM DETAIL
SCALE 3" = 1'-0"

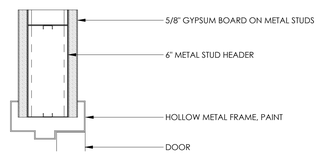

B ENLARGED HEAD DETAIL
SCALE 3" = 1'-0"

KKT
ARCHITECTURE \ INTERIORS \ ENGINEERING

KKT ARCHITECTS, INC.
2200 SOUTH UTICA PLACE, SUITE 200
TULSA, OKLAHOMA 74114
[P] 918.744.4270 \ [F] 918.744.7849
WWW.KKTARCHITECTS.COM
CERTIFICATE OF AUTHORIZATION

EAST CENTRAL HIGH SCHOOL CAFETERIA REMODEL

TULSA PUBLIC SCHOOLS

12150 E 11TH ST,
TULSA, OK
74128

STATE OF OKLAHOMA
SARAH J. GOULD
No. 6357
LICENSED PROFESSIONAL ARCHITECT
10/18/24

REV. DATE	#	DESCRIPTION
10-18-2024		CONST. DOCUMENTS

DOOR & WINDOW SCHEDULES AND TYPES

A602

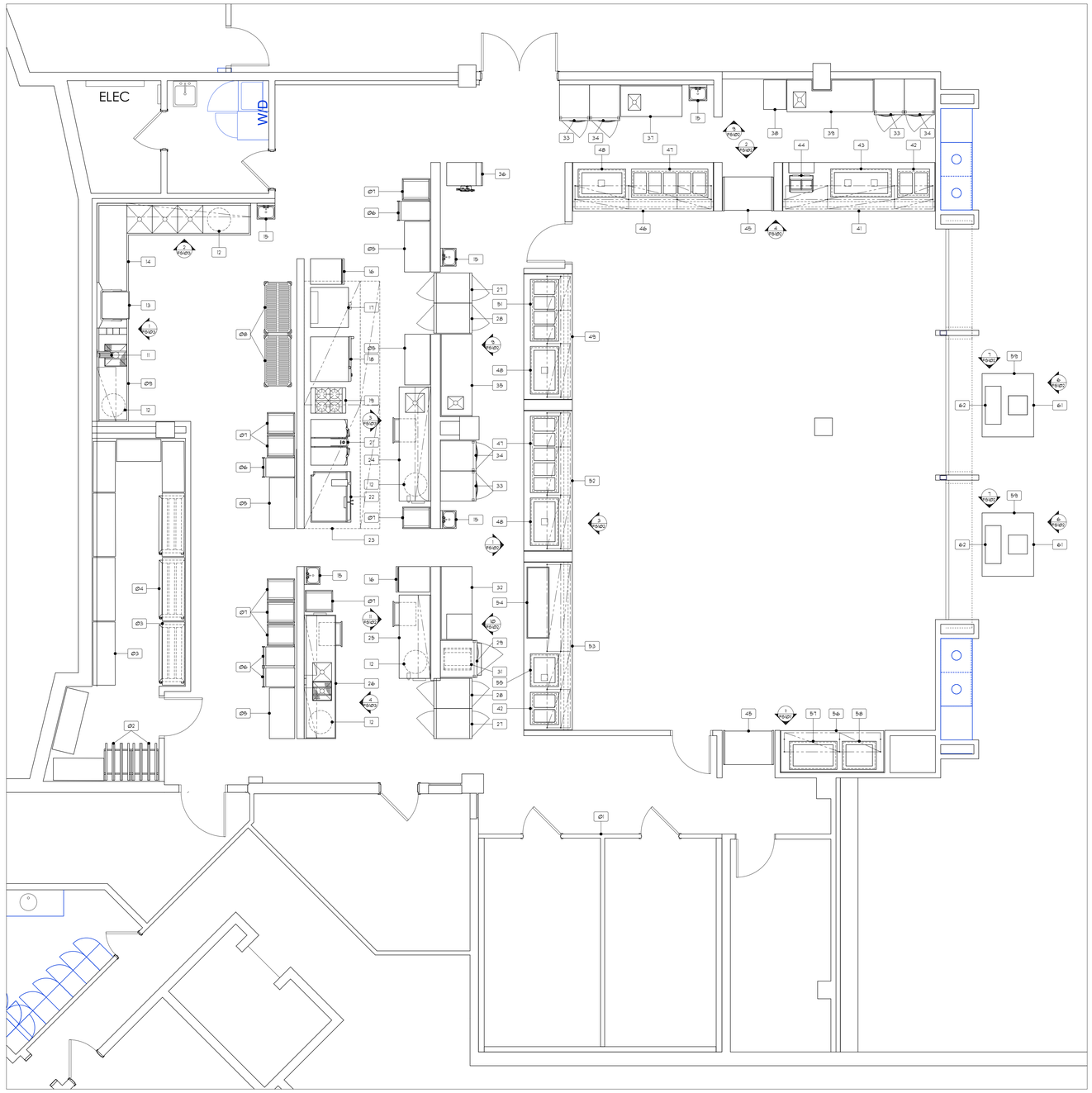

1 FOODSERVICE EQUIPMENT ARRANGEMENT PLAN

1/4" = 1'-0"

FOODSERVICE EQUIPMENT SCHEDULE

NO.	DESCRIPTION
01	WALK-IN COOLER & FREEZER - EXISTING
02	CAN RACKS - EXISTING
03	STORAGE SHELVING - EXISTING
04	MOBILE DUNNAGE RACKS - EXISTING
05	MOBILE PAN RACKS
06	MOBILE UTILITY CARTS
07	MOBILE COOLING RACKS
08	MOBILE DRYING RACKS
09	SOILED DISHTABLE
10	NUMBER NOT USED
11	WALL MOUNTED HOSE REEL
12	TRASH CAN
13	VENTLESS DISHWASHER WITH BOOSTER
14	CLEAN DISHTABLE & POT SINK
15	HAND SINK
16	MOBILE PROOF-HOT CABINET
17	MOBILE CONVECTION OVEN - EXISTING
18	MOBILE COMBI-OVEN
19	MOBILE RANGE
20	NUMBER NOT USED
21	IVARIO PRO 2-S
22	MOBILE BAKTER CONVECTION OVEN
23	VENTILATOR & FIRE SUPPRESSION SYSTEM - EXISTING
24	COOK'S TABLE
25	WORK TABLE
26	PREP TABLE
27	MOBILE PASS-THRU HOT CABINET
28	MOBILE PASS-THRU REFRIGERATOR
29	ROLL-IN HOT CABINET
30	NUMBER NOT USED
31	ROLL-IN RACK - ONLY ONE (1) ON THE DRAWING
32	BACK-UP COUNTER
33	MOBILE REFRIGERATOR
34	MOBILE HOT CABINET
35	BACK-UP COUNTER
36	ICE MAKER
37	BACKUP COUNTER
38	MOBILE BREAD CABINET
39	BACK-UP COUNTER
40	NUMBER NOT USED
41	MOBILE DELI SERVING COUNTER
42	DROP-IN HOT WELLS
43	DROP-IN COLD WELLS
44	PANINNI GRILL
45	GRAB-N-GO REFRIGERATOR
46	MOBILE ADVENTURE SERVING COUNTER
47	DROP-IN HOT WELLS
48	DROP-IN COLD WELLS
49	MOBILE MEXICAN SERVING COUNTER
50	NUMBER NOT USED
51	DROP-IN HOT WELLS
52	MOBILE GRILL SERVING COUNTER
53	MOBILE PIZZA SERVING COUNTER
54	DROP-IN PIZZA WARMER
55	DROP-IN COLD WELLS
56	MOBILE CONDIMENT BAR
57	DROP-IN GOLD WELLS
58	DROP-IN COLD WELLS
59	MOBILE CASHIER COUNTER
60	NUMBER NOT USED
61	POS BY THE OWNER
62	CHIP RACK BY THE VENDOR

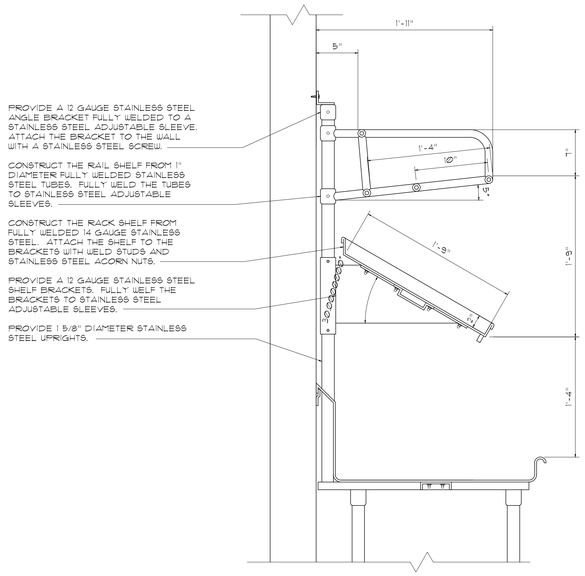

2 SECTION - SOILED DISHTABLE RACK & RAIL SHELVES

NO SCALE

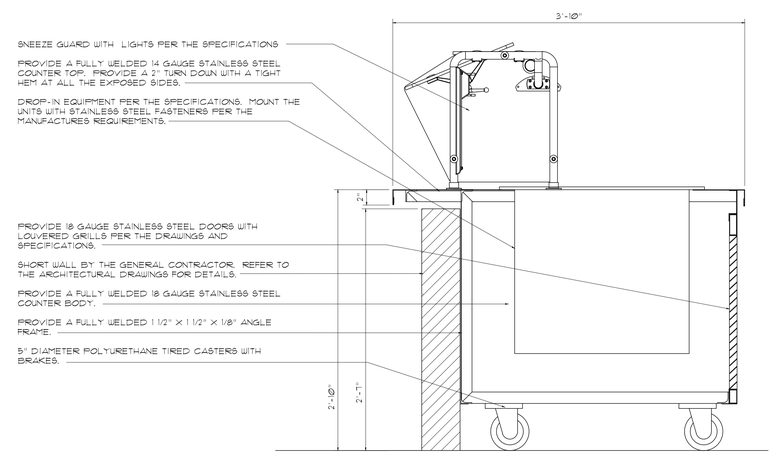

3 SECTION - TYPICAL SERVING COUNTER

NO SCALE

KKT
ARCHITECTURE \ INTERIORS \ ENGINEERING

KKT ARCHITECTS, INC.
2200 SOUTH UTICA PLACE, SUITE 200
TULSA, OKLAHOMA 74114
[P] 918.744.4270 \ [F] 918.744.7849
WWW.KKTARCHITECTS.COM
C OF A #534 EXPIRES 6/30/25

East Central HIGH SCHOOL CAFETERIA REMODEL

TULSA PUBLIC SCHOOLS

121150 E. 11th Street
TULSA OK, 74128

10.18.2024 CD

PROJECT NO. A240041

FOODSERVICE EQUIP. ARRANGEMENT PLAN

FS101

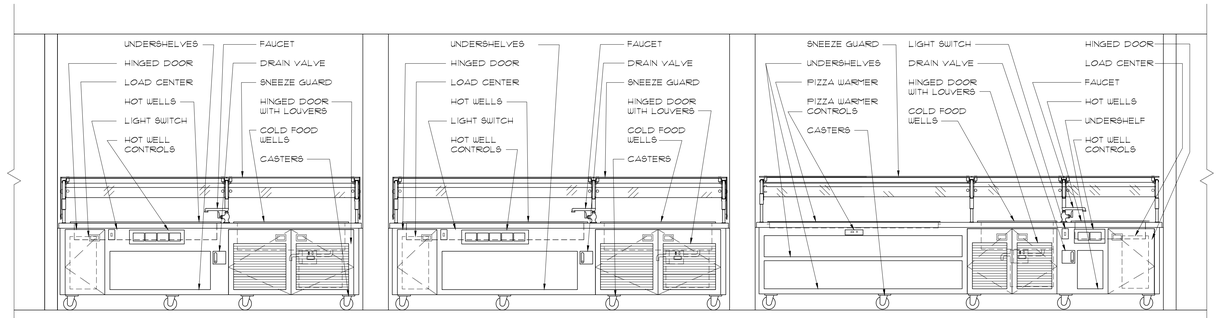

1 ELEVATION
NO SCALE

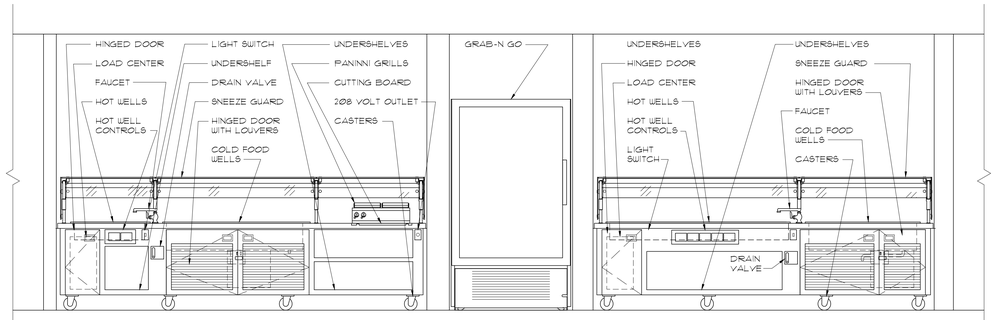

2 ELEVATION
NO SCALE

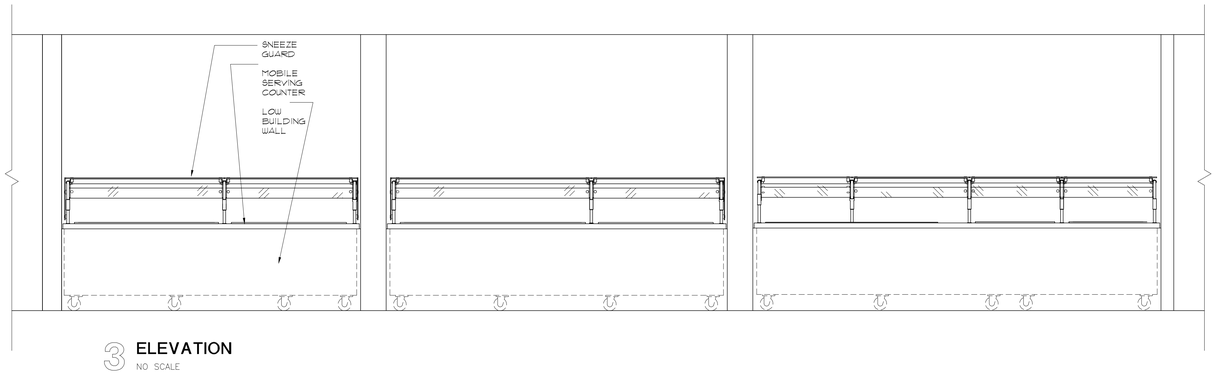

3 ELEVATION
NO SCALE

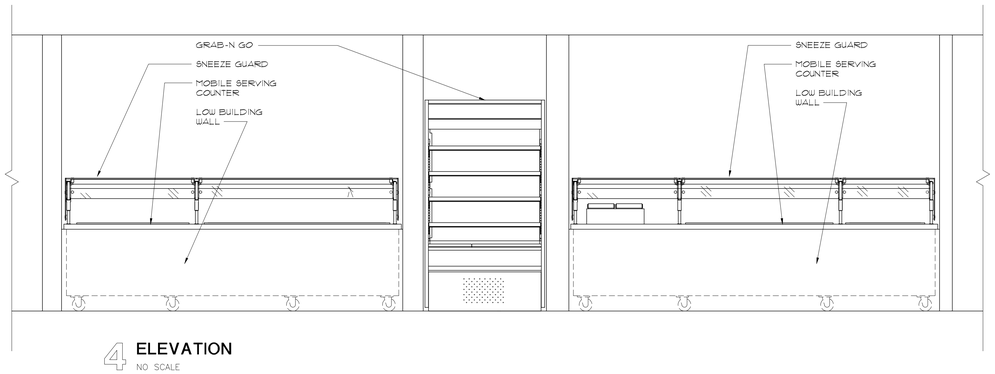

4 ELEVATION
NO SCALE

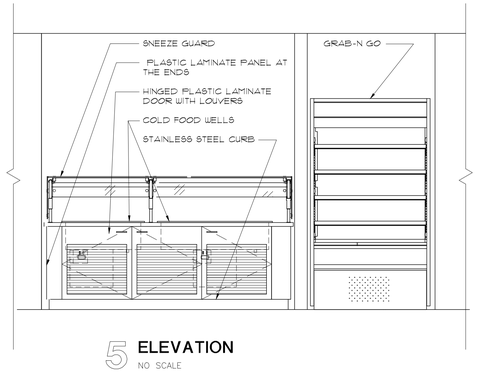

5 ELEVATION
NO SCALE

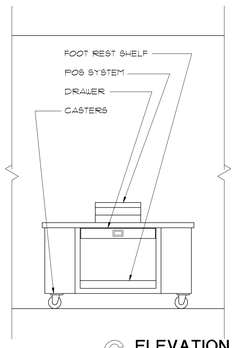

6 ELEVATION
NO SCALE

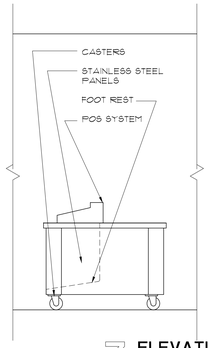

7 ELEVATION
NO SCALE

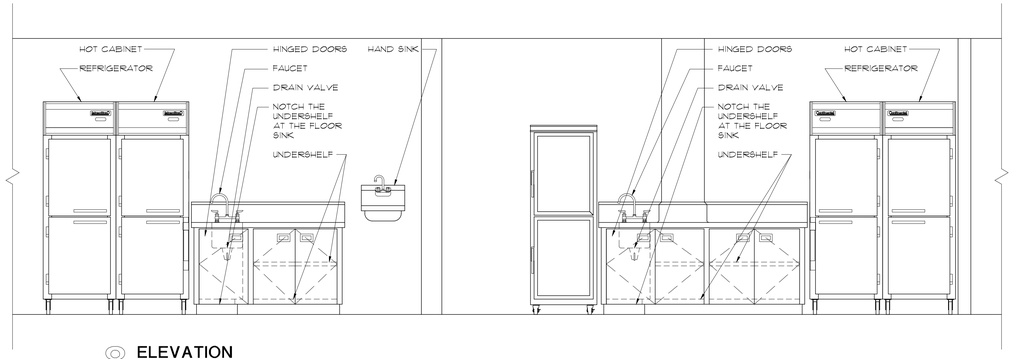

8 ELEVATION
NO SCALE

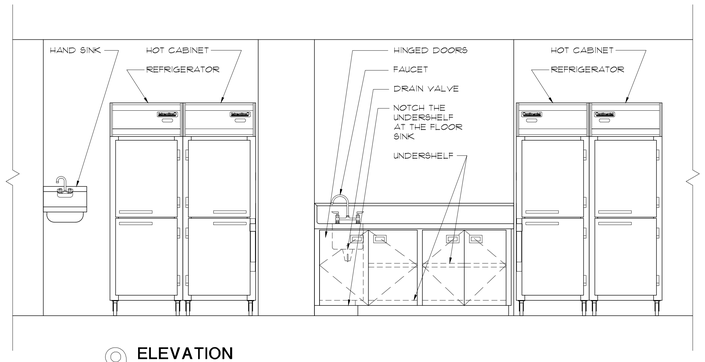

9 ELEVATION
NO SCALE

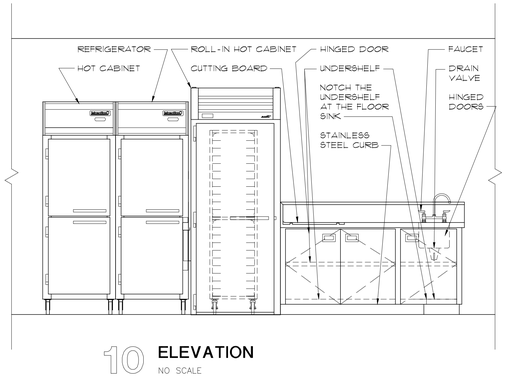

10 ELEVATION
NO SCALE

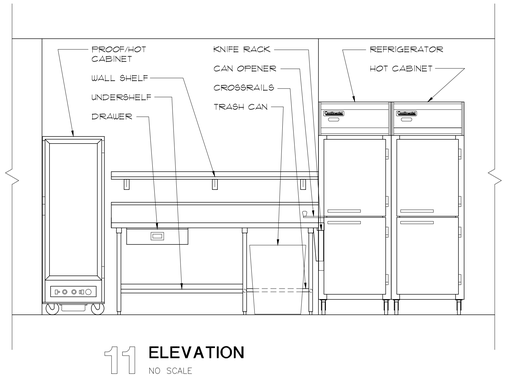

11 ELEVATION
NO SCALE

KKT
ARCHITECTURE \ INTERIORS \ ENGINEERING

KKT ARCHITECTS, INC.
2200 SOUTH UTICA PLACE, SUITE 200
TULSA, OKLAHOMA 74114
[P] 918.744.4270 \ [F] 918.744.7849
WWW.KKTARCHITECTS.COM
C OF A #534 EXPIRES 6/30/25

East Central HIGH SCHOOL CAFETERIA REMODEL

TULSA PUBLIC SCHOOLS

121150 E. 11th Street
TULSA OK, 74128

10.18.2024 CD

PROJECT NO. A240041

FOODSERVICE EQUIP. ELEVATIONS

FS102

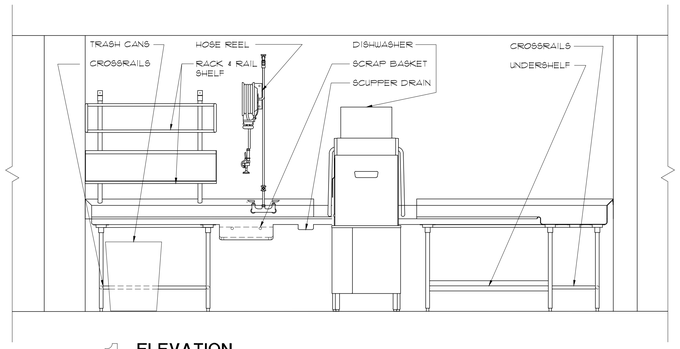

1 ELEVATION
NO SCALE

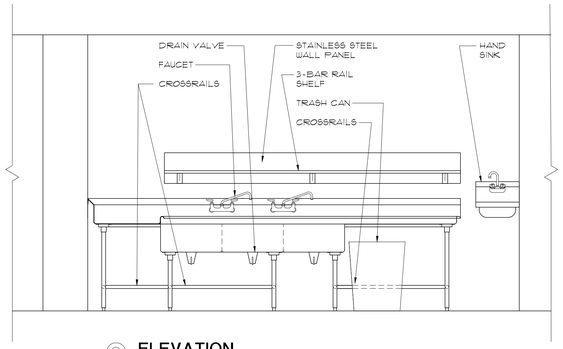

2 ELEVATION
NO SCALE

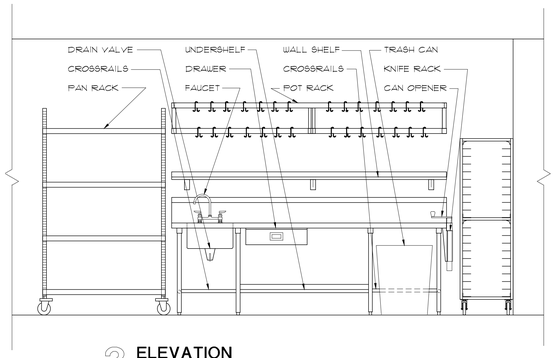

3 ELEVATION
NO SCALE

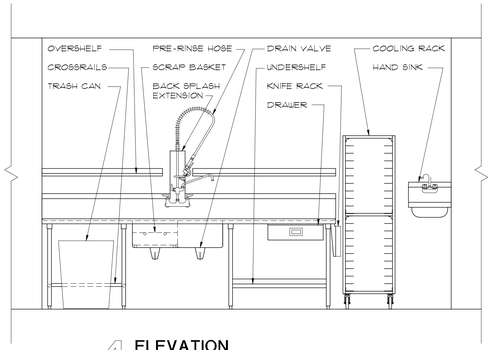

4 ELEVATION
NO SCALE

KKT
ARCHITECTURE \ INTERIORS \ ENGINEERING

KKT ARCHITECTS, INC.
2200 SOUTH UTICA PLACE, SUITE 200
TULSA, OKLAHOMA 74114
[P] 918.744.4270 \ [F] 918.744.7849
WWW.KKTARCHITECTS.COM
C OF A #534 EXPIRES 6/30/25

East Central HIGH SCHOOL CAFETERIA REMODEL

TULSA PUBLIC SCHOOLS

121150 E. 11th Street
TULSA OK, 74128

10.18.2024 CD

PROJECT NO. A240041

FOODSERVICE EQUIP. ELEVATIONS

FS103

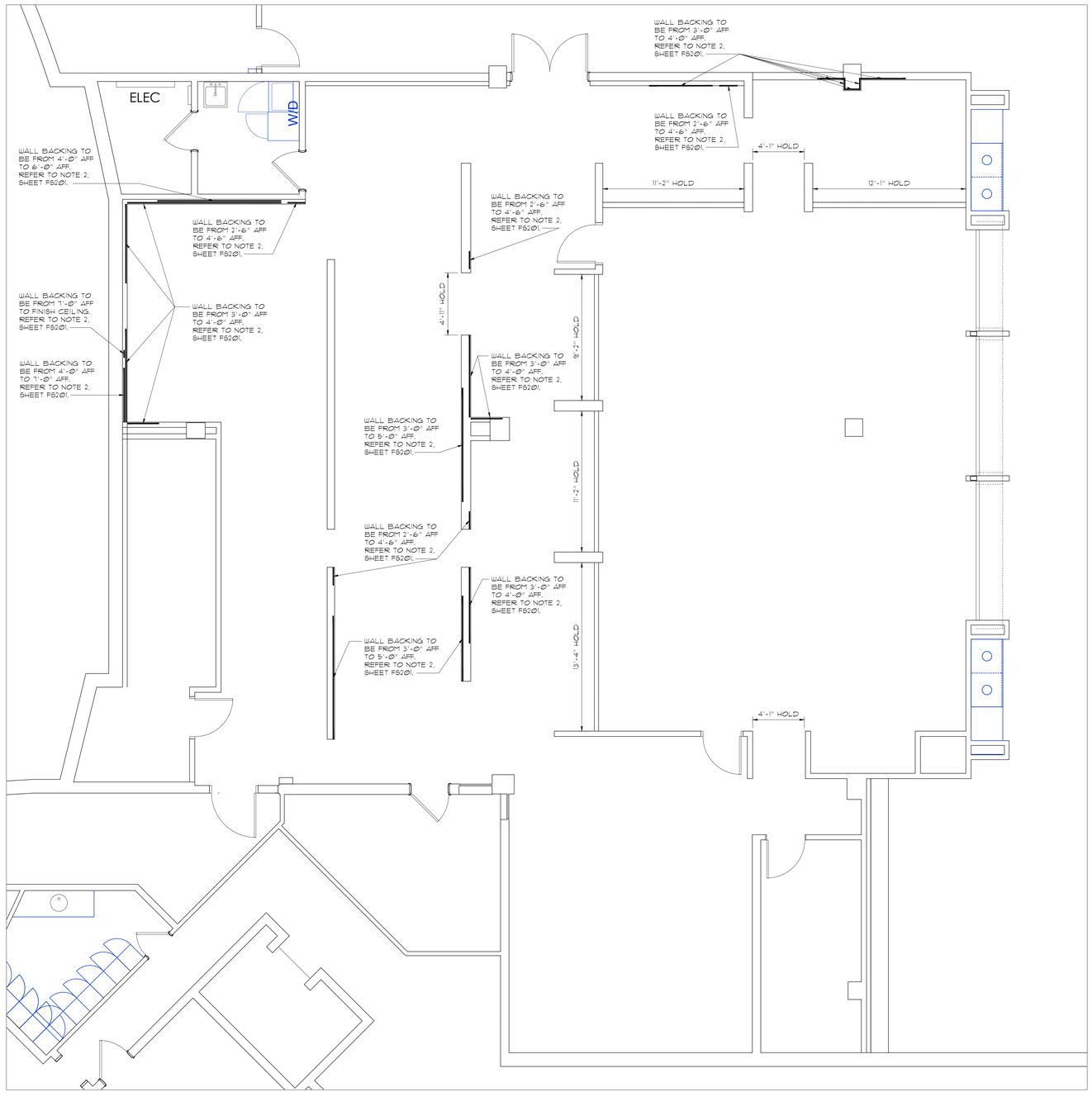

1 FOODSERVICE EQUIPMENT SPECIAL CONDITIONS PLAN

1/4" = 1'-0"

GENERAL NOTES

1. THE FOODSERVICE CONTRACTOR MUST COORDINATE AND VERIFY ALL DIMENSIONS WITH THE FOODSERVICE EQUIPMENT SHOP DRAWINGS AND THE MANUFACTURES DATA. DIMENSIONS ARE SHOWN FOR DESIGN AND BIDDING PURPOSES ONLY.
2. THE GENERAL CONTRACTOR TO PROVIDE AND INSTALL 3/4" THICK WOOD BACKING IN THE WALL FOR THE MOUNTING OF THE EQUIPMENT FURNISHED BY THE FOODSERVICE CONTRACTOR. THE FOODSERVICE CONTRACTOR TO FURNISH EXACT DIMENSIONED LOCATIONS.

KKT
ARCHITECTURE \ INTERIORS \ ENGINEERING

KKT ARCHITECTS, INC.
2200 SOUTH UTICA PLACE, SUITE 200
TULSA, OKLAHOMA 74114
[P] 918.744.4270 \ [F] 918.744.7849
WWW.KKTARCHITECTS.COM
C OF A #534 EXPIRES 6/30/25

East Central HIGH SCHOOL CAFETERIA REMODEL

TULSA PUBLIC SCHOOLS

121150 E. 11th Street
TULSA OK, 74128

10.18.2024 CD

PROJECT NO. A240041

FOODSERVICE EQUIP. SPECIAL COND. PLAN

FS201

FILE: P:\10 Drawings\Plans\AutoCAD\12 2024\Projects\2024\2024111 1\FS201.dwg
PRINTED BY: Jordan Fisher

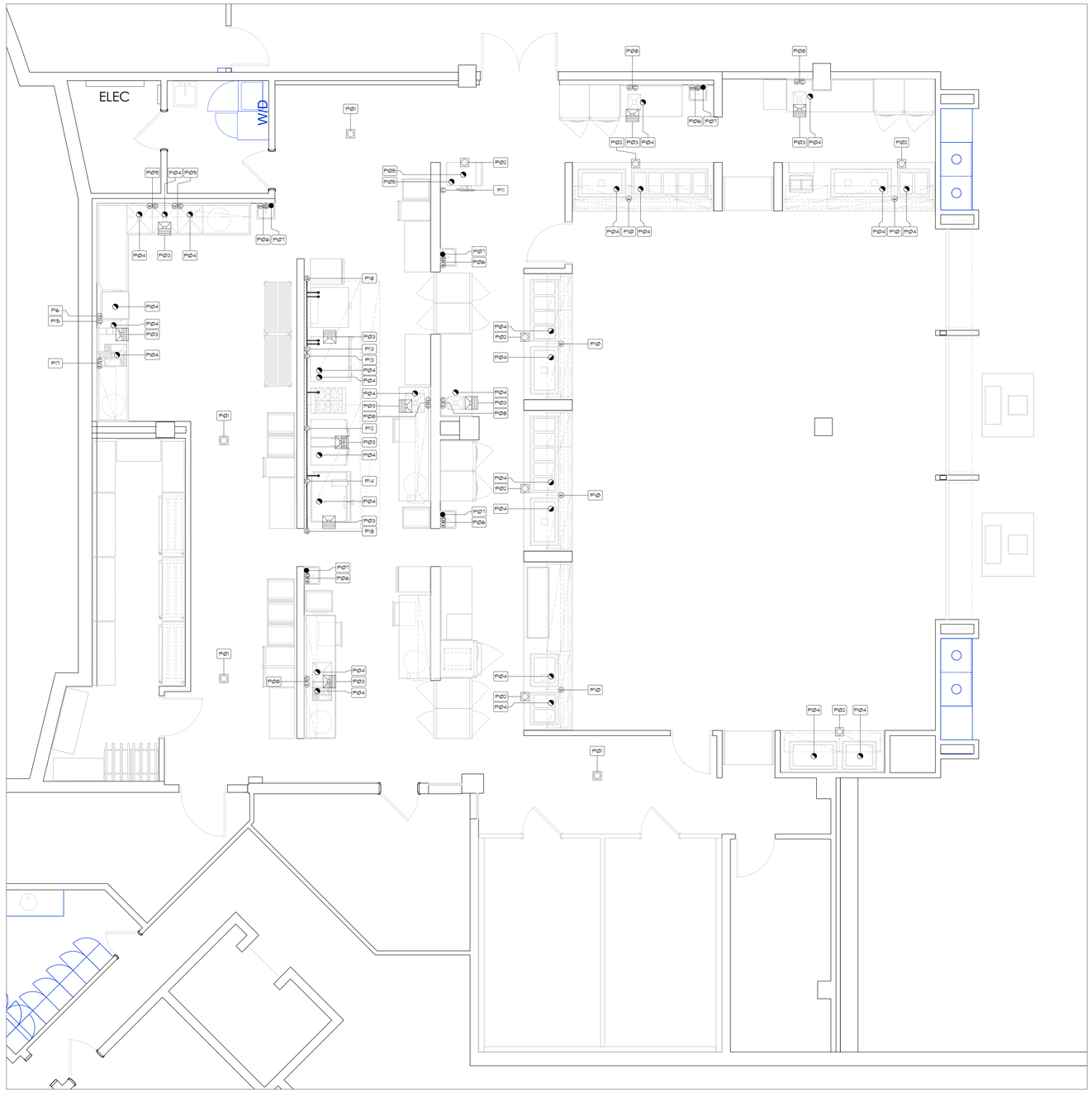

1 FOODSERVICE EQUIPMENT PLUMBING CONNECTIONS PLAN

1/4" = 1'-0"

PLUMBING CONNECTIONS SCHEDULE

NO.	ITEM NO.	SIZE	DESCRIPTION	LOCATION	A.F.F.	SERVICE TO		REMARKS
P01		---	FD	FLOOR	0"	---		AREA DRAIN
P02	36, 41, 46, 49, 52, 53 & 56	---	FD	FLOOR	0"	---		THE PLUMBING CONTRACTOR IS TO EXTEND THE EQUIPMENT DRAIN TO THE FD.
P03	09, 13, 14, 18, 21, 22, 24, 26, 35, 37 & 39	12" SQ.	FL. SINK	FLOOR	0"	---		THE PLUMBING CONTRACTOR IS TO EXTEND THE EQUIPMENT DRAIN TO THE FL. SINK. FURNISH WITH A 1/2 GRATE
P04	09, 13, 14, 18, 21, 22, 24, 26, 35, 37, 39, 46, 49, 52 53 & 56	---	IW	EQUIP.	---	---		THE PLUMBING CONTRACTOR IS TO FURNISH AND INSTALL THE LINE. DO NOT MANIFOLD MULTIPLY SINKS TOGETHER
P05	36	---	IW	EQUIP.	---	---		THE PLUMBING CONTRACTOR IS TO FURNISH AND INSTALL THE LINE. DO NOT MANIFOLD THIS LINE WITH ANY OTHER LINE.
P06	15	1/2"	H & CW	WALL	24"	FAUCET		BTC
P07	15	2"	DR	WALL	18"	SINK		BTC
P08	24, 26, 35, 37 & 39	1/2"	H & CW	WALL	18"	FAUCET		BTC
P09	14	3/4"	H & CW	WALL	18"	FAUCET		BTC
P10	41, 46, 49, 52 & 53	1/2"	HW	WALL	18"	FILL FAUCET		BTC
P11	36	1/2"	CW	WALL	50"	ICE MAKER		BTC THRU THE WATER FILTER
P12	21	1/2"	CW	WALL	12"	IVARIO PRO		BTC
P13	18	3/4"	CW	WALL	12"	COMBI-OVEN		BTC THRU THE WATER FILTER
P14	22	1/2"	CW	WALL	12"	CONVECTION OVEN.		BTC
P15	13	1/2"	CW	WALL	12"	DISHWASHER & DRAIN WATER TEMPERING KIT		BTC
P16	13	3/4"	HW 140°F	WALL	12"	DISHWASHER		BTC (36 GPH)
P17	11	1/2"	H & CW	WALL	18	HOSE REEL		BTC
P18	17, 18 19 & 22	---	GAS	---	18"	CONV. OVEN	95M BTU/HR	BTC - THE PLUMBING CONTRACTOR TO RUN THE GAS LINES DOWN THRU THE VENTILATOR AND CONNECT TO THE EQUIPMENT. THE FOODSERVICE CONTRACTOR IS TO FURNISH THE FIRE SUPPRESSION SYSTEM MECHANICAL GAS VALVE TO THE PLUMBING CONTRACTOR FOR INSTALLATION INTO THE GAS LINE.
						COMBI-OVEN	106.5M BTU/HR	
						COMBI-OVEN	106.5M BTU/HR	
						CONV. OVEN	55M BTU/HR	
						CONV. OVEN	55M BTU/HR	
						RANGE	140M BTU/HR	
						TOTAL BTU/HR	558,000	

PLUMBING/MECHANICAL NOTES

DO NOT ROUGH-IN FROM THIS DRAWING. REFER TO CONTRACTOR'S DIMENSIONED DRAWINGS.

1. DIMENSIONS INDICATED ARE TO BE VERIFIED BY THE FOODSERVICE CONTRACTOR AND ADJUSTED AS REQUIRED BY THE FOODSERVICE EQUIPMENT OR FIELD CONDITIONS.
2. VENTILATE REFRIGERATION MACHINERY ROOMS TO PROVIDE 95oF. MAXIUM AMBIENT TEMPERATURE.
3. EXHAUST DUCTS AND FANS CONNECTED TO EXHAUST HOODS SHALL NOT SERVE ANY OTHER AREA OR APPLIANCE.
4. DUCTS OF MULTIPLE EXHAUST HOODS WITH COMMON CONTROL PANEL MUST BE INTEGRATED FOR USE WITH A SINGLE EXHAUST FAN.

THE FOLLOWING WORK IS BY THE PLUMBING CONTRACTOR. REFER TO THE PLUMBING DRAWINGS AND/OR SPECIFICATIONS FOR ADDITIONAL INFORMATION:

5. FIELD INSTALLATION OF ACCESSORIES & FITTINGS PROVIDED LOOSE WITH THE FOODSERVICE EQUIPMENT.
6. SERVICE SINKS, LAVATORIES AND DRINKING FOUNTAINS.
7. GREASE-PROOF EXHAUST DUCTS FROM VENT CONNECTIONS OF THE EXHAUST HOODS.
8. FLUSHING-OUT OF ALL PIPING AND DRAINAGE SYSTEMS PRIOR TO CONNECTION TO FOODSERVICE EQUIPMENT.

PLUMBING SYMBOLS

	HW	HOT WATER
	CW	COLD WATER
	G	GAS SUPPLY
	IW	INDIRECT WASTE (EXTEND TO FD)
	FD	FLOOR DRAIN
	FS	FLOOR SINK - 1/2 GRATE
	AFF	ABOVE FINISHED FLOOR
	BTC	BRANCH TO CONNECTION
	DFA	DROP FROM ABOVE

NOTES

THE PLUMBING CONTRACTOR TO ROUGH-IN FROM THE FOODSERVICE CONTRACTORS ROUGH-IN DRAWINGS ONLY. THE PLUMBING CONTRACTOR WILL TAKE FULL RESPONSIBILITY FOR THE ROUGH-IN LOCATIONS IF THE FOODSERVICE AND/OR PLUMBING DRAWINGS ARE USED FOR THIS WORK.

KKT
ARCHITECTURE \ INTERIORS \ ENGINEERING

KKT ARCHITECTS, INC.
2200 SOUTH UTICA PLACE, SUITE 200
TULSA, OKLAHOMA 74114
[P] 918.744.4270 \ [F] 918.744.7849
WWW.KKTARCHITECTS.COM
C OF A #534 EXPIRES 6/30/25

East Central HIGH SCHOOL CAFETERIA REMODEL

TULSA PUBLIC SCHOOLS

121150 E. 11th Street
TULSA OK, 74128

10.18.2024 CD

PROJECT NO. A240041

FOODSERVICE EQUIP. PLUMBING CONN. PLAN

FS301

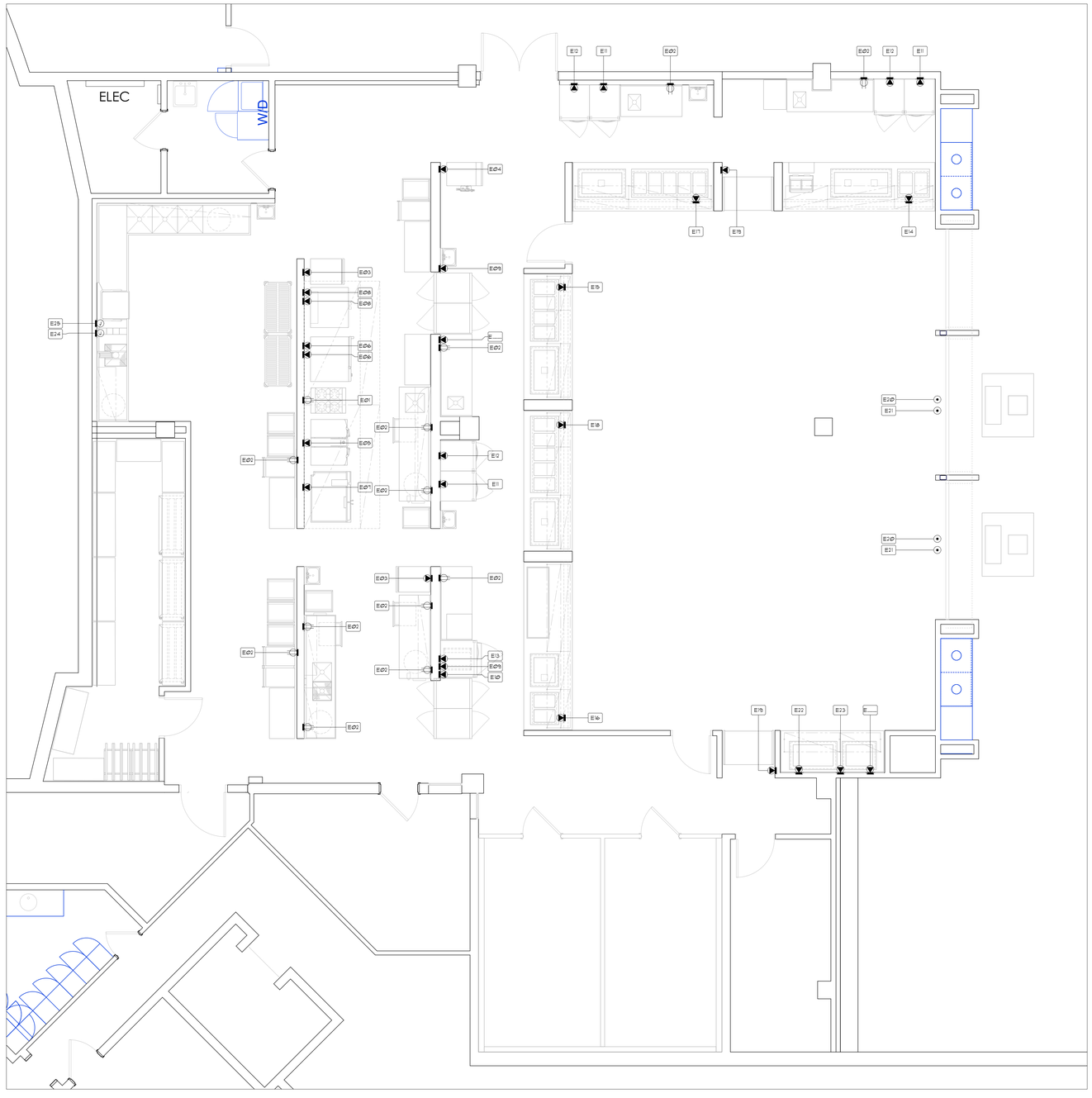

1 FOODSERVICE EQUIPMENT ELECTRICAL CONNECTIONS PLAN

1/4" = 1'-0"

ELECTRICAL CONNECTIONS SCHEDULE

NO.	ITEM NO.	CONN.	SERVICE TO	RATING	VOLTS	PH	LOCATION	AFF	REMARKS
E01	19	DR	CONVENIENCE	16.0 A	120	1	WALL	12"	RATING ASSUMES A 20.0 A OUTLET.
E02	24, 25, 26, 32, 35, 37 & 39	DR	CONVENIENCE	16.0 A	120	1	WALL	50"	RATING ASSUMES A 20.0 A OUTLET.
E03	16	SR	MOBILE PROOF/HOT CAB.	2.0 KW	120	1	WALL	50"	
E04	36	SR	ICE MAKER	11.3 A	120	1	WALL	50"	CORD & PLUG BY THE ELECTRICAL CONTRACTOR.
E05	21	SR	IVARIO PRO 2-S	23.0 KW	208	3	WALL	12"	CORD & PLUG BY THE ELECTRICAL CONTRACTOR.
E06	14	SR	COMBI-OVEN	9.00 W	208	1	WALL	12"	CORD & PLUG BY THE ELECTRICAL CONTRACTOR.
E07	22	SR	CONVECTION OVEN	15.0A	120	1	WALL	12"	
E08	17	SR	CONVECTION OVEN	1/2 HP	120	1	WALL	12"	
E09	27	SR	PASS-THRU HOT CABINET	1.5 KW	208	1	WALL	90"	CORD & PLUG BY THE ELECTRICAL CONTRACTOR.
E10	28	SR	PASS-THRU REFRIGERATOR	1/4 HP	120	1	WALL	90"	
E11	34	SR	HOT CABINET	1.5 KW	208	1	WALL	90"	CORD & PLUG BY THE ELECTRICAL CONTRACTOR.
E12	33	SR	REFRIGERATOR	1/4 HP	120	1	WALL	90"	SEE DETAIL 3, SHEET FS401.
E13	29	SR	ROLL-IN HOT CABINET	2.0 KW	208	1	WALL	90"	CORD & PLUG BY THE ELECTRICAL CONTRACTOR.
E14	41	SR	DELI SERVING COUNTER	31.0 A	208	3	WALL	12"	125.0 AMP LOAD CENTER IN THE EQUIPMENT BY THE FOODSERVICE CONTRACTOR. 4-WIRE. LOAD SHOWN IS ACTUAL LOAD PLUS 25%.
E15	49	SR	MEXICAN SERVING COUNTER	25.0 A	208	3	WALL	12"	125.0 AMP LOAD CENTER IN THE EQUIPMENT BY THE FOODSERVICE CONTRACTOR. 4-WIRE. LOAD SHOWN IS ACTUAL LOAD PLUS 25%.
E16	53	SR	PIZZA SERVING COUNTER	28.0 A	208	3	WALL	12"	125.0 AMP LOAD CENTER IN THE EQUIPMENT BY THE FOODSERVICE CONTRACTOR. 4-WIRE. LOAD SHOWN IS ACTUAL LOAD PLUS 25%.
E17	46	SR	ADVENTURE SERVING COUNTER	23.0 A	208	3	WALL	12"	125.0 AMP LOAD CENTER IN THE EQUIPMENT BY THE FOODSERVICE CONTRACTOR. 4-WIRE. LOAD SHOWN IS ACTUAL LOAD PLUS 25%.
E18	52	SR	GRILL SERVING COUNTER	23.0 A	208	3	WALL	12"	125.0 AMP LOAD CENTER IN THE EQUIPMENT BY THE FOODSERVICE CONTRACTOR. 4-WIRE. LOAD SHOWN IS ACTUAL LOAD PLUS 25%.
E19	45	SR	GRAB-N-GO REFRIGERATOR	1.75 KW	208	1	WALL	85"	
E20	61	FR	POS SYSTEM	12.0 A	120	1	FLOOR	0"	
E21	61	FR	POS SYSTEM	---	---	--	FLOOR	0"	PROVIDE AN EMPTY CONDUIT FOR DATA CABLE. VERIFY THE CONDUIT SIZE AND ENDING LOCATION WITH THE OWNER.
E22	57 & 58	SR	COLD FOOD WELLS	1/3 HP	120	1	WALL	12"	
E23	56	SR	SNEEZE GUARD LIGHTS	5.0 A	120	1	WALL	12"	CORD & PLUG BY THE ELECTRICAL CONTRACTOR.
E24	13	JB	DRAIN WATER TEMPERING KIT	5.0 A	120	1	WALL	12"	BTC
E25	13	JB	DISHWASHER	1 HP, 6.0 KW & 12.0 KW	208	3	WALL	66"	BTC

ELECTRICAL NOTES

DO NOT ROUGH-IN FROM THIS DRAWING. REFER TO CONTRACTOR'S DIMENSIONED DRAWINGS.

1. VERIFY ALL ELECTRICAL CHARACTERISTICS WITH ARCHITECT'S ENGINEERING DRAWINGS.
2. DIMENSIONS INDICATED ARE TO BE VERIFIED BY THE FOODSERVICE CONTRACTOR AND ADJUSTED AS REQUIRED BY THE FOODSERVICE EQUIPMENT AND/OR FIELD CONDITIONS.
3. REFER TO ARCHITECT'S DRAWINGS FOR CLOCKS, STAFF TIME-CLOCKS AND COMMUNICATION SYSTEMS IN FOODSERVICE AREAS.

THE FOLLOWING WORK IS BY THE ELECTRICAL CONTRACTOR. REFER TO THE ELECTRICAL DRAWINGS AND/OR SPECIFICATIONS FOR ADDITIONAL INFORMATION:

4. FIELD INSTALLATION OF ACCESSORIES & FITTINGS PROVIDED LOOSE WITH THE FOODSERVICE EQUIPMENT.
5. ALL RECEPTACLES TO BE GFI RECEPTACLES PER CODES.
6. CONDUIT AND WIRING BETWEEN THE WALK-IN COOLER AND FREEZER CONDENSING UNITS AND THE EVAPORATORS FOR CONTROLS, FAN MOTORS AND DEFROST HEATING ELEMENTS.
7. CONDUIT AND WIRING FROM EXHAUST HOOD FIRE EXTINGUISHING CYLINDER SWITCH TO EXHAUST HOOD DETECTORS, COOKING EQUIPMENT FUEL SHUT-OFF DEVICES AND ALARM.
8. CONTACTOR OR SHUNT-TRIP BREAKER FOR FUEL SHUT-OFF TO ALL ELECTRICALLY HEATED COOKING EQUIPMENT INDICATED ON DRAWINGS. FUEL SHUT-OFF DEVICE SHALL BE ACTUATED BY FIRE EXTINGUISHING SYSTEM DETECTOR LOCATED IN EXHAUST HOOD.
9. PENETRATIONS IN THE WALK-IN COOLER AND FREEZER MUST BE SEALED IN AN AIR TIGHT MANNER. INSTALL STAINLESS STEEL ESCUTCHEON FLANGE ON THE INTERIOR AND EXTERIOR OF THE UNITS. SEAL THE ESCUTCHEON FLANGE WITH SILICONE SEALANT.

ELECTRICAL SYMBOLS

DR	DUPLEX RECEPTACLE
SR	1 PH. SINGLE PURPOSE RECEP.
JB	JUNCTION BOX IN WALL
JB	JUNCTION BOX IN ABOVE CEILING
DCR	DROP CORD RECEPTACLE
FR	FLUSH FLOOR RECEPTACLE
BTC	BRANCH TO CONNECTION
AFF	ABOVE FINISHED FLOOR
DFA	DROP FROM ABOVE

NOTES

THE ELECTRICAL CONTRACTOR TO ROUGH-IN FROM THE FOODSERVICE CONTRACTORS ROUGH-IN DRAWINGS ONLY. THE ELECTRICAL CONTRACTOR WILL TAKE FULL RESPONSIBILITY FOR THE ROUGH-IN LOCATIONS IF THE FOODSERVICE AND/OR ELECTRICAL DRAWINGS ARE USED FOR THIS WORK.

KKT
ARCHITECTURE \ INTERIORS \ ENGINEERING

KKT ARCHITECTS, INC.
2200 SOUTH UTICA PLACE, SUITE 200
TULSA, OKLAHOMA 74114
[P] 918.744.4270 \ [F] 918.744.7849
WWW.KKTARCHITECTS.COM
C OF A #534 EXPIRES 6/30/25

East Central HIGH SCHOOL CAFETERIA REMODEL

TULSA PUBLIC SCHOOLS

121150 E. 11th Street
TULSA OK, 74128

10.18.2024 CD

PROJECT NO. A240041

FOODSERVICE EQUIP. ELECTRICAL CONN. PLAN

FS401

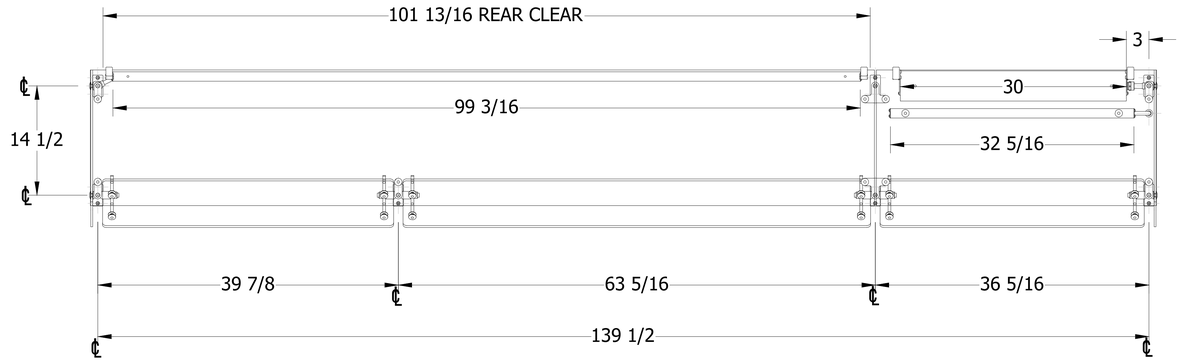

PLAN VIEW

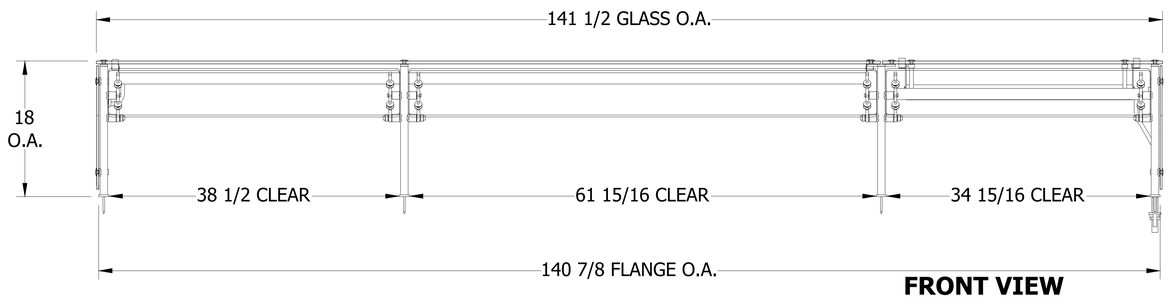

FRONT VIEW

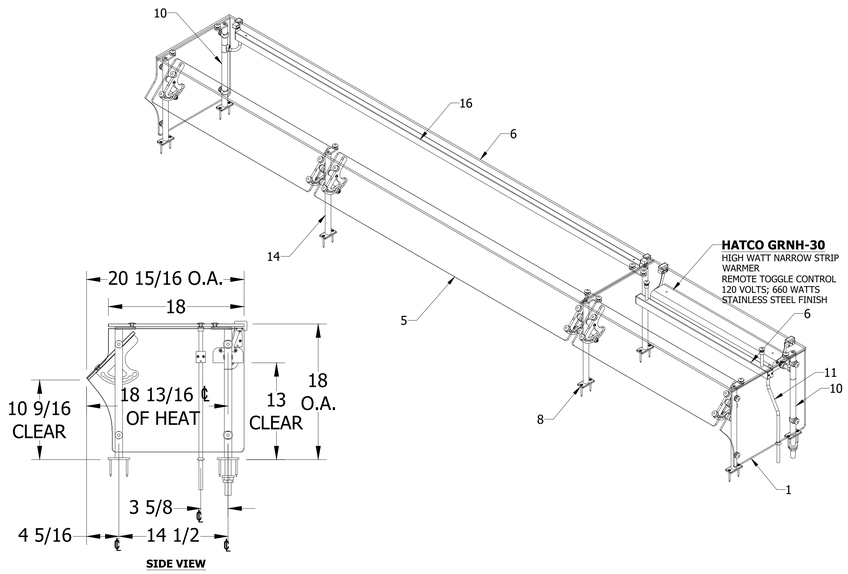

SIDE VIEW

V-G by VERSA-GARD®

3663 Southland Drive
Flowery Branch, Ga 30542
PH: 678-730-4155
FX: 678-730-2919

MODEL/ITEM: 1-#41A-VG3-SK-HTLED

FINISH: SATIN CLEAR ANODIZE ALUMINUM

PROJECT:	CLIENT:	QTY.:	DRAWN BY:	DATE:	APPROVED BY:
EAST CENTRAL HIGH SCHOOL	STURM CONSULTING	1	KW	07/26/24	
	CUSTOMER PO: LOI		REVISED BY:	REV. DATE:	SHEET NO.: 1 OF 11

NSF

KKT
ARCHITECTURE \ INTERIORS \ ENGINEERING

KKT ARCHITECTS, INC.
2200 SOUTH UTICA PLACE, SUITE 200
TULSA, OKLAHOMA 74114
[P] 918.744.4270 \ [F] 918.744.7849
WWW.KKTARCHITECTS.COM
C OF A #534 EXPIRES 6/30/25

East Central HIGH SCHOOL CAFETERIA REMODEL

TULSA PUBLIC SCHOOLS

121150 E. 11th Street
TULSA OK, 74128

10.18.2024 CD

PROJECT NO. A240041

FOODSERVICE EQUIP.
SNEEZE GUARD PLAN

FS501

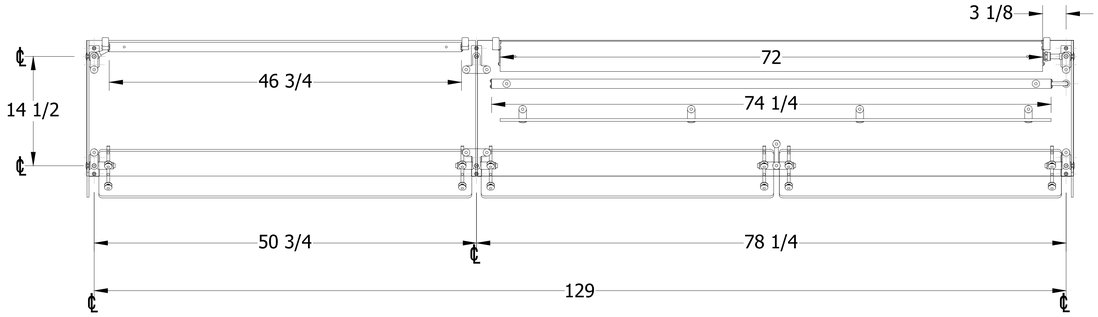

PLAN VIEW

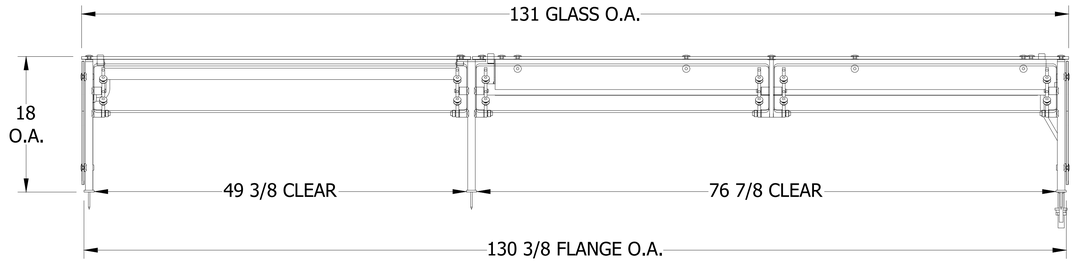

FRONT VIEW

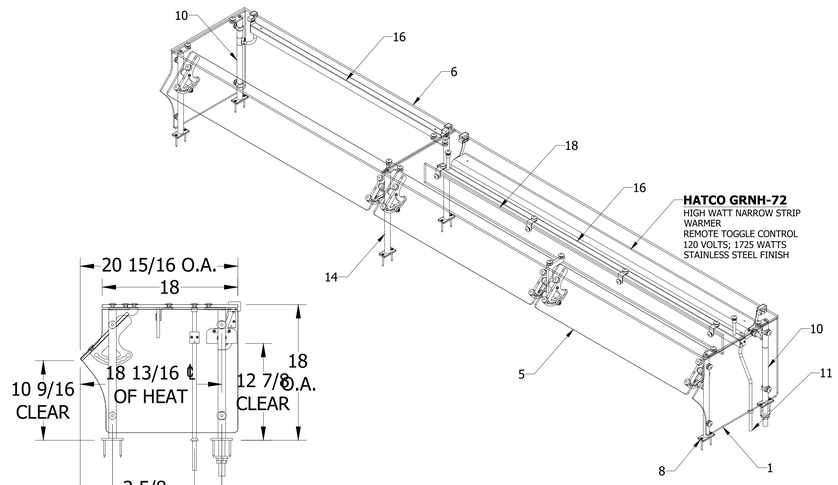

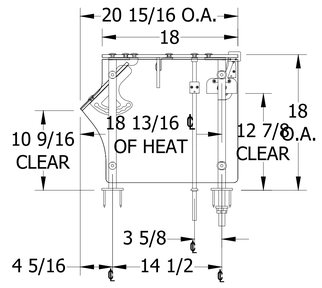

SIDE VIEW

V-G by VERSA-GARD

3663 Southland Drive
Flowery Branch, Ga 30542
PH: 678-730-4155
FX: 678-730-2919

MODEL/ITEM: 2-#46A-VG3-SK-E-HTLED

FINISH: SATIN CLEAR ANODIZE ALUMINUM

PROJECT:	CLIENT:	QTY.:	DRAWN BY:	DATE:	APPROVED BY:
EAST CENTRAL HIGH SCHOOL	STURM CONSULTING	1	KW	07/26/24	
	CUSTOMER PO: LOI		REVISED BY:	REV. DATE:	SHEET NO.: 3 OF 11

NSF

KKT
ARCHITECTURE \ INTERIORS \ ENGINEERING

KKT ARCHITECTS, INC.
2200 SOUTH UTICA PLACE, SUITE 200
TULSA, OKLAHOMA 74114
[P] 918.744.4270 \ [F] 918.744.7849
WWW.KKTARCHITECTS.COM
C OF A #534 EXPIRES 6/30/25

East Central HIGH SCHOOL CAFETERIA REMODEL

TULSA PUBLIC SCHOOLS

121150 E. 11th Street
TULSA OK, 74128

10.18.2024 CD

PROJECT NO. A240041

FOODSERVICE EQUIP.
SNEEZE GUARD PLAN

FS502

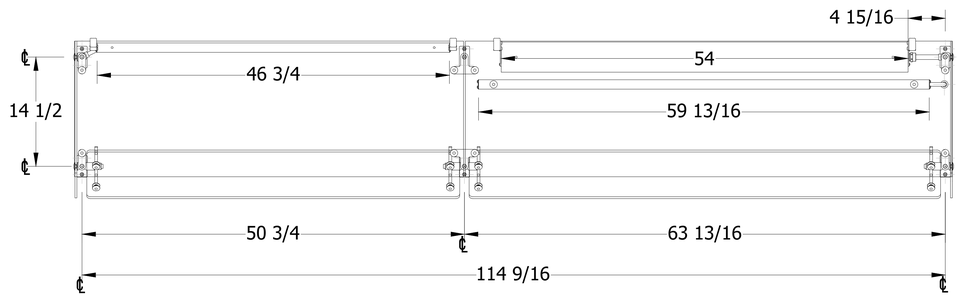

PLAN VIEW

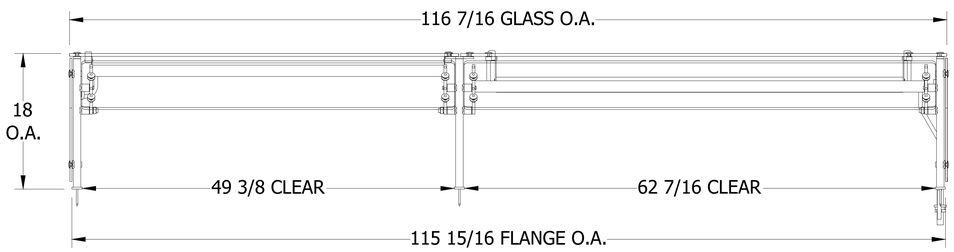

FRONT VIEW

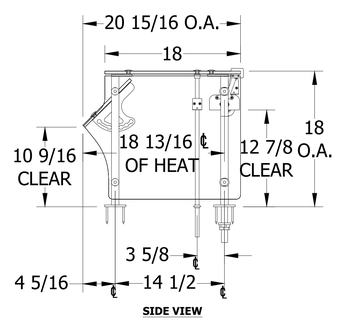

SIDE VIEW

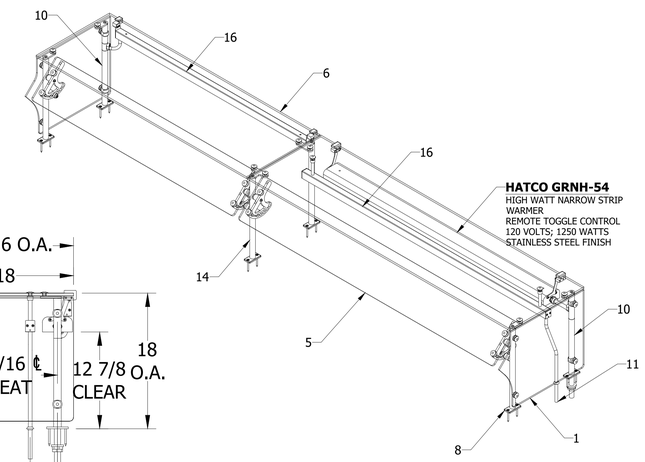

HATCO GRNH-54
HIGH WATT NARROW STRIP WARMER
REMOTE TOGGLE CONTROL
120 VOLTS; 1250 WATTS
STAINLESS STEEL FINISH

V-G by VERSA-GARD®
3663 Southland Drive
Flowery Branch, Ga 30542
PH: 678-730-4155
FX: 678-730-2919

MODEL/ITEM: 3-#49A-VG3-SK-HTLED

FINISH: SATIN CLEAR ANODIZE ALUMINUM

PROJECT:	CLIENT:	QTY.:	DRAWN BY:	DATE:	APPROVED BY:
EAST CENTRAL HIGH SCHOOL	STURM CONSULTING	1	KW	07/26/24	
	CUSTOMER PO: LOI		REVISED BY:	REV. DATE:	SHEET NO.: 5 OF 11

NSF

KKT
ARCHITECTURE \ INTERIORS \ ENGINEERING

KKT ARCHITECTS, INC.
2200 SOUTH UTICA PLACE, SUITE 200
TULSA, OKLAHOMA 74114
[P] 918.744.4270 \ [F] 918.744.7849
WWW.KKTARCHITECTS.COM
C OF A #534 EXPIRES 6/30/25

East Central HIGH SCHOOL CAFETERIA REMODEL

TULSA PUBLIC SCHOOLS

121150 E. 11th Street
TULSA OK, 74128

10.18.2024 CD

PROJECT NO. A240041

FOODSERVICE EQUIP.
SNEEZE GUARD PLAN

FS503

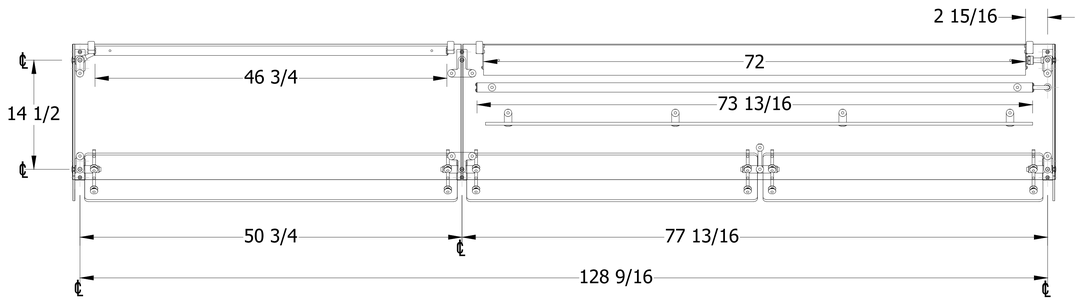

PLAN VIEW

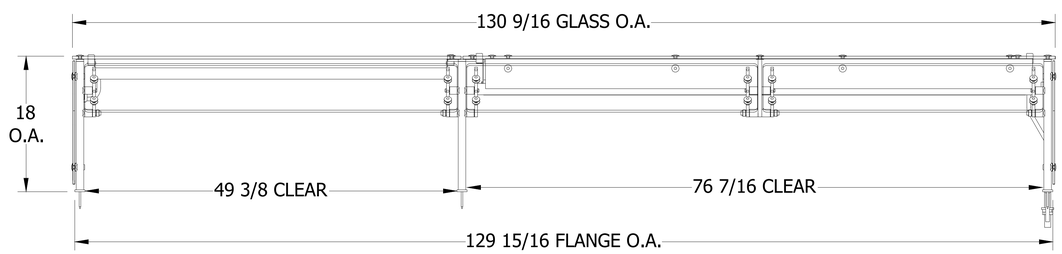

FRONT VIEW

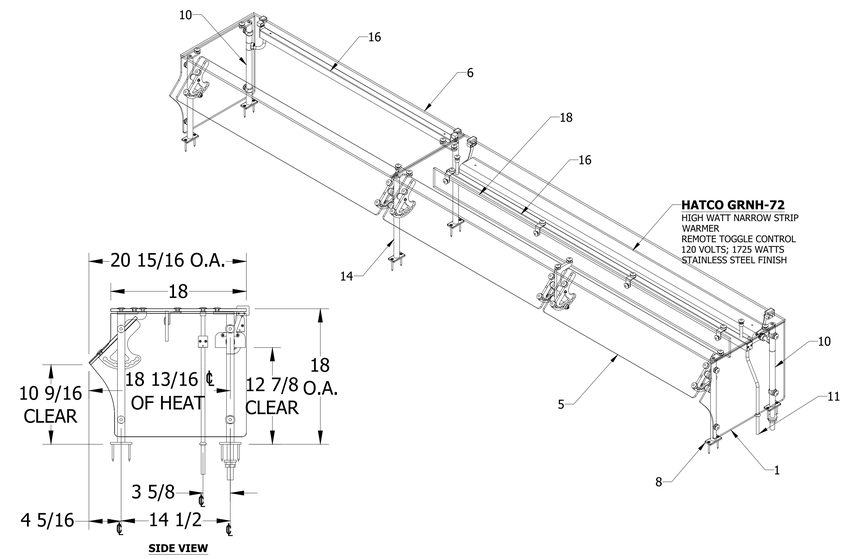

SIDE VIEW

V-G by VERSA-GARD®

3663 Southland Drive
Flowery Branch, Ga 30542
PH: 678-730-4155
FX: 678-730-2919

MODEL/ITEM: 4-#52A-VG3-SK-E-HTLED

FINISH: SATIN CLEAR ANODIZE ALUMINUM

PROJECT:	CLIENT:	QTY.:	DRAWN BY:	DATE:	APPROVED BY:
EAST CENTRAL HIGH SCHOOL	STURM CONSULTING	1	KW	07/26/24	
	CUSTOMER PO: LOI		REVISED BY:	REV. DATE:	SHEET NO.: 7 OF 11

NSF

KKT
ARCHITECTURE \ INTERIORS \ ENGINEERING

KKT ARCHITECTS, INC.
2200 SOUTH UTICA PLACE, SUITE 200
TULSA, OKLAHOMA 74114
[P] 918.744.4270 \ [F] 918.744.7849
WWW.KKTARCHITECTS.COM
C OF A #534 EXPIRES 6/30/25

East Central HIGH SCHOOL CAFETERIA REMODEL

TULSA PUBLIC SCHOOLS

121150 E. 11th Street
TULSA OK, 74128

10.18.2024 CD

PROJECT NO. A240041

FOODSERVICE EQUIP.
SNEEZE GUARD PLAN

FS504

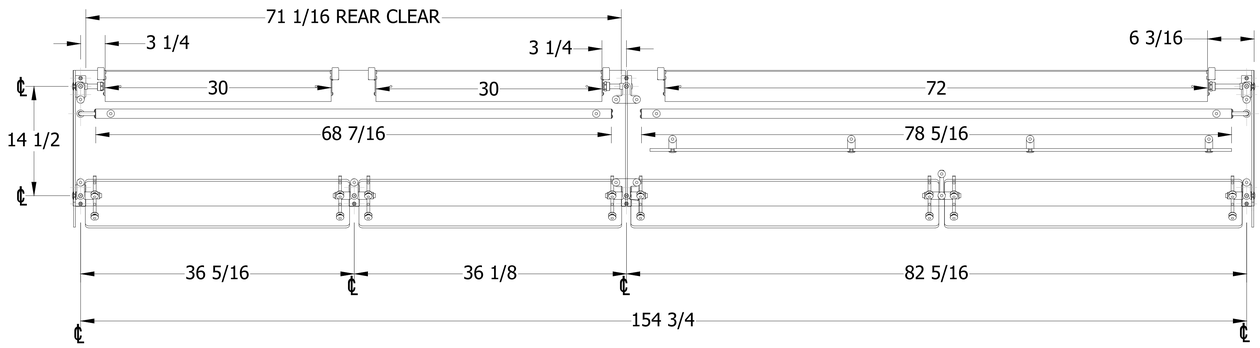

PLAN VIEW

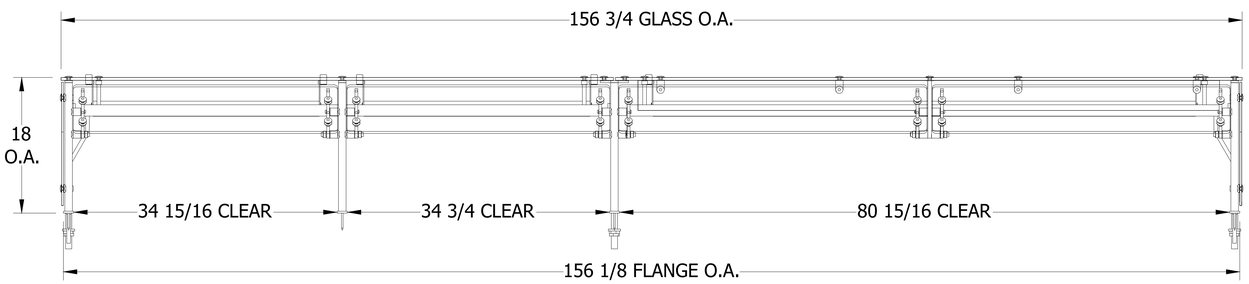

FRONT VIEW

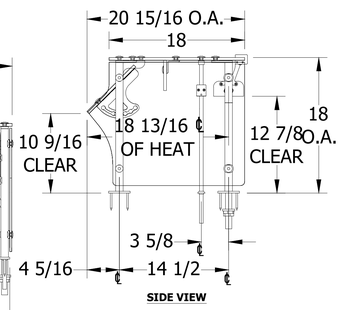

SIDE VIEW

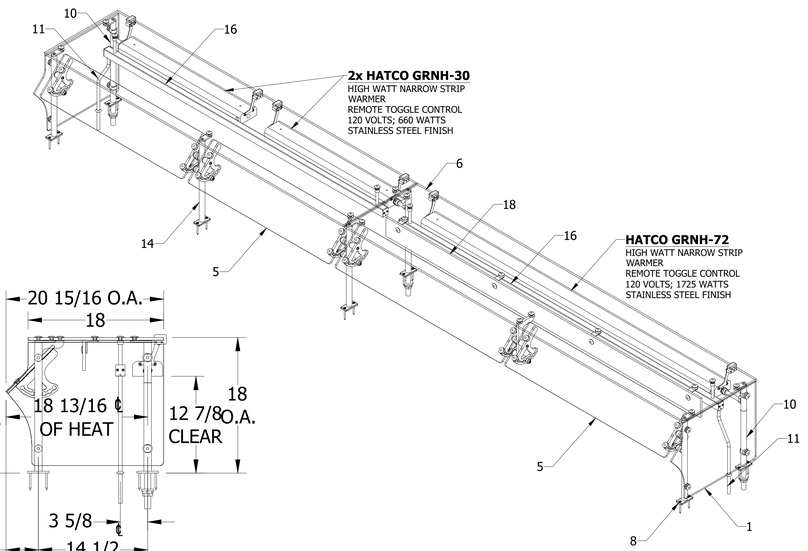

V-G® by VERSA-GARD®

3663 Southland Drive
Flowery Branch, Ga 30542
PH: 678-730-4155
FX: 678-730-2919

MODEL/ITEM: 5-#53A-VG3-SK-E-HTLED

FINISH: SATIN CLEAR ANODIZE ALUMINUM

PROJECT:	CLIENT:	QTY.:	DRAWN BY:	DATE:	APPROVED BY:
EAST CENTRAL HIGH SCHOOL	STURM CONSULTING	1	KW	07/26/24	
	CUSTOMER PO: LOI		REVISED BY:	REV. DATE:	SHEET NO.: 9 OF 11

NSF

KKT
ARCHITECTURE \ INTERIORS \ ENGINEERING

KKT ARCHITECTS, INC.
2200 SOUTH UTICA PLACE, SUITE 200
TULSA, OKLAHOMA 74114
[P] 918.744.4270 \ [F] 918.744.7849
WWW.KKTARCHITECTS.COM
C OF A #534 EXPIRES 6/30/25

East Central HIGH SCHOOL CAFETERIA REMODEL

TULSA PUBLIC SCHOOLS

121150 E. 11th Street
TULSA OK, 74128

10.18.2024 CD

PROJECT NO. A240041

FOODSERVICE EQUIP.
SNEEZE GUARD PLAN

FS505

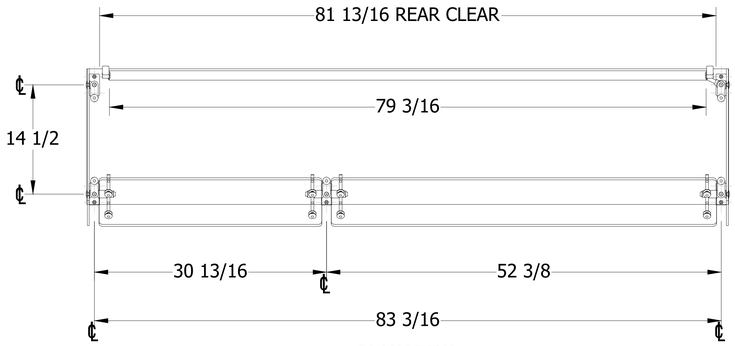

PLAN VIEW

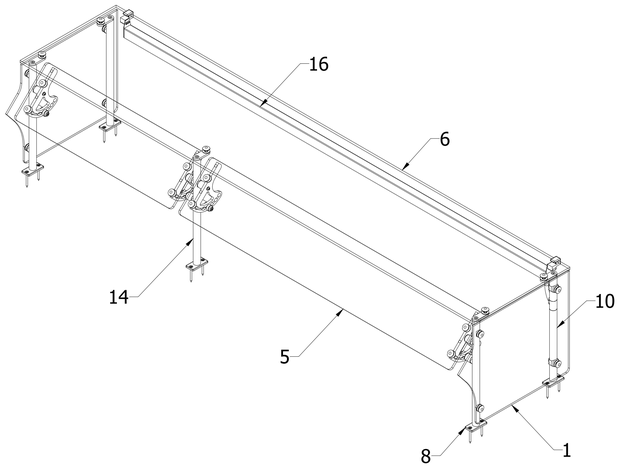

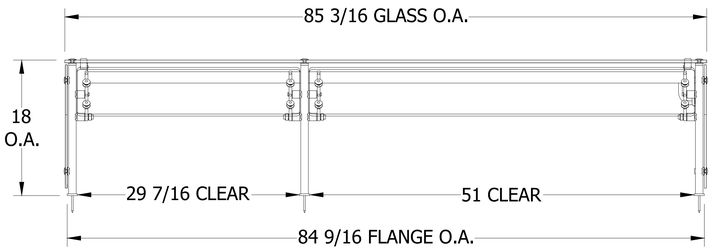

FRONT VIEW

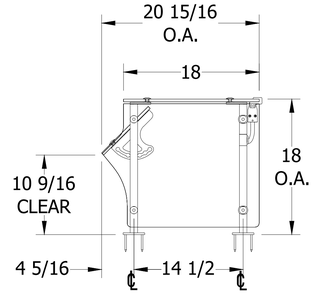

SIDE VIEW

V-G by VERSA-GARD®

3663 Southland Drive
Flowery Branch, Ga 30542
PH: 678-730-4155
FX: 678-730-2919

MODEL/ITEM: 6-#56A-VG3-SK-LT

FINISH: SATIN CLEAR ANODIZE ALUMINUM

PROJECT:	CLIENT:	QTY.:	DRAWN BY:	DATE:	APPROVED BY:
EAST CENTRAL HIGH SCHOOL	STURM CONSULTING	1	KW	07/26/24	
	CUSTOMER PO: LOI		REVISED BY:	REV. DATE:	SHEET NO.: 11 OF 11

NSF

KKT
ARCHITECTURE \ INTERIORS \ ENGINEERING

KKT ARCHITECTS, INC.
2200 SOUTH UTICA PLACE, SUITE 200
TULSA, OKLAHOMA 74114
[P] 918.744.4270 \ [F] 918.744.7849
WWW.KKTARCHITECTS.COM
C OF A #534 EXPIRES 6/30/25

East Central HIGH SCHOOL CAFETERIA REMODEL

TULSA PUBLIC SCHOOLS

121150 E. 11th Street
TULSA OK, 74128

10.18.2024 CD

PROJECT NO. A240041

FOODSERVICE EQUIP.
SNEEZE GUARD PLAN

FS506

General Plan Symbols

- Plan Revision Number
- Detail Number on Sheet
- Sheet Number Where Detail is Placed
- Keynote Symbol
- Continuation Symbol
- Point Where New Connects To Existing
- Room 1 — Room Name / Number
- Area Being Demolished
- Area Not In Contract

Abbreviations

Ø	ROUND	LVR	LOUVER
ABV	ABOVE	LWT	LEAVING WATER TEMPERATURE
AC	AIR CONDITIONING	M/A	MIXED AIR
AD	AREA DRAIN	MAX	MAXIMUM
ADD	ADDENDUM	MBH	ONE THOUSAND BTU PER HOUR
AFF	ABOVE FINISHED FLOOR	MCF	ONE THOUSAND CUBIC FEET
AFUE	ANNUAL FUEL UTILIZATION EFFICIENCY	MD	MOTORIZED DAMPER
ALT	ALTERNATE	MECH	MECHANICAL
AP	ACCESS PANEL	MFR	MANUFACTURER
ARCH	ARCHITECT/ARCHITECTURAL	MIN	MINIMUM
BFF	BELOW FINISHED FLOOR	MISC	MISCELLANEOUS
BLW	BELOW	MTR	MOTOR
BTU	BRITISH THERMAL UNITS	MU/A	MAKE-UP/AIR
BTUH	BRITISH THERMAL UNITS PER HOUR	NC	NOISE CRITERIA
CAP	CAPACITY	NC	NORMALLY CLOSED
CB	CATCH BASIN	NIC	NOT IN CONTRACT
CFM	CUBIC FEET PER MINUTE	NO	NUMBER
CLG	CEILING	NO	NORMALLY OPEN
CO	CLEAN OUT	NTS	NOT TO SCALE
CW	COLD WATER	O	OXYGEN
D	DEGREE	O/A	OUTSIDE AIR
DB	DRY BULB	ORD	OVERFLOW ROOF DRAIN
DIA	DIAMETER	PD	PRESSURE DROP
DN	DOWN	PIV	POST INDICATOR VALVE
DW	DISTILLED WATER	PLBG	PLUMBING
EA	EACH	PRESS	PRESSURE
EAT	ENTERING AIR TEMPERATURE	PRV	PRESSURE REDUCING VALVE
ELEC	ELECTRICAL	PSI	POUNDS PER SQUARE INCH
EQUIP	EQUIPMENT	PSIG	POUNDS PER SQUARE INCH GAUGE
EWC	ELECTRIC WATER COOLER	PWR	POWER
EWT	ENTERING WATER TEMPERATURE	R	DUCT RISER
E/A	EXHAUST AIR	R/A	RETURN AIR
EXIST	EXISTING	RCP	RADIANT CEILING PANEL
F	DEGREES FAHRENHEIT	RD	ROOF DRAIN
FCO	FLOOR CLEAN OUT	REC	RECESSED
FD	FLOOR DRAIN	RED	REDUCER
FDC	FIRE DEPARTMENT CONNECTION	RH	RELATIVE HUMIDITY
FL	FLOOR	RL/A	RELIEF AIR
FO	FUEL OIL	RM	ROOM
FOV	FUEL OIL VENT	RPM	REVOLUTIONS PER MINUTE
FOR	FUEL OIL RETURN	RW	RAIN WATER
FOS	FUEL OIL SUPPLY	SF	SQUARE FOOT
FPM	FEET PER MINUTE	S/A	SUPPLY AIR
FS	FLOOR SINK	SAN	SANITARY
FT	FOOT/FEET	SF	SQUARE FOOT
FTR	FIN TUBE RADIATION	SD	SMOKE DAMPER
GAL	GALLON	SM	SURFACE MOUNT
GF	GAS-FIRED	SP	STANDPIPE
GC	GENERAL CONTRACTOR	SP	STATIC PRESSURE
GPM	GALLONS PER MINUTE	STM	STEAM
GW	GREASE WASTE	T	THERMOSTAT
HB	HOSE BIB	TD	TEMPERATURE DROP
HP	HORSE POWER	TDR	TRENCH DRAIN
HTG	HEATING	TEMP	TEMPERATURE
HTR	HEATER	TYP	TYPICAL
HW	HOT WATER	UG	UNDERGROUND
HYD	HYDRANT	VAC	VACUUM
ID	INDIRECT	V	VENT
IN	INCH	VAV	VARIABLE AIR VOLUME
INV	INVERT	VENT	VENTILATION
LB	POUND	VTR	VENT THROUGH ROOF
LB/HR	POUNDS PER HOUR	W	WASTE
LAT	LEAVING AIR TEMPERATURE	WB	WET BULB
LP	LOW PRESSURE	WCO	WALL CLEAN OUT
LPG	LIQUEFIED PETROLEUM GAS	WH	WALL HYDRANT

Equipment Abbreviations

AC	AIR CONDITIONING UNIT	ET	EXPANSION TANK
ACCU	AIR COOLING CONDENSING UNIT	EWH	ELECTRIC WATER HEATER
AHU	AIR HANDLING UNIT	FCU	FAN COIL UNIT
AS	AIR SEPARATOR	FP	FIRE PUMP
B	BOILER	GI	GREASE INTERCEPTOR
CH	CHILLER	GRV	GRAVITY ROOF VENTILATOR
CT	COOLING TOWER	HWP	HEATING WATER PUMP
CUH	CABINET UNIT HEATER	HRU	HEAT RECOVERY UNIT
CHWP	CHILLED WATER PUMP	PRV	POWER ROOF VENTILATOR
DBP	DOMESTIC WATER BOOSTER PUMP	RE	RETURN/EXHAUST FAN
DC	DUCT MOUNTED COIL	RTU	ROOFTOP UNIT
DCP	DOMESTIC WATER CIRCULATING PUMP	SP	SUMP PUMP
EF	EXHAUST FAN	UH	UNIT HEATER
EDC	ELECTRIC DUCT COIL	WH	WATER HEATER

* NOTE *
ALL OF GENERAL NOTES ON THIS SHEET ARE TO BE APPLIED TO ALL OTHER DRAWINGS IN THIS SET.THE SYMBOLS AND ABBREVIATIONS SHOWN ON THIS SHEET MAY OR MAY NOT BE USED IN THIS SET OF DRAWINGS.

HVAC Symbols

- 24"x12" — Sq. Duct Size (Width x Height)
- 24"/12" — Oval Duct Size (Width / Height)
- 18"Ø — Round Duct Size (Diameter)
- (E) — Existing Duct To Remain
- Duct To Be Demolished
- S/A — Supply Air
- V/A — Ventilation Air
- O/A — Outdoor Air
- R/A — Return Air
- T/A — Transfer Air
- L/A — Building Relief Air
- E/A — General Exhaust Air
- KED — Kitchen Exhaust Duct
- LH — Laboratory Hood
- ETS — Env. Tobacco Smoke
- FLUE — Flue Gas Vent
- C/A — Combustion Air
- Rect. Supply Duct Rise / Drop
- Round Supply Duct Rise / Drop
- Rect. Return Duct Rise / Drop
- Round Return Duct Rise / Drop
- Rect. Exhaust Duct Rise / Drop
- Round Exhaust Duct Rise / Drop

Grille, Register, Diffusers

- Ceiling Diffuser: A | 500 — Type (See Schedule); 10"Ø/24x24 — Airflow; 29 |HB/9/17 — Neck Size / Module Size; Catalog Throw Performance; Throw Pattern; Max NC Rating
- Round Diffuser: SD9 | 100 — Airflow; 6"Ø — Neck Size; TYP. X 4 — Type Count for Space
- Sidewall Register: SG5 | 500 — Airflow; 18"x10" — Nominal Duct Size; AFF:9'-0" — Mounting Elevation (Centerline)
- Linear Diffuser: LD-1 | 120 — Airflow; 6"Ø/1s/48"L — Neck Size/ Slot(s)/ Active Length
- Sidewall Grille: RG11 | 800 — Airflow; 18"x16" — Nominal Duct Size; AFF:9'-0" — Mounting Elevation (Centerline)
- Ceiling Return: RG1 | 2000 — Airflow; 22"x22"/24x24 — Neck Size / Module Size; 25 — Max NC Rating

Mechanical Equipment

- RTU-1 — Unit Identity; 4.0 ton — Nominal Cooling Capacity; RTU-1; 72,000 Btu/h — Heating Capacity; 72 CFH — Gas Supply Input Rate
- ET-1; 379 lb — Operating Weight
- TF-1; 500 CFM — Design Airflow Rate
- VAV 1-2; 3.7 GPM — Design Water Flow
- AC-1; AFF:7'-0" — Bottom of Equipment Height
- (E)AHU-2 — Existing to Remain Equipment
- (R)AHU-3 — Existing Relocated Equipment
- Equipment By Others (Refer To Other Disciplines)

Damper Types

- Manual Damper
- Motorized Damper
- Backdraft Damper
- Smoke Damper
- Fire Damper
- Comb. Fire/ Smoke Damper

Mechanical Piping Symbols

- 2" — Nominal Pipe Size
- Above Ground Piping
- Below Ground Piping
- 1/8" / 12" SLOPE — Pipe Slope (When Applicable)
- (E) — Existing Pipe To Remain
- Pipe To Be Demolished
- CHWR — Chilled-Water Return
- CHWS — Chilled-Water Supply
- CD — Condensate Drain
- CWR — Condenser-Water Return
- CWS — Condenser-Water Supply
- GWR — Geothermal-Water Return
- GWS — Geothermal-Water Supply
- HWR — Hot-Water Return
- HWS — Hot-Water Supply
- G — Natural Gas
- LP — Liquid Propane
- RL — Refrigerant Liquid
- RS — Refrigerant Gas
- RD — Refrigerant Discharge
- STM — Steam Supply
- CDR — Steam Condensate Return
- Pipe Rise / Drop

Valve Types

- 2" SHUTOFF — Ball Valve
- 2" BAL — Balancing Valve
- 2" BFV — Butterfly Valve
- 2" CHECK — Check Valve
- 2" CHECK — Alternate Check Valve
- 3" CIRC — Circuit Setter
- 2" GATE — Gate Valve
- 2" GLOBE — Globe Valve
- 2" LOCK — Locked Shield Valve
- 2" PRV — Pressure Reducing Valve
- 2" QUICK — Quick Opening Valve
- 2" STRAIN — Fluid Strainer
- 2" M-CNTRL — Elec. Control Valve
- 4" 3-WAY CNTRL — 3-Way Elec. Valve
- 1" GAS-CNTRL — Emergency Gas Shutoff
- 1" PLUG — Plug Valve
- 1" GAS COCK — Gas Shutoff Cock
- 1" REG — Gas Regulator

Mechanical Devices

- AHU-1 — Unit Identity
- TS — Temperature Sensor
- TH — Temp/ Humidity Sensor
- TC — Temp/ CO2 Sensor
- T — Thermostat
- H — Humidistat
- HS — Humidity Sensor
- CO2 — Carbon Dioxide Detector
- CO — Carbon Monoxide Detector
- H2 — Hydrogen Gas Detector
- HZG — Hazardous Gas Detector
- NO2 — Nitrogen Dioxide Detector
- O2 — Oxygen Gas Detector

Project Requirements

A REMOVE ALL UNUSED PIPING, DUCTWORK AND ACCESSORIES.

B THE MECHANICAL CONTRACTOR SHALL BE RESPONSIBLE FOR FIELD VERIFYING, PRIOR TO FINAL BID, ALL EXISTING CONDITIONS FOR PLUMBING AND MECHANICAL SYSTEMS WITHIN TENANT SPACE AND WITHIN CLOSE PROXIMITY OF TENANT SPACE.

C THE MECHANICAL CONTRACTOR SHALL PERFORM SERVICE AND REPAIR ON THE EXISTING EQUIPMENT AND ITS ACCESSORIES AS FOLLOWS: CLEAN ALL COILS, REPLACE THE FILTERS AND BELTS, INSPECT, REPAIR, OR REPLACE THE ECONOMIZERS, DRIVES AND FAN BEARINGS, MOTORS, CONTROL COMPONENTS, VALVES AND ANY OTHER ITEM NECESSARY FOR A COMPLETE AND PROPER OPERATING SYSTEM. THIS CONTRACTOR SHALL ALSO VISIT THE SITE, PRIOR TO FINAL BIDDING, AND VERIFY ALL EXISTING SITE CONDITIONS. PROVIDE ALL MATERIAL AND COMPONENTS AS NEEDED TO BRING THE UNITS TO FULL COMPLIANCE OF THE LANDLORD'S CRITERIA AND LOCAL AUTHORITY HAVING JURISDICTION.

D WHERE FLOOR DRAINS OCCUR WITHIN THE LIMITS OF CONSTRUCTION, PREVENT CONSTRUCTION DEBRIS FROM ENTERING DRAIN BODY BY SEALING DRAIN OPENING PRIOR TO START OF WORK. UNSEAL DRAINS AT COMPLETION OF CONSTRUCTION.

E COORDINATE INSTALLATION OF PIPING, DUCTWORK, CONDUIT, LIGHTS, CABLE TRAY, STRUCTURE, AND EQUIPMENT TO PREVENT CONFLICTS.

F THE CONTRACTOR SHALL BE FAMILIAR WITH ALL THE CONDITIONS BOTH EXISTING AND THOSE ILLUSTRATED BY THESE DOCUMENTS AS WELL AS THOSE WHICH CAN BE REASONABLY ANTICIPATED INCLUDING, BUT NOT LIMITED TO ARCHITECTURAL, ELECTRICAL, VENTILATION, AND OTHER SYSTEMS INVOLVED ON THIS PROJECT.

G FINAL PRODUCT SHALL BE A COMPLETE AND FUNCTIONING SYSTEM, AND SHALL CONFORM TO ALL REQUIREMENTS OF APPLICABLE FEDERAL, STATE, AND LOCAL CODES, INCLUDING BUT NOT LIMITED TO THE INTERNATIONAL BUILDING CODE AND INTERNATIONAL MECHANICAL CODE.

H LOCATE EQUIPMENT REQUIRING ACCESS 2'-0" MAXIMUM ABOVE CEILING.

I LOCATE DUCTWORK, PIPING AND MECHANICAL EQUIPMENT AWAY FROM THE SPACE ABOVE ELECTRICAL PANELS. TRANSFORMERS AND OTHER ELECTRICAL EQUIPMENT.

J PENETRATIONS OF RATED ASSEMBLIES SHALL BE FIRE STOPPED. FIRE STOPPING SHALL BE AN APPROVED MATERIAL AS PRESCRIBED IN CSFM STANDARD 43-1 AND SHALL BE U.L. LISTED.

K PROVIDE SLEEVES AND/OR OPENINGS TO RUN PIPES AND DUCTS THROUGH FOUNDATIONS, FLOORS, WALLS, AND ROOF.

L MAINTAIN CLEAR ACCESS TO SERVICE EQUIPMENT AND OTHER ACCESSORIES REQUIRING SERVICE, VISUAL INSPECTION OR HAND OPERATION. WHERE INDICATED OR REQUIRED, PROVIDE ACCESS PANELS OF THE TYPE SELECTED TO SUIT MATERIALS IN WHICH INSTALLED.

M ADJUST PIPING AND DUCTWORK SIZES TO PROPERLY CONNECT TO MECHANICAL EQUIPMENT.

N REFER TO HVAC SERIES DRAWINGS FOR GAS AND A.C. CONDENSATE DRAIN PIPING.

O PIPE SIZES SHOWN SHALL BE CONTINUED IN THE DIRECTION OF FLOW UNTIL ANOTHER SIZE IS SHOWN.

P INSTALL ALL EQUIPMENT IN ACCORDANCE WITH THE RESPECTIVE MANUFACTURER'S WRITTEN INSTALLATION INSTRUCTIONS, AT A LEVEL OF QUALITY AND WORKMANSHIP CONSISTENT WITH THE SPECIFICATIONS.

Q LOCATIONS OF PIPING, DUCTWORK AND EQUIPMENT AS INDICATED ON THE DRAWING, ARE APPROXIMATE AND SUBJECT TO MINOR ADJUSTMENTS IN THE FIELD. WORK SHALL BE COORDINATED WITH ALL OTHER TRADES TO AVOID INTERFERENCE IN THE FIELD.

R INSTALL EXPOSED PIPING AND DUCTWORK AS HIGH AS PRACTICAL IN ROOMS WITHOUT CEILINGS.

S THE CONTRACTOR'S WORK SCHEDULE SHALL BE SUBMITTED TO AND APPROVED BY THE OWNER.

T PRIOR TO STARTING WORK, SUBMIT SHOP DRAWINGS FOR ALL MECHANICAL EQUIPMENT, PLUMBING FIXTURES, AND DIFFUSERS.

U CONTRACTOR SHALL OBTAIN AND PAY FOR ALL NECESSARY PERMITS AND SHALL ARRANGE FOR ALL INSPECTIONS AS REQUIRED.

V PROVIDE ONE YEAR WARRANTY FOR ALL WORKMANSHIP AND MATERIALS AFTER THE DATE OF FINAL ACCEPTANCE.

HVAC General Notes

A CONDENSATE DRAINS SHALL BE SUPPLIED FOR ALL COOLING EQUIPMENT. CONTRACTOR SHALL ENSURE PROPER INSTALLATION AND DRAINAGE AS REQUIRED BY FEDERAL, STATE, AND LOCAL CODES. CONDENSATE PIPING SHALL BE TYPE "L" COPPER.

B ALL SUPPLY, RETURN, AND EXHAUST DUCTWORK SHALL BE RATED FOR PRESSURE CLASS OF 2" W.G. UNLESS NOTED OTHERWISE.

C COORDINATE THE EXACT LOCATION OF ALL CEILING DIFFUSERS, REGISTERS, AND GRILLES WITH NEW AND EXISTING LIGHTING.

D PROVIDE DIFFUSERS AND REGISTERS WITH 4-WAY BLOW PATTERN UNLESS OTHERWISE NOTED.

E THIS CONTRACTOR SHALL BE REQUIRED TO REPLACE FILTERS ON HVAC EQUIPMENT AFTER ALL DUST PRODUCING CONSTRUCTION HAS BEEN COMPLETED AND PRIOR TO THE FINAL PUNCH.

HVAC SHEET INDEX

KKT
ARCHITECTURE \ INTERIORS \ ENGINEERING

KKT ARCHITECTS, INC.
2200 SOUTH UTICA PLACE, SUITE 200
TULSA, OKLAHOMA 74114
[P] 918.744.4270 \ [F] 918.744.7849
WWW.KKTARCHITECTS.COM
CERTIFICATE OF AUTHORIZATION

CEC
CEC CORPORATION
WWW.CONNECTCEC.COM
OK CA# 32 EXP: 2026-06-30
CEC PROJECT 240417

EAST CENTRAL HIGH SCHOOL CAFETERIA REMODEL

TULSA PUBLIC SCHOOLS

12150 E 11TH
TULSA, OK
74128

PROFESSIONAL ENGINEER
MATTHEW MALONE
10/18/24
35205
OKLAHOMA

REV. DATE	#	DESCRIPTION
10-18-2024	.	100% CD

MECHANICAL LEGEND & NOTES

M001

KEYED NOTES: (X)

1. EXISTING DIFFUSER TO BE REPLACED WITH NEW AS INDICATED ON PLANS. EXTEND AND REPAIR EXISTING DUCTWORK AS REQUIRED.
2. EXISTING TO REMAIN.

Grilles, Registers, Diffusers

ID Type	Description	Manufacturer	Model	Type	Deflection Type	Installation	Border Application	Face or Module Size	Notes
RG11	Sidewall Grille	Titus	350FL	Louvered Return	Fixed Blade	Ceiling	Lay-In Full Face	24x24	1
S1	3-Cone Diffuser	Titus	TMS	Square 3-Cone	Fixed Deflection	Ceiling Installation	Lay-In Full Face	24x24	1

NOTES:

1. COORDINATE REQUIRED SIZE TO MATCH WITH EXISTING DIFFUSER TO BE REPLACED.

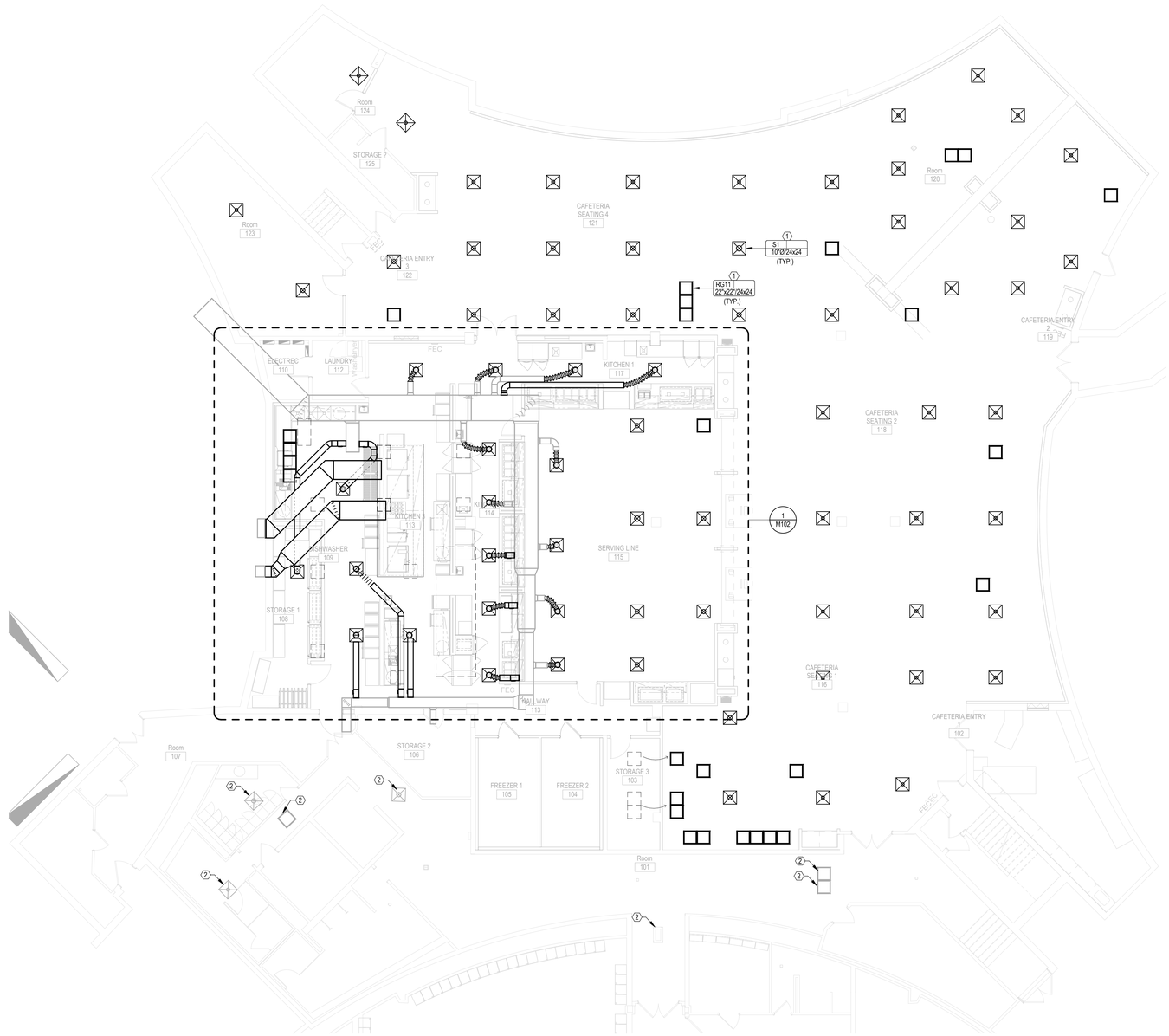

1 / M101 CAFETERIA - HVAC PLAN
1/8" = 1'-0"

KKT
ARCHITECTURE \ INTERIORS \ ENGINEERING

KKT ARCHITECTS, INC.
2200 SOUTH UTICA PLACE, SUITE 200
TULSA, OKLAHOMA 74114
[P] 918.744.4270 \ [F] 918.744.7849
WWW.KKTARCHITECTS.COM
CERTIFICATE OF AUTHORIZATION

CEC
CEC CORPORATION
WWW.CONNECTCEC.COM
OK CA#: 32 EXP.: 2026-06-30
CEC PROJECT 240417

EAST CENTRAL HIGH SCHOOL CAFETERIA REMODEL

TULSA PUBLIC SCHOOLS

12150 E 11TH
TULSA, OK
74128

REGISTERED PROFESSIONAL ENGINEER
MATTHEW MALONE
10/18/24
35205
OKLAHOMA

REV. DATE	#	DESCRIPTION
10-18-2024		100% CD

CAFETERIA - HVAC PLAN

M101

KEYED NOTES: (X)

1. EXISTING KITCHEN HOOD TO BE RELOCATED IN ITS ENTIRETY, GC TO COORDINATE WITH THE MANUFACTURE AS REQUIRED TO ENSURE A FULLY WORKING AND OPERATIONAL SYSTEM AFTER RELOCATION. REFERENCE ARCHITECTURAL FOR EXACT LOCATION.
2. IF EXISTING DUCTWORK CONFLICTS WITH NEW PROPOSED KITCHEN HOOD, GC TO SHORTEN AND EXTEND THE SUPPLY DUCT BRANCHES.
3. EXISTING DIFFUSER TO BE REPLACED WITH NEW. PATCH AND REPAIR EXISTING DUCT TAP AS REQUIRED.
4. PROVIDE NEW DIFFUSER AS SCHEDULED. EXTEND AND REPAIR EXISTING DUCTWORK AS REQUIRED.
5. PROVIDE FIRE / SMOKE DAMPERS AT DUCT PENETRATIONS THRU NEW FIRE WALL.
6. VERIFY RETUN PATH THRU NEW WALL WALL, PROVIDE IF NOT EXISTING.

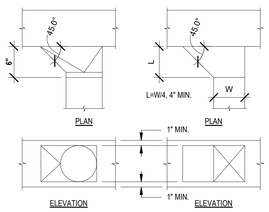

4 / M102 DUCT TAKE-OFF DETAIL
NO SCALE

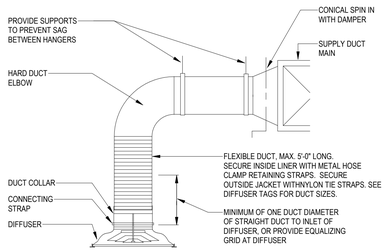

3 / M102 DIFFUSER FLEXIBLE DUCT CONNECTION
NOT TO SCALE

NOTES:
1. REFER TO HVAC FLOOR PLANS FOR DUCT SIZES
2. REFER TO SCHEDULES FOR GRILLES, REGISTERS, DIFFUSERS AND TERMINAL SIZES AND TYPES
3. PROVIDE A MANUAL TYPE BALANCING DAMPER FOR EACH SUPPLY OUTLET AND RETURN INLET
4. ALL DUCT RUNOUTS TO DIFFUSERS SHALL BE THE SAME SIZE AS DIFFUSER NECK SIZE, UNLESS OTHERWISE NOTED
5. FLEX DUCT WILL NOT BE ALLOWED ON RETURN OR EXHAUST DUCTWORK SYSTEMS
6. PROVIDE 12" AIR CUSHION AT THE END OF EACH SUPPLY MAIN AND BRANCH DUCT
7. INDIVIDUAL BRANCH BALANCING DAMPERS NOT REQUIRED FOR SUPPLY OR EXHAUST REGISTERS

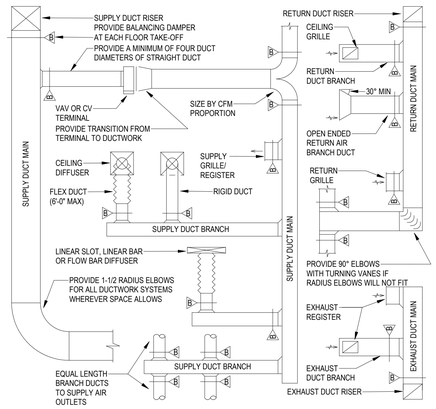

2 / M102 DUCTWORK INSTALLATION DIAGRAM
NO SCALE

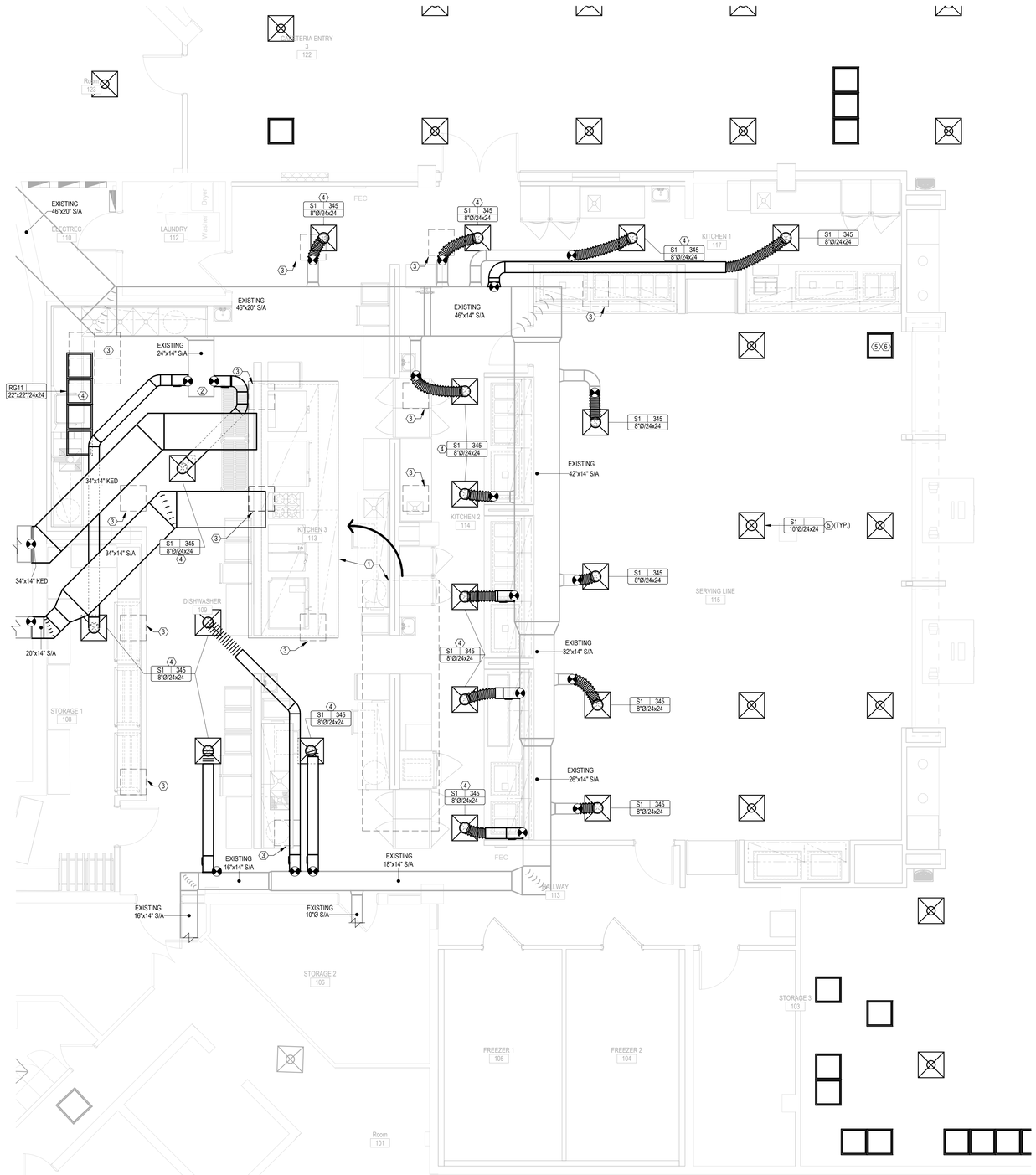

1 / M102 KITCHEN - HVAC PLAN
1/4" = 1'-0"

KKT
ARCHITECTURE \ INTERIORS \ ENGINEERING

KKT ARCHITECTS, INC.
2200 SOUTH UTICA PLACE, SUITE 200
TULSA, OKLAHOMA 74114
[P] 918.744.4270 \ [F] 918.744.7849
WWW.KKTARCHITECTS.COM
CERTIFICATE OF AUTHORIZATION

CEC
CEC CORPORATION
WWW.CONNECTCEC.COM
OK CA#: 32 EXP: 2026-06-30
CEC PROJECT 240417

EAST CENTRAL HIGH SCHOOL CAFETERIA REMODEL

TULSA PUBLIC SCHOOLS

12150 E 11TH
TULSA, OK
74128

PROFESSIONAL ENGINEER
MATTHEW MALONE
10/18/24
35205
OKLAHOMA

REV. DATE	#	DESCRIPTION
10-18-2024	.	100% CD

KITCHEN - HVAC PLAN

M102

General Plan Symbols

- Plan Revision Number
- Detail Number on Sheet
- Sheet Number Where Detail is Placed
- Keynote Symbol
- Continuation Symbol
- Point Where New Connects To Existing
- Room 1 — Room Name / Number
- Area Being Demolished
- Area Not In Contract

Abbreviations

Ø	ROUND	LVR	LOUVER
ABV	ABOVE	LWT	LEAVING WATER TEMPERATURE
AC	AIR CONDITIONING	M/A	MIXED AIR
AD	AREA DRAIN	MAX	MAXIMUM
ADD	ADDENDUM	MBH	ONE THOUSAND BTU PER HOUR
AFF	ABOVE FINISHED FLOOR	MCF	ONE THOUSAND CUBIC FEET
AFUE	ANNUAL FUEL UTILIZATION EFFICIENCY	MD	MOTORIZED DAMPER
ALT	ALTERNATE	MECH	MECHANICAL
AP	ACCESS PANEL	MFR	MANUFACTURER
ARCH	ARCHITECT/ARCHITECTURAL	MIN	MINIMUM
BFF	BELOW FINISHED FLOOR	MISC	MISCELLANEOUS
BLW	BELOW	MTR	MOTOR
BTU	BRITISH THERMAL UNITS	MU/A	MAKE-UP/AIR
BTUH	BRITISH THERMAL UNITS PER HOUR	NC	NOISE CRITERIA
CAP	CAPACITY	NC	NORMALLY CLOSED
CB	CATCH BASIN	NIC	NOT IN CONTRACT
CFM	CUBIC FEET PER MINUTE	NO	NUMBER
CLG	CEILING	NO	NORMALLY OPEN
CO	CLEAN OUT	NTS	NOT TO SCALE
CW	COLD WATER	O	OXYGEN
D	DEGREE	O/A	OUTSIDE AIR
DB	DRY BULB	ORD	OVERFLOW ROOF DRAIN
DIA	DIAMETER	PD	PRESSURE DROP
DN	DOWN	PIV	POST INDICATOR VALVE
DW	DISTILLED WATER	PLBG	PLUMBING
EA	EACH	PRESS	PRESSURE
EAT	ENTERING AIR TEMPERATURE	PRV	PRESSURE REDUCING VALVE
ELEC	ELECTRICAL	PSI	POUNDS PER SQUARE INCH
EQUIP	EQUIPMENT	PSIG	POUNDS PER SQUARE INCH GAUGE
EWC	ELECTRIC WATER COOLER	PWR	POWER
EWT	ENTERING WATER TEMPERATURE	R	DUCT RISER
E/A	EXHAUST AIR	R/A	RETURN AIR
EXIST	EXISTING	RCP	RADIANT CEILING PANEL
F	DEGREES FAHRENHEIT	RD	ROOF DRAIN
FCO	FLOOR CLEAN OUT	REC	RECESSED
FD	FLOOR DRAIN	RED	REDUCER
FDC	FIRE DEPARTMENT CONNECTION	RH	RELATIVE HUMIDITY
FL	FLOOR	RL/A	RELIEF AIR
FO	FUEL OIL	RM	ROOM
FOV	FUEL OIL VENT	RPM	REVOLUTIONS PER MINUTE
FOR	FUEL OIL RETURN	RW	RAIN WATER
FOS	FUEL OIL SUPPLY	SF	SQUARE FOOT
FPM	FEET PER MINUTE	S/A	SUPPLY AIR
FS	FLOOR SINK	SAN	SANITARY
FT	FOOT/FEET	SF	SQUARE FOOT
FTR	FIN TUBE RADIATION	SD	SMOKE DAMPER
GAL	GALLON	SM	SURFACE MOUNT
GF	GAS-FIRED	SP	STANDPIPE
GC	GENERAL CONTRACTOR	SP	STATIC PRESSURE
GPM	GALLONS PER MINUTE	STM	STEAM
GW	GREASE WASTE	T	THERMOSTAT
HB	HOSE BIB	TD	TEMPERATURE DROP
HP	HORSE POWER	TDR	TRENCH DRAIN
HTG	HEATING	TEMP	TEMPERATURE
HTR	HEATER	TYP	TYPICAL
HW	HOT WATER	UG	UNDERGROUND
HYD	HYDRANT	VAC	VACUUM
ID	INDIRECT	V	VENT
IN	INCH	VAV	VARIABLE AIR VOLUME
INV	INVERT	VENT	VENTILATION
LB	POUND	VTR	VENT THROUGH ROOF
LB/HR	POUNDS PER HOUR	W	WASTE
LAT	LEAVING AIR TEMPERATURE	WB	WET BULB
LP	LOW PRESSURE	WCO	WALL CLEAN OUT
LPG	LIQUEFIED PETROLEUM GAS	WH	WALL HYDRANT

Equipment Abbreviations

AC	AIR CONDITIONING UNIT	ET	EXPANSION TANK
ACCU	AIR COOLING CONDENSING UNIT	EWH	ELECTRIC WATER HEATER
AHU	AIR HANDLING UNIT	FCU	FAN COIL UNIT
AS	AIR SEPARATOR	FP	FIRE PUMP
B	BOILER	GI	GREASE INTERCEPTOR
CH	CHILLER	GRV	GRAVITY ROOF VENTILATOR
CT	COOLING TOWER	HWP	HEATING WATER PUMP
CUH	CABINET UNIT HEATER	HRU	HEAT RECOVERY UNIT
CHWP	CHILLED WATER PUMP	PRV	POWER ROOF VENTILATOR
DBP	DOMESTIC WATER BOOSTER PUMP	RE	RETURN/EXHAUST FAN
DC	DUCT MOUNTED COIL	RTU	ROOFTOP UNIT
DCP	DOMESTIC WATER CIRCULATING PUMP	SP	SUMP PUMP
EF	EXHAUST FAN	UH	UNIT HEATER
EDC	ELECTRIC DUCT COIL	WH	WATER HEATER

* NOTE *

ALL OF GENERAL NOTES ON THIS SHEET ARE TO BE APPLIED TO ALL OTHER DRAWINGS IN THIS SET.THE SYMBOLS AND ABBREVIATIONS SHOWN ON THIS SHEET MAY OR MAY NOT BE USED IN THIS SET OF DRAWINGS.

Plumbing Symbols

- 2" — Nominal Pipe Size
- Above Ground Piping
- Below Ground Piping
- 1/8" / 12" SLOPE — Pipe Slope (When Applicable)
- (E) — Existing Pipe To Remain
- Pipe To Be Demolished
- CW — Domestic Cold-Water
- NPW — Non-Potable Water
- S-CW — Soft Cold-Water
- F-CW — Filtered Cold-Water
- RO — Reverse Osmosis Water
- HW — Domestic Hot-Water
- HW 140° — Domestic Hot-Water 140°
- HW-R — Hot-Water Recirculation
- HW-R 140° — Hot-Water Recirculation 140°
- SS — Sanitary Drain
- V — Sanitary Vent
- WV — Sanitary Wet Vent
- CWV — Combination DWV
- CD — Condensate Drain
- ID — Indirect Drain
- GW — Grease Waste
- GV — Grease Vent
- OW — Oil Waste
- OV — Oil Vent
- PD — Pump Discharge
- SHWR — Solar Water Return
- SHWS — Solar Water Supply
- SD — Storm Drain
- OSD — Storm Overflow
- CA — Compressed Air
- G — Natural Gas
- LP — Liquid Propane
- Pipe Rise / Drop

Pipe Accessory Notes

- FLOOR CLEANOUT
- 2" BACKWATER — Swing Check
- 2" CHECK — Check Valve
- 2" CHECK — Alternate Check Valve
- 2" BALANCE — Balancing Valve
- 2" CIRC — Circuit Setter
- 2" GATE — Gate Valve
- 2" QUICK — Quick Opening Valve
- 2" S/O — Ball Valve
- 2" STRAIN — Fluid Strainer
- S — 1" GAS-CNTRL — Emergency Gas Shutoff
- 1" PLUG — Plug Valve
- 1" GAS COCK — Gas Shutoff Cock
- 1" REG — Gas Regulator
- T/P — 1" T/V — Thermostatic Valve
- T/P — PRIMER — Trap Primer
- M — 2" M-CNTRL — Elec. Control Valve
- T/P — TMV-T/P — Mixing Valve
- EM — TMV-EM — Emergency Mixer
- 2" PRV — Pressure Reducing Valve
- W — 2" METER — Water Meter
- 1 1/2" METER — Irrigation Meter
- Double Check Valve
- Reduced Pressure Zone

Plumbing Fixture Notes

- Floor Drain — Design Size
- 0" FD-1 — Identity Type
- 2 DFU — Drainage Fixture Units
- 2" FD-3 — Floor Drain w/ Deep Seal Trap
- 2" FD-3P — Floor Drain w/ Trap Primer "P" Indicates Primer Connection
- 2" FD-1 — Floor Drain w/ Integral Cleanout
- 3" AD-1 — Area Drain (No Trap)
- 6" DD-1 — Deck Drain
- 3" HD-1 — Hub Drain (Funnel Type)
- 3" FS-1 — FLOOR SINK
- 8" SD-12 — Roof Drain
- 6" SD-1 — Combination Drain
- 2000 SF — Rainfall Surface Area

Project Requirements

A REMOVE ALL UNUSED PIPING, DUCTWORK AND ACCESSORIES.

B THE MECHANICAL CONTRACTOR SHALL BE RESPONSIBLE FOR FIELD VERIFYING, PRIOR TO FINAL BID, ALL EXISTING CONDITIONS FOR PLUMBING AND MECHANICAL SYSTEMS WITHIN TENANT SPACE AND WITHIN CLOSE PROXIMITY OF TENANT SPACE.

C THE MECHANICAL CONTRACTOR SHALL PERFORM SERVICE AND REPAIR ON THE EXISTING EQUIPMENT AND ITS ACCESSORIES AS FOLLOWS: CLEAN ALL COILS, REPLACE THE FILTERS AND BELTS, INSPECT, REPAIR, OR REPLACE THE ECONOMIZERS, DRIVES AND FAN BEARINGS, MOTORS, CONTROL COMPONENTS, VALVES AND ANY OTHER ITEM NECESSARY FOR A COMPLETE AND PROPER OPERATING SYSTEM. THIS CONTRACTOR SHALL ALSO VISIT THE SITE, PRIOR TO FINAL BIDDING, AND VERIFY ALL EXISTING SITE CONDITIONS. PROVIDE ALL MATERIAL AND COMPONENTS AS NEEDED TO BRING THE UNITS TO FULL COMPLIANCE OF THE LANDLORD'S CRITERIA AND LOCAL AUTHORITY HAVING JURISDICTION.

D WHERE FLOOR DRAINS OCCUR WITHIN THE LIMITS OF CONSTRUCTION, PREVENT CONSTRUCTION DEBRIS FROM ENTERING DRAIN BODY BY SEALING DRAIN OPENING PRIOR TO START OF WORK. UNSEAL DRAINS AT COMPLETION OF CONSTRUCTION.

E COORDINATE INSTALLATION OF PIPING, DUCTWORK, CONDUIT, LIGHTS, CABLE TRAY, STRUCTURE, AND EQUIPMENT TO PREVENT CONFLICTS.

F THE CONTRACTOR SHALL BE FAMILIAR WITH ALL THE CONDITIONS BOTH EXISTING AND THOSE ILLUSTRATED BY THESE DOCUMENTS AS WELL AS THOSE WHICH CAN BE REASONABLY ANTICIPATED INCLUDING, BUT NOT LIMITED TO ARCHITECTURAL, ELECTRICAL, VENTILATION, AND OTHER SYSTEMS INVOLVED ON THIS PROJECT.

G FINAL PRODUCT SHALL BE A COMPLETE AND FUNCTIONING SYSTEM, AND SHALL CONFORM TO ALL REQUIREMENTS OF APPLICABLE FEDERAL, STATE, AND LOCAL CODES, INCLUDING BUT NOT LIMITED TO THE INTERNATIONAL BUILDING CODE AND INTERNATIONAL MECHANICAL CODE.

H LOCATE EQUIPMENT REQUIRING ACCESS 2'-0" MAXIMUM ABOVE CEILING.

I LOCATE DUCTWORK, PIPING AND MECHANICAL EQUIPMENT AWAY FROM THE SPACE ABOVE ELECTRICAL PANELS, TRANSFORMERS AND OTHER ELECTRICAL EQUIPMENT.

J PENETRATIONS OF RATED ASSEMBLIES SHALL BE FIRE STOPPED. FIRE STOPPING SHALL BE AN APPROVED MATERIAL AS PRESCRIBED IN CSFM STANDARD 43-1 AND SHALL BE U.L. LISTED.

K PROVIDE SLEEVES AND/OR OPENINGS TO RUN PIPES AND DUCTS THROUGH FOUNDATIONS, FLOORS, WALLS, AND ROOF.

L MAINTAIN CLEAR ACCESS TO SERVICE EQUIPMENT AND OTHER ACCESSORIES REQUIRING SERVICE, VISUAL INSPECTION OR HAND OPERATION. WHERE INDICATED OR REQUIRED, PROVIDE ACCESS PANELS OF THE TYPE SELECTED TO SUIT MATERIALS IN WHICH INSTALLED.

M ADJUST PIPING AND DUCTWORK SIZES TO PROPERLY CONNECT TO MECHANICAL EQUIPMENT.

N REFER TO HVAC SERIES DRAWINGS FOR GAS AND A.C. CONDENSATE DRAIN PIPING.

O PIPE SIZES SHOWN SHALL BE CONTINUED IN THE DIRECTION OF FLOW UNTIL ANOTHER SIZE IS SHOWN.

P INSTALL ALL EQUIPMENT IN ACCORDANCE WITH THE RESPECTIVE MANUFACTURER'S WRITTEN INSTALLATION INSTRUCTIONS, AT A LEVEL OF QUALITY AND WORKMANSHIP CONSISTENT WITH THE SPECIFICATIONS.

Q LOCATIONS OF PIPING, DUCTWORK AND EQUIPMENT AS INDICATED ON THE DRAWING, ARE APPROXIMATE AND SUBJECT TO MINOR ADJUSTMENTS IN THE FIELD. WORK SHALL BE COORDINATED WITH ALL OTHER TRADES TO AVOID INTERFERENCE IN THE FIELD.

R INSTALL EXPOSED PIPING AND DUCTWORK AS HIGH AS PRACTICAL IN ROOMS WITHOUT CEILINGS.

S THE CONTRACTOR'S WORK SCHEDULE SHALL BE SUBMITTED TO AND APPROVED BY THE OWNER.

T PRIOR TO STARTING WORK, SUBMIT SHOP DRAWINGS FOR ALL MECHANICAL EQUIPMENT, PLUMBING FIXTURES, AND DIFFUSERS.

U CONTRACTOR SHALL OBTAIN AND PAY FOR ALL NECESSARY PERMITS AND SHALL ARRANGE FOR ALL INSPECTIONS AS REQUIRED.

V PROVIDE ONE YEAR WARRANTY FOR ALL WORKMANSHIP AND MATERIALS AFTER THE DATE OF FINAL ACCEPTANCE.

Plumbing General Notes

A FIELD VERIFY ALL NEW WATER, WASTE, AND VENT PIPING CONNECTIONS AND PROVIDE NEW CONNECTIONS AS REQUIRED FOR PROPERLY OPERATING SYSTEMS.

B PITCH UNDERFLOOR SANITARY WASTE PIPING AT 1/4" PER FOOT, UNLESS NOTED OTHERWISE.

C PITCH UNDERFLOOR STORM PIPING 3" AND GREATER AT 1/8" PER FOOT, UNLESS NOTED OTHERWISE. PITCH ALL OTHER STORM PIPING AT 1/4" PER FOOT UNLESS OTHERWISE NOTED.

D WASTE AND VENT PIPING BELOW FLOOR AND THROUGH FLOOR SHALL BE 2" MINIMUM.

E PROVIDE CLEANOUT IN ACCESSIBLE LOCATION AT THE BASE OF ALL PLUMBING RISERS.

Plumbing Sheet Index

KKT
ARCHITECTURE \ INTERIORS \ ENGINEERING

KKT ARCHITECTS, INC.
2200 SOUTH UTICA PLACE, SUITE 200
TULSA, OKLAHOMA 74114
[P] 918.744.4270 \ [F] 918.744.7849
WWW.KKTARCHITECTS.COM
CERTIFICATE OF AUTHORIZATION

CEC
CEC CORPORATION
WWW.CONNECTCEC.COM
OK CA# 32 EXP: 2026-06-30
CEC PROJECT 240417

EAST CENTRAL HIGH SCHOOL CAFETERIA REMODEL

TULSA PUBLIC SCHOOLS

12150 E 11TH
TULSA, OK
74128

PROFESSIONAL ENGINEER
MATTHEW MALONE
10/18/24
35205
OKLAHOMA

REV. DATE	#	DESCRIPTION
10-18-2024	.	100% CD

PLUMBING LEGEND & NOTES

P001

Plumbing Fixture Schedule

Type Identity	Description	Manufacturer	Model	Drain Size	Product Specification
FCO	FLOOR CLEANOUT	WADE	6000		REFERANCE PLANS FOR REQUIRED SIZE. CAST IRON WITH NICKEL BRONZE FINISH NO-HUB CLEANOUT WITH FLANGED FERRULE. PROVIDE WITH BRASS GASKETED PLUG.
FD-1	FLOOR DRAIN	WADE	W1100	2"	FLOOR DRAIN WITH 6" STANDARD STRAINER, A.R.C. INTERIOR COATING, NICKEL BRONZE FINISH, AND PROVENT TRAP GUARD SEALING DEVICE.
FD-1	FLOOR DRAIN	WADE	W1100	3"	FLOOR DRAIN WITH 6" STANDARD STRAINER, A.R.C. INTERIOR COATING, NICKEL BRONZE FINISH, AND PROVENT TRAP GUARD SEALING DEVICE.
FS-1	FLOOR SINK	WADE	W9150-1-TSD	3"	12"X12"X10" A.R.C. FLOOR SINK WITH 1/2 GRATE, STRAINER, AND TRAP SEALING DEVICE.
GI-1	GREASE INTERCEPTOR	HAUSNERS	GT-1000	4"	1,000 GALLON PRECAST CONCRETE GREASE INTERCEPTOR WITH ACCESS COVERS. COORDINATE DEPTH WITH GC.
EWC-1A	Water Cooler	Elkay	EZS8WSSK	1 1/2"	Single Wall Hung Water Bottle Filling Station. The Unit Shall Be Complete With Cabinet, Mounting Frame, Self Closing Easy Touch Side And Front Pushbar Controls, Flexiguard Safety Bubbler, Refrigerating System, Air Cooled, 120 Volt, 60 Cycle, Single Phase Power Connection, Fully Automatic, Complete And Ready To Operate. Mount Unit At Ada Compliant Height.
YCO	YARD CLEANOUT	WADE	6000-85-X	4"	CAST IRON BODY WITH STAINLESS STEEL HEAVY DUTY COVER FINISH NO-HUB CLEANOUT WITH FLANGED FERRULE. PROVIDE WITH BRASS GASKETED PLUG. PROVIDE REINFORCED CONCRETE PAD FOR ANTICIPATED TRAFFIC LOADING AND INSTALL PER MANUFACTURER INSTRUCTIONS.

Grease Interceptor Sizing

Fixture Quantity	Fixture Description	Unit Fixture Dimension (In)	Unit Fixture Indirect Drain Size	DFU IPC Table 709.2	Unit Volume (Cu In)	Unit Capacity (Gallons)	Unit Drain Load Gallons @75%	Drain Time (Min)	Total Flow Rate (GPM)[1]	Uses Per Hour	Total Per 30 Minutes (Gallon)[2]
Kitchen											
1	3 Comp Sink Via Floor Sink	26 x 21 x 14 x 3	-	-	22,932	99.3	74.45	1	74.45	2	74.5
1	2 Comp Sink Via Floor Sink	18 x 18 x 10 x 2	-	-	6,480	28.1	21.04	1	21.04	2	21.0
5	Hand Sink	14 x 10 x 6	-	-	840	3.6	2.73	1	13.64	4	136.4
4	Prep Table With Sink Via Floor Sink	18 x 18 x 10	-	-	3,240	14.0	10.52	1	42.08	2	168.3
2	Combi-Oven Via Floor Sink	-	2"	3	-	-	-	-	3.50	4	6.0
1	iVario Two Pan Via Floor Sink	-	1-1/2"	2	-	-	-	-	1.00	4	2.0
12	Drop-inFood Wells Via Floor Drain	-	3/4"	1	-	-	-	-	0.50	4	12.0
1	Ice Machine Via Floor Drain	-	1/2" & 3/4"	2	-	-	-	-	1.00	4	2.0
2	Mobile Convection Oven Via Floor Sink	-	3/4"	1	-	-	-	-	0.50	4	2.0
1	Wall Mounted Hose Reel Via Floor Sink	-	2"	3	-	-	-	-	1.50	4	3.0
1	Dishwasher Via Floor Sink	-	1-1/2"	2	-	-	-	-	1.00	10	5.0
4	Emergency Floor Drain	0	-	0	-	-	-	-	0.00	0	0.0

Notes

[1] GPM based on IPC 709.3

[2] Gallon based on IPC 1003.3.7

Minimum Grease Interceptor Required (Gallons) = 432.2

Grease Interceptor Provided (Gallons) = 1000

KEYED NOTES: (X)

1. PLUMBING IN THESE AREAS IS TO REMAIN AS IS, NOT WITHIN SCOPE.
2. 1000 GALLON PRECAST CONCRETE GREASE INTERCEPTOR PER TULSA REQUIREMENTS. BASIS OF DESIGN TO INSTALL GREASE INTERCEPTOR IN EXISTING ASPHALT PARKING LOT WITH TRAFFIC RATED LIDS, COORDINATE FINAL LOCATION WITH EXISTING CONDITIONS. PATCH AND REPAIR ASPHALT TO MATCH EXISTING CONDITIONS. INSTALL PER MFR INSTRUCTIONS AND VENT PER CODE. IF REQUIRED, ROUTE VENT THRU BUILDING TO VTR TERMINATION. INSTALL VENT PIPE FOR GREASE TRAP CONNECTED TO NO FIXTURE VENTS.
3. PROVIDE DUAL YARD CLEANOUTS ON BOTH SIDES OF GREASE INTERCEPTO LOCATED IN CONCRETE PAD FLUSH WITH GRADE. PROVIDE PADS 2'x2'x4".
4. EXTEND NEW SEWER TO CONNECT TO NEAREST 4"Ø OR LARGER SANITARY SEWER. FIELD VERIFY EXACT LOCATION AND INVERT.
5. PROVIDE ALL WASTE PIPE CAST IRON TO GREASE TRAP. PROVIDE CLEANOUT / YARD CLEANOUT EVERY 100' AS NEEDED.
6. SLEEVE AND SEAL ALL PIPES PASSING THRU MASONRY WALLS, FOOTINGS, OR FOUNDATIONS SHALL BE SLEEVED AND SEALED WATER TIGHT. TYPICAL THROUGHOUT.

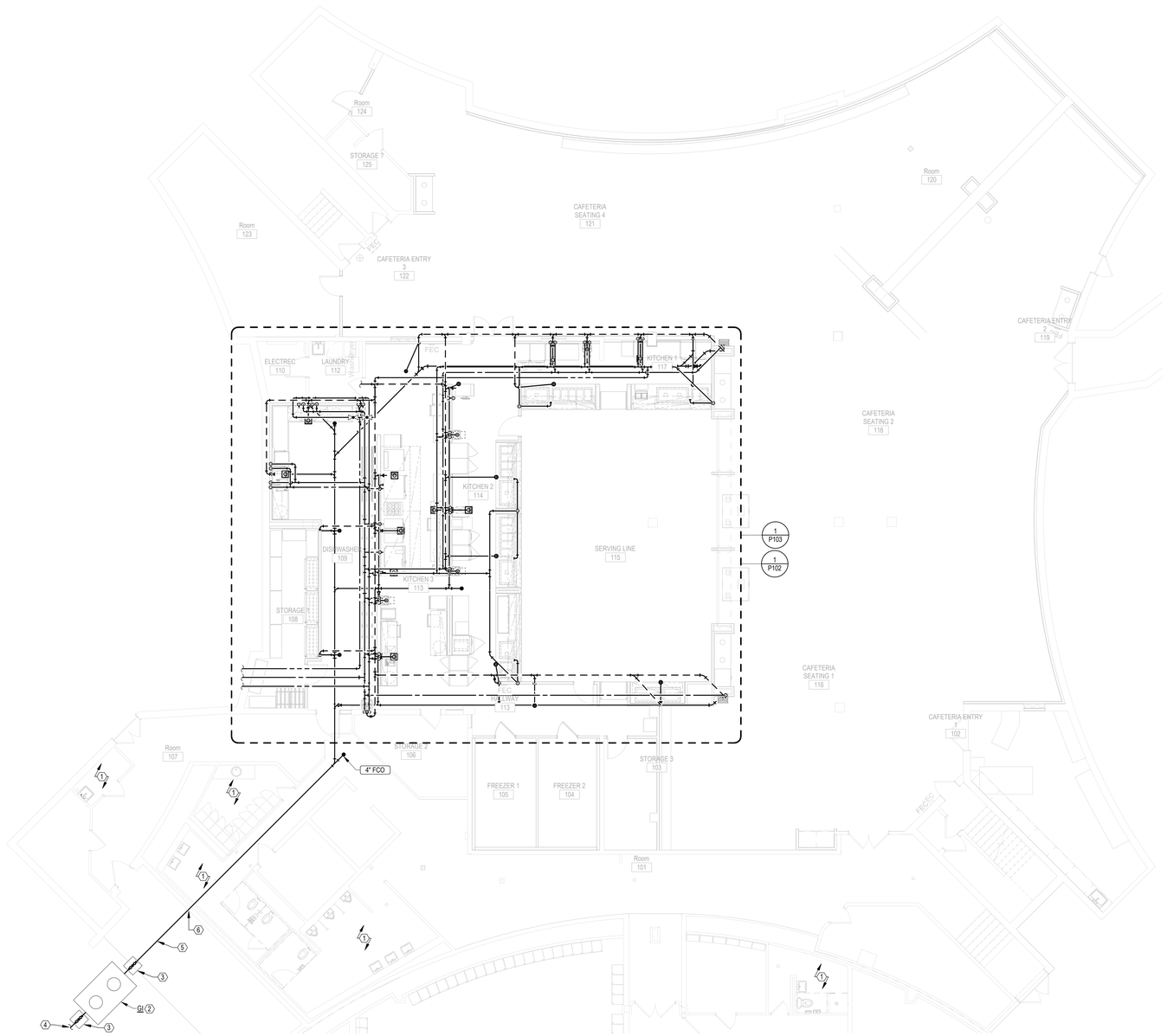

1 P101 CAFETERIA - PLUMBING PLAN
1/8" = 1'-0"

KKT
ARCHITECTURE \ INTERIORS \ ENGINEERING

KKT ARCHITECTS, INC.
2200 SOUTH UTICA PLACE, SUITE 200
TULSA, OKLAHOMA 74114
[P] 918.744.4270 \ [F] 918.744.7849
WWW.KKTARCHITECTS.COM
CERTIFICATE OF AUTHORIZATION

CEC
CEC CORPORATION
WWW.CONNECTCEC.COM
OK CA# 32 EXP: 2026-06-30
CEC PROJECT 240417

EAST CENTRAL HIGH SCHOOL CAFETERIA REMODEL

TULSA PUBLIC SCHOOLS

12150 E 11TH
TULSA, OK
74128

PROFESSIONAL ENGINEER
MATTHEW MALONE
10/18/24
35205
OKLAHOMA

REV.	DATE	#	DESCRIPTION
	10-18-2024	-	100% CD

CAFETERIA - PLUMBING PLAN

P101

Autodesk Docs://240417 - EAT - TPS East Central High School Cafeteria Remodel/P101.rvt
Created on 2024-10-17

KEYED NOTES: (X)

1. GC TO CONNECT NEW VENT LINE TO EXISING VENT LINE PREVIOUSLY SERVING AREA. VERIFY EXACT LOCATION IN FIELD AND CONNECT TO 3" LINE OR LARGER.
2. PROVIDE FLOOR CLEANOUTS FLUSH WITH FLOOR. LOCATE NO CLOSER THAN 18" TO WALLS OR MILLWORK. COORDINATE FINAL FINISH OF CLEANOUT WITH ARCHITECT AND FLOOR TYPE. TYPICAL THROUGHOUT.
3. COORDINATE FINAL LOCATION OF DRAIN RECEPTORS WITH FOOD SERVICE EQUIPMENT PROVIDER. COORDINATE WITH KITCHEN CONSULTANT DRAWINGS. TYPICAL THROUGHOUT.
4. HAND SINK PROVIDED BY FOOD SERVICE AND INSTALL BY PLUMBING. PROVIDE DRAIN TO GREASE WASTE SYSTEM.
5. PROVIDE WASTE PIPING FROM KITCHEN EQUIPMENT TO DRAIN RECEPTOR. COORDINATE WITH FOOD SERVICE FOR PIPE MATERIAL AND SIZE. DO NOT COMBINE WASTE PIPING. PROVIDE INSTALLATION AS TO NOT VOID WARRANTY.
6. SINK PROVIDED AND INSTALLED BY FOOD SERVICE CONTRACTOR. STRAINER PROVIDED BY FOOD SERVICE CONTRACTOR. PLUMBING CONTRACTOR TO PROVIDE AND INSTALL WASTE PIPING FROM DRAIN CONNECTION TO FLOOR SINK TERMINATION. PROVIDE 2" AIR GAP.
7. PLUMBING IN THESE AREAS IS TO REMAIN AS IS, NOT WITHIN SCOPE.

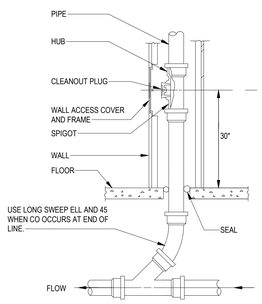

4 P102 WALL CLEAN OUT DETAIL
1/8" = 1'-0"

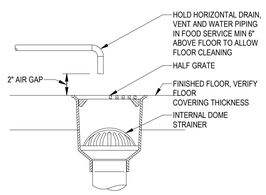

3 P102 FLOOR SINK
1/8" = 1'-0"

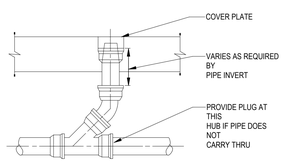

2 P102 CLEAN OUT AND PLUGGED RISER
1/8" = 1'-0"

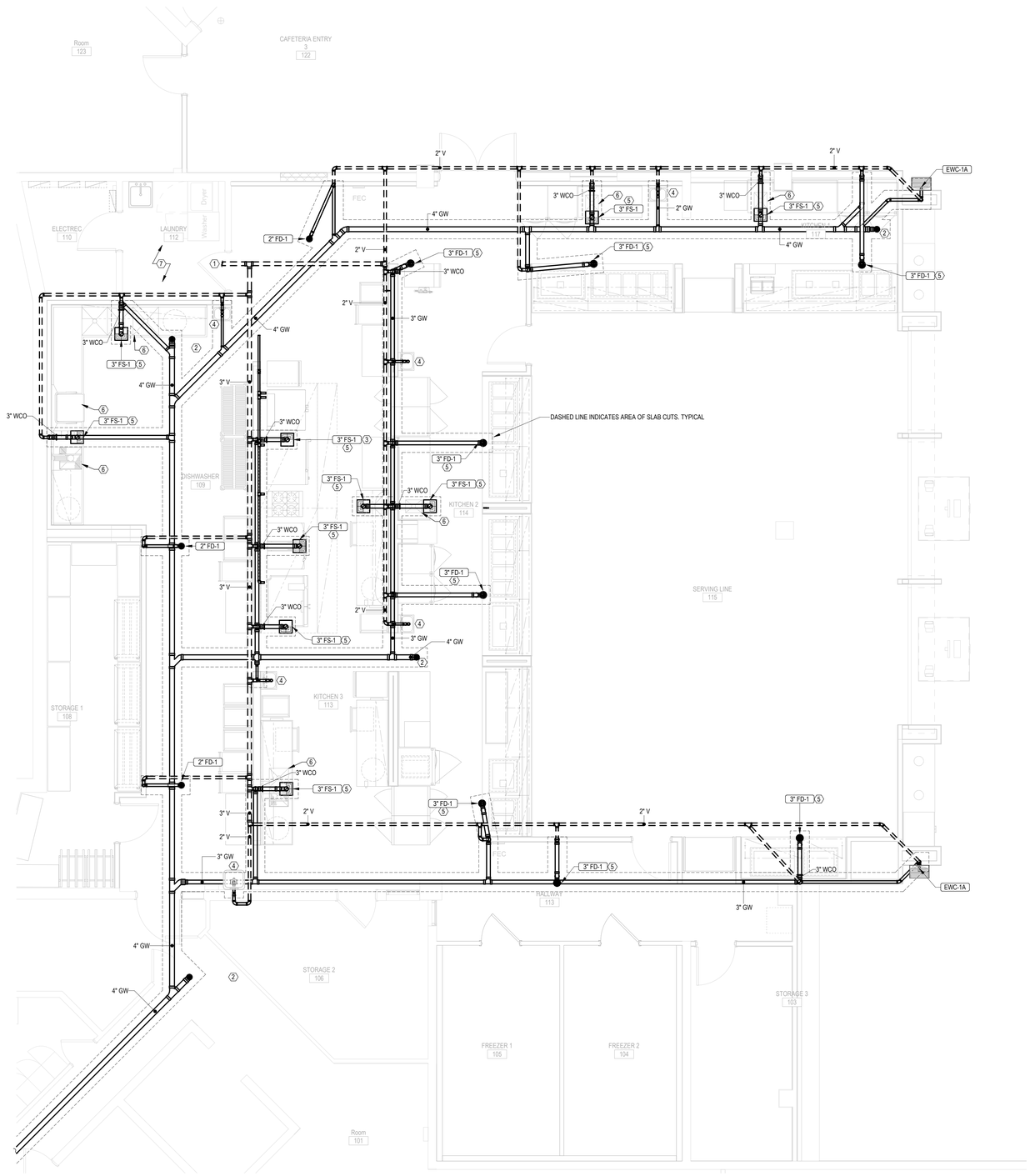

1 P102 KITCHEN - DWV PLAN
1/4" = 1'-0"

KKT
ARCHITECTURE \ INTERIORS \ ENGINEERING

KKT ARCHITECTS, INC.
2200 SOUTH UTICA PLACE, SUITE 200
TULSA, OKLAHOMA 74114
[P] 918.744.4270 \ [F] 918.744.7849
WWW.KKTARCHITECTS.COM
CERTIFICATE OF AUTHORIZATION

CEC
CEC CORPORATION
WWW.CONNECTCEC.COM
OK CA#: 32 EXP: 2026-06-30
CEC PROJECT 240417

EAST CENTRAL HIGH SCHOOL CAFETERIA REMODEL

TULSA PUBLIC SCHOOLS

12150 E 11TH
TULSA, OK
74128

MATTHEW MALONE
10/18/24
35205
OKLAHOMA

REV.	DATE	#	DESCRIPTION
	10-18-2024	-	100% CD

KITCHEN - DWV PLAN

P102

Autodesk Docs://240417_EAT_CPS East Central/P102 - KITCHEN - DWV PLAN.dwg
Created on 10/18/2024

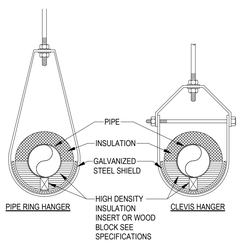

2 P103 INSULATED PIPE AT HANGER DETAIL
1/8" = 1'-0"

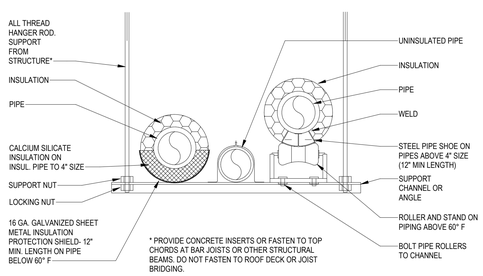

3 P103 TRAPEZE PIPE HANGER DETAIL
1/8" = 1'-0"

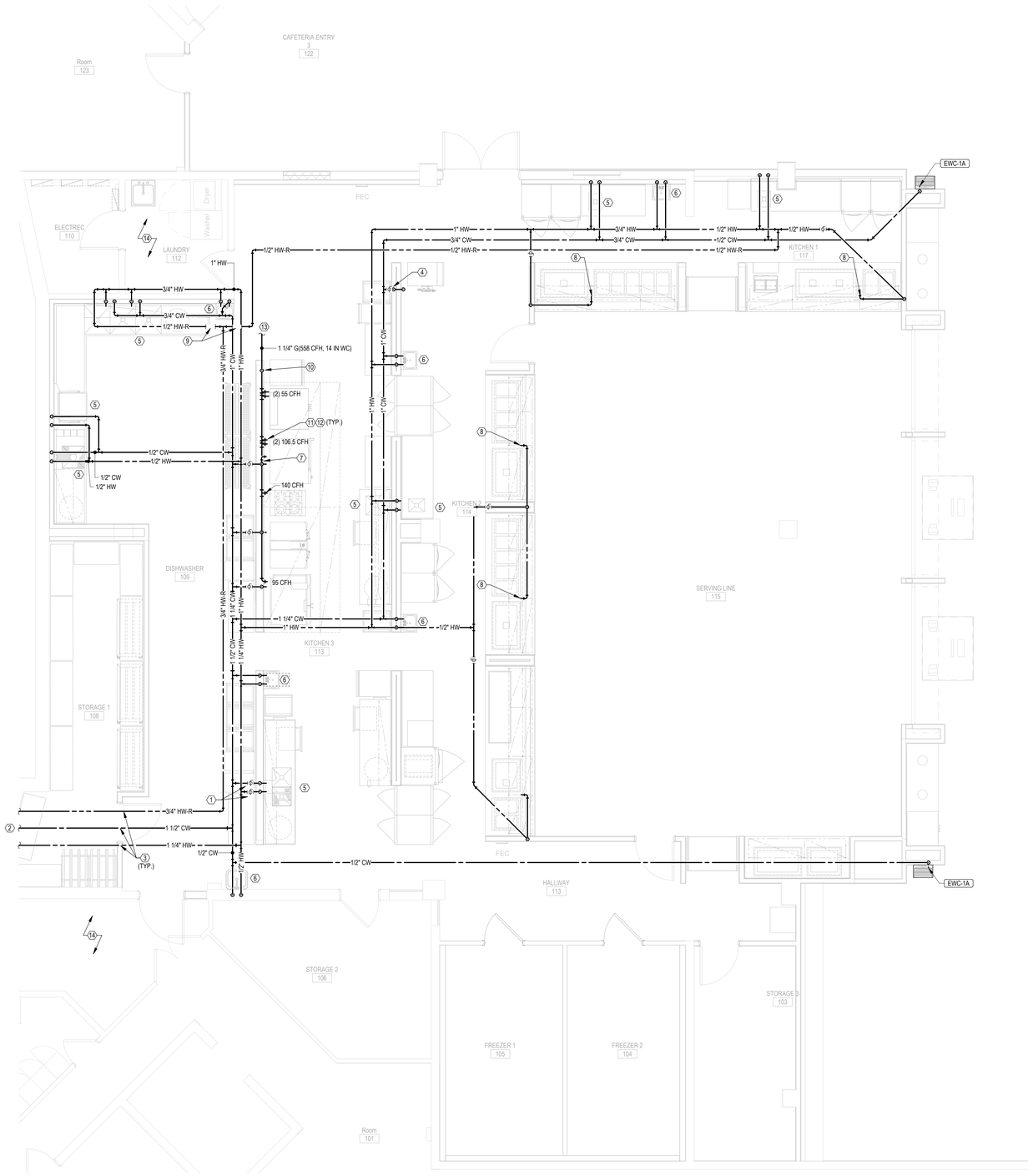

1 P103 KITCHEN - DOMESTIC WATER PLAN
1/4" = 1'-0"

KEYED NOTES: (X)

1. LOCATE SHUT-OFF VALVES FOR COMPLETE ACCESSIBILITY. PROVIDE 1/2" BLUE DOT IN CEILING GRID FOR VALVES LOCATED ABOVE CEILING. TYPICAL THROUGHOUT.
2. EXTEND NEW 1-1/2" COLD WATER TO NEAREST 1-1/2" OR LARGER COLD WATER MAIN & EXTEND NEW 1-1/4" HOT WATER TO NEAREST 1-1/4" OR LARGER HOT WATER LINE & 3/4 HWR BACK TO WATER HEATER. FIELD VERIFY EXACT TIE-IN LOCATION. PROVIDE UNION AND SHUT-OFF VALVE FULLY ACCESSIBLE AT POINT OF CONNECTION.
3. SLEEVE AND SEAL PIPE PASSING THROUGH MASONRY WALLS, FLOORS, AND SLABS.
4. ICE MACHINE AND WATER FILTER BY FOOD SERVICE. PROVIDE SHUT-OFF VALVE AND RUNOUT PIPING AT 48"AFF TO FILTER AND FIXTURE. INSTALL VALE AND FILTER FOR COMPLETE ACCESS. VERIFY EXACT CONNECTION REQUIREMENTS AND LOCATION WITH FOOD SERVICE CONTRACTOR. INSTALL PIPING WITH IN-LINE BACKFLOW PREVENTER WHERE NOT INTEGRAL TO ICE MAKER.
5. FOOD SERVICE EQUIPMENT AND FAUCETS PROVIDED AND INSTALLED BY FOOD SERVICE CONSULTANT. PLUMBING CONTRACTOR SHALL PROVIDE SHUT-OFF VALVES AND RUN OUT PIPING TO FOOD SERVICE FAUCETS. INSTALL PIPING WITH IN-LINE BACKFLOW PREVENTER WHERE NOT INTEGRAL TO FOOD SERVICE EQUIPMENT.
6. HAND SINK PROVIDED BY FOOD SERVICE CONTRACTOR TO BE INSTALLED BY PLUMBING CONTRACTOR. PROVIDE THERMOSTATIC MIXING VALVE EQUIVALENT TO WATTS LFUSG-B. PROVIDE RUN-OUT PIPING AND SHUT-OFF VALVES. INSULATE ALL WATER PIPES. LOCATE ROUGH-IN AT 24" AFF.
7. DROP WATER COLD WATER IN WALL. ROUTE HORIZONTALLY AT 12" AFF TO SERVE FIXTURES. VERIFY FIXTURE LOCATIONS AND TYPES WITH FOOD SERVICE. ROUTE HORIZONTAL WATER BELOW ANY ELECTRICAL RECEPTACLES OR CONDUITS. INSTALL PIPING WITH IN-LINE BACKFLOW PREVENTER WHERE NOT INTEGRAL TO FOOD SERVICE EQUIPMENT.
8. WATER PIPE ROUTED IN WALL AND UNDER MILLWORK TO LOCATION INDICATED. REFERANCE KITCHEN DRAWINGS FOR EXACT LOCATION. LOCATE ROUGH-IN AT 9" AFF. INSTALL PIPING WITH IN-LINE BACKFLOW PREVENTER WHERE NOT INTEGRAL TO FOOD SERVICE EQUIPMENT.
9. PROVIDE CIRCUIT SETTING BALANCE VALVE IN HOT WATER R ECIRCULATION PIPE.
10. INSTALL ELECTRIC GAS VALVE AT 60" AFF AND MANUAL GAS VALVE 72" AFF.
11. 2" LOOP STYLE GAS HEADER BEHIND EQUIPMENT. PROVIDE RUNOUTS FULL SIZE OF EQUIPMENT CONNECTIONS. COORDINATE WITH FOOD SERVICE EQUIPMENT.
12. PROVIDE UNION, SHUT-OFF VALVE, AND DIRT LEG AT EACH POINT OF CONNECTION TO GAS FIRED APPLIANCE. PROVIDE IDENTIFICATION LABEL FOR VALVES INSIDE WALLS AND ABOVE CEILINGS. PROVIDE 1/2" YELLOW DOT IN CEILING GRID FOR VALVES ABOVE CEILING. TYPICAL.
13. EXTEND GAS LINE AND CONNECT TO EXISTING GAS LINE PREVIOUSLY SERVING KITCHEN.
14. PLUMBING IN THESE AREAS IS TO REMAIN AS IS, NOT WITHIN SCOPE.

KKT
ARCHITECTURE \ INTERIORS \ ENGINEERING

KKT ARCHITECTS, INC.
2200 SOUTH UTICA PLACE, SUITE 200
TULSA, OKLAHOMA 74114
[P] 918.744.4270 \ [F] 918.744.7849
WWW.KKTARCHITECTS.COM
CERTIFICATE OF AUTHORIZATION

CEC
CEC CORPORATION
WWW.CONNECTCEC.COM
OK CoA# 32 EXP: 2026-06-30
CEC PROJECT 240417

EAST CENTRAL HIGH SCHOOL CAFETERIA REMODEL

TULSA PUBLIC SCHOOLS

12150 E 11TH
TULSA, OK
74128

REV.	DATE	#	DESCRIPTION
	10-18-2024	-	100% CD

KITCHEN - DOMESTIC WATER & GAS PLAN

P103

ELECTRICAL SYMBOLS AND ABBREVIATIONS

MARK	DESCRIPTION	MARK	DESCRIPTION	MARK	DESCRIPTION
A	ABOVE COUNTER, REFER DETAIL 9/E-501	GFCI	GROUND FAULT CIRCUIT INTERRUPTER	OCP	OVERCURRENT PROTECTION
AFF/AFG	ABOVE FINISHED FLOOR/GRADE	GND	GROUND	RCPT	RECEPTACLE
ALT	ALTERNATE	HOA	HAND OFF AUTOMATIC	SM	SURFACE MOUNTED
AMP	AMPERE	IN	INCHES	SPD	SURGE PROTECTION DEVICE
APPROX	APPROXIMATE	KW	KILOWATTS	SPEC	SPECIFICATION(S)
ARCH	ARCHITECT/ARCHITECTURAL	MCC	MOTOR CONTROL CENTER	TV	TELEVISION
ATS	AUTOMATIC TRANSFER SWITCH	MDP	MAIN DISTRIBUTION PANEL	TYP	TYPICAL
C	CONDUIT	MECH	MECHANICAL	UG	UNDERGROUND
CLG	CEILING	MTS	MANUAL TRANSFER SWITCH	UNO	UNLESS NOTED OTHERWISE
DISC	DISCONNECT SWITCH	NC	NORMALLY CLOSED	V	VOLTS
EC	ELECTRICAL CONTRACTOR	NEC	NATIONAL ELECTRIC CODE, NFPA 70	W/	WITH
EXIST	EXISTING	NIC	NOT IN CONTRACT	W/O	WITHOUT
EP	EXPLOSION PROOF	NL	NIGHT LIGHT	WP	WEATHERPROOF (DEVICE AND WHILE-IN-USE ENCLOSURE)
FT	FEET	NO	NORMALLY OPEN	WR	WEATHER RESISTANT (DEVICE AND FLIP ENCLOSURE)
GC	GENERAL CONTRACTOR	NTS	NOT TO SCALE	XFMR	TRANSFORMER
				1/E2	DETAIL 1 ON SHEET E2
	HALFTONE SYMBOL INDICATES EXISTING		NEMA 5-20R DUPLEX RECEPTACLE		SURFACE MOUNTED RACEWAY WITH POWER/ DATA ASSEMBLIES
	DASHED SYMBOL INDICATES DEMOLITION		NEMA 5-20R QUADPLEX RECEPTACLE, (2 DUPLEX RECEPTS IN A 2-GANG BOX)		TELEPHONE OUTLET
	ELECTRICAL 480V PANELBOARD	A	NEMA 5-20R DUPLEX RECEPTACLE MOUNTED ABOVE COUNTER	W	WALL TELEPHONE OUTLET
	ELECTRICAL 208V PANELBOARD		NEMA 5-20R DUPLEX RECEPTACLE MOUNTED IN CEILING		DATA OUTLET
	DISCONNECT SWITCH FUSIBLE UNLESS OTHERWISE NOTED, NUMBERS INDICATE FRAME/FUSE/POLE		TAMPER RESISTANT NEMA 5-20R DUPLEX RECEPTACLE, GROUND FAULT CIRCUIT INTERRUPTER TYPE		TELEDATA COMBINATION OUTLET
	DISCONNECT SWITCH NON FUSIBLE UNLESS OTHERWISE NOTED, NUMBERS INDICATE FRAME, FUSE, POLE	W	WEATHER AND TAMPER RESISTANT NEMA 5-20R DUPLEX RECEPTACLE OR SAME IN WEATHERPROOF ENCLOSURE		WIRELESS ACCESS POINT
	CONTACTOR/MAGNETIC MOTOR STARTER OR COMBINATION TYPE	IG	NEMA 5-20R DUPLEX RECEPTACLE,ISOLATED GROUND TYPE	CR	CARD READER
	VFD W/ DISCONNECTING MEANS	IG	NEMA 5-20R ISOLATED GROUND QUADPLEX, RECEPTACLE, ORANGE COLOR	K	KEYPAD
FACP	FIRE ALARM CONTROL PANEL		TAMPER RESISTANT SPLIT DUPLEX, NEMA 5-20R DUPLEX RECEPTACLE MOUNTED AT 18" WITH TWO CIRCUITS.		CCTV CAMERA
FAAP	FIRE ALARM ANNUCIATOR PANEL		20A TAMPER RESISTANT DUPLEX RECEPTACLE (LEVITON T5825 OR EQUAL)		LIGHT FIXTURE ON (EM) LIFE SAFETY BRANCH, INVERTER, OR INTEGRAL 90 MINUTE BATTERY
NAC	SIGNAL POWER EXTENDER		TAMPER RESISTANT USB A/C TYPE RECEPTACLE (LEVITON T5833 OR EQUAL)	$3	LIGHT SWITCH, SPST, 20A. NUMBER INDICATES DPST, 3-WAY, 4-WAY
GAP	GENERATOR ANNUCIATOR PANELBOARD	EWC	ELECTRIC WATER COOLER, NEMA 5-20R DUPLEX RECEPT. MOUNT PER MANUFACTURER'S REQUIREMENTS. PROVIDE GFCI BREAKER.	$b	LIGHT SWITCH, SPST, 20A. LETTER INDICATES CONTROL ZONE
	MOTOR OUTLET/CONNECTION - SEE SCHEDULE		SPECIAL OUTLET - SEE DEVICE SCHEDULE	$P	LIGHT SWITCH, PILOT LIGHT "ON", 20A
	EQUIPMENT CONNECTION - SEE SCHEDULE		SPECIAL OUTLET - POKE THRU - SEE SCHEDULE	$K	LIGHT SWITCH, KEY-OPERATED, 20A
XXXX	MECHANICAL EQUIPMENT TAG	FF	FURNITURE FEED - FLOOR BOX - TRIM COLOR TBD	$M	MANUAL MOTOR STARTER SWITCH W/ OVERLOAD
XXXX	OWNER EQUIPMENT TAG	FF	FURNITURE FEED - POKE THRU - TRIM COLOR TBD	$V	VOLUME CONTROL
	RISER OR CONDUIT TURNED DOWN		FLOOR BOX - DUPLEX WITH METALLIC FLIP COVER	$WP	WEATHER PROOF SWITCH
	RISER OR CONDUIT TURNED UP		FLOOR BOX - QUAD WITH METALLIC FLIP COVER	LV	LOW VOLTAGE OVERRIDE SWITCH
	CAP ON PIPE	J	JUNCTION BOX (J-BOX OR JB)	M	OCCUPANCY SENSOR SWITCH- WALL MOUNTED
	OPEN CONDUIT END	IR	INFRARED PLUMBING MOTION SENSOR	D	WALLBOX DIMMER SWITCH
	TEST PORT	P	POWER POLE	F	FAN SWITCH/CONTROLLER
A-1,3,5	HOMERUN WITH BRANCH CIRCUIT(S) AS INDICATED	PB	PULL BOX	OS	OCCUPANCY SENSOR - CEILING MOUNTED - SEE LIGHTING CONTROL SCHEDULE
A-1,3,5	PARTIAL HOMERUN WITH BRANCH CIRCUIT(S) AS INDICATED	S S	SPEAKER (WALL OR CEILING MOUNTED)	OS	OCCUPANCY SENSOR - WALL MOUNTED - SEE LIGHTING CONTROL SCHEDULE
	EMERGENCY CIRCUIT		PUSH BUTTON	PC	OUTDOOR PHOTOELECTRIC CELL - SEE SENSOR SCHEDULE
	LOW VOLTAGE CIRCUIT		START STOP	DS	INDOOR DAYLIGHT SENSOR - SEE SENSOR SCHEDULE
	NORMAL CIRCUIT				
	UNDERGROUND CIRCUIT				

GENERAL ELECTRICAL REQUIREMENTS:

1. ELECTRICAL WORK SHALL BE PERFORMED IN COMPLIANCE WITH THE ADOPTED EDITIONS OF THE INTERNATIONAL BUILDING (IBC), ELECTRICAL (NEC), AND FIRE (IFC) CODES, NFPA 13, 70, 72, 90A, 101 AND ALL LOCAL AMENDMENTS AND REGULATIONS. ALL WORK SHALL BE DONE IN ACCORDANCE WITH THESE DRAWINGS AND SHALL BE PERFORMED WITH THE LATEST INDUSTRY ACCEPTED STANDARDS. ANY DISCREPANCIES BETWEEN THE DRAWINGS AND APPLICABLE CODES SHALL BE BROUGHT TO THE ATTENTION OF THE ENGINEER AND THE MORE STRINGENT OF THE TWO SHALL BE FOLLOWED. ALL WORK SHALL BE CONDUCTED IN A SAFE MANNER WITH ADEQUATE PROTECTION FOR THE NEW WORK, EXISTING PROPERTY, AND THE GENERAL PUBLIC.
2. CONTRACTOR SHALL VISIT THE SITE TO DETERMINE THE EXTENT OF EXISTING CONDITIONS, NEW WORK, PATCHING, ETC., REQUIRED BY THE PROJECT, AND TO BECOME FAMILIAR WITH THE WORK CONDITIONS. NO ADDITIONAL COMPENSATION WILL BE ALLOWED FOR WORK INDICATED OR REQUIRED; FOR WORK PROVIDED DURING NON-STANDARD HOURS; FOR WORK REQUIRED TO MAINTAIN BUILDING SAFETY AND FUNCTION; FOR WORK TO PATCH/REPAIR BUILDING SYSTEMS AND FINISHES; OR ANY OTHER WORK RESULTING FROM REQUIRED NEW WORK, RECONNECTION, AND/OR DEMOLITION OPERATIONS.
3. THE WORK REQUIRED IS DIAGRAMMATICALLY INDICATED ON THE DRAWINGS. IT IS IMPRACTICAL TO INDICATE ALL REQUIRED MODIFICATIONS AND PATCHING IN EVERY DETAIL. IT IS THE INTENT OF THIS PROJECT TO EXTEND EXISTING SYSTEMS AND PROVIDE NEW SYSTEMS AS INDICATED, COMPLETE IN EVERY RESPECT WHETHER OR NOT SPECIFICALLY DETAILED. INFORMATION ON EXISTING UTILITIES, BUILDINGS, AND SITE LAYOUT HAS BEEN TAKEN FROM OWNER'S & CIVIL ENGINEER'S DRAWINGS AND LIMITED SITE SURVEYS. LOCATIONS, SIZES, QUANTITIES, ETC., ARE APPROXIMATE & ARE INDICATED TO ASSIST IN OUTLINING THE SCOPE OF THE WORK. CONTRACTOR ACKNOWLEDGES THAT EXISTING CONDITIONS HAVE BEEN VERIFIED AND ARE ACCEPTABLE. VARIATIONS IN ACTUAL SITE CONDITIONS AND CONCEALED CONSTRUCTION SHALL BE BROUGHT TO OWNER'S ATTENTION FOR RESOLUTION PRIOR TO COMMENCING APPLICABLE WORK.
4. PROTECT EXISTING CONSTRUCTION & COMPONENTS WHICH ARE TO REMAIN. REPAIR, TO PRE-DISTURBED CONDITION, ANY DAMAGE RESULTING FROM DEMOLITION OR NEW CONSTRUCTION OPERATIONS. CONCEALED CONDITIONS MAY EXIST THAT WILL REQUIRE MINOR REVISIONS IN ARRANGEMENT OF PIPING, VALVES, ATTACHMENTS, CONDUIT, ETC. EXISTING UTILITIES DAMAGED BY CONTRACTOR DURING NEW PIPING, CONDUIT OR EQUIPMENT INSTALLATION SHALL BE REPAIRED TO OWNER'S SATISFACTION.
5. ELECTRICAL SYSTEM PENETRATIONS THROUGH NEW & EXISTING WALLS, FLOOR/CEILING, OR ROOF CONSTRUCTION SHALL BE THOROUGHLY FILLED WITH FIRE RESISTANT MATERIAL (STUFFING FIBRE-FLAX DURA BLANKET IN CAVITIES) AND SEALED WITH 3M BRAND FIRE BARRIER CAULK, CP25. ALL FIRE STOPPING SHALL BE EQUAL TO OR BETTER THAN ASSEMBLY PENETRATED. PENETRATION OF ALL FIRE BARRIERS SHALL NOT IMPAIR THE INTEGRITY OF THE BARRIER. ALL SLEEVED OPENINGS SHALL BE FINISHED IN SUCH A MANNER THAT MAINTAINS THE FIRE RESISTANCE.
6. ELECTRICAL EQUIPMENT INSTALLATIONS SHALL BE IN FULL ACCORDANCE WITH MANUFACTURERS' RECOMMENDATIONS. ALL MATERIALS AND EQUIPMENT SHALL BE NEW AND SHALL MEET CURRENT INDUSTRY STANDARDS. WHERE APPLICABLE, EQUIPMENT SHALL BEAR TESTING LABORATORY LABELS. TEST ALL EQUIPMENT FOR PROPER OPERATION. ALL NEW MATERIALS AND EQUIPMENT SHALL BE OF FIRST QUALITY AND FREE FROM DEFECTS.
7. CONTRACTOR SHALL SUBMIT PRODUCT DATA OF ALL PROPOSED MATERIALS AND EQUIPMENT FOR APPROVAL.
8. CONTRACTOR SHALL COORDINATE THE INSTALLATION OF ALL MECHANICAL EQUIPMENT WITH ELECTRICAL WIRING AND CONDUIT, AND OTHER SYSTEMS SPECIFIED AND REQUIRED IN THE PROJECT. CONTRACTOR SHALL MAINTAIN PROPER CLEARANCES BETWEEN MECHANICAL AND ELECTRICAL EQUIPMENT. DUCTS, PIPES, OR EQUIPMENT SHALL NOT INTRUDE ON ELECTRICAL CLEARANCE SPACE AS DEFINED IN THE CURRENT EDITION OF THE NATIONAL ELECTRICAL CODE.
9. ALL NECESSARY PERMITS, LICENSES, CERTIFICATES, TESTS, ETC., SHALL BE OBTAINED BY THE CONTRACTOR, INCLUDED IN THE PROJECT COST AND BID, WITHOUT ADDITIONAL COST TO THE OWNER OR ENGINEER.
10. THE CONTRACTOR SHALL UPDATE RECORD DRAWINGS DAILY. ANNOTATE "AS INSTALLED" CONDITIONS IN RED INK ON HARD COPIES, INDICATING ALL CHANGES FROM THE ORIGINAL DRAWINGS MADE DURING THE INSTALLATION OF THE WORK. AT COMPLETION OF THE PROJECT, THE RECORD DRAWINGS SHALL BE DELIVERED TO THE OWNER'S REPRESENTATIVE.
11. THE CONTRACTOR SHALL PROVIDE A MINIMUM ONE YEAR WARRANTY ON ALL MATERIALS AND LABOR. UNLESS NOTED OTHERWISE.
12. CONDITIONS MAY OCCUR THAT WILL REQUIRE MINOR REVISIONS IN ARRANGEMENT OF DUCTWORK, ATTACHMENTS, CONDUIT, ETC., ON VARIOUS SYSTEMS. SUCH MODIFICATIONS ARE DEEMED A PART OF THIS CONTRACT, AND SHALL BE SUBMITTED FOR REVIEW PRIOR TO COMMENCEMENT OF WORK.
13. ALL NEW WORK SHALL BE IN ACCORDANCE WITH THE REQUIREMENTS OF THE AMERICAN DISABILITIES ACT (A.D.A.) AND ALL STATE REQUIREMENTS.
14. CONTRACTOR SHALL COORDINATE ALL CONNECTION REQUIREMENTS OF OWNER-FURNISHED EQUIPMENT & EQUIPMENT FURNISHED BY OTHERS. PROVIDE NECESSARY MATERIAL AND LABOR FOR A COMPLETE INSTALLATION.
15. ALL PATCHING AND PAINTING SHALL BE THE RESPONSIBILITY OF THE CONTRACTOR AND SHALL INCLUDE PATCHING AND PAINTING AS A RESULT OF MECHANICAL AND ELECTRICAL ALTERATIONS, CHANGES, AND ADDITIONS. COORDINATE WITH ARCHITECT.
16. SPACE IS LIMITED IN PORTIONS OF THIS PROJECT AND CLOSE COORDINATION WILL BE REQUIRED. CONTRACTOR SHALL COORDINATE TRADES INVOLVED COORDINATION DURING INSTALLATION OF NEW DUCTWORK, ELECTRICAL, AND DEVICES AT AND ABOVE THE CEILING. NOTIFY ENGINEER OF ANY DISCREPANCIES PRIOR TO PERFORMING WORK.
17. REFER TO ARCHITECTURAL DRAWINGS FOR ADDITIONAL REQUIREMENTS. SEE SEPARATE PROJECT MANUAL FOR GENERAL CONDITIONS AND SPECIFICATIONS. IF APPLICABLE. WHERE DISCREPANCIES OCCUR BETWEEN THESE DRAWINGS AND THE PROJECT MANUAL, THE LATTER SHALL BE FOLLOWED, COORDINATE WITH ENGINEER.
18. THE CONTRACTOR SHALL MODIFY, REMOVE AND/OR RELOCATE ALL MATERIALS AND ITEMS INDICATED ON THE DRAWINGS OR REQUIRED BY THE INSTALLATION OF NEW SYSTEMS/EQUIPMENT. ALL REMOVALS AND/OR DISMANTLING SHALL BE CONDUCTED IN A MANNER TO PRODUCE MAXIMUM SALVAGE. SALVAGE MATERIALS SHALL BE DISPOSED OF OFF-SITE, EXCEPT THAT THE OWNER RESERVES THE RIGHT TO SELECT AND RETAIN ANY DESIRED SALVAGE ITEMS. CONTRACTOR SHALL VERIFY WITH OWNER PRIOR TO REMOVING SALVAGED MATERIALS FROM SITE. MATERIALS AND/OR ITEMS SCHEDULED FOR RELOCATION AND WHICH ARE DAMAGED DURING DISMANTLING OR REASSEMBLING OPERATIONS SHALL BE REPAIRED AND RESTORED TO GOOD OPERATIVE CONDITION. THE CONTRACTOR MAY SUBSTITUTE NEW MATERIALS AND/OR ITEMS OF A LIKE DESIGN AND EQUAL QUALITY IN LIEU OF MATERIALS AND/OR ITEMS TO BE RELOCATED.
19. CONCEAL ALL PIPING AND CONDUIT IN FINISHED AREAS UNLESS OTHERWISE NOTED. ALL PIPING, DEVICES, APPARATUS, EQUIPMENT, ETC., SHALL BE PROPERLY SUPPORTED AND BRACED VERTICALLY AND HORIZONTALLY IN ACCORDANCE WITH CODES AND AS REQUIRED TO PREVENT EXCESSIVE MOVEMENT.
20. COORDINATE CEILING MOUNTED FIXTURES, DEVICES, ETC., WITH MECHANICAL DRAWINGS AND ARCHITECT'S REFLECTED CEILING PLAN DRAWINGS FOR EXACT LOCATIONS OF FIXTURES.
21. CONTRACTOR SHALL SEQUENCE WORK TO MINIMIZE DOWNTIME & OUTAGES. COORDINATE INTERRUPTION OF ANY UTILITY WITH OWNER. CONTRACTOR SHALL COORDINATE THE INSTALLATION OF ALL MECHANICAL EQUIPMENT WITH ELECTRICAL WIRING AND CONDUIT, AND OTHER SYSTEMS SPECIFIED AND REQUIRED IN THE BUILDING.
22. CORING SLAB PENETRATIONS FOR PIPING/CONDUIT AND DRILLING OF THE STRUCTURE FOR EQUIPMENT ANCHORAGE SHALL NOT BE PERFORMED WITHOUT THE PRIOR APPROVAL OF OWNER AND STRUCTURAL ENGINEER.
23. ALL REQUIRED CUTS INTO EXISTING CONCRETE WALKS, CURBS, AND ALL PAVED AREAS SHALL BE NEATLY SAW CUT AND PATCHED TO MATCH EXISTING TO THE SATISFACTION OF OWNER.
24. IN THE EVENT OF SUBSTITUTION OF EQUIPMENT, IT SHALL BE THE RESPONSIBILITY OF THE SUBSTITUTING CONTRACTORS TO COORDINATE ADDITIONAL REQUIREMENTS FOR THESE ALTERATIONS. THE SUBSTITUTING CONTRACTORS SHALL BE RESPONSIBLE TO PROVIDE ADDITIONAL EQUIPMENT, CONDUCTORS, BOXES, CONDUIT, ADJUST OVER-CURRENT PROTECTION DEVICES, PROVIDE ADDITIONAL OCPD, LABOR, ADJUST CONDUCTOR SIZES, ADJUST CONDUCTOR QUANTITIES, AND OTHER NECESSARY APPURTENANCES AS REQUIRED TO PROVIDE A COMPLETE AND OPERATIONAL SYSTEM PER THE MANUFACTURER'S RECOMMENDATIONS. INCLUDE ALL COSTS IN BASE BID.
25. THESE DRAWINGS DIAGRAMMATICALLY INDICATE THE INTENT OF THE PROPOSED CONSTRUCTION. SLIGHT VARIATIONS IN TENANT'S FURNITURE AND SITE CONDITIONS MAY REQUIRE OUTLETS TO BE RELOCATED TO ACCOMMODATE THE ACTUAL FURNITURE AND/OR OUTLETS. CONTRACTOR SHALL COORDINATE THE INSTALLATION OF ALL OUTLETS WITH OWNER'S REPRESENTATIVE, PERFORMING ADJUSTMENTS TO OUTLET LOCATIONS AS REQUIRED FOR A FINISHED AND FUNCTIONAL SYSTEM.
26. COORDINATE MOUNTING LOCATIONS OF RECEPTACLES, CLOCKS, FIRE ALARM DEVICES, TELEPHONE OUTLETS, SPECIAL PURPOSE OUTLETS, DATA/COMMUNICATIONS OUTLETS, SECURITY DEVICES, ETC., WITH ARCHITECT'S DRAWINGS AND SITE CONDITIONS PRIOR TO ROUGH-IN.
27. COORDINATE CEILING MOUNTED WIRING DEVICES, FIRE ALARM DEVICES, ETC., WITH MECHANICAL DRAWINGS AND ARCHITECT'S REFLECTED CEILING PLANS.
28. WHERE BACK-TO-BACK WALL MOUNTED DEVICES ARE INDICATED, SEPARATE ADJACENT OUTLET BOXES SHALL BE USED. THRU-WALL BOXES ARE NOT ACCEPTABLE FOR ANY DEVICES.
29. PROVIDE NEC REQUIRED SAFETY DISCONNECT SWITCHES ON ALL EQUIPMENT WHETHER SPECIFICALLY INDICATED OR NOT ON DRAWINGS.
30. ALL POWER WIRING SHALL BE INSTALLED IN CONDUIT. ALL LOW VOLTAGE WIRING SHALL USE PLENUM-RATED CABLE.
31. WIRING DEVICES INDICATED OR FOUND TO BE EXISTING SHALL BE VERIFIED FOR PROPER OPERATION, SAFETY AND APPLICATION PRIOR TO REUSE.
32. ALL NEW POWER AND LIGHTING CIRCUITS SHALL BE #12 COPPER MINIMUM, THHN, THWN OR THW, WITH GREEN WIRE GROUND AND SHALL BE CONNECTED TO A 20A BREAKER, MINIMUM.
33. ALL NEW CONCEALED CONDUITS SHALL BE 3/4" MINIMUM EMT WITH COMPRESSION TYPE FITTINGS. PROVIDE SHORT SECTIONS OF FLEXIBLE METAL CONDUIT WHERE REQUIRED. PROVIDE GALVANIZED RIGID CONDUIT IN EXPOSED LOCATIONS SUBJECT TO DAMAGE. INDIVIDUAL WIRING DEVICE CIRCUITS ONLY MAY UTILIZE 1/2" CONDUIT.
34. ALL CONDUCTORS ON ALL WIRING SYSTEMS SHALL BE COPPER.
35. ALL POWER WIRING SYSTEMS SHALL CONTAIN A "GREEN WIRE" INSULATED GROUND CONDUCTOR WITHIN THE RACEWAY SIZED IN ACCORDANCE WITH NEC ARTICLE 250. IN NO CASE SHALL THE METALLIC RACEWAY ALONE BE USED AS A GROUNDING CONDUCTOR PATH.
36. CONTRACTOR SHALL REMOVE ALL CONDUCTORS IN WALLS, ABOVE CEILINGS AND BELOW FLOORS THAT WILL NO LONGER SERVE EQUIPMENT. REMOVE ALL UNUSED CONDUITS WHERE POSSIBLE.
37. ALL RACEWAYS SHALL BE SUPPORTED AND ATTACHED IN ACCORDANCE WITH THE NEC.
38. PROVIDE A TYPED PANEL DIRECTORY FOR EACH NEW AND EXISTING PANEL AFFECTED BY THIS PROJECT. DIRECTORY SHALL IDENTIFY THE CIRCUIT NUMBER AND EQUIPMENT SERVED. PENCIL IN "SPARE" FOR UNUSED BRANCH OVER CURRENT DEVICES AND LEAVE "SPACES" BLANK FOR FUTURE USE.
39. ALL DEVICE AND JUNCTION BOXES SHALL BE GALVANIZED STEEL OR CAST METAL TYPE.
40. CIRCUIT NUMBERS WHERE INDICATED ARE FOR REFERENCE AND MAY NOT COINCIDE WITH AVAILABLE OR FINAL CIRCUITS USED. CONTRACTOR SHALL NOTE ACTUAL CIRCUITS USED ON PANEL DIRECTORY CARDS AND RECORD DRAWINGS. UPDATE CIRCUIT DIRECTORY CARDS IN NEW AND PANELS AFFECTED BY THE WORK OF THIS PROJECT.
41. ON ALL NEW AND TELEPHONE AND DATA/COMMUNICATION DEVICE BOXES, CONTRACTOR SHALL PROVIDE EMPTY CONDUIT TO ABOVE CEILING AND INSTALL PULL STRING, UNLESS NOTED OTHERWISE.
42. FLOOR POKE-THROUGHS SHALL BE FIRE RATED WITH FLUSH POKE THROUGH AND CONDUIT ADAPTER WHERE INDICATED ON DRAWINGS.
43. IF POWER FOR NEW CIRCUITS IS TO BE DERIVED FROM PANELBOARDS, RE-USE BREAKERS AND/OR PROVIDE NEW MATCHING BREAKERS AS REQUIRED FOR NEW CIRCUITS.
44. ALL POWER RECEPTACLE WIRING DEVICES SHALL BE RATED MINIMUM 20A AND SHALL BE COMMERCIAL GRADE, HEAVY DUTY, GROUNDING TYPE WITH GROUND SCREW FOR GROUND CONDUCTOR ATTACHMENT.
45. ELECTRICAL WIRING COLOR CODING SHALL BE IN ACCORDANCE WITH NEC AND ANY LOCAL AMENDMENTS.
46. PROVIDE MINIMUM 200 POUND TEST STRENGTH NYLON PULL CORDS IN ALL EMPTY CONDUIT SYSTEMS WITH LABELS ON CORDS INSIDE ALL JUNCTION BOXES.
47. ALL NEW WIRING DEVICES SHALL BE FLUSH MOUNTED WHEREVER POSSIBLE. MULTIPLE DEVICES SHALL BE MOUNTED IN GANGS WITH A COMMON GANG DEVICE PLATE. ALL DEVICES AND COVER PLATES SHALL MATCH WHERE APPLICABLE. COORDINATE WITH ARCHITECT FOR FINAL DEVICE AND FACEPLATE FINISHES.
48. CONTRACTOR SHALL VERIFY CIRCUITRY IN CONDUITS TO ASSURE THAT ALL AREAS OUTSIDE PROJECT BOUNDARIES REMAIN IN SERVICE, WHERE APPLICABLE.
49. ALL SWITCHES AND CONTROLS SHALL BE MOUNTED 40" TO TOP OF BOX, UNLESS NOTED OTHERWISE. ALL RECEPTACLES SHALL BE MOUNTED 18" AFF TO BOTTOM OF BOX, UNLESS NOTED OTHERWISE.
50. CONTRACTOR SHALL COORDINATE AS REQUIRED, ALL CONDUITS, ROUGH-INS, CONNECTIONS, ETC., FOR SECURITY, TELEPHONE, COMPUTER/DATA DEVICES AND EQUIPMENT BY OWNER OR OTHERS.
51. WHERE RELOCATED OR NEW LIGHTING FIXTURES ARE TO BE CONNECTED TO CIRCUITING OF ADJACENT FIXTURES, CONTRACTOR SHALL VERIFY EACH 20A CIRCUIT DOES NOT EXCEED 1800 VA (120V) OR 4400 VA (277V) OF LOAD UNLESS APPROVED BY ENGINEER. LIGHTING SHALL BE CONNECTED USING NEW AND/OR EXISTING WIRING/CONDUIT AS APPLICABLE, AND SHALL BE CONTROLLED IN SIMILAR ZONE SWITCHING ARRANGEMENT AS EXISTING FIXTURES.
52. ALL LAMPING SHALL BE 4000K TEMPERATURE THRU-OUT, TYPICAL, UNLESS NOTED OTHERWISE. LAMPING COLOR SHALL BE REVIEWED AND APPROVED BY THE OWNER PRIOR TO PURCHASE OF LIGHTING FIXTURES. ADJUST FINAL COLOR TEMPERATURES AS REQUIRED.
53. LIGHTING FIXTURE BALLASTS SHALL BE SUITABLE FOR CIRCUIT VOLTAGE TO WHICH CONNECTED, FIELD VERIFY.
54. COORDINATE MOUNTING LOCATIONS OF ALL LIGHT SWITCHES, EXIT SIGNS, ETC., WITH ARCHITECT'S DRAWINGS AND SITE CONDITIONS PRIOR TO ROUGH-IN.
55. FIXTURES AND SWITCHES FOUND TO BE EXISTING AND NOT INDICATED TO BE RE-USED AS INSTALLED SHALL BE REMOVED WITH CEILING/WALL PATCHED AND PAINTED OR BLANK COVER PLATE PROVIDED AS REQUIRED, CONFIRM.
56. REFER TO MECHANICAL AND PLUMBING DRAWINGS FOR LOCATIONS, QUANTITIES, AND ELECTRICAL CONNECTION REQUIREMENTS OF EQUIPMENT. REFER TO MECHANICAL EQUIPMENT ELECTRICAL CONNECTIONS SCHEDULE FOR MECHANICAL AND PLUMBING EQUIPMENT POWER REQUIREMENTS AND CIRCUITING.
57. PROVIDE AND INSTALL WHITE LABELS WITH BLACK LETTERING FOR IDENTIFICATION OF PANEL AND CIRCUITS.
58. PRIOR TO ROUGH-IN OF ANY DEVICES, COORDINATE WITH ARCHITECT MILLWORK ELEVATION DRAWINGS FOR EXACT LOCATIONS.
59. SUBMITTAL PROCESS AND SUBSTITUTIONS - ENGINEER WILL ONLY REVIEW QUANTITY (1) ONE SUBSTITUTE SUBMITTAL PACKAGE. IF THE SUBMITTED SUBSTITUTED PACKAGE DOES NOT MEET OR EXCEED THE SPECIFIED PACKAGE IN QUALITY AND PERFORMANCE, THE SPECIFIED PACKAGE (IN ENTIRETY) SHALL BE PROVIDED AT NO ADDITIONAL COST TO THE OWNER. PRIOR APPROVAL SUBMITTALS ARE NOT REQUIRED FOR BIDDING PURPOSES. LIGHT FIXTURE PACKAGES SHALL BE PROVIDED BY SUPPLIERS WITHIN THE STATE IN WHICH THE PROJECT IS CONSTRUCTED. NO OUT OF STATE SUPPLIERS LIGHTING PACKAGES WILL BE ACCEPTED.
60. KITCHEN EQUIPMENT, FUELING EQUIPMENT, AND GAS VALVES SHALL BE PROVIDED WITH SHUNT-TRIP BREAKERS AND EMERGENCY POWER OFF SWITCHES AS REQUIRED. E.C. SHALL COORDINATE ADDITIONAL REQUIRED SPACES IN PANELS WITH PANEL MANUFACTURER PRIOR TO ORDERING EQUIPMENT. INCLUDE ALL COSTS IN BASE BID.
61. ELECTRICAL CONTRACTOR IS RESPONSIBLE FOR ESTABLISHING TEMPORARY SERVICE FOR CONSTRUCTION. E.C. SHALL ENDURE ALL ASSOCIATED COSTS.
62. ELECTRICAL CONTRACTOR SHALL CONTACT THE ELECTRICAL UTILITY PROVIDER TO DETERMINE FINAL UTILITY REQUIREMENTS, LOCATIONS, AND SIZES PRIOR TO ROUGH-IN AND PURCHASE OF EQUIPMENT. E.C. SHALL ADJUST ALL EQUIPMENT, CONDUCTORS, CONDUIT, AND OTHER ASSOCIATED APPURTENANCES AS REQUIRED TO ACCOMMODATE THE ELECTRICAL UTILITY PROVIDER AS REQUIRED. E.C. SHALL INCLUDE ALL ASSOCIATED COSTS IN BASE BID.
63. LIGHTING FIXTURES SHOWN ON THE DRAWINGS ARE DIAGRAMMATICAL AND ARE NOT INTENDED FOR EXACT PLACEMENT. FINAL LIGHTING FIXTURE LOCATIONS (INTERIOR AND EXTERIOR) SHALL BE COORDINATED WITH THE ARCHITECT AND OWNER FOR FINAL FINISH, LOCATION, LAMP COLOR, ETC. PRIOR TO ROUGH-IN AND PURCHASE OF EQUIPMENT.
64. PROVIDE CONCRETE HOUSEKEEPING PADS FOR ALL FLOOR MOUNTED ELECTRICAL EQUIPMENT. MINIMUM REQUIREMENTS: 3.5" THICK AND REINFORCED WITH #3 BARS AT 12" ON-CENTER EACH WAY. 1-1/2" CLEAR COVER FROM THE TOP OF THE SLAB, ¾" CHAMFER ON TOP EDGES, EXTEND PAD 4" BEYOND EQUIPMENT FOOTPRINT.

LOW VOLTAGE SCOPE

GENERAL
1. CONTRACTOR SHALL CLARIFY ANY LOW VOLTAGE SCOPE QUESTIONS DURING THE BIDDING PHASE.
2. PLENUM RATED CABLE SHALL BE SUPPORTED BY DEDICATED J-HOOKS ABOVE ACCESSIBLE CEILING UON. ROUTE CABLE IN CONDUIT WHEN CABLE IS INACCESSIBLE (HARD CEILING) OR EXPOSED (NO CEILING).

DATA / PHONE, SECURITY, ACCESS CONTROL, AUDIO / VIDEO
1. CONTRACTOR TO PROVIDE INFRASTRUCTURE (RACEWAY, LINE VOLTAGE POWER) AS REQUIRED FOR A COMPLETE SYSTEM.
2. INDICATED DEVICES, LOCATIONS, AND INFORMATION ARE PROVIDED FOR BIDDING PURPOSES ONLY. COORDINATE FINAL REQUIREMENTS WITH PROVIDING VENDOR / CONTRACTOR PRIOR TO ROUGH-IN.
3. CONTRACTOR TO PROVIDE TELECOM CABLING AND INSTALLATION, INCLUDING JACKS, FINAL TERMINATIONS AND TESTING, CONFORM TO TULSA PUBLIC SCHOOLS PREMISE CABLING SPECIFICATION SECTION 271500.
4. INDICATED DEVICES, LOCATIONS, AND INFORMATION ARE PROVIDED FOR BIDDING PURPOSES ONLY. COORDINATE FINAL REQUIREMENTS WITH PROVIDING VENDOR/ CONTRACTOR PRIOR TO ROUGH-IN.
5. OWNER TO PROVIDE CABLING, RACK AND ACTIVE EQUIPMENT UNDER SEPARATE CONTRACT.

INTERCOM, CLOCK, AND WIRELESS ACCESS POINTS
1. CONTRACTOR TO REMOVE AND REPLACE SYSTEMS PER TULSA PUBLIC SCHOOLS PREMISE CABLING SPECIFICATIONS AS NEEDED IN DEMOLISHED AREAS. SEE SPECIFICATION SECTION 271500.

DEMOLITION NOTES

A. REFER TO MECHANICAL AND ARCHITECTURAL DEMOLITION PLANS. REMOVE ASSOCIATED EQUIPMENT AS INDICATED ON PLANS.

B. REFER TO PROPOSED ELECTRICAL PLANS E201. ALL RECEPTACLES AND DATA DROPS ON DEMOLISHED WALLS SHALL BE REMOVED.

C. REMOVE EXISTING DISCONNECTED/ABANDONED CONDUCTORS AND CONDUIT BACK TO SOURCE AND DISPOSE.

KKT
ARCHITECTURE \ INTERIORS \ ENGINEERING

KKT ARCHITECTS, INC.
2200 SOUTH UTICA PLACE, SUITE 200
TULSA, OKLAHOMA 74114
[P] 918.744.4270 \ [F] 918.744.7849
WWW.KKTARCHITECTS.COM
CERTIFICATE OF AUTHORIZATION

CEC
CEC CORPORATION
WWW.CONNECTCEC.COM
OK CoA# 32 EXP. 2026-06-30
CEC PROJECT 240417

EAST CENTRAL HIGH SCHOOL CAFETERIA REMODEL

TULSA PUBLIC SCHOOLS

12150 E 11TH
TULSA, OK
74128

REGISTERED PROFESSIONAL ENGINEER
JAMES W. LANE, JR.
No. 17528
OKLAHOMA
10-18-24

REV. DATE	#	DESCRIPTION
10-18-2024	-	100% CD

ELECTRICAL COVER SHEET

E001

LIGHTING CONTROL PANEL - 'LCP'

RELAY	CIRCUIT	AREA(S) CONTROLLED	PLAN DESIGNATION	POLE/DIMMING	CONTROL SCENARIO
1	GK-3-12	SERVING AREA	aa	1P/NON-DIM	A
2	GK-3-13	CAFETERIA	bb	1P/NON-DIM	A
3	GK-3-15	CAFETERIA	cc	1P/NON-DIM	A
4	GK-3-17	CAFETERIA	dd	1P/NON-DIM	A
5	--	SPARE	ee	1P/NON-DIM	--
6	--	SPARE	ff	1P/NON-DIM	--
7	--	SPARE	gg	1P/NON-DIM	--
8	--	SPARE	hh	1P/NON-DIM	--

GENERAL NOTES:
1. BASIS OF DESIGN CONTROL PANEL IS HUBBELL CX08.
2. COORDINATE ALL SCHEDULE SETTINGS WITH OWNER PRIOR TO PROGRAMMING.
3. SEE PLANS FOR LOCAL AND GLOBAL OVERRIDE SWITCHES.

CONTROL SCENARIOS:
(A) SCHEDULE ON/SCHEDULE OFF WITH AFTERHOURS OVERRIDE CONTROL.
PROGRAMCONTROL BUTTON STATIONS IN PUBLIC SPACES TO NOT FUNCTION DURING SCHOOL HOURS.

LIGHTING FIXTURE SCHEDULE

CALL OUT	LIGHT SOURCE LUMENS	CCT	CRI	WATT	VOLT	DESCRIPTION	MOUNTING	MANUFACTURER	CATALOG NUMBER	GENERAL NOTES
A2	3600	4000K	80CRI	30 W	120 V	2X4 LED TROFFER	RECESSED	COOPER	24F3140C	-
A2E	3600	4000K	80CRI	30 W	120 V	2X4 LED TROFFER	RECESSED	COOPER	24F3140C - EL14W	-
A4	6500	4000K	80CRI	63 W	120 V	2X4 LED TROFFER	RECESSED	COOPER	24FP6440C	-
A4E	6500	4000K	80CRI	63 W	120 V	2X4 LED TROFFER	RECESSED	COOPER	24FP6440C - EL14W	-
D1	1500	4000K	80CRI	9 W	120 V	6IN DOWNLIGHT, MED DIST.	RECESSED	HE WILLIAMS	6DR-TL-L15-8-40-UNV-L-M-OF-WH-	-
M	3000	4000K	80CRI	32 W	120 V	4' LINEAR UTILITY STRIP BATTERY	SUSPENDED	HE WILLIAMS	7SS-4-L30-8-40-EM/10WR	
T1	625L/FT	4000K	80CRI	20 W	120 V	WALL WASH TAPE LIGHT	RECESSED CHANNEL	LEDI	VS-STND-ECO-40	LIGHT SHALL BE INSTALLED UNDER COUNTERTOP TO WASH CERAMIC TILE
XM1	-	-	-	5 W	120 V	SINGLE FACE EXIT SIGN	WALL	EVENLITE	TLX-AC-RU-W	-

LIGHTING FIXTURE NOTES
1. SPECIFIED FIXTURES INDICATE DESIGN INTENT. SUBSTITUTIONS ARE WELCOME. NO PRE-APPROVAL REQUIRED. ENGINEER WILL REVIEW ONE LIGHTING SUBMITTAL PACKAGE DURING SUBMITTAL PHASE. IF SUBSTITUTIONS ARE DEEMED NOT EQUAL TO SPECIFIED FIXTURE, CONTRACTOR SHALL PROVIDE SPECIFIED FIXTURE.
2. SEE ARCHITECTURAL PLANS FOR ADDITIONAL LIGHTING INFORMATION - ELEVATIONS, CEILING HEIGHTS, CEILING TYPES, DETAILS, ETC.

Branch Panel: (E) GK-1 — EXISTING

Location: ELECTREC 109 **Volts:** 208Y/120 **A.I.C. Rating:** 22,000 AMPS SYMMETRICAL
Supply From: **Phases:** 3 **Mains Type:** MLO
Mounting: SURFACE **Wires:** 4 **Bus Amps:** 225
Enclosure: NEMA 1 **Lugs:** Standard

Notes:

CKT	Circuit Description	Trip	Poles	A		B		C		Poles	Trip	Circuit Description	CKT
1	(NCB)(GFCI) E03 - M. PROOF/HOT CAB	30 A	1	2000	750					2	20 A	(NCB)(GFCI) E11 - HOT CABINET	2
3	(NCB)(GFCI) E03.2 - M. PROOF/HOT CAB	30 A	1			2000	750						4
5	(NCB)(GFCI) E04 - ICE MAKER	20 A	1					1080	1000	2	20 A	(NCB)(GFCI) E13 - ROLL-IN HOT CAB.	6
7				7667	1000								8
9	(NCB)(GFCI) E05 - INVARIO PRO 2-S	100 A	3			7667	750			2	20 A	(NCB)(GFCI) E09.2 - PASS-THRU HOT CABINET	10
11								7667	750				12
13	(NCB)(GFCI) E06 - COMBINATION OVEN	20 A	2	450	750					2	20 A	(NCB)(GFCI) E09 - PASS-THRU HOT CABINET	14
15						450	750						16
17	(NCB)(GFCI) E06.2 - COMBINATION	20 A	2					450	1176	1	20 A	(NCB)(GFCI) E08.2 - CONVECTION...	18
19	OVEN			450	700					1	20 A	(NCB)(GFCI) E10 - PASS-THRU FRIDGE	20
21	(NCB)(GFCI) E07 - CONVECTION OVEN	20 A	1			1440	700			1	20 A	(NCB)(GFCI) E10.2 - PASS-THRU...	22
23	(NCB)(GFCI) E08 - CONVECTION OVEN	20 A	1					1176	700	1	20 A	(NCB)(GFCI) E12 - FRIDGE	24
25	SPARE	20 A	1	0	0					1	20 A	SPARE	26
27	SPARE	20 A	1			0	0			1	20 A	SPARE	28
29	SPARE	20 A	1					0	0	1	20 A	SPARE	30
31	SPARE	20 A	1	0	0					1	20 A	SPARE	32
33	SPARE	20 A	1			0	0			1	20 A	SPARE	34
35	SPARE	20 A	1					0	0	1	20 A	SPARE	36
37	SPARE	20 A	1	0	0					1	20 A	SPARE	38
39	SPARE	20 A	1			0	0			1	20 A	SPARE	40
41	SPARE	20 A	1					0	0	1	20 A	SPARE	42
			Total Load:	28826 VA		27838 VA		27076 VA					
			Total Amps:	241 A		233 A		226 A					

Legend:
(GFCI) - Ground Fault Circuit Interrupter Breaker, (AFCI) - Arc Fault Circuit Interrupter Breaker, (GFPE) - 30mA Ground Fault Protection of Equipment Breaker, (ST) - Shunt Trip Breaker, (LOCK ON/OFF) - Permanent Locking Means, (FA) - Provide Red Lock-On Clip, (DUAL) - Dual Function GFCI/ AFCI Breaker, (NCB) New Circuit Breaker in Existing...

Load Classification	Connected Load	Demand Factor	Estimated Demand	Panel Totals	
Other	1000 VA	100%	1000 VA		
Lighting	6762 VA	125%	8452 VA	**Total Conn. Load:**	83740 VA
Receptacle	5760 VA	100%	5760 VA	**Total Est. Demand:**	62635 VA
NON-MOTOR LOAD	5088 VA	100%	5088 VA	**Total Conn.:**	232 A
Kitchen	65130 VA	65%	42335 VA	**Total Est. Demand:**	174 A

Branch Panel: (E) GP — EXISTING

Location: ELECTREC 109 **Volts:** 208Y/120 **A.I.C. Rating:** 22,000 AMPS SYMMETRICAL
Supply From: **Phases:** 3 **Mains Type:** MLO
Mounting: SURFACE **Wires:** 4 **Bus Amps:** 225
Enclosure: NEMA 1 **Lugs:** Standard

Notes:

CKT	Circuit Description	Trip	Poles	A		B		C		Poles	Trip	Circuit Description	CKT
1				4667	750					2	20 A	(GFCI) E11.2 - HOT CABINET	2
3	(GFCI) E25 - DISHWASHER	70 A	3			4667	750						4
5								4667	750	2	20 A	(GFCI) E11.3 - HOT CABINET	6
7	(GFCI) E24 - WATER TEMPERING KIT	20 A	1	480	750								8
9	R - MICROWAVE	20 A	1			800	1000			1	20 A	(GFCI) P - FREEZER	10
11	R - MICROWAVE	20 A	1					800	2250	2	30 A	(GFCI) P - FREEZER	12
13	R - MICROWAVE	20 A	1	800	2250								14
15	R - MICROWAVE	20 A	1			800	2250			2	30 A	(GFCI) R - COOLER	16
17	R - MICROWAVE	20 A	1					800	2250				18
19	R - MICROWAVE	20 A	1	800	1000					1	20 A	(GFCI) R - COOLER	20
21	R - WASHER	20 A	1			500	1000			1	20 A	(GFCI) P - OHD	22
23	R - DRYER	20 A	2					1000	1000	1	20 A	(GFCI) P - OHD	24
25				1000	1000					1	20 A	(GFCI) P - OHD	26
27	(GFCI) E12.3 - FRIDGE	20 A	1			700	700			1	20 A	(GFCI) E12.2 - FRIDGE	28
29								2978	2210	3	125 A	(GFCI) E17 - ADVENTURE SERVING COUNTER	30
31	(GFCI) E14 - DELI SERVING COUNTER	125 A	3	2978	2210								32
33						2978	2210						34
35	(GFCI) GRAB-N-GO FRIDGE	20 A	1					1750	2400	3	125 A	(GFCI) E15 - MEXICAN SERVING COUNTER	36
37	SPARE	20 A	1	0	2400								38
39	SPARE	20 A	1			0	2400						40
41	SPARE	20 A	1					0	0	1	20 A	SPARE	42
			Total Load:	21085 VA		20755 VA		22855 VA					
			Total Amps:	176 A		173 A		191 A					

Legend:
(GFCI) - Ground Fault Circuit Interrupter Breaker, (AFCI) - Arc Fault Circuit Interrupter Breaker, (GFPE) - 30mA Ground Fault Protection of Equipment Breaker, (ST) - Shunt Trip Breaker, (LOCK ON/OFF) - Permanent Locking Means, (FA) - Provide Red Lock-On Clip, (DUAL) - Dual Function GFCI/ AFCI Breaker, (NCB) New Circuit Breaker in Existing...

Load Classification	Connected Load	Demand Factor	Estimated Demand	Panel Totals	
Receptacle	3300 VA	100%	3300 VA		
NON-MOTOR LOAD	480 VA	100%	480 VA	**Total Conn. Load:**	64695 VA
Kitchen	46915 VA	65%	30495 VA	**Total Est. Demand:**	48275 VA
Power	14000 VA	100%	14000 VA	**Total Conn.:**	180 A
				Total Est. Demand:	134 A

Branch Panel: (E) GK-2 — EXISTING

Location: ELECTREC 109 **Volts:** 208Y/120 **A.I.C. Rating:** 22,000 AMPS SYMMETRICAL
Supply From: (E) GK-1 **Phases:** 3 **Mains Type:** MLO
Mounting: SURFACE **Wires:** 4 **Bus Amps:** 225
Enclosure: NEMA 1 **Lugs:** Standard

Notes:

CKT	Circuit Description	Trip	Poles	A		B		C		Poles	Trip	Circuit Description	CKT
1				2690	2210					3	125 A	(NCB)(GFCI) E18 - GRILL SERVING COUNTER	2
3	(NCB)(GFCI) E16 - PIZZA COUNTER	125 A	3			2690	2210						4
5								2690	2210				6
7	(NCB)(GFCI) E20.2 - POS SYSTEM	20 A	1	1152	1750					1	20 A	(NCB)(GFCI) GRAB-N-GO FRIDGE	8
9	(NCB)(GFCI) E21 - POS SYSTEM	20 A	1			1152	1152			1	20 A	(NCB)(GFCI) E20 - POS SYSTEM	10
11	(NCB)(GFCI) E21.2 - POS SYSTEM	20 A	1					1152	864	1	20 A	(NCB)(GFCI) E22.2 - COLD FOOD WELLS	12
13	(NCB)(GFCI) E22 - COLD FOOD WELLS	20 A	1	864	0					1	20 A	SPARE	14
15	(NCB)(GFCI) E23 - SNEEZE GUARD...	20 A	1			480	0			1	20 A	SPARE	16
17	SPARE	20 A	1					0	0	1	20 A	SPARE	18
19	SPARE	20 A	1	0	0					1	20 A	SPARE	20
21	SPARE	20 A	1			0	0			1	20 A	SPARE	22
23	SPARE	20 A	1					0	0	1	20 A	SPARE	24
25	SPARE	20 A	1	0	0					1	20 A	SPARE	26
27	SPARE	20 A	1			0	0			1	20 A	SPARE	28
29	SPARE	20 A	1					0	0	1	20 A	SPARE	30
31	SPARE	20 A	1	0	0					1	20 A	SPARE	32
33	SPARE	20 A	1			0	0			1	20 A	SPARE	34
35	SPARE	20 A	1					0	0	1	20 A	SPARE	36
37	SPARE	20 A	1	0	0					1	20 A	SPARE	38
39	SPARE	20 A	1			0	0			1	20 A	SPARE	40
41	SPARE	20 A	1					0	0	1	20 A	SPARE	42
			Total Load:	15059 VA		13331 VA		13077 VA					
			Total Amps:	126 A		111 A		109 A					

Legend:
(GFCI) - Ground Fault Circuit Interrupter Breaker, (AFCI) - Arc Fault Circuit Interrupter Breaker, (GFPE) - 30mA Ground Fault Protection of Equipment Breaker, (ST) - Shunt Trip Breaker, (LOCK ON/OFF) - Permanent Locking Means, (FA) - Provide Red Lock-On Clip, (DUAL) - Dual Function GFCI/ AFCI Breaker, (NCB) New Circuit Breaker in Existing...

Load Classification	Connected Load	Demand Factor	Estimated Demand	Panel Totals	
Other	1000 VA	100%	1000 VA		
Lighting	6762 VA	125%	8452 VA	**Total Conn. Load:**	41468 VA
Receptacle	5760 VA	100%	5760 VA	**Total Est. Demand:**	35158 VA
NON-MOTOR LOAD	5088 VA	100%	5088 VA	**Total Conn.:**	115 A
Kitchen	22858 VA	65%	14858 VA	**Total Est. Demand:**	98 A

Branch Panel: (E) GK-3 — EXISTING

Location: ELECTREC 109 **Volts:** 208Y/120 **A.I.C. Rating:** 22,000 AMPS SYMMETRICAL
Supply From: (E) GK-2 **Phases:** 3 **Mains Type:** MLO
Mounting: SURFACE **Wires:** 4 **Bus Amps:** 225
Enclosure: NEMA 1 **Lugs:** Standard

Notes:

CKT	Circuit Description	Trip	Poles	A		B		C		Poles	Trip	Circuit Description	CKT
1	(NCB)(GFCI) R - GENERAL	20 A	1	360	360					1	20 A	(NCB)(GFCI) R - GENERAL	2
3	(NCB)(GFCI) R - GENERAL	20 A	1			360	360			1	20 A	(NCB)(GFCI) R - GENERAL	4
5	(NCB)(GFCI) R - GENERAL	20 A	1					360	360	1	20 A	(NCB)(GFCI) R - GENERAL	6
7	R - TVS	20 A	1	540	1136					1	20 A	L - KITCHEN	8
9	R - TVS	20 A	1			720	905			1	20 A	L - KITCHEN	10
11	R - GENERAL SEATING	20 A	1					540	1377	1	20 A	L - SERVING AREA	12
13	L - CAF SEATING	20 A	1	977	360					1	20 A	(NCB)(GFCI) R - GENERAL	14
15	L - CAF SEATING	20 A	1			1002	360			1	20 A	(NCB)(GFCI) R - GENERAL	16
17	L - CAF SEATING	20 A	1					1364	360	1	20 A	(NCB)(GFCI) R - GENERAL	18
19	R - GENERAL CAFETERIA	20 A	1	540	360					1	20 A	R - GENERAL CAFETERIA	20
21	R - GENERAL CAFETERIA	20 A	1			900	180			1	20 A	R - GENERAL CAFETERIA	22
23	R - GENERAL CAFETERIA	20 A	1					720	720	1	20 A	R - GENERAL CAFETERIA	24
25	(NCB)(GFCI) R - CAFETERIA WATER...	20 A	1	500	540					1	20 A	R - GENERAL CAFETERIA	26
27	(NCB)(GFCI) R - CAFETERIA WATER...	20 A	1			500	0			1	20 A	(GFCI) KITCHEN HOOD	28
29	(NCB)(GFCI) R - GENERAL	20 A	1					360	--	1	--	SHUNT TRIP	30
31	(NCB)(GFCI) R - GENERAL	20 A	1	360	360					1	20 A	(NCB)(GFCI) R - GENERAL	32
33	(NCB)(GFCI) R - GENERAL	20 A	1			360	0			1	20 A	SPARE	34
35	SPARE	20 A	1					0	0	1	20 A	SPARE	36
37	SPARE	20 A	1	0	0					1	20 A	SPARE	38
39	SPARE	20 A	1			0	0			1	20 A	SPARE	40
41	SPARE	20 A	1					0	0	1	20 A	SPARE	42
			Total Load:	6393 VA		5647 VA		6161 VA					
			Total Amps:	54 A		47 A		52 A					

Legend:
(GFCI) - Ground Fault Circuit Interrupter Breaker, (AFCI) - Arc Fault Circuit Interrupter Breaker, (GFPE) - 30mA Ground Fault Protection of Equipment Breaker, (ST) - Shunt Trip Breaker, (LOCK ON/OFF) - Permanent Locking Means, (FA) - Provide Red Lock-On Clip, (DUAL) - Dual Function GFCI/ AFCI Breaker, (NCB) New Circuit Breaker in Existing...

Load Classification	Connected Load	Demand Factor	Estimated Demand	Panel Totals	
Other	1000 VA	100%	1000 VA		
Lighting	6762 VA	125%	8452 VA	**Total Conn. Load:**	18202 VA
Receptacle	5760 VA	100%	5760 VA	**Total Est. Demand:**	18254 VA
Kitchen	4680 VA	65%	3042 VA	**Total Conn.:**	51 A
				Total Est. Demand:	51 A

KKT
ARCHITECTURE \ INTERIORS \ ENGINEERING

KKT ARCHITECTS, INC.
2200 SOUTH UTICA PLACE, SUITE 200
TULSA, OKLAHOMA 74114
[P] 918.744.4270 \ [F] 918.744.7849
WWW.KKTARCHITECTS.COM
CERTIFICATE OF AUTHORIZATION

CEC
CEC CORPORATION
WWW.CONNECTCEC.COM
OK C/A# 32 EXP. 2026-06-30
CEC PROJECT 240417

EAST CENTRAL HIGH SCHOOL CAFETERIA REMODEL

TULSA PUBLIC SCHOOLS

12150 E 11TH
TULSA, OK
74128

REGISTERED PROFESSIONAL ENGINEER
JAMES W. LANE, JR.
No. 17528
OKLAHOMA
10-18-24

REV. DATE	#	DESCRIPTION
10-18-2024	.	100% CD

ELECTRICAL SCHEDULES

E003

LIGHTING PLAN NOTES

A. ALL RECESSED LIGHTING FIXTURES IN LAY-IN CEILINGS SHALL BE INSTALLED WITH 6' LONG MC CABLE WHIP.
B. ALL MOUNTING HEIGHTS FOR LIGHTING FIXTURES ARE TO THE BOTTOM OF THE FIXTURES UNLESS INDICATED OTHERWISE.
C. LOWER CASE SUBSCRIPTS INDICATE SWITCH SCHEME.

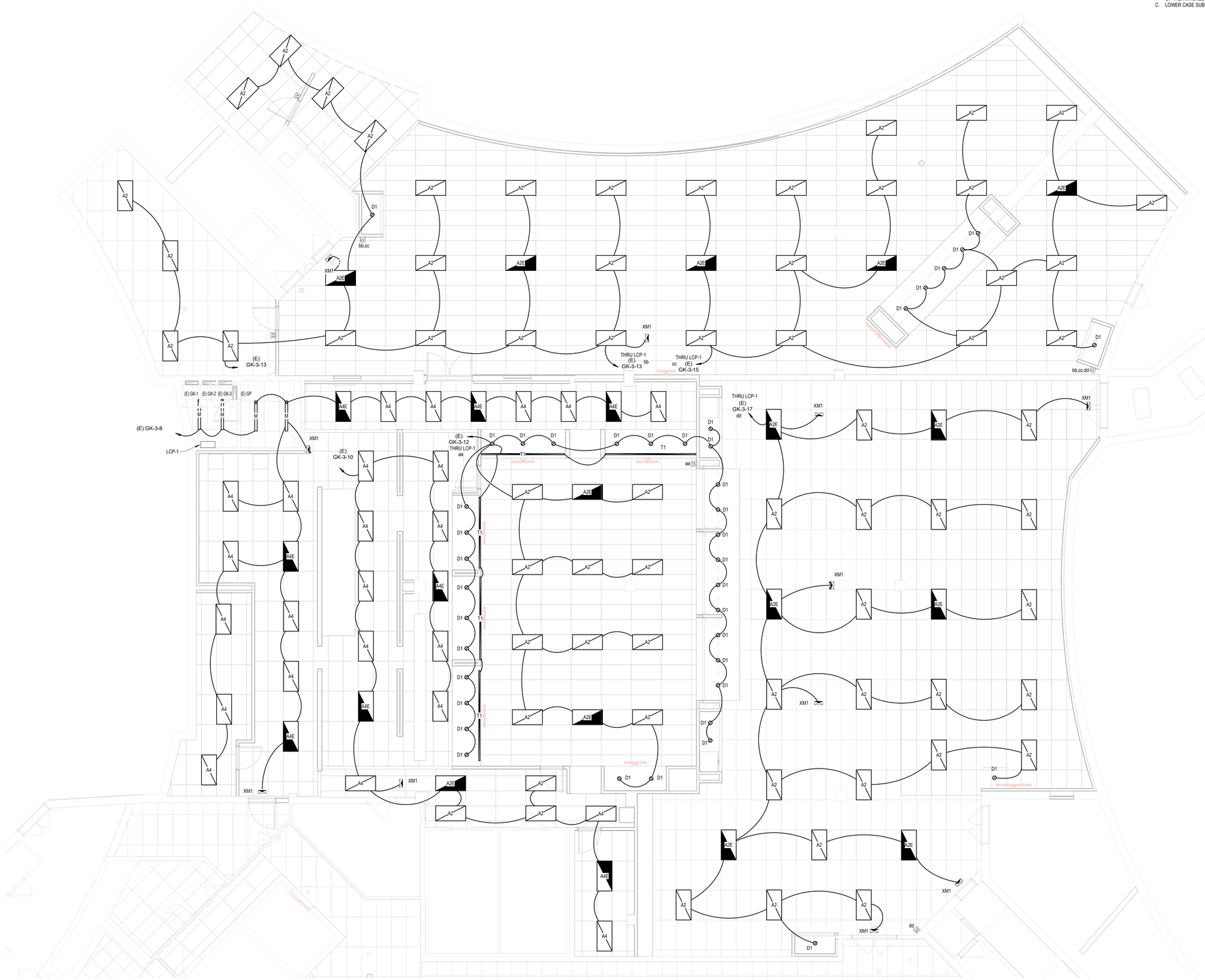

1 FIRST FLOOR-LIGHTING
SCALE : 3/16" = 1'-0"

KKT
ARCHITECTURE \ INTERIORS \ ENGINEERING

KKT ARCHITECTS, INC.
2200 SOUTH UTICA PLACE, SUITE 200
TULSA, OKLAHOMA 74114
[P] 918.744.4270 \ [F] 918.744.7849
WWW.KKTARCHITECTS.COM
CERTIFICATE OF AUTHORIZATION

CEC
CEC CORPORATION
WWW.CONNECTCEC.COM
OK.CoA# 32 EXP.: 2026-06-30
CEC PROJECT 240417

EAST CENTRAL HIGH SCHOOL CAFETERIA REMODEL

TULSA PUBLIC SCHOOLS

12150 E 11TH
TULSA, OK
74128

REGISTERED PROFESSIONAL ENGINEER
JAMES W. LANE, JR.
No. 17526
OKLAHOMA
10-18-24

REV. DATE	#	DESCRIPTION
10-18-2024	-	100% CD

CAFETERIA - LIGHTING PLAN

E101

Autodesk Docs://2024-01-KKT - TPS East Central High School Cafeteria Remodel/E101.rvt
Revision 1 Sep. 18,2024

POWER PLAN NOTES

A. PROVIDE HOUSEKEEPING PADS FOR ALL FLOOR MOUNTED ELECTRICAL EQUIPMENT. MINIMUM REQUIREMENTS: 4" HIGH, 4% AIR ENTRAINED, POLYFIBER REINFORCED CONCRETE, 4" WIDER AND 4" LONGER THAN EQUIPMENT TO BE PLACED ON IT.

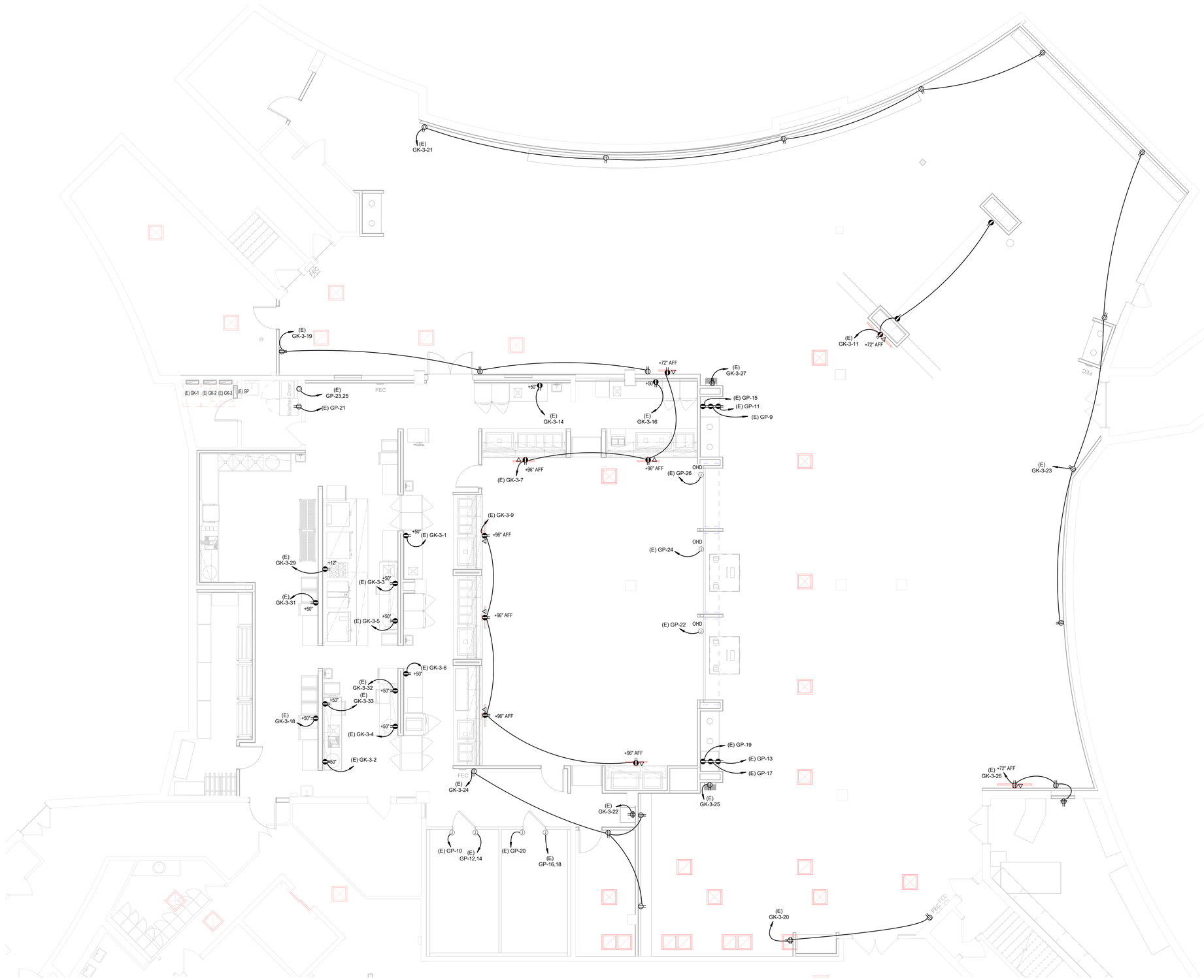

1 CAFETERIA - POWER PLAN
SCALE : 3/16" = 1'-0"

KKT
ARCHITECTURE \ INTERIORS \ ENGINEERING

KKT ARCHITECTS, INC.
2200 SOUTH UTICA PLACE, SUITE 200
TULSA, OKLAHOMA 74114
[P] 918.744.4270 \ [F] 918.744.7849
WWW.KKTARCHITECTS.COM
CERTIFICATE OF AUTHORIZATION

CEC
CEC CORPORATION
WWW.CONNECTCEC.COM
OK CoA# 32 EXP. 2026-06-30
CEC PROJECT 240417

EAST CENTRAL HIGH SCHOOL CAFETERIA REMODEL

TULSA PUBLIC SCHOOLS

12150 E 11TH
TULSA, OK
74128

REGISTERED PROFESSIONAL ENGINEER
JAMES W. LANE, JR.
No. 17526
OKLAHOMA
10-18-24

REV. DATE	#	DESCRIPTION
10-18-2024	.	100% CD

CAFETERIA - POWER PLAN

E201

Autodesk Docs://2024-EAST - PSR East Central High School - Cafeteria Remodel/E201-Cafeteria Remodel.rvt
Plotted On: Dec 18,2024

KEYNOTES

1 EXISTING KITCHEN HOOD TO BE RELOCATED IN ITS ENTIRITY. GC TO COORDINATE WITH THE MANUFACTURER AS REQUIRED TO ENSURE A FULLY WORKING AND OPERATIONAL SYSTEM AFTER RELOCATION. REFERENCE ARCHITECTURAL FOR EXACT LOCATION.

KITCHEN EQUIPMENT ELECTRICAL CONNECTION SCHEDULE

CALLOUT	DESCRIPTION	PHASE	VOLTAGE	CIRCUIT PANEL	CIRCUIT NUMBER	WIRE CALLOUT	LOAD KVA	LOAD FLA	LOAD MCA	DISCONNECT TYPE	NOTES
E03	MOBILE PROOF/ HOT CABINET	1	120 V	(E) GK-1	1	3/4"C, 1#10, #10N, #10G	2.00	17 A	22 A	SEE NOTES FOR RECEPTACLE CONFIGURATION	NEMA 5-20P CORD AND PLUG BY ELECTRICAL CONTRACTOR.
E03.2	MOBILE PROOF/ HOT CABINET	1	120 V	(E) GK-1	3	3/4"C, 1#10, #10N, #10G	2.00	17 A	22 A	SEE NOTES FOR RECEPTACLE CONFIGURATION	NEMA 5-20P CORD AND PLUG BY ELECTRICAL CONTRACTOR.
E04	ICE MAKER	1	120 V	(E) GK-1	5	3/4"C, 1#12, #12N, #12G	1.08	9 A	11 A	SEE NOTES FOR RECEPTACLE CONFIGURATION	NEMA 5-20P CORD AND PLUG BY ELECTRICAL CONTRACTOR.
E05	IVARIO PRO 2-S	3	208 V	(E) GK-1	7,9,11	1-1/4"C, 3#1, #8G	23.02	64 A	80 A	HARDWIRED	
E06	COMBI-OVEN	1	208 V	(E) GK-1	13,15	3/4"C, 2#12, #12G	0.90	4 A	6 A	SEE NOTES FOR RECEPTACLE CONFIGURATION	CORD AND PLUG BY ELECTRICAL CONTRACTOR. PROVIDE NEMA 6-20R PLUG AND DATA.
E06.2	COMBI-OVEN	1	208 V	(E) GK-1	17,19	3/4"C, 2#12, #12G	0.90	4 A	6 A	HARDWIRED	
E07	CONVECTION OVEN	1	120 V	(E) GK-1	21	3/4"C, 1#12, #12N, #12G	1.44	12 A	15 A	SEE NOTES FOR RECEPTACLE CONFIGURATION	NEMA 5-20P CORD AND PLUG BY ELECTRICAL CONTRACTOR.
E08	CONVECTION OVEN (E)	1	120 V	(E) GK-1	23	3/4"C, 1#12, #12N, #12G	1.18	10 A	12 A	SEE NOTES FOR RECEPTACLE CONFIGURATION	NEMA 5-20P CORD AND PLUG BY ELECTRICAL CONTRACTOR.
E08.2	CONVECTION OVEN (E)	1	120 V	(E) GK-1	18	3/4"C, 1#12, #12N, #12G	1.18	10 A	12 A	SEE NOTES FOR RECEPTACLE CONFIGURATION	NEMA 5-20P CORD AND PLUG BY ELECTRICAL CONTRACTOR.
E09	PASS-THRU HOT CABINET	1	208 V	(E) GK-1	14,16	3/4"C, 2#12, #12G	1.50	7 A	9 A	HARDWIRED	
E09.2	PASS-THRU HOT CABINET	1	208 V	(E) GK-1	10,12	3/4"C, 2#12, #12G	1.50	7 A	9 A	HARDWIRED	
E10	PASS-THRU REFIGERATOR	1	120 V	(E) GK-1	20	3/4"C, 1#12, #12N, #12G	0.70	6 A	7 A	SEE NOTES FOR RECEPTACLE CONFIGURATION	NEMA 5-20P CORD AND PLUG BY ELECTRICAL CONTRACTOR.
E10.2	PASS-THRU REFIGERATOR	1	120 V	(E) GK-1	22	3/4"C, 1#12, #12N, #12G	0.70	6 A	7 A	SEE NOTES FOR RECEPTACLE CONFIGURATION	NEMA 5-20P CORD AND PLUG BY ELECTRICAL CONTRACTOR.
E11	HOT CABINET	1	208 V	(E) GK-1	2,4	3/4"C, 2#12, #12G	1.50	7 A	9 A	HARDWIRED	
E11.2	HOT CABINET	1	208 V	(E) GP	2,4	3/4"C, 2#12, #12G	1.50	7 A	9 A	HARDWIRED	
E11.3	HOT CABINET	1	208 V	(E) GP	6,8	3/4"C, 2#12, #12G	1.50	7 A	9 A	HARDWIRED	
E12	REFRIGERATOR	1	120 V	(E) GK-1	24	3/4"C, 1#12, #12N, #12G	0.70	6 A	7 A	SEE NOTES FOR RECEPTACLE CONFIGURATION	NEMA 5-20P CORD AND PLUG BY ELECTRICAL CONTRACTOR.
E12.2	REFRIGERATOR	1	120 V	(E) GP	28	3/4"C, 1#12, #12N, #12G	0.70	6 A	7 A	SEE NOTES FOR RECEPTACLE CONFIGURATION	NEMA 5-20P CORD AND PLUG BY ELECTRICAL CONTRACTOR.
E12.3	REFRIGERATOR	1	120 V	(E) GP	27	3/4"C, 1#12, #12N, #12G	0.70	6 A	7 A	SEE NOTES FOR RECEPTACLE CONFIGURATION	NEMA 5-20P CORD AND PLUG BY ELECTRICAL CONTRACTOR.
E13	ROLL-IN HOT CABINET	1	208 V	(E) GK-1	6,8	3/4"C, 2#12, #12G	2.00	10 A	12 A	HARDWIRED	
E14	DELI SERVING COUNTER	3	208 V	(E) GP	29,31,33	1-1/2"C, 3-1/0, #6G	8.94	25 A	31 A	HARDWIRED	125A LOAD CENTER LOCATED IN EQUIPMENT BY FOOD SERVICE CONTRACTOR.
E15	MEXICAN SERVING COUNTER	3	208 V	(E) GP	36,38,40	1-1/2"C, 3-1/0, #6G	7.21	20 A	25 A	HARDWIRED	125A LOAD CENTER LOCATED IN EQUIPMENT BY FOOD SERVICE CONTRACTOR.
E16	PIZZA SERVING COUNTER	3	208 V	(E) GK-2	1,3,5	1-1/2"C, 3-1/0, #6G	8.08	23 A	28 A	HARDWIRED	125A LOAD CENTER LOCATED IN EQUIPMENT BY FOOD SERVICE CONTRACTOR.
E17	ADVENTURE SERVING COUNTER	3	208 V	(E) GP	30,32,34	1-1/2"C, 3-1/0, #6G	6.64	18 A	23 A	HARDWIRED	125A LOAD CENTER LOCATED IN EQUIPMENT BY FOOD SERVICE CONTRACTOR.
E18	GRILL SERVING COUNTER	3	208 V	(E) GK-2	2,4,6	1-1/2"C, 3-1/0, #6G	6.64	18 A	23 A	HARDWIRED	125A LOAD CENTER LOCATED IN EQUIPMENT BY FOOD SERVICE CONTRACTOR.
E19	GRAB-N-GO REFRIGERATOR	1	120 V	(E) GP	35	3/4"C, 2#12, #12G	1.75	8 A	11 A	SEE NOTES FOR RECEPTACLE CONFIGURATION	VIA DROP CORD FROM CEILING, 5-20R RECEPTACLE.
E19.2	GRAB-N-GO REFRIGERATOR	1	120 V	(E) GK-2	8	3/4"C, 2#12, #12G	1.75	8 A	11 A	SEE NOTES FOR RECEPTACLE CONFIGURATION	VIA DROP CORD FROM CEILING, 5-20R RECEPTACLE.
E20	POS SYSTEM	1	120 V	(E) GK-2	10	3/4"C, 1#12, #12N, #12G	1.15	10 A	12 A	SEE NOTES FOR RECEPTACLE CONFIGURATION	GFCI NEMA 5-20P RECEPTACLE. PROVIDE WITH EMPTY CONDUIT FOR DATA CABLE.
E20.2	POS SYSTEM	1	120 V	(E) GK-2	7	3/4"C, 1#12, #12N, #12G	1.15	10 A	12 A	SEE NOTES FOR RECEPTACLE CONFIGURATION	GFCI NEMA 5-20P RECEPTACLE. PROVIDE WITH EMPTY CONDUIT FOR DATA CABLE.
E21	POS SYSTEM	1	120 V	(E) GK-2	9	3/4"C, 1#12, #12N, #12G	1.15	10 A	12 A	SEE NOTES FOR RECEPTACLE CONFIGURATION	GFCI NEMA 5-20P RECEPTACLE. PROVIDE WITH EMPTY CONDUIT FOR DATA CABLE.
E21.2	POS SYSTEM	1	120 V	(E) GK-2	11	3/4"C, 1#12, #12N, #12G	1.15	10 A	12 A	SEE NOTES FOR RECEPTACLE CONFIGURATION	GFCI NEMA 5-20P RECEPTACLE. PROVIDE WITH EMPTY CONDUIT FOR DATA CABLE.
E22	COLD FOOD WELLS	1	120 V	(E) GK-2	13	3/4"C, 1#12, #12N, #12G	0.86	7 A	9 A	SEE NOTES FOR RECEPTACLE CONFIGURATION	NEMA 5-20P CORD AND PLUG BY ELECTRICAL CONTRACTOR.
E22.2	COLD FOOD WELLS	1	120 V	(E) GK-2	12	3/4"C, 1#12, #12N, #12G	0.86	7 A	9 A	SEE NOTES FOR RECEPTACLE CONFIGURATION	NEMA 5-20P CORD AND PLUG BY ELECTRICAL CONTRACTOR.
E23	SNEEZE GUARD LIGHTS	1	120 V	(E) GK-2	15	3/4"C, 1#12, #12N, #12G	0.48	4 A	5 A	SEE NOTES FOR RECEPTACLE CONFIGURATION	NEMA 5-20P CORD AND PLUG BY ELECTRICAL CONTRACTOR.
E24	DRAIN WATER TEMPERING KIT	1	120 V	(E) GP	7	3/4"C, 1#12, #12N, #12G	0.48	4 A	5 A	SEE NOTES FOR RECEPTACLE CONFIGURATION	
E25	DISHWASHER	3	208 V	(E) GP	1,3,5	1"C, 3#4, #8G	14.01	40 A	49 A	HARDWIRED	

MECHANICAL SCHEDULE NOTE

A. REF MECHANICAL PLANS FOR ADDITIONAL INFORMATION. PROVIDE REVISED EQUIPMENT
B. SIZE FUSES PER MANUFACTURED RECOMMENDATIONS.
C. COORDINATE FINAL REQUIREMENTS WITH SUBMITTED AND APPROVED EQUIPMENT. PROVIDE UPDATED EQUIPMENT SELECTIONS, BREAKERS, AND/OR CONDUCTOR SIZES BASED UPON DEVIATIONS FROM BASIS OF DESIGN. COORDINATE WITH MECHANICAL CONTRACTOR PRIOR TO SUBMITTING SUBMITTALS. COORDINATE LOCATION PRIOR TO ROUGH-IN.

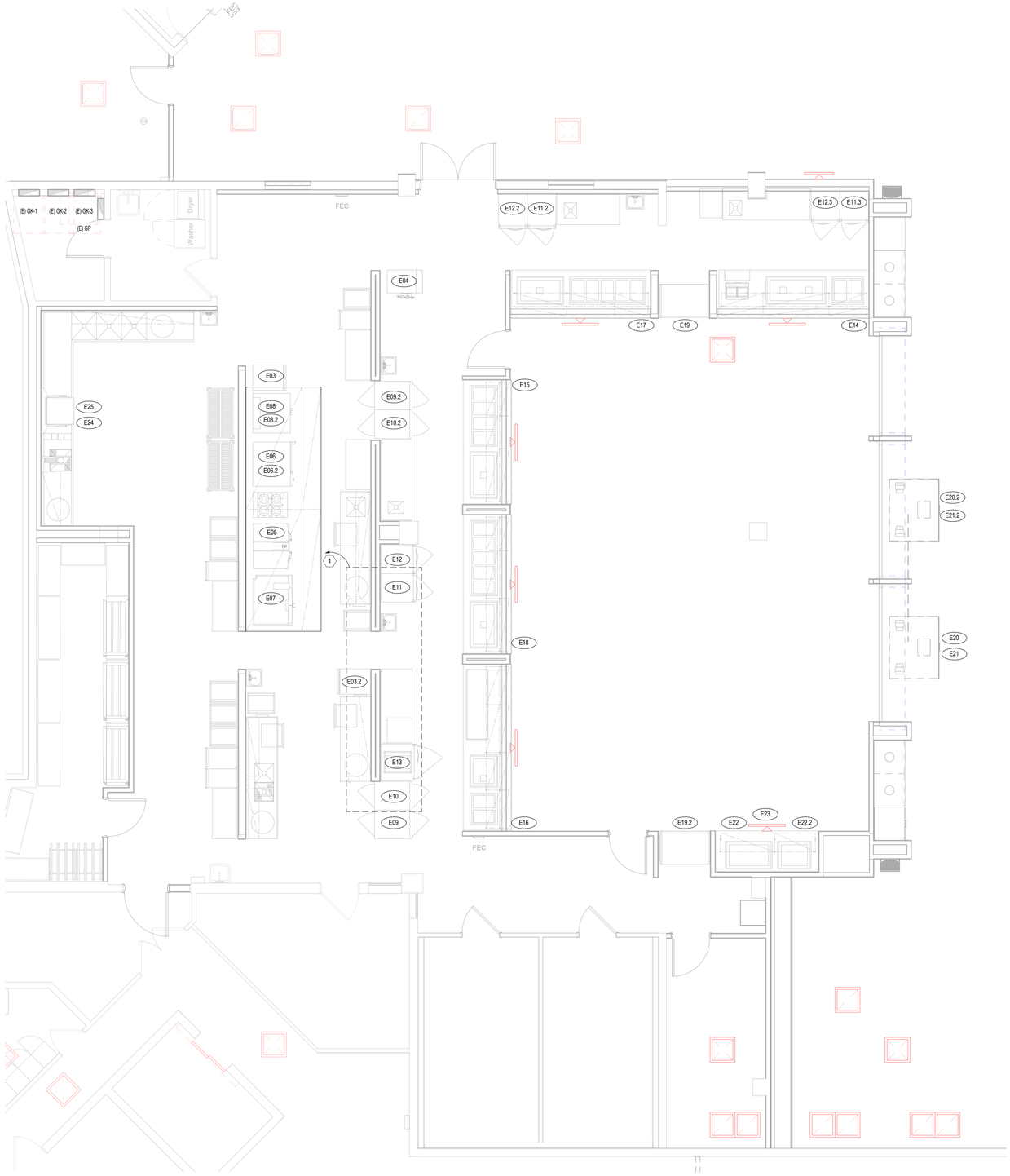

1 KITCHEN - SYSTEMS PLAN
SCALE : 1/4" = 1'-0"

KKT
ARCHITECTURE \ INTERIORS \ ENGINEERING

KKT ARCHITECTS, INC.
2200 SOUTH UTICA PLACE, SUITE 200
TULSA, OKLAHOMA 74114
[P] 918.744.4270 \ [F] 918.744.7849
WWW.KKTARCHITECTS.COM
CERTIFICATE OF AUTHORIZATION

CEC
CEC CORPORATION
WWW.CONNECTCEC.COM
OK CoA# 32 EXP. 2026-06-30
CEC PROJECT 240417

EAST CENTRAL HIGH SCHOOL CAFETERIA REMODEL

TULSA PUBLIC SCHOOLS

12150 E 11TH
TULSA, OK
74128

REGISTERED PROFESSIONAL ENGINEER
JAMES W. LANE, JR.
No. 17528
OKLAHOMA
10-18-24

REV. DATE	#	DESCRIPTION
10-18-2024	.	100% CD

KITCHEN - SYSTEMS PLAN

E302

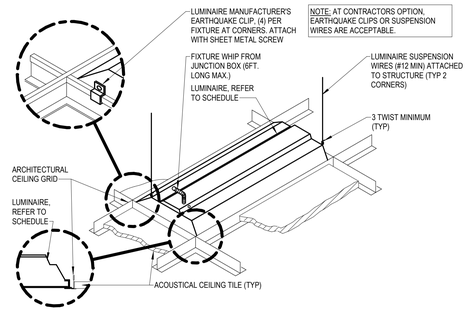

1 LUMINAIRE MOUNTING - LAY-IN CEILING
SCALE : NOT TO SCALE

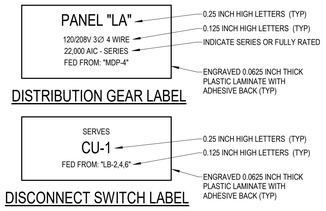

GENERAL NOTES:
A. IN ADDITION TO ABOVE, PROVIDE SELF-ADHESIVE (LABEL MAKER) LABELS LISTED FOR THE ENVIRONMENT FOR ALL BRANCH BREAKERS/FUSES IN SWITCHBOARDS, MOTOR CONTROL CENTERS AND DISTRIBUTION PANELS. INDICATE EQUIPMENT SERVED.
B. EXAMPLE EQUIPMENT NAMES INDICATED ABOVE. UPDATE TO MATCH SPECIFIC PROJECT.

3 ELECTRICAL EQUIPMENT LABELING
SCALE : NOT TO SCALE

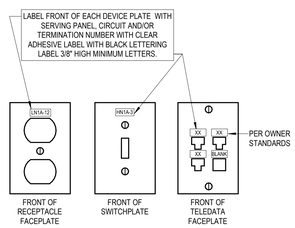

7 DEVICE PLATE INDENTIFICATION DETAIL
SCALE : NOT TO SCALE

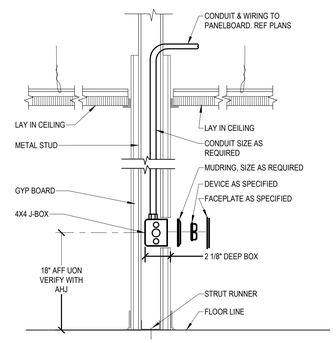

GENERAL NOTES:
A. INSTALLATION SHALL BE MODIFIED AS REQUIRED FOR CMU WALLS OR OTHER WALL OR CEILING TYPES ENCOUNTERED.
B. DO NOT MOUNT DEVICE BOXES BACK TO BACK OR SHARE A COMMON STUD SPACE.

2 TYPICAL POWER RECEPTACLE INSTALLATION
SCALE : NOT TO SCALE

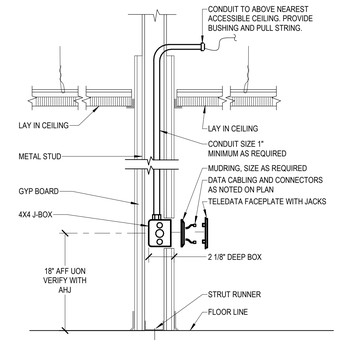

GENERAL NOTES:
A. INSTALLATION SHALL BE MODIFIED AS REQUIRED FOR CMU WALLS OR OTHER WALL OR CEILING TYPES ENCOUNTERED.
B. DO NOT MOUNT DEVICE BOXES BACK TO BACK OR SHARE A COMMON STUD SPACE.
C. EXTEND CONDUIT AS REQUIRED TO NEAREST ACCESSIBLE CEILING.

5 TYP. COMMUNICATIONS OUTLET INSTALLATION
SCALE : NOT TO SCALE

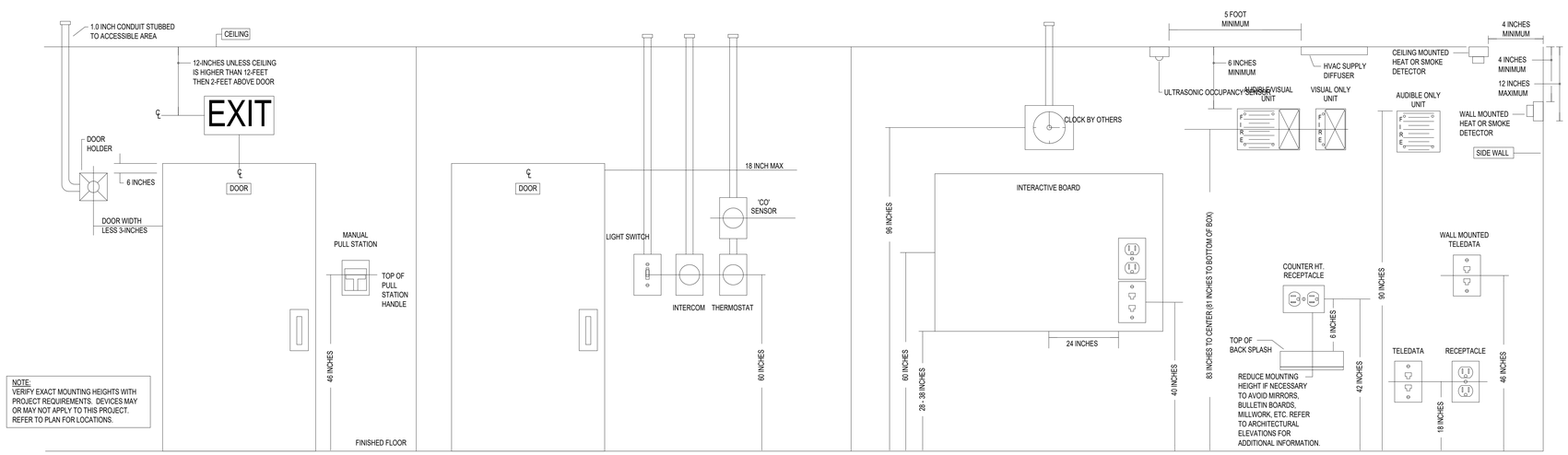

NOTE:
VERIFY EXACT MOUNTING HEIGHTS WITH PROJECT REQUIREMENTS. DEVICES MAY OR MAY NOT APPLY TO THIS PROJECT. REFER TO PLAN FOR LOCATIONS.

8 STANDARD DEVICE MOUNTING
SCALE : NOT TO SCALE

KKT
ARCHITECTURE \ INTERIORS \ ENGINEERING

KKT ARCHITECTS, INC.
2200 SOUTH UTICA PLACE, SUITE 200
TULSA, OKLAHOMA 74114
[P] 918.744.4270 \ [F] 918.744.7849
WWW.KKTARCHITECTS.COM
CERTIFICATE OF AUTHORIZATION

CEC
CEC CORPORATION
WWW.CONNECTCEC.COM
OK C/A# 32 EXP. 2026-06-30
CEC PROJECT 240417

EAST CENTRAL HIGH SCHOOL CAFETERIA REMODEL

TULSA PUBLIC SCHOOLS

12150 E 11TH
TULSA, OK
74128

REGISTERED PROFESSIONAL ENGINEER
JAMES W. LANE, JR.
No. 17526
OKLAHOMA
10-18-24

REV. DATE	#	DESCRIPTION
10-18-2024	.	100% CD

ELECTRICAL DETAILS

E501