KEYNOTES: (X)

1. REMOVE EXISTING RESIDENTIAL PANELBOARD INTERIORS AND REPLACE WITH NEW COMMERCIAL LISTED INTERIORS AND BREAKERS. TRACE EXISTING CIRCUITS AND DOCUMENT FOR NEW PANEL INDEX IN NEW WORK.

2. REMOVE RECEPTACLE AND DATA/TELE OUTLETS AT REMOVED WALLS. PREPARE BRANCH CIRCUIT HOMERUN FROM SPACE IN CEILING J-BOX TO SERVE NEW AREA CONFIGURATIONS.

3. COORDINATE WORK IN MDF/IDF CLOSETS WITH TPS REPRESENTATIVE TO EXPAND EXISTING RACKS, PATCH-PANELS, ETC. WORK SHALL COMPLY WITH OWNER'S "PREMISE CABLING SPECIFICATIONS" ISSUED BY THE BOND OFFICE.

4. REMOVE WIRING DEVICES IN EXISTING BACKBOXES AND READY FOR NEW WORK.

5. REUSE EXISTING LOW-VOLTAGE RACEWAYS ALONG EXISTING TEACHING WALLS TO BE RELOCATED TO ACCEPT NEW WORK.

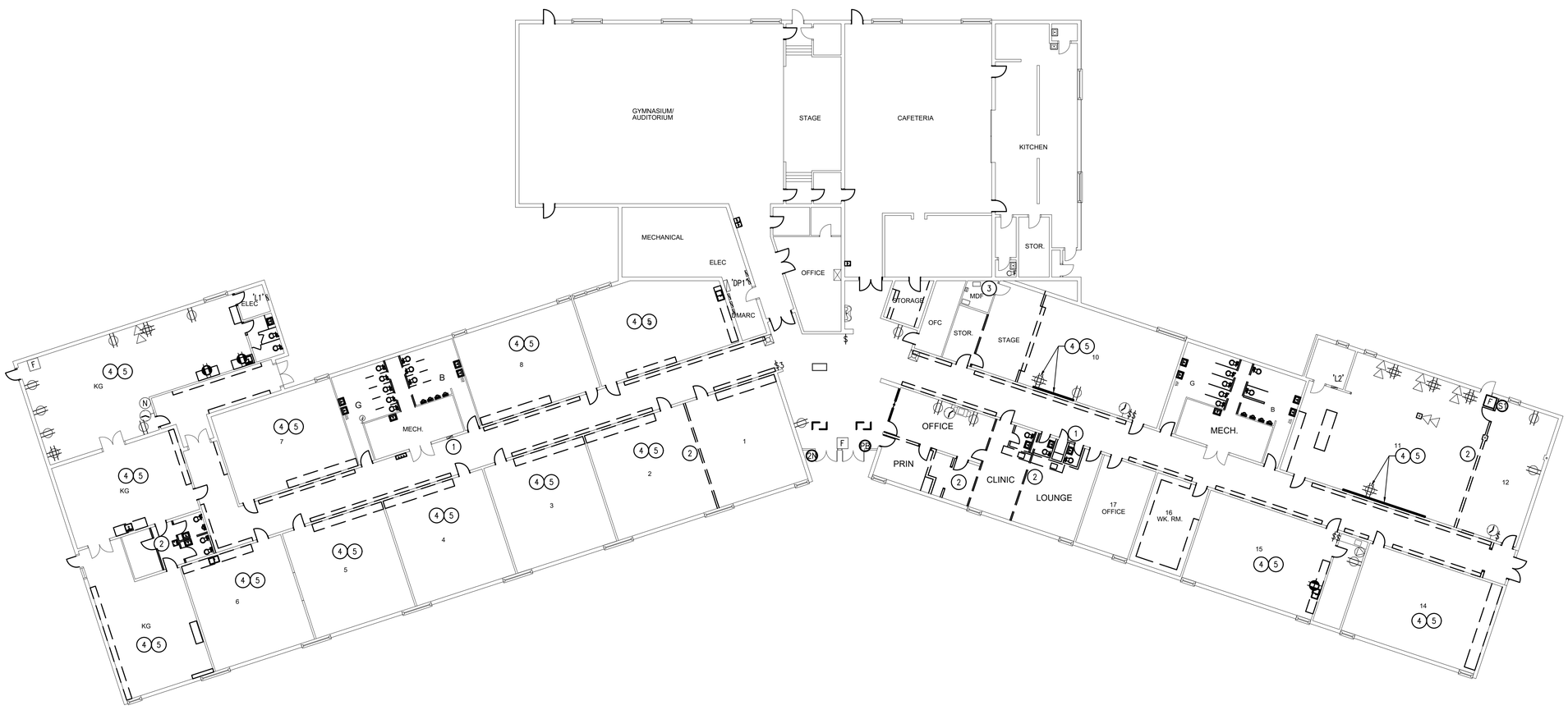

1 ELECTRICAL DEMO PLAN

Scale: 1/16" = 1'-0"

NORTH

TULSA PUBLIC SCHOOLS

TULSA PUBLIC SCHOOLS
TRANSITION ACADEMY AT GRIMES
3212 E 56TH STREET
TULSA, OK 74105

ENGINEER SEAL

SEAL

PROJECT TITLE
TRANSITION ACADEMY AT GRIMES

REVISION

SHEET TITLE
ELECTRICAL DEMOLITION PLAN

DATE: 10/29/2024

SHEET NO.
ED101

A:\2024\SDC\TPS Grimes Elem Interior\Dwg\ED101.dwg, 10/28/2024 10:08:09 AM

DEVICE SUBSCRIPT

'a'	LOWER CASE LETTER INDICATES DEVICE CONTROL ARRANGEMENT	LV	LOW-VOLTAGE
AFF	ABOVE FINISHED FLOOR	LFMC	LIQUID-TIGHT FLEXIBLE METAL CONDUIT
AFG	ABOVE FINISHED GRADE	LGT	LIGHTING
A/C	HVAC	M	FRACTIONAL HP RATED SWITCH
APL	APPLIANCE	MTR	MOTOR
AF	AMP FUSE	NL	NIGHT LIGHT
AT	AMP TRIP	OCPD	OVER-CURRENT PROTECTION DEVICE
BMS	BUILDING MANAGEMENT SYSTEM	OHE	OVERHEAD ELECTRIC
BTC	BRANCH TO CONNECTION	OHT	OVERHEAD TELEPHONE
C	COMMUNICATION	(R)	REMOVE (260450)
CKT	CIRCUIT	(RR)	REMOVE AND REINSTALL (260450)
CT	CURRENT TRANSFORMER	(RS)	REMOVE AND SALVAGE (260450)
CTL	CONTROL	RCP	RECEPTACLE
D	DATA OUTLET	RI	ROUGH-IN ONLY
(E)	EXISTING TO REMAIN (260450)	S.E.R.	SERVICE ENTRANCE RATED
(ER)	EXISTING RELOCATED	SPD	SURGE PROTECTION DEVICE
EM	EMERGENCY CIRCUIT	S.T.	SHUNT-TRIP BREAKER
EPO	EMERGENCY POWER OFF	SW	SPLIT WIRED RECEPTACLE FOR HALF SWITCHING
EQ	EQUAL	U.C.	UNDER COUNTER
EWC	ELECTRIC WATER COOLER	UGE	UNDERGROUND ELECTRIC
FACP	FIRE ALARM CONTROL PANEL	UGT	UNDERGROUND TELEPHONE
GFCI	GROUND FAULT CIRCUIT INTERRUPTING RECEPTACLE	UGF	UNDERGROUND FIBER
GFI	GROUND FAULT CIRCUIT INTERRUPTING BREAKER PROTECTED	UNO	UNLESS NOTED OTHERWISE
GFP	FEED THROUGH GROUND FAULT CIRCUIT INTERRUPTING PROTECTED	W/C	WALL/CEILING MOUNT
JB	JUNCTION BOX	WP	WEATHERPROOF WHILE IN USE
K	KEY OPERATED	WPS	WEATHERPROOF SPRING COVER DEVICE

ELECTRICAL GRAPHIC SYMBOL LEGEND

WALL MOUNTED DEVICES

- WALL MOUNTED, SIMPLEX RECEPTACLE
- DUPLEX RECEPTACLE
- QUAD RECEPTACLE
- SURFACE MOUNTED, SPECIAL RECEPTACLE
- DUPLEX RECEPTACLE W/GFCI
- QUAD RECEPTACLE W/GFCI
- J — JUNCTION BOX

CEILING MOUNTED DEVICES

- DUPLEX RECEPTACLE
- QUAD RECEPTACLE
- AP — WIRELESS ACCESS POINT
- SP — SPEAKER (VALCOM)

FIRE ALARM DEVICES

- FACP — EMERGENCY COMM. SYS. WITH FACP
- FAAP — REMOTE LCD ANNUNCIATOR PANEL
- HEAT DETECTOR
- SMOKE DETECTOR, PHOTOELECTRIC
- LED STROBE, W/C, (ALERT)
- LED SPEAKER/STROBE, W/C, (ALERT)
- WALL MOUNT LED SPEAKER/STROBE
- F — PULL STATION, DOUBLE ACTION
- DD — DUCT DETECTOR, W/PHOTO SENSOR
- TAMPER SWITCH
- FLOW SWITCH

CONTROL DEVICES

- $ — SWITCH
- $3 — THREE WAY SWITCH
- $4 — FOUR WAY SWITCH
- $D — DIMMER SWITCH
- $K — KEYED SWITCH
- $M — MOTOR RATED SWITCH
- OS — CEILING MOUNTED, OCCUPANCY SENSOR
- S — T-STAT SENSOR (DIV 23)
- R — NEVCO RECEIVER

SECURITY DEVICES

- M — MOTION DETECTOR – CEILING MOUNTED
- ML — MAGNETIC LOCKSET
- C — SURVEILLANCE CAMERA – CEILING MOUNTED
- C — SURVEILLANCE CAMERA – WALL MOUNTED
- WALL MOUNTED, BUZZER
- PUSH BUTTON – WALL MOUNTED
- A — ALARM CONTACT

SECURITY/ACCESS CONTROL LEGEND

- CR — KEY PAD: NAPCO GEM-RP1CAE2 TOUCH-PAD
- S1 — CLASSROOM SECURITY SENSOR – NAPCO C100STE W 12V POWER SUPPLY
- S2 — CORRIDOR SECURITY SENSOR – NAPCO MA9000 100' IRMW
- S3 — EQUIPMENT SECURITY SENSOR – SUPCO LOW PRESSURE SENSOR (SLP2565 & SF9602)
- 2N — 2N HELIOS IP FORCE

SWITCHES/MOTORS/TRANSFORMERS/ETC

- NON-FUSED DISCONNECT
- FUSED DISCONNECT
- COMBO MTR. STARTER DISCONNECT
- M — MOTOR
- VFD — VARIABLE FREQUENCY DRIVE (DIV 23)
- RECESSED PANELBOARD
- SURFACE-MOUNTED PANELBOARD
- IT — ISOLATION TRANSFORMER
- T — TRANSFORMER
- METER

RACEWAYS

- UNDERGROUND CONDUIT
- CONCEALED CONDUIT
- EXPOSED CONDUIT
- HOMERUN
- INTERCONNECTED HOMERUN CKT.

WALL MOUNTED, LOW-VOLTAGE DEVICES

- DIGITAL OUTLET – CAT 6
- N — INTERCOM BUTTON
- IP INTERCOM SYSTEM-CLASSROOMS K-6
- IP INTERCOM SYSTEM-CLASSROOMS 7-12
- IP CLOCK – SINGLE/DOUBLE FACE (SF/DF)
- SP — IP INTERCOM SYSTEMS-VALCOM HORN/SPEAKER +90°A.F.F.
- AV — WALL MOUNTED, AUDIO/VISUAL/CTV OUTLET

ELECTRICAL GENERAL NOTES:

A. **SITE OBSERVATION:** CONTRACTOR AND ASSOCIATED DIVISION TRADES SHALL VISIT THE SITE AND FAMILIARIZE THEMSELVES WITH THE SCOPE OF WORK DESIGNATED FOR THIS FACILITY PRIOR TO BIDDING. FAILURE TO SIGN-IN AND ATTEND THE PRE-CONSTRUCTION MEETING MAY EXCLUDE CONTRACTOR FROM FUTURE CLAIMS WHERE THE SCOPE OF WORK AND INTENT OF CONTRACT DOCUMENTS IS OPENLY EXPRESSED AND DOCUMENTED FOR FORMAL RESPONSES.

B. **CODE COMPLIANCE, PERMITS AND LICENSES:** ALL WORK SHALL BE ACCOMPLISHED IN ACCORDANCE WITH ALL APPLICABLE LOCAL, STATE, AND FEDERAL CODES AND ORDINANCES. IN EVENT OF CONFLICT BETWEEN DRAWINGS, SPECIFICATIONS, CODES AND ORDINANCES, THE MOST STRINGENT REQUIREMENT FROM THE AUTHORITY HAVING JURISDICTION SHALL TAKE PRECEDENCE. PROCURE ALL NECESSARY PERMITS AND LICENSES REQUIRED FOR WORK. PAY ALL LAWFUL FEES, INCLUDING, BUT NOT LIMITED TO UTILITY DEPOSITS, INSPECTION FEES, AND TEMPORARY AND PERMANENT CONSTRUCTION PERMITS.

C. **MATERIALS:** ALL MATERIALS SHALL BE NEW AND U.L. LISTED FOR THE APPLICATION. REUSE OF EXISTING MATERIALS MUST BE APPROVED PRIOR TO BID BY THE ENGINEER OF RECORD. PROVIDE PROTECTION FOR ALL ITEMS OF APPARATUS, FIXTURES, APPLIANCES, MATERIALS, EQUIPMENT, AND INSTALLATION SO AS TO PREVENT DAMAGE BY ANY TRADE. CONTRACTOR SHALL REPLACE, AT NO EXPENSE TO THE OWNER, ANY ITEM THAT IS MARRED, DEFACED, OR BROKEN PRIOR TO ACCEPTANCE BY OWNER.

D. **SUBSTITUTIONS:** SUBSTITUTIONS SHALL NOT BE ALLOWED AFTER APPROVAL OF SUBMITTED EQUIPMENT AND DEVICES UNLESS BY SPECIAL PERMISSION. NOTIFY ARCHITECT AND REQUEST ADDITIONAL INFORMATION FOR PROPOSED SUBSTITUTIONS OR SUBSTITUTED EQUIPMENT OTHER THAN LISTED IN THE CONTRACT DOCUMENTS OR SUBMITTED DURING PRODUCT REVIEW WHICH REQUIRES ADDITIONAL SPACE, SUPPORT, LAYOUT CONDITIONS, OR OTHER ELECTRICAL REQUIREMENTS. PROVIDE REQUIRED WORK ONLY AFTER WRITTEN NOTICE-TO-PROCEED FROM OWNER OR ENGINEER OF RECORD.

E. **TYPICAL DEVICE MOUNTING HEIGHTS – UNLESS NOTED OTHERWISE:**
PANELBOARDS – 78" AFF. TO TOP OF CABINET (MAX.)
CONTROL PANELS – 72" AFF TO TOP OF CABINET (MAX.)
DISCONNECTS – 64" AFF TO TOP OF CABINET (MAX.)
POWER/COMM. OUTLETS – 18" AFF TO CENTER OF DEVICE
TOGGLE SWITCHES – 48" AFF TO CENTER OF DEVICE
WHERE DEVICES ARE INDICATED TO BE ABOVE DOORS, CENTER BETWEEN TOP OF DOOR TRIM AND CEILING LINE. ARCHITECTURAL ELEVATIONS SHALL GOVERN OVER TYPICAL HEIGHTS LISTED. DEVICES LOCATED ABOVE COUNTERS SHALL BE MOUNTED 8" ABOVE COUNTERTOPS TO CENTER OF DEVICE.

F. **DIVISION TRADE COORDINATION:** COORDINATE WITH DIVISION TRADES AND THE ACTUAL SITE CONDITIONS OF CONSTRUCTION. RESOLVE CONFLICTS BETWEEN DIVISION TRADES FOR LOCATION OF EQUIPMENT INSTALLED AND ACCESSORIES REQUIRED, SO THAT ANY CONFLICTS ARE COORDINATED AND THE EQUIPMENT IS INSTALLED AS A COMPLETE AND OPERABLE SYSTEM. COORDINATE POWER REQUIREMENTS FOR EQUIPMENT PRIOR TO SUBMITTAL REVIEW BY ENGINEER OF RECORD. COORDINATION OF OTHER TRADES SCOPE-OF-WORK AND MATERIALS ARE A NORMAL PART OF THE CONSTRUCTION PROCESS. THE INTENT OF THE WORK IS IDENTIFIED IN THE FULL SET OF CONTRACT DOCUMENTS, AND IS NOT LIMITED BY DIVISION TRADE DOCUMENTS. FAILURE TO COORDINATE THE WORK SHALL NOT BE SUBJECT TO MONETARY CLAIMS. INSTALL EQUIPMENT AND DEVICES IN ACCORDANCE WITH MANUFACTURER'S INSTRUCTIONS AND SPECIFICATIONS. ADHERING TO REQUIRED CLEARANCES FOR OPERATION AND ACCESS FOR PRODUCT SERVICING. COORDINATE WITH DIVISION 22 & 23 MECHANICAL DUCTWORK SO AS NOT TO INSTALL JUNCTION BOXES ABOVE DUCT WORK OR INACCESSIBLE TO PERSONNEL.

G. **DEVIATIONS FROM CONTRACT DOCUMENTS:** MECHANICAL AND ELECTRICAL PLANS ARE DIAGRAMMATIC, AND SHALL BE FOLLOWED FOR ACTUAL CONSTRUCTION WITHOUT DEVIATIONS. THE APPROVAL FROM THE ARCHITECT OR ENGINEER SHALL BE OBTAINED BEFORE ANY DEVIATIONS FROM THESE PLANS. DIVISION TRADES WHICH DEVIATE FROM PLANS WITHOUT NOTIFICATION SHALL NOT BE COMPENSATED AND SHALL BE RESPONSIBLE FOR THE ADDITIONAL WORK REQUIRED. CONTRACTOR SHALL COORDINATE THE GENERAL WORK IN ORDER THAT EACH DIVISION TRADE WORK AND THE WORK OF THEIR SUB-CONTRACTORS WILL BE PROPERLY INSTALLED. CONTRACTOR SHALL INFORM ARCHITECT OF EXISTING CONDITIONS THAT ARE DISCOVERED DURING WORK IN PROGRESS THAT WOULD REQUIRE DEVIATIONS FROM THE ORIGINAL CONSTRUCTION DOCUMENTS BEFORE PROCEEDING WITH WORK.

H. **EXISTING SYSTEMS:** CONTRACTOR SHALL PROVIDE TEMPORARY WIRING AND CONNECTIONS TO MAINTAIN EXISTING SYSTEMS IN SERVICE DURING CONSTRUCTION. WHEN WORK MUST BE PERFORMED ON ENERGIZED EQUIPMENT OR CIRCUITS, USE PERSONNEL EXPERIENCED IN SUCH OPERATIONS.

I. **GROUNDING:** ALL LIGHT FIXTURES SHALL BE REQUIRED TO BE GROUNDED BY AN INSULATED GROUNDING CONDUCTOR. PROVIDE BARE COPPER GROUND BAR INSULATED FROM BUILDING STEEL AT ELECTRICAL CLOSETS DEDICATED FOR LOW-VOLTAGE SYSTEMS. INTERCONNECT LOW-VOLTAGE GROUNDING SYSTEMS TO THE MAIN GROUNDING ELECTRODE SYSTEM SERVING BUILDING. WHERE REQUIRED BY CODE, PROVIDE IRREVERSIBLE GROUNDING CONNECTIONS USING EXOTHERMIC WELDS.

J. **WET LOCATION LISTED DEVICES:** GFCI RECEPTACLES SHALL BE USED AT LOCATIONS WITHIN 6'-0" OF SINKS AND WATER. GFCI OUTLETS IN KITCHEN AREAS SHALL HAVE DEDICATED NEUTRAL(S). GFI BREAKERS SERVING KITCHEN EQUIPMENT SHALL BE DEDICATED CIRCUITS WITH DEDICATED NEUTRAL CONDUCTORS. PANELBOARDS AND METAL ENCLOSED DISCONNECTING MEANS SHALL BE NEMA 4X STAINLESS STEEL UNLESS NOTED OTHERWISE.

K. **FIRE AND SMOKE WALL ASSEMBLIES:** CONTRACTOR SHALL IDENTIFY ALL FIRE AND SMOKE RATED WALLS AND PROVIDE SEALS AT NEW AND EXISTING PENETRATIONS THROUGH RATED WALLS. PROVIDE 20A/1P BREAKER WITH LOCK-ON DEVICE AT HANDLE FOR CONNECTION OF LINE-VOLTAGE SMOKE DAMPERS INSTALLED BY DIVISION 23 CONTRACTOR.

L. **RACEWAYS AND JUNCTION BOXES:** CONDUIT RACEWAYS SHALL BE COMMERCIAL GRADE STEEL AND ALUMINUM U.L. LISTED FOR THE APPLICATION AND NOT LESS THAN 3/4" IN TRADE SIZE. **METAL-CLAD CABLE IS ALLOWED ONLY IN LIMITED LIGHTING AND MILLWORK APPLICATIONS AND LOCATIONS SUBJECT TO THE APPROVAL BY THE ENGINEER OF RECORD PRIOR TO INSTALLATION.** ALL EXPOSED EXTERIOR CONDUIT SHALL BE RIGID ONLY. IDENTIFY ALL EXPANSION JOINTS AND PROVIDE FOR EXPANSION JOINTS IN ALL CONDUITS CROSSING BUILDING BOUNDARIES. EXPOSED CONDUIT, JUNCTION BOXES AND ACCESSORIES IN FINISHED AREAS TO BE PAINTED AS DIRECTED BY ARCHITECT. COORDINATE CONDUIT RUNS IN EXPOSED AREAS SO THAT ALL RUNS ARE MADE PARALLEL OR PERPENDICULAR TO STRUCTURE.

M. **IDENTIFICATION:** COVERPLATES IN UNFINISHED AREAS AND CEILING CAVITIES SHALL BE LABELED WITH PERMANENT BLACK MARKER WITH CORRESPONDING CIRCUIT. PROVIDE ADHESIVE LABELS WITH PANEL AND CIRCUIT DESIGNATION ON COVERPLATES OF DEVICES IN FINISHED AREAS. PROVIDE 1-INCH LABELS AT BREAKERS: FIRE ALARM RED WITH WHITE LETTERS, SECURITY BLUE WITH WHITE LETTERS, MDF/IDF POWER GREEN WITH WHITE LETTERS.

N. **CONDUITS:** ABANDONED RACEWAYS FOR POWER AND DATA SHALL BE SEALED AT BOTH ENDS WITH HYDRAULIC CONCRETE. RACEWAYS BELOW GRADE THAT PENETRATES EXTERIOR WALLS OR SLAB SHALL BE SEALED TO PREVENT GROUND WATER ENTERING FACILITY.

TULSA PUBLIC SCHOOLS

TULSA PUBLIC SCHOOLS
TRANSITION ACADEMY AT GRIMES
3212 E 56TH STREET
TULSA, OK 74105

ENGINEER SEAL

SEAL

PROJECT TITLE
TRANSITION ACADEMY AT GRIMES

REVISION

SHEET TITLE
ELECTRICAL GENERAL NOTES AND SCHEDULES

DATE: 10/29/2024

SHEET NO.
E001

J:\2024\SJCA\TPS Grimes Elem Interior\Dwg\E001.dwg, 10/28/2024 10:08:09 AM

KEYNOTES: (X)

1. TRACE AND VERIFY EXISTING PANELS CIRCUITS MATCH INDEXES. UPDATE INDEXES AS REQUIRED. PANELS WITH SPARE BREAKERS THAT MATCH NEW WORK SHALL BE USED TO SERVE NEW WORK INDICATED.

2. COORDINATE WITH TPS REPRESENTATIVE REUSE OF EXISTING MDF CLOSET AND EXTENSION TO NEW IDF CLOSET WITH FIBER OPTIC CABLING. NEW WORK ON WEST BUILDING TO DERIVE FROM NEW IDF CLOSET. PROVIDE TEMPORARY CONNECTIONS TO MAINTAIN EXISTING SYSTEM WORKING DURING CONSTRUCTION.

3. EXISTING BUILDING WILL BE OCCUPIED DURING NEW CONSTRUCTION AND ALL NEW WORK SHALL BE SCHEDULED WITH CONSTRUCTION MANAGER AND TPS REPRESENTATIVE PRIOR TO ACCESS TO WORKING AREAS. ALL AREAS SHALL BE CLEANED PRIOR TO OCCUPANTS ALLOWED BACK IN AREAS.

4. NEW CABLING ROUTED IN CEILING FROM NEW IDF CLOSET SHALL BE DONE WHEN SCHOOL IS UNOCCUPIED. CEILING TILES SHALL BE REMOVED AND REINSTALLED IN SCHOOL CORRIDORS.

5. NO WORK IN THIS AREA.

6. PROVIDE ROUGH-IN FOR ACCESS CONTROLS PER TPS REPRESENTATIVE DIRECTIVES AND GUIDELINES. PROVIDE POWER FROM EXISTING PANELBOARD WHERE REQUIRED.

7. PROVIDE RACEWAY THROUGH WALL WITH BACKBOX IN ACCESSIBLE CEILING CAVITY FOR TPS PROVIDED CAMERAS. COORDINATE WITH TPS SECURITY REPRESENTATIVE. HEIGHT PER OWNER DIRECTIVE.

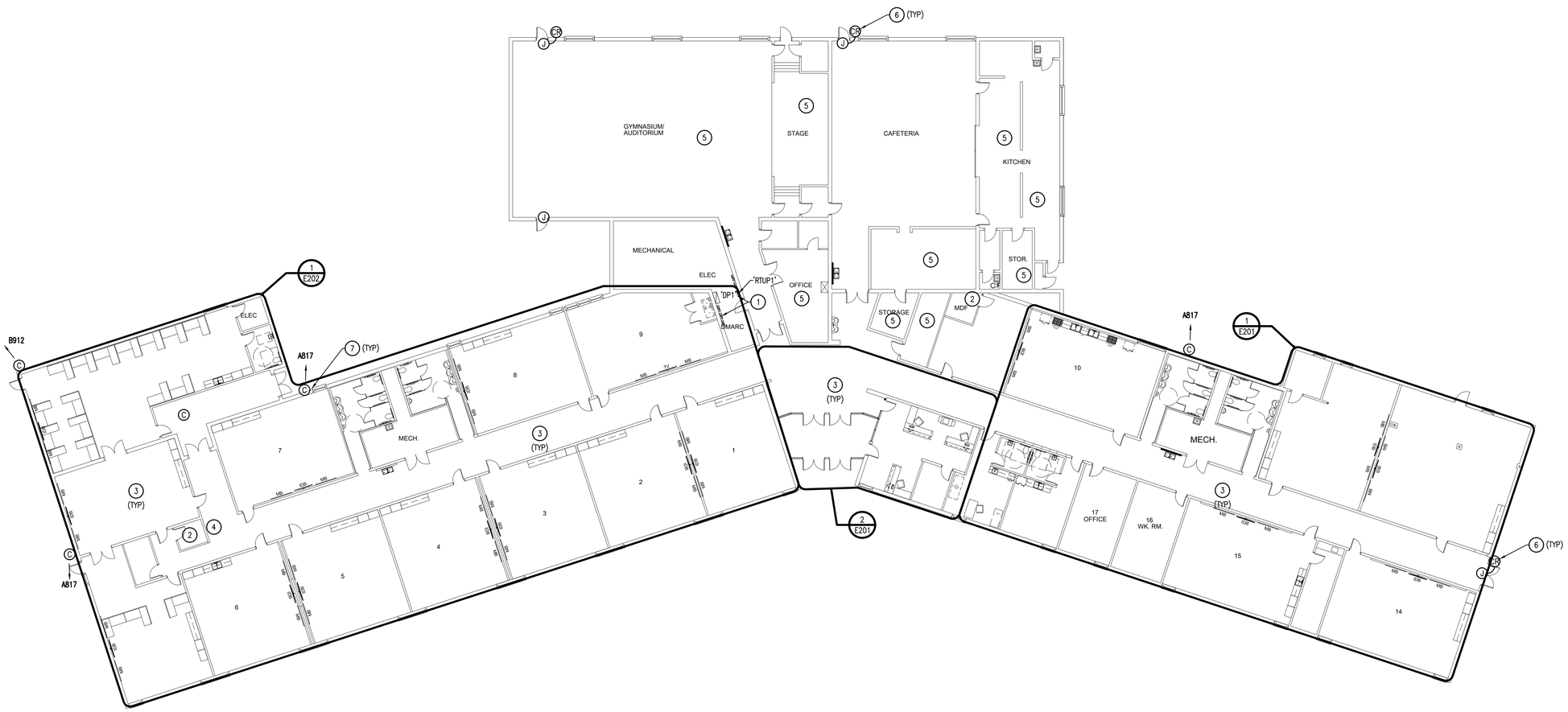

1 OVERALL ELECTRICAL PLAN

Scale: 1/16" = 1'-0"

NORTH

TULSA PUBLIC SCHOOLS

TULSA PUBLIC SCHOOLS
TRANSITION ACADEMY AT GRIMES
3212 E 56TH STREET
TULSA, OK 74105

ENGINEER SEAL

SEAL

PROJECT TITLE
TRANSITION ACADEMY AT GRIMES

REVISION

SHEET TITLE
OVERALL ELECTRICAL PLAN

DATE: 10/29/2024

SHEET NO.
E101

J:\2024\SOS\TPS Grimes Elem Interior\Dwg\E101.dwg, 10/28/2024 10:08:09 AM

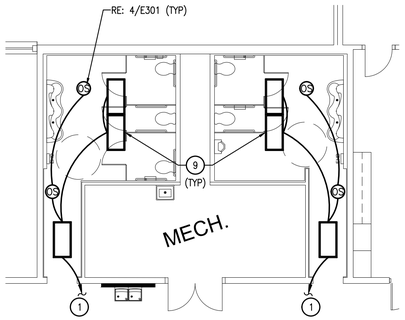

3 EAST ENLARGED LIGHTING PLAN
Scale: 1/8" = 1'-0"
NORTH

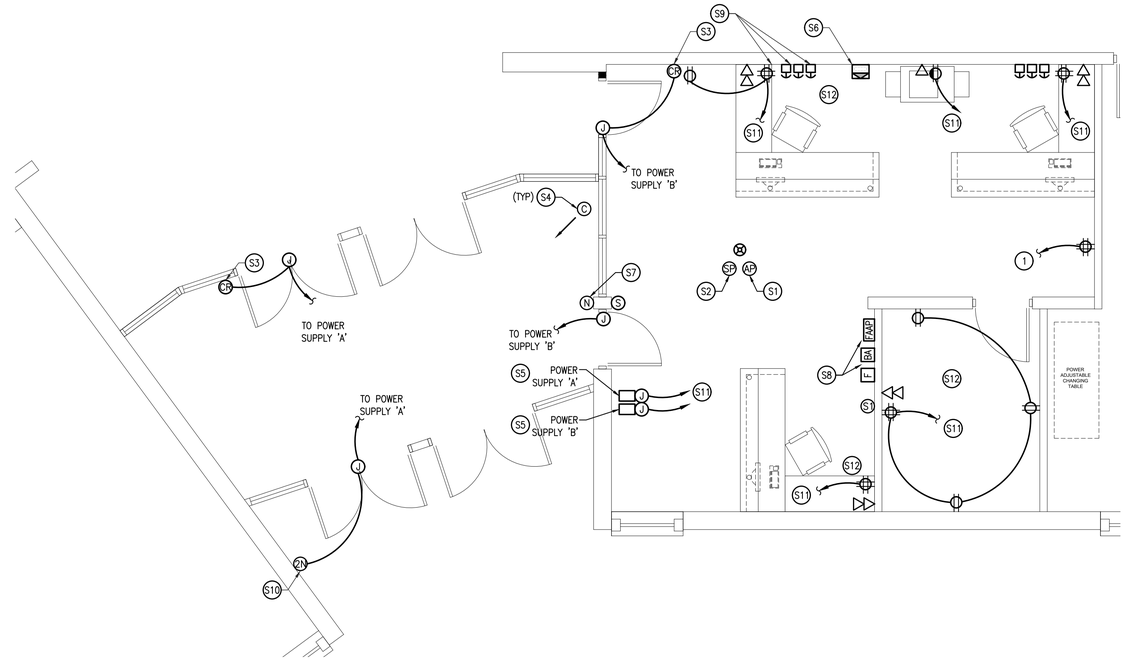

2 SECURE ENTRY ENLARGED ELECTRICAL PLAN
Scale: 1/4" = 1'-0"
NORTH

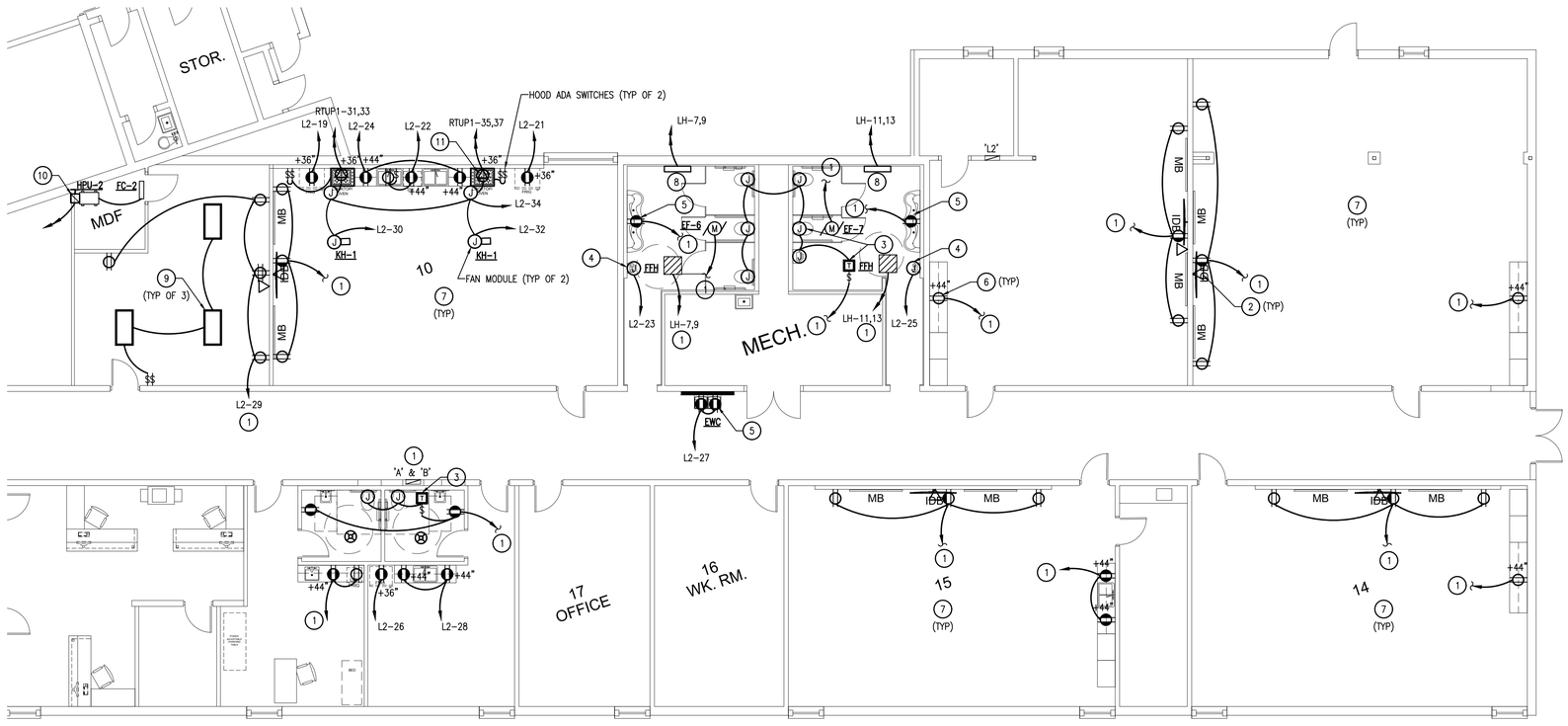

1 EAST ENLARGED ELECTRICAL PLAN
Scale: 1/8" = 1'-0"
NORTH

KEYNOTES: (X)

1. CONTRACTOR TO POWER NEW DEVICES FROM EXISTING CIRCUIT IN AREA. FIELD VERIFY AND TRACE EXISTING PANELS. UPDATE AND PROVIDE NEW PANEL INDEX. HOMERUN CIRCUITS SHALL NOT EXCEED 16-AMPS ON 20A/1P BREAKER OR (8) DUPLEX CONVENIENCE RECEPTACLES.

2. COORDINATE EXACT LOCATION OF DATA OUTLETS AND ACTIVATED PORTS WITH TPS REPRESENTATIVE.

3. **FLUSH VALVES:** INSTALL JUNCTION BOX ABOVE ACCESSIBLE CEILING FOR LOW-VOLTAGE CONTROL TRANSFORMER FOR AUTOMATIC FLUSH VALVES. PROVIDE JUNCTION BOX FOR FLUSH VALVE SENSOR AT EACH TOILET. MOUNT JUNCTION BOX PER FLUSH VALVE MANUFACTURER'S RECOMMENDATIONS. PROVIDE CONDUIT FROM FLUSH VALVES TO CONTROL TRANSFORMER FOR LOW-VOLTAGE WIRING.

4. **HAND DRYERS:** PROVIDE BACKBOX AT THIS APPROXIMATE LOCATION. COORDINATE EXACT LOCATION AND MOUNTING HEIGHT WITH ARCHITECTURAL DRAWINGS PRIOR TO ROUGH-IN.

5. PROVIDE NEW POWER RECEPTACLES FOR ELECTRIC WATER COOLERS AND BRADLEY SINKS PER MANUFACTURER SPECIFICATIONS AND MOUNTING HEIGHTS. PROVIDE SPECIFIED SURFACE RACEWAYS WHERE UNABLE TO CONCEAL.

6. COORDINATE NEW RECEPTACLES FOR COUNTERTOPS WITH EXISTING RECEPTACLE IN WALL LOCATION TO BE EXTENDED. ENERGIZE FROM EXISTING CLASSROOM RECEPTACLE BRANCH CIRCUIT.

7. COORDINATE CLASSROOM LAYOUT WITH TPS REPRESENTATIVE FOR ADDITIONAL POWER AND DATA OUTLETS. REUSE EXISTING DATA CABLING WHERE APPLICABLE. RE: 1/E301. PROVIDE NEW 20-AMP WIRING DEVICES/RECEPTACLES IN EXISTING BACKBOX. PROVIDE BLANK COVERPLATES AT UNUSED OUTLETS.

8. REMOVE EXISTING ELECTRICAL CONNECTION BACK TO J-BOX IN ACCESSIBLE CEILING FOR REUSE IN NEW WORK.

9. METALUX: 24FP4750C, LSI SFP24-LED-50-UE-DIM-50, SIGNIFY: 2FPZ-43L-850-4-DS-UNV-DIM.

10. PROVIDE HEAVY-DUTY RATED NEMA 3R DISCONNECT FUSED PER MANUFACTURER SPECIFICATIONS. EXTEND AND TERMINATE POWER TO FCU-1 THRU ROOF PENETRATION PER ROOF MANUFACTURER GUIDELINES.

11. OVEN ELECTRICAL DISCONNECT MODULE. INTERCONNECT HOOD CONTROLLER WITH FAN CONTROL MODULE, HOOD SWITCHES AND ALARMS PER HOOD MANUFACTURER SPECIFICATIONS. RE: MECH. (TYP OF 2)

SECURE ENTRY KEYNOTES: (SX)

S1. **WIRELESS ACCESS POINTS:** REINSTALL ALL STORED WIRELESS ACCESS POINTS FROM DEMOLITION. SHALL ANY ACCESS POINTS BE DAMAGED DURING WORK, CONTRACTOR SHALL PROVIDE NEW ACCESS POINT MATCHING EXISTING. SHALL ANY DATA CABLING BE DAMAGED DURING WORK, CONTRACTOR SHALL BE RESPONSIBLE FOR PROVIDING MATCHING CABLING. IN AREA NOT PREVIOUSLY CONTAINING WIRELESS ACCESS POINTS, NEW ACCESS POINTS SHALL BE PROVIDED BY OWNER AND INSTALLED BY CONTRACTOR. PROVIDE CAT-6 CABLING TO NEW WIRELESS ACCESS POINTS.

S2. **SPEAKERS:** CONTRACTOR SHALL PROVIDE VALCOM LAY-IN TALKBACK IP CEILING SPEAKER. PROVIDE CABLING FROM POWER OVER ETHERNET SWITCH TO NEW TALKBACK SPEAKER TO ENERGIZE SPEAKER. UTILIZE SPEAKER CALL SWITCH INPUT TO INTERCONNECT CALL BUTTON IN AREAS THAT REQUIRE A TALKBACK FUNCTION. REFER TO NOTE 'A' FOR AREA SPEAKER REQUIREMENTS. COORDINATE EXACT DEVICE LOCATIONS IN AREA WITH TPS REPRESENTATIVE PRIOR TO ROUGH-IN.

S3. **VISTA CARD READERS:** PROVIDE 120V CIRCUIT TO DOOR STRIKE TO BE CONTROLLED BY NEW CONTRACTOR PROVIDED CARD READER CAPABLE OF INTERCONNECTING WITH EXISTING OPEN OPTIONS CONTROLLER LOCATED IN MDF/IDF CLOSET. PROVIDE RACEWAYS AND CABLES IN J-HOOKS SUPPORTED EVERY 5' IN ACCESSIBLE CEILING CAVITY FROM NEW CARD READER TO EXISTING CONTROLLER. PROVIDE FINAL TERMINATIONS, TESTING, AND COMMISSIONING AND SUBMIT O&M MANUALS TO OWNER. RE: 1/E302.

S4. **OWNER SECURITY CAMERAS:** SECURITY CAMERA LOCATIONS SHOWN FOR REFERENCE ONLY. CONTRACTOR TO PROVIDE CABLING AND SUPPORTS. CAMERAS SHALL BE PROVIDED BY OWNER. COORDINATE WITH TPS HEAD OF SECURITY FOR EXACT LOCATION PRIOR TO ROUGH-IN.

S5. **POWER SUPPLY:** PROVIDE (1) DEDICATED 120V CIRCUIT FOR EACH SECURE ENTRY POWER SUPPLY. COORDINATE EXACT LOCATION WITH TPS REPRESENTATIVE AND DOOR HARDWARE CONTRACTOR PRIOR TO ROUGH-IN.

S6. CONTRACTOR SHALL PROVIDE (1) NEW CAT-6 DATA DROP FROM NEW VALCOM DEDICATED RACKS TO NEW CONTRACTOR PROVIDED CLOCK. REFER TO NOTE 'A' FOR AREA CLOCK REQUIREMENTS. IN EXISTING CLASSROOMS, CLOCK TO BE INSTALLED IN SAME LOCATION OF REMOVED CLOCK. COORDINATE EXACT DEVICE LOCATIONS IN AREA WITH TPS REPRESENTATIVE PRIOR TO ROUGH-IN.

S7. CONTRACTOR SHALL PROVIDE NEW VALCOM CALL SWITCH. ROUTE 18 GAUGE PAIR FROM CALL SWITCH TO SPEAKER. REFER TO TPS REPRESENTATIVE FOR AREA CALL SWITCH REQUIREMENTS. COORDINATE EXACT DEVICE LOCATIONS IN AREA WITH TPS REPRESENTATIVE PRIOR TO ROUGH-IN.

S8. SECURITY ALARM KEYPAD TO BE RELOCATED TO LOCATION ILLUSTRATED IN MAIN OFFICE FIELD VERIFY EXISTING LOCATION PRIOR TO NEW WORK. PROVIDE ALL CONDUCTORS, SUPPORTS, AND RACEWAYS FOR RELOCATION OF DEVICES. COORDINATE WITH TPS REPRESENTATIVE FOR EXACT REQUIREMENTS AND LOCATION PRIOR TO ROUGH-IN.

S9. **MOMENTARY VANDAL PROOF ROCKER SWITCHES:** PROVIDE (2) PUSH BUTTONS TO OPERATE DOOR STRIKES TO OFFICE AND (1) PUSH BUTTON FOR PANIC ALARM. PROVIDE CONDUCTORS, RACEWAYS, AND DEVICES FOR COMPLETE OPERABLE SYSTEM. BUTTONS SHALL BE MOUNTED BETWEEN 30" AND 48" COORDINATE WITH TPS HEAD OF SECURITY FOR EXACT HEIGHT PRIOR TO ROUGH-IN. RE: 1/E302.

S10. **2N DEVICE MOUNTING:** WHERE MOUNTING IS DIRECTED BY OWNER, FOLLOW THE GUIDELINES LISTED BELOW. RE: 1/E302.

A. FLUSH MOUNT – PROVIDE 2N FLUSH MOUNTING BOX, FRAME AND SECURITY SCREWS. SAW CUT BRICK OR PLASTERBOARD TO DIMENSIONS OF FLUSH MOUNTED BOX. NIPPLE THRU WALL TO SURFACE MOUNTED J-BOX IN ADJACENT SPACE. ROUTE CABLING IN CONDUIT INTO ACCESSIBLE CEILING CAVITY. ROUTE CABLING TO CONTROL HARDWARE AND MDF/IDF.

B. SURFACE MOUNT – MOUNTING FRAME NOT REQUIRED. PROVIDE SECURITY SCREWS. MOUNT 2N HELIOS IP FORCE UNIT TO EXTERIOR WALL WHERE FLUSH MOUNTING IS INCAPABLE. NIPPLE THRU WALL TO SURFACE MOUNTED J-BOX IN ADJACENT SPACE. ROUTE CABLING IN CONDUIT INTO ACCESSIBLE CEILING CAVITY AND ROUTE TO CONTROL HARDWARE.

S11. USE EXISTING CIRCUITS FOR NEW SECURE ENTRY DEVICES. CIRCUIT NOT TO EXCEED 16A.

S12. COORDINATE EXACT MOUNTING HEIGHT WITH ARCHITECTURAL DRAWINGS. CONNECT NEW DEVICES TO EXISTING POWER CIRCUIT IN ROOM.

TULSA PUBLIC SCHOOLS

TULSA PUBLIC SCHOOLS
TRANSITION ACADEMY AT GRIMES
3212 E 56TH STREET
TULSA, OK 74105

ENGINEER SEAL

SEAL

PROJECT TITLE
TRANSITION ACADEMY AT GRIMES

REVISION

SHEET TITLE
EAST ENLARGED ELECTRICAL PLAN

DATE: 10/29/2024

SHEET NO.
E201

K:\2024\SSG\TPS Grimes Elem Interior\Dwg\E201.dwg, 10/28/2024 10:08:17 AM

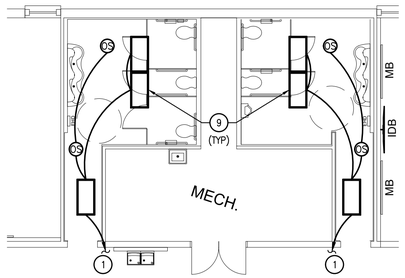

2 WEST ENLARGED LIGHTING PLAN

Scale: 1/8" = 1'-0"

NORTH

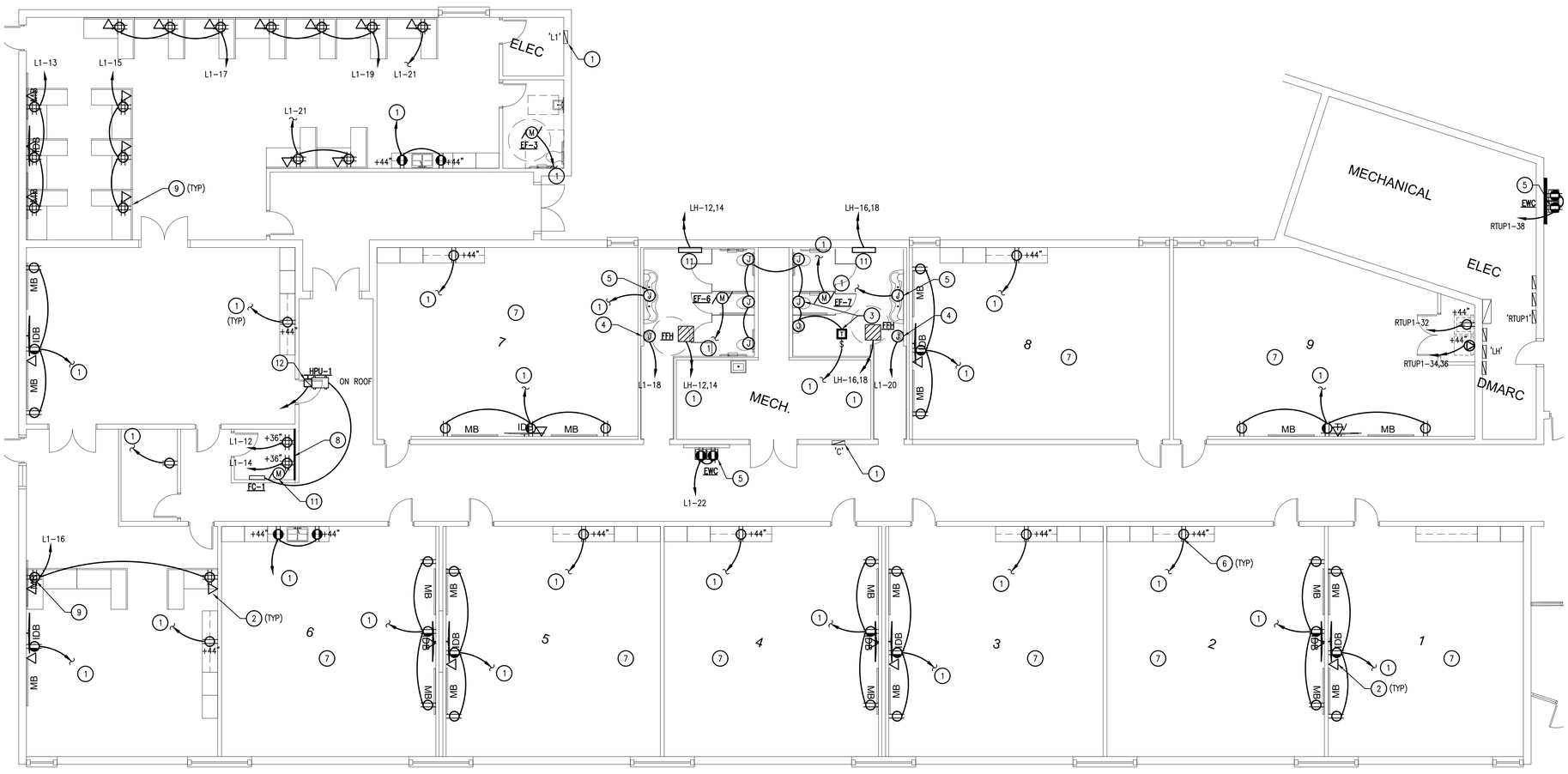

1 WEST ENLARGED ELECTRICAL PLAN

Scale: 1/8" = 1'-0"

NORTH

KEYNOTES: (X)

1. CONTRACTOR TO POWER NEW DEVICES FROM EXISTING CIRCUIT IN AREA. FIELD VERIFY AND TRACE EXISTING PANELS. UPDATE AND PROVIDE NEW PANEL INDEX. HOMERUN CIRCUITS SHALL NOT EXCEED 16-AMPS ON 20A/1P BREAKER OR (8) DUPLEX CONVENIENCE RECEPTACLES.

2. COORDINATE EXACT LOCATION OF DATA OUTLETS AND ACTIVATED PORTS WITH TPS REPRESENTATIVE.

3. FLUSH VALVES: INSTALL JUNCTION BOX ABOVE ACCESSIBLE CEILING FOR LOW-VOLTAGE CONTROL TRANSFORMER FOR AUTOMATIC FLUSH VALVES. PROVIDE JUNCTION BOX FOR FLUSH VALVE SENSOR AT EACH TOILET. MOUNT JUNCTION BOX PER FLUSH VALVE MANUFACTURER'S RECOMMENDATIONS. PROVIDE CONDUIT FROM FLUSH VALVES TO CONTROL TRANSFORMER FOR LOW-VOLTAGE WIRING.

4. HAND DRYERS: PROVIDE BACKBOX AT THIS APPROXIMATE LOCATION. COORDINATE EXACT LOCATION AND MOUNTING HEIGHT WITH ARCHITECTURAL DRAWINGS PRIOR TO ROUGH-IN.

5. PROVIDE NEW POWER RECEPTACLES FOR ELECTRIC WATER COOLERS AND BRADLEY SINKS PER MANUFACTURER SPECIFICATIONS AND MOUNTING HEIGHTS. PROVIDE SPECIFIED SURFACE RACEWAYS WHERE UNABLE TO CONCEAL.

6. COORDINATE NEW RECEPTACLES FOR COUNTERTOPS WITH EXISTING RECEPTACLE IN WALL LOCATION TO BE EXTENDED. ENERGIZE FROM EXISTING CLASSROOM RECEPTACLE BRANCH CIRCUIT.

7. COORDINATE CLASSROOM LAYOUT WITH TPS REPRESENTATIVE FOR ADDITIONAL POWER AND DATA OUTLETS. REUSE EXISTING DATA CABLING WHERE APPLICABLE. RE: 1/E301. PROVIDE NEW 20-AMP WIRING DEVICES/RECEPTACLES IN EXISTING BACKBOX. PROVIDE BLANK COVERPLATES AT UNUSED OUTLETS.

8. PROVIDE TELEPHONE BACKBOARD PAINTED TO MATCH. ROUTE FIBER OPTIC CABLE FROM EXISTING MDF CLOSET AND TERMINATE PER TPS DIRECTIVES.

9. ROUTE POWER AND DATA FROM WALL THROUGH NEW CUBICLE INTERNAL RACEWAY. PROVIDE RACEWAY AS REQUIRED FOR EACH DESK WITH OUTLETS INDICATED.

10. ROUGH-IN FOR ACCESS CONTROLS PER DIRECTIVES BY TPS REPRESENTATIVE FOR SECURITY AND CAMERA SYSTEMS.

11. REMOVE EXISTING ELECTRICAL CONNECTION BACK TO J-BOX IN ACCESSIBLE CEILING FOR REUSE IN NEW WORK.

12. PROVIDE HEAVY-DUTY RATED NEMA 3R DISCONNECT FUSED PER MANUFACTURER SPECIFICATIONS. EXTEND AND TERMINATE POWER TO FCU-1 THRU ROOF PENETRATION PER ROOF MANUFACTURER GUIDELINES.

TULSA PUBLIC SCHOOLS

TULSA PUBLIC SCHOOLS
TRANSITION ACADEMY AT GRIMES
3212 E 56TH STREET
TULSA, OK 74105

ENGINEER SEAL

SEAL

PROJECT TITLE
TRANSITION ACADEMY AT GRIMES

REVISION

SHEET TITLE
WEST ENLARGED ELECTRICAL PLAN

DATE: 10/29/2024

SHEET NO.
E202

X:\2024\SDs\TPS Grimes Elem Interior\Dwg\E202.dwg, 10/28/2024 10:08:19 AM

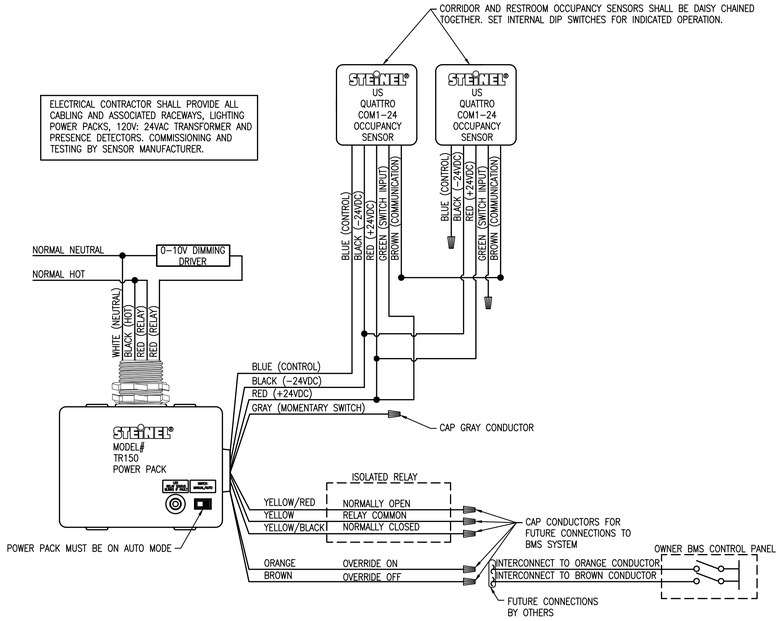

4 CORRIDOR/RESTROOM LIGHTING CONTROL DETAIL

Scale: NTS

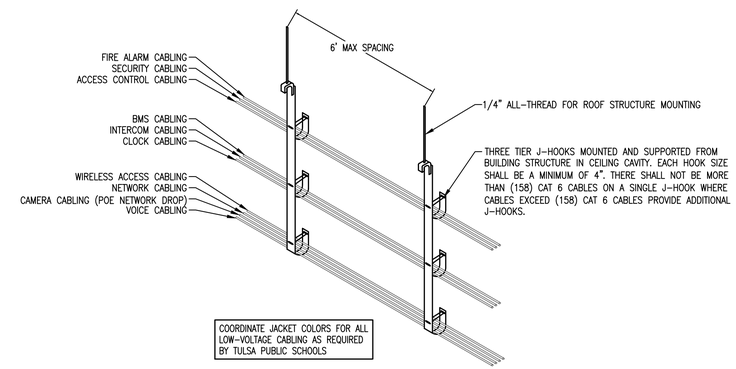

3 STRUCTURED CABLE ROUTING/SUPPORTS

Scale: NTS

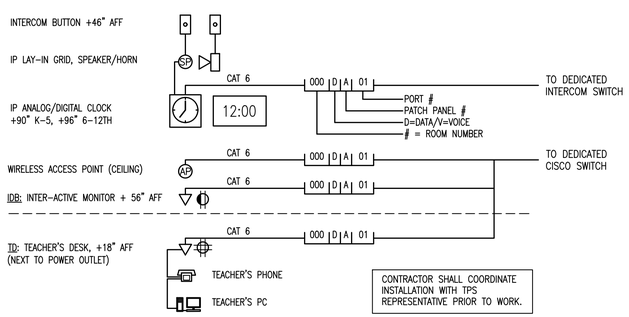

2 TYPICAL CLASSROOM DATA DROPS

Scale: NTS

DIVISION 26: SHALL SUBMIT ALL LOW-VOLTAGE RACEWAYS AND BOXES PRIOR TO NEW WORK.

ACCESSIBLE PARTITION WALLS:
NEW DEVICES TO BE FLUSH MOUNT WITH CONCEALED CONDUIT.

EXISTING/MASONRY WALLS:
POWER: WIREMOLD 700 SERIES RACEWAYS.
DATA/COM: LD5WH8 RACEWAYS.
PROVIDE JBX3510WH-A DEVICE BOXES AND ACCESSORIES INSTALLED ON EXISTING CMU WALLS.

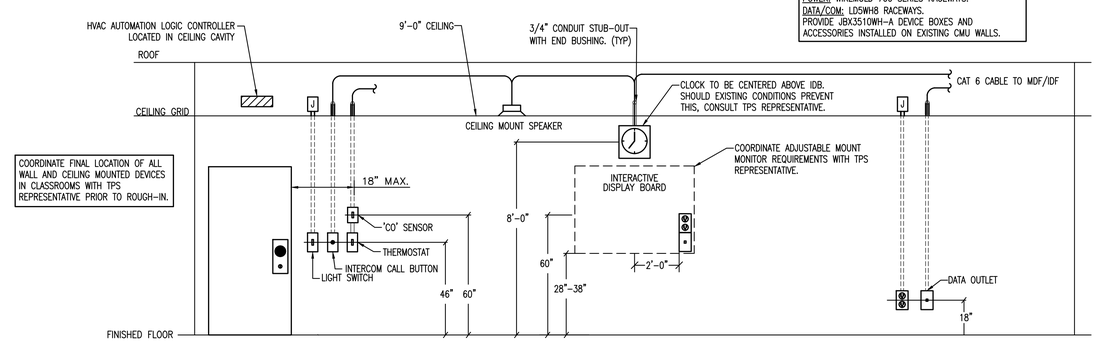

1 TYPICAL CLASSROOM DEVICE INSTALLATION ELEVATIONS

Scale: NTS

TULSA PUBLIC SCHOOLS

TULSA PUBLIC SCHOOLS
TRANSITION ACADEMY AT GRIMES
3212 E 56TH STREET
TULSA, OK 74105

ENGINEER SEAL

SEAL

PROJECT TITLE
TRANSITION ACADEMY AT GRIMES

REVISION

SHEET TITLE
ELECTRICAL DETAILS

DATE: 10/29/2024

SHEET NO.
E301

A:\2024\SOS\TPS Grimes Elem Interior\Dwg\E301.dwg, 10/28/2024 10:08:17 AM

	DESCRIPTION	ANIXTER PART NUMBER
1	2N HELIOS IP FORCE INTERCOM MAN. PART# 9151101CRP	952331
2	0192 RIM STRIKE	CS443408
3	2N SECURITY RELAY	952326
4	4100 STRIKE	CS498075
5	HID CARD READER	512075
6	VIKING K-202-DVA VOICE ALARM DIALING.	356693
7	STI STOPPER STATION	933834
8	900-BB VON DUPRIN BATTERY BACKUP CARD	CS462896
9	VALCOM CALL SWITCH MODEL #V-2972	--
10	VALCOM TALKBACK SPEAKER MODEL #VE4022	--
11	ELECTRIC STRIKE ROCKER SWITCH	CS928135
12	2N HELIOS IP LICENSE, ENHANCED VIDEO TO DOOR PHONES	952426
13	2N SECURED CARD READER READY 13.56 MHZ	952455

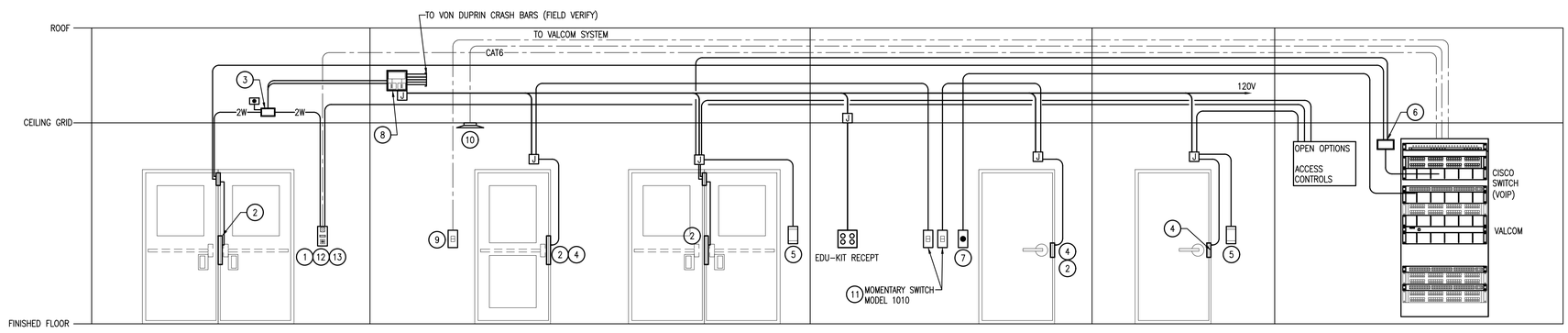

NEW DEVICES TO BE FLUSH MOUNT WITH CONCEALED CONDUIT. USE WIREMOLD SERIES RACEWAYS AND BACK BOXES FOR DEVICES TO BE INSTALLED AT EXISTING CMU WALLS.

1 TYPICAL SECURE ENTRY DEVICE INSTALLATION ELEVATIONS

Scale: NTS

TULSA PUBLIC SCHOOLS

TULSA PUBLIC SCHOOLS
TRANSITION ACADEMY AT GRIMES
3212 E 56TH STREET
TULSA, OK 74105

ENGINEER SEAL

SEAL

PROJECT TITLE
TRANSITION ACADEMY AT GRIMES

REVISION

SHEET TITLE
ELECTRICAL DETAILS

DATE: 10/29/2024

SHEET NO.
E302

J:\2024\SDG\TPS Grimes Elem Interior\Dwg\E302.dwg, 10/28/2024 10:08:17 AM

EXISTING PANELBOARD 'L1'

FLUSH MOUNTED
GROUND BUS
NEMA 1 ENCLOSURE

VOLT: 120/240V,1PH,3 WIRE
AMPS: 100 AMP, MCB
AIC: (E)

CKT	DESCRIPTION	BRKR	PL	KVA	LINE		KVA	PL	BRKR	DESCRIPTION	CKT
1	MAIN	100	2	–	L1		–	1	20	RECEPT S. RM 105-HALL	2
3	–	–	–	–		L2	–	1	20	RECEPTS W. RM 105	4
5	ROOF GFCI	20	1	–	L1		–	1	20	RECEPTS N. RM 105	6
7	OUTSIDE LIGHT	20	1	–		L2	–	1	20	COMPUTER RECEPT RM 105	8
9	LIGHTS BATH & HALL	20	1	–	L1		–	1	20	COMPUTER RECEPT	10
11	LIGHTS RM 105	20	1	–		L2	1.80	1	20	IDF RECEPTS	12
13	CUBICLE WORKSTATIONS	20	1	1.08	L1		1.80	1	20	IDF RECEPTS	14
15	CUBICLE WORKSTATIONS	20	1	1.08		L2	0.72	1	20	WEST OFFICE RECEPTS	16
17	CUBICLE WORKSTATIONS	20	1	1.08	L1		1.20	1	20	HAND DRYER	18
19	CUBICLE WORKSTATIONS	20	1	1.08		L2	1.20	1	20	HAND DRYER	20
21	CUBICLE WORKSTATIONS	20	1	1.08	L1		1.10	1	20	WEST EWC	22
23	SPARE	20	1	–		L2	–	1	20	SPARE	24
25	SPARE	20	1	–	L1		–	–	–	–	26
27	SPARE	20	1	–		L2	–	–	–	–	28
29	–	–	–	–	L1		–	–	–	–	30
31	–	–	–	–		L2	–	–	–	–	32
33	–	–	–	–	L1		–	–	–	–	34
35	–	–	–	–		L2	–	–	–	–	36
37	–	–	–	–	L1		–	–	–	–	38
39	–	–	–	–		L2	–	–	–	–	40

	KVA	AMPS
PHASE A	–	–
PHASE B	–	–

	KVA	AMPs
CONNECTED	–	–
FEEDER	–	–

EXISTING PANELBOARD 'RTUP1'

SURFACE MOUNTED
GROUND BUS
NEMA 1 ENCLOSURE

VOLT: 208Y/120V,3PH,4 WIRE
AMPS: 400 AMP, MLO
AIC: 22,000

CKT	DESCRIPTION	BRKR	PL	KVA	PHASE			KVA	PL	BRKR	DESCRIPTION	CKT
1	RTU-1	50	3	4.92	A			2.76	3	30	RTU-6	2
3	–	–	–	4.92		B		2.76	–	–	–	4
5	–	–	–	4.92			C	2.76	–	–	–	6
7	RTU-2	30	3	2.76	A			2.76	3	30	RTU-7	8
9	–	–	–	2.76		B		2.76	–	–	–	10
11	–	–	–	2.76			C	2.76	–	–	–	12
13	RTU-3	30	3	2.76	A			2.76	3	30	RTU-8	14
15	–	–	–	2.76		B		2.76	–	–	–	16
17	–	–	–	2.76			C	2.76	–	–	–	18
19	RTU-4	40	3	3.76	A			2.76	3	30	RTU-9	20
21	–	–	–	3.76		B		2.76	–	–	–	22
23	–	–	–	3.76			C	2.76	–	–	–	24
25	RTU-5	30	3	2.76	A			0.60	1	20	WATER CIRCULATING PUMP	26
27	–	–	–	2.76		B		0.90	1	20	AUTO DOOR	28
29	–	–	–	2.76			C	0.18	1	20	SPARE	30
31	COOKTOP OVEN	50	2	3.33	A			1.10	1	20	WASHER	32
33	–	–	–	3.33		B		2.20	2	30	DRYER	34
35	COOKTOP OVEN	50	2	3.33			C	2.20	–	–	–	36
37	–	–	–	3.33	A			1.10	1	20	GYM EWC	38
39	HPU-1	20	2	1.56		B		2.60	2	35	HPU-2	40
41	–	–	–	1.56			C	2.60	–	–	–	42

	KVA	AMPS
PHASE A	42.72	356.00
PHASE B	40.49	337.42
PHASE C	40.49	337.42

	KVA	AMPs
CONNECTED	123.70	343.61
FEEDER	–	–

NOTE: PROVIDE HACR BREAKERS

EXISTING PANELBOARD 'L2'

FLUSH MOUNTED
GROUND BUS
NEMA 1 ENCLOSURE

VOLT: 120/240V,1PH,3 WIRE
AMPS: 100 AMP, MCB
AIC: (E)

CKT	DESCRIPTION	BRKR	PL	KVA	LINE		KVA	PL	BRKR	DESCRIPTION	CKT
1	MAIN	100	2	–	L1		–	1	20	CLASSROOM LIGHTS	2
3	–	–	–	–		L2	–	1	20	LIGHTS N. SIDE	4
5	TVSS CLASSROOM	20	1	–	L1		–	1	20	OUTSIDE LIGHT	6
7	OFFICE RECEPTS	20	1	–		L2	–	1	20	LIGHTS E. SIDE	8
9	RECEPT N. CLASSROOM	20	1	–	L1		–	1	20	POWER POLE	10
11	RECEPT N. WALL	20	1	–		L2	–	1	20	POWER POLE	12
13	TVSS W. WALL	20	1	–	L1		–	1	20	TVSS N. WALL	14
15	CLOCK RECEPT	20	1	–		L2	–	1	20	TVSS N. WALL	16
17	RECEPT N. WALL	20	1	–	L1		–	1	20	OFFICE RECEPTS	18
19	REFRIGERATOR RM 10	20	1	1.10		L2	–	1	20	ROOF GFCI	20
21	REFRIGERATOR RM 10	20	1	1.10	L1		0.65	1	20	DISHWASHER	22
23	HAND DRYER	20	1	1.20		L2	1.80	1	20	KITCHENETTE COUNTER RECEPTS	24
25	HAND DRYER	20	1	1.20	L1		1.10	1	20	REFRIGERATOR LOUNGE	26
27	EAST EWC	20	1	1.10		L2	1.80	1	20	LOUNGE COUNTER RECEPTS	28
29	PRINCIPLE OFFICE RECEPTACLES	20	1	1.08	L1		1.10	1	20	KH-1	30
31	SPARE	20	1	0.18		L2	1.10	1	20	KH-1	32
33	SPARE	20	1	0.18	L1		0.55	1	20	HOOD CONTROLS	34
35	SPARE	20	1	0.18		L2	0.18	1	20	SPARE	36
37	–	–	–	–	L1		–	–	–	–	38
39	–	–	–	–		L2	–	–	–	–	40

	KVA	AMPS
PHASE A	–	–
PHASE B	–	–

	KVA	AMPs
CONNECTED	–	–
FEEDER	–	–

TULSA
PUBLIC SCHOOLS

TULSA PUBLIC SCHOOLS
TRANSITION ACADEMY AT GRIMES
3212 E 56TH STREET
TULSA, OK 74105

ENGINEER SEAL

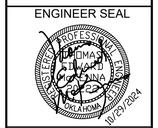

SEAL

PROJECT TITLE
TRANSITION ACADEMY AT GRIMES

REVISION

SHEET TITLE
ELECTRICAL PANEL SCHEDULES

DATE: 10/29/2024

SHEET NO.
E401

A:\2024\SOS\TPS Grimes Elem Interior\Dwg\E401.dwg, 10/28/2024 10:08:19 AM