RUHNAU
CLARKE
ARCHITECTS

October 24, 2024

ADDENDUM NO. 02

TO THE CONTRACT DOCUMENTS

FOR

SAN BERNARDINO COUNTY SUPERINTENDENT OF SCHOOLS

FOR THE

SDC Modular Classroom Building at Colton High School

DSA No: 04-122921 File No: 36-6 RCA Project No. 3-79-02

NOTICE TO BIDDERS

This Addendum forms a part of the Contract and modifies the original documents, DSA Approved on October 18, 2023. It is intended that all work affected by the following modifications shall conform with related provisions and general conditions of the contract of the original drawings and specifications. Modify the following items wherever appearing in any drawing or sections of the specifications. Acknowledge receipt of Addendum No. 02 in the space provided on the Bid Form. Failure to do so may subject bidder to disqualification.

GENERAL

Item No. 2.0 Replace "San Bernardino School District" with "**San Bernardino County Superintendent of Schools**" in all construction documents, including specifications.

RFBI RESPONSES

RFBI 006 RFI 02 requested the model number for the keypads and door contacts. The response included the model number for the keypads but did not include the model number for the door contacts. It is requested that CJUSD provide the door contacts model number.

Answer: George Risk Industries (G.R.I.) 8080-TMC-B 3/4"
Recessed Steel Door Channel Magnet, Mc-180
Magnet, Brown, Closed Loop, Terminals

CHANGES TO SPECIFICATIONS

Item No. 2.1 Reference Specification Section 32 18 13 – Synthetic Grass Surfacing
2.1.1 Add New Specification Section in its entirety.

CHANGES TO DRAWINGS

ARCHITECTURAL DRAWINGS

Item No. 2.2 Reference Sheet AS-2.1 – ENLARGED SITE PLAN
2.2.1 Revise per clouded areas of attached sketch ASK-2.1:
a. Detail 1 – New fence layout.

Item No. 2.3 Reference Sheet ASD-1.0 – SITE DETAILS
2.3.1 Revise per clouded areas of attached sketch ASK-2.2:
a. Detail 3 – New fence elevation at Building

Item No. 2.4 Reference Sheet A-4.01 – EXTERIOR ELEVATIONS

2.4.1 Revise per clouded areas of attached sketch ASK-2.3:

a. Revise South Elevation color pattern

Item No. 2.5 Reference Sheet AS-2.1 – ENLARGED SITE PLAN

2.5.1 Revise per clouded areas of attached sketch EXH-1.0:

a. Revise site plan to replace turf area at parking lot

ATTACHMENTS:

Specifications: **N/A**

Sketches: **ASK-2.1, ASK-2.2, ASK-2.3, EXH-1.0**

Sheets: **N/A**

END OF ADDENDUM NO. 2

LICENSED ARCHITECT
ROGER CLARKE
No. C-21340
Exp.10-31-25
STATE OF CALIFORNIA

_____

Roger Clarke, Principal
C-21340

SECTION 32 18 13
SYNTHETIC GRASS SURFACING

PART 1 GENERAL

1.01 SECTION INCLUDES

A. Synthetic grass surfacing and infill.

B. Edge anchoring and borders.

C. Correction of grades and subgrade.

1.02 REFERENCE STANDARDS

A. ASTM D698 - Standard Test Methods for Laboratory Compaction Characteristics of Soil Using Standard Effort (12,400 ft-lbf/ft3 (600 kN-m/m3)).

B. ASTM D6662 - Standard Specification for Polyolefin-Based Plastic Lumber Decking Boards.

C. ASTM F1487 - Standard Consumer Safety Performance Specification for Playground Equipment for Public Use.

D. ASTM F1632 - Standard Test Method for Particle Size Analysis and Sand Shape Grading of Golf Course Putting Green and Sports Field Rootzone Mixes.

E. ASTM F1667 - Standard Specification for Driven Fasteners: Nails, Spikes, and Staples.

F. CPSC Pub. No. 325 - Public Playground Safety Handbook.

1.03 ADMINISTRATIVE REQUIREMENTS

A. See Section 01 30 00 - Administrative Requirements - Administrative Requirements, for project meetings.

B. Preinstallation Meeting: Conduct preinstallation meeting at least one week prior to start of work of this section; require attendance by all affected installers.

1.04 SUBMITTALS

A. See Section 01 30 00 - Administrative Requirements, for submittal procedures.

B. Product Data: For all manufactured surfacing products, provide manufacturer's product data showing materials of construction, compliance with specified standards, installation procedures, and safety limitations.

   1. Treated Wood Products: Provide information on wood treatment chemical content, toxicity level, and life-cycle durability.

C. Shop Drawings, Carpet Roll: Show locations of seams and methods of seaming.

D. Samples: For each product for which color must be selected provide color chart showing full range of colors.

E. Samples: Provide following prior to ordering material:

   1. Synthetic Grass carpet: Two 12 inch by 12 inch (305 mm by 305 mm) pieces.

   2. Infill material: Two 1-gallon bags for each type.

3. Seamed synthetic grass carpet: Two 12 inch by 24 inch (305 mm by 610 mm) pieces seemed together for each seaming method indicated on drawings.

F. Installer's Qualification Statement.

G. Maintenance Data:

1. For manufactured surfacing products, provide manufacturer's recommended maintenance instructions and list of repair products, with address and phone number of source of supply.
2. For loose fill surfacing products, provide detailed re-ordering information to enable District to match installed material exactly.

1.05 QUALITY ASSURANCE

A. See section 01 40 00 - Quality Requirements, for procedures for testing, inspection, mock-ups, reports, certificates, use of reference standards.

B. Maintain one copy of latest edition of ASTM F1487 and CPSC Pub. No. 325 at project site.

1.06 DELIVERY, STORAGE, AND HANDLING

A. Deliver, handle, and store synthetic grass surfacing to project site in accordance with manufacturer's recommendations.

B. Store materials in dry, covered area, elevated above grade.

1.07 WARRANTY

A. See Section 01 78 00 - Closeout Submittals - Closeout Submittals, for additional warranty requirements.

B. Provide 10 year minimum warranty from date of substantial completion for materials and installation covering:

1. Excessive wear.
2. Fiber tensile strength.
3. Deterioration or fading from UV light.
4. Seam integrity.

PART 2 PRODUCTS

2.01 MANUFACTURERS

A. Basis of Design Product: TigerTurf Playground Fescue as manufactured by SGW, A Tencate Company, www.tencate.com , or equal.

B. Substitutions: See Section 01 60 00 - Product Requirements.

2.02 SYNTHETIC GRASS SURFACING

A. Synthetic Grass Carpet: Yarn fibers tufted through and adhered to porous fiber backing.

1. Total Weight: 84 oz per square yd, minimum.
2. Pile Height: Approx. 1.375 Inches
3. Machine Gauge: 3/8 inch

4. Thatch Color: Green & Tan
5. Roll: 15 feet (4.6 m) feet wide, minimum.

B. Synthetic Grass Infill: 1 pound per square foot (5 ksm), minimum at 50 to 50 percent granule to synthetic sand.
   1. Sand: Silica, 10 to 20 mesh, free of silts, clays, and contaminants, roundness of subangular, minimum, per ASTM F1632.

2.03 MATERIALS

A. Edge Anchoring: Wood-polymer composite lumber complying with ASTM D6662; factory finished, free of sharp vertical edges, protruding elements, and trip hazards, capable of being secured to border.
   1. Size(s): 2 inch by 3 inch (51 mm by 76mm).
   2. Minimum Edge Radius: 1/2 inch.

B. Border: Permanent element surrounding edge anchoring, consisting of exterior walls:

C. Geotextile: Nonwoven polypropylene sheet.

2.04 ACCESSORIES

A. Fasteners, Synthetic Grass to Edging: 1/2 inch (13 mm) stainless steel staples, in compliance with ASTM F1667.

B. Fasteners, Edging to Border: Self drilling, stainless steel screws, in compliance with ASTM F1667.

C. Fasteners, Seams:
   1. Bonding:
      a. Adhesive: Two-part urethane-based glue.
      b. Backing: 12-inch (305 mm) wide woven polyester.

PART 3 EXECUTION

3.01 PREPARATION

A. Lay out entire project perimeter as indicated on drawings prior to starting work.

B. Measure location of all synthetic grass elements, including perimeter of existing synthetic grass surfacing, access and egress points, hard surfaces, walls, fences, and structures.

C. Verify location of underground utilities and facilities in project area. Damage to underground utilities and facilities will be repaired at Contractor's expense.

3.02 SUBGRADE

A. Excavate unsuitable soil. Backfill with suitable material.
   1. Excavate and grade the area as needed to install 3 inches of road base material in the future turf area (Excavated soil to remain on site)

B. Correct irregularities to ensure that required depth of drainage layer can be installed, and elevation is in accordance with manufacturer's requirements.

C. Remove all obstructions that extend into drainage layer within composite nailer boards.

D. Perform rough and finish grading.

E. Shape to profile indicated on drawings and compact by proof rolling to minimum 95 percent, in compliance with ASTM D698.

F. Flatness Tolerance: 1/2 inch in 10 feet, maximum.

G. Verify that subgrades are at proper elevations and that smooth grading is complete.

3.03 GEOTEXTILE

A. Apply weed control pre-emergent

B. Install Gopher mesh matting

C. Install weed barrier

D. Verify that subgrade is free of ruts or protruding objects.

E. Install geotextile over subgrade in drainage trenches first, prior to field installation.

F. Lap minimum 36 inches width at seams. Adhere seams in accordance with manufacturer's recommendations.

G. Install smooth, and free of tensile stresses, folds, or wrinkles.

H. Protect from clogging, tears, or other damage during surfacing installation.

I. Repair or replace damaged geotextile in accordance with manufacturer's recommendations.

3.04 DRAINAGE AGGREGATE

A. Base Stone:

1. Import road base and grade and compact for proper drainage.
2. Flatness Tolerance: 1/2 inch in 10 feet, maximum.
3. Correct high and low areas in accordance with design drawings.
4. Mirror base stone elevations to final elevations.
5. Prevent disturbance to geotextile during installation.
6. Approval of drainage piping by Architect required prior to commencement of installation. Prevent disturbance of drainage piping during installation.

3.05 EDGE ANCHORING

A. Layout composite or redwood nailer boards. Approval of locations by Architect required prior to installing.

B. Install along full perimeter of synthetic grass.

C. Fasten to border with case hardened screws at 24 inch on center, minimum.

D. Set top of edging flush or recessed 1/2 inch below top of border, maximum.

3.06 BORDER

A. Verify that site furnishings and composite nailer boards located within project area are complete.

3.07 SYNTHETIC GRASS

A. Carpet Rolls:
   1. Unroll all carpet in same direction.
   2. Prevent seams from being located over impact mats.
   3. Allow carpet to rest for at least 4 hours after unrolling and prior to seaming.
   4. Smooth seams and edges, eliminate overlaps and gaps.

B. Seaming:
   1. Cut: Sinusoidal, with clean and smooth edge.
      a. The turf seams to be cut and matched using an S-weave pattern
   2. Method:
      a. Nailing / Stapling: Spaced 3 inch (76 mm) along seam.
         1) Install 6 Inch turf staples at turf seams
      b. Bonding: Adhesive-backed, applied uniformly with complete coverage.

C. Securing: Staple carpet to edging 1 inch (25 mm) on center.
   1. Install new 60d 6-inch turf nails to secure the turf at borders.

3.08 INFILL

A. Install white silica sand infill (1lb per sq ft)

B. Apply during dry weather without signs of moisture on synthetic grass.

C. Thoroughly brush synthetic grass prior to infill installation.

D. Apply infill uniformly in multiple lifts, brush fibers between each application.

E. Measure depth to confirm accordance with plans.

3.09 CLEANING

A. Power broom turf

B. Clean surrounding areas of excess construction materials, debris, and waste.

C. Remove excess and waste material and dispose of off-site in accordance with requirements of authorities having jurisdiction.

D. See Section 01 74 19 - Construction Waste Management and Disposal, for additional requirements.

3.10 PROTECTION

A. Protect installed products until Date of Substantial Completion.

B. Restore adjacent existing areas that have been damaged by work of this section.

END OF SECTION

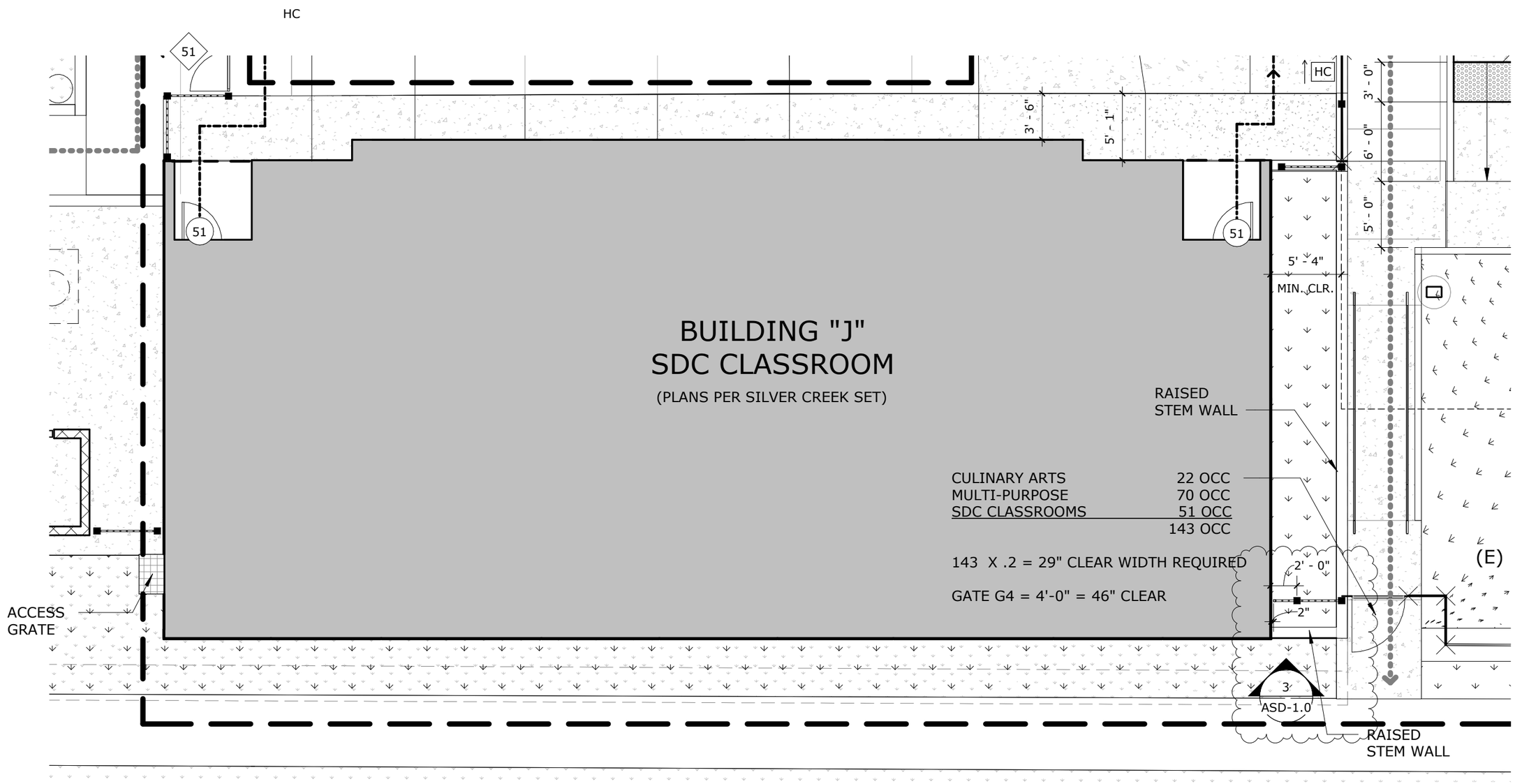

ADD #2

Description :

ENLARGED SITE PLAN - 1/AS-2.1

Scale:

1/8" = 1'-0"

COLTON H.S. - SDC CLASSROOM BUILDING
San Bernardino County Superintendent of Schools

10/23/2024 11:08:05 AM

RUHNAUCLARKE.COM
3775 TENTH STREET, RIVERSIDE CALIFORNIA 92501 (951) 684 4664
5751 PALMER WAY, SUITE C, CARLSBAD CALIFORNIA 92010 (760) 438 5899

RUHNAU CLARKE ARCHITECTS

DSA APN #: 04-121991

DSA File #: 36-6

Date: 10/24/2024

Project #: 3-79-02

Sheet #: **ASK-2.1**

Stamp: LICENSED ARCHITECT ROGER CLARKE No. C-21340 Exp.10-31-25 STATE OF CALIFORNIA

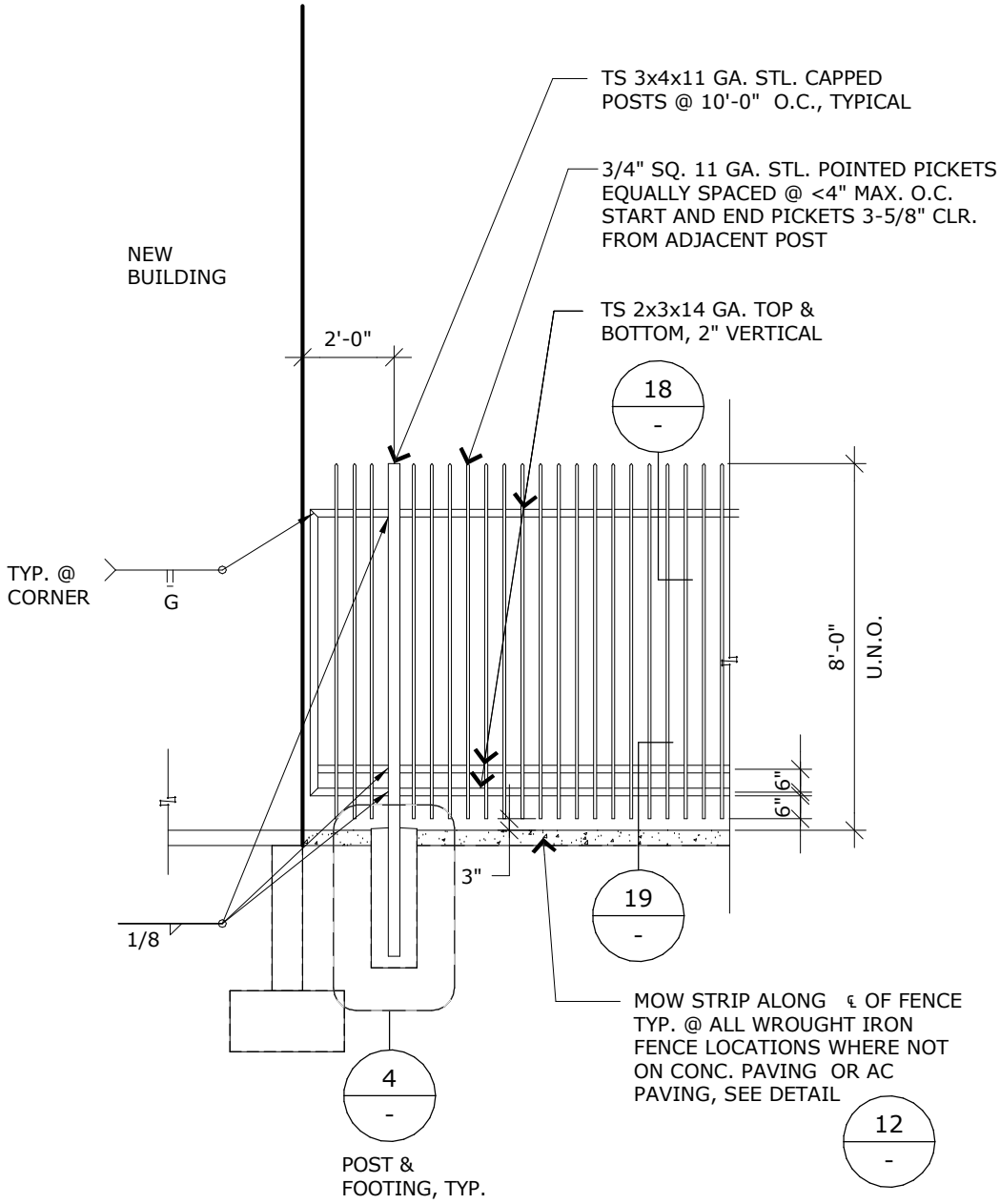

NOTE:

1. VERIFY ALL MEASUREMENTS AND CONDITIONS AT SITE PRIOR TO FABRICATION.
2. FOR ADDITIONAL INFORMATION, SEE DETAIL 15 / ASD-1.0

ADD #2

Description :

FENCE AT BLDG EDGE - 3/ASD-1.0

Scale:

1/4" = 1'-0"

COLTON H.S. - SDC CLASSROOM BUILDING
San Bernardino County Superintendent of Schools

10/23/2024 10:21:35 AM

DSA APN #: 04-121991

DSA File #: 36-H4

Date: 10/15/24

Project #: 3-79-02

Sheet #: **ASK-2.2**

Stamp: LICENSED ARCHITECT ROGER CLARKE No. C-21340 Exp.10-31-25 STATE OF CALIFORNIA

RUHNAU CLARKE ARCHITECTS
RUHNAUCLARKE.COM
3775 TENTH STREET, RIVERSIDE CALIFORNIA 92501 (951) 684 4664
5751 PALMER WAY, SUITE C, CARLSBAD CALIFORNIA 92010 (760) 438 5899

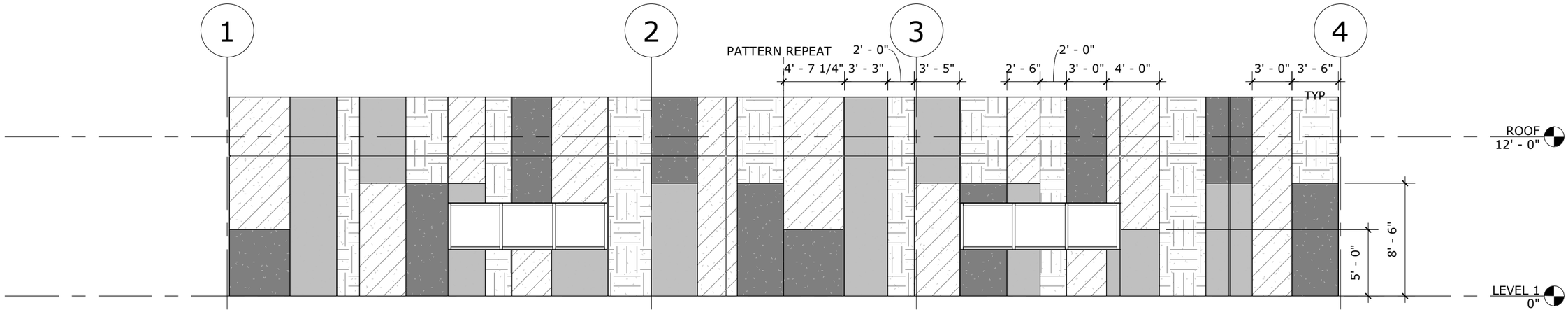

SOUTH ELEVATION - SCALE: 1/8" = 1'-0"

EXTERIOR ELEVATIONS LEGEND

- METAL WALL PANEL **(MWP-1)**
- CEMENT PLASTER **(CPL-1)**
- PAINTED CEMENT PLASTER **(P-2)**
- CEMENT PLASTER **(CPL-2)**
- PAINTED CEMENT PLASTER **(P-3)**
- PAINTED CEMENT PLASTER **(P-4)**
- PAINTED CEMENT PLASTER **(P-5)**
- EXTERIOR LIGHTING FIXTURE, PER ELEC. DWGS.

NOTE: REFER TO COLORS, MATERIALS AND FINISH LEGEND FOR MORE INFO

-
ID-1.1

Description :

SDC CLASSROOM BUILDING - SOUTH ELEVATION

Scale:

As indicated

COLTON H.S. - SDC CLASSROOM BUILDING
San Bernardino County Superintendent of Schools

10/23/2024 10:18:00 AM

DSA APN #: 04-122921

DSA File #: 36-6

Date: 10/24/24

Project #: 3-79-02

Sheet #: **ASK-2.3**

Stamp:

LICENSED ARCHITECT
ROGER CLARKE
No. C-21340
Exp.10-31-25
STATE OF CALIFORNIA

RUHNAU CLARKE ARCHITECTS

RUHNAUCLARKE.COM
3775 TENTH STREET, RIVERSIDE CALIFORNIA 92501 (951) 684 4664
5751 PALMER WAY, SUITE C, CARLSBAD CALIFORNIA 92010 (760) 438 5899

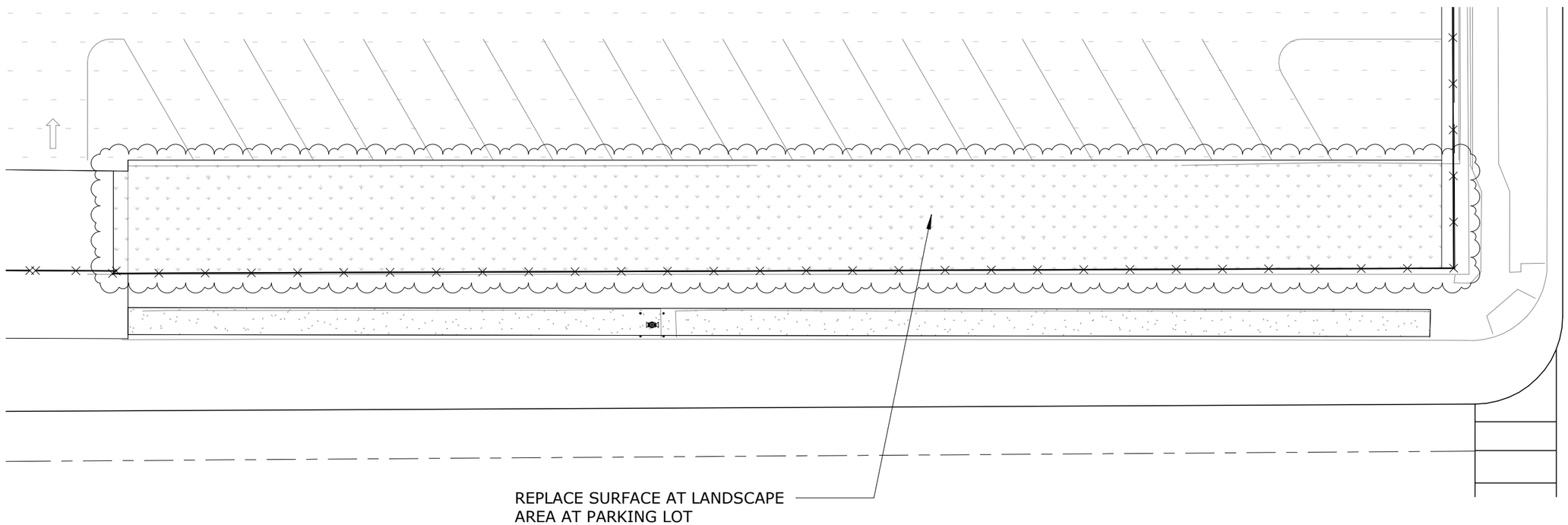

Description:

ENLARGED SITE PLAN - PARKING LOT UPGRADE

Scale:

1" = 20'-0"

COLTON H.S. - SDC CLASSROOM BUILDING
San Bernardino County Superintendent of Schools

10/23/2024 10:25:12 AM

RUHNAUCLARKE.COM
3775 TENTH STREET, RIVERSIDE CALIFORNIA 92501 (951) 684 4664
5751 PALMER WAY, SUITE C, CARLSBAD CALIFORNIA 92010 (760) 438 5899

RUHNAU CLARKE ARCHITECTS

DSA APN #: 04-122921

DSA File #: 36-6

Date: 10/24/24

Project #: 3-79-02

Sheet #: **EXH-1.0**

Stamp:

LICENSED ARCHITECT
ROGER CLARKE
No. C-21340
Exp.10-31-25
STATE OF CALIFORNIA