EDGEMONT UNION FREE SCHOOL DISTRICT
GREENVILLE ELEMENTARY SCHOOL
WINDOW REPLACEMENT, TENNIS COURT RENOVATION, AND RELATED WORK

100 GLENDALE ROAD, SCARSDALE, NY 10583

SED PROJECT NUMBER:

66-04-06-03-0-008-023

GREENVILLE ELEMENTARY SCHOOL
100 GLENDALE ROAD, SCARSDALE, NY 10583

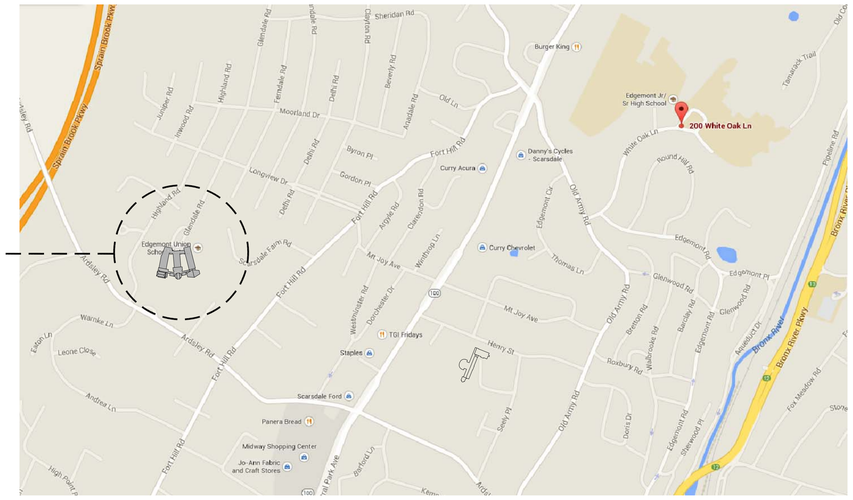

FULLER D'ANGELO P.C.

ARCHITECTS PLANNERS

45 KNOLLWOOD ROAD ELMSFORD NEW YORK 10523
TEL 914.592.4444 FAX 914.592.1717
WWW.FULLERDANGELO.COM

Copyright 2024 All Rights Reserved by FULLER & D'ANGELO P.C.

DATE	ISSUED TO
08-27-2024	BID
11-14-2023	SED SUBMISSION

SHEET SIZE 30"x42"

SCALE AS NOTED

DRAWN BY F & D

DRAWING NO. T-1

FILE NO. 23501.00

PLOT DATE: August 22, 2024 – 1:52pm

FILE: I:\23501.00 Edgemont Greenville Window replacement\DRAWINGS\CURRENT\1-F&D\23501.00-T-1.dwg

ABBREVIATIONS

&	AND
ACU	AIR CONDITIONING UNIT (S)
ACM	ASBESTOS CONTAINING MATERIAL
ACT	ACOUSTICAL CEILING TILE
ACW	ASBESTOS CONTAINING WASTE
AD	ACCESS DOOR
ADJ	ADJACENT
AFF	ABOVE FINISH FLOOR
AHU	AIR HANDLER UNIT
ALUM	ALUMINUM
ALT	ALTERNATE
AMB	AMBIENT
AMP	AMPERE
APD	AIR PRESSURE DROP
APPROX	APPROXIMATE
A.R.	AREA OF REFUGE
ARCH	ARCHITECTURAL
AVG	AVERAGE
BDD	BACK DRAFT DAMPER
BFW	BOILER FEED WATER
BHP	BRAKE HORSE POWER
BITUM	BITUMINOUS
BLDG	BUILDING
BLK	BLOCK
BTUH	BRITISH THERMAL UNITS/HOUR
BU	BUILT UP
BUR	BUILT UP ROOFING
C	COMMON
CV	COefficent, VALVE FLOW
CB	CATCH BASIN
C.C.	COOLING COIL
CEIL OR CLG	CEILING
CER/CEG	CEILING EXHAUST REGISTER/GRILLE
CFM	CUBIC FEET PER MINUTE
C.H	CEILING HEIGHT
CHWR	CHILLED WATER RETURN
CHWS	CHILLED WATER SUPPLY
C.J.	CONTROL JOINT
CL	CENTER LINE
CLG_WTR	COOLING WATER
CLOS	CLOSET
CMP	CORRUGATED METAL PIPE
C.O	CLEAN OUT
COL	COLUMN
COMPR	COMPRESSOR
CONC	CONCRETE
COND	CONDENSER
CONST	CONSTRUCTION
CONT	CONTINUOUS
CONTR	CONTRACTOR
CONV	CONVECTOR
CP	CONDENSATE PUMP
CRR/CRG	CEILING RETURN REGISTER/GRILLE
CRU	COMPUTER ROOM UNIT
CSD	CEILING SUPPLY DIFFUSER
CT	CERAMIC TILE
C.TWR.	COOLING TOWER
CU	CONDENSER UNIT
CU FT	CUBIC FEET
CUH	CABINET UNIT HEATER
CWR	CONDENSER WATER RETURN
CWS	CONDENSER WATER SUPPLY
D/DIA	DIAMETER
DB	DRY BULB TEMPERATURE
dB	DECIBEL
DC	DUST COLLECTOR
DEG	DEGREE
DEMO	DEMOLITION
D.F.	DRINKING FOUNTAIN
D.H.	DOUBLE HUNG
DIM	DIMENSION
DN	DOWN
D.O	REPEAT/DOOR OPENING
DP	DEEP
DR	DOOR
DWG	DRAWING
DX	DIRECT EXPANSION
E	EAST
EA	EACH
EAT	ENTERING AIR TEMPERATURE
E-CONTR	ELECTRICAL CONTRACTOR
E-CUSP.	EXISTING CUSPIDOR
EDB	ENTERING DRY BULB
E.D.F	EXISTING DRINKING FOUNTAIN
EDR	EQUIVALENT DIRECT RADIATION
E.E.W.	EMERGENCY EGRESS WINDOW
E.F.	EXHAUST FAN
EFE	EXISTING FIRE EXTINGUISHER
E.H.	EXHAUST HOOD
E.J	EXPANSION JOINT
EQ	EQUAL
ELEC	ELECTRICAL
EL/ELEV	ELEVATION
E.M.H.	ELEMENTARY SCHOOL MOUNTING HEIGHT
ENCL	ENCLOSURE
ENTR	ENTRANCE
EQUIP	EQUIPMENT
ESP	EXTERNAL STATIC PRESSURE
ETC	AND SO FORTH
EVAP	EVAPORATOR
EWB	ENTERING WET BULB
EWT	ENTERING WATER TEMPERATURE
EXH	EXHAUST
EXH.A	EXHAUST AIR
EXIST	EXISTING
EXP	EXPANSION
EXT	EXTERIOR
F	FAHRENHEIT
F.A.I.	FRESH AIR INTAKE
FCU	FAN COIL UNIT
F.D.	FLOOR DRAIN
F.DAMP.	FIRE DAMPER
F.E.	FIRE EXTINGUISHER
F.G.	FIBER GLASS
FIN	FINISH
FIXT	FIXTURE
FHC	FIRE HOSE CABINET
FL/FLR	FLOOR
FTG	FOOTING
FOB	FLAT ON BOTTOM
FOG	FUEL OIL GAUGE
FOR	FUEL OIL RETURN
FOS	FUEL OIL SUPPLY
FOT	FLAT ON TOP
F.P.	FIRE PROOF
FPM	FEET PER MINUTE
FPS	FEET PER SECOND
FRP	FIBERGLASS REINFORCED POLYSTYRENE
FT	FOOT OR FEET
GA	GAUGE
GAL	GALLONS
GALV	GALVANIZED
G.C	GENERAL CONSTRUCTION
GEN	GENERAL
GL	GLASS
GPH	GALLONS PER HOUR
GPM	GALLONS PER MINUTE
GR	GRAINS
G.V.	GAS VALVE
GYP. BD	GYPSUM BOARD
GYP. FB	GYPSUM FIBERBOARD
H	HEIGHT
H.B.	HOSE BIB
H-CONTR	HEATING, VENTING, AND AIR CONDITIONING CONTRACTOR
H.C.	HOLLOW CORE
H/C	HEATING/COOLING
HD	HEAD
HEAT.CL.	HEATING COIL
HG	REFRIGERANT HOT GAS
H.M	HOLLOW METAL
HORIZ	HORIZONTAL
H.P	HIGH POINT
HPS	HIGH PRESSURE STEAM
H.PWR	HORSE POWER
HR	HOUR (S)
HT	HEAT
HTHW	HIGH TEMPERATURE HOT WATER
HTR	HEATER
HV	HEATING/VENTILATION UNIT
H.W.C.	HIGH IMPACT WALL COVERING
HWR	HOT WATER RETURN
HWS	HOT WATER SUPPLY
HX	HEAT EXCHANGER
HZ	FREQUENCY(CYCLES PER MINUTE)
J.C	JANITOR'S CLOSET
JT	JOINT
J.B	JUNCTION BOX
KIT	KITCHEN
KW	KILOWATT
K.M.H.	KINDERGARTEN MOUNTING HEIGHT
L	LENGTH
LAT	LEAVING AIR TEMPERATURE
LAM	LAMINATE
LAV	LAVATORY
LBS/#	POUNDS
L.C.C	LEAD COATED COPPER
LDR	LEADER
LF	LINEAR FEET
LIQ	LIQUID
LL	LIVE LOAD
LP	LOW POINT
LPS	LOW PRESSURE STEAM
LRG	LINEAR RETURN GRILLE
LSD	LINEAR SUPPLY DIFFUSER
LWT	LEAVING WATER TEMPERATURE
M	MIRROR
MAX	MAXIMUM
MAT	MATERIAL
MBH	BTU PER HOUR (THOUSAND)
MD	MOTORIZED DAMPER
MECH	MECHANICAL
MFR	MANUFACTURER
MIN	MINIMUM
MISC	MISCELLANEOUS
MO	MASONRY OPENING
MPS	MEDIUM PRESSURE STEAM
MS	MARBLE SADDLE
MH	MAN HOLE
MTD	MOUNTED
MTL	METAL
N	NORTH
N/A	NOT APPLICABLE
NC	NORMALLY CLOSED
N.I.C	NOT IN CONTRACT
NO (S)	NUMBER(S)
N.OPEN	NORMALLY OPEN
N.T.S	NOT TO SCALE
OA	OUTSIDE AIR
OC	ON CENTER
OD	OUTSIDE DIAMETER
ODR	OPEN DUCT RETURN
OF	OUTSIDE FACE
OH	OVERHEAD
OPNG	OPENING
OPP	OPPOSITE
OZ	OUNCE
P	PUMP(IN-LINE OR BASE MOUNTED)
PART	PARTIAL
P-CONTR	PLUMBING CONTRACTOR
PB	PANEL BOX
PCC	POWER CHARGING CABINET
PD	PRESSURE DROP
PH	PENTHOUSE
PLT	PLATE
PLUMB	PLUMBING
PLYWOOD	PLYWOOD
PNL	PANEL
PNT	PAINT
PREFAB	PREFABRICATED
PRESS	PRESSURE
PRSC	PROJECTION SCREEN
PSI	POUNDS PER SQUARE INCH
PT	PRESSURE TREATED
QT	QUARRY TILE
QTY	QUANTITY
R	RISER/RADIUS
RA	RETURN AIR
RAD	RADIATION
RD	ROOF DRAIN
REF	ROOF EXHAUST FAN
REINF	REINFORCED
REQ'D	REQUIRED
RH	RELATIVE HUMIDITY
RO	ROUGH OPENING
RM	ROOM
RPM	REVOLUTIONS PER MINUTE
RTU	ROOF TOP UNIT
S	SINK
SA	SUPPLY AIR
SAN	SANITARY
SCHED	SCHEDULE
SD	SMOKE DETECTOR
S.DMPR	SMOKE DAMPER
SECT	SECTION
SF	SQUARE FOOT
SHT	SHEET
SIM	SIMILIAR
SP	STATIC PRESSURE
SPEC(S)	SPECIFICATION (S)
SQ	SQUARE
SQ FT	SQUARE FEET
SS	STAINLESS STEEL
STD	STANDARD
STL	STEEL
STM	STEAM
STOR	STORAGE
STRUCT	STRUCTURAL
SUCT	SUCTION
SUSP	SUSPENDED
T	TREAD/TOILET
TCP	TEMPERATURE CONTROL PANEL
T.D.	TRENCH DRAIN
T.DIFF.	TEMPERATURE DIFFERENCE
TEL	TELEPHONE
TEMP	TEMPERED
TEMPR.	TEMPERATURE
THK	THICK
T.O.	TRIMMED OPENING
T.O.C.	TOP OF CURB
T.O.P.	TOP OF PARAPET
T.O.S.	TOP OF STEEL
TSP	TOTAL STATIC PRESSURE
T.STAT	THERMOSTAT
TYP	TYPICAL
U	URINAL
UH	UNIT HEATER
UL	UNDERWRITERS LABORATORY
UNFIN	UNFINISHED
UV	UNIT VENTILATOR
V	VOLT
VAV	VARIABLE AIR VOLUME
V.C.T	VINYL COMPOSITION TILE
VD	VOLUME DAMPER
VEL	VELOCITY
VEST	VESTIBULE
V.I.F	VERIFY IN FIELD
VLV	VALVE
VOL	VOLUME
V.P.	VISION PANEL
V.W.C.	VINYL WALL COVERING
W	WOMEN/WIDTH/WASHER
W/	WITH
WB	WET BULB
W.C.	WATER CLOSET
WD	WOOD
WEF	WALL EXHAUST FAN
WER/WEG	WALL EXHAUST REGISTER/GRILLE
'WG'	INCHES OF WATER, GAGE (PRESSURE)
W.G.	WIRE GLASS
WK	WORK
W.I.	WROUGHT IRON
W.P.	WATER PROOF
WPD	WATER PRESSURE DROP
W.R.	WATER RESISTANT
WRR/WRG	WALL RETURN REGISTER/GRILLE
WSR/WSG	WALL SUPPLY REGISTER/GRILLE
WTG	WALL TRANSFER GRILLE
WTR	WATER
W.W.F.	WELDED WIRE FABRIC
W.W.M.	WELDED WIRE MESH
YD	YARD DRAIN

GRAPHIC LEGEND

CLASSROOM 100	ROOM NAME & NUMBER
100	DOOR NUMBER
1 A A100 2 3 4	ELEVATION KEY
1 4 2 3	INTERIOR WALL INDICATIONS
W1	WINDOW TYPE
WS1	REMOVAL/WORKSCOPE NOTE
1	REVISION MARK
1 DETAIL NO. A100 DWG. NO.	DETAIL KEY
1	WALL TYPE
A101	EXTERIOR ELEVATION KEY
FLUSH	FLUSH THRESHOLD
5'-0" ø HANDICAPPED TURNING RADIUS	
	REMOVE EXISTING CONSTRUCTION
	EXISTING CONSTRUCTION
	NEW WALL CONSTRUCTION
A 1	COLUMN GRID LINES
~	EXISTING COLUMN DESIGNATION
X XXX	BUILDING/WALL SECTION/DETAIL
	REFERENCE POINT
	HIDDEN LINE BELOW
	HIDDEN LINE ABOVE OR BEYOND
	CENTERLINE OR N.I.C. LINE
#	EXISTING DOOR INDICATES DOOR NUMBER (SEE DOOR SCHEDULE)
#	NEW DOOR INDICATES DOOR NUMBER (SEE DOOR SCHEDULE)

MATERIALS LEGEND

CONCRETE	PARTICLE BOARD
CONCRETE MASONRY UNITS	PLYWOOD
BRICK	ACOUSTICAL TILE
STONE	CONTINUOUS WOOD FRAMING THROUGH MEMBER
METALS	WOOD FRAMING THROUGH INTERRUPTED MEMBER
COMPACTED GRAVEL	FINISHED WOOD
EARTH/UNDISTURBED SOIL	BATT INSULATION
DRAINAGE BOARD	RIGID INSULATION

NEW YORK STATE 2020 ENERGY CONSERVATION CODE BUILDING ENVELOPE REQUIREMENTS

CLIMATE ZONE: 4

NOTE:
TO THE BEST OF OUR KNOWLEDGE, BELIEF AND PROFESSIONAL JUDGEMENT, PLANS AND SPECIFICATIONS ARE IN COMPLIANCE WITH SECTION E502.1 OF THE ENERGY CONSERVATION CONSTRUCTION CODE OF NEW YORK STATE. BUILDING ENVELOPE REQUIREMENTS ARE IN ACCORDANCE WITH TABLE E502.2(1).

FENESTRATION MAXIMUM U-FACTOR AND SHGC REQUIREMENTS (C402.4)

ELEMENT	CONDITION / VALUE	
VERTICAL FENESTRATION (AREA NOT GREATER THAN 30%)	U-VALUE	
	REQUIRED	PROVIDED
FIXED	0.38	SEE SPEC.
OPERABLE	0.45	
ENTRANCE DOORS	0.77	
SHGC		
PF<0.2	0.36	
0.2≤PF ≤0.5	0.43	
PF>0.5	0.58	

MAXIMUM AIR LEAKAGE RATE FOR FENESTRATION (C402.5.2)

ELEMENT	CONDITION / VALUE
WINDOWS	0.20 CFM/FT^2
SWINGING DOORS	0.20 CFM/FT^2

LIST OF DRAWINGS

GENERAL:

T-1 TITLE SHEET
G-1 ABBREVIATIONS, LEGENDS, GENERAL NOTES, GENERAL WINDOW NOTES, GENERAL REMOVAL NOTES & LIST OF DRAWINGS

ARCHITECTURAL:

A11 TENNIS COURT PLANS
A101 PARTIAL FIRST FLOOR PLANS & PARTIAL CLEARSTORY PLANS

A300 EXTERIOR PARTIAL ELEVATIONS
A301 EXTERIOR PARTIAL ELEVATIONS
A302 EXTERIOR PARTIAL ELEVATIONS

A425 WALL SECTIONS
A426 WALL SECTIONS
A427 WALL SECTIONS
A428 WALL SECTIONS
A429 WALL SECTIONS

A725 WINDOW SCHEDULE, DOOR SCHEDULE, & DOOR TYPES
A726 WINDOW DETAILS
A727 WINDOW DETAILS
A728 WINDOW DETAILS

AS PER USA CONGRESS ARCHITECTURAL WORKS COPYRIGHT PROTECTION ACT OF 1990 ALL IDEAS AND DESIGNS INCLUDING DERIVATIVES THEREOF, ALL DRAWINGS AND SPECIFICATIONS CONSTITUTE THE ORIGINAL COPYRIGHT WORK BY FULLER AND D'ANGELO, P.C. (F&D). THE DRAWINGS AND SPECIFICATIONS AS INSTRUMENTS OF SERVICE BY F&D ARE CREATED BY F&D FOR THIS PROJECT ONLY AND REMAIN THE PRODUCT AND PROPERTY OF F&D. ANY REPRODUCTION WITHOUT THE PRIOR CONSENT OF F&D IS PROHIBITED.

FULLER D'ANGELO P.C.
ARCHITECTS PLANNERS
48 SHOLLWOOD ROAD ELMFORD NEW YORK 10523
TEL. 914-592-4444 FAX 914.592.1717
WWW.FULLERANDANGELO.COM

Copyright 2020 Fuller & D'Angelo Architects & Planners (F&D) P.C.

S.E.D. CONTROL NUMBER:

GREENVILLE ELEMENTARY
66-04-06-03-0-008-023

PROJECT TITLE
GREENVILLE UNION FREE SCHOOL DISTRICT
GREENVILLE WINDOW REPLACEMENT, TENNIS COURT RENOVATION, AND RELATED WORK
180 GLENDALE RD., SCARSDALE, N.Y. 10583

DRAWING TITLE
LOCATION MAP, ABBREVIATIONS, LEGENDS, GENERAL NOTES, GENERAL WINDOW NOTES & GENERAL REMOVAL NOTES

DATE	ISSUED TO
08-27-2024	BID
11-14-2023	S.E.D. SUBMISSION

SCALE AS NOTED	DRAWING NO. G1
DRAWN BY F & D	
CHECKED BY F & D	FILE NO. 23501.00

GENERAL NOTES

THE FOLLOWING NOTES SHALL APPLY THROUGHOUT. EXCEPTIONS ARE SPECIFICALLY NOTED ON EACH DRAWING:

1. ALL DETAILS AND/OR PART OF DETAILS ARE SIMILAR FOR SIMILAR LOCATIONS IN ALL OR PART OF THE DETAIL.
2. COORDINATION OF ALL WORK UNDER THIS CONTRACT SHALL BE MAINTAINED TO ENSURE THE QUALITY AND TIMELY COMPLETION OF THE WORK/PROJECT.
3. INDICATED DIMENSIONS ARE TO:
   A. FACE OF MASONRY OR CONCRETE AND FACE OF FINISH TO FINISH ARE EXACT.
   B. CENTER LINES.
4. DRAWINGS ARE NOT TO BE SCALED. USE DIMENSIONS ONLY. ALL DIMENSIONS AND CONDITIONS SHOWN AND ASSUMED ON THE DRAWINGS MUST BE VERIFIED AT THE SITE BY THE CONTRACTOR BEFORE ORDERING ANY MATERIAL OR DOING ANY WORK. ANY DISCREPANCIES IN THE DRAWINGS AND SPECIFICATIONS SHALL BE REPORTED TO THE AUTHORITY. NO CHANGE IN DRAWINGS OR SPECIFICATIONS IS PERMISSIBLE WITHOUT THE WRITTEN CONSENT OF THE ARCHITECT AND ENGINEER. NO WORK SHALL PROCEED UNTIL SUCH DISCREPANCY HAS BEEN RECTIFIED.
5. ANY VARIATION FROM CONDITIONS SHOWN ON THESE DRAWINGS SHALL BE BROUGHT TO THE ATTENTION OF THE OWNER'S REPRESENTATIVE. AFFECTED WORK SHALL NOT PROCEED UNTIL CLARIFICATION HAS BEEN RECEIVED.
6. ALL WORK OF THIS CONTRACT SHALL BE DONE IN ACCORDANCE WITH THE LATEST EDITION OF THE BUILDING CODE NEW YORK STATE AND REGULATIONS OF OTHER AGENCIES HAVING JURISDICTION ON THE WORK OF THIS CONTRACT.
7. ALL WORK ON THESE DRAWINGS SHALL BE CONSIDERED NEW WORK WHETHER STATED OR NOT EXCEPT WHERE SPECIFICALLY NOTED AS "EXISTING TO REMAIN".
8. DISCREPANCIES AND OMISSIONS ON DRAWINGS AND SPECIFICATIONS SHALL BE REPORTED TO THE OWNER'S REPRESENTATIVE IN WRITING FOR CLARIFICATION.
9. SET ALL WORK STRAIGHT, PLUMB AND LEVEL OR WITH INDICIATED SLOPE.
10. THE CONTRACTOR SHALL USE THE APPROVED STANDARDS: A.I.S.C. FEDERAL, U.S., ETC. STANDARDS OF THEIR TRADES. ALL CONSTRUCTION SHALL BE PERFORMED TO THESE STANDARDS.
11. IF AMBIGUITIES EXIST IN THE CONTRACT DOCUMENTS, THE CONTRACTOR SHALL INCLUDE IN HIS BID THE MORE EXPENSIVE MATERIAL OR METHOD OF WORK.
12. THE CONTRACTOR SHALL REMOVE AND DISPOSE OF DEBRIS. THE CONTRACTOR SHALL KEEP WORK SITE FREE FROM DEBRIS AND ACCUMULATED REFUSE, AND SHALL HAVE SOLE RESPONSIBILITY FOR PROTECTING ALL DANGEROUS AREAS FROM ENTRY BY UNAUTHORIZED PARTIES. SITE SHALL BE LEFT BROOM CLEAN AT THE END OF EACH WORKING DAY.
13. LARGE SCALE DETAILS HAVE PRECEDENCE, HOWEVER WORK INDICATED ON SMALL SCALE DRAWINGS SHALL NOT BE OMITTED. SIMILARLY, NOTES TAKE PRECEDENCE OVER SCHEDULES, PIPING AND WIRE DIAGRAMS. HOWEVER, WORK SHOWN OR DESCRIBED BY OTHER METHODS SHALL NOT BE OMITTED.
14. THE CONTRACTOR SHALL PATCH AND REPAIR ALL DAMAGED OR EXPOSED SURFACES DUE TO CONTRACT WORK. ALL NEWLY INSTALLED, PATCHED WORK AND ALL AFFECTED AREAS SHALL BE PAINTED. ALL PAINTING WORK SHALL BE PERFORMED TO COVER THE ENTIRE HORIZONTAL OR VERTICAL SURFACE TO THE CLOSEST CORNER IN ALL FOUR DIRECTIONS. COLOR TO MATCH EXISTING CONDITIONS.
15. THE CONTRACTOR SHALL FURNISH AND INSTALL NEW MATERIALS AT NO ADDITIONAL COST TO THE OWNER FOR THE FOLLOWING CONDITIONS:
    A) TO FURNISH THE WORK OF THIS CONTRACT IN WORKMANLIKE MANNER.
16. THE CONTRACTOR SHALL BE RESPONSIBLE FOR ADEQUATELY BRACING AND PROTECTING ALL WORK DURING CONSTRUCTION AGAINST DAMAGE, BREAKAGE, COLLAPSE, DISTORTIONS AND OFF ALIGNMENTS ACCORDING TO CODES AND STANDARDS OF GOOD PRACTICE.
17. THE CONTRACTOR SHALL INCLUDE ALL PROPRIETARY AND ASSOCIATED SUPPLEMENTARY WORK TO PROVIDE A COMPLETE AND FINISHED INSTALLATION.
18. WHERE MANUFACTURER'S NAMES AND PRODUCT NUMBERS ARE INDICATED ON DRAWINGS, IT SHALL BE CONSTRUCTED TO MEAN THE ESTABLISHMENT OF QUALITY AND PERFORMANCE STANDARDS OF SUCH ITEMS. ALL OTHER PRODUCTS MUST BE SUBMITTED TO THE ARCHITECT FOR APPROVAL IN ACCORDANCE TO CONTRACT DOCUMENT REQUIREMENT BEFORE THEY SHALL BE DEEMED EQUAL.
19. FIRESTOPPING SHALL BE INSTALLED AT ALL PENETRATIONS OF FIRE RATED CONSTRUCTION AS PER SPECIFICATIONS.
20. PROVIDE GUARDS, RAILS, BARRICADES, FENCES, SIDEWALK SHEDS, CATCH PLATFORMS, DECKING, NIGHT LIGHTING, ETC., AS REQUIRED. TO PROVIDE ADEQUATE PROTECTION.
21. THE CONTRACTOR SHALL, UNLESS OTHERWISE PROVIDED IN THE CONTRACT DOCUMENTS, SECURE AND PAY FOR REQUIRED INSPECTIONS, PERMIT(S), FEES, LICENSE AND INSPECTIONS NECESSARY FOR THE PROPER EXECUTION OF THE WORK.
22. ADDITIONAL NOTES WHICH ARE APPLICABLE TO THIS PROJECT MAY BE FOUND THROUGHOUT THE CONTRACT DOCUMENTS.
23. SEISMIC RESTRAINTS SHALL BE PROVIDED, IN ACCORDANCE TO APPLICABLE CODES.
24. FOR ALL ITEMS THAT ARE REQUIRED TO HAVE SEISMIC SUPPORTS OR RESTRAINTS, SEISMIC PLANS AND SEISMIC RESTRAINT CALCULATIONS SHALL BE PREPARED, SEALED AND SIGNED BY A PROFESSIONAL ENGINEER LICENSED IN THE STATE OF NEW YORK ENGAGED BY THE CONTRACTOR. THE ENGINEER SHALL PROVIDE INSTALLATION SUPERVISION OF ALL SEISMIC SUPPORTS AND RESTRAINTS, UNLESS OTHERWISE NOTED.
25. REVIEW AND COORDINATE ALL CONDITIONS (INCLUDING BUT NOT LIMITED TO PENETRATIONS, FABRICATIONS, INSTALLATIONS) FOR CONFORMANCE TO THE PLANS, SPECIFICATIONS, APPLICABLE REFERENCE STANDARDS AND OTHER PROVISIONS OF THE CONTRACT DOCUMENTS, AND COORDINATE ALL WORK WITH ALL OTHER TRADES.
26. ALL WORK MUST CONFORM TO ALL CODES HAVING JURISDICTION ANY CONFLICT OF OR BETWEEN CODE, THE MORE STRINGENT CODE SHALL SUPERSEDE ALL OTHERS.
27. USE ONLY NEW MATERIALS AND EQUIPMENT, WITHOUT DEFECTS FOR THEIR INTENDED USE.
28. CONTRACTORS SHALL PROTECT ALL AREAS OF EXISTING CONSTRUCTION AND RELATED ITEMS FROM DAMAGE DURING CONSTRUCTION OPERATIONS.
29. ALL OCCUPIED PORTION OF THE SCHOOL BUILDING SHALL ALWAYS COMPLY WITH THE MINIMUM REQUIREMENTS NECESSARY TO MAINTAIN A CERTIFICATE OF OCCUPANCY.
30. ALL MEASUREMENTS AND CONDITIONS TO BE VERIFIED AT THE BUILDING BY THE CONTRACTOR. THE CONTRACTOR SHALL BE RESPONSIBLE THEREFORE.
31. ALL CONTRACTORS SHALL MEET THE FOLLOWING MINIMUM SAFETY AND SECURITY STANDARDS FOR CONSTRUCTION PROJECTS.
    a) ALL CONSTRUCTION MATERIALS SHALL BE STORED IN A SAFE AND SECURE MANNER.
    b) FENCES AROUND CONSTRUCTION SUPPLIES AND DEBRIS SHALL BE MAINTAINED.
    c) WORKERS SHALL BE REQUIRED TO WEAR PHOTO IDENTIFICATION BADGES AT ALL TIMES FOR IDENTIFICATION AND SECURITY PURPOSES WHILE WORKING ON SITE.
32. a) REMOVAL OF ALL DEBRIS SHALL BE THROUGH DESIGNATED, SEPARATED AND PROTECTED AREAS OF THE BUILDING. THERE SHALL BE NO MOVEMENT OF DEBRIS OR EQUIPMENT THROUGH OCCUPIED SPACES OF THE BUILDING.
    b) ALL OCCUPIED PARTS OF A BUILDING AFFECTED BY CONSTRUCTION ACTIVITY SHALL BE CLEANED AT THE CLOSE OF EACH WORK DAY.
33. CONTRACTOR SHALL MAKE THE BUILDING SECURE AT THE END OF EACH WORK DAY. PROVIDE TEMPORARY PLYWOOD COVERS OVER WINDOW/ DOOR OPENINGS AS REQUIRED TO SECURE BUILDING TO THE OWNERS SATISFACTION.
34. CLEANING DURING WINDOW WORK:
    -PRIOR TO START OF WINDOW WORK IN A SPACE, THE CONTRACTOR WILL MOVE ALL FURNITURE, EQUIPMENT AND MATERIALS TO A SPACE OPPOSITE IN THE ROOM FROM THE WINDOW. THE MATERIALS, EQUIPMENT AND FURNITURE WILL BE COVERED WITH SHEETING AT LEAST 1 MIL. THICK. THE MATERIALS ARE TO BE PROTECTED THROUGHOUT THE WORK. THROUGHOUT THE PROJECT, GARBAGE AND DEBRIS BOTH INSIDE AND OUTSIDE ARE TO BE CLEANED ON DAILY BASIS.
    -AT THE COMPLETION OF THE WINDOW WORK, THE MATERIALS, EQUIPMENT AND FURNITURE WILL BE MOVED BACK TO THEIR ORIGINAL LOCATION BY DISTRICT PERSONNEL.
    -THE CONTRACTOR SHALL CLEAN MATERIALS, EQUIPMENT AND FURNITURE SURFACES AND BROOM CLEANED THE FLOORS.

GENERAL REMOVAL NOTES:

1. REMOVAL DRAWINGS INDICATE ONLY MAJOR SCOPE OF REMOVALS. CONTRACTOR IS REQUIRED TO REMOVE ANY AND ALL ITEMS NOT SHOWN AS REQUIRED TO SUIT ALL NEW WORK. CONTRACTOR IS REQUIRED TO REMOVE, PROTECT AND STORE ANY AND ALL ITEMS SHOWN AS REQUIRED TO SUIT ALL NEW WORK, COORDINATE w/OWNER FOR STORING LOCATIONS.
2. CONTRACTOR IS TO VERIFY ANY MAJOR DIMENSIONAL DEVIATIONS FROM DRAWINGS OR STRUCTURAL OBSTRUCTIONS. THESE SHALL BE BROUGHT TO THE OWNER'S REPRESENTATIVE'S ATTENTION. ALL CONTRACT DRAWINGS INDICATE APPROXIMATE DIMENSIONS AND EXISTING CONDITIONS BASED ON FIELD SURVEY AND DRAWINGS FURNISHED BY THE OWNER. VARIATIONS MAY EXIST AS TO FIELD CONDITIONS. THE COST FOR ANY SUCH VARIATIONS SHALL BE INCLUDED WITHIN THE CONTRACT BID.
3. ALL SURFACES DISTURBED BY REMOVALS SHALL BE PATCHED/REPAIRED TO MATCH EXISTING ADJACENT FINISHES, COORDINATE AND PREPARE SURFACES TO ACCOMMODATE WITH NEW FINISH ACCORDING TO SPECS AND MANUFACTURER'S RECOMMENDATIONS.
4. GENERAL CONTRACTOR SHALL FIRE STOP ALL TRADE RELATED EXISTING OR NEW PENETRATIONS THROUGH FLOORS, PARTITIONS AND WALLS AT ALL LOCATIONS WITH APPROVED MATERIALS AND SYSTEMS.
5. ALWAYS WORK IN A MANNER WHICH PROVIDES CONTINUOUS SUPPORT TO STRUCTURE ABOVE. PROVIDE APPROPRIATE LINTEL FOR ALL OPENINGS UNLESS SPECIFIED OTHERWISE.
6. REMOVE ALL WINDOW TREATMENTS AND HARDWARE WHERE WINDOWS ARE BEING REPLACED. IF REQUESTED, TURNOVER TO OWNER.
7. GENERAL CONTRACTOR TO COORDINATE REMOVALS WITH NEW WORK.
8. FOR ABATEMENT OF HAZARDOUS/ TOXIC MATERIALS REFER TO HAZARDOUS MATERIALS DRAWINGS AND SPECIFICATIONS.
9. ABATEMENT OF HAZARDOUS MATERIAL SHALL BE COORDINATED WITH REMOVAL WORK.

GENERAL WINDOW NOTES

1. ALL MULLION REINFORCING TO BE CALCULATED TO MEET WIND LOADING REQUIREMENTS AS DESCRIBED IN THE SPECIFICATIONS BY WINDOW MANUFACTURER.
2. ALL INSULATED PANEL FACE COLORS, BOTH INTERIOR AND EXTERIOR AS SELECTED BY ARCHITECT.
3. ALL EXPOSED FASTENERS SHALL BE FINISHED TO MATCH ALUMINUM FINISH COLOR. ALL COUNTER FLASHING SHALL BE FINISHED TO MATCH ALUMINUM FINISH COLOR UNLESS NOTED OTHERWISE.
4. PROTECT DISSIMILAR MATERIALS AS PER SPECIFICATIONS.
5. CONTRACTOR SHALL PATCH ALL DISTURBED SURFACES TO MATCH EXISTING.
6. ALL BLOCKING REQUIRED SHALL BE KILN DRIED LUMBER. FINISH OF FASTENERS SHALL BE COMPATIBLE WITH BLOCKING MATERIAL AND SHALL BE NON-CORROSIVE. SEE SPECS. ALL FASTENERS TO COMPLY WITH ALL CRITERIA AS DESCRIBED IN THE SPECIFICATIONS AND SHALL BE DETERMINED BY A NEW YORK STATE LICENSED P.E. ENGAGED BY THE CONTRACTOR.
7. ALL EXPOSED LINTELS WHERE WINDOWS ARE BEING INSTALLED SHALL BE SCRAPED, WIRE BRUSHED, PRIMED AND PAINTED TO MATCH BRICK COLOR. PROVIDE PRIMER AND (2) FINISH COATS. REFER TO SPECIFICATIONS.
8. SILL JAMB AND HEAD FASTENERS TO COMPLY WITH ALL CRITERIA AS DESCRIBED IN THE SPECIFICATIONS.
9. ALL WINDOW SIZES INDICATED ARE APPROXIMATE CONTRACTOR TO FIELD VERIFY ALL M.O.'S PRIOR TO FABRICATION OF WINDOWS UNITS. EXISTING CONDITIONS SHOWN SHALL BE VERIFIED BY THE CONTRACTOR AND REFLECTED ON SHOP DRAWINGS. THE CONTRACTOR SHALL BE RESPONSIBLE FOR ALL DIMENSIONS AND JOB SITE CONDITIONS AFFECTING THIS WORK.
10. SIZES OF ALUMINUM SNAP TRIM SHOWN ARE APPROXIMATE. LARGER SIZES MAY BE REQUIRED TO COVER EXPOSED MATERIALS DETERMINED BY FIELD CONDITIONS.
11. CONCEALED FLASHING SHALL BE CORROSION RESISTANT, NON-STAINING AND NON-BLEEDING, COMPATIBLE WITH ADJACENT MATERIALS.
12. SEALANT COLOR SHALL MATCH ADJACENT ALUMINUM EXTRUSION AND FLASHING. UNLESS NOTED OTHERWISE.
13. FASTENER TYPE, LENGTH, AND SPACING SHALL BE AS REQUIRED BY DESIGN LOAD CRITERIA AND SHALL BE DETERMINED BY A NEW YORK STATE LICENSED P.E. ENGAGED BY THE CONTRACTOR.
14. REFER TO SPECIFICATIONS FOR SCREENS.
15. ALL INSULATED PANELS SHALL BE FIRE RATED. REFER TO SPECIFICATIONS.
16. EMERGENCY EGRESS WINDOWS (EEW) WINDOWS SHALL HAVE A MINIMUM NET CLEAR OPENING OF 6 S.F. WITH A MINIMUM DIMENSION OF 24". WINDOW OPERATING HARDWARE SHALL BE A MAXIMUM OF 54" ABOVE THE FINISHED FLOOR. PROVIDE LABEL, REFER TO DETAIL 1/A726.
17. PROVIDE SECURITY AND WEATHER PROTECTION OF THE WINDOW OPENINGS AND PROTECT FROM DAMAGE. MINIMUM ¾" PLYWOOD AND PLASTIC SHEETING.
18. ALL GLAZING 1" INSULATING TEMPERED UNLESS NOTED OTHERWISE.
19. CONTRACTOR TO CAREFULLY UNFASTEN EXISTING METAL PARTITION CLOSURE PLATES PRIOR TO REMOVAL OF EXISTING CURTAINWALL. TRIM CLOSURE PLATES TO ACCOMMODATE NEW WINDOW WAL

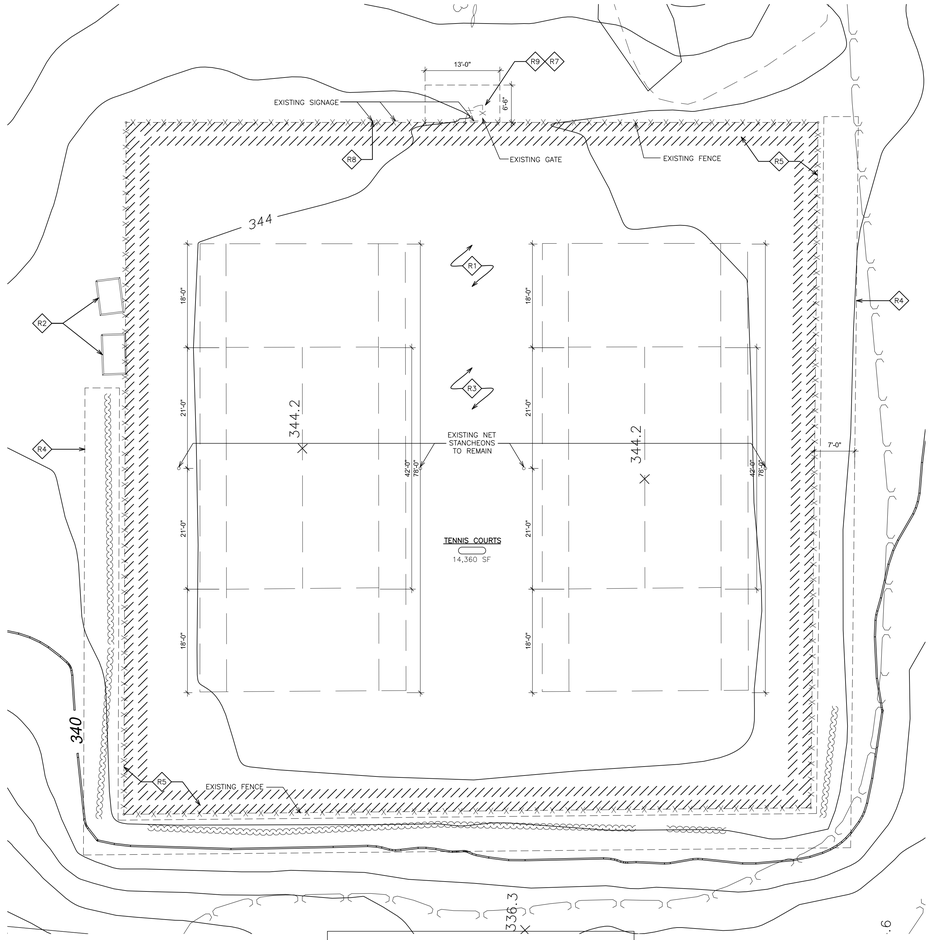

1 TENNIS COURT REMOVAL PLAN
SCALE: 3/32" = 1'-0"

SITE REMOVAL NOTES:

- R1 REMOVE EXISTING ARTIFICIAL TURF CARPET TENNIS COURT SURFACE AND GLUE RESIDUE.
- R2 TEMPORARILY RELOCATE STORAGE SHEDS TO ACCESS WORK. REINSTALL AT COMPLETION OF WORK.
- R3 MILL 1" OF EXISTING ASPHALT BASE. (EXISTING COURT SURFACE)
- R4 REMOVE ALL EXISTING VEGETATION, VINES, ETC. FROM EXISTING FENCE BY OWNER.
- R5 CAREFULLY REMOVE EXISTING CHAIN LINK FENCE FABRIC AND ALL RELATED ITEMS. EXISTING POSTS, TOP AND BOTTOM RAINS TO REMAIN. REMOVE EXISTING MID-RAIL.
- R6 REMOVE RUST AND DEBRIS FROM FENCE POSTS AND CROSS RAILS. REPAIR DAMAGED POSTS. APPLY RUST RESISTANT PAINT.
- R7 REMOVE EXISTING SWING GATE AND ASSOCIATED ITEMS.
- R8 CAREFULLY REMOVE EXISTING SIGNAGE. CLEAN AND STORE SAFELY FOR REUSE. REPLACE DAMAGED SIGNAGE, AS REQUIRED.
- R9 REMOVE RAILROAD TIE STEPS. PREPARE AREA AT ENTRANCE OF THE SWING GATE FOR THE INSTALLATION OF A NEW CONCRETE PAD AND SWING GATE.

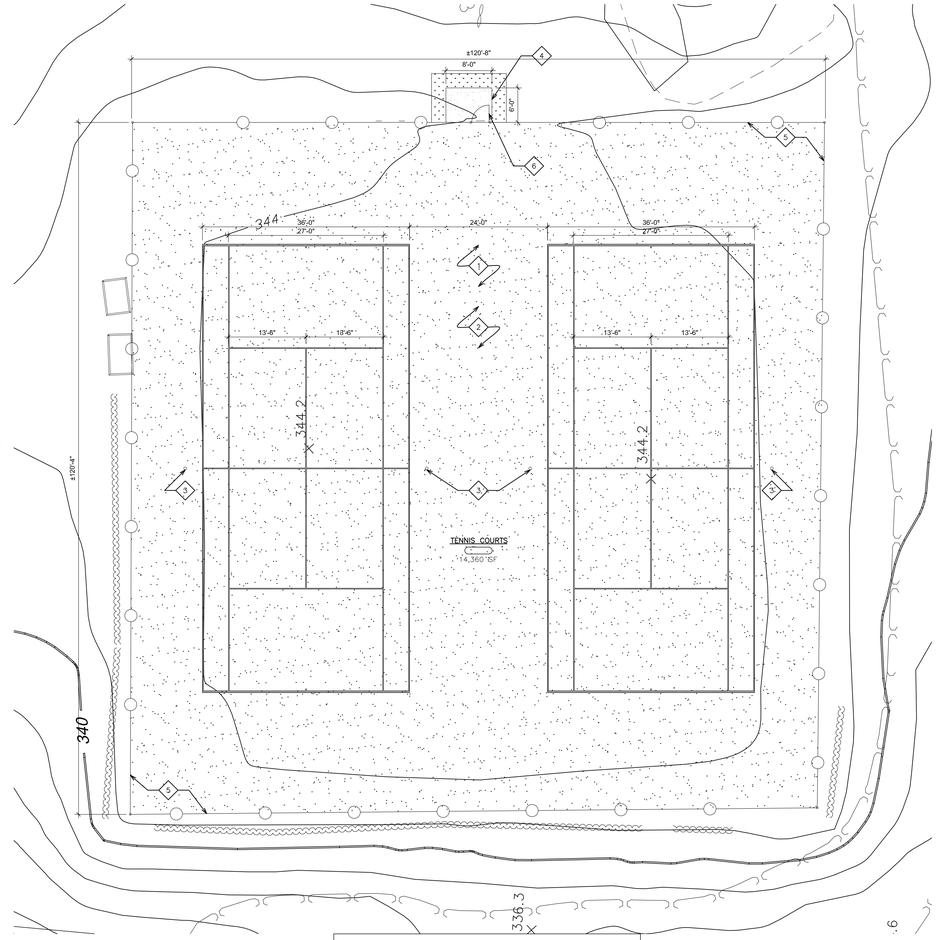

2 TENNIS COURT PLAN
SCALE: 3/32" = 1'-0"

SITE WORKSCOPE NOTES:

- 1 POWER WASH OR CLEAN W/ COMPRESSED AIR ENTIRE AREA TO BE RESURFACED. REMOVE ALL VEGETATION FROM CRACKS & SURFACE. REMOVE ALL LOOSE, FRACTURED OR OTHERWISE UNSTABLE PAVEMENT AND INFILL WITH NEW. ROUTE OUT ALL CRACKS 1/4" OR LARGER AND INSTALL CRACK REPAIR COMPOUND.
- 2 PROVIDE NEW TENNIS COURT SURFACE ON TOP OF NEW 1" ASPHALT BASE. IN ACCORDANCE WITH MANUFACTURERS REQUIREMENTS. SEE DETAIL AND SPECIFICATIONS. PROVIDE COURT LINES AS SHOWN.
- 3 ALIGN NEW TENNIS COURT MARKINGS WITH EXISTING STANCHION POST HOLES.
- 4 PROVIDE NEW CONCRETE PAVEMENT & BASE. SEE DETAILS 3/A11. RESTORE EXISTING GRASS AREA AFTER INSTALLATION OF NEW SIDEWALK.
- 5 INSTALL NEW 10 FT. HIGH CHAIN LINK FENCE FABRIC ON EXISTING POSTS AND RAILS. INSTALL NEW MID RAIL. SEE DETAIL 4/A11 AND SPECIFICATIONS.
- 6 PROVIDE NEW SWING GATE w/FULCRUM LATCH. SEE DETAIL 5/A11.

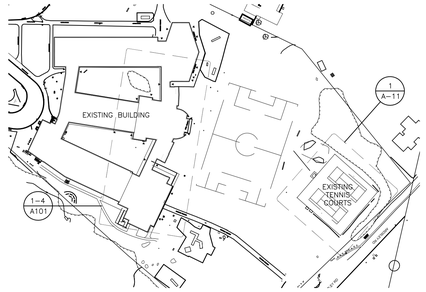

6 SITE KEY PLAN
SCALE: N.T.S.

N

SITE LEGEND:

- PROPERTY LINE
- EL XX.XX' — PROPOSED SPOT ELEVATION
- EXISTING CHAIN LINK FENCE.
- NEW CHAIN LINK FENCE FABRIC.
- # — SITE WORKSCOPE NOTE.
- PITCH DIRECTION
- AREA TO BE RE-GRADED AND RESTORED WITH TOP SOIL & SEED. SEE DETAILS AND SPECIFICATIONS.
- AREA TO RECEIVE NEW BITUMINOUS PAVEMENT. SEE DETAILS .

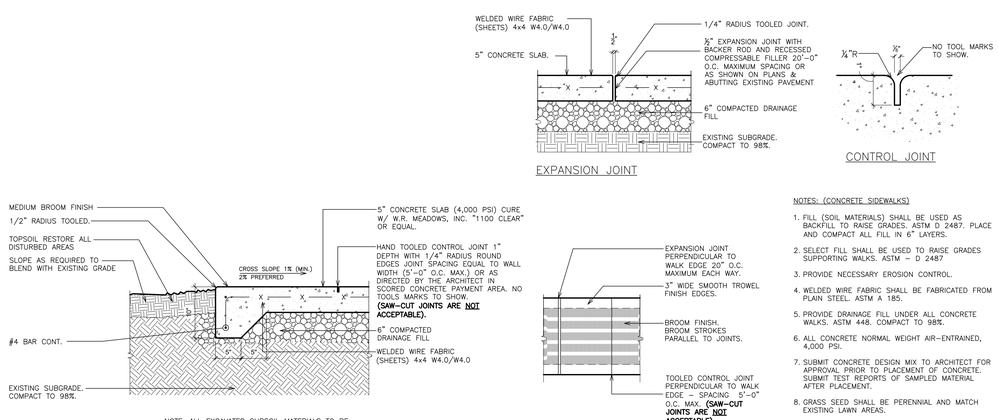

NOTE: ALL EXCAVATED SUBSOIL MATERIALS TO BE LEGALLY DISPOSED OFF SITE BY CONTRACTOR.

3 CONCRETE SIDEWALK DETAILS
SCALE: N.T.S.

NOTES: (CONCRETE SIDEWALKS)

1. FILL (SOIL MATERIALS) SHALL BE USED AS BACKFILL TO RAISE GRADES. ASTM D 2487. PLACE AND COMPACT ALL FILL IN 6" LAYERS.
2. SELECT FILL SHALL BE USED TO RAISE GRADES SUPPORTING WALKS. ASTM – D 2487
3. PROVIDE NECESSARY EROSION CONTROL.
4. WELDED WIRE FABRIC SHALL BE FABRICATED FROM PLAIN STEEL. ASTM A 185.
5. PROVIDE DRAINAGE FILL UNDER ALL CONCRETE WALKS. ASTM 448. COMPACT TO 98%.
6. ALL CONCRETE NORMAL WEIGHT AIR-ENTRAINED, 4,000 PSI.
7. SUBMIT CONCRETE DESIGN MIX TO ARCHITECT FOR APPROVAL PRIOR TO PLACEMENT OF CONCRETE. SUBMIT TEST REPORTS OF SAMPLED MATERIAL AFTER PLACEMENT.
8. GRASS SEED SHALL BE PERENNIAL AND MATCH EXISTING LAWN AREAS.
9. FORMS SHALL BE STEEL OR DIMENSIONAL LUMBER
10. ALL REINFORCING TO BE EPOXY COATED.
11. ALL CONTROL & EXPANSION JOINTS MUST BE TOOLED. **SAW-CUT JOINTS ARE NOT ACCEPTABLE.**

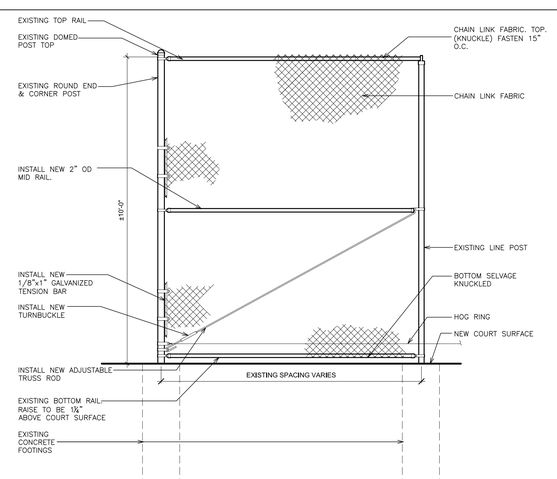

TOP & BOTTOM FABRIC OPTIONS
KNUCKLE

FENCE NOTES:

1. ALL MESH SHALL BE 1¾" DIAMOND SHAPE – 6 GAUGE, BLACK VINYL COATED ASTM F668, TYPE 2B, 7 MIL THERMALLY FUSED PVC.
2. SELVAGE SHALL BE TWISTED AND KNUCKLED, TOP AND BOTTOM.
3. STEEL PIPE SHALL BE STANDARD WEIGHT SCHEDULE 40 HOT DIPPED GALVANIZED AVG 1.8 OZ/SF.
4. PROVIDE MANUAL LOCK FOR GATE.
5. FASTEN FABRIC TO FRAME @ 12" O.C. MAX.

NOTE:
PAINT ALL EXISTING AND NEW FENCE COMPONENTS.

4 CHAIN LINK FENCE DETAIL
SCALE: N.T.S.

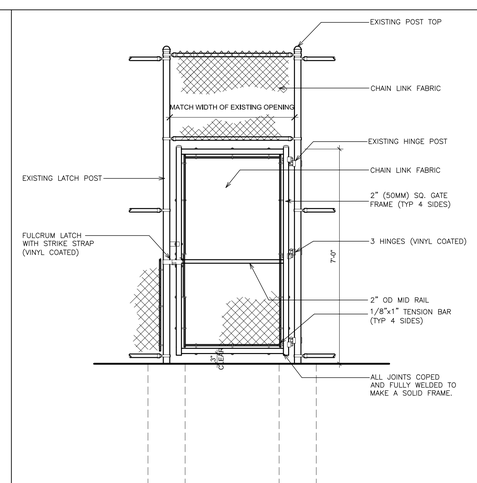

5 CHAIN LINK FENCE SINGLE GATE
SCALE: N.T.S.

AS PER USA CONGRESS ARCHITECTURAL WORKS COPYRIGHT PROTECTION ACT OF 1990 ALL IDEAS AND DESIGNS INCLUDING DERIVATIVES THEREOF, ALL DRAWINGS AND SPECIFICATIONS CONSTITUTE THE ORIGINAL COPYRIGHT WORK BY FULLER AND D'ANGELO, P.C. (F&D). THE DRAWINGS AND SPECIFICATIONS AS INSTRUMENTS OF SERVICE BY F&D ARE CREATED BY F&D FOR THIS PROJECT ONLY AND REMAIN THE PRODUCT AND PROPERTY OF F&D. ANY REPRODUCTION WITHOUT THE PRIOR CONSENT OF F&D IS PROHIBITED.

FULLER D'ANGELO P.C. ARCHITECTS PLANNERS
48 KNOLLWOOD ROAD ELMSFORD NEW YORK 10523
TEL. 914.592.4444 FAX 914.592.1717
WWW.FULLERANDANGELO.COM
Copyright 2024 Fuller D'Angelo Architects & Planners (F&D) P.C.

S.E.D. CONTROL NUMBER:
GREENVILLE ELEMENTARY
66-04-06-03-0-008-023

PROJECT TITLE
GREENVILLE UNION FREE SCHOOL DISTRICT
GREENVILLE WINDOW REPLACEMENT, TENNIS COURT RENOVATION, AND RELATED WORK
100 GLENDALE RD., SCARSDALE, NY 10583

DRAWING TITLE
TENNIS COURT PLANS & DETAILS

DATE	ISSUED TO
08-27-2024	BID
11-14-2023	S.E.D. SUBMISSION

SCALE: AS NOTED
DRAWING NO.: A11
DRAWN BY: F & D
CHECKED BY: F & D
FILE NO.: 23501.00

PLOT DATE: August 22, 2024 – 1:52pm

FILE: I:\23501.00 Edgemont Greenville Window replacement\DRAWINGS\CURRENT\1-F&D\23501.00-A10-11.dwg

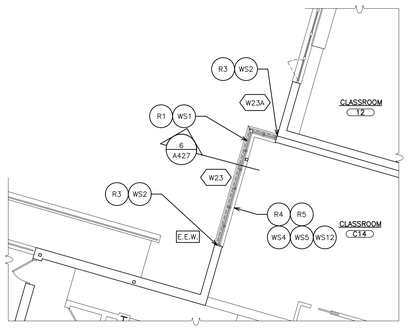

2 PARTIAL FIRST FLOOR PLAN
SCALE: 1/8" = 1'-0"

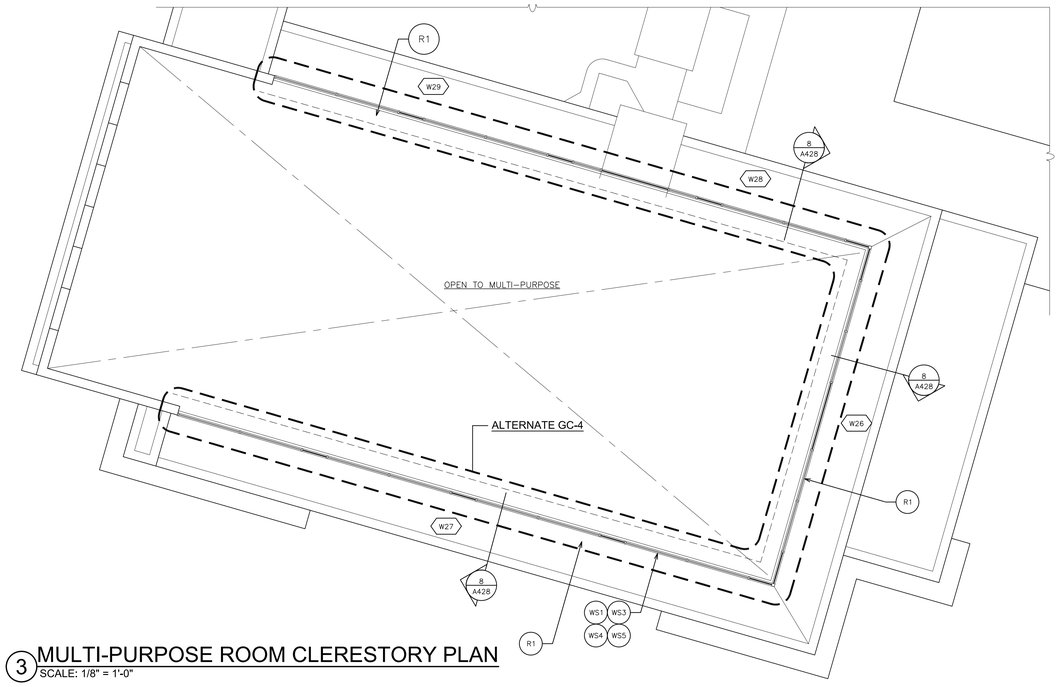

3 MULTI-PURPOSE ROOM CLERESTORY PLAN
SCALE: 1/8" = 1'-0"

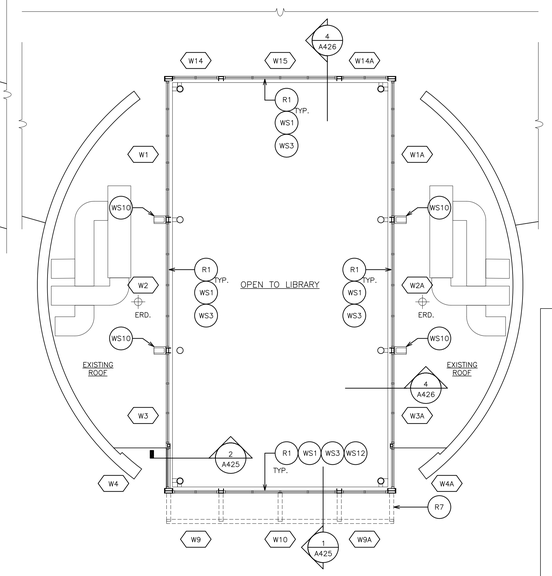

4 PARTIAL LIBRARY CLERESTORY PLAN
SCALE: 1/8" = 1'-0"

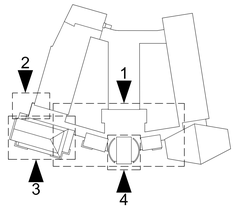

KEY PLAN
SCALE N.T.S.

AS PER USA CONGRESS ARCHITECTURAL WORKS COPYRIGHT PROTECTION ACT OF 1990 ALL IDEAS AND DESIGNS INCLUDING DERIVATIVES THEREOF, ALL DRAWINGS AND SPECIFICATIONS CONSTITUTE THE ORIGINAL COPYRIGHT WORK BY FULLER AND D'ANGELO, P.C. (F&D). THE DRAWINGS AND SPECIFICATIONS AS INSTRUMENTS OF SERVICE BY F&D ARE CREATED BY F&D FOR THIS PROJECT ONLY AND REMAIN THE PRODUCT AND PROPERTY OF F&D. ANY REPRODUCTION WITHOUT THE PRIOR CONSENT OF F&D IS PROHIBITED.

REMOVAL NOTES:
(COORDINATE REMOVALS W/ ABATEMENT CONTRACTOR)

- R1 REMOVE EXISTING ALUMINUM STOREFRONT SYSTEMS, AND ALL RELATED ITEMS, INCLUDING SEALANTS, AND FLASHINGS. PATCH ALL DISTURBED SURFACES TO MATCH EXISTING ADJACENT SURFACES.
- R2 REMOVE EXISTING DOORS, HARDWARE, THRESHOLDS, TRANSOMS, SIDELITES AND ALL RELATED ITEMS. PATCH ALL DISTURBED SURFACES TO MATCH EXISTING ADJACENT SURFACES.
- R3 CLEAN BRICK AND/OR CAST STONE SURFACES OF ALL SEALANT RESIDUE.
- R4 REMOVE AND SAFELY STORE EXISTING ROLLER SHADES, MOUNTING BRACKETS, FASTENERS, AND ALL RELATED ITEMS. REINSTALL AT CONCLUSION OF THE WORK.
- R5 REMOVE AND DISCARD AT LEAST FIRST ROW OF ACOUSTICAL CEILING PANELS (2'X4' & 2'X2') FOR REMOVALS AND INSTALLATION OF NEW WINDOW SYSTEM. REPLACE WITH NEW ACT TO MATCH EXISTING.
- R6 REMOVE EXISTING FLOOR MATERIAL BACK TO NEXT FULL TILE AS REQUIRED. PREPARE FLOOR AS PER FLOOR TILE MANUFACTURERS RECOMMENDATIONS. INSTALL FLOOR MATERIAL TO MATCH EXISTING ADJACENT MATERIAL.
- R7 REMOVE EXISTING STEEL SUNSHADE CANOPY.

WORKSCOPE NOTES:

- WS1 INSTALL NEW ALUMINUM STOREFRONT ASSEMBLY AND RELATED ITEMS AS PER DETAILS AND SPECIFICATIONS.
- WS2 REPAIR CRACKED AND/OR LOOSE CONCRETE AND BRICKS ADJACENT TO NEW WINDOW WALL ASSEMBLY CAUSED BY REMOVALS.
- WS3 SCRAPE, WIRE BRUSH, PRIME, AND PAINT EXISTING STEEL STRUCTURE PRIOR TO ENCLOSING WITHIN METAL PANEL SYSTEM.
- WS4 PATCH AND PAINT ALL SURFACES DAMAGED BY REMOVALS, ADJACENT TO WINDOW SYSTEM.
- WS5 SEAL ALL JOINTS, HORIZONTAL AND VERTICAL, AT THE JUNCTION OF NEW WINDOW SYSTEM AND EXISTING WALLS, FLOORS, AND CEILINGS.
- WS6 SCRAPE, WIREBRUSH, PRIME, AND PAINT EXPOSED STEEL LINTELS TO MATCH NEW FRAMES.
- WS7 PROVIDE AND INSTALL ELECTRIC ACCESS CONTROLS. CONNECT TO EXISTING SYSTEM. PROVIDE ALL COMPONENTS FOR A COMPLETE AND OPERABLE SYSTEM.
- WS8 RE-GRADE AND RE-SEED DISTURBED LANDSCAPING TO ORIGINAL CONDITION.
- WS9 POWER WASH SOILED AND STAINED WALL SURFACES.
- WS10 PROVIDE CONCRETE SPLASH BLOCK OVER 30"x30" WALKWAY PAD.
- WS11 INSTALL ALUMINUM WIDE STILE DOOR, ALUMINUM THERMALLY BROKEN DOOR FRAME AND HARDWARE. SEE DOOR DETAILS & SCHEDULE.
- WS12 PROVIDE ROLLER SHADE ASSEMBLY. ONE PER WINDOW BAY (TYPICAL). SEE SPECIFICATIONS FOR ADDITIONAL INFORMATION.

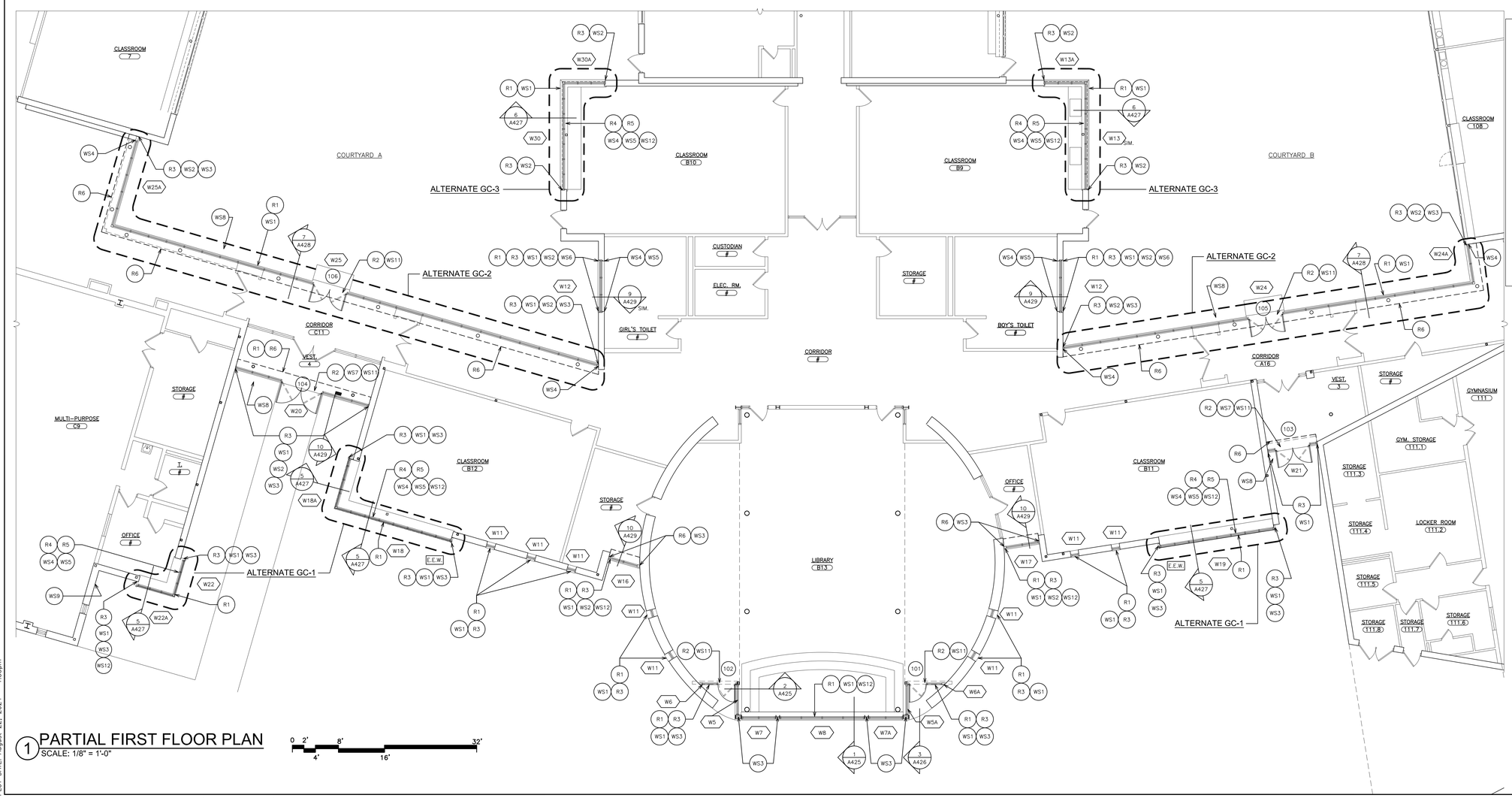

1 PARTIAL FIRST FLOOR PLAN
SCALE: 1/8" = 1'-0"

0 2' 4' 8' 16' 32'

FULLER D'ANGELO P.C. ARCHITECTS PLANNERS
48 CHOLLWOOD ROAD ELMSFORD NEW YORK 10523
TEL. 914.592.4444 FAX 914.592.1717
WWW.FULLERDANGELO.COM
Copyright 2024 - Fuller D'Angelo Architects & Planners (F&D) P.C.

S.E.D. CONTROL NUMBER:
GREENVILLE ELEMENTARY
66-04-06-03-0-008-023

PROJECT TITLE
GREENVILLE UNION FREE SCHOOL DISTRICT
GREENVILLE WINDOW REPLACEMENT, TENNIS COURT RENOVATION, AND RELATED WORK
100 GLENDALE RD., SCARSDALE, NY 10583

DRAWING TITLE
PART PLAN - FIRST FLOOR, LIBRARY & MULTI-PURPOSE CLERESTORY

DATE	ISSUED TO
08-27-2024	BID
11-14-2023	S.E.D. SUBMISSION

SCALE: AS NOTED	DRAWING NO. A101
DRAWN BY: F & D	
CHECKED BY: F & D	FILE NO. 23501.00

PLOT DATE: August 22, 2024 - 1:53pm

FILE: I:\23501.00 Edgemont Greenville Window replacement\DRAWINGS\CURRENT\1-F&D\23501.00-A101.dwg

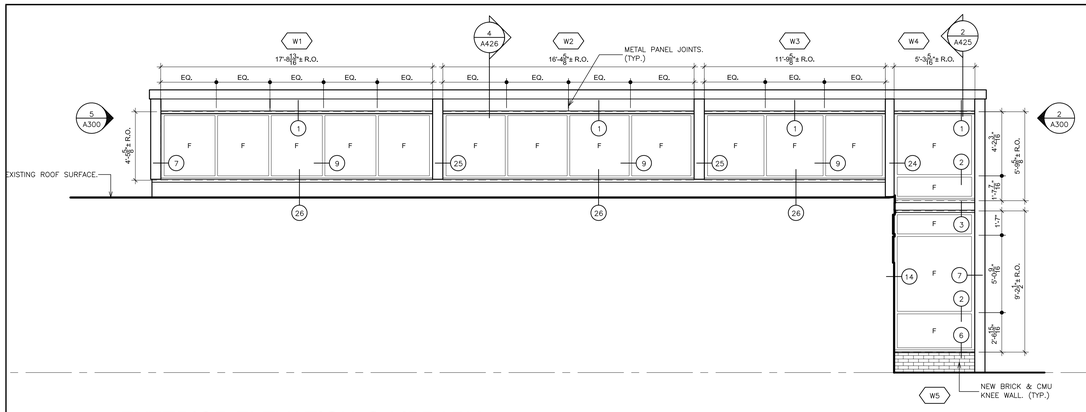

1 EXTERIOR ELEVATION @ LIBRARY
SCALE: 1/4" = 1'-0"

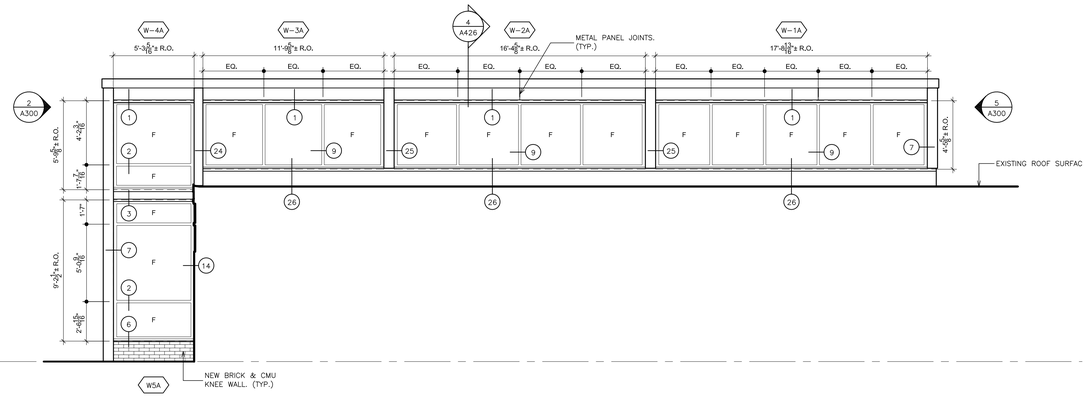

2 EXTERIOR ELEVATION @ LIBRARY
SCALE: 1/4" = 1'-0"

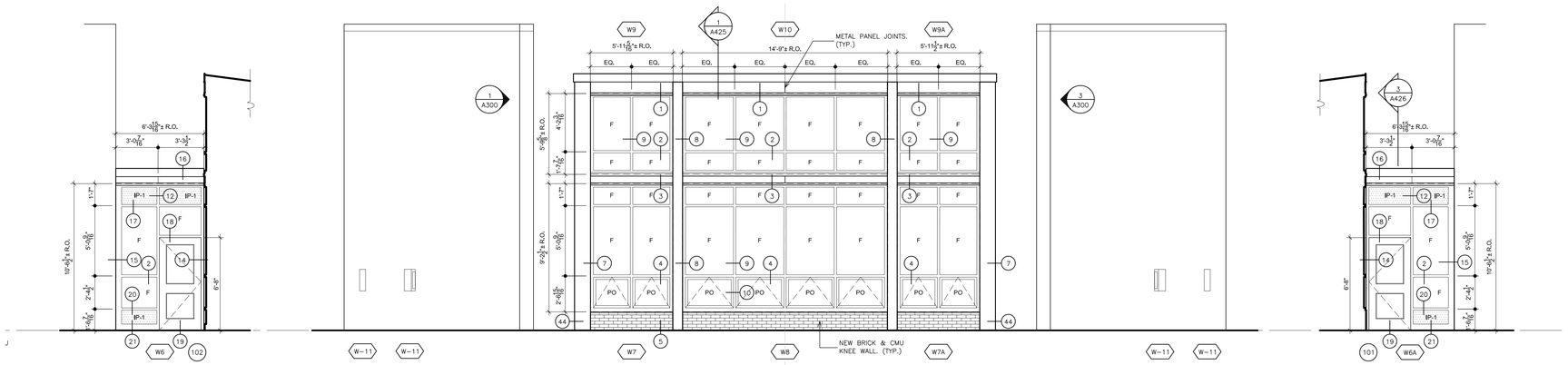

3 EXTERIOR ELEVATION @ LIBRARY
SCALE: 1/4" = 1'-0"

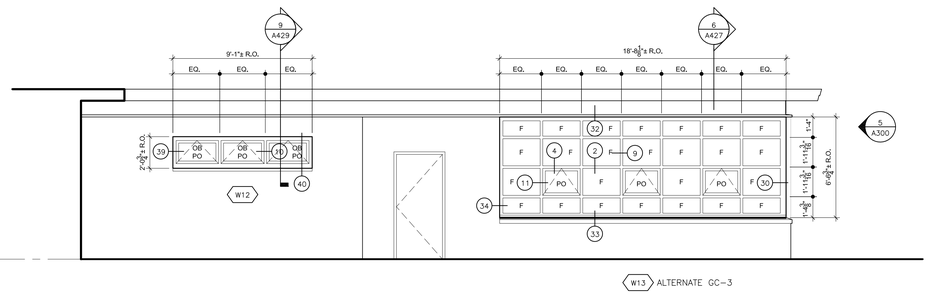

4 EXTERIOR ELEVATION
SCALE: 1/4" = 1'-0"

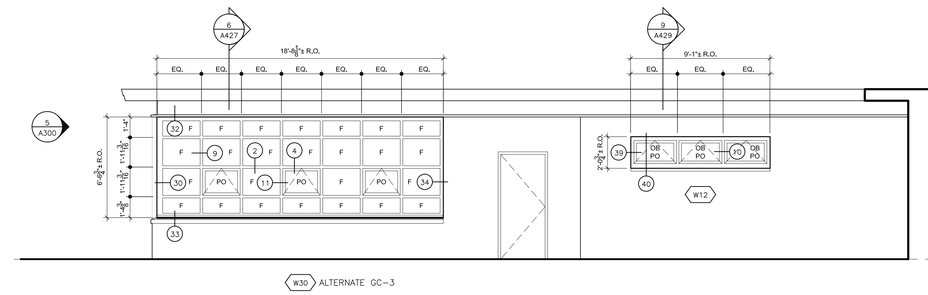

6 EXTERIOR ELEVATION
SCALE: 1/4" = 1'-0"

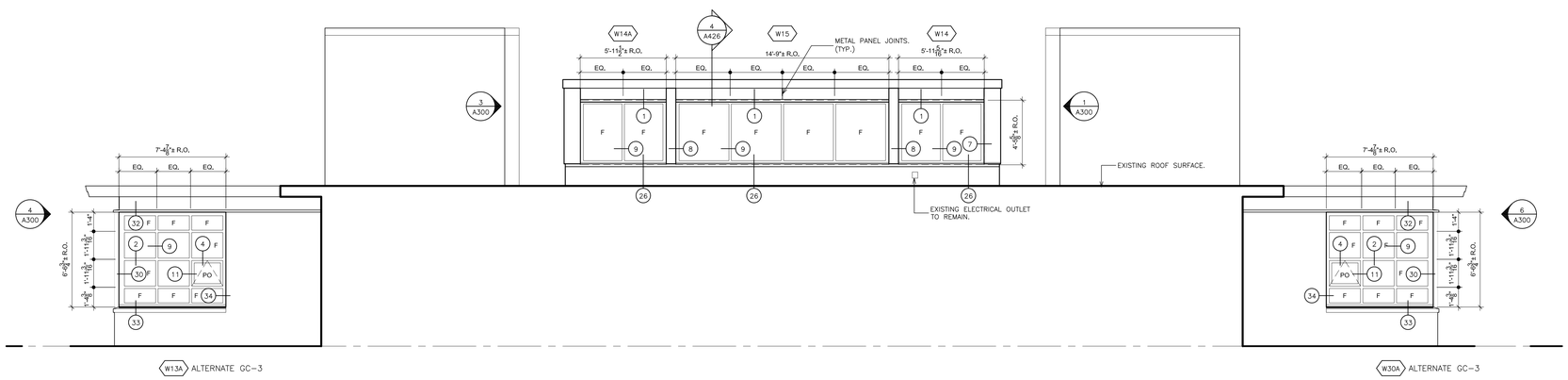

5 EXTERIOR ELEVATION
SCALE: 1/4" = 1'-0"

WINDOW LEGEND

F.	FIXED WINDOW
PO.	PROJECT OUT WINDOW
C.	CASEMENT WINDOW
O.B.	OBSCURE GLASS
#	DETAIL KEY
IP.	INSULATED METAL PANEL
RESCUE WINDOW	RESCUE WINDOW. REFER TO DETAILS A725.

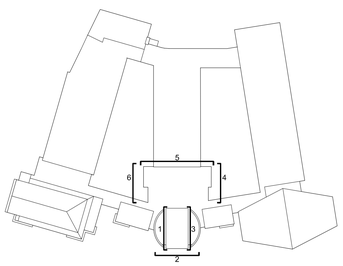

KEY PLAN
SCALE N.T.S.

AS PER USA CONGRESS ARCHITECTURAL WORKS COPYRIGHT PROTECTION ACT OF 1990 ALL IDEAS AND DESIGNS INCLUDING DERIVATIVES THEREOF, ALL DRAWINGS AND SPECIFICATIONS CONSTITUTE THE ORIGINAL COPYRIGHT WORK BY FULLER AND D'ANGELO, P.C. (F&D). THE DRAWINGS AND SPECIFICATIONS AS INSTRUMENTS OF SERVICE BY F&D ARE CREATED BY F&D FOR THIS PROJECT ONLY AND REMAIN THE PRODUCT AND PROPERTY OF F&D. ANY REPRODUCTION WITHOUT THE PRIOR CONSENT OF F&D IS PROHIBITED.

FULLER D'ANGELO P.C.
ARCHITECTS PLANNERS
48 SHOLWOOD ROAD ELMSFORD NEW YORK 10523
TEL. 914-592-4444 FAX 914.592.1717
WWW.FULLERANDANGELO.COM
Copyright 2024 - Fuller D'Angelo Architects & Planners (F&D) P.C.

S.E.D. CONTROL NUMBER:
GREENVILLE ELEMENTARY
66-04-06-03-0-008-023

PROJECT TITLE
ROCKLAND UNION FREE SCHOOL DISTRICT
GREENVILLE WINDOW REPLACEMENT, TENNIS COURT RENOVATION, AND RELATED WORK
100 GLENDALE RD., SCARSDALE, NY 10583

DRAWING TITLE
EXTERIOR ELEVATIONS

DATE	ISSUED TO
08-27-2024	BID
11-14-2023	S.E.D. SUBMISSION

SCALE: AS NOTED	DRAWING NO.: A300
DRAWN BY: F & D	
CHECKED BY: F & D	FILE NO.: 23501.00

PLOT DATE: August 22, 2024 – 1:54pm

FILE: I:\23501.00 Edgemont Greenville Window replacement\DRAWINGS\CURRENT\1-F&D\23501.00-A300-A301.dwg

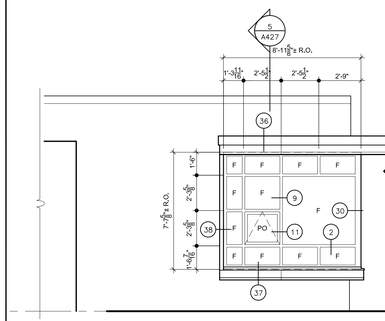

W18A ALTERNATE GC–1

7 EXTERIOR ELEVATION
SCALE: 1/4" = 1'-0"

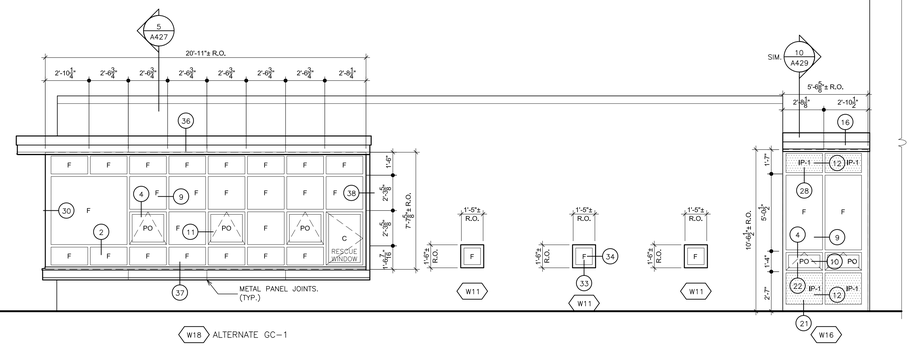

W18 ALTERNATE GC–1

8 EXTERIOR ELEVATION
SCALE: 1/4" = 1'-0"

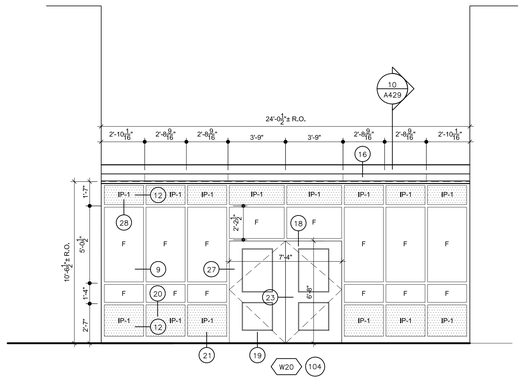

9 EXTERIOR ELEVATION
SCALE: 1/4" = 1'-0"

WINDOW LEGEND

F.	FIXED WINDOW
PO.	PROJECT OUT WINDOW
C.	CASEMENT WINDOW
O.B.	OBSCURE GLASS
#	DETAIL KEY
IP.	INSULATED METAL PANEL
RESCUE WINDOW	RESCUE WINDOW. REFER TO DETAILS A725.

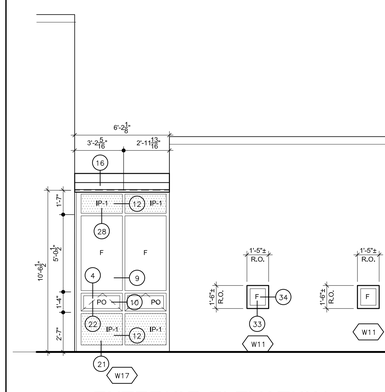

10 EXTERIOR ELEVATION
SCALE: 1/4" = 1'-0"

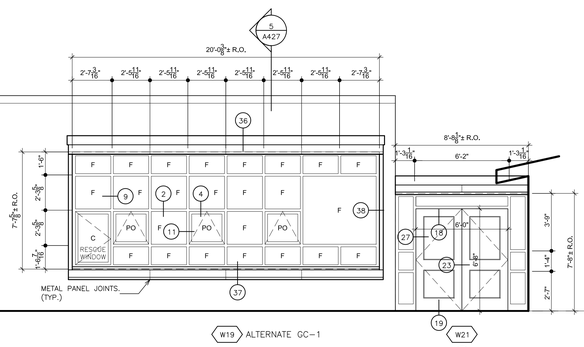

11 EXTERIOR ELEVATION
SCALE: 1/4" = 1'-0"

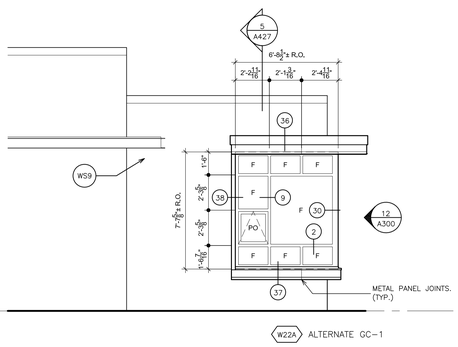

12 EXTERIOR ELEVATION
SCALE: 1/4" = 1'-0"

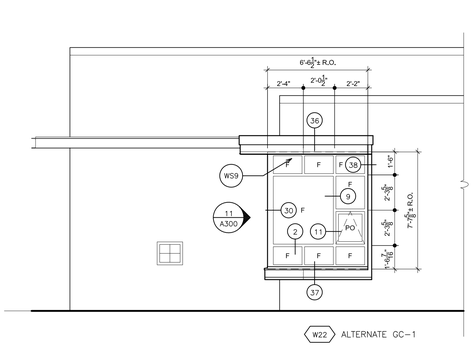

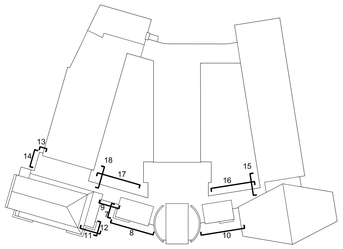

KEY PLAN
SCALE N.T.S.

N

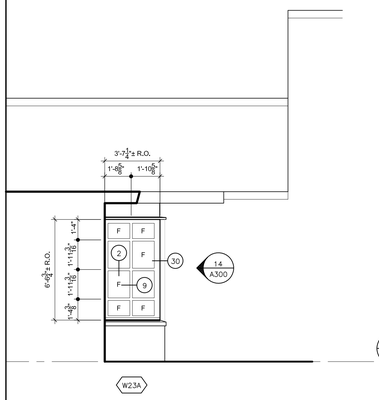

W23A

13 EXTERIOR ELEVATION
SCALE: 1/4" = 1'-0"

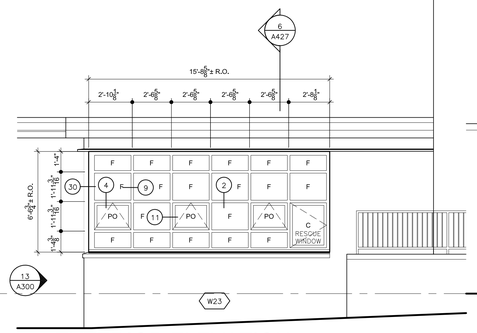

14 EXTERIOR ELEVATION
SCALE: 1/4" = 1'-0"

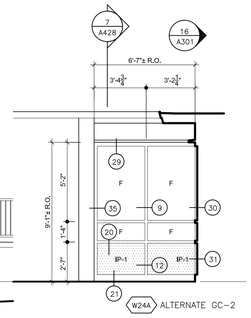

15 EXTERIOR ELEVATION
SCALE: 1/4" = 1'-0"

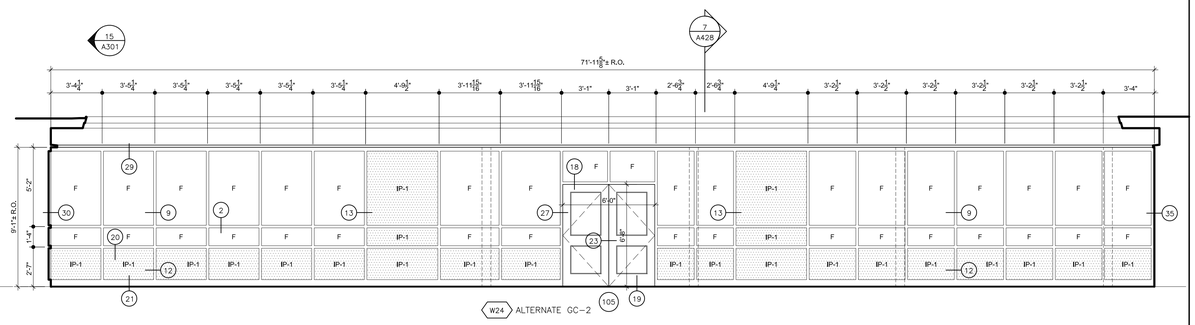

16 EXTERIOR ELEVATION
SCALE: 1/4" = 1'-0"

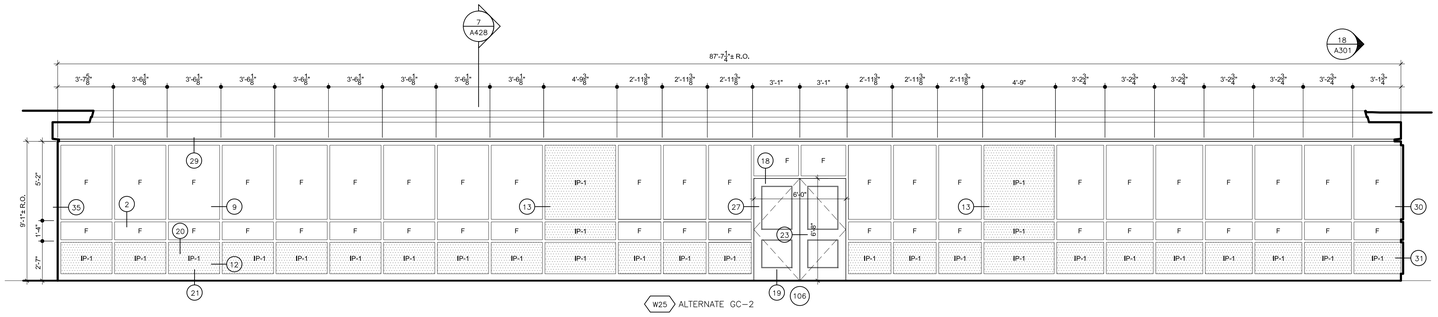

17 EXTERIOR ELEVATION
SCALE: 1/4" = 1'-0"

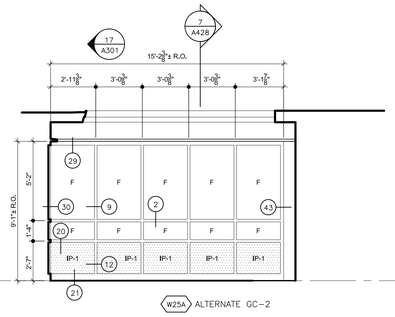

18 EXTERIOR ELEVATION
SCALE: 1/4" = 1'-0"

AS PER USA CONGRESS ARCHITECTURAL WORKS COPYRIGHT PROTECTION ACT OF 1990 ALL IDEAS AND DESIGNS INCLUDING DERIVATIVES THEREOF, ALL DRAWINGS AND SPECIFICATIONS CONSTITUTE THE ORIGINAL COPYRIGHT WORK BY FULLER AND D'ANGELO, P.C. (F&D). THE DRAWINGS AND SPECIFICATIONS AS INSTRUMENTS OF SERVICE BY F&D ARE CREATED BY F&D FOR THIS PROJECT ONLY AND REMAIN THE PRODUCT AND PROPERTY OF F&D. ANY REPRODUCTION WITHOUT THE PRIOR CONSENT OF F&D IS PROHIBITED.

FULLER D'ANGELO P.C.
ARCHITECTS PLANNERS
48 SHOLWOOD ROAD ELMSFORD NEW YORK 10523
TEL. 914-592-4444 FAX 914-592-1717
WWW.FULLERANDANGELO.COM
Copyright 2024 Fuller D'Angelo Architects & Planners (F&D) P.C.

S.E.D. CONTROL NUMBER:
GREENVILLE ELEMENTARY
66-04-06-03-0-008-023

PROJECT TITLE
EDGEMONT UNION FREE SCHOOL DISTRICT
GREENVILLE WINDOW REPLACEMENT, TENNIS COURT RENOVATION, AND RELATED WORK
100 GLENDALE RD., SCARSDALE, NY 10583

DRAWING TITLE
EXTERIOR ELEVATIONS

DATE	ISSUED TO
08-27-2024	BID
11-14-2023	S.E.D. SUBMISSION

SCALE: AS NOTED	DRAWING NO. A301
DRAWN BY: F & D	
CHECKED BY: F & D	FILE NO. 23501.00

PLOT DATE: August 22, 2024 – 1:54pm

FILE: I:\23501.00 Edgemont Greenville Window replacement\DRAWINGS\CURRENT\1-F&D\23501.00-A300-A301.dwg

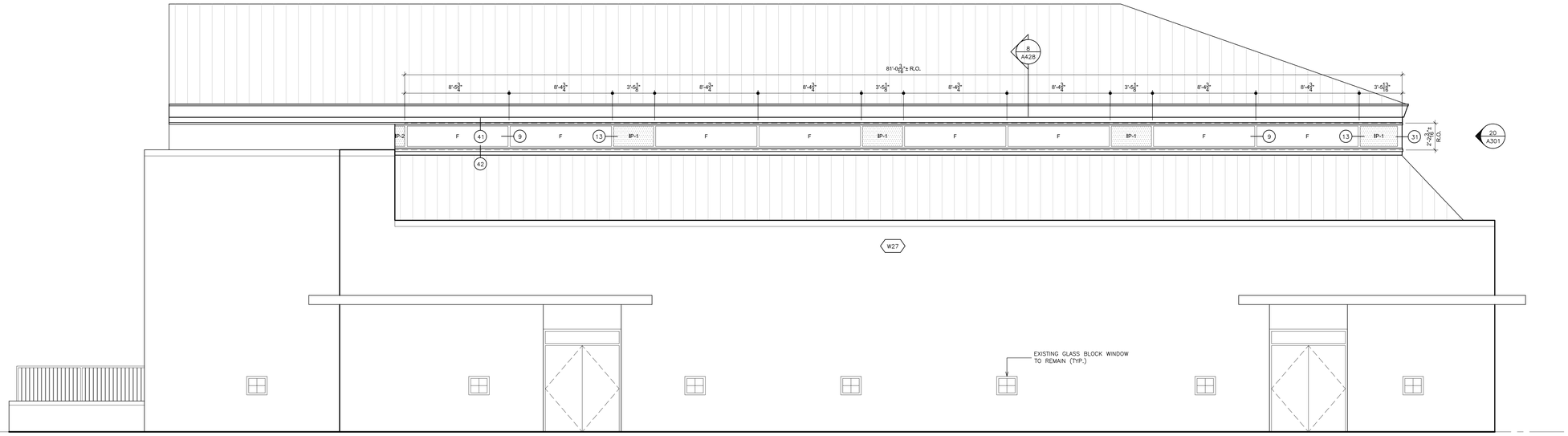

19 EXTERIOR ELEVATION- ALTERNATE GC-4
SCALE: 1/4" = 1'-0"

WINDOW LEGEND	
F.	FIXED WINDOW
PO.	PROJECT OUT WINDOW
C.	CASEMENT WINDOW
O.B.	OBSCURE GLASS
#	DETAIL KEY
IP.	INSULATED METAL PANEL
RESCUE WINDOW	RESCUE WINDOW. REFER TO DETAILS A725.

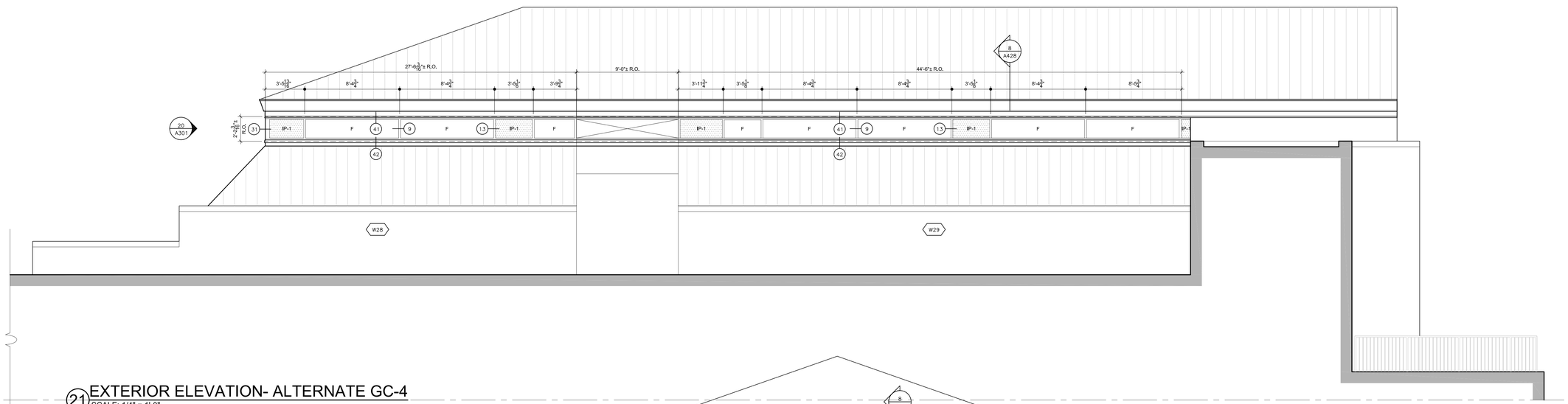

21 EXTERIOR ELEVATION- ALTERNATE GC-4
SCALE: 1/4" = 1'-0"

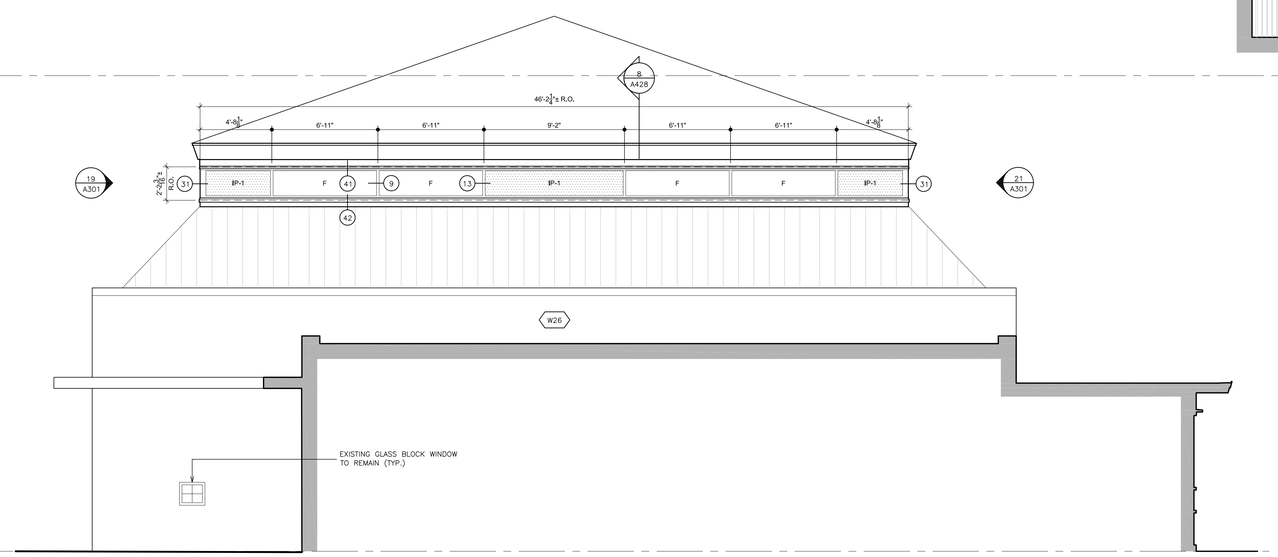

20 EXTERIOR ELEVATION- ALTERNATE GC-4
SCALE: 1/4" = 1'-0"

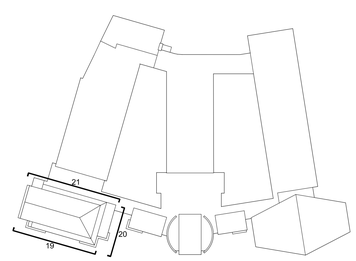

KEY PLAN
SCALE N.T.S.

N

AS PER USA CONGRESS ARCHITECTURAL WORKS COPYRIGHT PROTECTION ACT OF 1990 ALL IDEAS AND DESIGNS INCLUDING DERIVATIVES THEREOF, ALL DRAWINGS AND SPECIFICATIONS CONSTITUTE THE ORIGINAL COPYRIGHT WORK BY FULLER AND D'ANGELO, P.C. (F&D). THE DRAWINGS AND SPECIFICATIONS AS INSTRUMENTS OF SERVICE BY F&D ARE CREATED BY F&D FOR THIS PROJECT ONLY AND REMAIN THE PRODUCT AND PROPERTY OF F&D. ANY REPRODUCTION WITHOUT THE PRIOR CONSENT OF F&D IS PROHIBITED.

FULLER D'ANGELO P.C.
ARCHITECTS PLANNERS
48 KNOLLWOOD ROAD ELMSFORD NEW YORK 10523
TEL. 914.592.4444 FAX 914.592.1717
WWW.FULLERDANGELO.COM
Copyright 2024 - Fuller D'Angelo Architects & Planners (F&D) P.C.

S.E.D. CONTROL NUMBER:
GREENVILLE ELEMENTARY
66-04-06-03-0-008-023

PROJECT TITLE
EDGEMONT UNION FREE SCHOOL DISTRICT
GREENVILLE WINDOW REPLACEMENT, TENNIS COURT RENOVATION, AND RELATED WORK
100 GLENDALE RD., SCARSDALE, NY 10583

DRAWING TITLE
EXTERIOR ELEVATIONS

DATE	ISSUED TO
08-27-2024	BID
11-14-2023	S.E.D. SUBMISSION

SCALE: AS NOTED	DRAWING NO.: A302
DRAWN BY: F & D	
CHECKED BY: F & D	FILE NO.: 23501.00

PLOT DATE: August 22, 2024 – 1:55pm

FILE: I:\23501.00 Edgemont Greenville Window replacement\DRAWINGS\CURRENT\1-F&D\23501.00-A300-A301.dwg

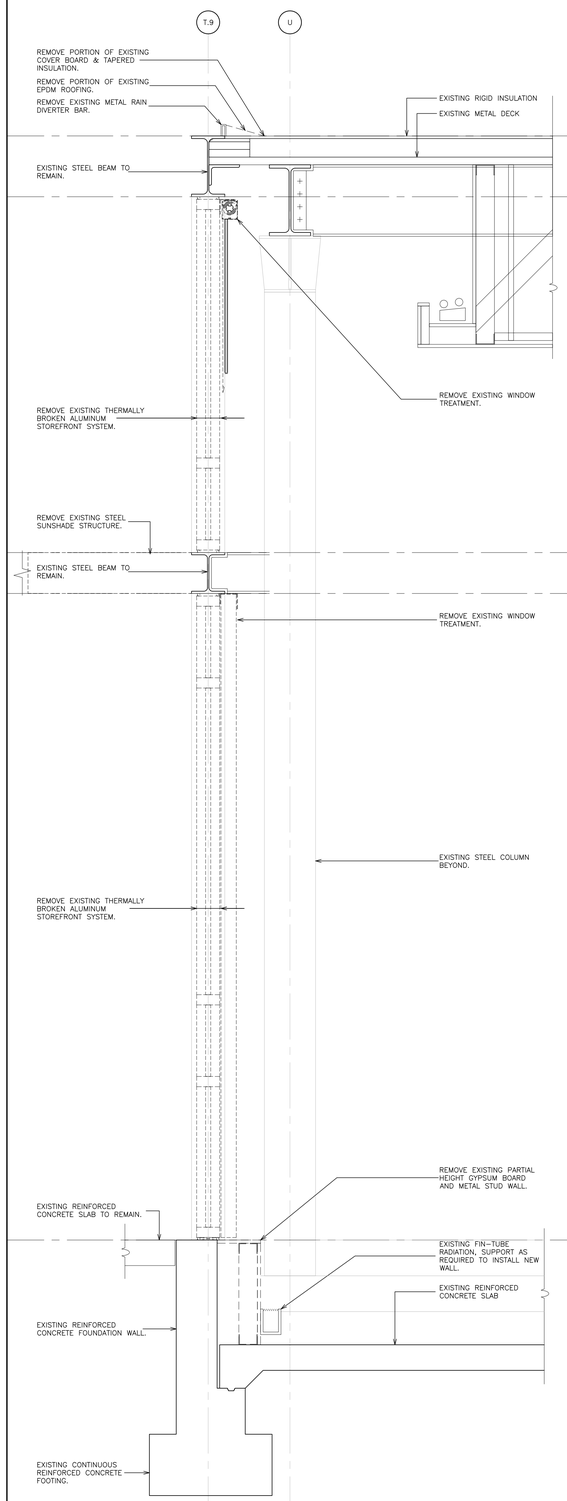

1 REMOVAL WALL SECTION
SCALE: 1" = 1'-0"

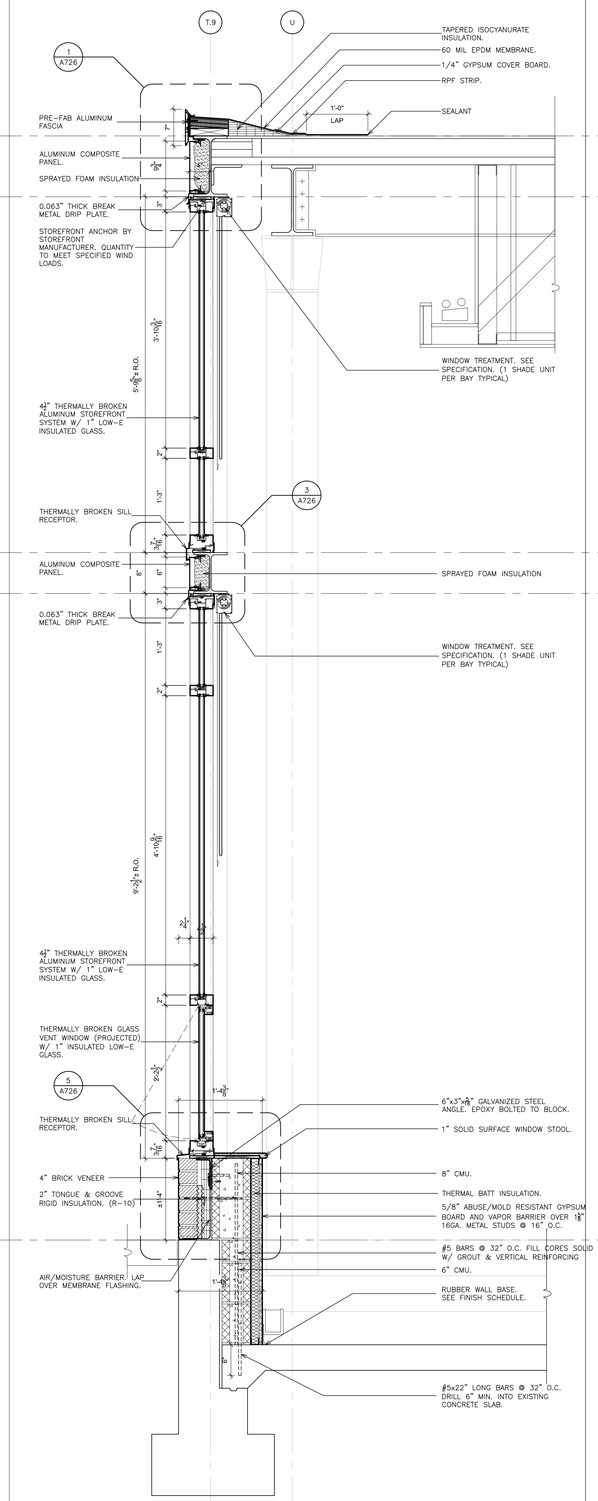

1A WALL SECTION
SCALE: 1" = 1'-0"

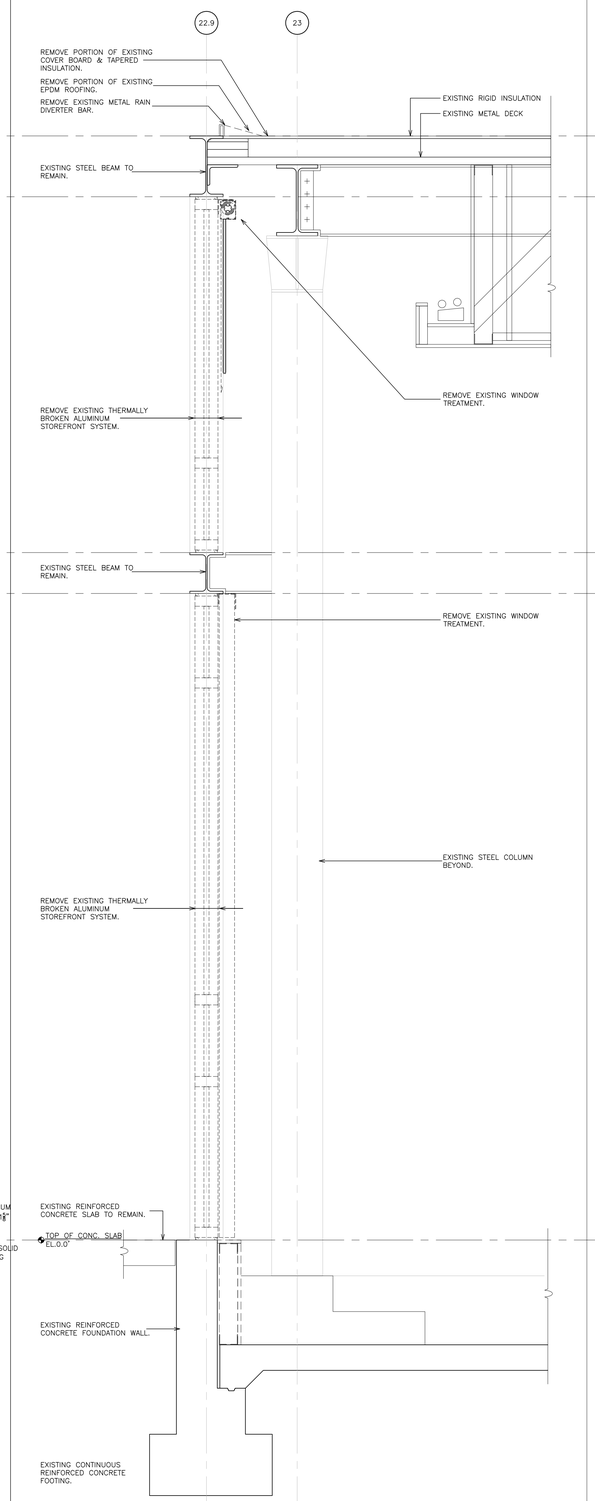

2 WALL SECTION
SCALE: 1" = 1'-0"

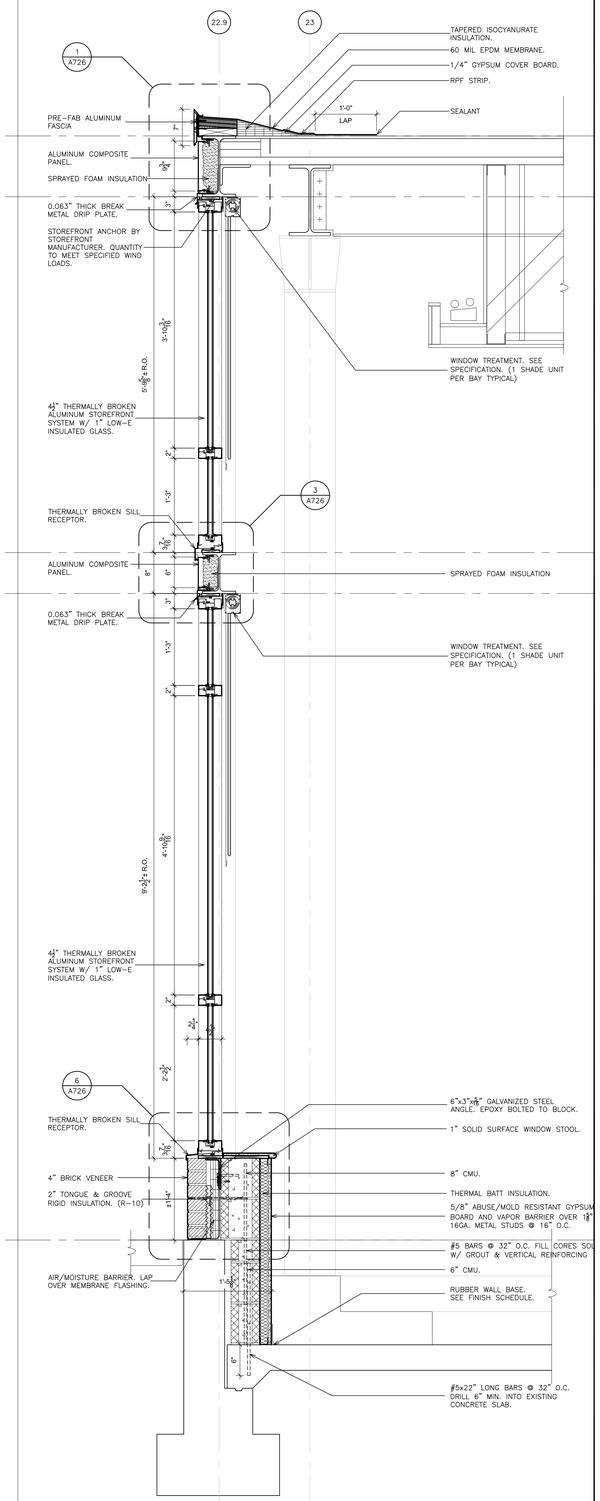

2A WALL SECTION
SCALE: 1" = 1'-0"

AS PER USA CONGRESS ARCHITECTURAL WORKS COPYRIGHT PROTECTION ACT OF 1990 ALL IDEAS AND DESIGNS INCLUDING DERIVATIVES THEREOF, ALL DRAWINGS AND SPECIFICATIONS CONSTITUTE THE ORIGINAL COPYRIGHT WORK BY FULLER AND D'ANGELO, P.C. (F&D). THE DRAWINGS AND SPECIFICATIONS AS INSTRUMENTS OF SERVICE BY F&D ARE CREATED BY F&D FOR THIS PROJECT ONLY AND REMAIN THE PRODUCT AND PROPERTY OF F&D. ANY REPRODUCTION WITHOUT THE PRIOR CONSENT OF F&D IS PROHIBITED.

FULLER D'ANGELO P.C.
ARCHITECTS PLANNERS
48 HOLLWOOD ROAD ELMSFORD NEW YORK 10523
TEL. 914.592.4444 FAX 914.592.1717
WWW.FULLERANDANGELO.COM
Copyright 2024 Fuller D'Angelo Architects & Planners (F&D) P.C.

S.E.D. CONTROL NUMBER:
GREENVILLE ELEMENTARY
66-04-06-03-0-008-023

PROJECT TITLE
EDGEMONT UNION FREE SCHOOL DISTRICT
GREENVILLE WINDOW REPLACEMENT, TENNIS COURT RENOVATION, AND RELATED WORK
100 GLENDALE RD., SCARSDALE, NY 10583

DRAWING TITLE
WALL SECTIONS

DATE	ISSUED TO
08-27-2024	BID
11-14-2023	S.E.D. SUBMISSION

SCALE: AS NOTED
DRAWING NO.: A425
DRAWN BY: F & D
CHECKED BY: F & D
FILE NO.: 23501.00

PLOT DATE: August 22, 2024 – 1:55pm

FILE: I:\23501.00 Edgemont Greenville Window replacement\DRAWINGS\CURRENT\1-F&D\23501.00-A425-A429.dwg

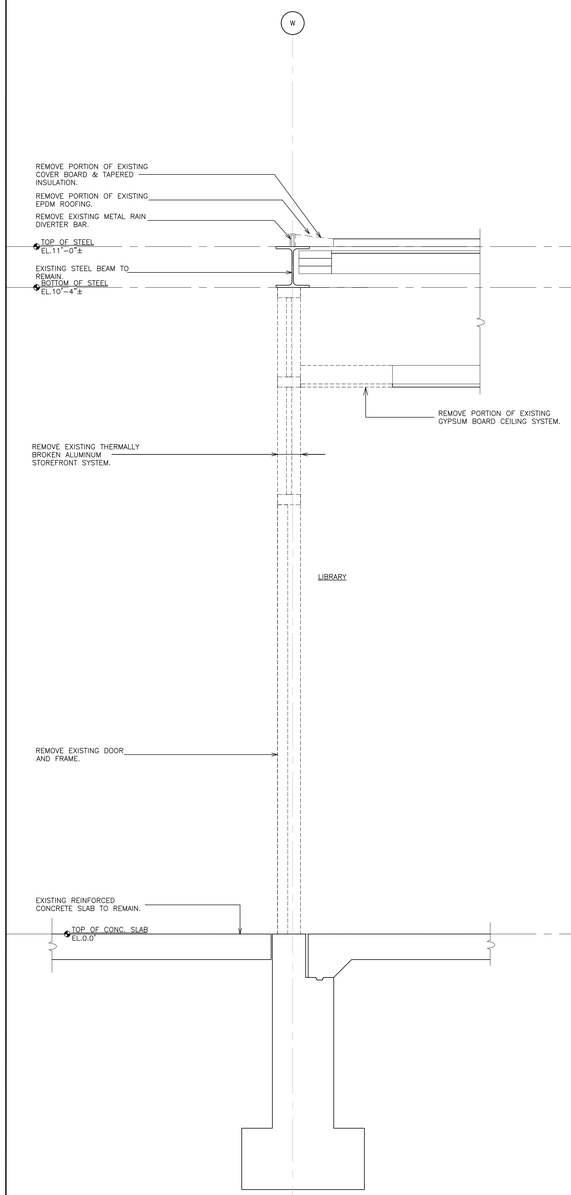

3 REMOVAL WALL SECTION
SCALE: 1" = 1'-0"

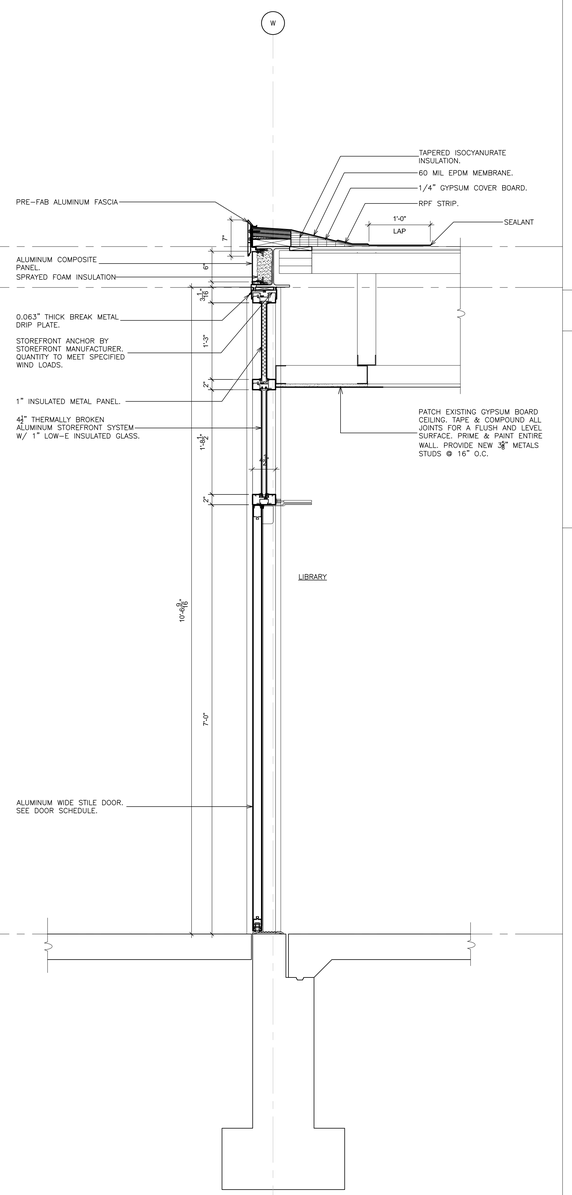

3A WALL SECTION
SCALE: 1" = 1'-0"

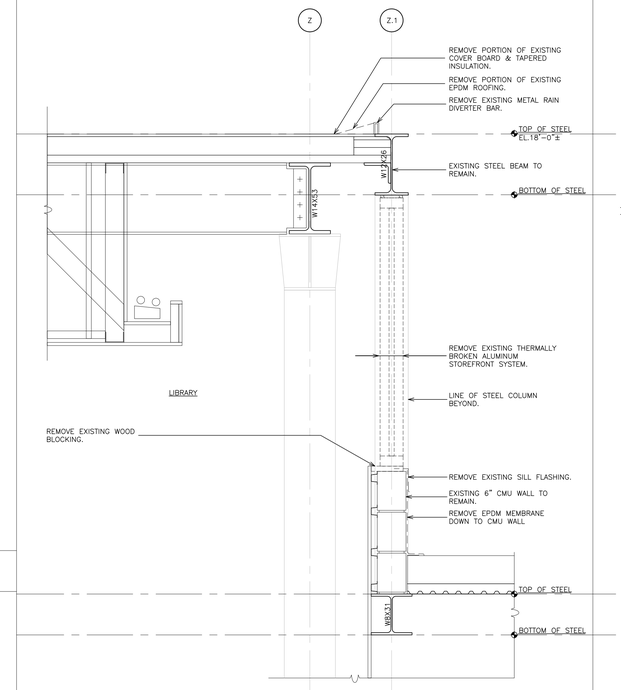

4 REMOVAL WALL SECTION
SCALE: 1" = 1'-0"

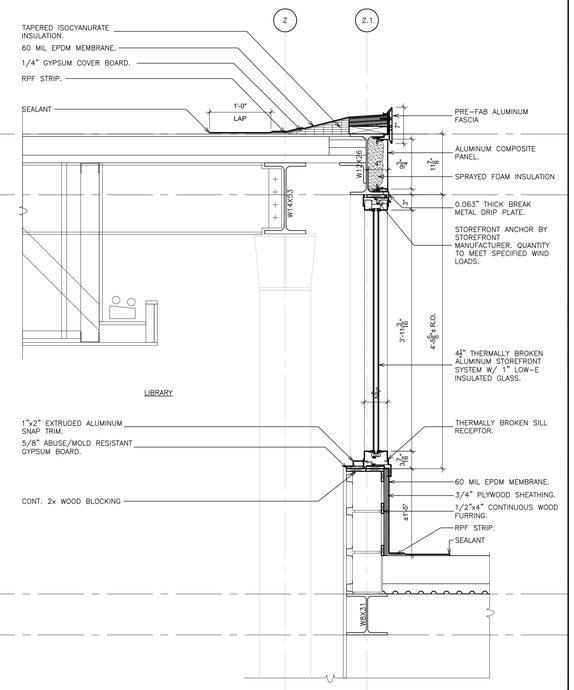

4A WALL SECTION
SCALE: 1" = 1'-0"

AS PER USA CONGRESS ARCHITECTURAL WORKS COPYRIGHT PROTECTION ACT OF 1990 ALL IDEAS AND DESIGNS INCLUDING DERIVATIVES THEREOF, ALL DRAWINGS AND SPECIFICATIONS CONSTITUTE THE ORIGINAL COPYRIGHT WORK BY FULLER AND D'ANGELO, P.C. (F&D). THE DRAWINGS AND SPECIFICATIONS AS INSTRUMENTS OF SERVICE BY F&D ARE CREATED BY F&D FOR THIS PROJECT ONLY AND REMAIN THE PRODUCT AND PROPERTY OF F&D. ANY REPRODUCTION WITHOUT THE PRIOR CONSENT OF F&D IS PROHIBITED.

FULLER D'ANGELO P.C. ARCHITECTS PLANNERS
48 KNOLLWOOD ROAD ELMSFORD NEW YORK 10523
TEL. 914.592.2444 FAX 914.592.1717
WWW.FULLERANDANGELO.COM
Copyright 2024 Fuller & D'Angelo, P.C. (F&D)

S.E.D. CONTROL NUMBER:
GREENVILLE ELEMENTARY
66-04-06-03-0-008-023

PROJECT TITLE
EDGEMONT UNION FREE SCHOOL DISTRICT
GREENVILLE WINDOW REPLACEMENT, TENNIS COURT RENOVATION, AND RELATED WORK
100 GLENDALE RD., SCARSDALE, NY 10583

DRAWING TITLE
WALL SECTIONS

DATE	ISSUED TO
08-27-2024	BID
11-14-2023	S.E.D. SUBMISSION

SCALE: AS NOTED
DRAWING NO.: A426
DRAWN BY: F & D
CHECKED BY: F & D
FILE NO.: 23501.00

PLOT DATE: August 22, 2024 – 1:56pm

FILE: I:\23501.00 Edgemont Greenville Window replacement\DRAWINGS\CURRENT\1-F&D\23501.00-A425-A429.dwg

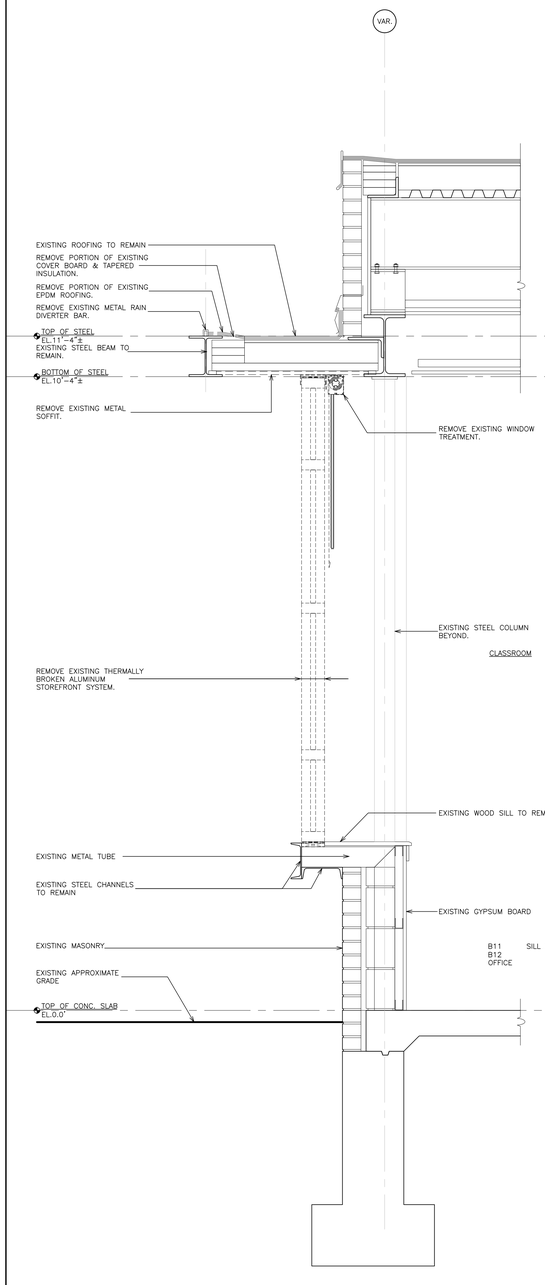

5 REMOVAL WALL SECTION
SCALE: 1" = 1'-0"

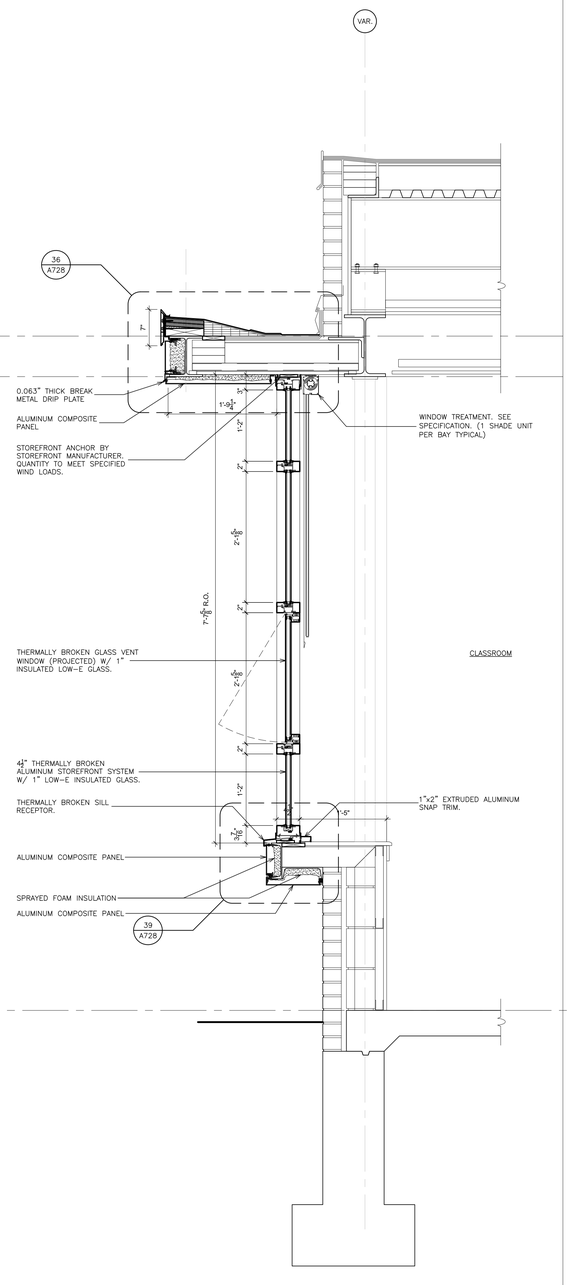

5A WALL SECTION
SCALE: 1" = 1'-0"

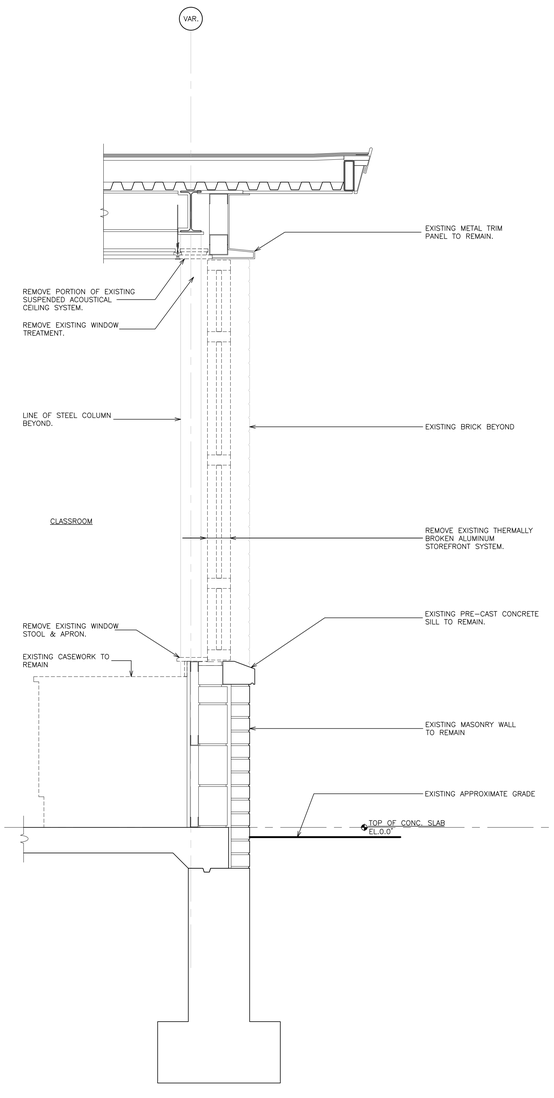

6 REMOVAL WALL SECTION
SCALE: 1" = 1'-0"

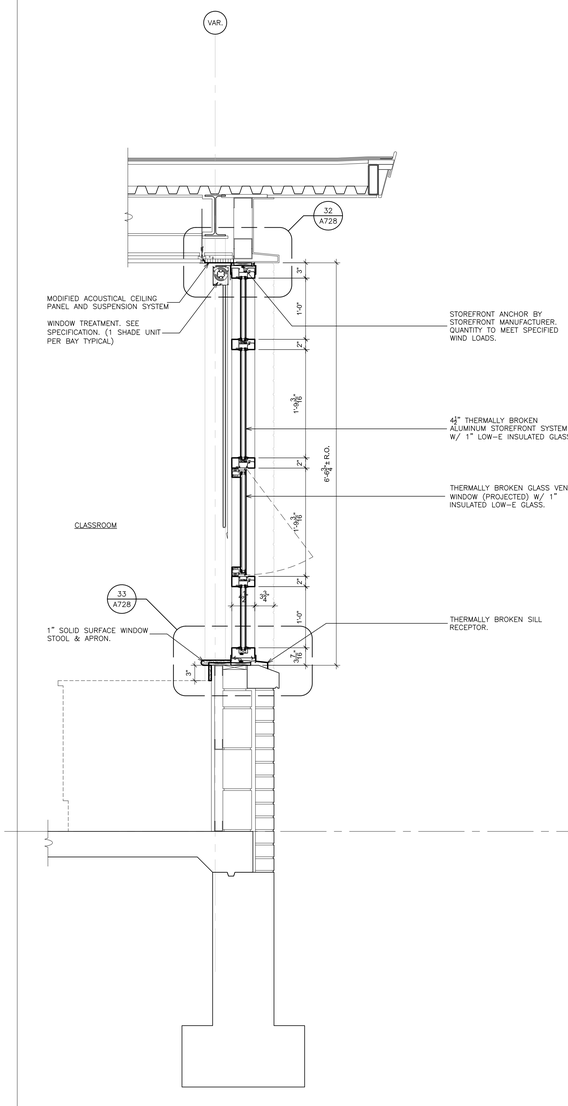

6A WALL SECTION
SCALE: 1" = 1'-0"

AS PER USA CONGRESS ARCHITECTURAL WORKS COPYRIGHT PROTECTION ACT OF 1990 ALL IDEAS AND DESIGNS INCLUDING DERIVATIVES THEREOF, ALL DRAWINGS AND SPECIFICATIONS CONSTITUTE THE ORIGINAL COPYRIGHT WORK BY FULLER AND D'ANGELO, P.C. (F&D). THE DRAWINGS AND SPECIFICATIONS AS INSTRUMENTS OF SERVICE BY F&D ARE CREATED BY F&D FOR THIS PROJECT ONLY AND REMAIN THE PRODUCT AND PROPERTY OF F&D. ANY REPRODUCTION WITHOUT THE PRIOR CONSENT OF F&D IS PROHIBITED.

FULLER D'ANGELO P.C. ARCHITECTS PLANNERS
48 HOLLWOOD ROAD ELMSFORD NEW YORK 10523
TEL. 914.592.4444 FAX 914.592.1717
WWW.FULLERANDDANGELO.COM
Copyright 2024 - Fuller D'Angelo Architects & Planners (FAPC) P.C.

S.E.D. CONTROL NUMBER:
GREENVILLE ELEMENTARY
66-04-06-03-0-008-023

PROJECT TITLE
EDGEMONT UNION FREE SCHOOL DISTRICT
GREENVILLE WINDOW REPLACEMENT, TENNIS COURT RENOVATION, AND RELATED WORK
100 GLENDALE RD., SCARSDALE, NY 10583

DRAWING TITLE
WALL SECTIONS

DATE	ISSUED TO
08-27-2024	BID
11-14-2023	S.E.D. SUBMISSION

SCALE: AS NOTED	DRAWING NO. A427
DRAWN BY: F & D	
CHECKED BY: F & D	FILE NO. 23501.00

PLOT DATE: August 22, 2024 - 1:56pm

FILE: I:\23501.00 Edgemont Greenville Window replacement\DRAWINGS\CURRENT\1-F&D\23501.00-A425-A429.dwg

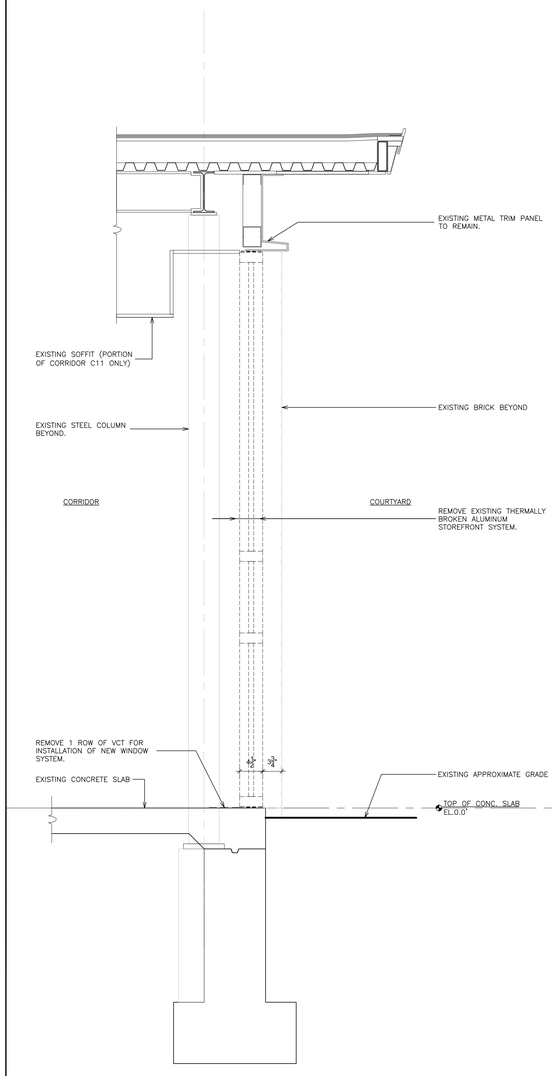

7 REMOVAL WALL SECTION
SCALE: 1" = 1'-0"

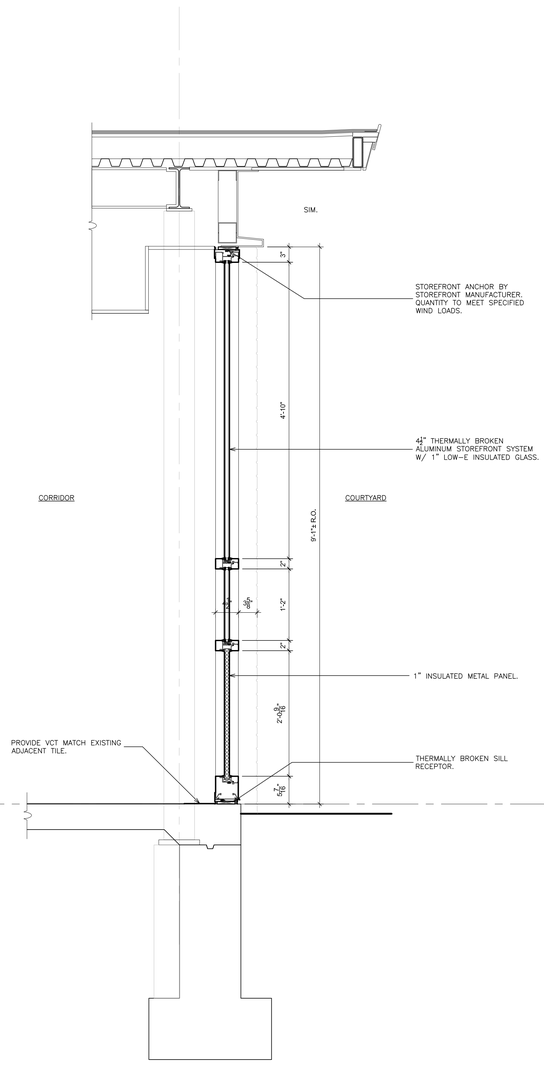

7A WALL SECTION
SCALE: 1" = 1'-0"

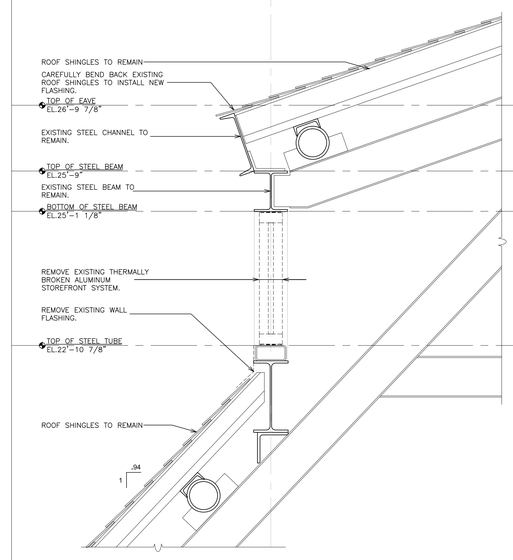

8 REMOVAL WALL SECTION
SCALE: 1" = 1'-0"

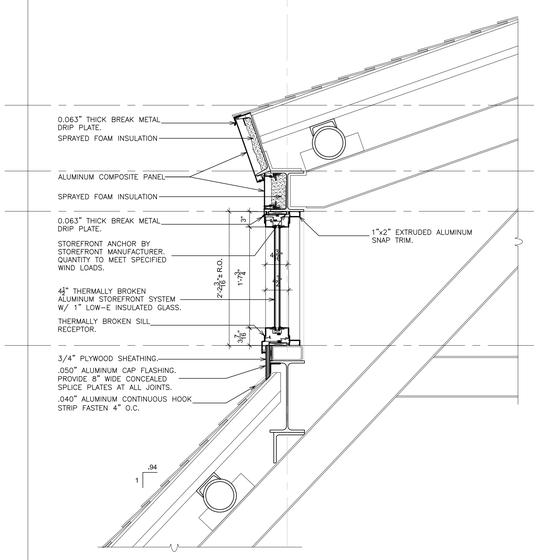

8A WALL SECTION
SCALE: 1" = 1'-0"

AS PER USA CONGRESS ARCHITECTURAL WORKS COPYRIGHT PROTECTION ACT OF 1990 ALL IDEAS AND DESIGNS INCLUDING DERIVATIVES THEREOF, ALL DRAWINGS AND SPECIFICATIONS CONSTITUTE THE ORIGINAL COPYRIGHT WORK BY FULLER AND D'ANGELO, P.C. (F&D). THE DRAWINGS AND SPECIFICATIONS AS INSTRUMENTS OF SERVICE BY F&D ARE CREATED BY F&D FOR THIS PROJECT ONLY AND REMAIN THE PRODUCT AND PROPERTY OF F&D. ANY REPRODUCTION WITHOUT THE PRIOR CONSENT OF F&D IS PROHIBITED.

FULLER D'ANGELO P.C. ARCHITECTS PLANNERS
48 KNOLLWOOD ROAD ELMSFORD NEW YORK 10523
TEL. 914.592.2444 FAX 914.592.1717
WWW.FULLERANDWHITE.COM
Copyright 2024 Fuller & D'Angelo, P.C. FILE:23501.00

S.E.D. CONTROL NUMBER:
GREENVILLE ELEMENTARY
66-04-06-03-0-008-023

PROJECT TITLE
EDGEMONT UNION FREE SCHOOL DISTRICT
GREENVILLE WINDOW REPLACEMENT TENNIS COURT RENOVATION, AND RELATED WORK
100 GLENDALE RD., SCARSDALE, NY 10583

DRAWING TITLE
WALL SECTIONS

DATE	ISSUED TO
08-27-2024	BID
11-14-2023	S.E.D. SUBMISSION

SCALE: AS NOTED
DRAWING NO.: A428
DRAWN BY: F & D
CHECKED BY: F & D
FILE NO.: 23501.00

PLOT DATE: August 22, 2024 – 1:58pm

FILE: I:\23501.00 Edgemont Greenville Window replacement\DRAWINGS\CURRENT\1-F&D\23501.00-A425-A429.dwg

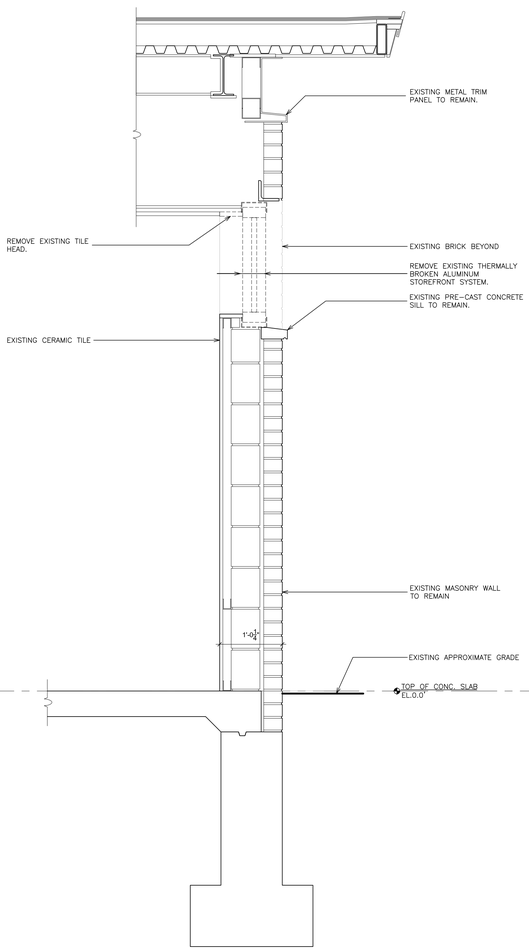

9 REMOVAL WALL SECTION
SCALE: 1" = 1'-0"

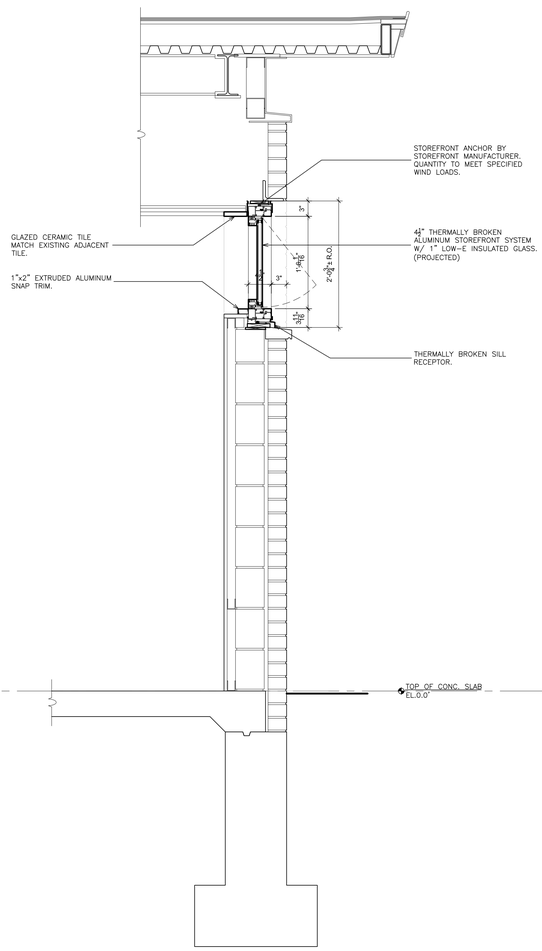

9A WALL SECTION
SCALE: 1" = 1'-0"

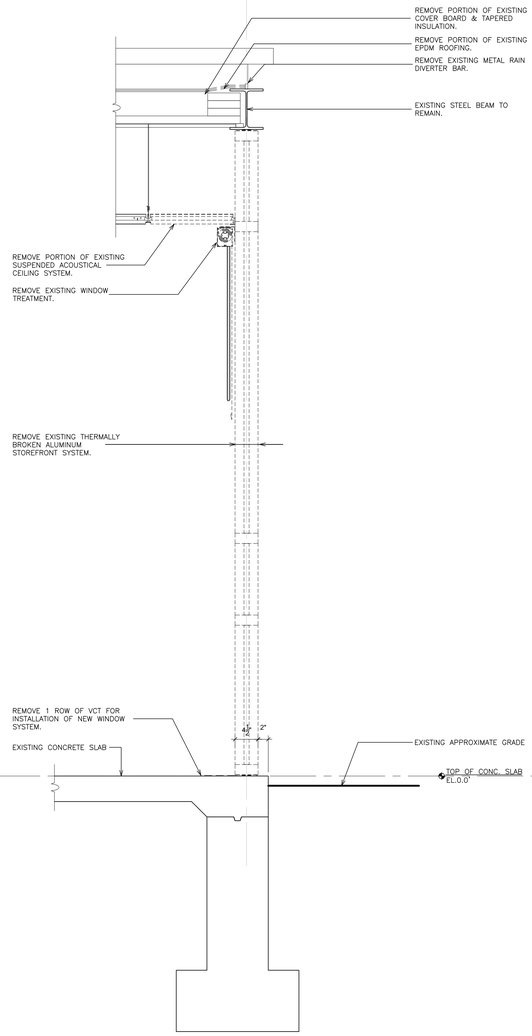

10 REMOVAL WALL SECTION
SCALE: 1" = 1'-0"

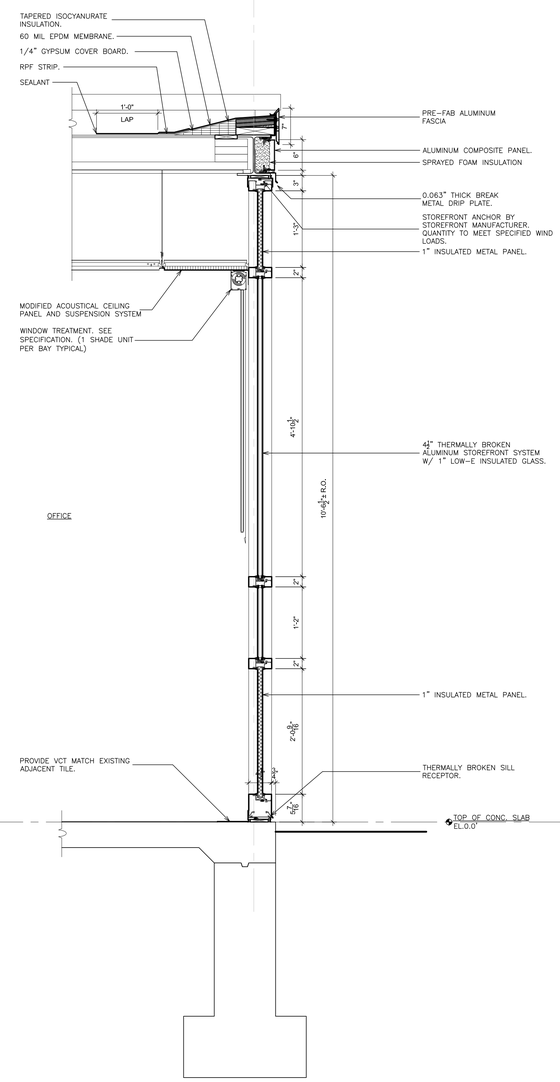

10A WALL SECTION
SCALE: 1" = 1'-0"

AS PER USA CONGRESS ARCHITECTURAL WORKS COPYRIGHT PROTECTION ACT OF 1990 ALL IDEAS AND DESIGNS INCLUDING DERIVATIVES THEREOF, ALL DRAWINGS AND SPECIFICATIONS CONSTITUTE THE ORIGINAL COPYRIGHT WORK BY FULLER AND D'ANGELO, P.C. (F&D). THE DRAWINGS AND SPECIFICATIONS AS INSTRUMENTS OF SERVICE BY F&D ARE CREATED BY F&D FOR THIS PROJECT ONLY AND REMAIN THE PRODUCT AND PROPERTY OF F&D. ANY REPRODUCTION WITHOUT THE PRIOR CONSENT OF F&D IS PROHIBITED.

FULLER D'ANGELO P.C.
ARCHITECTS PLANNERS
48 KNOLLWOOD ROAD ELMSFORD NEW YORK 10523
TEL. 914.592.2444 FAX 914.592.1717
WWW.FULLERANDANGELO.COM
Copyright 2024 Fuller & D'Angelo P.C. (FAD)

S.E.D. CONTROL NUMBER:
GREENVILLE ELEMENTARY
66-04-06-03-0-008-023

PROJECT TITLE
EDGEMONT UNION FREE SCHOOL DISTRICT
GREENVILLE WINDOW REPLACEMENT, TENNIS COURT RENOVATION, AND RELATED WORK
100 GLENDALE RD., SCARSDALE, NY 10583

DRAWING TITLE
WALL SECTIONS

DATE	ISSUED TO
08-27-2024	BID
11-14-2023	S.E.D. SUBMISSION

SCALE: AS NOTED
DRAWING NO.: A429
DRAWN BY: F & D
CHECKED BY: F & D
FILE NO.: 23501.00

PLOT DATE: August 22, 2024 – 2:00pm

FILE: I:\23501.00 Edgemont Greenville Window replacement\DRAWINGS\CURRENT\1-F&D\23501.00-A425-A429.dwg

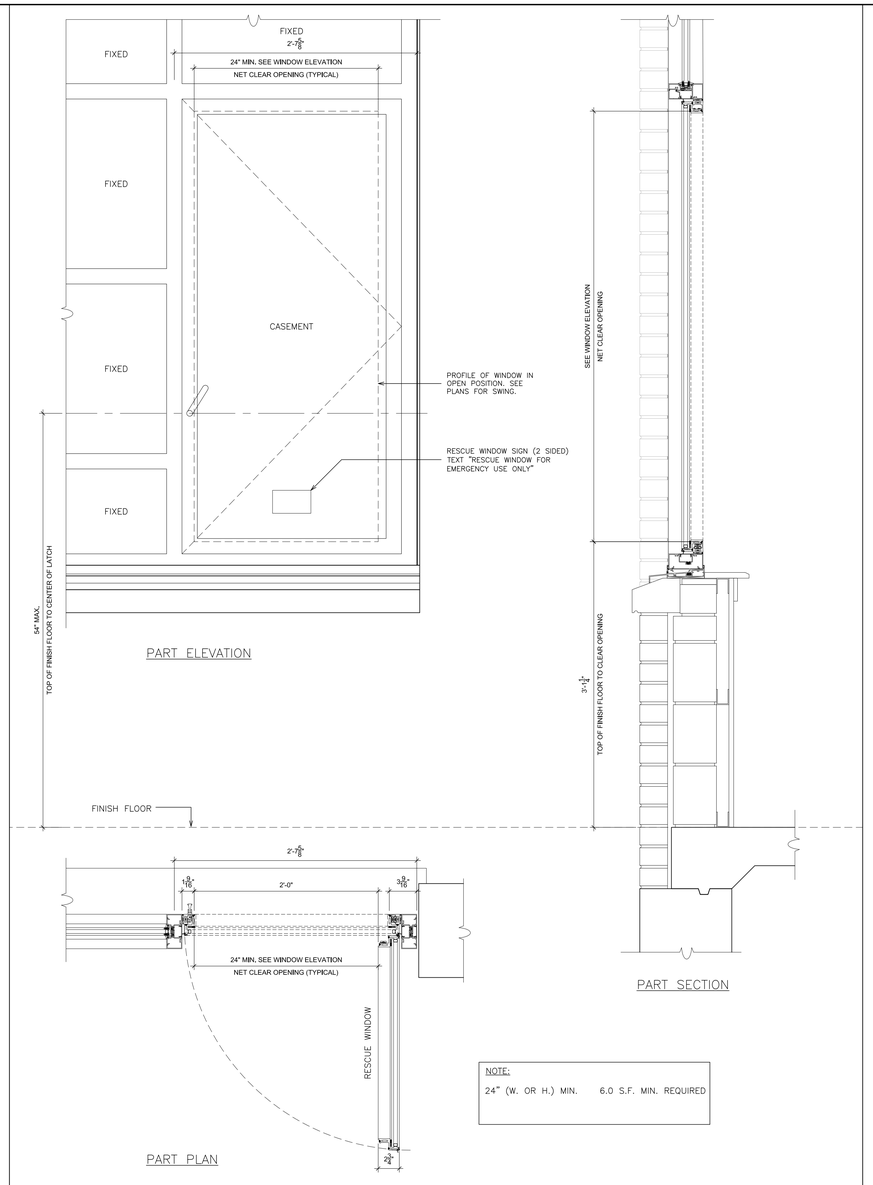

NOTE:
24" (W. OR H.) MIN. 6.0 S.F. MIN. REQUIRED

1 EXTERIOR ELEVATION - RESCUE WINDOW
SCALE: 1 1/2" = 1'-0"

WINDOW SCHEDULE

LINE No.	WINDOW DESIGNATION	MASONRY/ ROUGH OPENING WIDTH	MASONRY/ ROUGH OPENING HEIGHT	GLASS TYPE	MATERIAL	WINDOW TREATMENT (1 PER BAY)	REMARKS
1	W1	17'-8 1/2"± V.I.F.	4'-5 3/8"± V.I.F.	1" INSULATED LOW-E GLASS	ALUMINUM		
2	W1A	17'-8 1/2"± V.I.F.	4'-5 3/8"± V.I.F.	1" INSULATED LOW-E GLASS	ALUMINUM		
3	W2	16'-4 3/4"± V.I.F.	4'-5 3/8"± V.I.F.	1" INSULATED LOW-E GLASS	ALUMINUM		
4	W2A	16'-4 3/4"± V.I.F.	4'-5 3/8"± V.I.F.	1" INSULATED LOW-E GLASS	ALUMINUM		
5	W3	11'-9 3/8"± V.I.F.	4'-5 3/8"± V.I.F.	1" INSULATED LOW-E GLASS	ALUMINUM		
6	W3A	11'-9 3/8"± V.I.F.	4'-5 3/8"± V.I.F.	1" INSULATED LOW-E GLASS	ALUMINUM		
7	W4	5'-3 3/8"± V.I.F.	5'-9 3/8"± V.I.F.	1" INSULATED LOW-E GLASS	ALUMINUM	ROLLER SHADES	WINDOW TREATMENT (1 PER BAY)
8	W4A	5'-3 3/8"± V.I.F.	5'-9 3/8"± V.I.F.	1" INSULATED LOW-E GLASS	ALUMINUM	ROLLER SHADES	WINDOW TREATMENT (1 PER BAY)
9	W5	5'-3 3/8"± V.I.F.	9'-2 1/2"± V.I.F.	1" INSULATED LOW-E GLASS	ALUMINUM	ROLLER SHADES	WINDOW TREATMENT (1 PER BAY)
10	W5A	5'-3 3/8"± V.I.F.	9'-2 1/2"± V.I.F.	1" INSULATED LOW-E GLASS	ALUMINUM	ROLLER SHADES	WINDOW TREATMENT (1 PER BAY)
11	W6	8'-3 1/2"± V.I.F.	10'-6 1/4"± V.I.F.	1" INSULATED LOW-E GLASS & 1" INSULATED METAL PANEL	ALUMINUM		
12	W6A	8'-3 1/2"± V.I.F.	10'-6 1/4"± V.I.F.	1" INSULATED LOW-E GLASS & 1" INSULATED METAL PANEL	ALUMINUM		
13	W7	5'-11 7/8"± V.I.F.	9'-2 1/2"± V.I.F.	1" INSULATED LOW-E GLASS	ALUMINUM	ROLLER SHADES	WINDOW TREATMENT (1 PER BAY)
14	W7A	5'-11 1/2"± V.I.F.	9'-2 1/2"± V.I.F.	1" INSULATED LOW-E GLASS	ALUMINUM	ROLLER SHADES	WINDOW TREATMENT (1 PER BAY)
15	W8	14'-9"± V.I.F.	9'-2 1/2"± V.I.F.	1" INSULATED LOW-E GLASS	ALUMINUM	ROLLER SHADES	WINDOW TREATMENT (1 PER BAY)
16	W9	5'-11 7/8"± V.I.F.	5'-9 3/8"± V.I.F.	1" INSULATED LOW-E GLASS	ALUMINUM	ROLLER SHADES	WINDOW TREATMENT (1 PER BAY)
17	W9A	5'-11 1/2"± V.I.F.	5'-9 3/8"± V.I.F.	1" INSULATED LOW-E GLASS	ALUMINUM	ROLLER SHADES	WINDOW TREATMENT (1 PER BAY)
18	W10	14'-9"± V.I.F.	5'-9 3/8"± V.I.F.	1" INSULATED LOW-E GLASS	ALUMINUM	ROLLER SHADES	WINDOW TREATMENT (1 PER BAY)
19	W11	1'-5"± V.I.F.	1'-6"± V.I.F.	1" INSULATED LOW-E GLASS	ALUMINUM		
20	W12	9'-1"± V.I.F.	2'-0 3/8"± V.I.F.	1" INSULATED LOW-E OBSCURED GLASS	ALUMINUM		
21	W13	18'-8 3/4"± V.I.F.	6'-6 3/8"± V.I.F.	1" INSULATED LOW-E GLASS	ALUMINUM	ROLLER SHADES	WINDOW TREATMENT (1 PER BAY)
22	W13A	7'-4 3/4"± V.I.F.	6'-6 3/8"± V.I.F.	1" INSULATED LOW-E GLASS	ALUMINUM	ROLLER SHADES	WINDOW TREATMENT (1 PER BAY)
23	W14	5'-11 7/8"± V.I.F.	4'-5 3/8"± V.I.F.	1" INSULATED LOW-E GLASS	ALUMINUM		
24	W14A	5'-11 1/2"± V.I.F.	4'-5 3/8"± V.I.F.	1" INSULATED LOW-E GLASS	ALUMINUM		
25	W15	14'-9"± V.I.F.	4'-5 3/8"± V.I.F.	1" INSULATED LOW-E GLASS	ALUMINUM		
26	W16	5'-6 3/4"± V.I.F.	10'-6 1/4"± V.I.F.	1" INSULATED LOW-E GLASS & 1" INSULATED METAL PANEL	ALUMINUM	ROLLER SHADES	WINDOW TREATMENT (1 PER BAY)
27	W17	6'-2 1/4"± V.I.F.	10'-6 1/4"± V.I.F.	1" INSULATED LOW-E GLASS & 1" INSULATED METAL PANEL	ALUMINUM	ROLLER SHADES	WINDOW TREATMENT (1 PER BAY)
28	W18	20'-11 7/8"± V.I.F.	7'-7 3/8"± V.I.F.	1" INSULATED LOW-E GLASS	ALUMINUM	ROLLER SHADES	WINDOW TREATMENT (1 PER BAY)
29	W18A	8'-11 5/8"± V.I.F.	7'-7 3/8"± V.I.F.	1" INSULATED LOW-E GLASS	ALUMINUM	ROLLER SHADES	WINDOW TREATMENT (1 PER BAY)
30	W19	20'-0 3/8"± V.I.F.	7'-7 3/8"± V.I.F.	1" INSULATED LOW-E GLASS	ALUMINUM	ROLLER SHADES	WINDOW TREATMENT (1 PER BAY)
31	W20	24'-0 1/2"± V.I.F.	10'-6 1/4"± V.I.F.	1" INSULATED LOW-E GLASS & 1" INSULATED METAL PANEL	ALUMINUM		
32	W21	8'-8 3/4"± V.I.F.	7'-8"± V.I.F.	1" INSULATED LOW-E GLASS	ALUMINUM		
33	W22	6'-6 1/2"± V.I.F.	7'-7 3/8"± V.I.F.	1" INSULATED LOW-E GLASS	ALUMINUM	ROLLER SHADES	WINDOW TREATMENT (1 PER BAY)
34	W22A	6'-8 1/2"± V.I.F.	7'-7 3/8"± V.I.F.	1" INSULATED LOW-E GLASS	ALUMINUM	ROLLER SHADES	WINDOW TREATMENT (1 PER BAY)
35	W23	15'-8 3/8"± V.I.F.	6'-6 3/8"± V.I.F.	1" INSULATED LOW-E GLASS	ALUMINUM	ROLLER SHADES	WINDOW TREATMENT (1 PER BAY)
36	W23A	3'-7 1/2"± V.I.F.	6'-6 3/8"± V.I.F.	1" INSULATED LOW-E GLASS	ALUMINUM	ROLLER SHADES	WINDOW TREATMENT (1 PER BAY)
37	W24	71'-11 5/8"± V.I.F.	9'-1"± V.I.F.	1" INSULATED LOW-E GLASS & 1" INSULATED METAL PANEL	ALUMINUM		
38	W24A	6'-7"± V.I.F.	9'-1"± V.I.F.	1" INSULATED LOW-E GLASS & 1" INSULATED METAL PANEL	ALUMINUM		
39	W25	87'-7 1/4"± V.I.F.	9'-1"± V.I.F.	1" INSULATED LOW-E GLASS & 1" INSULATED METAL PANEL	ALUMINUM		
40	W25A	15'-2 3/8"± V.I.F.	9'-1"± V.I.F.	1" INSULATED LOW-E GLASS & 1" INSULATED METAL PANEL	ALUMINUM		
41	W26	46'-2 1/4"± V.I.F.	2'-2 3/8"± V.I.F.	1" INSULATED LOW-E GLASS & 1" INSULATED METAL PANEL	ALUMINUM		
42	W27	81'-0 3/8"± V.I.F.	2'-2 3/8"± V.I.F.	1" INSULATED LOW-E GLASS & 1" INSULATED METAL PANEL	ALUMINUM		
43	W28	27'-6 3/8"± V.I.F.	2'-2 3/8"± V.I.F.	1" INSULATED LOW-E GLASS & 1" INSULATED METAL PANEL	ALUMINUM		
44	W29	44'-6"± V.I.F.	2'-2 3/8"± V.I.F.	1" INSULATED LOW-E GLASS & 1" INSULATED METAL PANEL	ALUMINUM		
45	W30	18'-8 3/4"± V.I.F.	6'-6 3/8"± V.I.F.	1" INSULATED LOW-E GLASS	ALUMINUM	ROLLER SHADES	WINDOW TREATMENT (1 PER BAY)
46	W30A	7'-4 3/4"± V.I.F.	6'-6 3/8"± V.I.F.	1" INSULATED LOW-E GLASS	ALUMINUM	ROLLER SHADES	WINDOW TREATMENT (1 PER BAY)
47							
48							
49							
50							
51							
52							
53							
54							
55							
56							
57							

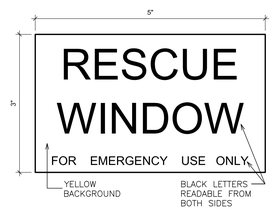

2 RESCUE WINDOW LABEL (RW)
SCALE: NTS

DOOR SCHEDULE

| BUILDING | LEVEL | LINE | DOOR NUMBER | DRAWING NUMBER | ROOM / RM No. | DOOR: DOUBLE LEAF DOOR | DOOR: WIDTH x HEIGHT | DOOR: NEW DOOR | DOOR: EXISTING DOOR | DOOR: DOOR TYPE | DOOR: DOOR MATERIAL | FRAME: FRAME TYPE | FRAME: FRAME MATERIAL | FRAME: HEAD DETAIL | FRAME: JAMB DETAIL | FRAME: SADDLE DETAIL | FIRE RATING (MIN.): 90 MINUTES | FIRE RATING (MIN.): 45 MINUTES | FIRE RATING (MIN.): 0 MINUTES | HARDWARE: FIRE CODE: PANIC RELEASE LATCH | FIRE CODE: POSITIVE LATCHING | FIRE CODE: AUTOMATIC CLOSER (DELAYED ACTION) | FIRE CODE: E.M. HOLD – OPEN | FIRE CODE: SMOKE SEALS | GLAZING: FIRE RATED | GLAZING: INSULATED | GLAZING: LAMINATED | GLAZING: SAFETY FILM | DISABLE REQUIREMENTS: LEVER, U-HANDLE | DISABLE REQUIREMENTS: KICK PLATE (BEVELED 4 SIDES) | DISABLE REQUIREMENTS: TACTILE WARNING | DISABLE REQUIREMENTS: ADA CONFORMING ACCESSIBLE THRESHOLD | HARDWARE TYPE: MORTISE LOCK SET | HARDWARE TYPE: CYLINDRICAL LOCK SET | HARDWARE TYPE: CYLINDER(S) | HARDWARE TYPE: CORE(S) – SFIC | HARDWARE TYPE: PUSH / PULL | FUNCTION: CLASSROOM W/ INTRUDER FUNC. | FUNCTION: CLASSROOM | FUNCTION: CLASSROOM DEADBOLT | FUNCTION: OFFICE | FUNCTION: STORE ROOM | FUNCTION: EXIT | FUNCTION: TOILET | FUNCTION: OCCUPANCY INDICATOR | MISCELLANEOUS: 180° SWING | MISCELLANEOUS: REMOVABLE MULLION | MISCELLANEOUS: CONTINUOUS HINGE | MISCELLANEOUS: CYLINDER DOGGING | MISCELLANEOUS: RECESS PULL | MISCELLANEOUS: HOLD OPEN-CLOSER | MISCELLANEOUS: WALL STOP | MISCELLANEOUS: FLOOR STOP | MISCELLANEOUS: OVERHEAD STOP | MISCELLANEOUS: PERIMETER WEATHERSTRIPING | SECURITY: DOOR CONTACTS | SECURITY: ACCESS CONTROL READER | SECURITY: ELECTRIFIED HARDWARE | SECURITY: ELECTRIC STRIKE | HARDWARE SET NO. | LINE | REMARKS |
|---|---|---|---|---|---|---|---

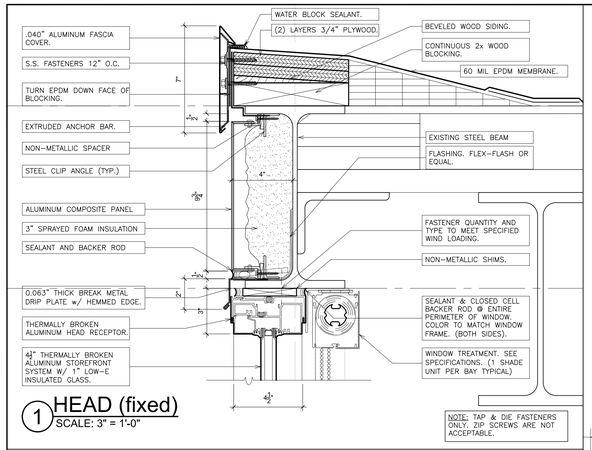

1 HEAD (fixed)
SCALE: 3" = 1'-0"

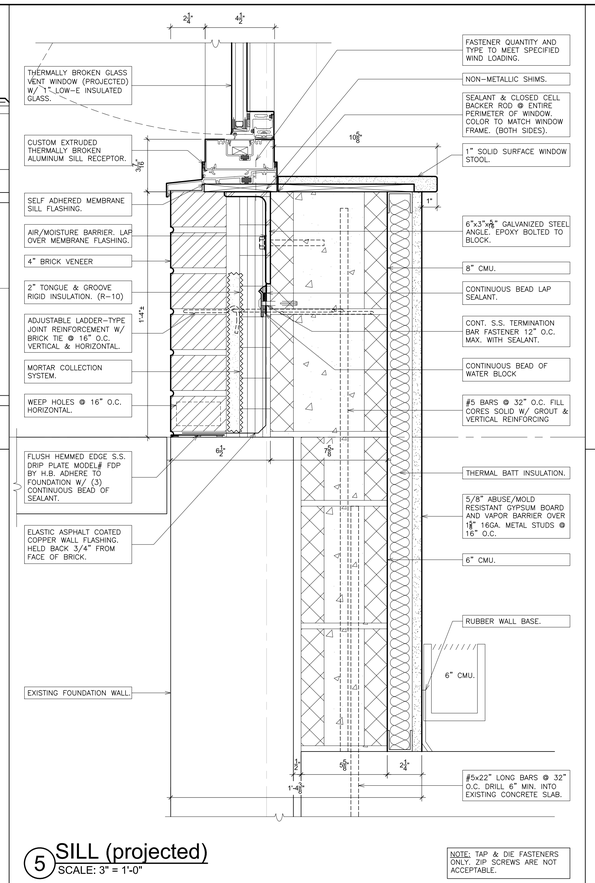

5 SILL (projected)
SCALE: 3" = 1'-0"

NOTE: TAP & DIE FASTENERS ONLY. ZIP SCREWS ARE NOT ACCEPTABLE.

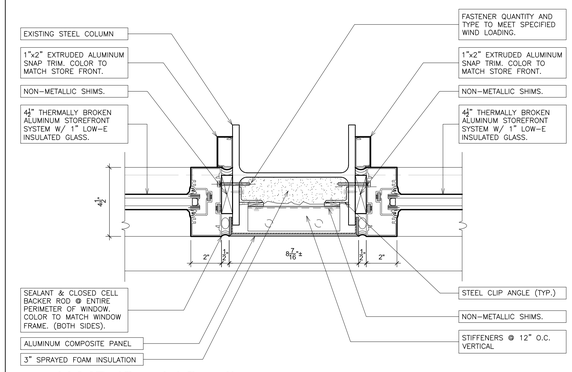

8 JAMB (fixed / fixed)
SCALE: 3" = 1'-0"

NOTE: TAP & DIE FASTENERS ONLY. ZIP SCREWS ARE NOT ACCEPTABLE.

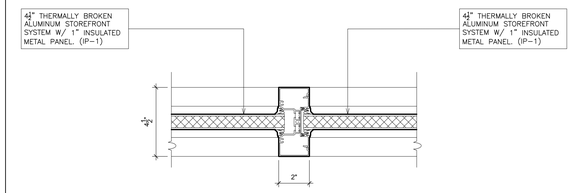

12 MULLION (fixed / fixed)
SCALE: 3" = 1'-0"

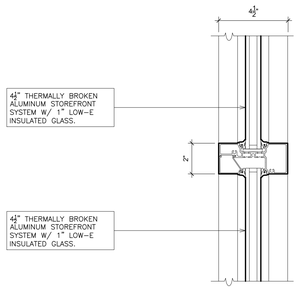

2 MEETING RAIL (fixed / fixed)
SCALE: 3" = 1'-0"

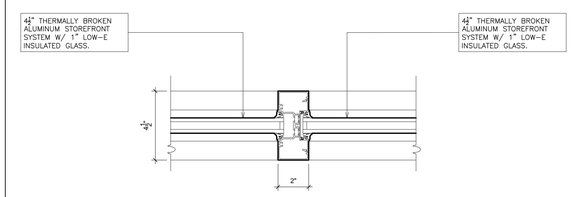

9 MULLION (fixed / fixed)
SCALE: 3" = 1'-0"

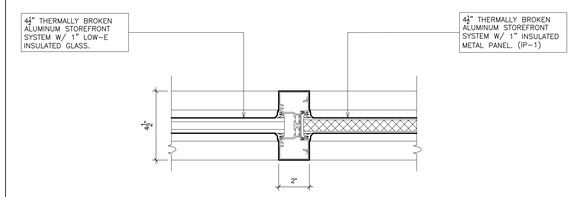

13 MULLION (fixed / fixed)
SCALE: 3" = 1'-0"

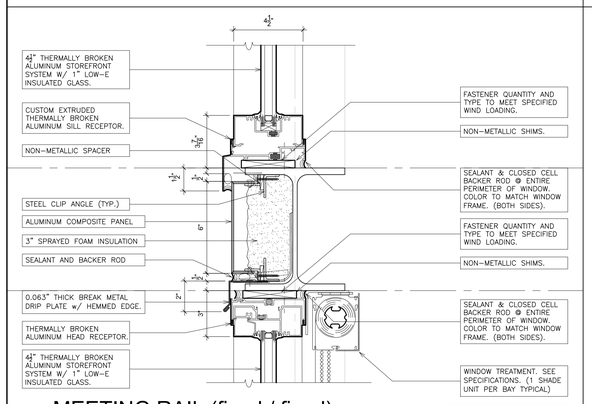

3 MEETING RAIL (fixed / fixed)
SCALE: 3" = 1'-0"

NOTE: TAP & DIE FASTENERS ONLY. ZIP SCREWS ARE NOT ACCEPTABLE.

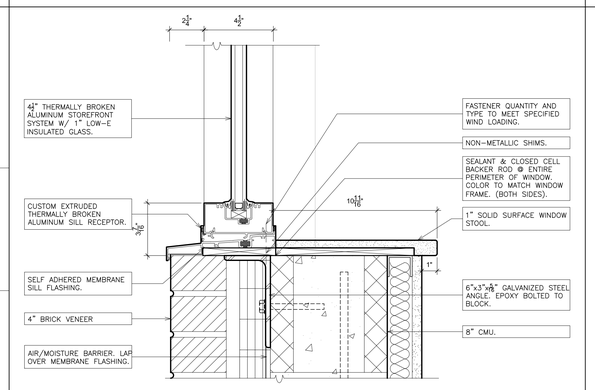

6 SILL (projected)
SCALE: 3" = 1'-0"

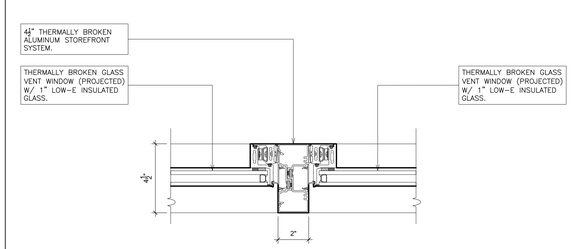

10 MULLION (projected / projected)
SCALE: 3" = 1'-0"

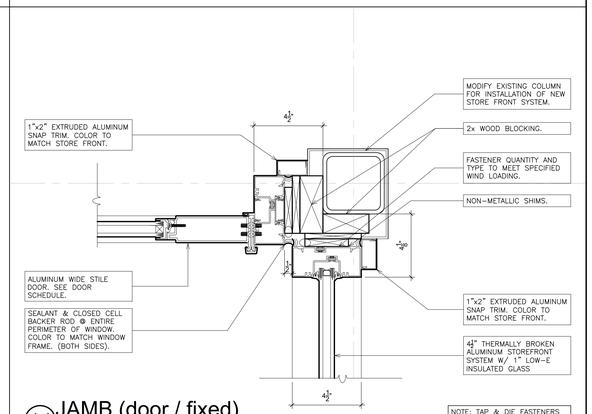

14 JAMB (door / fixed)
SCALE: 3" = 1'-0"

NOTE: TAP & DIE FASTENERS ONLY. ZIP SCREWS ARE NOT ACCEPTABLE.

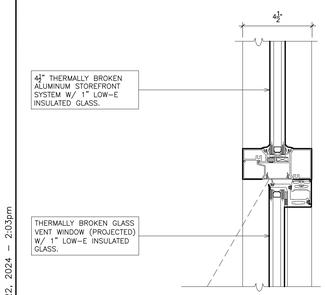

4 MEETING RAIL (fixed / projected)
SCALE: 3" = 1'-0"

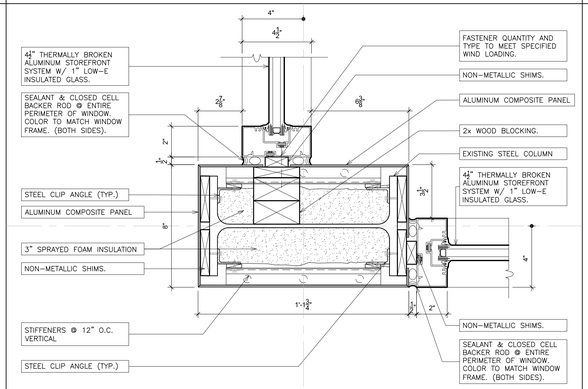

7 JAMB (fixed / fixed)
SCALE: 3" = 1'-0"

NOTE: TAP & DIE FASTENERS ONLY. ZIP SCREWS ARE NOT ACCEPTABLE.

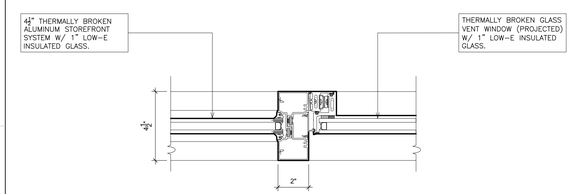

11 MULLION (fixed / projected)
SCALE: 3" = 1'-0"

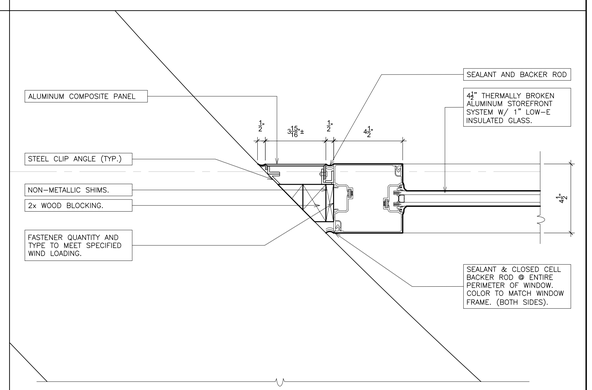

15 JAMB (fixed)
SCALE: 3" = 1'-0"

NOTE: TAP & DIE FASTENERS ONLY. ZIP SCREWS ARE NOT ACCEPTABLE.

AS PER USA CONGRESS ARCHITECTURAL WORKS COPYRIGHT PROTECTION ACT OF 1990 ALL IDEAS AND DESIGNS INCLUDING DERIVATIVES THEREOF, ALL DRAWINGS AND SPECIFICATIONS CONSTITUTE THE ORIGINAL COPYRIGHT WORK BY FULLER AND D'ANGELO, P.C. (F&D). THE DRAWINGS AND SPECIFICATIONS AS INSTRUMENTS OF SERVICE BY F&D ARE CREATED BY F&D FOR THIS PROJECT ONLY AND REMAIN THE PRODUCT AND PROPERTY OF F&D. ANY REPRODUCTION WITHOUT THE PRIOR CONSENT OF F&D IS PROHIBITED.

FULLER D'ANGELO P.C. ARCHITECTS PLANNERS
48 KHOLLWOOD ROAD ELMSFORD NEW YORK 10523
TEL. 914.592.4444 FAX 914.592.1717
WWW.FULLERANDDANGELO.COM
Copyright 2024 Fuller & D'Angelo, P.C. (F&D)

S.E.D. CONTROL NUMBER:
GREENVILLE ELEMENTARY
66-04-06-03-0-008-023

PROJECT TITLE
EDGEMONT UNION FREE SCHOOL DISTRICT
GREENVILLE WINDOW REPLACEMENT, TENNIS COURT RENOVATION, AND RELATED WORK
100 GLENDALE RD., SCARSDALE, NY 10583

DRAWING TITLE
WINDOW DETAILS

DATE	ISSUED TO
08-27-2024	BID
11-14-2023	S.E.D. SUBMISSION

SCALE: AS NOTED	DRAWING NO. A726
DRAWN BY: F & D	
CHECKED BY: F & D	FILE NO. 23501.00

PLOT DATE: August 22, 2024 – 2:03pm

FILE: I:\23501.00 Edgemont Greenville Window replacement\DRAWINGS\CURRENT\1-F&D\23501.00-A727-729.dwg

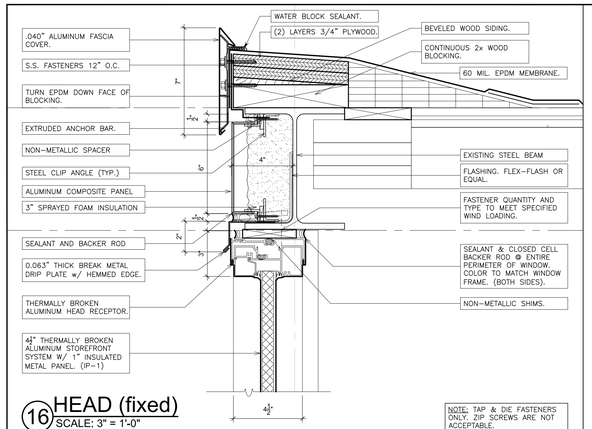

16 HEAD (fixed)
SCALE: 3" = 1'-0"

NOTE: TAP & DIE FASTENERS ONLY. ZIP SCREWS ARE NOT ACCEPTABLE.

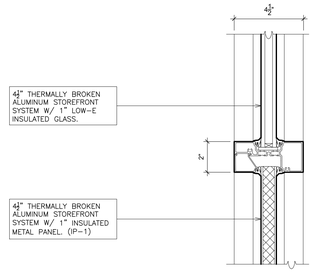

20 MEETING RAIL (fixed / fixed)
SCALE: 3" = 1'-0"

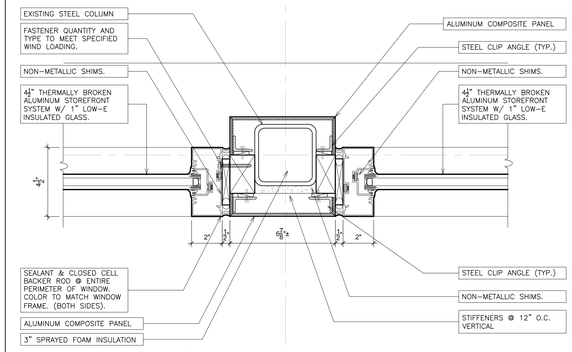

24 JAMB (fixed / fixed)
SCALE: 3" = 1'-0"

NOTE: TAP & DIE FASTENERS ONLY. ZIP SCREWS ARE NOT ACCEPTABLE.

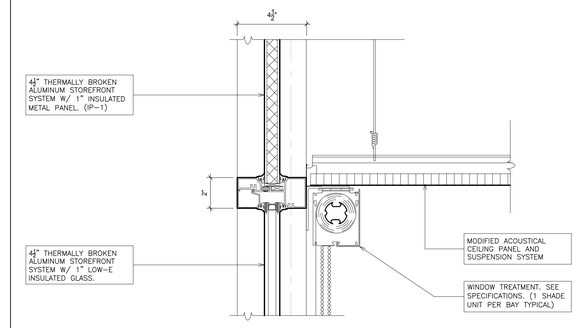

28 MEETING RAIL (fixed / fixed)
SCALE: 3" = 1'-0"

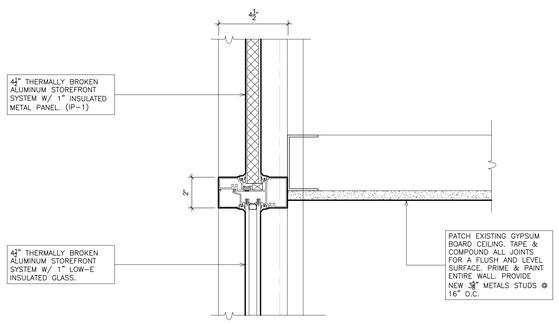

17 MEETING RAIL (fixed / fixed)
SCALE: 3" = 1'-0"

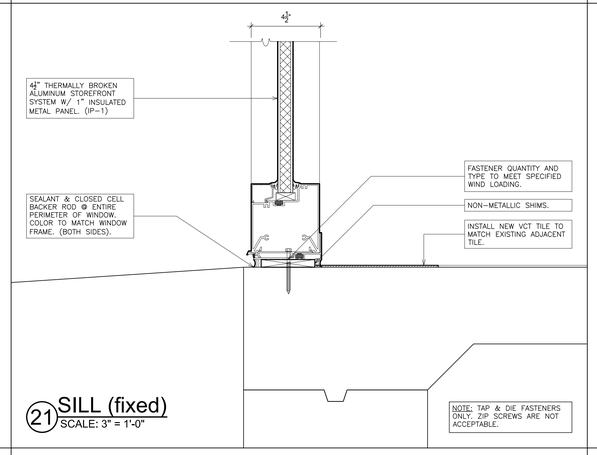

21 SILL (fixed)
SCALE: 3" = 1'-0"

NOTE: TAP & DIE FASTENERS ONLY. ZIP SCREWS ARE NOT ACCEPTABLE.

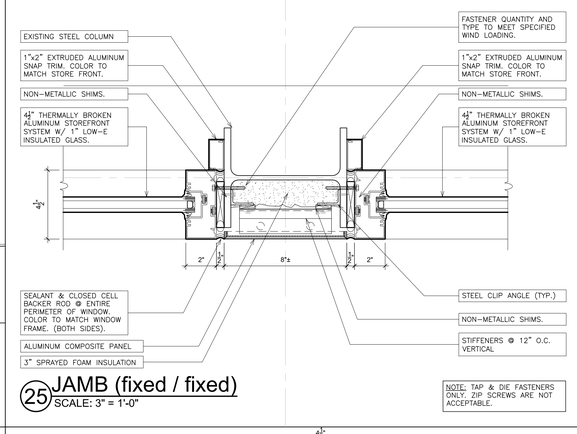

25 JAMB (fixed / fixed)
SCALE: 3" = 1'-0"

NOTE: TAP & DIE FASTENERS ONLY. ZIP SCREWS ARE NOT ACCEPTABLE.

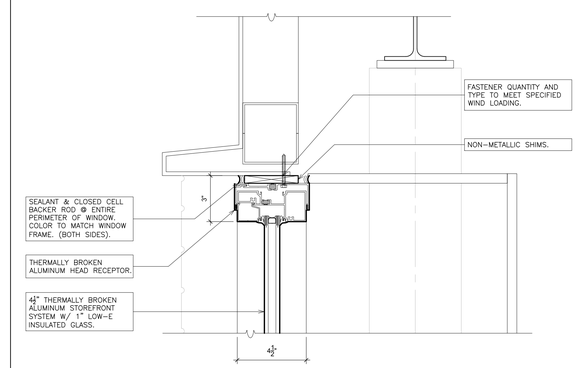

29 HEAD (fixed)
SCALE: 3" = 1'-0"

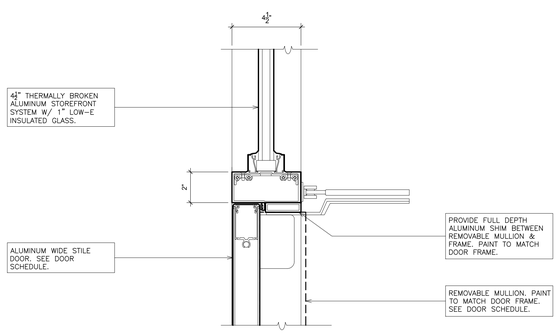

18 DOOR HEAD
SCALE: 3" = 1'-0"

NOTE: TAP & DIE FASTENERS ONLY. ZIP SCREWS ARE NOT ACCEPTABLE.

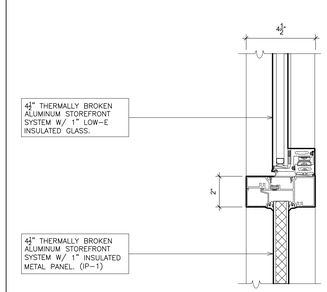

22 MEETING RAIL (projected / fixed)
SCALE: 3" = 1'-0"

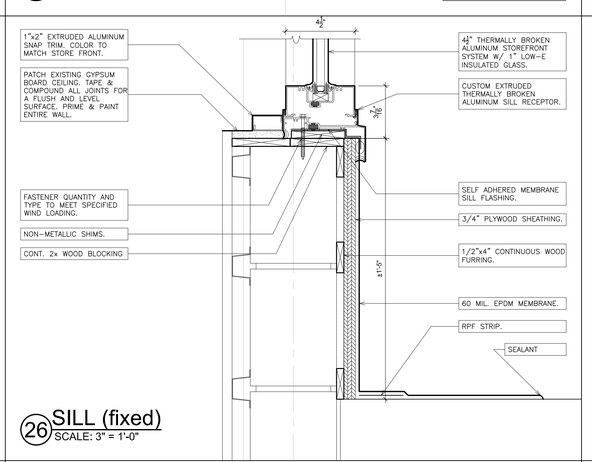

26 SILL (fixed)
SCALE: 3" = 1'-0"

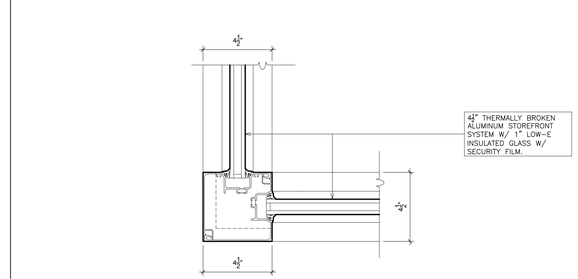

30 MULLION (fixed / fixed)
SCALE: 3" = 1'-0"

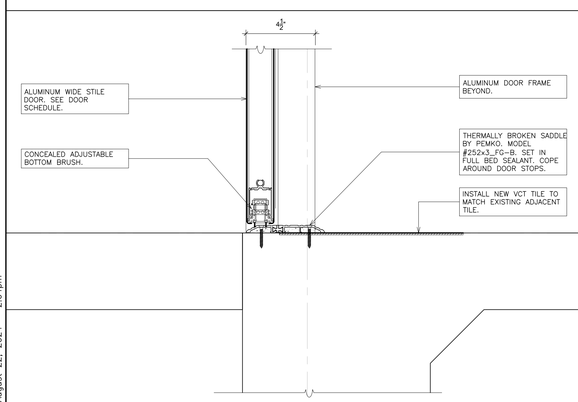

19 DOOR SILL
SCALE: 3" = 1'-0"

NOTE: TAP & DIE FASTENERS ONLY. ZIP SCREWS ARE NOT ACCEPTABLE.

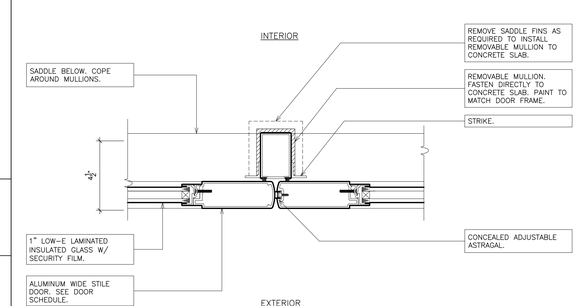

23 REMOVABLE MULLION
SCALE: 3" = 1'-0"

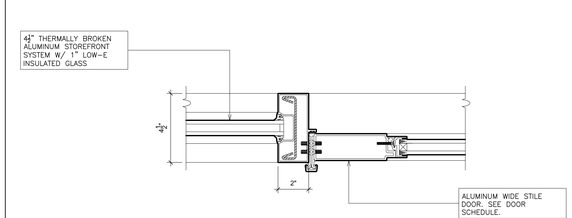

27 MULLION (fixed / door)
SCALE: 3" = 1'-0"

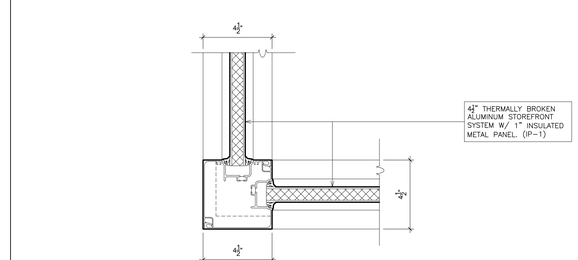

31 MULLION (fixed / fixed)
SCALE: 3" = 1'-0"

AS PER USA CONGRESS ARCHITECTURAL WORKS COPYRIGHT PROTECTION ACT OF 1990 ALL IDEAS AND DESIGNS INCLUDING DERIVATIVES THEREOF, ALL DRAWINGS AND SPECIFICATIONS CONSTITUTE THE ORIGINAL COPYRIGHT WORK BY FULLER AND D'ANGELO, P.C. (F&D). THE DRAWINGS AND SPECIFICATIONS AS INSTRUMENTS OF SERVICE BY F&D ARE CREATED BY F&D FOR THIS PROJECT ONLY AND REMAIN THE PRODUCT AND PROPERTY OF F&D. ANY REPRODUCTION WITHOUT THE PRIOR CONSENT OF F&D IS PROHIBITED.

FULLER D'ANGELO P.C.
ARCHITECTS PLANNERS
48 KHOLLWOOD ROAD ELMFORD NEW YORK 10523
TEL. 914-592-2444 FAX 914-592-1717
WWW.FULLERANDANGELO.COM
Copyright 2024 Fuller & D'Angelo, P.C. (F&D)

S.E.D. CONTROL NUMBER:

GREENVILLE ELEMENTARY
66-04-06-03-0-008-023

PROJECT TITLE
GREENVILLE UNION FREE SCHOOL DISTRICT
GREENVILLE WINDOW REPLACEMENT, TENNIS COURT RENOVATION, AND RELATED WORK
180 GLENDALE RD., SCARSDALE, NY 10583

DRAWING TITLE
WINDOW DETAILS

DATE	ISSUED TO
08-27-2024	BID
11-14-2023	S.E.D. SUBMISSION

SCALE: AS NOTED	DRAWING NO. A727
DRAWN BY: F & D	
CHECKED BY: F & D	FILE NO. 23501.00

PLOT DATE: August 22, 2024 - 2:04pm

FILE: I:\23501.00 Edgemont Greenville Window replacement\DRAWINGS\CURRENT\1-F&D\23501.00-A727-729.dwg

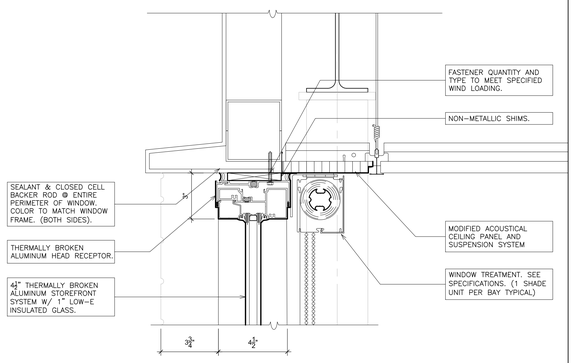

32 HEAD (fixed)
SCALE: 3" = 1'-0"

NOTE: TAP & DIE FASTENERS ONLY. ZIP SCREWS ARE NOT ACCEPTABLE.

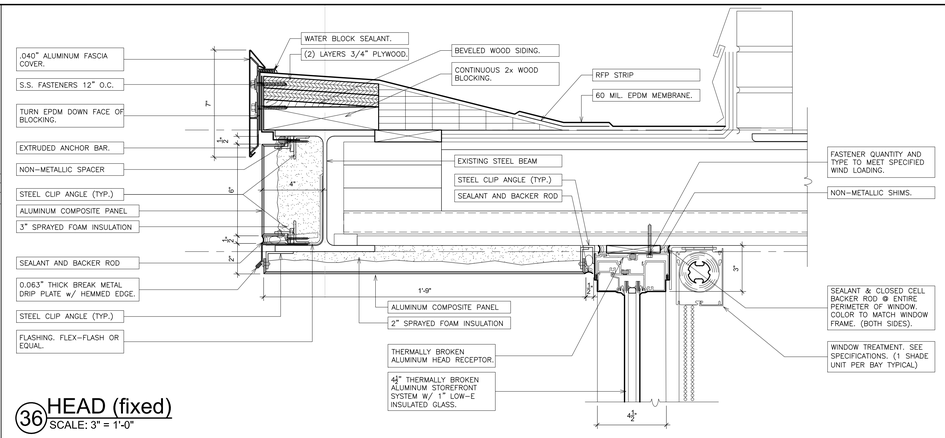

36 HEAD (fixed)
SCALE: 3" = 1'-0"

NOTE: TAP & DIE FASTENERS ONLY. ZIP SCREWS ARE NOT ACCEPTABLE.

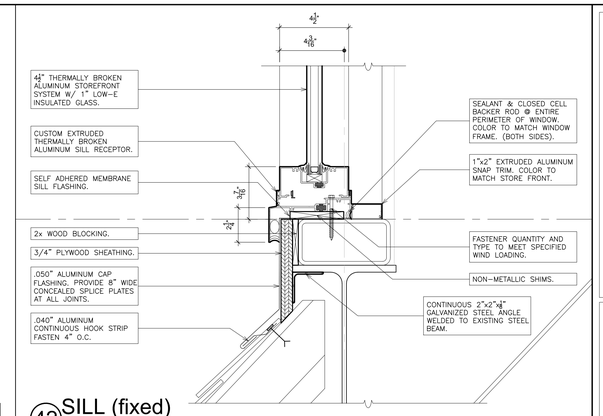

42 SILL (fixed)
SCALE: 3" = 1'-0"

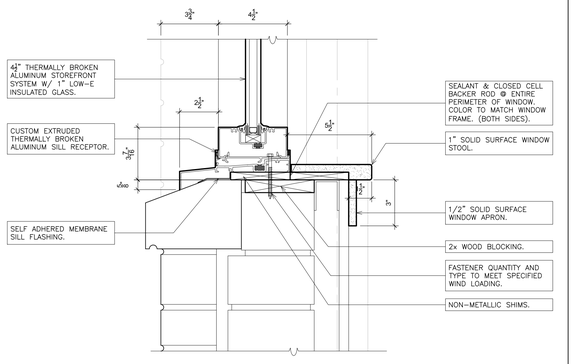

33 SILL (fixed)
SCALE: 3" = 1'-0"

NOTE: TAP & DIE FASTENERS ONLY. ZIP SCREWS ARE NOT ACCEPTABLE.

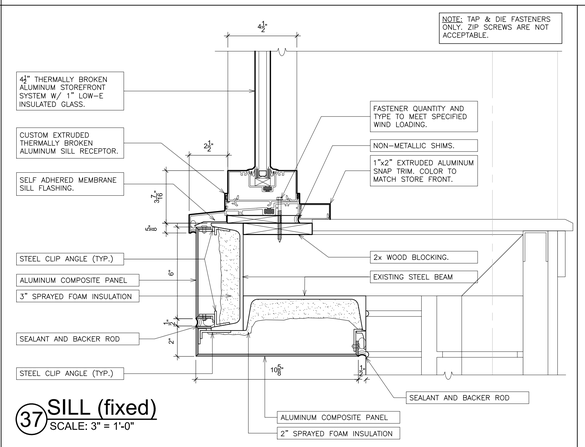

37 SILL (fixed)
SCALE: 3" = 1'-0"

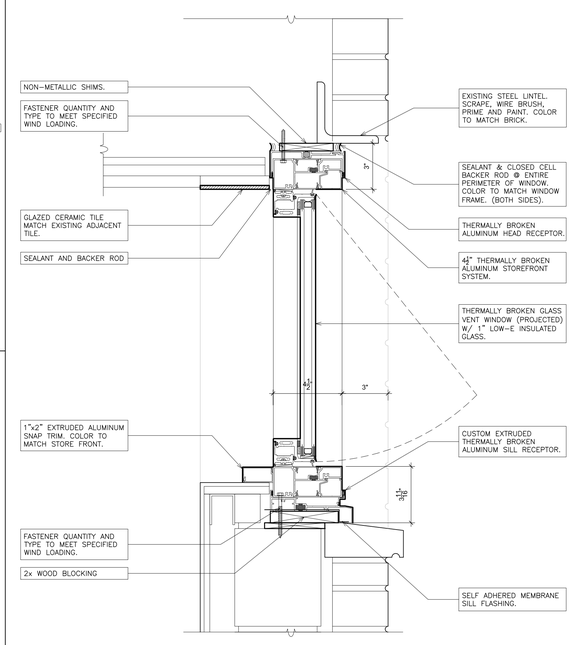

40 HEAD/SILL (projected)
SCALE: 3" = 1'-0"

NOTE: TAP & DIE FASTENERS ONLY. ZIP SCREWS ARE NOT ACCEPTABLE.

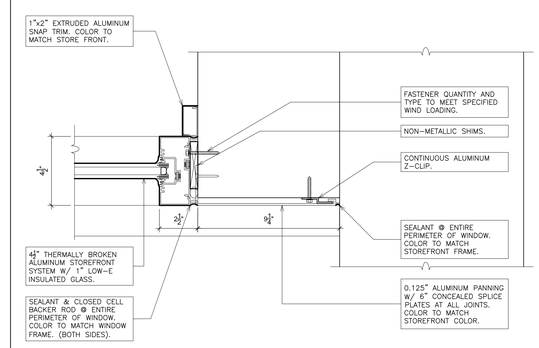

43 JAMB (fixed)
SCALE: 3" = 1'-0"

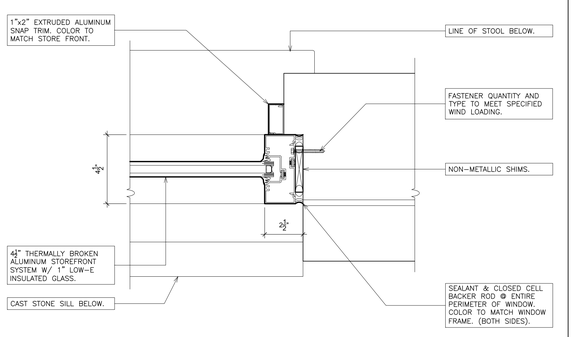

34 JAMB (fixed)
SCALE: 3" = 1'-0"

NOTE: TAP & DIE FASTENERS ONLY. ZIP SCREWS ARE NOT ACCEPTABLE.

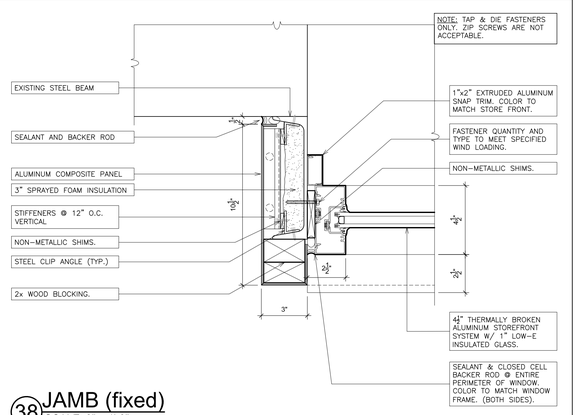

38 JAMB (fixed)
SCALE: 3" = 1'-0"

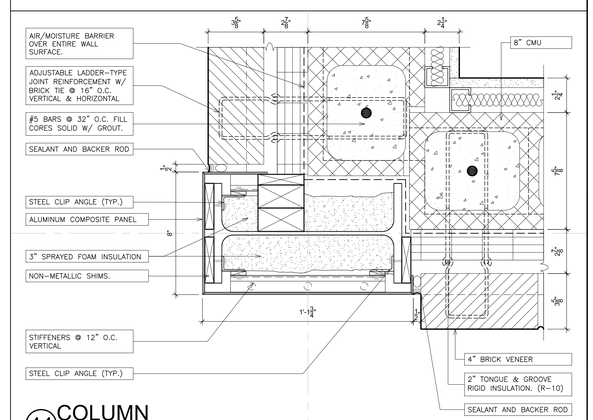

44 COLUMN
SCALE: 3" = 1'-0"

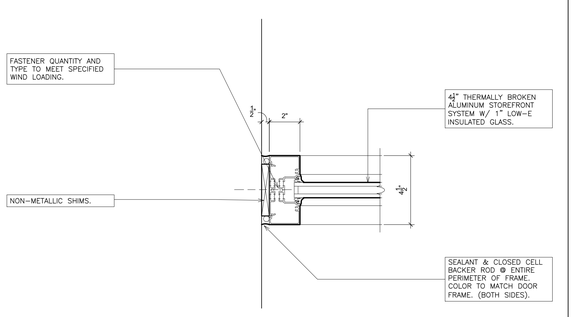

35 JAMB (fixed)
SCALE: 3" = 1'-0"

NOTE: TAP & DIE FASTENERS ONLY. ZIP SCREWS ARE NOT ACCEPTABLE.

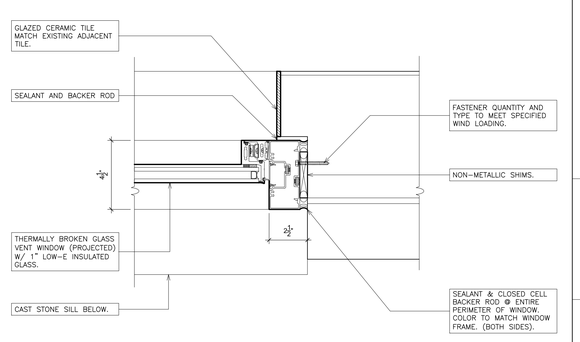

39 JAMB (projected)
SCALE: 3" = 1'-0"

NOTE: TAP & DIE FASTENERS ONLY. ZIP SCREWS ARE NOT ACCEPTABLE.

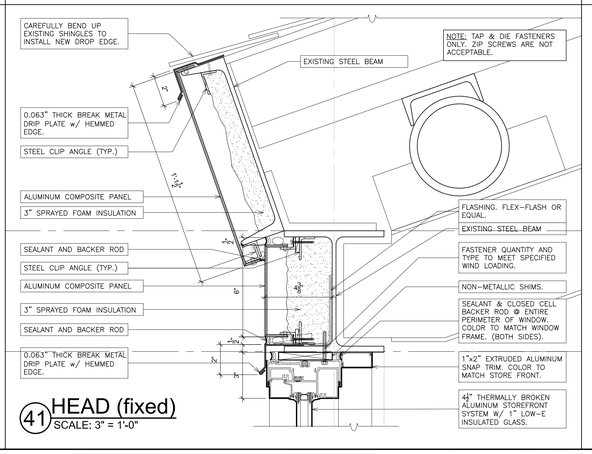

41 HEAD (fixed)
SCALE: 3" = 1'-0"

AS PER USA CONGRESS ARCHITECTURAL WORKS COPYRIGHT PROTECTION ACT OF 1990 ALL IDEAS AND DESIGNS INCLUDING DERIVATIVES THEREOF, ALL DRAWINGS AND SPECIFICATIONS CONSTITUTE THE ORIGINAL COPYRIGHT WORK BY FULLER AND D'ANGELO, P.C. (F&D). THE DRAWINGS AND SPECIFICATIONS AS INSTRUMENTS OF SERVICE BY F&D ARE CREATED BY F&D FOR THIS PROJECT ONLY AND REMAIN THE PRODUCT AND PROPERTY OF F&D. ANY REPRODUCTION WITHOUT THE PRIOR CONSENT OF F&D IS PROHIBITED.

FULLER D'ANGELO P.C.
ARCHITECTS PLANNERS
48 SHOLWOOD ROAD ELMSFORD NEW YORK 10523
TEL. 914.592.4444 FAX 914.592.1717
WWW.FULLERANDANGELO.COM
Copyright 2024 Fuller & D'Angelo, P.C. (F&D)

S.E.D. CONTROL NUMBER:
GREENVILLE ELEMENTARY
66-04-06-03-0-008-023

PROJECT TITLE
ROCKLAND COUNTY UNION FREE SCHOOL DISTRICT
GREENVILLE WINDOW REPLACEMENT, TENNIS COURT RENOVATION, AND RELATED WORK
100 GLENDALE RD., SCARSDALE, NY 10583

DRAWING TITLE
WINDOW DETAILS

DATE	ISSUED TO
08-27-2024	BID
11-14-2023	S.E.D. SUBMISSION

SCALE: AS NOTED	DRAWING NO. A728
DRAWN BY: F & D	
CHECKED BY: F & D	FILE NO. 23501.00

PLOT DATE: August 22, 2024 – 2:04pm

FILE: I:\23501.00 Edgemont Greenville Window replacement\DRAWINGS\CURRENT\1-F&D\23501.00-A727-729.dwg