CARL E. GILBERT ELEMENTARY SCHOOL

TK-PK CLASSROOMS & EARLY LEARNING BUILDING

7255 8TH STREET, BUENA PARK, CA 90621

BUENA PARK SD

DSA File No. 30-4
App. No. 04-123212
PTN. 66456-65

DRAWING INDEX

SHT. NO.	DESCRIPTION
GENERAL	
A0.1	COVER SHEET
A0.2	GENERAL NOTES
A0.3	ARCHITECTURAL SYMBOLS AND ABBREVIATIONS
A0.4	CODE ANALYSIS SITE PLAN
A0.5	CODE ANALYSIS FLOOR PLAN
5	
CIVIL	
C0.01	TITLE SHEET
C1.00	COMPOSITE SITE PLAN
C1.10	EROSION CONTROL PLAN
C1.11	EROSION CONTROL PLAN
C1.12	EROSION CONTROL PLAN
C1.20	DEMOLITION PLAN
C1.21	DEMOLITION PLAN
C1.22	DEMOLITION PLAN
C1.30	GRADING PLAN
C1.31	GRADING PLAN
C1.32	GRADING PLAN
C1.40	PAVING PLAN
C1.41	PAVING PLAN
C1.42	PAVING PLAN
C1.50	UTILITY PLAN
C1.51	UTILITY PLAN
C1.52	UTILITY PLAN
C5.00	DETAILS
C5.01	DETAILS
C5.02	DETAILS
C5.03	DETAILS
C5.04	DETAILS
C5.05	DETAILS
23	
LANDSCAPE	
L1.0	PLAYGROUND CONSTRUCTION PLAN
L1.1	PLAY STRUCTURE ELEMENTS PLAN AND ACCESSIBILITY TABLES
L1.2	PLAYGROUND CONSTRUCTION DETAILS
L1.3	PLAYGROUND EQUIPMENT
L1.4	MULTI TOWER PLAYGROUND EQUIPMENT
L1.5	PLAYGROUND EQUIPMENT
L1.6	LITTLE TURTLES PLAYGROUND EQUIPMENT
L2.0	WATER CONSERVATION PLAN
L2.1	IRRIGATION PLANS
L2.2	IRRIGATION LEGEND
L2.3	IRRIGATION DETAILS
L2.4	IRRIGATION DETAILS AND SCHEDULES
L3.0	PLANTING PLAN
L3.1	PLANTING DETAILS / DSA EXHIBITS
14	
P.C.FABRIC SHADE STRUCTURE A# 04-121917	
T-1.0	TITLE SHEET
T-2.0	UNIT SELECTION
T-3.0	T & I FORMS
25.1-1000	PRODUCT INFORMATION
25.2-2000	SPECIFICATIONS
5	
ARCHITECTURAL	
A1.1	SITE PLAN OVERALL
A1.2	ENLARGED SITE PLAN
A1.3	SITE SCORING PLAN
A2.1	FLOOR PLAN
A2.2	EQUIPMENT PLAN
A2.3	FLOOR PATTERN PLAN
A3.1	REFLECTED CEILING PLAN
A4.1	ROOF PLAN
A5.1	EXTERIOR ELEVATIONS
A5.2	EXTERIOR ELEVATIONS
A6.1	BUILDING SECTIONS
A6.2	BUILDING SECTIONS
A6.3	WALL SECTIONS
A6.4	WALL SECTIONS
A7.1	TOILET ROOM PLANS AND ELEVATIONS
A8.1	INTERIOR ELEVATIONS
A8.2	INTERIOR ELEVATIONS
A9.1	DOOR, GATE & WINDOW SCHEDULE
A9.2	ROOM FINISH SCHEDULE
A10.1	WALL TYPES
A10.2.1	SITE DETAILS- SIGNS / CURBS
A10.2.2	SITE DETAILS-STRIPING
A10.2.3	SITE DETAILS-FENCING
A10.2.4	SITE DETAILS- ORNAMENTAL FENCING
A10.4	MASONRY DETAILS
A10.6	PLASTER DETAILS
A10.7.1	ROOF DETAILS- PENETRATIONS
A10.7.2	ROOF DETAILS - MEMBRANE
A10.7.3	ROOF DETAILS - METAL
A10.8	DOOR AND WINDOW DETAILS
A10.9.1	CEILING DETAILS
A10.9.2	CEILING DETAILS - WOOD STRUCTURE
A10.9.3	CEILING DETAILS - STEEL STRUCTURE
A10.10.1	SPECIALTIES -SIGNAGE
A10.10.2	SPECIALTIES
A10.10.3	SPECIALTIES
A10.12	CASEWORK DETAILS
37	

SHT. NO.	DESCRIPTION
STRUCTURAL	
S0.1	GENERAL NOTES
S1.1	TYPICAL CONCRETE DETAILS
S1.2	TYPICAL WOOD FRAMING DETAILS
S1.3	TYPICAL WOOD FRAMING DETAILS
S1.4	TYPICAL FRAMING DETAILS
S2.1	FOUNDATION PLAN
S4.1	ROOF FRAMING PLAN
S5.1	FOUNDATION DETAILS
S6.1	FRAMING BUILDING SECTIONS
S7.1	ROOF FRAMING DETAILS
S7.2	FRAMING DETAILS
S7.3	FRAMING DETAILS
S7.4	FRAMING DETAILS
13	
MECHANICAL	
M0.1	MECHANICAL LEGEND AND GENERAL NOTES
M0.2	MECHANICAL SCHEDULE
M2.1	MECHANICAL FLOOR PLAN
M3.1	MECHANICAL ROOF PLAN
M4.1	MECHANICAL DETAILS
M4.2	MECHANICAL DETAILS
M5.1	CONTROL DETAILS
M6.1	TITLE 24
M6.2	TITLE 24
9	
PLUMBING	
P0.1	PLUMBING LEGEND, SCHEDULE, AND GENERAL NOTES
P1.1	PLUMBING ENLARGED SITE PLAN
P2.1	PLUMBING FLOOR PLAN
P3.1	PLUMBING ROOF PLAN
P4.1	PLUMBING ENLARGED PLANS
P4.2	PLUMBING ENLARGED PLANS
P5.1	PLUMBING DETAILS
7	
ELECTRICAL	
E0.1	SYMBOL LIST, NOTES AND SHEET INDEX
E0.2	SINGLE LINE DIAGRAM
E0.3	FIRE ALARM SYSTEM INFORMATION
E0.4	FIRE ALARM PLAN AND RISER DIAGRAM
E0.5	ELECTRICAL DETAILS
E0.6	CLASSROOM A/V DIAGRAM
E1.1	SITE ELECTRICAL PLAN
E2.1	LIGHTING PLAN
E2.2	POWER PLAN
E2.3	SIGNAL PLAN
E2.4	FIRE ALARM PLAN
E2.5	ROOF ELECTRICAL PLAN
E3.1	INDOOR TITLE 24
E3.2	OUTDOOR TITLE 24
E3.3	SOLAR AND BATTERY TITLE 24
15	
TOTAL SHEET COUNT: 128	

PROJECT DIRECTORY

CLIENT
BUENA PARK SD

BUENA PARK ELEMENTARY SCHOOL DISTRICT
6885 ORANGETHORPE AVE
BUENA PARK, CA 90620
[T] (714) 736-4294
MIKE ANDERSON
MAnderson@bpsd.us

ARCHITECT
STUDIO W ARCHITECTS

BRIAN WHITMORE, PRINCIPAL
1930 H STREET
SACRAMENTO, CA 95811
[T] (916) 254-5600
BrianW@StudioW-Architects.com

TONY PACHECO-TAYLOR, CLIENT LEADER
424 32ND STREET, SUITE D/E
NEWPORT BEACH, CA 92663
[T] (949) 774-2906
TonyP@StudioW-Architects.com

CIVIL ENGINEER
KPFF

JESÚS PÉREZ, PE, ENV SP, ASSOCIATE
140 NEWPORT CENTER DRIVE, SUITE 100
NEWPORT BEACH, CA 92660
[T] (949) 478-8807
Jesus.Perez@kpff.com

CAROLINE YEO
140 NEWPORT CENTER DRIVE, SUITE 100
NEWPORT BEACH, CA 92660
[T] (949) 478-8800
Caroline.Yeo@kpff.com

ALEXIS BASILIO
140 NEWPORT CENTER DRIVE, SUITE 100
NEWPORT BEACH, CA 92660
[T] (949) 478-8800
Alexis.Basilio@kpff.com

LANDSCAPE ARCHITECT
KDA LANDSCAPE ARCHITECTS, INC.

KATHRYN KANAAN, CEO, PRESIDENT
325 7TH AVENUE, UNIT 214
SAN DIEGO, CA 92101
[T] (619) 840-5174
Kathryn@kda-landscapearchitects.com

STRUCTURAL ENGINEER
WELSH STRUCTURES, INC.

STEPHANIE WELSH, PRESIDENT
12722 BARRETT LANE
SANTA ANA, CA 92705
[T] (714) 352-6297
[F] (714) 352-6947
SWelsh@welshstructures.com

MECHANICAL & PLUMBING ENGINEER
POCOCK DESIGN SOLUTIONS

TIM POCOCK, PRINCIPAL
14451 CHAMBERS ROAD, SUITE 210
TUSTIN, CA 92626
[T] (949) 417-3903
[F] (949) 419-1393
Tim@pocockdesignsolutions.com

ELECTRICAL ENGINEER
FBA ENGINEERING

STEVE ZAJICEK, PD, PRINCIPAL
150 PAULARINO AVENUE, SUITE A120
COSTA MESA, CA 92626
[T] (949) 852-9995
[F] (949) 852-1657
Steve@fbaengr.com

SPECIFICATION WRITER
BYUN PARTNERS

DAVID BYUN
1205 HAZEL PLACE
COSTA MESA, CA 92626
[T] (310) 800-0353
David@byunpartners.com

VICINITY MAP

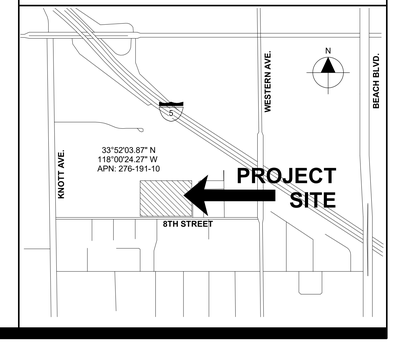

DSA REQUIREMENTS

1. ALL WORK SHALL CONFORM TO THE 2022 EDITION OF THE TITLE 24, CALIFORNIA CODE OF REGULATIONS (CCR).
2. AS A FACILITY WHICH COMES UNDER THE APPROVAL AND AUTHORITY OF THE DIVISION OF THE STATE ARCHITECT (DSA), THIS PROJECT IS SUBJECT TO DRAWING AND JOB SITE REVIEW BY A REPRESENTATIVE OF DSA.
3. CHANGES TO THE APPROVED DRAWINGS AND SPECIFICATIONS AFFECTING FLS, SSS, AND/OR ACS SHALL BE MADE BY ADDENDA OR A CONSTRUCTION CHANGE DOCUMENT (CCD) APPROVED BY THE DIVISION OF THE STATE ARCHITECT, AS REQUIRED BY SECTION 4-338, PART 1, TITLE 24, CCR AND DSA IR A-8.
4. A DSA CERTIFIED PROJECT INSPECTOR EMPLOYED BY THE DISTRICT (OWNER) AND APPROVED BY THE DIVISION OF THE STATE ARCHITECT SHALL PROVIDE CONTINUOUS INSPECTION OF THE WORK. THE DUTIES OF THE INSPECTOR ARE DEFINED IN SECTION 4-342, PART 1, TITLE 24, CCR.
5. A COPY OF PART 1 TO PART 5 & 9 OF TITLE 24 SHALL BE KEPT AND BE AVAILABLE IN THE FIELD DURING CONSTRUCTION.
6. DSA SHALL BE NOTIFIED OF THE START OF CONSTRUCTION AND PRIOR TO THE PLACEMENT OF CONCRETE PER SECTION 4-331, PART 1, TITLE 24, CCR
7. THE DIVISION OF THE STATE ARCHITECT IS EXEMPT FROM ARBITRATION OR MEDIATION PROCEDURES.
8. SUPERVISION BY THE DIVISION OF THE STATE ARCHITECT IS PER SECTION 4-334, PART 1, TITLE 24, CCR
9. ADMINISTRATION OF CONSTRUCTION PER PART 1, TITLE 24, CCR:
   - VERIFIED REPORTS PER SECT 4-336; PART 1, TITLE 24 CCR
   - DUTIES OF ARCHITECT PER SECT 4-331, 4-341; PART 1, TITLE 24 CCR
   - DUTIES OF CONTRACTOR PER SECT. 4-343; PART 1, TITLE 24
10. A DSA ACCEPTED TESTING LABORATORY DIRECTLY EMPLOYED BY THE DISTRICT (OWNER) SHALL CONDUCT ALL THE REQUIRED TESTS AND INSPECTIONS FOR THE PROJECT.
11. CHANGES IN LEVEL FOR FLOOR FINISHES SHALL CONFORM WITH CBC SECTION 1124B.2 AND 1124B.3
12. ALL TESTS TO CONFORM TO REQUIREMENTS OF SECTION 4-335; PART 1, TITLE 24, CCR
13. INSPECTOR SHALL BE APPROVED BY DSA. INSPECTION SHALL BE IN ACCORDANCE WITH SECTION 4-333(B).
14. THE INTENT OF THESE DRAWINGS AND SPECIFICATIONS IS THAT THE WORK OF THE ALTERATION, REHABILITATION OR RECONSTRUCTION IS TO BE IN ACCORDANCE WITH TITLE 24, CCR. SHOULD ANY EXISTING CONDITIONS SUCH AS DETERIORATION OR NON-COMPLYING CONSTRUCTION BE DISCOVERED WHICH IS NOT COVERED BY THE CONTRACT DOCUMENTS WHEREIN THE FINISHED WORK WILL NOT COMPLY WITH TITLE 24, CCR, A CONSTRUCTION CHANGE DOCUMENT (CCD), OR A SEPARATE SET OF PLANS AND SPECIFICATIONS, DETAILING AND SPECIFYING THE REQUIRED WORK SHALL BE SUBMITTED TO AND APPROVED BY DSA BEFORE PROCEEDING WITH THE WORK. (SECTION 4-317(C), PART 1, TITLE 24, CCR)
15. INSPECTOR OF RECORD REQUIREMENTS:
   A. ONE OR MORE INSPECTORS EMPLOYED BY THE OWNER IN ACCORDANCE WITH THE REQUIREMENTS OF TITLE 24 OF THE CALIFORNIA CODE OF REGULATIONS WILL BE ASSIGNED TO THE WORK. THE INSPECTOR'S DUTIES ARE SPECIFICALLY DEFINED IN SECTION 4-342 OF SAID TITLE 24; PART 1 AND IN ADDITION, SHALL BE STIPULATED IN INTERPRETATION OF REGULATION DOCUMENT IR A-8.
   B. INSPECTOR SHALL BE CERTIFIED AS A CLASS 1 INSPECTOR THROUGH THE DIVISION OF THE STATE ARCHITECT INSPECTOR EXAMINATION PROGRAM. INSPECTOR SHALL ALSO BE SPECIFICALLY APPROVED BY THE DIVISION OF THE STATE ARCHITECT FOR THIS PROJECT AT LEAST 10 DAYS PRIOR TO THE START OF ANY WORK FOR THIS PROJECT.
16. SUBSTITUTION OF PRODUCTS OR CONSTRUCTION PROCESSES WHICH AFFECT THE STRUCTURAL SAFETY, FIRE AND LIFE-SAFETY, OR ACCESSIBILITY OF THIS APPLICATION SHALL BE SUBMITTED TO DSA AS AN ADDENDUM OR CONSTRUCTION CHANGE DOCUMENT FOR REVIEW AND APPROVAL.

DEFERRED APPROVALS

1. NONE

ADD ALTERNATES

1. NONE

CODES AND REGULATIONS

LIST OF APPLICABLE CODES
2022 CALIFORNIA ADMINISTRATIVE CODE (CAC), PART 1, TITLE 24 CCR
2022 CALIFORNIA BUILDING CODE (CBC), PART 2, TITLE 24 CCR
2022 CALIFORNIA ELECTRIC CODE (CEC), PART 3, TITLE 24 CCR
2022 CALIFORNIA MECHANICAL CODE (CMC), PART 4, TITLE 24 CCR
2022 CALIFORNIA PLUMBING CODE (CPC), PART 5, TITLE 24 CCR
2022 CALIFORNIA ENERGY CODE, PART 6, TITLE 24 CCR
2022 CALIFORNIA FIRE CODE (CFC), PART 9, TITLE 24 CCR
2022 CALIFORNIA EXISTING BUILDING CODE (CEBC), PART 10, TITLE 24 CCR
2022 CALIFORNIA GREEN BUILDING STANDARD CODE (CALGREEN), PART 11, TITLE 24 CCR
2022 CALIFORNIA REFERENCE STANDARD CODE, PART 12, TITLE 24 CCR
TITLE 19 CCR, PUBLIC SAFETY, STATE FIRE MARSHAL REGULATIONS

APPLICABLE STANDARDS
FOR A LIST OF APPLICABLE STANDARDS, INCLUDING CALIFORNIA AMENDMENTS TO THE NFPA STANDARDS, REFER TO CBC CHAPTER 35 AND CFC CHAPTER 80.

PROJECT DESCRIPTION

APN: 276-191-10

THE PROJECT INCLUDES:
- (1) NEW PARKING LOT W/ ACCESSIBLE STUDENT DROP OFF
- (1) NEW ADMIN BUILDING KA
- (2) NEW CLASSROOM BUILDING KA & KB
- (4) NEW SHADE STRUCTURE SS-1, SS-2, SS-3 & SS-4
- (3) PLAY AREA & PLAY EQUIPMENT
- AND MISC. SITE WORK
- OFF SITE WORK TO CLOSE THREE CURB CUTS AND CREATE ONE NEW CURB CUT REQUIRING ADDITIONAL PERMITS WITH THE CITY OF BUENA PARK, GENERAL CONTRACTOR TO COORDINATE AND PAY FOR PERMITS.

STATEMENT OF GENERAL CONFORMANCE

FOR ARCHITECTS/ENGINEERS WHO UTILIZE PLANS,
INCLUDING BUT NOT LIMITED TO SHOP DRAWINGS, PREPARED BY OTHER LICENSED DESIGN PROFESSIONALS AND/OR CONSULTANTS

Application No. 04-123212

File No. 30-4

[X] The drawings or sheets listed on the cover or index sheet
(all C, L, S, M, P, E and P.C. FABRIC SHADE STRUCTURE drawings)
[ ] This drawing, page of specifications/calculations

have been prepared by other design professionals or consultants who are licensed and/or authorized to prepare such drawings in this state. It has been examined by me for:

1. design intent and appears to meet the appropriate requirements of Title 24, California Code of Regulations and the project specifications prepared by me, and
2. coordination with my plans and specifications and is acceptable for incorporation into the construction of this project.

The Statement of General Conformance "shall not be construed as relieving me of my rights, duties, and responsibilities under Sections 17302 and 81138 of the Education Code and Sections 4-336, 4-341 and 4-344" of Title 24, Part 1. (Title 24, Part 1, Section 4-317 [b])

I find that:
[X] All drawings or sheets listed on the cover or index sheet
[ ] This drawing or page

[X] is/are in general conformance with the project design and
[X] has/have been coordinated with the project plans and specifications

Signature — Date: 06/24/2024

Architect or Engineer designated to be in general responsible charge.

Brian P. Whitmore
Print Name

C 30345 — **License Number**
09-30-2025 — **Expiration Date**

STATEMENT OF GENERAL CONFORMANCE AND SIGNATURE BLOCK PER IR A-18

DSA STAMP

STUDIO W ARCHITECTS

Studio W Architects
424 32nd Street, Suite D/E
Newport Beach, California 92663
[T] 949.774.2920
www.StudioW-Architects.com

ARCHITECT	ENGINEER
LICENSED ARCHITECT BRIAN P WHITMORE No. C 30345 Ren. 9/30/25 STATE OF CALIFORNIA	
DATE SIGNED: 06/24/2024	

GENERAL NOTES

1. This sheet is part of a set and is not to be used alone.
2. This sheet is not to be used for construction unless the architect's stamp and signature appear on the drawings and the status box indicated drawings have been released for construction.
3. These plans and prints thereof, as instruments of service, are owned by the architect and are for use on this project only. Reproduction and/or distribution without the prior written consent of the architect is forbidden.
4. Copyright Studio W Associates, Inc. 2024.

REVISION HISTORY

NO.	REMARKS	DATE

DRAWING STATUS

	DATE
○ DSA PLAN CHECK	03/29/2024
● DSA BACK CHECK	06/24/2024
○ BIDDING	
○ CONSTRUCTION	

KEY PLAN

BUENA PARK SD
6885 ORANGETHORPE AVE
BUENA PARK, CA 90620

DSA SUBMITTAL

CARL E. GILBERT ELEMENTARY SCHOOL
TK-PK CLASSROOMS & EARLY LEARNING BUILDING
7255 8TH STREET, BUENA PARK, CA 90621

COVER SHEET

Date	Project Number
06/24/2024	23076
Application Number	Drawing Number
04-123212	A0.1
Drawn: AT	Checked: MS

PRINT DATE: 6/24/2024 9:39:45 PM
FILE PATH: BIM 360://23076 BPSD Gilbert ES PK-TK CRs, Early Learning Bldg/23076-BPUSD Gilbert-BLDG-A21.rvt

DRAWING DISCIPLINE PREFIX

A. ARCHITECTURAL
C. CIVIL
E. ELECTRICAL
FA. FIRE ALARM
FP. FIRE PROTECTION / SPRINKLER SYSTEM
L. LANDSCAPING
M. MECHANICAL
P. PLUMBING
S. STRUCTURAL

DRAWING INDEX CODE

A0. GENERAL INFORMATION
A1. SITE PLANS
A2. FLOOR PLANS
A3. REFLECTED CEILING PLANS
A4. ROOF PLANS
A5. EXTERIOR ELEVATIONS
A6. BUILDING SECTIONS
A7. ENLARGED PLANS
A8. INTERIOR ELEVATIONS
A9. SCHEDULES
A10. CONSTRUCTION DETAILS

DETAIL DRAWING CODE

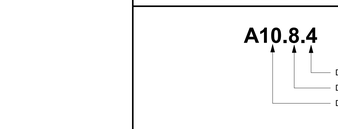

THE DIVISION PREFIX NUMBERS ARE THOSE IDENTIFIED BY THE 48 DIVISION GROUPING SYSTEM OF MASTERFORMAT AS PUBLISHED BY THE CONSTRUCTION SPECIFICATIONS INSTITUTE (CSI) AND SHALL NOT BE SOLELY REPRESENTATIVE OF REQUIREMENTS FOR ANY ONE DIVISION. THOSE DIVISIONS NOTED AS BEING OMITTED ARE NOT APPLICABLE OR ARE INCLUDED UNDER DISCIPLINE DRAWINGS.

IN CASE OF DISCREPANCY BETWEEN THE INDEX AND THE DRAWINGS, THE DRAWINGS SHALL GOVERN.

DIVISION NUMBER CODE

MASTERFORMAT NUMBERS AND TITLES AS PUBLISHED BY THE CONSTRUCTION SPECIFICATIONS INSTITUTE (CSI).

DIVISION 00 PROCUREMENT AND CONTRACTING REQUIREMENTS
DIVISION 01 GENERAL REQUIREMENTS
DIVISION 02 EXISTING CONDITIONS
DIVISION 03 CONCRETE
DIVISION 04 MASONRY
DIVISION 05 METALS
DIVISION 06 WOODS, PLASTICS, AND COMPOSITES
DIVISION 07 THERMAL AND MOISTURE PROTECTION
DIVISION 08 OPENINGS
DIVISION 09 FINISHES
DIVISION 10 SPECIALTIES
DIVISION 11 EQUIPMENT
DIVISION 12 FURNISHINGS
DIVISION 13 SPECIAL CONSTRUCTION
DIVISION 14 CONVEYING EQUIPMENT
DIVISION 21 FIRE SUPPRESSION
DIVISION 22 PLUMBING
DIVISION 23 HEATING, VENTILATING, AND AIR CONDITIONING (HVAC)
DIVISION 25 INTEGRATED AUTOMATION
DIVISION 26 ELECTRICAL
DIVISION 27 COMMUNICATIONS
DIVISION 28 ELECTRONIC SAFETY AND SECURITY
DIVISION 31 EARTHWORK
DIVISION 32 EXTERIOR IMPROVEMENTS
DIVISION 33 UTILITIES
DIVISION 34 TRANSPORTATION
DIVISION 35 WATERWAY AND MARINE CONSTRUCTION
DIVISION 40 PROCESS INTERCONNECTIONS
DIVISION 41 MATERIAL PROCESSING AND HANDLING EQUIPMENT
DIVISION 42 PROCESS HEATING, COOLING, AND DRYING EQUIPMENT
DIVISION 43 PROCESS GAS AND LIQUID HANDLING, PURIFICATION, AND STORAGE EQUIPMENT
DIVISION 44 POLLUTION AND WASTE CONTROL EQUIPMENT
DIVISION 45 INDUSTRY-SPECIFIC MANUFACTURING EQUIPMENT
DIVISION 46 WATER AND WASTEWATER EQUIPMENT
DIVISION 48 ELECTRICAL POWER GENERATION

GENERAL NOTES

1. PRIOR TO SUBMITTING PROPOSAL, BIDDER SHALL EXAMINE CONSTRUCTION DRAWINGS AND SPECIFICATIONS AND SHALL HAVE VISITED THE CONSTRUCTION SITE. HE SHALL BE FAMILIAR WITH THE CONDITIONS UNDER WHICH HE WILL HAVE TO OPERATE AND WHICH WILL IN ANY WAY AFFECT THE WORK UNDER THIS CONTRACT. THE GENERAL CONTRACTOR SHALL NOT DISPUTE, COMPLAIN OR ASSERT THAT THERE IS ANY MISUNDERSTANDING IN REGARDS TO LOCATION, EXTENT, NATURE OR AMOUNT OF WORK TO BE PERFORMED UNDER THIS CONTRACT DUE TO THE CONTRACTOR'S FAILURE TO INSPECT THE SITE. BIDDERS SHALL NOTIFY THE ARCHITECT OF ANY CONDITIONS, REQUIRING WORK, WHICH ARE NOT COVERED IN THE CONTRACT DOCUMENTS.
2. THERE WILL BE NO SUBSTITUTION FOR SPECIFIED ITEMS WITHOUT PRIOR APPROVAL UNLESS OTHERWISE NOTED. REQUESTS FOR SUBSTITUTIONS SHALL BE MADE IN ACCORDANCE WITH GENERAL CONDITIONS & DIVISION 1
3. THE GENERAL BUILDING CONTRACTOR SHALL BE RESPONSIBLE FOR OBTAINING AND PAYING FOR ALL PERMITS REQUIRED BY GOVERNING AGENCIES IN ORDER TO PERFORM WORK.
4. THE FINAL LOCATION OF ALL ELECTRICAL AND SIGNAL EQUIPMENT, PANEL BOARDS, FIXTURES, ETC., SHALL BE APPROVED BY OWNER PRIOR TO INSTALLATION.
5. DEFINITIONS
   A. "TYPICAL" MEANS IDENTICAL FOR ALL CONDITIONS, UNLESS OTHERWISE NOTED.
   B. "SIMILAR" MEANS COMPARABLE CHARACTERISTICS FOR THE CONDITION NOTED. VERIFY DIMENSIONS AND ORIENTATIONS.
   C. "PROVIDE" MEANS TO FURNISH AND INSTALL.
   D. "FURNISH" MEANS TO FURNISH AND OTHERS WILL INSTALL.
6. DIMENSIONING RULES:
   A. ALL HORIZONTAL DIMENSIONS SHALL BE TO FACE OF STUD OR TO CENTERLINE OF COLUMN GRID LINE, U.O.N
   B. DIMENSIONS NOTED "CLEAR", "CLR", OR "MINIMUM" MUST BE PRECISELY MAINTAINED.
   C. DIMENSIONS CAN NOT BE MODIFIED WITHOUT APPROVAL OF THE ARCHITECT UNLESS OTHERWISE NOTED.
   D. VERTICAL DIMENSIONS ARE FROM TOP OF FLOOR SLAB UNLESS OTHERWISE NOTED.
   E. DO NOT SCALE DRAWINGS. IF ANY ITEM OF WORK CANNOT BE LOCATED, DO NOT PROCEED WITH THE WORK WITHOUT THE ARCHITECT'S APPROVAL.
   F. DIMENSIONS MARKED "V.I.F." OR "VERIFY" SHALL BE VERIFIED BY THE CONTRACTOR PRIOR TO THE START OF CONSTRUCTION.
   G. VERIFY ALL ROUGH OPENING DIMENSIONS FOR FABRICATED ITEMS WITH THE MANUFACTURER PRIOR TO PROCEEDING WITH CONSTRUCTION.
7. PROVIDE REQUIRED BACKING, BLOCKING, AND BRACING FOR ALL WALL - MOUNTED FIXTURES, ACCESSORIES AND EQUIPMENT.
8. VERIFY AND COORDINATE WALLS THAT MAY REQUIRE NON-TYPICAL THICKNESS OR FRAMING DUE TO ELECTRICAL, MECHANICAL, PLUMBING, STRUCTURAL AND/OR EQUIPMENT REQUIREMENTS.
9. ALL GLAZING SHALL CONFORM TO FEDERAL GLAZING REGULATIONS AND CHAPTER 24, CBC.
10. ALL CONTRACTORS SHALL REMOVE TRASH AND DEBRIS STEMMING FROM THEIR WORK ON A DAILY BASIS. PROJECT SITE SHALL BE MAINTAINED IN A CLEAN AND ORDERLY CONDITION.
11. THE CONTRACTOR SHALL BE RESPONSIBLE FOR REMOVING ALL LEFT-OVER MATERIALS, DEBRIS, TOOLS AND EQUIPMENT INVOLVED IN HIS OPERATIONS AT THE CONCLUSION OF THE INSTALLATION. HE SHALL LEAVE ALL AREAS CLEAN AND FREE FROM DUST.
12. HAZARDOUS MATERIALS: THE ARCHITECT AND THE ARCHITECT'S CONSULTANTS SHALL HAVE NO RESPONSIBILITY FOR THE DISCOVERY, PRESENCE, HANDLING, REMOVAL, DISPOSAL OF OR EXPOSURE OF PERSONS TO ASBESTOS OR HAZARDOUS OR TOXIC SUBSTANCES IN ANY FORM AT THE PROJECT SITE. PROFESSIONAL SERVICES RELATED OR IN ANY WAY CONNECTED WITH THE INVESTIGATION, DETECTION, ABATEMENT, REPLACEMENT, USE, SPECIFICATION, OR REMOVAL OF PRODUCTS, MATERIALS, OR PROCESSES CONTAINING ASBESTOS OR HAZARDOUS OR TOXIC MATERIALS ARE BEYOND THE SCOPE OF THIS AGREEMENT.
13. THE GENERAL CONTRACTOR & SUBCONTRACTORS ARE RESPONSIBLE FOR LOCATING & VERIFYING ALL EXISTING UNDERGROUND UTILITIES IN ALL AREAS OF NEW WORK PRIOR TO COMMENCEMENT OF EXCAVATION. EXISTING UTILITIES SHOWN ON THE DRAWING ARE APPROXIMATE ROUTING LOCATION AS BEST DETERMINED FROM EXISTING DRAWINGS AND THE SCHOOL DISTRICT, BUT SHOULD NOT BE CONSTRUED TO REPRESENT ALL THE EXISTING UNDERGROUND UTILITIES.
14. ALL TEMPORARY WORK SHALL BE CONSIDERED A PART OF THIS CONTRACT AND NO EXTRA CHARGES WILL BE ALLOWED. THIS SHALL INCLUDE MINOR ITEMS OF MATERIAL OR EQUIPMENT NECESSARY TO MEET THE REQUIREMENTS AND INTENT OF THE PROJECT
15. ALL WALL PENETRATIONS TO EXTERIOR WALLS SHALL BE SEALED AIR/WATER TIGHT. ALL INTERIOR PENETRATIONS SHALL BE SEALED TO PROVIDE A PROFESSIONAL AND FINISHED APPEARANCE.
16. THE DRAWINGS AND SPECIFICATIONS DO NOT UNDERTAKE TO SHOW OR LIST EVERY ITEM TO BE PROVIDED, BUT RATHER TO DEFINE THE REQUIREMENTS FOR A FULL AND WORKING SYSTEM FROM THE STANDPOINT OF THE END USER. FOR THIS REASON, WHEN AN ITEM NOT SHOWN OR LISTED IS CLEARLY NECESSARY FOR PROPER USE CONTROL/ OPERATION OF EQUIPMENT WHICH IS SHOWN OR LISTED, PROVIDE ALL ITEMS WHICH WILL ALLOW THE SYSTEM TO FUNCTION PROPERLY AT NO INCREASE IN CONTRACT PRICE OR TIME.
17. THE DETAILS REFLECT THE DESIGN INTENT FOR TYPICAL CONDITIONS. THE CONTRACTOR SHALL VERIFY ALL FIELD CONDITIONS AND SHALL INCLUDE, IN HIS SCOPE. THE COST FOR COMPLETE FINISHED INSTALLATIONS, INCLUDING ANOMALIES, OF ALL TRADES.
18. ALL WORK SHALL CONFORM TO CALIFORNIA CODES, TRADE STANDARDS WHICH GOVERN EACH PHASE OF THE PROJECT, AND ALL APPLICABLE LOCAL CODES AND AUTHORITIES HAVING JURISDICTION.
19. THIS DRAWING SET SHALL BE USED IN CONJUNCTION WITH THE CSI FORMAT PROJECT MANUAL PUBLISHED IN BOOK FORM, COMBINED, THEY ARE THE "CONTRACT DOCUMENTS".
20. NO WORK SHALL COMMENCE WITH UNAPPROVED MATERIALS. ANY WORK DONE WITH UNAPPROVED MATERIALS AND EQUIPMENT IS AT THE CONTRACTOR'S RISK. SEE SPECIFICATIONS FOR SUBMITTAL AND SUBSTITUTION REQUIREMENTS.
21. CONSTRUCTION MATERIAL STORED ON THE SITE SHALL BE PROPERLY STACKED AND PROTECTED TO PREVENT DAMAGE OR DETERIORATION. FAILURE IN THIS REGARD MAY BE CAUSE FOR REJECTION OF MATERIAL AND/OR WORK. SECURITY OF MATERIALS ARE THE SOLE RESPONSIBILITY OF CONTRACTOR.
22. ALL EQUIPMENT/CABINETS SHALL BE FABRICATED FROM FIELD VERIFIED DIMENSIONS AND APPROVED SHOP DRAWINGS. COORDINATE MECHANICAL, PLUMBING AND ELECTRICAL EQUIPMENT WITH THIS WORK.
23. THE CONTRACTOR SHALL BE RESPONSIBLE FOR ALL DAMAGE AND COSTS ATTRIBUTED TO RAIN WATER DAMAGE DURING THE DURATION OF THIS PROJECT.
24. PROTECT AREAS FROM DAMAGE WHICH MAY OCCUR DUE TO TEMPERATURES, WIND, DUST, WATER, ETC. PROVIDE AND MAINTAIN TEMPORARY BARRICADES, CLOSURE WALLS, ETC., AS REQUIRED DURING CONSTRUCTION.
25. MAINTAIN EXISTING PEDESTRIAN ACCESS ALONG EXISTING ADJACENT STREETS.
26. ALL PUBLIC IMPROVEMENTS SHALL BE MADE IN ACCORDANCE WITH THE LATEST ADOPTED CITY/COUNTY STANDARDS.
27. ALL TYPICAL DETAILS SHALL APPLY UNLESS NOTED OTHERWISE.
28. NOTIFY THE ARCHITECT IN WRITING AND SEEK CLARIFICATION IF ANY DISCREPANCIES OR OMISSIONS ARE FOUND. CONTRACTOR SHALL BE RESPONSIBLE FOR REMEDIAL WORK IF RELATED WORK IS CONTINUED AFTER A DISCREPANCY IS IDENTIFIED.
29. NEW FINISHES AND CONSTRUCTION SHALL BE PROTECTED BY THE CONTRACTOR FROM POTENTIAL DAMAGE CAUSED BY CONSTRUCTION ACTIVITY. DAMAGE TO FINISHES OR CONSTRUCTION SHALL BE REPAIRED OR REPLACED (OWNER'S DECISION) BY THE CONTRACTOR WITH IDENTICAL MATERIAL AND/OR FINISHES. CONTRACTOR SHALL MAKE AND MAINTAIN A PHOTOGRAPHIC RECORD NOTEBOOK WITH DATED/INDEXED PHOTOGRAPHS.
30. SEE ELECTRICAL DRAWINGS FOR INFORMATION RELATED TO TELECOMMUNICATION EQUIPMENT, POWER, AND LIGHTING FIXTURES AND EQUIPMENT. SEE ARCHITECTURAL PLANS, REFLECTED CEILING PLAN AND INTERIOR ELEVATIONS FOR COORDINATED EQUIPMENT LOCATIONS. IF NOT SHOWN, CONTACT ARCHITECT FOR REVIEW AND DECISION.
31. PROVIDE ACCESS DOORS REQUIRED FOR ACCESS TO CONCEALED MECHANICAL, PLUMBING, AND ELECTRICAL EQUIPMENT.
32. ALL NOTED WORK IS UNDERSTOOD TO BE NEW, UNLESS LABELED AS "(E)" OR "EXISTING".

SUPPLEMENTAL GENERAL NOTES

1. THESE DRAWINGS DO NOT CONTAIN THE NECESSARY COMPONENTS FOR CONSTRUCTION SAFETY.
2. LOCATIONS OF ALL UTILITIES SHOWN ARE APPROXIMATE AND CONTRACTOR SHALL EXERCISE EXTREME CAUTION IN EXCAVATING AND TRENCHING ON THIS SITE TO AVOID INTERCEPTING EXISTING PIPING OR CONDUITS. IT SHALL BE THE RESPONSIBILITY OF THE CONTRACTOR TO LOCATE ALL EXISTING UTILITIES WHETHER SHOWN HEREIN OR NOT AND TO PROTECT THEM FROM DAMAGE. THE ARCHITECT IS NOT RESPONSIBLE FOR THE LOCATION OF UNDERGROUND UTILITIES OR STRUCTURES WHETHER OR NOT SHOWN OR DETAILED AND INSTALLED BY ANY OTHER CONTRACT. THE CONTRACTOR SHALL IMMEDIATELY NOTIFY THE ARCHITECT SHOULD ANY UNIDENTIFIED CONDITIONS BE DISCOVERED. THE CONTRACTOR SHALL BEAR ALL EXPENSE OF REPAIR OR REPLACEMENT OF UTILITIES OR OTHER PROPERTY DAMAGED BY OPERATIONS IN CONJUNCTION WITH THE EXECUTION OF THIS WORK.
3. THESE DOCUMENTS AND THE IDEAS AND DESIGNS INCORPORATED HEREIN, AS AN INSTRUMENT OF PROFESSIONAL SERVICE, ARE THE PROPERTY OF STUDIO W ARCHITECTS, AND ARE NOT TO BE USED, IN WHOLE OR IN PART, FOR ANY OTHER PROJECT WITHOUT THE WRITTEN AUTHORIZATION OF STUDIO W ARCHITECTS.
4. EACH BIDDER SHALL POSSESS AT THE TIME OF BID, A CLASS B OR THE APPROPRIATE CLASS C CONTRACTOR'S LICENSE PURSUANT TO PUBLIC CONTRACT CODE SECTION 3300 AND BUSINESS AND PROFESSIONS CODE SECTION 7028.15. THE SUCCESSFUL BIDDER MUST MAINTAIN THE LICENSE THROUGHOUT THE DURATION OF THIS CONTRACT.
5. FIRE SAFETY DURING CONSTRUCTION & DEMOLITION:
   A. GENERAL: FIRE SAFETY DURING CONSTRUCTION & DEMOLITION SHALL COMPLY WITH 2022 CALIFORNIA FIRE CODE (CFC) CH. 33 (PART 9, TITLE 24 CCR)
   B. CONSTRUCTION SAFEGUARDS: SHALL COMPLY WITH APPLICABLE PROVISIONS OF CBC 3302.
   C. DEMOLITION: SHALL COMPLY WITH APPLICABLE PROVISIONS OF CBC 3303.
   D. BUILDING ACCESS: ACCESS TO BUILDINGS FOR THE PURPOSE OF FIREFIGHTING SHALL BE PROVIDED. CONSTRUCTION MATERIAL SHALL NOT BLOCK ACCESS TO BUILDINGS, HYDRANTS OR FIRE APPLIANCES PER CBC 3308.1.
   E. MEANS OF EGRESS: SHALL COMPLY WITH APPLICABLE PROVISIONS OF CBC 3310.
   F. WATER SUPPLY: APPROVED WATER SUPPLY SHALL BE MADE AVAILABLE IN ACCORDANCE WITH CBC 3313.
   G. FIRE WATCH: MAINTAIN FIRE WATCH WHEN REQUIRED BY THE BUILDING OFFICIAL AND WHEN EXISTING FIRE PROTECTION SYSTEMS ARE SHUT DOWN FOR ALTERATIONS. FIRE WATCH SHALL REMAIN IN EFFECT UNTIL EXISTING FIRE PROTECTION SYSTEMS ARE RETURNED TO SERVICE OR AS ALLOWED BY THE BUILDING OFFICIAL PER CBC 3314.
6. PENETRATIONS IN FIRE RATED MATERIALS OR ASSEMBLIES SHALL BE RESTORED TO EQUAL RATING. FIRE STOP SYSTEMS AS LISTED BY UNDERWRITERS LABORATORIES SHALL BE INSTALLED PER FIRE RESISTANCE DIRECTORY. FIRE STOP SYSTEMS SHALL BE AS SPECIFIED.
7. NONRESIDENTIAL ENERGY STANDARDS COMPLIANCE STATEMENT (TITLE 24, PART 6):
   A. THE DESIGN INDICATED HEREIN COMPLIES WITH THE REQUIREMENTS OF THE ENERGY CONSERVATION STANDARDS OF TITLE 24, PART 6, CALIFORNIA CODE OF REGULATIONS. THE PROPOSED BUILDINGS WILL BE IN COMPLIANCE WITH THE ENERGY CONSERVATION STANDARDS PROVIDED THEY ARE BUILT ACCORDING TO THESE DRAWINGS AND SPECIFICATIONS AND PROVIDED ANY FUTURE IMPROVEMENTS ARE COMPLETED ACCORDING TO THE REQUIREMENTS OF TITLE 24, PART 6, CALIFORNIA CODE OF REGULATIONS. THESE DRAWINGS AND SPECIFICATIONS HAVE BEEN PREPARED TO INCLUDE ALL SIGNIFICANT ENERGY CONSERVATION FEATURES REQUIRED FOR COMPLIANCE WITH THE STANDARDS. BUILDING AREAS THAT ARE UNCONDITIONED AND/OR NOT SUBJECT TO THE STANDARDS ARE INDICATED ON THE DRAWINGS.
   B. ENVELOPE MANDATORY MEASURES:
      A. INSTALLED INSULATING MATERIALS SHALL HAVE BEEN CERTIFIED BY THE MANUFACTURER TO COMPLY WITH THE CALIFORNIA QUALITY STANDARDS FOR INSULATING MATERIAL.
      B. ALL INSULATING MATERIALS SHALL BE INSTALLED IN COMPLIANCE WITH THE FLAME SPREAD RATING AND SMOKE DENSITY REQUIREMENTS OF TITLE 24, PART 2, CALIFORNIA CODE OF REGULATIONS, SECTIONS 719
      C. ALL EXTERIOR JOINTS AND OPENINGS IN THE BUILDING ENVELOPE THAT ARE POTENTIAL AND OBSERVABLE SOURCES OF AIR LEAKAGE SHALL BE CAULKED, GASKETED, WEATHERSTRIPPED OR OTHERWISE SEALED.
      D. SITE CONSTRUCTED DOORS, WINDOWS, AND SKYLIGHTS SHALL BE CAULKED BETWEEN THE UNIT AND THE BUILDING, AND SHALL BE WEATHERSTRIPPED (EXCEPT FOR UNFRAMED GLASS DOORS AND FIRE DOORS).
      E. MANUFACTURED DOORS AND WINDOWS INSTALLED SHALL HAVE AIR INFILTRATION RATES CERTIFIED BY THE MANUFACTURER IN ACCORDANCE WITH TITLE 24, PART 6, CALIFORNIA CODE OF REGULATIONS, SECTION 116(a)1.
      F. MANUFACTURED FENESTRATION PRODUCTS IN THE ENVELOPE OF THE BUILDING, INCLUDING, BUT NOT LIMITED TO, WINDOWS, SLIDING GLASS DOORS, FRENCH DOORS, SKYLIGHTS, CURTAIN WALLS, AND GARDEN WINDOWS MUST BE LABELED FOR U-VALUE IN ACCORDANCE WITH THE (NFRC) NATIONAL FENESTRATION RATING COUNCIL'S INTERIM U-VALUE RATING PROCEDURE.
      G. DEMISING WALL INSULATION SHALL BE INSTALLED IN ALL OPAQUE PORTIONS OF FRAMED WALLS (EXCEPT DOORS).
8. PROOF LOAD TESTS FOR EXPANSION TYPE ANCHOR BOLTS:
   A. ANCHOR DIAMETER REFERS TO THE THREAD SIZE FOR THE WEDGE CATEGORY AND TO THE ANCHOR OUTSIDE DIAMETER FOR THE SLEEVE CATEGORY.
   B. APPLY PROOF TEST LOADS TO WEDGE & SLEEVE ANCHORS WITHOUT REMOVING THE NUT IF POSSIBLE. IF NOT, REMOVE NUT AND INSTALL A THREADED COUPLER TO THE SAME TIGHTNESS OF THE ORIGINAL NUT USING A TORQUE WRENCH AND APPLY LOAD.
   C. FOR SLEEVE INTERNALLY THREADED CATEGORIES, VERIFY THAT THE ANCHOR IS NOT PREVENTED FROM WITHDRAWING BY A BASEPLATE OR OTHER FIXTURES. IF RESTRAINT IS FOUND, LOOSEN AND SHIM OR REMOVE FIXTURE(S) PRIOR TO TESTING.
   D. REACTION LOADS FROM TEST FIXTURES MAY BE APPLIED CLOSE TO THE ANCHOR BEING TESTED, PROVIDED THE ANCHOR IS NOT RESTRAINED FROM WITHDRAWING BY THE FIXTURE(S).
   E. TEST EQUIPMENT IS TO BE CALIBRATED BY AN APPROVED TESTING LABORATORY IN ACCORDANCE WITH STANDARD RECOGNIZED PROCEDURES.
   F. THE FOLLOWING CRITERIA APPLY FOR THE ACCEPTANCE OF INSTALLED ANCHORS:
      1. HYDRAULIC RAM METHOD: ANCHORS TESTED WITH A HYDRAULIC JACK OR SPRING LOADED APPARATUS SHALL MAINTAIN THE TEST LOAD FOR A MINIMUM OF 15 SECONDS AND SHALL EXHIBIT NO DISCERNIBLE MOVEMENT DURING THE TENSION TEST PER 2022 CBC 1910A5.5.
      2. TORQUE WRENCH METHOD: THE APPLICABLE TEST TORQUE MUST BE REACHED WITHIN THE FOLLOWING LIMITS: WEDGE OR SLEEVE TYPE: ONE-HALF (1/2) TURN OF THE NUT. ONE-QUARTER (1/4) TURN OF THE NUT FOR THE 3/8 IN. SLEEVE ANCHOR ONLY.
   G. TESTING SHOULD OCCUR 24 HOURS MINIMUM AFTER INSTALLATION OF THE SUBJECT ANCHORS.
   H. ALL ANCHOR BOLTS OF THE EXPANSION TYPE (LOADED IN EITHER PULLOUT OR SHEAR) SHALL HAVE 50 PERCENT OF THE BOLTS (ALTERNATE BOLTS IN ANY GROUP ARRANGEMENT ALLOWED BY THE TYPE OF SUBSTRATE AND DIAMETER OF BOLT LISTED BELOW UNDER TEST VALUES TABLE) PROOF TESTED IN TENSION TO TWICE THE ALLOWABLE TENSION LOAD. IF THERE ARE ANY FAILURES, THE IMMEDIATELY ADJACENT BOLTS MUST THEN ALSO BE TESTED. TESTING SHALL BE PERFORMED IN ACCORDANCE WITH TITLE 24, PART 2, SECTION 1910A.5, "TESTS FOR POST-INSTALLED ANCHORS IN CONCRETE."
   I. ALL BOLTS MUST HAVE ICC APPROVAL.
   J. ALL ANCHOR BOLTS OF THE EXPANSION TYPE SHALL BE ONE OF THE FOLLOWING:
      1. HILTI KB-TZ2 ANCHOR ICC NO. ESR 4266

MINIMUM TEST VALUES
NORMAL WEIGHT OR LIGHTWEIGHT CONCRETE

ANCHOR	WEDGE		
DIA. (IN)	TENSION LOAD (LBS)	TORQUE (FT-LBS)	EFFECTIVE MIN. EMBEDMENT
3/8	6,490	30	1 1/2" - 2 1/2"
1/2	11,240	50	1 1/2" - 3 1/4"
5/8	17,535	40	2 3/4" - 4"
3/4	25,335	110	3 1/4" - 4 3/4"

9. POWDER-DRIVEN CONCRETE FASTENERS:
   A. GENERAL: USE OF POWDER DRIVEN CONCRETE FASTENERS FOR TENSION LOADS IS LIMITED TO SUPPORT OF MINOR LOADS LIKE ACOUSTICAL CEILINGS, DUCT WORK, CONDUIT.
   B. ALLOWABLE LOADS: IN GENERAL, LOADS SHOULD BE LIMITED TO LESS THAN 100 POUNDS. HOWEVER GREATER LOADS MAY BE PERMITTED FOR SPECIAL CASES WHEN APPROVED BY THE CHECKING SUPERVISOR OR FIELD ENGINEER.
   C. TESTING: THE OPERATOR, TOOL, AND FASTENER SHALL BE PREQUALIFIED BY THE PROJECT INSPECTOR. HE SHALL OBSERVE THE TESTING OF THE FIRST 10 FASTENER INSTALLATIONS. A TEST "PULL-OUT" LOAD OF NOT LESS THAN TWICE THE DESIGN LOAD, OR 200 POUNDS, WHICHEVER IS GREATER, SHALL BE APPLIED TO THE PIN IN SUCH A MANNER AS NOT TO RESIST THE SPALLING TENDENCY OF THE CONCRETE SURROUNDING THE PIN. THEREAFTER, RANDOM TESTS UNDER THE PROJECT INSPECTOR'S SUPERVISION SHALL BE MADE OF APPROXIMATELY 1 IN 10 PINS, EXCEPT THAT WHEN THE DESIGN LOAD EXCEEDS 100 POUNDS, ONE HALF OF THE PINS SHALL BE TESTED. SHOULD FAILURE OCCUR ON ANY PIN TESTED, ALL INSTALLATIONS MUST BE TESTED AND UNFAIR PINS REPLACED.
   D. ALL POWDER DRIVEN CONCRETE FASTENERS SHALL BE ONE OF THE FOLLOWING: HILTI, INC.
      1. 0.145 DIA. PAF X-CR INTO STEEL BASE MATERIAL - ICC NO. ESR 1663
      2. 0.138 DIA. PAF X-CR INTO CONCRETE BASE MATERIAL - ICC NO. ESR 1663

ACCEPTANCE TESTING

THE CALIFORNIA ENERGY CODE SECTION 10-103 REQUIRES ACCEPTANCE TESTING ON ALL NEWLY INSTALLED LIGHTING CONTROLS, MECHANICAL SYSTEMS, ENVELOPES, AND PROCESS EQUIPMENT AFTER INSTALLATION AND BEFORE PROJECT COMPLETION. AN ACCEPTANCE TEST IS A FUNCTIONAL PERFORMANCE TEST TO HELP ENSURE THAT NEWLY INSTALLED EQUIPMENT IS OPERATING AND IN COMPLIANCE WITH THE ENERGY CODE.

LIGHTING CONTROLS ACCEPTANCE TESTS MUST BE PERFORMED BY A CERTIFIED LIGHTING CONTROLS ACCEPTANCE TEST TECHNICIAN (ATT).

MECHANICAL SYSTEM ACCEPTANCE TESTS MUST BE PERFORMED BY A CERTIFIED MECHANICAL ATT FOR PROJECTS SUBMITTED ON OR AFTER OCTOBER 1, 2021.

ENVELOPE AND PROCESS EQUIPMENT ACCEPTANCE TESTS SHALL BE PERFORMED BY THE INSTALLING CONTRACTOR, ENGINEER/ARCHITECT OF RECORD OR THE OWNER'S AGENT.

A LISTING OF CERTIFIED ATT CAN BE FOUND AT: HTTPS://WWW.ENERGY.CA.GOV/PROGRAMS-AND-TOPICS/PROGRAMS/ACCEPTANCE-TEST-TECHNICIAN-CERTIFICATION-PROVIDER-PROGRAM/ACCEPTANCE.

THE ACCEPTANCE TESTING PROCEDURES MUST BE REPEATED, AND DEFICIENCIES MUST BE CORRECTED BY THE BUILDER OR INSTALLING CONTRACTOR UNTIL THE CONSTRUCTION/INSTALLATION OF THE SPECIFIED SYSTEMS CONFORM AND PASS THE REQUIRED ACCEPTANCE CRITERIA.

PROJECT INSPECTORS WILL COLLECT THE FORMS TO CONFIRM THAT THE REQUIRED ACCEPTANCE TESTS HAVE BEEN COMPLETED.

EMERGENCY RESPONDER RADIO COVERAGE

ARCHITECT OF RECORD (AOR) SHALL CONTACT THE LOCAL FIRE DEPARTMENT AND/OR EMERGENCY COMMUNICATIONS AUTHORITY TO OBTAIN DESIGN AND EQUIPMENT SPECIFICATIONS, AND TESTING AND ACCEPTANCE CRITERIA. IT IS THE RESPONSIBILITY OF THE DESIGN PROFESSIONAL / AOR TO SUBMIT PLANS AND REQUESTED DOCUMENTATION, AND APPLICABLE FEES, TO THE LOCAL AUTHORITY HAVING JURISDICTION FOR REVIEW AND APPROVAL. UPON COMPLETION, COPIES OF THE APPROVED PLANS, EQUIPMENT DATA SHEETS, AND PROOF OF TESTING AND ACCEPTANCE DOCUMENTATION SHALL BE PROVIDED TO THE SCHOOL DISTRICT. THE PROJECT INSPECTORS SHALL VERIFY THAT DOCUMENTATION IS PROVIDED TO THE SCHOOL DISTRICTS.

OWNER FURNISHED ITEMS

ITEMS LISTED BELOW ARE OWNER FURNISHED, **CONTRACTOR** INSTALLED.

TOILET ACCESSORIES
- TOILET PAPER DISPENSERS
- TOILET SEAT COVER DISPENSERS
- SANITARY NAPKIN DISPENSERS
- HAND SOAP DISPENSERS
- PAPER TOWEL DISPENSERS (MANUAL ONLY)

TECHNOLOGY
- SHORT THROW PROJECTORS
- EXTRON CLASSROOM SYSTEM
- APPLE TV
- VOIP PHONE
- ARUBA AP
- SPEAKERS
- CLOCKS

ITEMS LISTED BELOW ARE OWNER FURNISHED, **OWNER** INSTALLED AND MAY OR MAY NOT BE SHOWN IN THESE DOCUMENTS AND ARE LISTED HERE FOR REFERENCE ONLY.

- FURNITURE
- RECYCLING BINS
- PRINTERS

DSA STAMP

STUDIO W ARCHITECTS

Studio W Architects
424 32nd Street, Suite D/E
Newport Beach, California 92663
[T] 949.774.2920
www.StudioW-Architects.com

ARCHITECT	ENGINEER
LICENSED ARCHITECT BRYAN P WHITMORE No. C 30345 Ren. 9/30/25 STATE OF CALIFORNIA	

DATE SIGNED: 06/24/2024

GENERAL NOTES
1. This sheet is part of a set and is not to be used alone.
2. This sheet is not to be used for construction unless the architect's stamp and signature appear in the drawings and the status box indicated drawings have been released for construction.
3. These plans and prints thereof, as instruments of service, are and shall remain the property of the architect. The Reproduction and/or distribution without the prior written consent of the architect is forbidden.
4. Copyright Studio W Associates, Inc. 2024.

REVISION HISTORY

NO.	REMARKS	DATE

DRAWING STATUS

	DATE
○ DSA PLAN CHECK	03/29/2024
● DSA BACK CHECK	06/24/2024
○ BIDDING	
○ CONSTRUCTION	

KEY PLAN

BUENA PARK SD
6885 ORANGETHORPE AVE
BUENA PARK, CA 90620

DSA SUBMITTAL

CARL E. GILBERT ELEMENTARY SCHOOL
TK-PK CLASSROOMS & EARLY LEARNING BUILDING
7255 8TH STREET, BUENA PARK, CA 90621

GENERAL NOTES

Date	Project Number
06/24/2024	23076
Application Number	Drawing Number
04-123212	A0.2
Drawn AT / Checked MS	

PRINT DATE: 6/24/2024 9:39:45 PM
FILE PATH: BIM 360://23076 BPSD Gilbert ES PK-TK CRs_Early Learning Bldg/23076 BPUSD Gilbert-BLDG-A21.rvt

ARCHITECTURAL DRAWING ABBREVIATIONS

#	POUND OR NUMBER
&	AND
*	ITEMS IDENTIFIED AS "NIC" ARE NOT PART OF THIS DSA APPROVAL
2X	NOMINAL LUMBER SIZE (4X, 6X, 8X, ETC.)
@	AT
⊥	PERPENDICULAR
A	
A/C	AIR CONDITIONING
A/E	ARCHITECT/ENGINEER
AB	ANCHOR BOLT
ABAN	ABANDON
ABC	AGGREGATE BASE COURSE
ABV	ABOVE
AC	ASPHALTIC CONCRETE
ACC	ACCESS(IBLE)
ACP	ALUMINUM COMPOSITE PANEL
ACST	ACOUSTICAL
ACT	ACOUSTICAL CEILING TILE
AD	AREA DRAIN
ADDM	ADDENDUM
ADH	ADHESIVE
ADJ	ADJUSTABLE
ADJC	ADJACENT
AFF	ABOVE FINISH FLOOR
AFG	ABOVE FINISHED GRADE
AGGR	AGGREGATE
AHU	AIR HANDLING UNIT
ALS	ASSISTED LISTENING SYSTEM
ALT	ALTERNATE
ALUM./AL.	ALUMINUM
ANC	ANCHOR, ANCHORAGE
APLD	APPLIED
APPRX	APPROXIMATELY
ARCH	ARCHITECT(URAL)
ASC	ABOVE SUSPENDED CEILING
ASF	ABOVE STAGE FINISH
ASPH	ASPHALT
ASSY	ASSEMBLY
ASYM	ASYMMETRICAL
AUTO	AUTOMATIC
AV	AUDIO VISUAL
AWG	AMERICAN WIRE GAUGE
B	
B	BOLT
BC	BACK OF CURB
BD	BOARD
BITUM	BITUMINOUS
BLDG	BUILDING
BLK	BLOCK
BLKG	BLOCKING
BLW	BELOW
BLW CLG	BELOW CEILING
BLW FFLR	BELOW FINISH FLOOR
BM	BENCH MARK
BN	BOUNDARY NAILING
BO	BOTTOM OF
BOT	BOTTOM
BRCG	BRACING
BRDG	BRIDGING
BRG	BEARING
BRK	BRICK
BRKT	BRACKET
BRS	BRASS
BRZ	BRONZE
BS	BOTH SIDES
BSMT	BASEMENT
BTWN	BETWEEN
BUR	BUILT UP ROOFING
BW	BOTH WAYS
C	
C&G	CURB AND GUTTER
CAB	CABINET
CAD	CADMIUM
CB	CATCH BASIN
CBB	CEMENTITIOUS BACKER BOARD
CBC	CALIFORNIA BUILDING CODE
CEM	CEMENT
CER	CERAMIC
CFCI	CONTRACTOR FURNISHED CONTRACTOR INSTALLED
CFLG	COUNTERFLASHING
CFOI	CONTRACTOR FURNISHED OWNER INSTALLED
CG	CORNER GUARD
CHBD	CHALKBOARD
CHFR	CHAMFER
CI	CAST IRON
CIP	CAST IN PLACE
CIR	CIRCLE
CIRC	CIRCULAR, CIRCUMFERENCE
CJ	CONSTRUCTION JOINT
CL	CHAIN LINK OR CENTER LINE
CLG	CEILING
CLJ	CONTROL JOINT
CLKG	CAULKING
CLL	CONTRACT LIMIT LINE
CLOS	CLOSURE
CLR	CLEAR(ANCE)
CLRM	CLASSROOM
CMP	CORRUGATED METAL PANEL
CMPST	COMPOSITION
CMU	CONCRETE MASONARY UNIT
CNCL	CONCEALED
CNR	CORNER
CNTR	COUNTER
COL	COLUMN
COM	COMMON
COMB	COMBINATION
COMP	COMPOSITE
COMPT	COMPARTMENT
CONC	CONCRETE
CONF	CONFERENCE
CONN	CONNECTION
CONSTR	CONSTRUCTION
CONT	CONTINUOUS, CONTINUATION
CONTR	CONTRACT(OR)
COORD	COORDINATE
CORR	CORRIDOR
CPR	COPPER
CPRS	COMPRESS(ED), (ION), (IBLE)
CPT	CARPET
CRS	COLD ROLLED STEEL
CS	CAST STONE
CSG	CASING
CSK	COUNTERSUNK
CSMT	CASEMENT
CSWK	CASEWORK
CT	CERAMIC TILE
CTB	CERAMIC TILE BASE
CTF	CERAMIC TILE FLOOR
CTG	COATING
CTR	CENTER
CUFT	CUBIC FOOT
CUIN	CUBIC INCH
CUST	CUSTODIAN
CUYD	CUBIC YARD
CW	CURTAIN WALL
D	
D	DRAIN
d.	PENNYWEIGHT (NAILS)
DA	DOUBLE ACTING
DBL	DOUBLE
DEG	DEGREES
DEMO	DEMOLISH, DEMOLITION
DEP	DEPRESSED
DEPT	DEPARTMENT
DET	DETAIL
DF	DRINKING FOUNTAIN
DG	DECOMPOSED GRANITE
DH	DOUBLE HUNG
DIA	DIAMETER
DIAG	DIAGONAL
DIFF	DIFFUSER
DIM	DIMENSION
DISP	DISPENSER
DIV	DIVISION
DMPF	DAMPPROOFING
DMT	DEMOUNTABLE
DN	DOWN
DR	DOOR
DRB	DRAINBOARD
DRLV	DOOR LOUVER
DS	DOWNSPOUT
DSP	DRY STANDPIPE
DT	DRAIN TILE
DVTL	DOVETAIL
DW	DISHWASHER
DWG	DRAWING
DWL	DOWEL
DWR	DRAWER
E	
(E)	EXISTING
E	EAST
EA	EACH
EAR	EXHAUST AIR REGISTER
EB	EXPANSION BOLT
EE	EACH END
EF	EACH FACE
EFS	EXTERIOR FINISH SYSTEM
EHD	ELECTRIC HAND DRYER
EIFS	EXTERIOR INSULATION AND FINISH SYSTEM
EJ	EXPANSION JOINT
EL	ELEVATION
ELAST	ELASTOMERIC
ELEC	ELECTRIC(AL)
ELEV	ELEVATOR
EM	EXPANDED METAL
EMER	EMERGENCY
EN	EDGE NAILING
ENCL	ENCLOSE(URE)
ENGR	ENGINEER
ENTR	ENTRANCE
EP	ELECTRICAL PANELBOARD
EQ	EQUAL
EQUIP	EQUIPMENT
ESC	ESCUTCHEON
ESCL	ESCALATOR
ESMT	EASEMENT
EW	EACH WAY
EWC	ELECTRIC WATER COOLER
EWH	ELECTRIC WATER HEATER
EWS	EYE WASH STATION
EXC	EXCAVATE
EXH	EXHAUST
EXP	EXPOSED
EXPN	EXPANSION
EXS	EXTRA STRONG
EXT	EXTERIOR
F	
(F)	FUTURE
F/F	FACE TO FACE
FA	FIRE ALARM
FAB	FABRIC
FBD	FIBERBOARD
FBRK	FIRE BRICK
FCBRK	FACE BRICK
FD	FLOOR DRAIN
FDTN	FOUNDATION
FE	FIRE EXTINGUISHER
FEC	FIRE EXTINGUISHER CABINET
FF	FINISH FLOOR
FFA	FROM FLOOR ABOVE
FFB	FROM FLOOR BELOW
FFEL	FINISHED FLOOR ELEVATION
FFL	FINISHED FLOOR LINE
FGL	FIBERGLASS
FHC	FIRE HOUSE CABINET
FHMB	FLAT HEAD MACHINE BOLT
FHMS	FLAT HEAD MACHINE SCREW
FHWS	FLATHEAD WOOD SCREW
FIN	FINISH(ED)
FJT	FLUSH JOINT
FLASH	FLASHING
FLDG	FOLDING
FLG	FLOORING
FLR	FLOOR
FLUOR	FLUORESCENT
FN	FIELD NAILING
FOB	FACE OF BLOCK
FOC	FACE OF CONCRETE/CURB
FOF	FACE OF FINISH
FOG	FACE OF GRID
FOM	FACE OF MASONRY
FOS	FACE OF STUD
FPL	FIREPLACE
FPRF	FIREPROOF(ING)
FR	FRAME(D), (ING)
FRG	FIBERGLASS REINFORCED GYPSUM
FRP	FIBERGLASS REINFORCED PLASTIC
FRTW	FIRE RETARDANT TREATED WOOD
FRZ	FREEZER
FS	FIRE SPRINKLER
FS	FAR SIDE
FSTN	FASTEN, FASTENER
FT	FOOT/FEET
FTG	FOOTING
FURG	FURRED, (ING)
FWC	FABRIC WALL COVERING
G	
GA	GAUGE
GAL	GALLON
GALV	GALVANIZED
GB	GRAB BAR
GFRC	GLASS FIBER REINFORCED CONCRETE
GI	GALVANIZED IRON
GL	GLASS
GLULAM	GLUE LAMINATED
GLZ	GLAZING
GLZCMU	GLAZED CONRETE MASONRY UNIT
GND	GROUND
GPC	GYPSUM PLASTER CEILING
GR	GRADE
GRBM	GRADE BEAM
GRLN	GRADE LINE
GSB	GYPSUM SHEATHING BOARD
GSM	GALVANIZED SHEET METAL
GSS	GALVANIZED STEEL SHEET
GST	GLAZED STRUCTURAL TILE
GT	GROUT
GVL	GRAVEL
GYP	GYPSUM
GYP BD	GYPSUM BOARD
H	
HB	HOSE BIB
HC	HOLLOW CORE
HD	HEAVY DUTY
HDAS	HEADED ANCHOR STUD
HDJT	HEAD JOINT
HDR	HEADER
HDW	HARDWARE
HDWD	HARDWOOD
HEX	HEXAGONAL
HGR	HANGER
HLDN	HOLD DOWN
HM	HOLLOW METAL
HMD	HOLOW METAL DOOR
HMDF	HOLLOW METAL DOOR AND FRAME
HMF	HOLLOW METAL FRAME
HNDRL	HANDRAIL
HORIZ	HORIZONTAL
HPT	HIGH POINT
HR	HOUR
HT	HEIGHT
HTG	HEATING
HVAC	HEATING, VENTILATING, AIR CONDITIONING
HWH	HOT WATER HEATER
I	
ID	INSIDE DIAMETER
IN	INCH
INCL	INCLUDE(D), (ING)
INFO	INFORMATION
INSTL	INSTALL
INSUL	INSULATE(D), (ION)
INT	INTERIOR
INV	INVERT
IPS	IRON PIPE SIZE
ISA	INTERNATIONAL SYMBOL OF ACCESSIBILITY
J	
JAN	JANITOR
JST	JOIST
JT	JOINT
K	
KIT	KITCHEN
KO	KNOCKOUT
KPL	KICKPLATE
L	
LAB	LABORATORY
LAD	LADDER
LAM	LAMINATE
LAV	LAVATORY
LB(S)	POUND(S)
LBL	LABEL
LBR	LUMBER
LDR	LEADER
LF	LINEAL FOOT
LG	LENGTH, LONG
LH	LEFT HAND
LHR	LEFT HAND REVERSE
LKNT	LOCKNUT
LKR	LOCKER
LKWASH	LOCKWASHER
LLH	LONG LEG HORIZONTAL
LLV	LONG LEG VERTICAL
LMST	LIMSTONE
LNSCP	LANDSCAPE(D)
LNTL	LINTEL
LP	LIGHTPROOF
LPT	LOW POINT
LT	LIGHT
LTWT	LIGHTWEIGHT
LV	LOUVER VENT
LVL	LEVEL(ER)
LWC	LIGHTWEIGHT CONCRETE
LWIC	LIGHTWEIGHT INSULATING CONCRETE
M	
MAINT	MAINTAIN(ANCE)
MAS	MASONRY
MATL	MATERIAL
MAX	MAXIMUM
MB	MACHINE BOLT
MBR	MEMBER
MC	MEDICINE CABINET
MCB	METAL CORNER BEAD
MDO	MEDIUM DENSITY OVERLAID
MECH	MECHANICAL
MED	MEDIUM
MEMB	MEMBRANE
MEZZ	MEZZANINE
MFD	METAL FLOOR DECKING
MFR	MANUFACTUR(ER)
MH	MANHOLE
MIN	MINIMUM
MIRR	MIRROR
MISC	MISCELLANEOUS
ML	METAL LATH
MLDG	MOLDING
MLWK	MILLWORK
MO	MASONRY OPENING
MOD	MODULE(AR)
MR	MOISTURE RESISTANT
MRB	MARBLE
MRD	METAL ROOF DECKING
MS	MACHINE SCREW
MTD	MOUNTED
MTL	METAL
MTR	MORTAR
MULL	MULLION
N	
(N)	NEW
N	NORTH
NAT	NATURAL
NCOMBL	NONCOMBUSTIBLE
NE	NOT EXCEEDING
NF	NEAR FACE
NIC	NOT IN CONTRACT
NLB	NON-LOAD BEARING
NM	NONMETALLIC
NO	NUMBER
NOM	NOMINAL
NR	NOISE REDUCTION
NRC	NOISE REDUCTION COEFFICIENT
NRCA	NATIONAL ROOFING CONTRACTOR'S ASSOCIATION
NS	NEAR SIDE
NTS	NOT TO SCALE
O	
O/	OVER
O/O	OUT TO OUT
OA	OVERALL
OBS	OBSCURE
OC	ON CENTER
OCC	OCCUPANTS OR OCCUPANCY
OD	OUTSIDE DIAMETER
OFCI	OWNER FURNISHED CONTRACTOR INSTALLED
OFF	OFFICE
OFOI	OWNER FURNISHED OWNER INSTALLED
OFS	OUTSIDE FACE OF STUD
OHMS	OVALHEAD MACHINE SCREW
OHWS	OVALHEAD WOOD SCREW
OI	OWNER INSTALLED
OPH	OPPOSITE HAND
OPNG	OPENING
OPP	OPPOSITE
OPQ	OPAQUE
OPR	OPERABLE
ORD	OVERFLOW ROOF DRAIN
OSB	ORIENTED STRAND BOARD
OVFL	OVERFLOW
OVHD	OVERHEAD
P	
P	PAINT
PA	PUBLIC ADDRESS
PAR	PARALLEL
PAT	PATTERN
PB	PANIC BAR
PBD	PARTICLE BOARD
PC	PORTLAND CEMENT
PCC	PRECAST CONCRETE
PCP	PORTLAND CEMENT PLASTER
PED	PEDESTAL
PERF	PERFORATED
PERIM	PERIMETER
PERP	PERPENDICULAR
PGBD	PEGBOARD
PH	PHASE
PHS	PHILLIPS HEAD SCREW
PI	POINT OF INTERSECTION
PIV	POST INDICATOR VALVE
PL	PLATE, PROPERTY LINE
PLAM	PLASTIC LAMINATE
PLAS	PLASTER
PLYWD	PLYWOOD
PM	PRESSED METAL
PMF	PRESSED METAL FRAME
PNEU	PNEUMATIC
PNL	PANEL
PNT	PAINT(ED)
POL	POLISHED
POLY	POLYETHYLENE
PORC	PORCELAIN
PORT	PORTABLE
PR	PAIR
PRCST	PRECAST
PREFAB	PREFABRICATED
PREFIN	PREFINISHED
PREFMD	PREFORMED
PRKG	PARKING
PRML	PREMOLDED
PROJ	PROJECT
PROP	PROPERTY
PSCONC	PRESTRESSED CONCRETE
PT	POINT
PTD	PAPER TOWEL DISPENSER
PTDF	PRESSURE TREATED DOUGLAS FIR
PTN	PARTITION
PTR	PAPER TOWEL RECEPTACLE
PVC	POLYVINYL CHLORIDE
PVG	PAVE(D), (ING)
PVMT	PAVEMENT
Q	
QT	QUARRY TILE
QTB	QUARRY TILE BASE
QTF	QUARRY TILE FLOOR
QTR	QUARTER
QTY	QUANTITY
R	
R	RISER
RA	RETURN AIR
RAB	RABBET
RAD	RADIUS
RB	RESILIENT BASE
RBR	RUBBER
RCP	REINFORCED CONCRETE PIPE
RCVR	RECEIVER
RD	ROOF DRAIN
RDWY	ROADWAY
REBAR	REINFORCING STEEL BARS
REC	RECESSED
RECT	RECTANGULAR
RECYL	RECYCLING
REF	REFERENCE
REFL	REFLECT(ED), (IVE), (OR)
REFR	REFRIGERATOR
REG	REGISTER
REINF	REINFORCED
REM	REMOVE(ABLE)
REP	REPAIR
REPL	REPLACE
REQD	REQUIRED
RESIL	RESILIENT
RET	RETURN
REV	REVISION(S), REVISED
RF	RESILIENT FLOORING
RFG	ROOFING
RFH	ROOF HATCH
RGDINS	RIGID INSULATION
RH	RIGHT HAND
RHMS	ROUND HEAD MACHINE SCREW
RHR	RIGHT HAND REVERSE
RHWS	ROUND HEAD WOOD SCREW
RL	ROOF LEADER
RLG	RAILING
RM	ROOM
RND	ROUND
RO	ROUGH OPENING
ROW	RIGHT OF WAY
RR	RESTROOM
RS	ROUGH SAWN
RTF	RUBBER TILE FLOORING
RTU	ROOF TOP UNIT
RV	ROOF VENT
RVL	REVEAL
RVS	REVERSE (SIDE)
RVT	RIVET(ED)
RWD	REDWOOD
RWL	RAIN WATER LEADER
S	
S	SOUTH
S2S	SURFACED TWO SIDES
S4S	SURFACED FOUR SIDES
SA	SUPPLY AIR
SALV	SALVAGE
SAM	SELF-ADHERED MEMBRANE
SAT	SUSPENDED ACOUSTICAL TILE
SB	SPLASH BLOCK
SBSTR	SUBSTRATE
SC	SOLID CORE
SCD	SEAT COVER DISPENSER
SCHED	SCHEDULE
SCP	SCUPPER
SCRN	SCREEN
SD	STORM DRAIN
SDBL	SANDBLAST
SEC	SECONDS
SECT	SECTION
SEP	SEPERATE OR SEPERATION
SF	SQUARE FEET, STOREFRONT
SGL	SINGLE
SHR	SHOWER
SHT	SHEET(ING)
SHTG	SHEATHING
SHV	SHELVES(ING)
SIM	SIMILAR
SK	SINK
SKLT	SKYLIGHT
SLD	SEALED
SLDG	SLIDE(ING)
SLDR	SOLDER
SLNT	SEALANT
SLV	SLEEVE
SM	SHEET METAL
SMACNA	SHEET METAL AND AIR CONDITIONING CONTRACTOR'S NATIONAL ASSOCIATION
SMLS	SEAMLESS
SMS	SHEET METAL SCREW
SND	SANITARY NAPKIN DISPENSER
SNDINS	SOUND INSULATION
SNDU	SANITARY NAPKIN DISPOSAL UNIT
SNT	SEALANT
SP	SPACES
SPC	SUSPENDED PLASTER CEILING
SPD	SOAP DISPENSER
SPEC	SPECIFICATION(S)
SPRT	SUPPORT
SQ	SQUARE
SS	STAINLESS STEEL
SSK	SERVICE SINK
ST	STREET
STA	STATION
STAG	STAGGERED
STC	SOUND TRANSMISSION CLASS
STD	STANDARD
STG	SEATING
STIF	STIFFENER
STIR	STIRRUP
STL	STEEL
STOR	STORAGE
STR	STRAIGHT
STRUC	STRUCTURAL
STU	STRUCT
SUSP	SUSPENDED
SV	SHEET VINYL
SYMM	SYMMETRICAL
SYNTH	SYNTHETIC
SYS	SYSTEM
T	
T	TEMPERED, TOILET, TREAD
T24	TITLE 24
T&B	TOP AND BOTTOM
T&G	TONGUE & GROOVE
TB	THRU BOLT
TBE	THREADED BOTH ENDS
TD	TOWEL DISPENSER
TDR	TOWEL DISPENSER/RECEPTACLE
TEL	TELEPHONE
TEMP	TEMPORARY
TER	TERRAZZO
TFA	TO FLOOR ABOVE
TFB	TO FLOOR BELOW
THD	THREADED(D)
THERM	THERMAL
THK	THICK
THRES	THRESHOLD
THRU	THROUGH
TKBD	TACKBOARD
TMPD	TEMPERED
TO	TOP OF
TOB	TOP OF BEAM
TOC	TOP OF CURB OR TOP OF CONCRETE
TOF	TOP OF FOOTING
TOFF	TOP OF FINISH FLOOR
TOJ	TOP OF JOIST
TOL	TOLERANCE
TOM	TOP OF MASONRY
TOP	TOP OF PARAPET
TOPV	TOP OF PAVEMENT
TOS	TOP OF SHEATHING
TOSL	TOP OF SLAB
TOST	TOP OF STEEL
TOW	TOP OF WALL OR TOP OF WALK
TPD	TOILET PAPER DISPENSER
TPTN	TOILET PARTITION
TRANS	TRANSITION
TS	TUBE STEEL
TV	TELEVISION
TWLB	TOWEL BAR
TYP	TYPICAL
U	
UC	UNDERCUT
UGND	UNDERGROUND
UL	UNDERWRITER'S LABORATORY
UNFIN	UNFINISHED
UON	UNLESS OTHERWISE NOTED
UR	URINAL
URM	UNREINFORCED MASONRY
UTIL	UTILITY
V	
VAR	VARIES
VB	VINYL BASE
VCT	VINYL COMPOSITION TITLE
VER	VERIFY
VERT	VERTICAL
VEST	VESTIBULE
VF	VINYL FABRIC
VFAT	VINYL FACED ACOUSTIC TILE
VIF	VERIFY IN FIELD
VJ	V-JOINT(ED)
VNR	VENEER
VR	VAPOR RETARDER
VTR	VENT THROUGH ROOF
VWC	VINYL WALL COVERING
W	
W	WEST
W.O.	WHERE OCCURS
W/	WITH
W/O	WITHOUT
W/W	WALL TO WALL
WBL	WOOD BLOCKING
WC	WATER CLOSET
WD	WOOD
WDP	WOOD PANELING
WDW	WINDOW
WF	WIDE FLANGE
WFS	WOOD FURRING STRIP
WGL	WIRED GLASS
WH	WATER HEATER
WH	WALL HUNG
WI	WROUGHT IRON
WID	WIDTH, WIDE
WLD	WELD(ED)
WM	WIRE MESH
WP	WATERPROOF(ING)
WPT	WORKING POINT
WR	WIRE ROPE
WS	WOOD SCREW
WSCT	WAINSCOT
WT	WEIGHT
WWF	WELDED WIRE FABRIC
X	
XBRACE	CROSS BRACE
XFMR	TRANSFORMER
XSECT	CROSS SECTION
Y	
YCO	YARD CLEANOUT
YD	YARD

SYMBOLS LEGEND

N = PLAN NORTH ARROW
ADDITIONAL ARROW INDICATES TRUE NORTH

X = BUILDING SECTION NUMBER
AX.X = SHEET NUMBER

X = WALL SECTION NUMBER
AX.X = SHEET NUMBER

X = EXTERIOR ELEVATION NUMBER
AX.X = SHEET NUMBER

X = INTERIOR ELEVATION NUMBER
AX.X = SHEET NUMBER
N,S,E,W = INDICATES CARDINAL DIRECTION

GRID LINE, FACE OF STRUCTURE

GRID LINE, CENTER OF STRUCTURE

ELEVATION OR DATUM POINT

WORK POINT

REFERENCE DETAIL
X = DETAIL DRAWING NUMBER
AX.X = SHEET NUMBER

20 / AX.X — MATCH LINE AND AREA DESIGNATOR
SHADED PORTION IS THE SIDE CONSIDERED

ROOM NAME
A119 — ROOM NAME
AREA IDENTIFICATION:
A = BUILDING OR AREA DESIGNATION
1 = FLOOR NUMBER
19 = ROOM NUMBER

A — WINDOW, STOREFRONT, OR CURTAINWALL
SEE WINDOW SCHEDULE

A101A — DOOR NUMBER, SEE DOOR SCHEDULE

08 211 — KEYNOTE
08 = SPECIFICATION DIVISIONAL PREFIX
2 = SPECIFICATION SUBSECTION PREFIX
11 = NOTE NUMBER

1 — REVISION

102 (30" x 24" x 24" LOCKABLE) — CASEWORK TAG
102 = ARCHITECTURAL WOODWORK STANDARD (AWVS) NUMBER
36" x 24" x 24" = WIDTH x HEIGHT x DEPTH
LOCKABLE = MODIFYING NOTE

NOTE: FOR BASE CABINETS, HEIGHT DOES NOT INCLUDE COUNTERTOP THICKNESS - REFER TO PLANS FOR COUNTERTOP TYPE

41 — PATH OF EGRESS
41 = OCCUPANT LOAD
STARTING POINT OF PATH OF TRAVEL TO EXIT
MARKED BY DOT AT THE BEGINNING OF EGRESS LINE

P — PANIC HARDWARE DEVICE - REFERENCE DOOR SCHEDULE AND HARDWARE GROUP

S1 — SIGNAGE TAG

MATERIALS LEGEND

EARTH
POROUS FILL (STONE, GRAVEL, ETC.)
CONCRETE
GROUT
STEEL
FINISHED WOOD
WOOD BLOCKING
WOOD FRAMING
BATT INSULATION
RIGID INSULATION
GYPSUM BOARD
PLYWOOD
METAL LATH AND PLASTER

DSA STAMP

STUDIO W ARCHITECTS

Studio W Architects
424 32nd Street, Suite D/E
Newport Beach, California 92663
[T] 949.774.2920
www.StudioW-Architects.com

ARCHITECT	ENGINEER

LICENSED ARCHITECT — BRYAN P WHITMORE — No. C 30345 Ren. 9/30/25 — STATE OF CALIFORNIA
DATE SIGNED: 06/24/2024

GENERAL NOTES

1. This sheet is part of a set and is not to be used alone.
2. This sheet is not to be used for construction unless the architect's stamp and signature appear on the drawings and the status box indicated drawings have been released for construction.
3. These plans and prints thereof, as instruments of service, are owned by the architect and are for use on this project only. Reproduction and/or distribution without the prior written consent of the architect is forbidden.
4. Copyright Studio W Associates, Inc. 2024.

REVISION HISTORY

NO.	REMARKS	DATE

DRAWING STATUS

	DATE
○ DSA PLAN CHECK	03/29/2024
● DSA BACK CHECK	06/24/2024
○ BIDDING	
○ CONSTRUCTION	

KEY PLAN

BUENA PARK SD
6885 ORANGETHORPE AVE
BUENA PARK, CA 90620

DSA SUBMITTAL

CARL E. GILBERT ELEMENTARY SCHOOL
TK-PK CLASSROOMS & EARLY LEARNING BUILDING
7255 8TH STREET, BUENA PARK, CA 90621

ARCHITECTURAL SYMBOLS AND ABBREVIATIONS

Date	Project Number
06/24/2024	23076
Application Number	Drawing Number
04-123212	A0.3
Drawn: AT	Checked: MS

PRINT DATE: 6/24/2024 9:39:47 PM
FILE PATH: BIM 360://23076 BPSD Gilbert ES PK-TK CRs, Early Learning Bldg/23076-BPUSD Gilbert-BLDG-A21.rvt

GENERAL NOTES

EXISTING CONDITIONS
1. ALL (E) STRUCTURES AND ITEMS ON SITE ARE APPROXIMATE BASED ON DRAWINGS FROM OWNER.

BUILDING
1. ALL EXTERIOR OUTWARD SWINGING DOORS TO HAVE A MINIMUM 5'-0" LEVEL LANDING.
2. ALL BUILDING ENTRANCES AND EXTERIOR GROUND LEVEL EXITS SHALL BE ACCESSIBLE.

ACCESSIBLE PATH OF TRAVEL
1. SEE ACCESSIBLE PATH OF TRAVEL DEFINITION, THIS SHEET.
2. ALL SIDEWALKS ALONG THE ACCESSIBLE ROUTE TO BE A MINIMUM OF 4'-0" WIDE, AND THERE SHALL BE NO DROP-OFFS OVER 4" AT EDGE OF WALK OR LANDING. WHERE A 4" DROP-OFF DOES OCCUR, PROVIDING A 6" HIGH WARNING CURB OR GUARD OR HANDRAIL. (SEE CBC SECTION 11B-303.5)
3. FOR GRATINGS LOCATED IN THE SURFACE OF ANY PEDESTRIAN WALKWAY IN THE PATH OF TRAVEL, GRID/OPENINGS IN GRATINGS SHALL BE LIMITED TO 1/2" MAXIMUM IN THE DIRECTION OF TRAFFIC FLOW.
4. 36" WIDE CONTINUOUS DETECTABLE WARNING SHALL BE USED WHERE THE PEDESTRIAN PATH CROSSES OR ADJOINS A VEHICULAR WAY (SUCH AS A DRIVEWAY) TO WARN OF POTENTIAL HAZARDS AS PER CBC 11B-705.
5. SEE DESIGN PROFESSIONAL IN GENERAL RESPONSIBLE CHARGE STATEMENT ON THIS SHEET FOR PATH OF TRAVEL REQUIREMENTS.

GATES
1. GATES ALONG ACCESSIBLE ROUTE SHALL MEET DOOR REQUIREMENTS PER CBC SECTION 11B-404 INCLUDING PANIC HARDWARE AND 10" MIN. SMOOTH BOTTOM OR KICK PLATE.
2. GATES IN PATH OF TRAVEL SHALL COMPLY WITH EXIT DOOR REQUIREMENTS WITH PROPER ACCESSIBLE LEVER HARDWARE AND KICK PLATES.

FIRE ACCESS
1. ALL VEGETATION AND OTHER OBSTRUCTIONS OVERHANGING A FIRE ACCESS ROADWAY SHALL BE MAINTAINED TO A CLEAR HEIGHT OF 13'-6".
2. ALL POLES, BACKBOARDS, AND OTHER OBSTRUCTIONS ON PLAYGROUNDS NEAR A FIRE ACCESS ROADWAY SHALL BE PROVIDED WITH REFLECTIVE TAPE OR PAINT.
3. KNOX KEY SWITCHES, KNOX LOCKS, OR FRANGIBLE PADLOCKS/CHAINS SHALL BE PROVIDED FOR ALL GATES AND BARRIERS IN THE PATH OF VEHICLE OR FIREFIGHTER ACCESS.
4. THE CAMPUS IS IDENTIFIED WITH 6" HIGH ADDRESS NUMBERS EASILY VISIBLE FROM THE PUBLIC ROAD FRONTING THE PROPERTY. INDIVIDUAL STRUTURES ARE IDENTIFIED WITH 6" HIGH ADDRESS NUMBERS OR LETTER EASILY VISIBLE FROM THE PUBLIC WAY OR FIRE ACCESS ROADWAY.
5. ALL-WEATHER ACCESS ROADWAYS AND ALL FIRE HYDRANTS SHALL BE IN PLACE AND OPERATIONAL BEFORE BRINGING COMBUSTIBLE BUILDING MATERIALS OR PORTABLE UNITS ON-SITE.

DESIGN PROFESSIONAL IN GENERAL RESPONSIBLE CHARGE STATEMENT

(BASED ON DSA PROCEDURE PR 15-01)

THE P.O.T. IDENTIFIED IN THESE CONSTRUCTION DOCUMENTS MEETS THE REQUIREMENTS OF THE CURRENT APPLICABLE CALIFORNIA BUILDING CODE (CBC) ACCESSIBILITY PROVISIONS FOR PATH OF TRAVEL REQUIREMENTS FOR ALTERATIONS, ADDITIONS AND STRUCTURAL REPAIRS. AS PART OF THE DESIGN OF THIS PROJECT, THE P.O.T. WAS EXAMINED AND ANY ELEMENTS, COMPONENTS OR PORTIONS OF THE P.O.T. THAT WERE DETERMINED TO BE NONCOMPLIANT WITH THE CBC HAVE BEEN IDENTIFIED AND THE CORRECTIVE WORK NECESSARY TO BRING THEM INTO COMPLIANCE HAS BEEN INCLUDED WITHIN THE SCOPE OF THIS PROJECT'S WORK THROUGH DETAILS, DRAWINGS AND SPECIFICATIONS INCORPORATED INTO THESE CONSTRUCTION DOCUMENTS. ANY NONCOMPLIANT ELEMENTS, COMPONENTS OR PORTIONS OF THE P.O.T. THAT WILL NOT BE CORRECTED BY THIS PROJECT BASED ON VALUATION THRESHOLD LIMITATIONS OR A FINDING OF UNREASONABLE HARDSHIP ARE INDICATED IN THESE CONSTRUCTION DOCUMENTS.

DURING CONSTRUCTION, IF P.O.T. ITEMS WITHIN THE SCOPE OF THE PROJECT REPRESENTED AS CBC COMPLIANT ARE FOUND TO BE NONCONFORMING BEYOND REASONABLE CONSTRUCTION TOLERANCES, THE ITEMS SHALL BE BROUGHT INTO COMPLIANCE WITH THE CBC AS A PART OF THIS PROJECT BY MEANS OF A CONSTRUCTION CHANGE DOCUMENT.

ACC. PATH OF TRAVEL

ACCESSIBLE PATH OF TRAVEL AS INDICATED ON PLANS IS A BARRIER FREE ACCESS ROUTE WITHOUT ANY ABRUPT LEVEL CHANGES EXCEEDING 1/2" IF BEVELED AT 1:2 MAXIMUM SLOPE OR VERTICAL LEVEL CHANGES NOT EXCEEDING 1/4" MAXIMUM AND AT LEAST 48" IN WIDTH. SURFACE IS STABLE, FIRM AND SLIP RESISTANT. CROSS SLOPE DOES NOT EXCEED 2% AND SLOPE IN THE DIRECTION OF TRAVEL IS LESS THAN 5% UNLESS OTHERWISE INDICATED. ACCESSIBLE PATH OF TRAVEL SHALL BE MAINTAINED FREE OF OVERHANGING OBSTRUCTIONS TO 80" MINIMUM AND PROTRUDING OBJECTS GREATER THAN 4" PROJECTION FROM WALL ABOVE 27" AND LESS THAN 80". ARCHITECT SHALL VERIFY THAT THERE ARE NO BARRIERS IN THE PATH OF TRAVEL.

BICYCLE STORAGE CALCS

BASED ON 2022 CAL GREEN BUILDING STANDARDS CODE
SECTION 5.106.4.2 BICYCLE PARKING [DSA-SS]

5.106.4.2.1 STUDENT BICYCLE PARKING
REQUIRED: (4) 2-BIKE CAPACITY RACKS PER NEW BUILDING, NEW BUILDINGS: 2
(2) x 8 BIKES = 16 BICYCLES STORED
PROVIDED: **16-BIKE CAPACITY RACK**

5.106.4.2.2 STAFF BICYCLE PARKING
REQUIRED: 2 BIKES STORED PER NEW BUILDING, NEW BUILDINGS: 2
(2) x 2 BIKES = 4 BICYCLES STORED
PROVIDED: **4-BIKE CAPACITY STORAGE, PERMANENTLY ANCHORED IN WORKROOM 109**

CODE ANALYSIS

	BUILDING KA	BUILDING KB1	BUILDING KB2	SHADE SS-1	SHADE SS-2	SHADE SS-3
BUILDING CONDITION	NEW	NEW	NEW	NEW	NEW	NEW
OCCUPANCY (CBC SECTION 302)	B	E	E	E	E	E
BUILDING HEIGHT	18'-7"	21'-7"	21'-7"	20' MAX	20' MAX	20' MAX
NUMBER OF STORIES	1	1	1	1	1	1
TYPE OF CONSTRUCTION	V-B	V-B	V-B	V-B	V-B	V-B
SPRINKLERS	NO	NO	NO	NO	NO	NO
A_t = TABULAR ALLOWABLE AREA (CBC TABLE 506.2)	9,000 SF	9,500 SF	9,500 SF	9,500 SF	9,500 SF	9,500 SF
ACTUAL AREA	**1,469 sf = OK**	**7,193 = OK**	**7,015 = OK**	**565 = OK**	**440 = OK**	**1,457 = OK**

GROSS BUILDING AREA

NAME	TOTAL AREA (S.F.)
BLDG KA	1,469 SF
BLDG KB1	7,193 SF
BLDG KB2	7,015 SF
TOTAL AREA:	15,676 SF

ACCESSIBLE PARKING

BASED ON CBC TABLE 11B-208.2 "PARKING SPACES"

(E) PARKING LOT 1 (GENERAL USE)
STANDARD PARKING PROVIDED: 20 STALLS
ACCESSIBLE PARKING PROVIDED: 1 STALL + 1 VAN STALL
TOTAL PARKING PROVIDED: 22 STALLS

PARKING LOT 2 (GENERAL USE)
STANDARD PARKING PROVIDED: 62 STALLS
ACCESSIBLE PARKING PROVIDED: 2 STALLS + 1 VAN STALL
TOTAL PARKING PROVIDED: 65 STALLS

CGBSC TABLE 5.106.5.3.1

EV CAPABLE SPACES

TOTAL NUMBER OF ACTUAL PARKING SPACES	NUMBER OF REQUIRED EV CAPABLE SPACES	NUMBER OF EVCS (EV CAPABLE SPACES PROVIDED WITH EVSE)[2]
51-75	13	3

1. CALCULATION FOR SPACES SHALL BE ROUNDED UP TO THE NEAREST WHOLE NUMBER.
2. THE NUMBER OF REQUIRED EVCS (EV CAPABLE SPACES PROVIDED WITH EVSE) IN COLUMN 3 COUNT TOWARD THE TOTAL NUMBER OF REQUIRED EV CAPABLE SPACES SHOWN IN COLUMN 2.

EV CHARGING STATIONS

TOTAL NUMBER OF ACTUAL PARKING SPACES	65 STALLS
TOTAL NUMBER OF REQUIRED EV CHARGING STATIONS (EVCS) PER CGBSC TABLE 5.106.5.3.1 - SEE BELOW	3 STALLS
TOTAL NUMBER OF EV CAPABLE SPACES PROVIDED WITH EVSE (ELECTRIC VEHICLE SUPPLY EQUIPMENT) PER CGBSC TABLE 5.106.5.3.1 - SEE BELOW	17 STALLS
REQUIRED ACCESSIBLE EVCS (PER CBC TABLE 11B-228.3.2.1 - SEE BELOW)	1 VAN ACCESSIBLE
PROVIDED ACCESSIBLE EVCS (PER CBC TABLE 11B-228.3.2.1 - SEE BELOW)	1 VAN ACCESSIBLE

CBC TABLE 11B-228.3.2.1

ELECTRIC VEHICLE CHARGING STATIONS FOR PUBLIC USE AND COMMON USE

TOTAL NUMBER OF EVCS AT A FACILITY	MINIMUM NUMBER (BY TYPE) OF EVCS REQUIRED TO COMPLY WITH SECTION 11B-812		
	VAN ACCESSIBLE	STANDARD ACCESSIBLE	AMBULATORY
3	1	0	0

LOCAL FIRE AUTHORITY REVIEW

DSA 810

FIRE & LIFE SAFETY SITE CONDITIONS SUBMITTAL

Division of the State Architect (DSA) documents referenced within this publication are available on the DSA Forms or DSA Publications webpages.

To facilitate the Division of the State Architect's (DSA) fire and life safety plan review of project site conditions, DSA requires the design professional to provide the following information at time of project submittal for projects consisting of construction of a new campus, construction of new building(s), additions to existing buildings, and for site alternate design means for fire department emergency vehicle access, and fire suppression water supply.

Information associated with compliance items 1 through 3 below is to be provided for all project types indicated above. Information associated with items 4 through 7 is to be completed when an alternate means is utilized. Acknowledgement by the school district and signatures from the Local Fire Authority (LFA) is only required when an alternate design means is being requested.

The Project Information and Fire & Life Safety information sections are to be completed for all projects and imaged onto the fire access site plan. When an alternate design/means is proposed, all sections on pages 1 an 2 are to be completed and imaged on the fire access site plan.

For additional information refer to the instructions at the end of this form and DSA Policy *PL 09-01: Fire Flow fo Buildings*

PROJECT INFORMATION

School District/Owner:	Buena Park School District
Project Name/School:	Carl E. Gilbert Elementary School
Project Address:	7255 8th St., Buena Park, Ca 90621

FIRE & LIFE SAFETY INFORMATION

1.	Has a fire hydrant flow test been performed within the past 12 months? *(If yes, provide a copy of the test data.)*	Yes ☑		No ☐
2.	Was the fire hydrant water flow test performed as part of this LFA review?	Yes ☑		No ☐
3.	Is the project located within a designated fire hazard severity zone (FHSZ) as established by Cal-Fire? *(If yes, indicate FHSZ classification below.)*	Yes ☐		No ☑
	Refer to the following website for FHSZ locations: http://egis.fire.ca.gov/FHSZ/	Moderate ☑	High ☐	Very High ☐
	Wildland Interface Area (WIFA) *(If any designations are checked, project design must meet the requirements of CBC Chapter 7A.)*			WIFA ☐

DGS DSA 810 (revised 12/29/20) — DEPARTMENT OF GENERAL SERVICES — Page 1 of 4 — STATE OF CALIFORNIA
DIVISION OF THE STATE ARCHITECT

DSA 810
FIRE & LIFE SAFETY SITE CONDITIONS SUBMITTAL

	CONDITION MEANS AND METHODS RESOLUTION	ALTERNATE ACCEPTED			
		Yes	No	N/A	N/R
4.	Emergency vehicle access roadways do not meet CFC requirements.				
4a.	**Acceptable Alternate:** Emergency vehicle and personnel access as proposed by the project architect is acceptable for providing fire suppression and protection of life and property.				
5.	**Fire Hydrants:** Number and spacing does not meet CFC requirements.				
5a.	**Acceptable Alternate:** Number of fire hydrants and spacing as proposed by the project architect is acceptable for fire suppression and protection of life and property.				
6.	**Fire Hydrants:** Water flow and pressure are less than CFC minimum.				
6a.	**Acceptable Alternate:** The available flow and pressure is acceptable for providing fire suppression and protection of life and property.				
7.	Location of fire department connection(s) serving fire sprinkler systems or standpipe systems does not meet CFC requirements.				
7a.	**Acceptable Alternate:** The location of fire department connection serving the fire sprinkler system and/or standpipe system is acceptable for providing fire suppression and protection of life and property.				

School District Acceptance of Acceptable Design Alternates

By signing this form, the school district acknowledges and accepts the proposed design as an alternative to California Building Code (CBC) and California Fire Code (CFC) minimum requirements, as indicated by one or more of the conditions indicated at items 4a, 5a, 6a or 7a, for providing fire and life safety protection of life and property.

Accepted by: _____ Title: _____

Signature: _____ Date: _____

LOCAL FIRE AUTHORITY (LFA) INFORMATION

LFA Agency Name:	
LFA Review Official:	
Title:	Work Phone:
Work Email:	

LFA Reviewer's Signature: _____ Date: _____

DGS DSA 810 (revised 12/29/20) — DEPARTMENT OF GENERAL SERVICES — Page 2 of 4 — STATE OF CALIFORNIA
DIVISION OF THE STATE ARCHITECT

FIRE FLOW TEST

OCFA WATER AVAILABILITY FORM

SECTION A: To be completed by customer

Project Name: BPSD Carl E. Gilbert ES TK-PK Expansion — OCFA SR #: 546436
Project Address: 7255 8th St. — City: Buena Park
Applicant Phone #: (949) 774-2903 — Fax #: ( )
Area of largest building: 13,572 ft²; Construction type? (check one): IA IB IIA IIB IIIA IIIB IV VA VB
Is this building sprinklered throughout? (check one): Y N

SECTION B: To be completed by local water department/district
Customer to provide results to OCFA

Water Department/District: City of Buena Park
Test location (indicate address or cross-streets & provide reference map): 7255 8th St
Hydrant number(s) (if applicable): n/a
Elevation of test hydrant: n/a feet above sea level
Date of Test*: 4/18/24 Time of Test*: 9:30 AM (AM / PM)
* test to be performed as close as possible to the time that the lowest flows and pressures are expected (e.g., M-F, 8:00 - 9:00 am and 5:00 - 9:00 pm)

FLOW TEST RESULTS
TEST INFORMATION IS VALID FOR 6 MONTHS FROM DATE TEST IS PERFORMED

Static pressure:	75	psi	**Residual pressure:**	70	psi
Observed flow:	1048	gpm	**Flow calc'd at 20 psi:**	3825	gpm

☐ Check the box if the test information above was obtained in a manner other than an actual flow test (i.e. by computer modeling).

Based on fluctuations known to exist at the site of the test, provide estimated values for the following:

Maximum static pressure	78	psi	**Minimum static pressure**	70	psi
Minimum residual pressure	75	psi	**Minimum residual flow**	1048	gpm

I have witnessed and/or reviewed this water flow information and by personal knowledge and/or on-site observation certify that the above information is correct.

Name: Mark Stephenson — Company/Agency: City of Buena Park
Signature: — Title: Water Quality Specialist
Date: 4/23/24

Revised 1/7/16 ase

KEYNOTES

NUMBER	NOTE
10 121	TOW AWAY SIGN (SEE DETAIL 12/A10.2.1)
10 122	FIRE LANE SIGNAGE (SEE DETAIL 13/A10.2.1)
10 123	FIRE ACCESS VEHICLE GATE SIGNAGE (SEE DETAIL 14/A10.2.1)
10 125	EXIT SIGNAGE (SEE DETAIL 19/A10.2.1)
10 702	KNOX BOX PER OCFA
32 105	ACCESSIBLE RAMP (SEE A10.2.2)
32 175	FIRE LANE MARKING (SEE DETAIL 6/A10.2.1.) PROVIDE ALONG FIRE LANE
32 176	ACCESSIBLE STANDARD PARKING (SEE A10.2.2)
32 177	ACCESSIBLE VAN PARKING (SEE A10.2.2)
32 178	ACCESSIBLE VAN EVCS (SEE A10.2.2)
32 179	ACCESSIBLE DROP-OFF (SEE A10.2.2)
32 224	CHAIN LINK GATE (SEE GATE SCHEDULE)
32 225	CHAIN LINK FIRE ACCESS MANUAL 22' WIDE GATE W/ STRIKE STRAP & DROP ROD, PAD LOCK PER SPEC (SEE DETAIL 3/A10.2.3)
32 227	ORNAMENTAL METAL GATE (SEE SHEET A10.2.3)
32 240	[illegible]

GATE OPENING WIDTH

Mark	Panel Width	Mark	Panel Width
G01	3'-0"	G08	4'-0"
G02	4'-0"	G09	3'-0"
G03	4'-0"	G10	3'-0"
G04	4'-0"	G11	8'-3"
G05	4'-0"	G12	4'-0"
G06	4'-0"	G13	11'-0"
G07	4'-0"		

LEGEND

- (E) BUILDING, NOT UNDER SCOPE OF WORK
- BUILDING UNDER SCOPE OF WORK
- FIRE ACCESS LANE. CURB ALONG FIRE LANE TO BE PAINTED RED WITH MARKINGS PER PLAN AND DETAIL 6 / A10.2.1
- ACCESSIBLE PATH OF TRAVEL, SEE DEFINITION ON THIS SHEET
- PROPERTY LINE
- FIRE HOSE PULL, 150' MAX
- FIRE HYDRANT AND 210' RADIUS CIRCLE
- LOCATION OF ACCESSIBLE EXTERIOR EXIT DOORS, ENTRANCES, AND EGRESS
- GX — GATE TAG - SEE GATE SCHEDULE ON SHEET A9.1
- X — ACCESSIBLE BATHROOM FACILITIES:
  - S ALL GENDER STAFF
  - N ALL GENDER STUDENT
  - DF DRINKING FOUNTAIN / BOTTLE FILLER

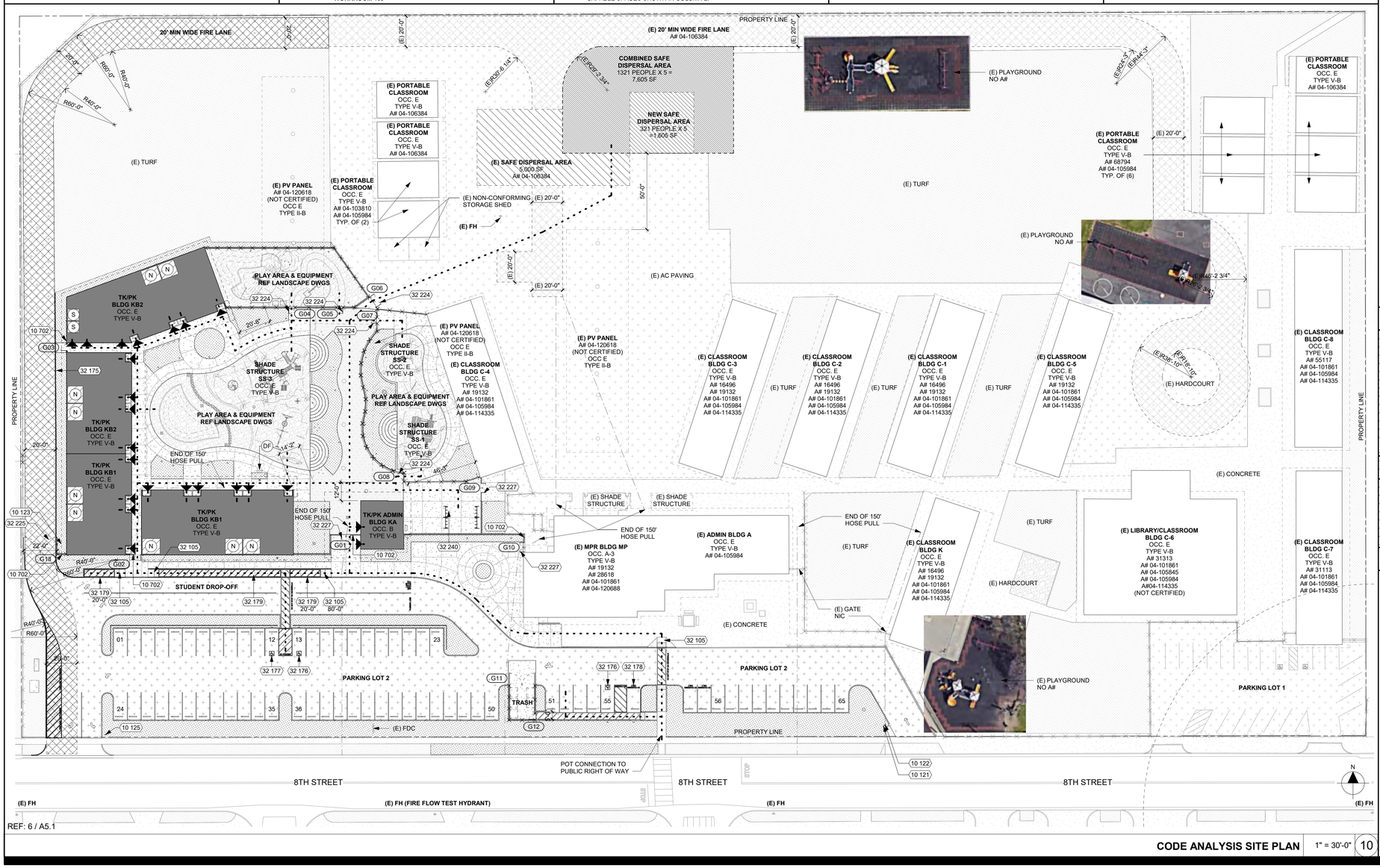

REF: 6 / A5.1

CODE ANALYSIS SITE PLAN — 1" = 30'-0" — 10

PRINT DATE: 6/24/2024 9:39:54 PM
FILE PATH: BM 360 / 23076 BPSD Gilbert ES PK-TK CRs, Early Learning Bldg/23076-BPKSD Gilbert BLDG A21.rvt

DSA STAMP

STUDIO W ARCHITECTS
Studio W Architects
424 32nd Street, Suite D/E
Newport Beach, California 92663
[T] 949.774.2920
www.StudioW-Architects.com

ARCHITECT	ENGINEER
LICENSED ARCHITECT BRYAN P. WHITMORE No. C 30345 Ren. 9/30/25 STATE OF CALIFORNIA	
DATE SIGNED: 06/24/2024	

GENERAL NOTES
1. This sheet is part of a set and is not to be used alone.
2. This sheet is not to be used for construction unless the architect's stamp and signature appear on the drawings and the status box indicated drawings have been released for construction.
3. These plans and prints thereof, as instruments of service, are owned by the architect and are for use on this project only. Reproduction and/or distribution without the prior written consent of the architect is forbidden.
4. Copyright Studio W Associates, Inc. 2024.

REVISION HISTORY

NO.	REMARKS	DATE

DRAWING STATUS

	DATE
○ DSA PLAN CHECK	03/29/2024
● DSA BACK CHECK	06/24/2024
○ BIDDING	
○ CONSTRUCTION	

KEY PLAN

BUENA PARK SD
6885 ORANGETHORPE AVE
BUENA PARK, CA 90620

DSA SUBMITTAL

CARL E. GILBERT ELEMENTARY SCHOOL
TK-PK CLASSROOMS & EARLY LEARNING BUILDING
7255 8TH STREET, BUENA PARK, CA 90621

CODE ANALYSIS SITE PLAN

Date	Project Number
06/24/2024	23076
Application Number	Drawing Number
04-123212	A0.4
Drawn AT	Checked MS

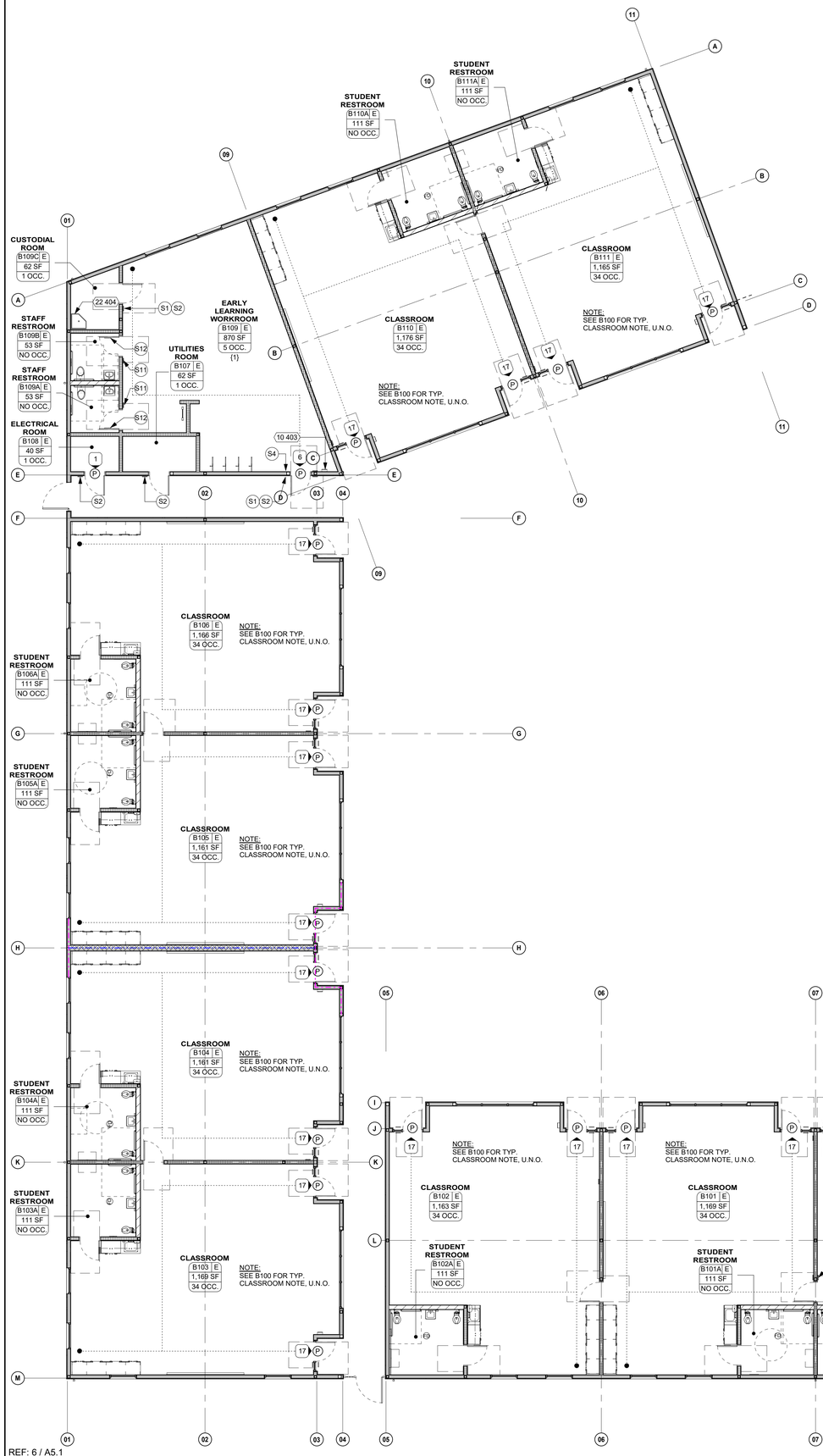

OCCUPANT LOAD CHART

ROOM NUMBER	ROOM NAME	FUNCTION OF SPACE (CBC TABLE 1004.1.2)	SQ. FT. (NET)	OCCUPANT LOAD FACTOR	OCCUPANT LOAD
A100	ADMIN/ STAFF	Business Areas	730 SF	150	5
A101	UTILITY ROOM	Accessory Storage Areas, Mechanical Equipment Room	51 SF	300	1
			781 SF		6
B100	CLASSROOM	Day care	1,166 SF	35	34
B100A	STUDENT RESTROOM	(none)	111 SF		
B101	CLASSROOM	Day care	1,169 SF	35	34
B101A	STUDENT RESTROOM	(none)	111 SF		
B102	CLASSROOM	Day care	1,163 SF	35	34
B102A	STUDENT RESTROOM	(none)	111 SF		
B103	CLASSROOM	Day care	1,169 SF	35	34
B103A	STUDENT RESTROOM	(none)	111 SF		
B104	CLASSROOM	Day care	1,161 SF	35	34
B104A	STUDENT RESTROOM	(none)	111 SF		
B105	CLASSROOM	Day care	1,161 SF	35	34
B105A	STUDENT RESTROOM	(none)	111 SF		
B106	CLASSROOM	Day care	1,166 SF	35	34
B106A	STUDENT RESTROOM	(none)	111 SF		
B107	UTILITIES ROOM	Accessory Storage Areas, Mechanical Equipment Room	62 SF	300	1
B108	ELECTRICAL ROOM	Accessory Storage Areas, Mechanical Equipment Room	40 SF	300	1
B109	EARLY LEARNING WORKROOM	Business Areas	870 SF	150	6
B109A	STAFF RESTROOM	(none)	53 SF		
B109B	STAFF RESTROOM	(none)	53 SF		
B109C	CUSTODIAL ROOM	Accessory Storage Areas, Mechanical Equipment Room	62 SF	300	1
B110	CLASSROOM	Day care	1,176 SF	35	34
B110A	STUDENT RESTROOM	(none)	111 SF		
B111	CLASSROOM	Day care	1,165 SF	35	34
B111A	STUDENT RESTROOM	(none)	111 SF		
			12,631 SF		315
			13,413 SF		321

KEYNOTES

NUMBER	NOTE
10 403	FIRE EXTINGUISHER (2A-10B:C) IN SEMI-RECESSED CABINET (SEE DETAIL 1/A10.10.3)
22 404	MOP SINK (SEE DETAIL 3/A10.10.3)

NOTE:
SEE CLASSROOM B100 FOR TYP. CLASSROOM KEYNOTES, U.N.O.

GENERAL NOTES

1. REQUIRED MEANS OF EGRESS SHALL BE MAINTAINED DURING CONSTRUCTION AND DEMOLITION PER CFC 3311.2.
2. MEANS OF EGRESS ILLUMINATION SHALL BE PROVIDED PER CFC 1013.3.
3. NUMBER OF EXITS SHOWN COMPLY WITH THE MINIMUM REQUIREMENTS SET FORTH IN CBC SECTION 1006.2. WHEN THERE ARE MORE THAN ONE REQUIRED EXIT, THE EXITS SHALL BE LOCATED PER SECTION 1007.1.1. SEE CALCULATIONS BELOW.
4. NO EXIT DOOR SHALL BE LESS THAN 32" CLEAR WIDTH.

OCCUPANCY CLASS

ROOM #	ROOM NAME	OCCUPANCY CLASS	SQ. FT. (NET)
A100	ADMIN/ STAFF	B	730 SF
A101	UTILITY ROOM	B	51 SF
BLDG KA TOTAL AREA (NET)			781 SF

ROOM #	ROOM NAME	OCCUPANCY CLASS	SQ. FT. (NET)
B100	CLASSROOM	E	1,166 SF
B100A	STUDENT RESTROOM	E	111 SF
B101	CLASSROOM	E	1,169 SF
B101A	STUDENT RESTROOM	E	111 SF
B102	CLASSROOM	E	1,163 SF
B102A	STUDENT RESTROOM	E	111 SF
B103	CLASSROOM	E	1,169 SF
B103A	STUDENT RESTROOM	E	111 SF
B104	CLASSROOM	E	1,161 SF
B104A	STUDENT RESTROOM	E	111 SF
BLDG KB1 TOTAL AREA (NET)			6,382 SF

ROOM #	ROOM NAME	OCCUPANCY CLASS	SQ. FT. (NET)
B105	CLASSROOM	E	1,161 SF
B105A	STUDENT RESTROOM	E	111 SF
B106	CLASSROOM	E	1,166 SF
B106A	STUDENT RESTROOM	E	111 SF
B107	UTILITIES ROOM	E	62 SF
B108	ELECTRICAL ROOM	E	40 SF
B109	EARLY LEARNING WORKROOM	E	870 SF
B109A	STAFF RESTROOM	E	53 SF
B109B	STAFF RESTROOM	E	53 SF
B109C	CUSTODIAL ROOM	E	62 SF
B110	CLASSROOM	E	1,176 SF
B110A	STUDENT RESTROOM	E	111 SF
B111	CLASSROOM	E	1,165 SF
B111A	STUDENT RESTROOM	E	111 SF
BLDG KB2 TOTAL AREA (NET)			6,250 SF

EXIT WIDTH CALCULATIONS

NOTE: EXIT WIDTH CALCULATIONS ARE PER CBC 1005.3.2. IF CALCULATED EXITING WIDTH IS LESS THAN 32", THEN 32" IS USED AS THE MINIMUM VALUE PER CBC 11B-403.5.1 (EXCEPTION 1). REFER TO "EXIT WIDTH PROVIDED" COLUMN BELOW AND DOOR SCHEDULE ON SHEET A9.1 FOR MORE INFORMATION.

MARK	DOOR WIDTH	EXITING OCCUPANTS	MINIMUM EXIT WIDTH REQUIRED (EXITING OCCUPANTS *.2)	EXIT WIDTH PROVIDED
A100A	3'-0"	1	32"	32"
A100B	3'-0"	6	32"	32"
B100A	3'-0"	17	32"	32"
B100B	3'-0"	17	32"	32"
B101A	3'-0"	17	32"	32"
B101B	3'-0"	17	32"	32"
B102A	3'-0"	17	32"	32"
B102B	3'-0"	17	32"	32"
B103A	3'-0"	17	32"	32"
B103B	3'-0"	17	32"	32"
B104A	3'-0"	17	32"	32"
B104B	3'-0"	17	32"	32"
B105A	3'-0"	17	32"	32"
B105B	3'-0"	17	32"	32"
B106A	3'-0"	17	32"	32"
B106B	3'-0"	17	32"	32"
B107	3'-0"	3	32"	32"
B108	3'-0"	1	32"	32"
B109	3'-0"	6	32"	32"
B110A	3'-0"	17	32"	32"
B110B	3'-0"	17	32"	32"
B111A	3'-0"	17	32"	32"
B111B	3'-0"	17	32"	32"

RECEIVER CALCULATION

11B-219.3 RECEIVERS

CUMULATIVE OCCUPANT LOAD OF CLASSROOMS: 306 OCCUPANTS

4% OF LOAD = **13 RECEIVERS REQUIRED**

25% OF REQUIRED RECEIVERS SHALL BE HEARING-AID COMPATIBLE IN ACCORDANCE WITH SECTION 11B-706.3 =
4 HEARING-AID COMPATIBLE RECIEVERS REQUIRED

FOR "ASSISTIVE LISTENING SYSTEM AVAILABLE" SIGN LOCATIONS REFER TO PLAN.
FOR SYSTEM SPECIFICATIONS REFER TO SIGNAL PLANS ON ELECTRICAL DWGS.

SIGNAGE LEGEND

- (S1) ACCESSIBLE ENTRANCE SIGN, SEE DETAIL 9 / A10.10.1
- (S2) ROOM IDENTIFICATION SIGN, SEE DETAIL 12 / A10.10.1
- (S4) EXIT SIGN, SEE DETAIL 13 / A10.10.1
- (S11) UNISEX WALL MOUNTED SIGN, SEE DETAIL 15 / A10.10.1
- (S12) UNISEX DOOR SIGN, SEE DETAIL 14 / A10.10.1
- (S13) ASSISTIVE LISTENING DEVICE AVAILABLE, SEE DETAIL 10 / A10.10.1

NOTE:
SEE CLASSROOM B100 FOR TYP. CLASSROOM SIGNAGE LOCATION, U.N.O.

PLUMBING ANALYSIS

PLUMBING OCCUPANCY (CPC CH. 4 TABLE A)

OCCUPANT LOAD	AREA	OCC. LOAD FACTOR	TOTAL PERSONS
GROUP B - OFFICE OR PUBLIC BUILDINGS	781 SF	200	4
GROUP E - SCHOOLS FOR DAY CARE, ELEMENTARY, SECONDARY	12,631 SF	50	252
	13,413 SF		
			256 PERSONS

MINIMUM PLUMBING FACILITIES (CPC TABLE 422.1, E OCCUPANCY)
256 OCCUPANTS = 128 MEN AND 128 WOMEN

FIXTURE TYPE	REQUIRED	PROVIDED
WATER CLOSETS	1 PER 50 MALE 1 PER 30 FEMALE	20
URINALS	1 PER 100	0
LAVATORIES	1 PER 40 MALE 1 PER 40 FEMALE	11
WATER FOUNTAINS	1 PER 150	11
SERVICE SINK OR LAUNDRY TRAY	1	1

LEGEND

WORKROOM
A101 | B
1,500 SF
10 OCC.
{15}

AREA IDENTITY/ CODE ANALYSIS
WORKROOM = ROOM NAME
A101 = ROOM NUMBER
B = OCCUPANCY CLASS (CBC 302)
1,500 SF = FLOOR AREA
10 = OCCUPANT LOAD
{15} = OCCUPANT LOAD PLUS ANCILLARY SPACE WHERE OCCURS

41 — PATH OF EGRESS
41 = OCCUPANT LOAD
STARTING POINT OF PATH OF TRAVEL TO EXIT MARKED BY DOT AT THE BEGINNING OF EGRESS LINE

(P) — PANIC HARDWARE DEVICE - REFERENCE DOOR SCHEDULE AND HARDWARE GROUP

DOOR CLEARENCE PER DETAIL 1/A10.8

CODE ANALYSIS FLOOR PLAN 1/8" = 1'-0" 10

DSA STAMP

STUDIO W ARCHITECTS

Studio W Architects
424 32nd Street, Suite D/E
Newport Beach, California 92663
[T] 949.774.2920
www.StudioW-Architects.com

ARCHITECT | ENGINEER

LICENSED ARCHITECT
BRYAN P WHITMORE
No. C 30345
Ren. 9/30/25
STATE OF CALIFORNIA
DATE SIGNED: 06/24/2024

GENERAL NOTES
1. This sheet is part of a set and is not to be used alone.
2. This sheet is not to be used for construction unless the architect's stamp and signature appear on the drawings and the status box indicated drawings have been released for construction.
3. These plans and prints thereof, as instruments of service, are owned by the architect and are for use on this project only. Reproduction and/or distribution without the prior written consent of the architect is forbidden.
4. Copyright Studio W Associates, Inc. 2024.

REVISION HISTORY

NO.	REMARKS	DATE

DRAWING STATUS

	DATE
DSA PLAN CHECK	03/29/2024
DSA BACK CHECK	06/24/2024
BIDDING	
CONSTRUCTION	

KEY PLAN

BUENA PARK SD
6885 ORANGETHORPE AVE
BUENA PARK, CA 90620

DSA SUBMITTAL

CARL E. GILBERT ELEMENTARY SCHOOL
TK-PK CLASSROOMS & EARLY LEARNING BUILDING
7255 8TH STREET, BUENA PARK, CA 90621

CODE ANALYSIS FLOOR PLAN

Date	Project Number
06/24/2024	23076
Application Number	Drawing Number
04-123212	A0.5
Drawn: AT	Checked: MS

PRINT DATE: 6/24/2024 9:39:58 PM
FILE PATH: BIM 360://23076 BPSD Gilbert ES PK-TK CRs, EarlyLearning Bldg/23076-BPUSD Gilbert-BLDG-A21.rvt

GENERAL NOTES:

1. WORK SHOWN HEREON SHALL BE DONE IN ACCORDANCE WITH THE "STANDARD SPECIFICATIONS FOR PUBLIC WORKS CONSTRUCTION," LATEST EDITION AND SUPPLEMENTS, THE UNIFORM BUILDING CODE (EXCAVATION AND GRADING), AND CITY OF BUENA PARK LOCAL ORDINANCES AS APPLICABLE.
2. ALL GRADING WORK SHALL BE PERFORMED IN ACCORDANCE WITH THE REQUIREMENTS AND RECOMMENDATIONS CONTAINED IN THE GEOTECHNICAL REPORT, "TK/PK CLASSROOMS & EARLY LEARNING BUILDING BUENA PARK SCHOOL DISTRICT CARL E. GILBERT ELEMENTARY SCHOOL 7255 8TH STREET", BY NINYO & MOORE DATED FEBRUARY 14, 2024.
3. EXISTING TOPOGRAPHY SHOWN HEREON WAS TAKEN FROM A SURVEY DATED JANUARY 15, 2024 BY HAHN AND ASSOCIATES, INC.
4. THE CONTRACTOR SHALL ASSUME SOLE AND COMPLETE RESPONSIBILITY FOR THE JOB SITE CONDITIONS, INCLUDING SAFETY OF ALL PERSONS AND PROPERTY, DURING THE COURSE OF CONSTRUCTION OF THIS PROJECT. THIS REQUIREMENT SHALL APPLY CONTINUOUSLY, AND SHALL NOT BE LIMITED TO NORMAL WORKING HOURS.
5. PRIOR TO COMMENCING CONSTRUCTION, CONTRACTOR SHALL HIRE A LICENSED LAND SURVEYOR TO VERIFY THAT THE ELEVATIONS SHOWN ON THE GRADING PLAN AT THE JOIN TO THE EXISTING IMPROVEMENTS MATCHES THE EXISTING ELEVATIONS IN THE FIELD. THE CONTRACTOR SHALL IMMEDIATELY NOTIFY THE ENGINEER OF ANY DISCREPANCIES, AND SHALL NOT BEGIN CONSTRUCTION, IN THE AREAS OF DISCREPANCIES UNTIL THE CHANGED CONDITIONS HAVE BEEN EVALUATED.
6. PRIOR TO COMMENCING CONSTRUCTION, CONTRACTOR SHALL POTHOLE AND VERIFY THE VERTICAL AND HORIZONTAL LOCATION OF ALL EXISTING UTILITIES WITHIN THE LIMIT OF WORK SHOWN ON THE CONSTRUCTION DRAWINGS, INCLUDING VERTICAL AND HORIZONTAL LOCATION OF EXISTING UNDERGROUND FACILITIES AT THE POINT-OF-CONNECTIONS AND CROSSINGS WITH THE PROPOSED UNDERGROUND FACILITIES. CONTRACTOR SHALL VERIFY THE POTHOLING INFORMATION AGAINST THE CONSTRUCTION DRAWINGS AND IMMEDIATELY NOTIFY THE ENGINEER OF ANY DISCREPANCIES AND/OR CONFLICTS. THE CONTRACTOR SHALL NOT BEGIN CONSTRUCTION OF UNDERGROUND FACILITIES UNTIL THE CHANGED CONDITIONS HAVE BEEN EVALUATED.
7. ALL DRAWINGS ARE CONSIDERED TO BE A PART OF THE CONTRACT DOCUMENTS. THE CONTRACTOR SHALL BE RESPONSIBLE FOR THE REVIEW AND COORDINATION OF ALL DRAWINGS AND SPECIFICATIONS PRIOR TO THE START OF CONSTRUCTION. ANY DISCREPANCIES THAT OCCUR SHALL BE BROUGHT TO THE ATTENTION OF THE ARCHITECT PRIOR TO THE START OF CONSTRUCTION SO THAT A CLARIFICATION CAN BE ISSUED. ANY WORK PERFORMED IN CONFLICT WITH THE CONTRACT DOCUMENTS OR ANY CODE REQUIREMENTS SHALL BE CORRECTED BY THE CONTRACTOR AT THEIR OWN EXPENSE AND AT NO EXPENSE TO THE OWNER OR ARCHITECT.
8. THE ENGINEER PREPARING THESE PLANS WILL NOT BE RESPONSIBLE FOR, OR LIABLE FOR, UNAUTHORIZED CHANGES TO OR USES OF THESE PLANS. ALL CHANGES TO THE PLANS MUST BE IN WRITING AND MUST BE APPROVED BY THE PREPARER OF THESE PLANS.
9. NOTES AND DETAILS ON DRAWINGS SHALL TAKE PRECEDENCE OVER GENERAL NOTES AND TYPICAL DETAILS. WHERE NO DETAILS ARE GIVEN, CONSTRUCTION SHALL BE AS SHOWN FOR SIMILAR WORK.
10. THE EXISTENCE, LOCATION AND CHARACTERISTICS OF UNDERGROUND UTILITY INFORMATION SHOWN ON THESE PLANS HAVE BEEN OBTAINED FROM A REVIEW OF AVAILABLE RECORD DATA. NO REPRESENTATION IS MADE AS TO THE ACCURACY OR COMPLETENESS OF SAID UTILITY INFORMATION. THE CONTRACTOR SHALL TAKE PRECAUTIONARY MEASURES TO PROTECT THE UTILITY LINES SHOWN AND ANY OTHER LINES NOT OF RECORD OR NOT SHOWN ON THESE PLANS.
11. IF AT ANY TIME DURING GRADING OPERATIONS, ANY UNFAVORABLE GEOLOGICAL CONDITIONS ARE ENCOUNTERED, GRADING IN THAT AREA WILL STOP UNTIL APPROVED CORRECTIVE MEASURES ARE OBTAINED.
12. THE PROPOSED GRADE IS THE FINAL GRADE AND NOT THE ROUGH GRADE. THE CONTRACTOR SHALL SUBTRACT THE THICKNESS OF THE PAVED SECTION AND/OR LANDSCAPE TOPSOIL SECTION TO ARRIVE AT THE ROUGH GRADE ELEVATION.
13. STRAIGHT GRADE SHALL BE MAINTAINED BETWEEN CONTOUR LINES AND SPOT ELEVATIONS UNLESS OTHERWISE SHOWN ON THE PLANS.
14. ALL DEBRIS AND FOREIGN MATERIAL SHALL BE REMOVED FROM THE SITE AND DISPOSED OF AT APPROVED DISPOSAL SITES. THE CONTRACTOR SHALL OBTAIN NECESSARY PERMITS FOR THE TRANSPORTATION OF MATERIAL TO AND FROM THE SITE.
15. ALL FILL SOILS OR SOILS DISTURBED OR OVEREXCAVATED DURING CONSTRUCTION SHALL BE COMPACTED PER THE REQUIREMENTS OF THE SOILS REPORT BUT NOT LESS THAN 90% MAXIMUM DENSITY AS DETERMINED BY A.S.T.M. SOIL COMPACTION TEST D-1557.
16. THE CONTRACTOR SHALL OBTAIN AN O.S.H.A. PERMIT FROM THE CALIFORNIA DIVISION OF INDUSTRIAL SAFETY PRIOR TO THE CONSTRUCTION OF TRENCHES OR EXCAVATIONS WHICH ARE FIVE FEET OR DEEPER.
17. DIMENSIONS TO PIPELINES ARE TO CENTERLINE UNLESS OTHERWISE NOTED.
18. ALL WATER LINES SHALL BE INSTALLED WITH 36" MINIMUM COVER FROM TOP OF PIPE TO FINISHED GRADE, UNLESS OTHERWISE NOTED.
19. THRUST BLOCKS SHALL BE INSTALLED AT WATERLINE HORIZONTAL AND VERTICAL BENDS, TEES, CAPPED ENDS AND REDUCERS ACCORDING TO THE DETAILS PROVIDED ON THESE PLANS.
20. CONSTRUCTION STAKING FOR IMPROVEMENTS SHOWN ON THESE PLANS SHALL BE PERFORMED BY A LICENSED LAND SURVEYOR.
21. THE CONTRACTOR SHALL REPLACE ALL EXISTING IMPROVEMENTS DAMAGED DURING CONSTRUCTION TO MATCH EXISTING, INCLUDING PERMANENT TRENCH RESURFACING.
22. CONTRACTOR TO CONTACT UNDERGROUND SERVICE ALERT 811 PRIOR TO EXCAVATION.
23. ALL DIMENSIONS ARE IN FEET OR DECIMALS THEREOF.
24. ALL CURB DIMENSIONS AND RADII ARE TO PAVEMENT FACE OF CURB.
25. CONTRACTOR TO BE AWARE OF ALL OVERHEAD LINES AT ALL TIMES, SO AS NOT TO DISTURB THEM.
26. WATER SHALL BE PROVIDED ONSITE AND USED TO CONTROL DUST DURING CONSTRUCTION OPERATIONS.
27. CONTRACTOR SHALL OBTAIN ANY NECESSARY PERMITS FROM THE CITY OF BUENA PARK FOR ALL WORK WITHIN THE PUBLIC RIGHT-OF-WAY.
28. STORM DRAINAGE SYSTEMS SHOWN ON THESE PLANS HAVE BEEN DESIGNED FOR THE FINAL SITE CONDITION AT COMPLETION OF THE PROJECT. THE CONTRACTOR IS RESPONSIBLE FOR MAINTAINING ADEQUATE DRAINAGE OF THE SITE, DURING INTERIM CONDITIONS OF CONSTRUCTION.
29. CONTRACTOR SHALL OBTAIN ALL REQUIRED PERMITS, INCLUDING NPDES, FROM THE APPROPRIATE JURISDICTIONAL AGENCIES FOR DISCHARGE OF GROUNDWATER THAT MAY BE NECESSARY TO ACCOMPLISH EXCAVATIONS SHOWN ON THESE PLANS.
30. BLANKET PROTECTION SHALL BE PROVIDED FOR ALL UTILITY PIPES AND CONDUITS UNDER DRIVEWAYS, ROADWAYS, PARKING LOTS, AND OTHER VEHICULAR PATH OF TRAVEL PER APWA STANDARD PLAN 225-1 WHERE THE MINIMUM COVER OVER THE PIPES AND CONDUITS IS LESS THAN 36".
31. CONTRACTOR SHALL ADJUST ALL EXISTING UTILITIES SUCH AS MANHOLE COVERS, CLEAN OUTLET COVERS, METER BOXES, PULL BOXES, VALVE BOXES, AREA DRAINS, CATCH BASINS, FIRE HYDRANTS AND OTHER SURFACE UTILITIES TO NEW FINISH GRADE. NOT ALL EXISTING SURFACE UTILITIES MAY HAVE BEEN IDENTIFIED ON THESE PLANS THAT MAY REQUIRE ADJUSTMENT TO NEW GRADE. THE CONTRACTOR SHALL BE RESPONSIBLE TO VISIT THE SITE TO FULLY ACKNOWLEDGE, UNDERSTAND AND INCLUDE THE EXTEND OF WORK REQUIRED.

LEGEND:

GENERAL

- CIVIL LIMITS OF WORK
- SHEET MATCH LINE

ANNOTATION

- 100.00 — SURFACE ELEVATION/UTILITY ELEVATION
- (100.00) — EXISTING SURFACE ELEVATION/UTILITY ELEVATION
- XX — CONSTRUCTION NOTE
- 2.0% — FLOW (DIRECTION AND GRADE)
- 2:1 — SLOPE (DIRECTION AND RUN:RISE)
- FF=100.00 — PAD/FINISHED FLOOR ELEVATION

SITE

- CURB/BACK OF CURB/GUTTER
- PROPERTY LINE/RIGHT OF WAY
- CENTER LINE
- TO BE DEMOLISHED
- ISOLATION JOINT

EROSION CONTROL

- GRAVEL BAG
- FIBER ROLL
- SURFACE FLOW DIRECTION

GRADING

- FLOW LINE
- GB — GRADE BREAK LINE
- R — RIDGE LINE
- SAWCUT

UTILITY

- SS — SANITARY SEWER
- W — WATER
- FW — FIRE WATER
- SD — STORM DRAIN
- E — ELECTRIC
- G — EXISTING GAS
- FW — EXISTING FIRE WATER
- W — EXISTING WATER LINE
- SS — EXISTING SANITARY SEWER
- POINT OF CONNECTION
- COORDINATION POINT
- UTILITY CLEANOUT
- STORM DRAIN INLET
- AREA DRAIN/PLANTER DRAIN
- TRENCH DRAIN
- BACKFLOW ASSEMBLY

BASIS OF BEARING

1. THE BEARINGS SHOWN HEREON ARE BASED ON THE CALIFORNIA PLANE COORDINATE SUSTEM- NAD 83 (2011) ZONE 5, DERIVED FROM OBSERVATIONS TAKEN ON SEPTEMBER 8, 2021, USING SOPAC'S CALIFORNIA REAL TIME NETWORK. THE BASIS OF BEARING FOR THE SURVEY.

BENCH MARK

1. THE ELEVATIONS OF 72.907' ON BENCHMARK NO. 1A-147-05 (DESCRIBED BY OCS 2005- FOUND 3.75" OCS ALUMINUM BENCHMARK DISK STAMPED "1A-147-05", SET IN THE SOUTHEASTERLY CORNER OF A 4.0 FT. BY 15.0 FT. CONCRETE CATCH BASIN. MONUMENT IS LOCATED IN THE NORTHEASTERLY PORTION OF THE INTERSECTION OF ARTESIA BOULEVARD AND WESTERN AVENUE, 42 FT. NORTHERLY OF THE CENTERLINE OF ARTESIA AND 61 FT. EASTERLY OF THE CENTERLINE OF WESTERN. MONUMENT IS SET LEVEL WITH THE SIDEWALK,) NAVD 1988 DATUM, 1995 ADJUSTMENT, AS SHOWN IN COUNTY OF ORANGE VERTICAL CONTROL DATA SHEET WAS USED AS ELEVATION DATUM FOR THIS SURVEY.

   IT IS THE RESPONSIBILITY OF THE CONSTRUCTION SURVEYOR AND/OR CONTRACTOR TO VERIFY AND CONFIRM AN ELEVATION DATUM THAT IS CONSISTENT WITH THE ELEVATIONS SHOWN ON THIS SURVEY BEFORE ANY CONSTRUCTION STAKING IS PERFORMED. THIS BENCH MARK SHALL BE USED FOR REFERENCE ONLY.

CALIFORNIA 811
CALL UNDERGROUND SERVICE ALERT OF SOUTHERN CALIFORNIA FOR UNDERGROUND LOCATING 48 HOURS BEFORE YOU DIG!
www.digalert.org

IMPORTANT NOTICE
SECTION 4216/4217 OF THE GOVERNMENT CODE REQUIRES A DIGALERT IDENTIFICATION NUMBER BE ISSUED BEFORE A "PERMIT TO EXCAVATE" WILL BE VALID. FOR YOUR DIGALERT I.D. NUMBER CALL UNDERGROUND SERVICE ALERT TOLL FREE 811 TWO WORKING DAYS BEFORE YOU DIG

ABBREVIATIONS:

AC	ASPHALTIC CONCRETE	(N)	NORTH
BW	BACK OF WALK	NTS	NOT TO SCALE
BLDG	BUILDING	PA	PLANTER AREA
BM	BENCH MARK	POC	POINT OF CONNECTION
BOS	BOTTOM OF STAIRS	PIV	POST INDICATOR VALVE
BMP	BEST MANAGEMENT PRACTICES	PCC	PORTLAND CEMENT CONCRETE
CB	CATCH BASIN	PRV	PRESSURE REDUCING VALVE
CI	CAST IRON	PVC	POLYVINYL CHLORIDE
CL, ℄	CENTER LINE	PL, ℙ	PROPERTY LINE
CMU	CONCRETE MASONRY UNIT	R=	RADIUS
CO	CLEANOUT	RCIP	RECTANGULAR CAST IRON PIPE
CONC	CONCRETE	RD	ROOF DRAIN
CF	CURB FACE	RW, R/W	RIGHT-OF-WAY
DW	DOMESTIC WATER	(S)	SOUTH
(E)	EAST	S=	SLOPE EQUALS
EG	EDGE OF GUTTER	SD	STORM DRAIN
EL., ELEV	ELEVATION	SSMH	SANITARY SEWER MANHOLE
ELEC	ELECTRIC, ELECTRICAL	SS	SANITARY SEWER
EX., EXIST.	EXISTING	STD	STANDARD
FDC	FIRE DEPARTMENT CONNECTION	SDMH	STORM DRAIN MANHOLE
FF	FINISHED FLOOR	TC	TOP OF CURB
FG	FINISHED GRADE (LANDSCAPE)	TEL	TELEPHONE
FS	FINISHED SURFACE (HARDSCAPE)	TG	TOP OF GRATE
FH	FIRE HYDRANT	TOS	TOP OF STAIRS
FL	FLOW LINE	TW	TOP OF WALL
FT	FOOT OR FEET	TS	TRAFFIC SIGNAL
FU	FIXTURE UNITS	TSB	TRAFFIC SIGNAL BOX
GV	GATE VALVE	TYP	TYPICAL
FW	FIRE WATER	TV	TELEVISION
GPM	GALLONS PER MINUTE	V.I.F.	VERIFY IN FIELD
HDPE	HIGH DENSITY POLYETHYLENE	VLT	VAULT
HP, (HP)	HIGH POINT	VCP	VITRIFIED CLAY PIPE
INV.	INVERT	(W)	WEST
LP, (LP)	LOW POINT	W	WATER
MAX.	MAXIMUM	WM	WATER METER
MIN.	MINIMUM	WV	WATER VALVE
MH	MANHOLE		

PATTERN LEGEND:

- CONCRETE WALKWAY (REFER TO SHEET C5.00FOR DETAILS)
- ASPHALT (REFER TO SHEET C5.00 FOR DETAILS)
- VEHICULAR CONCRETE PAVING (REFER TO SHEET C5.00. FOR DETAILS)
- PA — PLANTER AREA/LANDSCAPE (REFER TO LANDSCAPING PLANS FOR DETAILS)
- WOOD STAMP CONCRETE (REFER TO SHEET C5.00 FOR DETAILS)
- HEAVY VEHICULAR ASPHALT CONCRETE PAVING (REFER TO SHEET C5.00 FOR DETAILS)
- PLAY AREA (REFER TO LANDSCAPING PLANS FOR DETAILS)

PROJECT DIRECTORY:

OWNER:
BUENA PARK SCHOOL DISTRICT
6885 ORANGETHORPE AVE
BUENA PARK, CA 90620
TEL. 714.994.9236
CONTACT: MIKE MAGBOO

ARCHITECT:
STUDIO W ARCHITECTS
424 32ND STREET
NEWPORT BEACH, CA 92663
TEL. 949.774.2920
CONTACT: TONY PACHECO-TAYLOR

CIVIL ENGINEER:
KPFF CONSULTING ENGINEERS
140 NEWPORT CENTER DRIVE, SUITE 100
NEWPORT BEACH, CA 92626
TEL: 949.478.8800
CONTACT: JESUS PEREZ

SURVEYOR:
HAHN AND ASSOCIATES, INC.
25368 CONSTELLATION ROAD, SUITE 300
SANTA CLARITA, CA 91355
TEL. 661.775.9500
CONTACT: BRANDON HAHN

STRUCTURAL ENGINEER:
WELSH STRUCTURE, INC.
100 BAYVIEW CIR.,
NEWPORT BEACH, CA 92660
TEL. 714.352.6297
CONTACT: STEPHANIE WELSH

MECHANICAL & PLUMBING ENGINEER:
POCOCK DESIGN SOLUTIONS
14451 CHAMBERS ROAD, SUIT 210
TUSTIN, CA 92780
TEL. 949.417.3903
CONTACT: TIM POCOCK

ELECTRICAL ENGINEER:
FBA ENGINNER
150 PAULARINO AVENUE, SUIT A120
COSTA MESA, CA 92626
TEL. 949.852.1657
CONTACT: STEPHEN R. ZAJICEK

LANDSCAPE ARCHITECTS:
KDA LANDSCAPE ARCHITECTS, INC
325 7TH AVENUE, UNIT 214
SAN DIEGO, CA 92101-7176
TEL. 619.840.5174
CONTACT: KATHRYN J. KANAAN

CIVIL SHEET INDEX	
SHEET No.	DESCRIPTION
C0.01	TITLE SHEET
C1.00	COMPOSITE SITE PLAN
C1.10	EROSION CONTROL PLAN
C1.11	EROSION CONTROL PLAN
C1.12	EROSION CONTROL PLAN
C1.20	DEMOLITION PLAN
C1.21	DEMOLITION PLAN
C1.22	DEMOLITION PLAN
C1.30	GRADING PLAN
C1.31	GRADING PLAN
C1.32	GRADING PLAN
C1.40	PAVING PLAN
C1.41	PAVING PLAN
C1.42	PAVING PLAN
C1.50	UTILITY PLAN
C1.51	UTILITY PLAN
C1.52	UTILITY PLAN
C5.00	DETAILS
C5.01	DETAILS
C5.02	DETAILS
C5.03	DETAILS
C5.04	DETAILS
C5.05	DETAILS

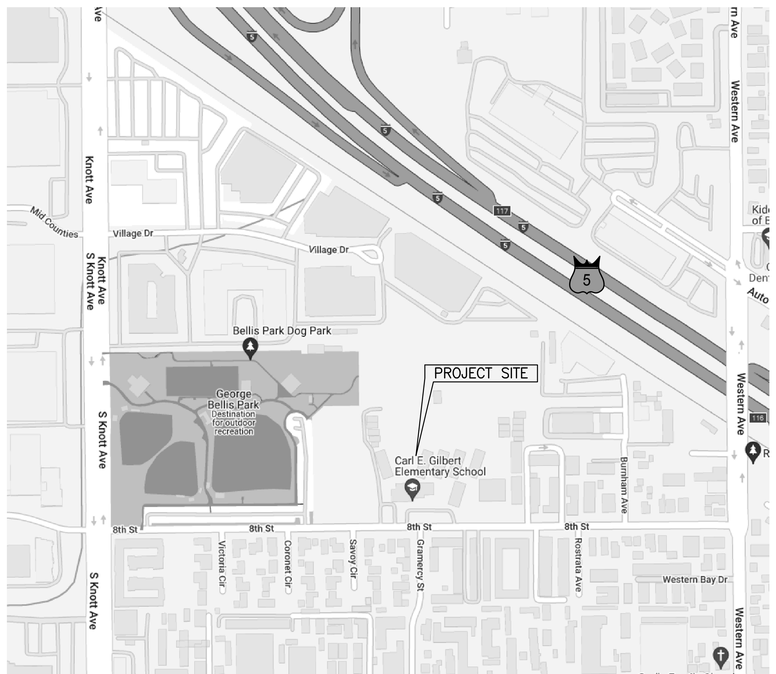

VICINITY MAP
NOT TO SCALE

DSA STAMP

STUDIO W ARCHITECTS

Studio W Architects
1930 H Street
Sacramento, California 95811
[T] 916.254.5600
www.StudioW-Architects.com

kpff
140 Newport Center Drive,
Suite 100
Newport Beach, CA 92660
O: 949.478.8800
www.kpff.com

ARCHITECT	ENGINEER
LICENSED ARCHITECT BRIAN P. WITHROW No. C 30345 Ren. 9/30/25 STATE OF CALIFORNIA	REGISTERED PROFESSIONAL ENGINEER ALI KHAMO No. C 74768 Exp. 12/31/25 CIVIL STATE OF CALIFORNIA
DATE SIGNED: 06/24/2024	DATE SIGNED: 06/24/2024

GENERAL NOTES
1. This sheet is part of a set and is not to be used alone.
2. This sheet is not to be used for construction unless the architect's stamp and signature appear on the drawings and the status box indicated drawings have been released for construction.
3. These plans and prints thereof, as instruments of service, are owned by the architect and are for use on this project only. Reproduction and/or distribution without the prior written consent of the architect is forbidden.
4. Copyright Studio W Associates, Inc. 2022.

REVISION HISTORY

DRAWING STATUS

	DATE
○ DSA PLAN CHECK	03/29/2024
● DSA BACK CHECK	06/24/2024
○ BIDDING	
○ CONSTRUCTION	

KEY PLAN

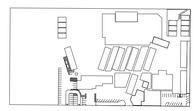

BUENA PARK USD
6885 ORANGETHORPE AVE
BUENA PARK, CA 90620

DSA SUBMITTAL

CARL E. GILBERT ELEMENTARY SCHOOL
TK/PK CLASSROOMS & EARLY LEARNING BUILDING
7255 8TH STREET, BUENA PARK, CA 90621

TITLE SHEET

Date	Project Number
06/24/2024	2300150
Application Number	Drawing Number
04-123212	C0.01
Drawn: TN	Checked: JP

Drawing: P:\2023\2300150 - 19 - BPSD - Carl E Gilbert Elementary School - TK-PK Classrooms & EL Building\DWG\SHEETS\2300150-C001.DWG Last Saved: Wednesday, June 19, 2024 11:19:23 AM Last Plotted: Wednesday, June 19, 2024 5:38:51 PM By: Alexis Bonilla

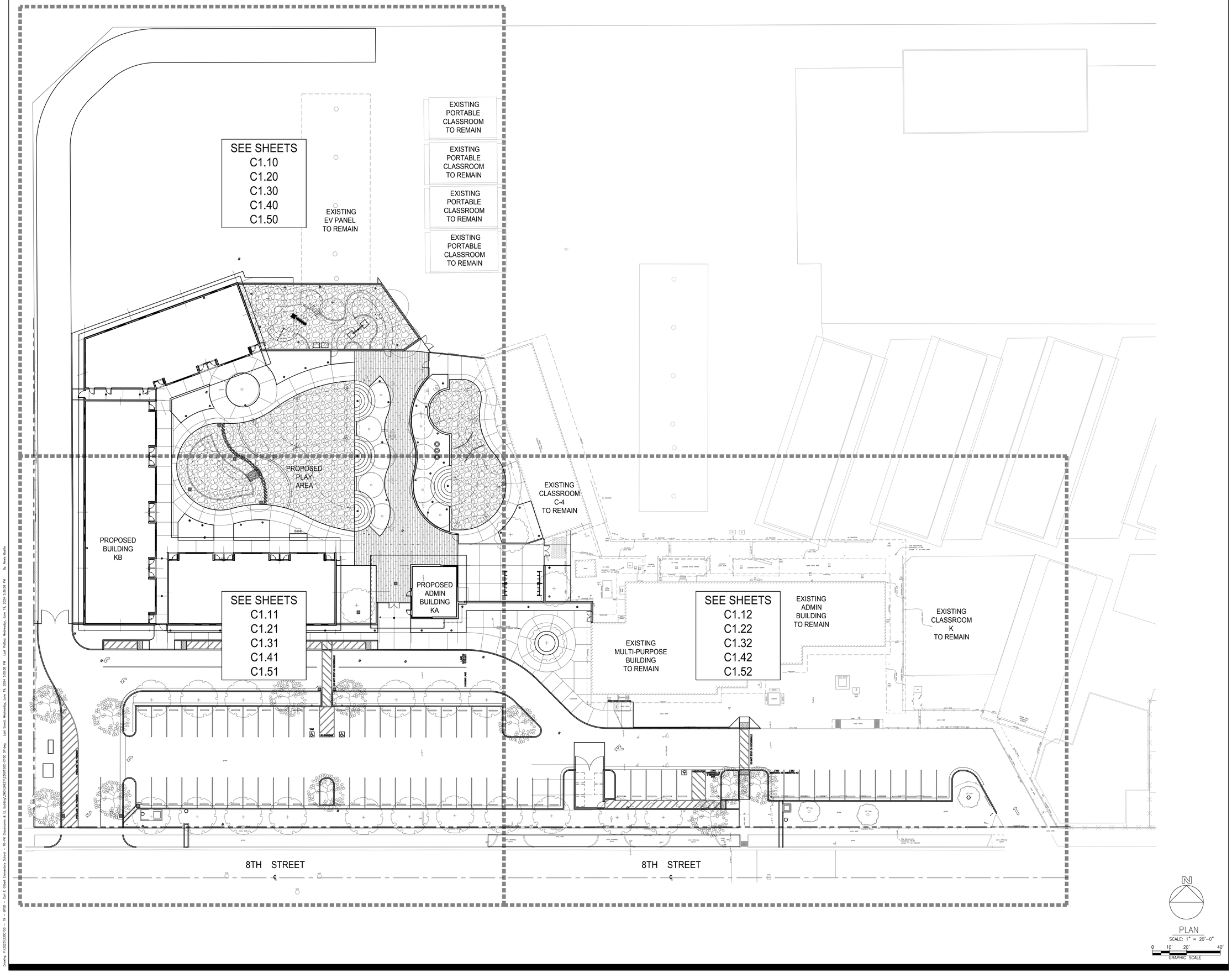

DSA STAMP

STUDIO W ARCHITECTS

Studio W Architects
1930 H Street
Sacramento, California 95811
[T] 916.254.5600
www.StudioW-Architects.com

kpff
140 Newport Center Drive,
Suite 100
Newport Beach, CA 92660
O: 949.478.8800
www.kpff.com

ARCHITECT	ENGINEER
LICENSED ARCHITECT BRIAN P. WHITMORE No. C 30345 Ren. 9/30/25 STATE OF CALIFORNIA	REGISTERED PROFESSIONAL ENGINEER ALI KHAMSI No. C74788 Exp. 12/31/25 CIVIL STATE OF CALIFORNIA
DATE SIGNED: 06/24/2024	DATE SIGNED: 06/24/2024

GENERAL NOTES

1. This sheet is part of a set and is not to be used alone.
2. This sheet is not to be used for construction unless the architect's stamp and signature appear on the drawings and the status box indicated drawings have been released for construction.
3. These plans and prints thereof, as instruments of service, are owned by the architect and are for use on this project only. Reproduction and/or distribution without the prior written consent of the architect is forbidden.
4. Copyright Studio W Associates, Inc. 2022.

REVISION HISTORY

DRAWING STATUS	DATE
DSA PLAN CHECK	03/29/2024
DSA BACK CHECK	06/24/2024
BIDDING	
CONSTRUCTION	

KEY PLAN

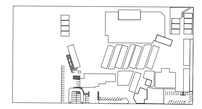

BUENA PARK USD
6885 ORANGETHORPE AVE
BUENA PARK, CA 90620

DSA SUBMITTAL

CARL E. GILBERT ELEMENTARY SCHOOL
TK/PK CLASSROOMS & EARLY LEARNING BUILDING
7255 8TH STREET, BUENA PARK, CA 90621

COMPOSITE SITE PLAN

Date	Project Number
06/24/2024	2300150
Application Number	Drawing Number
04-123212	C1.00
Drawn	Checked
TN	JP

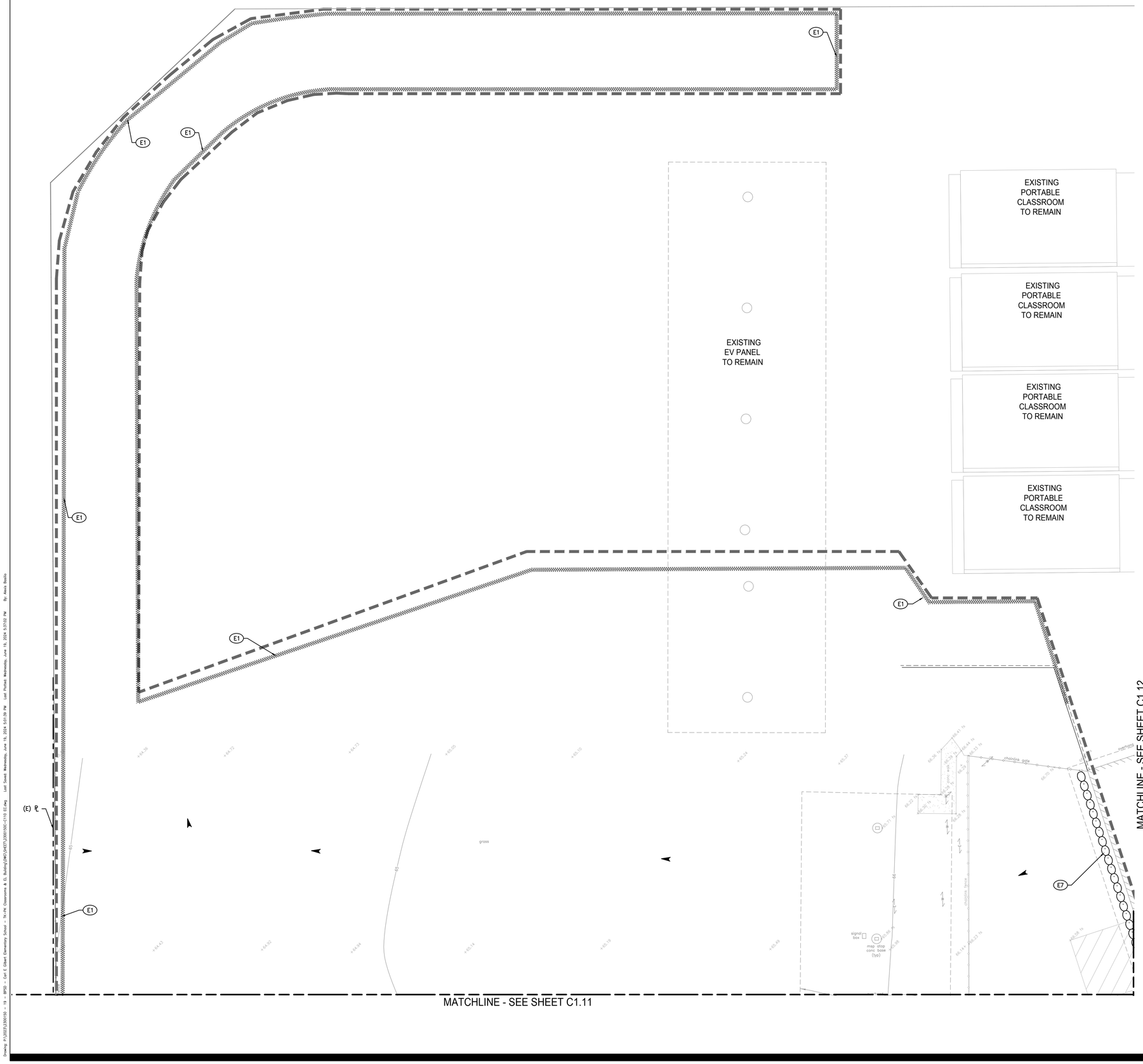

LEGEND:

- LIMIT LINE OF EROSION CONTROL
- GRAVEL BAGS
- FIBER ROLL
- SURFACE FLOW DIRECTION

BMP NOTES:

THE FOLLOWING BMPS AS OUTLINED IN, BUT NOT LIMITED TO, THE BEST MANAGEMENT PRACTICE HANDBOOK, CALIFORNIA STORMWATER QUALITY TASK FORCE, SACRAMENTO, CALIFORNIA 2009, OR THE LATEST REVISED EDITION, MAY APPLY DURING THE CONSTRUCTION OF THIS PROJECT (ADDITIONAL MEASURES MAY BE REQUIRED IF DEEMED APPROPRIATE BY CITY INSPECTORS):

EROSION CONTROL

EC1-SCHEDULING
EC2-PRESERVATION OF EXISTING VEGETATION
EC3-HYDRAULIC MULCH
EC4-HYDROSEEDING
EC5-SOIL BINDERS
~~EC6-STRAW MULCH~~
~~EC7-GEOTEXTILES~~
~~EC8-WOOD MULCHING~~
~~EC9-EARTH DIKES AND DRAINAGE SWALES~~
~~EC10-VELOCITY DISSIPATION DEVICES~~
~~EC11-SLOPE DRAINS~~
~~EC12-STREAMBANK STABILIZATION~~
~~EC13-POLYACRYLAMIDE~~

TEMPORARY SEDIMENT CONTROL

SE1-SILT FENCE
~~SE2-SEDIMENT BASIN~~
~~SE3-SEDIMENT TRAP~~
~~SE4-CHECK DAM~~
SE5-FIBER ROLLS
SE6-GRAVEL BAG BERM
SE7-STREET SWEEPING AND VACUUMING
SE8-SANDBAG BARRIER
~~SE9-STRAW BALE BARRIER~~
SE10-STORM DRAIN INLET PROTECTION
~~SE11-CHEMICAL TREATMENT~~

EQUIPMENT TRACKING CONTROL

TC1-STABILIZED CONSTRUCTION ENTRANCE/EXIT
TC2-STABILIZED CONSTRUCTION ROADWAY
~~TC3-ENTRANCE/OUTLET TIRE WASH~~

WIND EROSION CONTROL

WE1-WIND EROSION CONTROL

NON-STORMWATER MANAGEMENT

NS1-WATER CONSERVATION PRACTICES
NS2-DEWATERING OPERATIONS
NS3-PAVING AND GRINDING OPERATIONS
~~NS4-TEMPORARY STREAM CROSSING~~
~~NS5-CLEAR WATER DIVERSION~~
NS6-ILLICIT CONNECTION/DISCHARGE
NS7-POTABLE WATER/IRRIGATION
~~NS8-VEHICLE AND EQUIPMENT CLEANING~~
~~NS9-VEHICLE AND EQUIPMENT FUELING~~
~~NS10-VEHICLE AND EQUIPMENT MAINTENANCE~~
~~NS11-PILE DRIVING OPERATIONS~~
NS12-CONCRETE CURING
NS13-CONCRETE FINISHING
~~NS14-MATERIAL OVER WATER~~
~~NS15-DEMOLITION ADJACENT TO WATER~~
~~NS16-TEMPORARY BATCH PLANTS~~

WASTE MANAGEMENT & MATERIALS POLLUTION CONTROL

WM1-MATERIAL DELIVERY AND STORAGE
WM2-MATERIAL USE
WM3-STOCKPILE MANAGEMENT
WM4-SPILL PREVENTION AND CONTROL
WM5-SOLID WASTE MANAGEMENT
WM6-HAZARDOUS WASTE MANAGEMENT
WM7-CONTAMINATED SOIL MANAGEMENT
WM8-CONCRETE WASTE MANAGEMENT
WM9-SANITARY/SEPTIC WASTE MANAGEMENT
~~WM10-LIQUID WASTE MANAGEMENT~~

BMP NOTES:

1. THE CONTRACTOR SHALL BE RESPONSIBLE FOR CLEANUP OF ALL SILT AND MUD ON ADJACENT STREET(S), DUE TO CONSTRUCTION VEHICLES OR ANY OTHER CONSTRUCTION ACTIVITY, AT THE END OF EACH DAY, OR AFTER A STORM EVENT THAT CAUSES A BREECH IN INSTALLED CONSTRUCTION BMP'S WHICH MAY COMPROMISE STORM WATER QUALITY WITHIN ANY STREET(S).
2. ALL STOCKPILES OF SOIL AND/OR BUILDING MATERIALS THAT ARE INTENDED TO BE LEFT FOR A PERIOD GREATER THAN SEVEN CALENDAR DAYS ARE TO BE COVERED. ALL REMOVABLE BMP DEVICES SHALL BE IN PLACE AT THE END EACH WORKING DAY WHEN FIVE DAY RAIN PROBABILITY FORECAST EXCEEDS 40%.
3. A CONCRETE WASHOUT SHALL BE PROVIDED ON ALL PROJECTS WHICH PROPOSE THE CONSTRUCTION OF ANY CONCRETE IMPROVEMENTS WHICH ARE TO BE POURED IN PLACE ON SITE.
4. THE CONTRACTOR SHALL RESTORE ALL EROSION/SEDIMENT CONTROL DEVICES TO WORKING ORDER AFTER EACH RUN-OFF PRODUCING RAINFALL OR AFTER ANY MATERIAL BREACH IN EFFECTIVENESS.
5. ALL SLOPES THAT ARE CREATED OR DISTURBED BY CONSTRUCTION ACTIVITY MUST BE PROTECTED AGAINST EROSION AND SEDIMENT TRANSPORT AT ALL TIMES.
6. THE STORAGE OF ALL CONSTRUCTION MATERIALS AND EQUIPMENT MUST BE PROTECTED AGAINST ANY POTENTIAL RELEASE OF POLLUTANTS INTO THE ENVIRONMENT.

EROSION CONTROL NOTES:

1. EROSION CONTROL MEASURES SHALL BE IMPLEMENTED PER STORM WATER POLLUTION PREVENTION PLAN (SWPPP), DATED JULY 2024-JULY 2025.
2. TEMPORARY EROSION CONTROL DEVICES SHOWN ON THE GRADING PLAN WHICH INTERFERE WITH THE WORK SHALL BE RELOCATED OR MODIFIED AS AND WHEN THE INSPECTOR SO DIRECTS AS THE WORK PROGRESSES TO MEET "AS GRADED" CONDITIONS.
3. ALL LOOSE SOIL AND DEBRIS SHALL BE REMOVED FROM THE STREET AREAS UPON STARTING OPERATIONS AND PERIODICALLY THEREAFTER AS DIRECTED BY THE INSPECTOR
4. WHEN THE INSPECTOR SO DIRECTS, A 12-INCH BERM SHALL BE MAINTAINED ALONG THE TOP OF THE SLOPE OF THOSE FILLS ON WHICH GRADING IS NOT IN PROGRESS.
5. STORM AND SEWER DRAIN TRENCHES THAT ARE CUT THROUGH BASIN DIKES OR BASIN INLET DIKES SHALL BE PLUGGED WITH SANDBAGS.
6. EXCEPT WHEN THE INSPECTOR DIRECTS OTHERWISE, ALL DEVICES SHOWN SHALL BE IN PLACE AT THE END OF EACH WORKING DAY WHEN RAIN IS FORECAST, AND SHALL BE MAINTAINED DURING THE RAINY SEASON (OCTOBER 15 TO APRIL 15).
7. SANDBAGS SHALL BE STOCKPILED ON SITE, READY TO BE PLACED IN POSITION WHEN RAIN IS FORECAST, OR WHEN THE INSPECTOR SO DIRECTS.
8. A "STANDBY EMERGENCY CREW" SHALL BE ALERTED BY THE PERMITTEE OR THE CONTRACTOR TO PERFORM EMERGENCY WORK DURING RAINSTORMS. THE PARTY TO BE CONTACTED IS:
   NAME: _____ (TO BE FILLED IN BY CONTRACTOR)
   PHONE NUMBER: _____

EROSION CONTROL NOTES:

- FINAL BMP LOCATION TO BE DETERMINED BY THE CONTRACTOR.

(E1) PLACE FIBER ROLLS PER CASQA BMP SE-5.
(E2) STABILIZED CONSTRUCTION ENTRANCE PER CASQA BMP TC-1.
(E3) SANITARY/SEPTIC WASTE MANAGEMENT PER CASQA BMP WM-9.
(E4) SOLID WASTE MANAGEMENT PER CASQA BMP WM-5.
(E5) MATERIAL DELIVERY & STORAGE PER CASQA BMP WM-1.
(E6) CONCRETE WASTE MANAGEMENT PER CASQA BMP WM-8.
(E7) PLACE GRAVEL BAGS PER CASQA BMP SE-6.

N

PLAN
SCALE: 1" = 10'-0"
0 5' 10' 20'
GRAPHIC SCALE

DSA STAMP

STUDIO W ARCHITECTS

Studio W Architects
1930 H Street
Sacramento, California 95811
[T] 916.254.5600
www.StudioW-Architects.com

kpff
140 Newport Center Drive,
Suite 100
Newport Beach, CA 92660
O: 949.478.8800
www.kpff.com

ARCHITECT	ENGINEER
LICENSED ARCHITECT BRYAN P. WITHROW No. C 30345 Ren. 9/30/25 STATE OF CALIFORNIA	REGISTERED PROFESSIONAL ENGINEER ALI KHAMO No. C 74768 Exp. 12/31/25 CIVIL STATE OF CALIFORNIA
DATE SIGNED: 06/24/2024	DATE SIGNED: 06/24/2024

GENERAL NOTES

1. This sheet is part of a set and is not to be used alone.
2. This sheet is not to be used for construction unless the architect's stamp and signature appear on the drawings and the status box indicated drawings have been released for construction.
3. These plans and prints thereof, as instruments of service, are owned by the architect and are for use on this project only. Reproduction and/or distribution without the prior written consent of the architect is forbidden.
4. Copyright Studio W Associates, Inc. 2022.

REVISION HISTORY

DRAWING STATUS

	DATE
○ DSA PLAN CHECK	03/29/2024
● DSA BACK CHECK	06/24/2024
○ BIDDING	
○ CONSTRUCTION	

KEY PLAN

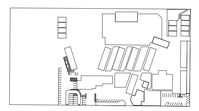

BUENA PARK USD
6885 ORANGETHORPE AVE
BUENA PARK, CA 90620

DSA SUBMITTAL

CARL E. GILBERT ELEMENTARY SCHOOL
TK/PK CLASSROOMS & EARLY LEARNING BUILDING
7255 8TH STREET, BUENA PARK, CA 90621

EROSION CONTROL PLAN

Date	Project Number
06/24/2024	2300150
Application Number	Drawing Number
04-123212	C1.10
Drawn / Checked	
TN / JP	

Drawing: P:\2023\2300150 - 19 - BPID - Carl E Gilbert Elementary School - TK-PK Classrooms & EL Building\DWG\SHEETS\2300150C-C1101 EC.dwg Last Saved: Wednesday, June 19, 2024 5:01:39 PM Last Plotted: Wednesday, June 19, 2024 5:37:02 PM By: Alicia Bisello

MATCHLINE - SEE SHEET C1.10

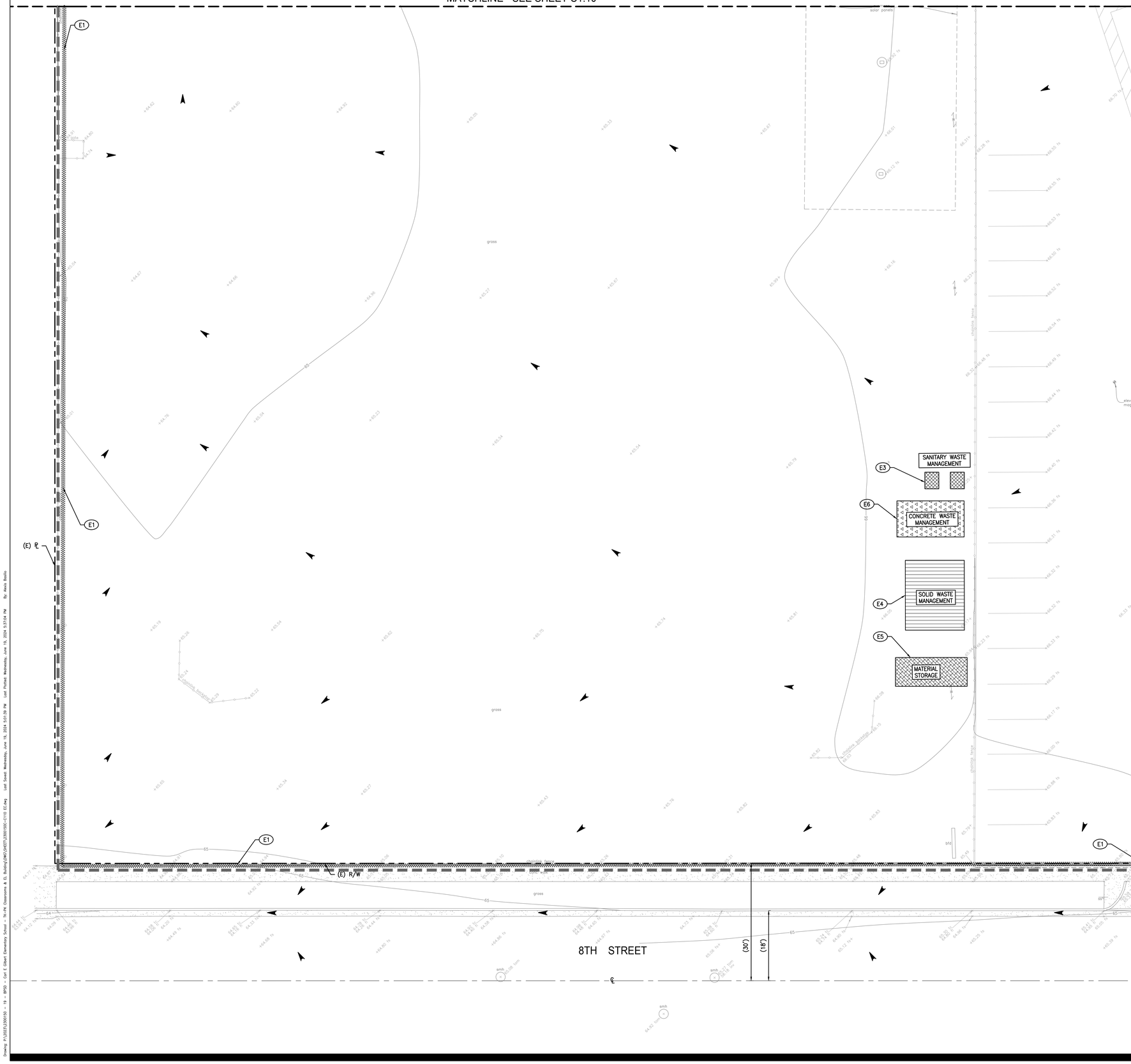

MATCHLINE - SEE SHEET C1.12

LEGEND:

- LIMIT LINE OF EROSION CONTROL
- GRAVEL BAGS
- FIBER ROLL
- SURFACE FLOW DIRECTION

BMP NOTES:

THE FOLLOWING BMPS AS OUTLINED IN, BUT NOT LIMITED TO, THE BEST MANAGEMENT PRACTICE HANDBOOK, CALIFORNIA STORMWATER QUALITY TASK FORCE, SACRAMENTO, CALIFORNIA 2009, OR THE LATEST REVISED EDITION, MAY APPLY DURING THE CONSTRUCTION OF THIS PROJECT (ADDITIONAL MEASURES MAY BE REQUIRED IF DEEMED APPROPRIATE BY CITY INSPECTORS):

EROSION CONTROL

EC1–SCHEDULING
EC2–PRESERVATION OF EXISTING VEGETATION
EC3–HYDRAULIC MULCH
EC4–HYDROSEEDING
EC5–SOIL BINDERS
~~EC6–STRAW MULCH~~
~~EC7–GEOTEXTILES~~
~~EC8–WOOD MULCHING~~
~~EC9–EARTH DIKES AND DRAINAGE SWALES~~
~~EC10–VELOCITY DISSIPATION DEVICES~~
~~EC11–SLOPE DRAINS~~
~~EC12–STREAMBANK STABILIZATION~~
~~EC13–POLYACRYLAMIDE~~

TEMPORARY SEDIMENT CONTROL

SE1–SILT FENCE
~~SE2–SEDIMENT BASIN~~
~~SE3–SEDIMENT TRAP~~
~~SE4–CHECK DAM~~
SE5–FIBER ROLLS
SE6–GRAVEL BAG BERM
SE7–STREET SWEEPING AND VACUUMING
SE8–SANDBAG BARRIER
~~SE9–STRAW BALE BARRIER~~
SE10–STORM DRAIN INLET PROTECTION
~~SE11–CHEMICAL TREATMENT~~

EQUIPMENT TRACKING CONTROL

TC1–STABILIZED CONSTRUCTION ENTRANCE/EXIT
TC2–STABILIZED CONSTRUCTION ROADWAY
~~TC3–ENTRANCE/OUTLET TIRE WASH~~

WIND EROSION CONTROL

WE1–WIND EROSION CONTROL

NON–STORMWATER MANAGEMENT

NS1–WATER CONSERVATION PRACTICES
NS2–DEWATERING OPERATIONS
NS3–PAVING AND GRINDING OPERATIONS
~~NS4–TEMPORARY STREAM CROSSING~~
~~NS5–CLEAR WATER DIVERSION~~
NS6–ILLICIT CONNECTION/DISCHARGE
NS7–POTABLE WATER/IRRIGATION
~~NS8–VEHICLE AND EQUIPMENT CLEANING~~
~~NS9–VEHICLE AND EQUIPMENT FUELING~~
~~NS10–VEHICLE AND EQUIPMENT MAINTENANCE~~
~~NS11–PILE DRIVING OPERATIONS~~
NS12–CONCRETE CURING
NS13–CONCRETE FINISHING
~~NS14–MATERIAL OVER WATER~~
~~NS15–DEMOLITION ADJACENT TO WATER~~
~~NS16–TEMPORARY BATCH PLANTS~~

WASTE MANAGEMENT & MATERIALS POLLUTION CONTROL

WM1–MATERIAL DELIVERY AND STORAGE
WM2–MATERIAL USE
WM3–STOCKPILE MANAGEMENT
WM4–SPILL PREVENTION AND CONTROL
WM5–SOLID WASTE MANAGEMENT
WM6–HAZARDOUS WASTE MANAGEMENT
WM7–CONTAMINATED SOIL MANAGEMENT
WM8–CONCRETE WASTE MANAGEMENT
WM9–SANITARY/SEPTIC WASTE MANAGEMENT
~~WM10–LIQUID WASTE MANAGEMENT~~

BMP NOTES:

1. THE CONTRACTOR SHALL BE RESPONSIBLE FOR CLEANUP OF ALL SILT AND MUD ON ADJACENT STREET(S), DUE TO CONSTRUCTION VEHICLES OR ANY OTHER CONSTRUCTION ACTIVITY, AT THE END OF EACH DAY, OR AFTER A STORM EVENT THAT CAUSES A BREECH IN INSTALLED CONSTRUCTION BMP'S WHICH MAY COMPROMISE STORM WATER QUALITY WITHIN ANY STREET(S).
2. ALL STOCKPILES OF SOIL AND/OR BUILDING MATERIALS THAT ARE INTENDED TO BE LEFT FOR A PERIOD GREATER THAN SEVEN CALENDAR DAYS ARE TO BE COVERED. ALL REMOVABLE BMP DEVICES SHALL BE IN PLACE AT THE END EACH WORKING DAY WHEN FIVE DAY RAIN PROBABILITY FORECAST EXCEEDS 40%.
3. A CONCRETE WASHOUT SHALL BE PROVIDED ON ALL PROJECTS WHICH PROPOSE THE CONSTRUCTION OF ANY CONCRETE IMPROVEMENTS WHICH ARE TO BE POURED IN PLACE ON SITE.
4. THE CONTRACTOR SHALL RESTORE ALL EROSION/SEDIMENT CONTROL DEVICES TO WORKING ORDER AFTER EACH RUN–OFF PRODUCING RAINFALL OR AFTER ANY MATERIAL BREACH IN EFFECTIVENESS.
5. ALL SLOPES THAT ARE CREATED OR DISTURBED BY CONSTRUCTION ACTIVITY MUST BE PROTECTED AGAINST EROSION AND SEDIMENT TRANSPORT AT ALL TIMES.
6. THE STORAGE OF ALL CONSTRUCTION MATERIALS AND EQUIPMENT MUST BE PROTECTED AGAINST ANY POTENTIAL RELEASE OF POLLUTANTS INTO THE ENVIRONMENT.

EROSION CONTROL NOTES:

1. EROSION CONTROL MEASURES SHALL BE IMPLEMENTED PER STORM WATER POLLUTION PREVENTION PLAN (SWPPP), DATED JULY 2024–JULY 2025.
2. TEMPORARY EROSION CONTROL DEVICES SHOWN ON THE GRADING PLAN WHICH INTERFERE WITH THE WORK SHALL BE RELOCATED OR MODIFIED AS AND WHEN THE INSPECTOR SO DIRECTS AS THE WORK PROGRESSES TO MEET "AS GRADED" CONDITIONS.
3. ALL LOOSE SOIL AND DEBRIS SHALL BE REMOVED FROM THE STREET AREAS UPON STARTING OPERATIONS AND PERIODICALLY THEREAFTER AS DIRECTED BY THE INSPECTOR
4. WHEN THE INSPECTOR SO DIRECTS, A 12–INCH BERM SHALL BE MAINTAINED ALONG THE TOP OF THE SLOPE OF THOSE FILLS ON WHICH GRADING IS NOT IN PROGRESS.
5. STORM AND SEWER DRAIN TRENCHES THAT ARE CUT THROUGH BASIN DIKES OR BASIN INLET DIKES SHALL BE PLUGGED WITH SANDBAGS.
6. EXCEPT WHEN THE INSPECTOR DIRECTS OTHERWISE, ALL DEVICES SHOWN SHALL BE IN PLACE AT THE END OF EACH WORKING DAY WHEN RAIN IS FORECAST, AND SHALL BE MAINTAINED DURING THE RAINY SEASON (OCTOBER 15 TO APRIL 15).
7. SANDBAGS SHALL BE STOCKPILED ON SITE, READY TO BE PLACED IN POSITION WHEN RAIN IS FORECAST, OR WHEN THE INSPECTOR SO DIRECTS.
8. A "STANDBY EMERGENCY CREW" SHALL BE ALERTED BY THE PERMITTEE OR THE CONTRACTOR TO PERFORM EMERGENCY WORK DURING RAINSTORMS. THE PARTY TO BE CONTACTED IS:
   NAME: _____ (TO BE FILLED IN BY CONTRACTOR)
   PHONE NUMBER: _____

EROSION CONTROL NOTES:

- FINAL BMP LOCATION TO BE DETERMINED BY THE CONTRACTOR.

(E1) PLACE FIBER ROLLS PER CASQA BMP SE–5.

(E2) STABILIZED CONSTRUCTION ENTRANCE PER CASQA BMP TC–1.

(E3) SANITARY/SEPTIC WASTE MANAGEMENT PER CASQA BMP WM–9.

(E4) SOLID WASTE MANAGEMENT PER CASQA BMP WM–5.

(E5) MATERIAL DELIVERY & STORAGE PER CASQA BMP WM–1.

(E6) CONCRETE WASTE MANAGEMENT PER CASQA BMP WM–8.

(E7) PLACE GRAVEL BAGS PER CASQA BMP SE–6.

N

PLAN
SCALE: 1" = 10'–0"
0 5' 10' 20'
GRAPHIC SCALE

DSA STAMP

STUDIO W ARCHITECTS

Studio W Architects
1930 H Street
Sacramento, California 95811
[T] 916.254.5600
www.StudioW-Architects.com

kpff
140 Newport Center Drive,
Suite 100
Newport Beach, CA 92660
O: 949.478.8800
www.kpff.com

ARCHITECT	ENGINEER
LICENSED ARCHITECT BRYAN P. WHITMORE No. C 30345 Ren. 9/30/25 STATE OF CALIFORNIA	REGISTERED PROFESSIONAL ENGINEER ALI KHAMO No. C74768 Exp. 12/31/25 CIVIL STATE OF CALIFORNIA
DATE SIGNED: 06/24/2024	DATE SIGNED: 06/24/2024

GENERAL NOTES

1. This sheet is part of a set and is not to be used alone.
2. This sheet is not to be used for construction unless the architect's stamp and signature appear on the drawings and the status box indicated drawings have been released for construction.
3. These plans and prints thereof, as instruments of service, are owned by the architect and are for use on this project only. Reproduction and/or distribution without the prior written consent of the architect is forbidden.
4. Copyright Studio W Associates, Inc. 2022.

REVISION HISTORY

DRAWING STATUS		DATE
○	DSA PLAN CHECK	03/29/2024
●	DSA BACK CHECK	06/24/2024
○	BIDDING	
○	CONSTRUCTION	

KEY PLAN

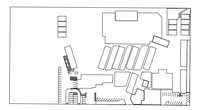

BUENA PARK USD
6885 ORANGETHORPE AVE
BUENA PARK, CA 90620

DSA SUBMITTAL

CARL E. GILBERT ELEMENTARY SCHOOL
TK/PK CLASSROOMS & EARLY LEARNING BUILDING
7255 8TH STREET, BUENA PARK, CA 90621

EROSION CONTROL PLAN

Date	Project Number
06/24/2024	2300150
Application Number	Drawing Number
04-123212	C1.11
Drawn / Checked	
TN / JP	

Drawing: R:\2023\2300150 – 19 - BPSD – Carl E Gilbert Elementary School – TK-PK Classrooms & EL Building\DWG\SHEETS\2300150C-C119 EC.dwg Last Saved: Wednesday, June 19, 2024 5:01:39 PM Last Plotted: Wednesday, June 19, 2024 5:37:04 PM By: Alicia Bastio

EROSION CONTROL NOTES:

* FINAL BMP LOCATION TO BE DETERMINED BY THE CONTRACTOR.

(E1) PLACE FIBER ROLLS PER CASQA BMP SE-5.

(E2) STABILIZED CONSTRUCTION ENTRANCE PER CASQA BMP TC-1.

(E3) SANITARY/SEPTIC WASTE MANAGEMENT PER CASQA BMP WM-9.

(E4) SOLID WASTE MANAGEMENT PER CASQA BMP WM-5.

(E5) MATERIAL DELIVERY & STORAGE PER CASQA BMP WM-1.

(E6) CONCRETE WASTE MANAGEMENT PER CASQA BMP WM-8.

(E7) PLACE GRAVEL BAGS PER CASQA BMP SE-6.

EROSION CONTROL NOTES:

1. EROSION CONTROL MEASURES SHALL BE IMPLEMENTED PER STORM WATER POLLUTION PREVENTION PLAN (SWPPP), DATED JULY 2024–JULY 2025.
2. TEMPORARY EROSION CONTROL DEVICES SHOWN ON THE GRADING PLAN WHICH INTERFERE WITH THE WORK SHALL BE RELOCATED OR MODIFIED AS AND WHEN THE INSPECTOR SO DIRECTS AS THE WORK PROGRESSES TO MEET "AS GRADED" CONDITIONS.
3. ALL LOOSE SOIL AND DEBRIS SHALL BE REMOVED FROM THE STREET AREAS UPON STARTING OPERATIONS AND PERIODICALLY THEREAFTER AS DIRECTED BY THE INSPECTOR
4. WHEN THE INSPECTOR SO DIRECTS, A 12–INCH BERM SHALL BE MAINTAINED ALONG THE TOP OF THE SLOPE OF THOSE FILLS ON WHICH GRADING IS NOT IN PROGRESS.
5. STORM AND SEWER DRAIN TRENCHES THAT ARE CUT THROUGH BASIN DIKES OR BASIN INLET DIKES SHALL BE PLUGGED WITH SANDBAGS.
6. EXCEPT WHEN THE INSPECTOR DIRECTS OTHERWISE, ALL DEVICES SHOWN SHALL BE IN PLACE AT THE END OF EACH WORKING DAY WHEN RAIN IS FORECAST, AND SHALL BE MAINTAINED DURING THE RAINY SEASON (OCTOBER 15 TO APRIL 15).
7. SANDBAGS SHALL BE STOCKPILED ON SITE, READY TO BE PLACED IN POSITION WHEN RAIN IS FORECAST, OR WHEN THE INSPECTOR SO DIRECTS.
8. A "STANDBY EMERGENCY CREW" SHALL BE ALERTED BY THE PERMITTEE OR THE CONTRACTOR TO PERFORM EMERGENCY WORK DURING RAINSTORMS. THE PARTY TO BE CONTACTED IS:
   NAME: _____ (TO BE FILLED IN BY CONTRACTOR)
   PHONE NUMBER: _____

LEGEND:

- LIMIT LINE OF EROSION CONTROL
- GRAVEL BAGS
- FIBER ROLL
- SURFACE FLOW DIRECTION

BMP NOTES:

THE FOLLOWING BMPS AS OUTLINED IN, BUT NOT LIMITED TO, THE BEST MANAGEMENT PRACTICE HANDBOOK, CALIFORNIA STORMWATER QUALITY TASK FORCE, SACRAMENTO, CALIFORNIA 2009, OR THE LATEST REVISED EDITION, MAY APPLY DURING THE CONSTRUCTION OF THIS PROJECT (ADDITIONAL MEASURES MAY BE REQUIRED IF DEEMED APPROPRIATE BY CITY INSPECTORS):

EROSION CONTROL

EC1–SCHEDULING
EC2–PRESERVATION OF EXISTING VEGETATION
EC3–HYDRAULIC MULCH
EC4–HYDROSEEDING
EC5–SOIL BINDERS
~~EC6–STRAW MULCH~~
EC7–GEOTEXTILES
~~EC8–WOOD MULCHING~~
~~EC9–EARTH DIKES AND DRAINAGE SWALES~~
~~EC10–VELOCITY DISSIPATION DEVICES~~
~~EC11–SLOPE DRAINS~~
~~EC12–STREAMBANK STABILIZATION~~
~~EC13–POLYACRYLAMIDE~~

TEMPORARY SEDIMENT CONTROL

SE1–SILT FENCE
~~SE2–SEDIMENT BASIN~~
~~SE3–SEDIMENT TRAP~~
~~SE4–CHECK DAM~~
SE5–FIBER ROLLS
SE6–GRAVEL BAG BERM
SE7–STREET SWEEPING AND VACUUMING
SE8–SANDBAG BARRIER
~~SE9–STRAW BALE BARRIER~~
SE10–STORM DRAIN INLET PROTECTION
~~SE11–CHEMICAL TREATMENT~~

EQUIPMENT TRACKING CONTROL

TC1–STABILIZED CONSTRUCTION ENTRANCE/EXIT
TC2–STABILIZED CONSTRUCTION ROADWAY
~~TC3–ENTRANCE/OUTLET TIRE WASH~~

WIND EROSION CONTROL

WE1–WIND EROSION CONTROL

NON–STORMWATER MANAGEMENT

NS1–WATER CONSERVATION PRACTICES
NS2–DEWATERING OPERATIONS
NS3–PAVING AND GRINDING OPERATIONS
~~NS4–TEMPORARY STREAM CROSSING~~
~~NS5–CLEAR WATER DIVERSION~~
NS6–ILLICIT CONNECTION/DISCHARGE
NS7–POTABLE WATER/IRRIGATION
~~NS8–VEHICLE AND EQUIPMENT CLEANING~~
~~NS9–VEHICLE AND EQUIPMENT FUELING~~
~~NS10–VEHICLE AND EQUIPMENT MAINTENANCE~~
~~NS11–PILE DRIVING OPERATIONS~~
NS12–CONCRETE CURING
NS13–CONCRETE FINISHING
~~NS14–MATERIAL OVER WATER~~
~~NS15–DEMOLITION ADJACENT TO WATER~~
~~NS16–TEMPORARY BATCH PLANTS~~

WASTE MANAGEMENT & MATERIALS POLLUTION CONTROL

WM1–MATERIAL DELIVERY AND STORAGE
WM2–MATERIAL USE
WM3–STOCKPILE MANAGEMENT
WM4–SPILL PREVENTION AND CONTROL
WM5–SOLID WASTE MANAGEMENT
WM6–HAZARDOUS WASTE MANAGEMENT
WM7–CONTAMINATED SOIL MANAGEMENT
WM8–CONCRETE WASTE MANAGEMENT
WM9–SANITARY/SEPTIC WASTE MANAGEMENT
~~WM10–LIQUID WASTE MANAGEMENT~~

BMP NOTES:

1. THE CONTRACTOR SHALL BE RESPONSIBLE FOR CLEANUP OF ALL SILT AND MUD ON ADJACENT STREET(S), DUE TO CONSTRUCTION VEHICLES OR ANY OTHER CONSTRUCTION ACTIVITY, AT THE END OF EACH DAY, OR AFTER A STORM EVENT THAT CAUSES A BREECH IN INSTALLED CONSTRUCTION BMP'S WHICH MAY COMPROMISE STORM WATER QUALITY WITHIN ANY STREET(S).
2. ALL STOCKPILES OF SOIL AND/OR BUILDING MATERIALS THAT ARE INTENDED TO BE LEFT FOR A PERIOD GREATER THAN SEVEN CALENDAR DAYS ARE TO BE COVERED. ALL REMOVABLE BMP DEVICES SHALL BE IN PLACE AT THE END EACH WORKING DAY WHEN FIVE DAY RAIN PROBABILITY FORECAST EXCEEDS 40%.
3. A CONCRETE WASHOUT SHALL BE PROVIDED ON ALL PROJECTS WHICH PROPOSE THE CONSTRUCTION OF ANY CONCRETE IMPROVEMENTS WHICH ARE TO BE POURED IN PLACE ON SITE.
4. THE CONTRACTOR SHALL RESTORE ALL EROSION/SEDIMENT CONTROL DEVICES TO WORKING ORDER AFTER EACH RUN–OFF PRODUCING RAINFALL OR AFTER ANY MATERIAL BREACH IN EFFECTIVENESS.
5. ALL SLOPES THAT ARE CREATED OR DISTURBED BY CONSTRUCTION ACTIVITY MUST BE PROTECTED AGAINST EROSION AND SEDIMENT TRANSPORT AT ALL TIMES.
6. THE STORAGE OF ALL CONSTRUCTION MATERIALS AND EQUIPMENT MUST BE PROTECTED AGAINST ANY POTENTIAL RELEASE OF POLLUTANTS INTO THE ENVIRONMENT.

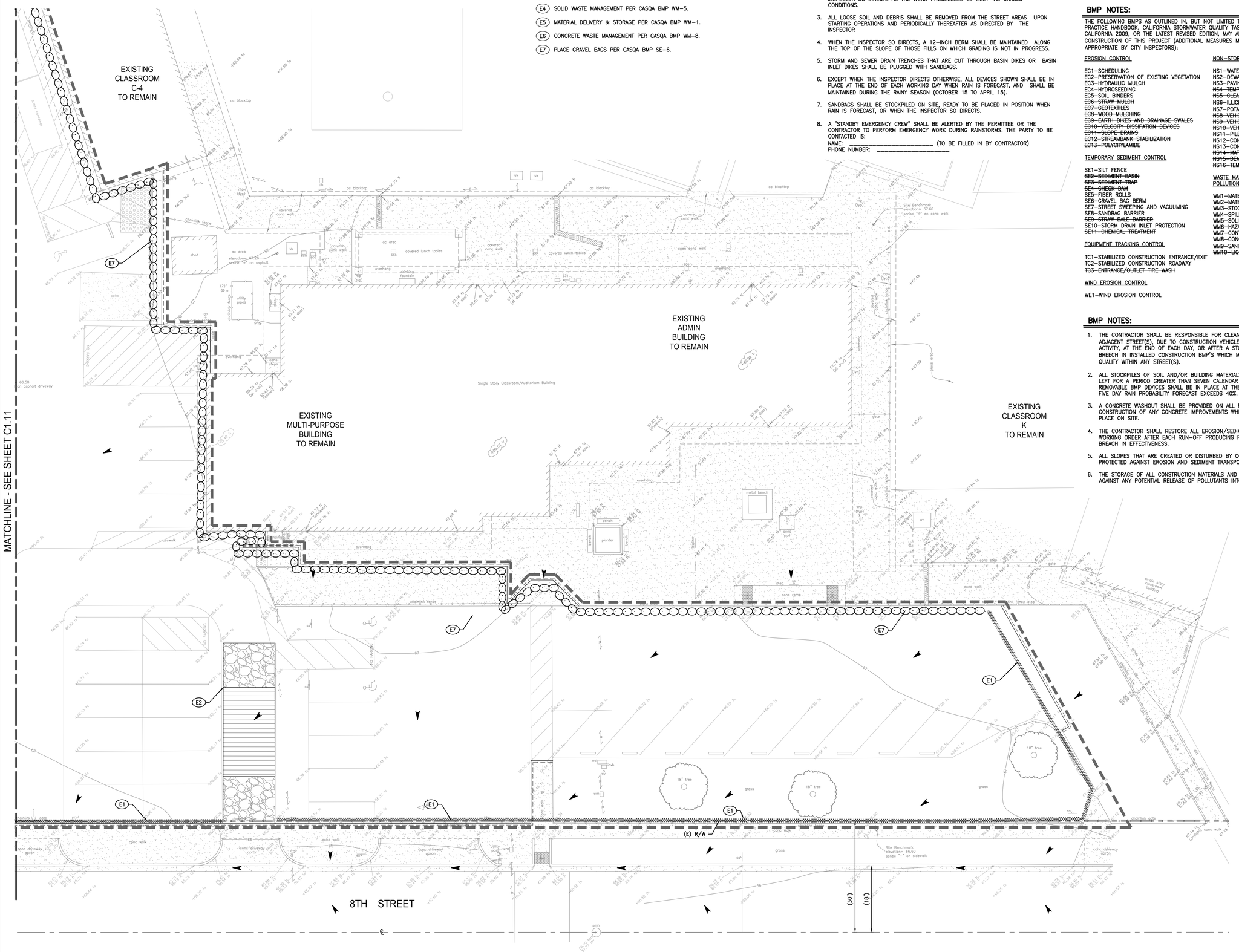

Studio W Architects
1930 H Street
Sacramento, California 95811
[T] 916.254.5600
www.StudioW-Architects.com

kpff
140 Newport Center Drive,
Suite 100
Newport Beach, CA 92660
O: 949.478.8800
www.kpff.com

ARCHITECT	ENGINEER
LICENSED ARCHITECT BENJAMIN P. WHITMORE No. C 30345 Ren. 9/30/25 STATE OF CALIFORNIA	REGISTERED PROFESSIONAL ENGINEER ALI KHAMO No. C74768 Exp. 12/31/25 CIVIL STATE OF CALIFORNIA
DATE SIGNED: 06/24/2024	DATE SIGNED: 06/24/2024

GENERAL NOTES

1. This sheet is part of a set and is not to be used alone.
2. This sheet is not to be used for construction unless the architect's stamp and signature appear on the drawings and the status box indicated drawings have been released for construction.
3. These plans and prints thereof, as instruments of service, are owned by the architect and are for use on this project only. Reproduction and/or distribution without the prior written consent of the architect is forbidden.
4. Copyright Studio W Associates, Inc. 2022.

REVISION HISTORY

DRAWING STATUS

	DATE
○ DSA PLAN CHECK	03/29/2024
● DSA BACK CHECK	06/24/2024
○ BIDDING	
○ CONSTRUCTION	

KEY PLAN

BUENA PARK USD
6885 ORANGETHORPE AVE
BUENA PARK, CA 90620

DSA SUBMITTAL

CARL E. GILBERT ELEMENTARY SCHOOL
TK/PK CLASSROOMS & EARLY LEARNING BUILDING
7255 8TH STREET, BUENA PARK, CA 90621

EROSION CONTROL PLAN

Date	Project Number
06/24/2024	2300150
Application Number	Drawing Number
04-123212	C1.12
Drawn: TN	Checked: JP

Drawing: P:\2023\2300150 - 19 - BPSD - Carl E Gilbert Elementary School - TK/PK Classrooms & EL Building\DWG\SHEETS\2300150-C1110 EC.dwg Last Saved: Wednesday, June 19, 2024 5:01:39 PM Last Plotted: Wednesday, June 19, 2024 5:37:09 PM By: Alexis Bostic

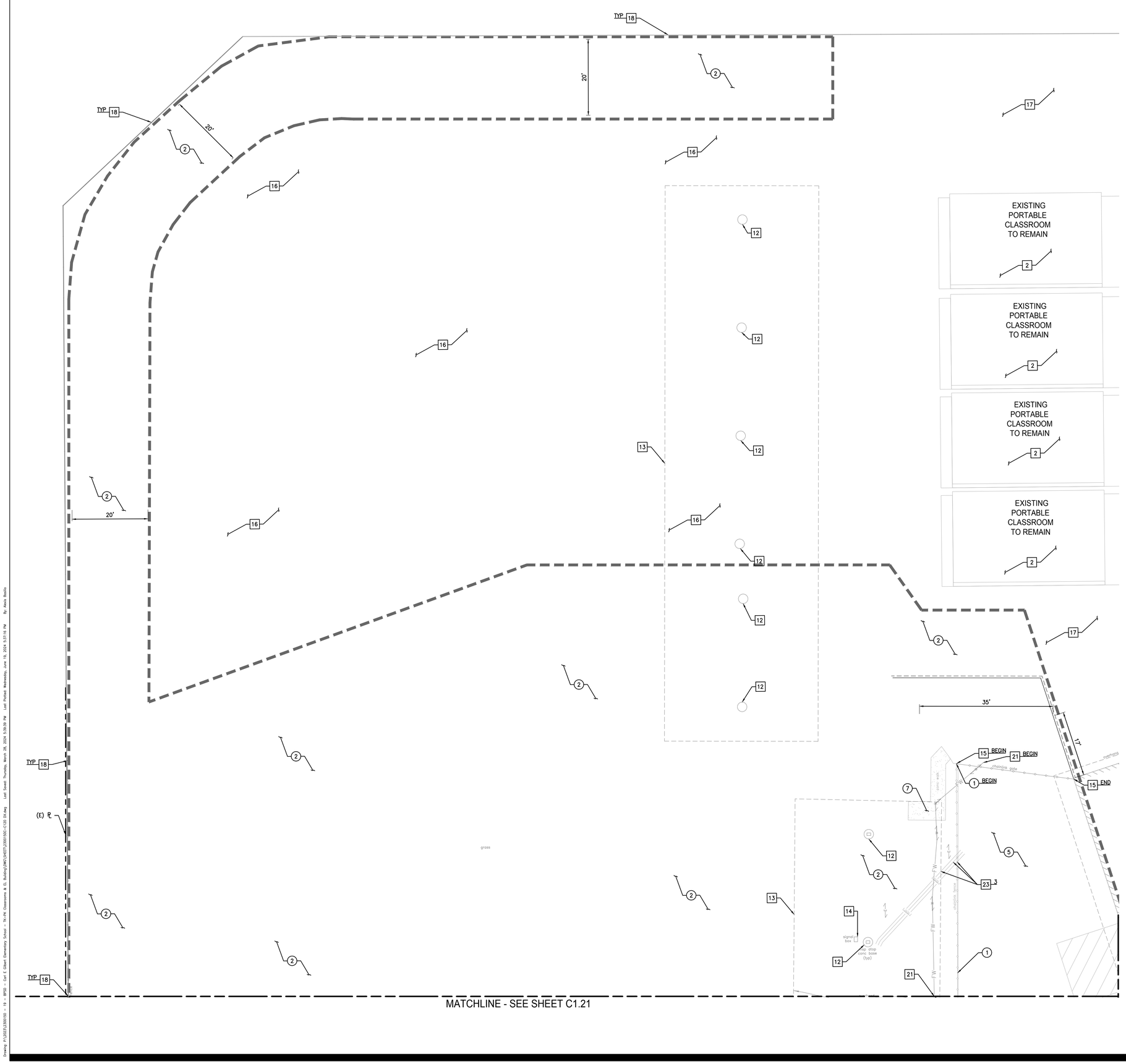

DEMOLITION LEGEND:

- PROPERTY LINE
- LIMIT LINE OF DEMOLITION
- SAWCUT

GENERAL DEMOLITION NOTES:

1. CONTRACTOR TO CLEAR PROJECT SITE AREA WITHIN THE CONFINES OF THE DEMOLITION LIMIT LINE. THE CONTRACTOR SHALL DEMOLISH AND REMOVE FROM THE SITE ALL EXISTING UTILITIES, STRUCTURES, PLANTERS, TREES, AND ALL OTHER SITE FEATURES, UNLESS OTHERWISE NOTED ON THE PLAN TO BE PROTECTED, RELOCATED AND/OR SALVAGED.
2. REMOVAL OF LANDSCAPING SHALL INCLUDE ROOTS AND ORGANIC MATERIALS.
3. THE CONTRACTOR SHALL BE RESPONSIBLE FOR OBTAINING ANY AND ALL PERMITS AND SHALL PAY ALL FEES NECESSARY FOR ENCROACHMENT, GRADING, DEMOLITION AND DISPOSAL OF SAID MATERIALS AS REQUIRED BY PRIVATE, LOCAL AND STATE JURISDICTIONS.
4. NOT ALL EXISTING SITE CONDITIONS AND IMPROVEMENTS MAY HAVE BEEN SHOWN ON DEMOLITION PLANS, THE CONTRACTOR SHALL BE RESPONSIBLE TO VISIT THE SITE TO FULLY ACKNOWLEDGE, UNDERSTAND AND INCLUDE THE EXTENT OF DEMOLITION WORK REQUIRED FOR THE IMPROVEMENTS SHOWN ON THE CONTRACT PLANS.
5. THE CONTRACTOR SHALL VERIFY AND LOCATE ALL EXISTING ABOVE AND UNDERGROUND UTILITIES. LOCATIONS SHOWN ON THE PLANS ARE APPROXIMATE AND ARE SHOWN FOR GENERAL INFORMATION ONLY.
6. DAMAGE TO ANY EXISTING UTILITIES AND SERVICES TO REMAIN SHALL BE THE RESPONSIBILITY OF THE CONTRACTOR. CONTRACTOR SHALL REPAIR AND/OR REPLACE IN KIND.
7. EROSION CONTROL MEASURES SHALL BE IMPLEMENTED TO PREVENT DEBRIS AND UNSUITABLE MATERIALS FROM ENTERING STORM DRAINS, SANITARY SEWERS AND STREETS.
8. DUST CONTROL SHALL BE IMPLEMENTED DURING DEMOLITION.
9. DEMOLITION IS LIMITED TO WITHIN DEMOLITION LIMIT LINE UNLESS NOTED OTHERWISE.
10. CONTRACTOR SHALL INCLUDE IN THEIR SCOPE OF WORK DEMOLITION OF ALL EXISTING IMPROVEMENTS REQUIRED FOR THE CONSTRUCTION OF THE NEW IMPROVEMENTS SHOWN ON THE CONTRACT PLANS, REGARDLESS OF IF THE DEMOLITION AND REMOVAL OF THE EXISTING IMPROVEMENTS REQUIRED FOR NEW CONSTRUCTION IS EXPLICITLY SHOWN ON THESE PLANS TO BE DEMOLISHED AND REMOVED.
11. DEMOLITION CALLOUTS IN THIS SECTION ARE REPRESENTATIVE OF WHAT IS TO BE DONE, NOT AN ITEMIZED ACCOUNTING FOR EACH PIPE, CATCH BASIN, MANHOLE, VAULT, ETC, THAT IS TO BE DEMOLISHED, REMOVED AND DISPOSED OF.

DEMOLITION NOTES:

PROTECT-IN-PLACE

1. 6" BACK FLOW DEVICE
2. BUILDING
3. TREE
4. STREET SIGN & POST
5. GAS VALVE
6. 3" WATER METER.
7. UTILITY POST
8. CONCRETE WALKWAY
9. SHED
10. WATER VALVE.
11. 3" WATER SUPPLY LINE.
12. METAL POST AND FOOTING
13. SOLAR PANELS
14. SIGNAL BOX
15. CHAIN LINK GATE
16. LANDSCAPE
17. ASPHALT CONCRETE PAVEMENT
18. CHAIN LINK FENCE
19. BRICK WALL
20. 6" SEWER LINE
21. 6" FIRE WATER LINE.
22. 4" GAS LINE.
23. ELECTRICAL CONDUITS. SEE ELECTRICAL PLANS FOR PROPOSED IMPROVEMENTS.
24. UTILITY PIPES.
25. SEWER CLEAN OUT.
26. UTILITY VAULT.
27. CONCRETE STEPS.

REMOVE & DEMOLISH

1. CHAIN LINK FENCE, FOOTING AND GATE
2. LANDSCAPE. CONTRACTOR TO STOCKPILE THE TOP 6-9" OF EXISTING TURF/GRASS AREAS FOR USE IN PROPOSED TURF/GRASS AREAS PER LANDSCAPE REQUIREMENTS.
3. CHAIN LINK BACKSTOP
4. CONNEX CONTAINER. CONTRACTOR TO RELOCATE ON-SITE AS DIRECTED BY THE DISTRICT.
5. ASPHALT CONCRETE PAVEMENT
6. SIGN & POST
7. CONCRETE WALKWAY. CONTRACTOR TO REMOVE CONCRETE WALKWAY PAVEMENT AT NEAREST CONTROL JOINT, BEYOND LIMIT OF WORK SHOWN ON THE PLAN. CONTRACTOR TO VERIFY IN FIELD.
8. CHAIN LINK GATE
9. CONCRETE RAMP
10. WATER LINE.TEMPORARILY CAP PIPE WHERE SHOWN REFER TO UTILITY PLANS. SEE SHEET C1.51 FOR IMPROVEMENTS.
11. TREE.
12. TRUNCATED DOMES.
13. CONCRETE WHEEL STOP.
14. CONCRETE CURB.

N

PLAN
SCALE: 1" = 10'-0"
0 5' 10' 20'
GRAPHIC SCALE

DSA STAMP

STUDIO W ARCHITECTS

Studio W Architects
1930 H Street
Sacramento, California 95811
[T] 916.254.5600
www.StudioW-Architects.com

kpff
140 Newport Center Drive,
Suite 100
Newport Beach, CA 92660
O: 949.478.8800
www.kpff.com

ARCHITECT	ENGINEER
LICENSED ARCHITECT BRIAN P. WITHROW No. C 30345 Ren. 9/30/25 STATE OF CALIFORNIA	REGISTERED PROFESSIONAL ENGINEER ALI KHAMD No. C74768 Exp. 12/31/25 CIVIL STATE OF CALIFORNIA
DATE SIGNED: 06/24/2024	DATE SIGNED: 06/24/2024

GENERAL NOTES

1. This sheet is part of a set and is not to be used alone.
2. This sheet is not to be used for construction unless the architect's stamp and signature appear on the drawings and the status box indicated drawings have been released for construction.
3. These plans and prints thereof, as instruments of service, are owned by the architect and are for use on this project only. Reproduction and/or distribution without the prior written consent of the architect is forbidden.
4. Copyright Studio W Associates, Inc. 2022.

REVISION HISTORY

DRAWING STATUS	DATE
DSA PLAN CHECK	03/29/2024
DSA BACK CHECK	06/24/2024
BIDDING	
CONSTRUCTION	

KEY PLAN

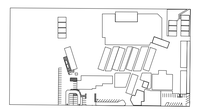

BUENA PARK USD
6885 ORANGETHORPE AVE
BUENA PARK, CA 90620

DSA SUBMITTAL

CARL E. GILBERT ELEMENTARY SCHOOL
TK/PK CLASSROOMS & EARLY LEARNING BUILDING
7255 8TH STREET, BUENA PARK, CA 90621

DEMOLITION PLAN

Date	Project Number
06/24/2024	2300150
Application Number	Drawing Number
04-123212	C1.20
Drawn: TN	Checked: JP

Drawing: P:\2023\2300150 - 19 - BPID - Carl E Gilbert Elementary School - TK-PK Classrooms & EL Building\DWG\SHEETS\2300150C-C120 DS.dwg Last Saved: Thursday, March 28, 2024 5:39:39 PM Last Plotted: Wednesday, June 19, 2024 5:37:16 PM By: Alexis Bolido

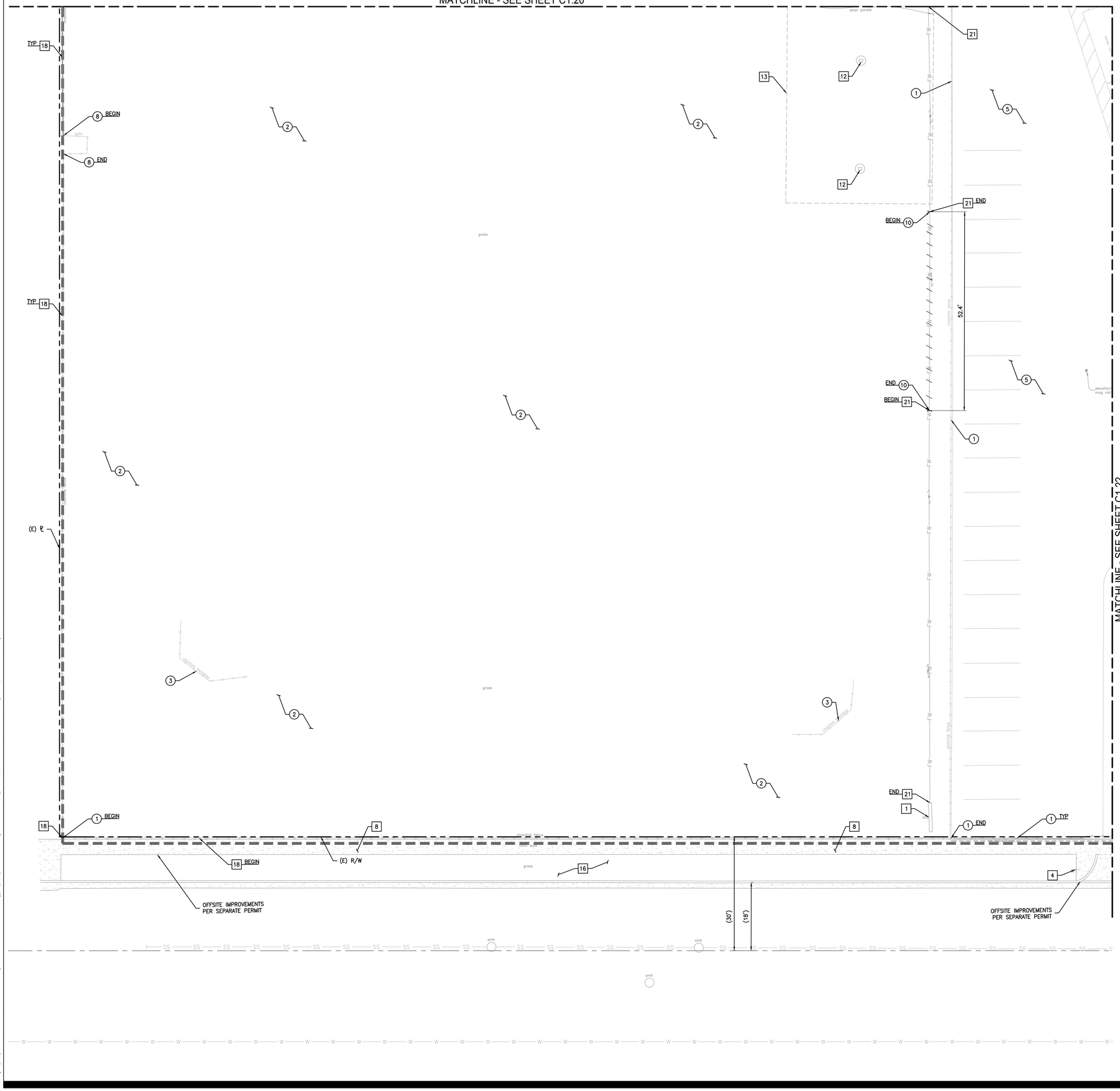

DEMOLITION LEGEND:

- PROPERTY LINE
- LIMIT LINE OF DEMOLITION
- SAWCUT

GENERAL DEMOLITION NOTES:

1. CONTRACTOR TO CLEAR PROJECT SITE AREA WITHIN THE CONFINES OF THE DEMOLITION LIMIT LINE. THE CONTRACTOR SHALL DEMOLISH AND REMOVE FROM THE SITE ALL EXISTING UTILITIES, STRUCTURES, PLANTERS, TREES, AND ALL OTHER SITE FEATURES, UNLESS OTHERWISE NOTED ON THE PLAN TO BE PROTECTED, RELOCATED AND/OR SALVAGED.
2. REMOVAL OF LANDSCAPING SHALL INCLUDE ROOTS AND ORGANIC MATERIALS.
3. THE CONTRACTOR SHALL BE RESPONSIBLE FOR OBTAINING ANY AND ALL PERMITS AND SHALL PAY ALL FEES NECESSARY FOR ENCROACHMENT, GRADING, DEMOLITION AND DISPOSAL OF SAID MATERIALS AS REQUIRED BY PRIVATE, LOCAL AND STATE JURISDICTIONS.
4. NOT ALL EXISTING SITE CONDITIONS AND IMPROVEMENTS MAY HAVE BEEN SHOWN ON DEMOLITION PLANS, THE CONTRACTOR SHALL BE RESPONSIBLE TO VISIT THE SITE TO FULLY ACKNOWLEDGE, UNDERSTAND AND INCLUDE THE EXTENT OF DEMOLITION WORK REQUIRED FOR THE IMPROVEMENTS SHOWN ON THE CONTRACT PLANS.
5. THE CONTRACTOR SHALL VERIFY AND LOCATE ALL EXISTING ABOVE AND UNDERGROUND UTILITIES. LOCATIONS SHOWN ON THE PLANS ARE APPROXIMATE AND ARE SHOWN FOR GENERAL INFORMATION ONLY.
6. DAMAGE TO ANY EXISTING UTILITIES AND SERVICES TO REMAIN SHALL BE THE RESPONSIBILITY OF THE CONTRACTOR. CONTRACTOR SHALL REPAIR AND/OR REPLACE IN KIND.
7. EROSION CONTROL MEASURES SHALL BE IMPLEMENTED TO PREVENT DEBRIS AND UNSUITABLE MATERIALS FROM ENTERING STORM DRAINS, SANITARY SEWERS AND STREETS.
8. DUST CONTROL SHALL BE IMPLEMENTED DURING DEMOLITION.
9. DEMOLITION IS LIMITED TO WITHIN DEMOLITION LIMIT LINE UNLESS NOTED OTHERWISE.
10. CONTRACTOR SHALL INCLUDE IN THEIR SCOPE OF WORK DEMOLITION OF ALL EXISTING IMPROVEMENTS REQUIRED FOR THE CONSTRUCTION OF THE NEW IMPROVEMENTS SHOWN ON THE CONTRACT PLANS, REGARDLESS OF IF THE DEMOLITION AND REMOVAL OF THE EXISTING IMPROVEMENTS REQUIRED FOR NEW CONSTRUCTION IS EXPLICITLY SHOWN ON THESE PLANS TO BE DEMOLISHED AND REMOVED.
11. DEMOLITION CALLOUTS IN THIS SECTION ARE REPRESENTATIVE OF WHAT IS TO BE DONE, NOT AN ITEMIZED ACCOUNTING FOR EACH PIPE, CATCH BASIN, MANHOLE, VAULT, ETC, THAT IS TO BE DEMOLISHED, REMOVED AND DISPOSED OF.

DEMOLITION NOTES:

PROTECT-IN-PLACE

1. 6" BACK FLOW DEVICE
2. BUILDING
3. TREE
4. STREET SIGN & POST
5. GAS VALVE
6. 3" WATER METER.
7. UTILITY POST
8. CONCRETE WALKWAY
9. SHED
10. WATER VALVE.
11. 3" WATER SUPPLY LINE.
12. METAL POST AND FOOTING
13. SOLAR PANELS
14. SIGNAL BOX
15. CHAIN LINK GATE
16. LANDSCAPE
17. ASPHALT CONCRETE PAVEMENT
18. CHAIN LINK FENCE
19. BRICK WALL
20. 6" SEWER LINE
21. 6" FIRE WATER LINE.
22. 4" GAS LINE.
23. ELECTRICAL CONDUITS. SEE ELECTRICAL PLANS FOR PROPOSED IMPROVEMENTS.
24. UTILITY PIPES.
25. SEWER CLEAN OUT.
26. UTILITY VAULT.
27. CONCRETE STEPS.

REMOVE & DEMOLISH

1. CHAIN LINK FENCE, FOOTING AND GATE
2. LANDSCAPE. CONTRACTOR TO STOCKPILE THE TOP 6-9" OF EXISTING TURF/GRASS AREAS FOR USE IN PROPOSED TURF/GRASS AREAS PER LANDSCAPE REQUIREMENTS.
3. CHAIN LINK BACKSTOP
4. CONNEX CONTAINER. CONTRACTOR TO RELOCATE ON-SITE AS DIRECTED BY THE DISTRICT.
5. ASPHALT CONCRETE PAVEMENT
6. SIGN & POST
7. CONCRETE WALKWAY. CONTRACTOR TO REMOVE CONCRETE WALKWAY PAVEMENT AT NEAREST CONTROL JOINT, BEYOND LIMIT OF WORK SHOWN ON THE PLAN. CONTRACTOR TO VERIFY IN FIELD.
8. CHAIN LINK GATE
9. CONCRETE RAMP
10. WATER LINE.TEMPORARILY CAP PIPE WHERE SHOWN REFER TO UTILITY PLANS. SEE SHEET C1.51 FOR IMPROVEMENTS.
11. TREE.
12. TRUNCATED DOMES.
13. CONCRETE WHEEL STOP.
14. CONCRETE CURB.

N

PLAN
SCALE: 1" = 10'-0"
0 5' 10' 20'
GRAPHIC SCALE

DSA STAMP

STUDIO W ARCHITECTS

Studio W Architects
1930 H Street
Sacramento, California 95811
[T] 916.254.5600
www.StudioW-Architects.com

kpff
140 Newport Center Drive,
Suite 100
Newport Beach, CA 92660
O: 949.478.8800
www.kpff.com

ARCHITECT	ENGINEER
LICENSED ARCHITECT BRYAN P. WHITMORE No. C 30345 Ren. 9/30/25 STATE OF CALIFORNIA	REGISTERED PROFESSIONAL ENGINEER ALI KHAMO No. C74768 Exp. 12/31/25 CIVIL STATE OF CALIFORNIA
DATE SIGNED: 06/24/2024	DATE SIGNED: 06/24/2024

GENERAL NOTES

1. This sheet is part of a set and is not to be used alone.
2. This sheet is not to be used for construction unless the architect's stamp and signature appear on the drawings and the status box indicated drawings have been released for construction.
3. These plans and prints thereof, as instruments of service, are owned by the architect and are for use on this project only. Reproduction and/or distribution without the prior written consent of the architect is forbidden.
4. Copyright Studio W Associates, Inc. 2022.

REVISION HISTORY

DRAWING STATUS

	DATE
○ DSA PLAN CHECK	03/29/2024
● DSA BACK CHECK	06/24/2024
○ BIDDING	
○ CONSTRUCTION	

KEY PLAN

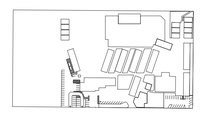

BUENA PARK USD
6885 ORANGETHORPE AVE
BUENA PARK, CA 90620

DSA SUBMITTAL

CARL E. GILBERT ELEMENTARY SCHOOL
TK/PK CLASSROOMS & EARLY LEARNING BUILDING
7255 8TH STREET, BUENA PARK, CA 90621

DEMOLITION PLAN

Date	Project Number
06/24/2024	2300150
Application Number	Drawing Number
04-123212	C1.21
Drawn: TN	Checked: JP

Drawing: P:\2023\2300150 - 19 - BPSD - Carl E Gilbert Elementary School - TK+PK Classrooms & EL Building\DWG\SHEETS\2300150-C120 DR.dwg Last Saved: Thursday, March 28, 2024 5:39:39 PM Last Plotted: Wednesday, June 19, 2024 5:37:19 PM By: Alexis Bonilla

DEMOLITION NOTES:

PROTECT-IN-PLACE

1. 6" BACK FLOW DEVICE
2. BUILDING
3. TREE
4. STREET SIGN & POST
5. GAS VALVE
6. 3" WATER METER.
7. UTILITY POST
8. CONCRETE WALKWAY
9. SHED
10. WATER VALVE.
11. 3" WATER SUPPLY LINE.
12. METAL POST AND FOOTING
13. SOLAR PANELS
14. SIGNAL BOX
15. CHAIN LINK GATE
16. LANDSCAPE
17. ASPHALT CONCRETE PAVEMENT
18. CHAIN LINK FENCE
19. BRICK WALL
20. 6" SEWER LINE
21. 6" FIRE WATER LINE.
22. 4" GAS LINE.
23. ELECTRICAL CONDUITS. SEE ELECTRICAL PLANS FOR PROPOSED IMPROVEMENTS.
24. UTILITY PIPES.
25. SEWER CLEAN OUT.
26. UTILITY VAULT.
27. CONCRETE STEPS.

REMOVE & DEMOLISH

1. CHAIN LINK FENCE, FOOTING AND GATE
2. LANDSCAPE. CONTRACTOR TO STOCKPILE THE TO TURF/GRASS AREAS FOR USE IN PROPOSED TL LANDSCAPE REQUIREMENTS.
3. CHAIN LINK BACKSTOP
4. CONNEX CONTAINER. CONTRACTOR TO RELOCATE DIRECTED BY THE DISTRICT.
5. ASPHALT CONCRETE PAVEMENT
6. SIGN & POST
7. CONCRETE WALKWAY. CONTRACTOR TO REMOVE PAVEMENT AT NEAREST CONTROL JOINT, BEYONI SHOWN ON THE PLAN. CONTRACTOR TO VERIFY
8. CHAIN LINK GATE
9. CONCRETE RAMP
10. WATER LINE.TEMPORARILY CAP PIPE WHERE SHO TO UTILITY PLANS. SEE SHEET C1.51 FOR IMPROVEMENTS.
11. TREE.
12. TRUNCATED DOMES.
13. CONCRETE WHEEL STOP.

DEMOLITION LEGEND:

- PROPERTY LINE
- LIMIT LINE OF DEMOLITION
- SAWCUT

GENERAL DEMOLITION NOTES:

1. CONTRACTOR TO CLEAR PROJECT SITE AREA WITHIN THE CONFINES OF THE DEMOLITION LIMIT LINE. THE CONTRACTOR SHALL DEMOLISH AND REMOVE FROM THE SITE ALL EXISTING UTILITIES, STRUCTURES, PLANTERS, TREES, AND ALL OTHER SITE FEATURES, UNLESS OTHERWISE NOTED ON THE PLAN TO BE PROTECTED, RELOCATED AND/OR SALVAGED.
2. REMOVAL OF LANDSCAPING SHALL INCLUDE ROOTS AND ORGANIC MATERIALS.
3. THE CONTRACTOR SHALL BE RESPONSIBLE FOR OBTAINING ANY AND ALL PERMITS AND SHALL PAY ALL FEES NECESSARY FOR ENCROACHMENT, GRADING, DEMOLITION AND DISPOSAL OF SAID MATERIALS AS REQUIRED BY PRIVATE, LOCAL AND STATE JURISDICTIONS.
4. NOT ALL EXISTING SITE CONDITIONS AND IMPROVEMENTS MAY HAVE BEEN SHOWN ON DEMOLITION PLANS, THE CONTRACTOR SHALL BE RESPONSIBLE TO VISIT THE SITE TO FULLY ACKNOWLEDGE, UNDERSTAND AND INCLUDE THE EXTENT OF DEMOLITION WORK REQUIRED FOR THE IMPROVEMENTS SHOWN ON THE CONTRACT PLANS.
5. THE CONTRACTOR SHALL VERIFY AND LOCATE ALL EXISTING ABOVE AND UNDERGROUND UTILITIES. LOCATIONS SHOWN ON THE PLANS ARE APPROXIMATE AND ARE SHOWN FOR GENERAL INFORMATION ONLY.
6. DAMAGE TO ANY EXISTING UTILITIES AND SERVICES TO REMAIN SHALL BE THE RESPONSIBILITY OF THE CONTRACTOR. CONTRACTOR SHALL REPAIR AND/OR REPLACE IN KIND.
7. EROSION CONTROL MEASURES SHALL BE IMPLEMENTED TO PREVENT DEBRIS AND UNSUITABLE MATERIALS FROM ENTERING STORM DRAINS, SANITARY SEWERS AND STREETS.
8. DUST CONTROL SHALL BE IMPLEMENTED DURING DEMOLITION.
9. DEMOLITION IS LIMITED TO WITHIN DEMOLITION LIMIT LINE UNLESS NOTED OTHERWISE.
10. CONTRACTOR SHALL INCLUDE IN THEIR SCOPE OF WORK DEMOLITION OF ALL EXISTING IMPROVEMENTS REQUIRED FOR THE CONSTRUCTION OF THE NEW IMPROVEMENTS SHOWN ON THE CONTRACT PLANS, REGARDLESS OF IF THE DEMOLITION AND REMOVAL OF THE EXISTING IMPROVEMENTS REQUIRED FOR NEW CONSTRUCTION IS EXPLICITLY SHOWN ON THESE PLANS TO BE DEMOLISHED AND REMOVED.
11. DEMOLITION CALLOUTS IN THIS SECTION ARE REPRESENTATIVE OF WHAT IS TO BE DONE, NOT AN ITEMIZED ACCOUNTING FOR EACH PIPE, CATCH BASIN, MANHOLE, VAULT, ETC, THAT IS TO BE DEMOLISHED, REMOVED AND DISPOSED OF.

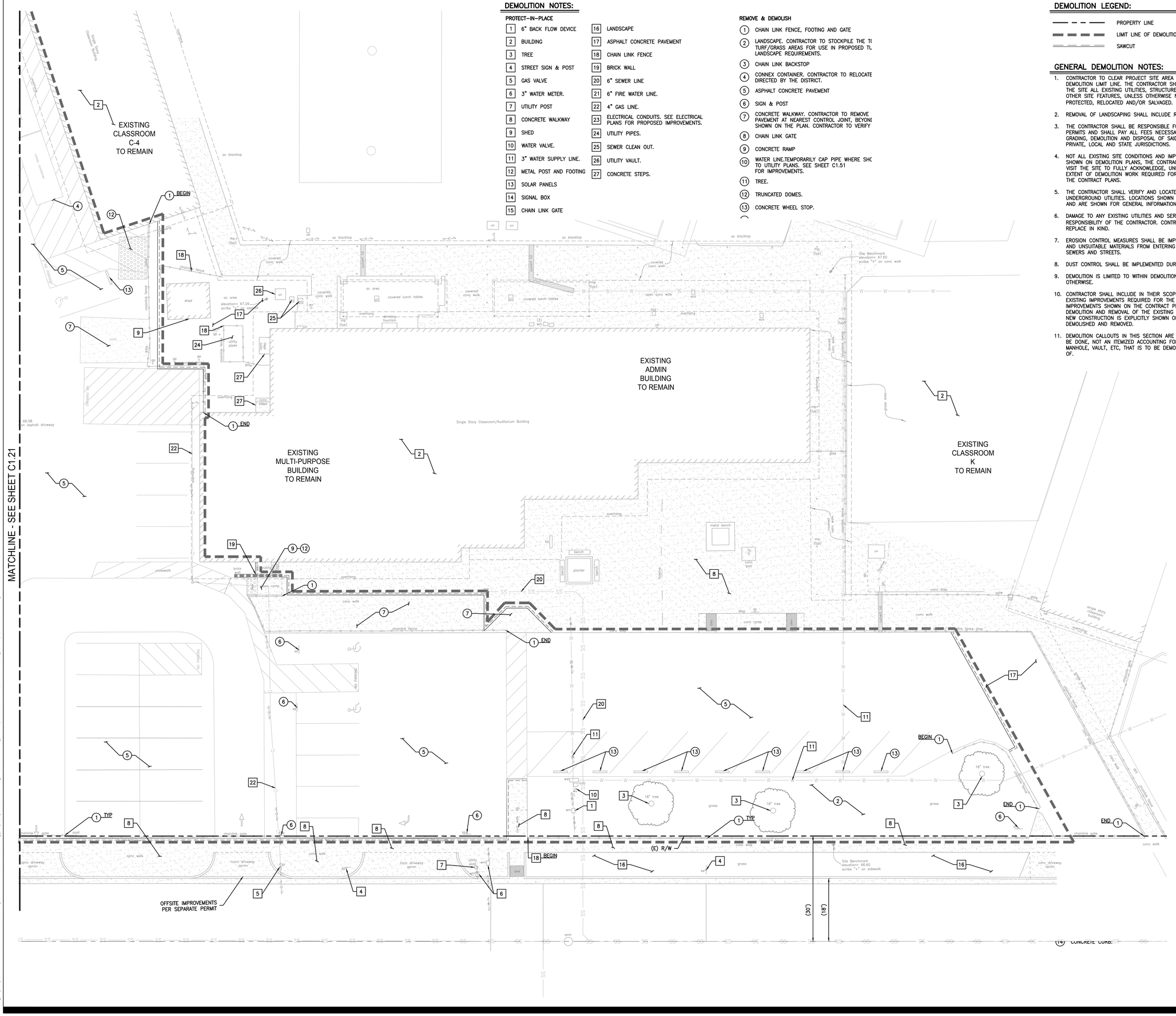

DSA STAMP

STUDIO W ARCHITECTS

Studio W Architects
1930 H Street
Sacramento, California 95811
[T] 916.254.5600
www.StudioW-Architects.com

kpff
140 Newport Center Drive,
Suite 100
Newport Beach, CA 92660
O: 949.478.8800
www.kpff.com

ARCHITECT	ENGINEER
LICENSED ARCHITECT BRIAN P. WITHROW No. C 30345 Ren. 9/30/25 STATE OF CALIFORNIA	REGISTERED PROFESSIONAL ENGINEER ALI KHAMO No. C 74768 Exp. 12/31/25 CIVIL STATE OF CALIFORNIA
DATE SIGNED: 06/24/2024	DATE SIGNED: 06/24/2024

GENERAL NOTES

1. This sheet is part of a set and is not to be used alone.
2. This sheet is not to be used for construction unless the architect's stamp and signature appear on the drawings and the status box indicated drawings have been released for construction.
3. These plans and prints thereof, as instruments of service, are owned by the architect and are for use on this project only. Reproduction and/or distribution without the prior written consent of the architect is forbidden.
4. Copyright Studio W Associates, Inc. 2022.

REVISION HISTORY

DRAWING STATUS

	DATE
○ DSA PLAN CHECK	03/29/2024
● DSA BACK CHECK	06/24/2024
○ BIDDING	
○ CONSTRUCTION	

KEY PLAN

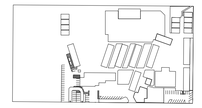

BUENA PARK USD
6885 ORANGETHORPE AVE
BUENA PARK, CA 90620

DSA SUBMITTAL

CARL E. GILBERT ELEMENTARY SCHOOL
TK/PK CLASSROOMS & EARLY LEARNING BUILDING
7255 8TH STREET, BUENA PARK, CA 90621

DEMOLITION PLAN

Date	Project Number
06/24/2024	2300150
Application Number	Drawing Number
04-123212	C1.22
Drawn: TN	Checked: JP

Drawing: P:\2023\2300150 - 19 - BPSD - Carl E Gilbert Elementary School - TK-PK Classrooms & EL Building\DWG\SHEETS\2300150-C1D.DA.dwg Last Saved: Thursday, March 28, 2024 1:39:39 PM Last Plotted: Wednesday, June 19, 2024 5:37:24 PM By: Alexis Bolio

LEGEND:

- PROPERTY LINE
- LIMIT OF GRADING
- GB — GB — GB — GRADE BREAK LINE
- R — RIDGE LINE
- SAWCUT

EXISTING PORTABLE CLASSROOM TO REMAIN

EXISTING PORTABLE CLASSROOM TO REMAIN

EXISTING PORTABLE CLASSROOM TO REMAIN

EXISTING PORTABLE CLASSROOM TO REMAIN

PROPOSED BUILDING KB
FF=68.25

FF=68.25

3:1 MAX IN ANY DIRECTION

2% MAX IN ANY DIRECTION

BUILDING OVERHANG (TYP)

(4) RISERS @ 6" EACH

(4)RISERS @ 4"EA

MATCHLINE - SEE SHEET C1.31

PLAN
SCALE: 1" = 10'-0"
GRAPHIC SCALE 0 5' 10' 20'

DSA STAMP

STUDIO W ARCHITECTS

Studio W Architects
1930 H Street
Sacramento, California 95811
[T] 916.254.5600
www.StudioW-Architects.com

kpff
140 Newport Center Drive,
Suite 100
Newport Beach, CA 92660
O: 949.478.8800
www.kpff.com

ARCHITECT	ENGINEER
LICENSED ARCHITECT BRYAN P. WHITMORE No. C 30345 Ren. 9/30/25 STATE OF CALIFORNIA	REGISTERED PROFESSIONAL ENGINEER ALI KHAMD No. C74768 Exp. 12/31/25 CIVIL STATE OF CALIFORNIA
DATE SIGNED: 06/24/2024	DATE SIGNED: 06/24/2024

GENERAL NOTES

1. This sheet is part of a set and is not to be used alone.
2. This sheet is not to be used for construction unless the architect's stamp and signature appear on the drawings and the status box indicated drawings have been released for construction.
3. These plans and prints thereof, as instruments of service, are owned by the architect and are for use on this project only. Reproduction and/or distribution without the prior written consent of the architect is forbidden.
4. Copyright Studio W Associates, Inc. 2022.

REVISION HISTORY

DRAWING STATUS

	DATE
○ DSA PLAN CHECK	03/29/2024
● DSA BACK CHECK	06/24/2024
○ BIDDING	
○ CONSTRUCTION	

KEY PLAN

BUENA PARK USD
6885 ORANGETHORPE AVE
BUENA PARK, CA 90620

DSA SUBMITTAL

CARL E. GILBERT ELEMENTARY SCHOOL
TK/PK CLASSROOMS & EARLY LEARNING BUILDING
7255 8TH STREET, BUENA PARK, CA 90621

GRADING PLAN

Date	Project Number
06/24/2024	2300150
Application Number	Drawing Number
04-123212	C1.30
Drawn: TN	Checked: JP

Drawing: P:\2023\23001S0 - 19 - BPSD - Carl E Gilbert Elementary School - TK-PK Classrooms & EL Building\DWG\SHEETS\23001S0C-C130 GI.dwg Last Saved: Wednesday, June 19, 2024 5:36:03 PM Last Plotted: Wednesday, June 19, 2024 5:37:33 PM By: Alexis Bostic

MATCHLINE - SEE SHEET C1.30

MATCHLINE - SEE SHEET C1.32

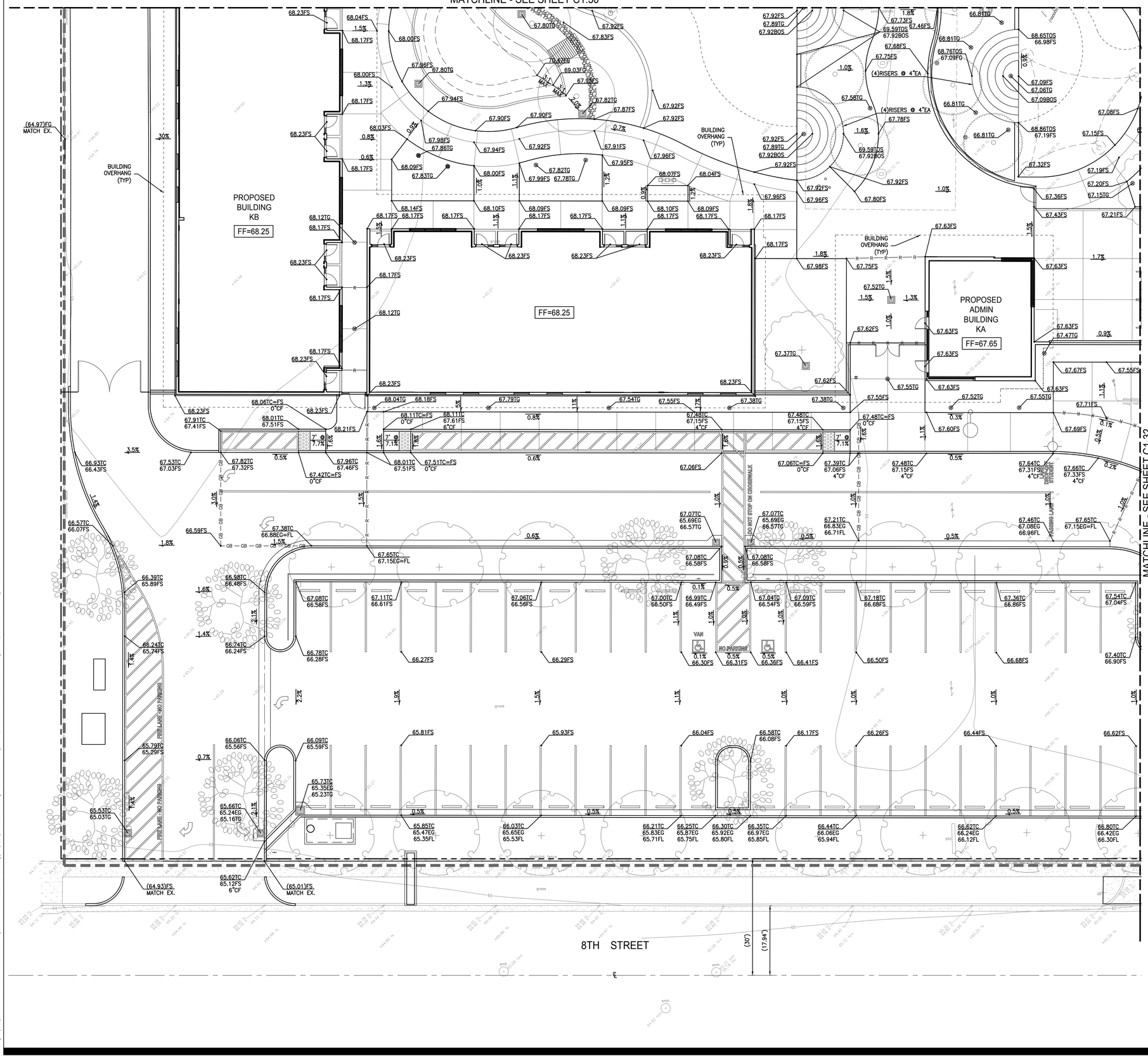
PROPOSED BUILDING KB
FF=68.25
FF=68.25
PROPOSED ADMIN BUILDING KA
FF=67.65
BUILDING OVERHANG (TYP)
BUILDING OVERHANG (TYP)
BUILDING OVERHANG (TYP)
(64.97)FG MATCH EX.
(4)RISERS @ 4"EA
(4)RISERS @ 4"EA
VAN
NO PARKING
FIRE LANE - NO PARKING
FIRE LANE - NO PARKING
BY-PASS LANE
BY-PASS LANE
STOP
8TH STREET
(30')
(17.94')
(64.93)FS MATCH EX.
(65.01)FS MATCH EX.
66.43FS
66.07FS
66.89FS
65.74FS
65.29FS
65.03FS
66.48FS
66.24FS
66.28FS
66.27FS
66.29FS
66.30FS
66.31FS
66.36FS
66.41FS
66.50FS
66.68FS
67.04FS
66.90FS
65.81FS
65.93FS
66.04FS
66.17FS
66.26FS
66.44FS
66.62FS
65.47EG 65.35FL
66.03TC 65.65EG 65.53FL
66.21TC 65.83EG 65.71FL
66.25TC 65.87EG 65.75FL
66.30TC 65.92EG 65.80FL
66.35TC 66.97EG 65.85FL
66.44TC 66.06EG 65.94FL
66.62TC 66.24EG 66.12FL
66.80TC 66.42EG 66.30FL
65.12FS 6"CF
65.16TG
65.24EG
65.56FS
66.06TC
66.09TC 65.59FS
65.73TC 65.35EG 65.25TG
65.66TC
66.58FS
67.15EG=FL
67.65TC
67.38TC 66.88EG=FL
66.59FS
66.57TC 66.07FS
66.98TC 66.48FS
66.74TC 66.24FS
66.78TC 66.28FS
67.08TC 66.58FS
67.11TC 66.61FS
67.06TC 66.56FS
67.00TC 66.50FS
66.99TC 66.49FS
67.04TC 66.54FS
67.09TC 66.59FS
67.18TC 66.68FS
67.36TC 66.86FS
67.54TC 67.04FS
67.08TC 66.58FS
67.07TC 65.69EG 66.57TG
67.21TC 66.83EG 66.71FL
67.46TC 67.08EG 66.96FL
67.65TC 67.15EG=FL
67.07TC 65.69EG 66.57TG
67.08TC 66.58FS
67.38TC
67.06FS
67.48TC 67.15FS 4"CF
67.48TC=FS 0"CF
67.39TC 67.06FS 4"CF
67.48TC 67.15FS 4"CF
67.64TC 67.31FS 4"CF
67.66TC 67.33FS 4"CF
67.53TC 67.03FS
67.82TC 67.32FS
67.96TC 67.46FS
68.01TC 67.51FS
67.51TC=FS 0"CF
67.42TC=FS 0"CF
68.06TC=FS 0"CF
68.01TC 67.51FS
68.11TC=FS 0"CF
68.11TC 67.61FS 6"CF
67.91TC 67.41FS
68.04TG
68.18FS
67.79TG
67.54TG
67.55FS
67.38TG
68.23FS
68.21FS
67.37TG
67.62FS
67.55TG
67.52TG
67.60FS
67.55TG
67.71FS
67.69FS
67.67FS
67.55FS
67.63FS
67.47TG
67.62TG
67.98FS
67.75FS
67.52TG
67.63FS
67.92FS
67.89TG
67.92BOS
67.80TG
67.83FS
70.47TG
69.03FG
67.98FS
67.82TG
67.87FS
67.92FS
67.94FS
67.90FS
67.90FS
68.03FS
67.98FS
67.86TG
67.94FS
67.92FS
67.91FS
67.96FS
67.95FS
68.09FS
67.83TG
68.00FS
67.82TG
67.99FS
67.78TG
68.07FS
68.04FS
67.96FS
67.92FS
67.80FS
67.92FS
67.89TG
67.92BOS
67.92FS
67.58TG
67.68FS
67.75FS
67.78FS
66.81TG
68.76TOS 67.09FG
68.65TOS 66.98FS
67.09FS
67.06TG
67.09BOS
68.86TOS 67.19FS
67.32FS
67.08FS
67.15FS
67.19FS
67.20FS
67.15TG
67.36FS
67.43FS
67.21FS
67.92FS
67.89TG
67.92BOS
67.92FS
67.92FS
67.92FS
67.92FS
67.73FS
67.46FS
59.59TOS 67.92BOS
66.81TG
66.81TG
66.81TG
69.59TOS 67.92BOS
68.14FS
68.17FS
68.10FS
68.09FS
68.09FS
68.10FS
68.09FS
68.17FS
68.12TG
68.17FS
68.23FS
68.17FS
68.12TG
68.17FS
68.23FS
68.23FS
68.23

LEGEND:

- PROPERTY LINE
- LIMIT OF GRADING
- GB — GB — GB — GRADE BREAK LINE
- R — RIDGE LINE
- SAWCUT

EXISTING CLASSROOM C-4 TO REMAIN

EXISTING ADMIN BUILDING TO REMAIN

EXISTING MULTI-PURPOSE BUILDING TO REMAIN

EXISTING CLASSROOM K TO REMAIN

Single Story Classroom/Auditorium Building

MATCHLINE - SEE SHEET C1.31

8TH STREET

OFFSITE IMPROVEMENTS PER SEPARATE PERMIT

Site Benchmark elevation= 67.60 scribe "+" on conc walk

Site Benchmark elevation= 66.60 scribe "+" on sidewalk

PLAN
SCALE: 1" = 10'-0"
0 5' 10' 20'
GRAPHIC SCALE

DSA STAMP

STUDIO W ARCHITECTS

Studio W Architects
1930 H Street
Sacramento, California 95811
[T] 916.254.5600
www.StudioW-Architects.com

kpff
140 Newport Center Drive,
Suite 100
Newport Beach, CA 92660
O: 949.478.8800
www.kpff.com

ARCHITECT	ENGINEER
LICENSED ARCHITECT BRIAN P. WHITMORE No. C 30345 Ren. 9/30/25 STATE OF CALIFORNIA	REGISTERED PROFESSIONAL ENGINEER ALI KHAMO No. C 74768 Exp. 12/31/25 CIVIL STATE OF CALIFORNIA
DATE SIGNED: 06/24/2024	DATE SIGNED: 06/24/2024

GENERAL NOTES

1. This sheet is part of a set and is not to be used alone.
2. This sheet is not to be used for construction unless the architect's stamp and signature appear on the drawings and the status box indicated drawings have been released for construction.
3. These plans and prints thereof, as instruments of service, are owned by the architect and are for use on this project only. Reproduction and/or distribution without the prior written consent of the architect is forbidden.
4. Copyright Studio W Associates, Inc. 2022.

REVISION HISTORY

DRAWING STATUS

	DATE
○ DSA PLAN CHECK	03/29/2024
● DSA BACK CHECK	06/24/2024
○ BIDDING	
○ CONSTRUCTION	

KEY PLAN

BUENA PARK USD
6885 ORANGETHORPE AVE
BUENA PARK, CA 90620

DSA SUBMITTAL

CARL E. GILBERT ELEMENTARY SCHOOL

TK/PK CLASSROOMS & EARLY LEARNING BUILDING
7255 8TH STREET, BUENA PARK, CA 90621

GRADING PLAN

Date 06/24/2024	Project Number 2300150
Application Number 04-123212	Drawing Number C1.32
Drawn TN	Checked JP

Drawing: P:\2023\2300150 - 19 - BPSD - Carl E. Gilbert Elementary School - TK-/PK Classrooms & EL Building\DWG\SHEETS\2300150C-C130 GD.dwg Last Saved: Wednesday, June 19, 2024 5:36:03 PM Last Plotted: Wednesday, June 19, 2024 5:37:39 PM By: Alexis Bastin

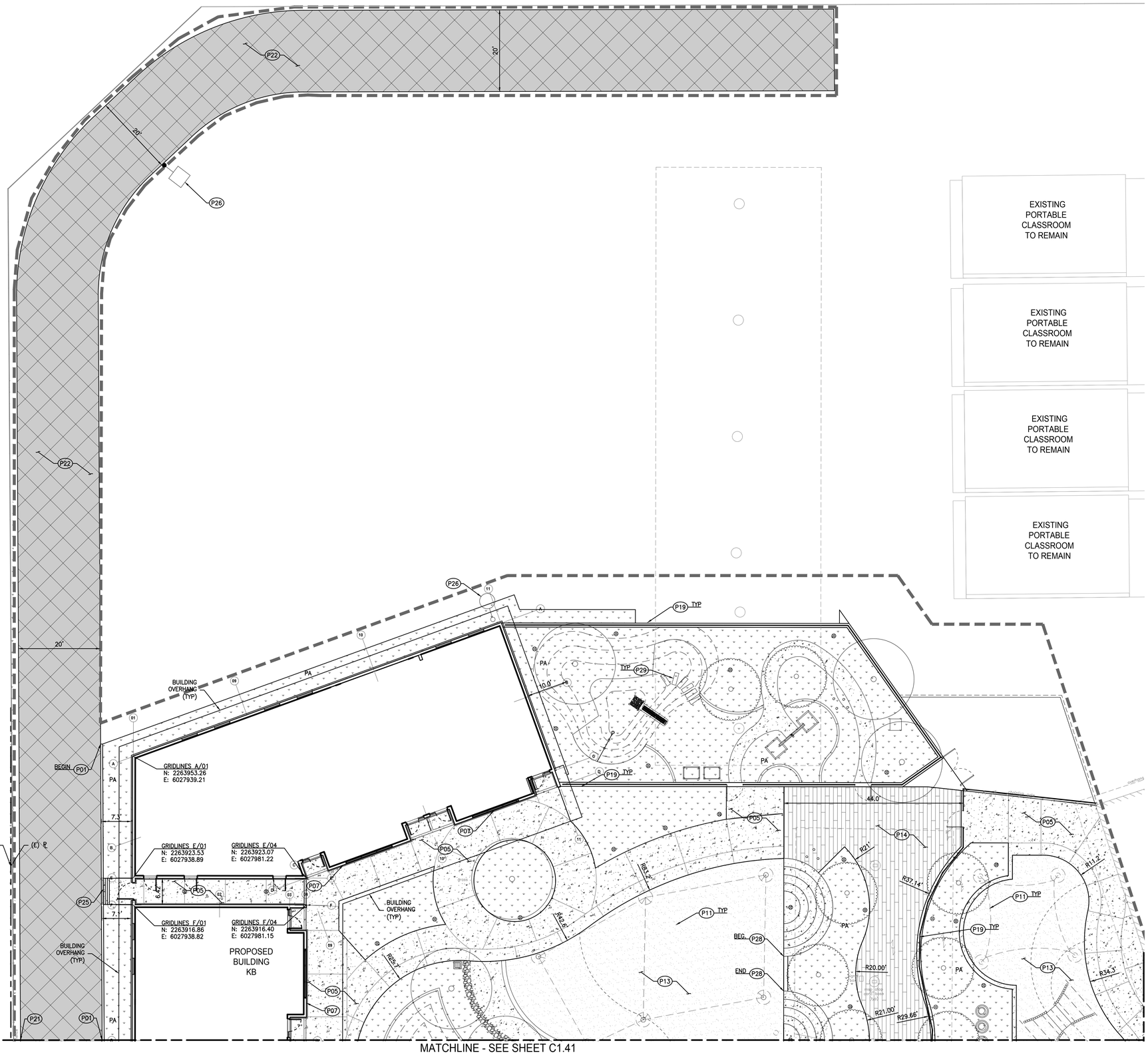

MATCHLINE - SEE SHEET C1.41

LEGEND:

- PROPERTY LINE
- LIMIT LINE OF PAVING
- ISOLATION JOINT AT BUILDING
- SAW CUT LINE
- CONCRETE WALKWAY (REFER TO SHEET C5.00 FOR DETAILS)
- ASPHALT CONCRETE PAVING (REFER TO SHEET C5.00 FOR DETAILS)
- VEHICULAR CONCRETE PAVING (REFER TO SHEET C5.00. FOR DETAILS)
- PA — PLANTER AREA/LANDSCAPE (REFER TO LANDSCAPING PLANS FOR DETAILS)
- WOOD STAMP CONCRETE (REFER TO SHEET C5.00 FOR DETAILS)
- HEAVY VEHICULAR ASPHALT CONCRETE PAVING (REFER TO SHEET C5.00 FOR DETAILS)
- PLAY AREA (REFER TO LANDSCAPING PLANS FOR DETAILS)

PAVING CONSTRUCTION NOTES:

- P01 CONCRETE CURB PER DETAIL 1/C5.00.
- P02 CONCRETE CURB AND GUTTER PER DETAIL 2/C5.00.
- P03 CONCRETE VALLEY GUTTER PER DETAIL 3/C5.00.
- P04 ASPHALT CONCRETE PAVEMENT PER DETAIL 4/C5.00.
- P05 CONCRETE WALKWAY PER DETAIL 5/C5.00.
- P06 CURB RAMP PER ARCHITECTURAL PLANS.
- P07 ISOLATION JOINT PER DETAIL 12/C5.00.
- P08 REINFORCED VEHICULAR CONCRETE PAVEMENT PER DETAIL 6/C5.00.
- P09 ADA PARKING STALL PAVEMENT MARKING PER ARCHITECTURAL PLANS.
- P10 PARKING STALL PAVEMENT MARKING PER ARCHITECTURAL PLANS.
- P11 SHADE STRUCTURE PER ARCHITECT PER ARCHITECTURAL PLANS.
- P12 TRASH ENCLOSURE PER ARCHITECTURAL PLANS.
- P13 PLAY AREA PER LANDSCAPE ARCHITECTURAL PLANS.
- P14 WOOD STAMP CONCRETE PER PER DETAIL 5/C5.00.
- P15 7' ORNAMENTAL FENCE PER ARCHITECTURAL PLANS.
- P16 ASPHALT PAVEMENT JOIN PER DETAIL 7/C5.00.
- P17 TRANSITION ASPHALT CONCRETE TO P.C.C PER DETAIL 8/C5.00.
- P18 WHEEL STOP PER DETAIL 9/C5.00.
- P19 4' ORNAMENTAL FENCE PER ARCHITECTURAL PLANS.
- P20 SIGNAGE PER ARCHITECTURAL PLANS.
- P21 BIKE RACK PER ARCHITECTURAL PLANS.
- P22 HEAVY VEHICULAR ASPHALT CONCRETE PAVEMENT PER DETAIL 4/C5.00.
- P23 PARKWAY DRAIN PER SEPARATE OFF-SITE PERMIT.
- P24 SEAT WALL PER ARCHITECTURAL PLANS.
- P25 STAIRS PER DETAIL 10/C5.00.
- P26 LIGHT POLES PER ELECTRICAL PLANS.
- P27 VAN ACCESSIBLE EV CHARGING STALL.
- P28 MOW CURB PER LANDSCAPE ARCHITECTURAL PLANS.
- P29 WOOD PLANKS PER LANDSCPAE ARCHITRCTURAL PLANS.

PLAN
SCALE: 1" = 10'-0"
0 5' 10' 20'
GRAPHIC SCALE

DSA STAMP

STUDIO W ARCHITECTS

Studio W Architects
1930 H Street
Sacramento, California 95811
[T] 916.254.5600
www.StudioW-Architects.com

kpff
140 Newport Center Drive,
Suite 100
Newport Beach, CA 92660
O: 949.478.8800
www.kpff.com

ARCHITECT	ENGINEER
LICENSED ARCHITECT BRYAN P. WITHROW No. C 30345 Ren. 9/30/25 STATE OF CALIFORNIA	REGISTERED PROFESSIONAL ENGINEER ALI KHAMO No. C74768 Exp. 12/31/25 CIVIL STATE OF CALIFORNIA
DATE SIGNED: 06/24/2024	DATE SIGNED: 06/24/2024

GENERAL NOTES

1. This sheet is part of a set and is not to be used alone.
2. This sheet is not to be used for construction unless the architect's stamp and signature appear on the drawings and the status box indicated drawings have been released for construction.
3. These plans and prints thereof, as instruments of service, are owned by the architect and are for use on this project only. Reproduction and/or distribution without the prior written consent of the architect is forbidden.
4. Copyright Studio W Associates, Inc. 2022.

REVISION HISTORY

DRAWING STATUS		DATE
○	DSA PLAN CHECK	03/29/2024
●	DSA BACK CHECK	06/24/2024
○	BIDDING	
○	CONSTRUCTION	

KEY PLAN

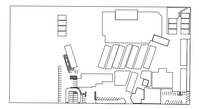

BUENA PARK USD
6885 ORANGETHORPE AVE
BUENA PARK, CA 90620

DSA SUBMITTAL

CARL E. GILBERT ELEMENTARY SCHOOL
TK/PK CLASSROOMS & EARLY LEARNING BUILDING
7255 8TH STREET, BUENA PARK, CA 90621

PAVING PLAN

Date	Project Number
06/24/2024	2300150
Application Number	Drawing Number
04-123212	C1.40
Drawn: TN	Checked: JP

Drawing: P:\2023\2300150 - 19 - BPID - Carl E Gilbert Elementary School - TK/PK Classrooms & EL Building\DWG\SHEETS\2300150C-C140 PP.dwg Last Saved: Wednesday, June 19, 2024 5:35:58 PM Last Plotted: Wednesday, June 19, 2024 5:37:49 PM By: Alexis Bonilla

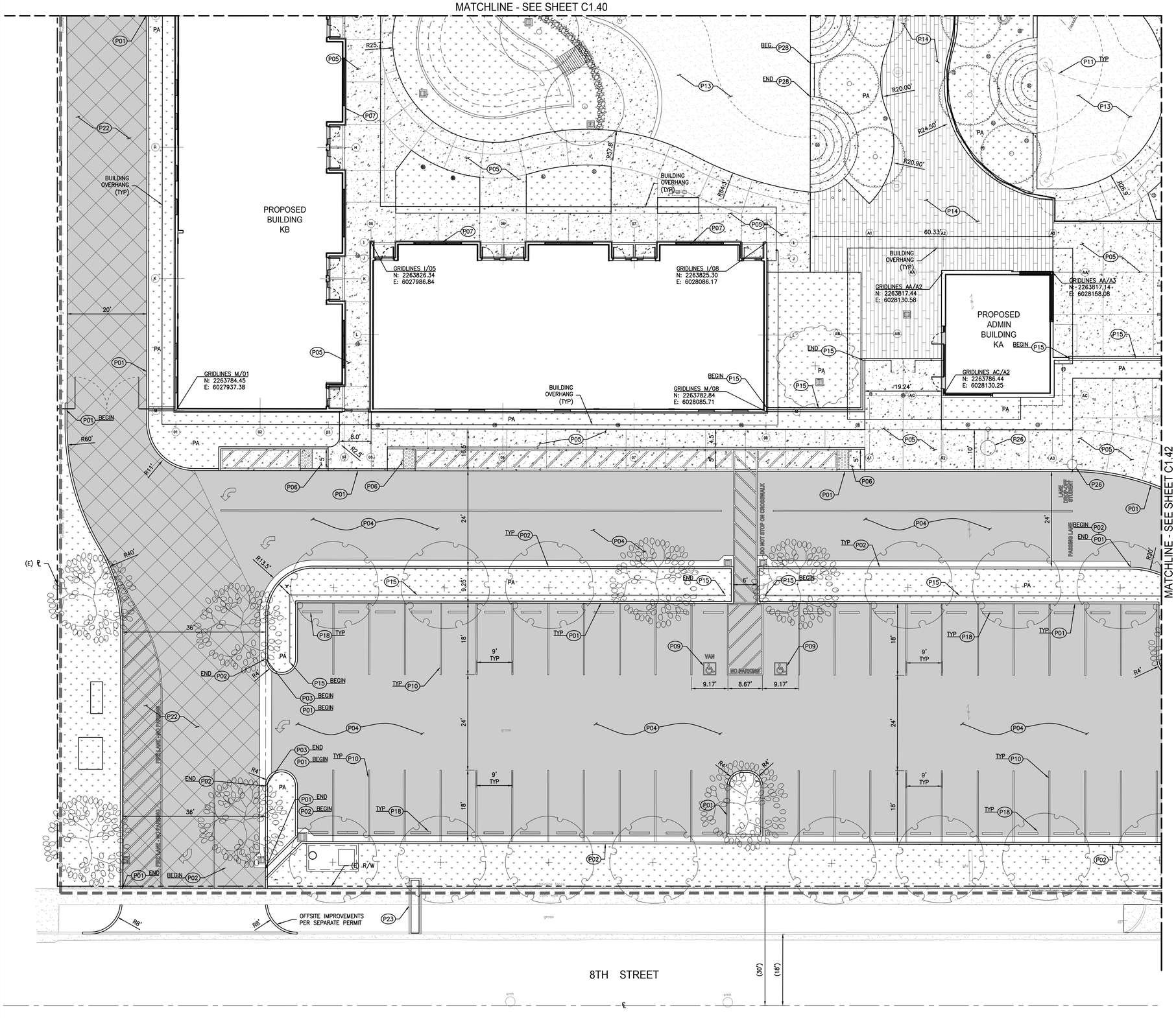

LEGEND:

- PROPERTY LINE
- LIMIT LINE OF PAVING
- ISOLATION JOINT AT BUILDING
- SAW CUT LINE
- CONCRETE WALKWAY (REFER TO SHEET C5.00 FOR DETAILS)
- ASPHALT CONCRETE PAVING (REFER TO SHEET C5.00 FOR DETAILS)
- VEHICULAR CONCRETE PAVING (REFER TO SHEET C5.00. FOR DETAILS)
- PLANTER AREA/LANDSCAPE (REFER TO LANDSCAPING PLANS FOR DETAILS)
- WOOD STAMP CONCRETE (REFER TO SHEET C5.00 FOR DETAILS)
- HEAVY VEHICULAR ASPHALT CONCRETE PAVING (REFER TO SHEET C5.00 FOR DETAILS)
- PLAY AREA (REFER TO LANDSCAPING PLANS FOR DETAILS)

PAVING CONSTRUCTION NOTES:

- P01 CONCRETE CURB PER DETAIL 1/C5.00.
- P02 CONCRETE CURB AND GUTTER PER DETAIL 2/C5.00.
- P03 CONCRETE VALLEY GUTTER PER DETAIL 3/C5.00.
- P04 ASPHALT CONCRETE PAVEMENT PER DETAIL 4/C5.00.
- P05 CONCRETE WALKWAY PER DETAIL 5/C5.00.
- P06 CURB RAMP PER ARCHITECTURAL PLANS.
- P07 ISOLATION JOINT PER DETAIL 12/C5.00.
- P08 REINFORCED VEHICULAR CONCRETE PAVEMENT PER DETAIL 6/C5.00.
- P09 ADA PARKING STALL PAVEMENT MARKING PER ARCHITECTURAL PLANS.
- P10 PARKING STALL PAVEMENT MARKING PER ARCHITECTURAL PLANS.
- P11 SHADE STRUCTURE PER ARCHITECT PER ARCHITECTURAL PLANS.
- P12 TRASH ENCLOSURE PER ARCHITECTURAL PLANS.
- P13 PLAY AREA PER LANDSCAPE ARCHITECTURAL PLANS.
- P14 WOOD STAMP CONCRETE PER PER DETAIL 5/C5.00.
- P15 7' ORNAMENTAL FENCE PER ARCHITECTURAL PLANS.
- P16 ASPHALT PAVEMENT JOIN PER DETAIL 7/C5.00.
- P17 TRANSITION ASPHALT CONCRETE TO P.C.C PER DETAIL 8/C5.00.
- P18 WHEEL STOP PER DETAIL 9/C5.00.
- P19 4' ORNAMENTAL FENCE PER ARCHITECTURAL PLANS.
- P20 SIGNAGE PER ARCHITECTURAL PLANS.
- P21 BIKE RACK PER ARCHITECTURAL PLANS.
- P22 HEAVY VEHICULAR ASPHALT CONCRETE PAVEMENT PER DETAIL 4/C5.00.
- P23 PARKWAY DRAIN PER SEPARATE OFF-SITE PERMIT.
- P24 SEAT WALL PER ARCHITECTURAL PLANS.
- P25 STAIRS PER DETAIL 10/C5.00.
- P26 LIGHT POLES PER ELECTRICAL PLANS.
- P27 VAN ACCESSIBLE EV CHARGING STALL.
- P28 MOW CURB PER LANDSCAPE ARCHITECTURAL PLANS.
- P29 WOOD PLANKS PER LANDSCPAE ARCHITRCTURAL PLANS.

PLAN
SCALE: 1" = 10'-0"
0 5' 10' 20'
GRAPHIC SCALE

DSA STAMP

STUDIO W ARCHITECTS

Studio W Architects
1930 H Street
Sacramento, California 95811
[T] 916.254.5600
www.StudioW-Architects.com

kpff
140 Newport Center Drive,
Suite 100
Newport Beach, CA 92660
O: 949.478.8800
www.kpff.com

ARCHITECT	ENGINEER
LICENSED ARCHITECT BRIAN P. WITHROW No. C 30345 Ren. 9/30/25 STATE OF CALIFORNIA	REGISTERED PROFESSIONAL ENGINEER ALI KHAMO No. C 74768 Exp. 12/31/25 CIVIL STATE OF CALIFORNIA
DATE SIGNED: 06/24/2024	DATE SIGNED: 06/24/2024

GENERAL NOTES

1. This sheet is part of a set and is not to be used alone.
2. This sheet is not to be used for construction unless the architect's stamp and signature appear on the drawings and the status box indicated drawings have been released for construction.
3. These plans and prints thereof, as instruments of service, are owned by the architect and are for use on this project only. Reproduction and/or distribution without the prior written consent of the architect is forbidden.
4. Copyright Studio W Associates, Inc. 2022.

REVISION HISTORY

DRAWING STATUS

	DATE
○ DSA PLAN CHECK	03/29/2024
● DSA BACK CHECK	06/24/2024
○ BIDDING	
○ CONSTRUCTION	

KEY PLAN

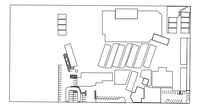

BUENA PARK USD
6885 ORANGETHORPE AVE
BUENA PARK, CA 90620

DSA SUBMITTAL

CARL E. GILBERT ELEMENTARY SCHOOL
TK/PK CLASSROOMS & EARLY LEARNING BUILDING
7255 8TH STREET, BUENA PARK, CA 90621

PAVING PLAN

Date	Project Number
06/24/2024	2300150
Application Number	Drawing Number
04-123212	C1.41
Drawn: TN	Checked: JP

Drawing: P:\2023\2300150 - 19 - BPSD - Carl E Gilbert Elementary School - TK-PK Classrooms & EL Building\DWG\SHEETS\2300150C-C140 PV.dwg Last Saved: Wednesday, June 19, 2024 5:20:58 PM Last Plotted: Wednesday, June 19, 2024 5:37:54 PM By: Alexis Bostic

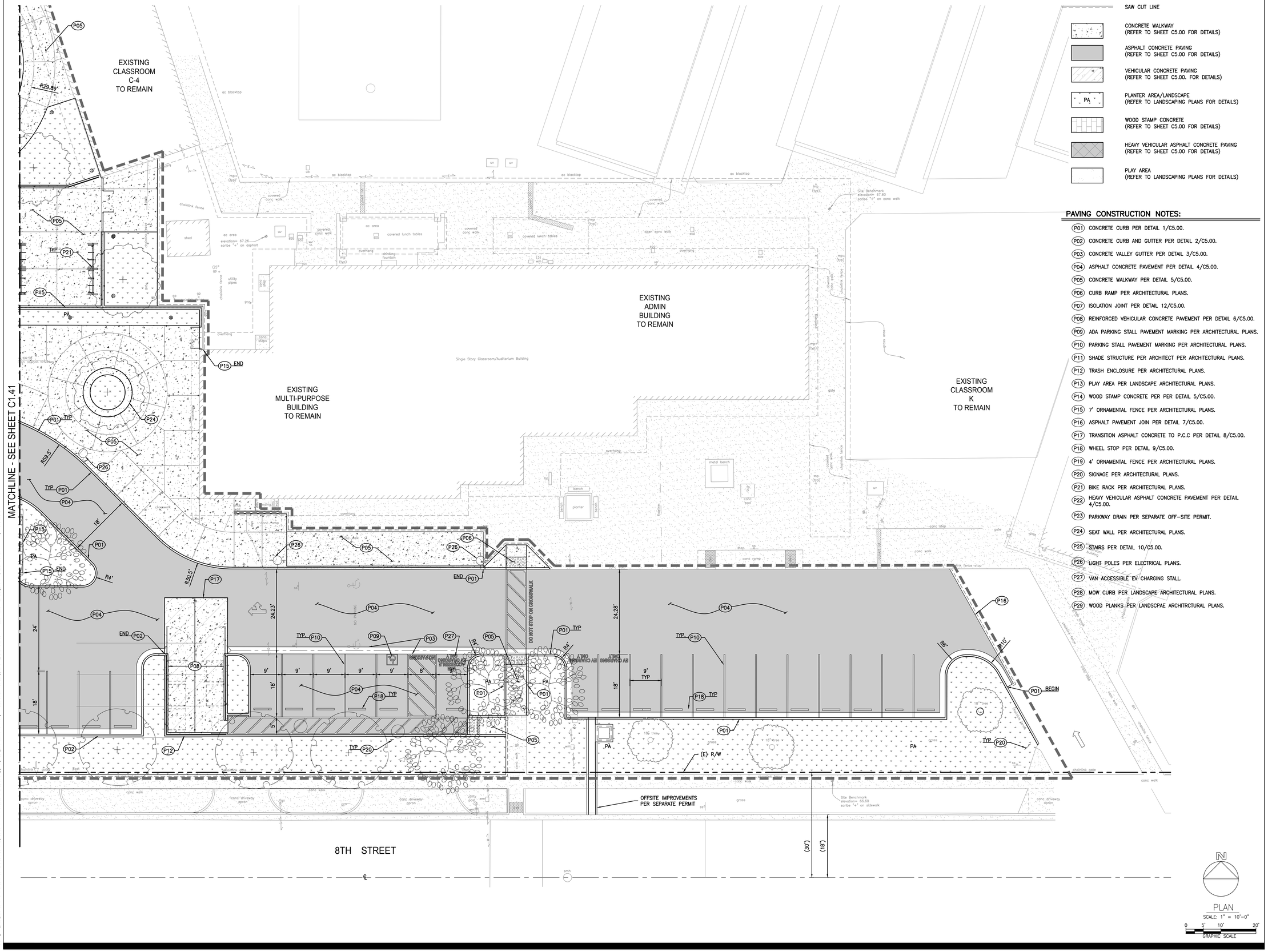

LEGEND:

- PROPERTY LINE
- LIMIT LINE OF PAVING
- ISOLATION JOINT AT BUILDING
- SAW CUT LINE
- CONCRETE WALKWAY (REFER TO SHEET C5.00 FOR DETAILS)
- ASPHALT CONCRETE PAVING (REFER TO SHEET C5.00 FOR DETAILS)
- VEHICULAR CONCRETE PAVING (REFER TO SHEET C5.00. FOR DETAILS)
- PLANTER AREA/LANDSCAPE (REFER TO LANDSCAPING PLANS FOR DETAILS)
- WOOD STAMP CONCRETE (REFER TO SHEET C5.00 FOR DETAILS)
- HEAVY VEHICULAR ASPHALT CONCRETE PAVING (REFER TO SHEET C5.00 FOR DETAILS)
- PLAY AREA (REFER TO LANDSCAPING PLANS FOR DETAILS)

PAVING CONSTRUCTION NOTES:

- P01 CONCRETE CURB PER DETAIL 1/C5.00.
- P02 CONCRETE CURB AND GUTTER PER DETAIL 2/C5.00.
- P03 CONCRETE VALLEY GUTTER PER DETAIL 3/C5.00.
- P04 ASPHALT CONCRETE PAVEMENT PER DETAIL 4/C5.00.
- P05 CONCRETE WALKWAY PER DETAIL 5/C5.00.
- P06 CURB RAMP PER ARCHITECTURAL PLANS.
- P07 ISOLATION JOINT PER DETAIL 12/C5.00.
- P08 REINFORCED VEHICULAR CONCRETE PAVEMENT PER DETAIL 6/C5.00.
- P09 ADA PARKING STALL PAVEMENT MARKING PER ARCHITECTURAL PLANS.
- P10 PARKING STALL PAVEMENT MARKING PER ARCHITECTURAL PLANS.
- P11 SHADE STRUCTURE PER ARCHITECT PER ARCHITECTURAL PLANS.
- P12 TRASH ENCLOSURE PER ARCHITECTURAL PLANS.
- P13 PLAY AREA PER LANDSCAPE ARCHITECTURAL PLANS.
- P14 WOOD STAMP CONCRETE PER PER DETAIL 5/C5.00.
- P15 7' ORNAMENTAL FENCE PER ARCHITECTURAL PLANS.
- P16 ASPHALT PAVEMENT JOIN PER DETAIL 7/C5.00.
- P17 TRANSITION ASPHALT CONCRETE TO P.C.C PER DETAIL 8/C5.00.
- P18 WHEEL STOP PER DETAIL 9/C5.00.
- P19 4' ORNAMENTAL FENCE PER ARCHITECTURAL PLANS.
- P20 SIGNAGE PER ARCHITECTURAL PLANS.
- P21 BIKE RACK PER ARCHITECTURAL PLANS.
- P22 HEAVY VEHICULAR ASPHALT CONCRETE PAVEMENT PER DETAIL 4/C5.00.
- P23 PARKWAY DRAIN PER SEPARATE OFF-SITE PERMIT.
- P24 SEAT WALL PER ARCHITECTURAL PLANS.
- P25 STAIRS PER DETAIL 10/C5.00.
- P26 LIGHT POLES PER ELECTRICAL PLANS.
- P27 VAN ACCESSIBLE EV CHARGING STALL.
- P28 MOW CURB PER LANDSCAPE ARCHITECTURAL PLANS.
- P29 WOOD PLANKS PER LANDSCPAE ARCHITRCTURAL PLANS.

PLAN
SCALE: 1" = 10'-0"
0 5' 10' 20'
GRAPHIC SCALE

DSA STAMP

STUDIO W ARCHITECTS

Studio W Architects
1930 H Street
Sacramento, California 95811
[T] 916.254.5600
www.StudioW-Architects.com

kpff
140 Newport Center Drive,
Suite 100
Newport Beach, CA 92660
O: 949.478.8800
www.kpff.com

ARCHITECT	ENGINEER
LICENSED ARCHITECT BRIAN P WHITMORE No. C 30345 Ren. 9/30/25 STATE OF CALIFORNIA	REGISTERED PROFESSIONAL ENGINEER ALI KHAMO No. C74768 Exp. 12/31/25 CIVIL STATE OF CALIFORNIA
DATE SIGNED: 06/24/2024	DATE SIGNED: 06/24/2024

GENERAL NOTES
1. This sheet is part of a set and is not to be used alone.
2. This sheet is not to be used for construction unless the architect's stamp and signature appear on the drawings and the status box indicated drawings have been released for construction.
3. These plans and prints thereof, as instruments of service, are owned by the architect and are for use on this project only. Reproduction and/or distribution without the prior written consent of the architect is forbidden.
4. Copyright Studio W Associates, Inc. 2022.

REVISION HISTORY

DRAWING STATUS		DATE
○	DSA PLAN CHECK	03/29/2024
●	DSA BACK CHECK	06/24/2024
○	BIDDING	
○	CONSTRUCTION	

KEY PLAN

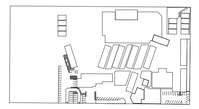

BUENA PARK USD
6885 ORANGETHORPE AVE
BUENA PARK, CA 90620

DSA SUBMITTAL

CARL E. GILBERT ELEMENTARY SCHOOL
TK/PK CLASSROOMS & EARLY LEARNING BUILDING
7255 8TH STREET, BUENA PARK, CA 90621

PAVING PLAN

Date	Project Number
06/24/2024	2300150
Application Number	Drawing Number
04-123212	C1.42
Drawn: TN	Checked: JP

Drawing: P:\2023\2300150 - 19 - BPID - Carl E Gilbert Elementary School - TK-PK Classrooms & EL Building\DWG\SHEETS\2300150C-C140 PV.dwg Last Saved: Wednesday, June 19, 2024 5:35:58 PM Last Plotted: Wednesday, June 19, 2024 5:37:09 PM By: Alexis Bisolo

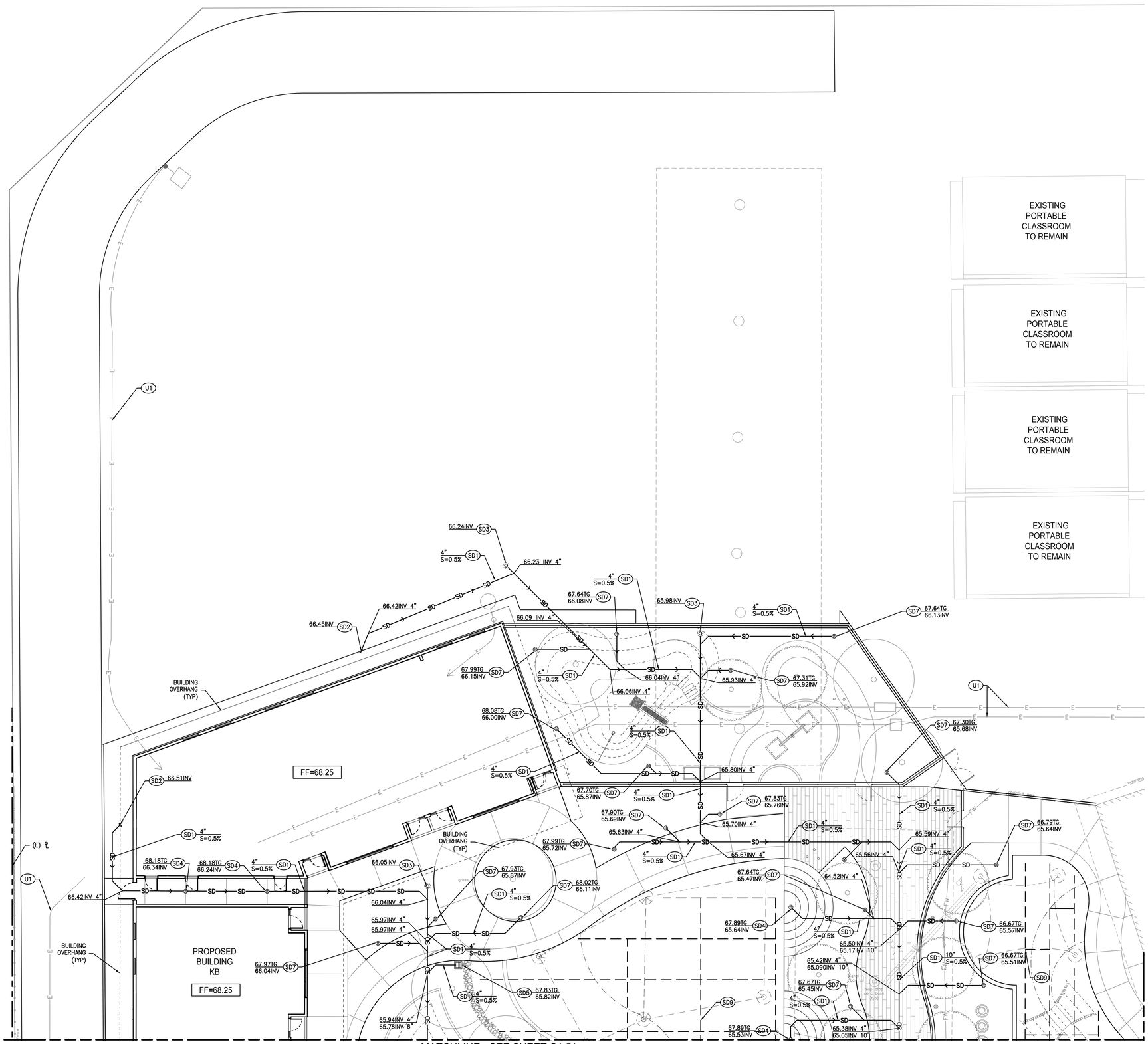

UTILITY CONSTRUCTION NOTES:

STORM DRAIN

- (SD1) PVC, SDR-35 STORM DRAIN PIPE PER DETAIL 1/C5.01. SIZE AND SLOPE PER PLAN.
- (SD2) POINT OF CONNECTION 5 FEET FROM BUILDING FACE. SEE PLUMBING DRAWINGS FOR CONTINUATION.
- (SD3) CLEANOUT PER DETAIL 3/C5.01.
- (SD4) AREA DRAIN PER DETAIL 4/C5.01.
- (SD5) 12" X 12"CAST IN PLACE CONCRETE CATCH BASIN PER DETAIL 5/C5.01. UNLESS NOTED OTHERWISE ON PLAN.
- (SD6) ECOSTREAM UNIT 1 & 2 PER DETAIL 6/C5.01 AND 7/C5.01.
- (SD7) PLANTER DRAIN PER DETAIL 2/C5.01.
- (SD8) ADS STORMTECH CHAMBER DETENTION SYSTEM. REFER TO SHEET C5.04 TO C5.05 FOR MORE DETAIL. PROVIDE TRAFFIC RATED RIM COVERS.
- (SD9) 4" PVC, SDR-35 PERFORATED STORM DRAIN SUBDRAIN PIPE UNDER RUBBER PLAY AREA. BACKFILL PER MANUFACTURER RECOMMENDATIONS.
- (SD10) PERFORATED PIPE TO SOLID PIPE TRANSITION WITH WYE FITTING.
- (SD11) STORMWATER LIFT STATION 1 & 2 PER DETAIL 1/C5.02 AND 1/C5.03.
- (SD12) CONCRETE BLANKET PROTECTION PER S.P.P.W.C STANDARD PLAN # 225-3.
- (SD13) INTERLAKEN RAIN 12"X12" CATCH BASIN GRATE-HEEL PROOF.

SANITARY SEWER

- (SS1) PVC, SDR-35 SANITARY SEWER PIPE PER DETAIL 1/C5.01.SIZE AND SLOPE PER PLAN.
- (SS2) POINT OF CONNECTION 5 FEET FROM BUILDING FACE. SEE PLUMBING DRAWINGS FOR CONTINUATION.
- (SS3) CLEANOUT PER DETAIL 3/C5.01

DOMESTIC WATER

- (W1) PVC SCH-40 DOMESTIC WATER PIPE PER DETAIL 1/C5.01. SIZE PER PLAN.
- (W2) POINT OF CONNECTION 5 FEET FROM BUILDING FACE. SEE PLUMBING DRAWINGS FOR CONTINUATION.
- (W3) THRUST BLOCK PER DETAIL 11/C5.00.

FIRE WATER

- (F1) PVC C-900 FIRE WATER PIPE PER DETAIL 1/C5.01. SIZE AND MATERIAL PER PLAN.

OTHER UTILITIES

- (U1) ELECTRICAL CONDUIT. SEE ELECTRICAL DRAWINGS FOR DETAILS AND SPECIFICATIONS. SHOWN FOR COORDINATION PURPOSES ONLY.

NOTE:

ALL BURIED DUCTILE IRON AND COPPER PIPE, FITTINGS, VALVES, AND APPURTENANCES SHALL BE COATED WITH A DIELECTRIC COATING: A LIQUID EPOXY COATING SYSTEM PER AWWA C-210 AT 24 MILS MINIMUM DRY FILM THICKNESS (MDFT) 3M SCOTCHKOTETM 323/323I LIQUID EPOXY COATINGS FOR CORROSION PROTECTION OR EQUIVALENT, OR A COLD APPLIED THREE PART SYSTEM PETROLEUM WAX TAPE PER AWWA C-217, OR A 100% POLYURETHANE COATING OF 24 MILS MDFT SUITABLE FOR BURIED USE DENSYL TAPE BY DENSO OR EQUIVALENT.

PLAN
SCALE: 1" = 10'-0"
0 5' 10' 20'
GRAPHIC SCALE

DSA STAMP

STUDIO W ARCHITECTS

Studio W Architects
1930 H Street
Sacramento, California 95811
[T] 916.254.5600
www.StudioW-Architects.com

kpff
140 Newport Center Drive,
Suite 100
Newport Beach, CA 92660
O: 949.478.8800
www.kpff.com

ARCHITECT	ENGINEER
LICENSED ARCHITECT BRYAN P. WITHROW No. C 30345 Ren. 9/30/25 STATE OF CALIFORNIA	REGISTERED PROFESSIONAL ENGINEER ALI KHAMO No. C74768 Exp. 12/31/25 CIVIL STATE OF CALIFORNIA
DATE SIGNED: 06/24/2024	DATE SIGNED: 06/24/2024

GENERAL NOTES

1. This sheet is part of a set and is not to be used alone.
2. This sheet is not to be used for construction unless the architect's stamp and signature appear on the drawings and the status box indicated drawings have been released for construction.
3. These plans and prints thereof, as instruments of service, are owned by the architect and are for use on this project only. Reproduction and/or distribution without the prior written consent of the architect is forbidden.
4. Copyright Studio W Associates, Inc. 2022.

REVISION HISTORY

DRAWING STATUS

	DATE
○ DSA PLAN CHECK	03/29/2024
● DSA BACK CHECK	06/24/2024
○ BIDDING	
○ CONSTRUCTION	

KEY PLAN

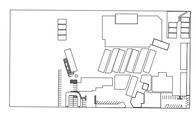

BUENA PARK USD
6885 ORANGETHORPE AVE
BUENA PARK, CA 90620

DSA SUBMITTAL

CARL E. GILBERT ELEMENTARY SCHOOL
TK/PK CLASSROOMS & EARLY LEARNING BUILDING
7255 8TH STREET, BUENA PARK, CA 90621

UTILITY PLAN

Date	Project Number
06/24/2024	2300150
Application Number	Drawing Number
04-123212	C1.50
Drawn / Checked	
TN / JP	

Drawing: P:\2023\2300150 - 19 - BPSD - Carl E Gilbert Elementary School - TK-PK Classrooms & EL Building\DWG\SHEETS\2300150C-C1501.DT.dwg Last Saved: Wednesday, June 19, 2024 5:02:06 PM Last Plotted: Wednesday, June 19, 2024 5:36:07 PM By: Alexis Basilio

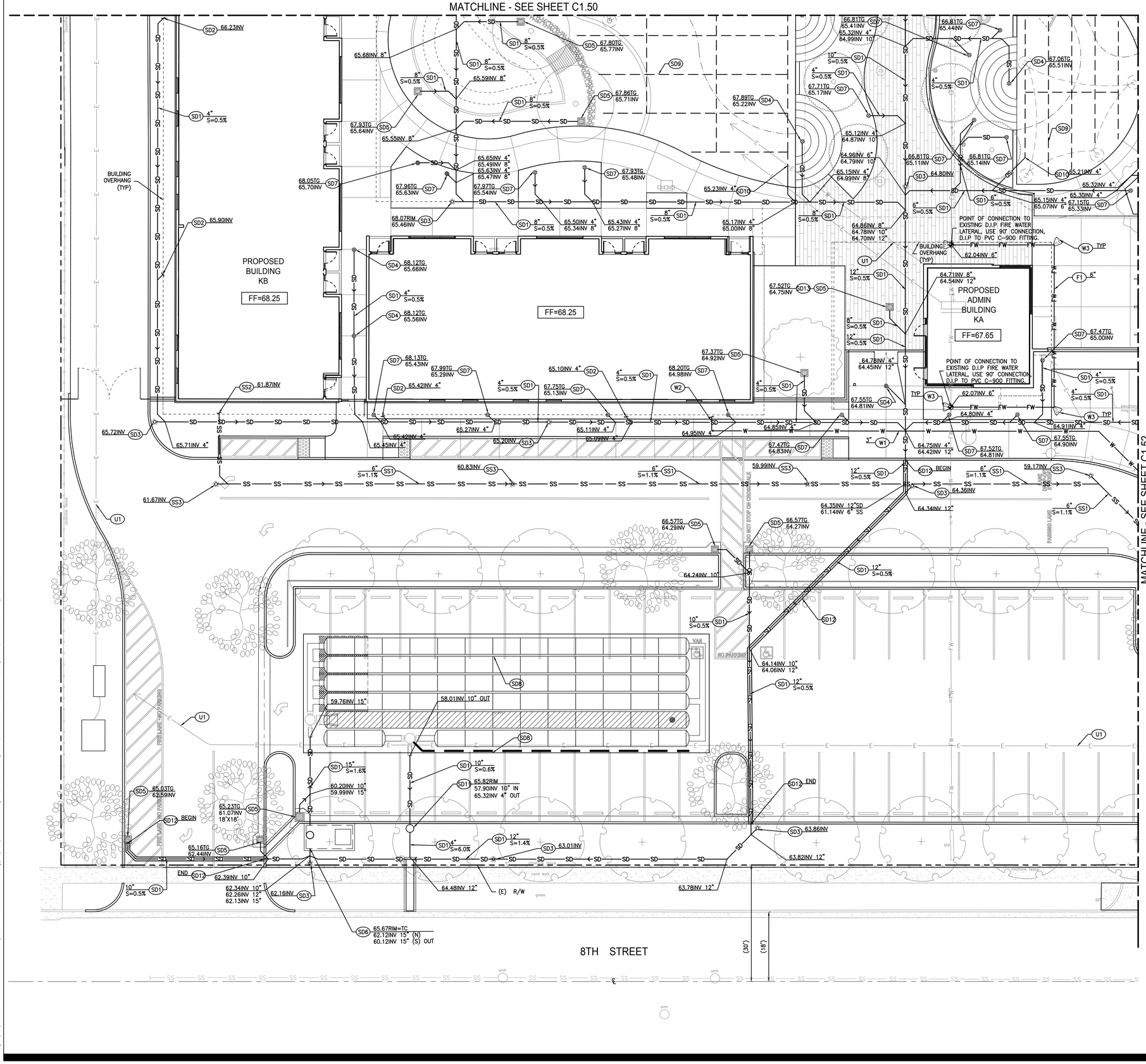

UTILITY CONSTRUCTION NOTES:

STORM DRAIN

- SD1 PVC, SDR-35 STORM DRAIN PIPE PER DETAIL 1/C5.01. SIZE AND SLOPE PER PLAN.
- SD2 POINT OF CONNECTION 5 FEET FROM BUILDING FACE. SEE PLUMBING DRAWINGS FOR CONTINUATION.
- SD3 CLEANOUT PER DETAIL 3/C5.01.
- SD4 AREA DRAIN PER DETAIL 4/C5.01.
- SD5 12" X 12"CAST IN PLACE CONCRETE CATCH BASIN PER DETAIL 5/C5.01. UNLESS NOTED OTHERWISE ON PLAN.
- SD6 ECOSTREAM UNIT 1 & 2 PER DETAIL 6/C5.01 AND 7/C5.01.
- SD7 PLANTER DRAIN PER DETAIL 2/C5.01.
- SD8 ADS STORMTECH CHAMBER DETENTION SYSTEM. REFER TO SHEET C5.04 TO C5.05 FOR MORE DETAIL. PROVIDE TRAFFIC RATED RIM COVERS.
- SD9 4" PVC, SDR-35 PERFORATED STORM DRAIN SUBDRAIN PIPE UNDER RUBBER PLAY AREA. BACKFILL PER MANUFACTURER RECOMMENDATIONS.
- SD10 PERFORATED PIPE TO SOLID PIPE TRANSITION WITH WYE FITTING.
- SD11 STORMWATER LIFT STATION 1 & 2 PER DETAIL 1/C5.02 AND 1/C5.03.
- SD12 CONCRETE BLANKET PROTECTION PER S.P.P.W.C STANDARD PLAN # 225-3.
- SD13 INTERLAKEN RAIN 12"X12" CATCH BASIN GRATE-HEEL PROOF.

SANITARY SEWER

- SS1 PVC, SDR-35 SANITARY SEWER PIPE PER DETAIL 1/C5.01.SIZE AND SLOPE PER PLAN.
- SS2 POINT OF CONNECTION 5 FEET FROM BUILDING FACE. SEE PLUMBING DRAWINGS FOR CONTINUATION.
- SS3 CLEANOUT PER DETAIL 3/C5.01

DOMESTIC WATER

- W1 PVC SCH-40 DOMESTIC WATER PIPE PER DETAIL 1/C5.01. SIZE PER PLAN.
- W2 POINT OF CONNECTION 5 FEET FROM BUILDING FACE. SEE PLUMBING DRAWINGS FOR CONTINUATION.
- W3 THRUST BLOCK PER DETAIL 11/C5.00.

FIRE WATER

- F1 PVC C-900 FIRE WATER PIPE PER DETAIL 1/C5.01. SIZE AND MATERIAL PER PLAN.

OTHER UTILITIES

- U1 ELECTRICAL CONDUIT. SEE ELECTRICAL DRAWINGS FOR DETAILS AND SPECIFICATIONS. SHOWN FOR COORDINATION PURPOSES ONLY.

NOTE:

ALL BURIED DUCTILE IRON AND COPPER PIPE, FITTINGS, VALVES, AND APPURTENANCES SHALL BE COATED WITH A DIELECTRIC COATING: A LIQUID EPOXY COATING SYSTEM PER AWWA C-210 AT 24 MILS MINIMUM DRY FILM THICKNESS (MDFT) 3M SCOTCHKOTETM 323/323I LIQUID EPOXY COATINGS FOR CORROSION PROTECTION OR EQUIVALENT, OR A COLD APPLIED THREE PART SYSTEM PETROLEUM WAX TAPE PER AWWA C-217, OR A 100% POLYURETHANE COATING OF 24 MILS MDFT SUITABLE FOR BURIED USE DENSYL TAPE BY DENSO OR EQUIVALENT.

PLAN
SCALE: 1" = 10'-0"
0 5' 10' 20'
GRAPHIC SCALE

DSA STAMP

STUDIO W ARCHITECTS

Studio W Architects
1930 H Street
Sacramento, California 95811
[T] 916.254.5600
www.StudioW-Architects.com

kpff
140 Newport Center Drive,
Suite 100
Newport Beach, CA 92660
O: 949.478.8800
www.kpff.com

ARCHITECT	ENGINEER
LICENSED ARCHITECT BRIAN P. WHITMORE No. C 30345 Ren. 9/30/25 STATE OF CALIFORNIA	REGISTERED PROFESSIONAL ENGINEER ALI KHAMO No. C 74768 Exp. 12/31/25 CIVIL STATE OF CALIFORNIA
DATE SIGNED: 06/24/2024	DATE SIGNED: 06/24/2024

GENERAL NOTES

1. This sheet is part of a set and is not to be used alone.
2. This sheet is not to be used for construction unless the architect's stamp and signature appear on the drawings and the status box indicated drawings have been released for construction.
3. These plans and prints thereof, as instruments of service, are owned by the architect and are for use on this project only. Reproduction and/or distribution without the prior written consent of the architect is forbidden.
4. Copyright Studio W Associates, Inc. 2022.

REVISION HISTORY

DRAWING STATUS		DATE
	DSA PLAN CHECK	03/29/2024
	DSA BACK CHECK	06/24/2024
	BIDDING	
	CONSTRUCTION	

KEY PLAN

BUENA PARK USD
6885 ORANGETHORPE AVE
BUENA PARK, CA 90620

DSA SUBMITTAL

CARL E. GILBERT ELEMENTARY SCHOOL

TK/PK CLASSROOMS & EARLY LEARNING BUILDING
7255 8TH STREET, BUENA PARK, CA 90621

UTILITY PLAN

Date 06/24/2024	Project Number 2300150
Application Number 04-123212	Drawing Number C1.51
Drawn TN	Checked JP

Drawing: X:\2023\2300150 - 19 - BPSD - Carl E Gilbert Elementary School - TK-PK Classrooms & EL Building\DWG\SHEETS\2300150C-C150 UP.dwg Last Saved: Wednesday, June 19, 2024 5:02:06 PM Last Plotted: Wednesday, June 19, 2024 5:38:09 PM By: Alexis Bisbiko

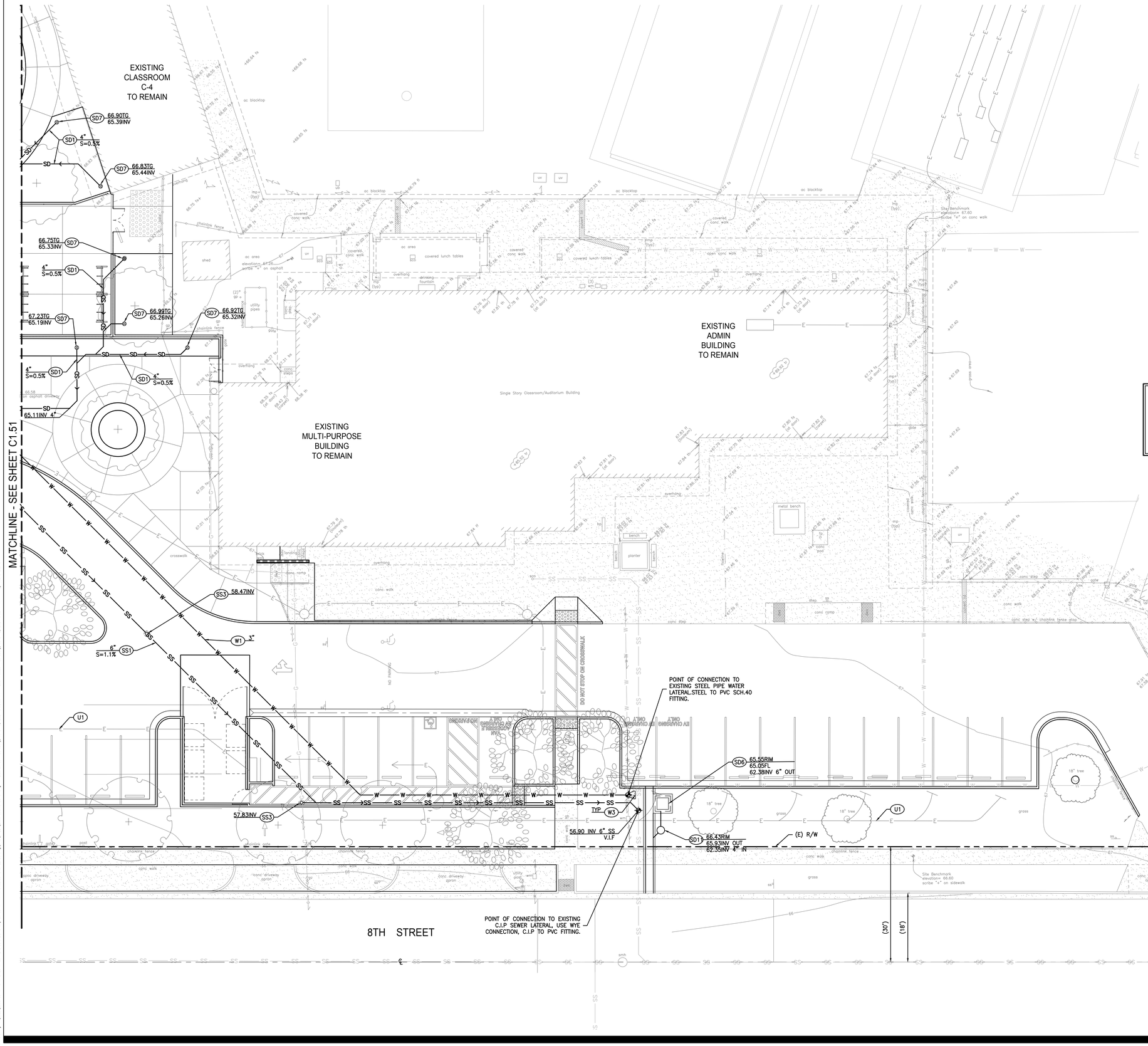

UTILITY CONSTRUCTION NOTES:

STORM DRAIN

- (SD1) PVC, SDR-35 STORM DRAIN PIPE PER DETAIL 1/C5.01. SIZE AND SLOPE PER PLAN.
- (SD2) POINT OF CONNECTION 5 FEET FROM BUILDING FACE. SEE PLUMBING DRAWINGS FOR CONTINUATION.
- (SD3) CLEANOUT PER DETAIL 3/C5.01.
- (SD4) AREA DRAIN PER DETAIL 4/C5.01.
- (SD5) 12" X 12"CAST IN PLACE CONCRETE CATCH BASIN PER DETAIL 5/C5.01. UNLESS NOTED OTHERWISE ON PLAN.
- (SD6) ECOSTREAM UNIT 1 & 2 PER DETAIL 6/C5.01 AND 7/C5.01.
- (SD7) PLANTER DRAIN PER DETAIL 2/C5.01.
- (SD8) ADS STORMTECH CHAMBER DETENTION SYSTEM. REFER TO SHEET C5.04 TO C5.05 FOR MORE DETAIL. PROVIDE TRAFFIC RATED RIM COVERS.
- (SD9) 4" PVC, SDR-35 PERFORATED STORM DRAIN SUBDRAIN PIPE UNDER RUBBER PLAY AREA. BACKFILL PER MANUFACTURER RECOMMENDATIONS.
- (SD10) PERFORATED PIPE TO SOLID PIPE TRANSITION WITH WYE FITTING.
- (SD11) STORMWATER LIFT STATION 1 & 2 PER DETAIL 1/C5.02 AND 1/C5.03.
- (SD12) CONCRETE BLANKET PROTECTION PER S.P.P.W.C STANDARD PLAN # 225-3.
- (SD13) INTERLAKEN RAIN 12"X12" CATCH BASIN GRATE-HEEL PROOF.

SANITARY SEWER

- (SS1) PVC, SDR-35 SANITARY SEWER PIPE PER DETAIL 1/C5.01.SIZE AND SLOPE PER PLAN.
- (SS2) POINT OF CONNECTION 5 FEET FROM BUILDING FACE. SEE PLUMBING DRAWINGS FOR CONTINUATION.
- (SS3) CLEANOUT PER DETAIL 3/C5.01

DOMESTIC WATER

- (W1) PVC SCH-40 DOMESTIC WATER PIPE PER DETAIL 1/C5.01. SIZE PER PLAN.
- (W2) POINT OF CONNECTION 5 FEET FROM BUILDING FACE. SEE PLUMBING DRAWINGS FOR CONTINUATION.
- (W3) THRUST BLOCK PER DETAIL 11/C5.00.

FIRE WATER

- (F1) PVC C-900 FIRE WATER PIPE PER DETAIL 1/C5.01. SIZE AND MATERIAL PER PLAN.

OTHER UTILITIES

- (U1) ELECTRICAL CONDUIT. SEE ELECTRICAL DRAWINGS FOR DETAILS AND SPECIFICATIONS. SHOWN FOR COORDINATION PURPOSES ONLY.

NOTE:

ALL BURIED DUCTILE IRON AND COPPER PIPE, FITTINGS, VALVES, AND APPURTENANCES SHALL BE COATED WITH A DIELECTRIC COATING: A LIQUID EPOXY COATING SYSTEM PER AWWA C-210 AT 24 MILS MINIMUM DRY FILM THICKNESS (MDFT) 3M SCOTCHKOTETM 323/323I LIQUID EPOXY COATINGS FOR CORROSION PROTECTION OR EQUIVALENT, OR A COLD APPLIED THREE PART SYSTEM PETROLEUM WAX TAPE PER AWWA C-217, OR A 100% POLYURETHANE COATING OF 24 MILS MDFT SUITABLE FOR BURIED USE DENSYL TAPE BY DENSO OR EQUIVALENT.

DSA STAMP

STUDIO W ARCHITECTS

Studio W Architects
1930 H Street
Sacramento, California 95811
[T] 916.254.5600
www.StudioW-Architects.com

kpff
140 Newport Center Drive,
Suite 100
Newport Beach, CA 92660
O: 949.478.8800
www.kpff.com

ARCHITECT	ENGINEER
LICENSED ARCHITECT BRIAN P. WHITMORE No. C 30345 Ren. 9/30/25 STATE OF CALIFORNIA	REGISTERED PROFESSIONAL ENGINEER ALI KHAMO No. C 74768 Exp. 12/31/25 CIVIL STATE OF CALIFORNIA
DATE SIGNED: 06/24/2024	DATE SIGNED: 06/24/2024

GENERAL NOTES

1. This sheet is part of a set and is not to be used alone.
2. This sheet is not to be used for construction unless the architect's stamp and signature appear on the drawings and the status box indicated drawings have been released for construction.
3. These plans and prints thereof, as instruments of service, are owned by the architect and are for use on this project only. Reproduction and/or distribution without the prior written consent of the architect is forbidden.
4. Copyright Studio W Associates, Inc. 2022.

REVISION HISTORY

DRAWING STATUS		DATE
○	DSA PLAN CHECK	03/29/2024
●	DSA BACK CHECK	06/24/2024
○	BIDDING	
○	CONSTRUCTION	

KEY PLAN

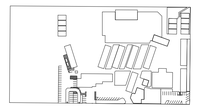

BUENA PARK USD
6885 ORANGETHORPE AVE
BUENA PARK, CA 90620

DSA SUBMITTAL

CARL E. GILBERT ELEMENTARY SCHOOL
TK/PK CLASSROOMS & EARLY LEARNING BUILDING
7255 8TH STREET, BUENA PARK, CA 90621

UTILITY PLAN

Date	Project Number
06/24/2024	2300150
Application Number	Drawing Number
04-123212	C1.52
Drawn: TN	Checked: JP

Drawing: P:\2023\23300150 - 19 - BPSD - Carl E Gilbert Elementary School - TK-PK Classrooms & EL Building\CAD\CIVIL\2300150-C150.12.dwg Last Saved: Wednesday, June 19, 2024 5:02:08 PM Last Plotted: Wednesday, June 19, 2024 5:38:14 PM By: Alexis Bistlo

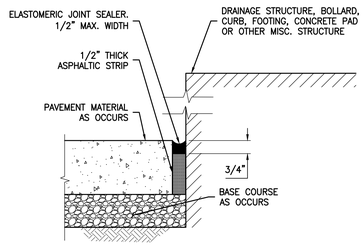

12 ISOLATION JOINT AT STRUCTURE N.T.S.

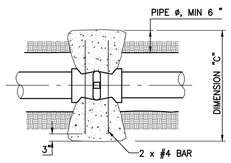

VALVE SUPPORT PLAN

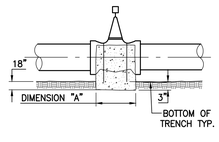

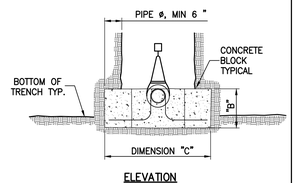

ELEVATION

VALVE ANCHORS

THRUST BLOCK BEARING AREAS – S.F.

MAIN SIZE	TEE *	BEND			
		90°	45°	22.5°	11.25°
4"	3.8	3.8	1.6	0.8	0.4
6"	7.9	7.9	3.3	1.6	0.8
8"	13.6	13.6	5.7	2.7	1.4
10"	20.5	20.5	8.5	4.1	2.9
12"	29.0	29.0	12	5.8	2.9

* INCLUDES TEES, PLUGS, CAPS, HYDRANTS & VALVES.

VALVE SUPPORT BLOCK

VALVE SIZE	DIMENSION "A"	DIMENSION "B"
4"	12"	12"
6"	12"	12"
8"	13"	14"
10"	14"	16"
12"	15"	18"

DIMENSION "C" = TRENCH WIDTH PLUS TWO TIMES THE PIPE ø, MINIMUM 6" EMBEDMENT.

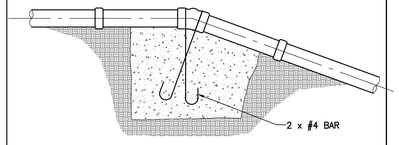

VERTICAL BEND

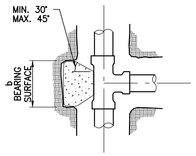

TEE

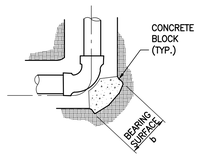

90° ELBOW

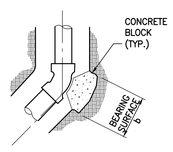

45° ELBOW

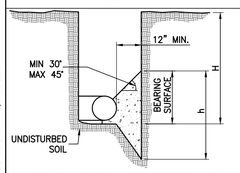

TYPICAL SECTION OF THRUST BLOCK

$h \leq 1/2\ H$

$h \leq b \leq 2\ h$

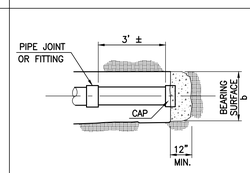

CAPPED END

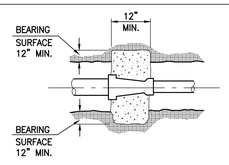

REDUCER

GENERAL NOTES:

1. ALL THRUST/ANCHOR BLOCKS SHALL BEAR AGAINST UNDISTURBED SOIL.
2. CONCRETE SHALL BE 450-C-2000.
3. ALL ANCHOR RODS AND ANCHOR BOLTS SHALL BE MINIMUM 5/8" DIA. & ANCHOR STRAPS SHALL BE 3"x1/4".
4. THRUST BLOCK DESIGN IS PER NFPA 24, BASED ON A WATER PRESSURE OF 100 P.S.I., AND A MINIMUM ALLOWABLE SOIL BEARING VALUE OF 1000 P.S.F.
5. THE RATIO OF WIDTH TO HEIGHT OF THRUST BLOCKS SHALL NOT EXCEED 1.5 TO 1.
6. PORTIONS OF REINFORCING STEEL NOT EMBEDDED IN CONCRETE SHALL BE COATED WITH HOT TAR OR COLD APPLIED BITUMASTIC MATERIAL.

11 THRUST AND ANCHOR BLOCK DETAILS N.T.S.

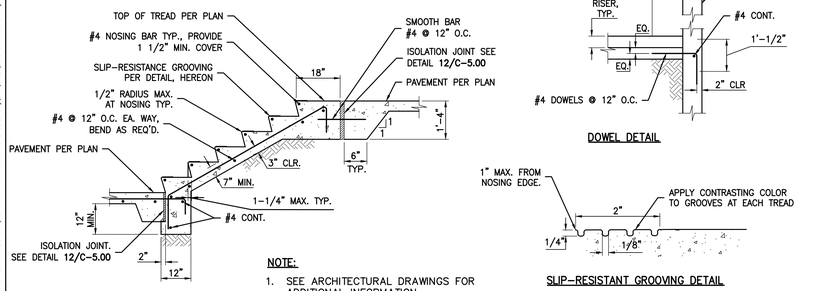

NOTE:

1. SEE ARCHITECTURAL DRAWINGS FOR ADDITIONAL INFORMATION.
2. HANDRAIL DETAILS PER ARCHITECTURAL PLANS.

10 TYPICAL CONCRETE STAIRS ON GRADE N.T.S.

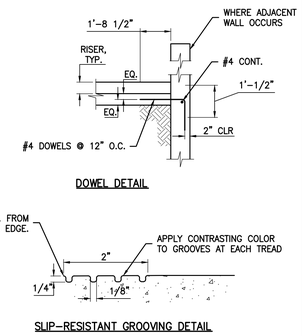

SLIP-RESISTANT GROOVING DETAIL

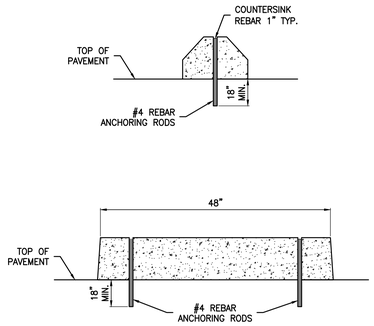

9 REINFORCED PRECAST WHEEL STOP N.T.S.

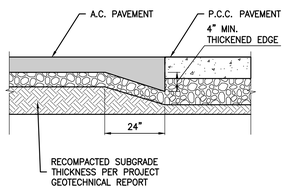

NOTE:

1. APPROVED BONDING AGENT SHALL BE APPLIED AT CONSTRUCTION JOINT.

8 TRANSITION ASPHALT CONCRETE TO P.C.C. N.T.S.

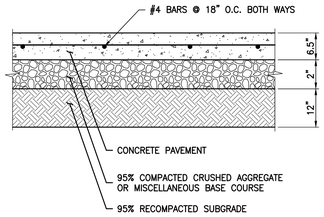

NOTES:

1. PAVEMENT SECTIONS ARE BASED ON RECOMMENDATIONS FROM THE PROJECT GEOTECHNICAL REPORT.
2. REFER TO ARCHITECTURAL PLANS FOR CONCRETE COLOR, PATTERN, TEXTURE, AND FINISH.
3. SEE PLAN FOR LOCATION OF CONTROL JOINTS.

6 REINFORCED CONCRETE PAVEMENT N.T.S.

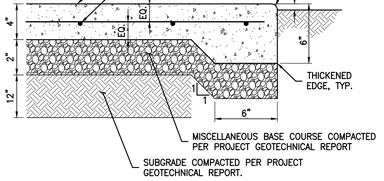

NOTES:

1. ALL TREAD SURFACES SHALL BE SLIP-RESISTANT.
2. REFER TO ARCHITECTURAL DRAWINGS FOR COLOR, PATTERN, TEXTURE, AND FINISH.
3. SEE PLAN FOR LOCATION OF CONTROL JOINTS.

5 CONCRETE WALK SECTION N.T.S.

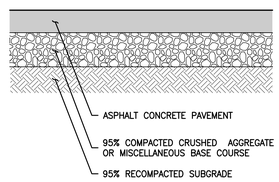

A.C. PAVEMENT TYPE	ASPHALT CONCRETE (INCHES)	BASE COURSE (INCHES)	RECOMPACTED SUBGRADE (INCHES)
VEHICULAR PARKING	3"	4.5"	12"
HEAVY TRUCK TRAFFIC	4"	6"	12"

NOTE:

1. PAVEMENT SECTIONS ARE BASED ON RECOMMENDATIONS FROM THE PROJECT GEOTECHNICAL REPORT.

4 ASPHALT PAVEMENT SECTION N.T.S.

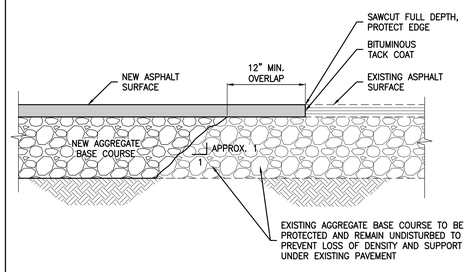

7 ASPHALT PAVEMENT JOIN N.T.S.

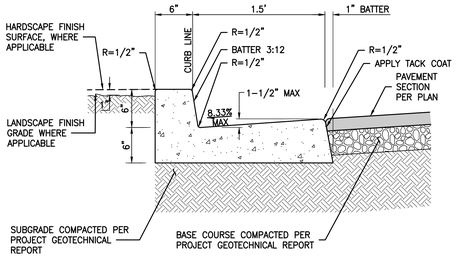

NOTES:

1. ISOLATION JOINTS SHALL BE PLACED ONLY AS SPECIFIED.
2. CONTROL JOINTS CONSISTING OF 1" DEEP SCORES SHALL BE PLACED AT 10' INTERVALS O.C.

3 CONCRETE VALLEY GUTTER N.T.S.

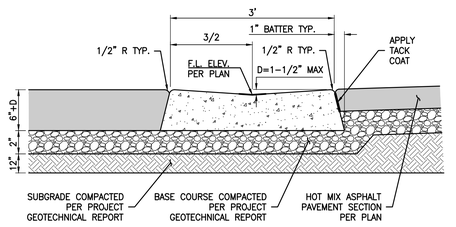

NOTES:

1. ISOLATION JOINTS SHALL BE PLACED ONLY AS SPECIFIED.
2. CONTROL JOINTS CONSISTING OF 1" DEEP SCORES SHALL BE PLACED AT 10' INTERVALS O.C.
3. WHERE A WALK IS ADJACENT TO THE CURB THE JOINTS SHALL ALIGN WITH JOINTS IN THE WALK.

2 CONCRETE CURB AND GUTTER N.T.S.

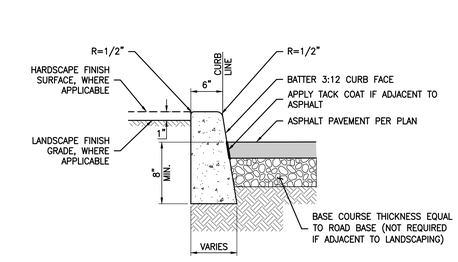

NOTES:

1. ISOLATION JOINTS SHALL BE PLACED ONLY AS SPECIFIED.
2. CONTROL JOINTS CONSISTING OF 1" DEEP SCORES SHALL BE PLACED AT 10' INTERVALS O.C.
3. WHERE A WALK IS ADJACENT TO THE CURB, THE JOINTS SHALL ALIGN WITH JOINTS IN THE WALK.

1 CONCRETE CURB N.T.S.

DSA STAMP

STUDIO W ARCHITECTS

Studio W Architects
1930 H Street
Sacramento, California 95811
[T] 916.254.5600
www.StudioW-Architects.com

kpff
140 Newport Center Drive,
Suite 100
Newport Beach, CA 92660
O: 949.478.8800
www.kpff.com

ARCHITECT	ENGINEER
LICENSED ARCHITECT BRYAN P. WITHROW No. C 30345 Ren. 9/30/25 STATE OF CALIFORNIA	REGISTERED PROFESSIONAL ENGINEER ALI KHAMO No. C 71476 Exp. 12/31/25 CIVIL STATE OF CALIFORNIA
DATE SIGNED: 06/24/2024	DATE SIGNED: 06/24/2024

GENERAL NOTES

1. This sheet is part of a set and is not to be used alone.
2. This sheet is not to be used for construction unless the architect's stamp and signature appear on the drawings and the status box indicated drawings have been released for construction.
3. These plans and prints thereof, as instruments of service, are owned by the architect and are for use on this project only. Reproduction and/or distribution without the prior written consent of the architect is forbidden.
4. Copyright Studio W Associates, Inc. 2022.

REVISION HISTORY

DRAWING STATUS

	DATE
○ DSA PLAN CHECK	03/29/2024
● DSA BACK CHECK	06/24/2024
○ BIDDING	
○ CONSTRUCTION	

KEY PLAN

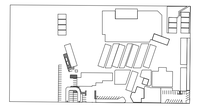

BUENA PARK USD
6885 ORANGETHORPE AVE
BUENA PARK, CA 90620

DSA SUBMITTAL

CARL E. GILBERT ELEMENTARY SCHOOL
TK/PK CLASSROOMS & EARLY LEARNING BUILDING
7255 8TH STREET, BUENA PARK, CA 90621

DETAILS

Date	Project Number
06/24/2024	2300150
Application Number	Drawing Number
04-123212	C5.00
Drawn: TN	Checked: JP

Drawing: P:\2023\2300150 - 19 - BPSD - Carl E Gilbert Elementary School - TK-PK Classrooms & EL Building\DWG\SHEETS\2300150-C500 DT.dwg Last Saved: Tuesday, June 18, 2024 3:22:52 PM By: Rikka Bistilo
Last Plotted: Wednesday, June 19, 2024 5:38:21 PM

NOTES:

- UNDERDRAIN SHOWN IS SCHEMATIC ONLY. FOR DETAILS ON UNDERDRAIN SIZING AND LAYOUT SEE ECOSTREAM INSTALLATION GUIDE FOR DETAILS, KIT NUMBER AND PLACEMENT OPTIONS
- THE ENGINEER MUST REVIEW THE ECOSTREAM OUTLET INVERT TO ENSURE IT CAN CONNECT TO THE DOWNSTREAM INVERT.

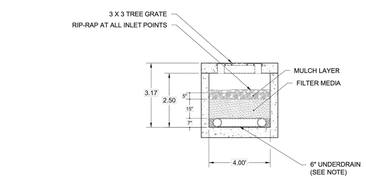

SECTION A-A
NTS

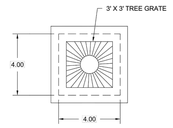

TOP SLAB PLAN VIEW
NTS / PIPE CONNECTIONS NOT SHOWN

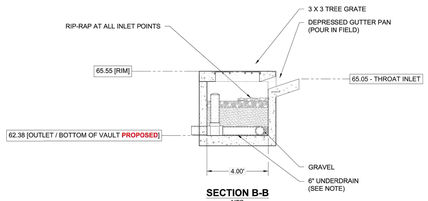

SECTION B-B
NTS

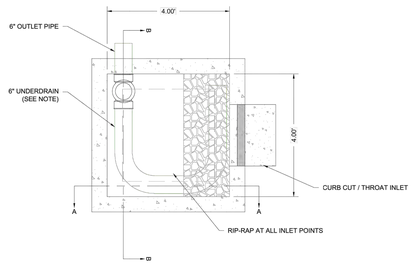

PLAN VIEW
NTS

ECOSTREAM BIOFILTER ES16	WQ02
WATER QUALITY FLOW RATE (CFS)	0.111

THE ECOSTREAM BIOFILTER™ IS A BIOFILTRATION STORMWATER TREATMENT TECHONOLOGY RELIES ON PHYSICAL, CHEMICAL AND BIOLOGICAL MECHANISMS TO REMOVE TOTAL SUSPENDED SOLIDS, TOTAL PHOSPHORUS, TOTAL NITROGEN, HEAVY METALS, OIL and GREASE, TRASH AND BACTERIA.

*Drainage area is based on 16.93 lb./ft^2 (270.8 lb./16 ft^2) of effective filtration treatment area and the equation in the NJDEP Filtration Protocol Appendix, where drainage area is calculated based on 600 lbs. of mass contributed per acre of drainage area annually. **NJDEP regulations limit the contributory drainage area for GI MTD's to 2.5 acres.

CARL E GILBERT ES
TK/PK CLASSROOMS AND EARLY LEARNING BUILDING
BUENA PARK, CA
DATE: 03/25/24 DRAWN: ESM CHECKED: CP
PROJECT # : - DRWG CHK#:

DATE	DRWG CHK#	DESCRIPTION

EcoStream™ Biofilter
Stormwater Media Filters

4640 TRUEMAN BLVD
HILLIARD, OH 43026

NOT TO SCALE

THIS DRAWING HAS BEEN PREPARED BASED ON INFORMATION PROVIDED TO OR UNDER THE DIRECTION OF THE SITE DESIGN ENGINEER AND IS INTENDED TO BE USED BY THE SITE DESIGN ENGINEER AS AN INSTRUMENT OF SERVICE. ADS DOES NOT WARRANT THE PRODUCTS DEPICTED HEREIN ARE ALL APPROPRIATE FOR THE SITE. THE SITE DESIGN ENGINEER IS ULTIMATELY RESPONSIBLE FOR THE SITE DESIGN AND TO ENSURE THAT THE PRODUCTS DEPICTED HEREIN ARE ALL APPROPRIATE FOR THE SITE AND ARE SPECIFIED AND INSTALLED IN ACCORDANCE WITH ALL APPLICABLE LAWS, REGULATIONS, AND PROJECT REQUIREMENTS.

SHEET 3 OF 3

7 | ADS–ECOSTREAM UNIT 2 N.T.S.

NOTES:

- UNDERDRAIN SHOWN IS SCHEMATIC ONLY. FOR DETAILS ON UNDERDRAIN SIZING AND LAYOUT SEE ECOSTREAM INSTALLATION GUIDE FOR DETAILS, KIT NUMBER AND PLACEMENT OPTIONS

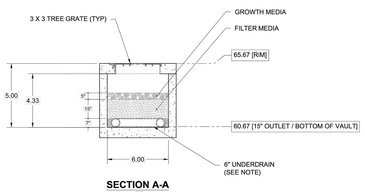

SECTION A-A
NTS

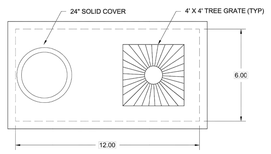

TOP SLAB PLAN VIEW
NTS / PIPE CONNECTIONS NOT SHOWN

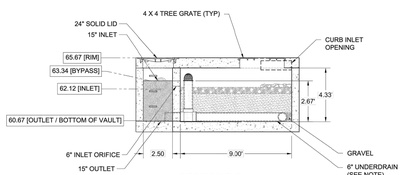

SECTION B-B
NTS

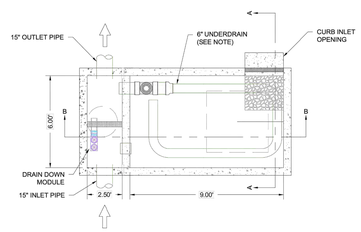

PLAN VIEW
NTS

ECOSTREAM BIOFILTER ES60	WQ01
WATER QUALITY FLOW RATE (CFS)	0.37

THE ECOSTREAM BIOFILTER™ IS A BIOFILTRATION STORMWATER TREATMENT TECHONOLOGY RELIES ON PHYSICAL, CHEMICAL AND BIOLOGICAL MECHANISMS TO REMOVE TOTAL SUSPENDED SOLIDS, TOTAL PHOSPHORUS, TOTAL NITROGEN, HEAVY METALS, OIL and GREASE, TRASH AND BACTERIA.

*Drainage area is based on 16.93 lb./ft^2 (270.8 lb./16 ft^2) of effective filtration treatment area and the equation in the NJDEP Filtration Protocol Appendix, where drainage area is calculated based on 600 lbs. of mass contributed per acre of drainage area annually. **NJDEP regulations limit the contributory drainage area for GI MTD's to 2.5 acres.

CARL E GILBERT ES
TK/PK CLASSROOMS AND EARLY LEARNING BUILDING
BUENA PARK, CA
DATE: 03/25/24 DRAWN: ESM CHECKED: CP
PROJECT # : - DRWG CHK#:

DATE	DRWG CHK#	DESCRIPTION

EcoStream™ Biofilter
Stormwater Media Filters

4640 TRUEMAN BLVD
HILLIARD, OH 43026

NOT TO SCALE

THIS DRAWING HAS BEEN PREPARED BASED ON INFORMATION PROVIDED TO OR UNDER THE DIRECTION OF THE SITE DESIGN ENGINEER AND IS INTENDED TO BE USED BY THE SITE DESIGN ENGINEER AS AN INSTRUMENT OF SERVICE. ADS DOES NOT WARRANT THE PRODUCTS DEPICTED HEREIN ARE ALL APPROPRIATE FOR THE SITE. THE SITE DESIGN ENGINEER IS ULTIMATELY RESPONSIBLE FOR THE SITE DESIGN AND TO ENSURE THAT THE PRODUCTS DEPICTED HEREIN ARE ALL APPROPRIATE FOR THE SITE AND ARE SPECIFIED AND INSTALLED IN ACCORDANCE WITH ALL APPLICABLE LAWS, REGULATIONS, AND PROJECT REQUIREMENTS.

SHEET 2 OF 3

6 | ADS–ECOSTREAM UNIT 1 N.T.S.

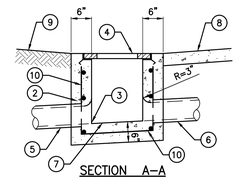

LEGEND:

1. GALVANIZED FRAME AND GRATE, ALHAMBRA FOUNDRY CO., OR APPROVED EQUIVALENT. SIZE PER PLAN.
2. PORTLAND CEMENT CONCRETE (f'c=4000psi).
3. INVERT ELEVATION PER PLAN.
4. TOP OF GRATE. SEE PLAN FOR ELEVATION.
5. OUTLET PIPE. SIZE PER PLAN.
6. INLET PIPE, WHERE OCCURS. SIZE PER PLAN.
7. FLOOR OF BASING SHALL BE GIVEN A STEEL–TROWELED FINISH AND SHALL SLOPE TO DRAIN IN ALL DIRECTIONS.
8. FINISH SURFACE PER PLAN.
9. FINISH GRADE PER PLAN.
10. CATCH BASIN WALLS AND FLOOR TO BE REINFORCED WITH #4 REBAR.

5 | CAST–IN–PLACE CONCRETE CATCH BASIN N.T.S.

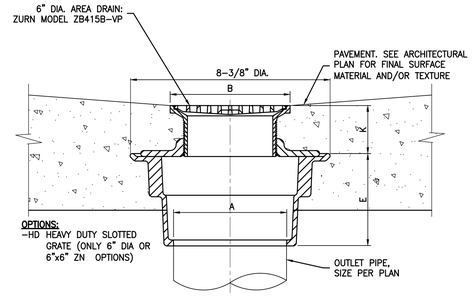

A PIPE SIZE (IN)	B STRAINER (IN)	K (IN) MIN.	K (IN) MAX.	E (IN)	STRAINER OPEN AREA (SQ IN)
4	6 DIA.	1–13/32	2–17/32	3–13/16	9
6	8 DIA.	1–3/4	2–7/8	2–7/8	19
4	6x6	1–13/32	2–19/32	3–13/16	13
4	8x8	1–3/4	2–5/8	3–13/16	28

4 | NON–TRAFFIC AREA DRAIN N.T.S.

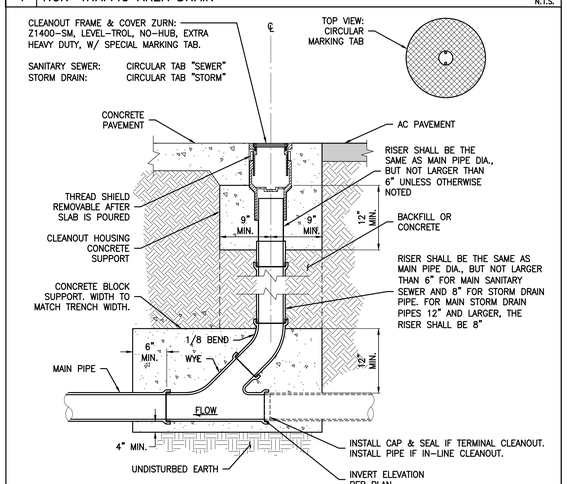

NOTE:

FINISH: "Z"–CAST IRON
"HD–ZN" NICKEL BRONZE
CONCRETE: SSPWC 560–C–3250

3 | CLEANOUT N.T.S.

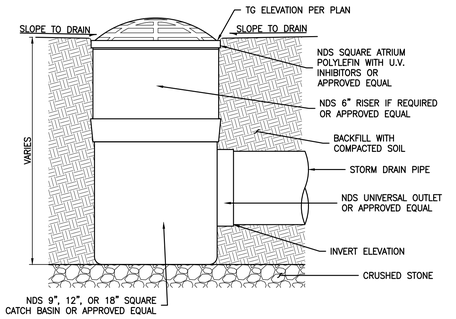

SIZE	TYPE	COLOR	MODEL NO.	FREE AREA (SQ IN/GPM)
9"X9" DIA.	DOME	BLACK	981	31.50/41.27
12"X12" DIA.	DOME	BLACK	1290	50.60/66.29
18"X18" DIA.	DOME	BLACK	1881	89.40/117.11

2 | NDS SQUARE ATRIUM GRATE WITH NDS SQUARE CATCH BASIN N.T.S.

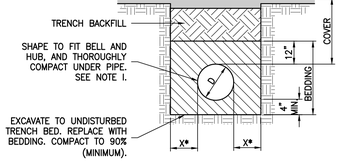

* PIPE SIZES UP TO AND INCLUDING 16"; X=8" MIN. TO 12" MAX.

* PIPE SIZES LARGER THAN 16" TO 30"; X=6"+D/8 MIN. TO 18" MAX.

PIPE FOR GRAVITY FLOW SAN. SEWERS AND DRAINAGE P.V.C. CONFORMING TO A.S.T.M. D–3034 MAXIMUM SDR 35, GASKETED JOINTS FOR 4" TO 15" DIA. PIPE AND ASTM F–679 FOR 18" DIA. AND LARGER.

FOR PVC PRESSURE PIPE CONFORMING TO AWWA C900 FOR 4" TO 12" DIA. PIPE AND AWWA C905 FOR 14" AND LARGER DIA. PIPE.

BEDDING CRUSHED ROCK. SHALL CONFORM TO SUBSECTION 200–1.2 OF THE STANDARD SPECIFICATIONS FOR PUBLIC WORKS CONSTRUCTION WITH 1/2" MAXIMUM ROCK GRADATION.

INITIAL BACKFILL NATIVE MATERIAL – MAXIMUM SIZE NOT TO EXCEED 1–1/2".

TRENCH BACKFILL NATIVE MATERIAL – 90% COMPACTION MIN. UP TO CLASS IV SOILS, TYPE ML, CL. FINE GRAINED, LL<50, MEDIUM TO NO PLASTICITY. NOTE, IF CLASS IV SOIL, TYPE MH OR ALL CLASS V SOILS THEN REPLACE WITH CLEAN SAND, SUBGRADE AND AGGREGATE BASE SECTION COMPACTIONS ABOVE THE UTILITY TRENCH SHALL MATCH THE MINIMUM COMPACTIONS FOR PAVEMENT SECTION ABOVE THE UTILITY TRENCH, WHERE IT IS APPLICABLE.

CLEAN SAND SHALL CONFORM TO THE REQUIREMENTS OF SAND FOR PORTLAND CEMENT CONCRETE AS SPECIFIED IN SECTION 200–1.5.5 OF THE STANDARD SPECIFICATIONS FOR PUBLIC WORKS CONSTRUCTION.

NOTES:

1. EXCAVATE FOR BELLS OR HUBS SO FULL LOAD IS CARRIED BY PIPE BARRELS.
2. BEDDING MATERIAL SHALL BE PLACED IN A MANNER SUCH AS SLICING, SHOVEL–SPADING, OR SHOVEL RODDING TO ENSURE COMPLETE FILLING OF THE "HAUNCH AREAS" BELOW THE PIPE. (JETTING OF BEDDING MATERIAL IS NOT AUTHORIZED UNLESS PREVIOUSLY APPROVED).
3. TRENCH BEDDING BACKFILL SHALL BE COMPACTED IN ACCORDANCE WITH SECTION 306–12 OF THE STANDARD SPECIFICATIONS FOR PUBLIC WORKS CONSTRUCTION (SSPWC), LATEST EDITION WITH THE FOLLOWING EXCEPTIONS:
   (1) JETTED TRENCH BACKFILL SHALL NOT BE USED.
   (2) MINIMUM COMPACTION OF BEDDING AND TRENCH BACKFILL SHALL BE 90% RELATIVE COMPACTION.
4. TRENCH EXCAVATION IN ACCORDANCE WITH SECTION 306–3 OF SSPWC.

1 | FLEXIBLE PIPE BEDDING DETAIL N.T.S.

DSA STAMP

STUDIO W ARCHITECTS

Studio W Architects
1930 H Street
Sacramento, California 95811
[T] 916.254.5600
www.StudioW-Architects.com

kpff
140 Newport Center Drive,
Suite 100
Newport Beach, CA 92660
O: 949.478.8800
www.kpff.com

ARCHITECT	ENGINEER
LICENSED ARCHITECT BRYAN P. WITHROW No. C 30345 Ren. 9/30/25 STATE OF CALIFORNIA	REGISTERED PROFESSIONAL ENGINEER ALI KHAMD No. C 74768 Exp. 12/31/25 CIVIL STATE OF CALIFORNIA
DATE SIGNED: 06/24/2024	DATE SIGNED: 06/24/2024

GENERAL NOTES

1. This sheet is part of a set and is not to be used alone.
2. This sheet is not to be used for construction unless the architect's stamp and signature appear on the drawings and the status box indicated drawings have been released for construction.
3. These plans and prints thereof, as instruments of service, are owned by the architect and are for use on this project only. Reproduction and/or distribution without the prior written consent of the architect is forbidden.
4. Copyright Studio W Associates, Inc. 2022.

REVISION HISTORY

DRAWING STATUS

	DATE
○ DSA PLAN CHECK	03/29/2024
● DSA BACK CHECK	06/24/2024
○ BIDDING	
○ CONSTRUCTION	

KEY PLAN

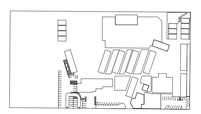

BUENA PARK USD
6885 ORANGETHORPE AVE
BUENA PARK, CA 90620

DSA SUBMITTAL

CARL E. GILBERT ELEMENTARY SCHOOL
TK/PK CLASSROOMS & EARLY LEARNING BUILDING
7255 8TH STREET, BUENA PARK, CA 90621

DETAILS

Date	Project Number
06/24/2024	2300150
Application Number	Drawing Number
04-123212	C5.01
Drawn TN	Checked JP

Drawing: P:\2023\23005D - 19 - BPSD - Carl E Gilbert Elementary School - TK-PK Classrooms & EL Building\DWG\24ET\23005C-C501.DT.dwg Last Saved: Tuesday, June 18, 2024 2:22:52 PM Last Plotted: Wednesday, June 19, 2024 5:39:23 PM By: Alexis Bisello

PACKAGE DUPLEX PUMP LIFT STATION - MANUFACTURED BY PACIFIC SOUTHWEST INDUSTRIES

GILBERT ELEMENTARY 7255 8TH ST BUENA PARK, CA

Furnish and install complete pre-packaged duplex Lift Station model **#PSI-KPF032524-P1** as manufactured by Pacific Southwest Industries (national phone # 800-358-9095)

This pre-packaged Lift Station shall incorporate a quick removal system manufactured by the pump manufacturer. The pump(s) shall be guided to the discharge base elbow by a single or double guide rail and shall be stainless steel and shall extend from the discharge base elbow to the upper guide bracket mounted on 1-5/8" x 1-5/8" channel strut just below the basin cover. Stainless steel lifting chain or cable shall be supplied and properly installed to remove the pump from the wet well. The internal discharge piping shall be completely pre-plumbed with pressure rated schedule 40 or 80 PVC pipe as indicated and extend 12" beyond the wet well and valve vault side wall for contractor connection to the force main piping. The pump(s) discharge piping shall have a check and ball valve installed on each pump discharge. The Lift Station shall include control panel and level control floats. The control panel shall be suitable for surface mounting or free standing on a leg kit if the site conditions require it.

PUMP(S):

Furnish and install Tsurumi, VANC'S series submersible pump(s). Each unit shall be shall be designed to pump waste water, sewage or effluent containing 1.5-inch (40mm) diameter solids without damage during operation. The pump(s) shall be designed so that the shaft power required (BHP) / (kW) shall not exceed the motor rated output throughout the entire operating range of the pump performance curve. A two-year warranty "out of the box" shall be standard.

MATERIALS OF CONSTRUCTION:

Construction of major parts of the pumping unit(s) including pump casing, impeller, motor head cover and intermediate brackets shall be manufactured from recyclable, application appropriate resins. The need for a protective coating shall not be required. All exposed fasteners shall be stainless steel and shall have stainless mating anchors integrally cast into the mating part. All units shall be furnished with a NPT discharge companion flange. Impellers shall be of the multi-vane, semi-vortex solids handling design and shall be slip fit to the shaft. The motor shaft shall be machined to provide a positive drive of the impeller. The pump casing shall incorporate an air relief valve.

MECHANICAL SEAL:

All units shall be furnished with a dual inside mechanical shaft seal located completely out of the pumpage, running in a separate oil filled chamber. Units shall be fitted with a device that shall provide positive lubrication of top mechanical seal, (down to one third of the standard oil level). The device shall not consume any additional electrical power. Units shall have silicon carbide mechanical seal faces. Mechanical seal hardware shall be stainless steel.

MOTOR:

Motor(s) shall have a 1.15 service factor and shall be rated for 6 starts per hour. Motor(s) shall be air filled, copper wound, class E insulated with built-in thermal protection. Motor shaft shall be 403 stainless steel and shall be supported by two permanently lubricated, high temperature ball bearings, with a B-10 life rating at best efficiency point of 60,000 hours. The bearings shall be single row, double shielded, C3, deep groove type ball bearings. Bearing seats shall be rolled carbon steel or aluminum die casting. Motor housing shall be 304 stainless steel. Motors shall be suitable variable speed applications, utilizing a properly sized variable frequency drive.

POWER CABLE AND CABLE ENTRANCE:

The pump power cable shall be suitable for submersible pump applications. The cable entrance shall incorporate built in strain relief, a one-piece, three-way mechanical compression seal with a fatigue reducing cable boot. The cable entrance assembly shall contain an anti-wicking block to eliminate water incursion into the motor due to Capillary wicking should the power cable be accidentally damaged.

QUICK REMOVAL SYSTEM:

The pumping unit(s) shall be equipped with quick removal system (QRS). The construction shall be such that the pump(s) will automatically connect to the discharge piping when lowered into place on the discharge connector. There shall be no need for personnel to enter the wet well to accomplish installation or removal of the pump(s). The pumping unit(s) shall be fitted with stainless steel lifting chain(s) of sufficient length and strength to permit the raising and lowering of the unit(s). The chain(s) shall be fastened at the top of the structure near the access opening. The need for a protective coating shall not be required. A sliding guide bracket shall be an integral part of the pumping unit and the pump casing shall have a machined connection with a bracket to connect with the discharge connection. Sealing of the pumping unit to the discharge connection shall be accomplished by a single linear downward motion of the pump with the entire weight of the pumping unit guided by a pawl, thereby wedging the pumping unit tightly against the discharge connector. No portion of the pump shall bear directly on the floor of the sump nor shall a rotary motion of the pump be required for sealing. All fasteners coming into contact with the pumpage shall be stainless steel. Two corrosion resistant guide pipes shall be furnished and installed for each pump to permit raising and lowering of the pump.

FIBERGLASS WET WELL:

The fiberglass wet well with an anti-flotation flange shall have the proper diameter and depth below the lowest inlet to promote proper cycling while maintaining the rim at grade. The fiberglass wet well shall be manufactured using a process that is filament wound and or chopped spray. The wet well shall be constructed with a anti flotation flange. Lifting lugs shall be required for those wet wells 48 inches in diameter and larger for setting of the wet well. The laminate shall have a Barco hardness of at least 90% of the resin manufactures minimum specified hardness for cured resin on both the interior and exterior surfaces. The minimum wall thickness of the wet well shall not be less than 1/4". Stainless steel studs will be encapsulated in the bottom of the wet well to allow the mounting of the quick removal system. The top rim flange will be a minimum of 2" wide to allow for the installation of the pedestrian rated aluminum cover to the rim flange or shall be rimless if the cover is specified for H20 off street locations. The wet well shall be provided with "unseal" fittings that can be installed in the field to insure proper elevation of the inlet, vent, and electrical on the side of the wet well. The wet well will house 2 - swing check valves, and 2 – shut off valves.

COVER(s)

The wet well cover shall always be gasketed and bolted to the rim flange of the fiber glass tank using 7/16" stainless steel hex head bolts unless the cover is to be in a H20 off street location. The type of material to be used for the cover shall be as indicated on this plan sheet.

DUPLEX ALTERNATING CONTROL PANEL:

The duplex control panel, as a minimum, shall include the appropriate enclosure type for the environment it is to be installed in and should include the following: Motor starters, motor circuit protectors or variable frequency drives (VFD), pump run indicator(s), operation selector switch(es), high water alarm and light, silence switch, dry contact for alarm, numbered terminals for all incoming power, pump motor(s) and level controls. The control panel shall be UL listed 508 or 913.

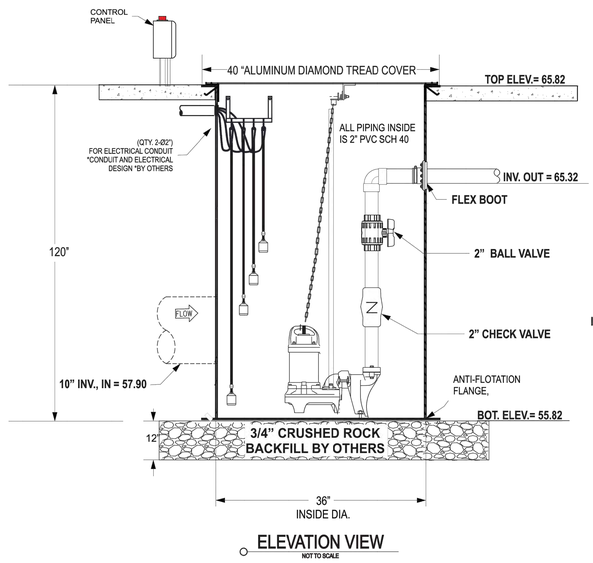

ELEVATION VIEW
NOT TO SCALE

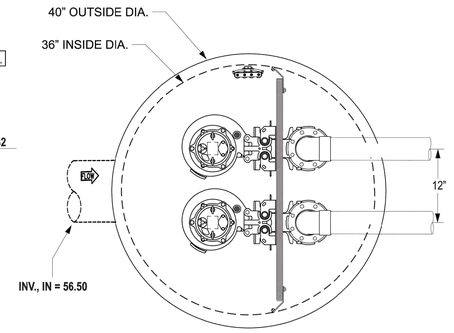

PLAN VIEW
NOT TO SCALE

FLOAT ELEVATIONS	
ALARM	57.75'
LAG	57.25'
ON	56.75'
OFF	56.32'

PUMP MODEL: 50PU2.15S
1/5 HP 120 VOLTS 1PH 3.2A
PERFORMANCE: 35 GPM @ 10.40' TDH

THIS DRAWING CONTAINS CONFIDENTIAL INFORMATION AND IS THE EXCLUSIVE PROPERTY OF PSI. IT MAY NOT BE COPIED OR REPRODUCED IN ANY FORM WITHOUT THE EXPRESS WRITTEN PERMISSION OF PSI.

Dec. 19 60-PC-PU-01

TSURUMI PUMP — **VANCS - SERIES - PU** (FRP) SEMI-VORTEX - SEWAGE & WASTEWATER PUMPS — **PERFORMANCE CURVE**

MODEL	BORE	HP	KW	RPM	SOLIDS DIA	LIQUID	SG.	VISCOSITY	TEMP.
50PU(A)W2.15S-64, 50PUF2.15S-63	2"/50mm	0.20	0.15	3430	1.38"/35mm	Water	1.0	1.123 cSt	60°F
PUMP TYPE	PHASE	VOLTAGE	AMPERAGE	HZ	STARTING METHOD	INS. CLASS			
Semi-Vortex - Sewage & Wastewater	Single	115 / 120 / 230	3.2 / 3.1 / 1.6	60	Capacitor-Start	E			
CURVE No.	DATE	PHASE	VOLTAGE	AMPERAGE	HZ	STARTING METHOD	INS. CLASS		
-							-		

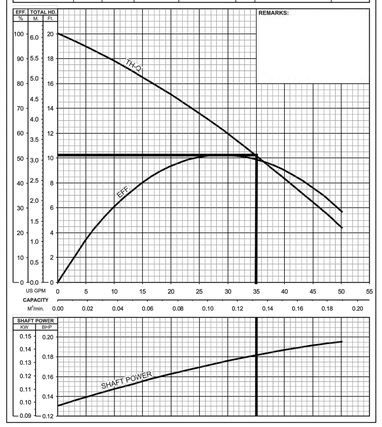

LIFT STATION PROFILE & CALCULATIONS						
2" SCH 40 = 2.06 SCH 80 = 1.94						
2" PVC PIPE	(QTY)	20	x	1 FT		20 FT
2" PVC 90 ELBOW	(QTY)	1	x	5.2 FT		5.2 FT
2" PVC 45 BEND	(QTY)	1	x	2.8 FT		2.8 FT
2" PVC TEE	(QTY)	0	x	13.8 FT		0 FT
2" BALL VALVE	(QTY)	1	x	1.4 FT		1.4 FT
2" CHECK VALVE	(QTY)	1	x	13 FT		13 FT
TOTAL EQUIVALENT LENGTH						42.4 FT
FRICTION LOSS PER 100 FT 2" PVC	35 GPM	2.1 FT		PER 100 FT		
FRICTION LOSS 2"	42.4	/	100	x 2.1	FT	0.90 FT
TOTAL DYNAMIC HEAD						
2" FRICTION LOSS						0.90 FT
STATIC HEAD					+	9.50 FT
PERFORMANCE	35 GPM	@	10.40	FT TDH THROUGH 2" PVC LINE		

HAZEN-WILLIAMS EQUATION/HEAD LOSS IN WATER PIPE	
$(f) = 0.2083\ (100 / c)^{1.852}\ q^{1.852} / dh^{4.8655}$	
c=	150 HDPE / PVC
q=	35 GPM
dh=	2" SCH 40 = 2.06
FRICTION LOSS PER 100 FT f=	2.11
Velocity (ft/s) =	3.37

LIFT STATION DETAILS

NOTE: VERIFY ALL ELVEATIONS PRIOR TO FABRICATION. OTHERS TO VERIFY ALL INLET/OUTLET ORIENTATIONS PRIOR TO FABRICATION AND INSTALLATION. ALL PIPE OPENINGS AND SEALING SHALL BE COMPLETED IN FIELD BY OTHERS.

PSI Pacific Southwest Industries
ENGINEERED- PUMPS-FLUID HANDLING & DISPOSAL SYSTEMS
16541 COLLIER, . LAKE ELSINORE, CA 92530 PH: 800 358-9095

No.	Date	Description
1		1ST DRAFT

LIFT STATION DETAILS
GILBERT ELEMENTARY
7255 8TH ST.
BUENA PARK, CA

Date: 03/25/24 | Scale: NTS
Drawn by: JS | Sheet No. 1 OF 1
Checked by:

LSD-1

DSA STAMP

STUDIO W ARCHITECTS
Studio W Architects
1930 H Street
Sacramento, California 95811
[T] 916.254.5600
www.StudioW-Architects.com

kpff
140 Newport Center Drive, Suite 100
Newport Beach, CA 92660
O: 949.478.8800
www.kpff.com

ARCHITECT	ENGINEER
LICENSED ARCHITECT BRIAN P. WITHROW No. C 30345 Ren. 9/30/25 STATE OF CALIFORNIA	REGISTERED PROFESSIONAL ENGINEER ALI KHAMO No. C 74768 Exp. 12/31/25 CIVIL STATE OF CALIFORNIA
DATE SIGNED: 06/24/2024	DATE SIGNED: 06/24/2024

GENERAL NOTES
1. This sheet is part of a set and is not to be used alone.
2. This sheet is not to be used for construction unless the architect's stamp and signature appear on the drawings and the status box indicated drawings have been released for construction.
3. These plans and prints thereof, as instruments of service, are owned by the architect and are for use on this project only. Reproduction and/or distribution without the prior written consent of the architect is forbidden.
4. Copyright Studio W Associates, Inc. 2022.

REVISION HISTORY

DRAWING STATUS	DATE
DSA PLAN CHECK	03/29/2024
DSA BACK CHECK	06/24/2024
BIDDING	
CONSTRUCTION	

KEY PLAN

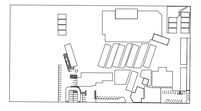

BUENA PARK USD
6885 ORANGETHORPE AVE
BUENA PARK, CA 90620

DSA SUBMITTAL

CARL E. GILBERT ELEMENTARY SCHOOL
TK/PK CLASSROOMS & EARLY LEARNING BUILDING
7255 8TH STREET, BUENA PARK, CA 90621

DETAILS

Date 06/24/2024 | Project Number 2300150
Application Number 04-123212 | Drawing Number C5.02
Drawn TN | Checked JP

1 | PSI–STORMWATER LIFT STATION 1

Drawing: P:\2023\23300150 - 19 - BPSD - Carl E. Gilbert Elementary School - TK-PK Classrooms & EL Building\DWG\SHEETS\2300150-C500.17.dwg Last Saved Tuesday, June 18, 2024 3:22:52 PM Last Plotted: Wednesday, June 19, 2024 5:38:28 PM By: Alexis Bisbiis

PACKAGE DUPLEX PUMP LIFT STATION - MANUFACTURED BY PACIFIC SOUTHWEST INDUSTRIES

GILBERT ELEMENTARY 7255 8TH ST BUENA PARK, CA

Furnish and install complete pre-packaged duplex Lift Station model **#PSI-KPF032524-P2** as manufactured by Pacific Southwest Industries (national phone # 800-358-9095)

This pre-packaged Lift Station shall incorporate a quick removal system manufactured by the pump manufacturer. The pump(s) shall be guided to the discharge base elbow by a single or double guide rail and shall be stainless steel and shall extend from the discharge base elbow to the upper guide bracket mounted on 1-5/8" x 1-5/8" channel strut just below the basin cover. Stainless steel lifting chain or cable shall be supplied and properly installed to remove the pump from the wet well. The internal discharge piping shall be completely pre-plumbed with pressure rated schedule 40 or 80 PVC pipe as indicated and extend 12" beyond the wet well and valve vault side wall for contractor connection to the force main piping. The pump(s) discharge piping shall have a check and ball valve installed on each pump discharge. The Lift Station shall include control panel and level control floats. The control panel shall be suitable for surface mounting or free standing on a leg kit if the site conditions require it.

PUMP(S):

Furnish and install Tsurumi, VANC'S series submersible pump(s). Each unit shall be shall be designed to pump waste water, sewage or effluent containing 1.5-inch (40mm) diameter solids without damage during operation. The pump(s) shall be designed so that the shaft power required (BHP) / (kW) shall not exceed the motor rated output throughout the entire operating range of the pump performance curve. A two-year warranty "out of the box" shall be standard.

MATERIALS OF CONSTRUCTION:

Construction of major parts of the pumping unit(s) including pump casing, impeller, motor head cover and intermediate brackets shall be manufactured from recyclable, application appropriate resins. The need for a protective coating shall not be required. All exposed fasteners shall be stainless steel and shall have stainless mating anchors integrally cast into the mating part. All units shall be furnished with a NPT discharge companion flange. Impellers shall be of the multi-vane, semi-vortex solids handling design and shall be slip fit to the shaft. The motor shaft shall be machined to provide a positive drive of the impeller. The pump casing shall incorporate an air relief valve.

MECHANICAL SEAL:

All units shall be furnished with a dual inside mechanical shaft seal located completely out of the pumpage, running in a separate oil filled chamber. Units shall be fitted with a device that shall provide positive lubrication of top mechanical seal, (down to one third of the standard oil level). The device shall not consume any additional electrical power. Units shall have silicon carbide mechanical seal faces. Mechanical seal hardware shall be stainless steel.

MOTOR:

Motor(s) shall have a 1.15 service factor and shall be rated for 6 starts per hour. Motor(s) shall be air filled, copper wound, class E insulated with built-in thermal protection. Motor shaft shall be 403 stainless steel and shall be supported by two permanently lubricated, high temperature ball bearings, with a B-10 life rating at best efficiency point of 60,000 hours. The bearings shall be single row, double shielded, C3, deep groove type ball bearings. Bearing seats shall be rolled carbon steel or aluminum die casting. Motor housing shall be 304 stainless steel. Motors shall be suitable variable speed applications, utilizing a properly sized variable frequency drive.

POWER CABLE AND CABLE ENTRANCE:

The pump power cable shall be suitable for submersible pump applications. The cable entrance shall incorporate built in strain relief, a one-piece, three-way mechanical compression seal with a fatigue reducing cable boot. The cable entrance assembly shall contain an anti-wicking block to eliminate water incursion into the motor due to Capillary wicking should the power cable be accidentally damaged.

QUICK REMOVAL SYSTEM:

The pumping unit(s) shall be equipped with quick removal system (QRS). The construction shall be such that the pump(s) will automatically connect to the discharge piping when lowered into place on the discharge connector. There shall be no need for personnel to enter the wet well to accomplish installation or removal of the pump(s). The pumping unit(s) shall be fitted with stainless steel lifting chain(s) of sufficient length and strength to permit the raising and lowering of the unit(s). The chain(s) shall be fastened at the top of the structure near the access opening. The need for a protective coating shall not be required. A sliding guide bracket shall be an integral part of the pumping unit and the pump casing shall have a machined connection with a bracket to connect with the discharge connection. Sealing of the pumping unit to the discharge connection shall be accomplished by a single linear downward motion of the pump with the entire weight of the pumping unit guided by a pawl, thereby wedging the pumping unit tightly against the discharge connector. No portion of the pump shall bear directly on the floor of the sump nor shall a rotary motion of the pump be required for sealing. All fasteners coming into contact with the pumpage shall be stainless steel. Two corrosion resistant guide pipes shall be furnished and installed for each pump to permit raising and lowering of the pump.

FIBERGLASS WET WELL:

The fiberglass wet well with an anti-flotation flange shall have the proper diameter and depth below the lowest inlet to promote proper cycling while maintaining the rim at grade. The fiberglass wet well shall be manufactured using a process that is filament wound and or chopped spray. The wet well shall be constructed with a anti flotation flange. Lifting lugs shall be required for those wet wells 48 inches in diameter and larger for setting of the wet well. The laminate shall have a Barco hardness of at least 90% of the resin manufactures minimum specified hardness for cured resin on both the interior and exterior surfaces. The minimum wall thickness of the wet well shall not be less than 1/4". Stainless steel studs will be encapsulated in the bottom of the wet well to allow the mounting of the quick removal system. The top rim flange will be a minimum of 2" wide to allow for the installation of the pedestrian rated aluminum cover to the rim flange or shall be rimless if the cover is specified for H20 off street locations. The wet well shall be provided with "unseal" fittings that can be installed in the field to insure proper elevation of the inlet, vent, and electrical on the side of the wet well. The wet well will house 2 - swing check valves, and 2 – shut off valves.

COVER(s)

The wet well cover shall always be gasketed and bolted to the rim flange of the fiber glass tank using 7/16" stainless steel hex head bolts unless the cover is to be in a H20 off street location. The type of material to be used for the cover shall be as indicated on this plan sheet.

DUPLEX ALTERNATING CONTROL PANEL:

The duplex control panel, as a minimum, shall include the appropriate enclosure type for the environment it is to be installed in and should include the following: Motor starters, motor circuit protectors or variable frequency drives (VFD), pump run indicator(s), operation selector switch(es), high water alarm and light, silence switch, dry contact for alarm, numbered terminals for all incoming power, pump motor(s) and level controls. The control panel shall be UL listed 508 or 913.

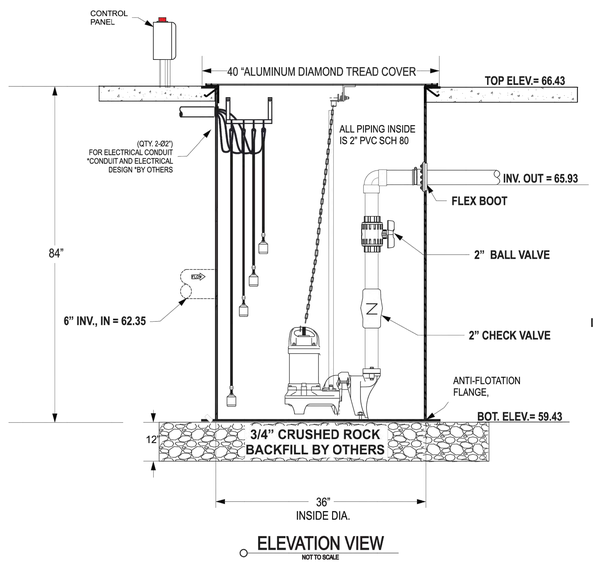

ELEVATION VIEW
NOT TO SCALE

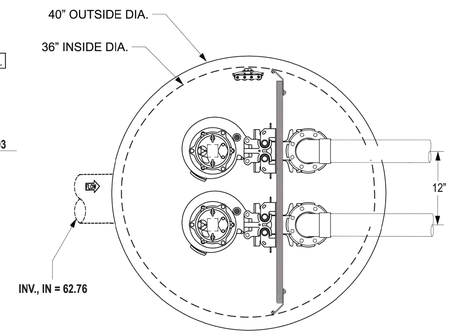

PLAN VIEW
NOT TO SCALE

FLOAT ELEVATIONS	
ALARM	62.75'
LAG	62.35'
ON	62.00'
OFF	60.43'

PUMP MODEL: 50PU2.15S
1/3HP 120 VOLTS 1PH 3.2A
PERFORMANCE: 41 GPM @ 8.00' TDH

THIS DRAWING CONTAINS CONFIDENTIAL INFORMATION AND IS THE EXCLUSIVE PROPERTY OF PSI. IT MAY NOT BE COPIED OR REPRODUCED IN ANY FORM WITHOUT THE EXPRESS WRITTEN PERMISSION OF PSI.

Dec. 19 — 60-PC-PU-01

TSURUMI PUMP — **VANCS - SERIES - PU** — **(FRP) SEMI-VORTEX - SEWAGE & WASTEWATER PUMPS** — **PERFORMANCE CURVE**

MODEL	BORE	HP	KW	RPM	SOLIDS DIA	LIQUID	SG.	VISCOSITY	TEMP.
50PU(A)#2.15S-64, 50PUF2.15S-63	2"/50mm	0.20	0.15	3430	1.38"/35mm	Water	1.0	1.123 cSt	60°F

PUMP TYPE	PHASE	VOLTAGE	AMPERAGE	HZ	STARTING METHOD	INS. CLASS
Semi-Vortex - Sewage & Wastewater	Single	115 / 120 / 230	3.2 / 3.1 / 1.6	60	Capacitor-Start	E

CURVE No.	DATE	PHASE	VOLTAGE	AMPERAGE	HZ	STARTING METHOD	INS. CLASS
-	-						-

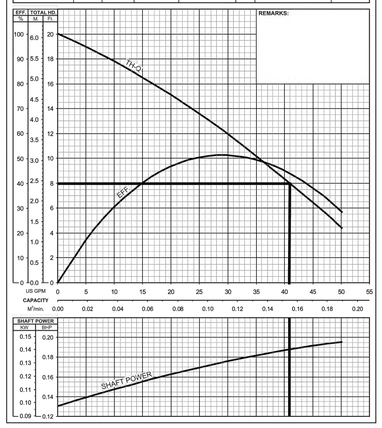

LIFT STATION PROFILE & CALCULATIONS						
2" SCH 40 = 2.06 SCH 80 = 1.94						
2" PVC PIPE	(QTY)	20	x	1 FT		20 FT
2" PVC 90 ELBOW	(QTY)	1	x	5.2 FT		5.2 FT
2" PVC 45 BEND	(QTY)	0	x	2.8 FT		0 FT
2" PVC TEE	(QTY)	0	x	13.8 FT		0 FT
2" BALL VALVE	(QTY)	1	x	1.4 FT		1.4 FT
2" CHECK VALVE	(QTY)	1	x	13 FT		13 FT
TOTAL EQUIVALENT LENGTH						39.6 FT
FRICTION LOSS PER 100 FT 2" PVC	41 GPM		3.8 FT		PER 100 FT	
FRICTION LOSS 2"	39.6	/	100	x 3.8	FT	1.50 FT
TOTAL DYNAMIC HEAD						
2" FRICTION LOSS						1.50 FT
STATIC HEAD					+	6.50 FT
PERFORMANCE	41 GPM	¢	8.00	FT TDH THROUGH 2" PVC LINE		

HAZEN-WILLIAMS EQUATION/HEAD LOSS IN WATER PIPE	
$(f) = 0.2083\ (100 / c)^{1.852}\ q^{1.852} / dh^{4.8655}$	
c=	150 HDPE / PVC
q=	41 GPM
dh=	2" SCH 80 = 1.94
FRICTION LOSS PER 100 FT f=	3.79
Velocity (ft/s) =	4.45

LIFT STATION DETAILS

NOTE: VERIFY ALL ELVEATIONS PRIOR TO FABRICATION. OTHERS TO VERIFY ALL INLET/OUTLET ORIENTATIONS PRIOR TO FABRICATION AND INSTALLATION. ALL PIPE OPENINGS AND SEALING SHALL BE COMPLETED IN FIELD BY OTHERS.

PSI Pacific Southwest Industries
ENGINEERED- PUMPS/FLUID HANDLING & DISPOSAL SYSTEMS
16541 COLLIER , LAKE ELSINORE, CA 92530 PH: 800 358-9095

No.	Date	Description
1		1ST DRAFT

LIFT STATION DETAILS
GILBERT ELEMENTARY
7255 8TH ST.
BUENA PARK, CA

Date: 03/25/24 | Scale: NTS
Drawn by: JS | Sheet No. 1 OF 1
Checked by:

LSD-1

DSA STAMP

STUDIO W ARCHITECTS
Studio W Architects
1930 H Street
Sacramento, California 95811
[T] 916.254.5600
www.StudioW-Architects.com

kpff
140 Newport Center Drive, Suite 100
Newport Beach, CA 92660
O: 949.478.8800
www.kpff.com

ARCHITECT	ENGINEER
LICENSED ARCHITECT BRIAN P. WITHROW No. C 30345 Ren. 9/30/25 STATE OF CALIFORNIA	REGISTERED PROFESSIONAL ENGINEER ALI KHAMO No. C 74768 Exp. 12/31/25 CIVIL STATE OF CALIFORNIA
DATE SIGNED: 06/24/2024	DATE SIGNED: 06/24/2024

GENERAL NOTES
1. This sheet is part of a set and is not to be used alone.
2. This sheet is not to be used for construction unless the architect's stamp and signature appear on the drawings and the status box indicated drawings have been released for construction.
3. These plans and prints thereof, as instruments of service, are owned by the architect and are for use on this project only. Reproduction and/or distribution without the prior written consent of the architect is forbidden.
4. Copyright Studio W Associates, Inc. 2022.

REVISION HISTORY

DRAWING STATUS

	DATE
○ DSA PLAN CHECK	03/29/2024
● DSA BACK CHECK	06/24/2024
○ BIDDING	
○ CONSTRUCTION	

KEY PLAN

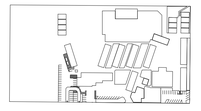

BUENA PARK USD
6885 ORANGETHORPE AVE
BUENA PARK, CA 90620

DSA SUBMITTAL

CARL E. GILBERT ELEMENTARY SCHOOL
TK/PK CLASSROOMS & EARLY LEARNING BUILDING
7255 8TH STREET, BUENA PARK, CA 90621

DETAILS

Date 06/24/2024 | Project Number 2300150
Application Number 04-123212 | Drawing Number C5.03
Drawn TN | Checked JP

1 | PSI–STORMWATER LIFT STATION 2

Drawing: P:\2023\23005\50 - 19 - BPSD - Carl E. Gilbert Elementary School - TK-PK Classrooms & EL Building\CAD\T\23005DC-C500.DT.dwg Last Saved Tuesday, June 18, 2024 3:22:52 PM Last Plotted: Wednesday, June 19, 2024 5:38:54 PM By: Alexis Bisbiis

UNDERDRAIN DETAIL
NTS

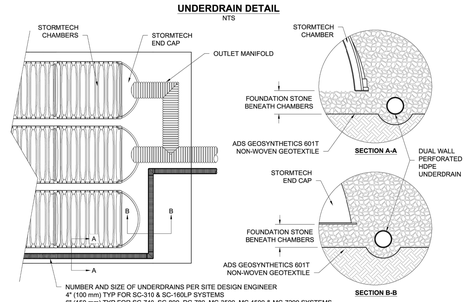

SC-740 TECHNICAL SPECIFICATION
NTS

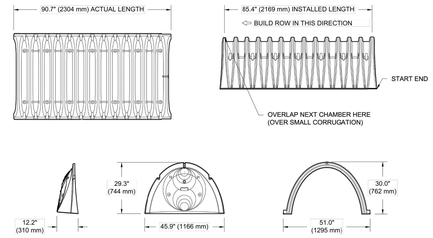

NOMINAL CHAMBER SPECIFICATIONS

SIZE (W X H X INSTALLED LENGTH)	51.0" X 30.0" X 85.4"	(1295 mm X 762 mm X 2169 mm)
CHAMBER STORAGE	45.9 CUBIC FEET	(1.30 m³)
MINIMUM INSTALLED STORAGE*	74.9 CUBIC FEET	(2.12 m³)
WEIGHT	75.0 lbs.	(33.6 kg)

*ASSUMES 6" (152 mm) STONE ABOVE, BELOW, AND BETWEEN CHAMBERS

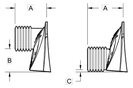

PRE-FAB STUBS AT BOTTOM OF END CAP FOR PART NUMBERS ENDING WITH "B"
PRE-FAB STUBS AT TOP OF END CAP FOR PART NUMBERS ENDING WITH "T"
PRE-CORED END CAPS END WITH "PC"

PART #	STUB	A	B	C
SC740EPE06T / SC740EPE06TPC	6" (150 mm)	10.9" (277 mm)	18.5" (470 mm)	---
SC740EPE06B / SC740EPE06BPC			---	0.5" (13 mm)
SC740EPE08T / SC740EPE08TPC	8" (200 mm)	12.2" (310 mm)	16.5" (419 mm)	---
SC740EPE08B / SC740EPE08BPC			---	0.6" (15 mm)
SC740EPE10T / SC740EPE10TPC	10" (250 mm)	13.4" (340 mm)	14.5" (368 mm)	---
SC740EPE10B / SC740EPE10BPC			---	0.7" (18 mm)
SC740EPE12T / SC740EPE12TPC	12" (300 mm)	14.7" (373 mm)	12.5" (318 mm)	---
SC740EPE12B / SC740EPE12BPC			---	1.2" (30 mm)
SC740EPE15T / SC740EPE15TPC	15" (375 mm)	18.4" (467 mm)	9.0" (229 mm)	---
SC740EPE15B / SC740EPE15BPC			---	1.3" (33 mm)
SC740EPE18T / SC740EPE18TPC	18" (450 mm)	19.7" (500 mm)	5.0" (127 mm)	---
SC740EPE18B / SC740EPE18BPC			---	1.6" (41 mm)
SC740ECEZ*	24" (600 mm)	18.5" (470 mm)	---	0.1" (3 mm)

ALL STUBS, EXCEPT FOR THE SC740ECEZ ARE PLACED AT BOTTOM OF END CAP SUCH THAT THE OUTSIDE DIAMETER OF THE STUB IS FLUSH WITH THE BOTTOM OF THE END CAP. FOR ADDITIONAL INFORMATION CONTACT STORMTECH AT 1-888-892-2694.

* FOR THE SC740ECEZ THE 24" (600 mm) STUB LIES BELOW THE BOTTOM OF THE END CAP APPROXIMATELY 1.75" (44 mm). BACKFILL MATERIAL SHOULD BE REMOVED FROM BELOW THE N-12 STUB SO THAT THE FITTING SITS LEVEL.

NOTE: ALL DIMENSIONS ARE NOMINAL

4 | ADS–STORMTECH CHAMBER DETENTION SYSTEM 4 | N.T.S.

ACCEPTABLE FILL MATERIALS: STORMTECH SC-740 CHAMBER SYSTEMS

	MATERIAL LOCATION	DESCRIPTION	AASHTO MATERIAL CLASSIFICATIONS	COMPACTION / DENSITY REQUIREMENT
D	**FINAL FILL:** FILL MATERIAL FOR LAYER 'D' STARTS FROM THE TOP OF THE 'C' LAYER TO THE BOTTOM OF FLEXIBLE PAVEMENT OR UNPAVED FINISHED GRADE ABOVE. NOTE THAT PAVEMENT SUBBASE MAY BE PART OF THE 'D' LAYER.	ANY SOIL/ROCK MATERIALS, NATIVE SOILS, OR PER ENGINEER'S PLANS. CHECK PLANS FOR PAVEMENT SUBGRADE REQUIREMENTS.	N/A	PREPARE PER SITE DESIGN ENGINEER'S PLANS. PAVED INSTALLATIONS MAY HAVE STRINGENT MATERIAL AND PREPARATION REQUIREMENTS.
C	**INITIAL FILL:** FILL MATERIAL FOR LAYER 'C' STARTS FROM THE TOP OF THE EMBEDMENT STONE ('B' LAYER) TO 18" (450 mm) ABOVE THE TOP OF THE CHAMBER. NOTE THAT PAVEMENT SUBBASE MAY BE A PART OF THE 'C' LAYER.	GRANULAR WELL-GRADED SOIL/AGGREGATE MIXTURES, <35% FINES OR PROCESSED AGGREGATE. MOST PAVEMENT SUBBASE MATERIALS CAN BE USED IN LIEU OF THIS LAYER.	AASHTO M145[1] A-1, A-2-4, A-3 OR AASHTO M43[1] 3, 357, 4, 467, 5, 56, 57, 6, 67, 68, 7, 78, 8, 89, 9, 10	BEGIN COMPACTIONS AFTER 12" (300 mm) OF MATERIAL OVER THE CHAMBERS IS REACHED. COMPACT ADDITIONAL LAYERS IN 6" (150 mm) MAX LIFTS TO A MIN. 95% PROCTOR DENSITY FOR WELL GRADED MATERIAL AND 95% RELATIVE DENSITY FOR PROCESSED AGGREGATE MATERIALS. ROLLER GROSS VEHICLE WEIGHT NOT TO EXCEED 12,000 lbs (53 kN). DYNAMIC FORCE NOT TO EXCEED 20,000 lbs (89 kN).
B	**EMBEDMENT STONE:** FILL SURROUNDING THE CHAMBERS FROM THE FOUNDATION STONE ('A' LAYER) TO THE 'C' LAYER ABOVE.	CLEAN, CRUSHED, ANGULAR STONE OR RECYCLED CONCRETE[3]	AASHTO M43[1] 3, 357, 4, 467, 5, 56, 57	NO COMPACTION REQUIRED.
A	**FOUNDATION STONE:** FILL BELOW CHAMBERS FROM THE SUBGRADE UP TO THE FOOT (BOTTOM) OF THE CHAMBER.	CLEAN, CRUSHED, ANGULAR STONE OR RECYCLED CONCRETE[3]	AASHTO M43[1] 3, 357, 4, 467, 5, 56, 57	PLATE COMPACT OR ROLL TO ACHIEVE A FLAT SURFACE.[2,3]

PLEASE NOTE:
1. THE LISTED AASHTO DESIGNATIONS ARE FOR GRADATIONS ONLY. THE STONE MUST ALSO BE CLEAN, CRUSHED, ANGULAR. FOR EXAMPLE, A SPECIFICATION FOR #4 STONE WOULD STATE: "CLEAN, CRUSHED, ANGULAR NO. 4 (AASHTO M43) STONE".
2. STORMTECH COMPACTION REQUIREMENTS ARE MET FOR 'A' LOCATION MATERIALS WHEN PLACED AND COMPACTED IN 6" (150 mm) (MAX) LIFTS USING TWO FULL COVERAGES WITH A VIBRATORY COMPACTOR.
3. WHERE INFILTRATION SURFACES MAY BE COMPROMISED BY COMPACTION, FOR STANDARD DESIGN LOAD CONDITIONS, A FLAT SURFACE MAY BE ACHIEVED BY RAKING OR DRAGGING WITHOUT COMPACTION EQUIPMENT. FOR SPECIAL LOAD DESIGNS, CONTACT STORMTECH FOR COMPACTION REQUIREMENTS.
4. ONCE LAYER 'C' IS PLACED, ANY SOIL/MATERIAL CAN BE PLACED IN LAYER 'D' UP TO THE FINISHED GRADE. MOST PAVEMENT SUBBASE SOILS CAN BE USED TO REPLACE THE MATERIAL REQUIREMENTS OF LAYER "C" OR 'D' AT THE SITE DESIGN ENGINEER'S DISCRETION.
5. WHERE RECYCLED CONCRETE AGGREGATE IS USED IN LAYERS 'A' OR 'B' THE MATERIAL SHOULD ALSO MEET THE ACCEPTABILITY CRITERIA OUTLINED IN TECHNICAL NOTE 6.20 "RECYCLED CONCRETE STRUCTURAL BACKFILL".

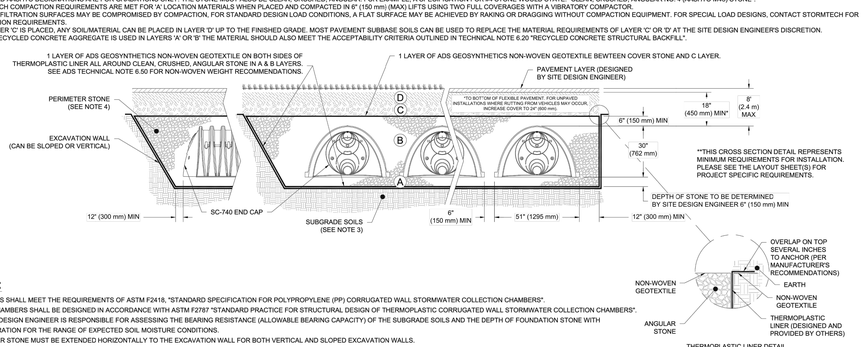

NOTES:

1. CHAMBERS SHALL MEET THE REQUIREMENTS OF ASTM F2418, "STANDARD SPECIFICATION FOR POLYPROPYLENE (PP) CORRUGATED WALL STORMWATER COLLECTION CHAMBERS".
2. SC-740 CHAMBERS SHALL BE DESIGNED IN ACCORDANCE WITH ASTM F2787 "STANDARD PRACTICE FOR STRUCTURAL DESIGN OF THERMOPLASTIC CORRUGATED WALL STORMWATER COLLECTION CHAMBERS".
3. THE SITE DESIGN ENGINEER IS RESPONSIBLE FOR ASSESSING THE BEARING RESISTANCE (ALLOWABLE BEARING CAPACITY) OF THE SUBGRADE SOILS AND THE DEPTH OF FOUNDATION STONE WITH CONSIDERATION FOR THE RANGE OF EXPECTED SOIL MOISTURE CONDITIONS.
4. PERIMETER STONE MUST BE EXTENDED HORIZONTALLY TO THE EXCAVATION WALL FOR BOTH VERTICAL AND SLOPED EXCAVATION WALLS.
5. REQUIREMENTS FOR HANDLING AND INSTALLATION:
   - TO MAINTAIN THE WIDTH OF CHAMBERS DURING SHIPPING AND HANDLING, CHAMBERS SHALL HAVE INTEGRAL, INTERLOCKING STACKING LUGS.
   - TO ENSURE A SECURE JOINT DURING INSTALLATION AND BACKFILL, THE HEIGHT OF THE CHAMBER JOINT SHALL NOT BE LESS THAN 2".
   - TO ENSURE THE INTEGRITY OF THE ARCH SHAPE DURING INSTALLATION, a) THE ARCH STIFFNESS CONSTANT AS DEFINED IN SECTION 6.2.8 OF ASTM F2418 SHALL BE GREATER THAN OR EQUAL TO 550 LBS/FT/%, AND b) TO RESIST CHAMBER DEFORMATION DURING INSTALLATION AT ELEVATED TEMPERATURES (ABOVE 73° F / 23° C), CHAMBERS SHALL BE PRODUCED FROM REFLECTIVE GOLD OR YELLOW COLORS.

2 | ADS–STORMTECH CHAMBER DETENTION SYSTEM 2 | N.T.S.

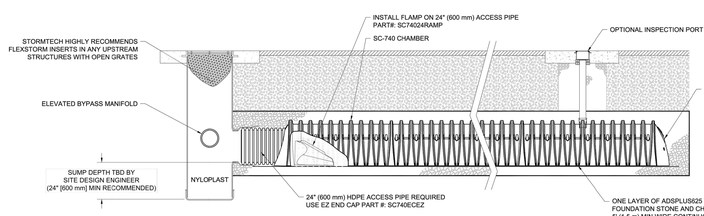

SC-740 ISOLATOR ROW PLUS DETAIL
NTS

INSPECTION & MAINTENANCE

STEP 1) INSPECT ISOLATOR ROW PLUS FOR SEDIMENT
- A. INSPECTION PORTS (IF PRESENT)
  - A.1. REMOVE/OPEN LID ON NYLOPLAST INLINE DRAIN
  - A.2. REMOVE AND CLEAN FLEXSTORM FILTER IF INSTALLED
  - A.3. USING A FLASHLIGHT AND STADIA ROD, MEASURE DEPTH OF SEDIMENT AND RECORD ON MAINTENANCE LOG
  - A.4. LOWER A CAMERA INTO ISOLATOR ROW PLUS FOR VISUAL INSPECTION OF SEDIMENT LEVELS (OPTIONAL)
  - A.5. IF SEDIMENT IS AT, OR ABOVE, 3" (80 mm) PROCEED TO STEP 2. IF NOT, PROCEED TO STEP 3.
- B. ALL ISOLATOR PLUS ROWS
  - B.1. REMOVE COVER FROM STRUCTURE AT UPSTREAM END OF ISOLATOR ROW PLUS
  - B.2. USING A FLASHLIGHT, INSPECT DOWN THE ISOLATOR ROW PLUS THROUGH OUTLET PIPE
    - i) MIRRORS ON POLES OR CAMERAS MAY BE USED TO AVOID A CONFINED SPACE ENTRY
    - ii) FOLLOW OSHA REGULATIONS FOR CONFINED SPACE ENTRY IF ENTERING MANHOLE
  - B.3. IF SEDIMENT IS AT, OR ABOVE, 3" (80 mm) PROCEED TO STEP 2. IF NOT, PROCEED TO STEP 3.

STEP 2) CLEAN OUT ISOLATOR ROW PLUS USING THE JETVAC PROCESS
- A. A FIXED CULVERT CLEANING NOZZLE WITH REAR FACING SPREAD OF 45° (1.1 m) OR MORE IS PREFERRED
- B. APPLY MULTIPLE PASSES OF JETVAC UNTIL BACKFLUSH WATER IS CLEAN
- C. VACUUM STRUCTURE SUMP AS REQUIRED

STEP 3) REPLACE ALL COVERS, GRATES, FILTERS, AND LIDS; RECORD OBSERVATIONS AND ACTIONS.

STEP 4) INSPECT AND CLEAN BASINS AND MANHOLES UPSTREAM OF THE STORMTECH SYSTEM.

NOTES

1. INSPECT EVERY 6 MONTHS DURING THE FIRST YEAR OF OPERATION. ADJUST THE INSPECTION INTERVAL BASED ON PREVIOUS OBSERVATIONS OF SEDIMENT ACCUMULATION AND HIGH WATER ELEVATIONS.
2. CONDUCT JETTING AND VACTORING ANNUALLY OR WHEN INSPECTION SHOWS THAT MAINTENANCE IS NECESSARY.

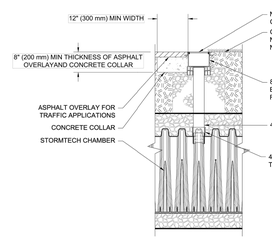

4" PVC INSPECTION PORT DETAIL (SC SERIES CHAMBER)
NTS

3 | ADS–STORMTECH CHAMBER DETENTION SYSTEM 3 | N.T.S.

PROPOSED LAYOUT

76	STORMTECH SC-740 CHAMBERS
14	STORMTECH SC-740 END CAPS
6	STONE ABOVE (in)
12	STONE BELOW (in)
40	% STONE VOID
7,214	**INSTALLED SYSTEM VOLUME (CF) (PERIMETER STONE INCLUDED)**
3199	SYSTEM AREA (ft²)
270	SYSTEM PERIMETER (ft)

PROPOSED ELEVATIONS

69.51	MAXIMUM ALLOWABLE GRADE (TOP OF PAVEMENT/UNPAVED)
63.51	MINIMUM ALLOWABLE GRADE (UNPAVED WITH TRAFFIC)
63.01	MINIMUM ALLOWABLE GRADE (UNPAVED NO TRAFFIC)
63.01	MINIMUM ALLOWABLE GRADE (BASE OF FLEXIBLE PAVEMENT)
63.01	MINIMUM ALLOWABLE GRADE (TOP OF RIGID PAVEMENT)
62.01	TOP OF STONE
61.51	TOP OF SC-740 CHAMBER
59.76	15" TOP MANIFOLD INVERT
59.12	15" BOTTOM MANIFOLD/CONNECTION INVERT
59.02	24" ISOLATOR ROW PLUS CONNECTION INVERT
59.01	BOTTOM OF SC-740 CHAMBER
58.01	UNDERDRAIN INVERT
58.01	BOTTOM OF STONE

NOTES

- MANIFOLD SIZE TO BE DETERMINED BY SITE DESIGN ENGINEER. SEE TECHNICAL NOTE 6.32 FOR MANIFOLD SIZING GUIDANCE.
- DUE TO THE ADAPTATION OF THIS CHAMBER SYSTEM TO SPECIFIC SITE AND DESIGN CONSTRAINTS, IT MAY BE NECESSARY TO CUT AND COUPLE ADDITIONAL PIPE TO STANDARD MANIFOLD COMPONENTS IN THE FIELD.
- THIS CHAMBER SYSTEM WAS DESIGNED WITHOUT SITE-SPECIFIC INFORMATION ON SOIL CONDITIONS OR BEARING CAPACITY. THE SITE DESIGN ENGINEER IS RESPONSIBLE FOR DETERMINING THE SUITABILITY OF THE SOIL AND PROVIDING THE BEARING CAPACITY OF THE INSITU SOILS. THE BASE STONE DEPTH MAY BE INCREASED OR DECREASED ONCE THIS INFORMATION IS PROVIDED.
- ADS DOES NOT DESIGN OR PROVIDE MEMBRANE LINER SYSTEMS. TO MINIMIZE THE LEAKAGE POTENTIAL OF LINER SYSTEMS, THE MEMBRANE LINER SYSTEM SHOULD BE DESIGNED BY A KNOWLEDGEABLE GEOTEXTILE PROFESSIONAL AND INSTALLED BY A QUALIFIED CONTRACTOR.

- **ATTENTION**: THIS DRAWING IS NOT INTENDED FOR USE IN BIDDING OR CONSTRUCTION WITHOUT THE PRIOR APPROVAL OF THE PROJECT'S ENGINEER OF RECORD (EOR). AS WITH ALL PROPOSED ADS LAYOUTS, THE EOR SHOULD REVIEW AND APPROVE THIS DRAWING PRIOR TO USE IN BIDDING AND/OR CONSTRUCTION. IT IS THE ULTIMATE RESPONSIBILITY OF THE EOR TO ENSURE THAT THE PRODUCT(S) DEPICTED AND THE ASSOCIATED DETAILS MEET ALL APPLICABLE LAWS, REGULATIONS, AND PROJECT REQUIREMENTS.

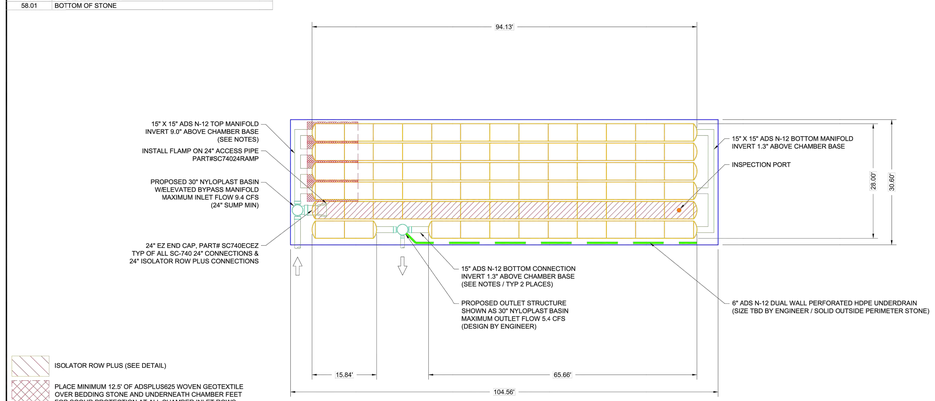

1 | ADS–STORMTECH CHAMBER DETENTION SYSTEM 1 | N.T.S.

BPSD GILBERT ELEMENTARY SCHOOL BUENE PARK, CA
DATE: 03/29/24 | DRAWN: BMW
PROJECT #: 8402210 | CHECKED: ---
REVISIONS WITH NO BLDG DESCRIPTION
NO. BY DESCRIPTION
DATE
DRWN | CHKD

StormTech® Chamber System
888-892-2694 | WWW.STORMTECH.COM

4640 TRUEMAN BLVD HILLIARD, OH 43026

ADS

THIS DRAWING HAS BEEN PREPARED BASED ON INFORMATION PROVIDED TO ADS UNDER THE DIRECTION OF THE SITE DESIGN ENGINEER OF OTHER PROJECT REPRESENTATIVES. THE SITE DESIGN ENGINEER SHALL REVIEW THIS DRAWING PRIOR TO USE IN BIDDING AND/OR CONSTRUCTION. IT IS THE ULTIMATE RESPONSIBILITY OF THE SITE DESIGN ENGINEER TO ENSURE THAT THE PRODUCT(S) DEPICTED AND ALL ASSOCIATED DETAILS MEET ALL APPLICABLE LAWS, REGULATIONS, AND PROJECT REQUIREMENTS.

SHEET 5 OF 6 | SHEET 3 OF 6 | SHEET 4 OF 6 | SHEET 2 OF 6

DSA STAMP

STUDIO W ARCHITECTS

Studio W Architects
1930 H Street
Sacramento, California 95811
[T] 916.254.5600
www.StudioW-Architects.com

kpff
140 Newport Center Drive,
Suite 100
Newport Beach, CA 92660
O: 949.478.8800
www.kpff.com

ARCHITECT	ENGINEER
LICENSED ARCHITECT BRIAN P. WITHROW No. C 30345 Ren. 9/30/25 STATE OF CALIFORNIA	REGISTERED PROFESSIONAL ENGINEER ALI KHAMOSHI No. C 74768 Exp. 12/31/25 CIVIL STATE OF CALIFORNIA
DATE SIGNED: 06/24/24	DATE SIGNED: 06/24/24

GENERAL NOTES
1. This sheet is part of a set and is not to be used alone.
2. This sheet is not to be used for construction unless the architect's stamp and signature appear on the drawings and the status box indicated drawings have been released for construction.
3. These plans and prints thereof, as instruments of service, are owned by the architect and are for use on this project only. Reproduction and/or distribution without the prior written consent of the architect is forbidden.
4. Copyright Studio W Associates, Inc. 2022.

REVISION HISTORY

DRAWING STATUS

	DATE
○ DSA PLAN CHECK	03/29/2024
● DSA BACK CHECK	06/24/2024
○ BIDDING	
○ CONSTRUCTION	

KEY PLAN

BUENA PARK USD
6885 ORANGETHORPE AVE
BUENA PARK, CA 90620

DSA SUBMITTAL

CARL E. GILBERT ELEMENTARY SCHOOL
TK/PK CLASSROOMS & EARLY LEARNING BUILDING
7255 8TH STREET, BUENA PARK, CA 90621

DETAILS

Date 06/24/2024	Project Number 2300150
Application Number 04-123212	Drawing Number C5.04
Drawn TN	Checked JP

Drawing: P:\2023\2300150 - 19 - BPSD - Carl E Gilbert Elementary School - TK-PK Classrooms & EL Building\DWG\SHEETS\2300150C-C500 07.dwg Last Saved: Tuesday, June 18, 2024 3:23:23 PM Last Plotted: Wednesday, June 19, 2024 5:38:38 PM By: Alexis Bisilo

Drawing: P:\2023\2300150 - 19 - BPSD - Carl E Gilbert Elementary School - TK-PK Classrooms & EL Building\DWG\SHEETS\2300150C-C500 07.dwg Last Saved: Tuesday, June 18, 2024 12:23:2 PM Last Plotted: Wednesday, June 19, 2024 5:38:43 PM By: Alexis Bisolo

NYLOPLAST DRAIN BASIN

NTS

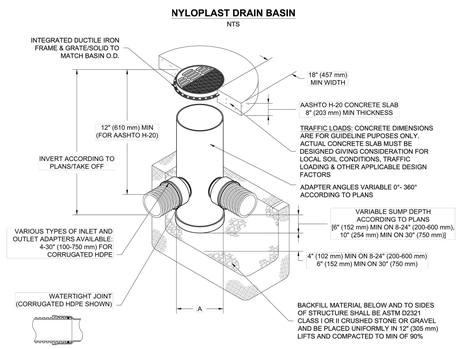

NOTES

1. 8-30" (200-750 mm) GRATES/SOLID COVERS SHALL BE DUCTILE IRON PER ASTM A536 GRADE 70-50-05
2. 12-30" (300-750 mm) FRAMES SHALL BE DUCTILE IRON PER ASTM A536 GRADE 70-50-05
3. DRAIN BASIN TO BE CUSTOM MANUFACTURED ACCORDING TO PLAN DETAILS
4. DRAINAGE CONNECTION STUB JOINT TIGHTNESS SHALL CONFORM TO ASTM D3212 FOR CORRUGATED HDPE (ADS & HANCOR DUAL WALL) & SDR 35 PVC
5. FOR COMPLETE DESIGN AND PRODUCT INFORMATION: **WWW.NYLOPLAST-US.COM**
6. TO ORDER CALL: **800-821-6710**

A	PART #	GRATE/SOLID COVER OPTIONS		
8" (200 mm)	2808AG	PEDESTRIAN LIGHT DUTY	STANDARD LIGHT DUTY	SOLID LIGHT DUTY
10" (250 mm)	2810AG	PEDESTRIAN LIGHT DUTY	STANDARD LIGHT DUTY	SOLID LIGHT DUTY
12" (300 mm)	2812AG	PEDESTRIAN AASHTO H-10	STANDARD AASHTO H-20	SOLID AASHTO H-20
15" (375 mm)	2815AG	PEDESTRIAN AASHTO H-10	STANDARD AASHTO H-20	SOLID AASHTO H-20
18" (450 mm)	2818AG	PEDESTRIAN AASHTO H-10	STANDARD AASHTO H-20	SOLID AASHTO H-20
24" (600 mm)	2824AG	PEDESTRIAN AASHTO H-10	STANDARD AASHTO H-20	SOLID AASHTO H-20
30" (750 mm)	2830AG	PEDESTRIAN AASHTO H-20	STANDARD AASHTO H-20	SOLID AASHTO H-20

BPSD GILBERT
ELEMENTARY SCHOOL
BUENE PARK, CA

DATE: 03/28/24 DRAWN: BMW
PROJECT #: 84902103 CHECKED: JP

MARK/#/#	DATE	DESCRIPTION
BLT	—	REDRAWN WITH ISO HDS
		SIGNAL (UNIV)

Nyloplast®

4640 TRUEMAN BLVD
HILLIARD, OH 43026

770-850-2443 | WWW.NYLOPLAST-US.COM

THIS DRAWING HAS BEEN PREPARED BASED ON INFORMATION PROVIDED TO ADS. ADS ASSUMES NO RESPONSIBILITY FOR ERRORS OR OMISSIONS IN THE INFORMATION PROVIDED BY OTHERS. IT IS THE CONTRACTOR'S RESPONSIBILITY TO CONFIRM AND VERIFY ALL INFORMATION AND DIMENSIONS. CONTRACTOR SHALL REVIEW ALL DRAWINGS AND SUBMIT ANY CHANGES TO ADS IN WRITING BEFORE CONSTRUCTION. ADS ASSUMES NO RESPONSIBILITY FOR ANY ERRORS OR OMISSIONS IN THESE DRAWINGS OR FOR THE NON-CONFORMING WORK BASED ON THESE DRAWINGS. ANY PRODUCTS INSTALLED FROM ALL ASSOCIATED DESIGN ELEMENTS MUST ALL APPLICABLE LAWS, REGULATIONS, AND PROJECT REQUIREMENTS.

SHEET 6 OF 6

1 ADS–STORMTECH CHAMBER DETENTION SYSTEM 5 N.T.S.

DSA STAMP

STUDIO W ARCHITECTS

Studio W Architects
1930 H Street
Sacramento, California 95811
[T] 916.254.5600
www.StudioW-Architects.com

kpff

140 Newport Center Drive,
Suite 100
Newport Beach, CA 92660
O: 949.478.8800
www.kpff.com

ARCHITECT	ENGINEER
LICENSED ARCHITECT BRYAN P. WHITMORE No. C 30345 Ren. 9/30/25 STATE OF CALIFORNIA	REGISTERED PROFESSIONAL ENGINEER ALI KHAMO No. C74768 Exp. 12/31/25 CIVIL STATE OF CALIFORNIA
DATE SIGNED: 06/24/2024	DATE SIGNED: 06/24/2024

GENERAL NOTES

1. This sheet is part of a set and is not to be used alone.
2. This sheet is not to be used for construction unless the architect's stamp and signature appear on the drawings and the status box indicated drawings have been released for construction.
3. These plans and prints thereof, as instruments of service, are owned by the architect and are for use on this project only. Reproduction and/or distribution without the prior written consent of the architect is forbidden.
4. Copyright Studio W Associates, Inc. 2022.

REVISION HISTORY

DRAWING STATUS

	DATE
○ DSA PLAN CHECK	03/29/2024
● DSA BACK CHECK	06/24/2024
○ BIDDING	
○ CONSTRUCTION	

KEY PLAN

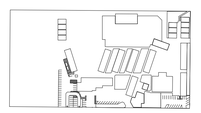

BUENA PARK USD
6885 ORANGETHORPE AVE
BUENA PARK, CA 90620

DSA SUBMITTAL

CARL E. GILBERT
ELEMENTARY SCHOOL
TK/PK CLASSROOMS & EARLY LEARNING BUILDING
7255 8TH STREET, BUENA PARK, CA 90621

DETAILS

Date	Project Number
06/24/2024	2300150
Application Number	Drawing Number
04-123212	C5.05
Drawn: TN	Checked: JP

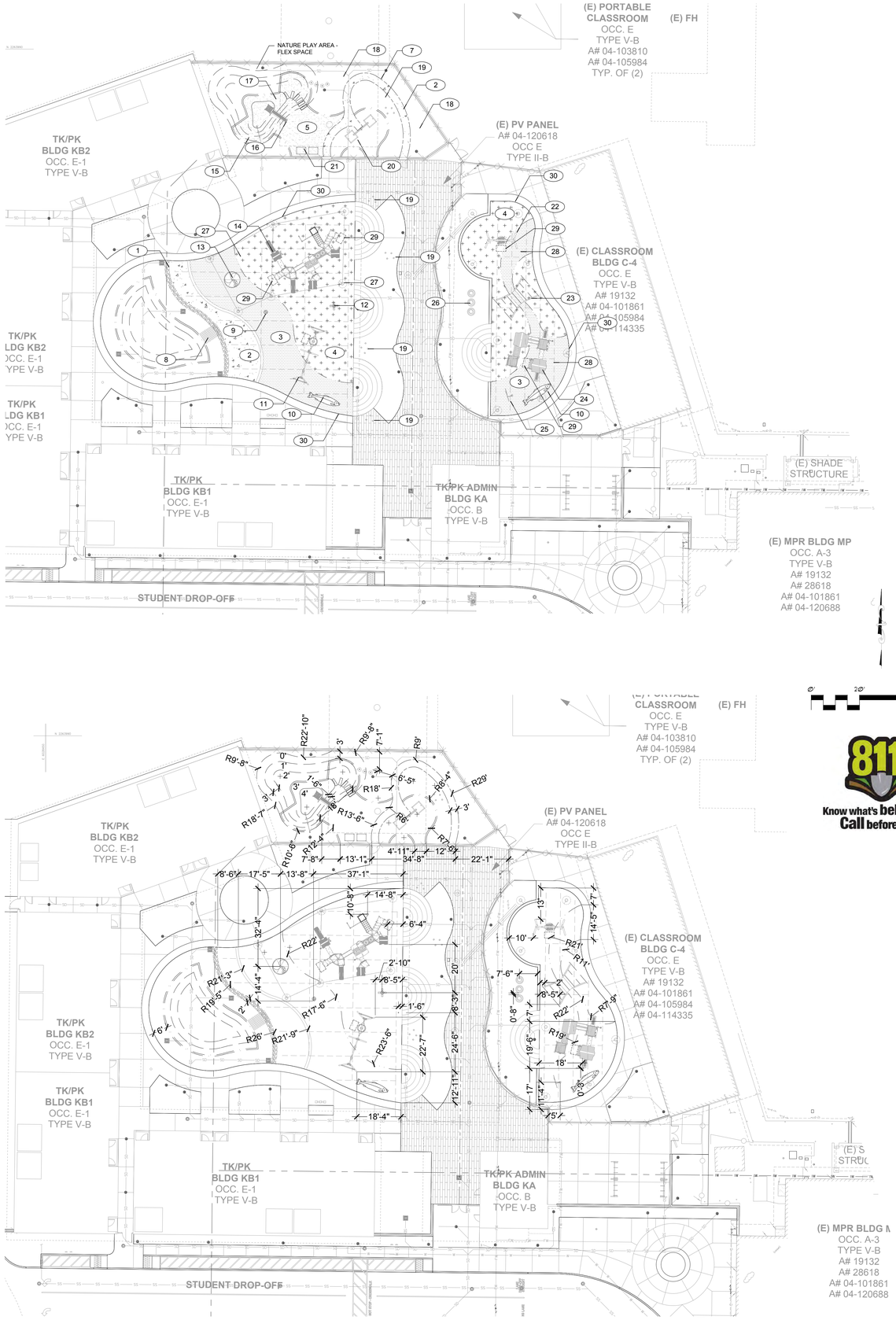

Know what's below. Call before you dig.

FINISH SCHEDULE

CONTRACTOR NOTE:

THE LANDSCAPE ARCHITECT SHALL BE NOTIFIED OF ANY FIELD CHANGES TO ARCHITECTURAL EXTERIORS OR HARDSCAPE CHANGES.

SYMBOL	DESCRIPTION	COLOR/FINISH	DETAIL
1	STREAM BED	COLOR: SIERRA SELECT 1" BOULDERS AND 3-5" COBBLE. FROM: SOUTHWEST BOULDER & STONE PH: 760-685-0202 (STEVE SERRANO)	SEE DETAIL A, SHEET L1.2
2	3" LIFT GRANITECRETE	COLOR: CARMEL COAST FROM: SOUTHWEST BOULDER & STONE PH: 760-685-0202 (STEVE SERRANO)	SEE DETAIL B, SHEET L1.2
3	TOTTURF TPV SUPREME POUR IN PLACE RUBBER SURFACING IPEMA CERT SHEET L1.1	COLOR: STANDARD BLUE FROM: ROBERTSON RECREATIONAL SURFACES PH: 714-904-8219 (VINCE BRANTLEY)	SEE DETAIL C, SHEET L1.2
4	TOTTURF TPV SUPREME POUR IN PLACE RUBBER SURFACING IPEMA CERT. SHEET L1.1	COLOR: STANDARD GREEN FROM: ROBERTSON RECREATIONAL SURFACES PH: 714-904-8219 (VINCE BRANTLEY)	SEE DETAIL C, SHEET L1.2
5	SYNTHETIC TURF HILL	TIGER TURF PLAYGROUND FROM: SYNTHETIC GRASS WAREHOUSE PH: 877-643-8006	SEE DETAIL H, SHEET L1.2
6	6" SQ CONCRETE MOWCURB	TIGER TURF PLAYGROUND	SEE DETAIL B-D, SHEET L1.2
7	CHANGE IN RUBBER COLORING		
	GRANITECRETE EDGE		SEE DETAIL B, SHEET L1.2
8	WOOD BRIDGE		SEE DETAIL G, SHEET L1.2
9	JUNIOR SPICA	ELE400024. COLOR: RED FROM: KOMPAN PH: 714-293-5065 (JEFF GRAEF)	PER MANUFACTURER REF L, SHEET L1.3 AND SPECIFICATIONS
10	RUBBER SURFACE SALMON DETAIL		SEE DETAIL J, SHEET L1.3
11	COMBI SWING W/ TEXMADE POSTS AND MOLDED PE BIRDS NEST. SWINGS TO BE 12" AND NESTS TO BE 24" A.F.S HEIGHT OF RUBBER SURFACING PER 11B-108.4.4.	KSW93045. COLOR: TEAL FROM: KOMPAN PH: 714-293-5065 (JEFF GRAEF)	PER MANUFACTURER REF L, SHEET L1.3 AND SPECIFICATIONS
12	WATER LILIES TEETER TAWTER	M175. COLOR: MEDIUM GREEN FROM: KOMPAN PH: 714-293-5065 (JEFF GRAEF)	PER MANUFACTURER REF L, SHEET L1.3 AND SPECIFICATIONS
13	INCLUSIVE ORBIT	560-0051. COLOR: SEA BREEZE FROM: BCI BURKE PH: 562-693-5200 (JONATHAN LARIOS)	PER MANUFACTURER AND SPECIFICATIONS.
14	MULTI PLAY TOWER & PLAYHOUSES, ONLY ROOF ON THE PLAY HOUSE AND LOWER SLIDE.	PCM900131. COLOR: TEAL FROM: KOMPAN PH: 714-293-5065 (JEFF GRAEF)	PER MANUFACTURER REF M, SHEET L1.4 AND SPECIFICATIONS
15	HILLSIDE CLIMBER ROPE	COR10545. COLOR: BEIGE FROM: KOMPAN PH: 714-293-5065 (JEFF GRAEF)	PER MANUFACTURER REF L, SHEET L1.3 AND SPECIFICATIONS
16	4' HIGH EMBANKMENT SLIDE	COLOR: STEEL FROM: KOMPAN PH: 714-293-5065 (JEFF GRAEF)	PER MANUFACTURER REF L, SHEET L1.3 AND SPECIFICATIONS
17	WOOD STEPS		SEE DETAIL E, SHEET L1.2
18	NATUREPLAY ROCK- SMALL	560-2614. FROM: BCI BURKE PH: 562-693-5200 (JONATHAN LARIOS)	PER MANUFACTURER
19	SITTING POLES	NRO509. COLOR: NATURAL FROM: KOMPAN PH: 714-293-5065 (JEFF GRAEF)	PER MANUFACTURER
20	WATER SEESAW W/ 2 SPLASH TABLES. NO PLATFORM	NRO509. COLOR: NATURAL FROM: KOMPAN PH: 714-293-5065 (JEFF GRAEF)	PER NANUFACTURER REF N, SHEET L1.5 AND SPECIFICATIONS
21	SENSORY TABLES		SEE DETAIL F, SHEET L1.2
22	ROBINIA BIRDS NEST SWING W/ MOLDED PE SEAT TO BE 24" A.F.S HEIGHT OF RUBBER SURFACING PER 11B-108.4.4.	NRO911. COLOR: NATURAL, TURQUOSE, FROM: KOMPAN PH: 714-293-5065 (JEFF GRAEF)	PER MANUFACTURER REF N, SHEET L1.5 AND SPECIFICATIONS
23	TUNNEL	6" DIAM PRESSURE TREATED ROUND POST POLES	SEE DETAIL K, SHEET L1.2
24	LITTLE TURTLE'S TOWN	NRO4001. COLOR: ROBINIA TURQUOISE FROM: KOMPAN PH: 714-293-5065 (JEFF GRAEF)	PER MANUFACTURER REF O, SHEET L1.6 AND SPECIFICATIONS
25	CLOUD CLIMBER	MSC5401. COLOR: LIGHT BLUE FROM: KOMPAN PH: 714-293-5065 (JEFF GRAEF)	PER MANUFACTURER REF N, SHEET L1.5 AND SPECIFICATIONS
26	NATUREPLAY STUMP - SMALL	560-0553 FROM: BCI BURKE PH: 562-693-5200 (JONATHAN LARIOS)	PER MANUFACTURER
27	PK SHADE SAILS W/ DUAL SHADE FABRIC	COLOR: TOPAZ FROM: USA SHADE PH: 949-466-4592 (PATTI ABRECHT)	PER MANUFACTURER PC SHEETS AT THE END OF THIS SET AND SPECIFICATIONS.
28	TODDLER SHADE SAILS W/ DUAL SHADE FABRIC	COLOR: TOPAZ FROM: USA SHADE PH: 949-466-4592 (PATTI ABRECHT)	PER MANUFACTURER PC SHEETS AT THE END OF THIS SET AND SPECIFICATIONS.
29	30X48" TRANSFER PADS		
30	FLUSH CURBS AT ALL RUBBER TO CONCRETE SURFACES		SEE DETAIL C, SHEET L1.2

DSA STAMP

STUDIO W ARCHITECTS

Studio W Architects
1930 H Street
Sacramento, California 95811
[T] 916.254.5600
www.StudioW-Architects.com

KDA LANDSCAPE ARCHITECTS
325 7th Avenue, Unit 214
San Diego, CA 92101-7176
t 619.840.5174
website www.kda-landscapearchitects.com

ARCHITECT	LANDSCAPE ARCHITECT
LICENSED ARCHITECT BRIAN P WHITMORE No. C 30345 Ren. 9/30/25 STATE OF CALIFORNIA	REGISTERED LANDSCAPE ARCHITECT KEVIN J. KARAN No. 5491 5/31/25 RENEWAL DATE 06/19/24 DATE STATE OF CALIFORNIA

DATE SIGNED: 06/24/2024

GENERAL NOTES

1. This sheet is part of a set and is not to be used alone.
2. This sheet is not to be used for construction unless the architect's stamp and signature appear on the drawings and the status box indicated drawings have been released for construction.
3. These plans and prints thereof, as instruments of service, are owned by the architect and are for use on this project only. Reproduction and/or distribution without the prior written consent of the architect is forbidden.
4. Copyright Studio W Associates, Inc. 2022.

REVISION HISTORY

NO.	REMARKS	DATE

DRAWING STATUS

	DATE
DSA PLAN CHECK	
DSA BACK CHECK	06/24/2024
BIDDING	
CONSTRUCTION	

KEY PLAN

BUENA PARK USD
6885 ORANGETHORPE AVE
BUENA PARK, CA 90620

SCHEMATIC DESIGN

CARL E. GILBERT ELEMENTARY SCHOOL
TK/PK CLASSROOMS & EARLY LEARNING BUILDING
7255 8TH STREET, BUENA PARK, CA 90621

PLAYGROUND CONSTRUCTION PLAN

Date	Project Number
06/24/2024	23076
Application Number	Drawing Number
XX-XXXXXX	L1.0
Drawn / Checked	
Author / Checker	

C:\KDA PROJECTS\24000 PROJECTS\24001 GILBERT ES TK-PK EXPANSION\AUTOCAD\CD'S\24001 CP.DWG

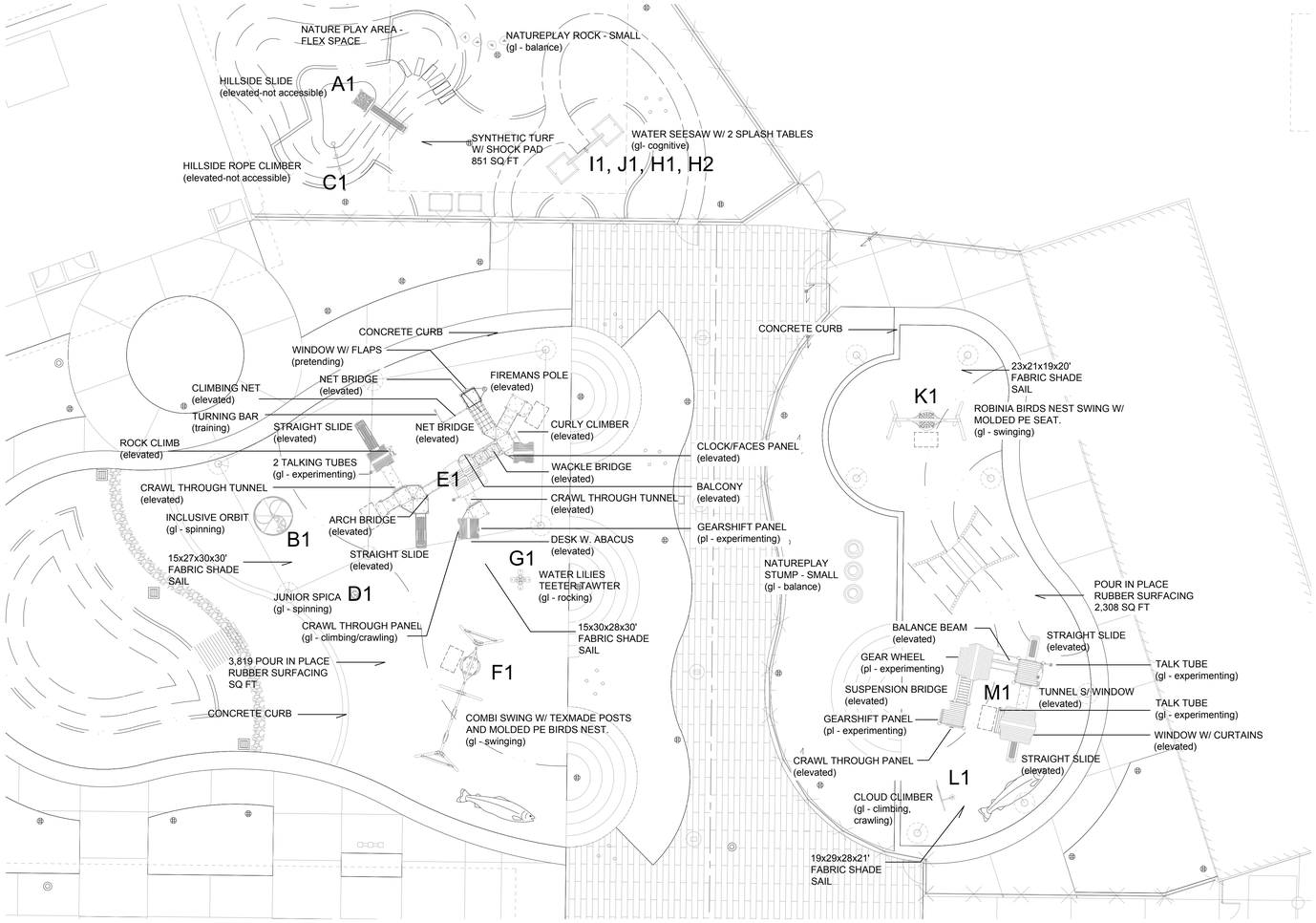

AGES 3-5

AGES 2-5

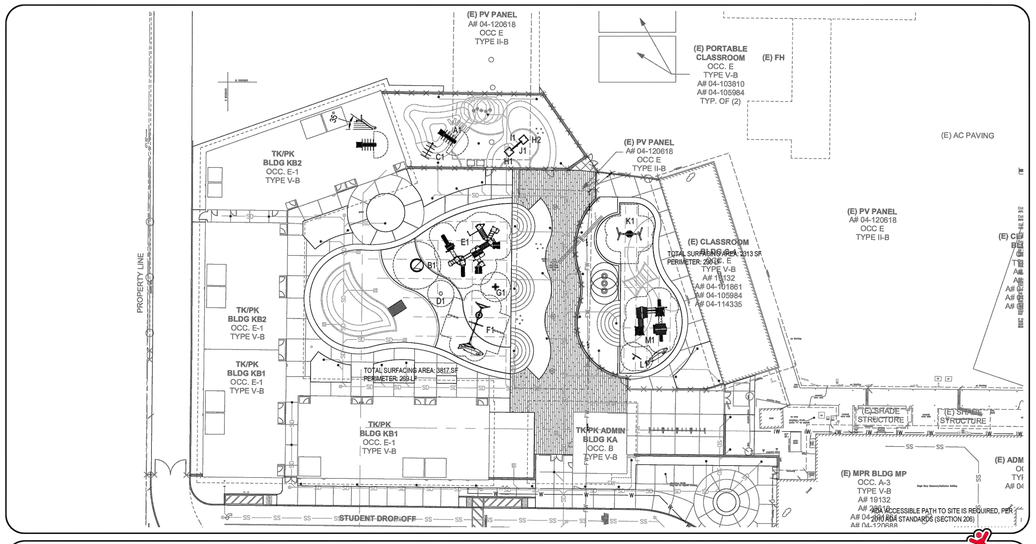

#	Product Number	Product Name	M.F.H.	Count
A	PCM72605	Embankment Slide	3'-4"	2
B	PCM157.ed03	Universal Carousel	1'-3"	1
C	COR105631.ed01	Hill Climber Rope with SPIDA, Type 3	0'-0"	1
D	ELE400158.ed.rDTE	Junior Spica	0'-7"	1
E	PCM90031-CUSTOM_20251028	Multi Play Tower & Playhouses	6'-8"	1
F	KSW80045-0500	Combi Swing, 3/8in w, 8ft h	7'-11"	1
G	M175S1.ed7	Water Lilies	1'-5"	1
H	NRO505.ed01	Splash Table	0'-5"	2
I	NRO504.ed01	Water Seesaw	0'-2"	1
J	M593S5.ed	Water Tap	0'-0"	1
K	NRO501.ed01	Birds Nest Swing	7'-7"	1
L	MSC5401S0.ed1TP	Cloud Climber	2'-4"	1
M	NRO4001.ed01	Little Turtle's Town	1'-11"	1

Carl E Gilbert Elementary School

6885 Orangethrorpe Ave
Buena Park, CA 90621
Site Plan

1/32"=1'-0" ON 11" x 17" SHEET

MANUFACTURER'S SHOP DRAWING:

SALES REPRESENTATIVE		SHEET
JeWos		K1.0
REVIEW BY	DRAWN BY	DATE
DESIGN	JeWos	03/25/24
REV. NO.	REV. BY	REV. DATE
-	-	-

REVISION NOTES
-

LAYOUT IS IN ACCORDANCE WITH ASTM F1487-19

PLAY STRUCTURE AND LAYOUT OF COMPONENTS CONFORM TO ASTM F1487-21 AND CPSC #325 GUIDELINES AND CCR TITLE 22, DIVISION 4 CHAPTER 22. CRITICAL FALL HEIGHT OF OVERALL PLAY AREA: 95"

IPEMA INTERNATIONAL PLAY EQUIPMENT MANUFACTURERS ASSOCIATION

IPEMA ASTM F1292-18 (SECTION 4.2) AND/OR ASTM F3351-19 CERTIFICATE OF COMPLIANCE

ISSUE DATE: September 29, 2020
Requested By: ROBERTSON INDUSTRIES, INC.
Project: ROBERTSON INDUSTRIES INC

In the interest of public playground safety, IPEMA provides a third party certification service whereby TÜV SÜD America validates a manufacturer's certification of conformance to ASTM F1292-18 Standard Specification for Impact Attenuation of Surfacing Materials Within the Use Zone of Playground Equipment Standard, Section 4.2, Performance Criterion and/or ASTM F3351-19 Standard Test Method for Playground Surface Impact Testing in Laboratory at Specified Test Height.

The manufacturers listed below have received written validation from TÜV SÜD America that the products listed conform with the requirements of ASTM F1292-18, Section 4.2 and/or ASTM F3351-19.

The validation is made by testing at the specified fall height rating requested by the manufacturer, based upon its experience and knowledge of its products, instead of the "critical fall height" used in ASTM F1292-18. TÜV SÜD America validates that the impact attenuating performance criterion specified by ASTM F1292-18 (Section 4.2) and/or ASTM F3351-19 has been met or exceeded.

MODEL #	COMMERCIAL NAME OF PRODUCT	PRODUCT LINE	THK/HT	MANUFACTURER
TS400	TotTurf TPV Supreme PIP for 8ft fall height	TotTurf	4" / 8'	Robertson Industries, Inc., A PlayCore Company
TS300	TotTurf TPV Supreme PIP for 6ft fall height	TotTurf	3.0" / 6'	Robertson Industries, Inc., A PlayCore Company
TS250	TotTurf TPV Supreme PIP for 5ft fall height	TotTurf	2.50" / 5'	Robertson Industries, Inc., A PlayCore Company
TS200	TotTurf TPV Supreme PIP for 4ft fall height	TotTurf	2.00" / 4'	Robertson Industries, Inc., A PlayCore Company
TS500	TotTurf TPV Supreme PIP for 10ft fall height	TotTurf	5.25" / 10'	Robertson Industries, Inc., A PlayCore Company

Play Area Accessibility Checklist

KEEP A COPY OF THIS FORM FOR YOUR RECORDS.

Play Areas for 2–5 year olds and 5–12 year olds, as well as geographically separated play areas, should be evaluated separately.

Site Name carl e gilber
Age Group ■-5
Date March 25, 2024
Prepared By joaace

	Item Number / Name	Play Activity	Elevated	Accessible	Ground	Accessible	Ground Level Play Type
B1	PCM157 Universal Carousel				•	•	Spinning
E1	PCM900131 Multi Play Tower & Playh	Net Bridge	•	•			
		Curly Climber	•	•			
		Rung Ladder	•	•			
		Climbing Net, Vertical	•	•			
		Abacus	•	•			
		Loop Climber	•	•			
		Straight Slide	•	•			
		Balcony	•	•			
		Clock/Faces Panel	•	•			
		Wackle Bridge	•	•			
		Balcony	•	•			
		Rung Ladder	•				
		Gears Panel	•				
		Arch Bridge	•				
		Crawl Through Tunnel	•	•			
		Straight Slide	•	•			
		Crawl Through Tunnel	•	•			
		Flower Panel	•	•			
		Rock Climb	•	•			
		Window with Flaps			•	•	Pretending
		Turning Bar			•	•	Training
		Gears Panel			•	•	Experimenting
		Desk with Conveyor Belt			•	•	Experimenting
		Crawl Through Panel			•	•	Climbing/Crawling
		Talk Tubes Set of 2			•	•	Experimenting
G1	M175P Water Lilies				•	•	Rocking
D1	ELE400158 Junior Spica				•	•	Spinning
		TOTALS	**19**	**16**	**9**	**9**	**6**
			Elevated Activities	Accessible Elevated	Ground Level Activities	Accessible Ground Level	DIFFERENT Ground Level Play Types

NOTE: If elevated play components exceed 19, the play area requires a ramp structure. https://www.access-board.gov/ada/guides/chapter-10-play-areas/#when-ramps-are-required. ADA 2010, 1008.2, Exception #1.

Accessible Elevated Activities Required 10
50% of elevated activities must be accessible.

Accessible Ground Level Activities Required 6
See table for accessibility requirements.

Accessible Ground Level Play Types Required 6
See table and compare to total number of different ground level play types. The larger number is the number of ground level play types that must be accessible.

NOTE: If a ground level play type is present but not accessible and it is the ONLY ONE, an additional ground level play component with the same play type MUST BE PROVIDED IN THE PLAY AREA TO OFFER EQUITY. (ADA2010, Chapter 2: Scoping Requirements, 240.2.1.1 Minimum Number and Types)

This form is intended to assist the evaluation of accessibility for outdoor play facilities. This form does not represent all factors required for an accessible play facility contained in the regulations, and therefore is not a guarantee, test, or confirmation of accessibility. Requirements for accessibility include appropriate accessible routes, maneuvering spaces and clear floor and ground spaces. Play components must include appropriate transfer heights and/or be accessed by ramp where appropriate. Providing and maintaining accessibility is the responsibility of the Play Facility Owner.

Play Area Accessibility Checklist

KEEP A COPY OF THIS FORM FOR YOUR RECORDS.

Play Areas for 2–5 year olds and 5–12 year olds, as well as geographically separated play areas, should be evaluated separately.

Site Name carl e gilber
Age Group 2-5
Date March 24, 2024
Prepared By joaace

	Item Number / Name	Play Activity	Elevated	Accessible	Ground	Accessible	Ground Level Play Type
J1	NRO506 Splash Table				•	•	Experimenting
H1, H2	NRO509 Water Seesaw with 2 Splash Tables				•	•	Experimenting
I1	M593P Water Tap				•	•	Experimenting
L1	MSC5401P Cloud Climber				•	•	Climbing/Crawling
M1	NRO4001 Little Turtle's Town	Straight Slide	•	•			
		Window with Curtains	•	•			
		Tunnel	•	•			
		Straight Slide	•	•			
		Balance Beam	•	•			
		Crawl Through Panel	•	•			
		Suspension Bridge	•	•			
		Crawl Through Panel	•	•			
		Gear Wheel			•	•	Experimenting
		Gearshift Panel			•	•	Experimenting
		Talk Tubes Set of 2			•	•	Experimenting
K1	KSW920-	Basic Swing			•	•	Swinging
		Basket Swing			•	•	Swinging
		Basic Swing			•	•	Swinging
A1	Embankment Slide	Slide	•				
		Mound/Hill	•				
C1	COR105331 Hill Climber Rope, Type 3		•				
		TOTALS	**11**	**8**	**10**	**10**	**3**
			Elevated Activities	Accessible Elevated	Ground Level Activities	Accessible Ground Level	DIFFERENT Ground Level Play Types

NOTE: If elevated play components exceed 19, the play area requires a ramp structure. https://www.access-board.gov/ada/guides/chapter-10-play-areas/#when-ramps-are-required. ADA 2010, 1008.2, Exception #1.

Accessible Elevated Activities Required 6
50% of elevated activities must be accessible.

Accessible Ground Level Activities Required 4
See table for accessibility requirements.

Accessible Ground Level Play Types Required 3
See table and compare to total number of different ground level play types. The larger number is the number of ground level play types that must be accessible.

NOTE: If a ground level play type is present but not accessible and it is the ONLY ONE, an additional ground level play component with the same play type MUST BE PROVIDED IN THE PLAY AREA TO OFFER EQUITY. (ADA2010, Chapter 2: Scoping Requirements, 240.2.1.1 Minimum Number and Types)

This form is intended to assist the evaluation of accessibility for outdoor play facilities. This form does not represent all factors required for an accessible play facility contained in the regulations, and therefore is not a guarantee, test, or confirmation of accessibility. Requirements for accessibility include appropriate accessible routes, maneuvering spaces and clear floor and ground spaces. Play components must include appropriate transfer heights and/or be accessed by ramp where appropriate. Providing and maintaining accessibility is the responsibility of the Play Facility Owner.

DSA STAMP

STUDIO W ARCHITECTS
Studio W Architects
1930 H Street
Sacramento, California 95811
[T] 916.254.5600
www.StudioW-Architects.com

KDA LANDSCAPE ARCHITECTS
325 7th Avenue, Unit 214
San Diego, CA 92101-7176
t 619.840.5174
website www.kda-landscapearchitects.com

ARCHITECT — LICENSED ARCHITECT BRIAN P. WHITMORE No. C 30345 Ren. 9/30/25 STATE OF CALIFORNIA — DATE SIGNED: 06/24/2024

LANDSCAPE ARCHITECT — REGISTERED LANDSCAPE ARCHITECT STEPHEN J. KANAN 5/8/25 STATE OF CALIFORNIA — 06/19/24

GENERAL NOTES
1. This sheet is part of a set and is not to be used alone.
2. This sheet is not to be used for construction unless the architect's stamp and signature appear on the drawings and the status box indicated drawings have been released for construction.
3. These plans and prints thereof, as instruments of service, are owned by the architect and are for use on this project only. Reproduction and/or distribution without the prior written consent of the architect is forbidden.
4. Copyright Studio W Associates, Inc. 2022.

REVISION HISTORY

NO.	REMARKS	DATE

DRAWING STATUS — DATE
- DSA PLAN CHECK
- DSA BACK CHECK 06/24/2024
- BIDDING
- CONSTRUCTION

KEY PLAN

BUENA PARK USD
6885 ORANGETHORPE AVE
BUENA PARK, CA 90620

SCHEMATIC DESIGN

CARL E. GILBERT ELEMENTARY SCHOOL
TK/PK CLASSROOMS & EARLY LEARNING BUILDING
7255 8TH STREET, BUENA PARK, CA 90621

PLAY STRUCTURE ELEMENTS PLAN AND ACCESSIBILITY TABLES

Date	Project Number
06/24/2024	23076
Application Number	Drawing Number
XX-XXXXXX	L1.1
Drawn / Checked	
Author / Checker	

C:\AKDA PROJECTS\24000 PROJECTS\24001 GILBERT ES TK-PK EXPANSION\AUTOCAD\CD'S\24001 CP.DWG

1. 4x8" SEVERE WEATHER PRESSURE TREATED POST W/ 3" OF GRAVEL SURROUNDING ALL SIDES IN SOIL.
2. 1' SQ CONCRETE FOOTING, LENGTH OF THE FIRST 2 DECK BOARDS, W/ #4 REBAR CONTINUOUS, CENTERED.
3. 4x8" WOOD CURBING ATTACHED TO POST BY COUNTERSINKING 1" 2- $\frac{5}{16}$" GALV. LAG SCREWS, 9" LONG.
4. 4x6" DECKING. FIRST 2 BOARDS TO BE SET FIRST AND SECURED TO CONCRETE FOOTING VIA SIMPSON 18" CUT DOWN 12 GAUGE WOOD TO CONCRETE CIP GALV. MASONRY STRAP ATTACHED TO ENDS OF BOARDS, NOT TO BE SEEN FROM ABOVE. ATTACH REMAINING 14 BOARDS TO UNDERSIDE OF BEAM AND CURBING BY COUNTER SINKING 1" 2- 3/8" GALV. LAG SCREWS, 5" LONG. ONCE THE 14 BOARDS ARE ATTACHED, THE BRIDGE IS TO BE PLACED, CURB SIDE UP, AND SECURED TO FIRST 2 DECK BOARDS W/ $\frac{5}{16}$" GALV. LAG SCREWS.
5. FINISH GRADE OF TURF AND/OR STREAM, BOTH GRADED TOWARDS PLANTING AREA.
6. CONCRETE MOWCURB PER PLAN.
7. 80% COMPACTED SUBGRADE

NOTES:
WOOD TO BE WESTERN RED CEDAR.

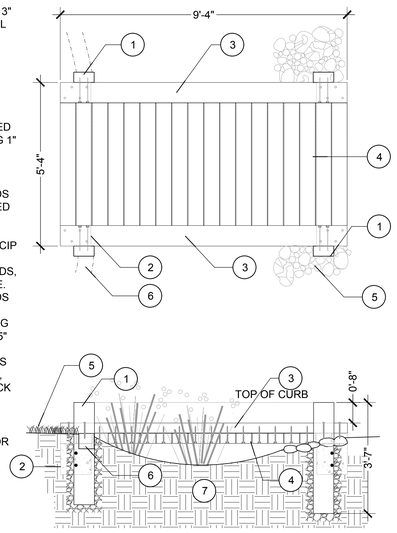

G BRIDGE

SCALE: 1/2"=1'-0"

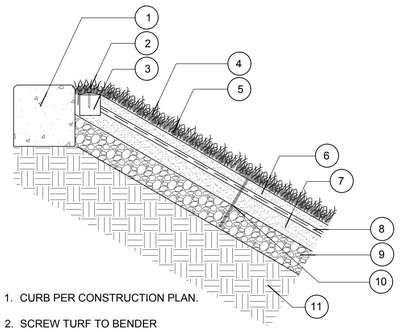

1. CURB PER CONSTRUCTION PLAN.
2. SCREW TURF TO BENDER BOARD WITH GALVANIZED SCREW.
3. 2x4" COMPOSITE WOOD BENDER BOARD ALL SIDES HELD IN PLACE WITH 12" COMPOSIT STAKES @ 3' O.C. TOP BOARD TO BE SET IN 2" THICK LAYER OF CONCRETE.
4. SYNTHETIC TURF PER FINISH SCHEDULE.
5. ENVIROFILL PER MANUFACTURER.
6. 1" SHOCK PAD.
7. 2-4" LAYER OF BEDDING SAND OR GRANITE DUST WET COMPACTED TO 90%
8. GEOTEXTILE FABRIC, NAIL INTO SUBBASE.
9. 4-6" LAYER OF CLASS II BASE 1/4" MINUS WITH FINES MIXED WET COMPACTED TO 90%
10. 60D GALVANIZED FLAT HEAD SYNTHETIC GRASS SPIKES. SECURE PERIMETER @ 6" O.C. AND SEAMS WITH 6" 'U' NAILS 6" O.C.
11. NATIVE SOIL

NOTE:
'S' SEAMING TO BE USED. TURF PIECES TO RUN IN SAME DIRECTION AND ALL SEAMS PARALLEL WITH THE SLOPE.

H SYNTHETIC TURF SLOPE

SCALE: 1/2"=1'-0"

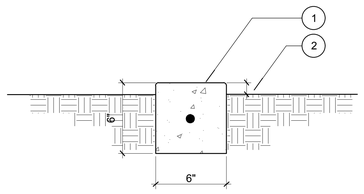

1. 2000 PSI CONCRETE MOW STRIP. SMOOTH TROWEL FINISH, NATURAL GREY, 1/4" RAD. TO ALL EDGES.

   INSTALL 1/2" PREFORMED EXPANSION JOINTS @ 15' O.C. MAX., AND AT BEGINNING AND END OF RADIUS.
2. FINISH GRADE, 2" AT GROUND COVER 1" AT TURF AREAS.

D 6" SQ CONC MOWCURB

N.T.S.

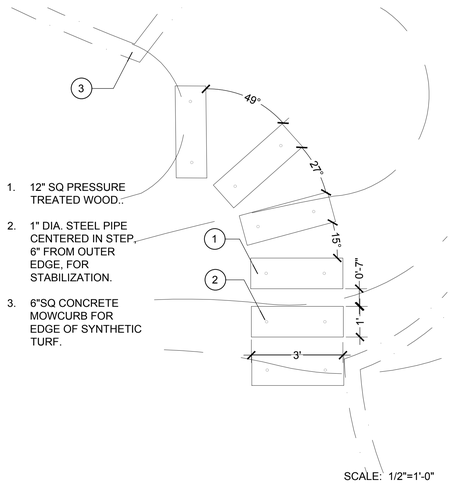

1. 12" SQ PRESSURE TREATED WOOD.
2. 1" DIA. STEEL PIPE CENTERED IN STEP, 6" FROM OUTER EDGE, FOR STABILIZATION.
3. 6"SQ CONCRETE MOWCURB FOR EDGE OF SYNTHETIC TURF.

SCALE: 1/2"=1'-0"

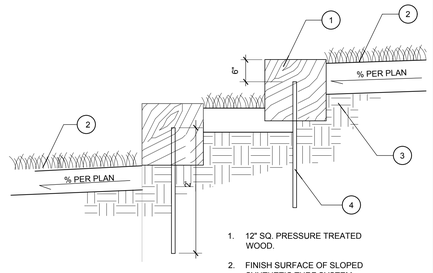

1. 12" SQ. PRESSURE TREATED WOOD.
2. FINISH SURFACE OF SLOPED SYNTHETIC TURF SYSTEM.
3. 90% COMPACTED SUBGRADE
4. 1" DIA. STEEL PIPE CENTERED IN STEP FOR STABILIZATION

E WOOD STEPS

SCALE: 1"=1'-0"

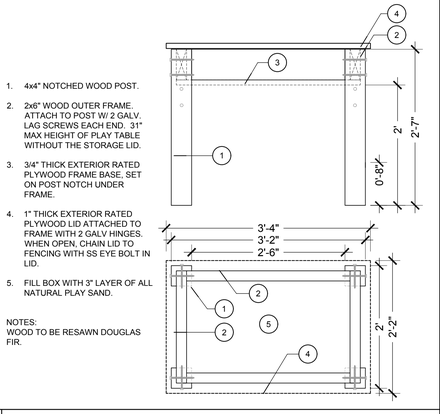

1. 4x4" NOTCHED WOOD POST.
2. 2x6" WOOD OUTER FRAME. ATTACH TO POST W/ 2 GALV. LAG SCREWS EACH END. 31" MAX HEIGHT OF PLAY TABLE WITHOUT THE STORAGE LID.
3. 3/4" THICK EXTERIOR RATED PLYWOOD FRAME BASE. SET ON POST NOTCH UNDER FRAME.
4. 1" THICK EXTERIOR RATED PLYWOOD LID ATTACHED TO FRAME WITH 2 GALV HINGES. WHEN OPEN, CHAIN LID TO FENCING WITH SS EYE BOLT IN LID.
5. FILL BOX WITH 3" LAYER OF ALL NATURAL PLAY SAND.

NOTES:
WOOD TO BE RESAWN DOUGLAS FIR.

F SENSORY TABLE

SCALE: 1"=1'-0"

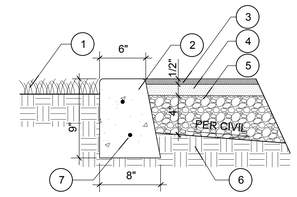

1. FINISH GRADE OF PLANTER AREA.
2. 2800 PSI CONCRETE CURB. COLOR: NATURAL GREY MEDIUM BROOM FINISH TOP, SMOOTH FINISH SIDES. 3/4" RADIUS ALL EDGES
3. 1/2" MINIMUM THICKNESS WEAR COURSE OF POUR IN PLACE RUBBER SURFACING. REFER TO FINISH SCHEDULE FOR COLOR.
4. RUBBERIZED CUSHION LAYER, DEPTH PER CRITICAL FALL HEIGHT. REFER TO PLAN.
5. SUB-BASE OPTIONS PER ADA GUIDELINES: COMPACTED AGGREGATE - 4" OF 3/4" MINUS IRREGULAR STONE WITH FINES COMPACTED TO 95% IN 2" WATERED LIFTS.
6. EXISTING COMPACTED NATIVE SOIL.
7. #4 REBAR CONTINUOUS, TO REMAIN 3" FROM ALL EDGES.

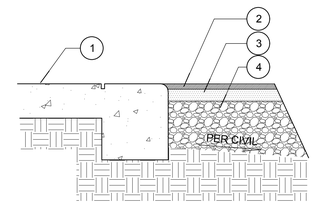

1. CONCRETE PAVING. REFER TO ARCHITECTURAL PLAN
2. 1/2" MINIMUM THICKNESS WEAR COURSE OF POUR IN PLACE RUBBER SURFACING. REFER TO FINISH SCHEDULE FOR COLOR.
3. RUBBERIZED CUSHION LAYER, DEPTH PER CRITICAL FALL HEIGHT. REFER TO PLAN.
4. SUB-BASE PER ADA GUIDELINES: 4" OF 3/4" MINUS CLASS II AGGREGATE COMPACTED TO 95% IN 2" WATERED LIFTS.
5. EXISTING COMPACTED NATIVE SOIL.

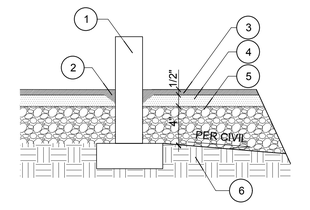

1. POST AND FOOTING OF PLAY EQUIPMENT / SHADE SAIL PER PLAN.
2. 1 $\frac{1}{2}$" 45 DEGREE KEY IN CUSHION LAYER AGAINST POST FOR BETTER WEAR COURSE.
3. 1/2" MINIMUM THICKNESS WEAR COURSE OF POUR IN PLACE RUBBER SURFACING. REFER TO FINISH SCHEDULE FOR COLOR.
4. RUBBERIZED CUSHION LAYER, DEPTH PER CRITICAL FALL HEIGHT. REFER TO PLAN.
5. SUB-BASE OPTIONS PER ADA GUIDELINES: COMPACTED AGGREGATE - 4" OF 3/4" MINUS IRREGULAR STONE WITH FINES COMPACTED TO 95% IN 2" WATERED LIFTS.
6. EXISTING COMPACTED NATIVE SOIL.

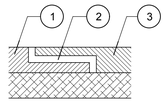

1. 1/2" MINIMUM THICKNESS WEAR COURSE OF COLOR #1.
2. $\frac{1}{4}$"x4" WIDE STEP IN FIRST COLOR, PRIME STEP W/ URETHANE. STEP TO BE COVERED BY $\frac{1}{4}$" MINIMUM STEP IN SECOND COLOR.
3. SBR THICKNESS VARIES BASED ON FALL HEIGHT(S). INSTALL PER MFG RECOMMENDATIONS.

C PIP RUBBER PLAY SURFACE

SCALE: 1"=1'-0"

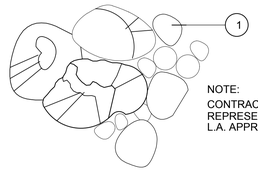

NOTE:
CONTRACTOR TO SET UP A REPRESENTION IN FIELD FOR L.A. APPROVAL.

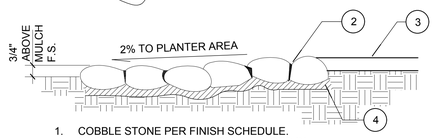

1. COBBLE STONE PER FINISH SCHEDULE. MUST VARY AND BE RANDOMLY PLACED IN DRY SET CONCRETE.
2. 1/4-1/2" CONCRETE MORTAR JOINT
3. FINISH GRADE OF PIP RUBBER SURFACING/ HARDSCAPE TO BE FLUSH.
4. 4" SAND BASE

A COBBLE IN CONCRETE

SCALE: 1"=1'-0"

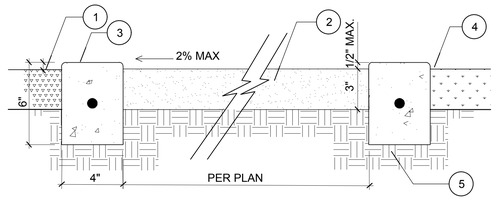

1. FINISH GRADE OF PLANTER AREA MULCH 1/2" MAX. BELOW TOP OF MOWCURB.
2. GRANITECRETE PER PLAN.
3. 2800 PSI CONCRETE MOWCURB, NATURAL GREY. SMOOTH TROWEL FINISH, 1/4" RADIUS TO ALL EDGES. INSTALL 1/2" PREFORMED EXPANSION JOINTS @ 15' O.C. MAX. AND @ BEGINNING & END OF RADIUS. #3 REBAR CONT. CENTERED, LAP BARS 8" @ SPLICES & TIES. FINISH GRADE 1/2" MAX. ABOVE ADJACENT GRANITECRETE.
4. FINISH SURFACE OF SYNTHETIC TURF INFILL NO MORE THAN 1/2" BELOW TOP OF CONCRETE MOWCURB. SYNTHETIC TURF PER LEGEND AND DETAIL H THIS SHEET.
5. 90% COMPACTED SUBGRADE.

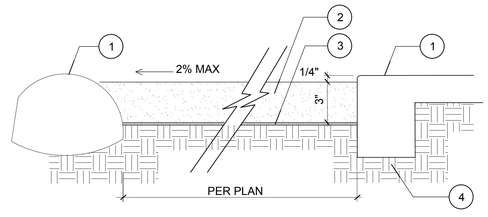

1. FINISH GRADE. 1/4" BELOW TOP OF COBBLE AND/OR ADJACENT PAVING.
2. GRANITECRETE PER PLAN.
3. TREVIRA SPUNDBOUND S1115 SOIL SEPARATOR FABRIC OR EQUAL.
4. 90% COMPACTED SUBGRADE.

B GRANITECRETE

SCALE: 1"=1'-0"

DSA STAMP

STUDIO W ARCHITECTS

Studio W Architects
1930 H Street
Sacramento, California 95811
[T] 916.254.5600
www.StudioW-Architects.com

KDA LANDSCAPE ARCHITECTS

325 7th Avenue, Unit 214
San Diego, CA 92101-7176
t 619.840.5174
website www.kda-landscapearchitects.com

ARCHITECT: LICENSED ARCHITECT, BRIAN P WHITAKER, No. C 30345, Ren. 9/30/25, STATE OF CALIFORNIA, DATE SIGNED: 06/24/2024

LANDSCAPE ARCHITECT: REGISTERED LANDSCAPE ARCHITECT, KATHRYN J. KANAAN, No. 5491, 5/31/25, 06/18/24, STATE OF CALIFORNIA

GENERAL NOTES

1. This sheet is part of a set and is not to be used alone.
2. This sheet is not to be used for construction unless the architect's stamp and signature appear on the drawings and the status box indicated drawings have been released for construction.
3. These plans and prints thereof, as instruments of service, are owned by the architect and are for use on this project only. Reproduction and/or distribution without the prior written consent of the architect is forbidden.
4. Copyright Studio W Associates, Inc. 2022.

REVISION HISTORY

NO.	REMARKS	DATE

DRAWING STATUS

DATE

- DSA PLAN CHECK
- DSA BACK CHECK 06/24/2024
- BIDDING
- CONSTRUCTION

KEY PLAN

BUENA PARK USD
6885 ORANGETHORPE AVE
BUENA PARK, CA 90620

SCHEMATIC DESIGN

CARL E. GILBERT ELEMENTARY SCHOOL
TK/PK CLASSROOMS & EARLY LEARNING BUILDING
7255 8TH STREET, BUENA PARK, CA 90621

PLAYGROUND CONSTRUCTION DETAILS

Date 06/24/2024	Project Number 23076
Application Number XX-XXXXXX	Drawing Number L1.2
Drawn Author	Checked Checker

C:\AKDA PROJECTS\24000 PROJECTS\24001 GILBERT ES TK-PK EXPANSION\AUTOCAD\CD'S\24001 CD.DWG

Junior Spica ASTM 1478/CSA Z614

ELE400158

KOMPAN Let's play

* Max fall height | ** Total height | *** Safety surfacing area	* Max fall height | ** Total height

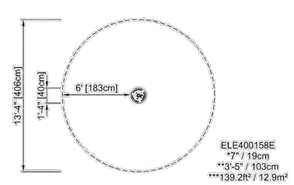

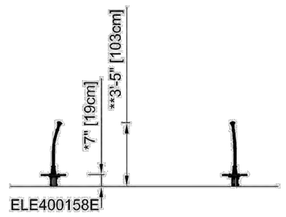

Click to see TOP VIEW | Click to see SIDE VIEW

4 / 03/21/2024

Data is subject to change without prior notice.

Combi Swing, 39in w, 8ft h ASTM 1478/CSA Z614

KSW93045

KOMPAN Let's play

* Max fall height | ** Total height | *** Safety surfacing area	* Max fall height | ** Total height

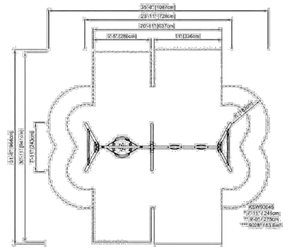

Click to see TOP VIEW | Click to see SIDE VIEW

4 / 03/14/2024

Data is subject to change without prior notice.

Water Lilies ASTM 1478/CSA Z614

M175

KOMPAN Let's play

* Max fall height | ** Total height | *** Safety surfacing area	* Max fall height | ** Total height

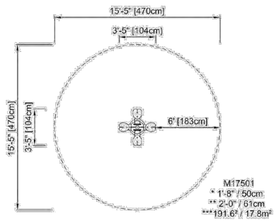

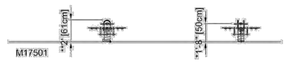

Click to see TOP VIEW | Click to see SIDE VIEW

4 / 02/29/2024

Data is subject to change without prior notice.

Hill Climber Rope with EPDM

COR10545

KOMPAN Let's play

* Max fall height | ** Total height | *** Safety surfacing area	* Max fall height | ** Total height

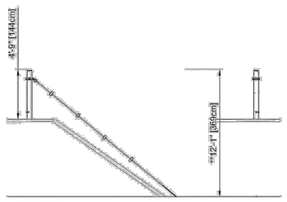

Click to see TOP VIEW | Click to see SIDE VIEW

4 / 02/29/2024

Data is subject to change without prior notice.

Custom Hill slide with EPDM

ASTM F1487

KOMPAN

PCMS-CUSTOM

725695

20230301SJ

Copyright © KOMPAN A/S 2023

1:1/8"

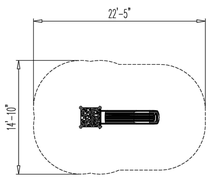

REFER TO SPEC BOOKLET FOR PLAY EQUIPMENT INSTALLATION DETAILS FROM THE MANUFACTURER.

L PLAY EQUIPMENT

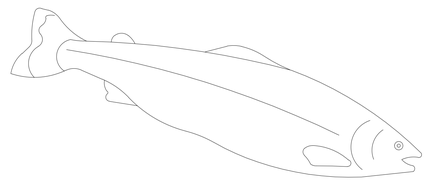

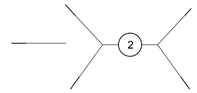

J SURFACE SALMON DETAIL SCALE: 1/2"=1'-0"

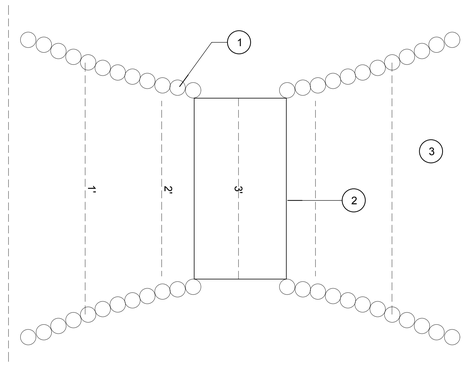

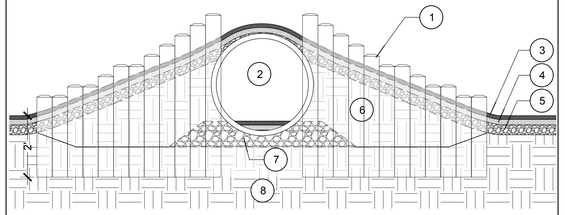

1. 6" DIAM. PRESSURE TREATED POST SET 2' INTO NATIVE SOIL.
2. 3' DIAM. PLASTIC CULVERT PIPE SET IN 8" GRAVEL BED. BOTTOM OF PIPE TO RECIEVE RUBBER SURFACING PER PLAN, COLOR PER FINISH SCHEDULE.
3. ½" WEAR COURSE.
4. SBR CUSHON LAYER.
5. 2" CONCRETE SKIM COAT.
6. RECOMPACTED SOIL TO 95%.
7. 6" THICK LAYER OF COMPACTED GRAVEL.
8. NATIVE SOIL.

K TODDLER TUNNEL SCALE: 1"=1'-0"

DSA STAMP

STUDIO W ARCHITECTS

Studio W Architects
1930 H Street
Sacramento, California 95811
[T] 916.254.5600
www.StudioW-Architects.com

KDA LANDSCAPE ARCHITECTS

325 7th Avenue, Unit 214
San Diego, CA 92101-7176
t 619.840.5174
website www.kda-landscapearchitects.com

ARCHITECT: LICENSED ARCHITECT BRIAN P WHITMORE, No. C 30345, Ren. 9/30/25, STATE OF CALIFORNIA

LANDSCAPE ARCHITECT: REGISTERED LANDSCAPE ARCHITECT, KENNETH J. KANAAN, No. 5491, 5/31/25 Renewal Date, 06/19/24 Date, STATE OF CALIFORNIA

DATE SIGNED: 06/24/2024

GENERAL NOTES

1. This sheet is part of a set and is not to be used alone.
2. This sheet is not to be used for construction unless the architect's stamp and signature appear on the drawings and the status box indicated drawings have been released for construction.
3. These plans and prints thereof, as instruments of service, are owned by the architect and are for use on this project only. Reproduction and/or distribution without the prior written consent of the architect is forbidden.
4. Copyright Studio W Associates, Inc. 2022.

REVISION HISTORY

NO.	REMARKS	DATE

DRAWING STATUS

	DATE
○ DSA PLAN CHECK	
● DSA BACK CHECK	06/24/2024
○ BIDDING	
○ CONSTRUCTION	

KEY PLAN

BUENA PARK USD
6885 ORANGETHORPE AVE
BUENA PARK, CA 90620

SCHEMATIC DESIGN

CARL E. GILBERT ELEMENTARY SCHOOL
TK/PK CLASSROOMS & EARLY LEARNING BUILDING
7255 8TH STREET, BUENA PARK, CA 90621

PLAYGROUND EQUIPMENT

Date	Project Number
06/24/2024	23076
Application Number	Drawing Number
XX-XXXXXX	L1.3
Drawn / Author	Checked / Checker

C:\KDA PROJECTS\24000 PROJECTS\24001 GILBERT ES TK-PK EXPANSION\AUTOCAD\CD'S\24001 CD.DWG

Multi Play Tower & Playhouses

PCM900131

KOMPAN Let's play

* Max fall height | ** Total height | *** Safety surfacing area	* Max fall height | ** Total height

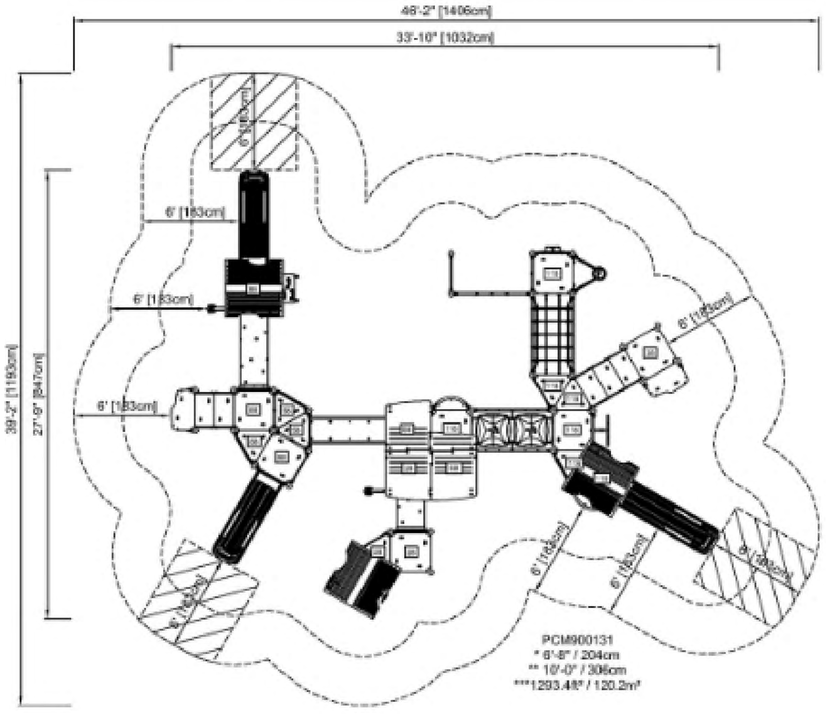

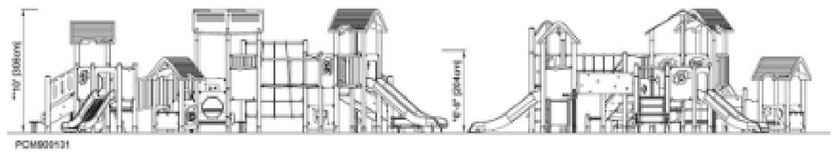

Click to see TOP VIEW

Click to see SIDE VIEW

5 / 01/17/2024

Data is subject to change without prior notice.

REFER TO SPEC BOOKLET FOR PLAY EQUIPMENT INSTALLATION DETAILS FROM THE MANUFACTURER.

M | PLAY EQUIPMENT

DSA STAMP

STUDIO W ARCHITECTS

Studio W Architects
1930 H Street
Sacramento, California 95811
[T] 916.254.5600
www.StudioW-Architects.com

KDA LANDSCAPE ARCHITECTS
325 7th Avenue, Unit 214
San Diego, CA 92101-7176
t 619.840.5174
website www.kda-landscapearchitects.com

ARCHITECT	LANDSCAPE ARCHITECT
LICENSED ARCHITECT BRIAN P WHITMORE No. C 30345 Ren. 9/30/25 STATE OF CALIFORNIA DATE SIGNED: 06/24/2024	REGISTERED LANDSCAPE ARCHITECT KATHRYN J. KANAAN NO. 4344 Expiration 5/31/25 Renewal Date 06/19/24 Date STATE OF CALIFORNIA

GENERAL NOTES

1. This sheet is part of a set and is not to be used alone.
2. This sheet is not to be used for construction unless the architect's stamp and signature appear on the drawings and the status box indicated drawings have been released for construction.
3. These plans and prints thereof, as instruments of service, are owned by the architect and are for use on this project only. Reproduction and/or distribution without the prior written consent of the architect is forbidden.
4. Copyright Studio W Associates, Inc. 2022.

REVISION HISTORY

NO.	REMARKS	DATE

DRAWING STATUS

	DATE
DSA PLAN CHECK	
DSA BACK CHECK	06/24/2024
BIDDING	
CONSTRUCTION	

KEY PLAN

BUENA PARK USD
6885 ORANGETHORPE AVE
BUENA PARK, CA 90620

SCHEMATIC DESIGN

CARL E. GILBERT ELEMENTARY SCHOOL
TK/PK CLASSROOMS & EARLY LEARNING BUILDING
7255 8TH STREET, BUENA PARK, CA 90621

MULTI TOWER PLAYGROUND EQUIPMENT

Date 06/24/2024	Project Number 23076
Application Number XX-XXXXXX	Drawing Number L1.4
Drawn Author / Checked Checker	

C:\AKDA PROJECTS\24000 PROJECTS\24001 GILBERT ES TK-PK EXPANSION\AUTOCAD\CD'S\24001 CD.DWG

Cloud Climber ASTM F1487 ASTM 1487/CSA Z614

KOMPAN Let's play

MSC5401

* Max fall height | ** Total height | *** Safety surfacing area

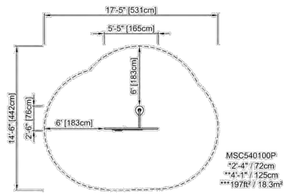

Click to see TOP VIEW

* Max fall height | ** Total height

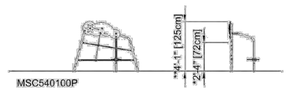

Click to see SIDE VIEW

4 / 03/12/2024

Data is subject to change without prior notice.

Water Seesaw with 2 Splash Tables

KOMPAN Let's play

NRO509

* Max fall height | ** Total height | *** Safety surfacing area

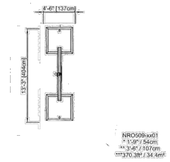

Click to see TOP VIEW

* Max fall height | ** Total height

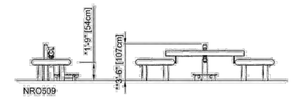

Click to see SIDE VIEW

4 / 03/08/2024

Data is subject to change without prior notice.

Birds Nest Swing ASTM 1487/CSA Z614

KOMPAN Let's play

NRO911

* Max fall height | ** Total height | *** Safety surfacing area

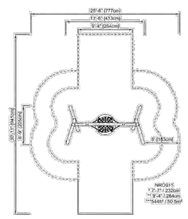

Click to see TOP VIEW

* Max fall height | ** Total height

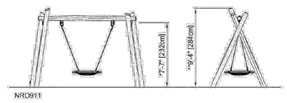

Click to see SIDE VIEW

4 / 02/19/2024

Data is subject to change without prior notice.

PERMANENT PLUMBING DETAIL

IN-GROUND FOOTINGS DETAIL

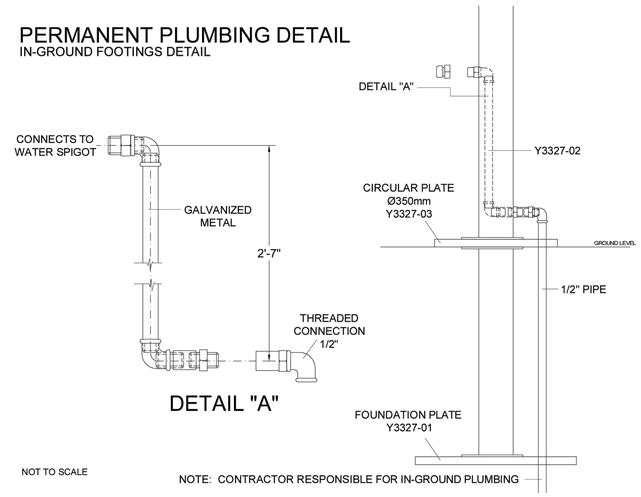

NOT TO SCALE

NOTE: CONTRACTOR RESPONSIBLE FOR IN-GROUND PLUMBING

REFER TO SPEC BOOKLET FOR PLAY EQUIPMENT INSTALLATION DETAILS FROM THE MANUFACTURER.

M PLAY EQUIPMENT

DSA STAMP

STUDIO W ARCHITECTS

Studio W Architects
1930 H Street
Sacramento, California 95811
[T] 916.254.5600
www.StudioW-Architects.com

KDA LANDSCAPE ARCHITECTS
325 7th Avenue, Unit 214
San Diego, CA 92101-7176
t 619.840.5174
website www.kda-landscapearchitects.com

ARCHITECT	LANDSCAPE ARCHITECT
LICENSED ARCHITECT BRIAN P WHITMORE No. C 30345 Ren. 9/30/25 STATE OF CALIFORNIA	REGISTERED LANDSCAPE ARCHITECT KATHRYN J. KANAAN NO. 4164 5/31/25 Renewal Date 06/19/24 Date STATE OF CALIFORNIA

DATE SIGNED: 06/24/2024

GENERAL NOTES

1. This sheet is part of a set and is not to be used alone.
2. This sheet is not to be used for construction unless the architect's stamp and signature appear on the drawings and the status box indicated drawings have been released for construction.
3. These plans and prints thereof, as instruments of service, are owned by the architect and are for use on this project only. Reproduction and/or distribution without the prior written consent of the architect is forbidden.
4. Copyright Studio W Associates, Inc. 2022.

REVISION HISTORY

NO.	REMARKS	DATE

DRAWING STATUS

		DATE
○	DSA PLAN CHECK	
●	DSA BACK CHECK	06/24/2024
○	BIDDING	
○	CONSTRUCTION	

KEY PLAN

BUENA PARK USD
6885 ORANGETHORPE AVE
BUENA PARK, CA 90620

SCHEMATIC DESIGN

CARL E. GILBERT ELEMENTARY SCHOOL
TK/PK CLASSROOMS & EARLY LEARNING BUILDING
7255 8TH STREET, BUENA PARK, CA 90621

PLAYGROUND EQUIPMENT

Date	Project Number
06/24/2024	23076
Application Number	Drawing Number
XX-XXXXXX	L1.5
Drawn / Checked	
Author / Checker	

C:\AKDA PROJECTS\24000 PROJECTS\24001 GILBERT ES TK-PK EXPANSION\AUTOCAD\CD'S\24001 CD.DWG

Little Turtle's Town

NRO4001

KOMPAN Let's play

* Max fall height | ** Total height | *** Safety surfacing area	* Max fall height | ** Total height

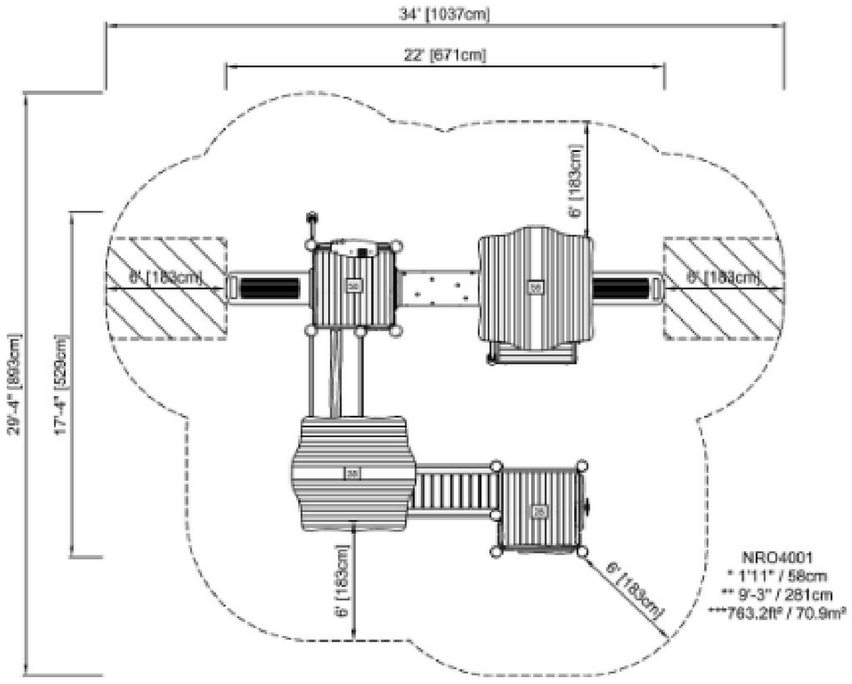

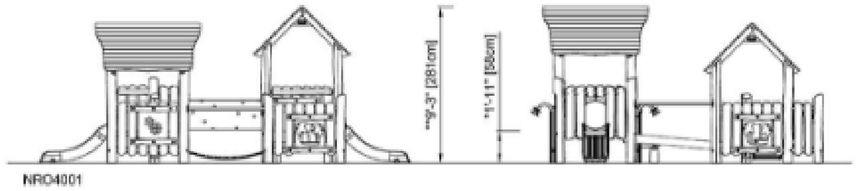

Click to see TOP VIEW

Click to see SIDE VIEW

4 / 02/29/2024

Data is subject to change without prior notice.

REFER TO SPEC BOOKLET FOR PLAY EQUIPMENT INSTALLATION DETAILS FROM THE MANUFACTURER.

M | PLAY EQUIPMENT

DSA STAMP

STUDIO W ARCHITECTS

Studio W Architects
1930 H Street
Sacramento, California 95811
[T] 916.254.5600
www.StudioW-Architects.com

KDA LANDSCAPE ARCHITECTS
325 7th Avenue, Unit 214
San Diego, CA 92101-7176
t 619.840.5174
website www.kda-landscapearchitects.com

ARCHITECT	LANDSCAPE ARCHITECT
LICENSED ARCHITECT BRIAN P WHITMORE No. C 30345 Ren. 9/30/25 STATE OF CALIFORNIA	REGISTERED LANDSCAPE ARCHITECT KATHRYN J. KANAAN NO. 4344 Expiration 5/31/25 Renewal Code 06/19/24 Date STATE OF CALIFORNIA

DATE SIGNED: 06/24/2024

GENERAL NOTES

1. This sheet is part of a set and is not to be used alone.
2. This sheet is not to be used for construction unless the architect's stamp and signature appear on the drawings and the status box indicated drawings have been released for construction.
3. These plans and prints thereof, as instruments of service, are owned by the architect and are for use on this project only. Reproduction and/or distribution without the prior written consent of the architect is forbidden.
4. Copyright Studio W Associates, Inc. 2022.

REVISION HISTORY

NO.	REMARKS	DATE

DRAWING STATUS

		DATE
○	DSA PLAN CHECK	
●	DSA BACK CHECK	06/24/2024
○	BIDDING	
○	CONSTRUCTION	

KEY PLAN

BUENA PARK USD
6885 ORANGETHORPE AVE
BUENA PARK, CA 90620

SCHEMATIC DESIGN

CARL E. GILBERT ELEMENTARY SCHOOL
TK/PK CLASSROOMS & EARLY LEARNING BUILDING
7255 8TH STREET, BUENA PARK, CA 90621

LITTLE TURTLE'S PLAYGROUND EQUIPMENT

Date	Project Number
06/24/2024	23076
Application Number	Drawing Number
XX-XXXXXX	L1.6
Drawn / Checked	
Author / Checker	

C:\AKDA PROJECTS\24000 PROJECTS\24001 GILBERT ES TK-PK EXPANSION\AUTOCAD\CD'S\24001 CD.DWG

WATER CONSERVATION PLAN

IRRIGATION:
KDA'S WATER CONSERVATION STARTS AT THE EXISTING SEPARATE IRRIGATION METER AND POINT OF CONNECTION. WE WILL BE ADDING A MASTER VALVE AND FLOW SENSOR TO DETECT, ISOLATE AND SHUT DOWN THE INDIVIDUAL OR WHOLE SYSTEM TO ELIMINATE RUNOFF FROM CATASTROPHIC BREAKS IN THE MAINLINE, LOSS OF IRRIGATION NOZZLES, OR VALVE THAT ARE STUCK ON. WE HAVE ISOLATED SECTIONS OF THE MAINLINE FOR EASE OF REPAIRING EQUIPMENT DURING MAINTENANCE OR EMERGENCIES.

OUR SMART IRRIGATION CONTROLLER HAS BEEN TESTED BY THE EPA AND CERTIFIED AS WATERSENSE SMART, HAS BUILT-IN WATER SAVING FEATURES SUCH AS REAL-TIME WEATHER SENSING AND RAIN CUP/SHUT OFF TO ADJUST THE SYSTEM RUN TIMES TO ACTUAL WEATHER CONDITIONS VERSUS ESTIMATED. WE WILL PROVIDE THE CONTRACTOR WITH IRRIGATION WATERING SCHEDULES FOR THE ESTABLISHMENT PERIOD AND FOR LONG TERM MAINTENANCE THAT WILL TAKE INTO ACCOUNT, SOILS TYPES, ASPECT, TOPOGRAPHY, PLANT MATERIAL, IRRIGATION EFFICIENCY AND WATERING DURING COOLER HOURS OF THE NIGHT/MORNINGS.

OUR METHODS OF WATERING THE PLANT MATERIAL WILL UTILIZE PRESSURE COMPENSATING HIGH EFFICIENCY ABOVE AND BELOW GROUND BUBBLERS WITH CHECK VALVES FOR TREES, POINT SOURCE DRIP WITH AUTO FLUSH VALVES AND MICROSPRAYS FOR LOW WATER PLANT HYDROZONES AND STREAM SPRAY FOR AREAS WHERE STUDENT WILL BE ACTIVELY IN THE PLANTERS. TREES WILL BE SEPARATELY VALVED TO PROVIDE ADEQUATE DEEP WATERING FOR TREE ROOTS DURING THE WARMER MONTHS TO ASSURE THEY THRIVE AND ARE READY TO TAKE UP STORM WATER IN THE WINTER MONTHS.

SOILS MANAGEMENT REPORT:
KDA WILL MANAGE THE SOIL PRODUCTIVITY BY FIRST SCALPING THE TOP 6" OF TOP SOIL AND STORING ONSITE FOR REUSE AFTER MAJOR GRADING IS COMPLETE AND HARDSCAPE IS INSTALLED, THEN CONDUCTING AN AGRONOMIC SOILS ANALYSIS WHICH WILL IDENTIFY DEFICIENCIES THAT NEED TO BE ADDRESSED AND CONSTRAINTS IN THE SOIL THAT ARE NOT CORRECTABLE. THE PLANT PALETTE WILL BE REVISITED ONCE THE SOILS ANALYSIS REPORT IS REVIEWED AND PLANT MATERIAL WILL BE SUBSTITUTED WHEN THERE ARE SEVERE MINERAL CONFLICTS. KDA UTILIZES ORGANIC MEANS OF TREATING SOILS AND PLANT PITS WHENEVER POSSIBLE TO INCREASE THE HEALTHY ORGANISMS IN THE SOILS VERSUS APPLYING SOMETHING THAT WILL LEACH AWAY OVER TIME.

PLANTING:
THE PLANT PALETTE CHOSEN IS ON THE LOW END FOR WATER NEEDS AND ACCLIMATED TO CALIFORNIA CLIMATES. THE PLANTS HAVE BEEN CLUSTERED FOR SIMILAR WATER REQUIREMENTS, SUN EXPOSURE, TOPOGRAPHY, SOLAR GLARE, LOCATION AND SIZE OF PLANTER. MEDIUM CANOPY TREES WILL PROVIDE SHADE FOR THE CARS AND PEDESTRIANS AND WILL BRING DOWN THE HEAT ISLAND EFFECT.

MULCH:
A 3" LAYER OF MULCH WILL BE APPLIED TO ALL PLANTING AREAS TO KEEP THE SOILS MOISTURE IN, CONTROL THE AMOUNT OF WEEDS, AND WHEN BREAKING DOWN OVER TIME IT WILL REPLENISH NUTRIENTS BACK INTO THE SOIL. REFER TO PLANTING PLAN SHEET L3.0.

MAINTENANCE:
MAINTENANCE IS AN IMPORTANT PART OF THE LANDSCAPE PROCESS FOR WITHOUT GOOD MAINTENANCE THE BEST DESIGNED LANDSCAPE WILL SUFFER AND/OR BECOME INEFFICIENT. KDA HAS DESIGNED THE PLANTING AND IRRIGATION TO MINIMIZE CONFLICTS BETWEEN PLANTS AND SPRAY WHERE USED AND PLANT MATERIAL IS PLACED SO THAT THE MATURE GROWTH WILL REMAIN 2' FROM HARDSCAPE AREAS TO MINIMIZE THE URGE TO TRIM PLANTS. WE HAVE DESIGNED THE PLANTING SO THAT TRIMMING/FORMING OF PLANTS IS NOT INTENDED BUT THEY ARE TO GROW AS THEIR NATURAL HABIT AND FORM.

AS PART OF OUR SPECIFICATIONS, KDA PROVIDES THE CONTRACTOR WITH A LIST OF MAINTENANCE NEEDS TO BE DONE BOTH SHORT AND LONG TERM FOR THE SUCCESS OF THE EVER EVOLVING LANDSCAPE. ITEMS INCLUDE MONTHLY CHECKS OF THE IRRIGATION SYSTEM, IMMEDIATE REPLACEMENT OF PLANT MATERIAL WHEN NECESSARY, FERTILIZING SCHEDULES, REPLENISHMENT OF MULCH ON A YEARLY BASIS AND YEARLY IRRIGATION SYSTEM AUDITS, REPAIRS, ADJUSTMENTS. REFER TO PROJECT SPECIFICATIONS BOOK.

LANDSCAPE SQ FOOTAGES/ SHADE PERCENTAGES	
SQ FT OF PROJECT: 146,015 SQ FT.	3.35 OF AN ACRE
SQ FT OF LANDSCAPE: 47,042 SQ FT	32% LANDSCAPE
PARKING SHADE %:	70%
LANDSCAPE SHADE %: trees+solar arrays+Bldg overhang	73%
HARDSCAPE SHADE %: trees+solar arrays+Bldg overhang	50%
SQ FT OF ARTIFICIAL TURF:	873
SQ FT OF MULCH AREA:	1,353

NO ACCURATE AS-BUILT IRRIGATION PLANS WERE AVAILABLE SO ALL INFORMATION, INCLUDING PRESSURE INFORMATION TAKEN FROM MAINTENANCE AND OPERATIONS DEPARTMENT. LANDSCAPE CONTRACTOR IS TO FIELD VERIFY PRESSURE AND POTHOLE FOR MAINLINE ROUTING.

WARNING ABOUT ASBESTOS MAINLINE PIPE FROM THE BACKFLOW TO THE ATHLETIC FIELDS.

HYDROZONE PLAN

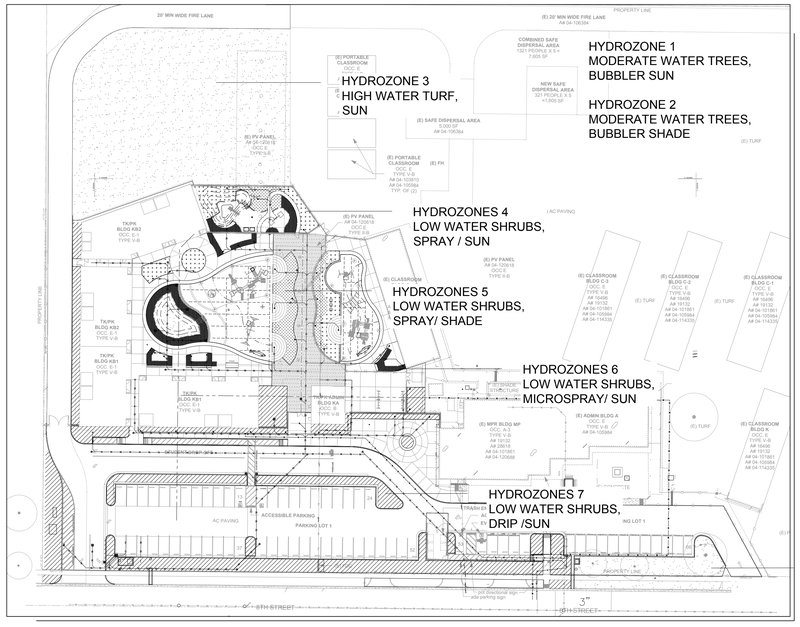

Hydrozone Information Worksheet

Controller	Station Number	Area (sq. ft.)	Percent of Area	Plant Type/ Description	Water Use (WUCOLS)	Irrigation Type	Zone Flow (GPM)	Precipitation Rate (in./hr.)	Zone Pressure (psi)
A	1	660	1%	mod h20 trees/shade	0.5	bubblers	11	2.0165	40
	2	185	0%	low plants/sun	0.3	drip	6	1.2099	40
	3	624	1%	low plants/sun	0.3	stream spray	10	1.2099	45
	4	993	2%	low plants/shade	0.3	stream spray	24	1.2099	45
	5	344	1%	low plants/sun	0.3	drip	3	1.2099	40
	6	640	1%	low plants/sun	0.3	drip	5	1.2099	40
	7	840	2%	high water turf/ sun	0.5	stream spray	9	2.0165	45
	8	637	1%	low plants/sun	0.3	stream spray	7	1.2099	45
	9	540	1%	mod water trees/sun	0.5	bubblers	9	2.0165	40
	10	352	1%	low plants/sun	0.3	stream spray	5	1.2099	45
	11	294	1%	low plants/shade	0.3	stream spray	5	1.2099	45
	12	113	0%	low plants/sun	0.3	drip	1	1.2099	40
	13	608	1%	low plants/sun	0.3	drip	6	1.2099	40
	14	559	1%	low plants/sun	0.3	stream spray	5	1.2099	45
	15	5,954	13%	mod turf/sun	0.4	rotors	59	1.6132	50
	16	10,731	23%	mod turf/sun	0.4	rotors	50	1.6132	50
	17	7,271	15%	mod turf/sun	0.4	rotors	51	1.6132	50
	18	1,064	2%	low plants/sun	0.3	drip	1	1.2099	30
	19	2,669	6%	low plants/sun	0.3	drip	6	1.2099	30
	20	960	2%	mod water trees/ sun	0.5	bubblers	14	2.0165	40
	21	2,614	6%	low plants/sun	0.3	drip	6	1.2099	30
	22	960	2%	mod water trees/ sun	0.5	bubblers	16	2.0165	40
	23	3,965	8%	low plants/sun	0.3	drip	7	1.2099	30
existing	24	997	2%	high turf/sun	0.5	spray	-	2.0165	30
existing	25	2,468	5%	high turf/sun	0.5	spray	-	2.0165	30
TOTAL =		47,042	100%			Peak Flow =	59 GPM		
						Eto average=	4.033	inches/mo	

Project: Gilbert ES - TK/PK
Date: 4/24/2024

Reference Evapotranspiration (ET_o)		48.4	Project Type	Non-Residential		0.45
Hydrozone # / Planting Description[a]	Plant Factor (PF)	Irrigation Method[b]	Irrigation Efficiency (IE)[c]	ETAF (PF/IE)	Landscape Area (Sq. Ft.)	ETAF x Area	Estimated Total Water Use (ETWU)[d]
Regular Landscape Areas							
#1 - VALVES (9,20,22)	0.5	Bubblers	0.81	0.62	2460	1519	45568
#2- VALVES (1)	0.5	Bubblers	0.81	0.62	660	407	12225
#4- VALVES (3,8,10,14)	0.3	Stream Spr	0.75	0.40	2172	869	26071
#5- VALVES (4,11)	0.3	Stream Spr	0.75	0.40	1287	515	15448
#6- VALVES (2,5,6,12,13)	0.3	Drip	0.81	0.37	1890	700	21006
#7- VALVES (18,19,21,23)	0.3	Drip	0.81	0.37	10312	3819	0
#8- VALVES (24,25)	0.5	Overhead	0.75	0.67	3465	2310	69318
				Totals	22246	10139	189636
Special Landscape Areas							
#3- VALVES (7,15-17)				1	24796	24796	744078
				1		0	0
				1		0	0
				1		0	0
				Totals	24796	24796	744078
						ETWU Total	933715
						Maximum Allowed Water Allowance (MAWA)[e]	1044479

ETAF Calculations

Regular Landscape Areas

Total ETAF x Area	10139
Total Area	22246
Average ETAF	0.46

All Landscape Areas

Total ETAF x Area	34935
Total Area	47042
Average ETAF	0.74

Average ETAF for Regular Landscape Areas must be 0.55 or below for residential areas, and 0.45 or below for non-residential areas.

STUDIO W ARCHITECTS
Studio W Architects
1930 H Street
Sacramento, California 95811
[T] 916.254.5600
www.StudioW-Architects.com

KDA LANDSCAPE ARCHITECTS
325 7th Avenue, Unit 214
San Diego, CA 92101-7176
t 619.840.5174
website www.kda-landscapearchitects.com

ARCHITECT: LICENSED ARCHITECT, BRIAN P. WHITTAKER, No. C 30345, Ren. 9/30/25, STATE OF CALIFORNIA
LANDSCAPE ARCHITECT: REGISTERED LANDSCAPE ARCHITECT, KATHRYN J. KANAAN, No. 5652, 5/31/25, 06/28/24, STATE OF CALIFORNIA
DATE SIGNED: 06/24/2024

GENERAL NOTES
1. This sheet is part of a set and is not to be used alone.
2. This sheet is not to be used for construction unless the architect's stamp and signature appear on the drawings and the status box indicated drawings have been released for construction.
3. These plans and prints thereof, as instruments of service, are owned by the architect and are for use on this project only. Reproduction and/or distribution without the prior written consent of the architect is forbidden.
4. Copyright Studio W Associates, Inc. 2022.

REVISION HISTORY

NO.	REMARKS	DATE

DRAWING STATUS

	DATE
DSA PLAN CHECK	
DSA BACK CHECK	06/24/2024
BIDDING	
CONSTRUCTION	

KEY PLAN

BUENA PARK USD
6885 ORANGETHORPE AVE
BUENA PARK, CA 90620

SCHEMATIC DESIGN

CARL E. GILBERT ELEMENTARY SCHOOL
TK/PK CLASSROOMS & EARLY LEARNING BUILDING
7255 8TH STREET, BUENA PARK, CA 90621

WATER CONSERVATION PLAN

Date 06/24/2024
Project Number 23076
Application Number XX-XXXXXX
Drawing Number L2.0
Drawn Author
Checked Checker

C:\KDA PROJECTS\24000 PROJECTS\24001 GILBERT ES TK-PK EXPANSION\AUTOCAD\CD'S\24001 IP.DWG

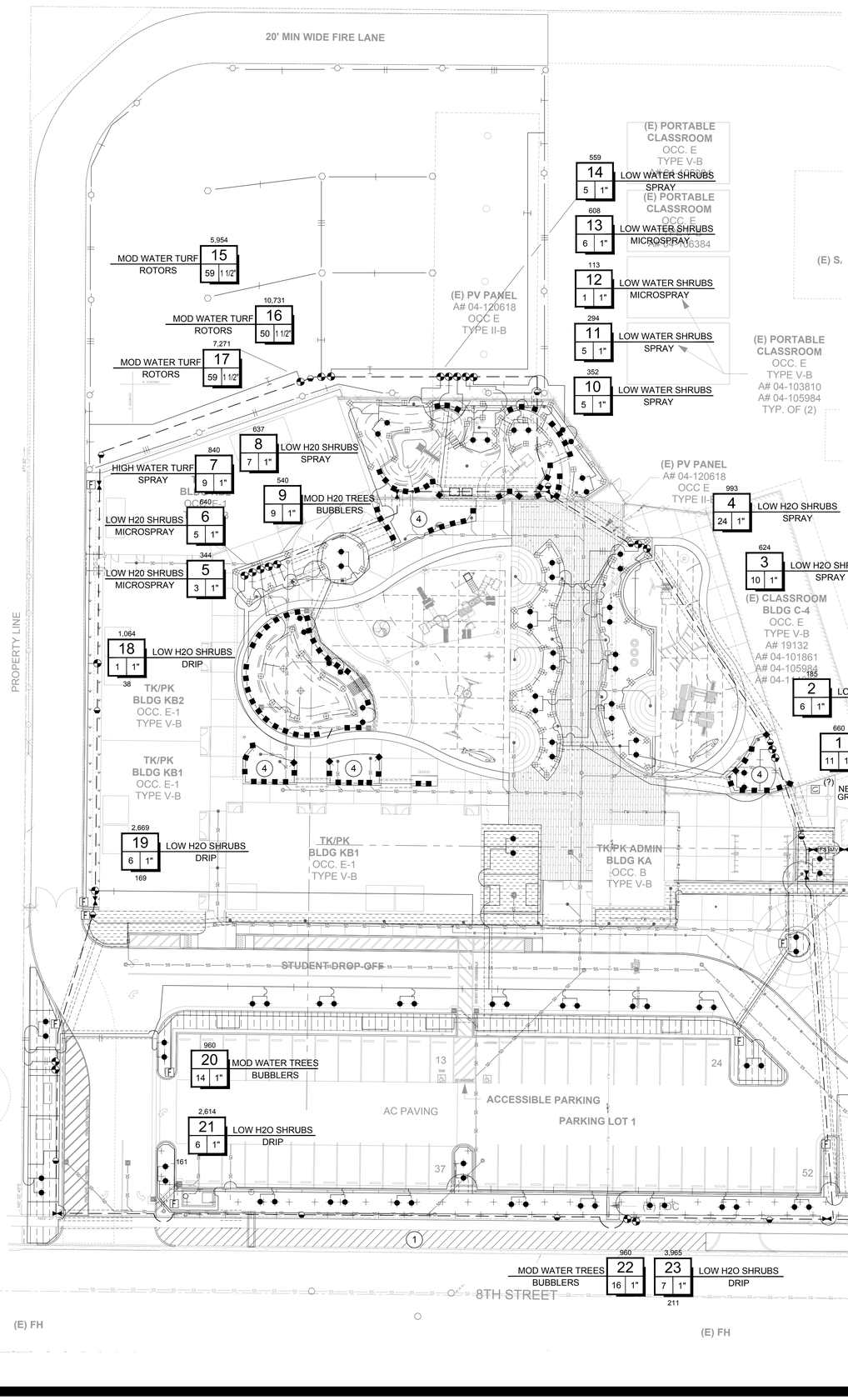

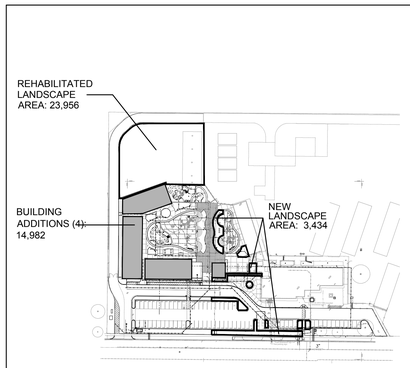

DSA Application No. (if applicable): _____

DSA Landscape Application No.: _____

Existing Site: 7255 8th Street Buena Park, CA 90621

School District: Buena Park Unified School District

SITE LANDSCAPE AREA LOCATION PLAN

SCH 40 PVC SLEEVING CHART

1 1/4" SLEEVE	1-4 WIRES	1/2" PIPE
1 1/2" SLEEVE	5-10 WIRES	3/4" PIPE
2" SLEEVE	11-20 WIRES	1" PIPE
2 1/2" SLEEVE	21-30 WIRES	1 1/4" PIPE
3" SLEEVE	31-40 WIRES	1 1/2" PIPE
4" SLEEVE	41-60 WIRES	2" PIPE
6" SLEEVE	61-99 WIRES	3" PIPE
8" SLEEVE	100+ WIRES	4" PIPE
10" SLEEVE	N/A	6" PIPE

PIPE SIZING CHART

	3/4" PIPE
	1" PIPE
	1 1/4" PIPE
	1 1/2" PIPE
	2" PIPE
	2 1/2" PIPE
	3" PIPE
	4" PIPE
	6" PIPE
	8" PIPE

NO ACCURATE AS-BUILT IRRIGATION PLANS WERE AVAILABLE SO ALL INFORMATION, INCLUDING PRESSURE INFORMATION TAKEN FROM MAINTENANCE AND OPERATIONS DEPARTMENT. LANDSCAPE CONTRACTOR IS TO FIELD VERIFY PRESSURE AND POTHOLE FOR MAINLINE ROUTING.

WARNING ABOUT ASBESTOS MAINLINE PIPE FROM THE BACKFLOW TO THE ATHLETIC FIELDS.

DSA 1-L

TITLE 24, PART 11 – OUTDOOR WATER USE SELF-CERTIFICATION OF LANDSCAPE IRRIGATION DESIGN AND DOCUMENTATION

PART 1 – PROJECT INFORMATION

1. **School or Community College District:** BUENA PARK UNIFIED SCHOOL DISTRICT
2. **Name of Facility:** CARL E GILBERT ELEMENTARY SCHOOL
3. **Project Name:** TK/PK CALSSROOMS & EARLY LEARNING BUILDING

4. **Project Type(s):**

4a. ☐ **New Campus:** Landscape irrigation work on a new site or campus; proceed to Part 4.

4b. ☐ **Existing MWELO Compliant Site:** Building construction and/or landscape irrigation work on an existing site where all existing landscape areas in compliance with Title 24, Part 11, Section 5.304.6.

4c. ☐ **Elective Landscape Irrigation Work on an Existing Site:** Landscape irrigation work on an existing site not required by the Minimum Rehabilitated Landscape Area provisions of Title 24, Part 11, Section 301.4.1. Elective landscape work may be either 1) a stand-alone landscape installation or 2) part of a larger site or building construction project.

4d. ☒ **Required Minimum Rehabilitated Landscape Area Work on an Existing Site:** Landscape irrigation work on an existing site required by the construction of a new building or an addition to an existing building. Comply with Title 24, Part 11, Section 301.4.1 when the aggregate area of the new building and/or the addition to an existing building is 1,600 square feet or greater; complete Lines 8a, 8b and 9a through 9d as applicable.

PART 2 – LANDSCAPE INSTALLATION INFORMATION

5. **Landscape Irrigation Areas To Be Installed By This Project**

5a. **New.** New landscape area not previously irrigated on an existing site. 3,434 Sq. Ft.

5b. **Existing.** Existing irrigated landscape area being rehabilitated to current requirements. 23,956 Sq. Ft.

5c. **Total:** Aggregate area of irrigated landscape of this project (5a + 5b = 5c). 27,390 Sq. Ft.

6. **Area of Existing Landscape Irrigation Being Removed.** Aggregate area of existing irrigated landscape covered by 1) a new building, 2) an addition to an existing building, 3) paving, 4) site hardscaping or 5) otherwise removed from service by this project: 37,092 Sq. Ft.

7. **Required Attachment, Site Landscape Area Location Plan.** Provide a campus-level key site plan showing the location, extent and area of the landscape irrigation to be installed. The plan shall indicate the site address, facility name, school district, buildings and landscape areas (new, rehabilitated and /or removed) within the scope of work. For a sample of this document, refer to PR 15-03 Attachment 1.

8. **Existing Site, Required Minimum Rehabilitated Landscape Area Calculation:**

8a. **Foot Print Area:** Total foot print area of new buildings and/or building additions. 14,982 Sq. Ft.

8b. **Required Minimum Rehabilitated Landscape Area:** (75% of footprint area on Line 8a). 11,237 Sq. Ft.

9. **Existing Site, Required Minimum Rehabilitated Landscape Area Compliance.**

9a. **Project Landscape Area.** Area of new and/or rehabilitated landscape, Line 5c. 27,390 Sq. Ft.

9b. **Removed Landscape Area.** Area of existing landscape being removed, Line 6. 37,092 Sq. Ft.

9c. **District Landscape Area (DLA) Account**. From DLA available balance. _____ Sq. Ft.

9d. **Total Landscape Irrigation Compliance Area.** Add Lines 9a + 9b + 9c = 9d. Must equal or exceed Line 8b. 64,482 Sq. Ft.

PART 3 – DISTRICT LANDSCAPE AREA ACCOUNT ADJUSTMENT

10. **District Landscape Area Account.** Landscape area provided by this project (Line 9d) exceeds the minimum rehabilitated landscape area required (Line 8b). Credit the landscape area provided in excess of the required minimum rehabilitated landscape area to the District Landscape Area account for use on future projects in the amount of 53,245 Sq. Ft. (Line 9d – Line 8b = Line 10).

PART 4 – CERTIFICATION

Contact information for the professional in general responsible charge of the landscape irrigation design and documentation:

11. **Name:** Kathryn Kanaan 12. **Title:** CEO/President
13. **Telephone #:** (619) 840-5174 14. **Email address:** kathryn@kda-landscapearchitects.com
15. **License or Registration Number:** 4394

☐ ***Architect*** ☒ ***Landscape Architect*** ☐ ***Civil Engineer***

16. **Certification by Professional in General Responsible Charge of the Landscape Irrigation Design and Documentation:**

As the professional in general responsible charge of the landscape irrigation design and documentation, I certify that:

1. The landscape planting and irrigation design and Landscape Documentation Package has been completed in accordance with the requirements of Title 24, Part 11, Sections 301.4 and 5.304.6.
2. The Landscape Documentation Package with attachments as required for this project by Title 23, Division 2, Chapter 2.7 Model Water Efficient Landscape Ordinance may be reviewed by DSA for audit purposes and will be made available upon request.

IRRIGATION DESIGNER Kathryn Kanaan — Digitally signed by Kathryn J Kanaan; DN: cn=Kathryn J Kanaan, o=KDA Landscape Architects, ou=Principal, email=kathryn@kda-landscapearchitects.com, c=KDA Landscape Architects; Date: 2024.06.26 16:12:24 PDT — 03/24/2024

Signature *Date*

(1) REUSE 2 EXISTING TURF AREA VALVES ARE TO BE REMOVED, HYDROZONES RECONNECTED TO NEW VALVES AND MAINLINE WHERE SHOWN.

PART 5 – DSA USE ONLY

17. **DSA Application Number(s).** _____

18. **Landscape Installation No.** _____

(4) THESE AREAS TO RECEIVE BARK MULCH IN THE CENTER FOR BREAKOUT LEARNING AREAS.

DSA STAMP

STUDIO W ARCHITECTS
Studio W Architects
1930 H Street
Sacramento, California 95811
[T] 916.254.5600
www.StudioW-Architects.com

KDA LANDSCAPE ARCHITECTS
325 7th Avenue, Unit 214
San Diego, CA 92101-7176
t 619.840.5174
website www.kda-landscapearchitects.com

ARCHITECT: LICENSED ARCHITECT BRIAN P WHITMORE No. C 30345 Ren. 9/30/25 STATE OF CALIFORNIA — DATE SIGNED: 06/24/2024

LANDSCAPE ARCHITECT: REGISTERED LANDSCAPE ARCHITECT KATHRYN J. KANAAN No. 4394 5/31/25 STATE OF CALIFORNIA — 06/19/24

GENERAL NOTES
1. This sheet is part of a set and is not to be used alone.
2. This sheet is not to be used for construction unless the architect's stamp and signature appear on the drawings and the status box indicated drawings have been released for construction.
3. These plans and prints thereof, as instruments of service, are owned by the architect and are for use on this project only. Reproduction and/or distribution without the prior written consent of the architect is forbidden.
4. Copyright Studio W Associates, Inc. 2022.

REVISION HISTORY

NO.	REMARKS	DATE

DRAWING STATUS
- ○ DSA PLAN CHECK
- ● DSA BACK CHECK 06/24/2024
- ○ BIDDING
- ○ CONSTRUCTION

KEY PLAN

BUENA PARK USD
6885 ORANGETHORPE AVE
BUENA PARK, CA 90620

SCHEMATIC DESIGN

CARL E. GILBERT ELEMENTARY SCHOOL
TK/PK CLASSROOMS & EARLY LEARNING BUILDING
7255 8TH STREET, BUENA PARK, CA 90621

IRRIGATION PLAN

0' 20' 40' 60'

811 Know what's below. Call before you dig.

Date 06/24/2024	Project Number 23076
Application Number XX-XXXXXX	Drawing Number L2.1
Drawn Author	Checked Checker

C:\AKDA PROJECTS\24000 PROJECTS\24001 GILBERT ES TK-PK EXPANSION\AUTOCAD\CD'S\24001 IP.DWG

EQUIPMENT LEGEND

SYMBOL	MANUFACTURER/MODEL #	SIZE	DETAIL	NOTES
M	EXISTING WATER METER TO BE PROTECTED IN PLACE	1 1/2"	-	-
	EXISTING BACKFLOW PREVENTER, BACK OF ADMIN BUILDING TO BE PROTECTED IN PLACE EXISTING ATMOSPHERIC VACUUM BREAKER IN THE EXISTING TURF AREA TO BE REMOVED	3"	-	-
	EXISTING VALVES TO BE REMOVED AND HYDROZONES RECONNECTED TO NEW VALVES AND MAINLINE.	PER PLAN	'J, K, I'/L2.3	-
MV	GRISWOLD 2160 NORMALLY OPEN MASTER VALVE	1 1/2"	'F'/L2.3	(1-4)
FS	FLOMEC QS200-15 ULTRASONIC FLOW SENSOR (.55-82 gpm)	1 1/2"	'F'/L2.3	(1, 2, 4)
	RAINBIRD 44LRC QUICK COUPLING VALVE	1"	'H'/L2.3	(1, 2, 4)
	NIBCO T585 BALL VALVE 2" & SMALLER NIBCO WD2000 BUTTERFLY VALVE 2 1\2" & LARGER	LINE SIZE	'C, G'/L2.3	(1, 2, 4)
(?)	HUNTER ACC2 1200-SS AUTOMATIC CONTROLLER W/ 3-A2M-600 AND A2C-F3 FLOW SENSOR MODULE AND WSS-SEN MOUNTED ON SOUTH FACING EAVE OF BUILDING.	30 ST	'Q, R'/L2.4	(3)
	RAINBIRD PESB SERIES ELECTRIC CONTROL VALVE	PER PLAN	'J, K, I'/L2.3	(1, 2, 4)
S #	SPARE COMMON AND PILOT WIRES, COLOR TO DIFFER FROM SITE WIRING	12/14 GA	'L'/L2.3 'M'/L2.4	(1, 2, 4)
W W W	EXISTING ASBESTOS MAINLINE TO BE PROTECTED IN PLACE FROM BACKFLOW TO NEW POINT OF CONNECTION WHERE SHOWN ON THE PLAN.	3"	-	-
	EXISTING ASBESTOS MAINLINE TO BE REMOVED AND DISPOSED OF LEGALLY BY A CERTIFIED TEAM.	3"	-	-
	NEW CL315 PVC MAINLINE - 24" MINIMUM COVER. CERTIFIED ASBESTOS TEAM TO MAKE NEW CONNECTION.	3"	'A, B, D,E'/L2.3	(1, 2)
	SCH 40 PVC NON-PRESSURE LATERAL LINE - 12" MIN. COVER	PLAN SIZE	'A, B'/L2.3	(1, 2)
	SCH 40 PVC IRRIGATION PIPE / WIRE SLEEVE - 24" MIN. COVER	SEE CHART	'A, B'/L2.3	(1, 2)
NOT SHOWN	UF RATED CONTROL WIRE, 12 GA COMMON, 14 GA PILOT - 18" MIN. COVER	12/14 GA	'L'/L2.3 'M'/L2.4	(1, 2)

(1) PIPES AND VALVES ARE SHOWN IN HARDSCAPE FOR CLARITY ONLY.

(2) ALL MAINLINE TEES AND 90'S ARE TO BE SCH 80 PVC AND SHALL BE THE SAME SIZE AS THE MAINLINE, REDUCING WHEN NECESSARY JUST BEFORE THE VALVES.

(3) COORDINATE ELEC. POINT OF CONNECTION WITH ELECTRICAL CONTRACTOR. THE WEATHER SENSOR SHALL BE INSTALLED ON THE SOUTH OR SOUTHWESTERN FACING AREA OF A ROOF. THE AREA SELECTED SHALL BE IN A CLEAR OPEN AREA OF THE ROOF, NOT EFFECTED BY SHADE FROM ANOTHER BUILDING OR TREE. THE CONTRACTOR SHALL INSTALL THE SWITCH ON AN EAVE OR FASCIA BOARD PER THE DIRECTION OF THE LANDSCAPE ARCHITECT. ALL WIRING SHALL BE CONCEALED EITHER WITHIN PVC CONDUIT OR OTHER MEANS AS DIRECTED BY THE LANDSCAPE ARCHITECT.

(4) ALL VALVE BOX COVERS TO BE CARSON/BROOKS GREEN VALVE BOXES OR EQUAL.

IRRIGATION LEGEND

SYMBOL	MANUFACTURER/MODEL #	RAD.	PSI	FLOW (GPM) Q	H	F	Van	DETAIL
SHRUB HI-POP SPRAY HEADS								
	RAINBIRD 1812-SAM-PRS w/ 4' SQ- QTR & HALF	4.5'	40	.12	.18			'O' / L2.4
	RAINBIRD 1812-SAM-PRS w/ R-VAN14	8'-14'	45	.32	.63		.73	'O' / L2.4
	RAINBIRD 1812-SAM-PRS w/ R-VAN18	13'-18'	45	.5	1.01		1.17	'O' / L2.4
TURF POP-UP SPRAY / ROTOR HEADS								
	RAINBIRD 1812-SAM-PRS w/ R-VAN14	8'-14'	45	.32	.63		.73	'O' / L2.4
	RAINBIRD 1812-SAM-PRS w/ R-VAN14-360	8'-14'	45			1.27		'O' / L2.4
	HUNTER I-25-06 - SS - 4	41'	50	4.3				'N' / L2.4
	HUNTER I-25-06 - SS - 8	49'	50		8.3			'N' / L2.4
	HUNTER I-25-06 - SS - 8	49'	50			8.3		'N' / L2.4
TREE BUBBLER SYSTEM								
	RAINBIRD 1806-SAM-1402 SERIES BUBBLER + RWS-B-C-1402		40	.5				'O, P' / L2.4
DRIP SYSTEM								
F	FLUSH VALVE / OPERATION INDICATOR ASSEMBLY							'T' / L2.3
	HATCH PATTERN REFLECTS INDIVIDUAL VALVE ZONES TO BE WATERED VIA POINT TO POINT DRIP W/ BOWSMITH SL.200. 1 EMITTER PER PLANT EXCEPT CENTAUREA, LEONOTIS, MUHLENBERGIA, AND YUCCA TO RECEIVE 2 EMITTERS		30	2 GPH				'S' / L.2
MISCELLANEOUS								
	REPAIR AND REPLACE WITH LIKE MATERIAL, ANY IRRIGATION EQUIPMENT DAMAGED DURING INSTALLATION. EXISTING TREE TO BE PROTECTED IN PLACE. HAND DIGGING ONLY WITHIN THE DRIPLINE OF THE TREE CANOPY. NO ROOTS OVER 1 1/2" IN DIAMETER ARE TO BE REMOVED. IF NOT POSSIBLE TO SAVE ALL ROOTS, MANUALLY CUT ROOT WITH A SHARP PRUNING INSTRUMENT ONLY. REDIRECT MAIN OR TAP ROOTS ONLY AND GIVE TEMPORARY SUPPORT AND MOISTURE UNTIL REROUTED.							

1. PCS SCREENS ARE TO BE USED TO BRING DOWN RADIUS OF SPRAY HEADS, AS NECESSARY.
2. MINOR ADJUSTMENTS IN THE FIELD MAY BE NECESSARY TO AVOID VERTICAL OBJECTS.

SCH 40 PVC SLEEVING CHART

1 1/4" SLEEVE	1-4 WIRES	1/2" PIPE
1 1/2" SLEEVE	5-10 WIRES	3/4" PIPE
2" SLEEVE	11-20 WIRES	1" PIPE
2 1/2" SLEEVE	21-30 WIRES	1 1/4" PIPE
3" SLEEVE	31-40 WIRES	1 1/2" PIPE
4" SLEEVE	41-60 WIRES	2" PIPE
6" SLEEVE	61-99 WIRES	3" PIPE
8" SLEEVE	100+ WIRES	4" PIPE
10" SLEEVE	N/A	6" PIPE

PIPE SIZING CHART

	3/4" PIPE
	1" PIPE
	1 1/4" PIPE
	1 1/2" PIPE
	2" PIPE
	2 1/2" PIPE
	3" PIPE
	4" PIPE
	6" PIPE
	8" PIPE

PRESSURE LOSS CALCULATIONS (VALVE 17 @ 51 GPM)	METER ELEV. 66.03 VALVE ELEV. 66.14
LOSS THRU 1 1/2" WATER METER	4.9 PSI
LOSS THRU 3" R/P DEVICE	- PSI
LOSS THRU 1158' OF LOOPED 3" MAIN AFTER MV/FS	.51 PSI
LOSS THRU 2" MASTER VALVE	1.0 PSI
LOSS THRU 2 BALL VALVES	2.0 PSI
LOSS THRU 1 1/2" VALVE	3.6 PSI
LOSS THRU LATERAL LINES	3.2 PSI
ELEVATION GAIN	.05 PSI
MISC. LOSS THRU FITTINGS	1.52 PSI
TOTAL SYSTEM LOSSES	16.78 PSI
PRESSURE REQUIRED AT HEAD	50 PSI
STATIC PRESSURE AFTER BACKFLOW	75 PSI
RESIDUAL PRESSURE	8.22 PSI

SQ FT

STATION NUMBER	
FLOW (GPM)	VALVE SIZE

PLANTS

IRRIGATION NOTES:

1. REFER TO IRRIGATION DETAILS AND SPECIFICATIONS SHEETS.
2. VERIFY ALL EXISTING CONDITIONS, DIMENSIONS AND ELEVATIONS PRIOR TO COMMENCEMENT OF WORK. NOTIFY THE LANDSCAPE ARCHITECT IMMEDIATELY OF ANY FIELD CONDITIONS THAT VARY FROM THE PLANS.
3. LOCATE ALL EXISTING UTILITIES WHETHER SHOWN ON THE PLANS OR NOT AND PROTECT THEM FROM DAMAGE. NOTIFY OWNER'S REPRESENTATIVE IMMEDIATELY OF ANY DAMAGE AND ASSUME FULL RESPONSIBILITY FOR REPAIRS/ REPLACEMENT/ COSTS INCURRED DUE TO DAMAGED UTILITIES.
4. LANDSCAPE CONTRACTOR IS TO FIELD VERIFY ENTIRE EXISTING SYSTEM FOR FUNCTIONALITY AND TO COORDINATE WITH LANDSCAPE MAINTENANCE COMPANY ON ISSUES OR CONSTRAINTS OF BURIED COMPONENTS.
5. CERTIFIED CONTRACTOR IS TO MAKE IRRIGATION POINT OF CONNECTION INTO EXISTING ASBESTOS MAINLINES AS NOTED ON THE PLANS. VERIFY CONDITIONS AND LOCATIONS IN THE FIELD AND ADJUST AS NECESSARY.
6. ALL PRESSURE LINES SHALL BE TESTED FOR 2 HOURS UNDER HYDROSTATIC PRESSURE OF 150 PSI AND BE PROVEN WATER TIGHT PRIOR TO BACKFILLING. CONTRACT SHALL NOTIFY LANDSCAPE ARCHITECT OF VERIFICATION AND BY WHOM.
7. THE SPRINKLER SYSTEM IS BASED ON THE MINIMUM OPERATING PRESSURE AND MAXIMUM FLOW DEMAND SHOWN ON THE PRESSURE LOSS CALCULATION. THE IRRIGATION CONTRACTOR SHALL VERIFY EXISTING STATIC WATER PRESSURE PRIOR TO CONSTRUCTION. NOTIFY THE LANDSCAPE ARCHITECT IMMEDIATELY ANY DIFFERENCE BETWEEN WATER PRESSURE SHOWN ON DRAWINGS AND THE ACTUAL PRESSURE READING AT THE IRRIGATION POINT OF CONNECTION. THE CONTRACTOR SHALL ASSUME FULL RESPONSIBILITY FOR ANY REVISION NECESSARY IF DIFFERENCES ARE NOT REPORTED PRIOR TO INSTALLATION OF SYSTEM.
8. MAINLINE AND VALVES SHOWN OUTSIDE OF PLANTED AREAS FOR CLARITY ONLY. INSTALL ALL IRRIGATION EQUIPMENT IN ADJACENT PLANTED AREAS EXCEPT WHERE SLEEVING IS SHOWN ON THE PLANS. ALL PIPES AND WIRES THAT MUST RUN UNDER HARDSCAPE TO BE SLEEVED IN SCH 40 PVC SLEEVES ACCORDING TO THE SLEEVING CHART.
9. THE FINAL LOCATION OF THE CONTROLLER SHALL BE APPROVED BY THE LANDSCAPE ARCHITECT PRIOR TO INSTALLATION. 120 VOLT ELECTRICAL POWER AT THE CONTROLLER LOCATION SHALL BE PROVIDED BY OTHERS AND IS THE RESPONSIBILITY OF THE LANDSCAPE CONTRACTOR TO COORDINATE AND MAKE THE FINAL HOOK-UP FROM ELECTRICAL OUTLET TO THE CONTROLLER PER LOCAL CODES.
10. ALL POP UP SPRINKLER HEADS IN SHRUB AREAS TO BE INSTALLED SO THE TOP OF THE SPRINKLER IS 1" ABOVE FINISH GRADE OF BARK MULCH.
11. ALL SPRINKLER HEADS TO BE INSTALLED PERPENDICULAR TO FINISH GRADE OF THE AREA TO BE IRRIGATION UNLESS OTHERWISE NOTED.
12. LOW HEAD DRAINAGE WILL NOT BE ALLOWED AND ALL HEADS SHALL RECEIVE CHECK VALVES EVEN IF NOT SHOWN ON THE PLANS.
13. ALL POINT SOURCE EMITTERS ARE TO BE LOCATED AWAY FROM SEAT WALLS, CURBS AND WALKWAYS TO MINIMIZE CONFLICT WITH PEDESTRIANS.
14. THE IRRIGATION SYSTEM SHALL BE FLUSHED AND ADJUSTED FOR OPTIMUM PERFORMANCE. ELIMINATE OVER SPRAY ONTO HARDSCAPE IN ALL SHRUB AREAS AND IN TURF AREAS PRIOR TO END OF MAINTENANCE PERIOD. IF LOW TRAJECTORY HEADS NEED TO BE USES THEY SHALL BE SUBSTITUTED.
15. INSTALL ALL PIPE MATERIALS AND EQUIPMENT PER DETAILS. USE TEFLON TAPE OR TEFLON PIPE DOPE ON ALL PVC MALE PIPE THREADS ON SWING JOINTS AND VALVE ASSEMBLIES.
16. DO NOT WILLFULLY INSTALL THE IRRIGATION SYSTEM AS SHOWN ON THE DRAWINGS WHEN IT IS OBVIOUS IN THE FIELD THAT OBSTRUCTIONS, GRADE DIFFERENCES, OR SITE DIMENSION DIFFERENCES EXIST. IMMEDIATELY INFORM THE LANDSCAPE ARCHITECT OF SUCH CONDITIONS.
17. I HAVE COMPLIED WITH THE CRITERIA OF THE MWELO ORDINANCE AND APPLIED THEM FOR THE EFFICIENT USE OF WATER IN THE LANDSCAPE DESIGN PLAN.

NO ACCURATE AS-BUILT IRRIGATION PLANS WERE AVAILABLE SO ALL INFORMATION, INCLUDING PRESSURE INFORMATION TAKEN FROM MAINTENANCE AND OPERATIONS DEPARTMENT. LANDSCAPE CONTRACTOR IS TO FIELD VERIFY PRESSURE AND POTHOLE FOR MAINLINE ROUTING.

WARNING ABOUT ASBESTOS MAINLINE PIPE FROM THE BACKFLOW TO THE ATHLETIC FIELDS.

DSA STAMP

STUDIO W ARCHITECTS

Studio W Architects
1930 H Street
Sacramento, California 95811
[T] 916.254.5600
www.StudioW-Architects.com

KDA LANDSCAPE ARCHITECTS
325 7th Avenue, Unit 214
San Diego, CA 92101-7176
t 619.840.5174
website www.kda-landscapearchitects.com

ARCHITECT — LICENSED ARCHITECT — BRIAN P WHITMORE — No. C 30345 — Ren. 9/30/25 — STATE OF CALIFORNIA — DATE SIGNED: 06/24/2024

LANDSCAPE ARCHITECT — REGISTERED LANDSCAPE ARCHITECT — KENNETH J. KAMAN — No. 5426 — 5/31/25 — 06/19/24 — STATE OF CALIFORNIA

GENERAL NOTES
1. This sheet is part of a set and is not to be used alone.
2. This sheet is not to be used for construction unless the architect's stamp and signature appear on the drawings and the status box indicated drawings have been released for construction.
3. These plans and prints thereof, as instruments of service, are owned by the architect and are for use on this project only. Reproduction and/or distribution without the prior written consent of the architect is forbidden.
4. Copyright Studio W Associates, Inc. 2022.

REVISION HISTORY

NO.	REMARKS	DATE

DRAWING STATUS

	DATE
○ DSA PLAN CHECK	
● DSA BACK CHECK	06/24/2024
○ BIDDING	
○ CONSTRUCTION	

KEY PLAN

BUENA PARK USD
6885 ORANGETHORPE AVE
BUENA PARK, CA 90620

SCHEMATIC DESIGN

CARL E. GILBERT ELEMENTARY SCHOOL
TK/PK CLASSROOMS & EARLY LEARNING BUILDING
7255 8TH STREET, BUENA PARK, CA 90621

IRRIGATION LEGEND

Date 06/24/2024
Project Number 23076
Application Number XX-XXXXXX
Drawing Number L2.2
Drawn Author
Checked Checker

C:\KDA PROJECTS\24000 PROJECTS\24001 GILBERT ES TK-PK EXPANSION\AUTOCAD\CD'S\24001 IP.DWG

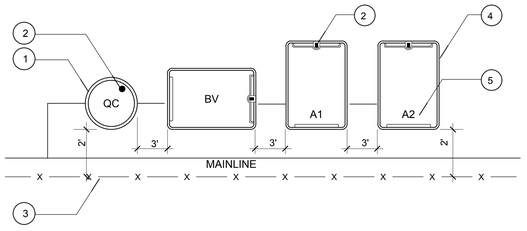

1. QUICK COUPLER BOX
2. STAINLESS STEEL BOLT, WASHER, AND NUT TO SECURE BOX LID
3. PERIMETER FENCE
4. RECTANGULAR VALVE BOX
5. HEAT BRAND LETTERS AND NUMBERS

NOTE:
CENTER VALVE BOX OVER REMOTE CONTROL VALVE FOR MAINTENANCE.

INSTALL VALVE BOXES PARALLEL TO EACH OTHER AND PERPENDICULAR TO PAVING EDGES WHERE APPLICABLE

AVOID HEAVY COMPACTION OF SOIL AROUND VALVE BOXES, AND PLANTS WITHIN 2' OF VALVE BOXES

J VALVE MANIFOLD

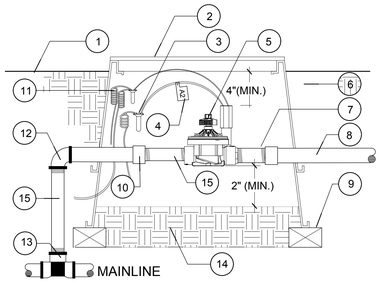

1. FINISH GRADE \" IN TURF, 3" IN GROUND COVER
2. RECTANGULAR VALVE BOX W/ LOCKING LID, COLOR GREEN, BRAND STATION ID ON LID
3. WATER PROOF WIRE CONNECTOR
4. CHRISTY ID TAG W/ STATION NUMBER
5. REMOTE CONTROL VALVE PER LEGEND
6. NATIVE SOIL
7. SCH 40 PVC FEMALE ADAPTOR
8. PVC PIPE TO SYSTEM
9. BRICK SUPPORT 4 REQ.
10. SCH 40 PVC MALE ADAPTOR
11. 18-24" COILED COMMON & CONTROL WIRES
12. PVC ELL
13. MAINLINE WITH TEE OR ELL, SLIPxSLIPxFIPT
14. FILL BOX W/ PEA GRAVEL
15. SCH 80 PVC NIPPLE

K REMOTE CONTROL VALVE

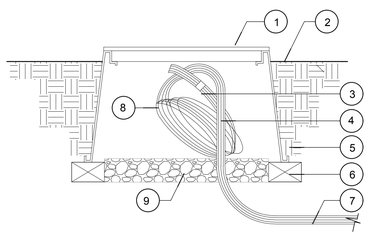

1. RECTANGULAR VALVE BOX W/ LOCKING LID, COLOR GREEN, BRAND 'SW' ON LID
2. FINISH GRADE \" IN TURF, 3" IN GROUND COVER
3. TAPE END OF WIRES W/ ELECTRICAL TAPE.
4. CONTROL / COMMON WIRES PER IRRIGATION LEGEND.
5. NATIVE SOIL
6. BRICK SUPPORTS (4)
7. WIRE RUN FROM LANDSCAPE 18-24" DEEP
8. 36" MIN. COILED WIRES
9. FILL BASE WITH GRAVEL

NOTES:
ALL SPLICES TO BE IN PULL BOXES AND MADE W/ WATERPROOF CONNECTORS.

L SPARE WIRE STUB-OUT

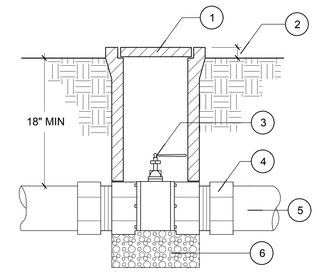

1. PLASTIC VALVE BOX W/ LOCKABLE TOP EXTENSIONS AS NECESSARY
2. FINISH GRADE 1/2" IN TURF, 2" IN GROUND COVER AREAS
3. BALL VALVE
4. ADAPT TO MAIN LINE
5. MAIN LINE
6. 8" PEA GRAVEL SUMP

G BALL VALVE

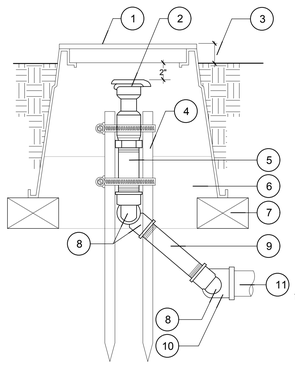

1. 10" ROUND PLASTIC VALVE BOX W/ 'QC' BRANDED ON LID
2. QUICK COUPLER VALVE PER LEGEND.
3. FINISH GRADE 1" IN TURF AREAS 3" IN SHRUB AREAS
4. (2) #4 36" LONG STAKE W/ (2) STAINLESS STEEL CLAMPS.
5. 1"x6" SCH 80 PVC NIPPLE
6. 6" OF PEA GRAVEL
7. BRICK SUPPORTS (3)
8. 1" SCH 40 PVC STREET ELL (3)
9. 1"x12" SCH 80 PVC NIPPLE
10. 1" SCH 40 PVC ELL (SxT)
11. 1" SCH 40 PVC MAINLINE, W/ SCH 40 PVC FITTING (TEE OR ELL) W/ 1" SLIP OUTLET TO MAINLINE.

H QUICK COUPLING VALVE

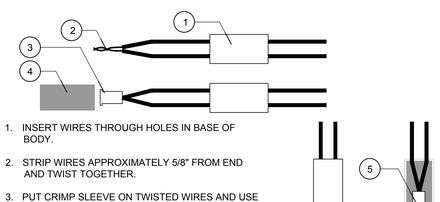

1. INSERT WIRES THROUGH HOLES IN BASE OF BODY.
2. STRIP WIRES APPROXIMATELY 5/8" FROM END AND TWIST TOGETHER.
3. PUT CRIMP SLEEVE ON TWISTED WIRES AND USE INDENT-TYPE CRIMPING TOOL TO SECURE. TRIM EXCESS BARE WIRE.
4. PLUG PRE-FILLED WITH WATERPROOF SEALANT.
5. INVERT BODY AND INSERT PLUG INTO BODY UNTIL IT SNAPS TIGHT.
6. PUSH WIRES ALL THE WAY INTO PLUG TO COMPLETELY SEAL THE CRIMP SLEEVE.

NOTES:
USE SPEARS #DS-400 DRI-SPLICE WIRE CONNECTOR KIT. MAKE ALL WATERPROOF WIRE CONNECTIONS PER THE MANUFACTURER'S DIRECTIONS.

I WIRE CONNECTORS

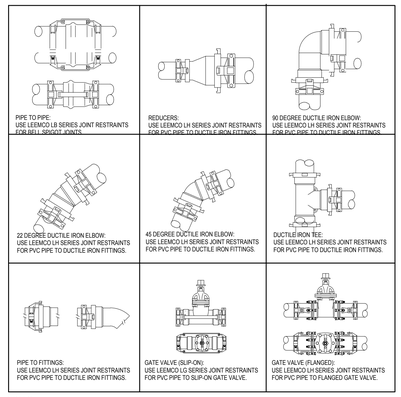

NOTES:

IN MAIN LINE DIRECTION AND AT ALL COUPLING WITHIN 50 FEET OF THE DIRECTIONAL CHANGE..
2- INSTALL ALL DUCTILE IRON FITTINGS AND JOINT RESTRAINTS PER LEEMCO INSTALLATION GUIDES AND SPECIFICATIONS.

1-USE LEEMCO JOINT RESTRAINT SYSTEM ON ALL DUCTILE IRON FITTINGS AND AT DIRECTIONAL CHANGES

D 3" AND LARGER MAINLINE JOINT RESTRAINTS

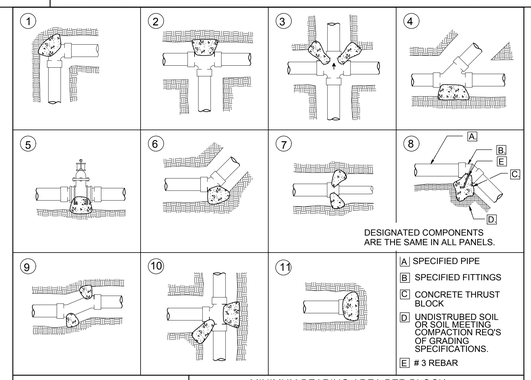

1. DIRECTION CHANGE, ELBOW
2. THRU LINE CONNECTION, TEE
3. THRU LINE CONNECTION, CROSS
4. THRU LINE CONNECTION, WYE
5. VALVE ANCHOR
6. DIRECTION CHANGE, 45 ELBOW
7. CHANGE LINE SIZE, REDUCER
8. VERTICAL DIRECTION CHANGE, BEND ANCHOR
9. DIRECTION CHANGE
10. DIRECTION CHANGE, TEE USED AS ELBOW
11. END CAP BLOCK

MINIMUM BEARING AREA PER BLOCK

SIZE OF PIPE	IN SQUARE FEET FIG51-4,7,10-11	IN SQUARE FEET FIG56,9	IN CUBIC FEET FIG58
3"-4"	3	2	8
6"	5	4	22
8"	8	6	-
10"	12	9	-

ALL PIPE IN SYSTEM, INCLUDING SMALLER SOLVENT WELDED PIPE, WHICH COULD RECEIVE THRUST FROM BELL RING PIPE, SHALL HAVE THRUST BLOCKS.

E THRUST BLOCKS

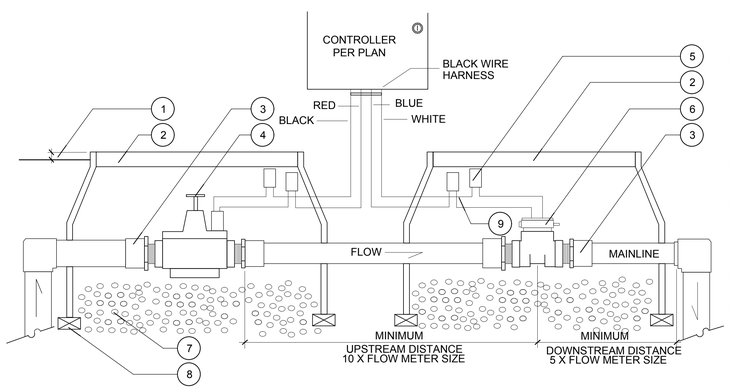

1. FINISH GRADE 1" IN TURF AREAS 2" IN SHRUB AREAS
2. RECTANGULAR PLASTIC W/ LOCKING LID
3. PVC MALE ADAPTORS
4. MASTER VALVE - PER PLAN
5. WATERPROOF ELECTRICAL CONNECTORS
6. FLOW METER PER PLAN
7. 3/4" CRUSHED ROCK SLUMP, 12" DEEP FROM BOTTOM OF VALVE BOX
8. 2"X2" CONCRETE BLOCKS
9. FLOW SENSING CABLE TO BE HOUSED IN AN 1 1/4" ELECTRICAL CONDUIT SWEEP ELBOW W/ CONDUIT BUSHING.

F MASTER VALVE/FLOW SENSOR

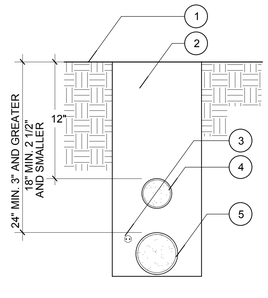

1. FINISH GRADE
2. BACKFILL 90% COMPACTION (TYP.)
3. CONTROL AND NEUTRAL CONDUCTORS
4. LATERAL LINE
5. MAIN LINE (PRESSURIZED)

NOTE: CONTROL AND NEUTRAL CONDUCTORS SHALL BE INSTALLED WITH A MINIMUM OF 18" EARTH COVER

IRRIGATION PIPE TO BE SLEEVED UNDER ALL HARDSCAPE AREAS W/ A MIN. 24" COVER

A TRENCHING

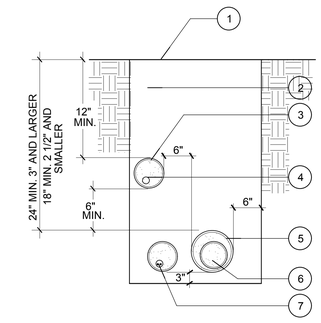

1. FINISH GRADE
2. 90% COMPACTED NATIVE SOIL
3. SLEEVE
4. SPRINKLER LATERAL
5. MAINLINE SLEEVE
6. MAIN SUPPLY LINE
7. CONTROL AND NEUTRAL WIRES

B SLEEVING

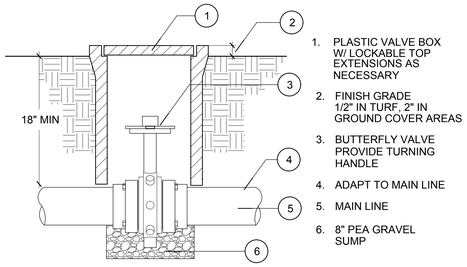

1. PLASTIC VALVE BOX W/ LOCKABLE TOP EXTENSIONS AS NECESSARY
2. FINISH GRADE 1/2" IN TURF, 2" IN GROUND COVER AREAS
3. BUTTERFLY VALVE PROVIDE TURNING HANDLE
4. ADAPT TO MAIN LINE
5. MAIN LINE
6. 8" PEA GRAVEL SUMP

C BUTTERFLY VALVE

DSA STAMP

STUDIO W ARCHITECTS
Studio W Architects
1930 H Street
Sacramento, California 95811
[T] 916.254.5600
www.StudioW-Architects.com

KDA LANDSCAPE ARCHITECTS
325 7th Avenue, Unit 214
San Diego, CA 92101-7176
t 619.840.5174
website www.kda-landscapearchitects.com

ARCHITECT	LANDSCAPE ARCHITECT
LICENSED ARCHITECT BRIAN P WHITAKER No. C 30345 Ren. 9/30/25 STATE OF CALIFORNIA	REGISTERED LANDSCAPE ARCHITECT JENNIFER J. KAMAN 5/31/25 STATE OF CALIFORNIA

DATE SIGNED: 06/24/2024

GENERAL NOTES
1. This sheet is part of a set and is not to be used alone.
2. This sheet is not to be used for construction unless the architect's stamp and signature appear on the drawings and the status box indicated drawings have been released for construction.
3. These plans and prints thereof, as instruments of service, are owned by the architect and are for use on this project only. Reproduction and/or distribution without the prior written consent of the architect is forbidden.
4. Copyright Studio W Associates, Inc. 2022.

REVISION HISTORY

NO.	REMARKS	DATE

DRAWING STATUS — DATE
- DSA PLAN CHECK
- DSA BACK CHECK 06/24/2024
- BIDDING
- CONSTRUCTION

KEY PLAN

BUENA PARK USD
6885 ORANGETHORPE AVE
BUENA PARK, CA 90620

SCHEMATIC DESIGN

CARL E. GILBERT ELEMENTARY SCHOOL
TK/PK CLASSROOMS & EARLY LEARNING BUILDING
7255 8TH STREET, BUENA PARK, CA 90621

IRRIGATION DETAILS

Date	Project Number
06/24/2024	23076
Application Number XX-XXXXXX	Drawing Number L2.3
Drawn Author	Checked Checker

C:\KDA PROJECTS\24000 PROJECTS\24001 GILBERT ES TK-PK EXPANSION\AUTOCAD\CD'S\24001 ID.DWG

PROJECT NAME : IRRIGATION SCHEDULE GUIDELINE - PLANT ESTABLISHMENT PERIOD

HYDRO ZONE	HYDROZONE DATA		Days per Month =	Jan 31	Feb 28	Mar 31	Apr 30	May 31	Jun 30	Jul 31	Aug 31	Sep 30	Oct 31	Nov 30	Dec 31	Total 365	
			Historic ET =	2.6	2.5	3.6	4.4	5.3	5.3	6.0	5.8	4.9	3.5	2.5	2.0	48.4	
HZ 1 Med/Bubbler	Plant Kc =	0.40	Total Monthly Run Time	39	38	54	66	79	79	89	86	73	52	38	30		Valves 9, 20 21
	Soil Type =	SandyLoam	Irrigation Days per Month	3	3	3	4	5	5	5	5	3	3	3	2		
	Root Depth =	8	Station Run Time per ID	13	13	18	17	16	16	18	18	15	18	13	15		
	Precip. Rate =	2.00	Cycles per Irrigation Day	2	2	2	2	2	2	2	2	2	2	2	2		
	Irr. Eff. =	0.81	Station Run Time per Cycle	7	7	9	9	8	8	9	9	8	9	7	8		
HZ 2 Med/Bubbler	Plant Kc =	0.40	Total Monthly Run Time	39	38	54	66	79	79	89	86	73	52	38	30		Valves 1
	Soil Type =	SandyLoam	Irrigation Days per Month	3	3	3	4	5	5	5	5	3	3	3	2		
	Root Depth =	8	Station Run Time per ID	13	13	18	17	16	16	18	18	15	18	13	15		
	Precip. Rate =	2.00	Cycles per Irrigation Day	2	2	2	2	2	2	2	2	2	2	2	2		
	Irr. Eff. =	0.81	Station Run Time per Cycle	7	7	9	9	8	8	9	9	8	9	7	8		
HZ 3 High/Rotor	Plant Kc =	0.50	Total Monthly Run Time	241	232	334	408	491	491	556	538	454	325	232	186		Valves 7, 15, 16, 17
	Soil Type =	SandyLoam	Irrigation Days per Month	11	11	15	19	23	23	25	25	21	15	11	9		
	Root Depth =	2	Station Run Time per ID	22	22	23	22	22	22	23	22	22	22	22	21		
	Precip. Rate =	0.40	Cycles per Irrigation Day	1	1	1	1	1	1	1	1	1	1	1	1		
	Irr. Eff. =	0.81	Station Run Time per Cycle	22	22	23	22	22	22	23	22	22	22	22	21		
HZ 4 Low/MP	Plant Kc =	0.30	Total Monthly Run Time	149	143	206	252	303	303	343	332	280	200	143	115		Valves 3, 8, 10, 14
	Soil Type =	SandyLoam	Irrigation Days per Month	5	5	6	8	9	9	10	10	9	6	5	4		
	Root Depth =	3	Station Run Time per ID	30	29	35	32	34	34	35	34	32	34	29	29		
	Precip. Rate =	0.42	Cycles per Irrigation Day	1	1	1	1	1	1	1	1	1	1	1	1		
	Irr. Eff. =	0.75	Station Run Time per Cycle	30	29	35	32	34	34	35	34	32	34	29	29		
HZ 5 Low/MP	Plant Kc =	0.30	Total Monthly Run Time	149	143	206	252	303	303	343	332	280	200	143	115		Valves 4, 11
	Soil Type =	SandyLoam	Irrigation Days per Month	5	5	6	8	9	9	10	10	9	6	5	4		
	Root Depth =	3	Station Run Time per ID	30	29	35	32	34	34	35	34	32	34	29	29		
	Precip. Rate =	0.42	Cycles per Irrigation Day	1	1	1	1	1	1	1	1	1	1	1	1		
	Irr. Eff. =	0.75	Station Run Time per Cycle	30	29	35	32	34	34	35	34	32	34	29	29		
HZ 6 Low/Drip	Plant Kc =	0.30	Total Monthly Run Time	91	87	125	153	185	185	209	202	171	122	87	70		Valves 2, 5, 6, 12, 13
	Soil Type =	SandyLoam	Irrigation Days per Month	5	5	6	8	9	9	10	10	9	6	5	4		
	Root Depth =	3	Station Run Time per ID	19	18	21	20	21	21	21	21	19	21	18	18		
	Precip. Rate =	0.64	Cycles per Irrigation Day	1	1	1	1	1	1	1	1	1	1	1	1		
	Irr. Eff. =	0.81	Station Run Time per Cycle	19	18	21	20	21	21	21	21	19	21	18	18		
HZ 7 Low/Drip	Plant Kc =	0.30	Total Monthly Run Time	91	87	125	153	185	185	209	202	171	122	87	70		Valves 18, 19, 21, 23
	Soil Type =	SandyLoam	Irrigation Days per Month	5	5	6	8	9	9	10	10	9	6	5	4		
	Root Depth =	3	Station Run Time per ID	19	18	21	20	21	21	21	21	19	21	18	18		
	Precip. Rate =	0.64	Cycles per Irrigation Day	1	1	1	1	1	1	1	1	1	1	1	1		
	Irr. Eff. =	0.81	Station Run Time per Cycle	19	18	21	20	21	21	21	21	19	21	18	18		
HZ 8 High/Spray	Plant Kc =	0.50	Total Monthly Run Time	67	65	93	113	136	136	154	149	126	90	65	52		Valves 24, 25
	Soil Type =	SandyLoam	Irrigation Days per Month	11	11	15	19	23	23	25	25	21	15	11	9		
	Root Depth =	2	Station Run Time per ID	7	6	7	6	6	6	7	6	6	6	6	6		
	Precip. Rate =	1.56	Cycles per Irrigation Day	1	1	1	1	1	1	1	1	1	1	1	1		
	Irr. Eff. =	0.75	Station Run Time per Cycle	7	6	7	6	6	6	7	6	6	6	6	6		

IRRIGATION SCHEDULE GUIDELINE NOTES:
THE IRRIGATION SCHEDULE GUIDELINE IS BASED ON THE HYDROZONE DATA LISTED IN THE CHART ABOVE (HISTORICAL ET, ESTIMATED CROP COEFFICIENT FROM WUCOLS, ESTIMATED SOIL TYPE, ESTIMATED ROOT DEPTH, CALCULATED PRECIPITATION RATE, ESTIMATED IRRIGATION EFFICIENCY, AND A MANAGED ALLOWABLE DEPLETION OF 50%). THIS SCHEDULE WILL NEED TO BE FINE-TUNED AND ADJUSTED BASED ON ACTUAL SITE CONDITIONS, SLOPE FACTORS, AND MICRO CLIMATES. AT ALL TIMES THE CORRECT AMOUNT OF WATER SHALL BE APPLIED FOR MAXIMUM PLANT HEALTH. THE CONTROLLER FOR THIS PROJECT IS A 'SMART' CONTROLLER. IT IS SUGGESTED THAT THE AUTOMATIC ET ADJUSTMENT FEATURE NOT BE USED UNTIL PLANTS HAVE DEVELOPED ESTABLISHED ROOT SYSTEMS.

PROJECT NAME : IRRIGATION SCHEDULE GUIDELINE - ESTABLISHED PLANTS

HYDRO ZONE	HYDROZONE DATA		Days per Month =	Jan 31	Feb 28	Mar 31	Apr 30	May 31	Jun 30	Jul 31	Aug 31	Sep 30	Oct 31	Nov 30	Dec 31	Total 365	
			Historic ET =	2.6	2.5	3.6	4.4	5.3	5.3	6.0	5.8	4.9	3.5	2.5	2.0	48.4	
HZ 1 Med/Bubbler	Plant Kc =	0.40	Total Monthly Run Time	39	38	54	66	79	79	89	86	73	52	38	30		Valves 9, 20 21
	Soil Type =	SandyLoam	Irrigation Days per Month	1	1	1	2	2	2	2	2	1	1	1	1		
	Root Depth =	24	Station Run Time per ID	39	38	54	33	40	40	45	43	37	52	38	30		
	Precip. Rate =	2.00	Cycles per Irrigation Day	4	4	5	3	4	4	4	4	4	5	4	3		
	Irr. Eff. =	0.81	Station Run Time per Cycle	10	10	11	11	10	10	12	11	10	11	10	10		
HZ 2 Med/Bubbler	Plant Kc =	0.40	Total Monthly Run Time	39	38	54	66	79	79	89	86	73	52	38	30		Valves 1
	Soil Type =	SandyLoam	Irrigation Days per Month	1	1	1	2	2	2	2	2	2	1	1	1		
	Root Depth =	24	Station Run Time per ID	39	38	54	33	40	40	45	43	37	52	38	30		
	Precip. Rate =	2.00	Cycles per Irrigation Day	4	4	5	3	4	4	4	4	4	5	4	3		
	Irr. Eff. =	0.81	Station Run Time per Cycle	10	10	11	11	10	10	12	11	10	11	10	10		
HZ 3 High/Rotor	Plant Kc =	0.50	Total Monthly Run Time	241	232	334	408	491	491	556	538	454	325	232	186		Valves 7, 15, 16, 17
	Soil Type =	SandyLoam	Irrigation Days per Month	5	5	6	8	9	9	10	10	9	6	5	4		
	Root Depth =	5	Station Run Time per ID	49	47	56	51	55	55	56	54	51	55	47	47		
	Precip. Rate =	0.40	Cycles per Irrigation Day	1	1	1	1	1	1	1	1	1	1	1	1		
	Irr. Eff. =	0.81	Station Run Time per Cycle	49	47	56	51	55	55	56	54	51	55	47	47		
HZ 4 Low/MP	Plant Kc =	0.30	Total Monthly Run Time	149	143	206	252	303	303	343	332	280	200	143	115		Valves 3, 8, 10, 14
	Soil Type =	SandyLoam	Irrigation Days per Month	2	2	3	3	4	4	4	4	4	3	2	2		
	Root Depth =	8	Station Run Time per ID	75	72	69	84	76	76	86	83	70	67	72	58		
	Precip. Rate =	0.42	Cycles per Irrigation Day	2	2	2	2	2	2	2	2	2	2	2	2		
	Irr. Eff. =	0.75	Station Run Time per Cycle	38	36	35	42	38	38	43	42	35	34	36	29		
HZ 5 Low/MP	Plant Kc =	0.30	Total Monthly Run Time	149	143	206	252	303	303	343	332	280	200	143	115		Valves 4, 11
	Soil Type =	SandyLoam	Irrigation Days per Month	2	2	3	3	4	4	4	4	4	3	2	2		
	Root Depth =	8	Station Run Time per ID	75	72	69	84	76	76	86	83	70	67	72	58		
	Precip. Rate =	0.42	Cycles per Irrigation Day	2	2	2	2	2	2	2	2	2	2	2	2		
	Irr. Eff. =	0.75	Station Run Time per Cycle	38	36	35	42	38	38	43	42	35	34	36	29		
HZ 6 Low/Drip	Plant Kc =	0.30	Total Monthly Run Time	91	87	125	153	185	185	209	202	171	122	87	70		Valves 2, 5, 6, 12, 13
	Soil Type =	SandyLoam	Irrigation Days per Month	2	2	3	3	4	4	4	4	3	2	2			
	Root Depth =	8	Station Run Time per ID	46	44	42	51	47	47	53	51	43	41	44	35		
	Precip. Rate =	0.64	Cycles per Irrigation Day	2	2	2	2	2	2	2	2	2	2	2	1		
	Irr. Eff. =	0.81	Station Run Time per Cycle	23	22	21	26	24	24	27	26	22	21	22	35		
HZ 7 Low/Drip	Plant Kc =	0.50	Total Monthly Run Time	151	145	209	255	307	307	348	336	284	203	145	116		Valves 18, 19, 21, 23
	Soil Type =	SandyLoam	Irrigation Days per Month	3	3	4	5	6	6	7	7	6	4	3	3		
	Root Depth =	8	Station Run Time per ID	51	49	53	51	52	52	50	48	48	51	49	39		
	Precip. Rate =	0.64	Cycles per Irrigation Day	2	2	2	2	2	2	2	2	2	2	2	2		
	Irr. Eff. =	0.81	Station Run Time per Cycle	26	25	27	26	26	26	25	24	24	26	25	20		
HZ 8 High/Spray	Plant Kc =	0.50	Total Monthly Run Time	67	65	93	113	136	136	154	149	126	90	65	52		Valves 24, 25
	Soil Type =	SandyLoam	Irrigation Days per Month	5	5	6	8	9	9	10	10	9	6	5	4		
	Root Depth =	5	Station Run Time per ID	14	13	16	15	16	16	16	15	14	15	13	13		
	Precip. Rate =	1.56	Cycles per Irrigation Day	1	1	2	1	2	2	2	1	1	1	1	1		
	Irr. Eff. =	0.75	Station Run Time per Cycle	14	13	8	15	8	8	8	15	14	15	13	13		

IRRIGATION SCHEDULE GUIDELINE NOTES:
THE IRRIGATION SCHEDULE GUIDELINE IS BASED ON THE HYDROZONE DATA LISTED IN THE CHART ABOVE (HISTORICAL ET, ESTIMATED CROP COEFFICIENT FROM WUCOLS, ESTIMATED SOIL TYPE, ESTIMATED ROOT DEPTH, CALCULATED PRECIPITATION RATE, ESTIMATED IRRIGATION EFFICIENCY, AND A MANAGED ALLOWABLE DEPLETION OF 50%). THIS SCHEDULE WILL NEED TO BE FINE-TUNED AND ADJUSTED BASED ON ACTUAL SITE CONDITIONS, SLOPE FACTORS, AND MICRO CLIMATES. AT ALL TIMES THE CORRECT AMOUNT OF WATER SHALL BE APPLIED FOR MAXIMUM PLANT HEALTH. THE CONTROLLER FOR THIS PROJECT IS A 'SMART' CONTROLLER. IT IS SUGGESTED THAT THE AUTOMATIC ET ADJUSTMENT FEATURE NOT BE USED UNTIL PLANTS HAVE DEVELOPED ESTABLISHED ROOT SYSTEMS.

U IRRIGATION SCHEDULES

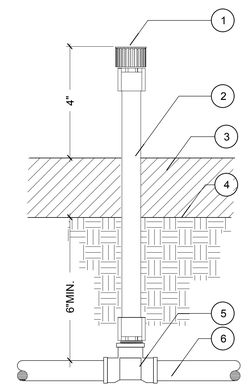

1. DRIP NOZZLE PER LEGEND. 1 EMITTER PER PLANT
2. HUNTER IH FLEXIBLE RISER (LENGTH AS REQUIRED)
3. DECOMPOSED GRANITE / MULCH PER PLAN.
4. FINISH GRADE.
5. SCH 40 PVC FITTING (SxSxT).
6. SCH 40 PVC PIPE

S POINT SOURCE DRIP

1. ROUND VALVE BOX
2. LINE FLUSHING VALVE
3. FINISH GRADE 1" IN TURF, 3" IN SHRUB AREAS
4. PVC HEADER
5. 3/4" GRAVEL SUMP, MIN 2' DEEP

NOTE: LATERIAL LENGTH WILL BE LONG ENOUGH TO FLUSH LINE WELL BEYOND VALVE BOX AREA. LATERAL LINE ALSO WILL BE CORRECT LENGTH TO ALLOW COILING LATERAL ON GRAVEL SUMP FOR DRAINING.

T FLUSH VALVE

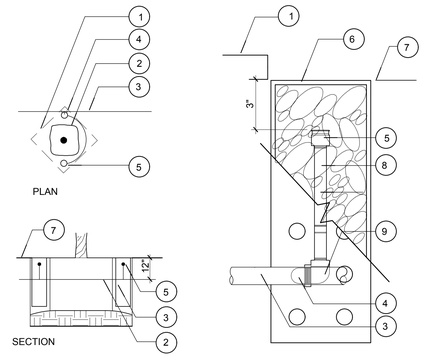

1. PARKING DIAMOND
2. ROOTBALL PVC
3. LATERAL LINE
4. SCH 80 PVC TEE AND ELL
5. BUBBLER HEAD PER LEGEND.
6. 4" DIA. X 24" LONG PERFORATED DRAIN LINE FILLED WITH COARSE GRAVEL.
7. FINISH GRADE
8. SCH. 80 PVC NIPPLE
9. SCH. 80 PVC TxT 90 STREET ELL.

NOTE:
INSTALL BUBBLER HEADS ADJACENT TO ROOTBALL FOR PROPER COVERAGE OF PLANT MATERIAL IN TREE WELL.

P BUBBLER IN PIPE

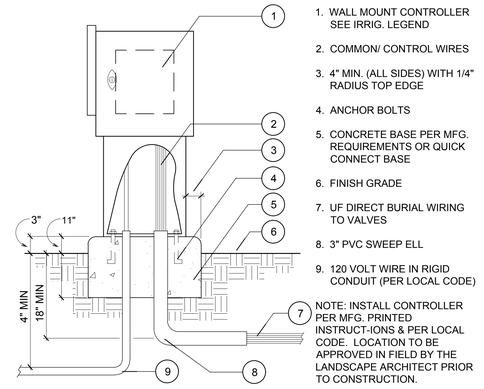

1. WALL MOUNT CONTROLLER SEE IRRIG. LEGEND
2. COMMON/ CONTROL WIRES
3. 4" MIN. (ALL SIDES) WITH 1/4" RADIUS TOP EDGE
4. ANCHOR BOLTS
5. CONCRETE BASE PER MFG. REQUIREMENTS OR QUICK CONNECT BASE
6. FINISH GRADE
7. UF DIRECT BURIAL WIRING TO VALVES
8. 3" PVC SWEEP ELL
9. 120 VOLT WIRE IN RIGID CONDUIT (PER LOCAL CODE)

NOTE: INSTALL CONTROLLER PER MFG. PRINTED INSTRUCT-IONS & PER LOCAL CODE. LOCATION TO BE APPROVED IN FIELD BY THE LANDSCAPE ARCHITECT PRIOR TO CONSTRUCTION.

Q PEDESTAL CONTROLLER

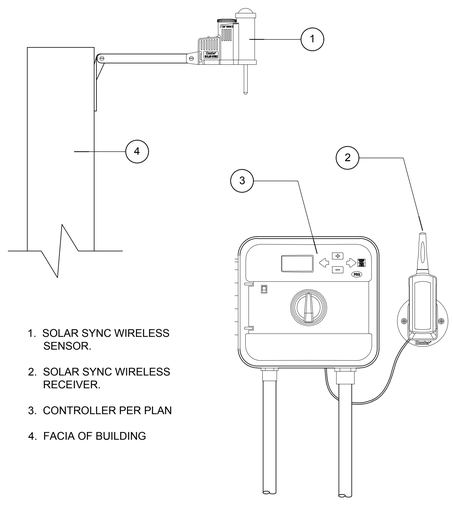

1. SOLAR SYNC WIRELESS SENSOR.
2. SOLAR SYNC WIRELESS RECEIVER.
3. CONTROLLER PER PLAN
4. FACIA OF BUILDING

R WIRELESS SOLAR SYNC

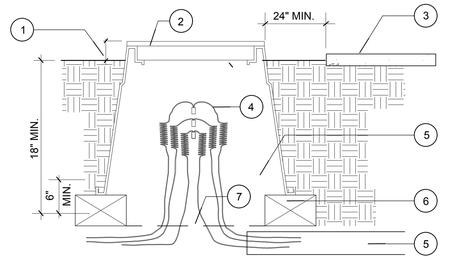

1. FINISH GRADE
   1" IN TURF AREAS
   3" IN SHRUB AREAS
2. ROUND PLASTIC VALVE BOX AND COVER MARKED "PB"
3. HARDSCAPE WHERE OCCURS
4. CONTROL AND COMMON WIRES W/ 24" EXPANSION CURLS
5. PVC WIRE SLEEVE - SIZE NOTED ON PLAN
6. 3 BRICK SUPPORTS
7. 3/8" WELDED WIRE MESH
8. PEA GRAVEL COMMON WIRES
9. DIRECT BURIAL CONTROL AND COMMON WIRES

M PULL BOX

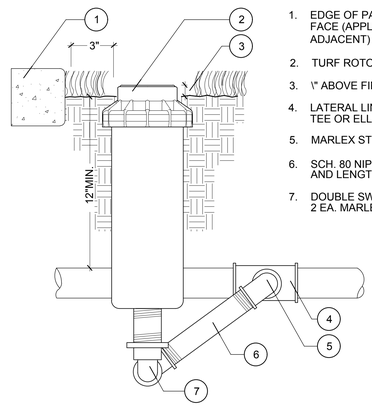

1. EDGE OF PAVING OR WALL FACE (APPLIES ONLY WHEN ADJACENT)
2. TURF ROTOR HEAD
3. \" ABOVE FINISH GRADE
4. LATERAL LINE WITH PVC TEE OR ELL
5. MARLEX STREET ELL
6. SCH. 80 NIPPLE SIZE AND LENGTH AS REQUIRED
7. DOUBLE SWING JOINT
   2 EA. MARLEX STREET ELLS

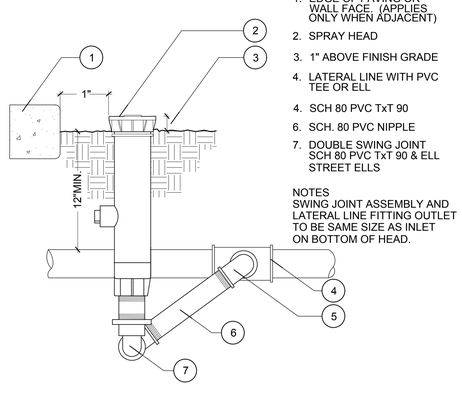

1. EDGE OF PAVING OR WALL FACE. (APPLIES ONLY WHEN ADJACENT)
2. SPRAY HEAD
3. 1" ABOVE FINISH GRADE
4. LATERAL LINE WITH PVC TEE OR ELL
4. SCH 80 PVC TxT 90
6. SCH. 80 PVC NIPPLE
7. DOUBLE SWING JOINT SCH 80 PVC TxT 90 & ELL STREET ELLS

NOTES
SWING JOINT ASSEMBLY AND LATERAL LINE FITTING OUTLET TO BE SAME SIZE AS INLET ON BOTTOM OF HEAD.

N TURF POP ROTOR

O TURF/SHRUB/TREE SPRAY POP

DSA STAMP

STUDIO W ARCHITECTS

Studio W Architects
1930 H Street
Sacramento, California 95811
[T] 916.254.5600
www.StudioW-Architects.com

KDA LANDSCAPE ARCHITECTS
325 7th Avenue, Unit 214
San Diego, CA 92101-7176
t 619.840.5174
website www.kda-landscapearchitects.com

ARCHITECT — LICENSED ARCHITECT — BRIAN P WHITTAKER — No. C 30345 Ren. 9/30/25 — STATE OF CALIFORNIA

LANDSCAPE ARCHITECT — REGISTERED LANDSCAPE ARCHITECT — KENNETH J. KAPANKE — 5/30/25 — 06/28/24 — STATE OF CALIFORNIA

DATE SIGNED: 06/24/2024

GENERAL NOTES
1. This sheet is part of a set and is not to be used alone.
2. This sheet is not to be used for construction unless the architect's stamp and signature appear on the drawings and the status box indicated drawings have been released for construction.
3. These plans and prints thereof, as instruments of service, are owned by the architect and are for use on this project only. Reproduction and/or distribution without the prior written consent of the architect is forbidden.
4. Copyright Studio W Associates, Inc. 2022.

REVISION HISTORY

NO.	REMARKS	DATE

DRAWING STATUS

	DATE
○ DSA PLAN CHECK	
● DSA BACK CHECK	06/24/2024
○ BIDDING	
○ CONSTRUCTION	

KEY PLAN

BUENA PARK USD
6885 ORANGETHORPE AVE
BUENA PARK, CA 90620

SCHEMATIC DESIGN

CARL E. GILBERT ELEMENTARY SCHOOL
TK/PK CLASSROOMS & EARLY LEARNING BUILDING
7255 8TH STREET, BUENA PARK, CA 90621

IRRIGATION DETAILS and SCHEDULES

Date	Project Number
06/24/2024	23076
Application Number XX-XXXXXX	Drawing Number L2.4
Drawn Author	Checked Checker

C:\KDA PROJECTS\24000 PROJECTS\24001 GILBERT ES TK-PK EXPANSION\AUTOCAD\CD'S\24001 ID.DWG

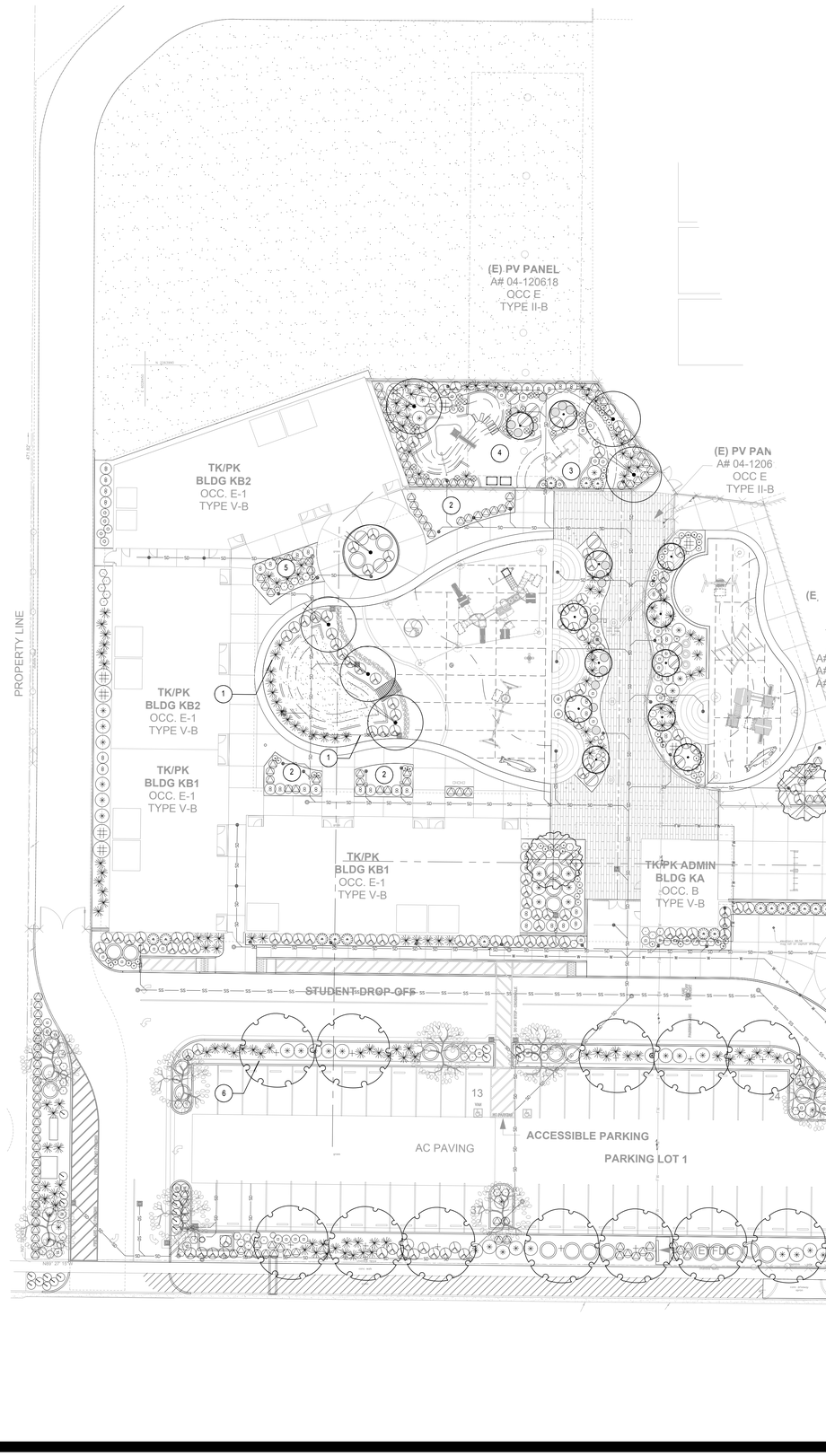

PLANT LEGEND

SYMBOL	QTY	WUCOLS PF	BOTANICAL NAME/ COMMON NAME	SIZE	SPACING	REMARKS/ CALIPERS	DETAIL
TREES							
			EXISTING TREE TO BE PROTECTED IN PLACE. HAND DIGGING ONLY WITHIN THE DRIPLINE OF THE TREE CANOPY. NO ROOTS OVER 1 1/2" IN DIAMETER ARE TO BE REMOVED. IF NOT POSSIBLE TO SAVE ALL ROOTS, MANUALLY CUT ROOT WITH A SHARP PRUNING INSTRUMENT ONLY. REDIRECT MAIN OR TAP ROOTS ONLY AND GIVE TEMPORARY SUPPORT AND MOISTURE UNTIL REROUTED.				
	7	.3	ARBUTUS UN. 'MARINA' STRAWBERRY TREE	48" BOX	REFER TO PLAN	LOW BRANCH	'A-E'/ L3.1
	12	.3	ACER PALMATUM 'SHAINA' OR 'EVER RED' SHAINA OR EVER RED JAPANESE MAPLE	48" BOX	8'X10'	LOW BRANCH	'B-E'/ L3.1
	11	.3	PISTACIA CHINENSIS CHINESE PISTACHE	48" BOX	REFER TO PLAN	STANDARD	'B-E'/ L3.1
	4	.3	METROSIDEROS EXCELSUS NEW ZEALAND CHRISTMAS TREE	48" BOX	REFER TO PLAN	STANDARD	'B-E'/ L3.1
	15	.3	PODOCARPUS GRACILIOR FERN PINE	48" BOX	REFER TO PLAN	STANDARD	'B-E'/ L3.1
NOT SHOWN			ALL TREES LOCATED WITHIN 10' OF ANY UTILITY, LIGHT STANDARD, OR HARDSCAPE TO RECEIVE A LINEAR ROOT BARRIER TO EXTEND5' BEYOND MATURE CANOPY.				'H'/ L3.1
SHRUBS							
	16	.2	ACACIA COGNATA 'ACCOG01' COUSIN ITT ACACIA	5 GAL.	5' O.C.		'F'/ L3.1
	13	.2	ANIGOZANTHOS 'BIG RED' KANGAROO PAW	5 GAL	3' O.C.	ACID	'F, G'/ L3.1
	8	.3	BUDDLEJA DAVIDII 'BLACK KNIGHT' BLACK KNIGHT BUTTERFLY BUSH	5 GAL	6' O.C.		'F, G'/ L3.1
	152	.2	CHONDROPETALUM TECTORUM CAPE REED	5 GAL	4' O.C.		'F, G'/ L3.1
	26	.3	DIANELLA TAS. VARIEGATA TASMAN FLAX LILY	5 GAL	2' O.C.		'F, G'/ L3.1
	10	.2	FUCHSIA HYB. 'SHABETTY' SHADOW DANCERS BETTY	5 GAL	1' O.C.		'F'/ L3.1
	37	.2	KNIPHOFIA UVARIA RED HOT POKER	5 GAL.	3' O.C.		'F'/ L3.1
	18	.2	THELYPTERIS NORMALIS SOUTHERN WOOD FERN	5 GAL.	2' O.C.		'F'/ L3.1
	43	.3	LAVANDULA INT. 'RIVERINA THOMAS' RIVERINA THOMAS FRENCH LAVENDER	5 GAL.	2' O.C.		'F'/ L3.1
	52	.2	LEONOTIS LEONURUS LIONS TAIL	5 GAL	5' O.C.		'F, G'/ L3.1
	32	.2	LEUCADENDRON EBONY EBONY CONEBUSH	5 GAL	6' O.C.		'F'/ L3.1
	166	.2	MUHLENBERGIA CAP. PLUMETASTIC PINK MUHLY	5 GAL.	4' O.C.		'F, G'/ L3.1
	185	.3	MYRTUS COMMUNIS COMPACTA DWARF MYRTLE	5 GAL.	3' O.C.		'F'/ L3.1
	41	.2	NANDINA DOM. 'LEMON-LIME' LEMON LIME NANDINA	5 GAL.	4' O.C.		'F'/ L3.1
	64	.3	PENNISETUM SEC. 'FIREWORKS' DWARF RED FOUNTAINGRASS	5 GAL	3' O.C.		'F'/ L3.1
	84	.2	PHLOMIS FRUTICOSA JERUSALEM SAGE	5 GAL.	3' O.C.		'F'/ L3.1
	18	.2	PODOCARPUS MAC. 'SOSA' MOOD RING PODOCARPUS	5 GAL.	4' O.C.		'F'/ L3.1
	20	.2	STACHYS BYZANTINA LAMB'S EAR	5 GAL.	2' O.C.		'F'/ L3.1
	850		MARATHON II DWARF FESCUE SOUTHLAND SOD FARM 800-532-3489	SOD			REFER TO SPECS.
	24,323		TIF SPORT WEST COAST TURF 888-893-8873	HYDROSEED ATHLETIC FIELD			REFER TO SPECS.
NOT SHOWN			ALL PLANTER AREAS TO RECEIVE A 3" THICK LAYER OF SMALL/FINE GRIND ORGANIC WOOD CHIPS. CONTRACTOR TO SUBMIT SAMPLE TO LA. FOR APPROVAL.				

NOTE:

1. REFER TO PLANTING DETAILS AND SPECIFICATIONS SHEETS L3.1-3.3
2. VERIFY ALL EXISTING CONDITIONS, DIMENSIONS AND ELEVATIONS PRIOR TO COMMENCEMENT OF WORK. NOTIFY THE LANDSCAPE ARCHITECT IMMEDIATELY OF ANY FIELD CONDITIONS THAT VARY FROM THE PLANS.
3. LOCATE ALL EXISTING UTILITIES WHETHER SHOWN ON THE PLANS OR NOT AND PROTECT THEM FROM DAMAGE. NOTIFY OWNER'S REPRESENTATIVE IMMEDIATELY OF ANY DAMAGE AND ASSUME FULL RESPONSIBILITY FOR REPAIRS/ REPLACEMENT/ COSTS INCURRED DUE TO DAMAGED UTILITIES.
4. PRIOR TO GRADING OF SOILS BUT AFTER REMOVAL OF PLANT MATERIAL, TOPSOIL IS TO BE REMOVED AND STOCKPILED FOR REUSE AFTER GRADING HAS OCCURRED. REFER TO SPECIFICATIONS.
5. PRIOR TO GRADING OF SOILS BUT AFTER REMOVAL OF PLANT MATERIAL, A WEED ABATEMENT SHALL OCCUR TO REMOVE ALL SURFACE WEEDS.
6. ON CENTER SPACING REQUIREMENTS FOR SHRUB INSTALLATION MAY ADD ADDITIONAL QUANTITIES OF SHRUBS BEYOND THE AMOUNT SHOWN ON THE PLAN. THE CONTRACTOR SHALL BE RESPONSIBLE FOR INSTALLING THE ACTUAL AMOUNT REQUIRED ON SITE.
7. ALL PLANT MATERIAL SHALL BE PLANTED TO MAINTAIN 1' CLEAR FROM WALKWAYS OR DRIVES TO THE EDGE OF THE MATURE PLANT. I.E. A 3' WIDE PLANT SHALL BE PLANTED 2 1/2' FROM THE BACK OF WALK.
8. THE LANDSCAPE ARCHITECT SHALL RETAIN THE OPTION TO TAG BOXED TREE MATERIAL AT A WHOLESALE NURSERY OF THEIR CHOICE AFTER THE BID HAS BEEN AWARDED.
9. PLANT MATERIAL IS SUBJECT TO INSPECTION AND APPROVAL/REJECTION BY THE LANDSCAPE ARCHITECT BOTH PRIOR TO DELIVERY AND UPON DELIVERY TO THE SITE.
10. ALL GROUND COVERS SHALL BE FULLY ROOTED IN FLATS OR POTS AND SHALL BE PLANTED WITH TRIANGULAR SPACING UNLESS OTHERWISE NOTED.
11. BUDS, BLOOMS AND LARGE SURFACE LEAVES ON ALL PLANT MATERIAL MUST BE PROTECTED AT ALL TIMES, INCLUDING DURING TRANSPORTATION AND INSTALLATION.
12. NO TRIMMING OR SHAPING OF PLANT MATERIAL MAY OCCUR UNLESS DIRECTED BY THE LANDSCAPE ARCHITECT.
13. ALL VINES ARE TO BE REMOVED FROM THE NURSERY STAKES OR ESPALIER RACK AND ATTACHED TO WALL/ FENCE/ COLUMN/ ETC. PER DETAILED.
14. THE CONTRACTOR SHALL GUARANTEE THE PLANT MATERIAL FOR THE PERIOD SPECIFIED IN THE SPECIFICATIONS.
15. PROVIDE AND INSTALL JUTE NETTING ON ALL SLOPES GREATER THEN 2:1.
16. THE LANDSCAPE CONTRACTOR SHALL PROVIDE AN AGRONOMIC SOILS TEST AFTER GRADING HAS OCCURRED AND SUBSEQUENT AMENDING PER SUCH TEST . REFER TO SPECIFICATIONS.
17. I HAVE COMPLIED WITH THE CRITERIA OF THE MWELO ORDINANCE AND APPLIED THEM FOR THE EFFICIENT USE OF WATER IN THE LANDSCAPE DESIGN PLAN.

PLANTING KEYNOTES

1. VOID LEFT IN PLANTING FOR MOWER ACCESS AND CHILDREN'S PATH.
2. VOID IN PLANTER FOR BREAK OUT LEARNING AMD PLAYING. TO RECEIVE BARK MULCH.
3. PLAY AREA TO RECEIVE 3" LAYER OF BARK MULCH.
4. ARTIFICIAL TURF PER CONSTRUCTION PLAN.
5. IRRIGATION EQUIPMENT.
6. AREA BETWEEN FENCE AND PARKING IS TO RECEIVE BARK MULCH.

DSA STAMP

STUDIO W ARCHITECTS

Studio W Architects
1930 H Street
Sacramento, California 95811
[T] 916.254.5600
www.StudioW-Architects.com

KDA LANDSCAPE ARCHITECTS

325 7th Avenue, Unit 214
San Diego, CA 92101-7176
t 619.840.5174
website www.kda-landscapearchitects.com

ARCHITECT	LANDSCAPE ARCHITECT
LICENSED ARCHITECT BRIAN P WHITMORE No. C 30345 Ren. 9/30/25 STATE OF CALIFORNIA	REGISTERED LANDSCAPE ARCHITECT KENNETH J. KAHAN No. 5749 5/31/25 STATE OF CALIFORNIA
DATE SIGNED: 06/24/2024	

GENERAL NOTES

1. This sheet is part of a set and is not to be used alone.
2. This sheet is not to be used for construction unless the architect's stamp and signature appear on the drawings and the status box indicated drawings have been released for construction.
3. These plans and prints thereof, as instruments of service, are owned by the architect and are for use on this project only. Reproduction and/or distribution without the prior written consent of the architect is forbidden.
4. Copyright Studio W Associates, Inc. 2022.

REVISION HISTORY

NO.	REMARKS	DATE

DRAWING STATUS

	DATE
DSA PLAN CHECK	
DSA BACK CHECK	06/24/2024
BIDDING	
CONSTRUCTION	

KEY PLAN

BUENA PARK USD
6885 ORANGETHORPE AVE
BUENA PARK, CA 90620

SCHEMATIC DESIGN

CARL E. GILBERT ELEMENTARY SCHOOL

TK/PK CLASSROOMS & EARLY LEARNING BUILDING
7255 8TH STREET, BUENA PARK, CA 90621

PLANTING PLAN

811 Know what's below. Call before you dig.

Date	Project Number
06/24/2024	23076
Application Number	Drawing Number
XX-XXXXXX	L3.0
Drawn / Checked	
Author / Checker	

C:\AKDA PROJECTS\24000 PROJECTS\24001 GILBERT ES TK-PK EXPANSION\AUTOCAD\CD'S\24001 PP.DWG

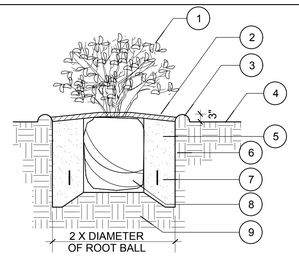

1. 1, 5, OR 15 GAL. SHRUB
2. 2" LAYER OF COMPOST MULCH
3. 3" WATER BASIN
4. FINISH GRADE
5. AMENDED SOIL FOR PLANTING - SEE SOILS REPORT
6. PLANT PIT EXCAVATION
7. NUTRI-PAK FERTILIZER PACKETS. 2 PER 1 GAL., 3 PER 5 GAL., 5 PER 15 GAL.
8. ROOTBALL
9. NATIVE SUBGRADE

F SHRUB PLANTING

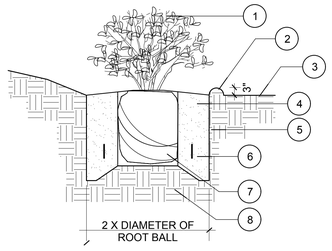

1. 1, 5, OR 15 GALLON SHRUB
2. 3" WATER BASIN
3. FINISH GRADE
4. AMENDED SOIL- SEE SOILS REPORT
5. PLANT PIT EXCAVATION
6. NUTRI-PAK FERTILIZER PACKETS. 2 PER 1 GAL., 3 PER 5 GAL., 5 PER 15 GAL.
7. ROOTBALL
8. NATIVE SUBGRADE

G SHRUB ON SLOPE

Linear Style Planting with DeepRoot Barriers

Determine the correct number of panels to be used. Depending upon the actual planting plan and the number of trees involved the length of linear barrier will vary, but as a general rule of thumb take the anticipated mature canopy diameter of the tree and add 2 feet (61cm). This will be the number of feet necessary for a Linear style planting application. (See chart below.)

A. Choose the barrier that best suits the application.

B. Dig the trench to the depth based upon the particular barrier chosen.

C. Install the barrier. When using DeepRoot Linear Barriers simply pull the appropriate number of panels out of the box (they come preassembled) and separate the joiner at the correct length. When installing DeepRoot Universal Barriers in a linear fashion you will need to join the appropriate number of panels together.

D. Next place the barrier in the trench with the vertical ribs facing toward the tree and align in a straight fashion. It is helpful to place the barrier against the hardscape. Use the hardscape as a guide and backfill against the barriers to promote a clean smooth fit to the hardscape. Be sure to keep the barrier's double top edge at least 1/2" (13mm) above grade to ensure roots do not grow over the top.

E. Plant the tree(s). The Linear style offers a more expansive rooting growth area, however adverse soil and drainage conditions may exist in the actual planting area. Take steps to ensure healthy growth of the tree at planting. Consult with a local Arborist for planting tips and recommendations.

F. If the tree(s) will be subject to maintenance work such as lawn mowing or weed trimming we strongly recommend the installation of ArborGard+ Tree Trunk Protectors which is placed around the base of young trees to protect them from damage by weed trimmers, lawn mowers and small rodents.

For additional information please consult the 16 page DeepRoot Product Selection and Installation Guidelines.

For information regarding distributors please call: 1 800 ILV ROOT (458.7668). For help with difficult drainage or other difficult installation questions please call DeepRoot Technical Support at: 1 800 ROOT TEX (766.8838).

L

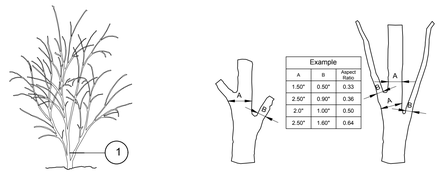

ACCEPTABLE

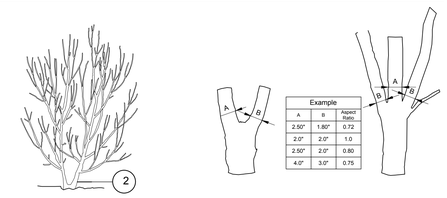

REJECTABLE

1. ASPECT RATIO TO BE LESS THAN 0.66 ON ALL BRANCH UNIONS.
   ASPECT RATIO IS THE DIAMETER OF BRANCH (A) AS MEASURED 1" ABOVE THE TOP OF THE BRANCH UNION.
   (B) DIVIDED BY THE DIAMETER OF THE TRUNK
2. ASPECT RATIO GREATER THAN 0.66

NOTE:
ANY TREE NOT MEETING THE CROWN OBSERVATIONS DETAIL MAY BE REJECTED.

URBAN TREE FOUNDATION © 2014

D MULTI BRANCH CROWN OBSERV.

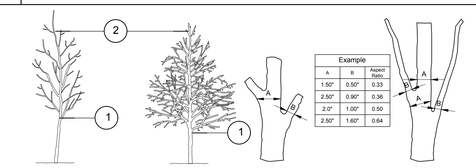

ACCEPTABLE

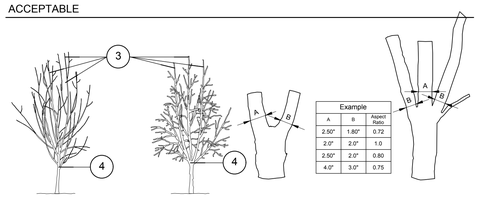

REJECTABLE

1. ASPECT RATIO TO BE LESS THAN 0.66 ON ALL BRANCH UNIONS.
   ASPECT RATIO IS THE DIAMETER OF BRANCH (A) AS MEASURED 1" ABOVE THE TOP OF THE BRANCH UNION.
   (B) DIVIDED BY THE DIAMETER OF THE TRUNK
2. 1 CENTRAL LEADER. NO CODOMINANT LEADERS
3. MULTIPLE LEADERS. SEVERAL CODOMINANT LEADERS.
4. ASPECT RATIO GREATER THAN 0.66

NOTE:
ANY TREE NOT MEETING THE CROWN OBSERVATIONS DETAIL MAY BE REJECTED.

URBAN TREE FOUNDATION © 2014

E HIGH BRANCHED CROWN OBSERV.

For a simple formula to determine the quantity of panels required for a Linear application use:
Estimated Diameter of the Tree Canopy at Maturity + 2' (61cm) = Length of Barrier per Side.

As little as one side of the tree may need barrier for root direction as there may be no hardscape elsewhere requiring protection.

For One Side of Tree

Expected Tree Canopy at Maturity	Number of Feet of Linear Barrier	Universal Barrier # Panels
12' (3.6m) Diameter	+2' (61cm) = 14' (4.2m)	7 Panels
18' (5.5m) Diameter	+2' (61cm) = 20' (6.1m)	10 Panels
24' (7.3m) Diameter	+2' (61cm) = 26' (7.9m)	13 Panels

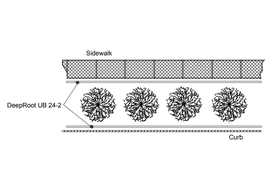

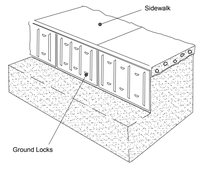

H DEEPROOT BARRIER

TO BE 24" DEEP ON ALL SIDES

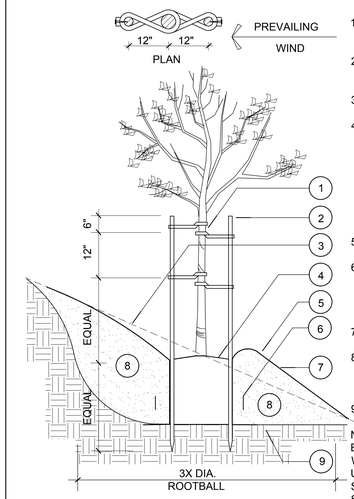

1. TWIST BRACE' BY V.I.T. CO. (619) 673-1760
2. LODGEPOLE PINE STAKE 3" X 12' LONG.
3. ORIGINAL SLOPE
4. ROOT BALL. TOP TO BE 1" ABOVE FINISH GRADE REMOVE ALL CIRCLING ROOTS FROM THE ROOTBALL AND ABOVE STRUCTURAL ROOTS SHAVE OUTER CIRCLING ROOTS A MINIMUM OF 1" DEEP INTO ROOT BALL ON ALL SIDES
5. 4"Hx8"W WATER BASIN
6. NUTRI-PAK FERTILIZER PACKETS 3 PER 5 GAL., 5 PER 15 GAL., 7 PER 24" BOX, 9 PER 36" BOX, 12 PER 48" BOX.
7. FINISH GRADE
8. BACKFILL MIX - SEE SOILS REPORT LOOSEN DIG AND TURN SOIL TO REDUCE COMPACTION
9. NATIVE SUBGRADE

NOTE: MIN. TWO TIES (TOP & BOTTOM) REQUIRED. USE THIRD TIE WHEN NECESSARY TO HOLD TREE IN UPRIGHT POSITION. TIES TO BE SECURED TO AVOID SLIPPAGE SECURE WITH WOOD SCREWS

A DBL STAKE TREE SLOPE

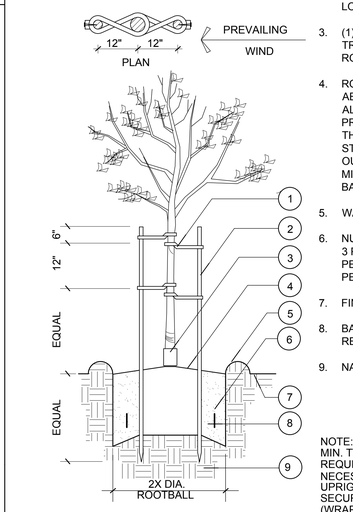

1. 'CINCH-TIE' BY V.I.T. CO. (619) 673-1760
2. LODGEPOLE PINE STAKE 3" X 12' LONG.
3. (1) 8" 'ARBOR GUARD' FOR EACH TREE IN TURF. MFG. BY DEEP ROOT CORP. (714) 898-0563
4. ROOT BALL. TOP TO BE 1" ABOVE FINISH GRADE REMOVE ALL CIRCLING ROOTS FROM PREVIOUS CONTAINERS WITHIN THE ROOTBALL AND ABOVE STRUCTURAL ROOTS SHAVE OUTER CIRCLING ROOTS A MINIMUM OF 1" DEEP INTO ROOT BALL ON ALL SIDES 3" HIGH
5. WATER BASIN
6. NUTRI-PAK FERTILIZER PACKETS 3 PER 5 GAL., 5 PER 15 GAL., 7 PER 24" BOX, 9 PER 36" BOX, 12 PER 48" BOX.
7. FINISH GRADE
8. BACKFILL MIX - SEE SOILS REPORT
9. NATIVE SUBGRADE

NOTE:
MIN. TWO TIES (TOP & BOTTOM) REQUIRED. USE THIRD TIE WHEN NECESSARY TO HOLD TREE IN UPRIGHT POSITION. TIES TO BE SECURED TO AVOID SLIPPAGE (WRAP STAKE TO FORM FIGURE EIGHT. NAIL W/ (1) WOOD SCREW THROUGH EACH TIE INTO POLE.

B DOUBLE STAKED TREE

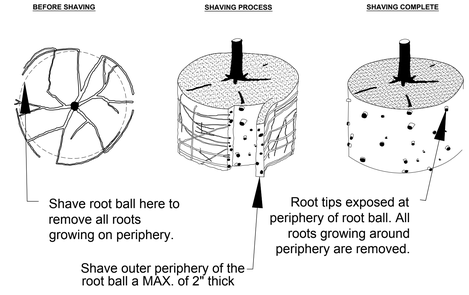

1. SHAVING TO BE CONDUCTED USING A SHARP BLADE OR HAND SAW, ELIMINATING NO MORE THAN NEEDED TO REMOVE ALL ROOTS ON THE PERIPHERY OF THE ROOTBALL.
2. SHAVING CAN BE PERFORMED JUST PRIOR TO PLANTING OR AFTER PLACING IN THE HOLE.

URBAN TREE FOUNDATION © 2014

C ROOT BALL SHAVING - CONTAINER

DSA STAMP

STUDIO W ARCHITECTS
Studio W Architects
1930 H Street
Sacramento, California 95811
[T] 916.254.5600
www.StudioW-Architects.com

KDA LANDSCAPE ARCHITECTS
325 7th Avenue, Unit 214
San Diego, CA 92101-7176
t 619.840.5174
website www.kda-landscapearchitects.com

ARCHITECT	LANDSCAPE ARCHITECT
LICENSED ARCHITECT BRIAN P. WHITAKER No. C 30345 Ren. 9/30/25 STATE OF CALIFORNIA	REGISTERED LANDSCAPE ARCHITECT KAMRAN JOSEPH KAMRANI No. 5491 5/31/25 STATE OF CALIFORNIA

DATE SIGNED: 06/24/2024

GENERAL NOTES
1. This sheet is part of a set and is not to be used alone.
2. This sheet is not to be used for construction unless the architect's stamp and signature appear on the drawings and the status box indicated drawings have been released for construction.
3. These plans and prints thereof, as instruments of service, are owned by the architect and are for use on this project only. Reproduction and/or distribution without the prior written consent of the architect is forbidden.
4. Copyright Studio W Associates, Inc. 2022.

REVISION HISTORY

NO.	REMARKS	DATE

DRAWING STATUS

	DATE
○ DSA PLAN CHECK	
● DSA BACK CHECK	06/24/2024
○ BIDDING	
○ CONSTRUCTION	

KEY PLAN

BUENA PARK USD
6885 ORANGETHORPE AVE
BUENA PARK, CA 90620

SCHEMATIC DESIGN

CARL E. GILBERT ELEMENTARY SCHOOL
TK/PK CLASSROOMS & EARLY LEARNING BUILDING
7255 8TH STREET, BUENA PARK, CA 90621

PLANTING DETAILS/ DSA EXHIBITS

Date	Project Number
06/24/2024	23076
Application Number	Drawing Number
XX-XXXXXX	L3.1
Drawn / Checked	
Author / Checker	

C:\AKDA PROJECTS\24000 PROJECTS\24001 GILBERT ES TK-PK EXPANSION\AUTOCAD\CD'S\24001 PD.DWG

USASHADE
& Fabric Structures, Inc.

FABRIC SHADE STRUCTURE

DSA P.C. 04-121917

GENERAL NOTES:

1. ALL WORK SHALL CONFORM TO THE 2022 EDITION OF THE TITLE 24, CALIFORNIA CODE OF REGULATIONS (CCR).
2. ALL WORK SHALL BE IN COMPLIANCE WITH CFC CHAPTER 33 - FIRE SAFETY DURING CONSTRUCTION AND DEMOLITION.
3. SEE INDIVIDUAL STRUCTURAL DRAWINGS FOR SPECIFIC DESIGN NOTES AND LOADING.
4. PRIOR TO SUBMITTAL ARCHITECT OF RECORD SHALL IDENTIFY PC MODEL(S) SELECTED BY END USER ON SHEETS T-1.0 AND T-2.0 BY CHECKING THE APPROPRIATE BOX ASSOCIATED WITH SELECTED PC MODEL(S). EXCLUDE SHEETS FOR MODELS NOT SELECTED.

PLANS FOR SPECIFIC APPLICATION SHALL INCLUDE THE FOLLOWING:

1. COMPLETE SCOPE OF WORK INCLUDING THE SHADE STRUCTURE MODEL NUMBER, P.C. NUMBER, AND SPECIFIC SIZE OF THE SHADE STRUCTURE(S).
2. PROVIDE A CODE ANALYSIS, INCLUDING ACTUAL SHADE STRUCTURE AREA (SQ. FT.), OCCUPANCY TYPE (A-3), AND TYPE OF CONSTRUCTIONS (V-B). INDICATE OCCUPANT LOAD FACTOR (2022 CBC, SECTION 1004).
3. ACTUAL DIMENSIONS OF SHADE STRUCTURES.
4. DIMENSIONS FROM ADJACENT STRUCTURES AND PROXIMITY OF ASSUMED OR ACTUAL PROPERTY LINES.
5. INDICATE LOCATIONS OF FIRE EXTINGUISHERS WITHIN 75 FEET.
6. SHOW LOCATION OF AUDIBLE FIRE ALARM.
7. ALL SADDLES, CLAMPS AND FITTINGS SHALL CONFORM TO THE GUIDELINES AS SPECIFIED IN APPENDICES "A, B, & C", RESPECTIVELY, IN ASCE/SEI 19-16, "STRUCTURAL APPLICATIONS OF STEEL CABLES FOR BUILDINGS."
8. ARCHITECTS OF RECORD TO DETERMINE IF SPECIFIC SITE IS LOCATED IN A MAPPED GEOLOGIC HAZARD ZONE. GEOHAZARD REPORTS REQUIREMENTS SHALL COMPLY WITH DSA IR A-4.
9. ARCHITECTS OF RECORD TO DETERMINE IF SPECIFIC SITE IS LOCATED IN A MAPPED FIRE HAZARD SEVERITY ZONE OR WILDLAND INTERFACE AREA.

FOR SNOW LOAD MODELS ONLY:

10. INDICATE DIMENSIONS FROM THE ROOF TO THE HIGHER STRUCTURE OR TERRAIN FEATURE. MINIMUM DIMENSION OF 20'-0" FOR SNOW LOAD MODEL (ASCE 7-16).
11. ACTUAL SITE ELEVATION (FEET) TO DETERMINE IF THE SITE OCCURS AT OR BELOW THE UPPER ELEVATION LIMIT FOR THE GROUND SNOW LOAD SHOWN IN ASCE 7-16.

P.C. NOTES

PLANS FOR SPECIFIC APPLICATION SHALL INCLUDE THE FOLLOWING:

LIST OF APPLICABLE CODES:

- 2022 CALIFORNIA ADMINISTRATIVE CODE (CAC), PART 1, TITLE 24 C.C.R.
- 2022 CALIFORNIA BUILDING CODE (CBC), PART 2, TITLE 24 C.C.R.
- 2022 CALIFORNIA ELECTRICAL CODE (CEC) , PART 3, TITLE 24 C.C.R.
- 2022 CALIFORNIA MECHANICAL CODE (CMC), PART 4, TITLE 24 C.C.R.
- 2022 CALIFORNIA PLUMBING CODE (CPC), PART 5, TITLE 24 C.C.R.
- 2022 CALIFORNIA ENERGY CODE (CEC), PART 6, TITLE 24 C.C.R.
- 2022 CALIFORNIA FIRE CODE, PART 9, TITLE 24 C.C.R.
- 2022 CALIFORNIA EXISTING BUILDING CODE (CEBC), PART 10, TITLE 24 C.C.R.
- 2022 CALIFORNIA GREEN BUILDING STANDARDS CODE (CALGREEN), PART 11, TITLE 24 C.C.R.
- 2022 CALIFORNIA REFERENCED STANDARDS CODE, PART 12, TITLE 24 C.C.R.
- TITLE 19 C.C.R., PUBLIC SAFETY, STATE FIRE MARSHAL REGULATIONS

APPLICABLE STANDARDS:

FOR A LIST OF APPLICABLE STANDARDS, INCLUDING CALIFORNIA AMENDMENTS TO THE NFPA STANDARDS, REFER TO CBC CHAPTER 35 AND CFC CHAPTER 80.

APPLICABLE CODES

SITE SPECIFIC PARAMETERS

INSTRUCTIONS: DESIGN PROFESSIONAL SHALL CHECK THE APPROPRIATE SELECTION BOXES BELOW AND ENTER THE DESIGN PARAMETERS APPLICABLE TO THE SPECIFIC PROJECT SITE.

SOURCE:

- DESIGN BASED ON SITE CLASS D
  - NO GEOTECHNICAL INVESTIGATION REQUIRED
  - PER 1.4
- X DESIGN BASED ON SITE CLASS DETERMINED PER CHAPTER 20 OF ASCE 7-16
  - GEOTECHNICAL INVESTIGATION PROVIDED
  - SITE CLASS: ____ (B, C, D, E, OR F) — X D
  - S_S = 1.531 — F_a = 1.0 (FROM ASCE 7-16 TABLE 11.4-1)
- DESIGN BASED ON SITE CLASS SPECIFIC GROUND MOTION HAZARD ANALYSIS
  - PER CHAPTER 21 OF ASCE 7-16
  - SHORT-PERIOD DESIGN SPECTRAL RESPONSE PARAMETER, S_{DS}, SHALL BE:
  - NOT LESS THAN 90% OF THE VALUE FROM SITE-SPECIFIC GEOTECHNICAL INVESTIGATION.
  - DSA APPROVAL REQUIRED
  - NOT ELIGIBLE FOR OPEN VIEW
  - SITE CLASS: ____ (C, D, OR E)
  - S_{DS} = 1.021 (2/3 OF S_S FROM ASCE 7-16 TABLE 11.4-1)
  - K_D = 0.1 USED IN DESIGN
  - SEISMIC DESIGN CATEGORY: X D ____ E

SHEET T-1.0

CODE ANALYSIS			
OCCUPANCY GROUP	OCCUPANT LOAD FACTOR	TOTAL OCCUPANT LOAD	SHADE STRUCTURE AREA (SF)

SITE SPECIFIC PARAMETERS

MANUFACTURER:

USA SHADE & FABRIC STRUCTURES
2580 ESTERS BOUVLEVARD, SUITE 100
DFW AIRPORT, TEXAS 75261
PH. 800-996-5005
W. www.usa-shade.com

ARCHITECT:

HIGGINSON ARCHITECTS, INC.
DAVID HIGGINSON, AIA, PRINCIPAL ARCHITECT
34247 YUCAIPA BOULEVARD, SUITE D
YUCAIPA, CALIFORNIA 92399
PH. 909-496-0058
E. dhigginson@higginsonarchitects.com
W. www.higginsonarchitects.com

LICENSED ARCHITECT — C19168 — 10-31-25 — STATE OF CALIFORNIA

STRUCTURAL ENGINEER:

MARK LOWE, S.E.
c/o USA SHADE AND FABRIC STRUCTURES

REGISTERED PROFESSIONAL ENGINEER — Mark Lowe — No. 3693 — STRUCTURAL — STATE OF CALIFORNIA

ARCHITECT / ENGINEER

✓	SHEET NO.	SHEET DESCRIPTION	UNIT STRUCTURE TYPE	MAX. UNIT SIZE	UNIT MODEL NUMBER
X	T-1.0	TITLE SHEET			
X	T-2.0	UNIT SELECTION			
X	T-3.0	T&I FORMS			
	1.1-1000	PRODUCT INFORMATION	HIP	20' x 30' x 15'	DSA4012030-22
	1.2-2000	REACTIONS	HIP	20' x 30' x 15'	DSA4012030-22
	2.1-1000	PRODUCT INFORMATION	HIP	30' x 30' x 15'	DSA4013030-22
	2.2-2000	REACTIONS	HIP	30' x 30' x 15'	DSA4013030-22
	3.1-1000	PRODUCT INFORMATION	HIP	30' x 40' x 15'	DSA4013040-22
	3.2-2000	REACTIONS	HIP	30' x 40' x 15'	DSA4013040-22
	4.1-1000	PRODUCT INFORMATION	HIP	40' x 40' x 15'	DSA4014040-22
	4.2-2000	REACTIONS	HIP	40' x 40' x 15'	DSA4014040-22
	5.1-1000	PRODUCT INFORMATION	HIP	20' x 30' x 12'	DSA401203012-22
	5.2-2000	REACTIONS	HIP	20' x 30' x 12'	DSA401203012-22
	6.1-1000	PRODUCT INFORMATION	HIP	30' x 30' x 12'	DSA401303012-22
	6.2-2000	REACTIONS	HIP	30' x 30' x 12'	DSA401303012-22
	7.1-1000	PRODUCT INFORMATION	HIP	30' x 40' x 12'	DSA401304012-22
	7.2-2000	REACTIONS	HIP	30' x 40' x 12'	DSA401304012-22
	8.1-1000	PRODUCT INFORMATION	HIP (20 psf SNOW LOAD)	20' x 30' x 15'	DSA401S2030-22
	8.2-2000	REACTIONS	HIP (20 psf SNOW LOAD)	20' x 30' x 15'	DSA401S2030-22
	9.1-1000	PRODUCT INFORMATION	JOINED HIPS	VARIES	DSA401J-22
	9.2-1001	DETAILS	JOINED HIPS	VARIES	DSA401J-22
	9.3-2000	REACTIONS	JOINED HIPS	VARIES	DSA401J-22
	10.1-1000	PRODUCT INFORMATION	QUAD JOINED HIPS	VARIES	DSA401Q-22
	10.2-1001	DETAILS	QUAD JOINED HIPS	VARIES	DSA401Q-22
	10.3-2000	REACTIONS	QUAD JOINED HIPS	VARIES	DSA401Q-22
	11.1-1000	PRODUCT INFORMATION	FULL CANTILEVER HIP SINGLE	20' x 30' x 15'	DSA2022030-22
	11.2-2000	REACTIONS	FULL CANTILEVER HIP SINGLE	20' x 30' x 15'	DSA2022030-22
	12.1-1000	PRODUCT INFORMATION	FULL CANTILEVER HIP JOINED	20' x 200' x 15'	DSA3022060-22
	12.2-2000	REACTIONS	FULL CANTILEVER HIP JOINED	20' x 200' x 15'	DSA3022060-22
	13.1-1000	PRODUCT INFORMATION	SINGLE POST PYRAMID	14' x 14' x 12'	DSA1031414-22
	13.2-2000	REACTIONS	SINGLE POST PYRAMID	14' x 14' x 12'	DSA1031414-22
	14.1-1000	PRODUCT INFORMATION	SINGLE POST PYRAMID	20' x 20' x 12'	DSA1032020-22
	14.2-2000	REACTIONS	SINGLE POST PYRAMID	20' x 20' x 12'	DSA1032020-22
	15.1-1000	PRODUCT INFORMATION	SINGLE POST PYRAMID CANTILEVER	14' x 14' x 12'	DSA1241414-22
	15.2-2000	REACTIONS	SINGLE POST PYRAMID CANTILEVER	14' x 14' x 12'	DSA1241414-22
	16.1-1000	PRODUCT INFORMATION	SINGLE POST PYRAMID CANTILEVER	20' x 20' x 12'	DSA1242020-22
	16.2-2000	REACTIONS	SINGLE POST PYRAMID CANTILEVER	20' x 20' x 12'	DSA1242020-22
	17.1-1000	PRODUCT INFORMATION	MARINER PEAK	30' x 30' x 15'	DSA4073030-22
	17.2-2000	REACTIONS	MARINER PEAK	30' x 30' x 15'	DSA4073030-22
	18.1-1000	PRODUCT INFORMATION	MARINER PEAK	30' x 40' x 18'	DSA4073040-22
	18.2-2000	REACTIONS	MARINER PEAK	30' x 40' x 18'	DSA4073040-22
	19.1-1000	PRODUCT INFORMATION	MARINER PEAK JOINED	30' x 133' x 15'	DSA407J3060-22
	19.2-2000	REACTIONS	MARINER PEAK JOINED	30' x 133' x 15'	DSA407J3060-22
	20.1-1000	PRODUCT INFORMATION	MARINER PEAK QUAD	60' x 60' x 15'	DSA407Q6060-22
	20.2-2000	REACTIONS	MARINER PEAK QUAD	60' x 60' x 15'	DSA407Q6060-22
	21.1-1000	PRODUCT INFORMATION	TRI TRUSS HIP SINGLE WIDE	20' x 30' x 15'	DSA2062030-22
	21.2-2000	REACTIONS	TRI TRUSS HIP SINGLE WIDE	20' x 30' x 15'	DSA2062030-22
	22.1-1000	PRODUCT INFORMATION	TRI TRUSS HIP JOINED	20' x 200' x 15'	DSA3052060-22
	22.2-2000	REACTIONS	TRI TRUSS HIP JOINED	20' x 200' x 15'	DSA3052060-22
	23.1-1000	PRODUCT INFORMATION	TENSION SAILS THREE POINT	30' x 133' x 15'	DSA30730-22
	23.2-2000	REACTIONS	TENSION SAILS THREE POINT	30' x 133' x 15'	DSA30730-22
	24.1-1000	PRODUCT INFORMATION	TENSIONS SAILS FOUR POINT	20' x 200' x 15'	DSA4182020-22
	24.2-2000	REACTIONS	TENSIONS SAILS FOUR POINT	20' x 200' x 15'	DSA4182020-22
X	25.1-1000	PRODUCT INFORMATION	TENSIONS SAILS FOUR POINT	30' x 133' x 15'	DSA4183030-22
X	25.2-2000	REACTIONS	TENSIONS SAILS FOUR POINT	30' x 133' x 15'	DSA4183030-22
	26.1-1000	PRODUCT INFORMATION	TRIANGLE	25' x 25' x 15'	DSA30125-22
	26.2-2000	REACTIONS	TRIANGLE	25' x 25' x 15'	DSA30125-22
	27.1-1000	PRODUCT INFORMATION	TRIANGLE	40' x 40' x 15'	DSA30140-22
	27.2-2000	REACTIONS	TRIANGLE	40' x 40' x 15'	DSA30140-22
	28.1-1000	PRODUCT INFORMATION	HEXAGON	Ø40' X 15'	DSA60340-22
	28.2-2000	REACTIONS	HEXAGON	Ø40' X 15'	DSA60340-22
	29.1-1000	PRODUCT INFORMATION	HEXAGON	Ø60' X 15'	DSA60360-22
	29.2-2000	REACTIONS	HEXAGON	Ø60' X 15'	DSA60360-22

TOTAL SHEET COUNT: 63 SHEETS

SHEET INDEX

THESE PLANS AND SPECIFICATIONS ARE THE PROPERTY OF USA SHADE AND FABRIC STRUCTURES AND SHALL NOT BE REPRODUCED WITHOUT THEIR WRITTEN

USASHADE & Fabric Structures®
CORPORATE HEADQUARTERS
2580 ESTERS BLVD. SUITE 100
DFW AIRPORT, TX, 75261
800-966-5005

CERTIFICATIONS:
IAS CERTIFICATION No: FA-429
CLARK COUNTY MANUFACTURER CERTIFICATION NUMBER (NEVADA): 355

CUSTOMER:
Buena Park Elementary S.D.

PROJECT NAME:
Gilbert Elementary

LOCATION:
7255 8th Street
Buena Park, CA 90621

MODEL NUMBER:

APPROVED
DIV. OF THE STATE ARCHITECT
APP: 04-121917 PC
REVIEWED FOR:
SS [Z] FLS [Z] ACS [Z] CG [ ]
DATE: 10/30/2023

STRUCTURE TYPE:

SCALE : VARIES

DRAWING SIZE:
D

PRE-CHECK (PC) DOCUMENT
Code : 2022 CBC
A separate project application for construction is required.

Eng. By :	DWH	2/14/23
Design By :	DWH	2/14/23
Approved By :	DWH	2/14/23

DRAWING DESCRIPTION:

DWG.
TITLE SHEET

SHEET
T-1.0

REV.

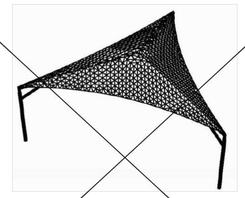

STRUCTURE MODEL:	DSA30125-22	SEE SHEET 26.1-1000
MAX. SIZE:	25' x 25' x 15'	
MAX. AREA:	271 SQ. FT.	
MAX. OCCUPANCY:	18 PERSONS	
STRUCTURE MODEL:	DSA30140-22	SEE SHEET 27.1-1000
MAX. SIZE:	40' x 40' x 15'	
MAX. AREA:	692 SQ. FT.	
MAX. OCCUPANCY:	46 PERSONS	

FOR DSA 103 TESTING & INSPECTIONS SAMPLE, SEE PC T-3.0 & PC T-4.0

TRIANGLE

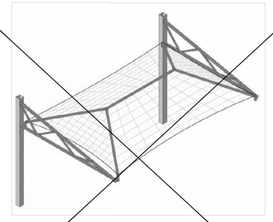

STRUCTURE MODEL:	DSA2062030-22	SEE SHEET 21.1-1000
MAX. SIZE:	20' x 30' x 15'	
MAX. AREA:	600 SQ. FT.	
MAX. OCCUPANCY:	40 PERSONS	

FOR DSA 103 TESTING & INSPECTIONS SAMPLE, SEE PC T-3.0 & PC T-4.0

TRI-TRUSS HIP SINGLE WIDE

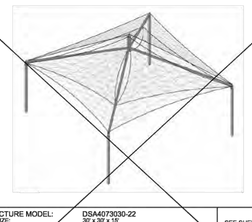

STRUCTURE MODEL:	DSA4073030-22	SEE SHEET 17.1-1000
MAX. SIZE:	30' x 30' x 15'	
MAX. AREA:	600 SQ. FT.	
MAX. OCCUPANCY:	40 PERSONS	
STRUCTURE MODEL:	DSA4073040-22	SEE SHEET 18.1-1000
MAX. SIZE:	30' x 40' x 18'	
MAX. AREA:	1,200 SQ. FT.	
MAX. OCCUPANCY:	80 PERSONS	

FOR DSA 103 TESTING & INSPECTIONS SAMPLE, SEE PC T-3.0 & PC T-4.0

MARINER PEAK

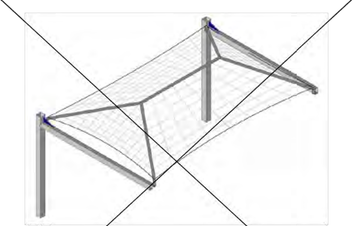

STRUCTURE MODEL:	DSA2022030-22	SEE SHEET 11.1-1000
MAX. SIZE:	20' x 30' x 15'	
MAX. AREA:	600 SQ. FT.	
MAX. OCCUPANCY:	40 PERSONS	

FOR DSA 103 TESTING & INSPECTIONS SAMPLE, SEE PC T-3.0 & PC T-4.0

FULL CANTILEVER HIP SINGLE

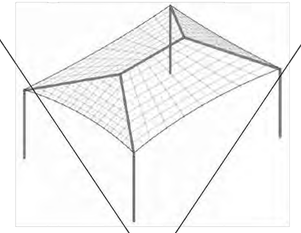

STRUCTURE MODEL:	DSA4012030-22	SEE SHEET 1.1-1000
MAX. SIZE:	20' x 30' x 15'	
MAX. AREA:	600 SQ. FT.	
MAX. OCCUPANCY:	40 PERSONS	
STRUCTURE MODEL:	DSA4013030-22	SEE SHEET 2.1-1000
MAX. SIZE:	30' x 30' x 15'	
MAX. AREA:	900 SQ. FT.	
MAX. OCCUPANCY:	60 PERSONS	
STRUCTURE MODEL:	DSA4013040-22	SEE SHEET 3.1-1000
MAX. SIZE:	30' x 40' x 15'	
MAX. AREA:	1,200 SQ. FT.	
MAX. OCCUPANCY:	80 PERSONS	
STRUCTURE MODEL:	DSA4012030-12	SEE SHEET 4.1-1000
MAX. SIZE:	20' x 30' x 12'	
MAX. AREA:	600 SQ. FT.	
MAX. OCCUPANCY:	40 PERSONS	
STRUCTURE MODEL:	DSA4013030-22	SEE SHEET 5.1-1000
MAX. SIZE:	30' x 30' x 12'	
MAX. AREA:	900 SQ. FT.	
MAX. OCCUPANCY:	60 PERSONS	
STRUCTURE MODEL:	DSA4013040-22	SEE SHEET 6.1-1000
MAX. SIZE:	30' x 40' x 12'	
MAX. AREA:	1,200 SQ. FT.	
MAX. OCCUPANCY:	80 PERSONS	
STRUCTURE MODEL:	DSA4014040-22	SEE SHEET 7.1-1000
MAX. SIZE:	40' x 40' x 12'	
MAX. AREA:	1,600 SQ. FT.	
MAX. OCCUPANCY:	106 PERSONS	
STRUCTURE MODEL:	DSA4012030-22 (20 psf SNOW LOAD)	SEE SHEET 8.1-1000
MAX. SIZE:	20' x 30' x 15'	
MAX. AREA:	600 SQ. FT.	
MAX. OCCUPANCY:	40 PERSONS	

FOR DSA 103 TESTING & INSPECTIONS SAMPLE, SEE PC T-3.0 & PC T-4.0

HIP

STRUCTURE MODEL:	DSA60340-22	SEE SHEET 28.1-1000
MAX. SIZE:	240' x 15'	
MAX. AREA:	1,040 SQ. FT.	
MAX. OCCUPANCY:	69 PERSONS	
STRUCTURE MODEL:	DSA60360-22	SEE SHEET 29.1-1000
MAX. SIZE:	260' x 15'	
MAX. AREA:	1,318 SQ. FT.	
MAX. OCCUPANCY:	156 PERSONS	

FOR DSA 103 TESTING & INSPECTIONS SAMPLE, SEE PC T-3.0 & PC T-4.0

HEXAGON

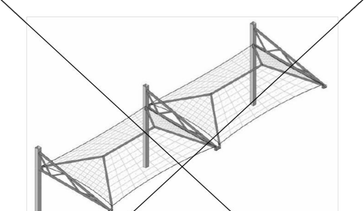

STRUCTURE MODEL:	DSA3052060-22	SEE SHEET 22.1-1000
MAX. SIZE:	20' x 200' x 15'	
MAX. AREA:	4,000 SQ. FT.	
MAX. OCCUPANCY:	266 PERSONS	

FOR DSA 103 TESTING & INSPECTIONS SAMPLE, SEE PC T-3.0 & PC T-4.0

TRI-TRUSS HIP JOINED

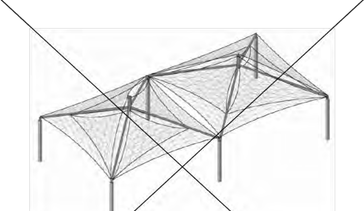

STRUCTURE MODEL:	DSA407J3060-22	SEE SHEET 19.1-1000
MAX. SIZE:	30' x 133' x 15'	
MAX. AREA:	3,990 SQ. FT.	
MAX. OCCUPANCY:	266 PERSONS	

FOR DSA 103 TESTING & INSPECTIONS SAMPLE, SEE PC T-3.0 & PC T-4.0

MARINER PEAK JOINED

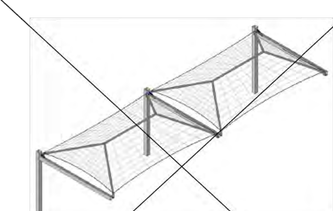

STRUCTURE MODEL:	DSA3022060-22	SEE SHEET 12.1-1000
MAX. SIZE:	20' x 200' x 15'	
MAX. AREA:	4,000 SQ. FT.	
MAX. OCCUPANCY:	266 PERSONS	

FOR DSA 103 TESTING & INSPECTIONS SAMPLE, SEE PC T-3.0 & PC T-4.0

FULL CANTILEVER HIP JOINED

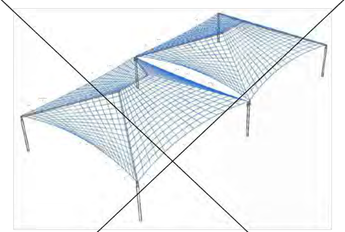

STRUCTURE MODEL:	DSA401J-22	SEE SHEET 9.1-1000
MAX. SIZE:	VARIES, SEE JOINED HIP UNIT SHEET	
MAX. AREA:	VARIES	
MAX. OCCUPANCY:	VARIES	

FOR DSA 103 TESTING & INSPECTIONS SAMPLE, SEE PC T-3.0 & PC T-4.0

JOINED HIP

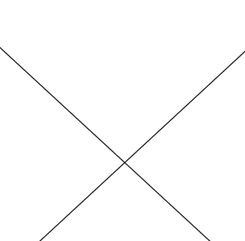

STRUCTURE MODEL:		
MAX. SIZE:		
MAX. AREA:		
MAX. OCCUPANCY:		

FOR DSA 103 TESTING & INSPECTIONS SAMPLE, SEE PC T-3.0 & PC T-4.0

NOT USED

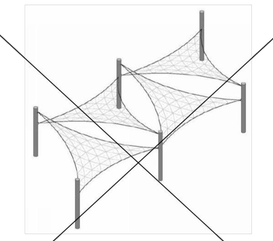

STRUCTURE MODEL:	DSA30730-22	SEE SHEET 23.1-1000
MAX. SIZE:	30' x 133' x 15'	
MAX. AREA:	3,990 SQ. FT.	
MAX. OCCUPANCY:	266 PERSONS	

FOR DSA 103 TESTING & INSPECTIONS SAMPLE, SEE PC T-3.0 & PC T-4.0

TENSIONS SAILS THREE-POINT

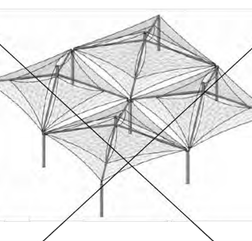

STRUCTURE MODEL:	DSA407Q6060-22	SEE SHEET 20.1-1000
MAX. SIZE:	60' x 60' x 15'	
MAX. AREA:	3,600 SQ. FT.	
MAX. OCCUPANCY:	240 PERSONS	

FOR DSA 103 TESTING & INSPECTIONS SAMPLE, SEE PC T-3.0 & PC T-4.0

MARINER PEAK QUAD

STRUCTURE MODEL:	DSA1031414-22	SEE SHEET 13.1-1000
MAX. SIZE:	14' x 14' x 12'	
MAX. AREA:	196 SQ. FT.	
MAX. OCCUPANCY:	13 PERSONS	
STRUCTURE MODEL:	DSA1032020-22	SEE SHEET 14.1-1000
MAX. SIZE:	20' x 20' x 12'	
MAX. AREA:	400 SQ. FT.	
MAX. OCCUPANCY:	26 PERSONS	

FOR DSA 103 TESTING & INSPECTIONS SAMPLE, SEE PC T-3.0 & PC T-4.0

SINGLE POST PYRAMID

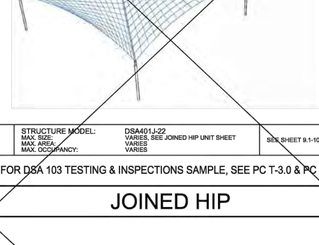

STRUCTURE MODEL:	DSA401Q-22	SEE SHEET 10.1-1000
MAX. SIZE:	VARIES, SEE QUAD HIP UNIT SHEET	
MAX. AREA:	VARIES	
MAX. OCCUPANCY:	VARIES	

FOR DSA 103 TESTING & INSPECTIONS SAMPLE, SEE PC T-3.0 & PC T-4.0

QUAD HIP

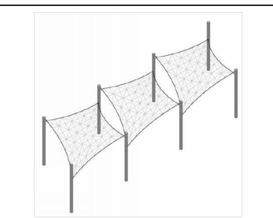

STRUCTURE MODEL:	DSA4182020-22	SEE SHEET 24.1-1000
MAX. SIZE:	20' x 20' x 15'	
MAX. AREA:	400 SQ. FT.	
MAX. OCCUPANCY:	26 PERSONS	
X STRUCTURE MODEL:	DSA4183030-22	SEE SHEET 25.1-1000
MAX. SIZE:	30' x 133' x 15'	
MAX. AREA:	3,990 SQ. FT.	
MAX. OCCUPANCY:	266 PERSONS	

FOR DSA 103 TESTING & INSPECTIONS SAMPLE, SEE PC T-3.0 & PC T-4.0

NOT USED

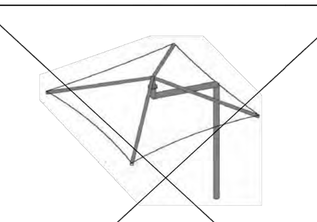

STRUCTURE MODEL:	DSA1241414-22	SEE SHEET 15.1-1000
MAX. SIZE:	14' x 14' x 12'	
MAX. AREA:	196 SQ. FT.	
MAX. OCCUPANCY:	13 PERSONS	
STRUCTURE MODEL:	DSA1242020-22	SEE SHEET 16.1-1000
MAX. SIZE:	20' x 20' x 12'	
MAX. AREA:	400 SQ. FT.	
MAX. OCCUPANCY:	26 PERSONS	

FOR DSA 103 TESTING & INSPECTIONS SAMPLE, SEE PC T-3.0 & PC T-4.0

SINGLE POST PYRAMID CANTILEVER

NOT USED

TENSIONS SAILS FOUR-POINT

THESE PLANS AND SPECIFICATIONS ARE THE PROPERTY OF USA SHADE AND FABRIC STRUCTURES AND SHALL NOT BE REPRODUCED WITHOUT THEIR WRITTEN

USASHADE & Fabric Structures

CORPORATE HEADQUARTERS
2580 ESTERS BLVD, SUITE 100
DFW AIRPORT, TX, 75261
800-966-5005

CERTIFICATIONS:

IAS CERTIFICATION No: FA-428

CLARK COUNTY MANUFACTURER CERTIFICATION NUMBER (NEVADA): 355

CUSTOMER:

Buena Park Elementary S.D.

PROJECT NAME:

Gilbert Elementary

LOCATION:

7255 8th Street
Buena Park, CA 90621

MODEL NUMBER:

APPROVED
DIV. OF THE STATE ARCHITECT
APP: 04-121917 PC
REVIEWED FOR
SS ☑ FLS ☑ ACS ☑ CG ☐
DATE: 10/30/2023

STRUCTURE TYPE:

SCALE : VARIES

DRAWING SIZE:
D

PRE-CHECK (PC) DOCUMENT
Code : 2022 CBC
A separate project application for construction is required.

Eng. By :	DWH	2/14/23
Design By :	DWH	2/14/23
Approved By :	DWH	2/14/23

DRAWING DESCRIPTION:

DWG.
UNIT SELECTION

SHEET
T-2.0

REV.

REGISTERED PROFESSIONAL ENGINEER — No. 3693 — STRUCTURAL — STATE OF CALIFORNIA

10/18/2023

LICENSED ARCHITECT — DAVID HIGGINBOTHAM — C19168 — 10-31-25 RENEWAL DATE — STATE OF CALIFORNIA

DSA 103-22: LISTING OF STRUCTURAL TESTS & SPECIAL INSPECTIONS, 2022 CBC

Application Number: 04-121917
DSA File Number:
School Name: PC FABRIC SHADE STRUCTURES
Increment Number:
School District: USA SHADE AND FABRIC STRUCTURES
Date Created: 2023-02-15 15:23:09

2022 CBC

IMPORTANT: This form is only a summary list of structural tests and some of the special inspections required for the project. Generally, the structural tests and special inspections noted on this form are those that will be performed by the Geotechnical Engineer of Record, Laboratory of Record, or Special Inspector. The actual complete test and inspection program must be performed as detailed on the DSA approved documents. The appendix at the bottom of this form identifies work NOT subject to DSA requirements for special inspection or structural testing. The project inspector is responsible for providing inspection of all facets of construction, including but not limited to, special inspections not listed on this form such as structural wood framing, high-load wood diaphragms, cold-formed steel framing, anchorage of non-structural components, etc., per Title 24, Part 2, Chapter 17A (2022 CBC).

****NOTE:** Undefined section and table references found in this document are from the CBC, or California Building Code.

KEY TO COLUMNS

1. TYPE	2. PERFORMED BY
Continuous – Indicates that a continuous special inspection is required	**GE (Geotechnical Engineer)** – Indicates that the special inspection shall be performed by a registered geotechnical engineer or his or her authorized representative.
Periodic – Indicates that a periodic special inspection is required	**LOR (Laboratory of Record)** – Indicates that the test or special inspection shall be performed by a testing laboratory accepted in the DSA Laboratory Evaluation and Acceptance (LEA) Program. See CAC Section 4-335.
Test – Indicates that a test is required	**PI (Project Inspector)** – Indicates that the special inspection may be performed by a project inspector when specifically approved by DSA.
	SI (Special Inspection) – Indicates that the special inspection shall be performed by an appropriately qualified/approved special inspector.

DSA 103-22: LISTING OF STRUCTURAL TESTS & SPECIAL INSPECTIONS (CONCRETE), 2022 CBC

Table 1705A.3; ACI 318-19 Sections 26.12 & 26.13
Application Number: 04-121917
DSA File Number:
School Name: PC FABRIC SHADE STRUCTURES
Increment Number:
School District: USA SHADE AND FABRIC STRUCTURES
Date Created: 2023-02-15 15:23:09

	C1. CAST-IN-PLACE CONCRETE			
	Test or Special Inspection	**Type**	**Performed By**	**Code References and Notes**
☑	**a.** Verify use of required design mix.	**Periodic**	**SI**	**Table 1705A.3 Item 5, 1910A.1.**
☑	**b.** Identify, sample, and test reinforcing steel.	**Test**	**LOR**	**1910A.2;** ACI 318-19 Ch.20 and Section 26.6.1.2; DSA IR 17-10. (See Appendix (end of this form) for exemptions.)
☑	**c.** During concrete placement, fabricate specimens for strength tests, perform slump and air content tests, and determine the temperature of the concrete.	**Test**	**LOR**	**Table 1705A.3 Item 6,** ACI 318-19 Sections 26.5 & 26.12.
☑	**d.** Test concrete (f'c).	**Test**	**LOR**	**1905A.1.17;** ACI 318-19 Section 26.12.
☑	**e.** Batch plant inspection: **Eliminated**	**See Notes**	**SI**	Default of **'Continuous'** per **1705A.3.3.** If approved by DSA, batch plant inspection may be reduced to **'Periodic'** subject to requirements in Section **1705A.3.3.** 1, or eliminated per **1705A3.3.2.** See IR 17-13. (See Appendix (end of this form) for exemptions.)
☐	**f.** Welding of reinforcing steel.	Provide special inspection per STEEL, Category S/A4(d) & (e) and/or S/A5(g) & (h) below.		

	C2. PRESTRESSED / POST-TENSIONED CONCRETE (IN ADDITION TO SECTION C1):			
	Test or Special Inspection	**Type**	**Performed By**	**Code References and Notes**
☐	**a.** Sample and test prestressing tendons and anchorages.	**Test**	**LOR**	**1705A.3.4, 1910A.3**
☐	**b.** Inspect placement of prestressing tendons.	**Periodic**	**SI**	**1705A.3.4, Table 1705A.3 Items 1 & 9.**

DSA 103-22: LISTING OF STRUCTURAL TESTS & SPECIAL INSPECTIONS (STEEL AND ALUMNINUM), 2022 CBC

1705A.2.1, Table 1705A.2.1; AISC 303-16, AISC 341-16, AISC 358-16, AISC 360-16; AISI S100-20; RCSC 2016; AWS D1.1, AWS D1.2, AWS D1.3, AWS D1.4, AWS D1.8
Application Number: 04-121917
DSA File Number:
School Name: PC FABRIC SHADE STRUCTURES
Increment Number:
School District: USA SHADE AND FABRIC STRUCTURES
Date Created: 2023-02-15 15:23:09

	S/A3. WELDING:			
	Test or Special Inspection	**Type**	**Performed By**	**Code References and Notes**
☑	**a.** Verify weld filler material identification markings per AWS designation listed on the DSA-approved documents and the WPS.	**Periodic**	**SI**	**1705A.2.5, Table 1705A.2.1 Items 4 & 5;** AWS D1.1 and AWS D1.8 for structural steel; AWS D1.2 for Aluminum; AWS D1.3 for cold-formed steel; AWS D1.4 for reinforcing steel; DSA IR 17-3.
☑	**b.** Verify weld filler material manufacturer's certificate of compliance.	**Periodic**	**SI**	DSA IR 17-3.
☑	**c.** Verify WPS, welder qualifications and equipment.	**Periodic**	**SI**	DSA IR 17-3.

	S/A4. SHOP WELDING (IN ADDITION TO SECTION S/A3):			
	Test or Special Inspection	**Type**	**Performed By**	**Code References and Notes**
☑	**a.** Inspect groove welds, multi-pass fillet welds, single pass fillet welds > 5/16", plug and slot welds.	**Continuous**	**SI**	**Table 1705A.2.1 Items 5a.1–4;** AISC 360-16 (and AISC 341-16 as applicable); DSA IR 17-3.
☑	**b.** Inspect single-pass fillet welds ≤ 5/16", floor and roof deck welds.	**Periodic**	**SI**	**1705A.2.2, Table 1705A.2.1 Items 5a.5 & 5a.6;** AISC 360-16 (and AISC 341-16 as applicable); DSA IR 17-3.
☐	**c.** Inspect welding of stairs and railing systems.	**Periodic**	**SI**	**1705A.2.1;** AISC 360-16 (and AISC 341-16 as applicable); AWS D1.1 & D1.3; DSA IR 17-3.
☐	**d.** Verification of reinforcing steel weldability other than ASTM A706.	**Periodic**	**SI**	**1705A.3.1;** AWS D1.4; DSA IR 17-3. Verify carbon equivalent reported on mill certificates.
☐	**e.** Inspect welding of reinforcing steel.	**Continuous**	**SI**	**Table 1705A.2.1 Item 5b, 1705A.3.1, Table 1705A.3 Item 2, 1903A.8;** AWS D1.4; DSA IR 17-3.

DSA 103-22: LISTING OF STRUCTURAL TESTS & SPECIAL INSPECTIONS (STEEL AND ALUMNINUM), 2022 CBC

1705A.2.1, Table 1705A.2.1; AISC 303-16, AISC 341-16, AISC 358-16, AISC 360-16; AISI S100-20; RCSC 2016; AWS D1.1, AWS D1.2, AWS D1.3, AWS D1.4, AWS D1.8
Application Number: 04-121917
DSA File Number:
School Name: PC FABRIC SHADE STRUCTURES
Increment Number:
School District: USA SHADE AND FABRIC STRUCTURES
Date Created: 2023-02-15 15:23:09

	S/A11. Other Steel			
	Test or Special Inspection	**Type**	**Performed By**	**Code References and Notes**
☐	**a.**			

DSA 103-22: LISTING OF STRUCTURAL TESTS & SPECIAL INSPECTIONS (SOILS), 2022 CBC

Table 1705A.6, Table 1705A.7, Table 1705A.8
Application Number: 04-121917
DSA File Number:
School Name: PC FABRIC SHADE STRUCTURES
Increment Number:
School District: USA SHADE AND FABRIC STRUCTURES
Date Created: 2023-02-15 15:23:09

Geotechnical Reports: Project does NOT have and does NOT require a geotechnical report

	S1. GENERAL:			
	Test or Special Inspection	**Type**	**Performed By**	**Code References and Notes**
☑	**a.** Verify that: • Site has been prepared properly prior to placement of controlled fill and/or excavations for foundations. • Foundation excavations are extended to proper depth and have reached proper material. • Materials below footings are adequate to achieve the design bearing capacity.	**See Notes**	**PI**	Refer to specific items identified in the Appendix listing exemptions for limitations. Placement of controlled fill exceeding 12" depth under foundations is not permitted without a geotechnical report.

	S2. SOIL COMPACTION AND FILL:			
	Test or Special Inspection	**Type**	**Performed By**	**Code References and Notes**
☑	**a.** Verify use of proper materials, densities and inspect lift thickness, placement and compaction during placement of fill.	**Continuous**	**LOR***	* Under the supervision of a geotechnical engineer or LOR's engineering manager. Refer to specific items identified in the Appendix listing exemptions for limitations.
☑	**b.** Compaction testing.	**Test**	**LOR***	* Under the supervision of a geotechnical engineer or LOR's engineering manager. Refer to specific items identified in the Appendix listing exemptions for limitations.

	S3. DRIVEN DEEP FOUNDATIONS (PILES):			
	Test or Special Inspection	**Type**	**Performed By**	**Code References and Notes**
☐	**a.** Verify pile materials, sizes and lengths comply with the requirements.	**Continuous**	**GE***	* By geotechnical engineer or his or her qualified representative.
☐	**b.** Determine capacities of test piles and conduct additional load tests as required.	**Test**	**LOR***	* Under the supervision of the geotechnical engineer.

DSA 103-22: LISTING OF STRUCTURAL TESTS & SPECIAL INSPECTIONS (CONCRETE), 2022 CBC

Table 1705A.3; ACI 318-19 Sections 26.12 & 26.13
Application Number: 04-121917
DSA File Number:
School Name: PC FABRIC SHADE STRUCTURES
Increment Number:
School District: USA SHADE AND FABRIC STRUCTURES
Date Created: 2023-02-15 15:23:09

	Table of Special Inspection			
	Test or Special Inspection	**Type**	**Performed By**	**Code References and Notes**
☐	**c.** Verify anchor concrete strength prior to stressing of post-tensioning tendons.	**Periodic**	**SI**	**Table 1705A.3 Item 13.** Special Inspector to verify specified concrete strength test prior to stressing.
☐	**d.** Inspect application of post-tensioning or prestressing forces and grouting of bonded prestressing tendons.	**Continuous**	**SI**	**1705A.3.4, Table 1705A.3 Item 9;** ACI 318-14 Section 26.13

	C3. PRECAST CONCRETE (IN ADDITION TO SECTION C1):			
	Test or Special Inspection	**Type**	**Performed By**	**Code References and Notes**
☐	**a.** Inspect fabrication of precast concrete members.	**Continuous**	**SI**	ACI 318-19 Section 26.13.
☐	**b.** Inspect erection of precast concrete members.	**Periodic**	**SI***	**Table 1705A.3 Item 10.** * May be performed by PI when specifically approved by DSA.
☐	**c.** For precast concrete diaphragm connections or reinforcement at joints classified as moderate or high deformability elements (MDE or HDE) in structures assigned to Seismic Design Category D, E or F, inspect such connections and reinforcement in the field for: 1. Installation of the embedded parts 2. Completion of the continuity of reinforcement across joints. 3. Completion of connections in the field.	**Continuous**	**SI**	Table 1705A.3; ACI 318-19 Section 26.13.1.3; ACI 550.5
☐	**d.** Inspect installation tolerances of precast concrete diaphragm connections for compliance with ACI 550.5.	**Periodic**	**SI**	Table 1705A.3; ACI 318-19 Section 26.13.1.3; ACI 550.5

DSA 103-22: LISTING OF STRUCTURAL TESTS & SPECIAL INSPECTIONS (STEEL AND ALUMNINUM), 2022 CBC

1705A.2.1, Table 1705A.2.1; AISC 303-16, AISC 341-16, AISC 358-16, AISC 360-16; AISI S100-20; RCSC 2016; AWS D1.1, AWS D1.2, AWS D1.3, AWS D1.4, AWS D1.8
Application Number: 04-121917
DSA File Number:
School Name: PC FABRIC SHADE STRUCTURES
Increment Number:
School District: USA SHADE AND FABRIC STRUCTURES
Date Created: 2023-02-15 15:23:09

	S/A5. FIELD WELDING (IN ADDITION TO SECTION S/A3):			
	Test or Special Inspection	**Type**	**Performed By**	**Code References and Notes**
☐	**a.** Inspect groove welds, multi-pass fillet welds, single pass fillet welds ≥ 5/16", plug and slot welds.	**Continuous**	**SI**	**Table 1705A.2.1 Items 5a.1–4;** AISC 360-16 (AISC 341-16 as applicable); DSA IR 17-3.
☐	**b.** Inspect single-pass fillet welds ≤ 5/16".	**Periodic**	**SI**	**Table 1705A.2.1 Item 5a.5;** AISC 360-16 (AISC 341-16 as applicable); DSA IR 17-3.
☐	**c.** Inspect end-welded studs (ASTM A-108) installation (including bend test).	**Periodic**	**SI**	**2213A.2;** AISC 360-16 (AISC 341-16 as applicable); AWS D1.1; DSA IR 17-3.
☐	**d.** Inspect floor and roof deck welds.	**Periodic**	**SI**	**1705A.2.2, Table 1705A.2.1 Item 5a.6;** AISC 360-16 (AISC 341-16 as applicable); AWS D1.3; DSA IR 17-3.
☐	**e.** Inspect welding of structural cold-formed steel.	**Periodic**	**SI***	**1705A.2.5; AWS D1.3; DSA IR 17-3.** The quality control provisions of AISI S240-20 Chapter D shall also apply. * May be performed by the project inspector when specifically approved by DSA.
☐	**f.** Inspect welding of stairs and railing systems.	**Periodic**	**SI***	**1705A.2.1;** AISC 360-16 (AISC 341-16 as applicable); AWS D1.1 & D1.3; DSA IR 17-3. * May be performed by the project inspector when specifically approved by DSA.
☐	**g.** Verification of reinforcing steel weldability.	**Periodic**	**SI**	**1705A.3.1;** AWS D1.4; DSA IR 17-3. Verify carbon equivalent reported on mill certificates.
☐	**h.** Inspect welding of reinforcing steel.	**Continuous**	**SI**	**Table 1705A.2.1 Item 5b, 1705A.3.1, Table 1705A.3 Item 2, 1903A.8;** AWS D1.4; DSA IR 17-3.

GENERAL DSA-103 NOTES:

1. THE SAMPLE DSA-103 FORM PROVIDED ON THIS SHEET IS FOR ILLUSTRATIVE PURPOSES ONLY TO ASSIST IN THE COMPLETION OF SPECIFIC DSA-103 FORMS FOR FUTURE PROJECTS.
2. A CURRENT DSA-103 FORM IS TO BE COMPLETED FOR EACH APPLICATION THAT THIS P.C. DOCUMENT IS BEING INCORPORATED INTO AND ALL SAMPLE DSA-103 SHEETS ARE TO BE CROSSED OUT ON THIS SHEET

ADDITIONAL TESTING AND INSPECTION NOTES:

1. THE PROJECT INSPECTOR AND TESTING AGENCY SHALL BE EMPLOYED BY THE SCHOOL DISTRICT AND APPROVED BY DSA AND THE ARCHITECT OF RECORD.
2. A "DSA CERTIFIED" PROJECT INSPECTRO EMPLOYED BY THE DISTRICT (OWNER) AND APPROVED BY DSA SHALL PROVIDE CONTINUOUS INSPECTION OF THE WORK. THE DUTIES OF THE INSPECTOR ARE DEFINED IN SECTION 4-342, PART 1, TITLE 24, CCR.
3. THE SITE PROJECT INSPECTOR SHALL BE CLASS 2.
4. A DSA ACCEPTED TESTING LABORATORY DIRECTLY EMPLOYED BY THE DISTRICT (OWNER) SHALL CONDUCT ALL THE REQUIRED TEST AND INSPECTIONS FOR THE PROJECT.
5. THE COSTS OF THE PROJECT INSPECTOR AND TESTING AGENCY SHALL BE BORN BY THE SCHOOL DISTRICT.
6. COPIES OF THE VERIFIED REPORTS SHALL BE SENT TO DSA, THE ARCHITECT, THE SCHOOL DISTRICT, THE CONTRACTOR, AND THE PROJECT INSPECTOR.
7. THE IN-PLANT INSPECTOR SHALL BE A WELDING SPECIAL INSPECTOR FOR MATERIAL VERIFICATION AND WELDING.
8. PER 2022 CBC, SECTION 1705A.3.3, BATCH PLANT INSPECTION MAY BE WAIVED WHEN THE FOLLOWING REQUIREMENTS ARE MET:
   - 8.1. A LICENSED WEIGHMASTER SHALL POSITIVELY IDENTIFY QUANTITY OF MATERIALS AND CERTIFY EACH LOAD BY A BATCH TICKET.
   - 8.2. BATCH TICKETS, INCLUDING MATERIAL QUANTITIES AND WEIGHTS SHALL ACCOMPANY THE LOAD, SHALL BE TRANSMITTED TO THE INSPECTOR OF RECORD BY THE TRUCK DRIVER WITH LOAD IDENTIFIED THEREON. THE LOAD SHALL NOT BE PLACED WITHOUT A BATCH TICKET IDENTIFYING THE MIX. THE INSPECTOR OF RECORD SHALL KEEP A DAILY RECORD OF PLACEMENTS, IDENTIFYING EACH TRUCK, IT'S LOAD, TIME OF RECEIPT AT THE JOBSITE, AND APPROXIMATE LOCATION OF DEPOSIT IN THE STRUCTURE AND SHALL MAINTAIN A COPY OF THE DAILY RECORD AS REQUIRED BY THE ENFORCING AGENCY.

DSA 103-22: LISTING OF STRUCTURAL TESTS & SPECIAL INSPECTIONS (SOILS), 2022 CBC

Table 1705A.6, Table 1705A.7, Table 1705A.8
Application Number: 04-121917
DSA File Number:
School Name: PC FABRIC SHADE STRUCTURES
Increment Number:
School District: USA SHADE AND FABRIC STRUCTURES
Date Created: 2023-02-15 15:23:09

	Test or Special Inspection	**Type**	**Performed By**	**Code References and Notes**
☐	**c.** Inspect driving operations and maintain complete and accurate records for each pile.	**Continuous**	**GE***	* By geotechnical engineer or his or her qualified representative.
☐	**d.** Verify locations of piles and their plumbness, confirm type and size of hammer, record number of blows per foot of penetration, determine required penetrations to achieve design capacity, record tip and butt elevations and record any pile damage.	**Continuous**	**GE***	* By geotechnical engineer or his or her qualified representative.
☐	**e.** Steel piles.	Provide tests and inspections per STEEL section below.		
☐	**f.** Concrete piles and concrete filled piles.	Provide tests and inspections per CONCRETE section below.		
☐	**g.** For specialty piles, perform additional inspections as determined by the registered design professional in responsible charge.	*	*	* As defined on drawings or specifications.

	S4. CAST-IN-PLACE DEEP FOUNDATIONS (PIERS):			
	Test or Special Inspection	**Type**	**Performed By**	**Code Reference and Note**
☑	**a.** Inspect drilling operations and maintain complete and accurate records for each pier.	**Continuous**	**PI**	Continuous inspection to be provided by project inspector. Refer to specific items identified in the Appendix listing exemptions for limitations.
☑	**b.** Verify pier locations, diameters, plumbness and lengths.Record concrete or grout volumes.	**Continuous**	**PI**	Continuous inspection to be provided by project inspector. Refer to specific items identified in the Appendix listing exemptions for limitations.
☑	**c.** Concrete piers.	Provide tests and inspections per CONCRETE section below.		

DSA 103-22: LISTING OF STRUCTURAL TESTS & SPECIAL INSPECTIONS (CONCRETE), 2022 CBC

Table 1705A.3; ACI 318-19 Sections 26.12 & 26.13
Application Number: 04-121917
DSA File Number:
School Name: PC FABRIC SHADE STRUCTURES
Increment Number:
School District: USA SHADE AND FABRIC STRUCTURES
Date Created: 2023-02-15 15:23:09

	C4. SHOTCRETE (IN ADDITION TO SECTION C1):			
	Test or Special Inspection	**Type**	**Performed By**	**Code References and Notes**
☐	**a.** Inspect shotcrete placement for proper application techniques.	**Continuous**	**SI**	**1705A.3.9, Table 1705A.3 Item 7, 1908A.1, 1908A.2, 1908A.3.** See ACI SCO6.2-13 Section 3.4, ACI 506R-16.
☐	**b.** Sample and test shotcrete (f'c).	**Test**	**LOR**	**1908A.2, 1705A.3.8**

	C5. POST-INSTALLED ANCHORS:			
	Test or Special Inspection	**Type**	**Performed By**	**Code References and Notes**
☐	**a.** Inspect installation of post-installed anchors	**See Notes**	**SI***	**1617A.1.19, Table 1705A.3 Item 4a (Continuous) & 4b (Periodic), 1705A.3.8** (See Appendix (end of this form) for exemptions). ACI 318-14 Sections 17.8.6.2&13. * May be performed by the project inspector when specifically approved by DSA.
☐	**b.** Test post-installed anchors.	**Test**	**LOR**	**1910A.5.** (See Appendix (end of this form) for exemptions.)

	C6. OTHER CONCRETE:			
	Test or Special Inspection	**Type**	**Performed By**	**Code References and Notes**
☐	**a.**			

DSA 103-22: LISTING OF STRUCTURAL TESTS & SPECIAL INSPECTIONS (STEEL AND ALUMNINUM), 2022 CBC

1705A.2.1, Table 1705A.2.1; AISC 303-16, AISC 341-16, AISC 358-16, AISC 360-16; AISI S100-20; RCSC 2016; AWS D1.1, AWS D1.2, AWS D1.3, AWS D1.4, AWS D1.8
Application Number: 04-121917
DSA File Number:
School Name: PC FABRIC SHADE STRUCTURES
Increment Number:
School District: USA SHADE AND FABRIC STRUCTURES
Date Created: 2023-02-15 15:23:09

	Test or Special Inspection	**Type**	**Performed By**	**Code References and Notes**
	S/A6. NONDESTRUCTIVE TESTING:			
☐	**a.** Ultrasonic	**Test**	**LOR**	**1705A.2.1, 1705A.2.5;** AISC 341-16 J6.2, AISC 360-16 N5.5; AWS D1.1, AWS D1.8; DSA IR 17-2.
☐	**b.** Magnetic Particle	**Test**	**LOR**	**1705A.2.1, 1705A.2.5;** AISC 341-16 J6.2, AISC 360-16 N5.5; AWS D1.1, AWS D1.8; DSA IR 17-2.
☐	**c.**	**Test**	**LOR**	

	S/A7. STEEL JOISTS AND TRUSSES:			
	Test or Special Inspection	**Type**	**Performed By**	**Code References and Notes**
☐	**a.** Verify size, type and grade for all chord and web members as well as connectors and weld filler material; verify joist profile, dimensions and camber (if applicable); verify all weld locations, lengths and profiles; mark or tag each joist.	**Continuous**	**SI**	**1705A.2.3, Table 1705A.2.3:** AWS D1.1; DSA IR 22-3 for steel joists only. **1705A.2.4:** AWS D1.3 for cold-formed steel trusses.

DSA 103-22: LISTING OF STRUCTURAL TESTS & SPECIAL INSPECTIONS (SOILS), 2022 CBC

Table 1705A.6, Table 1705A.7, Table 1705A.8
Application Number: 04-121917
DSA File Number:
School Name: PC FABRIC SHADE STRUCTURES
Increment Number:
School District: USA SHADE AND FABRIC STRUCTURES
Date Created: 2023-02-15 15:23:09

	Test or Special Inspection	**Type**	**Performed By**	**Code References and Notes**
	S5. RETAINING WALLS:			
	Test or Special Inspection	**Type**	**Performed By**	**Code References and Notes**
☐	**a.** Placement, compaction and inspection of backfill.	**Continuous**	**GE***	**1705A.8.7.** * By geotechnical engineer or his or her qualified representative. (See section S2 above).
☐	**b.** Placement of soil reinforcement and/or drainage devices.	**Continuous**	**GE***	* By geotechnical engineer or his or her qualified representative.
☐	**c.** Segmental retaining walls; inspect placement of units, dowels, connectors, etc.	**Continuous**	**GE***	* By geotechnical engineer or his or her qualified representative. See DSA IR 18-2.
☐	**d.** Concrete retaining walls.	Provide tests and inspections per CONCRETE section below.		
☐	**e.** Masonry retaining walls.	Provide tests and inspections per MASONRY section below.		

	S6. OTHER SOILS:			
	Test or Special Inspection	**Type**	**Performed By**	**Code References and Notes**
☐	**a.** Soil improvements.	**Test**	**GE***	Submit a comprehensive report documenting final soil improvements constructed, construction observations and the results of the confirmation testing and analysis to CGS (California Geological Survey) for final acceptance. * By geotechnical engineer or his or her qualified representative.
☐	**b.** Inspection of Soil Improvements	**Continuous**	**GE***	* By geotechnical engineer or his or her qualified representative.
☐	**c.**			

DSA 103-22: LISTING OF STRUCTURAL TESTS & SPECIAL INSPECTIONS (STEEL AND ALUMNINUM), 2022 CBC

1705A.2.1, Table 1705A.2.1; AISC 303-16, AISC 341-16, AISC 358-16, AISC 360-16; AISI S100-20; RCSC 2016; AWS D1.1, AWS D1.2, AWS D1.3, AWS D1.4, AWS D1.8
Application Number: 04-121917
DSA File Number:
School Name: PC FABRIC SHADE STRUCTURES
Increment Number:
School District: USA SHADE AND FABRIC STRUCTURES
Date Created: 2023-02-15 15:23:09

	Test or Special Inspection	**Type**	**Performed By**	**Code References and Notes**
	S/A8. SPRAYED FIRE-RESISTANT MATERIALS:			
	Test or Special Inspection	**Type**	**Performed By**	**Code References and Notes**
☐	**a.** Examine structural steel surface conditions, inspect application, take samples, measure thickness and verify compliance of all aspects of application with DSA-approved documents.	**Periodic**	**SI**	**1705A.15, 1705A.1, 1705A.2, 1705A.3, 1705A.4.**
☐	**b.** Test density.	**Test**	**LOR**	**1705A.15.1, 1705A.15.5, ASTM E736**
☐	**c.** Bond strength adhesion/cohesion.	**Test**	**LOR**	**1705A.15.1, 1705A.15.4, ASTM E605**

	S/A9. ANCHOR BOLTS AND ANCHOR RODS:			
	Test or Special Inspection	**Type**	**Performed By**	**Code References and Notes**
☐	**a.** Anchor Bolts and Anchor Rods	**Test**	**LOR**	Sample and test anchor bolts and anchor rods not readily identifiable per procedures noted in DSA IR 17-11.
☐	**b.** Threaded rod not used for foundation anchorage.	**Test**	**LOR**	Sample and test threaded rods not readily identifiable per procedures noted in DSA IR 17-11.

	S/A10. STORAGE RACK SYSTEMS:			
	Test or Special Inspection	**Type**	**Performed By**	**Code References and Notes**
☐	**a.** Materials used, to verify compliance with one or more of the material test reports in accordance with the approved construction documents.	**Periodic**	**SI**	Table 1705A.13.7
☐	**b.** Fabricated storage rack elements.	**Periodic**	**SI**	1704A.2.5, Table 1705A.13.7

DSA 103-22: LISTING OF STRUCTURAL TESTS & SPECIAL INSPECTIONS (STEEL AND ALUMNINUM), 2022 CBC

1705A.2.1, Table 1705A.2.1; AISC 303-16, AISC 341-16, AISC 358-16, AISC 360-16; AISI S100-20; RCSC 2016; AWS D1.1, AWS D1.2, AWS D1.3, AWS D1.4, AWS D1.8
Application Number: 04-121917
DSA File Number:
School Name: PC FABRIC SHADE STRUCTURES
Increment Number:
School District: USA SHADE AND FABRIC STRUCTURES
Date Created: 2023-02-15 15:23:09

	Test or Special Inspection	**Type**	**Performed By**	**Code References and Notes**
	S/A8. SPRAYED FIRE-RESISTANT MATERIALS:			
	Test or Special Inspection	**Type**	**Performed By**	**Code References and Notes**
☐	**a.** Examine structural steel surface conditions, inspect application, take samples, measure thickness and verify compliance of all aspects of application with DSA-approved documents.	**Periodic**	**SI**	**1705A.15, 1705A.1, 1705A.2, 1705A.3, 1705A.4.**
☐	**b.** Test density.	**Test**	**LOR**	**1705A.15.1, 1705A.15.5, ASTM E736**
☐	**c.** Bond strength adhesion/cohesion.	**Test**	**LOR**	**1705A.15.1, 1705A.15.4, ASTM E605**

	S/A9. ANCHOR BOLTS AND ANCHOR RODS:			
	Test or Special Inspection	**Type**	**Performed By**	**Code References and Notes**
☐	**a.** Anchor Bolts and Anchor Rods	**Test**	**LOR**	Sample and test anchor bolts and anchor rods not readily identifiable per procedures noted in DSA IR 17-11.
☐	**b.** Threaded rod not used for foundation anchorage.	**Test**	**LOR**	Sample and test threaded rods not readily identifiable per procedures noted in DSA IR 17-11.

	S/A10. STORAGE RACK SYSTEMS:			
	Test or Special Inspection	**Type**	**Performed By**	**Code References and Notes**
☐	**a.** Materials used, to verify compliance with one or more of the material test reports in accordance with the approved construction documents.	**Periodic**	**SI**	Table 1705A.13.7
☐	**b.** Fabricated storage rack elements.	**Periodic**	**SI**	1704A.2.5, Table 1705A.13.7

DSA 103-22: LISTING OF STRUCTURAL TESTS & SPECIAL INSPECTIONS (STEEL AND ALUMNINUM), 2022 CBC

1705A.2.1, Table 1705A.2.1; AISC 303-16, AISC 341-16, AISC 358-16, AISC 360-16; AISI S100-20; RCSC 2016; AWS D1.1, AWS D1.2, AWS D1.3, AWS D1.4, AWS D1.8
Application Number: 04-121917
DSA File Number:
School Name: PC FABRIC SHADE STRUCTURES
Increment Number:
School District: USA SHADE AND FABRIC STRUCTURES
Date Created: 2023-02-15 15:23:09

	Test or Special Inspection	**Type**	**Performed By**	**Code References and Notes**
	S/A11. Other Steel			
	Test or Special Inspection	**Type**	**Performed By**	**Code References and Notes**
☐	**a.**			

DSA 103-22: LISTING OF STRUCTURAL TESTS & SPECIAL INSPECTIONS (STEEL AND ALUMNINUM), 2022 CBC

1705A.2.1, Table 1705A.2.1; AISC 303-16, AISC 341-16, AISC 358-16, AISC 360-16; AISI S100-20; RCSC 2016; AWS D1.1, AWS D1.2, AWS D1.3, AWS D1.4, AWS D1.8
Application Number: 04-121917
DSA File Number:
School Name: PC FABRIC SHADE STRUCTURES
Increment Number:
School District: USA SHADE AND FABRIC STRUCTURES
Date Created: 2023-02-15 15:23:09

	Test or Special Inspection	**Type**	**Performed By**	**Code References and Notes**
	S/A11. Other Steel			
	Test or Special Inspection	**Type**	**Performed By**	**Code References and Notes**
☐	**a.**			

D

GENERAL NOTES

1.- SPECIAL INSPECTION REQUIREMENTS SHALL FOLLOW THE ATTACHED SAMPLE TEST AND INSPECTION LIST (T & I LIST) APPROVED BY DSA. THE SHOP WELDING INSPECTION SHALL INCLUDE WELDING OF ALL STEEL MEMBERS AND IDENTIFICATION OF STEEL THROUGH MILL CERTIFICATE OR MATERIAL TESTING, UNCERTIFIED STEEL SHALL BE TESTED TO THE REQUIREMENTS OF CBC 2022 CHAPTER 17A. THE FIELD SPECIAL INSPECTION SHALL INCLUDE COMPRESSION CYLINDER TESTS FOR THE CONCRETE FOUNDATION.

2.- STRUCTURE SHALL BE IN THE LOCATION SHOWN ON THE SITE SPECIFIC DSA APPLICATION DRAWING.

3.- FOUNDATION DESIGN BASED ON CBC 2022, TABLE 1806A.2, SOIL CLASS 5 (ALLOWABLE FOUNDATION PRESSURE 1500 PSF)

4.- DESIGN PER FOLLOWING CODES: CBC 2022 (CHAPTER 35), ASCE 7-16, AISC 360-16, AISC 341-16, ACI 318-19, ASCE 55-16 & ASCE 19-16

STRUCTURAL STEEL

1.- FABRICATION OF THE STEEL STRUCTURES SHALL BE PERFORMED BY SHADE STRUCTURES OR AN AUTHORIZED LICENSEE. MATERIAL TESTING (OR MILL CERTIFICATES) AND INSPECTION OF WELDING SHALL BE CONDUCTED PER CBC 2022 SECTIONS 1704A, 1705A, 1705A.2, AND TABLE 1705A.2.1.

2.- ONLY CALIFORNIA LICENSED CONTRACTORS AUTHORIZED BY SHADE STRUCTURES SHALL INSTALL THE SHADE STRUCTURES.

3.- ALL WORK SHALL CONFORM TO CBC 2022 EDITION, TITLE 24, CALIFORNIA CODE OF REGULATIONS (CCR).

4.- ALL STRUCTURAL SHAPES SHALL BE COLD FORMED HSS ASTM A500 GRADE C, UNLESS OTHERWISE NOTED. TYPICAL MECHANICAL PROPERTIES ACHIEVED FOR HSS PRODUCTS:

SQUARE AND RECTANGULAR	50,000 PSI YIELD STRESS /	62,000 PSI TENSILE STRESS
ROUND PIPE	50,000 PSI YIELD STRESS /	62,000 PSI TENSILE STRESS

5.- ALL PLATES PRODUCTS SHALL COMPLY WITH ASTM A572 GRADE 50.

6.- STRUCTURAL STEEL SHALL BE DETAILED, FABRICATED AND ERECTED IN ACCORDANCE WITH A.I.S.C. SPECIFICATIONS.

7.- ALL WELDING TO CONFORM WITH AMERICAN WELDING SOCIETY STANDARDS AND SHALL BE INSPECTED BY AN AWS/CWI INSPECTOR. AWS D1.1 FOR HOT ROLLED. AWS D1.3 FOR SHEET/COLD FORMED. AWS D1.8 SEISMIC SUPPLEMENT.

8.- ALL FULL PENETRATION WELD SHALL BE CONTINUOUSLY INSPECTED PER AWS D1.1 & D1.8.

9.- SHOP CONNECTIONS SHALL BE WELDED UNLESS NOTED OTHERWISE. ALL FILLET WELDS SHALL BE A MINIMUM OF 3/16" ER70SX ELECTRODES UNLESS OTHERWISE NOTED. GMAW IS ACCEPTABLE.

10.- ALL STRUCTURAL STEEL (ITEMS FROM NOTE 4) SHALL BE POWDER COATED WITH ONE SHOP COAT (2.5 MILS MIN.) OF ZINC-RICH PRIMER, UNDERCOAT, AND FINISH COAT, OR EQUIVALENT PAINT SYSTEM. THIS COAT IS A WEATHER RESISTANT POWDER COATING BASED ON POLYESTER TGIC (MANUFACTURED BY SHERWIN WILLIAMS, ASKO NOBEL, PPG OR TIGER DRYLAC). TO ACHIEVE OPTIMUM ADHESION, IT IS RECOMMENDED THAT THE PROPER TREATMENT AND DRYING TAKE PLACE BEFORE COATING. POLYESTER POWDER (TGIC) SPECIFICATIONS SHALL BE AS FOLLOWS:

- PENCIL HARDNESS (ASTM D-3363). - HUMIDITY (ASTM D-2247).
- SOLVENT RESISTANCE (PCI METHOD) - 50 DBL RUBS SL. SOFTNESS.

11.- ALL EXPOSED STEEL FASTENERS SHALL BE STAINLESS STEEL (TYPE 304 MINIMUM), HOT DIP GALVANIZED (ASTM A153, CLASS D MINIMUM OR ASTM F2329) AS APPLICABLE, OR PROTECTED WITH CORROSION PREVENTIVE COATING THAT DEMONSTRATED NO MORE THAN 2% OF RED RUST IN MINIMUM 1,000 HOURS OF EXPOSURE IN SALT SPRAY TEST PER ASTM B117. ZINC-PLATED FASTENERS DO NOT COMPLY WITH THIS REQUIREMENT.

CONCRETE SPECIFICATION

1.- CONCRETE SHALL BE SAMPLED AND TESTED PER CBC 2022 SECTION 1903A & SHALL BE INSPECTED PER SECTION 1903A.

2.- CONCRETE TO BE F'_{cr} 4500 PSI, TYPE V CEMENT PLUS POZZOLAN OR SLAG CEMENT, MAXIMUM WATER/CEMENT RATIO OF 0.45, PER ACI 318-19 CHAPTER 19. (NO ADMIXTURES CONTAINING CALCIUM CHLORIDE WILL BE USED.) REINFORCING STEEL SHALL CONFORM TO ASTM A-615 GRADE 60 AND TO BE Fy= 60000 PSI , MIN. GR. 60. ALSO COATED ACCORDING TO ASTM A767/ A767M, STANDARD SPECIFICATION FOR ZINC-COATING (GALVANIZED) STEEL BARS FOR CONCRETE REINFORCEMENT.

3.- ALL ANCHOR BOLTS SET IN NEW CONCRETE (WHEN APPLICABLE) SHALL COMPLY WITH ASTM F-1554 GRADE 36 (GALVANIZED PER ASTM A153, CLASS D MINIMUM OR ASTM F2329).
ANCHOR BOLT'S DIAMETER NEEDS TO BE AS FOLLOW:
A) ANCHOR BOLT Ø1 1/4"

4.- CERTIFIED MILL TEST REPORTS ARE TO BE PROVIDED FOR EACH SHIPMENT OF REINFORCEMENT.

5.- ALL NON-SHRINK GROUT SHALL HAVE A MINIMUM 28 DAYS COMPRESSIVE STRENGTH OF 5000 PSI, AND SHALL COMPLY THE REQUIREMENTS OF ASTM C109, ASTM C939, ASTM C1090, ASTM C1107, WHEN APPLICABLE.

6.- CONCRETE EXPOSED TO FREEZING-AND-THAWING CYCLES SHALL BE AIR ENTRAINED PER ACI 318 SECTION 19.3.3.

FABRIC SPECIFICATION

1.- FABRIC SHALL BE MANUFACTURED BY MULTIKNIT LTD., WHICH MEETS THE SPECIFICATIONS LISTED ON PAGE 2000, AND SHALL BE FABRICATED FROM POLYETHYLENE MATERIALS. MINIMUM SEAM LENGTH 3/4".

2.- THE FABRIC SHALL RETAIN 80% OF ITS TENSILE AND TEARING STRENGTH AFTER ULTRAVIOLET EXPOSURE PER ASTM G53 USING A 313 NM LIGHT SOURCE FOR 500 HOURS WHILE MOISTENED FOR 1 HOUR EVERY 12 HOURS.

3.- PROVIDE CERTIFICATION BY MANUFACTURER AND STATE FIRE MARSHAL TO SCHOOL'S DISTRICT INSPECTOR OF RECORD AT SITE SPECIFIC INSTALLATION. COPY OF FIRE CERTIFICATION SHALL BE SENT TO DSA.

4.- FABRIC SHALL REQUIRE ANNUAL INSPECTION AND MAINTENANCE BY THE DISTRICT. FIRE TEST ON FABRIC: NFPA 701 TEST 2 AND ASTM E 84 EXTENDED 30 MINUTES TEST. FLAME SPREAD INDEX (FSI): 10. SMOKE DEVELOPED INDEX (SDI): 50. FABRIC IS ACCEPTABLE FOR USE IN WILDLIFE URBAN INTERFACE AREA.

5.- FABRIC TOP NEEDS TO BE REMOVED IF SNOW EXCEEDING 5 PSF ARE ANTICIPATED, FABRIC TOP NEEDS TO BE REMOVED IF WINDS EXCEEDING 115 MPH ARE ANTICIPATED.

6.- A VISUAL INSPECTION LOOKING FOR TEAR AND ABNORMAL WEAR IN FABRIC MATERIAL AND THREAD IS REQUIRED PRIOR TO RE-INSTALLATION. USA SHADE & FABRIC STRUCTURES SHALL BE NOTIFIED IF SIGNIFICANT DAMAGE IS PRESENT BEFORE RE-INSTALLATION.

AIRCRAFT CABLE

1.- FOR FABRIC ATTACHMENT USE 1/2" 6x19 GALV. CABLE PER ASTM A1023/A1023M, WITH A BREAKING STRENGTH VALUE OF 20,700 LBS. CABLE SHALL BE TENSIONED TO 300 LBS MINIMUM AND 500 LBS MAXIMUM.THE MAXIMUM CALCULATED CABLE ALLOWABLE CAPACITY IS Sa=7056 LB.

2.- CABLES SHALL BE FED THROUGH THE FABRIC SLEEVES AROUND THE PERIMETER OF THE CANOPY AND TENSIONED UNTIL THE FABRIC PANELS (DESIGNED PURPOSELY UNDERSIZED) REACH A TAUT APPEARANCE. ANY LONG TERM CABLE SAG SHALL BE MINIMIZED DURING THE MAINTENANCE RE-TIGHTING VISITS AS REQUIRED.

MAXIMUM OCCUPANT LOAD (PER CBC 2022 TABLE 1604A.5)

-K-12:	250 PERSONS
-PUBLIC ASSEMBLY:	300 PERSONS
-EDUCATIONAL OCCUPANCIES ABOVE 12TH GRADE:	500 PERSONS

NOTE: THE MINIMUM CLEARANCE REQUIRED BETWEEN DRILLED PIERS WHEN PLACING MULTIPLE OPEN FABRIC SHADE STRUCTURES ADJACENT TO EACH OTHER, FROM CENTER TO CENTER, IS THREE TIMES THE LEAST HORIZONTAL DIMENSION OF THE PIER PER CBC 2022 SEC. 1810A.2.5.

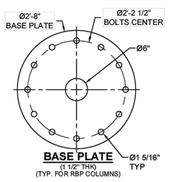

BASE PLATE
(1 1/2" THK)
(TYP. FOR RBP COLUMNS)

FOOTPRINT CONFIGURATION

1.- THE STRUCTURE CAN BE A SINGLE 4 POST TENSION SAIL.

2.- THE STRUCTURE CAN BE PLACED FOLLOWING A CURVED CONFIGURATION AS LONG AS THE MAXIMUM DIMENSIONS ARE NOT EXCEEDED.

CBC PC DESIGN NOTES

BUILDING CODE	CBC 2022 (BASED ON IBC 2021)
FLOOR LIVE LOAD	N/A
ROOF LIVE LOAD	RLL 5 PSF

ALLOWABLE SOIL PRESSURE:

DL + LL (CONC FTG)	1500 PSF
DL + LL + SEISMIC (CONC FTG)	1500 PSF
LATERAL BEARING DESIGN VALUE	100 PSF/FT BELOW NATURAL GRADE, PER TABLE 1806A.2

TWO TIMES THE TABULAR VALUE IS USED (200 PSF/FT)
PER CBC SECTION 1806A.3.4.
ALLOWABLE PIER FRICTIONAL RESISTANCE 250 PSF MAXIMUM
BASED ON SECTION 1810A.3.3.1.4 (ONE-SIXTH OF THE BEARING VALUE).
UPLIFT FRICTIONAL RESISTANCE HAVE A SAFETY FACTOR OF 3.

ROOF SNOW LOAD	5 PSF
ICE LOAD	ZERO PSF
FLOOD HAZARD AREA	ZONE X

WHEN A SITE SPECIFIC PROJECT IS LOCATED IN A FLOOD ZONE OTHER THAN ZONE X, A LETTER STAMPED AND SIGNED FROM A SOILS ENGINEER IS NEEDED TO VALIDATE THE ALLOWABLE SOIL VALUES SPECIFIED IN THE PC ARE STILL APPLICABLE.

WIND DESIGN DIRECTIONAL PROCEDURE: ASCE 7-16, SECTION 27.3.2
NOTE: WIND DESIGN IS LIMITED TO UNOBSTRUCTED CLEAR FLOW CONDITION

-BASIC DESIGN WIND SPEED (3 SEC GUST)	V	115 MPH
-ASD WIND LOAD (CBC 2022 SEC. 1603A.1.4)	V_{ASD}	90 MPH
-WIND EXPOSURE FACTOR	C	
-TOPOGRAPHIC FACTOR	Kzt	1
-RISK CATEGORY	II	
-VELOCITY PRESSURE EXPOSURE COEFFICIENT	Kz	0.88
-VELOCITY PRESSURE	qz	25.32 PSF

SEISMIC DESIGN:

-SITE CLASS	D	
NOTE: UNLESS A SITE-SPECIFIC GROUND MOTION HAZARD ANALYSIS IS PERFORMED, THE SM1 VALUE INCREASED BY 50% SHALL BE LESS THAN THE DESIGN CRITERIA STATED HEREIN.		
	SS	3.00g
	S1	1.389g
-SPECTRAL RESPONSE COEFFICIENTS	SDS	2.00
	SD1	1.39
-LATERAL FORCE RESISTING SYSTEM G.2 ORDINARY CANTILEVERED COLUMN SYSTEM.		
-SEISMIC IMPORTANCE FACTOR	Ie	1.0
-DESIGN BASE SHEAR AT BASE	V	22638 LB
-SEISMIC RESPONSE COEFFICIENTS	Cs	1.6
-RESPONSE MODIFICATION FACTOR	R	1.25
-ANALYSIS PROCEDURE	EQUIVALENT LATERAL FORCE	
-RISK CATEGORY	II	
-SEISMIC DESIGN CATEGORY		E
-SITE COEFFICIENT CATEGORY	Fa	1.2
	Fv	1.5
-REDUNDANCY FACTOR	ρ	1.3

GEOHAZARD REPORT IS NOT REQUIRED FOR OPEN FABRIC STRUCTURES 1,600 SQF OR LESS COMPLYING WITH THE REQUIREMENTS OF IR A-4 SECTION 3.1.1. OPEN FABRIC SHADE STRUCTURES GREATER THAN 1,600 SQUARE FEET UP TO A MAXIMUM OF 4,000 SQUARE FEET AND COMPLYING WITH THE REQUIREMENTS NOTED IN IR A-4 SECTION 3.1.1 DO NOT REQUIRE A GEOHAZARD REPORT PROVIDED A GEOTECHNICAL REPORT INDICATES THAT NO LIQUEFACTION POTENTIAL EXISTS.

ARCHITECT OF RECORD TO DETERMINE IF SPECIFIC SITE IS IN GEOLOGIC HAZARD ZONE. GEOHAZARD REPORT REQUIREMENTS PER DSA IR A-4.

PC OPTIONS SHALL NOT INCLUDE LIQUEFIABLE SOIL (EXCEPTION: OPEN FABRIC SHADE STRUCTURES 1,600 SQUARE FEET OR LESS COMPLYING WITH REQUIREMENTS OF IR A-4 SECTION 3.1.1). IF STRUCTURE IS LOCATED IN AN AREA WITH LIQUEFIABLE SOIL OR SITE CLASS F, OVER-THE-COUNTER SUBMITTAL IS NOT ALLOWED AND REGULAR PROJECT SUBMITTAL IS REQUIRED. IF SITE IS NOT IN A MAPPED LIQUEFACTION HAZARD ZONE, IT MAY BE PRESUMED THAT NO LIQUEFACTION HAZARD EXISTS ON THAT SITE UNLESS A SITE-SPECIFIC GEOTECHNICAL REPORT IDENTIFIES SUCH HAZARD.

MINIMUM FOUNDATION SETBACK LIMIT IN ADJACENT SLOPE: THE DEPTH OF REQUIRED PIER EMBEDMENT SHALL START FROM AN ELEVATION THAT CORRESPONDS WITH A HORIZONTAL CLEAR DISTANCE OF 24'-6" FEET THAT INTERSECT WITH THE SLOPE (DAYLIGHTING). IF SETBACK LIMITS ARE SMALLER THAN CBC REQUIRES, A SITE-SPECIFIC SOILS REPORT IS REQUIRED.

MINIMUM CLASS 2 PROJECT INSPECTOR REQUIRED.

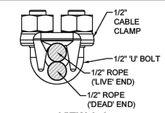

VIEW A-A
REFER TO DETAIL 1

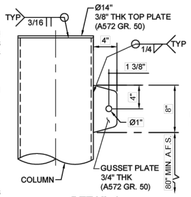

DETAIL 2
REFER TO SIDE VIEW

CAP PLATE
(3/8" THK)
(BOTTOM OF PIH COLUMNS)
(A572 GR. 50)

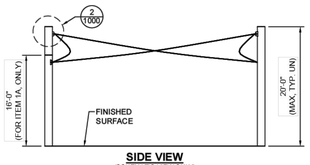

SIDE VIEW
(SCHEMATIC VIEW ONLY)

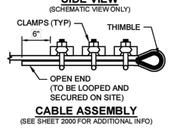

CABLE ASSEMBLY
(SEE SHEET 2000 FOR ADDITIONAL INFO)

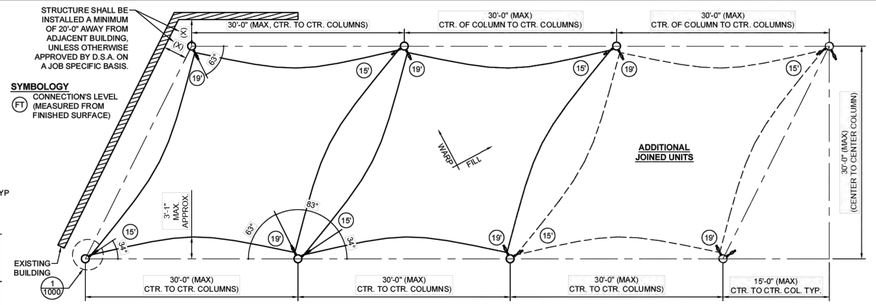

TOP VIEW
(SCHEMATIC VIEW ONLY)

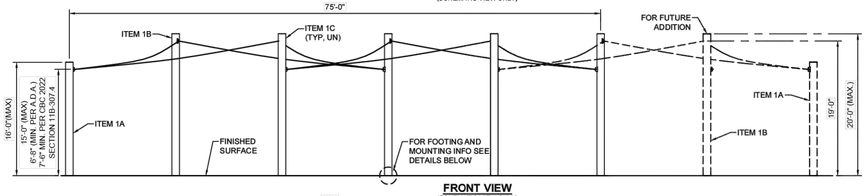

FRONT VIEW
(SCHEMATIC VIEW ONLY)

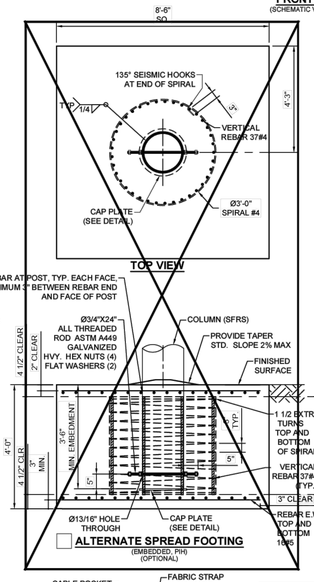

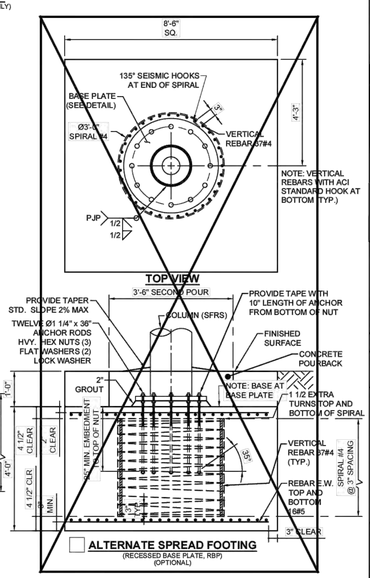

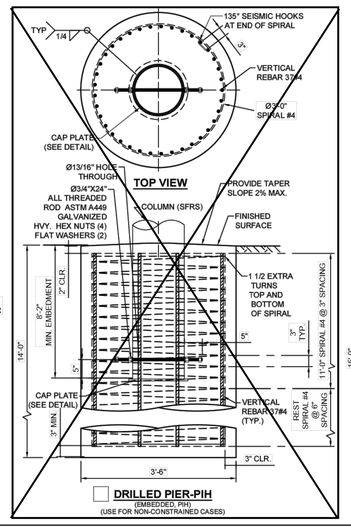

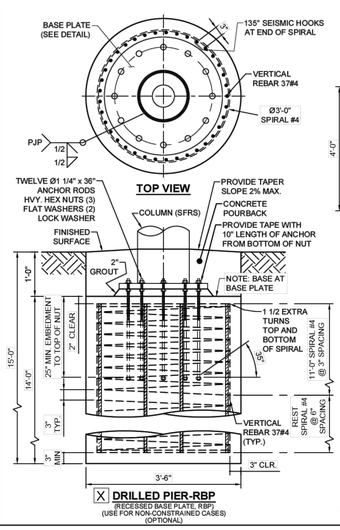

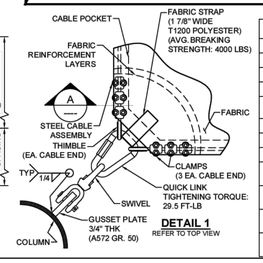

LIST OF MATERIALS

ITEM	QTY	DESCRIPTION	MATERIAL
1A	TBD	COLUMN	HSS 14.0 x 0.625
1B	TBD	COLUMN	HSS 14.0 x 0.625
1C	TBD	COLUMN	HSS 14.0 x 0.625
2	TBD	FABRIC TOP	FR COLOURSHADE 190/F5
3	TBD	Ø1/2" CABLE	GALVANIZED STEEL
4	TBD	Ø1/2" THIMBLE	GALVANIZED
5	TBD	Ø1/2" CABLE CLAMP	GALVANIZED
6	TBD	3/4" SWIVEL JAW END	GALVANIZED (W.L. = 7200 LB)
7	TBD	26/32" QUICK LINK	ZINC PLATED (W.L. = 6613 LB)
8	TBD	CAP PLATE (3/8" THK)	ASTM A572 GR. 50
9	TBD	GUSSET PLATE (3/4" THK)	ASTM A572 GR. 50

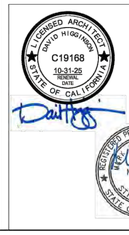

10/18/2023

THESE PLANS AND SPECIFICATIONS ARE THE PROPERTY OF USA SHADE AND FABRIC STRUCTURES AND SHALL NOT BE REPRODUCED WITHOUT THEIR WRITTEN PERMISSION.

USASHADE & Fabric Structures®
CORPORATE HEADQUARTERS
2580 ESTERS BLVD. SUITE 100
DFW AIRPORT, TX, 75261
800-966-5005

CERTIFICATIONS:
IAS CERTIFICATION No: FA-428
CLARK COUNTY MANUFACTURER CERTIFICATION NUMBER (NEVADA): 355

CUSTOMER:
Buena Park Elementary S.D.

PROJECT NAME:
Gilbert Elementary

LOCATION:
7255 8th Street
Buena Park, CA 90621

MODEL NUMBER:
DSA4183030-22

APPROVED
DIV. OF THE STATE ARCHITECT
APP: 04-121917 PC
REVIEWED FOR
SS ☑ FLS ☑ ACS ☒ CG ☐
DATE: 10/30/2023

STRUCTURE TYPE:
TENSION SAILS
DSA

SIZE: MAXIMUM
30' x 133' MAX. x 15'e

SCALE : NONE

DRAWING SIZE:
D

PRE-CHECK (PC) DOCUMENT
Code : 2022 CBC
A separate project application for construction is required.

Eng. By :	HH	12/01/22
Design By :	OS	12/01/22
Approved By :	MB	12/01/22

DRAWING DESCRIPTION:
PRODUCT INFORMATION

DWG.
DSA4183030-22

SHEET
25.1-1000

REV.
NC

190/F5 Fire rated specifications

Multiknit INTERNATIONAL

Standard range

Revision 0 28-Oct-12

Colour	Shade %	UV Block %	Average GSM	Average Warp break strength kgs	Average Elongation %	Average Weft break strength kgs	Average Elongation %	Average Burst Kpa	Average Burst to Mass ratio
Desert Sand	80	92	185	50	40	72	73	156	0.84
Blue	80	85	185	50	40	72	73	156	0.84
Brown	85		185	50	40	72	73	156	0.84
Green	80	85	185	50	40	72	73	156	0.84
Red	80	86	185	50	40	72	73	156	0.84
Silver	80	81	185	50	40	72	73	156	0.84
Terracotta	75	82	185	50	40	72	73	156	0.84
Yellow	80	89	185	50	40	72	73	156	0.84
				110 LB		159 LB		3258 PSF	

CONVERSION TO IMPERIAL UNITS:
185 GSM = .0378 psf
50 KGS = 110 Lb
72 KGS = 159 Lb
156 Kpa = 3258 psf

Notes:
- 190/F5 conforms to The California State Fire Marshal Title 19 Test for Small scale Fabrics
- Tear tests are done using a 50mm wide strip and a cross head speed of 500mm/min
- This report has been compiled using the mean results from all tests conducted on the given sample by our Quality Control Laboratory, the information provided is considered to be a good reflection of the relevant properties of the fabric tested. These results must only be used as an indication of the quality and characteristics of the fabric tested.
- Company cannot be held responsible or liable in any way whatsoever should this information differ to that of a registered testing institution.

Deon Joubert
General Manager - Multiknit (Pty) Ltd

Tommy Rogers
Managing Director - Multiknit (Pty) Ltd

GALVANIZED IWRC
6 X 19 IWRC

IMPROVED PLOW STEEL / EXTRA IMPROVED PLOW STEEL

NOMINAL DIAMETER	MIN. BREAKING STRENGTH IPS	MIN. BREAKING STRENGTH EIPS*	WEIGHT	STOCK NUMBER
INCH	LBS	LBS	LBS/FT	6X19
1/4"	5,300	6,120	0.105	J42
5/16"	8,240	9,480	0.164	K42
3/8"	11,800	13,600	0.236	L42
7/16"	16,000	18,360	0.320	M42
1/2"	20,700	24,000	0.420	N42
9/16"	26,100	30,200	0.530	O42
5/8"	32,200	37,000	0.660	A42
3/4"	46,000	53,000	0.950	Q42
7/8"	62,200	71,600	1.290	R42
1"	80,800	93,000	1.680	S42
1 1/8"	101,800	117,000	2.130	T42
1 1/4"	125,000	143,800	2.630	U42
1 3/8"	150,400	172,800	3.180	V42
1 1/2"	178,000	206,000	3.780	W42

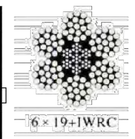

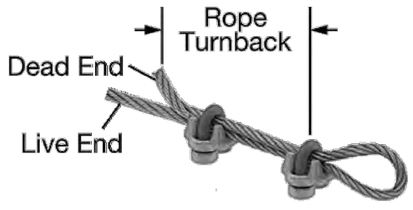

FORGED WIRE ROPE CLAMP

FITTING TYPE: ROPE CLAMP
FABRICATION: FORGED
MATERIAL: GALVANIZED STEEL
FOR WIRE ROPE DIAMETER: 1/2"
NUMBER OF CLAMPS REQUIRED: 3
ROPE TURNBACK: 11 1/2"
FOR WIRE ROPE CONSTRUCTION: 6 × 19
ATTACHMENT TYPE: LOOP
CLAMP
WIDTH: 2 5/16"
HEIGHT: 2 3/8"
THICKNESS: 1 15/16"
REQUIRED INSTALLATION TOOL: TORQUE WRENCH
REQUIRED TORQUE: 65 FT.-LBS.
CAPACITY: 80% OF THE ROPE'S CAPACITY
SPECIFICATIONS MET ASME B30.26, FED. SPEC. FF-C-450

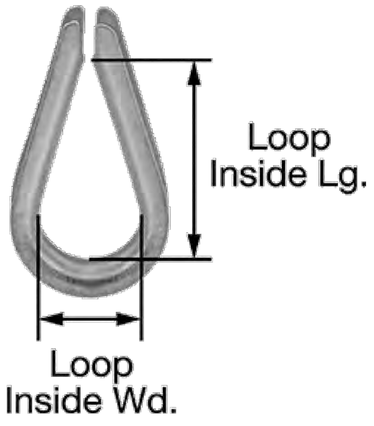

CAL FIRE

FLAME RETARDANT

Fabric Registration

LICENSE NUMBER: F-052001

COLOURSHADE 190/F5

Product Marketed by:

MULTIKNIT (PTY) LTD
BOX 798 WHITE RIVER 1240
MPUMALANGA SOUTH AFRICA, ,

Issue Date : 05/08/2023
Expiration Date : 06/30/2024

This product meets the minimum requirements of flame resistance established by the California State Fire Marshal for products identified in Section 13115, California Health and Safety Code. The scope of the approved use of this product is provided in the current edition of the CALIFORNIA APPROVED LIST OF FLAME RETARDANT CHEMICALS AND FABRICS, GENERAL AND LIMITED APPLICATIONS CONCERNS published by the California State Fire Marshal.

Issued By Cortney Walker
Fire Engineering License Manager
Fire Engineering & Investigations Division

Reviewed and Approved By Patricia Setter
Deputy State Fire Marshal III
Fire Engineering & Investigations Division

OFFICE OF THE STATE FIRE MARSHAL

Please visit calfire.govmotus.org for more information on Licensing and Permitting with CAL FIRE

Page 1 of 1

Delta Maillon rapide

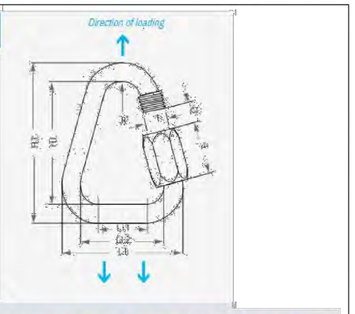

Delta shape: developed after the ever-increasing development of webbing-fitted systems; perfect for webbing uphold onto its lower flat part.

Zinc plated steel | Stainless steel | Zinc

Reference	Diameter mm	Diameter inches	L.T.	L.I.1	L.I.2	H.T.	H.I.	O	E	R	T	Weight g	WLL kgf	BL kgf	Quote Qty
MRDZ02.5	2,5	3/32"	22	10	17	27	22	3,5	8	3,5	3,5	3	25	125	
MRDZ03.0	3	7/64"	27	12,5	21	30	24	4	9	4,25	4	6	40	200	
MRDZ03.5	3,5	1/8"	31	14	24	35	29	5	11	5	5	9	70	350	
MRDZ04.0	4	5/32"	35,5	16	27,5	40	32	5,5	12,5	5,75	6	14	100	500	
MRDZ05.0	5	3/16"	40	17	30	48	38	6,5	16	6,5	7	23	150	750	
MRDZ06.0	6	1/4"	47	20,5	35	56	44	7,5	19	7,25	9	39	250	1250	
MRDZ07.0	7	9/32"	51	21	37	63	49	8,5	21,5	8	10	58	400	2000	
MRDZ08.0	8	5/16"	56	22,5	40	73	57	10	24	8,65	11	88	550	2750	
MRDZ09.0	9	3/8"	60	23	42	78	60	11	26	9,5	12	115	700	3500	
MRDZ10.0	10	7/16"	66	25,5	46	87	67	12	29	10,25	13	153	900	4500	
MRDZ12.0	12	1/2"	75	27,5	51	104	80	15	33	11,75	15	256	1100	5500	
MRDZ14.0	14	9/16"	85	30,5	57	123	95	17	38,5	13,25	17	404	1800	9000	
MRDZ16.0	16	5/8"	93	31,5	61	139	106	19	45	14,75	19	612	2200	11000	
MRDZ18.0	18	11/16"	102	32,5	66	155	119	23	52	16,25	22	845	2600	13000	
MRDZ20.0	20	25/32"	112	31,5	72	175	136	24	60	17,75	24	1165	3000	15000	

*WLL: Working load limit.
*BL: Breaking load.

Stainless steel | Zinc

25/32 QUICK LINK UNITS CONVERSION

LT [in]	LI1 [in]	LI2 [in]	HT [in]	HI [in]	O [in]	E [in]	R [in]	T [in]	WEIGHT [lb]	WORKING LOAD [lb]	BREAKING LOAD [lb]
4.409	1.240	2.835	6.929	5.354	0.945	2.362	0.699	0.945	2.61	6613	33069

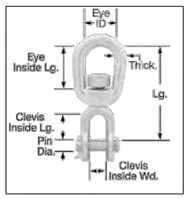

EYE-TO-CLEVIS SWIVEL

MATERIAL: GALVANIZED STEEL
LENGTH: 5 7/8"
EYE:
THICKNESS: 3/4"
INSIDE LENGTH: 1 3/4"
ID: 2"
CLEVIS
INSIDE WIDTH: 1 1/8"
INSIDE LENGTH: 1 3/4"
PIN DIAMETER: 3/4"
PIN TYPE: COTTER
CAPACITY: 7,200 LBS.
FABRICATION: FORGED
SPECIFICATIONS MET FED. SPEC. RR-C-271
FITTING TYPE: SWIVEL
ATTACHMENT TYPE: EYE-TO-CLEVIS

WIRE ROPE THIMBLE

FITTING TYPE: THIMBLE
MATERIAL: GALVANIZED STEEL
FOR WIRE ROPE DIAMETER" 1/2"
LOOP
INSIDE LENGTH: 1 7/8"
INSIDE WIDTH: 1 1/8"
SPECIFICATIONS MET FED. SPEC. FF-T-276B

LICENSED ARCHITECT DAVID HIGHAM C19168 10-31-25 RENEWAL DATE STATE OF CALIFORNIA

REGISTERED PROFESSIONAL ENGINEER MICHAEL BERG Clark Berg No. 3693 STRUCTURAL STATE OF CALIFORNIA

10/18/2023

THESE PLANS AND SPECIFICATIONS ARE THE PROPERTY OF USA SHADE AND FABRIC STRUCTURES AND SHALL NOT BE REPRODUCED WITHOUT THEIR WRITTEN PERMISSION.

USASHADE & Fabric Structures
CORPORATE HEADQUARTERS
2580 ESTERS BLVD. SUITE 100
DFW AIRPORT, TX, 75261
800-966-5005

CERTIFICATIONS:
IAS CERTIFICATION No: FA-428
CLARK COUNTY MANUFACTURER CERTIFICATION NUMBER (NEVADA): 355

CUSTOMER:
Buena Park Elementary S.D.

PROJECT NAME:
Gilbert Elementary

LOCATION:
7255 8th Street
Buena Park, CA 90621

MODEL NUMBER:
DSA4183030-22

APPROVED
DIV. OF THE STATE ARCHITECT
APP: 04-121917 PC
REVIEWED FOR
SS ☑ FLS ☑ ACS ☒ CG ☐
DATE: 10/30/2023

STRUCTURE TYPE:
TENSION SAILS
DSA

SIZE: MAXIMUM
30' x 133' MAX. x 15'e

SCALE : NONE

DRAWING SIZE:
D

PRE-CHECK (PC) DOCUMENT
Code : 2022 CBC
A separate project application for construction is required.

Eng. By :	HH	12/01/22
Design By :	OS	12/01/22
Approved By :	MB	12/01/22

DRAWING DESCRIPTION:
SPECIFICATIONS

DWG. DSA4183030-22

SHEET 25.2-2000

REV. NC

GENERAL NOTES

1. CONTRACTOR IS RESPONSIBLE FOR 6'-0" HIGH TEMPORARY CONSTRUCTION BARRIER WITH VISION SCREEN AT STAGING, STORAGE AND CONSTRUCTION AREA WITH SIGNAGE EVERY 20'-0" TO WARN STUDENTS OF CONSTRUCTION AREA.
2. CONTRACTOR TO BRING IN OFFICE TRAILER TO CONSTRUCTION AREA.
3. CONTRACTOR SHALL ACCESS THE SITE FROM 8TH STREET. ANY DAMAGE TO FIRE LANE WILL BE AT THE CONTRACTOR'S EXPENSE.
4. CONTRACTOR TO REPAIR BACK TO EXISTING CONDITIONS ALL LAYDOWN AREAS AT THE END OF CONSTRUCTION. THIS INCLUDES LANDSCAPE AREAS AND ANY BROKEN SPRINKLERS, VALVE BOXES, CONCRETE, ASPHALT, ETC.
5. CONTRACTOR SHALL REPLACE, RECONSTRUCT AND REPAIR ALL EXISTING WORK THAT IS IMPACTED, DAMAGED, OR DESTROYED AS A RESULT OF ANY CONTRACTOR WORK INCLUDING, BUT NOT LIMITED TO, HARDSCAPING, SIDEWALKS, IRRIGATION SYSTEMS, LANDSCAPING, LAWNS, STRUCTURES AND UTILITIES - ALL TO THE SATISFACTION OF THE DISTRICT.
6. WHERE ASPHALT OR CONCRETE IS BEING REPATCHED, CONTRACTOR SHALL PROVIDE EVEN AND STRAIGHT LINE CUTS WITH 2-FOOT STRAIGHT SLURRY SEAL SURFACE PATCH ON BOTH SIDES OF CUT.
7. CONTRACTOR SHALL EXERCISE EXTREME CAUTION IN EXCAVATING AND TRENCHING ON SITE TO AVOID EXISTING DUCTS, PIPING OR CONDUITS, ETC., AND TO PREVENT HAZARDS TO PERSONNEL AND/OR DAMAGE TO EXISTING UNDERGROUND UTILITIES OR STRUCTURES WHETHER OR NOT SHOWN AND INSTALLED BY ANY OTHER CONTRACTS. THE ARCHITECT IS NOT RESPONSIBLE FOR THE LOCATION OF UNDERGROUND UTILITIES OR STRUCTURES WHETHER OR NOT SHOWN OR DETAILED AND INSTALLED BY ANY OTHER CONTRACTS. THE CONTRACTOR SHALL IMMEDIATELY NOTIFY THE ARCHITECT SHOULD SUCH UNIDENTIFIED CONDITIONS BE DISCOVERED. THESE DRAWINGS AND SPECIFICATIONS DO NOT INCLUDE THE NECESSARY ELEMENTS FOR CONSTRUCTION SAFETY.
8. GATES IN PATH OF TRAVEL SHALL COMPLY WITH EXIT DOOR REQUIREMENTS WITH PROPER LEVER HARDWARE AND KICK PLATES.

LEGEND

- (E) ASPHALT
- CONCRETE (SEE CIVIL DWGS)
- COLORED STAMPED CONCRETE (SEE LANDSCAPE DWGS)
- ASPHALT PAVING (SEE CIVIL DWGS)
- LANDSCAPING (SEE LANDSCAPE DWGS)
- PROPERTY LINE
- LIMIT OF WORK
- LINE OF ROOF, SKYLIGHT, OR SOFFIT OVERHEAD - SHOWN DASHED
- FIRE HYDRANT
- CHAINLINK FENCE

KEYNOTES

NUMBER	NOTE
02 114	(E) PLANTER

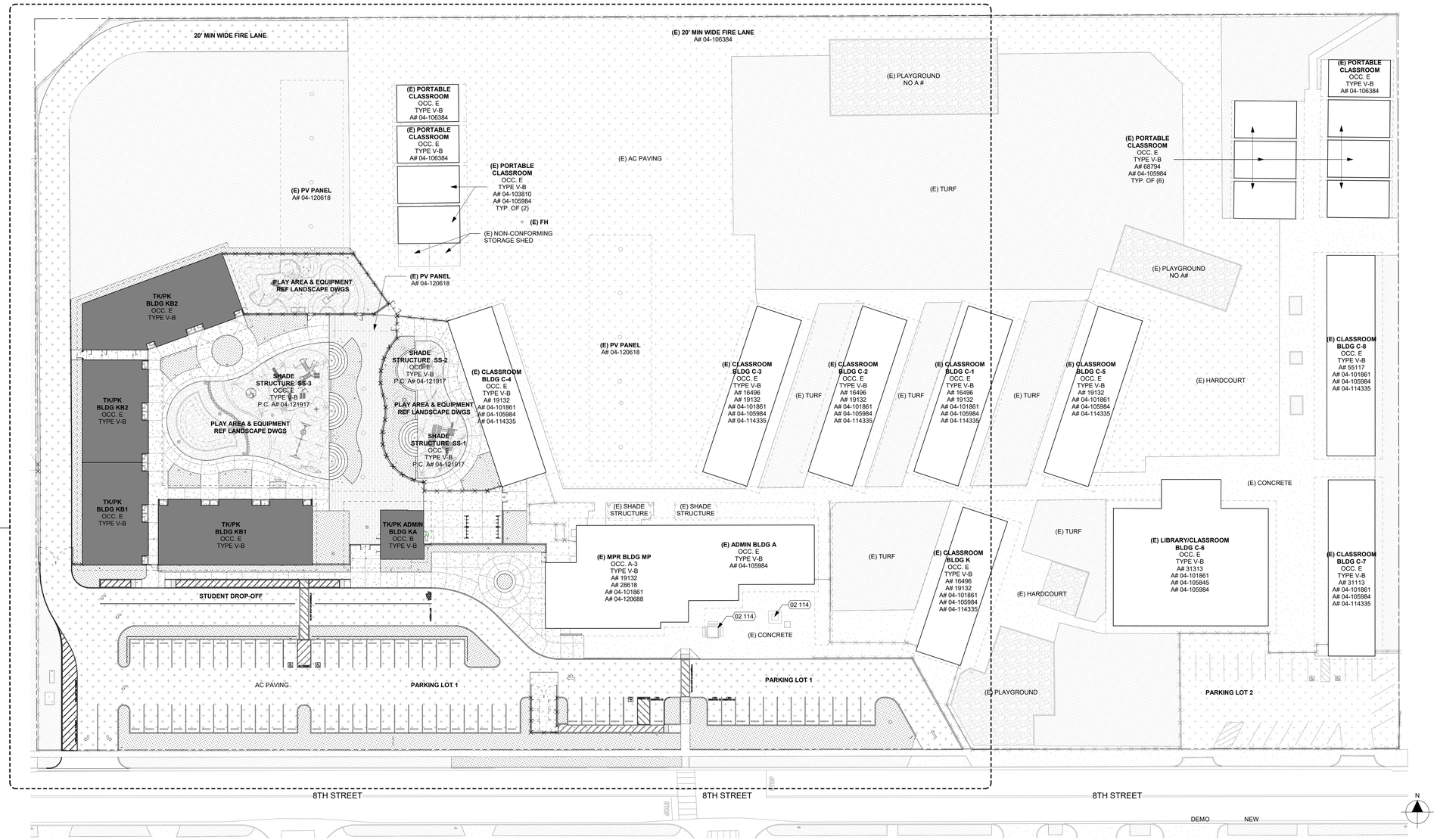

REF: 6 / A5.1

SITE PLAN OVERALL 1" = 30'-0" 1

DSA STAMP

STUDIO W ARCHITECTS

Studio W Architects
424 32nd Street, Suite D/E
Newport Beach, California 92663
[T] 949.774.2920
www.StudioW-Architects.com

ARCHITECT	ENGINEER

LICENSED ARCHITECT BRYAN P WHITMORE No. C 30345 Ren. 9/30/25 STATE OF CALIFORNIA

DATE SIGNED: 06/24/2024

GENERAL NOTES

1. This sheet is part of a set and is not to be used alone.
2. This sheet is not to be used for construction unless the architect's stamp and signature appear on the drawings and the status box indicated drawings have been released for construction.
3. These plans and prints thereof, as instruments of service, are owned by the architect and are for use on this project only. Reproduction and/or distribution without the prior written consent of the architect is forbidden.
4. Copyright Studio W Associates, Inc. 2024.

REVISION HISTORY

NO.	REMARKS	DATE

DRAWING STATUS

	DATE
○ DSA PLAN CHECK	03/29/2024
● DSA BACK CHECK	06/24/2024
○ BIDDING	
○ CONSTRUCTION	

KEY PLAN

BUENA PARK SD
6885 ORANGETHORPE AVE
BUENA PARK, CA 90620

DSA SUBMITTAL

CARL E. GILBERT ELEMENTARY SCHOOL
TK-PK CLASSROOMS & EARLY LEARNING BUILDING
7255 8TH STREET, BUENA PARK, CA 90621

SITE PLAN OVERALL

Date	Project Number
06/24/2024	23076
Application Number	Drawing Number
04-123212	A1.1
Drawn AT	Checked MS

PRINT DATE: 6/24/2024 9:40:03 PM
FILE PATH: BIM 360://23076 BPSD Gilbert ES PK-TK CRs, Early Learning Bldg/23076-BP(ISD) Gilbert-BLDG-A21.rvt

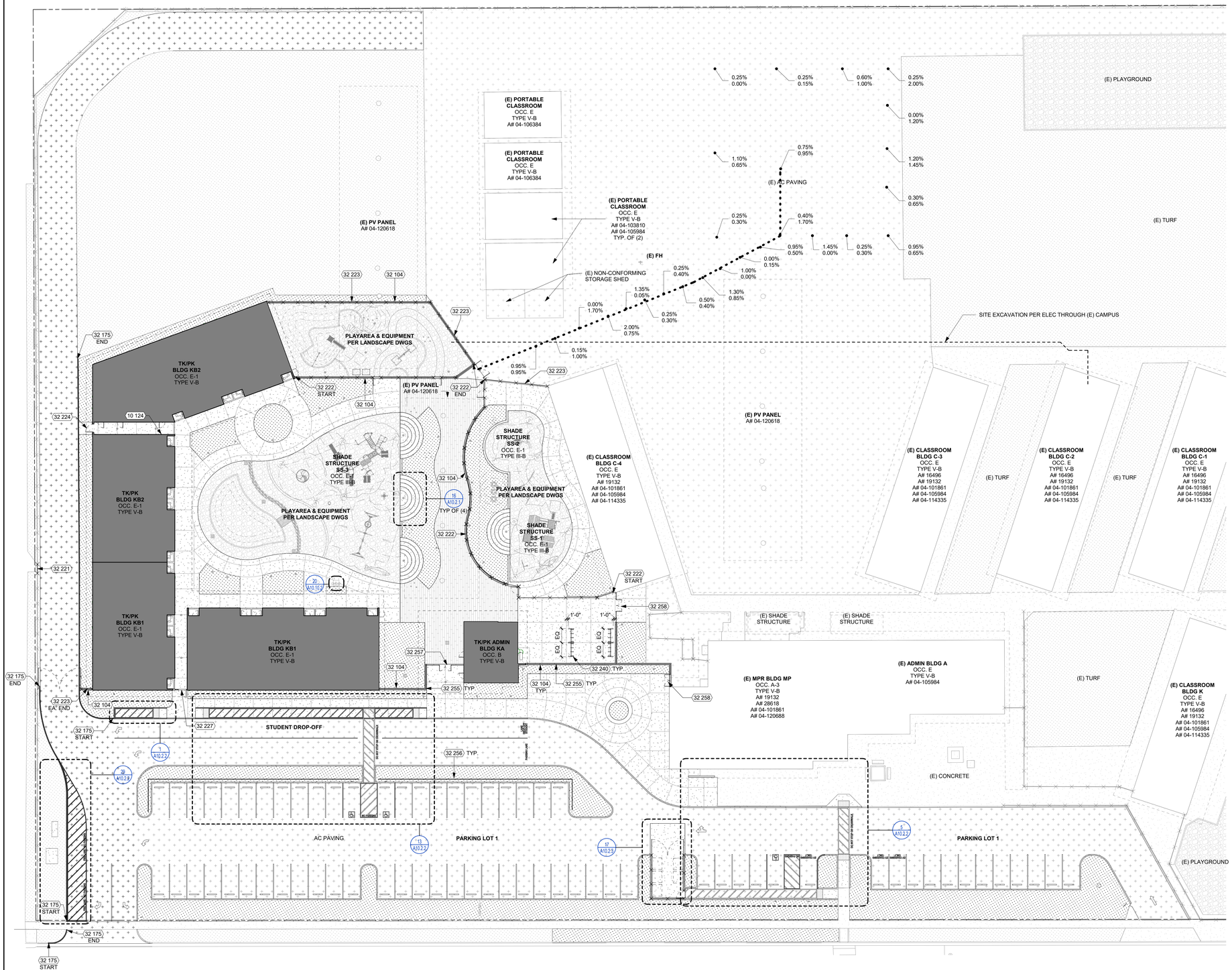

REF: 1 / A1.1

ENLARGED SITE PLAN 3/64" = 1'-0" 10

KEYNOTES

NUMBER	NOTE
10 124	DIRECTIONAL ACCESS SIGNAGE (SEE DETAIL 15/A10.2.1)
32 104	12" MOV CURB (SEE 28/A10.2.1)
32 175	FIRE LANE MARKING (SEE DETAIL 6/A10.2.1.) PROVIDE ALONG FIRE LANE
32 221	CHAIN LINK FENCE MATCH (E) (SEE DETAIL 2/A10.2.3)
32 222	4' TALL CHAIN LINK FENCE (SEE DETAIL 2/A10.2.3)
32 223	6' TALL CHAIN LINK FENCE (SEE DETAIL 2/A10.2.3)
32 224	CHAIN LINK GATE (SEE GATE SCHEDULE)
32 227	ORNAMENTAL METAL GATE (SEE SHEET A10.2.4)
32 240	BICYCLE RACKS (SEE DETAIL 16/A10.2.1)
32 255	7' ORNAMENTAL FENCE (SEE DETAIL 1/A10.2.4)
32 256	4' ORNAMENTAL FENCE (SEE DETAIL 1/A10.2.4)
32 257	ORNAMENTAL ACCESSIBLE DOUBLE GATE (SEE DETAIL 2/A10.2.4)
32 258	ORNAMENTAL SERVICE GATE (SEE DETAIL 5/A10.2.4)

GENERAL NOTES

1. INSTALLATION OF CONDUIT FOR LOW VOLTAGE AND FIRE ALARM THROUGH THE EXISTING BUILDINGS. PATCH/REPAIR FINISHES TO MATCH EXISTING. SITE HARDSCAPE/LANDSCAPE RESTORED TO ORIGINAL CCONDITION.

LEGEND

- CONCRETE (SEE CIVIL DWGS)
- STAMPED CONC. (SEE LANDSCAPE & CIVIL DWGS)
  MFR: MATCRETE
  PRODUCT: PACIFIC BOARDWALK STAMP (12"X6")
  INTEGRAL COLOR: MFR.DAVIS COLOR (COCOA 6130)
  RELEASE COLOR: TBD
- ASPHALT PAVING (SEE CIVIL DWGS)
- ASPHALT PAVING (SEE CIVIL DWGS)
- PLANTING (SEE LANDSCAPE DWGS)
- 0.00% / 0.00% DIRECTION OF TRAVEL % / CROSS SLOPE %

DSA STAMP

STUDIO W ARCHITECTS

Studio W Architects
424 32nd Street, Suite D/E
Newport Beach, California 92663
[T] 949.774.2920
www.StudioW-Architects.com

ARCHITECT	ENGINEER

LICENSED ARCHITECT BRYAN P WHITMORE No. C 30345 Ren. 9/30/25 STATE OF CALIFORNIA

DATE SIGNED: 06/24/2024

GENERAL NOTES

1. This sheet is part of a set and is not to be used alone.
2. This sheet is not to be used for construction unless the architect's stamp and signature appear on the drawings and the status box indicated drawings have been released for construction.
3. These plans and prints thereof, as instruments of service, are owned by the architect and are for use on this project only. Reproduction and/or distribution without the prior written consent of the architect is forbidden.
4. Copyright Studio W Associates, Inc. 2024.

REVISION HISTORY

NO.	REMARKS	DATE

DRAWING STATUS

	DATE
DSA PLAN CHECK	03/29/2024
DSA BACK CHECK	06/24/2024
BIDDING	
CONSTRUCTION	

KEY PLAN

BUENA PARK SD
6885 ORANGETHORPE AVE
BUENA PARK, CA 90620

DSA SUBMITTAL

CARL E. GILBERT ELEMENTARY SCHOOL
TK-PK CLASSROOMS & EARLY LEARNING BUILDING
7255 8TH STREET, BUENA PARK, CA 90621

ENLARGED SITE PLAN

Date	Project Number
06/24/2024	23076
Application Number	Drawing Number
04-123212	A1.2
Drawn AT	Checked MS

PRINT DATE: 6/24/2024 9:40:09 PM
FILE PATH: BIM 360://23076 BPSD Gilbert ES PK-TK CRs, Early Learning Bldg/23076-BPUSD Gilbert-BLDG-A21.rvt

LEGEND	GENERAL NOTES	KEYNOTES
		NUMBER / NOTE

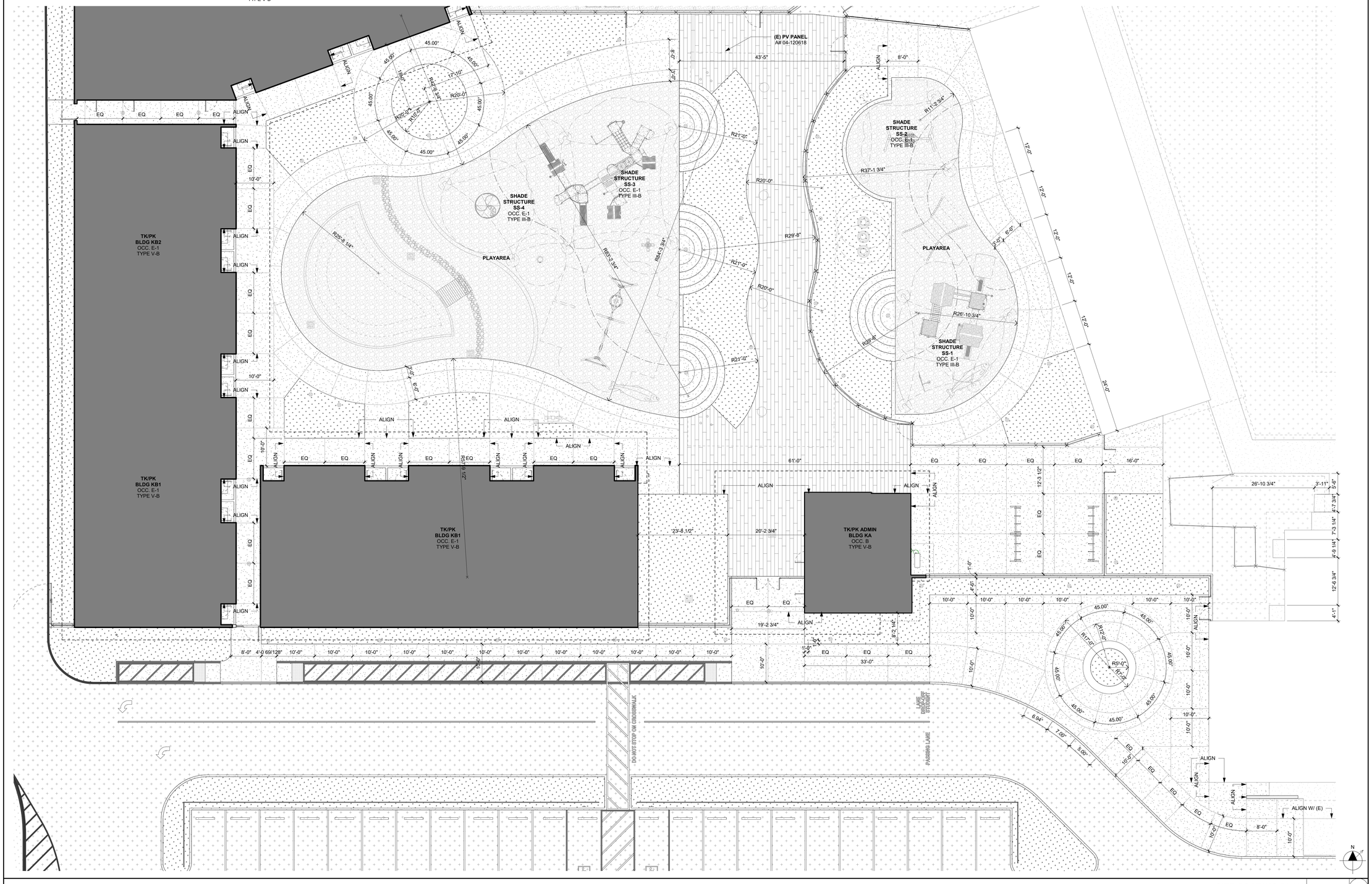

STUDIO W ARCHITECTS

Studio W Architects
424 32nd Street, Suite D/E
Newport Beach, California 92663
[T] 949.774.2920
www.StudioW-Architects.com

DSA STAMP

ARCHITECT	ENGINEER
LICENSED ARCHITECT BRYAN P WHITMORE No. C 30345 Ren. 9/30/25 STATE OF CALIFORNIA DATE SIGNED: 06/24/2024	

GENERAL NOTES

1. This sheet is part of a set and is not to be used alone.
2. This sheet is not to be used for construction unless the architect's stamp and signature appear on the drawings and the status box indicated drawings have been released for construction.
3. These plans and prints thereof, as instruments of service, are owned by the architect and are for use on this project only. Reproduction and/or distribution without the prior written consent of the architect is forbidden.
4. Copyright Studio W Associates, Inc. 2024.

REVISION HISTORY

NO.	REMARKS	DATE

DRAWING STATUS

	DATE
○ DSA PLAN CHECK	03/29/2024
● DSA BACK CHECK	06/24/2024
○ BIDDING	
○ CONSTRUCTION	

KEY PLAN

BUENA PARK SD
6885 ORANGETHORPE AVE
BUENA PARK, CA 90620

DSA SUBMITTAL

CARL E. GILBERT ELEMENTARY SCHOOL
TK-PK CLASSROOMS & EARLY LEARNING BUILDING
7255 8TH STREET, BUENA PARK, CA 90621

SITE SCORING PLAN

Date	Project Number
06/24/2024	23076
Application Number	Drawing Number
04-123212	A1.3
Drawn / Checked	
AT / MS	

SITE SCORING PLAN | 1" = 10'-0" | 5

PRINT DATE: 6/24/2024 9:40:12 PM
FILE PATH: BIM 360://23076 BPSD Gilbert ES PK-TK CRs, Early Learning Bldg/23076-BPUSD Gilbert-BLDG-A21.rvt

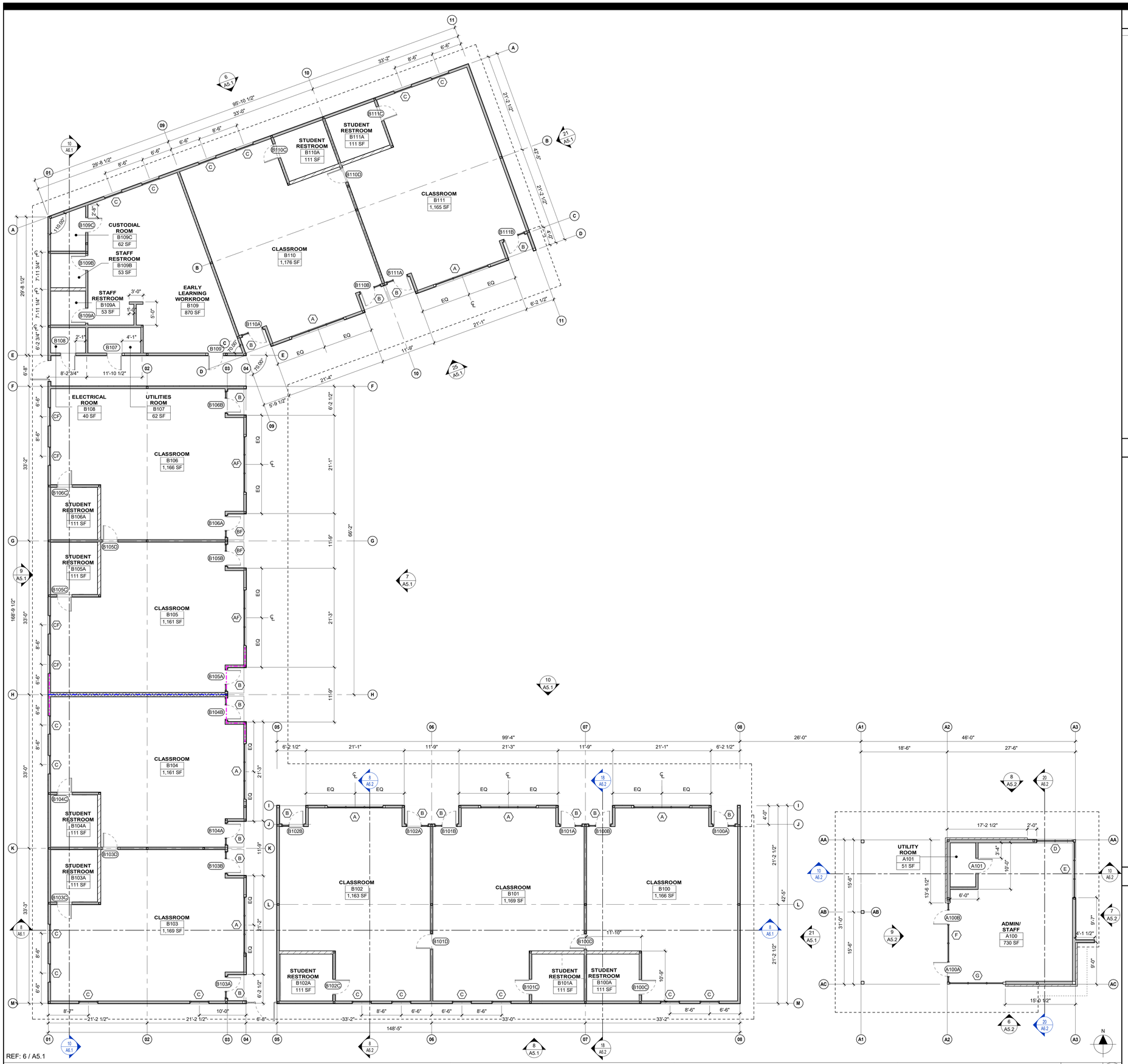

FLOOR PLAN 1/8" = 1'-0" 1

KEYNOTES

NUMBER	NOTE

GENERAL NOTES

GENERAL

1. FOR PLUMBING FIXTURES, FLOOR DRAINS, CASEWORK, AND OTHER EQUIPMENT - REFER TO EQUIPMENT PLAN.
2. FOR ALL REQUIRED SIGNAGE INCLUDING ROOM NAME AND NUMBER THROUGHOUT - REFER TO CODE ANALYSIS PLAN.
3. ALL WALLS SHALL HAVE R-19 BATT INSULATION, FULL HEIGHT AND SOUND INSULATION TO BE INSTALLED AT INTERIOR WALLS.
4. PAINT ALL INTERIOR WALLS. REFER TO ROOM FINISH SCHEDULE FOR INTERIOR WALL FINISHES.
5. DOORS SHALL BE INSTALLED 4" FROM JAMB UNLESS OTHERWISE NOTED. FOR ADDITIONAL REQUIRED DOOR CLEARANCES, SEE DETAIL 1 / A10.8
6. ALL FIRE WALLS THAT HAVE A CONCEALED FLOOR-CEILING ATTIC SPACE SHALL BE EFFECTIVELY AND PERMANENTLY IDENTIFIED WITH SIGNS OR STENCILING READING "FIRE AND/OR SMOKE BARRIER - PROTECT ALL OPENINGS" IN THE CONCEALED SPACE. THE IDENTIFICATION SHALL BE LOCATED WITHIN 15 FEET OF THE END OF EACH WALL AT INTERVALS NOT EXCEEDING 30 FEET HORIZONTALLY. THE LETTERING SHALL NOT BE LESS THAN 3" TALL AND HAVE A MINIMUM STROKE OF 3/8".

STRUCTURE

1. DIMENSIONS OF WALLS ARE FROM FACE OF STUD UNLESS OTHERWISE NOTED.
2. REFER TO STRUCTURAL DRAWINGS FOR HEADER SCHEDULE AND FRAMING DETAILS FOR OPENINGS IN INTERIOR AND EXTERIOR WALLS.
3. SEE STRUCTURAL DRAWINGS FOR FRAMING SIZE AND SPACING.
4. SEE STRUCTURAL DRAWINGS FOR COLUMN LOCATIONS AND SIZING.

LEGEND

A101A	DOOR NUMBER, SEE DOOR SCHEDULE
A	WINDOW OR STOREFRONT, SEE WINDOW SCHEDULE
	LINE OF ROOF OR SOFFIT OVERHEAD - SHOWN DASHED
	EXTERIOR PLASTER 6" STUD WALL, SEE DETAIL 1 / A10.1
	WITH PLASTER DBL SIDED, SEE DETAIL 2 / A10.1
	EXTERIOR BRICK 8" STUD WALL, SEE DETAIL 5 / A10.1
	EXTERIOR 1-HOUR RATED WALL, SEE DETAIL 13 / A10.1
	INTERIOR 6" STUD WALL, SEE DETAIL 6 / A10.1
	INTERIOR 8" STUD WALL, SEE DETAIL 7 / A10.1
	INTERIOR CMU 4 - HOUR RATED WALL 15 / A10.1

DSA STAMP

STUDIO W ARCHITECTS

Studio W Architects
424 32nd Street, Suite D/E
Newport Beach, California 92663
[T] 949.774.2920
www.StudioW-Architects.com

ARCHITECT	ENGINEER

LICENSED ARCHITECT BRYAN P WHITMORE No. C 30345 Ren. 9/30/25 STATE OF CALIFORNIA

DATE SIGNED: 06/24/2024

GENERAL NOTES

1. This sheet is part of a set and is not to be used alone.
2. This sheet is not to be used for construction unless the architect's stamp and signature appear on the drawings and the status box indicated drawings have been released for construction.
3. These plans and prints thereof, as instruments of service, are owned by the architect and are for use on this project only. Reproduction and/or distribution without the prior written consent of the architect is forbidden.
4. Copyright Studio W Associates, Inc. 2024.

REVISION HISTORY

NO.	REMARKS	DATE

DRAWING STATUS

	DATE
○ DSA PLAN CHECK	03/29/2024
● DSA BACK CHECK	06/24/2024
○ BIDDING	
○ CONSTRUCTION	

KEY PLAN

BUENA PARK SD
6885 ORANGETHORPE AVE
BUENA PARK, CA 90620

DSA SUBMITTAL

CARL E. GILBERT ELEMENTARY SCHOOL
TK-PK CLASSROOMS & EARLY LEARNING BUILDING
7255 8TH STREET, BUENA PARK, CA 90621

FLOOR PLAN

Date	Project Number
06/24/2024	23076
Application Number	Drawing Number
04-123212	A2.1
Drawn AT / Checked MS	

PRINT DATE: 6/24/2024 9:40:15 PM
FILE PATH: BIM 360://23076 BPSD Gilbert ES PK-TK CRs, Early Learning Bldg/23076-BPUSD Gilbert-BLDG-A21.rvt

EQUIPMENT PLAN | 1/8" = 1'-0" | 1

KEYNOTES

NUMBER	NOTE
05 501	ROOF ACCESS LADDER (SEE DETAIL 1/A10.7.1)
07 705	DOWNSPOUT, PAINT TO MATCH COLOR(S) OF WALL BEHIND (SEE DETAIL 9/A10.7.1)
09 704	MAGNETIC DRY ERASE WALL COVERING
10 403	FIRE EXTINGUISHER (2A-10B:C) IN SEMI-RECESSED CABINET (SEE DETAIL 1/A10.10.3)
22 404	MOP SINK (SEE DETAIL 3/A10.10.3)
23 701	HVAC EQUIPMENT (SEE MECHANICAL DWGS.)
32 242	VERTICAL BIKE RACK (SEE DETAIL 16/A10.10.3)

GENERAL NOTES

1. FOR SIGNAGE REFER TO CODE ANALYSIS PLAN.
2. FOR CASEWORK DIMENSIONS REFER TO INTERIOR ELEVATIONS.
3. FOR TYPICAL CASEWORK ANCHORAGE SEE DETAIL 4 / A10.12
4. FOR TACK BOARD LOCATIONS REFER TO INTERIOR ELEVATIONS.
5. FOR RESTROOM FIXTURES, PARTITIONS, AND SPECIALTIES, REFER TO ENLARGED RESTROOM PLANS.
6. FOR WALL TYPES REFER TO FLOOR PLAN.
7. PER CBC 11B-203.5 MACHINERY SPACES FREQUENTED ONLY BY SERVICE PERSONNEL FOR MAINTENANCE, REPAIR OR OCCASSIONAL MONITORING OF EQUIPMENT SHALL NOT BE REQUIRED TO COMPLY WITH CHAPTER 11B OR TO BE ON AN ACCESSIBLE ROUTE.

LEGEND

102 (30" x 24" x 24" LOCKABLE)

CASEWORK TAG
102 = ARCHITECTURAL WOODWORK STANDARD (AWS) NUMBER
36" x 24" x 24" = WIDTH x HEIGHT x DEPTH
LOCKABLE = MODIFYING NOTE

NOTE: FOR BASE CABINETS, HEIGHT DOES NOT INCLUDE COUNTERTOP THICKNESS - REFER TO PLANS FOR COUNTERTOP TYPE

FOR TYPICAL CASEWORK ANCHORAGE, SEE DETAIL 4 / A10.12

30" x 48" ACCESSIBLE CLEAR SPACE

60" DIAMETER ACCESSIBLE CLEAR SPACE

DSA STAMP

STUDIO W ARCHITECTS

Studio W Architects
424 32nd Street, Suite D/E
Newport Beach, California 92663
[T] 949.774.2920
www.StudioW-Architects.com

ARCHITECT	ENGINEER

LICENSED ARCHITECT BRYAN P WHITMORE No. C 30345 Ren. 9/30/25 STATE OF CALIFORNIA

DATE SIGNED: 06/24/2024

GENERAL NOTES

1. This sheet is part of a set and is not to be used alone.
2. This sheet is not to be used for construction unless the architect's stamp and signature appear on the drawings and the status box indicated drawings have been released for construction.
3. These plans and prints thereof, as instruments of service, are owned by the architect and are for use on this project only. Reproduction and/or distribution without the prior written consent of the architect is forbidden.
4. Copyright Studio W Associates, Inc. 2024.

REVISION HISTORY

NO.	REMARKS	DATE

DRAWING STATUS

	DATE
○ DSA PLAN CHECK	03/29/2024
● DSA BACK CHECK	06/24/2024
○ BIDDING	
○ CONSTRUCTION	

KEY PLAN

BUENA PARK SD
6885 ORANGETHORPE AVE
BUENA PARK, CA 90620

DSA SUBMITTAL

CARL E. GILBERT ELEMENTARY SCHOOL
TK-PK CLASSROOMS & EARLY LEARNING BUILDING
7255 8TH STREET, BUENA PARK, CA 90621

EQUIPMENT PLAN

Date	Project Number
06/24/2024	23076
Application Number	Drawing Number
04-123212	A2.2
Drawn: AT	Checked: MS

PRINT DATE: 6/24/2024 9:40:18 PM
FILE PATH: BIM 360://23076 BPSD Gilbert ES PK-TK CRs_Early Learning Bldg/23076-BPUSD Gilbert-BLDG-A21.rvt

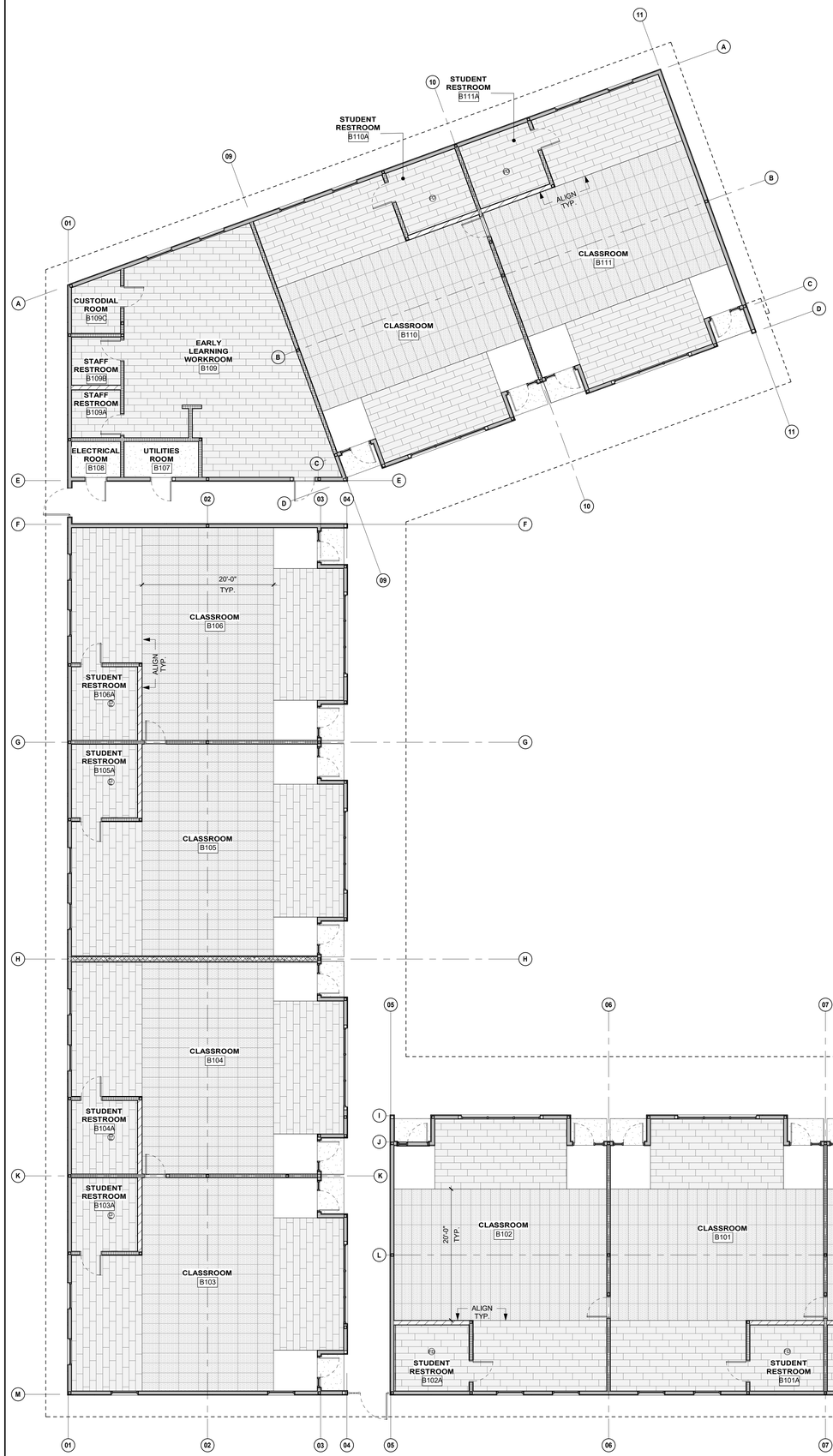

REF: 6 / A5.1

FLOOR PATTERN PLAN 1/8" = 1'-0" 1

GENERAL NOTES

1. SEE ROOM FINISH SCHEDULE SHEET FOR MORE INFORMATION.
2. FOR CONCRETE EXPANSION JOINT REQUIREMENTS, SEE STRUCTURAL DWGS.
3. CONCRETE IN CARPETED AREAS DOES NOT HAVE A SPECIFIC SCORING PATTERN BUT CONTROL JOINTS MUST NOT EXCEED 10'-0" O.C. MAX. SPACING.

FINISH PLAN LEGEND

- LVT, FOR WALL BASE SEE 17/A10.10.3 13/A10.10.3
- WALK-OFF MAT, FOR WALL BASE SEE 16/A10.10.3
- CARPET TILE, FOR WALL BASE SEE 18/A10.10.3
- SLIP RESISTANT POLISHED CONCRETE PER SPECIFICATIONS, FOR WALL BASE SEE 17/A10.10.3
- CONTROL JOINTS AT EXPOSED CONCRETE, SEE DETAIL 17/S1.1
- FD FLOOR DRAIN WITH LOCALIZED DEPRESSION, SEE DETAIL 4/A10.10.3

DSA STAMP

STUDIO W ARCHITECTS

Studio W Architects
424 32nd Street, Suite D/E
Newport Beach, California 92663
[T] 949.774.2920
www.StudioW-Architects.com

ARCHITECT	ENGINEER

LICENSED ARCHITECT BRYAN P WHITMORE No. C 30345 Ren. 9/30/25 STATE OF CALIFORNIA

DATE SIGNED: 06/24/2024

GENERAL NOTES

1. This sheet is part of a set and is not to be used alone.
2. This sheet is not to be used for construction unless the architect's stamp and signature appear on the drawings and the status box indicated drawings have been released for construction.
3. These plans and prints thereof, as instruments of service, are owned by the architect and are for use on this project only. Reproduction and/or distribution without the prior written consent of the architect is forbidden.
4. Copyright Studio W Associates, Inc. 2024.

REVISION HISTORY

NO.	REMARKS	DATE

DRAWING STATUS

	DATE
○ DSA PLAN CHECK	03/29/2024
● DSA BACK CHECK	06/24/2024
○ BIDDING	
○ CONSTRUCTION	

KEY PLAN

BUENA PARK SD
6885 ORANGETHORPE AVE
BUENA PARK, CA 90620

DSA SUBMITTAL

CARL E. GILBERT ELEMENTARY SCHOOL
TK-PK CLASSROOMS & EARLY LEARNING BUILDING
7255 8TH STREET, BUENA PARK, CA 90621

FLOOR PATTERN PLAN

Date	Project Number
06/24/2024	23076
Application Number	Drawing Number
04-123212	A2.3
Drawn AT	Checked MS

PRINT DATE: 6/24/2024 9:40:20 PM
FILE PATH: BIM 360://23076 BPSD Gilbert ES PK-TK CRs, Early Learning Bldg/23076-BPUSD Gilbert-BLDG-A21.rvt

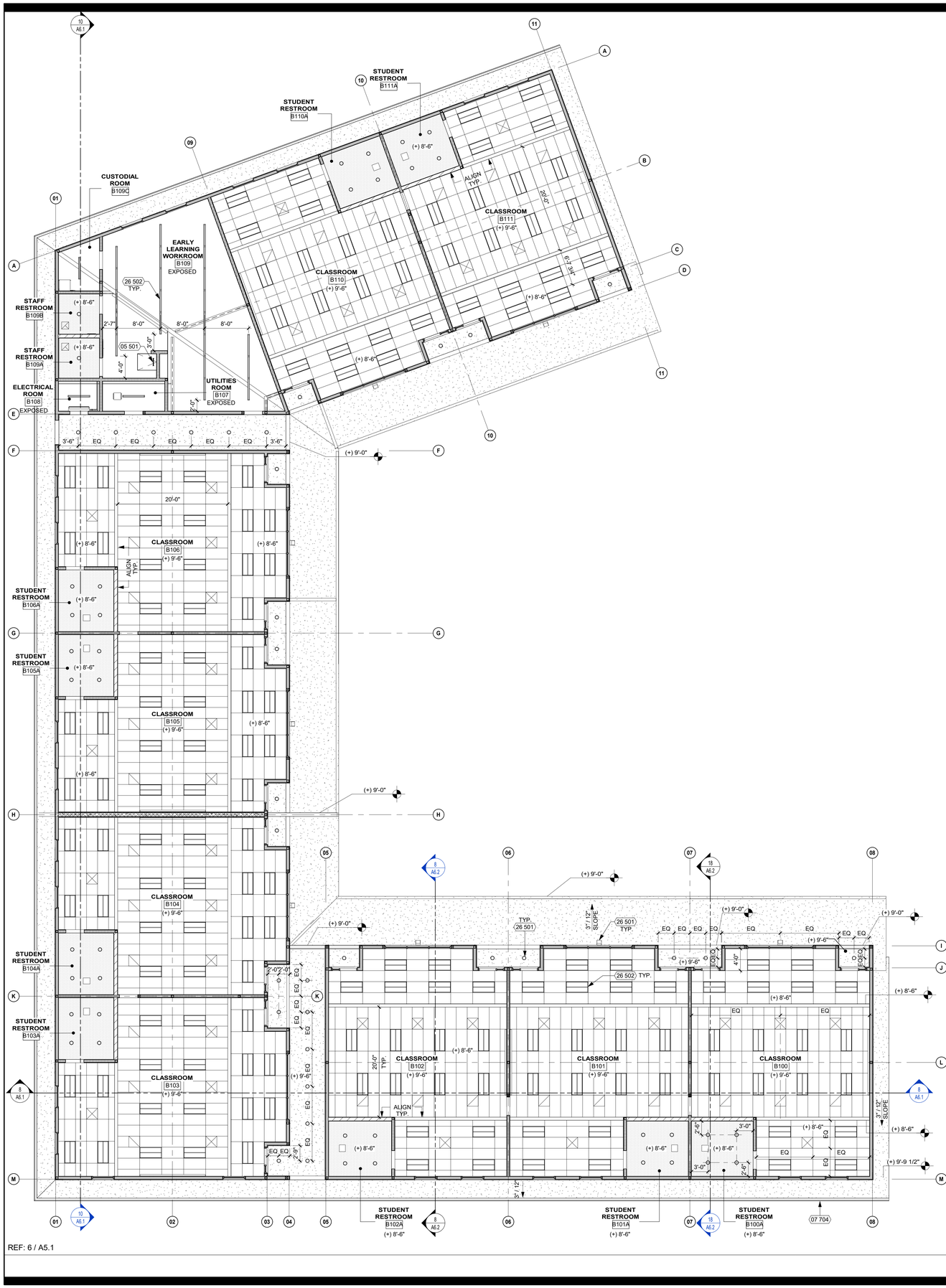

REF: 6 / A5.1

REFLECTED CEILING PLAN 1/8" = 1'-0" 1

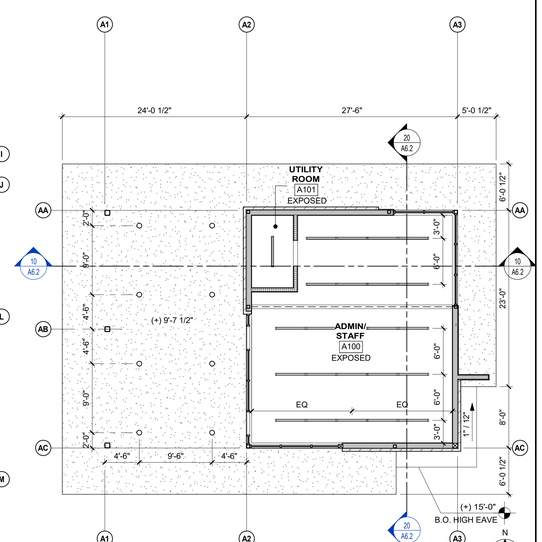

KEYNOTES

NUMBER	NOTE
05 501	ROOF ACCESS LADDER (SEE DETAIL 1/A10.7.1)
07 704	GUTTER, PREFINISHED TO MATCH ROOF PANELS IN COLOR, TYP.
26 501	EXTERIOR LIGHT FIXTURE (SEE ELECTRICAL DWGS.)
26 502	INTERIOR LIGHT FIXTURE (SEE ELECTRICAL DWGS.)

GENERAL NOTES

GENERAL
1. ALL HEIGHTS ARE REFERENCED FROM FINISH FLOOR ELEVATIONS = 0'-0"
2. CEILING SYSTEM SHOULD BE CENTERED WITHIN EACH ROOM AS WELL AS ALIGNED WITH THE STRUCTURAL GRID, U.O.N.
3. CEILING SYSTEM SHALL BE COORDINATED WITH THE LIGHTING & ELECTRICAL PLANS.
4. PAINT GYP. BD. CEILINGS AND SOFFITS P-1 U.O.N. (PAINT FINISH TO BE SAME AT FACE AND UNDERSIDE OF SOFFITS.) REFER TO ROOM FINISH SCHEDULE FOR COLOR SELECTIONS
5. PAINT EXPOSED CEILINGS, DUCTWORK AND EQUIPMENT PER FINISH SCHEDULE.
6. NO EXPOSED NAILS OR SCREWS ARE ALLOWED.

EQUIPMENT
1. SEE ELECTRICAL DRAWINGS FOR LIGHT FIXTURE SUPPORTS & BRACING. ELECTRICAL DEVICES ARE SHOWN FOR LOCATION IN RELATION TO LIGHT FIXTURES AND MECHANICAL DIFFUSERS IN SELECT AREAS. FOR FIXTURE INFORMATION SEE ELECTRICAL DRAWINGS.
2. SEE MECHANICAL AND PLUMBING DRAWINGS FOR DIFFUSERS AND PIPE CHASES.
3. SEE FIRE PROTECTION DETAILS FOR PENETRATIONS THROUGH RATED WALLS, WHERE OCCURS.
4. ROOM WITH SINGLE LIGHT FIXTURES SHALL CENTER FIXTURE IN ROOM.
5. LIGHT FIXTURE DIMENSIONS ARE TO CENTERLINE OF FIXTURE OR GROUP OF FIXTURES, AND TO WALL FINISH SURFACE. U.O.N.
6. CENTER AND ALIGN SMOKE DETECTOR, DIFFUSERS, GRILLS, AND SIMILAR ITEMS IN CEILING TILE GRID AND ALIGN WITH LIGHT FIXTURES

NOTE:
SEE CLASSROOM B100 FOR TYP. LIGHT FIXTURE DIM. AND CEILING HEIGHTS IN CLASSROOMS, U.N.O.

LEGEND

- 2x4 SUSPENDED ACOUSTICAL CEILING PANEL SYSTEM. SEE SHEET A10.9.1 AND A10.9.2 FOR ATTACHMENT TO STRUCTURE.
- GYPSUM WALLBOARD CEILING, PAINT SURFACE, SEE SHEET A10.9.1 AND A10.9.2
- EXTERIOR PLASTER SOFFIT, SEE DETAIL 7 / A10.6
- LIGHT FIXTURES, SEE ELECTRICAL DRAWINGS
- MECHANICAL EQUIPMENT, SEE MECHANICAL DRAWINGS
- ROOM NAME A119 (+) 8'-0" — ROOM TAG (+) 8'-0" = CEILING HEIGHT OF ROOM, U.O.N.
- ROOM NAME A119 EXPOSED — ROOM TAG EXPOSED = OPEN TO STRUCTURE

DSA STAMP

STUDIO W ARCHITECTS

Studio W Architects
424 32nd Street, Suite D/E
Newport Beach, California 92663
[T] 949.774.2920
www.StudioW-Architects.com

ARCHITECT	ENGINEER

LICENSED ARCHITECT BRYAN P WHITMORE No. C 30345 Ren. 9/30/25 STATE OF CALIFORNIA

DATE SIGNED: 06/24/2024

GENERAL NOTES
1. This sheet is part of a set and is not to be used alone.
2. This sheet is not to be used for construction unless the architect's stamp and signature appear on the drawings and the status box indicated drawings have been released for construction.
3. These plans and prints thereof, as instruments of service, are owned by the architect and are for use on this project only. Reproduction and/or distribution without the prior written consent of the architect is forbidden.
4. Copyright Studio W Associates, Inc. 2024.

REVISION HISTORY

NO.	REMARKS	DATE

DRAWING STATUS

	DATE
DSA PLAN CHECK	03/29/2024
DSA BACK CHECK	06/24/2024
BIDDING	
CONSTRUCTION	

KEY PLAN

BUENA PARK SD
6885 ORANGETHORPE AVE
BUENA PARK, CA 90620

DSA SUBMITTAL

CARL E. GILBERT ELEMENTARY SCHOOL
TK-PK CLASSROOMS & EARLY LEARNING BUILDING
7255 8TH STREET, BUENA PARK, CA 90621

REFLECTED CEILING PLAN

Date	Project Number
06/24/2024	23076
Application Number	Drawing Number
04-123212	A3.1
Drawn / Checked	
AT / MS	

PRINT DATE: 6/24/2024 9:40:23 PM
FILE PATH: BIM 360://23076 BPSD Gilbert ES PK-TK CRs_Early Learning Bldg/23076-BPUSD Gilbert BLDG-A21.rvt

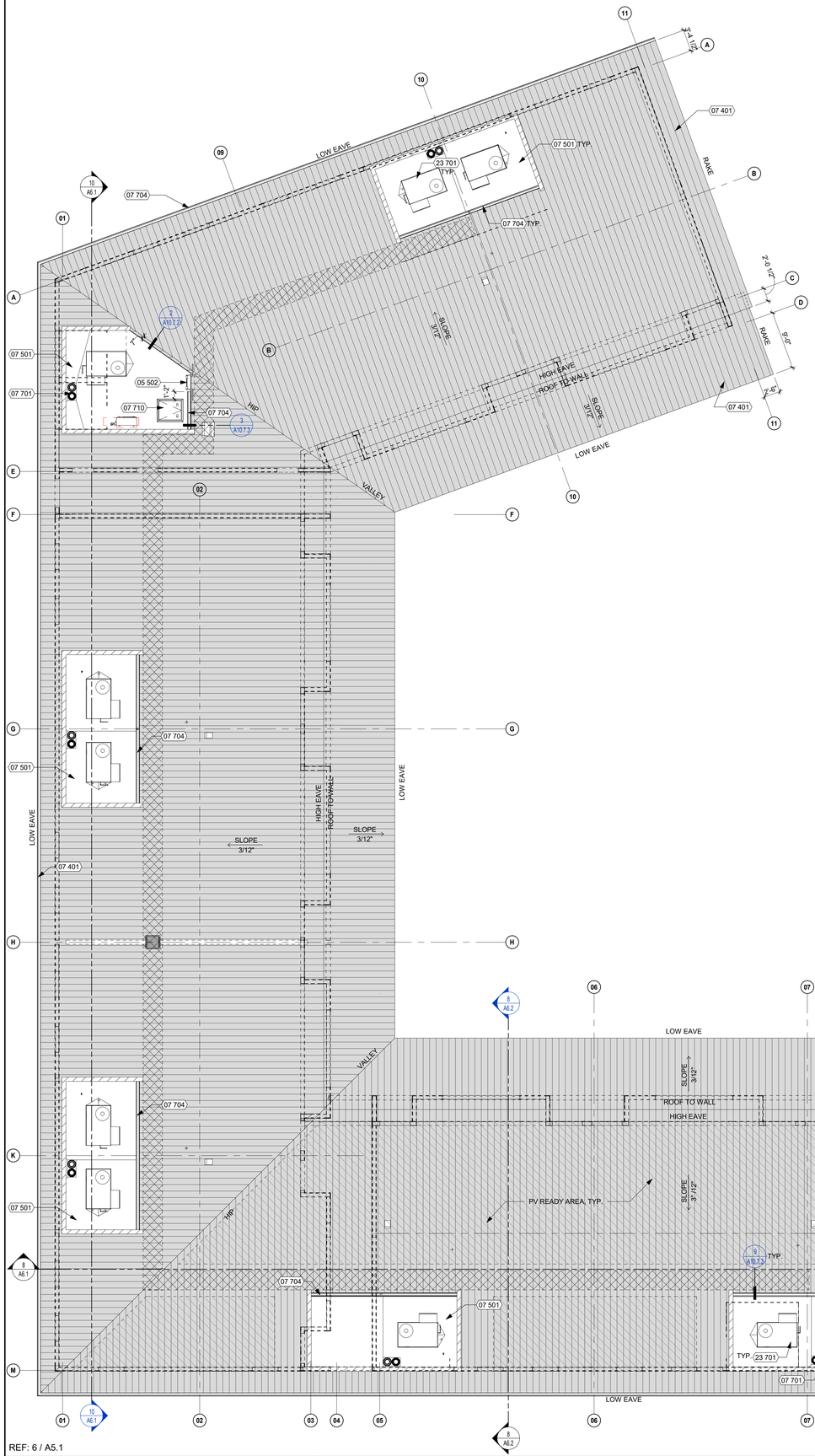

REF: 6 / A5.1

ROOF PLAN 1/8" = 1'-0" 5

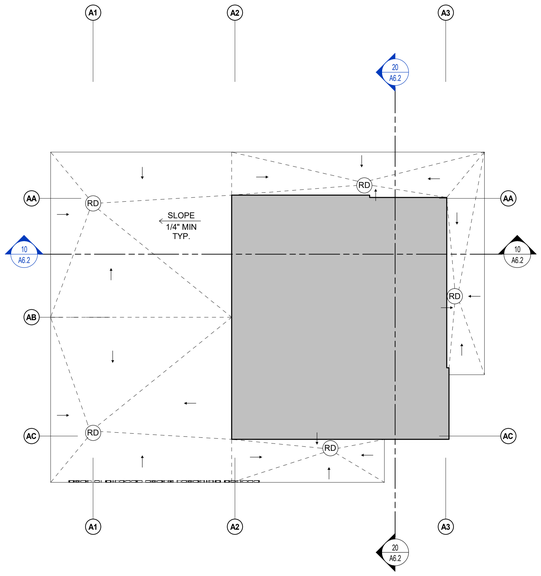

REF: 6 / A5.1

ADMIN CANOPY ROOF DRAINAGE PLAN 1/8" = 1'-0" 2

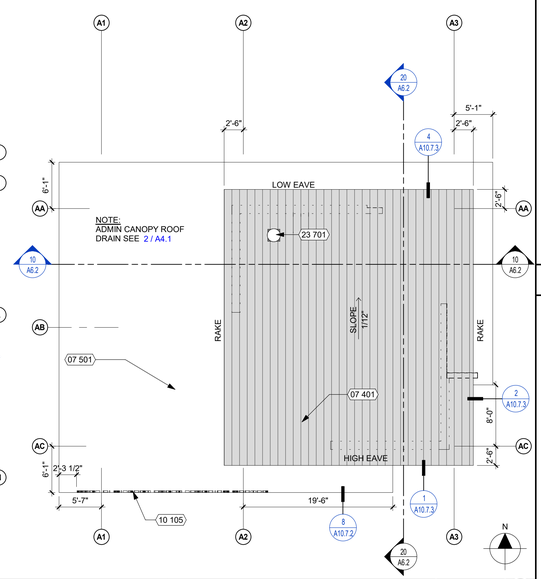

KEYNOTES

NUMBER	NOTE
05 502	PARAPET LADDER (SEE DETAIL 25/A10.7.1)
07 401	CLASS 'A' STANDING SEAM METAL ROOF ASSEMBLY
07 501	CLASS 'A' MEMBRANE ROOF ASSEMBLY
07 701	ROOF DRAIN AND OVERFLOW DRAIN (SEE DETAIL 16/A10.7.1)
07 704	GUTTER, PREFINISHED TO MATCH ROOF PANELS IN COLOR, TYP.
07 710	ROOF ACCESS HATCH, 36x42 (SEE DETAIL 3/A10.7.3)
10 105	EXTERIOR ALUMINUM LETTERS (SEE DETAIL 12/A10.7.2)
23 701	HVAC EQUIPMENT (SEE MECHANICAL DWGS.)

GENERAL NOTES

GENERAL
1. NOTES AND SYMBOLS ARE TO APPLY AT ALL AREAS OF SIMILAR GRAPHIC REPRESENTATION. SUCH INDICATIONS MAY BE LIMITED TO PROMOTE CLARITY OR AVOID REDUNDANCY. NO LIMITATION OF APPLICATION SHALL BE CONSTRUED WITHOUT SPECIFIC NOTATION.
2. ALL ROOF MATERIALS TO BE CLASS A RATED.
3. MINIMUM ROOF INSULATION R-30 ALL LOCATIONS OF THE ROOF.
4. MINIMUM THICKNESS OF ROOF INSULATION TO BE 6" AT LOW POINT OF ROOF DRAIN SUMP.
5. FLASHING TERMINATIONS SHALL HAVE WATER-TIGHT SHEET METAL CLOSURES WITH WATERPROOF SELF-ADHERED MEMBRANE UNDERLAYMENT.
6. NAILER THICKNESS SHALL MATCH ADJACENT INSULATION THICKNESS WITHIN 1/4" TOLERANCE.

SLOPES AND DRAINAGE
1. SECONDARY SLOPE (CRICKETS, SADDLES, SUMPS, ETC.) SHALL BE 1/4" / FT. SLOPE MINIMUM AS INDICATED AT ALL ROOF AREAS, INCLUDING VALLEYS, AND STEEPER AS REQUIRED TO MEET VALLEY SLOPE CRITERIA.
2. BACK SLOPES SHALL BE 2X THE PRIMARY SLOPE.
3. MINIMUM ROOF SLOPE IN VALLEYS IS 1/4" / FT. ADJUST SLOPE OF CRICKETS TO PROVIDE MINIMUM SLOPE AT ALL LOCATIONS OF ROOF. TO PREVENT PONDING, DIRECT ALL ROOF WATER TO DRAINS.
4. TAPER INSULATION UP FROM DRAIN IN SUMPS MINIMUM OF 1/4" / FT. BUT NOT TO EXCEED 1" /FT. PROVIDE TAPERED FILL TO CONFORM THE SUMP INSULATION TO THE THICKNESS OF INSULATION IN THE FIELD OF THE ROOF.
5. PROVIDE TAPERED CRICKET ON THE HIGH SIDE OF PENETRATIONS WIDER THAN 24".
6. MINIMUM SLOPE 1/4"/FT TO DRAIN AT ALL LOCATIONS.

EQUIPMENT
1. REFER TO MECHANICAL, PLUMBING, ELECTRICAL AND OTHER FACILITY SERVICES DRAWINGS FOR EQUIPMENT, DUCTWORK, PENETRATIONS AND OTHER FEATURES NOT OTHERWISE SHOWN.
2. PENETRATIONS, CURBS AND TERMINATIONS, INCLUDING THOSE FOR MECHANICAL, ELECTRICAL, PLUMBING AND OTHER FACILITY SERVICES SHALL PROVIDE MINIMUM 8" VERTICAL BASE FLASHING ELEVATION ABOVE THE TOP OF THE ADJACENT ROOF SURFACE (NOT STRUCTURAL DECK).
3. EQUIPMENT SUPPORT PENETRATIONS SHALL BE ROUND SHAPES UNLESS SPECIFICALLY DETAILED OTHERWISE.
4. FOR CONDUIT THROUGH ROOF DETAIL, SEE ELECTRICAL DRAWINGS
5. FOR TYPICAL PENETRATION CLEARANCES, SEE DETAIL 7 / A10.7.1
6. FOR DUCT THRU WALL PENETRATION, SEE DETAIL 15 / A10.7.1
7. FOR VENT PIPE AT SINGLE PLY ROOFING, SEE DETAIL 13 / A10.7.1
8. FOR VENT PIPE AT METAL ROOFING, SEE DETAIL 14 / A10.7.1

SOLAR READY ZONE

CEC SECTION 110.10 MANDATORY REQUIREMENTS FOR SOLAR READY BUILDINGS

(B) SOLAR ZONE

1. MINIMUM AREA. (B) NONRESIDENTIAL BUILDINGS. THE SOLAR ZONE SHALL BE LOCATED ON THE ROOF OR OVERHANG OF THE BUILDING OR ON THE ROOF OR OVERHANG OF ANOTHER STRUCTURE LOCATED WITHIN 250 FEET OF THE BUILDING OR ON COVERED PARKING INSTALLED WITH THE BUILDING PROJECT AND HAVE A TOTAL AREA NO LESS THAN 15 PERCENT OF THE TOTAL ROOF AREA OF THE BUILDING EXCLUDING ANY SKYLIGHT AREA.
   A. BUILDING A:
      a. TOTAL ROOF AREA = 1,174 SF
      b. 15% OF TOTAL ROOF AREA = 176 SF
   B. BUILDING B:
      a. TOTAL ROOF AREA= 19,438 SF
      b. 15% OF TOTAL ROOF AREA = 2,916 SF
   C. TOTAL AREA REQUIRED = 3,091 SF
      a. TOTAL SOLAR READY AREA PROVIDED = 3,100 SF
      b. SOLAR READY AREA IDENTIFIED ON BUILDING B ROOF PLAN.
2. ORIENTATION. ALL SECTIONS OF THE SOLAR ZONE LOCATED ON STEEP-SLOPED ROOFS SHALL BE ORIENTED BETWEEN 110 DEGREES AND 270 DEGREES OF TRUE NORTH.
   A. SEE ROOF PLAN FOR COMPLIANCE.
3. SHADING. NO OBSTRUCTIONS SHALL BE LOCATED IN THE SOLAR ZONE.
   A. SEE ROOF PLAN FOR COMPLIANCE.
4. STRUCTURAL DESIGN LOADS ON CONSTRUCTION DOCUMENTS.
   A. SEE STRUCTURAL DRAWINGS FOR DESIGN LOADS.

(C) INTERCONNECTION PATHWAYS

1. SEE ELECTRICAL DRAWINGS FOR COMPLIANCE.

(D) DOCUMENTATION

1. A COPY OF THE CONSTRUCTION DOCUMENTS OR A COMPARABLE DOCUMENT INDICATING THE INFORMATION FROM SECTION 110.10(B) THROUGH 110.10 (C) SHALL BE PROVIDED TO THE OCCUPANT.

NOTE:
THE SOLAR ZONE WAS NOT DESIGNED FOR THE INCLUSION OF ANY COLLATERAL LOADS FOR FUTURE SOLAR ENERGY SYSTEMS.

FUTURE SOLAR P.V INSTALLATION IS SUBJECT TO DSA REVIEW AND APPROVAL AND SHALL BE SUBMITTED UNDER A SEPERATE DSA APPLICATION.

ROOFTOP SOLAR INSTALLATION WILL NOT BE ACCEPTED AS A POST APPROVAL DOCUMENT AND MUST BE SUBMITTED AS ONE OF THE FOLLOWING:

1. PART OF THE ORIGINAL DSA BUILDING SUBMITTAL,
2. A SEPARATE INCREMENT UNDER THE BUILDING SUBMITTAL, OR
3. A SEPARATE APPLICATION NUMBER.

LEGEND

- SLOPED GARLAND R-MER-LOCK STANDING SEAM METAL ROOFING, CLASS 'A', 22 GAUGE 16" WIDE STANDARD PANEL PROFILE W/ 2 3/8" SEAM HEIGHT, SEE SPECIFICATIONS AND SEE DETAILS ON A10.7.3
- CLASS 'A' 2-PLY MEMBRANE ROOFING, PER DETAIL 10 / A10.7.2
- ROOF ACCESS HATCH, SEE DETAIL 3 / A10.7.1
- ROOF DRAIN AND OVERFLOW, SEE DETAIL 10 / A10.7.1
- RAISED ROOF WALKWAY PER DETAIL 5 / A10.7.2
- ROOF CRICKET, TAPERED RIGID INSULATION, SLOPED TO DRAIN PER DETAIL 3 / A10.7.2
- SOLAR READY ZONE, SEE CALCULATION ABOVE

DSA STAMP

STUDIO W ARCHITECTS

Studio W Architects
424 32nd Street, Suite D/E
Newport Beach, California 92663
[T] 949.774.2920
www.StudioW-Architects.com

ARCHITECT	ENGINEER
LICENSED ARCHITECT BRYAN P WHITMORE No. C 30345 Ren. 9/30/25 STATE OF CALIFORNIA	
DATE SIGNED: 06/24/2024	

GENERAL NOTES
1. This sheet is part of a set and is not to be used alone.
2. This sheet is not to be used for construction unless the architect's stamp and signature appear on the drawings and the status box indicated drawings have been released for construction.
3. These plans and prints thereof, as instruments of service, are owned by the architect and are for use on this project only. Reproduction and/or distribution without the prior written consent of the architect is forbidden.
4. Copyright Studio W Associates, Inc. 2024.

REVISION HISTORY

NO.	REMARKS	DATE

DRAWING STATUS

	DATE
DSA PLAN CHECK	03/29/2024
DSA BACK CHECK	06/24/2024
BIDDING	
CONSTRUCTION	

KEY PLAN

BUENA PARK SD
6885 ORANGETHORPE AVE
BUENA PARK, CA 90620

DSA SUBMITTAL

CARL E. GILBERT ELEMENTARY SCHOOL
TK-PK CLASSROOMS & EARLY LEARNING BUILDING
7255 8TH STREET, BUENA PARK, CA 90621

ROOF PLAN

Date	Project Number
06/24/2024	23076
Application Number	Drawing Number
04-123212	A4.1
Drawn / Checked	
AT / MS	

PRINT DATE: 6/24/2024 9:40:26 PM
FILE PATH: BIM 360://23076 BPSD Gilbert ES PK-TK CRs, EarlyLearning Bldg/23076-BPUSD Gilbert-BLDG-A21.rvt

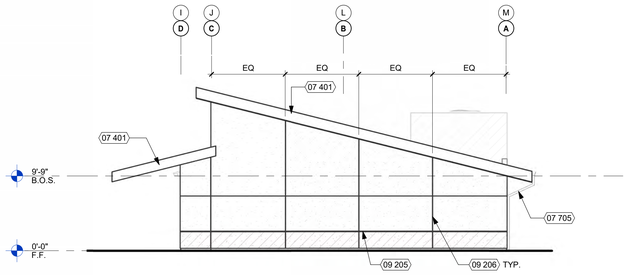

PARTIAL EAST ELEVATION 1/8" = 1'-0" 21

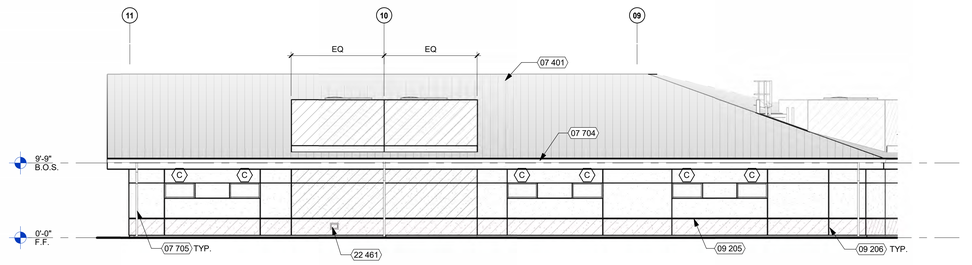

NORTH ELEVATION 2 1/8" = 1'-0" 6

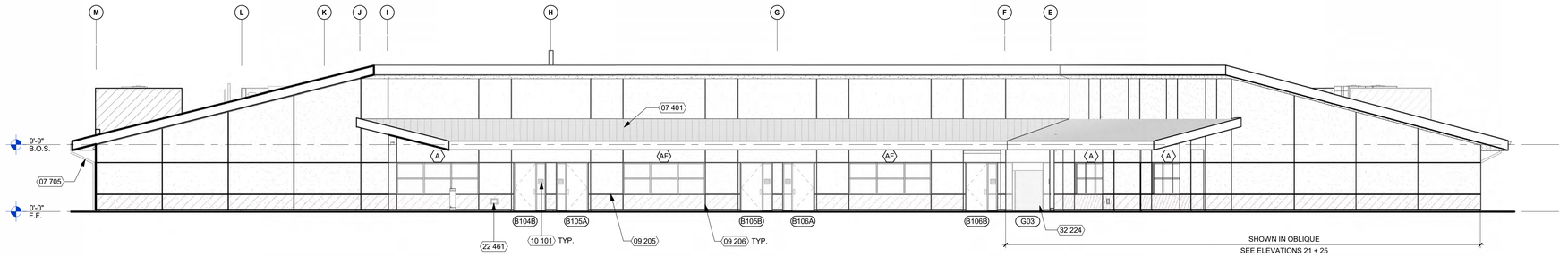

EAST ELEVATION 1/8" = 1'-0" 7

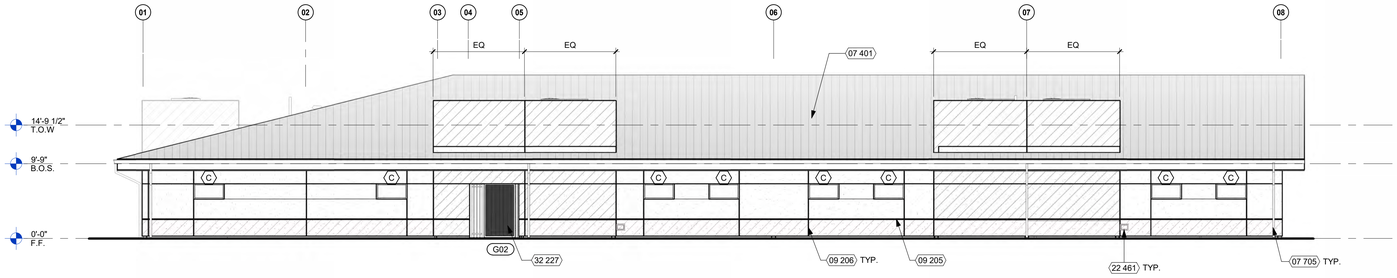

SOUTH ELEVATION 1 1/8" = 1'-0" 8

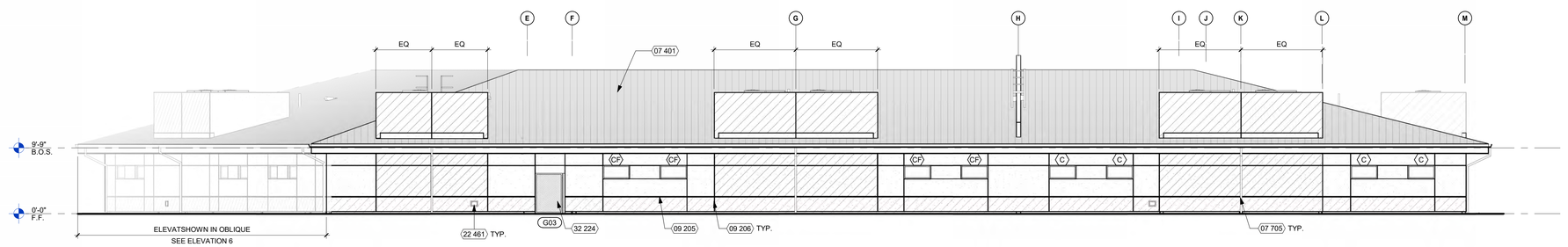

WEST ELEVATION 1/8" = 1'-0" 9

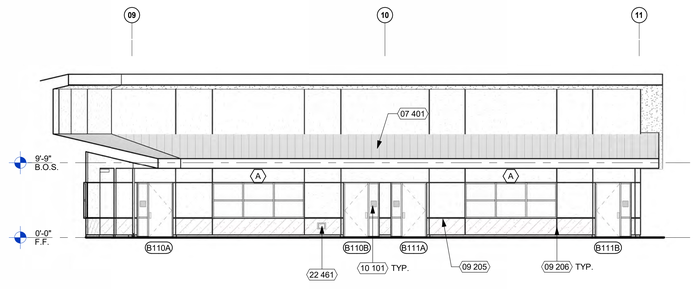

SOUTH ELEVATION 2 1/8" = 1'-0" 25

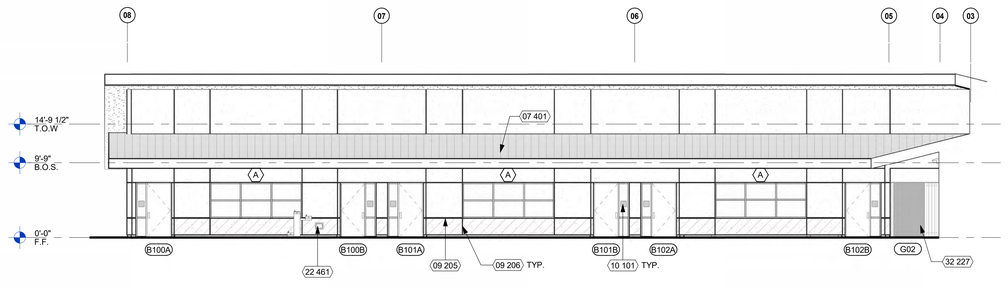

NORTH ELEVATION 1 1/8" = 1'-0" 10

KEYNOTES

NUMBER	NOTE
07 401	CLASS 'A' STANDING SEAM METAL ROOF ASSEMBLY
07 704	GUTTER, PREFINISHED TO MATCH ROOF PANELS IN COLOR, TYP.
07 705	DOWNSPOUT, PAINT TO MATCH COLOR(S) OF WALL BEHIND (SEE DETAIL 9/A10.7.1)
09 205	PLASTER REVEAL (3/4")
09 206	PLASTER REVEAL (1/4")
10 101	SIGNAGE (SEE CODE ANALYSIS PLAN)
22 461	HOSE BIBB (SEE PLUMBING DWGS.)
32 224	CHAIN LINK GATE (SEE GATE SCHEDULE)
32 227	ORNAMENTAL METAL GATE (SEE SHEET A10.2.4)

GENERAL NOTES

1. GRAFFITI-RESISTANT COATINGS TO BE APPLIED ONLY TO MASONRY BRICK AND CONCRETE, NOT PLASTER - SEE SPECIFICATIONS

LEGEND

- EXTERIOR CEMENT PLASTER, PAINTED P3
  FOR TYPICAL DETAILS SEE:
  WIDE REVEAL: 1 / A10.6
  NARROW REVEAL: 2 / A10.6
  INSIDE CORNER: 4 / A10.6
  OUTSIDE CORNER: 9 / A10.6
- EXTERIOR CEMENT PLASTER, PAINTED P6
  FOR TYPICAL DETAILS SEE:
  WIDE REVEAL: 1 / A10.6
  NARROW REVEAL: 2 / A10.6
  INSIDE CORNER: 4 / A10.6
  OUTSIDE CORNER: 9 / A10.6
- FULL BRICK, SEE TYPICAL ASSEMBLY DETAIL 5 / A10.1
- BRICK EXPANSION JOINT, SEE DETAIL 8 / A10.4
- CLASS 'A' STANDING SEAM METAL ROOF PER SPECIFICATIONS - SEE DETAILS ON A10.7.3

DSA STAMP

STUDIO W ARCHITECTS

Studio W Architects
424 32nd Street, Suite D/E
Newport Beach, California 92663
[T] 949.774.2920
www.StudioW-Architects.com

ARCHITECT	ENGINEER
LICENSED ARCHITECT BRYAN P WHITMORE No. C 30345 Ren. 9/30/25 STATE OF CALIFORNIA DATE SIGNED: 06/24/2024	

GENERAL NOTES

1. This sheet is part of a set and is not to be used alone.
2. This sheet is not to be used for construction unless the architect's stamp and signature appear on the drawings and the status box indicated drawings have been released for construction.
3. These plans and prints thereof, as instruments of service, are owned by the architect and are for use on this project only. Reproduction and/or distribution without the prior written consent of the architect is forbidden.
4. Copyright Studio W Associates, Inc. 2024.

REVISION HISTORY

NO.	REMARKS	DATE

DRAWING STATUS

	DATE
○ DSA PLAN CHECK	03/29/2024
● DSA BACK CHECK	06/24/2024
○ BIDDING	
○ CONSTRUCTION	

KEY PLAN

BUENA PARK SD
6885 ORANGETHORPE AVE
BUENA PARK, CA 90620

DSA SUBMITTAL

CARL E. GILBERT ELEMENTARY SCHOOL
TK-PK CLASSROOMS & EARLY LEARNING BUILDING
7255 8TH STREET, BUENA PARK, CA 90621

EXTERIOR ELEVATIONS

Date	Project Number
06/24/2024	23076
Application Number	Drawing Number
04-123212	A5.1
Drawn AT / Checked MS	

PRINT DATE: 6/24/2024 9:40:36 PM
FILE PATH: BIM 360://23076 BPSD Gilbert ES PK-TK CRs, Early Learning Bldg/23076-BPUSD Gilbert-BLDG-A21.rvt

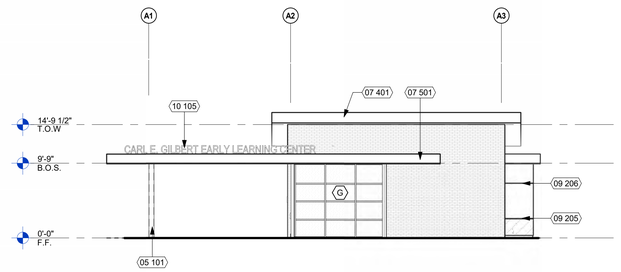

REF: 1 / PY

ADMIN NORTH ELEVATION 1/8" = 1'-0" 6

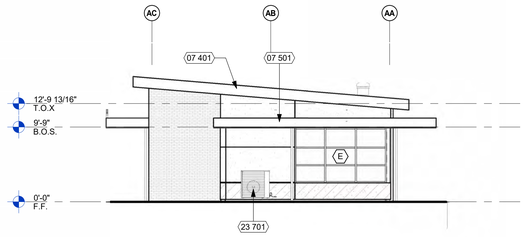

REF: 1 / PY

ADMIN EAST ELEVATION 1/8" = 1'-0" 7

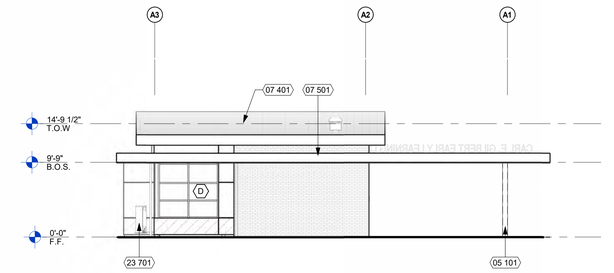

REF: 1 / PY

ADMIN SOUTH ELEVATION 1/8" = 1'-0" 8

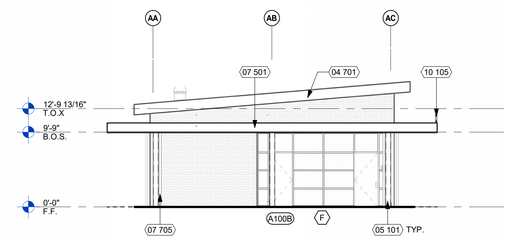

REF: 1 / PY

ADMIN WEST ELEVATION 1 1/8" = 1'-0" 9

KEYNOTES

NUMBER	NOTE
04 701	FULL BRICK VENEER
05 101	
05 101	STEEL COLUMN (SEE STRUCTURAL DWGS.)
07 401	CLASS 'A' STANDING SEAM METAL ROOF ASSEMBLY
07 501	CLASS 'A' MEMBRANE ROOF ASSEMBLY
07 705	DOWNSPOUT, PAINT TO MATCH COLOR(S) OF WALL BEHIND (SEE DETAIL 9/A10.7.1)
09 205	PLASTER REVEAL (3/4")
09 206	PLASTER REVEAL (1/4")
10 105	EXTERIOR ALUMINUM LETTERS (SEE DETAIL 12/A10.7.2)
23 701	HVAC EQUIPMENT (SEE MECHANICAL DWGS.)

GENERAL NOTES

1. GRAFFITI-RESISTANT COATINGS TO BE APPLIED ONLY TO MASONRY BRICK AND CONCRETE, NOT PLASTER - SEE SPECIFICATIONS

LEGEND

- EXTERIOR CEMENT PLASTER, PAINTED P3
  FOR TYPICAL DETAILS SEE:
  WIDE REVEAL: 1 / A10.6
  NARROW REVEAL: 2 / A10.6
  INSIDE CORNER: 4 / A10.6
  OUTSIDE CORNER: 9 / A10.6
- EXTERIOR CEMENT PLASTER, PAINTED P6
  FOR TYPICAL DETAILS SEE:
  WIDE REVEAL: 1 / A10.6
  NARROW REVEAL: 2 / A10.6
  INSIDE CORNER: 4 / A10.6
  OUTSIDE CORNER: 9 / A10.6
- FULL BRICK, SEE TYPICAL ASSEMBLY DETAIL 5 / A10.1
- BRICK EXPANSION JOINT, SEE DETAIL 8 / A10.4
- CLASS 'A' STANDING SEAM METAL ROOF PER SPECIFICATIONS
  - SEE DETAILS ON A10.7.3

DSA STAMP

STUDIO W ARCHITECTS

Studio W Architects
424 32nd Street, Suite D/E
Newport Beach, California 92663
[T] 949.774.2920
www.StudioW-Architects.com

ARCHITECT | ENGINEER

LICENSED ARCHITECT
BRYAN P WHITMORE
No. C 30345
Ren. 9/30/25
STATE OF CALIFORNIA
DATE SIGNED: 06/24/2024

GENERAL NOTES

1. This sheet is part of a set and is not to be used alone.
2. This sheet is not to be used for construction unless the architect's stamp and signature appear on the drawings and the status box indicated drawings have been released for construction.
3. These plans and prints thereof, as instruments of service, are owned by the architect and are for use on this project only. Reproduction and/or distribution without the prior written consent of the architect is forbidden.
4. Copyright Studio W Associates, Inc. 2024.

REVISION HISTORY

NO.	REMARKS	DATE

DRAWING STATUS

	DATE
○ DSA PLAN CHECK	03/29/2024
● DSA BACK CHECK	06/24/2024
○ BIDDING	
○ CONSTRUCTION	

KEY PLAN

BUENA PARK SD
6885 ORANGETHORPE AVE
BUENA PARK, CA 90620

DSA SUBMITTAL

CARL E. GILBERT ELEMENTARY SCHOOL
TK-PK CLASSROOMS & EARLY LEARNING BUILDING
7255 8TH STREET, BUENA PARK, CA 90621

EXTERIOR ELEVATIONS

Date	Project Number
06/24/2024	23076
Application Number	Drawing Number
04-123212	A5.2
Drawn / Checked	
AT / MS	

PRINT DATE: 6/24/2024 9:40:39 PM
FILE PATH: BIM 360://23076 BPSD Gilbert ES PK-TK CRs_Early Learning Bldg/23076-BPUSD Gilbert-BLDG-A21.rvt

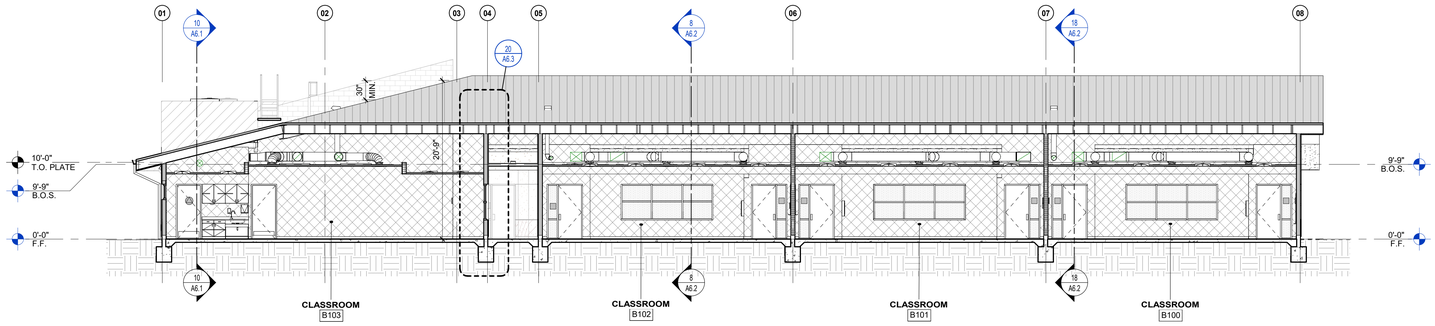

REF: 1 / A2.1

BUILDING SECTION EAST/WEST CLASSROOMS 1/8" = 1'-0" 8

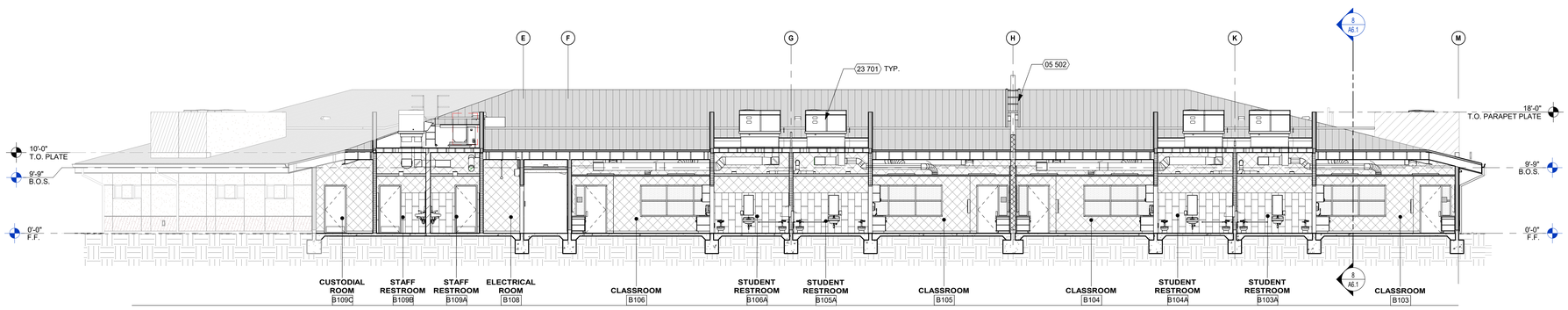

REF: 1 / A2.1

BUILDING SECTIONS NORTH/SOUTH CLASSROOMS 1/8" = 1'-0" 10

KEYNOTES

NUMBER	NOTE
05 502	PARAPET LADDER (SEE DETAIL 25/A10.7.1)
23 701	HVAC EQUIPMENT (SEE MECHANICAL DWGS.)

GENERAL NOTES

1. FOR FINISH INFORMATION, REFER TO INTERIOR ELEVATIONS AND FINISH SCHEDULE.
2. SEE REFLECTED CEILING PLANS FOR CEILING INFORMATION.
3. SEE FLOOR PLAN FOR WALL TYPES.

LEGEND

DSA STAMP

STUDIO W ARCHITECTS

Studio W Architects
424 32nd Street, Suite D/E
Newport Beach, California 92663
[T] 949.774.2920
www.StudioW-Architects.com

ARCHITECT	ENGINEER
LICENSED ARCHITECT BRYAN P WHITMORE No. C 30345 Ren. 9/30/25 STATE OF CALIFORNIA DATE SIGNED: 06/24/2024	

GENERAL NOTES

1. This sheet is part of a set and is not to be used alone.
2. This sheet is not to be used for construction unless the architect's stamp and signature appear on the drawings and the status box indicated drawings have been released for construction.
3. These plans and prints thereof, as instruments of service, are owned by the architect and are for use on this project only. Reproduction and/or distribution without the prior written consent of the architect is forbidden.
4. Copyright Studio W Associates, Inc. 2024.

REVISION HISTORY

NO.	REMARKS	DATE

DRAWING STATUS

	DATE
○ DSA PLAN CHECK	03/29/2024
● DSA BACK CHECK	06/24/2024
○ BIDDING	
○ CONSTRUCTION	

KEY PLAN

BUENA PARK SD
6885 ORANGETHORPE AVE
BUENA PARK, CA 90620

DSA SUBMITTAL

CARL E. GILBERT ELEMENTARY SCHOOL
TK-PK CLASSROOMS & EARLY LEARNING BUILDING
7255 8TH STREET, BUENA PARK, CA 90621

BUILDING SECTIONS

Date	Project Number
06/24/2024	23076
Application Number	Drawing Number
04-123212	A6.1
Drawn AT	Checked MS

PRINT DATE: 6/24/2024 9:40:46 PM
FILE PATH: BIM 360://23076 BPSD Gilbert ES PK-TK CRs, EarlyLearning Bldg/23076-BPUSD Gilbert-BLDG-A21.rvt

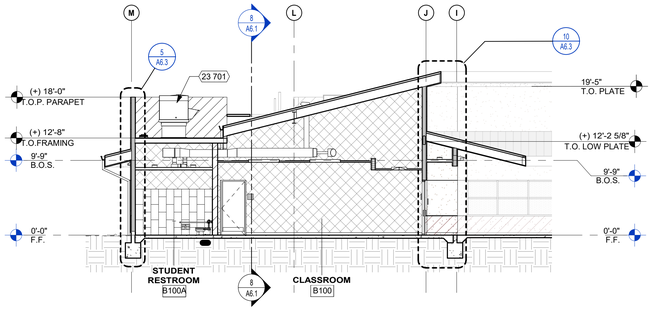

BUILDING SECTION NORTH/SOUTH AT CLASSROOM THRU RESTROOMS 1/8" = 1'-0" 18

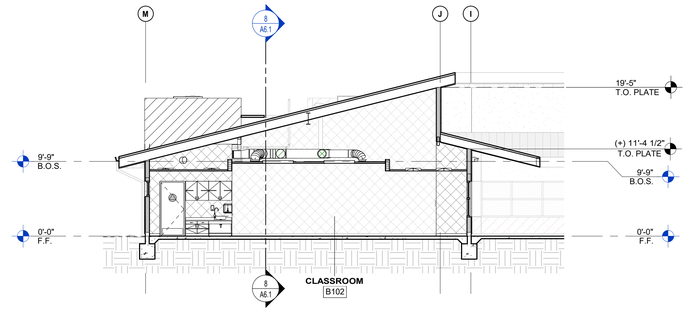

BUILDING SECTION NORTH SOUTH AT CLASSROOM 1/8" = 1'-0" 8

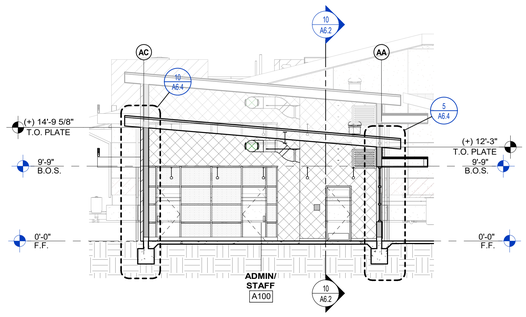

BUILDING SECTION NORTH/SOUTH ADMIN BLDG 1/8" = 1'-0" 20

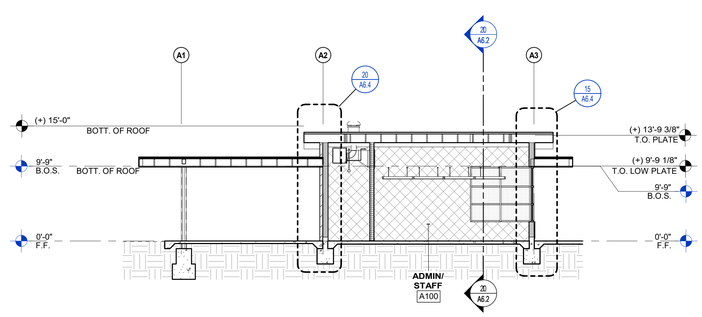

BUILDING SECTION EAST/WEST ADMIN BLDG 1/8" = 1'-0" 10

KEYNOTES

NUMBER	NOTE
23 701	HVAC EQUIPMENT (SEE MECHANICAL DWGS.)

GENERAL NOTES

1. FOR FINISH INFORMATION, REFER TO INTERIOR ELEVATIONS AND FINISH SCHEDULE.
2. SEE REFLECTED CEILING PLANS FOR CEILING INFORMATION.
3. SEE FLOOR PLAN FOR WALL TYPES.

LEGEND

DSA STAMP

STUDIO W ARCHITECTS

Studio W Architects
424 32nd Street, Suite D/E
Newport Beach, California 92663
[T] 949.774.2920
www.StudioW-Architects.com

ARCHITECT	ENGINEER

LICENSED ARCHITECT
BRYAN P WHITMORE
No. C 30345
Ren. 9/30/25
STATE OF CALIFORNIA
DATE SIGNED: 06/24/2024

GENERAL NOTES

1. This sheet is part of a set and is not to be used alone.
2. This sheet is not to be used for construction unless the architect's stamp and signature appear on the drawings and the status box indicated drawings have been released for construction.
3. These plans and prints thereof, as instruments of service, are owned by the architect and are for use on this project only. Reproduction and/or distribution without the prior written consent of the architect is forbidden.
4. Copyright Studio W Associates, Inc. 2024.

REVISION HISTORY

NO.	REMARKS	DATE

DRAWING STATUS

	DATE
○ DSA PLAN CHECK	03/29/2024
● DSA BACK CHECK	06/24/2024
○ BIDDING	
○ CONSTRUCTION	

KEY PLAN

BUENA PARK SD
6885 ORANGETHORPE AVE
BUENA PARK, CA 90620

DSA SUBMITTAL

CARL E. GILBERT ELEMENTARY SCHOOL
TK-PK CLASSROOMS & EARLY LEARNING BUILDING
7255 8TH STREET, BUENA PARK, CA 90621

BUILDING SECTIONS

Date	Project Number
06/24/2024	23076
Application Number	Drawing Number
04-123212	A6.2
Drawn / Checked	
AT / MS	

PRINT DATE: 6/24/2024 9:40:59 PM
FILE PATH: BIM 360:/23076 BPSD Gilbert ES PK-TK CRs, EarlyLearning Bldg/23076-BPUSD Gilbert-BLDG-A21.rvt

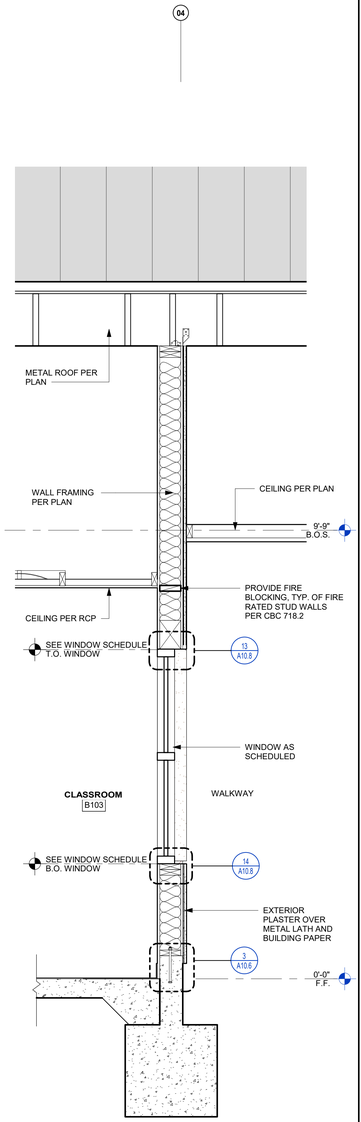

REF: 8 / A6.1

EAST/WEST CLASSROOMS 3/4" = 1'-0" 20

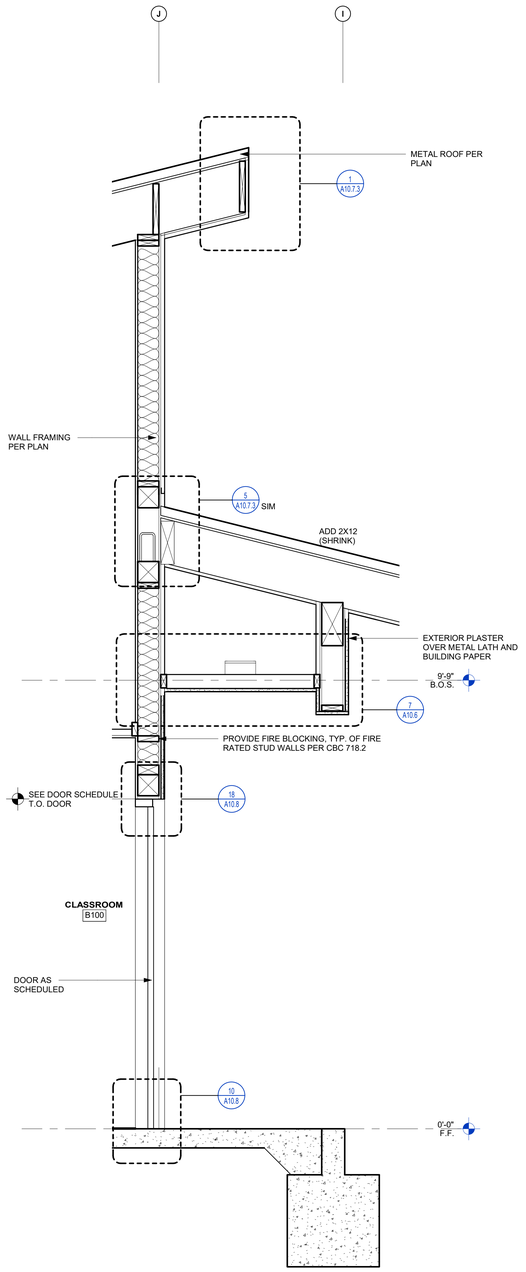

REF: 18 / A6.2

BUILDING SECTION NORTH/SOUTH AT CLASSROOM DOOR 3/4" = 1'-0" 10

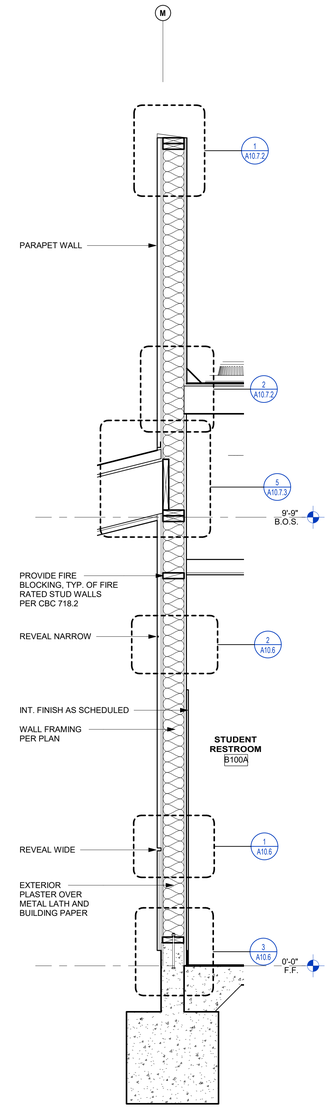

REF: 18 / A6.2

BUILDING SECTION N/S AT PARAPET 3/4" = 1'-0" 5

DSA STAMP

STUDIO W ARCHITECTS

Studio W Architects
424 32nd Street, Suite D/E
Newport Beach, California 92663
[T] 949.774.2920
www.StudioW-Architects.com

ARCHITECT	ENGINEER
LICENSED ARCHITECT BRYAN P WHITMORE No. C 30345 Ren. 9/30/25 STATE OF CALIFORNIA DATE SIGNED: 06/24/2024	

GENERAL NOTES

1. This sheet is part of a set and is not to be used alone.
2. This sheet is not to be used for construction unless the architect's stamp and signature appear on the drawings and the status box indicated drawings have been released for construction.
3. These plans and prints thereof, as instruments of service, are owned by the architect and are for use on this project only. Reproduction and/or distribution without the prior written consent of the architect is forbidden.
4. Copyright Studio W Associates, Inc. 2024.

REVISION HISTORY

NO.	REMARKS	DATE

DRAWING STATUS

	DATE
○ DSA PLAN CHECK	03/29/2024
● DSA BACK CHECK	06/24/2024
○ BIDDING	
○ CONSTRUCTION	

KEY PLAN

BUENA PARK SD
6885 ORANGETHORPE AVE
BUENA PARK, CA 90620

DSA SUBMITTAL

CARL E. GILBERT ELEMENTARY SCHOOL
TK-PK CLASSROOMS & EARLY LEARNING BUILDING
7255 8TH STREET, BUENA PARK, CA 90621

WALL SECTIONS

Date	Project Number
06/24/2024	23076
Application Number	Drawing Number
04-123212	A6.3
Drawn: AT	Checked: MS

PRINT DATE: 6/24/2024 9:47:09 PM
FILE PATH: BIM 360://23076 BPSD Gilbert ES PK-TK CRs, EarlyLearning Bldg/23076-BPKSD Gilbert BLDG-A21.rvt

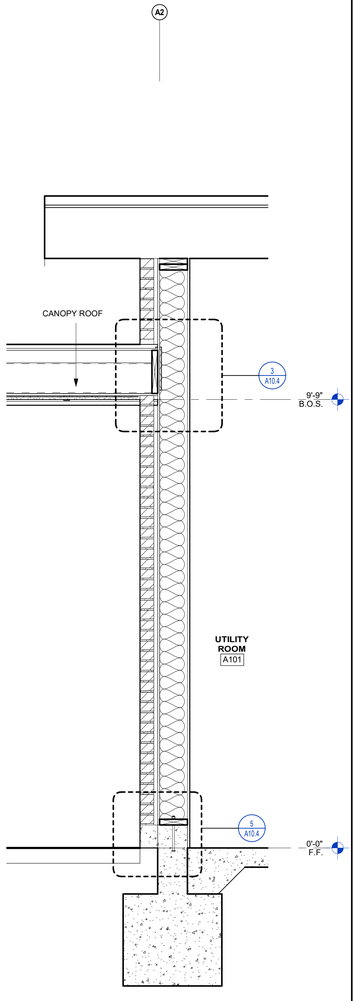

REF: 10 / A6.2

ADMIN AT RAKE 3/4" = 1'-0" 20

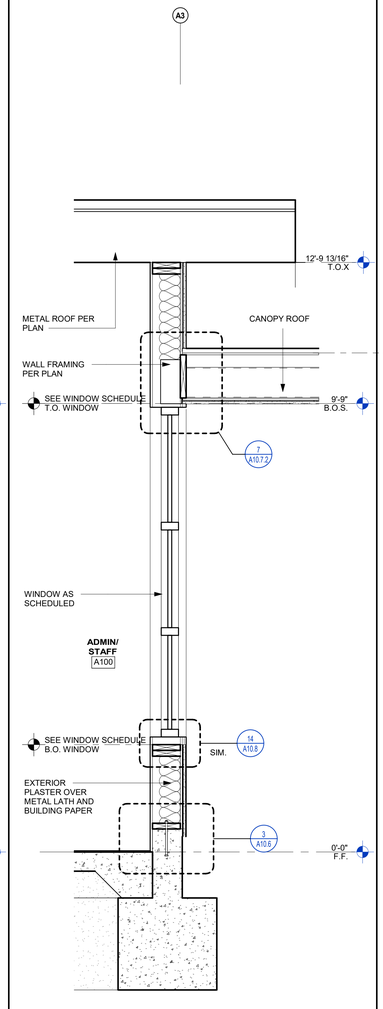

REF: 10 / A6.2

ADMIN AT WINDOW 3/4" = 1'-0" 15

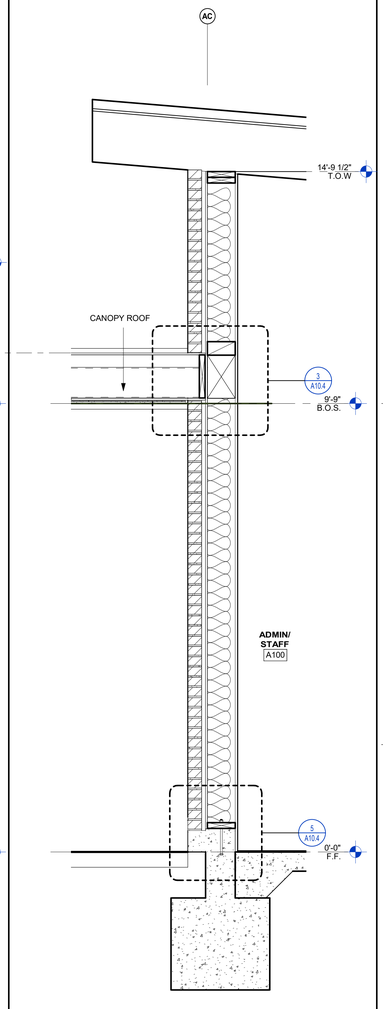

REF: 20 / A6.2

ADMIN AT HIGH EAVE 3/4" = 1'-0" 10

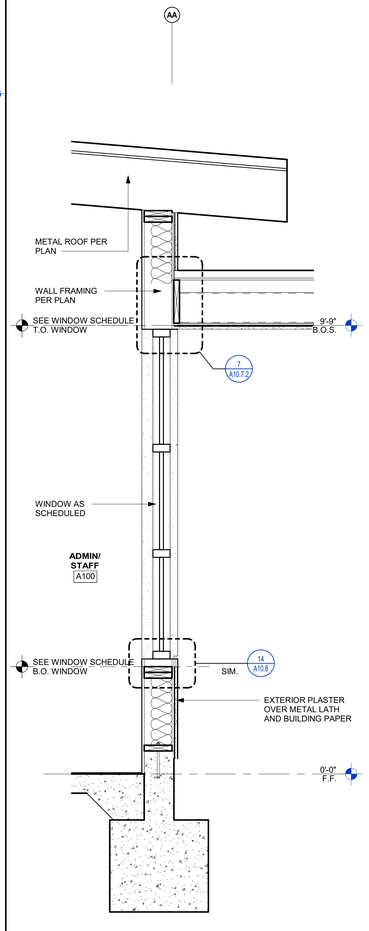

REF: 20 / A6.2

ADMIN AT LOW EAVE 3/4" = 1'-0" 5

DSA STAMP

STUDIO W
ARCHITECTS

Studio W Architects
424 32nd Street, Suite D/E
Newport Beach, California 92663
[T] 949.774.2920
www.StudioW-Architects.com

ARCHITECT	ENGINEER

LICENSED ARCHITECT
BRYAN P WHITMORE
No. C 30345
Ren. 9/30/25
STATE OF CALIFORNIA

DATE SIGNED: 06/24/2024

GENERAL NOTES

1. This sheet is part of a set and is not to be used alone.
2. This sheet is not to be used for construction unless the architect's stamp and signature appear on the drawings and the status box indicated drawings have been released for construction.
3. These plans and prints thereof, as instruments of service, are owned by the architect and are for use on this project only. Reproduction and/or distribution without the prior written consent of the architect is forbidden.
4. Copyright Studio W Associates, Inc. 2024.

REVISION HISTORY

NO.	REMARKS	DATE

DRAWING STATUS

	DATE
○ DSA PLAN CHECK	03/29/2024
● DSA BACK CHECK	06/24/2024
○ BIDDING	
○ CONSTRUCTION	

KEY PLAN

BUENA PARK SD
6885 ORANGETHORPE AVE
BUENA PARK, CA 90620

DSA SUBMITTAL

CARL E. GILBERT
ELEMENTARY SCHOOL
TK-PK CLASSROOMS & EARLY
LEARNING BUILDING
7255 8TH STREET, BUENA PARK,
CA 90621

WALL SECTIONS

Date	Project Number
06/24/2024	23076
Application Number	Drawing Number
04-123212	A6.4
Drawn AT	Checked MS

PRINT DATE: 6/24/2024 9:40:53 PM
FILE PATH: BIM 360://23076 BPSD Gilbert ES PK-TK CRs_EarlyLearning Bldg/23076-BPUSD Gilbert-BLDG-A01.rvt

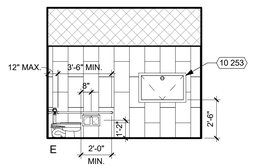

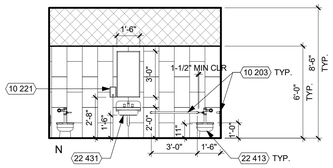

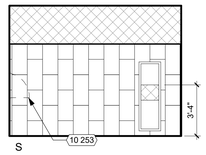

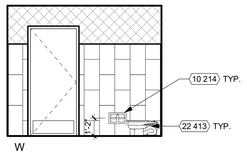

REF: 1 / PY

STUDENT RESTROOM 1/4" = 1'-0" 17

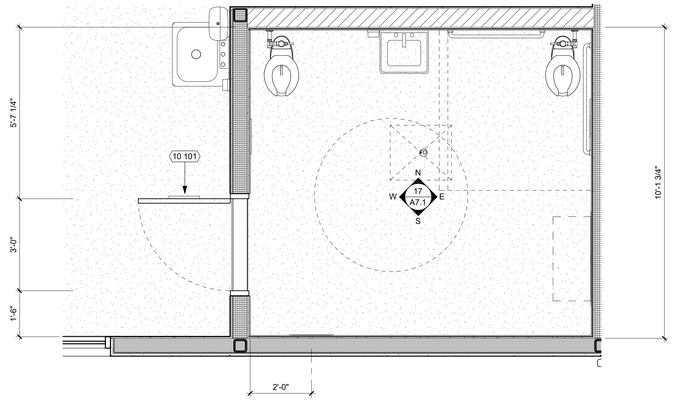

NOTE: TYPICAL AND SIMILAR (MIRRORED) AT ALL CLASSROOMS
AGE GROUP: 3 - 4 YEARS OLD

REF: 1 / A2.2

ENLARGED RESTROOM PLAN - STUDENT 1/2" = 1'-0" 7

KEYNOTES

NUMBER	NOTE
10 101	SIGNAGE (SEE CODE ANALYSIS PLAN)
10 203	GRAB BAR (SEE DETAIL 11/A10.10.2)
10 214	TOILET PAPER DISPENSER, RECESSED
10 220	MIRROR
10 221	SOAP DISPENSER
10 253	FOLD-DOWN DIAPER CHANGING STATION
22 410	WALL MOUNTED WATER CLOSET (SEE DETAIL 19/A10.10.2)
22 413	FLOOR MOUNTED WATER CLOSET, AGES 3-4
22 431	LAVATORY

REF: 1 / PY

STAFF RESTROOM 1/4" = 1'-0" 19

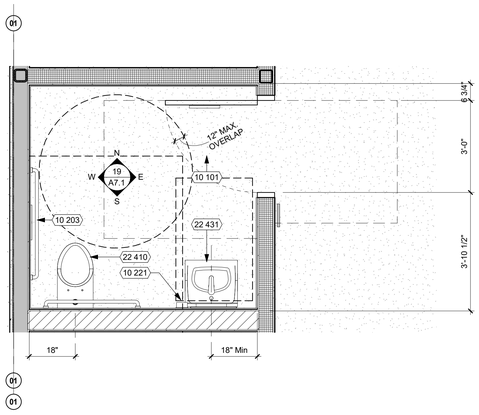

REF: 1 / A2.2

ENLARGED RESTROOM PLAN - STAFF 1/2" = 1'-0" 9

GENERAL NOTES

GENERAL
1. DIMENSIONS
   A. ALL MINIMUM CLEARANCE DIMENSIONS FOR PLUMBING FIXTURES ARE FROM FACE OF WALL FINISH TO CENTER OF FIXTURE, U.O.N.
   B. ALL DIMENSIONS MARKED "MIN. CLR" OR "CLR." ARE TO/ FROM FACE OF WALL FINISH (F.O.F.)
2. SEE FINISH PLAN FOR INTERIOR FINISHES.
3. PROVIDE GLASSMAT BACKER BOARD AT ALL TILED WALLS AND WALLS WITHIN 48" OF ANY PLUMBING FIXTURE
4. ALL DRINKING FOUNTAIN ALCOVES TO BE FINISHED WITH WATER RESISTANT WALL MATERIAL. SEE FINISH SCHEDULE AND INTERIOR ELEVATIONS.
5. ALL FLOOR SLOPES IN RESTROOMS ARE NOT TO EXCEED 1:48 IN ANY DIRECTION.
6. FOR FLOOR DRAIN, SEE DETAIL 4 / A10.10.3

ACCESSORIES
1. ALL RESTROOM FIXTURES AND ACCESSORIES MOUNTING HEIGHTS AND LOCATIONS TO USE ADULT DIMENSIONS
2. FOR TYPICAL RESTROOM ACCESSORY MOUNTING HEIGHTS, ACCESSIBLE DIMENSIONS, SEE SHEET A10.10.2
3. TOILET ACCESSORIES LOCATED ON OR WITHIN WALLS SHALL BE INSTALLED AND SEALED TO PROTECT STRUCTURAL ELEMENTS FROM MOISTURE (CBC SECTION 1210.2.2)
4. PLUMBING FIXTURES TO HAVE SOLID BLOCKING AS REQUIRED BY CODE, SEE DETAIL 16 / A10.10.2
5. FOR MOP SINK WITH BROOM RACK, SEE DETAIL 3 / A10.10.3

LEGEND

102
36" x 24" x 24"
LOCKABLE

CASEWORK TAG
102 = ARCHITECTURAL WOODWORK STANDARD (AWS) NUMBER
36" x 24" x 24" = WIDTH x HEIGHT x DEPTH
LOCKABLE = MODIFYING NOTE

NOTE: FOR BASE CABINETS, HEIGHT DOES NOT INCLUDE COUNTERTOP THICKNESS - REFER TO PLANS FOR COUNTERTOP TYPE

FOR TYPICAL CASEWORK ANCHORAGE, SEE DETAIL 4 / A10.12

30" x 48" ACCESSIBLE CLEAR SPACE

60" DIAMETER ACCESSIBLE CLEAR SPACE

DSA STAMP

STUDIO W ARCHITECTS

Studio W Architects
424 32nd Street, Suite D/E
Newport Beach, California 92663
[T] 949.774.2920
www.StudioW-Architects.com

ARCHITECT	ENGINEER
LICENSED ARCHITECT BRYAN P WHITMORE No. C 30345 Ren. 9/30/25 STATE OF CALIFORNIA DATE SIGNED: 06/24/2024	

GENERAL NOTES
1. This sheet is part of a set and is not to be used alone.
2. This sheet is not to be used for construction unless the architect's stamp and signature appear on the drawings and the status box indicated drawings have been released for construction.
3. These plans and prints thereof, as instruments of service, are owned by the architect and are for use on this project only. Reproduction and/or distribution without the prior written consent of the architect is forbidden.
4. Copyright Studio W Associates, Inc. 2024.

REVISION HISTORY

NO.	REMARKS	DATE

DRAWING STATUS

	DATE
○ DSA PLAN CHECK	03/29/2024
● DSA BACK CHECK	06/24/2024
○ BIDDING	
○ CONSTRUCTION	

KEY PLAN

BUENA PARK SD
6885 ORANGETHORPE AVE
BUENA PARK, CA 90620

DSA SUBMITTAL

CARL E. GILBERT ELEMENTARY SCHOOL
TK-PK CLASSROOMS & EARLY LEARNING BUILDING
7255 8TH STREET, BUENA PARK, CA 90621

TOILET ROOM PLANS AND ELEVATIONS

Date	Project Number
06/24/2024	23076
Application Number	Drawing Number
04-123212	A7.1
Drawn AT / Checked MS	

PRINT DATE: 6/24/2024 9:40:55 PM
FILE PATH: BIM 360://23076 BPSD Gilbert ES PK-TK CRs, Early Learning Bldg/23076-BPUSD Gilbert-BLDG-A21.rvt

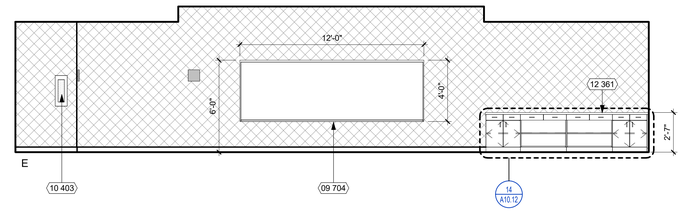

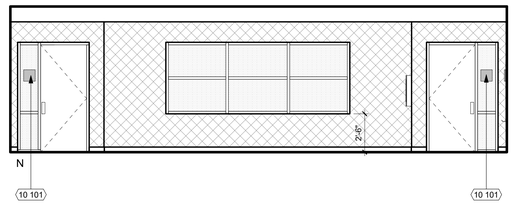

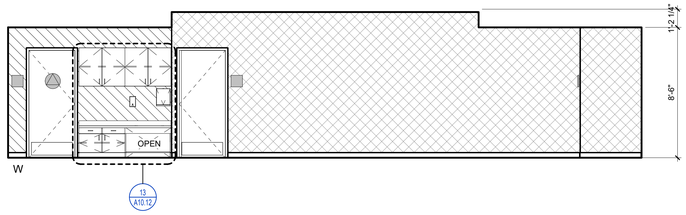

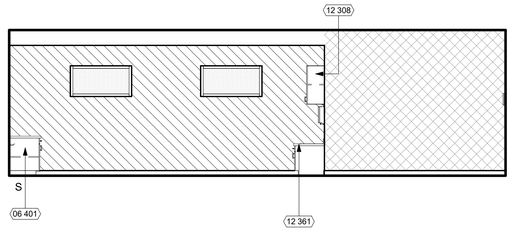

REF: 1 / PY

TYPICAL CLASSROOM 1/4" = 1'-0" 7

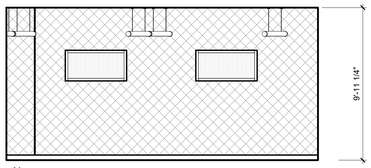

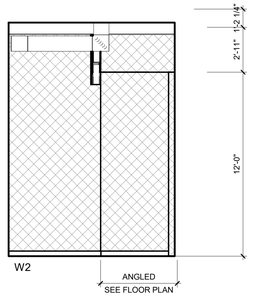

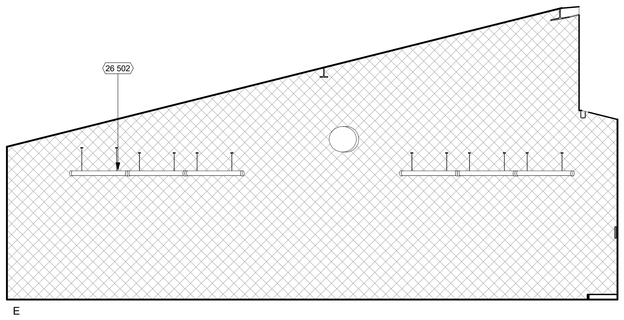

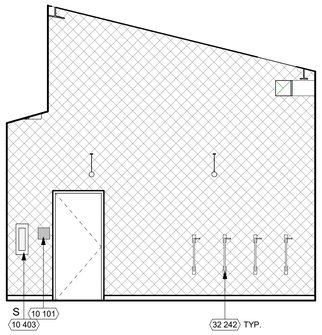

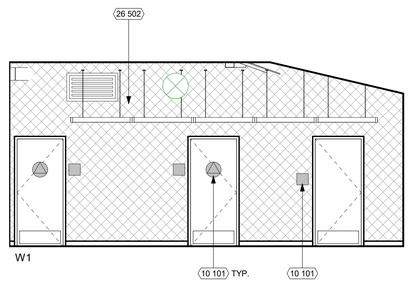

REF: 1 / PY

WORKROOM 1/4" = 1'-0" 9

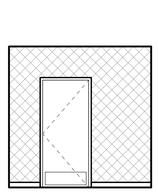

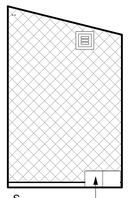

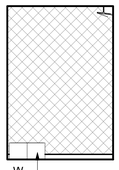

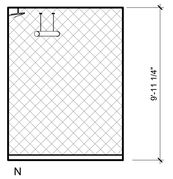

REF: 1 / PY

CUSTODIAL ROOM 1/4" = 1'-0" 10

KEYNOTES

NUMBER	NOTE
06 401	CUSTOM CASEWORK (SEE DETAIL 9/A10.12)
09 704	MAGNETIC DRY ERASE WALL COVERING
10 101	SIGNAGE (SEE CODE ANALYSIS PLAN)
10 403	FIRE EXTINGUISHER (2A-10B:C) IN SEMI-RECESSED CABINET (SEE DETAIL 1/A10.10.3)
12 308	UPPER CABINET (SEE DETAIL 9/A10.12)
12 361	PLASTIC LAMINATE COUNTERTOP. (SEE DETAIL 5/A10.12)
22 404	MOP SINK (SEE DETAIL 3/A10.10.3)
26 502	INTERIOR LIGHT FIXTURE (SEE ELECTRICAL DWGS.)
32 242	VERTICAL BIKE RACK (SEE DETAIL 16/A10.10.3)

GENERAL NOTES

GENERAL
1. SEE ROOM FINISH SCHEDULE FOR FINISH INFORMATION AND LEGEND.
2. SEE REFLECTED CEILING PLANS FOR CEILING HEIGHTS AND FINISHES.
3. SEE FLOOR PLAN FOR WALL TYPES AND DOOR NUMBERS
4. FOR SIGNAGE TYPES, SEE CODE ANALYSIS FLOOR PLAN.

FINISHES
1. ALL GYPSUM BOARD CEILINGS AND SOFFITS TO BE P-1, UNLESS NOTED OTHERWISE.
2. ALL EXPOSED STRUCTURAL ROOF FRAMING TO BE PAINTED.
3. ALL ACCENT WALL PAINT TO BE TERMINATED AT EITHER INSIDE CORNER AND/ OR REVEALS.

EQUIPMENT
1. PROVIDE BACKING PLATES OR BLOCKING IN WALLS FOR ALL WALL MOUNTED EQUIPMENT SUCH AS SHELVING, MARKER BOARDS, AND DOOR STOPS. SEE DETAIL.
2. ALL MILLWORK TO BE INSTALLED PRIOR TO CARPET (WHERE OCCURS), BUT AFTER PAINT WORK. MILLWORK SHALL BE MOUNTED TO SUB-FLOOR. FOR TYPICAL CASEWORK ANCHORAGE, SEE DETAIL 4 / A10.12
3. PROVIDE FILLER PANEL BETWEEN WALL AND CABINETS, TYP. FILLER PANELS TO BE MINIMAL.
4. ALIGN ALL CASEWORK, MARKER BOARDS AND TACKABLE SURFACE WITH TOP OF DOORS, U.O.N.
5. FOR TYPICAL RESTROOM ACCESSORY MOUNTING HEIGHTS, ACCESSIBLE DIMENSIONS, SEE DETAIL 3 / A10.10.2

LEGEND

P2 PER FINISH SCHEDULE

P4 PER FINISH SCHEDULE

ETCHED GLAZING PER WINDOW SCHEDULE

DSA STAMP

STUDIO W ARCHITECTS

Studio W Architects
424 32nd Street, Suite D/E
Newport Beach, California 92663
[T] 949.774.2920
www.StudioW-Architects.com

ARCHITECT	ENGINEER

LICENSED ARCHITECT BRYAN P WHITMORE No. C 30345 Ren. 9/30/25 STATE OF CALIFORNIA

DATE SIGNED: 06/24/2024

GENERAL NOTES
1. This sheet is part of a set and is not to be used alone.
2. This sheet is not to be used for construction unless the architect's stamp and signature appear on the drawings and the status box indicated drawings have been released for construction.
3. These plans and prints thereof, as instruments of service, are owned by the architect and are for use on this project only. Reproduction and/or distribution without the prior written consent of the architect is forbidden.
4. Copyright Studio W Associates, Inc. 2024.

REVISION HISTORY

NO.	REMARKS	DATE

DRAWING STATUS

	DATE
DSA PLAN CHECK	03/29/2024
DSA BACK CHECK	06/24/2024
BIDDING	
CONSTRUCTION	

KEY PLAN

BUENA PARK SD
6885 ORANGETHORPE AVE
BUENA PARK, CA 90620

DSA SUBMITTAL

CARL E. GILBERT ELEMENTARY SCHOOL
TK-PK CLASSROOMS & EARLY LEARNING BUILDING
7255 8TH STREET, BUENA PARK, CA 90621

INTERIOR ELEVATIONS

Date	Project Number
06/24/2024	23076
Application Number	Drawing Number
04-123212	A8.1
Drawn / Checked	
AT / MS	

PRINT DATE: 6/24/2024 9:40:58 PM
FILE PATH: BIM 360://23076 BPSD Gilbert ES PK-TK CRs_Early Learning Bldg/23076-BPUSD Gilbert-BLDG-A01.rvt

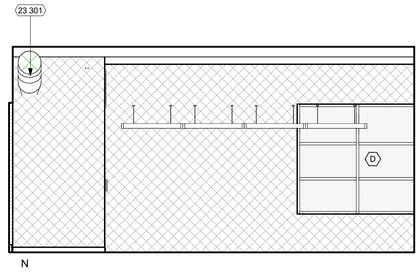

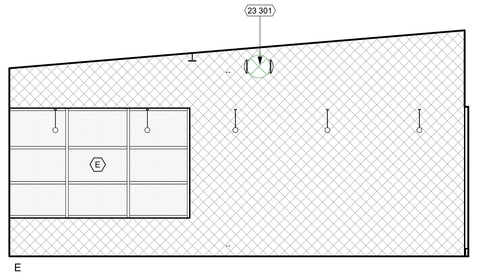

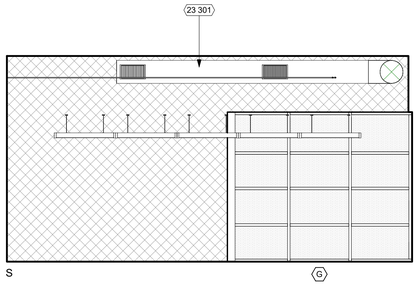

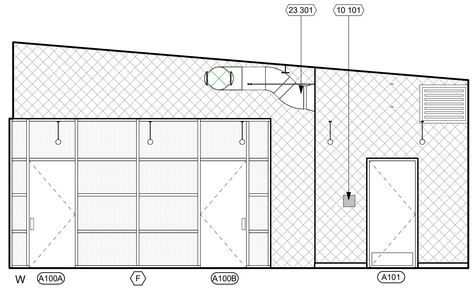

REF: 1 / PY

ADMIN - W 1/4" = 1'-0" 1

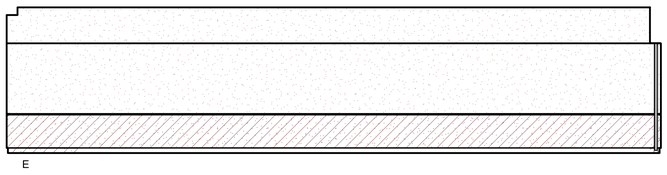

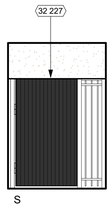

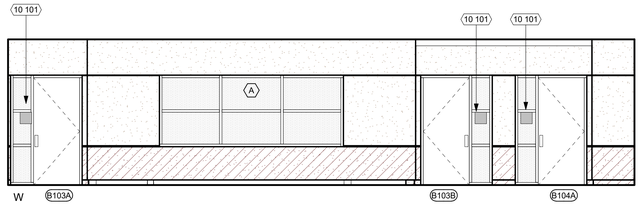

REF: 1 / PY

HALL 1 W 1/4" = 1'-0" 6

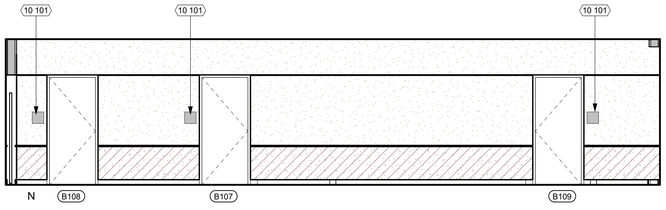

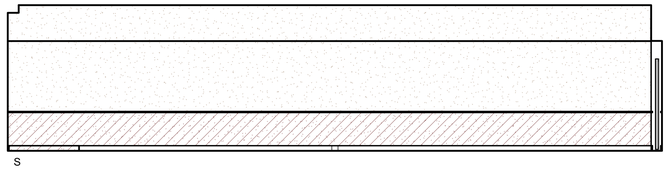

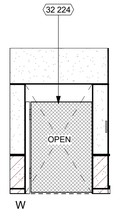

REF: 1 / PY

HALL 2 WEST 1/4" = 1'-0" 10

KEYNOTES

NUMBER	NOTE
10 101	SIGNAGE (SEE CODE ANALYSIS PLAN)
23 301	EXPOSED DUCTWORK (SEE MECHANICAL DWGS.)
32 224	CHAIN LINK GATE (SEE GATE SCHEDULE)
32 227	ORNAMENTAL METAL GATE (SEE SHEET A10.2.4)

GENERAL NOTES

GENERAL
1. SEE ROOM FINISH SCHEDULE FOR FINISH INFORMATION AND LEGEND.
2. SEE REFLECTED CEILING PLANS FOR CEILING HEIGHTS AND FINISHES.
3. SEE FLOOR PLAN FOR WALL TYPES AND DOOR NUMBERS
4. FOR SIGNAGE TYPES, SEE CODE ANALYSIS FLOOR PLAN.

FINISHES
1. ALL GYPSUM BOARD CEILINGS AND SOFFITS TO BE P-1, UNLESS NOTED OTHERWISE.
2. ALL EXPOSED STRUCTURAL ROOF FRAMING TO BE PAINTED.
3. ALL ACCENT WALL PAINT TO BE TERMINATED AT EITHER INSIDE CORNER AND/ OR REVEALS.

EQUIPMENT
1. PROVIDE BACKING PLATES OR BLOCKING IN WALLS FOR ALL WALL MOUNTED EQUIPMENT SUCH AS SHELVING, MARKER BOARDS, AND DOOR STOPS. SEE DETAIL.
2. ALL MILLWORK TO BE INSTALLED PRIOR TO CARPET (WHERE OCCURS), BUT AFTER PAINT WORK. MILLWORK SHALL BE MOUNTED TO SUB-FLOOR. FOR TYPICAL CASEWORK ANCHORAGE, SEE DETAIL 4 / A10.12
3. PROVIDE FILLER PANEL BETWEEN WALL AND CABINETS, TYP. FILLER PANELS TO BE MINIMAL.
4. ALIGN ALL CASEWORK, MARKER BOARDS AND TACKABLE SURFACE WITH TOP OF DOORS, U.O.N.
5. FOR TYPICAL RESTROOM ACCESSORY MOUNTING HEIGHTS, ACCESSIBLE DIMENSIONS, SEE DETAIL 3 / A10.10.2

LEGEND

P2 PER FINISH SCHEDULE

P4 PER FINISH SCHEDULE

ETCHED GLAZING PER WINDOW SCHEDULE

DSA STAMP

STUDIO W ARCHITECTS

Studio W Architects
424 32nd Street, Suite D/E
Newport Beach, California 92663
[T] 949.774.2920
www.StudioW-Architects.com

ARCHITECT	ENGINEER

LICENSED ARCHITECT BRYAN P WHITMORE No. C 30345 Ren. 9/30/25 STATE OF CALIFORNIA

DATE SIGNED: 06/24/2024

GENERAL NOTES
1. This sheet is part of a set and is not to be used alone.
2. This sheet is not to be used for construction unless the architect's stamp and signature appear on the drawings and the status box indicated drawings have been released for construction.
3. These plans and prints thereof, as instruments of service, are owned by the architect and are for use on this project only. Reproduction and/or distribution without the prior written consent of the architect is forbidden.
4. Copyright Studio W Associates, Inc. 2024.

REVISION HISTORY

NO.	REMARKS	DATE

DRAWING STATUS

	DATE
○ DSA PLAN CHECK	03/29/2024
● DSA BACK CHECK	06/24/2024
○ BIDDING	
○ CONSTRUCTION	

KEY PLAN

BUENA PARK SD
6885 ORANGETHORPE AVE
BUENA PARK, CA 90620

DSA SUBMITTAL

CARL E. GILBERT ELEMENTARY SCHOOL
TK-PK CLASSROOMS & EARLY LEARNING BUILDING
7255 8TH STREET, BUENA PARK, CA 90621

INTERIOR ELEVATIONS

Date	Project Number
06/24/2024	23076
Application Number	Drawing Number
04-123212	A8.2
Drawn / Checked	
AT / MS	

PRINT DATE: 6/24/2024 9:41:01 PM
FILE PATH: BIM 360://23076 BPSD Gilbert ES PK-TK CRs_Early/Learning Bldg/23076-BPUSD Gilbert-BLDG-A21.rvt

DOOR SCHEDULE

MARK	DOOR SIZE PAIR	SIZE PANEL WIDTH	SIZE HT	SIZE THK	DOOR TYPE	DOOR MAT.	DOOR FINISH	DOOR CORE	DOOR GLASS	DOOR RATING	DOOR LOUVER HT	DOOR LOUVER WD	HDW GROUP	HDW PANIC	HDW CLOSER	HDW INT. LOCK	FRAME TYPE	FRAME MTL	FRAME FINISH	FRAME GLASS	FRAME DETAILS HEAD	FRAME DETAILS JAMB	FRAME DETAILS THRESHOLD	FRAME DETAILS OTHER	COMMENTS
A100A	-	3'-0"	7'-0"	1 3/4"	A	HM	P	HM	-	-	-	-	03	P	Y	Y	B	AL	FF	SP/T	18/A10.8	19/A10.8	20/A10.8		
A100B	-	3'-0"	7'-0"	1 3/4"	A	HM	P	HM	-	-	-	-	03	P	Y	Y	B	AL	FF	SP/T	18/A10.8	19/A10.8	20/A10.8		
A101	-	3'-0"	7'-0"	1 3/4"	B	HM	P	HM	-	-	-	-	29	-	Y	-	A	HM	P	-	3/A10.8	3/A10.8	10/A10.8		
B100A	-	3'-0"	7'-0"	1 3/4"	A	HM	P	HM	-	-	-	-	02	P	Y	Y	B	AL	FF	SP/T	18/A10.8	19/A10.8	20/A10.8		
B100B	-	3'-0"	7'-0"	1 3/4"	A	HM	P	HM	-	-	-	-	02	P	Y	Y	B	AL	FF	SP/T	18/A10.8	19/A10.8	20/A10.8		
B100C	-	3'-0"	7'-0"	1 3/4"	B	HM	P	HM	-	-	-	-	05	-	Y	-	A	HM	P	-	3/A10.8	3/A10.8	5/A10.8		
B100D	-	3'-0"	7'-0"	1 3/4"	B	HM	P	HM	-	-	-	-	07	-	Y	Y	A	HM	P	-	3/A10.8	3/A10.8	10/A10.8		
B101A	-	3'-0"	7'-0"	1 3/4"	A	HM	P	HM	-	-	-	-	02	P	Y	Y	B	AL	FF	SP/T	18/A10.8	19/A10.8	20/A10.8		
B101B	-	3'-0"	7'-0"	1 3/4"	A	HM	P	HM	-	-	-	-	02	P	Y	Y	B	AL	FF	SP/T	18/A10.8	19/A10.8	20/A10.8		
B101C	-	3'-0"	7'-0"	1 3/4"	B	HM	P	HM	-	-	-	-	05	-	Y	-	A	HM	P	-	3/A10.8	3/A10.8	5/A10.8		
B101D	-	3'-0"	7'-0"	1 3/4"	B	HM	P	HM	-	-	-	-	07	-	Y	Y	A	HM	P	-	3/A10.8	3/A10.8	10/A10.8		
B102A	-	3'-0"	7'-0"	1 3/4"	A	HM	P	HM	-	-	-	-	02	P	Y	Y	B	AL	FF	SP/T	18/A10.8	19/A10.8	20/A10.8		
B102B	-	3'-0"	7'-0"	1 3/4"	A	HM	P	HM	-	-	-	-	02	P	Y	Y	B	AL	FF	SP/T	18/A10.8	19/A10.8	20/A10.8		
B102C	-	3'-0"	7'-0"	1 3/4"	B	HM	P	HM	-	-	-	-	05	-	Y	-	A	HM	P	-	3/A10.8	3/A10.8	5/A10.8		
B103A	-	3'-0"	7'-0"	1 3/4"	A	HM	P	HM	-	-	-	-	02	P	Y	Y	B	AL	FF	SP/T	18/A10.8	19/A10.8	20/A10.8		
B103B	-	3'-0"	7'-0"	1 3/4"	A	HM	P	HM	-	-	-	-	02	P	Y	Y	B	AL	FF	SP/T	18/A10.8	19/A10.8	20/A10.8		
B103C	-	3'-0"	7'-0"	1 3/4"	B	HM	P	HM	-	-	-	-	05	-	Y	-	A	HM	P	-	3/A10.8	3/A10.8	5/A10.8		
B103D	-	3'-0"	7'-0"	1 3/4"	B	HM	P	HM	-	-	-	-	07	-	Y	Y	A	HM	P	-	3/A10.8	3/A10.8	10/A10.8		
B104A	-	3'-0"	7'-0"	1 3/4"	A	HM	P	HM	-	-	-	-	02	P	Y	Y	B	AL	FF	SP/T	18/A10.8	19/A10.8	20/A10.8		
B104B	-	3'-0"	7'-0"	1 3/4"	A	HM	P	HM	-	45	-	-	01	P	Y	Y	B	AL	FF	FG	18/A10.8	19/A10.8	20/A10.8		OH-45
B104C	-	3'-0"	7'-0"	1 3/4"	B	HM	P	HM	-	-	-	-	05	-	Y	-	A	HM	P	-	3/A10.8	3/A10.8	5/A10.8		
B105A	-	3'-0"	7'-0"	1 3/4"	A	HM	P	HM	-	45	-	-	01	P	Y	Y	B	AL	FF	FG	18/A10.8	19/A10.8	20/A10.8		OH-45
B105B	-	3'-0"	7'-0"	1 3/4"	A	HM	P	HM	-	-	-	-	02	P	Y	Y	B	AL	FF	SP/T	18/A10.8	19/A10.8	20/A10.8		
B105C	-	3'-0"	7'-0"	1 3/4"	B	HM	P	HM	-	-	-	-	05	-	Y	-	A	HM	P	-	3/A10.8	3/A10.8	5/A10.8		
B105D	-	3'-0"	7'-0"	1 3/4"	B	HM	P	HM	-	-	-	-	07	-	Y	Y	A	HM	P	-	3/A10.8	3/A10.8	10/A10.8		
B106A	-	3'-0"	7'-0"	1 3/4"	A	HM	P	HM	-	-	-	-	02	P	Y	Y	B	AL	FF	SP/T	18/A10.8	19/A10.8	20/A10.8		
B106B	-	3'-0"	7'-0"	1 3/4"	A	HM	P	HM	-	-	-	-	02	P	Y	Y	B	AL	FF	SP/T	18/A10.8	19/A10.8	20/A10.8		
B106C	-	3'-0"	7'-0"	1 3/4"	B	HM	P	HM	-	-	-	-	05	-	Y	-	A	HM	P	-	3/A10.8	3/A10.8	5/A10.8		
B107	-	3'-0"	7'-0"	1 3/4"	B	HM	P	HM	-	-	-	-	06	-	Y	-	A	HM	P	-	13/A10.8	13/A10.8	10/A10.8		
B108	-	3'-0"	7'-0"	1 3/4"	B	HM	P	HM	-	-	-	-	04	P	Y	-	A	HM	P	-	13/A10.8	13/A10.8	10/A10.8		
B109	-	3'-0"	7'-0"	1 3/4"	B	HM	P	HM	-	-	-	-	03	P	Y	Y	A	HM	P	-	13/A10.8	13/A10.8	10/A10.8		
B109A	-	3'-0"	7'-0"	1 3/4"	B	HM	P	HM	-	-	-	-	09	-	Y	Y	A	HM	P	-	3/A10.8	3/A10.8	10/A10.8		
B109B	-	3'-0"	7'-0"	1 3/4"	B	HM	P	HM	-	-	-	-	09	-	Y	Y	A	HM	P	-	3/A10.8	3/A10.8	10/A10.8		
B109C	-	3'-0"	7'-0"	1 3/4"	B	HM	P	HM	-	-	-	-	08	-	Y	-	A	HM	P	-	3/A10.8	3/A10.8	10/A10.8		
B110A	-	3'-0"	7'-0"	1 3/4"	A	HM	P	HM	-	-	-	-	02	P	Y	Y	B	AL	FF	SP/T	18/A10.8	19/A10.8	20/A10.8		
B110B	-	3'-0"	7'-0"	1 3/4"	A	HM	P	HM	-	-	-	-	02	P	Y	Y	B	AL	FF	SP/T	18/A10.8	19/A10.8	20/A10.8		
B110C	-	3'-0"	7'-0"	1 3/4"	B	HM	P	HM	-	-	-	-	05	-	Y	-	A	HM	P	-	3/A10.8	3/A10.8	5/A10.8		
B110D	-	3'-0"	7'-0"	1 3/4"	B	HM	P	HM	-	-	-	-	07	-	Y	Y	A	HM	P	-	3/A10.8	3/A10.8	10/A10.8		
B111A	-	3'-0"	7'-0"	1 3/4"	A	HM	P	HM	-	-	-	-	02	P	Y	Y	B	AL	FF	SP/T	18/A10.8	19/A10.8	20/A10.8		
B111B	-	3'-0"	7'-0"	1 3/4"	A	HM	P	HM	-	-	-	-	02	P	Y	Y	B	AL	FF	SP/T	18/A10.8	19/A10.8	20/A10.8		
B111C	-	3'-0"	7'-0"	1 3/4"	B	HM	P	HM	-	-	-	-	05	-	Y	-	A	HM	P	-	3/A10.8	3/A10.8	5/A10.8		

GATE SCHEDULE

MARK	DOOR SIZE PAIR	SIZE PANEL WIDTH	SIZE HT	SIZE THK	DOOR TYPE	DOOR MAT.	DOOR FINISH	DOOR CORE	DOOR GLASS	DOOR RATING	DOOR LOUVER HT	DOOR LOUVER WD	HDW GROUP	HDW PANIC	HDW CLOSER	HDW INT. LOCK	FRAME TYPE	FRAME MTL	FRAME FINISH	FRAME GLASS	FRAME DETAILS HEAD	FRAME DETAILS JAMB	FRAME DETAILS THRESHOLD	FRAME DETAILS OTHER	COMMENTS
G01	PR	3'-0"	7'-2"	1 1/2"	A	STL	P	STL	-	-	-	-	11	Y	Y	-	-	STL	P	-	-	-	-	4/A10.2.4	
G02	PR	4'-0"	7'-2"	1 1/2"	A	STL	P	STL	-	-	-	-	10	Y	Y	-	-	STL	P	-	-	-	-	6/A10.2.4	
G03	-	4'-0"	6'-0"	1 1/2"	B	STL	P	STL	-	-	-	-	17	-	-	-	-	STL	P	-	-	-	-	10/A10.2.3	
G04	-	4'-0"	4'-0"	1 1/2"	C	CL	FF	CL	-	-	-	-	15	Y	Y	-	-	CL	FF	-	-	-	-	19/A10.2.3	
G05	-	4'-0"	4'-0"	1 1/2"	C	CL	FF	CL	-	-	-	-	15	Y	Y	-	-	CL	FF	-	-	-	-	19/A10.2.3	
G06	PR	4'-0"	6'-0"	1 1/2"	C	CL	FF	CL	-	-	-	-	14	Y	Y	-	-	CL	FF	-	-	-	-	15/A10.2.3	
G07	-	4'-0"	4'-0"	1 1/2"	C	CL	FF	CL	-	-	-	-	15	Y	Y	-	-	CL	FF	-	-	-	-	19/A10.2.3	
G08	-	4'-0"	4'-0"	1 1/2"	C	CL	FF	CL	-	-	-	-	15	Y	Y	-	-	CL	FF	-	-	-	-	19/A10.2.3	
G09	PR	3'-0"	7'-2"	1 1/2"	E	STL	P	STL	-	-	-	-	18	-	Y	-	-	STL	P	-	-	-	-	5/A10.2.4	SERVICE GATE
G10	PR	3'-0"	7'-2"	1 1/2"	C	STL	P	STL	-	-	-	-	19	-	Y	-	-	STL	P	-	-	-	-	5/A10.2.4	SERVICE GATE
G11	PR	8'-3"	6'-0"	1 1/2"	C	CL	FF	CL	-	-	-	-	12	-	-	-	-	CL	FF	-	-	-	-	4/A10.2.3	TRASH ENCLOSURE GATE
G12	-	4'-0"	6'-0"	1 1/2"	C	CL	FF	CL	-	-	-	-	16A	-	-	-	-	CL	FF	-	-	-	-	14/A10.2.3	TRASH ENCLOSURE MAN GATE
G13	PR	11'-0"	6'-0"	1 1/2"	C	CL	FF	CL	-	-	-	-	13	-	-	-	-	CL	FF	-	-	-	-	3/A10.2.3	FIRE ACCESS GATE

GENERAL NOTES

MATERIALS AND FINISHES
1. MATERIALS, FINISHES AND INSTALLATION OF PRODUCTS REFERENCED IN THE DOOR SCHEDULE SHALL BE IN ACCORDANCE WITH REQUIREMENTS SPECIFIED IN THE RESPECTIVE PRODUCT SECTIONS IN THE PROJECT MANUAL.
2. REFER TO WALL PARTITION TYPES AS INDICATED ON DRAWINGS TO DETERMINE FRAME DEPTH.
3. VERIFY ALL MASONRY OR STUD OPENINGS PRIOR TO FABRICATION OF FRAME, EXACT SIZES AND CONFIGURATIONS OF ALL DOOR AND WINDOW SECTIONS SHALL BE VERIFIED ON THE SITE PRIOR TO FABRICATION.
4. TYPICAL DOOR BEVEL TO BE 1/8" IN 2" U.O.N. BY HARDWARE TEMPLATE REQUIREMENTS.
5. THE BOTTOM 10" OF ALL DOORS, EXCEPT AUTOMATIC AND SLIDING SHALL HAVE SMOOTH UNINTERRUPTED SURFACE TO ALLOW THE DOOR TO BE OPENED BY A WHEELCHAIR FOOTREST.
6. ADJUST DOOR FRAME OPENING SIZES AS NECESSARY TO REFLECT VARIATIONS IN THE STRUCTURAL SLAB AND VARYING THICKNESS OF THE FLOOR FINISHES.
7. ALL ALUMINUM FRAMES, ALUMINUM STOREFRONT, ALUMINUM DOORS TO BE PAINTED WITH FLUOROPOLYMER PAINT FINISH, COLOR AS SCHEDULED.
8. WEATHERSTRIP ALL EXTERIOR DOORS.
9. FRAMES FOR EXTERIOR DOORS AND WINDOWS SHALL BE SET IN SEALANT.

GLAZING
1. GLASS TYPES REFERENCED IN DOOR SCHEDULE ARE SPECIFIED IN SECTION 'GLAZING'. ALL GLAZING TO BE TEMPERED. SAFETY GLAZING TO COMPLY WITH CBC SECTION 2406.
2. FIRE RATED GLAZING TO BE CLEAR FIRE GLASS WITH A DH-45 LABEL

FIRE RATED DOORS
1. AT RATED DOORS, PROVIDE ASSEMBLY PER CBC 716.5 WITH GLAZING PER 2022 CBC 716.5.8 COMPLYING WITH NFPA 80 AND WITH MAX. TESTING SIZE PER NFPA 252.
2. ALL FIRE DOORS SHALL HAVE SMOKE AND DRAFT CONTROL PER 2022 CBC 716.5.3.1.
3. ALL FIRE DOORS SHALL BE EQUIPPED WITH AUTOMATIC LATCHES.
4. ALL FIRE DOORS SHALL BE EQUIPPED WITH AUTOMATIC OR SELF CLOSING FIRE ASSEMBLIES PER 2022 CBC 716.5.9.
5. IF THE OPENING CONTAINS A DOOR AND NO SIDELIGHT, THE RATING OF THE FRAME SHALL MATCH THE RATING OF THE DOOR. IF THE OPENING CONTAINS A DOOR AND A SIDELIGHT, OR IF THE OPENING CONTAINS A WINDOW, THE RATING OF THE FRAME SHALL MATCH THE RATING OF THE GLAZING.
6. FIRE-RATED DOOR FRAMES SHALL BE INSTALLED STRICTLY IN ACCORDANCE WITH MANUFACTURER'S PRINTED INSTRUCTIONS. MANUFACTURER'S PRINTED INSTRUCTIONS SHALL BE MADE AVAILABLE TO THE INSPECTION AUTHORITY. 2022 CBC 716.5.7 AND 716.5.7.1
7. WHERE RATED OPENINGS OCCUR, PROVIDE ASSEMBLIES THAT HAVE BEEN TESTED BY A NATIONALLY RECOGNIZED TESTING AGENCY. INCLUDES ASSEMBLY COMPONENTS SUCH AS GLAZING, DOORS AND HARDWARE.
8. IDENTIFICATION OF FIRE DOORS, FIRE WINDOWS AND FIRE DAMPERS SHALL HAVE AN APPROVAL LABEL OR LISTING MARK INDICATING THE FIRE-PROTECTION RATING, WHICH IS PERMANENTLY AFFIXED AT THE FACTORY WHERE FABRICATION AND ASSEMBLY ARE DONE.
9. PROVIDE MARKINGS AT ALL RATED GLAZING AND FRAMES PER 2022 CBC 716.3
10. RATED DOORS SHALL HAVE AN UNDERCUT NOT EXCEEDING MAX. ALLOWABLE PER NFPA 80, SECTION 4.8.4.1 (3/4" MAX.)

EXITING AND PATH OF TRAVEL
1. EXIT DOORS SHALL BE OPERABLE FROM THE INSIDE WITHOUT USE OF A KEY OR ANY SPECIAL KNOWLEDGE OR EFFORT.
2. MAXIMUM FORCE TO PUSH OR PULL OPEN A DOOR (11B-404.2.9) SHALL NOT EXCEED 5 LBS FOR BOTH INTERIOR AND EXTERIOR DOORS. REQUIRED FIRE DOORS: THE MINIMUM OPENING FORCE ALLOWABLE BY THE APPROPRIATE ADMINISTRATIVE AUTHORITY, NOT TO EXCEED 15 POUNDS (66.7 N).
3. ALL REQUIRED EXIT DOORS SHALL BE SIZED NOT LESS THAN 3'-0" WIDE AND 6'-8" HIGH AND BE CAPABLE OF OPENING 90 DEG. AND MOUNTED SO THAT THE CLEAR WIDTH OF THE EXIT WAY IS 32" MIN., U.O.N.
4. ALL REQUIRED EXIT DOORS SHALL SWING IN THE DIRECTION OF TRAVEL.
5. THE FLOOR OR LANDING LENGTH ON EACH SIDE OF AN EXIT DOOR SHALL BE LEVEL (<2% MAX. SLOPE) AND CLEAR AT LEAST 60 INCHES IN THE DIRECTION OF THE DOOR SWING (PULL SIDE) AND 48 INCHES ON THE PUSH SIDE, WHEN MEASURED AT RIGHT ANGLES FROM DOOR IN CLOSED POSITION. THE CLEAR WIDTH SHALL EXTEND 24 INCHES BEYOND THE STRIKE ON THE PULL SIDE OF ALL EXTERIOR EXIT DOORS AND 18 INCHES FOR INTERIOR EXIT DOORS. THE CLEAR WIDTH SHALL EXTEND 12 INCHES BEYOND THE STRIKE EDGE OF THE PUSH SIDE OF ALL EXIT DOORS. DOORS SHALL BE EQUIPPED WITH BOTH A LATCH AND CLOSER. SEE DETAIL 1 / A10.8 and 6 / A10.8
6. LATCHING AND LOCKING DOORS THAT ARE HAND-ACTIVATED AND WHICH ARE IN THE PATH OF TRAVEL SHALL BE OPERABLE WITH A SINGLE EFFORT BY LEVEL-TYPE HARDWARE, PANIC BARS, PUSH-PULL ACTIVATED BARS OR OTHER HARDWARE DESIGNED TO PROVIDE PASSAGE WITHOUT REQUIRING THE ABILITY TO GRASP THE OPENING HARDWARE.

HARDWARE
1. HAND ACTIVATED HARDWARE SHALL BE BETWEEN 34" AND 44" A.F.F. COORDINATE MOUNTING HEIGHT. DO NOT TO OBSTRUCT DOOR VISION LIGHT WHERE OCCURS.
2. PANIC HARDWARE SHALL BE PROVIDED ON EXIT DOORS SERVING AN OCCUPANT LOAD OF 50 OR MORE. PROVIDE WALL OR FLOOR MOUNTED DOOR STOPS FOR ALL DOORS. LOCATE FLOOR MOUNTED DOOR STOP WITHIN 4" MAX. OF WALL. PROVIDE BACKING AT ALL WALL MOUNTED DOOR STOPS.
3. PROVIDE NON-REMOVABLE PINS ON ALL HINGES ACCESSIBLE FROM THE EXTERIOR.
4. PROVIDE CYLINDER GUARDS ON ALL MORTISED OR RIM TYPE CYLINDER LOCKS WHICH PROJECT BEYOND THE FACE OF THE DOOR.
5. DOOR CLOSERS SHALL CONFORM WITH 2022 CBC 11B-404.2.8.1
6. DOORS TO INCLUDE FACTORY INSTALLED MAGNETIC CONTACTS, 3/8" RECESSED PRESS FIT, COLOR TO MATCH WINDOW FRAME, AT ALL CLASSROOM DOORS, SEE MECHANICAL
7. ELECTRIFIED HARDWARE: COORDINATE ALL ELECTRICAL REQUIREMENTS WITH DIVISIONS 26 AND 27
8. KICKPLATES PER HARDWARE GROUPS, SEE DETAIL 4 / A10.8
9. ALL CLASSROOM DOORS TO BE LOCKABLE FROM INSIDE TO COMPLY WITH CMC 1010.2.8.2, EXCEPTIONS FOR ELECTRICAL ROOM, STORAGE, JANITOR'S CLOSET, AND STUDENT RESTROOMS.

WINDOW SCHEDULE

MARK	FUNCTION	FRAME FINISH	FRAME TYPE	FRAME SET	GLASS	GLASS STOP LOCATION	COMMENTS
A	Exterior						
8							
AF	Exterior						
2							
B	Exterior						
16							
BF	Exterior						
2							
C	Exterior						
18							
CF	Exterior						
4							
D	Exterior						
1							
E	Exterior						
1							
F	Exterior						
1							
G	Exterior						
1							

WINDOW GENERAL NOTES

GENERAL
1. REFERENCE OF WINDOWS ARE MADE ON THE FLOOR PLANS, TYP.
2. ALL WINDOWS SHALL BE RATED STC 35 MINIMUM.
3. SAFETY GLAZING SHALL COMPLY WITH CBC SECTION 2406.
4. AT OPERABLE WINDOWS, PROVIDE LIMITER DEVICE TO STOP WINDOW FROM PROTRUDING MORE THAN 4" INTO SPACE BELOW 80 INCHES A.F.F. WHEN OPENED.
5. FOR TYPICAL MULLION DETAILS SEE 16 / A10.8 AND 17 / A10.8
6. ALL WINDOWS SHALL COMPLY WITH CALIFORNIA ENERGY CODE SECTION 110.6 - MANDATORY REQUIREMENTS FOR FENESTRATION PRODUCTS AND EXTERIOR DOORS.

SIZING
1. ALL WINDOWS ARE BASED ON NOMINAL 2" WINDOW PROFILE.
2. ALL OVERALL DIMENSIONS CORRESPOND TO WINDOW ROUGH OPENINGS UNLESS OTHERWISE NOTED.
3. CONTRACTOR SHALL BE SOLELY RESPONSIBLE TO COORDINATE ROUGH OPENING SIZE WITH REQUIRED SHIM SPACERS AND FINISH FRAME DIMENSION.
4. ALL ROUGH OPENING DIMENSIONS SHALL BE FIELD VERIFIED PRIOR TO WINDOW FABRICATION.

GLAZING
1. ALL GLAZING TO BE TEMPERED UNLESS OTHERWISE NOTED.
   A. ANY WINDOW SECTION WHOSE NEAREST VERTICAL EDGE IS WITHIN 24" FROM A DOOR IN CLOSED POSITION AND WHOSE BOTTOM EDGE IS LESS THAN 60" ABOVE THE WALKING SURFACE SHALL BE TEMPERED.
   B. ANY WINDOW SECTION WHERE THE LOWEST EDGE OF THE GLAZING MATERIAL IS LESS THAN 18" ABOVE THE FLOOR AND WHOSE TOP EDGE IS GREATER THAN 36" ABOVE THE FLOOR AND WHERE THE SECTION IS GREATER THAN 9 SF AND IS WITHIN 36" HORIZONTALLY OF A WALKING SURFACE SHALL BE TEMPERED.

DOOR TYPES

NOTE:
1. DOOR TYPES WITH TWO LETTER DESIGNATIONS INDICATES A PAIR OF THE SINGLE DOOR TYPE DESIGNATION.

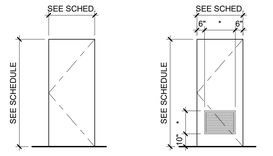

TYPE A
FLUSH

TYPE B
FLUSH
LOUVER AS SCHEDULED

DOOR FRAME TYPES

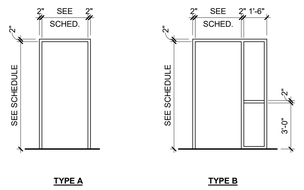

TYPE A

TYPE B

ABBREVIATIONS

CORE:
GL GLASS
INSUL INSULATED
SC SOLID CORE
SCWD SOLID CORE WOOD

DOOR PANEL FINISH:
P# PAINTED - SEE FINISH SCHEDULE

DOOR / WINDOW FRAME FINISH:
FF FACTORY FINISH - CLEAR ANODIZED
P# PAINTED - SEE FINISH SCHEDULE

DOOR PANEL / FRAME MATERIAL:
AL ALUMINUM
CL CHAIN LINK
HM HOLLOW METAL
PC POWDER COATED
STL STEEL
VN WOOD VENEER, TRANSPARENT FINISH
WD WOOD

HARDWARE:
P PANIC - SEE ALSO CODE ANALYSIS PLAN

REMARKS:
T TEMPERED, CATEGORY II
(CATEGORY I AND II CLASSIFACTIONS PER CBC SECTION 2406)

GLAZING TYPE (SEE SPECIFICATION SECTION 08 80 00):
CL CLEAR LAMINATED
DG DUAL GLAZING, 1" THICK INSULATED UNIT
(2) 1/4" GLAZING PANES WITH AIR GAP
SP SINGLE PANE GLAZING
(1) 1/4" THICK GLAZING PANE
TG TINTED GLAZING
FG FIRELITE+ GLAZING

FOR SPECIFIC FINISHES REFER TO MATERIAL LEGEND ON ROOM FINISH SCHEDULE SHEET.

WINDOW TYPES

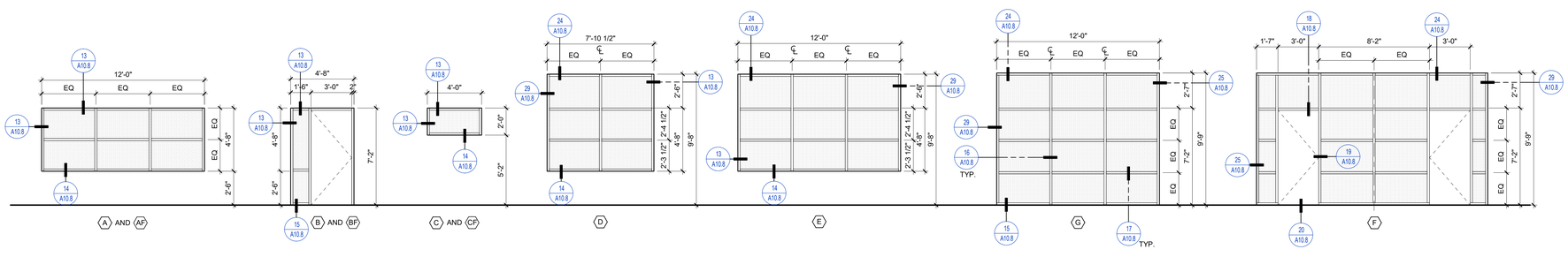

Studio W Architects
424 32nd Street, Suite D/E
Newport Beach, California 92663
[T] 949.774.2920
www.StudioW-Architects.com

ARCHITECT | ENGINEER

LICENSED ARCHITECT
BRYAN P WHITMORE
No. C 30345
Ren. 9/30/25
STATE OF CALIFORNIA
DATE SIGNED: 06/24/2024

GENERAL NOTES
1. This sheet is part of a set and is not to be used alone.
2. This sheet is not to be used for construction unless the architect's stamp and signature appear on the drawings and the status box indicated drawings have been released for construction.
3. These plans and prints thereof, as instruments of service, are owned by the architect and are for use on this project only. Reproduction and/or distribution without the prior written consent of the architect is forbidden.
4. Copyright Studio W Associates, Inc. 2024.

REVISION HISTORY

NO.	REMARKS	DATE

DRAWING STATUS

	DATE
DSA PLAN CHECK	03/29/2024
DSA BACK CHECK	06/24/2024
BIDDING	
CONSTRUCTION	

KEY PLAN

BUENA PARK SD
6885 ORANGETHORPE AVE
BUENA PARK, CA 90620

DSA SUBMITTAL

CARL E. GILBERT ELEMENTARY SCHOOL
TK-PK CLASSROOMS & EARLY LEARNING BUILDING
7255 8TH STREET, BUENA PARK, CA 90621

DOOR, GATE & WINDOW SCHEDULE

Date	Project Number
06/24/2024	23076
Application Number	Drawing Number
04-123212	A9.1
Drawn: AT	Checked: MS

PRINT DATE: 6/24/2024 9:41:04 PM
FILE PATH: BIM 360://23076 BPSD Gilbert ES PK-TK CRs_Early Learning Bldg/23076-BPUSD Gilbert-BLDG-A01.rvt

ROOM FINISH SCHEDULE

ROOM		FLOOR		WALLS				CASEWORK			CEILING	COMMENTS
NO.	NAME	MATERIAL	BASE	NORTH (N)	EAST (E)	SOUTH (S)	WEST (W)	BASE	UPPER	COUNTER		
A100	ADMIN/ STAFF	LVT	RB	P2	P2	P2	P2	-	-	-	NC	
A101	UTILITY ROOM	EC	RB	P2	P2	P2	P2	-	-	-	NC	
B100	CLASSROOM	CPT/WM/LVT	RB	P2	P2	P2/P4	P2/P4	PL	PL	SS	AC	
B100A	STUDENT RESTROOM	LVT	RB	P2	P2	P2	P2	-	-	-	NC	
B101	CLASSROOM	CPT/WM/LVT	RB	P2	P2/P4	P2/P4	P2	PL	PL	SS	AC	
B101A	STUDENT RESTROOM	LVT	RB	P2	P2	P2	P2	-	-	-	NC	
B102	CLASSROOM	CPT/WM/LVT	RB	P2	P2	P2/P4	P2/P4	PL	PL	SS	AC	
B102A	STUDENT RESTROOM	LVT	RB	P2	P2	P2	P2	-	-	-	NC	
B103	CLASSROOM	CPT/WM/LVT	RB	P2/P4	P2	P2	P2/P4	PL	PL	SS	AC	
B103A	STUDENT RESTROOM	LVT	RB	P2	P2	P2	P2V	-	-	-	NC	
B104	CLASSROOM	CPT/WM/LVT	RB	P2	P2V	P2/P4	P2/P4	PL	PL	SS	AC	
B104A	STUDENT RESTROOM	LVT	RB	P2	P2	P2	P2	-	-	-	NC	
B105	CLASSROOM	CPT/WM/LVT	RB	P2/P4	P2	P2	P2/P4	PL	PL	SS	AC	
B105A	STUDENT RESTROOM	LVT	RB	P2	P2	P2	P2	-	-	-	NC	
B106	CLASSROOM	CPT/WM/LVT	RB	P2	P2	P2/P4	P2/P4	PL	PL	SS	AC	
B106A	STUDENT RESTROOM	LVT	RB	P2	P2	P2	P2	-	-	-	NC	
B107	UTILITIES ROOM	CONC	RB	P2	P2	P2	P2	-	-	-	NC	
B108	ELECTRICAL ROOM	CONC	RB	P2	P2	P2	P2	-	-	-	NC	
B109	EARLY LEARNING WORKROOM	CONC	RB	P2	P2	P2	P2	-	-	-	NC	
B109A	STAFF RESTROOM	LVT	RB	P2	P2	P2	P2	-	-	-	NC	
B109B	STAFF RESTROOM	LVT	RB	P2	P2	P2	P2	-	-	-	NC	
B109C	CUSTODIAL ROOM	PT	RB	P2/P4	P2/P4	P2	P2	-	-	-	NC	
B110	CLASSROOM	CPT/WM/LVT	RB	P2	P2	P2	P2	PL	PL	SS	AC	
B110A	STUDENT RESTROOM	LVT	RB	P2	P2	P2	P2	-	-	-	NC	
B111	CLASSROOM	CPT/WM/LVT	RB	P2/P4	P2	P2	P2/P4	PL	PL	SS	AC	
B111A	STUDENT RESTROOM	LVT	RB	P2	P2	P2	P2	-	-	-	NC	

GENERAL NOTES

GENERAL
1. ALL INTERIOR CORNERS TO HAVE CORNER GUARDS INSTALLED PER DETAIL 6 / A10.10.3
2. ALL FINISHES SHALL COMPLY WITH CBC CHAPTERS 3-8 &10 AND TITLE 19 C.C.R.
3. PROVIDE MOISTURE RESISTANT GYPSUM BOARD AT ALL RESTROOMS, MOP SINK AREAS AND WALLS ADJACENT TO ANY SINK WHERE GYPSUM BOARD IS SCHEDULED.
4. DO NOT INSTALL MOISTURE RESISTANT GYPSUM BOARD AT CEILING PLANES.

TILING
1. THINSET CERAMIC WALL TILE OVER STUD FRAMING TO BE OVER 5/8" MOISTURE RESISTANT GYPSUM BOARD.
2. ALL TILE CORNERS TO HAVE TRIM PER DETAIL 15 / A10.10.3
3. CERAMIC TILE AT FLOORS OVER DEPRESSED SLABS AND WITH FLOOR DRAINS SHALL BE FULL SET.

PAINTING
1. ALL INTERIOR WALLS AND CEILINGS TO RECIEVE LEVEL 5 FINISH PER SPECIFICATIONS.
2. ALL ROOMS TO RECEIVE EGG-SHELL SHEEN EXCEPT AT RESTROOMS WHICH SHALL RECIEVE SEMI-GLOSS SHEEN.
3. EXTERIOR WALL FINISHES TO RECEIVE FLAT SHEEN, U.O.N.
4. EXTERIOR STEEL, HM FRAMES AND METAL FLASHINGS TO RECEIVE SEMI-GLOSS SHEEN.

BASE MATERIAL LEGEND

SYMBOL	MATERIAL	BASIS OF DESIGN MANUFACTURER	STYLE/COLOR
RB	4" RUBBER BASE	ROPPE	669 BATTLESHIP

CEILING MATERIAL LEGEND

SYMBOL	MATERIAL	BASIS OF DESIGN MANUFACTURER	STYLE/COLOR
AC	2 X 4 SUSPENDED ACOUSTICAL CEILING PANELS	ARMSTRONG	ULTIMA/WHITE
NC	NO CEILING, PAINT P2 U.O.N.		

FLOOR MATERIAL LEGEND

SYMBOL	MATERIAL	BASIS OF DESIGN MANUFACTURER	STYLE/COLOR
CPT	CARPET TILE	BENTLEY	TECH UPD8 INTEGER
WM	WALK-OFF MATT	BENTLEY	ROUGH IDEA SHEAR
LVT	LUXURY VINYL TILE	BENTLEY	BATISTE CAMBRIC
EC	EXPOSED AND SEALED CONCRETE	SEE SPECS	CLEAR SEALER

CASEWORK MATERIAL LEGEND

SYMBOL	MATERIAL	BASIS OF DESIGN MANUFACTURER	STYLE/COLOR
PL	PLASTIC LAMINATE	FORMICA	GREEN SLATE
SS	SOLID SURFACE COUNTERTOP	CORIAN	SPARKLING GRANITA

WALL MATERIAL LEGEND

SYMBOL	MATERIAL	BASIS OF DESIGN MANUFACTURER	STYLE/COLOR
BR	FACE BRICK	MUDDOX	CUSTOM TO MATCH ADJ.
G1	GROUT		CUSTOM TO MATCH ADJ.
P1	PAINT	DUNN EDWARDS	FADED GRAY DEW382
P2	PAINT	DUNN EDWARDS	COLD MORNING DE6365
P3	PAINT	DUNN EDWARDS	COVERED IN PLATINUM DE6367
P4	PAINT	DUNN EDWARDS	LEAFY DE5628
P5	PAINT	DUNN EDWARDS	DEEP INTO THE JUNGLE DE5720
P6	PAINT	DUNN EDWARDS	REVIVAL RED DET 441

DSA STAMP

STUDIO W ARCHITECTS

Studio W Architects
424 32nd Street, Suite D/E
Newport Beach, California 92663
[T] 949.774.2920
www.StudioW-Architects.com

ARCHITECT | ENGINEER

LICENSED ARCHITECT
BRYAN P WHITMORE
No. C 30345
Ren. 9/30/25
STATE OF CALIFORNIA
DATE SIGNED: 06/24/2024

GENERAL NOTES
1. This sheet is part of a set and is not to be used alone.
2. This sheet is not to be used for construction unless the architect's stamp and signature appear on the drawings and the status box indicated drawings have been released for construction.
3. These plans and prints thereof, as instruments of service, are owned by the architect and are for use on this project only. Reproduction and/or distribution without the prior written consent of the architect is forbidden.
4. Copyright Studio W Associates, Inc. 2024.

REVISION HISTORY

NO.	REMARKS	DATE

DRAWING STATUS

	DATE
○ DSA PLAN CHECK	03/29/2024
● DSA BACK CHECK	06/24/2024
○ BIDDING	
○ CONSTRUCTION	

KEY PLAN

BUENA PARK SD
6885 ORANGETHORPE AVE
BUENA PARK, CA 90620

DSA SUBMITTAL

CARL E. GILBERT ELEMENTARY SCHOOL
TK-PK CLASSROOMS & EARLY LEARNING BUILDING
7255 8TH STREET, BUENA PARK, CA 90621

ROOM FINISH SCHEDULE

Date 06/24/2024
Project Number 23076
Application Number 04-123212
Drawing Number A9.2
Drawn AT
Checked MS

PRINT DATE: 6/24/2024 9:41:05 PM
FILE PATH: BIM 360://23076 BPSD Gilbert ES PK-TK CRs_Early Learning Bldg/23076-BPUSD Gilbert-BLDG-A21.rvt

UL DESIGN NO. U348 (GENERIC, 1 HOUR FIRE)

GYPSUM WALLBOARD, WOOD STUDS, MINERAL FIBER INSULATION, PLASTER

FIRE DESIGN:

ONE LAYER 5/8" TYPE X GYPSUM WALLBOARD APPLIED TO 2 X 6 WOOD STUDS 16" OC WITH 2 1/4" TYPE S OR W SCREWS 12" OC, 5 1/2" MINERAL FIBER INSULATION, PRESSURE FIT IN STUD SPACE, AND 7/8" CEMENTITIOUS STUCCO WITH SELF-FURRING METAL LATH, 1: 4 MIX FOR SCRATCH AND 1:5 FOR BROWN COAT.

VERTICAL JOINTS STAGGERED 16" OC, HORIZONTAL JOINTS STAGGERED 24" OC, ON OPPOSITE SIDES.

TESTED AT 5,156 LBS PER STUD OR 100 PERCENT OF DESIGN LOAD. (LOAD BEARING)
NOTES:

1. PER CBC 703.5 ALL FIRE WALLS THAT HAVE A CONCEALED FLOOR-CEILING OR ATTIC SPACE SHALL BE EFFECTIVELY AND PERMANENTLY IDENTIFIED WITH SIGNS OR STENCILING READING "FIRE AND/OR SMOKE BARRIER - PROTECT ALL OPENINGS" IN THE CONCEALED SPACE. THE IDENTIFICATION SHALL BE LOCATED WITHIN 15 FEET OF THE END OF EACH WALL AT INTERVALS NOT EXCEEDING 30 FEET HORIZONTALLY, AND THE LETTERING SHALL NOT BE LESS THAN 3 INCHES IN HEIGHT OR HAVE A STROKE LESS THAN 3/8-INCH IN A CONTRASTING COLOR.

PLAN

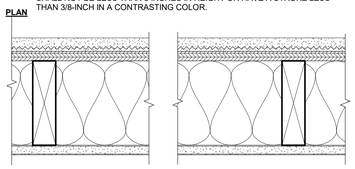

THICKNESS: 6-3/4" (FIRE)
APPROX. WEIGHT: 8 1/2 PSF (FIRE)
FIRE TEST: ITS J99-22441.1, 10-99

SECTION

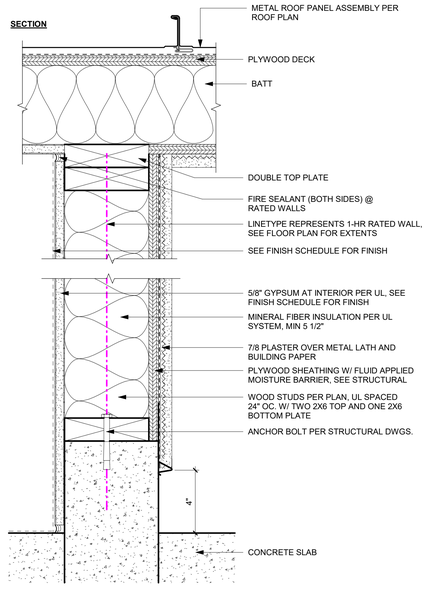

1 HR RATED EXT. WALL ASSEMBLY 3" = 1'-0" 13

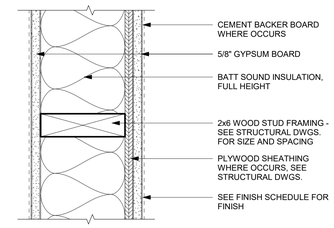

NOTES:
1. WALLS TO BE FULL HEIGHT, WITH GYPSUM BOARD AND INSULATION FULL HEIGHT.

INTERIOR WALL ASSEMBLY - 6 INCH STUD 3" = 1'-0" 6

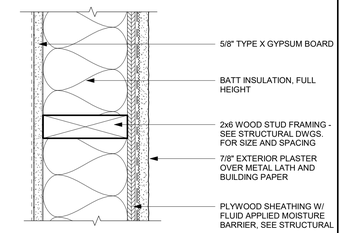

NOTES:
1. WALLS TO BE FULL HEIGHT, WITH GYPSUM BOARD AND INSULATION FULL HEIGHT.
2. PLASTER AT EXTERIOR WALLS ONLY. SEE FINISH SCHEDULE FOR INDIVIDUAL INTERIOR ROOM FINISHES.

EXTERIOR PLASTER WALL ASSEMBLY - 6 INCH STUD 3" = 1'-0" 1

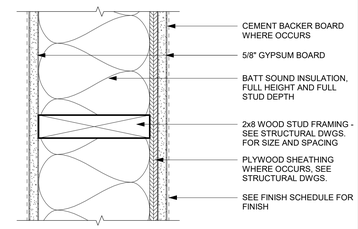

PLAN

NOTES:
1. WALLS TO BE FULL HEIGHT, WITH GYPSUM BOARD AND INSULATION FULL HEIGHT.
2. GYPSUM BOARD AT ONE SIDE ONLY AT FULLY ENCLOSED SHAFTS OR CAVITY WALLS.

INTERIOR WALL ASSEMBLY - 8 INCH STUD 3" = 1'-0" 7

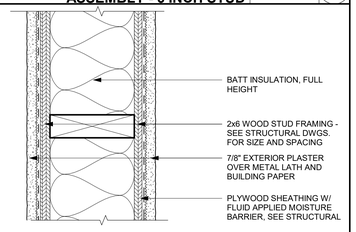

NOTES:
1. WALLS TO BE FULL HEIGHT, WITH GYPSUM BOARD AND INSULATION FULL HEIGHT.
2. PLASTER AT EXTERIOR WALLS ONLY. SEE FINISH SCHEDULE FOR INDIVIDUAL INTERIOR ROOM FINISHES.

EXTERIOR PLASTER WALL ASSEMBLY - DBL SIDED 3" = 1'-0" 2

UL DESIGN NO. U901 (GENERIC, 4 HOUR FIRE)

CONCRETE BLOCKS, MORTAR

FIRE DESIGN:

CONCRETE BLOCKS LAID IN FULL BED OF 3/8" THICK MORTAR, NOT LESS THAN 2.25-3.5 PARTS OF CLEAN SHARP SAND TO 1 PART PORTLAND CEMENT AND NOT LESS THAN 50% HYDRATED LIME. VERTICAL JOINTS STAGGERED.

VERTICAL JOINTS STAGGERED 16" OC, HORIZONTAL JOINTS STAGGERED 24" OC, ON OPPOSITE SIDES.

NOTES:

1. PER CBC 703.5, ALL FIRE WALLS THAT HAVE A CONCEALED FLOOR-CEILING OR ATTIC SPACE SHALL BE EFFECTIVELY AND PERMANENTLY IDENTIFIED WITH SIGNS OR STENCILING READING "FIRE AND/OR SMOKE BARRIER - PROTECT ALL OPENINGS" IN THE CONCEALED SPACE. THE IDENTIFICATION SHALL BE LOCATED WITHIN 15 FEET OF THE END OF EACH WALL AT INTERVALS NOT EXCEEDING 30 FEET HORIZONTALLY, AND THE LETTERING SHALL NOT BE LESS THAN 3 INCHES IN HEIGHT OR HAVE A STROKE LESS THAN 3/8-INCH IN A CONTRASTING COLOR.

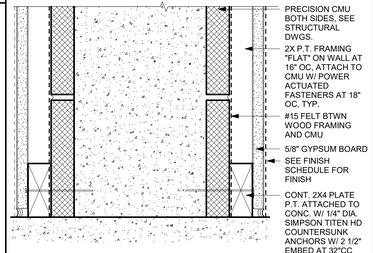

NOTES:
1. ALL WOOD IN DIRECT CONTACT WITH CONCRETE OR MASONRY SHALL BE P.T. AND ASSOCIATED FASTENERS SHALL BE HOT-DIPPED GALV. OR S.S.

4 HR RATED INT. WALL ASSEMBLY 3" = 1'-0" 15

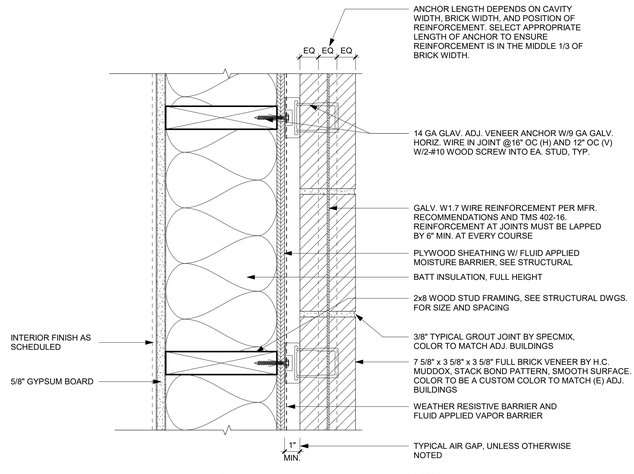

PLAN

NOTES:
1. WALLS TO BE FULL HEIGHT, WITH GYPSUM BOARD AND INSULATION FULL HEIGHT.
2. SEE FINISH SCHEDULE FOR INDIVIDUAL INTERIOR ROOM FINISHES.

FULL BRICK VENEER WALL ASSEMBLY1 3" = 1'-0" 5

DSA STAMP

STUDIO W ARCHITECTS

Studio W Architects
424 32nd Street, Suite D/E
Newport Beach, California 92663
[T] 949.774.2920
www.StudioW-Architects.com

ARCHITECT	ENGINEER
LICENSED ARCHITECT BRYAN P WHITMORE No. C 30345 Ren. 9/30/25 STATE OF CALIFORNIA DATE SIGNED: 06/24/2024	

GENERAL NOTES

1. This sheet is part of a set and is not to be used alone.
2. This sheet is not to be used for construction unless the architect's stamp and signature appear on the drawings and the status box indicated drawings have been released for construction.
3. These plans and prints thereof, as instruments of service, are owned by the architect and are for use on this project only. Reproduction and/or distribution without the prior written consent of the architect is forbidden.
4. Copyright Studio W Associates, Inc. 2024.

REVISION HISTORY

NO.	REMARKS	DATE

DRAWING STATUS

	DATE
○ DSA PLAN CHECK	03/29/2024
● DSA BACK CHECK	06/24/2024
○ BIDDING	
○ CONSTRUCTION	

KEY PLAN

BUENA PARK SD
6885 ORANGETHORPE AVE
BUENA PARK, CA 90620

DSA SUBMITTAL

CARL E. GILBERT ELEMENTARY SCHOOL
TK-PK CLASSROOMS & EARLY LEARNING BUILDING
7255 8TH STREET, BUENA PARK, CA 90621

WALL TYPES

Date	Project Number
06/24/2024	23076
Application Number	Drawing Number
04-123212	A10.1
Drawn / Checked	
AT / MS	

PRINT DATE: 6/24/2024 9:41:06 PM
FILE PATH: BIM 360://23076 BPSD Gilbert ES PK-TK CRs_Early Learning Bldg/23076 BPUSD Gilbert-BLDG-A21.rvt

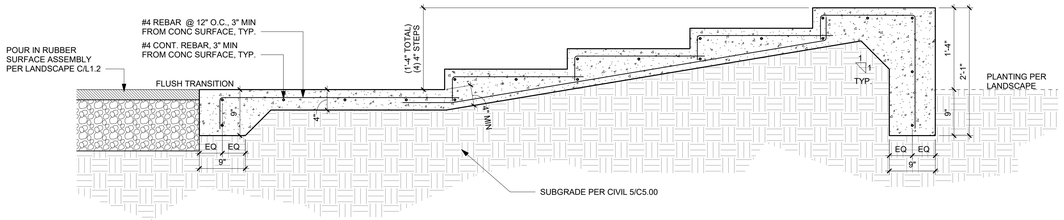

REF: 10 / A1.2

CONC. AMPHITHEATER SECTION 1" = 1'-0" 16

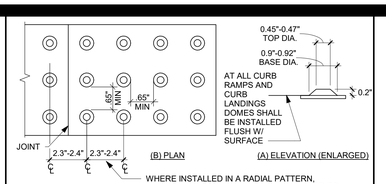

DETECTABLE WARNINGS:

1. **HAZARDOUS VEHICULAR AREAS** DETECTABLE WARNINGS AT HAZARDOUS VEHICULAR AREAS SHALL BE 36 INCHES IN WIDTH.
2. **ONLY APPROVED DSA-AC DETECTABLE WARNING PRODUCTS** AND DIRECTIONAL SURFACES SHALL BE INSTALLED PER THE CALIFORNIA CODE OF REGULATIONS (CCR), TITLE 24, PART 1, CH 5, ARTICLES 2,3, & 4. REFER TO CCR TITLE 24, PART 12, SEC 12 - 11B.705 FOR BLDG/FACILITY ACCESS SPEC'S FOR PRODUCT APPROVAL FOR DETECTABLE WARNING PRODUCTS/DIRECTIONAL SURFACES.
3. **COLOR AND CONTRAST** THE MAT'L USED TO PROVIDE VISUAL CONTRAST SHALL BE AN INTEGRAL PART OF THE SURFACE. WARNING SURFACES SHALL BE YELLOW 33538 PER FEDERAL STD 595A.

TRUNCATED DOMES 1/4" = 1'-0" 11

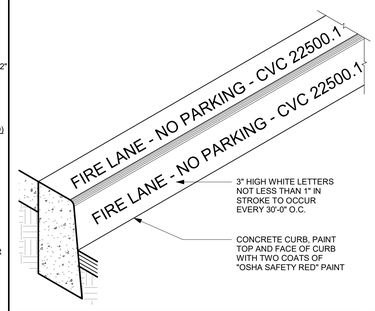

FIRE LANE MARKING 1 1/2" = 1'-0" 6

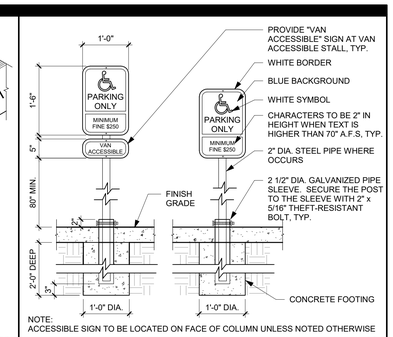

NOTE:
ACCESSIBLE SIGN TO BE LOCATED ON FACE OF COLUMN UNLESS NOTED OTHERWISE

ACCESSIBLE STALL SIGNAGE 3/4" = 1'-0" 1

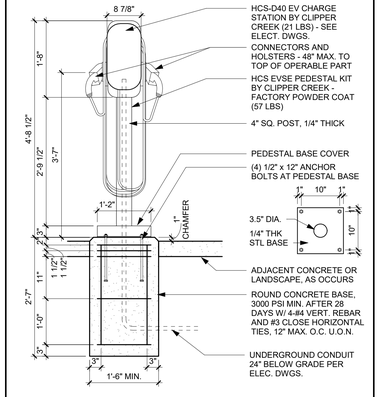

MOW CURB 1 1/2" = 1'-0" 21

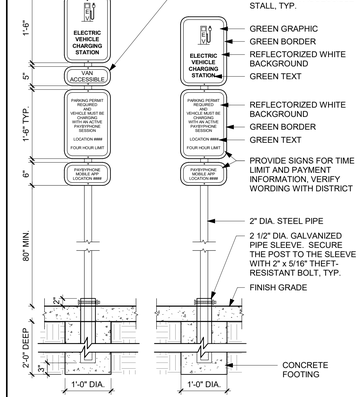

REF: 23 / A10.2.1

CAMPUS BIKE RACK MOUNTING 3" = 1'-0" 22

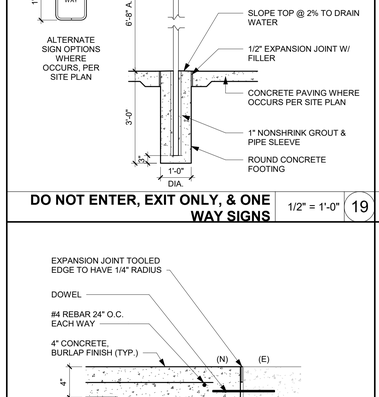

CONC. AMPHITHEATER PLAN 3/16" = 1'-0" 17

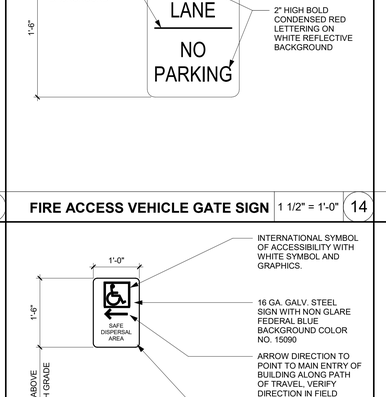

TOW AWAY SIGN 3/4" = 1'-0" 12

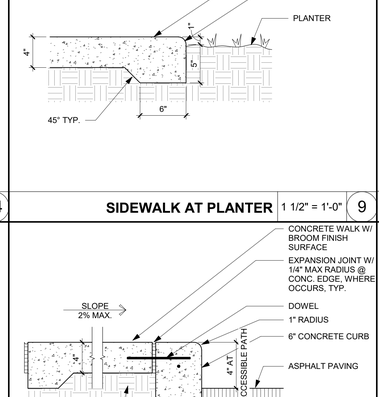

CONCRETE TRANSITION 1 1/2" = 1'-0" 7

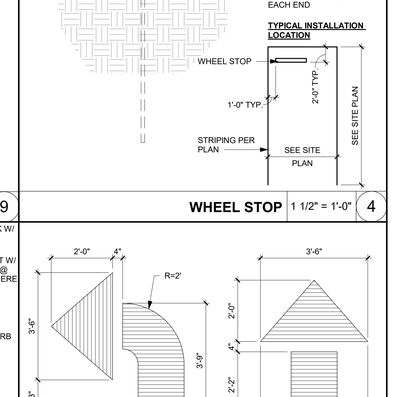

TYPICAL STALL MARKING 1/4" = 1'-0" 2

CAMPUS BIKE RACK ELEVATION 1" = 1'-0" 23

CURB AT REINFORCED CONCRETE PAVEMENT 1 1/2" = 1'-0" 18

FIRE LANE SIGN 3/4" = 1'-0" 13

CURB AT PLANTER 1 1/2" = 1'-0" 8

NOTE:
ISA COLOR & PROPORTIONS SHALL MATCH CBC FIG. 11B-703.7.2.1, TYP. WHERE USED

ACCESSIBLE STALL SYMBOL 1" = 1'-0" 3

DUAL HEAD EV CHARGING PEDESTAL 3/4" = 1'-0" 30

NOTE:
ACCESSIBLE SIGN TO BE LOCATED ON FACE OF COLUMN UNLESS NOTED OTHERWISE

EV CHARGING STALL SIGNAGE 3/4" = 1'-0" 25

DO NOT ENTER, EXIT ONLY, & ONE WAY SIGNS 1/2" = 1'-0" 19

FIRE ACCESS VEHICLE GATE SIGN 1 1/2" = 1'-0" 14

SIDEWALK AT PLANTER 1 1/2" = 1'-0" 9

WHEEL STOP 1 1/2" = 1'-0" 4

CONCRETE TRANSITION @ EXISTING 1 1/2" = 1'-0" 20

DIRECTIONAL ACCESS 3/4" = 1'-0" 15

CURB AT SIDEWALK 1 1/2" = 1'-0" 10

NOTES:
1. ALL FLOW ARROWS TO BE 2 COATS WHITE BEADED REFLECTIVE TRAFFIC PAINT AS PER DIMENSIONS ABOVE.
2. REVERSE ARROWS FOR OPPOSITEI DIRECTION OF FLOW

DIRECTIONAL ARROWS 1/2" = 1'-0" 5

DSA STAMP

STUDIO W ARCHITECTS

Studio W Architects
424 32nd Street, Suite D/E
Newport Beach, California 92663
[T] 949.774.2920
www.StudioW-Architects.com

ARCHITECT	ENGINEER

LICENSED ARCHITECT BRYAN P WHITMORE No. C 30345 Ren. 9/30/25 STATE OF CALIFORNIA

DATE SIGNED: 06/24/2024

GENERAL NOTES
1. This sheet is part of a set and is not to be used alone.
2. This sheet is not to be used for construction unless the architect's stamp and signature appear on the drawings and the status box indicated drawings have been released for construction.
3. These plans and prints thereof, as instruments of service, are owned by the architect and are for use on this project only. Reproduction and/or distribution without the prior written consent of the architect is forbidden.
4. Copyright Studio W Associates, Inc. 2024.

REVISION HISTORY

NO.	REMARKS	DATE

DRAWING STATUS

	DATE
○ DSA PLAN CHECK	03/29/2024
● DSA BACK CHECK	06/24/2024
○ BIDDING	
○ CONSTRUCTION	

KEY PLAN

BUENA PARK SD
6885 ORANGETHORPE AVE
BUENA PARK, CA 90620

DSA SUBMITTAL

CARL E. GILBERT ELEMENTARY SCHOOL
TK-PK CLASSROOMS & EARLY LEARNING BUILDING
7255 8TH STREET, BUENA PARK, CA 90621

SITE DETAILS- SIGNS / CURBS

Date	Project Number
06/24/2024	23076
Application Number	Drawing Number
04-123212	A10.2.1
Drawn / Checked	
AT / MS	

PRINT DATE: 6/24/2024 9:41:07 PM
FILE PATH: BIM 360:/23076 BPSD Gilbert ES PK-TK CRs_Early Learning Bldg/23076-BPUSD Gilbert-BLDG-A21.rvt

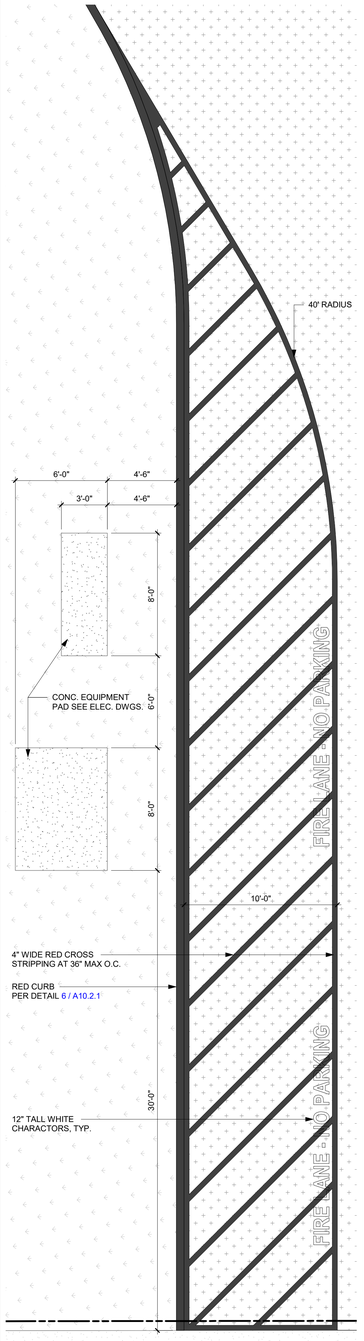

REF: 10 / A1.2

ENLARGED FIRE CURB & STRIPPING 1/4" = 1'-0" 29

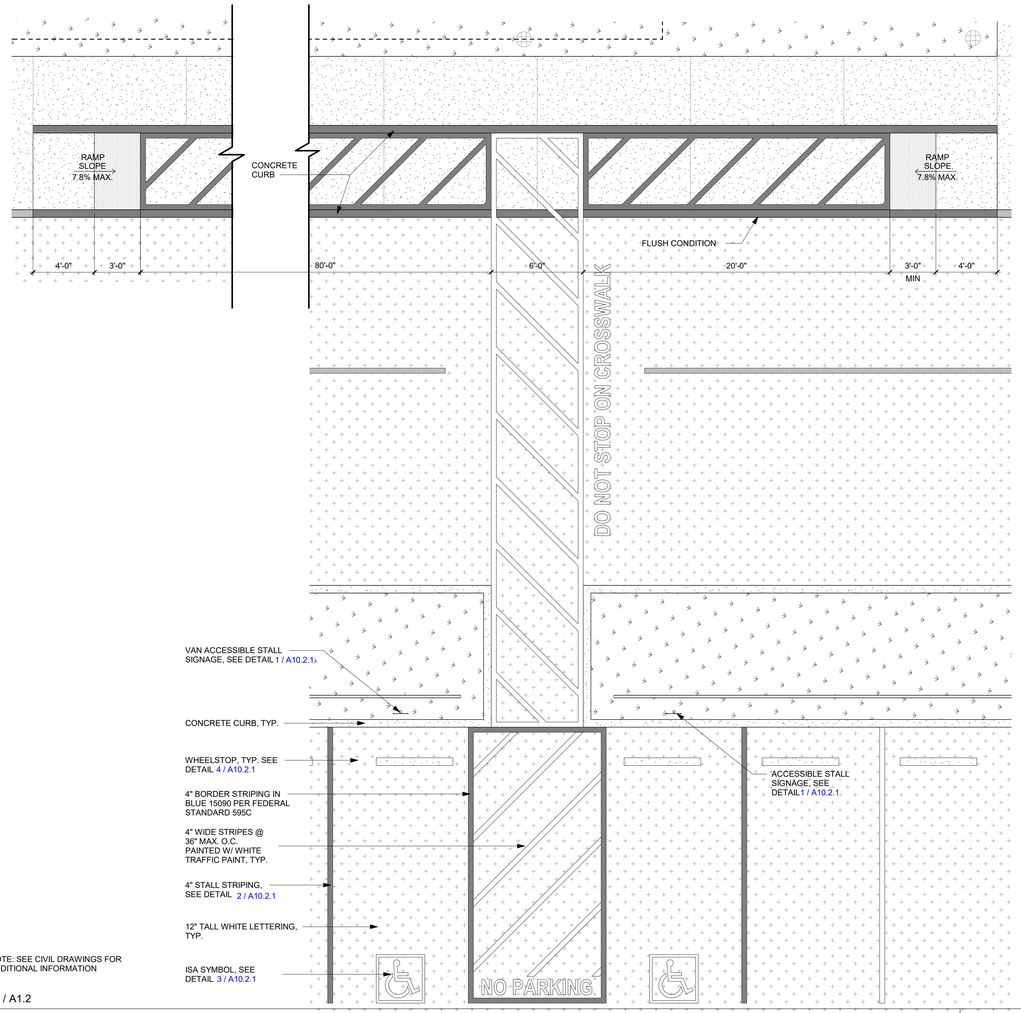

NOTE: SEE CIVIL DRAWINGS FOR ADDITIONAL INFORMATION

REF: 10 / A1.2

ENLARGED CURB PARKING 1/4" = 1'-0" 13

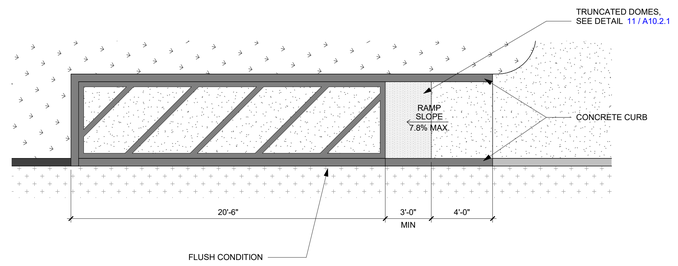

REF: 10 / A1.2

ENLARGED CURB TYP 1/4" = 1'-0" 1

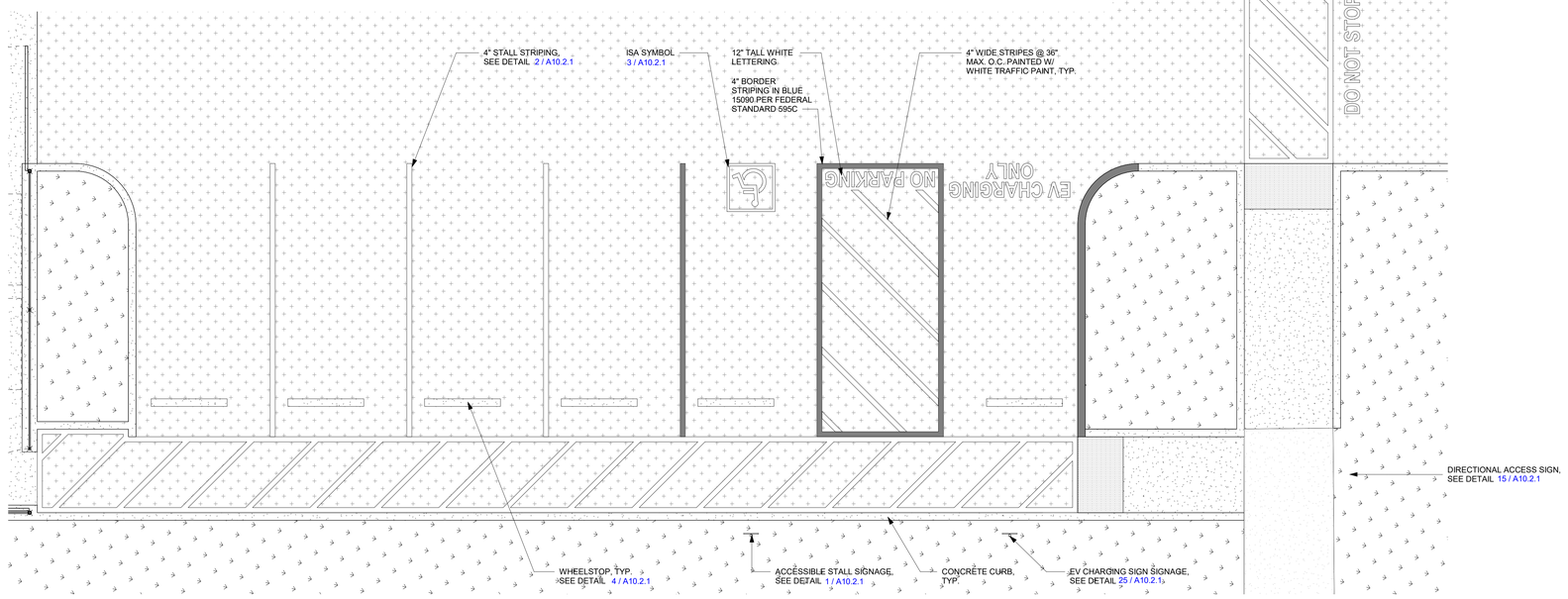

NOTE: SEE CIVIL DRAWINGS FOR ADDITIONAL INFORMATION

REF: 10 / A1.2

ENLARGED CURB FROM EV 1/4" = 1'-0" 5

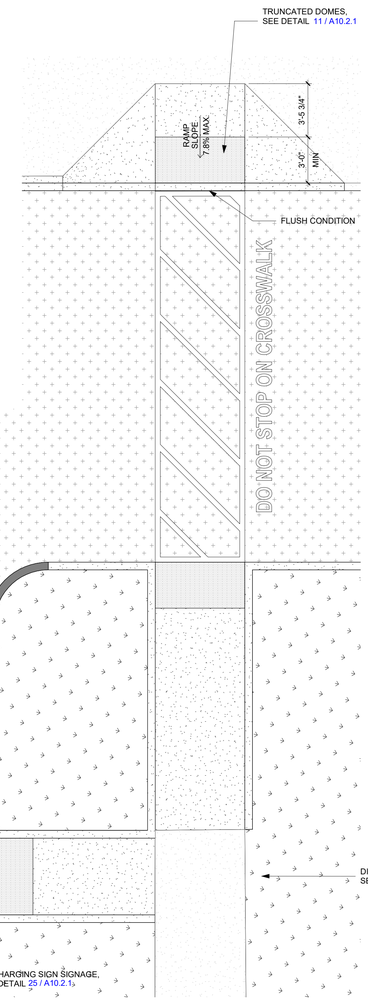

DSA STAMP

STUDIO W ARCHITECTS

Studio W Architects
424 32nd Street, Suite D/E
Newport Beach, California 92663
[T] 949.774.2920
www.StudioW-Architects.com

ARCHITECT	ENGINEER
LICENSED ARCHITECT BRYAN P WHITMORE No. C 30345 Ren. 9/30/25 STATE OF CALIFORNIA DATE SIGNED: 06/24/2024	

GENERAL NOTES

1. This sheet is part of a set and is not to be used alone.
2. This sheet is not to be used for construction unless the architect's stamp and signature appear on the drawings and the status box indicated drawings have been released for construction.
3. These plans and prints thereof, as instruments of service, are owned by the architect and are for use on this project only. Reproduction and/or distribution without the prior written consent of the architect is forbidden.
4. Copyright Studio W Associates, Inc. 2024.

REVISION HISTORY

NO.	REMARKS	DATE

DRAWING STATUS

	DATE
○ DSA PLAN CHECK	03/29/2024
● DSA BACK CHECK	06/24/2024
○ BIDDING	
○ CONSTRUCTION	

KEY PLAN

BUENA PARK SD
6885 ORANGETHORPE AVE
BUENA PARK, CA 90620

DSA SUBMITTAL

CARL E. GILBERT ELEMENTARY SCHOOL
TK-PK CLASSROOMS & EARLY LEARNING BUILDING
7255 8TH STREET, BUENA PARK, CA 90621

SITE DETAILS-STRIPING

Date	Project Number
06/24/2024	23076
Application Number	Drawing Number
04-123212	A10.2.2
Drawn / Checked	
AT / MS	

PRINT DATE: 6/24/2024 9:49:49 PM
FILE PATH: BIM 360://23076 BPSD Gilbert ES PK-TK CRs, Early Learning Bldg/23076-BPUSD Gilbert-BLDG-A21.rvt

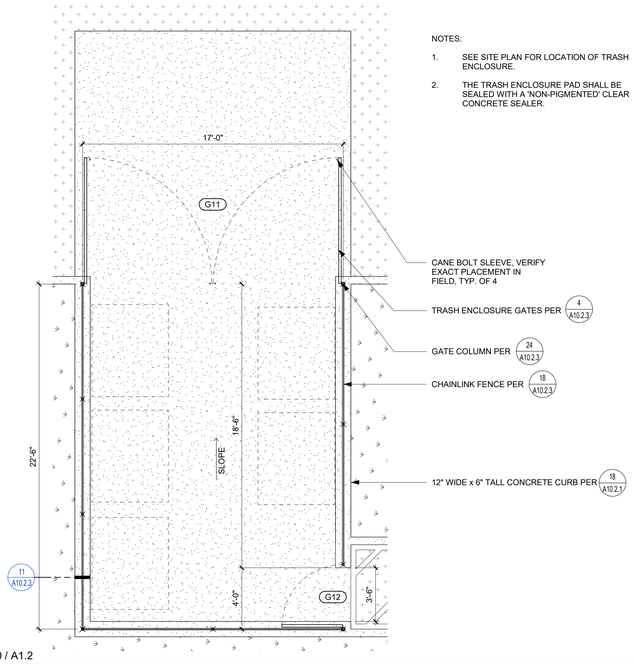

REF: 10 / A1.2

ENLARGED TRASH ENCLOSURE PLAN 1/4" = 1'-0" 17

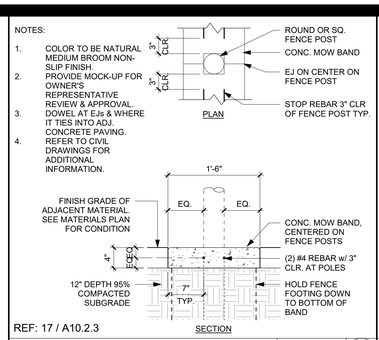

REF: 17 / A10.2.3

CONCRETE MOW STRIP 1" = 1'-0" 11

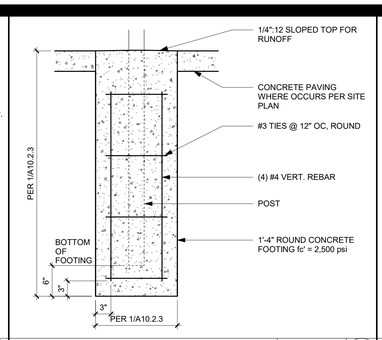

POST/FENCE FOOTING 1" = 1'-0" 6

NOTE: DIAMETER SHALL BE 4X POST SIZE, MIN.

CHAIN LINK: 6'-0" HIGH	
TYPE	POST FOOTING
CORNER, END, AND PULL POSTS	39" x 14" DIA.
LINE POSTS	36" x 12" DIA.
GATE AND LATCH POSTS: 3'-0" TO 5'-0" WIDE	48" x 14" DIA.
GATE AND LATCH POSTS: 10'-0" WIDE	48" x 18" DIA.
GATE AND LATCH POSTS: 12'-0" WIDE	48" x 26" DIA.

ORNAMENTAL: 7'-0" HIGH	
TYPE	POST FOOTING
SINGLE GATE: 4'-0" WIDE	4'-8" x 14" Ø
SINGLE GATE: 5' TO 11'-11" WIDE	5'-6" x 24" Ø
TERMINAL OR LINE POST OR GATE STOP	2'-6" x 14" Ø

POST/FENCE FOOTING SCHEDULE 1/2" = 1'-0" 1

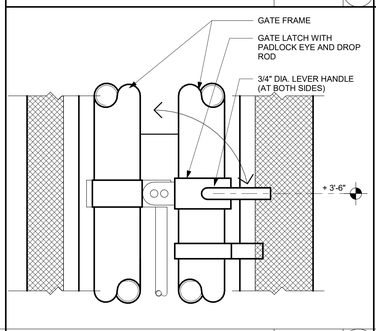

GATE LATCH 3" = 1'-0" 12

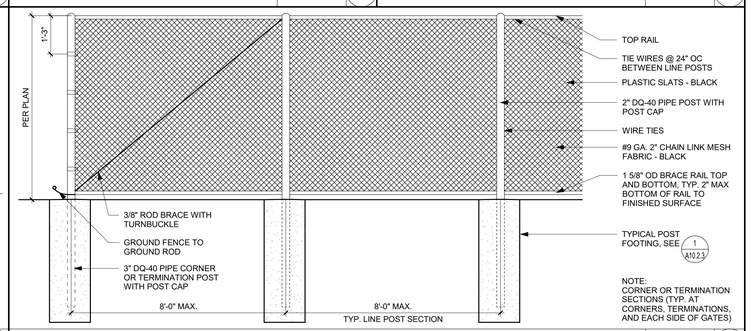

CHAIN LINK FENCE TYPICAL ELEVATION 1/2" = 1'-0" 2

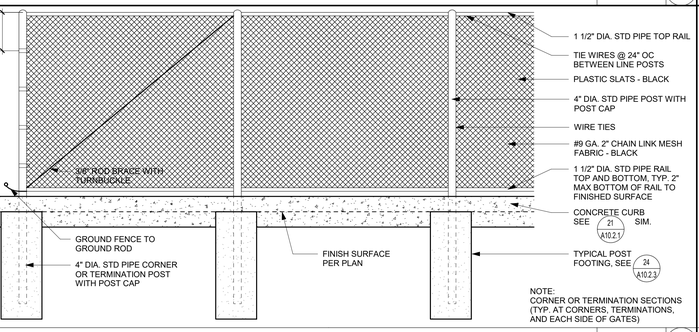

CHAIN LINK FENCE TRASH ENCLOSURE ELEVATION 1/2" = 1'-0" 18

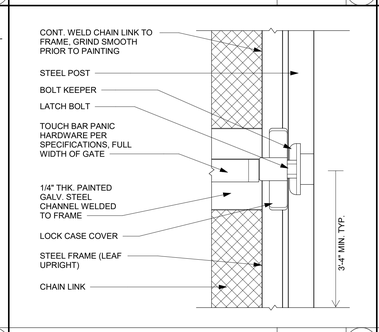

PANIC HARDWARE 1/2" = 1'-0" 13

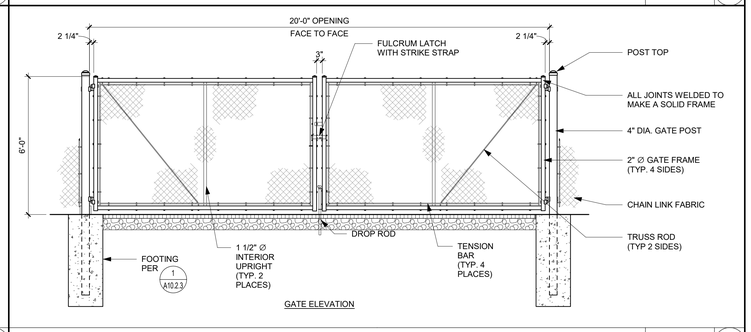

FIRE ACCESS SWING GATES - CHAINLINK 3/8" = 1'-0" 3

CHAIN LINK: 6'-0" HIGH	
TYPE	POST FOOTING
CORNER, END, AND PULL POSTS	66" x 18" DIA.
LINE POSTS	66" x 18" DIA.
GATE AND LATCH POSTS	66" x 18" DIA.

NOTE: DIAMETER SHALL BE 4X POST SIZE, MIN.

TRASH ENCLOSURE FOOTING SCHEDULE 1/2" = 1'-0" 24

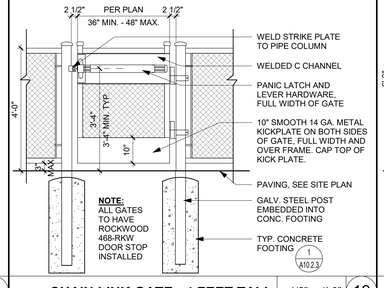

CHAIN LINK GATE - 4 FEET TALL 1/2" = 1'-0" 19

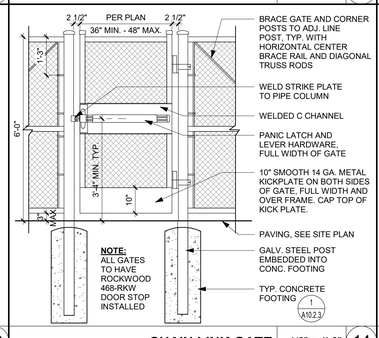

CHAIN LINK GATE 1/2" = 1'-0" 14

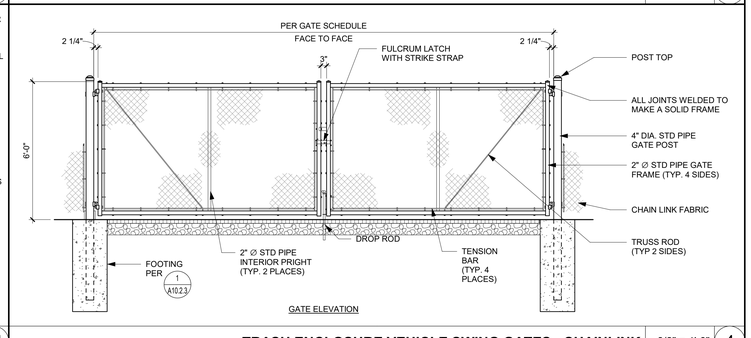

TRASH ENCLOSURE VEHICLE SWING GATES - CHAINLINK 3/8" = 1'-0" 4

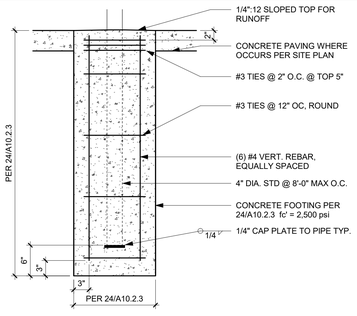

TRASH ENCLOSURE POST FOOTING 1" = 1'-0" 25

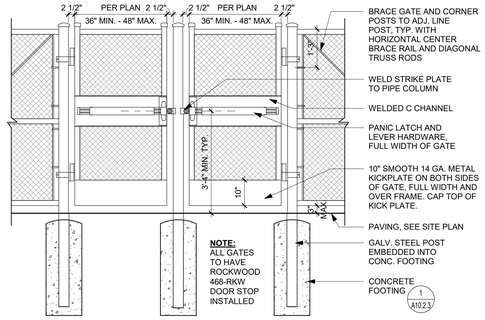

CHAIN LINK GATE - DOUBLE 1/2" = 1'-0" 15

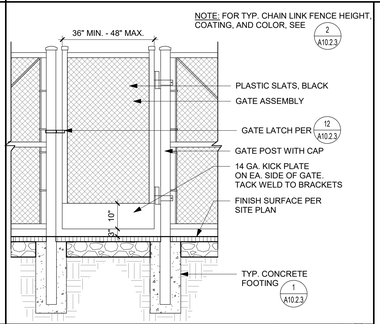

MAINTENANCE CHAIN LINK GATE 1/2" = 1'-0" 10

DSA STAMP

STUDIO W ARCHITECTS

Studio W Architects
424 32nd Street, Suite D/E
Newport Beach, California 92663
[T] 949.774.2920
www.StudioW-Architects.com

ARCHITECT	ENGINEER

LICENSED ARCHITECT BRYAN P WHITMORE No. C 30345 Ren. 9/30/25 STATE OF CALIFORNIA

DATE SIGNED: 06/24/2024

GENERAL NOTES
1. This sheet is part of a set and is not to be used alone.
2. This sheet is not to be used for construction unless the architect's stamp and signature appear on the drawings and the status box indicated drawings have been released for construction.
3. These plans and prints thereof, as instruments of service, are owned by the architect and are for use on this project only. Reproduction and/or distribution without the prior written consent of the architect is forbidden.
4. Copyright Studio W Associates, Inc. 2024.

REVISION HISTORY

NO.	REMARKS	DATE

DRAWING STATUS

	DATE
○ DSA PLAN CHECK	03/29/2024
● DSA BACK CHECK	06/24/2024
○ BIDDING	
○ CONSTRUCTION	

KEY PLAN

BUENA PARK SD
6885 ORANGETHORPE AVE
BUENA PARK, CA 90620

DSA SUBMITTAL

CARL E. GILBERT ELEMENTARY SCHOOL
TK-PK CLASSROOMS & EARLY LEARNING BUILDING
7255 8TH STREET, BUENA PARK, CA 90621

SITE DETAILS-FENCING

Date	Project Number
06/24/2024	23076
Application Number	Drawing Number
04-123212	A10.2.3
Drawn / Checked	
AT / MS	

PRINT DATE: 6/24/2024 9:41:12 PM
FILE PATH: BIM 360:/23076 BPSD Gilbert ES PK-TK CRs, Early Learning Bldg/23076-BPUSD Gilbert-BLDG-A21.rvt

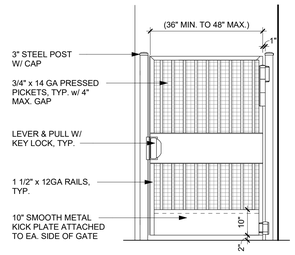

ORNAMENTAL SINGLE GATE - PULL 1/2" = 1'-0" 6

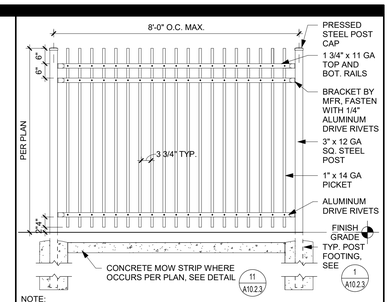

NOTE:
1. ALL EXPOSED FIELD WELDS TO BE GROUND SMOOTH AND POINTED WITH 2 COATS ZINC ENRICH GALV. SPRAY, 2 COAT PRIME, 1 COAT EPOXY PAINT, TYP. TO MATCH SHOP COLOR

ORNAMENTAL FENCE TYPICAL ELEVATION 1/2" = 1'-0" 1

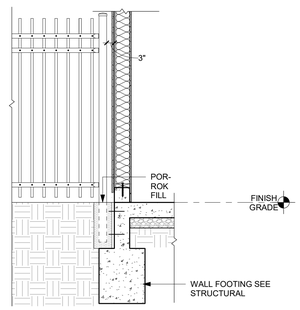

ORNAMENTAL FENCE AT BUILDING WALL 1/2" = 1'-0" 12

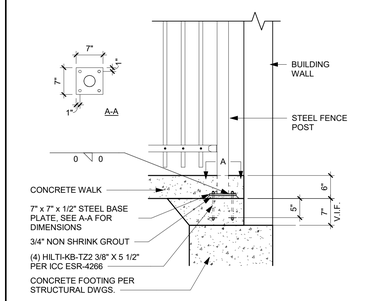

REF: 4 / A10.2.4

FENCE FOOTING AT BUILDING 3/4" = 1'-0" 7

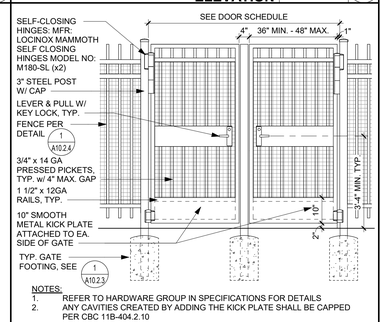

NOTES:
1. REFER TO HARDWARE GROUP IN SPECIFICATIONS FOR DETAILS
2. ANY CAVITIES CREATED BY ADDING THE KICK PLATE SHALL BE CAPPED PER CBC 11B-404.2.10

ORNAMENTAL DOUBLE GATE - PULL SIDE ELEVATION 1/2" = 1'-0" 2

NOTE:
GATE AND FRAME TO BE POWDER COATED

GATE LATCH - ORNAMENTAL 3" = 1'-0" 13

NOTES:
1. GRIND SMOOTH ALL WELDED JOINTS
2. FOR GATE INFORMATION, SEE GATE SCHEDULE ON SHEET A9.1
3. ANY CAVITIES CREATED BY ADDING THE KICK PLATE SHALL BE CAPPED PER CBC 11B-404.2.10
4. FOR PULL SIDE ELEVATION SEE DETAIL 2 A10.2.4

ORNAMENTAL DOUBLE GATE 1/2" = 1'-0" 4

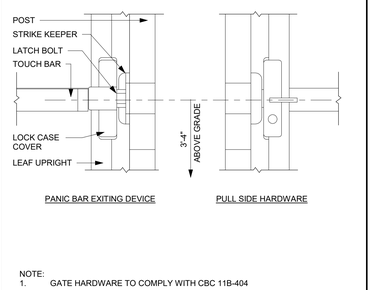

NOTE:
1. GATE HARDWARE TO COMPLY WITH CBC 11B-404

TYP. SWINGING GATE ACCESSORIES 1/2" = 1'-0" 14

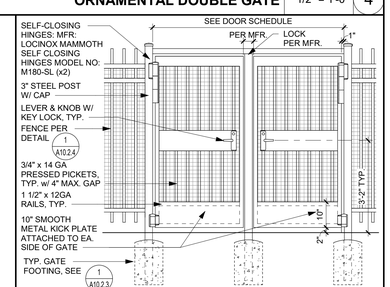

NOTES:
1. REFER TO HARDWARE GROUP IN SPECIFICATIONS FOR DETAILS
2. ANY CAVITIES CREATED BY ADDING THE KICK PLATE SHALL BE CAPPED PER CBC 11B-404.2.10

ORNAMENTAL DOUBLE GATE - SERVICE GATE 1/2" = 1'-0" 5

DSA STAMP

STUDIO W ARCHITECTS

Studio W Architects
424 32nd Street, Suite D/E
Newport Beach, California 92663
[T] 949.774.2920
www.StudioW-Architects.com

ARCHITECT	ENGINEER

LICENSED ARCHITECT BRYAN P WHITMORE No. C 30345 Ren. 9/30/25 STATE OF CALIFORNIA

DATE SIGNED: 06/24/2024

GENERAL NOTES
1. This sheet is part of a set and is not to be used alone.
2. This sheet is not to be used for construction unless the architect's stamp and signature appear on the drawings and the status box indicated drawings have been released for construction.
3. These plans and prints thereof, as instruments of service, are owned by the architect and are for use on this project only. Reproduction and/or distribution without the prior written consent of the architect is forbidden.
4. Copyright Studio W Associates, Inc. 2024.

REVISION HISTORY

NO.	REMARKS	DATE

DRAWING STATUS

	DATE
○ DSA PLAN CHECK	03/29/2024
● DSA BACK CHECK	06/24/2024
○ BIDDING	
○ CONSTRUCTION	

KEY PLAN

BUENA PARK SD
6885 ORANGETHORPE AVE
BUENA PARK, CA 90620

DSA SUBMITTAL

CARL E. GILBERT ELEMENTARY SCHOOL
TK-PK CLASSROOMS & EARLY LEARNING BUILDING
7255 8TH STREET, BUENA PARK, CA 90621

SITE DETAILS- ORNAMENTAL FENCING

Date	Project Number
06/24/2024	23076
Application Number	Drawing Number
04-123212	A10.2.4
Drawn / Checked	
AT / MS	

PRINT DATE: 6/24/2024 9:41:14 PM
FILE PATH: BIM 360:/23076 BPSD Gilbert ES PK-TK CRs, EarlyLearning Bldg/23076-BPUSD Gilbert-BLDG-A21.rvt

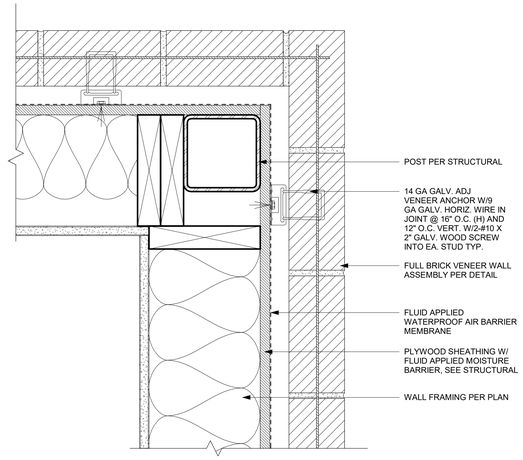

BRICK OUTSIDE CORNER 3" = 1'-0" 6

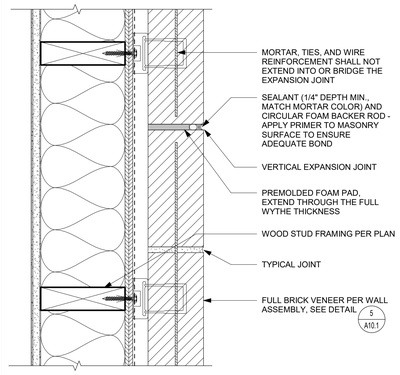

FULL BRICK VENEER VERTICAL EXPANSION JOINT 3" = 1'-0" 8

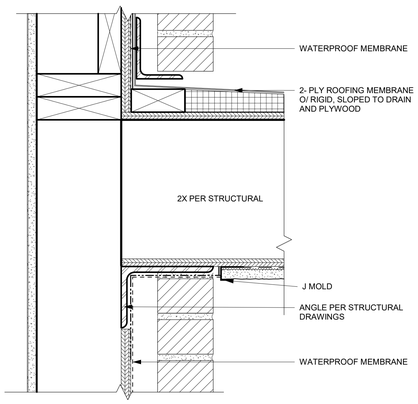

CANOPY ROOF AT MASONRY WALL 3" = 1'-0" 3

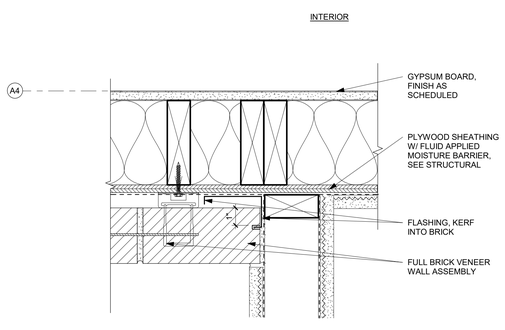

BRICK TO PLASTER PERP. WALL 3" = 1'-0" 20

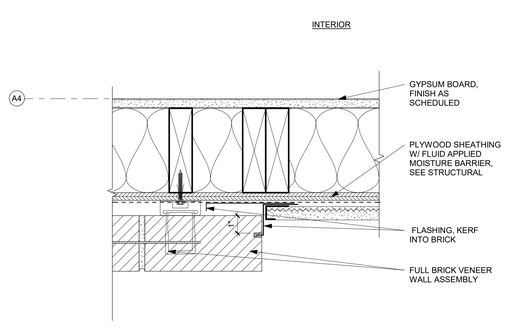

BRICK TO PLASTER 3" = 1'-0" 15

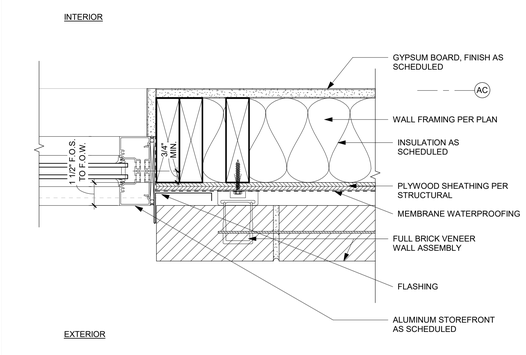

BRICK AT STOREFRONT JAMB 3" = 1'-0" 10

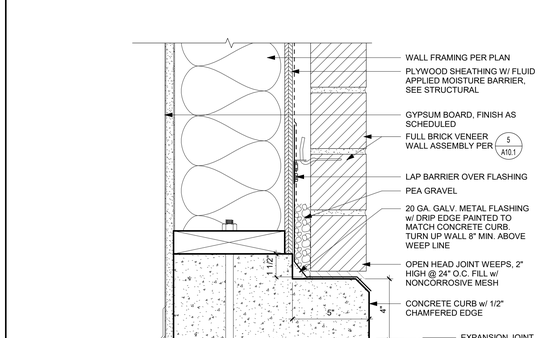

BRICK AT BASE 3" = 1'-0" 5

PRINT DATE: 6/24/2024 9:41:14 PM
FILE PATH: BIM 360://23076 BPSD Gilbert ES PK-TK CRs, Early_earning Bldg/23076-BPUSD Gilbert-BLDG-A21.rvt

DSA STAMP

STUDIO W ARCHITECTS

Studio W Architects
424 32nd Street, Suite D/E
Newport Beach, California 92663
[T] 949.774.2920
www.StudioW-Architects.com

ARCHITECT	ENGINEER

LICENSED ARCHITECT BRYAN P WHITMORE No. C 30345 Ren. 9/30/25 STATE OF CALIFORNIA

DATE SIGNED: 06/24/2024

GENERAL NOTES

1. This sheet is part of a set and is not to be used alone.
2. This sheet is not to be used for construction unless the architect's stamp and signature appear on the drawings and the status box indicated drawings have been released for construction.
3. These plans and prints thereof, as instruments of service, are owned by the architect and are for use on this project only. Reproduction and/or distribution without the prior written consent of the architect is forbidden.
4. Copyright Studio W Associates, Inc. 2024.

REVISION HISTORY

NO.	REMARKS	DATE

DRAWING STATUS

	DATE
○ DSA PLAN CHECK	03/29/2024
● DSA BACK CHECK	06/24/2024
○ BIDDING	
○ CONSTRUCTION	

KEY PLAN

BUENA PARK SD
6885 ORANGETHORPE AVE
BUENA PARK, CA 90620

DSA SUBMITTAL

CARL E. GILBERT ELEMENTARY SCHOOL
TK-PK CLASSROOMS & EARLY LEARNING BUILDING
7255 8TH STREET, BUENA PARK, CA 90621

MASONRY DETAILS

Date	Project Number
06/24/2024	23076
Application Number	Drawing Number
04-123212	A10.4
Drawn AT / Checked MS	

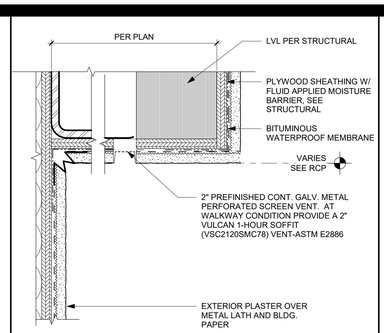

PLASTER VENT AND DRIP SCREED 3" = 1'-0" 6

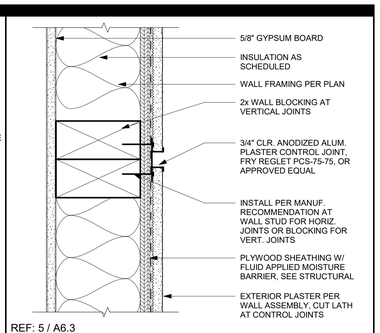

REF: 5 / A6.3

EXT. PLASTER REVEAL WIDE 3" = 1'-0" 1

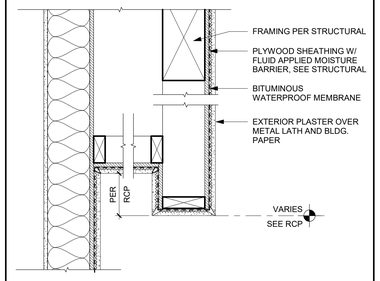

REF: 10 / A6.3

PLASTER SOFFIT 1 1/2" = 1'-0" 7

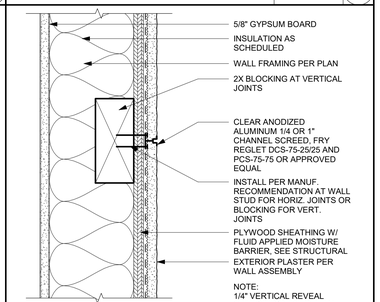

REF: 5 / A6.3

EXT. PLASTER REVEAL NARROW 3" = 1'-0" 2

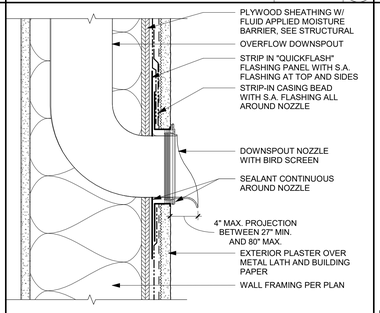

OVERFLOW NOZZLE 3" = 1'-0" 8

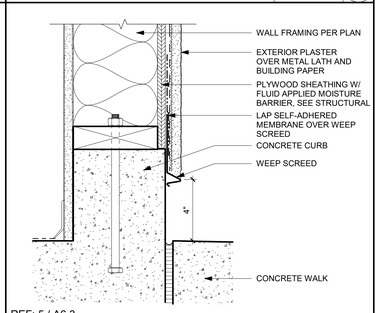

REF: 5 / A6.3

EXTERIOR PLASTER AT BASE 3" = 1'-0" 3

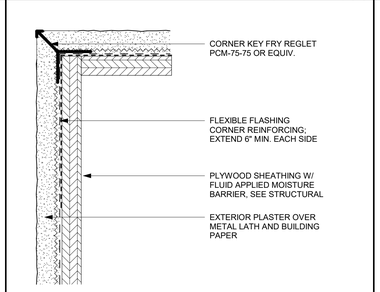

EXTERIOR PLASTER OUTSIDE CORNER PLAN DETAIL 6" = 1'-0" 9

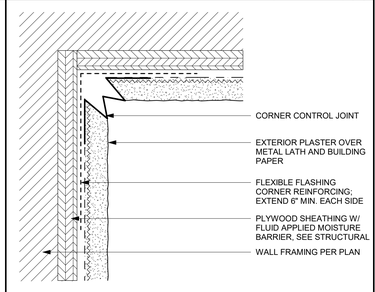

EXTERIOR PLASTER INSIDE CORNER PLAN DETAIL 6" = 1'-0" 4

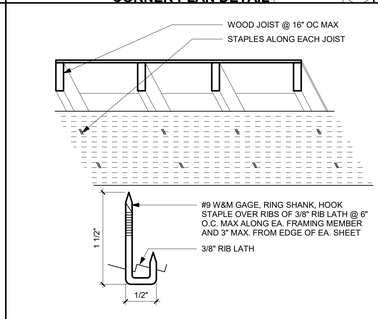

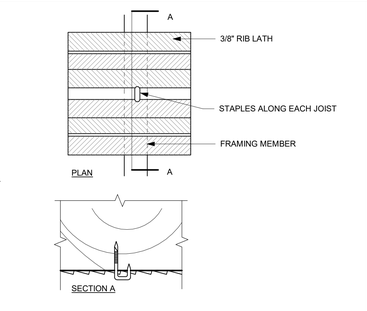

PLASTER LATH ATTACHMENT AT SOFFIT 12" = 1'-0" 5

DSA STAMP

STUDIO W ARCHITECTS

Studio W Architects
424 32nd Street, Suite D/E
Newport Beach, California 92663
[T] 949.774.2920
www.StudioW-Architects.com

ARCHITECT	ENGINEER

LICENSED ARCHITECT BRYAN P WHITMORE No. C 30345 Ren. 9/30/25 STATE OF CALIFORNIA

DATE SIGNED: 06/24/2024

GENERAL NOTES

1. This sheet is part of a set and is not to be used alone.
2. This sheet is not to be used for construction unless the architect's stamp and signature appear on the drawings and the status box indicated drawings have been released for construction.
3. These plans and prints thereof, as instruments of service, are owned by the architect and are for use on this project only. Reproduction and/or distribution without the prior written consent of the architect is forbidden.
4. Copyright Studio W Associates, Inc. 2024.

REVISION HISTORY

NO.	REMARKS	DATE

DRAWING STATUS

	DATE
○ DSA PLAN CHECK	03/29/2024
● DSA BACK CHECK	06/24/2024
○ BIDDING	
○ CONSTRUCTION	

KEY PLAN

BUENA PARK SD
6885 ORANGETHORPE AVE
BUENA PARK, CA 90620

DSA SUBMITTAL

CARL E. GILBERT ELEMENTARY SCHOOL
TK-PK CLASSROOMS & EARLY LEARNING BUILDING
7255 8TH STREET, BUENA PARK, CA 90621

PLASTER DETAILS

Date	Project Number
06/24/2024	23076
Application Number	Drawing Number
04-123212	A10.6
Drawn AT / Checked MS	

PRINT DATE: 6/24/2024 9:41:15 PM
FILE PATH: BIM 360://23076 BPSD Gilbert ES PK-TK CRs, Early Learning Bldg/23076-BPUSD Gilbert-BLDG-A21.rvt

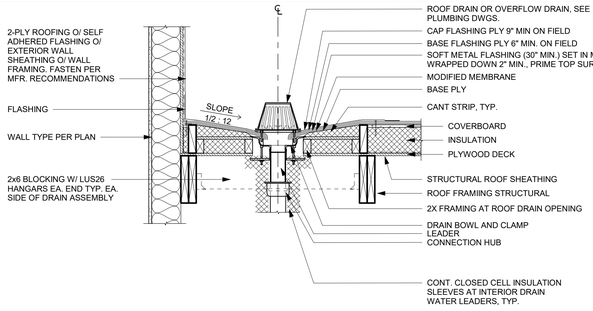

ROOF AND OVERFLOW DRAIN AT 2-PLY ROOFING 1" = 1'-0" 16

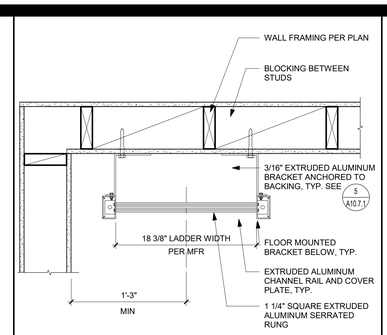

ROOF ACCESS LADDER PLAN 1 1/2" = 1'-0" 6

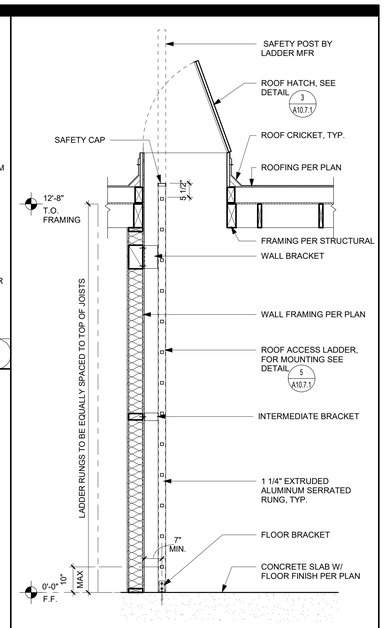

ROOF ACCESS LADDER AND HATCH SECTION 1/2" = 1'-0" 2

NOTES:

1. STEEL CLAMPING RINGS MUST BE USED ON ALL ROOF AND OVERFLOW DRAINS.
2. IF THE DRAIN SUMP IS RECESSED BELOW THE DECK MORE THAN 4", PLYWOOD OR WOOD CANT STRIP SHALL BE INSTALLED TO MEET FLUSH WITH THE TOP OF THE SUMP. THE PLYWOOD CANT SHALL BE INSTALLED AT A 45 DEGREE ANGLE, WITH THE TOP AND BOTTOM EDGES MITERED TO FIT FLUSH WITH THE SUBSTRATE.
3. AFTER COMPLETE INSTALLATION OF THE ROOFING SYSTEM, G.C. SHALL INSPECT AND TEST ALL ROOF DRAINS TO ASSURE THAT NO CLOGGING OF THE DRAINAGE SYSTEM IS PRESENT.
4. ROOF DRAIN LEADERS SHOULD BE IN SUCH CONDITION THAT THE FULL DIAMETER OF THE DRAIN LEADER IS CLEAR.
5. OVERFLOW DRAIN SHALL COMPLY WITH C.B.C. 1503.4 AND C.P.C.

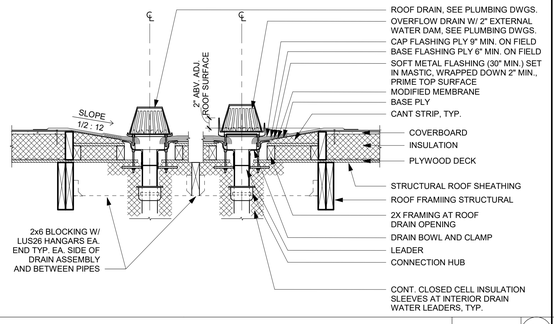

ROOF AND OVERFLOW DRAIN AT 2-PLY ROOFING SECTION 1" = 1'-0" 17

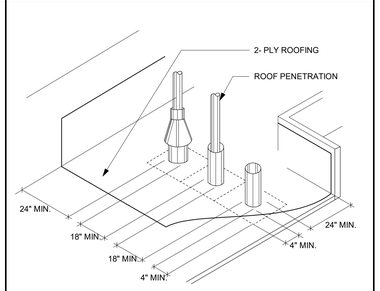

TYPICAL PENETRATION CLEARANCES AT ROOF 1" = 1'-0" 7

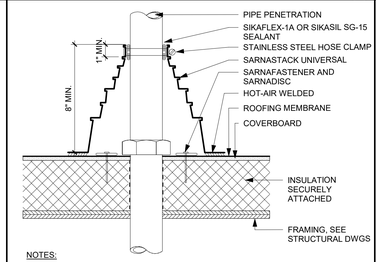

NOTES:

1. VAPOR RETARDER SHALL BE SEALED AT EDGES.
2. PIPE SEAL MUST HAVE INTACT RIB AT TOP EDGE, REGARDLESS OF PIPE DIAMETER.
3. DECK FLANGES OF THE PRE-MOLDED PIPE SEAL SHALL NOT BE OVERLAPPED, CUT OR APPLIED OVER ANY ANGLE CHANGE.
4. THE EMPTY SPACE MAY BE FILLED WITH AN EXPANDING URETHANE FOAM.

VENT PIPE AT 2-PLY ROOF 3" = 1'-0" 13

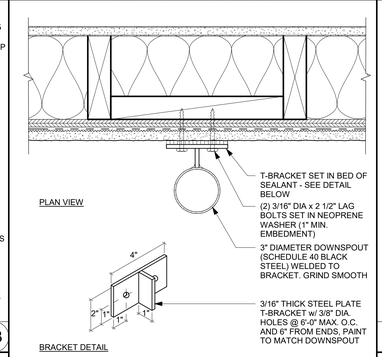

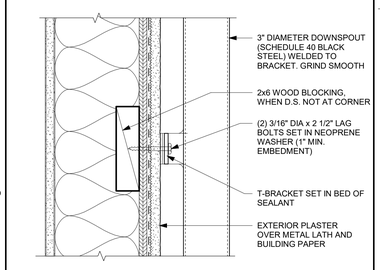

RAINWATER LEADER MOUNTING BRACKET 3" = 1'-0" 9

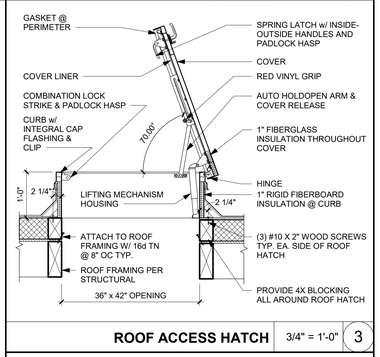

ROOF ACCESS HATCH 3/4" = 1'-0" 3

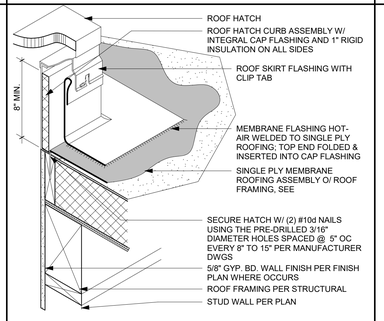

ROOF HATCH PENETRATION AND CURB 1 1/2" = 1'-0" 19

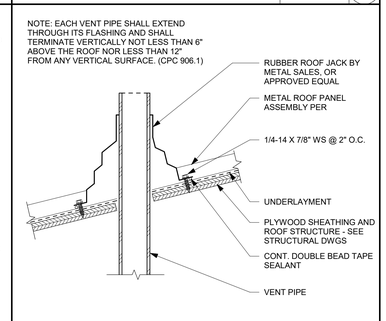

VENT PIPE AT METAL ROOF 3" = 1'-0" 14

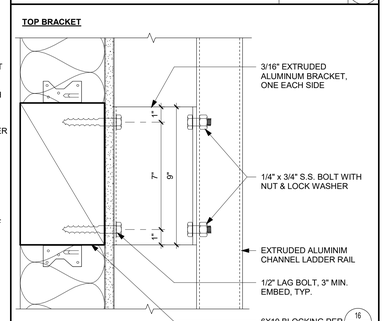

ROOF ACCESS LADDER MOUNTING 3" = 1'-0" 5

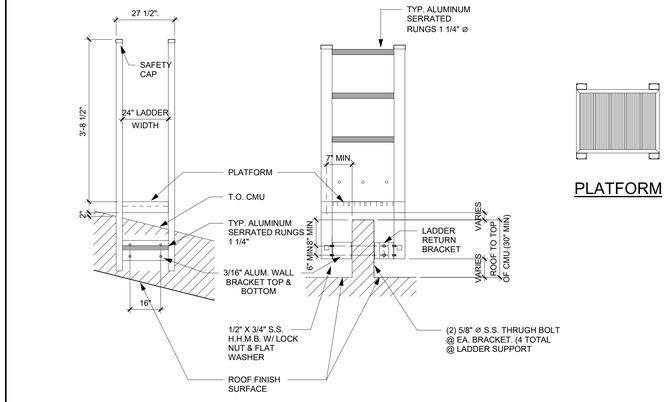

FRONT ELEVATION SIDE ELEVATION

PLATFORM

PARAPET / CMU LADDER 3/8" = 1'-0" 25

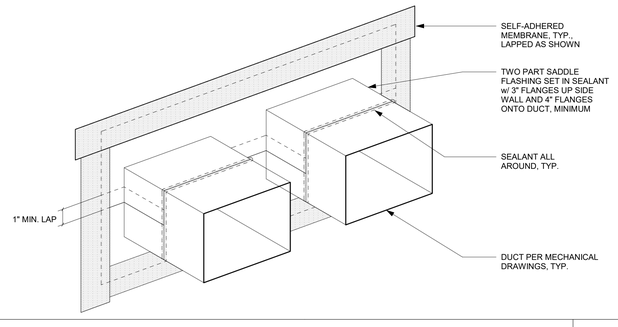

DUCT THRU WALL PENETRATION 3" = 1'-0" 15

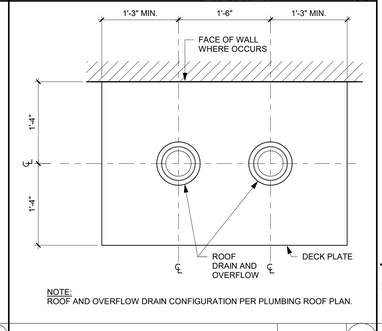

NOTE:
ROOF AND OVERFLOW DRAIN CONFIGURATION PER PLUMBING ROOF PLAN.

ROOF AND OVERFLOW DRAIN PLAN 1" = 1'-0" 10

DSA STAMP

STUDIO W ARCHITECTS

Studio W Architects
424 32nd Street, Suite D/E
Newport Beach, California 92663
[T] 949.774.2920
www.StudioW-Architects.com

ARCHITECT	ENGINEER

LICENSED ARCHITECT BRYAN P WHITMORE No. C 30345 Ren. 9/30/25 STATE OF CALIFORNIA

DATE SIGNED: 06/24/2024

GENERAL NOTES

1. This sheet is part of a set and is not to be used alone.
2. This sheet is not to be used for construction unless the architect's stamp and signature appear on the drawings and the status box indicated drawings have been released for construction.
3. These plans and prints thereof, as instruments of service, are owned by the architect and are for use on this project only. Reproduction and/or distribution without the prior written consent of the architect is forbidden.
4. Copyright Studio W Associates, Inc. 2024.

REVISION HISTORY

NO.	REMARKS	DATE

DRAWING STATUS

	DATE
DSA PLAN CHECK	03/29/2024
DSA BACK CHECK	06/24/2024
BIDDING	
CONSTRUCTION	

KEY PLAN

BUENA PARK SD
6885 ORANGETHORPE AVE
BUENA PARK, CA 90620

DSA SUBMITTAL

CARL E. GILBERT ELEMENTARY SCHOOL
TK-PK CLASSROOMS & EARLY LEARNING BUILDING
7255 8TH STREET, BUENA PARK, CA 90621

ROOF DETAILS- PENETRATIONS

Date	Project Number
06/24/2024	23076
Application Number	Drawing Number
04-123212	A10.7.1
Drawn AT / Checked MS	

PRINT DATE: 6/24/2024 9:41:16 PM
FILE PATH: BIM 360://23076 BPSD Gilbert ES PK-TK CRs_Early Learning Bldg/23076-BPUSD Gilbert-BLDG-A21.rvt

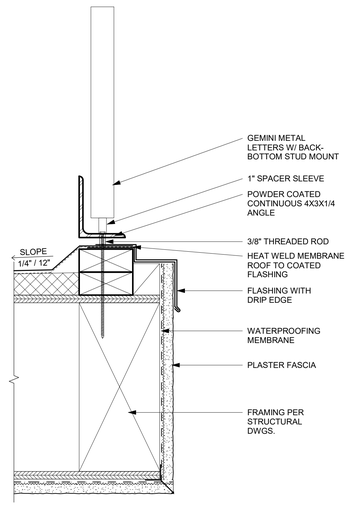

EAVE AT SIGNAGE 3" = 1'-0" 12

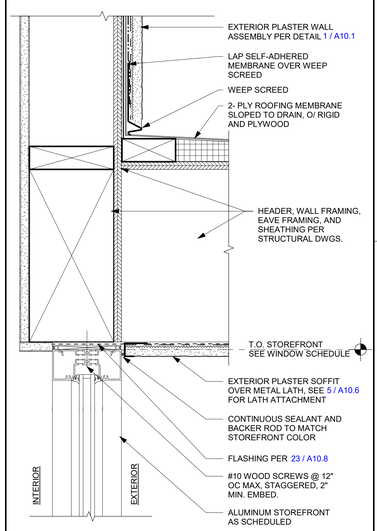

REF: 5 / A6.4

MEBRANE ROOF EAVE AT ADMIN. WINDOW 3" = 1'-0" 7

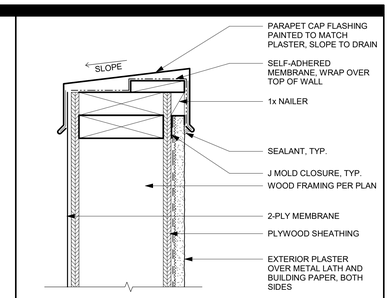

REF: 5 / A6.3

PARAPET CAP 3" = 1'-0" 1

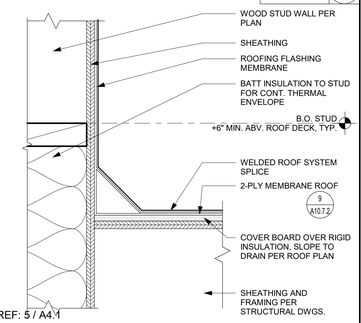

REF: 5 / A4.1

MECH. ROOF TO PARAPET WALL 3" = 1'-0" 2

REF: 5 / A4.1

EAVE AT MEMBRANE ROOF 3" = 1'-0" 8

CRICKET AT ADMIN 3" = 1'-0" 3

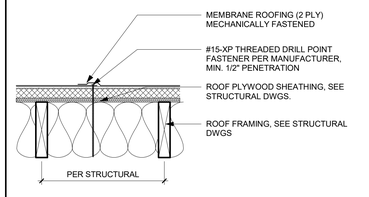

MEMBRANE ROOF AT MECHANICAL 1 1/2" = 1'-0" 9

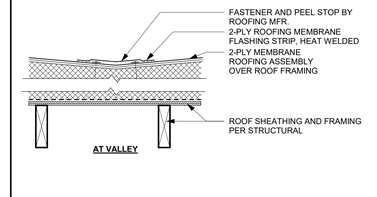

ROOF TRANSITIONS 1 1/2" = 1'-0" 4

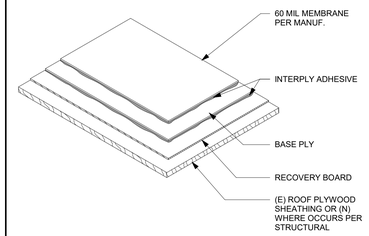

NOTE:
REFERENCE SPECIFICATION FOR SURFACING AND MEMBRANE ADHESIVE TYPE

2-PLY ROOFING ASSEMBLY 1/8" = 1'-0" 10

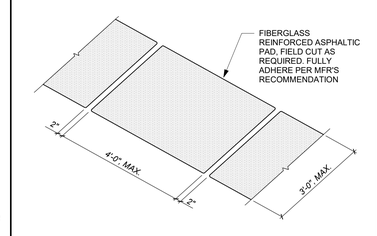

WALK PADS ARE REQUIRED ON MEMBRANE ROOFS: INSTALL 12" MAX. APART AND 12" AWAY FROM WALLS AND CURBS. PROVIDE AT ALL ROOF ENTRY AND EXIT POINTS AND IN FRONT OF SERVICE DOORS OR PANELS IN MECHANICAL EQUIPMENT, AND OTHERWISE AS REQUIRED BY ROOF MANUFACTURER. SEE ROOF PLAN FOR ADDITIONAL LOCATIONS.

ROOF WALKWAY PADS 1/2" = 1'-0" 5

DSA STAMP

STUDIO W ARCHITECTS

Studio W Architects
424 32nd Street, Suite D/E
Newport Beach, California 92663
[T] 949.774.2920
www.StudioW-Architects.com

ARCHITECT	ENGINEER
LICENSED ARCHITECT BRYAN P WHITMORE No. C 30345 Ren. 9/30/25 STATE OF CALIFORNIA DATE SIGNED: 06/24/2024	

GENERAL NOTES

1. This sheet is part of a set and is not to be used alone.
2. This sheet is not to be used for construction unless the architect's stamp and signature appear on the drawings and the status box indicated drawings have been released for construction.
3. These plans and prints thereof, as instruments of service, are owned by the architect and are for use on this project only. Reproduction and/or distribution without the prior written consent of the architect is forbidden.
4. Copyright Studio W Associates, Inc. 2024.

REVISION HISTORY

NO.	REMARKS	DATE

DRAWING STATUS

	DATE
○ DSA PLAN CHECK	03/29/2024
● DSA BACK CHECK	06/24/2024
○ BIDDING	
○ CONSTRUCTION	

KEY PLAN

BUENA PARK SD
6885 ORANGETHORPE AVE
BUENA PARK, CA 90620

DSA SUBMITTAL

CARL E. GILBERT ELEMENTARY SCHOOL
TK-PK CLASSROOMS & EARLY LEARNING BUILDING
7255 8TH STREET, BUENA PARK, CA 90621

ROOF DETAILS - MEMBRANE

Date 06/24/2024	Project Number 23076
Application Number 04-123212	Drawing Number A10.7.2
Drawn AT / Checked MS	

PRINT DATE: 6/24/2024 9:41:17 PM
FILE PATH: BIM 360://23076 BPSD Gilbert ES PK-TK CRs, Early Learning Bldg/23076-BPUSD Gilbert-BLDG-A21.rvt

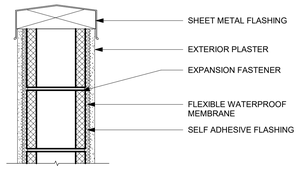

CMU WALL CAP 1 1/2" = 1'-0" 11

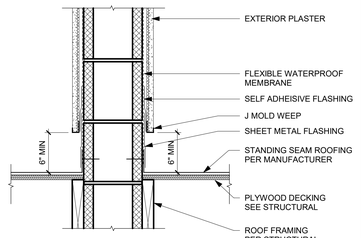

METAL ROOF AT CMU WALL 1 1/2" = 1'-0" 6

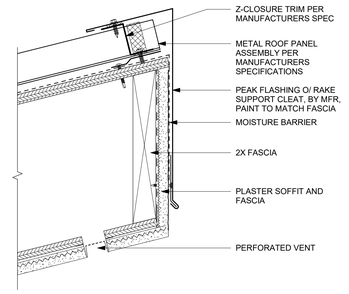

REF: 5 / A4.1

METAL ROOF HIGH EAVE 3" = 1'-0" 1

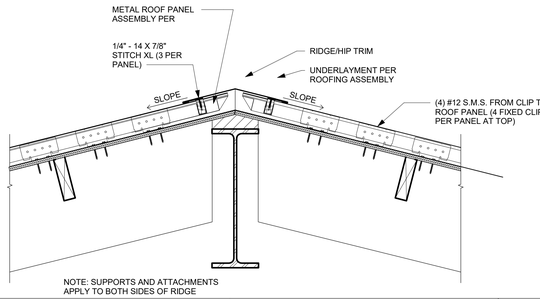

METAL ROOF AT RIDGE 1 1/2" = 1'-0" 7

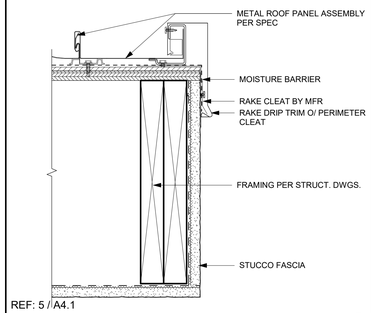

REF: 5 / A4.1

METAL ROOF RAKE 3" = 1'-0" 2

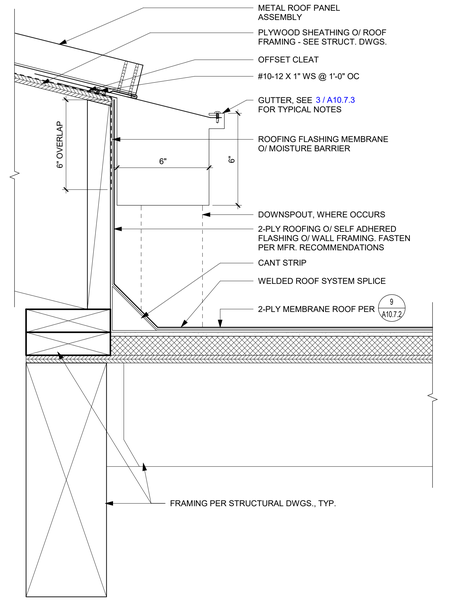

REF: 5 / A4.1

METAL ROOF TO MECH. WELL TRANSITION 3" = 1'-0" 9

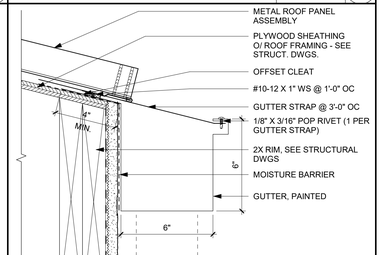

REF: 5 / A4.1

METAL ROOF AT GUTTER 3" = 1'-0" 3

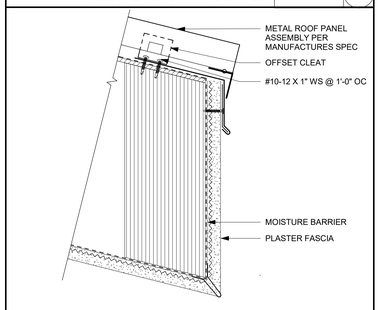

REF: 5 / A4.1

METAL ROOF AT EAVE 3" = 1'-0" 4

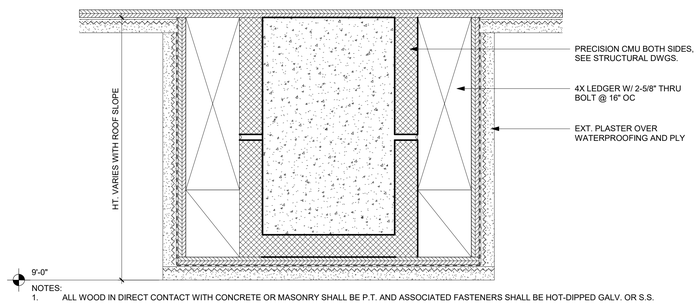

NOTES:
1. ALL WOOD IN DIRECT CONTACT WITH CONCRETE OR MASONRY SHALL BE P.T. AND ASSOCIATED FASTENERS SHALL BE HOT-DIPPED GALV. OR S.S.

CMU @ SOFFIT 3" = 1'-0" 10

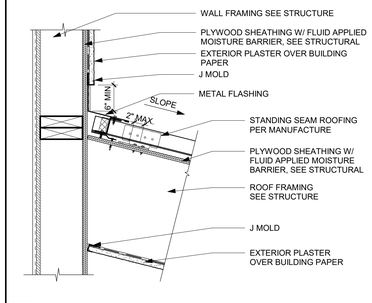

REF: 5 / A4.1

METAL ROOF AT PARAPET 1 1/2" = 1'-0" 5

DSA STAMP

STUDIO W ARCHITECTS

Studio W Architects
424 32nd Street, Suite D/E
Newport Beach, California 92663
[T] 949.774.2920
www.StudioW-Architects.com

ARCHITECT	ENGINEER

LICENSED ARCHITECT BRYAN P WHITMORE No. C 30345 Ren. 9/30/25 STATE OF CALIFORNIA

DATE SIGNED: 06/24/2024

GENERAL NOTES

1. This sheet is part of a set and is not to be used alone.
2. This sheet is not to be used for construction unless the architect's stamp and signature appear on the drawings and the status box indicated drawings have been released for construction.
3. These plans and prints thereof, as instruments of service, are owned by the architect and are for use on this project only. Reproduction and/or distribution without the prior written consent of the architect is forbidden.
4. Copyright Studio W Associates, Inc. 2024.

REVISION HISTORY

NO.	REMARKS	DATE

DRAWING STATUS

	DATE
○ DSA PLAN CHECK	03/29/2024
● DSA BACK CHECK	06/24/2024
○ BIDDING	
○ CONSTRUCTION	

KEY PLAN

BUENA PARK SD
6885 ORANGETHORPE AVE
BUENA PARK, CA 90620

DSA SUBMITTAL

CARL E. GILBERT ELEMENTARY SCHOOL
TK-PK CLASSROOMS & EARLY LEARNING BUILDING
7255 8TH STREET, BUENA PARK, CA 90621

ROOF DETAILS - METAL

Date	Project Number
06/24/2024	23076
Application Number	Drawing Number
04-123212	A10.7.3
Drawn AT / Checked MS	

PRINT DATE: 6/24/2024 9:41:18 PM
FILE PATH: BIM 360://23076 BPSD Gilbert ES PK-TK CRs_Early Learning Bldg/23076-BPUSD Gilbert-BLDG-A21.rvt

1. INDIVIDUALLY FLASH ALL EXTERIOR OPENINGS FOR FIXTURES SUCH AS WINDOWS, DOORS, AND VENTS TO MAKE THEM WATER TIGHT. PENETRATION FLASHING MATERIAL SHALL BE BARRIER COATED REINFORCED AND SHALL PROVIDE 4 HOUR MIN. PROTECTION FROM WATER PENETRATION WHEN TESTED IN ACCORDANCE WITH ASTM D-779. SEALANT SHALL COMPLY TO FF T-S- 1657. IN HIGH WIND AREAS A WATERPROOF SHEET MEMBRANE SHALL BE USED OVER SOLID BACKING.
2. APPROVED FLASHING MATERIAL SHALL BE AT LEAST 9" WIDE. FLASHING SHALL BE APPLIED IN A WEATHERBOARD FASHION AROUND THE FULL PERIMETER OF THE OPENING.
3. APPLY THE FIRST STRIP HORIZONTALLY IMMEDIATELY BELOW THE SILL. CUT IT SUFFICIENTLY LONG TO EXTEND PAST EACH SIDE OF THE WINDOW, SO THAT IT PROJECTS BEYOND THE VERTICAL FLASHING TO BE APPLIED LATER. FASTEN THE TOP EDGE OF THE SILL FLASHING TO THE FRAMING, BUT DO NOT FASTEN THE LOWER EDGE, SO THE WEATHER-RESISTIVE BARRIER APPLIED LATER MAY BE SLIPPED UP AND UNDERNEATH THE FLASHING IN WEATHERBOARD FASHION. (**SEE FIGURE A**)
4. NEXT, FASTEN STRIPS OF FLASHING AT EACH VERTICAL EDGE (JAMB) OF THE OPENING. RUN THIS FLASHING BEYOND THE SILL FLASHING AND ABOVE WHERE THE HEAD FLASHING WILL INTERSECT. (**SEE FIGURE B**)
5. APPLY A CONTINUOUS SEAL TO THE BACKSIDE (INTERIOR) OF THE MOUNTING FLANGE NEAR THE OUTER EDGE OR A CONTINUOUS SEAL TO THE PERIMETER OF THE OPENING AT A POINT TO ENSURE CONTACT WITH THE BACKSIDE (INTERIOR) OF THE MOUNTING FLANGE. (**SEE FIGURE C**)
6. FOR FIXTURES WITHOUT A NAIL-ON-FLANGE THE FLASHING SHALL BE 12" MIN. WIDE AND EXTEND INTO THE ROUGH FRAME AT THE SILL AND JAMB IN A WEATHERBOARD FASHION.
7. THE FIXTURE SHALL THEN BE INSTALLED.
8. NEXT, APPLY A CONTINUOUS SEAL AT THE TOP (HEAD) MOUNTING FLANGE OR G.S.M. HEAD FLASHING AND EMBED THE BOTTOM OF THE HEAD FLASHING OVER THE SEALANT AND THE MOUNTING FLANGE OR G.S.M. FLASHING. CUT THIS FLASHING SUFFICIENTLY LONG SO THAT IT WILL EXTEND BEYOND EACH JAMB FLASHING. FASTEN IN PLACE. (**SEE FIGURE D**)
9. APPLY REMAINING WEATHER-RESISTIVE BARRIER IN A WEATHERBOARD FASHION WITH THE SILL FLASHING LAPPING OVER THE TOP, AND THE HEAD AND JAMB FLASHING BELOW.
10. BASED UPON INDUSTRY STANDARDS APPROVED BY THE CALIFORNIA ASSOCIATION OF WINDOW MANUFACTURERS, (CAWM).

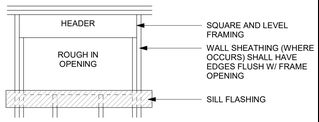

FIGURE A

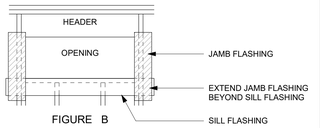

FIGURE B

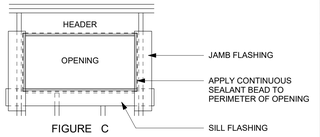

FIGURE C

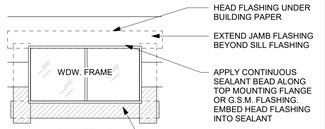

FIGURE D

FLASHING AT EXT. WALL OPENINGS 1/4" = 1'-0" 23

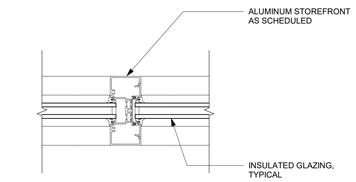

REF: 7 / A9.1

VERTICAL MULLION 3" = 1'-0" 16

LOCATION OF WELDED ANCHORS AND ATTACHMENTS:
1. JAMBS: 6" FROM TOP OF FRAME, 9" FROM BOTTOM OF FRAME, 24" MAX. O.C.
2. HEAD: 6" FROM EACH END OR FRAME, 24" MAX. O.C.
3. FOR FURTHER HM FRAME DETAILS SEE 2 / A10.8

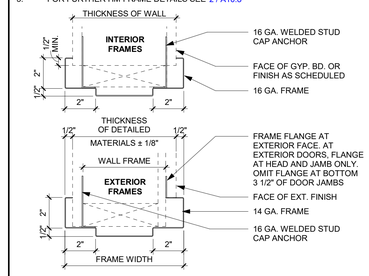

TYPICAL HM FRAMES 3" = 1'-0" 11

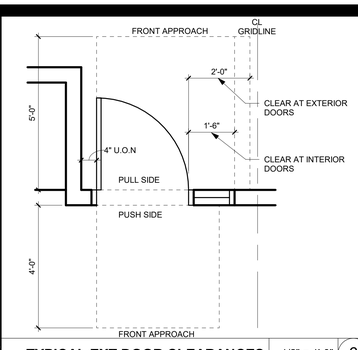

TYPICAL EXT DOOR CLEARANCES 1/2" = 1'-0" 6

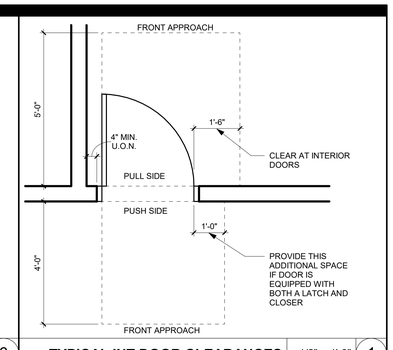

TYPICAL INT DOOR CLEARANCES 1/2" = 1'-0" 1

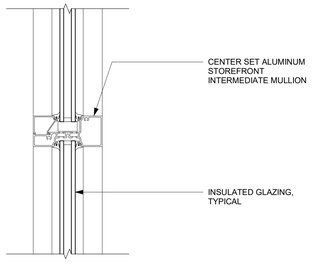

REF: 7 / A9.1

HORIZONTAL MULLION 3" = 1'-0" 17

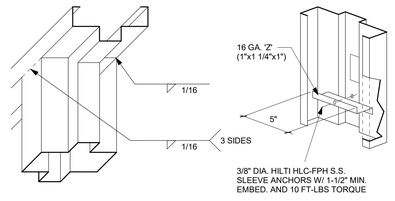

TYP. MULLION & HEAD WELD — D

NOTE:
FOR ADDITIONAL INSTALLATION INFORMATION, SEE SPECIFICATIONS

BOLT-IN-Z — C

3 ANCHORS PER JAMB. NOT TO EXCEED 24" O.C. PUNCH AND DIMPLE FOR 3/8" BOLTS AND PROVIDE 'Z' SPACERS AT EA. BOLTS, SHIELDS, SHIMS, ETC.AND 2 AT HEAD, NOT TO EXCEED 24" O.C

FLOOR CLIP — B

STUD CAP — A

ANCHOR SPACING PER TYPICAL HM FRAMES DETAIL 11 / A10.8
SEE FLOOR PLAN FOR STUD SIZES.
OVERLAP HM FRAME AND GYP. BD. BY 1/2"

NOTES:
1. REFER TO PROFILES.
2. ALL HOLLOW METAL FRAME/JAMBS SHALL BE CUT FOR STANDARD UNIT LOCK STRIKES 3/4" HIGH.
3. FRAME DIMENSIONS ARE FROM FINISH PAVING. FRAME DIMENSIONS MAY VARY DUE TO FINISH MATERIALS.
4. SEE 'RATING' ON DOOR SCHEDULE FOR REQUIRED RATED DOORS.
5. VERIFY ALL DOOR AND FRAME OPENING SIZES AND WALL AND DOOR FRAME WIDTHS ON SITE.
6. PER CBC 715.4, APPROVED FIRE DOOR HARDWARE AND FIRE DOOR FRAMES INCLUDING THE ANCHORAGE THEREOF SHALL BE INSTALLED IN ACCORDANCE WITH THEIR LISTING.
7. ADHERE TO UL 10C OR NFPA 252 FOR INSTALLATION OF DOOR FRAMES.
8. UNDERCUT ALL DOORS TO CLEAR FLOOR FINISH BY 1/4" EXCEPT AT RATED DOORS

TYPICAL HM DOOR AND FRAME DETAILS 12" = 1'-0" 2

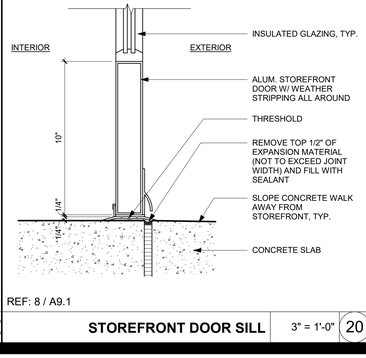

REF: 10 / A6.3

DOOR HEAD AT STOREFRONT 3" = 1'-0" 18

REF: 20 / A6.3

HEAD / JAMB AT STOREFRONT 3" = 1'-0" 13

HEAD / JAMB AT EXTERIOR DOOR 3" = 1'-0" 8

HEAD / JAMB AT INTERIOR DOOR 3" = 1'-0" 3

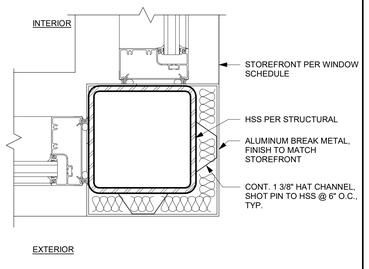

REF: 5 / A9.1

STOREFRONT CORNER MULLION AT COLUMN 3" = 1'-0" 29

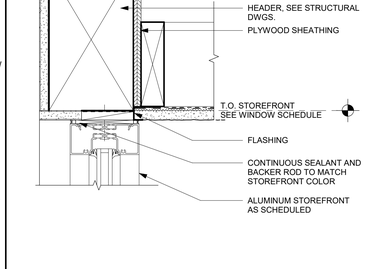

REF: 5 / A9.1

HEAD AT STOREFRONT AT CANOPY 3" = 1'-0" 24

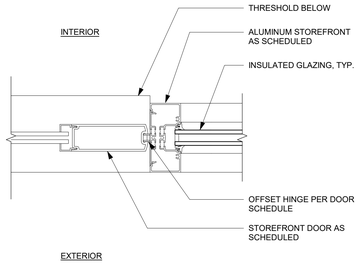

REF: 8 / A9.1

DOOR JAMB AT STOREFRONT 3" = 1'-0" 19

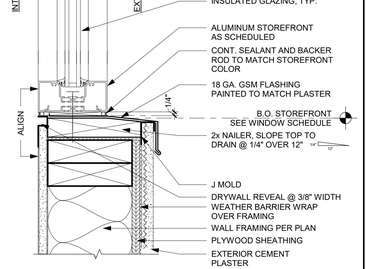

REF: 20 / A6.3

RAISED SILL AT STOREFRONT 3" = 1'-0" 14

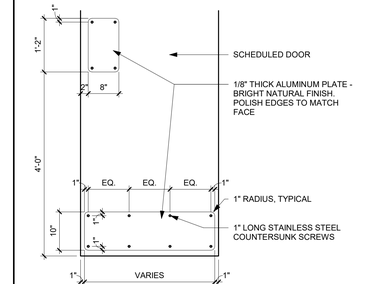

ALUM. KICK & PUSH PLATES 3/4" = 1'-0" 4

REF: 7 / A9.1

BRICK AT STOREFRONT JAMB 3" = 1'-0" 25

REF: 8 / A9.1

STOREFRONT DOOR SILL 3" = 1'-0" 20

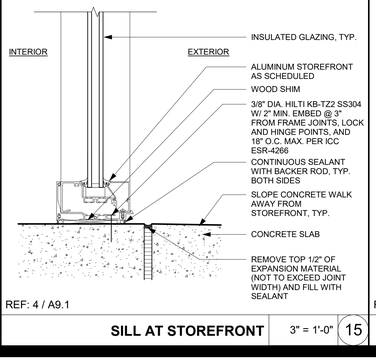

REF: 4 / A9.1

SILL AT STOREFRONT 3" = 1'-0" 15

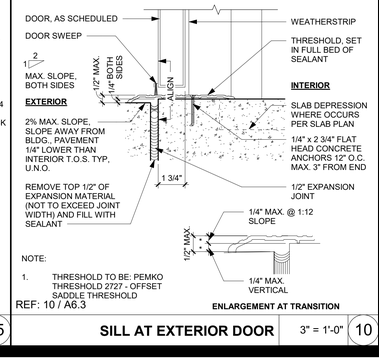

NOTE:
1. THRESHOLD TO BE: PEMKO THRESHOLD 272' - OFFSET SADDLE THRESHOLD

REF: 10 / A6.3

SILL AT EXTERIOR DOOR 3" = 1'-0" 10

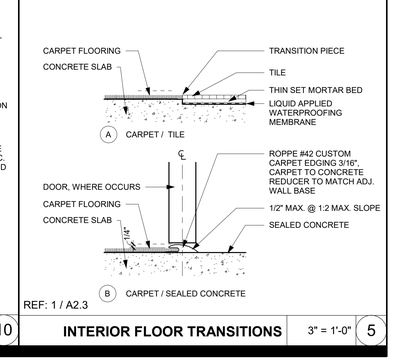

REF: 1 / A2.3

INTERIOR FLOOR TRANSITIONS 3" = 1'-0" 5

PRINT DATE: 6/24/2024 9:41:19 PM
FILE PATH: BIM 360://23076 BPSD Gilbert ES PK-TK CRs_Early learning Bldg/23076-BPUSD Gilbert-BLDG-A01.rvt

DSA STAMP

STUDIO W ARCHITECTS

Studio W Architects
424 32nd Street, Suite D/E
Newport Beach, California 92663
[T] 949.774.2920
www.StudioW-Architects.com

ARCHITECT	ENGINEER

LICENSED ARCHITECT BRYAN P WHITMORE No. C 30345 Ren. 9/30/25 STATE OF CALIFORNIA

DATE SIGNED: 06/24/2024

GENERAL NOTES
1. This sheet is part of a set and is not to be used alone.
2. This sheet is not to be used for construction unless the architect's stamp and signature appear on the drawings and the status box indicated drawings have been released for construction.
3. These plans and prints thereof, as instruments of service, are owned by the architect and are for use on this project only. Reproduction and/or distribution without the prior written consent of the architect is forbidden.
4. Copyright Studio W Associates, Inc. 2024.

REVISION HISTORY

NO.	REMARKS	DATE

DRAWING STATUS

	DATE
○ DSA PLAN CHECK	03/29/2024
● DSA BACK CHECK	06/24/2024
○ BIDDING	
○ CONSTRUCTION	

KEY PLAN

BUENA PARK SD
6885 ORANGETHORPE AVE
BUENA PARK, CA 90620

DSA SUBMITTAL

CARL E. GILBERT ELEMENTARY SCHOOL
TK-PK CLASSROOMS & EARLY LEARNING BUILDING
7255 8TH STREET, BUENA PARK, CA 90621

DOOR AND WINDOW DETAILS

Date	Project Number
06/24/2024	23076
Application Number	Drawing Number
04-123212	A10.8
Drawn / Checked	
AT / MS	

COMPRESSION STRUT TABLE

EMT COMPRESSION STRUT	MAXIMUM LENGTH
1/2" DIAMETER EMT (0.042" WALL THICKNESS)	3'-11"
3/4" DIAMETER EMT (0.049" WALL THICKNESS)	6'-4"
1" DIAMETER EMT (0.057" WALL THICKNESS)	9'-9"
1 1/4" DIAMETER EMT (0.065" WALL THICKNESS)	12'-9"
1 1/2" DIAMETER EMT (0.065" WALL THICKNESS)	14'-9"
2" DIAMETER EMT (0.065" WALL THICKNESS)	18'-10"

CHANNEL COMPRESSION STRUT	MAXIMUM LENGTH
250S125-33	5'-10"
250S137-33	6'-10"
362S137-33	8'-0"
250S137-43	8'-10"
400S137-43	10'-10"

COMPRESSION STRUT TABLE 3" = 1'-0" 17

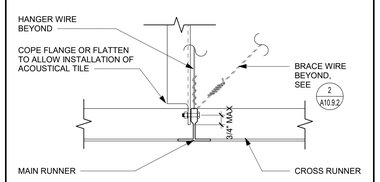

CHANNEL TYPE STRUT 3" = 1'-0" 18

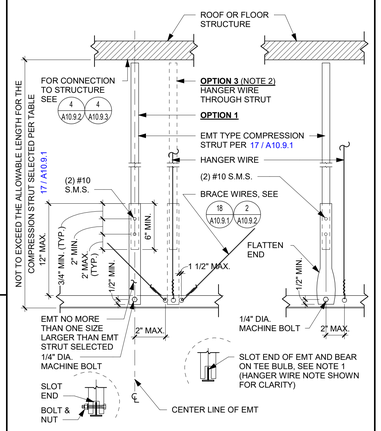

NOTES:
1. MACHINE BOLT IS NOT REQUIRED ON OPTION 3.
2. OPTION 3 IS PERMITTED ONLY WHERE THE ROOF OR FLOOR STRUCTURE IS SAWN TIMBER WITHOUT GYPSUM BOARD.

EMT TYPE STRUT 1 1/2" = 1'-0" 20

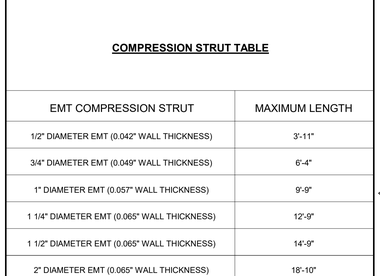

LUMINAIRE / AIR TERMINAL SUPPORT 3" = 1'-0" 11

CHANNEL TYPE STRUT 1 1/2" = 1'-0" 15

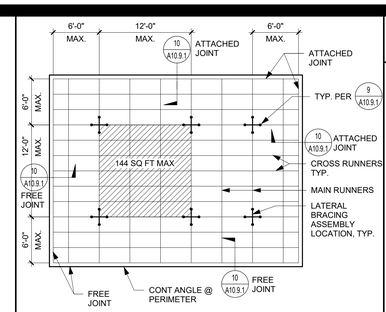

NOTE: BRACING WIRES AND COMP. STRUT SHALL OCCUR AT EVERY 144 SQ. FT. MAX. IN ROOMS OVER 144 SQ. FT.

TYP. CEILING PLAN - 12'x12' BRACE ASSEMBLY SPACING 1/8" = 1'-0" 6

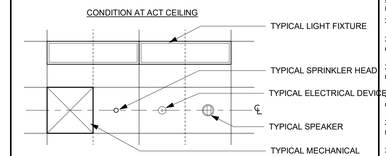

TYPICAL DEVICE LAYOUT 3/8" = 1'-0" 8

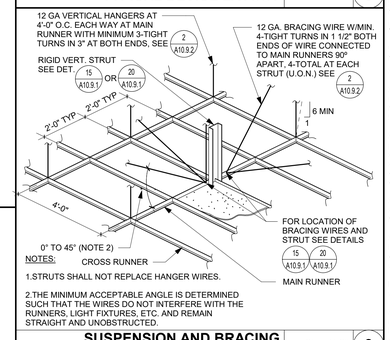

NOTES:
1. STRUTS SHALL NOT REPLACE HANGER WIRES.
2. THE MINIMUM ACCEPTABLE ANGLE IS DETERMINED SUCH THAT THE WIRES DO NOT INTERFERE WITH THE RUNNERS, LIGHT FIXTURES, ETC. AND REMAIN STRAIGHT AND UNOBSTRUCTED.

SUSPENSION AND BRACING ASSEMBLY 3" = 1'-0" 9

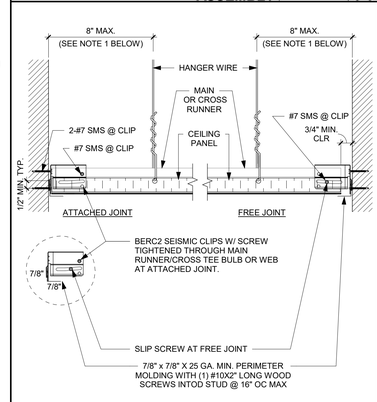

NOTES:
1. PROVIDE #12 GAUGE HANGER WIRES AT THE ENDS OF ALL MAIN AND CROSS RUNNERS WITHIN EIGHT (8) INCHES OF THE SUPPORT OR WITHIN ONE-FOURTH (1/4) OF THE LENGTH OF THE END TEE, WHICHEVER IS LESS, FOR THE PERIMETER OF THE CEILING AREA. PERIMETER WIRES ARE NOT REQUIRED WHEN THE LENGTH OF THE END TEE IS EIGHT (8) INCHES OR LESS.

CEILING PERIMETER 3" = 1'-0" 10

ACOUSTICAL CEILING NOTES

1. CEILING SYSTEM COMPONENTS:

1.01 Ceiling system components shall comply with ASTM C635 and Section 5.1 of ASTM E580.

1.02 The ceiling grid system must be rated **heavy duty** as defined by ASTM C635.

1.03 Ceiling systems. The following ceiling system(s) is/are part of the scope of this project:
Manufacturer's Name: **Armstrong**
Product Name: **Prelude XL (15/16" Exposed Tee System)**
Evaluation Report Type and Number: **ICC-ES, ESR-1308**
Main Runner Part, Model, or Catalog Number: **7301**
Cross Runner Part, Model, or Catalog Number: **XL7341 4 ft cross tee and L7328 2 ft cross tee**

1.04 Seismic Wall Clip:
Manufacturer's Model: **BERC-2 clip (Beam End Retaining Clip)**

1.05 Ceiling panels shall not support any light fixtures, air terminals or devices.

1.06 For ceiling installations utilizing acoustical tile panels of mineral or glass fiber, it is not mandatory to provide ¾" clearance between the acoustical tile panels and the wall on the sides of the ceiling which are free to slip. For all other ceiling panel types, provide ¾" clearance between the ceiling panel and the wall on the sides of the ceiling free to slip. Clearance between ceiling grid runners/members and walls shall comply with the details on these drawings regardless of ceiling tile material.

2. MATERIALS:

2.01 Ceiling wire shall be Class 1 zinc coated (galvanized) carbon steel conforming to ASTM A641. Wire shall be #12 gauge (0.106" diameter) with soft temper and minimum ultimate tensile strength = 70 ksi.

2.02 Galvanized sheet steel (including that used for metal stud and track compression struts/post) shall conform to ASTM A653, or other equivalent sheet steel listed in Section A3.1 of the North American Specification for the Design of Cold-Formed Steel Structural Members, (AISI S100). Material 43 mil (18 gauge) and lighter shall have minimum yield strength of 33 ksi. Material 54 mil (16 gauge) and heavier shall have a minimum yield strength of 50 ksi.

2.03 Electrical metallic tube (EMT) shall be ANSI C80.3/UL 797 carbon steel with G90 galvanizing. EMT shall have minimum yield strength (F_y) of 30 ksi and minimum ultimate strength (F_u) of 48 ksi.

3. ATTACHMENT OF HANGER AND BRACING WIRES:

3.01 Separate all ceiling hanger and bracing wires at least six (6) inches from all un-braced ducts, pipes, conduit, etc.

3.02 Hanger and bracing wires shall not attach to or bend around obstructions including but not limited to: piping, ductwork, conduit and equipment.

3.03 Hanger wires that are more than one (horizontal) in six (vertical) out of plumb shall have counter-sloping wires.

3.04 Slack safety wires shall be considered hanger wires for installation and testing requirements.

3.05 Hanger and bracing wire anchorage to the structure shall be installed in such a manner that the direction of the anchorage aligns closely with the direction of the wire. (e.g. bracing wire ceiling clips must be bent as shown in the details and rotated as required to align closely with the direction of the wire, screw eyes in wood must be installed so they align closely with the direction of the wire, etc.)

4. FASTENERS AND WELDING:

4.01 Sheet metal screws shall comply with ASTM C1513, ASME B18.6.3. Penetration of screws through joined material shall not be less than three exposed threads.

4.02 Expansion anchors shall be: **N/A**

4.03 Power-Actuated Fasteners shall be one of the following: **N/A**

4.04 If not otherwise specified in the evaluation report, power-actuated fasteners installed in steel shall be installed so the entire pointed end of the fastener is driven through the steel member.

4.05 Power-actuated fasteners in concrete or masonry are not permitted for bracing wires.

4.06 Concrete reinforcement and prestressing tendons shall be located by non-destructive means prior to installing post-installed anchor.

4.07 Welding shall be in accordance with AWS D1.3 using E60XX series electrodes.

5. TESTING:

5.01 All field testing must be performed in the presence of the project inspector.

5.02 Post-installed anchors in concrete used to support hanger wires shall be tested at a frequency of 10 percent. Power actuated fasteners in concrete shall be field tested for 200 pounds in tension. All other post-installed anchors in concrete shall be tested in accordance with CBC Section 1910A.5.

5.03 Post-installed anchors in concrete used to attach bracing wires shall be tested at a frequency of 50 percent in accordance with CBC Section 1910A.5.

6. LUMINAIRES:

6.01 All luminaires shall be positively attached to the ceiling suspension systems by mechanical means to resist a horizontal force equal to the weight of the fixture. A minimum of two screws or approved fasteners are required at each light fixture, per ASTM E580, Section 5.3.1.

6.02 Surface-mounted luminaires shall be attached to the main runner with at least two positive clamping devices. The clamping device shall completely surround the supporting ceiling runner and be made of steel with a minimum thickness of #14 gauge. Rotational spring catches do not comply. A #12 gauge slack safety wire shall be connected from each clamping device to the structure above. Provide additional supports when a luminaire is 8 feet or longer or exceeds 56 pounds Maximum spacing between supports shall not exceed 8 feet.

6.03 Luminaires weighing less than or equal to 10 pounds may be supported directly on the ceiling runners, shall haev a minimum of one #12 gauge slack safety wire connected from the fixture housing to the structure above.

6.04 Luminaires weighing greater than 10 pounds but less than or equal to 56 pounds may be supported directly on the ceiling runners, but they shall have a minimum of two #12 gauge slack safety wires connected from the fixture housing at diagonal corners to the structure above.

Exception: All luminaires greater than two by four feet weighing less than 56 pounds shall have a #12 gauge slack safety wire at each corner.

6.05 All luminaires weighing greater than 56 pounds shall be independently supported by not less than four taut #12 gauge hanger wires (one at each corner) attached from the fixture housing to the structure above or other approved hangers. The four taut #12 gauge wires or other approved hangers, including their attachment to the structure above, shall be capable of supporting four times the weight of the fixture.

7. SERVICES WITHIN THE CEILING:

7.01 All flexible sprinkler hose fitting mounting brackets, ceiling-mounted air terminals or other services shall be positively attached to the ceiling suspension systems by mechanical means. Screws or approved fasteners are required. A minimum of two attachments are required at each component.

7.02 Ceiling-mounted air terminals or other services weighing less than or equal to 20 pounds shall have one #12 gauge slack safety wire attached from the terminal or service to the structure above.

7.03 Flexible sprinkler hose fittings, ceiling-mounted air terminals or other services weighing more than 20 pounds but less than or equal to 56 pounds shall have two #12 gauge slack safety wires (at diagonal corners) connected from the terminal or service to the structure above.

7.04 Flexible sprinkler hose fittings, ceiling-mounted air terminals or other services weighing more than 56 pounds shall be supported directly from the structure above by not less than four taut #12 gauge hanger wires attached from the terminal or service to the structure above or other approved hangers.

8. OTHER DEVICES WITHIN THE CEILING:

8.01 All lightweight miscellaneous devices, such as strobe lights, occupancy sensors, speakers, exit signs, etc., shall be attached to the ceiling grid. In addition, devices weighing more than 10 pounds shall have a #12 gauge slack safety wire anchored to the structure above. Devices weighing more than 20 pounds shall be supported independently from the structure above.

DSA STAMP

STUDIO W ARCHITECTS

Studio W Architects
424 32nd Street, Suite D/E
Newport Beach, California 92663
[T] 949.774.2920
www.StudioW-Architects.com

ARCHITECT	ENGINEER
LICENSED ARCHITECT BRYAN P WHITMORE No. C 30345 Ren. 9/30/25 STATE OF CALIFORNIA	
DATE SIGNED: 06/24/2024	

GENERAL NOTES
1. This sheet is part of a set and is not to be used alone.
2. This sheet is not to be used for construction unless the architect's stamp and signature appear on the drawings and the status box indicated drawings have been released for construction.
3. These plans and prints thereof, as instruments of service, are owned by the architect and are for use on this project only. Reproduction and/or distribution without the prior written consent of the architect is forbidden.
4. Copyright Studio W Associates, Inc. 2024.

REVISION HISTORY

NO.	REMARKS	DATE

DRAWING STATUS

	DATE
○ DSA PLAN CHECK	03/29/2024
● DSA BACK CHECK	06/24/2024
○ BIDDING	
○ CONSTRUCTION	

KEY PLAN

BUENA PARK SD
6885 ORANGETHORPE AVE
BUENA PARK, CA 90620

DSA SUBMITTAL

CARL E. GILBERT ELEMENTARY SCHOOL
TK-PK CLASSROOMS & EARLY LEARNING BUILDING
7255 8TH STREET, BUENA PARK, CA 90621

CEILING DETAILS

Date	Project Number
06/24/2024	23076
Application Number	Drawing Number
04-123212	A10.9.1
Drawn AT / Checked MS	

PRINT DATE: 6/24/2024 9:41:21 PM
FILE PATH: BIM 360://23076 BPSD Gilbert ES PK-TK CRs_Early Learning Bldg/23076-BPUSD Gilbert-BLDG-A21.rvt

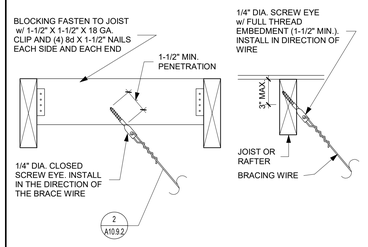

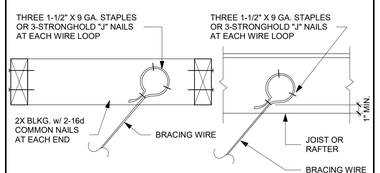

BRACING WIRE CONNECTION TO SAWN TIMBER

1 1/2" = 1'-0" | 12

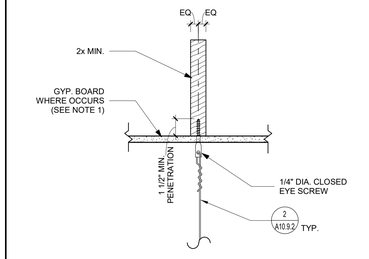

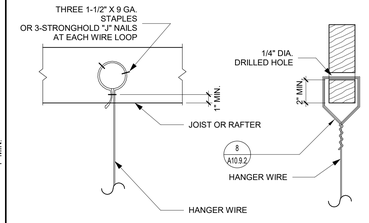

NOTE:
1. WHEN FIRE RATED GYP. BOARD IS INSTALLED ON THE BOTTOM FLANGES, USE SCREW EYES W/ SUFFICIENT LENGTH TO AVOID DAMAGING THE FIRE RATED GYP. BOARD AND MEET MIN. PENETRATION.

HANGER WIRE CONNECTION TO SAWN TIMBER

1 1/2" = 1'-0" | 7

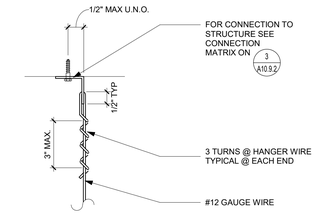

HANGER WIRE

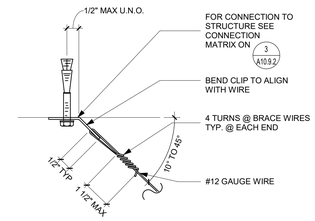

BRACING WIRE

HANGER AND BRACING WIRE TYPICAL WIRE TURNS

3" = 1'-0" | 2

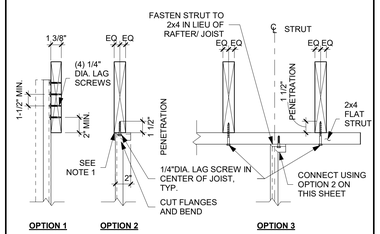

CHANNEL STRUT

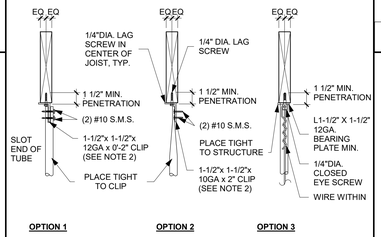

TUBE STRUT

NOTES:
1. WEB OF CHANNEL TO BEAR WITHIN WIDTH OF WOOD MEMBER.
2. VERTICAL LEG OF MEMBER TO FALL WITHIN THE WIDTH OF THE WOOD MEMBER.

STRUT CONNECTION TO SAWN TIMBER WITHOUT GYPSUM BOARD

1 1/2" = 1'-0" | 14

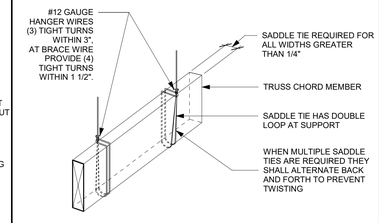

TYPICAL SADDLE TIE DETAIL

HANGER WIRE CONDITION SHOWN. BRACE WIRE CONDITION SIMILAR

TYPICAL SADDLE TIE DETAIL

NTS | 8

STRUCTURAL CONDITION OF FLOOR/ROOF ABOVE SUSPENDED CEILING	APPLICABLE HANGER WIRE DETAIL	APPLICABLE BRACING WIRE DETAIL
BARE METAL DECK	4.20 (N/A)	4.30 (N/A)
CONCRETE OVER METAL DECK	4.21 (N/A)	4.31 (N/A)
CONCRETE SLAB, BEAM, OR JOIST	4.22 (N/A)	4.32 (N/A)
STRUCTURAL STEEL	4.23 (N/A)	4.33 (N/A)
METAL STUD WALL	4.24 (N/A)	4.34 (N/A)
SAWN TIMBER	4.25 & 4.29 7 / A10.9.2 & 8 / A10.9.2	4.35 12 / A10.9.2
WOOD I-JOIST	4.26 (N/A)	4.36 & 4.37 (N/A)
WOOD CHORD TRUSS	4.27 & 4.29 8 / A10.9.2	4.29 & 4.38 8 / A10.9.2
OPEN WEB STEEL JOIST	4.28, 4.29 (N/A)	4.29, 4.39 (N/A)

HANGER AND BRACING WIRE CONNECTION MATRIX

NTS | 3

STRUCTURAL CONDITION OF FLOOR/ROOF ABOVE COMPRESSION STRUT	DETAIL
METAL DECK	5.20 (N/A)
CONCRETE OVER METAL DECK	5.21 (N/A)
CONCRETE SLAB, BEAM, OR JOIST	5.30 (N/A)
STRUCTURAL STEEL	5.40 (N/A)
SAWN TIMBER WITH GYPSUM BOARD	5.50 (N/A)
SAWN TIMBER WITHOUT GYPSUM BOARD	5.60 14 / A10.9.2

COMPRESSION STRUT CONNECTION TO STRUCTURE

NTS | 4

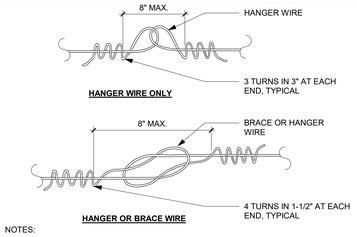

NOTES:
1. WIRE SPLICES ARE SHOWN LOOSELY TIED FOR ILLUSTRATIVE PURPOSES ONLY AND SHALL BE DRAWN TIGHT TO COMPLETE INSTALLATION WHEN CONSTRUCTED.
2. WIRE LOOPS SHALL BE TIGHTLY WRAPPED AND SHARPLY BENT TO PREVENT ANY VERTICAL MOVEMENT OR ROTATION WITHIN THE LOOPS.
3. EACH HANGER AND BRACE WIRE SHALL BE SPLICED NO MORE THAN ONCE ALONG ITS LENGTH.

CEILING WIRE SPLICES

3" = 1'-0" | 5

DSA STAMP

STUDIO W ARCHITECTS

Studio W Architects
424 32nd Street, Suite D/E
Newport Beach, California 92663
[T] 949.774.2920
www.StudioW-Architects.com

ARCHITECT	ENGINEER

LICENSED ARCHITECT BRYAN P WHITMORE No. C 30345 Ren. 9/30/25 STATE OF CALIFORNIA

DATE SIGNED: 06/24/2024

GENERAL NOTES
1. This sheet is part of a set and is not to be used alone.
2. This sheet is not to be used for construction unless the architect's stamp and signature appear on the drawings and the status box indicated drawings have been released for construction.
3. These plans and prints thereof, as instruments of service, are owned by the architect and are for use on this project only. Reproduction and/or distribution without the prior written consent of the architect is forbidden.
4. Copyright Studio W Associates, Inc. 2024.

REVISION HISTORY

NO.	REMARKS	DATE

DRAWING STATUS

	DATE
○ DSA PLAN CHECK	03/29/2024
● DSA BACK CHECK	06/24/2024
○ BIDDING	
○ CONSTRUCTION	

KEY PLAN

BUENA PARK SD
6885 ORANGETHORPE AVE
BUENA PARK, CA 90620

DSA SUBMITTAL

CARL E. GILBERT ELEMENTARY SCHOOL
TK-PK CLASSROOMS & EARLY LEARNING BUILDING
7255 8TH STREET, BUENA PARK, CA 90621

CEILING DETAILS - WOOD STRUCTURE

Date	Project Number
06/24/2024	23076
Application Number	Drawing Number
04-123212	A10.9.2
Drawn AT	Checked MS

PRINT DATE: 6/24/2024 9:41:21 PM
FILE PATH: BIM 360://23076 BPSD Gilbert ES PK-TK CRs, Early\Learning Bldg/23076 BPUSD Gilbert-BLDG-A21.rvt

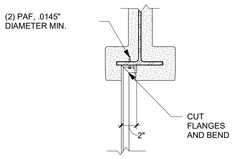

CHANNEL STRUT

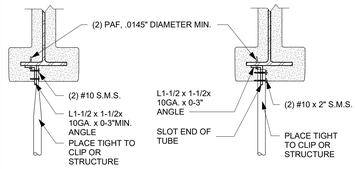

OPTION 1 **OPTION 2**

TUBE STRUT

NOTES:

1. STRUCTURAL STEEL MEMBER SHALL NOT BE LESS THAN 3/16".
2. RDP IN RESPONSIBLE CHARGE, I.O.R. AND CONTRACTOR SHALL VERIFY THAT NO PAF IS INSTALLED IN THE PROTECTED ZONE OF ANY STEEL MEMBER, SEE ANSI/AISC PR: 341-16.
3. REFER TO 14 / A10.9.2 FOR ADDITIONAL INFORMATION.

STRUT CONNECTION TO STRUCTURAL STEEL — 1 1/2" = 1'-0" — 10

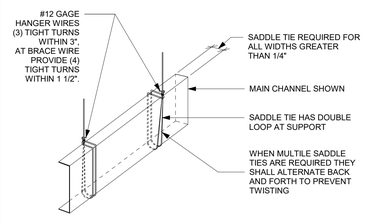

TYPICAL SADDLE TIE DETAIL

HANGER WIRE CONDITION SHOWN. BRACE WIRE CONDITION SIMILAR

TYPICAL SADDLE TIE DETAIL — NTS — 11

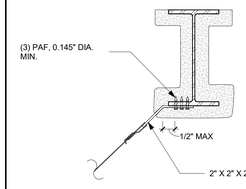

BRACING WIRE

NOTES:

1. BEAM FLANGE THICKNESS SHALL NOT BE LESS THAN 3/16"
2. RDP IN RESPONSIBLE CHARGE, OR, AND CONTRACTOR SHALL VERIFY THAT NO PAF IS INSTALLED IN THE PROTECTED ZONE OF ANY STEEL MEMBER. SEE ANSI/AISC PR: 341-16
3. FOR ADDITIONAL DETAILS REFER TO 2 / A10.9.3

BRACING WIRE CONNECTION TO STRUCTURAL STEEL — 1 1/2" = 1'-0" — 6

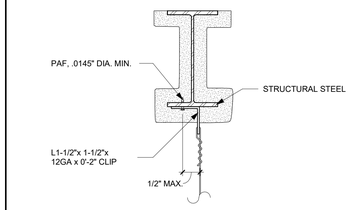

HANGER WIRE

NOTES:

1. BEAM FLANGE THICKNESS SHALL NOT BE LESS THAN 3/16"
2. ARCHITECT, IOR AND CONTRACTOR SHALL VERIFY THAT NO PAF IS INSTALLED IN THE PROTECTED ZONE OF ANY STEEL MEMBER. SEE AISC 341.
3. FOR ADDITIONAL DETAILS REFER TO 2 / 10.9.3

HANGER WIRE CONNECTION TO STRUCTURAL STEEL — 1 1/2" = 1'-0" — 7

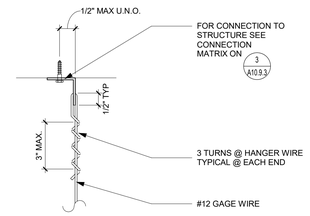

HANGER WIRE

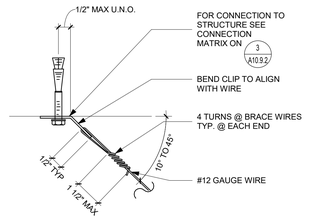

BRACING WIRE

HANGER AND BRACING WIRE TYPICAL WIRE TURNS — 3" = 1'-0" — 2

STRUCTURAL CONDITION OF FLOOR/ROOF ABOVE SUSPENDED CEILING	APPLICABLE HANGER WIRE DETAIL	APPLICABLE BRACING WIRE DETAIL
BARE METAL DECK	4.20 (N/A)	4.30 (N/A)
CONCRETE OVER METAL DECK	4.21 (N/A)	4.31 (N/A)
CONCRETE SLAB, BEAM, OR JOIST	4.22 (N/A)	4.32 (N/A)
STRUCTURAL STEEL	4.23 7 / A10.9.3	4.33 6 / A10.9.3
METAL STUD WALL	4.24 (N/A)	4.34 (N/A)
SAWN TIMBER	4.25 & 4.29 (N/A)	4.35 (N/A)
WOOD I JOIST	4.26 (N/A)	4.36 & 4.37 (N/A)
WOOD CHORD TRUSS	4.27 & 4.29 (N/A)	4.29 & 4.38 (N/A)
OPEN WEB STEEL JOIST	4.28 & 4.29 11 / A10.9.3	4.29 & 4.39 11 / A10.9.3

HANGER AND BRACING WIRE CONNECTION MATRIX — NTS — 3

STRUCTURAL CONDITION OF FLOOR/ROOF ABOVE COMPRESSION STRUT	DETAIL
METAL DECK	5.20 (N/A)
CONCRETE OVER METAL DECK	5.21 (N/A)
CONCRETE SLAB, BEAM, OR JOIST	5.30 (N/A)
STRUCTURAL STEEL	5.40 10 / A10.9.3
SAWN TIMBER WITH GYPSUM BOARD	5.50 (N/A)
SAWN TIMBER WITHOUT GYPSUM BOARD	5.60 (N/A)

COMPRESSION STRUT CONNECTION TO STRUCTURE — NTS — 4

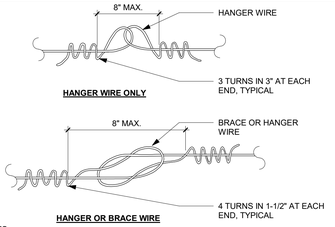

NOTES:

1. WIRE SPLICES ARE SHOWN LOOSELY TIED FOR ILLUSTRATIVE PURPOSES ONLY AND SHALL BE DRAWN TIGHT TO COMPLETE INSTALLATION WHEN CONSTRUCTED.
2. WIRE LOOPS SHALL BE TIGHTLY WRAPPED AND SHARPLY BENT TO PREVENT ANY VERTICAL MOVEMENT OR ROTATION WITHIN THE LOOPS.
3. EACH HANGER AND BRACE WIRE SHALL BE SPLICED NO MORE THAN ONCE ALONG ITS LENGTH.

CEILING WIRE SPLICES — 3" = 1'-0" — 5

DSA STAMP

STUDIO W ARCHITECTS

Studio W Architects
424 32nd Street, Suite D/E
Newport Beach, California 92663
[T] 949.774.2920
www.StudioW-Architects.com

ARCHITECT	ENGINEER

LICENSED ARCHITECT BRYAN P WHITMORE No. C 30345 Ren. 9/30/25 STATE OF CALIFORNIA

DATE SIGNED: 06/24/2024

GENERAL NOTES

1. This sheet is part of a set and is not to be used alone.
2. This sheet is not to be used for construction unless the architect's stamp and signature appear on the drawings and the status box indicated drawings have been released for construction.
3. These plans and prints thereof, as instruments of service, are owned by the architect and are for use on this project only. Reproduction and/or distribution without the prior written consent of the architect is forbidden.
4. Copyright Studio W Associates, Inc. 2024.

REVISION HISTORY

NO.	REMARKS	DATE

DRAWING STATUS

	DATE
○ DSA PLAN CHECK	03/29/2024
● DSA BACK CHECK	06/24/2024
○ BIDDING	
○ CONSTRUCTION	

KEY PLAN

BUENA PARK SD
6885 ORANGETHORPE AVE
BUENA PARK, CA 90620

DSA SUBMITTAL

CARL E. GILBERT ELEMENTARY SCHOOL

TK-PK CLASSROOMS & EARLY LEARNING BUILDING
7255 8TH STREET, BUENA PARK, CA 90621

CEILING DETAILS - STEEL STRUCTURE

Date	Project Number
06/24/2024	23076
Application Number	Drawing Number
04-123212	A10.9.3
Drawn AT	Checked MS

PRINT DATE: 6/24/2024 9:41:22 PM
FILE PATH: BIM 360://23076 BPSD Gilbert ES PK-TK CRs_Early Learning Bldg/23076-BPUSD Gilbert-BLDG-A21.rvt

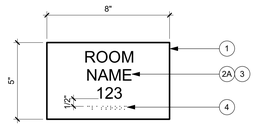

THREE LINES OF TEXT

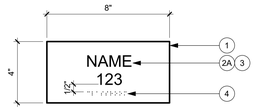

TWO LINES OF TEXT

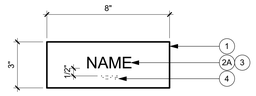

SINGLE LINE OF TEXT

NOTE: FOR SIGNAGE KEYNOTE LEGEND AND SIGNAGE GENERAL NOTES, SEE DETAIL 2 / A10.10.1

ROOM ID SIGNAGE 3" = 1'-0" 12

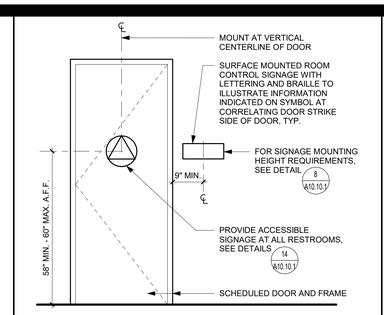

ROOM CONTROL SIGNAGE 1/2" = 1'-0" 6

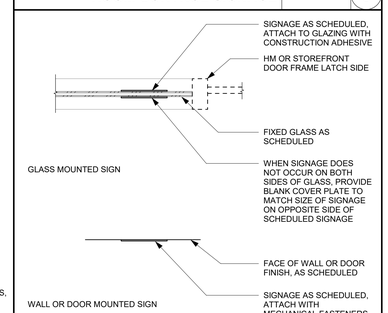

SIGNAGE MOUNTING TYPES 1" = 1'-0" 7

SIGNAGE GENERAL NOTES

1. FOR TYPICAL MOUNTING DISTANCE FROM DOOR FRAME, SEE DETAIL 6 / A10.10.1
2. FOR MOUNTING ATTACHMENTS, SEE DETAIL 7 / A10.10.1
3. FOR SIGNAGE MOUNTING HEIGHT REQUIREMENTS, SEE DETAIL 8 / A10.10.1
4. SIGNS AND IDENTIFICATION DEVICES SHALL BE FIELD INSPECTED AFTER INSTALLATION AND APPROVED BY THE ENFORCING AGENCY PRIOR TO THE ISSUANCE OF A FINAL CERTIFICATE OF OCCUPANCY PER CBC CHAPTER 1, DIVISION II, SECTION 111, OR FINAL APPROVAL WHERE NO CERTIFICATE OF OCCUPANCY IS ISSUED. THE INSPECTION SHALL INCLUDE, BUT NOT BE LIMITED TO, VERIFICATION THAT BRAILLE DOTS AND CELLS ARE PROPERLY SPACED AND THE SIZE, PROPORTION AND TYPE OF RAISED CHARACTERS ARE IN COMPLIANCE WITH THESE REGULATIONS (CBC 11B-703.1.1.2, 11B-703.2.6 and 11B-703.5.7)

SIGNAGE KEYNOTES

1. EXTRUDED CLEAR ACRYLIC SIGN WITH A NON GLARE BACKGROUND OF 70% CONTRASTING COLOR TO TEXT AND ONE PIECE CONSTRUCTION PER SPECIFICATIONS
   BACKGROUND COLOR: PINE GREEN 3X1-902
   THICKNESS: 1/4"
2A. 1/32" RAISED TEXT, CENTER JUSTIFIED ON PLAQUE
   TEXT STYLE: HELVETICA, ALL CAPS
   TEXT HEIGHT: 3/4" U.O.N.
   TEXT COLOR: WHITE 3X1-201
2B. 1/32" RAISED TEXT, LEFT JUSTIFIED ON PLAQUE
   TEXT STYLE: HELVETICA, ALL CAPS
   TEXT HEIGHT: 3/4" U.O.N.
   TEXT COLOR:WHITE 3X1-201
3. VERIFY ROOM NAMES AND NUMBERS PRIOR TO FABRICATION
   10 LETTERS PER LINE, MAXIMUM
4. CALIFORNIA ROUNDED TOP CONTRACTED GRADE 2 BRAILLE BELOW RAISED TEXT (11B-703.3.2). DISTANCE FROM BOTTOM OF RAISED LETTERS TO TOP OF BRAILLE CHARACTERS SHALL BE 3/8" MINIMUM AND 1/2" MAXIMUM. BRAILLE TO BE CENTER JUSTIFIED OR LEFT JUSTIFIED TO MATCH RAISED TEXT. FOR MORE INFORMATION ON BRAILLE REQUIREMENTS, SEE DETAIL 5 / A10.10.1
5. INTERNATIONAL SYMBOL OF ACCESSIBILITY PICTOGRAM
   COLOR: WHITE 3X1-201
7. RAISED PICTOGRAM
   COLOR:WHITE 3X1-201
8A. CONTRAST 70% WITH DOOR COLOR
8B. 1/4" THICK, 12" DIA. CIRCLE WITH A 1/4" THICK EQUILATERAL TRIANGLE SYMBOL SUPERIMPOSED ON AND GEOMETRICALLY INSCRIBED WITHIN THE 12" DIA. CIRCLE SYMBOL. VERTICES OF THE TRIANGLE SYMBOL SHALL BE LOCATED 1/4" MAX. FROM THE EDGE OF THE CIRCLE SYMBOL WITH A VERTEX POINTING UPWARD. TRANGLE SYMBOL SHALL CONTRAST THE COLOR OF THE CIRCLE SYMBOL. CIRCLE SYMBOL SHALL CONTRAST 70% THE DOOR COLOR.
   TRIANGLE COLOR:
   CIRCLE COLOR:
9. PROVIDE EASED OR ROUNDED EDGES A 1/16" MIN. OR CHAMFERED AT 1/8" MAX. VERTICES SHALL BE RADIUSED BETWEEN 1/8" MINIMUM AND 1/4" MAX.

TYPICAL SIGNAGE NOTES 12" = 1'-0" 2

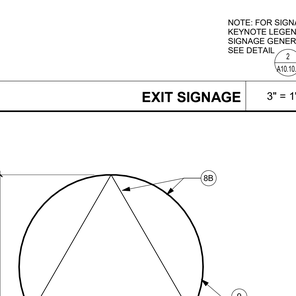

NOTE: FOR SIGNAGE KEYNOTE LEGEND AND SIGNAGE GENERAL NOTES, SEE DETAIL 2 / A10.10.1

EXIT SIGNAGE 3" = 1'-0" 13

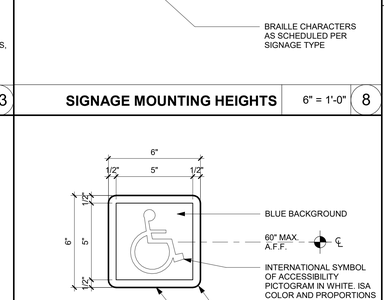

SIGNAGE MOUNTING HEIGHTS 6" = 1'-0" 8

TABLE 11B-703.3.1
BRAILLE DIMENSIONS

MEASUREMENT RANGE	MINIMUM IN INCHES MAXIMUM IN INCHES
DOT BASE DIAMETER	0.059" (1.5MM) TO 0.063" (1.6MM)
DISTANCE BETWEEN TWO DOTS IN THE SAME CELL *	0.100" (2.5MM)
DISTANCE BETWEEN CORRESPONDING DOTS IN ADJACENT CELLS *	0.300" (7.6MM)
DOT HEIGHT RANGE	0.025" (0.6MM) TO 0.037 (0.9MM)
DISTANCE BETWEEN CORRESPONDING DOTS FROM ONE CELL DIRECTLY BELOW *	0.395" (10MM) TO 0.400" (10.2MM)
* MEASURED CENTER TO CENTER	

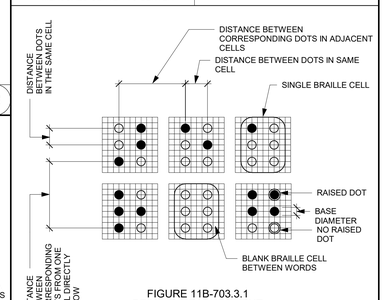

FIGURE 11B-703.3.1
BRAILLE MEASUREMENT

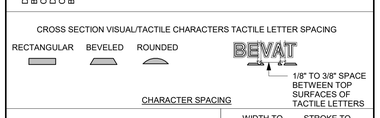

NOTE:

(A) "O" IS 60 PERCENT MINIMUM AND 110 PERCENT MAXIMUM OF THE HEIGHT OF THE UPPERCASE "I"

(B) STROKE THICKNESS OF THE UPPERCASE LETTER "I" SHALL BE 15 PERCENT MAXIMUM OF THE HEIGHT OF THE CHARACTER

	WIDTH TO HEIGHT RATIO	STROKE TO HEIGHT RATIO
	60% - 110% SEE NOTE (A)	15% MAX SEE NOTE (B)

FONT RATIO

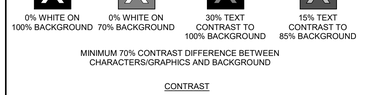

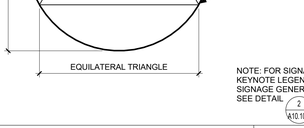

NOTE: FOR SIGNAGE KEYNOTE LEGEND AND SIGNAGE GENERAL NOTES, SEE DETAIL 2 / A10.10.1

UNISEX DOOR SIGNAGE 3" = 1'-0" 14

NOTE: FOR SIGNAGE KEYNOTE LEGEND AND SIGNAGE GENERAL NOTES, SEE DETAIL 2 / A10.10.1

ACCESSIBILITY SIGNAGE 3" = 1'-0" 9

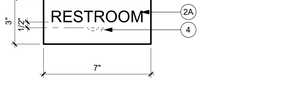

NOTE: FOR SIGNAGE KEYNOTE LEGEND AND SIGNAGE GENERAL NOTES, SEE DETAIL 2 / A10.10.1

UNISEX WALL MOUNTED SIGNAGE 3" = 1'-0" 15

NOTE: FOR SIGNAGE KEYNOTE LEGEND AND SIGNAGE GENERAL NOTES, SEE DETAIL 2 / A10.10.1

ASSISTIVE LISTENING SYSTEM AVAILABLE SIGN 3" = 1'-0" 10

SIGNAGE DESIGN REQUIREMENTS 1 1/2" = 1'-0" 5

Studio W Architects
424 32nd Street, Suite D/E
Newport Beach, California 92663
[T] 949.774.2920
www.StudioW-Architects.com

ARCHITECT | ENGINEER

LICENSED ARCHITECT BRYAN P WHITMORE No. C 30345 Ren. 9/30/25 STATE OF CALIFORNIA

DATE SIGNED: 06/24/2024

GENERAL NOTES

1. This sheet is part of a set and is not to be used alone.
2. This sheet is not to be used for construction unless the architect's stamp and signature appear on the drawings and the status box indicated drawings have been released for construction.
3. These plans and prints thereof, as instruments of service, are owned by the architect and are for use on this project only. Reproduction and/or distribution without the prior written consent of the architect is forbidden.
4. Copyright Studio W Associates, Inc. 2024.

REVISION HISTORY

NO.	REMARKS	DATE

DRAWING STATUS

	DATE
○ DSA PLAN CHECK	03/29/2024
● DSA BACK CHECK	06/24/2024
○ BIDDING	
○ CONSTRUCTION	

KEY PLAN

BUENA PARK SD
6885 ORANGETHORPE AVE
BUENA PARK, CA 90620

DSA SUBMITTAL

CARL E. GILBERT ELEMENTARY SCHOOL
TK-PK CLASSROOMS & EARLY LEARNING BUILDING
7255 8TH STREET, BUENA PARK, CA 90621

SPECIALTIES -SIGNAGE

Date	Project Number
06/24/2024	23076
Application Number	Drawing Number
04-123212	A10.10.1
Drawn AT	Checked MS

PRINT DATE: 6/24/2024 9:41:23 PM
FILE PATH: BIM 360://23076 BPSD Gilbert ES PK-TK CRs, Early Learning Bldg/23076-BPUSD Gilbert-BLDG-A21.rvt

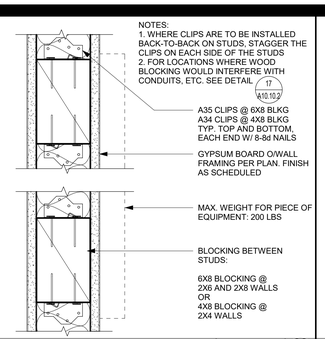

TYPICAL WALL BLOCKING 3" = 1'-0" 16

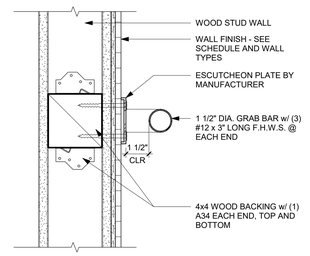

GRAB BAR ANCHORAGE 3" = 1'-0" 11

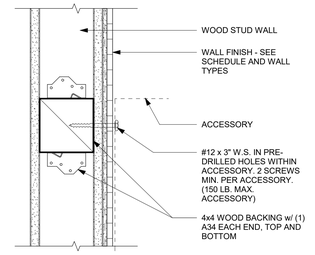

TYPICAL ACCESSORY MOUNTING 3" = 1'-0" 6

KEYNOTES

NUMBER	NOTE
10 203	GRAB BAR (SEE DETAIL 11/A10.10.2)
10 210	SANITARY NAPKIN DISPENSER, SURFACE MOUNTED
10 211	TOILET SEAT COVER DISPENSER, SURFACE MOUNTED
10 212	TOILET PAPER DISPENSER, SURFACE MOUNTED
10 215	SANITARY NAPKIN DISPOSAL, SURFACE MOUNTED
10 220	MIRROR
10 221	SOAP DISPENSER
10 222	ELECTRIC HAND DRYER, SURFACE MOUNTED
10 228	COMBINATION PAPER TOWEL DISPENSER AND WASTE RECEPTACLE, SURFACE MOUNTED
10 901	COAT HOOK
22 410	WALL MOUNTED WATER CLOSET (SEE DETAIL 19/A10.10.2)
22 411	FLOOR MOUNTED WATER CLOSET
22 413	FLOOR MOUNTED WATER CLOSET, AGES 3-4
22 431	LAVATORY

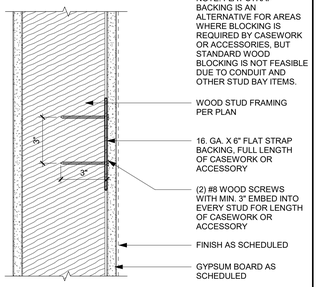

FLAT STRAP BACKING 3" = 1'-0" 17

TYPICAL ADULT RESTROOMS

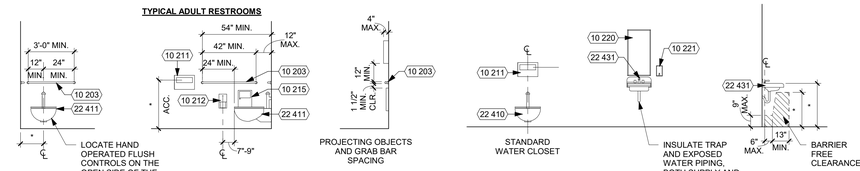

TYPICAL CHILDREN'S RESTROOMS (3-4)

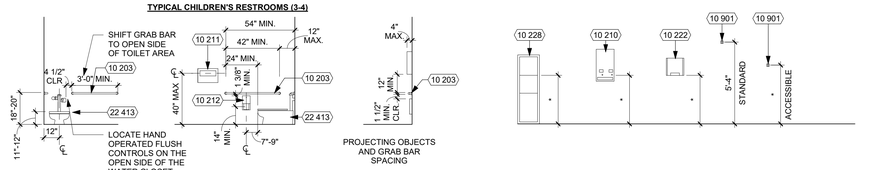

NOTES:
1. ALL DIMENSIONS MARKED WITH AN ASTERISK (*) REFERENCE TOILET FIXTURES AND ACCESSORIES SCHEDULE BELOW.
2. FOR TYPICAL ACCESSORY MOUNTING SEE DETAIL 6 / A10.10.2
3. REFER TO KEYNOTE LIST FOR ADDITIONAL DETAILS.

TYPICAL FIXTURE AND ACCESSORY DIMENSIONS 1/4" = 1'-0" 3

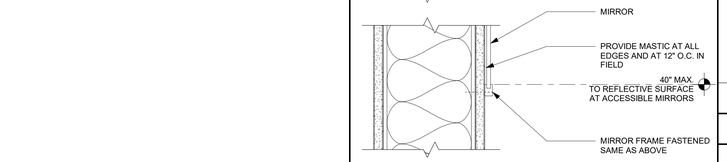

MIRROR ATTACHMENT 3" = 1'-0" 18

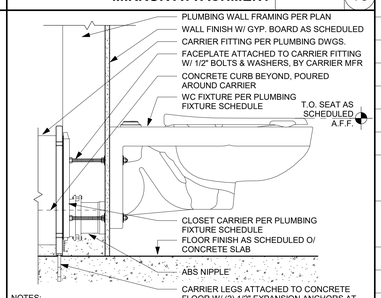

NOTES:
1. REFER TO MANUFACTURER INSTALLATION INSTRUCTIONS FOR MORE INFORMATION.

WALL MOUNTED WATER CLOSET 1 1/2" = 1'-0" 19

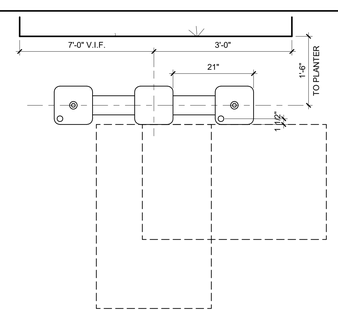

REF: 10 / A1.2

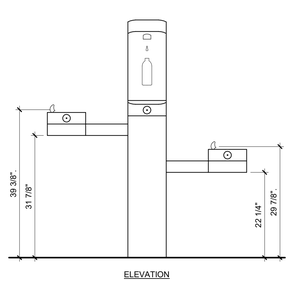

DRINKING FOUNTAIN PLAN & ELEVATION 3/4" = 1'-0" 20

TOILET FIXTURES AND ACCESSORIES SCHEDULE

KEY	FIXTURE	DIMENSION REFERENCE	ADULT DIMENSION	PER TABLE 11B-604.9 (2022 CBC) SUGGESTED DIMENSION FOR CHILDREN* AGES 3-4*	2022 CBC REFERENCES: T: TABLE S: SECTION F: FIGURE	RECOMMENDED TOILET ACCESSORIES MANUFACTURER (BASIS OF DESIGN)
10 203	GRAB BAR*	TOP OF GRIPPING SURFACE	33" - 36"	18" - 20"	T: 11B-604.9	BOBRICK 5806 (STRAIGHT GRAB BARS)
10 201	TOILET PARTITION	TOE CLEARANCE	9" MIN.	12" MIN.		
10 202	URINAL SCREEN					
10 221	SOAP DISPENSER	ABOVE FINISH FLOOR	40" MAX. TO CENTERLINE OF OPERABLE PART		S: 11B-603.5	BOBRICK B-2111 SOAP DISPENSER SURFACE MOUNTED
10 222	ELECTRIC HAND DRYER	ABOVE FINISH FLOOR	40" MAX. TO CENTERLINE OF OPERABLE PART		S: 11B-603.5	
10 228	PAPER TOWEL DISPENSER W/ WASTE RECEPTACLE	ABOVE FINISH FLOOR	40" MAX. TO CENTERLINE OF OPERABLE PART		S: 11B-603.5	
10 211	SEAT COVER DISPENSER	ABOVE FINISH FLOOR	40" MAX. TO CENTERLINE OF OPERABLE PART		S: 11B-603.5	BOBRICK B-221 SEAT COVER DISPENSER SURFACE MOUNTED
10 220	MIRROR	BOTTOM EDGE OF REFLECTING SURFACE	40" MAX. ABOVE LAVATORY OR COUNTERTOP 35" MAX. NOT ABOVE LAVATORY OR COUNTERTOP		S: 11B-603.3	BOBRICK B-290 MIRROR 24" X 30"
		BOTTOM EDGE OF REFLECTING SURFACE	20" MAX. IN DRESSING, FITTING, & LOCKER ROOMS		S: 11B-803.6	
10 212	TOILET PAPER DISPENSER*	OUTLET HEIGHT	19" MIN. AND BELOW GRAB BAR.	14"	T: 11B-604.9 S: 11B-604.7	BOBRICK B-2888 TOILET TISSUE DISPENSER SURFACE MOUNTED
		CENTERLINE OF OVERALL DISPENSER	7" MIN. - 9" MAX. TO CENTERLINE OF DISPENSER			
10 210	SANITARY NAPKIN DISPENSER	ABOVE FINISH FLOOR	40" MAX. TO CENTERLINE OF OPERABLE PART		S: 11B-603.5	
10 215	SANITARY NAPKIN DISPOSAL	OPENING HEIGHT	19" MIN. AND BELOW GRAB BAR. BETWEEN THE TOILET PAPAER DISPENSER AND THE BACK WALL		S: 11B-604.7.2	BOBRICK B-254 SANITARY NAPKIN DISPOSAL SURFACE MOUNTED
10 901	COAT HOOK	ABOVE FINISH FLOOR	40" - 48"		S: 11B-604.8.3	BOBRICK B-76717 ROBE HOOK
22 403	HI-LO DRINKING FOUNTAIN	HIGH SPOUT HEIGHT	38" MIN. - 43" MAX.		S: 11B-602.7	
		LOW SPOUT APPROACH, HEIGHT, AND LOCATION FROM FRONT EDGE OF THE UNIT INCLUDING BUMPERS	FRONT APPROACH PER 11B-306, 36" MAX. A.F.F., AND 5" MAX. FROM FRONT EDGE OF UNIT.	PARALLEL APPROACH IS PERMITTED IF SPOUT IS 30" MAX. A.F.F. & 3 1/2" MAX. FROM FRONT EDGE OF UNIT.	S: 11B-602.2 - EXCEPTION S: 11B-602.4 S: 11B-602.5	
		OPERABLE PARTS	6" MAX. FROM FRONT EDGE OF UNIT		S: 11B-602.3	
		PROJECTION	18" - 19"		S: 11B-602.9	
22 410	STANDARD WATER CLOSET					
22 411	ACCESSIBLE WATER CLOSET*	CENTERLINE FROM WALL (TOILET OFFSET)	17" - 18" WHEEL CHAIR 17" - 19" AMBULATORY	12"	T: 11B-604.9	
		SEAT HEIGHT (TOP OF SEAT)	17" - 19"	11" - 12"	T: 11B-604.9	
22 420	STANDARD URINAL	RIM HEIGHT	24"			
22 421	ACCESSIBLE URINAL	RIM HEIGHT	17" MAX.		S: 11B-605.2	
		PROJECTION	13 1/2" MIN.		S: 11B-605.2	
		FLUSH CONTROL HEIGHT	44" MAX.		S: 11B-605.4	
22 431	LAVATORY (W/ INSULATED DRAIN)	SINK RIM HEIGHT	34" MAX.	31" MAX.	S: 11B-606.2 S: 11B-606.3	
		SINK KNEE CLEARANCE	27" MIN. (29" AT APRON FOR LAVATORY)	PARALLEL APPROACH PERMITTED, FRONT APPROACH AT 24" MIN.	S: 11B-606.2 F: 11B-306.3	

NOTES:
1. ALL FIXTURES AND ACCESSORIES ARE ACCESSIBLE UNLESS OTHERWISE NOTED OR DIMENSIONED.
A. (*) WHEN A SPECIFIC AGE GROUP IS CALLED OUT ON THE ENLARGED RESTROOM PLANS, ALL FIXTURES AND ACCESSORIES MARKED WITH AN ASTERISK (*) SHALL BE INSTALLED AT HEIGHTS INDICATED PER THAT AGE GROUP.
2. SEE ENLARGED TOILET PLAN DRAWINGS FOR TOILET ACCESSORY LOCATIONS.
3. ALL ACCESSORIES ARE TO BE ACCESSIBLE WITH A MAXIMUM REACH HEIGHT OF 3'-4" FROM FLOOR TO TOP OF FUNCTIONAL POINT.
4. ALL HEIGHT DIMENSIONS ARE A.F.F. (OR A.F.G. FOR EXTERIOR). ALL HORIZONTAL DIMENSIONS ARE TO FACE OF FINISH.
5. FOR TYPICAL ACCESSORY BACKING INFORMATION, SEE DETAIL 6 / A10.10.2

DSA STAMP

STUDIO W ARCHITECTS

Studio W Architects
424 32nd Street, Suite D/E
Newport Beach, California 92663
[T] 949.774.2920
www.StudioW-Architects.com

ARCHITECT	ENGINEER
LICENSED ARCHITECT BRYAN P WHITMORE No. C 30345 Ren. 9/30/25 STATE OF CALIFORNIA	
DATE SIGNED: 06/24/2024	

GENERAL NOTES
1. This sheet is part of a set and is not to be used alone.
2. This sheet is not to be used for construction unless the architect's stamp and signature appear on the drawings and the status box indicated drawings have been released for construction.
3. These plans and prints thereof, as instruments of service, are owned by the architect and are for use on this project only. Reproduction and/or distribution without the prior written consent of the architect is forbidden.
4. Copyright Studio W Associates, Inc. 2024.

REVISION HISTORY	NO.	REMARKS	DATE

DRAWING STATUS		DATE
	DSA PLAN CHECK	03/29/2024
●	DSA BACK CHECK	06/24/2024
	BIDDING	
	CONSTRUCTION	

KEY PLAN

BUENA PARK SD
6885 ORANGETHORPE AVE
BUENA PARK, CA 90620

DSA SUBMITTAL

CARL E. GILBERT ELEMENTARY SCHOOL
TK-PK CLASSROOMS & EARLY LEARNING BUILDING
7255 8TH STREET, BUENA PARK, CA 90621

SPECIALTIES

Date	Project Number
06/24/2024	23076
Application Number	Drawing Number
04-123212	A10.10.2
Drawn AT	Checked MS

PRINT DATE: 6/24/2024 9:41:25 PM
FILE PATH: BIM 360:/23076 BPSD Gilbert ES PK-TK CRs, Early Learning Bldg/23076-BPUSD Gilbert BLDG-A21.rvt

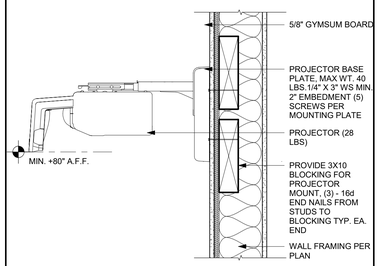

WALL MOUNTED PROJECTOR 1 1/2" = 1'-0" 20

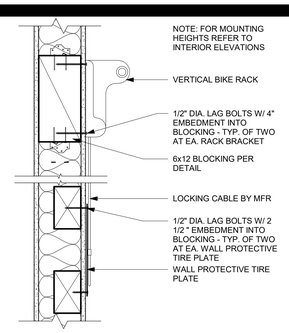

VERTICAL BIKE RACK 1 1/2" = 1'-0" 16

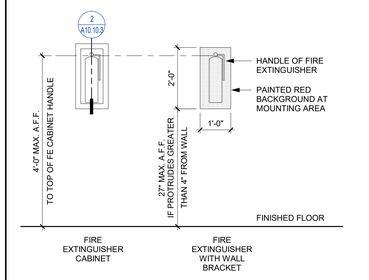

FIRE EXTINGUISHER CABINET 1/2" = 1'-0" 1

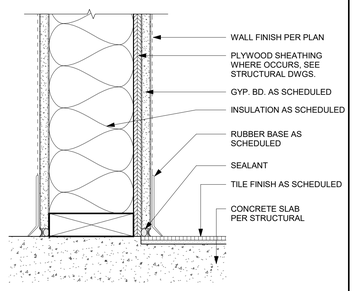

WALL BASE AT TILE FLOOR 3" = 1'-0" 17

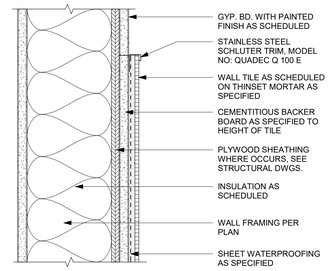

TILE TOP TRIM 3" = 1'-0" 12

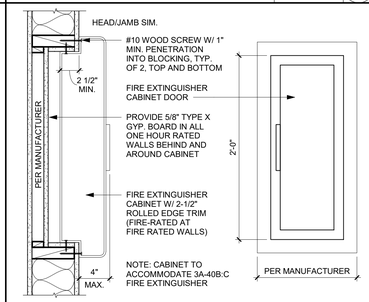

REF: 1 / A10.10.3

SEMI-REC. F.E. CAB. ANCHORAGE 1 1/2" = 1'-0" 2

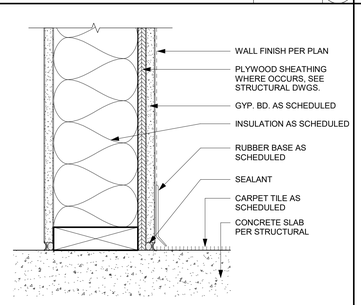

WALL BASE AT CARPET 3" = 1'-0" 18

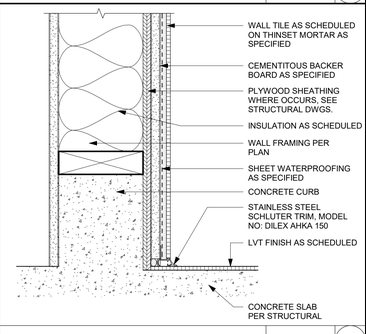

TILE BASE AT CONCRETE 3" = 1'-0" 13

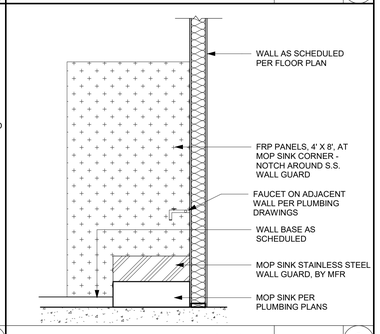

MOP SINK 1/2" = 1'-0" 3

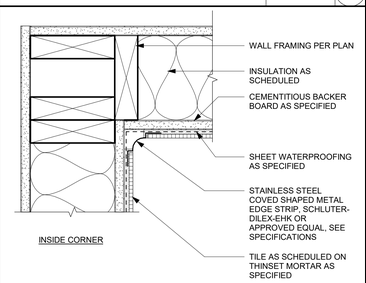

TILE CORNERS 3" = 1'-0" 15

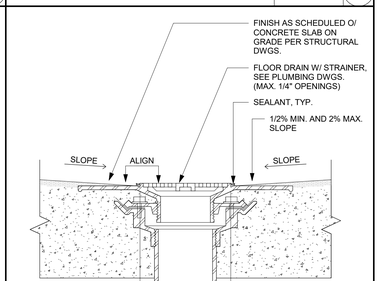

FLOOR DRAIN IN TILE 3" = 1'-0" 4

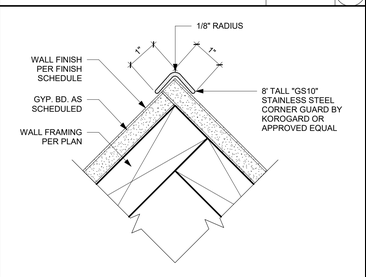

S.S. CORNER GUARD 6" = 1'-0" 6

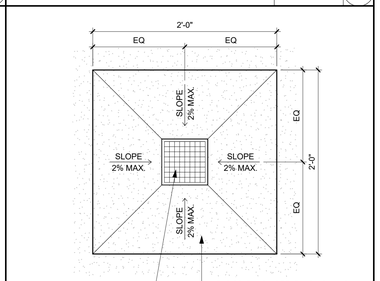

LOCALIZED DEPRESSION AT FLOOR DRAIN 1 1/2" = 1'-0" 5

DSA STAMP

STUDIO W ARCHITECTS

Studio W Architects
424 32nd Street, Suite D/E
Newport Beach, California 92663
[T] 949.774.2920
www.StudioW-Architects.com

ARCHITECT	ENGINEER

LICENSED ARCHITECT BRYAN P WHITMORE No. C 30345 Ren. 9/30/25 STATE OF CALIFORNIA

DATE SIGNED: 06/24/2024

GENERAL NOTES

1. This sheet is part of a set and is not to be used alone.
2. This sheet is not to be used for construction unless the architect's stamp and signature appear on the drawings and the status box indicated drawings have been released for construction.
3. These plans and prints thereof, as instruments of service, are owned by the architect and are for use on this project only. Reproduction and/or distribution without the prior written consent of the architect is forbidden.
4. Copyright Studio W Associates, Inc. 2024.

REVISION HISTORY

NO.	REMARKS	DATE

DRAWING STATUS

	DATE
○ DSA PLAN CHECK	03/29/2024
● DSA BACK CHECK	06/24/2024
○ BIDDING	
○ CONSTRUCTION	

KEY PLAN

BUENA PARK SD
6885 ORANGETHORPE AVE
BUENA PARK, CA 90620

DSA SUBMITTAL

CARL E. GILBERT ELEMENTARY SCHOOL
TK-PK CLASSROOMS & EARLY LEARNING BUILDING
7255 8TH STREET, BUENA PARK, CA 90621

SPECIALTIES

Date	Project Number
06/24/2024	23076
Application Number	Drawing Number
04-123212	A10.10.3
Drawn AT / Checked MS	

PRINT DATE: 6/24/2024 9:41:25 PM
FILE PATH: BIM 360://23076 BPSD Gilbert ES PK-TK CRs_Early Learning Bldg/23076-BPUSD Gilbert-BLDG-A21.rvt

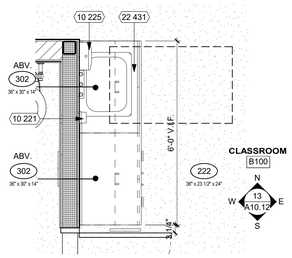

REF: 1 / A2.2

CLASSROOM CASEWORK SINK 1/2" = 1'-0" 11

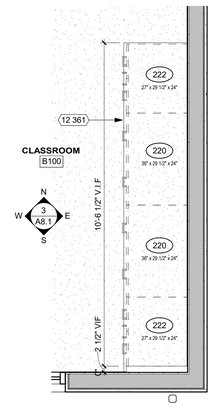

REF: 1 / A2.2

CLASSROOM CASEWORK COUNTER 1/2" = 1'-0" 7

KEY NOTES

NUMBER	NOTE
10 221	SOAP DISPENSER
10 225	PAPER TOWEL DISPENSER, SURFACE MOUNTED
12 361	PLASTIC LAMINATE COUNTERTOP. (SEE DETAIL 5/A10.12)
22 431	LAVATORY

GENERAL NOTES

1. FOR WALL TYPES REFER TO FLOOR PLAN
2. FOR TYPICAL DETAILS SEE:
   UPPER AND LOWER CABINETS: 4/A10.12
   TALL CABINETS: 9/10.12
   ACCESSIBLE BASE CABINET: 5/A10.12
   REACH RANGES: 14/A10.12

LEGEND

102 (36" x 24" x 24" LOCKABLE)

CASEWORK TAG
102 = ARCHITECTURAL WOODWORK STANDARD (AWS) NUMBER
36" x 24" x 24" = WIDTH x HEIGHT x DEPTH
LOCKABLE = MODIFYING NOTE

NOTE: FOR BASE CABINETS, HEIGHT DOES NOT INCLUDE COUNTERTOP THICKNESS - REFER TO PLANS FOR COUNTERTOP TYPE

FOR TYPICAL CASEWORK ANCHORAGE, SEE DETAIL 4 / A10.12

30" x 48" ACCESSIBLE CLEAR SPACE

60" DIAMETER ACCESSIBLE CLEAR SPACE

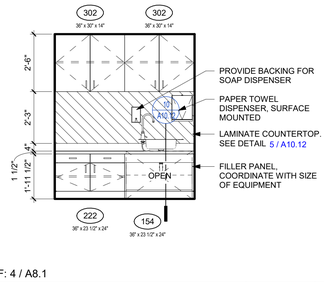

REF: 4 / A8.1

CLASSROOM SINK CASEWORK 3/8" = 1'-0" 13

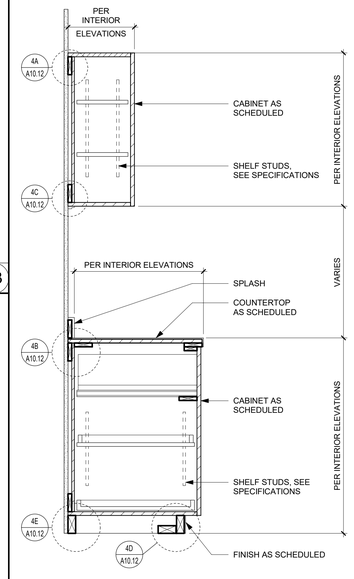

CASEWORK SECTION - UPPER AND LOWER CABINETS 1" = 1'-0" 9

TYPICAL ATTACHMENTS (APPLY TO ALL CONDITIONS AS APPLICABLE):

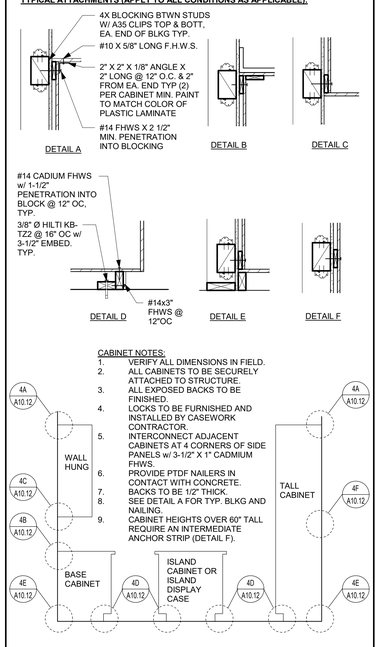

CASEWORK ANCHORAGE 1/2" = 1'-0" 4

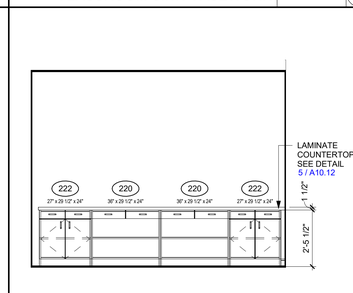

REF: 2 / A8.1

CLASSROOM CASEWORK 3/8" = 1'-0" 14

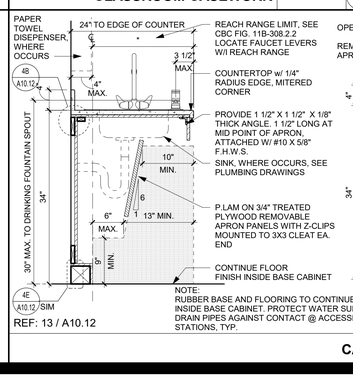

REF: 13 / A10.12

CASEWORK - ACCESSIBLE BASE CABINET. 1" = 1'-0" 10

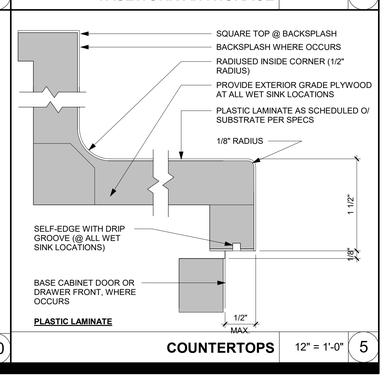

COUNTERTOPS 12" = 1'-0" 5

DSA STAMP

STUDIO W ARCHITECTS

Studio W Architects
424 32nd Street, Suite D/E
Newport Beach, California 92663
[T] 949.774.2920
www.StudioW-Architects.com

ARCHITECT	ENGINEER

LICENSED ARCHITECT BRYAN P WHITMORE No. C 30345 Ren. 9/30/25 STATE OF CALIFORNIA

DATE SIGNED: 06/24/2024

GENERAL NOTES

1. This sheet is part of a set and is not to be used alone.
2. This sheet is not to be used for construction unless the architect's stamp and signature appear on the drawings and the status box indicated drawings have been released for construction.
3. These plans and prints thereof, as instruments of service, are owned by the architect and are for use on this project only. Reproduction and/or distribution without the prior written consent of the architect is forbidden.
4. Copyright Studio W Associates, Inc. 2024.

REVISION HISTORY

NO.	REMARKS	DATE

DRAWING STATUS

	DATE
○ DSA PLAN CHECK	03/29/2024
● DSA BACK CHECK	06/24/2024
○ BIDDING	
○ CONSTRUCTION	

KEY PLAN

BUENA PARK SD
6885 ORANGETHORPE AVE
BUENA PARK, CA 90620

DSA SUBMITTAL

CARL E. GILBERT ELEMENTARY SCHOOL
TK-PK CLASSROOMS & EARLY LEARNING BUILDING
7255 8TH STREET, BUENA PARK, CA 90621

CASEWORK DETAILS

Date	Project Number
06/24/2024	23076
Application Number	Drawing Number
04-123212	A10.12
Drawn / Checked	
AT / MS	

PRINT DATE: 6/24/2024 9:41:28 PM
FILE PATH: BIM 360:/23076 BPSD Gilbert ES PK-TK CRs, Early Learning Bldg/23076-BPUSD Gilbert-BLDG-A21.rvt

ABBREVIATION

AB	ANCHOR BOLT
ABV	ABOVE
ADDT'L	ADDITIONAL
ALT	ALTERNATE
ARCH	ARCHITECT,ARCHITECTURAL
BTWN	BETWEEN
BLW	BELOW
BLDG	BUILDING
BLKG	BLOCKING
BM	BEAM
BN	BOUNDARY NAILING
BOTT	BOTTOM
BS	BOTH SIDES
BSMT	BASEMENT
CLR	CLEAR
CLG	CEILING
CMU	CONCRETE MASONRY UNITS
COL	COLUMN
CONC	CONCRETE
CONN	CONNECTION
CONST	CONSTRUCTION
CONT	CONTINUOUS
CONTR	CONTRACTOR
CF	CUBIC FOOT
CJ	CONST JOINT
CVR	COVER
DIA	DIAMETER
DIR	DIRECTION
DT	DRAG TIE
DWG	DRAWING
EA	EACH
EF	EACH FACE
ELEC	ELECTRICAL
EL	ELEVATION
ENGR	ENGINEER
EXP JT	EXPANSION JOINT
EQ	EQUAL
EXT	EXTERIOR
FF	FINISHED FLOOR
FG	FINISHED GRADE
FL	FLOOR
FS	FAR SIDE
FDN	FOUNDATION
FOC	FACE OF CONCRETE
FOS	FACE OF STUD
FT	FOOT, FEET
FOOTING	FTG
GA	GAGE
GALV	GALVANIZED
GND	GROUND
GR	GRADE
HB	HEADED BOLT
HT	HEIGHT
HORIZ	HORIZONTAL
HS	HIGH STRENGTH
HSS	HOLLOW STRUCTURAL SECTIONS
INFO	INFORMATION
INT	INTERIOR
KP	KING POST
KSI	KIPS PER SQ INCH
LBS	POUNDS
LG	LONG
LONG	LONGITUDINAL
LT WT	LIGHT WEIGHT
MAX	MAXIMUM
MB	MACHINE BOLT
MD	METAL DECK
MECH	MECHANICAL
MFR	MANUFACTURER
MIN	MINIMUM
MISC	MISCELLANEOUS
NS	NEAR SIDE
NW	NORMAL WEIGHT
OC	ON CENTER
OPP	OPPOSITE
PSF	POUNDS PER SQ FOOT
PSI	POUNDS PER SQ INCH
REINF	REINFORCEMENT
REQ	REQUIRED
SCHED	SCHEDULE
SF	SQUARE FOOT
SHT	SHEET
SIM	SIMILAR
SPEC	SPECIFICATION
SQ	SQUARE
STD	STANDARD
STL	STEEL
STRUCT	STRUCTURAL
SYM	SYMMETRICAL
THK	THICK
T&B	TOP & BOTTOM
TOF	TOP OF FOOTING
TL	TOP OF LEDGER
TOS	TOP OF STEEL, TOP OF SHEATHING
TRANSV	TRANSVERSE
TS	TUBE STEEL
TYP	TYPICAL
UNO	UNLESS NOTED OTHERWISE
VERT	VERTICAL
WF	WIDE FLANGE BEAM
W/	WITH
W/O	WITHOUT
WP	WATERPROOFING
WWF	WELDED WIRE FABRIC
WT	WEIGHT
WP	WORKING POINT
WS	WELDED STUD

MASONRY

1. F'm, SPECIFIED COMPRESSIVE STRENGTH OF CONCRETE MASONRY UNIT (CMU) SHALL BE AS FOLLOWS.

   f 'm = 2000 PSI U.N.O.

2. CONCRETE BLOCK SHALL BE MEDIUM WEIGHT COMPLYING ASTM C90, GRADE N-1 AND CBC SECTION 2103A.1 WITH MINIMUM COMPRESSIVE STRENGTH AS NEEDED TO GET SPECIFIED COMPRESSIVE STRENGTH OF MASONRY.

3. GROUT SHALL COMPLY WITH ASTM C476 AND CBC SECTION 2103A.3 WITH MINIMUM COMPRESSIVE STRENGTH AS NEEDED TO GET SPECIFIED COMPRESSIVE STRENGTH OF MASONRY. COMPRESSIVE STRENGTH SHALL NOT BE LESS THAN 2000 PSI AT 28 DAYS. GROUT SHALL BE FRESHLY PREPARED AND UNIFORMLY MIXED IN PROPORTION BASED ON SUBMITTED AND APPROVED MIX DESIGN.

4. MORTAR SHALL COMPLY WITH ASTM C270, TYPE. S WITH MINIMUM STRENGTH AT 28 DAYS OF 1800 PSI. PROVIDE MIX DESIGN PREPARED BY TESTING LAB FOR APPROVAL.

5. CEMENT SHALL CONFORM TO ASTM C150, TYPE I OR II. USE OF MASONRY CEMENT OR PLASTIC CEMENT IS NOT PERMITTED.

6. SPECIAL INSPECTION IS REQUIRED FOR ALL STRUCTURAL MASONRY UNITS PER CBC SECTION 1705A.4 2105A, TMS 402 TABLE 3.1 , LEVEL 2.

7. AGGREGATES FOR MORTAR AND GROUT SHALL BE NATURAL SAND AND ROCK COMPLYING WITH ASTM C144 AND C404.

8. SEE REINFORCING STEEL NOTES FOR REINFORCING STEEL, U.N.O.

9. REINFORCING STEEL SPLICES (U.N.O.):
   - 48 DIAMETERS @ LAP SPLICES IN WALL
   - 72 DIAMETERS @ FOOTING DOWELS
   - WHEN MINIMUM CLEAR DISTANCE BETWEEN BARS @ ADJACENT SPLICE IS 3 INCHES OR LESS, INCREASE SPLICE LENGTH 30 PERCENT UNLESS SPLICES ARE STAGGERED AT LEAST 24 BAR DIAMETERS.

10. PROVIDE MINIMUM 1" MINIMUM GROUT COVER AROUND ALL ANCHOR BOLTS, INSERTS, REINFORCING STEEL, ETC. PENETRATING MASONRY SHELL.

11. GROUT SOLID ALL CELLS UNLESS NOTED OTHERWISE MECHANICALLY VIBRATE GROUT IN CELLS.

12. USE LOW LIFT GROUTING METHOD PER CBC SECTION 2104A.1.3.1.1.1.1 UNLESS NOTED OTHERWISE. FOR HIGH LIFT GROUTING METHOD, SEE IR 21-2 AND CBC SECTION 2104A.1.3.1.1.1.2.

13. SET COURSES IN RUNNING BOND U.N.O. SET CELLS IN VERTICAL ALIGNMENT.

14. WHEN WORK IS STOPPED ONE HOUR OR LONGER, PROVIDE HORIZONTAL CONSTRUCTION JOINT BY STOPPING GROUT 1-1/2" BELOW TOP OF MASONRY UNIT.

WOOD CONT.

1. ALL PLYWOOD SHALL BE MANUFACTURED USING EXTERIOR GLUE AND SHALL CONFORM TO U.S. PRODUCT STANDARD PS-1, SECTION 7. PANELS SHALL CONFORM TO THE GRADES SPECIFIED ON THE DRAWINGS. PANELS EXPOSED TO WEATHER SHALL BE EXTERIOR GRADE. EACH PANEL SHALL BEAR MARKINGS IDENTIFYING THE QUALIFIED TESTING AND INSPECTION AGENCY, GRADE, NOMINAL THICKNESS, SPAN RATING, EXPOSURE DURABILITY CLASSIFICATION AND STANDARD TO WHICH IT IS CERTIFIED.

2. USE OF MACHINE NAILING IS SUBJECT TO A SATISFACTORY JOB SITE DEMONSTRATION FOR EACH PROJECT AND THE APPROVAL OF THE PROJECT ARCHITECT OR STRUCTURAL ENGINEER AND THE ENFORCEMENT AGENCY. THE APPROVAL IS SUBJECT TO CONTINUED SATISFACTORY PERFORMANCE. MACHINE NAILING IS NOT ALLOWED FOR 5/16 INCH PLYWOOD. IF THE NAIL HEADS PENETRATE THE OUTER PLY MORE THAN WOULD BE NORMAL FOR A HAND HELD HAMMER, OR IF MINIMUM ALLOWABLE EDGE DISTANCES ARE NOTE MAINTAINED, THE PERFORMANCE WILL BE DEEMED UNSATISFACTORY AND MACHINE NAILING SHALL BE DISCONTINUED.

5. ALL BOLTED CONNECTIONS ARE TO BE RETIGHTENED PRIOR TO CLOSING IN.

6. NAILING SHALL BE WITH COMMON NAILS AND SHALL CONFORM TO THE CBC NAILING SCHEDULE TABLE 2304.10.1

7. SHEET METAL HANGERS, TIES, BRIDGING ANCHORS, ETC. SHALL BE BY THE SIMPSON COMPANY OR APPROVED EQUAL.

8. BLOCKING AND BRIDGING TO BE PROVIDED PER CBC 2308.4.6

9. FOR 10d NAILS AT PLYWOOD SHEAR WALLS AND ROOF DIAPHRAGMS, PROVIDE 1 1/2" MINIMUM PENETRATION INTO FRAMING PER AWS SDPWS (FORMERLY ANSI7AF & PA SDPWS) TABLES.

COMPOSITE LUMBER

1. STRUCTURAL COMPOSITE LUMBER NOTED ON PLAN AS LVL CAN BE MANUFACTURED BY BOISE CASCADE VERSA-LAM 2.1E 3100. ALL VERSA-LAM SHALL BE 2.1E AND IN ACCORDANCE WITH ESR # 1040

   G = 125,000 PSI
   E = 2,100,000 PSI
   F_b = 3100 PSI
   F_v = 1950 PSI
   F_{cp} = 750 PSI
   $F_{c\perp}$= 3000 PSI
   F_v = 285 PSI
   S.G. = 0.50

EXPANSION OR EPOXY - TYPE ANCHORS

1. INSTALLATION SHALL BE IN ACCORDANCE WITH THE 2022 CBC 1910A.5

2. INSTALLATION SHALL BE CONTINUOUSLY INSPECTED IN ACCORDANCE WITH ICC EVALUATION .

3. LOAD TEST FOR VALUES SHOWN U.N.O. ARE IN ACCORDANCE WITH CBC, SECTION 1910A.5.4

4. ALL EXPANSION BOLTS TO BE USED SHALL BE HILTI KB-TZ2 ANCHORS TYP PER ICC ESR-4266. ALL EPOXY BOLTS SHALL BE SIMPSON SET- 3G PER ICC ESR-4057. NO SUBSTITUTION SHALL BE MADE WITHOUT APPROVAL FROM THE STRUCTURAL ENGINEER.

   HILTI KB TZ2 BOLT TESTING TABLE. FOR EPOXY BOLTS SEE SPECIFIC DETAIL FOR EMBEDMENT AND DIRECT PULL TESTING LOAD.

BOLT DIA.	MINIMUM DEPTH OF EMBEDMENT	REQUIRED INSTALLATION TORQUE FOR EXPANSION BOLT
3/8"	2"	30 FT-LBS
1/2"	3 1/4"	50 FT- LBS
5/8"	4"	60 FT- LBS
3/4"	4 3/4"	110 FT- LBS

TABLE NOTES:

A. TABULATED VALUES ARE BASED ONTHE ICC ESR REPORT #4266 AND SHALL BE INSTALLED WITH SPECIAL INSPECTION. THE TABULATED VALUES ARE FOR ANCHORS INSTALLED A MINIMUM OF 12 DIAMETERS ON CENTER AND A MINIMUM EDGE DISTANCE OF 12 DIAMETERS. SEE CBC 1910A.5.5 AND DSA FORM 103 FOR ACCEPTANCE AND FAILURE CRITERIA.

B. WHEN THE EXPANSION-TYPE ANCHORS ARE TO BE USED FOR SILL PLATE BOLTING APPLICATIONS, 10% OF THE ANCHORS SHALL BE TENSION TESTED. WHEN EXPANSION-TYPE ANCHORS ARE USED FOR OTHER STRUCTURAL APPLICATIONS, ALL SUCH EXPANSION ANCHORS SHALL BE TESTED. WHEN EXPANSION-TYPE ANCHORS ARE USED FOR NONSTRUCTURAL APPLICATIONS SUCH AS EQUIPMENT ANCHORAGE, 50% OR ALTERNATE BOLTS IN A GROUP SHALL BE TENSION TESTED.

C. THE TESTING OF THE EXPANSION AND EPOXY ANCHORS SHALL BE DONE IN THE PRESENCE OF THE PROJECT INSPECTOR AND A REPORT OF THE TEST RESULTS SHALL BE SUBMITTED TO DSA ENFORCEMENT AGENCY. IF ANY ANCHORS FAIL THE TENSION-TESTING REQUIREMENTS, DSA ENFORCEMENT AGENCY SHALL DETERMINE IF THE PROPOSED ADDITIONAL TESTING REQUIREMENTS ARE ACCEPTABLE.

POWDER DRIVEN SHOT PINS (LOW VELOCITY)

1. SHOT PINS MAY BE USED FOR SHEAR LOADS AND THEY MAY BE USED IN TENSION TO SUPPORT LOADS LESS THAN 90 POUNDS FOR MINOR LOADS LIKE ACOUSTICAL CEILINGS, DUCT WORK, CONDUIT, ETC. ANY SHOT ANCHORS MUST HAVE ICBO APPROVAL FOR USE ON CONCRETE CURBS.

2. THE ALLOWABLE LOADS SHALL BE 90 POUNDS OR 80 % OF ESR APPROVED VALUES, WHICHEVER IS LESS. QUALIFICATIONS FOR USE OF ALL POWER ACTUATED TOOLS MUST MEET ANSI A10.3 STANDARD AS REQUIRED BY THE MANUFACTURER AND ALL OSHA REQUIREMENTS.

3. TESTING - THE OPERATOR, TOOL AND FASTENER SHALL BE PRE - QUALIFIED BY THE PROJECT INSPECTOR. THE INSPECTOR SHALL OBSERVE THE TESTING OF THE FIRST 1- FASTENER INSTALLATIONS. A TEST "PULL - OUT" LOAD OF NOT LESS THAN TWICE THE DESIGN LOAD SHALL BE APPLIED TO THE PIN IN SUCH A MANNER AS NOT TO RESIST THE SPALLING TENDENCY OF THE CONCRETE SURROUNDING THE PIN. THEREAFTER, RANDOM TESTS UNDER THE PROJECT INSPECTOR'S SUPERVISION SHALL BE MADE OF APPROXIMATELY 1 IN 10 PINS. IF ANY PIN FAILS TESTING, TEST ALL PINS OF THE SAME CATEGORY NOT PREVIOUSLY TESTED UNTIL (20) CONSECUTIVE PASS, THEN RESUME THE INITIAL TESTING FREQUENCY.

4. SHOT PINS SHALL BE HILTI. X - U (ESR 2269) AND CAN BE USED TO CONNECT METAL STUD TRACK OR WOOD SILL TO

   - CONCRETE — X - U 0.157 SHANK DIA. W/ 1-1/4" PENETRATION

REINFORCED CONCRETE (CAST-IN-PLACE) CONT.

3. ALL CONCRETE SHALL HAVE A MINIMUM COMPRESSIVE STRENGTH AT 28 DAYS AS FOLLOWS. ALL CONCRETE NORMAL WEIGHT U.N.O.

	STRENGTH (PSI)	CEMENT TYPE	W/C	WT	MAX NOMINAL AGG:
SLAB ON GRADE	4500	V	0.45	145	1"
FOUNDATIONS	4500	V	0.45	145	1"

4. ALL CONCRETE SHALL HAVE A MAXIMUM SLUMP NO GREATER THAN 4"

5. MIX DESIGNS SHALL BE APPROVED BY STRUCTURAL ENGINEER PRIOR TO USE.

6. PROPOSED CONSTRUCTION JOINT LOCATIONS SHALL BE SUBMITTED FOR REVIEW AND APPROVAL.

REINFORCING STEEL

1. REINFORCING STEEL SHALL CONFORM TO ASTM A615 GRADE 40 FOR#3 AND SMALL AND GRADE 60 FOR #4 AND LARGER. REINFORCING STEEL TO BE WELDED SHALL CONFORM TO ASTM A706, GRADE 60.

2. WELDED WIRE FABRIC (WWF) SHALL COMPLY WITH ASTM A1064, AND SHALL BE LAPPED 1-1/2 SPACES (12"MM).

3. ALL REINFORCING STEEL, DOWELS, ANCHOR BOLTS, ETC. SHALL BE WELL SECURED IN PLACE PRIOR TO PLACING CONCRETE.

4. ALL REINFORCING STEEL SHALL BE LAPPED AS SPECIFIED ON THE DETAIL. WHERE NOT SPECIFICALLY INDICATED ON THE DRAWING, ALL REINFORCING STEEL SHALL BE LAPPED USING THE TENSION SPLICE LENGTHS IN THE SCHEDULE ON DRAWING UNLESS NOTED OTHERWISE, TERMINATED CONTINUOUS BARS AT DISCONTINUOUS ENDS WITH STANDARD HOOKS.

5. DOWELS SHALL BE PROVIDED AT POUR AND CONSTRUCTION JOINTS AND SHALL BE THE SAME SIZE AND SPACING AS THE REINFORCING SHOWN FOR THE SUBSEQUENT CONSTRUCTION.

6. REINFORCING STEEL SHALL HAVE THE FOLLOWING MINIMUM COVERS, U.N.O.

   CONCRETE AGAINST EARTH (NOT FORMED) ——— 3"
   CONCRETE AGAINST EARTH (FORMED AND TROWELED) ——— 2"
   WALL AND CURB ——— 1-1/2"
   SLAB ON GRADE ——— CENTER

7. WELDING OR REINFORCING STEEL SHALL COMPLY WITH AWS D1.4. ALL BARS TO BE WELDED SHALL CONFORM TO ASTM A706, GRADE 60.

8. SUBMIT REINFORCING STEEL SHOP DRAWING TO ARCHITECT FOR APPROVAL.

STRUCTURAL STEEL

1. ALL STRUCTURAL STEEL SHALL CONFORM TO THE REQUIREMENTS OF ASTM A6 AND SHALL BE FABRICATED ACCORDING TO AISC PRACTICE AND SPECIFICATION FOR BUILDING.

2. MATERIALS: PROVIDE STRUCTURAL STEEL COMPLYING WITH UBC STANDARD AND ASTM STANDARD AS FOLLOWS, U.N.O.

   A. ALL WIDE FLANGES — ASTM A992, GRADE 50
   B. TUBES (HSS ROUNDS, HSS TUBES) — ASTM A500, GRADE B (46ksi @ HSS RECT, GRADE B (42 ksi @ ROUND HSS)
   C. PIPES — ASTM A53, GRADE B (35ksi)
   D. CHANNELS, ANGLES, PLATES — ASTM A36 (U.O.N.)
   E. ANCHOR BOLTS — ASTM F1554 (36 KSI, U.N.O.)
   F. THREADED ROD — ASTM A36

3. BOLTS

   A. UUSE ASTM A307 BOLTS, NUTS AND WASHERS UNLESS NOTED OTHERWISE.
   B. STANDARD BOLT HOLE SHALL BE 1/16" LARGER IN DIAMETER THAN NORMAL BOLT DIAMETER, U.N.O.
   C. OVERSIZE BOLTS HOLES FOR ANCHOR BOLTS IN BASE PLATE MAY BE ALLOWED BY PROVIDING 3-1/2" SQUARE PLATE WASHERS UNDER NUT U.N.O. THICKNESS OF PLATE WASHER SHALL BE 0.5 TIMES THE DIAMETER OF ANCHOR BOLTS U.N.O. USE 5/16 INCH FILLET WELD AROUND PLATE WASHER U.N.O.

4. WELDING

   A. ALL WELDS SHALL BE DONE USING THE SHIELDED ELECTRIC ARC PROCESS BY AWS CERTIFIED WELDERS USING AWS D1.1 LOW - HYDROGEN E70XX ELECTRODES.
   B. ALL WELDS USED IN PRIMARY MEMBERS AND CONNECTIONS IN THE LATERAL FORCE SYSTEMS SHALL BE MADE WITH A FILLER MATERIAL THAT HAS A MINIMUM CHARPY V - NOTCH TOUGHNESS OF 20FT-LBS AT MINUS 20 DEGREES F. AS DETERMINED BY AWS CLASSIFICATION.
   C. INSPECTION IS REQUIRED FOR ALL FIELD AND SHOP WELDING BY AN INSPECTOR APPROVED BY GOVERNING CODE - AUTHORITY (DSA FOR PUBLIC SCHOOLS, REFER TO DSA FORM 103 FOR REQUIREMENTS)
   D. WELDERS SHALL BE QUALIFIED AND CERTIFIED BY THE GOVERNING CODE AUTHORITY. (DSA FOR PUBLIC SCHOOLS)

5. STEEL EXPOSED TO WEATHER SHALL BE HOT DIPPED GALVANIZED U.N.O. (SEE ARCHITECTURAL DRAWINGS FOR OTHER CONDITION)

6. STRUCTURAL STEEL SHOP DRAWINGS SHALL BE REVIEWED BY THE STRUCTURAL ENGINEER PRIOR TO FABRICATION.

WOOD

1. ALL WOOD MEMBERS SHALL BE DOUGLAS FIR LARCH #1 GRADE UNO, EXCEPT BLOCKING MAY BE #2 GRADE, CONFORMING TO THE WCLIB GRADING RULES #16, OR AS SPECIFICALLY CALLED FOR ON THE DRAWINGS. EACH PIECE OF LUMBER SHALL BE GRADE MARKED. ALL MEMBERS TO HAVE MOISTURE CONTENT LESS THAN 19% AT TIME OF INSTALLATION.

2. ALL LUMBER WHICH COMES IN DIRECT CONTACT WITH CONCRETE OR MASONRY SHALL BE DOUGLAS FIR NO. 2 OR BETTER, PRESSURE TREATED AND BEAR THE MARK INDICATING CONFORMANCE WITH THE REQUIREMENTS OF AWPA STANDARD U1 AND T1. THE LUMBER SHALL BE PRESSURE TREATED WITH THE CHEMICAL ACZA, BORATE OR EQUAL. WHERE SILLS ARE CUT, DRILLED OR NOTCHED THEY SHALL BE TREATED WITH A PRESERVATIVE THAT MEETS THE AWPA STANDARD U1 AND APPROVED BY THE ARCHITECT AND THE ENFORCEMENT AGENCY. ON ALL EXPOSED SURFACES FROM WHICH THE PRESERVATIVE TREATMENT HAS BEEN REMOVED. SILLS AT SHEAR WALLS AND BEARING WALLS SHALL BE FLAT AND UNIFORM ON CONCRETE SURFACE SO AS TO OBTAIN CONTINUOUS BEARING.

GENERAL

1. ALL WORKS AND MATERIALS SHALL CONFORM TO THE 2022 CALIFORNIA BUILDING CODE AND ALL LOCAL CODES.

2. STRUCTURAL DRAWINGS ARE PARTS OF CONTRACT DOCUMENTS. THE CONTRACTOR SHALL VERIFY ALL DIMENSIONS AND CONDITIONS AND COORDINATE WITH ARCHITECTURAL DRAWINGS, DRAWINGS FROM OTHER CONSULTANTS, PROJECT SHOP DRAWINGS AND FIELD CONDITIONS, AND SHALL NOTIFY THE ARCHITECT AND ENGINEERS OF ANY DISCREPANCIES.

3. STRUCTURAL DRAWINGS AND SPECIFICATIONS REPRESENT THE FINISHED STRUCTURE. CONTRACTOR SHALL PROVIDE MEANS AND METHODS AS REQUIRED. PROVIDE ADEQUATE BRACING, SHORING, TEMPORARY STRUCTURES AND PARTIALLY COMPLETED PORTIONS OF WORKS COMPLYING WITH NATIONAL, STATE AND ALL LOCAL SAFETY ORDINANCES.

4. TYPICAL DETAILS AND SCHEDULES MAY NOT BE REFERENCED ON DRAWINGS. CONTRACTOR SHALL REVIEW AND BE FAMILIAR WITH ALL TYPICAL DETAILS AND SCHEDULES PRIOR TO PROCEED WITH WORK.

5. CONTRACTOR SHALL PROTECT EXISTING FACILITIES, STRUCTURES AND UTILITY LINES FROM ALL DAMAGE.

6. THE CONTRACTOR SHALL NOT DEVIATE FROM THE TENDERED DOCUMENTS WITHOUT WRITTEN APPROVAL OF THE ARCHITECT AND ENGINEERS.

7. JOB SAFETY AND CONSTRUCTION PROCEDURES ARE THE SOLE RESPONSIBILITY OF THE CONTRACTOR.

8. FOR ALL LOCATIONS OF DATUM ELEVATION 0.0; REFER TO ARCHITECTURAL AND SITE DRAWINGS. ALL ELEVATIONS INDICATED ON THE STRUCTURAL DRAWINGS ARE MEASURED WITH RESPECT TO THIS DATUM, UNLESS NOTED OTHERWISE.

DESIGN LOADS

1. WIND DESIGN LOADS
   BASIC WIND SPEED..... 105 MPH FOR ALL BLDGS.
   V asd ..... 81.3 MPH
   RISK CATEGORY ..... III FOR CLASSROOM BLDG. AND II FOR ADMIN BLDG.
   EXPOSURE..... C
   INTERNAL PRESSURE COEFFICIENT..... ± 0.18
   COMPONENT AND CLADDING..... -33 PSF LRFD (OUTWARD) + 25 PSF LRFD (INWARD)

2. SEISMIC DESIGN LOADS
   RISK CATEGORY..... III FOR CLASSROOM BLDG. AND II FOR ADMIN BLDG.
   SITE CLASS..... D
   SEISMIC DESIGN CATEGORY..... D
   IMPORTANCE FACTOR..... 1.25 FOR CLASSROOM BLDG. AND 1.0 FOR ADMIN BLDG.
   S_s = 1.531 Fa=1.0
   S_1 = 0.542 Fv=1.758
   S_{DS} = 1.107
   S_{D1} = 1.181 LATITUDE = 33.6754; LONGITUDE = -117.8216

BLDG ANALYSIS PROCEDURE
ALL EQUIVALENT LATERAL FORCE PROCEDURE

BLDG	DIRECTION	IRREGULATIES	SEISMIC FORCE RESISTING SYSTEM	R	RHO	Cd	OMEGA	Cs (LRFD)	V (LRFD)
CLASSROOM BLDG	N/S	HORIZ = TYPE 2, 4 & 5. VERT.=NONE	LFWSW	6.5	1.0	4.0	2.5	0.213	119 K
CLASSROOM BLDG	E/W	HORIZ = TYPE 2, 4 & 5. VERT.=NONE	SRMSW	5.0	1.0	3.5	2.0	0.28	163.7 K
ADMIN. BLDG	N/S	HORIZ.=NONE VERT.=NONE	SSCCS	2.5	1.0	2.5	1.25	0.4428	36.5 K
ADMIN. BLDG	E/W	HORIZ.=NONE VERT.=NONE	LFWSW	6.5	1.0	4.0	2.5	0.17	16.4 K

"LFWSW" - LIGHT FRAMED WOOD SHEAR WALL
"SRMSW" - SPECIAL REINFORCED MASONRY SHEAR WALL
"SSCCS" - STEEL SPECIAL CANTILEVER COLUMN SYSTEM

3. ROOF LIVE LOAD = 20PSF(REDUCIBLE)
4. SOLAR PV DEAD LOAD= 4 PSF@SOUTH WING OF BLDG ONLY. FUTURE PV INSTALLATION WILL BE SUBJECT TO DSA REVIEW AND APPROVAL
5. ROOF DEAD LOAD = 22 PSF

FOUNDATION

1. FOUNDATION DESIGN IS BASED ON ORIGINAL GEOTECHNICAL REPORT PREPARED BY: NINYO & MOORE GEOTECHNICAL. PROJECT NUMBER 212502001, DATED FEBRUARY 14, 2024
2. ALLOWABLE DESIGN VALUE :
   BEARING PRESSURE — 2500 PSF BASED ON 2' EMBEDMENT DEPTH & 2' WIDTH, + 500 PSF/ADD'L DEPTH AND +250 PSF/ADD'L WIDTH (3500 PSF MAX).
   PASSIVE PRESSURE — 350 PCF (LEVEL)
   FRICTION — 0.35
   SOIL WEIGHT — 120 PCF
   BEARING AND PASSIVE MAY BE INCREASED BY 1/3 FOR SHORT TERM LOADS.
3. FOOTING SHALL REST ON COMPACTED SOIL, SEE GEOTECHNICAL REPORT FOR OVEREXCAVATION AND RECOMPACTION REQUIREMENTS. AND 15/S1.1. BOTTOM OF FOOTING 2'-0" MIN. BELOW GRADE
4. NO BACKFILL SHALL BE DONE AGAINST FOUNDATION AND RETAINING WALL UNTIL CONCRETE HAS ATTAINED AT LEAST 75% OF ITS DESIGN STRENGTH. ADEQUATELY SHORE RETAINING WALLS DURING BACKFILL.
5. CONTRACTOR SHALL BE RESPONSIBLE TO ADEQUATELY PROTECT ALL EXCAVATION SLOPES. WHERE NECESSARY, SHEETING AND SHORING OF EXCAVATION SHALL BE PROVIDED WITH ALL REQUIRED TIE BACKS AND BRACING.
6. METHOD EMPLOYED IN ALL SHEETING AND SHORING SHALL BE DESIGNED BY A LICENSED PROFESSIONAL CIVIL ENGINEER.

REINFORCED CONCRETE (CAST-IN-PLACE)

1. STRUCTURAL CONCRETE AND CONCRETE PRACTICES SHALL CONFORM TO ACI 318-19 CURRENT EDITION AS WELL AS ALL APPLICABLE CODES STATED IN GENERAL NOTE.

2. ALL CONCRETE DETAILS SHALL BE IN ACCORDANCE WITH ACI-135 "MANUAL OF STANDARD PRACTICE FOR DETAILING REINFORCED CONCRETE STRUCTURES", UNLESS NOTED OTHERWISE.

PRINT DATE:
FILE PATH:

DSA STAMP

STUDIO W ARCHITECTS

Studio W Architects
1930 H Street
Sacramento, California 95811
[T] 916.254.5600
www.StudioW-Architects.com

ARCHITECT	ENGINEER
LICENSED ARCHITECT BRYAN P. WHITMORE No. C 30345 Ren. 9/30/25 STATE OF CALIFORNIA	REGISTERED PROFESSIONAL ENGINEER No. 2998 Exp. 6-30-26 STRUCTURAL STATE OF CALIFORNIA
DATE SIGNED: 06/24/2024	DATE SIGNED: 06/24/2024

GENERAL NOTES
1. This sheet is part of a set and is not to be used alone,
2. This sheet is not to be used for construction unless the architect's stamp and signature appear on the drawings and the status box indicated drawings have been released for construction,
3. These plans and prints thereof, as instruments of service, are owned by the architect and are for use on this project only. Reproduction and/or distribution without the prior written consent of the architect is forbidden.
4. Copyright Studio W Associates, Inc. 2022.

REVISION HISTORY

DRAWING STATUS — DATE
- DSA PLAN CHECK
- DSA BACK CHECK 06/24/2024
- BIDDING
- CONSTRUCTION

KEY PLAN

BUENA PARK USD
6885 ORANGETHORPE AVE
BUENA PARK, CA 90620

SCHEMATIC DESIGN

CARL E. GILBERT ELEMENTARY SCHOOL
TK/PK CLASSROOMS & EARLY LEARNING BUILDING
7255 8TH STREET, BUENA PARK, CA 90621

GENERAL NOTES

Date 06/24/2024	Project Number 24-002
Application Number 04-123212	Drawing Number S0.1
Drawn Author	Checked Checker

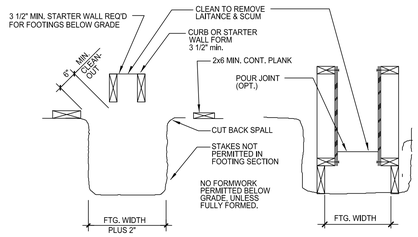

NOTES:
1. UNFORMED FOOTING DETAIL MAY BE USED PROVIDED TRENCH IS STABLE & APPROVED BY STRUCTURAL ENGINEER.
2. SOLID FORM LUMBER MAY BE USED IN UNEXPOSED CONSTRUCTION IF IN GOOD SOUND CONDITION.
3. ALL ANCHOR BOLTS, REINFORCING, INSERTS, ETC. TO BE FIRMLY TIED IN PLACE PRIOR TO PLACING CONCRETE.

1 FORMS FOR FOUNDATION

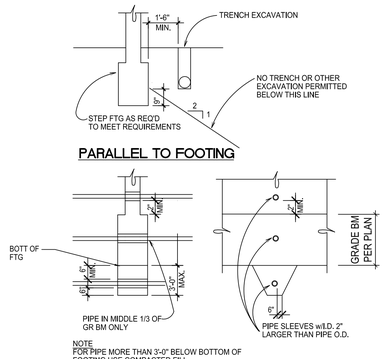

NOTE
FOR PIPE MORE THAN 3'-0" BELOW BOTTOM OF FOOTING USE COMPACTED FILL.

2 PIPES THROUGH FOOTING

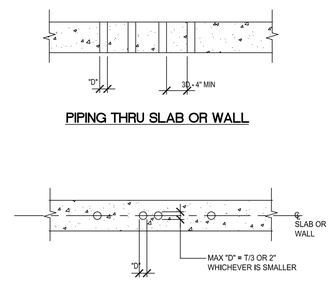

3 PIPEST & CONDUIT IN WALLS AND SLAB

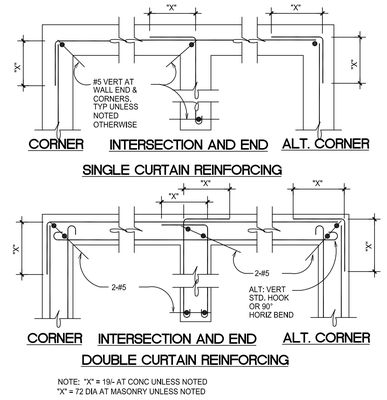

NOTE: "X" = 19\- AT CONC UNLESS NOTED
"X" = 72 DIA AT MASONRY UNLESS NOTED

4 REINF @ WALL AND GRD BEAM INTERSECTION

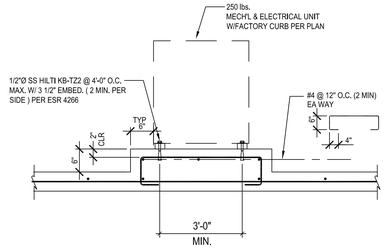

5 MECHANICAL PAD

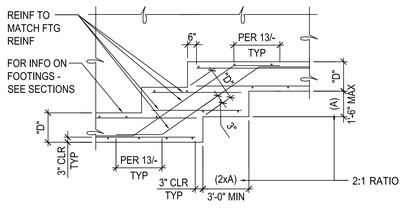

6 STEPPED FOOTING DETAIL

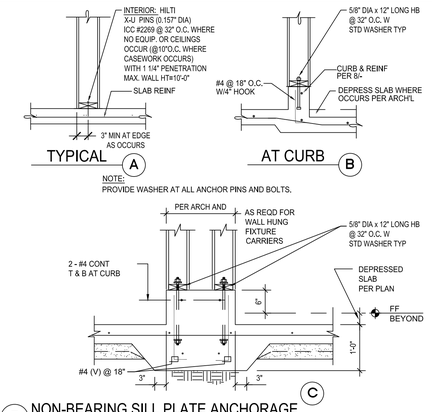

7 NON-BEARING SILL PLATE ANCHORAGE

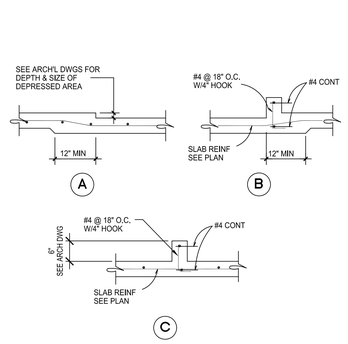

8 DEPRESSED SLAB AND CONC CURB

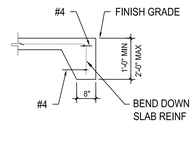

9 SLAB EDGE

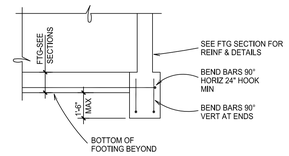

10 STEPPED FOOTING @ CORNER

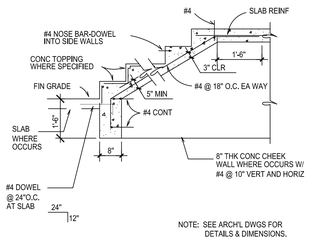

NOTE: SEE ARCH'L DWGS FOR DETAILS & DIMENSIONS.

11 CONCRETE STAIR ON GRADE

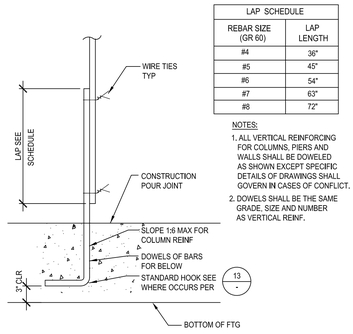

LAP SCHEDULE	
REBAR SIZE (GR 60)	LAP LENGTH
#4	36"
#5	45"
#6	54"
#7	63"
#8	72"

NOTES:
1. ALL VERTICAL REINFORCING FOR COLUMNS, PIERS AND WALLS SHALL BE DOWELED AS SHOWN EXCEPT SPECIFIC DETAILS OF DRAWINGS SHALL GOVERN IN CASES OF CONFLICT.
2. DOWELS SHALL BE THE SAME GRADE, SIZE AND NUMBER AS VERTICAL REINF.

12 DOWELS AT CMU WALL

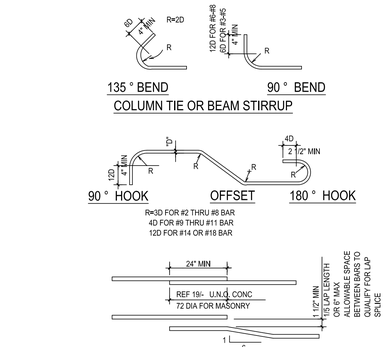

13 REINFORCING STEEL DETAIL

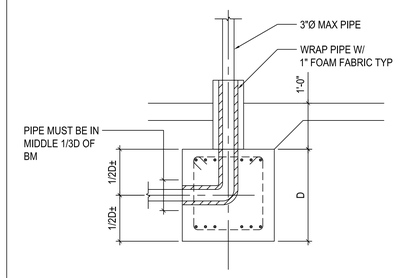

14 PIPE THRU FOOTING

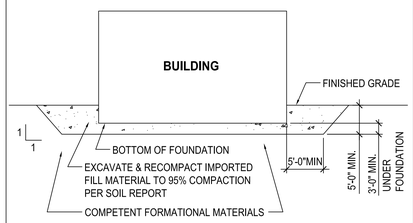

SOIL EXCAVATION AND RECOMPACTION

1. THE GRADING CONTRACTOR SHALL NOTIFY THE PROJECT GEOTECHNICAL ENGINEER NOT LESS THAN 72 HOURS IN ADVANCE OF THE LOCATION OF ANY SOILS PROPOSED FOR IMPORT. EACH PROPOSED IMPORT SOURCE SHALL BE SAMPLED, TESTED AND APPROVED PRIOR TO DELIVERY OF SOILS FOR USE ON THE SITE.
2. LOCAL AREAS MAY REQUIRE DEEPER EXCAVATION W/ THE EXACT DEPTH DETERMINED BY GEOTECHNICAL ENGINEER.

15 BUILIDNG OVER EXCAVATION

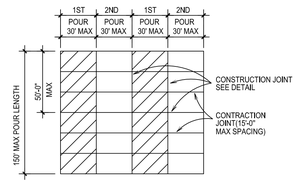

NOTE: CONSTRUCTION SLAB IN ALTERNATE BAYS AS SHOWN. ALLOW 24 HRS MINIMUM BETWEEN POURS. CONTRACTOR MAY POUR SLAB IN CHECKERBOARD PATTERN, IF DESIRED, WITH 30'-0" MAXIMUM DIMENSION EACH SIDE & CONTRACTION JOINTS AT 10'-0" EACH WAY.

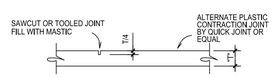

NOTES:
1. PROVIDE CONTRACTION OR CONSTRUCTION JOINTS AT CENTERLINE OF COLUMNS AND 10'-0" MAX O.C. UNO.

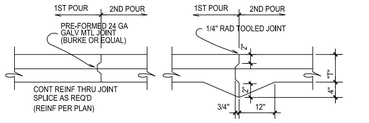

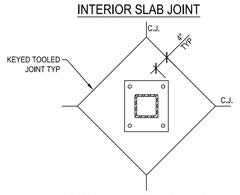

17 SLAB ON GRADE

SCHEDULE									
CLASS A SPLICE (DEVELOPMENT) LENGTHS									
CONCRETE fc=4500 HARD ROCK	BAR SIZE	#4	#5	#6	#7	#8	#9	#10	#11
	TOP BAR	28	35	42	61	70	79	88	96
	OTHER BAR	22	27	33	47	54	61	68	74
CLASS B SPLICE LENGTHS									
CONCRETE fc=4500 HARD ROCK	BAR SIZE	#4	#5	#6	#7	#8	#9	#10	#11
	TOP BAR	37	46	55	80	91	102	114	125
	OTHER BAR	28	35	42	61	70	79	88	96
HOOK DEVELOPMENT LENGTH- STANDARD PER 13/- IN TENSION									
CONCRETE fc=4500 HARD ROCK	BAR SIZE	#4	#5	#6					
	L hd	9	11	14					

NOTES:
1. TOP BARS ARE HORIZONTAL BARS WITH MORE THAN 12" OF CONCRETE BELOW THEM.
2. WALL BARS ARE NOT CONSIDERED TOP BARS.
3. USE CLASS B SPLICES TYPICALLY U.N.O.
4. ALL LENGTHS ARE IN INCHES.
5. REF. ACI 318 -19 CHAPTER 25 SECTION 25.5.

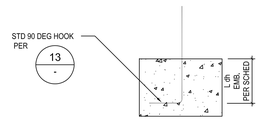

TENSION L dh HOOK EMBEDMENT

19 REINFORCING BAR SPLICE SCHEDULE IN CONCRETE

PRINT DATE:
FILE PATH:

DSA STAMP

STUDIO W ARCHITECTS

Studio W Architects
1930 H Street
Sacramento, California 95811
[T] 916.254.5600
www.StudioW-Architects.com

ARCHITECT	ENGINEER
LICENSED ARCHITECT BRYAN P. WHITMORE No. C 30345 Ren. 9/30/25 STATE OF CALIFORNIA	REGISTERED PROFESSIONAL ENGINEER No. 2998 Exp. 6-30-26 STRUCTURAL STATE OF CALIFORNIA
DATE SIGNED: 06/24/2024	DATE SIGNED: 06/24/2024

GENERAL NOTES
1. This sheet is part of a set and is not to be used alone.
2. This sheet is not to be used for construction unless the architect's stamp and signature appear on the drawings and the status box indicated drawings have been released for construction.
3. These plans and prints thereof, as instruments of service, are owned by the architect and are for use on this project only. Reproduction and/or distribution without the prior written consent of the architect is forbidden.
4. Copyright Studio W Associates, Inc. 2022.

REVISION HISTORY

DRAWING STATUS

	DATE
DSA PLAN CHECK	
DSA BACK CHECK	06/24/2024
BIDDING	
CONSTRUCTION	

KEY PLAN

BUENA PARK USD
6885 ORANGETHORPE AVE
BUENA PARK, CA 90620

SCHEMATIC DESIGN

CARL E. GILBERT ELEMENTARY SCHOOL
TK/PK CLASSROOMS & EARLY LEARNING BUILDING
7255 8TH STREET, BUENA PARK, CA 90621

TYPICAL CONCRETE DETAILS

Date	Project Number
06/24/2024	24-002
Application Number	Drawing Number
04-123212	S1.1
Drawn / Author	Checked / Checker

1 NAILING SCHEDULE

JOIST OR RAFTER TO SIDE OF STUD:	
8" DEEP JOIST OR LESS	3 - 16d
EACH ADDITIONAL 4" OF DEPTH	1 - 16d
BRIDGING TO JOIST;	
TOE NAIL EACH END	2 - 8d
BLOCKING BETWEEN JOISTS OR RAFTERS:	
TOE NAIL EACH SIDE, EACH END	2 - 10d*
BLOCKING BETWEEN STUDS:	
TOENAIL	4 - 8d
OR END NAIL	2 - 16d
1"x6" SUBFLOOR OR LESS TO EACH JOIST, FACE NAIL	2 - 8d
WIDER THAN 1"x6" SUBFLOOR TO EA. JOIST, FACE NAIL	3 - 8d
2" SUBFLOOR TO JOIST OR GIRDER, BLIND & FACE NAIL	2 - 16d
SOLE PLATE TO JOIST OR BLOCKING, FACE NAIL	16d @ 16"
SOLE PLATE TO JOIST OR BLKG. @ BRACED WALL PANELS	16d @ 16"
TOP PLATE TO STUD, END NAIL	2 - 16d
STUD TO SOLE PLATE:	
TOENAIL	4 - 8d
OR END NAIL	2 - 16d
DOUBLE STUDS, FACE NAIL	16d @ 24"
DOUBLE TOP PLATES, FACE NAIL	16d @ 16"
DOUBLE TOP PLATES, LAP SPLICE	8 - 16d
BLOCKING BETWEEN JOISTS OR RAFTERS TO TOP PLATE:	
TOENAIL	3 - 8d
RIM JOIST TO TOP PLATE;	
TOENAIL	8d @ 6"
TOP PLATES, LAPS & INTERSECTIONS, FACE NAIL	2 - 16d
CONTINUOUS HEADER, TWO PIECES - ALONG EA. EDGE	16d @ 16"
CEILING JOIST TO PLATE, TOENAIL	3 - 8d
CONTINUOUS HEADER TO STUD, TOENAIL	4 - 8d
CEILING JOISTS, LAPS OVER PARTITIONS, FACE NAIL	3 - 16d
CEILING JOISTS TO PARALLEL RAFTERS, FACE NAIL	3 - 16d
JOIST OR RAFTER AT ALL BEARINGS:	
TOE NAIL EACH SIDE	2 - 10d
1" BRACE TO EACH STUD & PLATE, FACE NAIL	2 - 8d
1"x8" SHEATHING OR LESS TO EA. BEARING, FACE NAIL	3 - 8d
WIDER THAN 1"x8" SHTG TO EA BEARING, FACE NAIL	3 - 8d
BUILT UP CORNER STUDS	16d @ 24"
BUILT UP GIRDER AND BEAMS;	
ALONG TOP AND BOTTOM OF BEAM OR JOIST	20d @ 32"
AT ENDS AND AT EACH SPLICE, STAGGER	2 - 20d
2" PLANKS, AT EA BEARING	2 - 16d
COLLAR TIES TO RAFTERS, FACE NAIL	3 - 10d

COMMON SHALL BE USED EXCEPT WHERE OTHERWISE STATED.

* WHEN POSSIBLE, NAILS DRIVEN PERPENDICULAR TO THE GRAIN SHALL BE USED INSTEAD OF TOE NAILS.

2 NON BEARING WALL BRACING

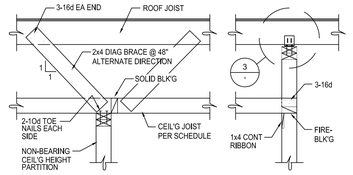

WALL PERPENDICULAR TO CEIL JOIST

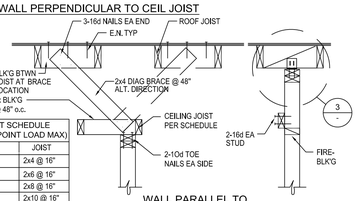

WALL PARALLEL TO CEILING JOIST

CEILING JOIST SCHEDULE (LL= 200LBS POINT LOAD MAX)	
SPAN	JOIST
≤ 6'-0"	2x4 @ 16"
6'-1" to 10'-0"	2x6 @ 16"
10'-1" to 12'-6"	2x8 @ 16"
12'-7" to 14'-0"	2x10 @ 16"
14'-1" to 16'-0"	2x12 @ 16"
16'-1" to 17'-6"	2x14 @ 16"

3 NON BEARING WALL SUPPORT

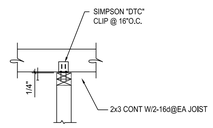

JOIST NORMAL TO WALL

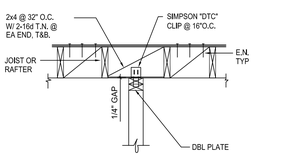

JOIST PARALLEL TO WALL

4 PLYWOOD ROOF DIAPHRAGM

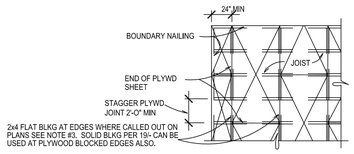

NOTES

1. RUN FACE GRAIN OF PLYWD PERPENDICULAR TO JOIST UNLESS NOTED OTHERWISE.
2. NAILS SHALL HAVE 3/8" MIN EDGE DISTANCE FROM EDGE OF PLYWD & FRAMING MEMBER. NAILS SHALL BE STAGGERED.
3. PROVIDE 3 x FRAMING WHERE NAIL SPACING IS LESS THAN 3" O.C. FOR 8d NAILS & 4" O.C. FOR 10d NAILS AT PLYWD JOINTS.
4. PROVIDE 3/4" NAIL EDGE DISTANCE AT 3 x MEMBERS.
5. WHERE JOIST LAP SPLICE OCCURS & PLYWD JOINT IS OFFSET, ADD 2x4 OR 3x4 NAILER AS SHOWN
6. BOUNDARY NAIL AT DIAPHRAM BOUNDARY. CHORDS, DRAG TIES, & WHERE CALLED OUT ON PLANS. DOUBLE ROW @ INTERIOR DRAG LINES
7. PLYWOOD JOINTS SHALL OCCUR AT THE CENTER OF FRAMING MEMBERS OR BLOCKING. THE MINIMUM EDGE DISTANCE FOR NAILS IN THE RECEIVING MEMBERS AND THE PLYWOOD SHALL BE 3/8" FOR 2-INCH NOMINAL RECEIVING MEMBERS AND 1/2" FOR 3-INCH NOMINAL RECEIVING MAMBERS. FLAT BLOCKING RECEIVING 10d NAILS SHALL BE 3-INCH BY 4-INCH NOMINAL OR LARGER.

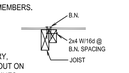

5 WASHER SCHEDULE

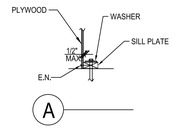

BOLT SIZE	STEEL WASHERS			MALL IRON ROUND
	SLOTTED	SQUARE	ROUND	
1/2"	3"x41/2"X3 GA	3"x1/4"	3 1/2"x1/4"	3 1/2"x1/4"
5/8"	3"x41/2"X3 GA	3"x1/4"	3 1/2"x1/4"	3 1/2"x5/16"
3/4"	3"x41/2"X3 GA	3"x1/4"	3 1/2"x5/16"	3 1/2"x7/16"
7/8"	-	3 1/4"x5/16"	3 1/2"x3/8"	3 1/2"x7/16"
1"	-	4"x3/8"	4"x7/16"	4"x1/2"

NOTES:

1. WASHERS SHALL BE USED UNDER ALL NUT & BOLT HEADS BEARING ON WOOD.
2. WASHER SCHEDULE ABOVE SHALL BE USED IN THE FOLLOWING LOCATIONS: ANCHOR BOLTS, WOOD TO STEEL & BOLTS IN TENSION AND SHEAR WALL A.B.
3. USE STANDARD CUT WASHERS AT ALL OTHER LOCATIONS.
4. WASHERS ABOVE ARE MIN. SIZES, SEE A/- FOR SHEAR WALL.

6 SHEAR WALL SCHEDULE AND DETAIL

SHEAR WALL SCHEDULE

MARK	PLYWOOD	NAIL AND SPACING			EDGE STUD & BLK'G	SILL PLATE SEE NOTE #6			A35/LTP4	SEISMIC SHEAR CAP. A.S.D.
		NAIL	E.N.	F.N.		CONNECTOR*	SPAC'G	SILL PLATE		
1	15/32"	10d	6"	12"	2x	5/8"Ø	4'-0"	2x	@ 12"o.c.	340 #/ft
2	15/32"	10d	4"	12"	2x	5/8"Ø	2'-8"	2x	@ 8"o.c.	510 #/ft
3	15/32"	10d	3"	12"	3x	5/8"Ø	1'-4"	3x	@ 6"o.c.	665 #/ft
4	15/32"	10d	2"	12"	3x	5/8"Ø	1'-4"	3x	@ 6"o.c.	820 #/ft
5	3/8"	8d	6"	12"	2x	5/8"Ø	4'-0"	2x	@ 16"o.c.	280 #/ft

*ANCHOR BOLT @ EXT. 2x6 WALL EMBED LENGTH SHALL BE 9" BELOW TOP OF SLAB
*ANCHOR BOLT @ 1 3/4" x 1 1/4" STUD WALL, PROVIDE EMBED LENGTH OF 8" BELOW TOP OF CURB.

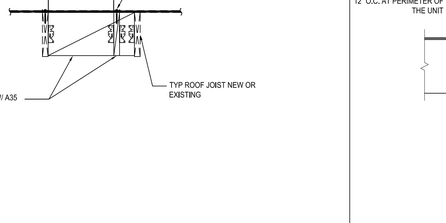

NOTES:

1. ALL PLYWOOD SHEATHING SHALL BE STRUCT I PLYWOOD.
2. ALL PLYWOOD EDGES SHALL BE BLOCKED WITH 2-INCH NOMINAL OR THICKER FRAMING. PLYWOOD MAY BE INSTALLED EITHER HORIZONTALLY OR VERTICALLY.
3. WHERE PLYWOOD PANELS ARE APPLIED ON BOTH FACES OF A WALL AND NAIL SPACING IS LESS THAN 6 INCHES, PANEL JOISTS SHALL BE OFFSET TO FALL ON DIFFERENT FRAMING MEMBERS, OR THE FRAMING SHALL BE 3 INCHES NOMINAL OR THICKER AT ADJOINING PANEL EDGES AND NAILS ON EACH SIDE SHALL BE STAGGERED.
4. SHEARWALLS MORE THAN ONE VERTICAL PANEL IN HEIGHT SHALL HAVE EITHER VERT OR HORIZ STAGGERED SPLICED JOINTS. AT CONT HORIZ JOINTS THE BLK'G SHALL BE 3" NOMINAL OR THICKER.
5. THE MINIMUM EDGE DISTANCE FOR NAILS IN THE RECEIVING MEMBERS AND THE PLYWOOD SHALL BE 3/8" FOR 2" NOMINAL RECEIVING MEMBERS AND 1/2" FOR 3" NOMINAL RECEIVING MEMBERS. BLK'G RECEIVING 10d NAILS SHALL BE 3" NOMINAL OR LARGER.
6. SILL PLATE SHALL BE PRESSURE TREATED D.F. AND CONFORM TO SILL PLATE DETAILS. PROVIDE MINIMUM OF 3 ANCHOR BOLTS IN ALL SHEARWALLS.
7. ANCHOR SPACING SHALL BE REDUCED TO HALF THE SPACING SHOWN WHERE SHEARWALL SHEATHING IS ON BOTH SIDES OF THE WALL (TWICE AS MANY A.B.). ALSO STAGGER NAILING @ JOINTS.
8. ALL DEFECTIVE NAILS SHALL BE REMOVED & REPLACED WITH SOUND NAILING.
9. NAILING WITH MACHINE NAILS SHALL CONFORM TO THE WOOD GENERAL NOTES ON COVER SHEET.
10. ALL ANCHOR BOLTS AT SHEAR WALL SHALL BE 12" LONG HEX BOLTS U.N.O.
11. ALL NAILS TO SILL PLATE (P.T.D.F.) SHALL BE GALVANIZED.

7 STEEL TUBE NAILER

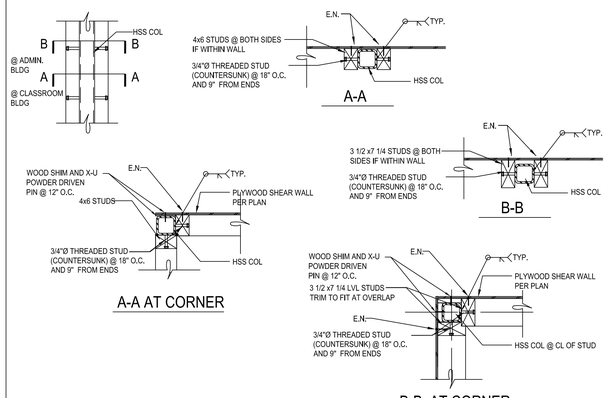

8 SILL PLATE DETAIL

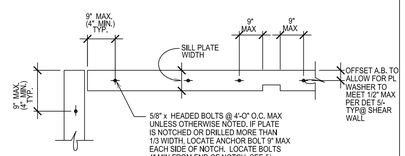

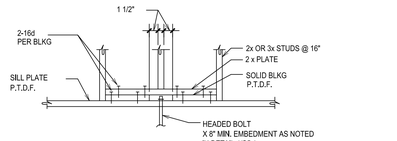

9 HEADER SCHEDULE

CLEAR OPNG WIDTH	HEADER SIZE	REMARKS
TO 4'-0"	6x6	
4'-1" TO 6'-0"	6x6	
6'-1" TO 8'-0"	6x8	
8'-1" TO 10'-0"	6x10	2-CRIPPLE STUDS U.N.O.
10'-1" TO 12'-0"	6x12	2-CRIPPLE STUDS U.N.O.

NOTE:

USE ABOVE SCHEDULED SIZES ONLY WHERE SIZE IS NOT INDICATED ON PLANS & DETAILS AND ONLY AFTER PRIOR WRITTEN APPROVAL FROM STRUCTURAL ENGINEER & D.S.A. IF SPAN EXCEEDS 12'-0".

10 TOP PLATE NOTCH

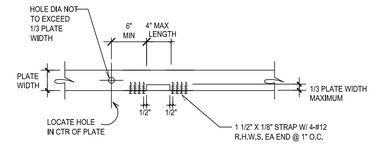

NOTE:

NOTCHES NOT PERMITTED WITHOUT PRIOR APPROVAL OF STRUCTURAL ENGINEER.

11 TOP PLATE SPLICE

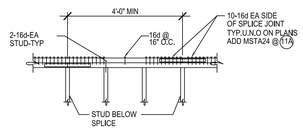

NOTE:
PROVIDE SPLICE W/ 3-16d AT PLATE LAPS AT CORNERS & INTERSECTIONS.

12 TYPICAL STUD WALL

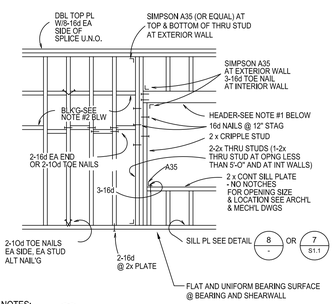

NOTES:
1. SEE DETAIL 9 FOR TYPICAL HEADER
2. BLOCKING REQ'D AT CEILING LINE & 8'-0" o.c. MAX SPACING. 2 x STUD WIDTH SOLID BLOCKING REQ'D. SEE SHEAR WALL DETAILS & SECTIONS FOR ADDITIONAL BLOCKING REQ'D.

13 STEEL TUBE NAILER

14 JOIST TO BEAM HANGER SCHEDULE

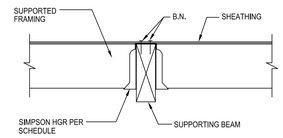

SUPPORTED FRAMING	HGR TYPE
2x	"U"
SKEWED 2x	"W"
MULTIPLE JOIST	"WNP"
3x AND LARGER	"HU"
GLB	"GLT"
Wx STEEL BM	"BA"

15 TYPICAL ROOF OPENING

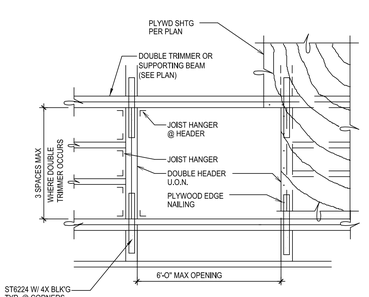

NOTE:
JOIST HGRS TO BE SIMPSON STD U JOIST HGRS. (OR EQUAL)

16 EXHAUST FAN SUPPORT

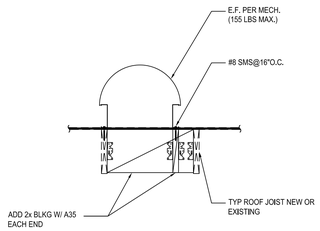

17 HVAC UNIT SUPPORT

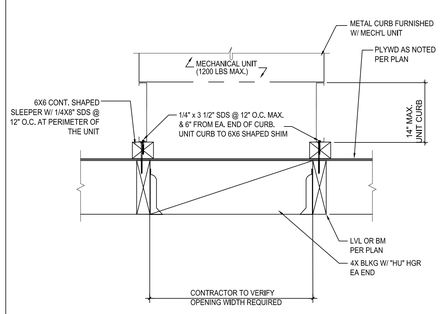

18 CONDENSING UNIT SUPPORT

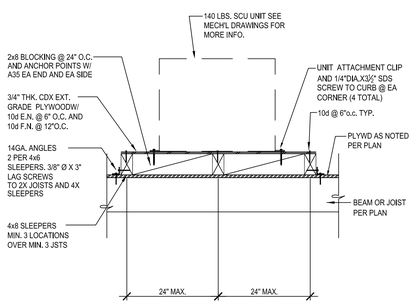

19 TYP. BLOCK'G OR CROSS BRIDGING

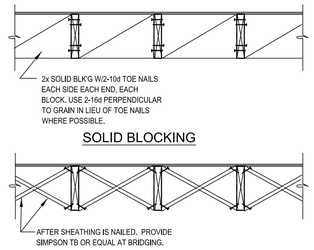

NOTE: PROVIDE BLOCKING OR BRIDGING AT 8'-0" O.C. MAX AT ROOF JOISTS DEEPER THAN 8" AND AT ALL FLOOR JOISTS.

BLOCKING BETWEEN JOISTS TYPICAL AT ROOF & FLOOR

20 TYP. SHEAR WALL BLOCKING

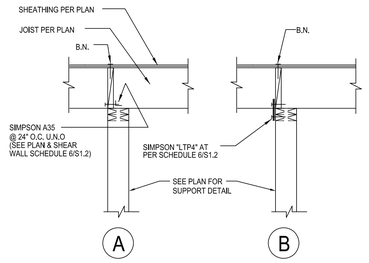

PRINT DATE:
FILE PATH:

DSA STAMP

STUDIO W ARCHITECTS

Studio W Architects
1930 H Street
Sacramento, California 95811
[T] 916.254.5600
www.StudioW-Architects.com

ARCHITECT	ENGINEER
LICENSED ARCHITECT BRYAN P. WHITNEY No. C 30345 Ren. 9/30/25 STATE OF CALIFORNIA	REGISTERED PROFESSIONAL ENGINEER No. 2998 Exp. 6-30-26 STRUCTURAL STATE OF CALIFORNIA
DATE SIGNED: 06/24/2024	DATE SIGNED: 06/24/2024

GENERAL NOTES

1. This sheet is part of a set and is not to be used alone.
2. This sheet is not to be used for construction unless the architect's stamp and signature appear on the drawings and the status box indicated drawings have been released for construction.
3. These plans and prints thereof, as instruments of service, are owned by the architect and are for use on this project only. Reproduction and/or distribution without the prior written consent of the architect is forbidden.
4. Copyright Studio W Associates, Inc. 2022.

REVISION HISTORY

DRAWING STATUS

	DATE
○ DSA PLAN CHECK	
● DSA BACK CHECK	06/24/2024
○ BIDDING	
○ CONSTRUCTION	

KEY PLAN

BUENA PARK USD
6885 ORANGETHORPE AVE
BUENA PARK, CA 90620

SCHEMATIC DESIGN

CARL E. GILBERT ELEMENTARY SCHOOL
TK/PK CLASSROOMS & EARLY LEARNING BUILDING
7255 8TH STREET, BUENA PARK, CA 90621

TYPICAL WOOD FRAMING DETAILS

Date	Project Number
06/24/2024	24-002
Application Number	Drawing Number
04-123212	S1.2
Drawn / Author	Checked / Checker

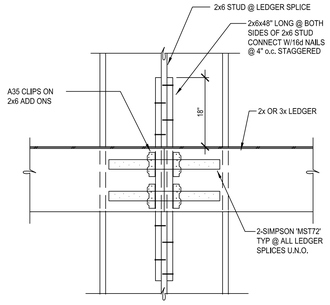

2 TYPICAL LEDGER SPLICE

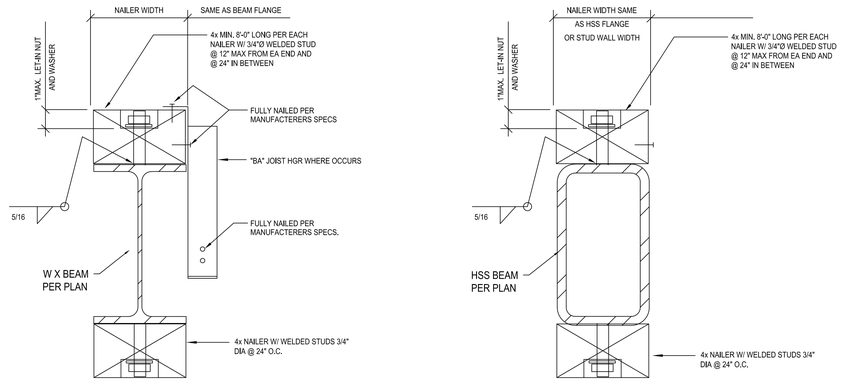

3 TYPICAL NAILER AT STEEL BEAM

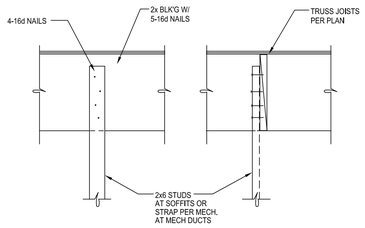

4 TYPICAL SOFFIT HANGER DETAIL

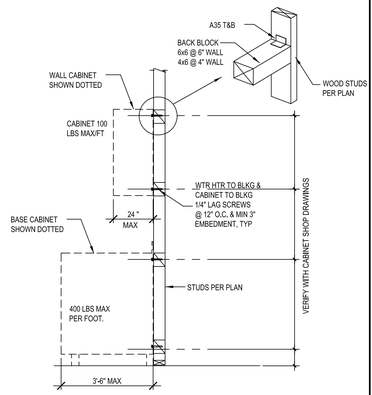

5 CABINET ANCHORAGE TO WALL

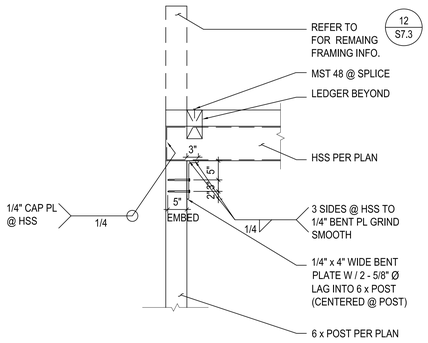

6 DETAIL

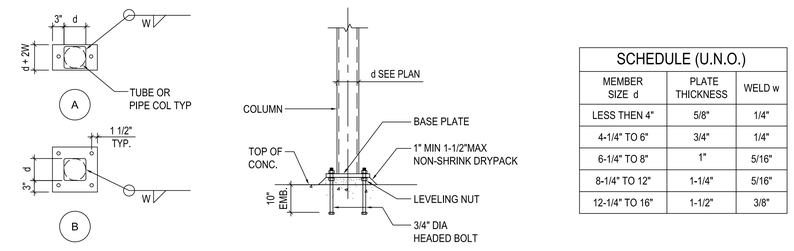

SCHEDULE (U.N.O.)		
MEMBER SIZE d	PLATE THICKNESS	WELD w
LESS THEN 4"	5/8"	1/4"
4-1/4" TO 6"	3/4"	1/4"
6-1/4" TO 8"	1"	5/16"
8-1/4" TO 12"	1-1/4"	5/16"
12-1/4" TO 16"	1-1/2"	3/8"

7 TYPICAL COL BASE PLATE

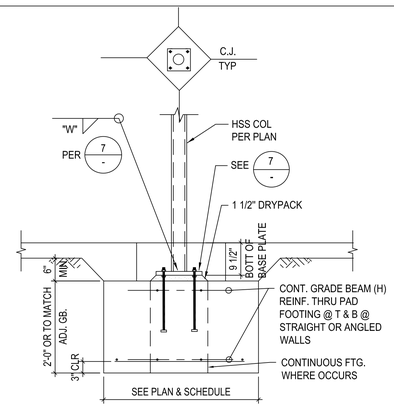

7.1 FOOTING AT STEEL COLUMN

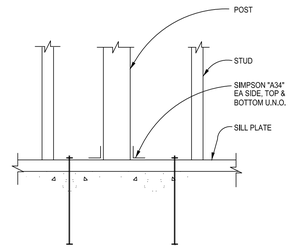

8 TYPICAL WOOD POST TO SILL PLATE

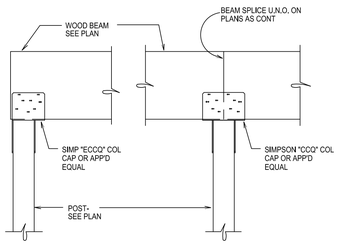

9 BEAM TO POST CONNECTION

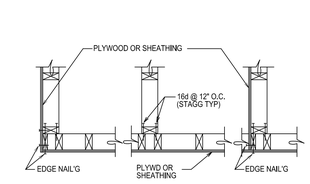

NOTE:

PROVIDE 3 x STUD OR POST AS REQ'D.

10 WALL INTERSECTIONS

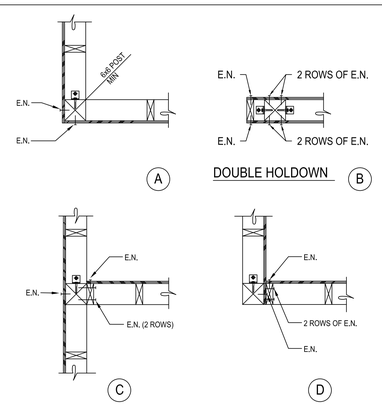

11 HOLDOWNS AT INTERSECTIONS

HOLDOWN OF	1/4x2.5 SDS @ POST, U.N.O.	PAB ANCHOR	CONC. MIN. STRENGTH (PSI)	MIN. EMBED. Le	POST SIZE U.N.O	(ASD) MAX. CAP
HDU2	6	5/8"Ø	4500	12"	4x	2460 LBS
HDU5	14	5/8"Ø	4500	16"	4x	4516 LBS
HDU8	20	7/8"Ø	4500	16"	4x	5576 LBS
HDU11	30	1"Ø (SEE DET. BELOW)	4500	18"	6x	8940 LBS
HDU14	36	1"Ø (SEE DET. BELOW)	4500	18"	6x	11556 LBS
HD19	5-1"Ø BOLTS	1 1/4"Ø	4500	18"	6x	15256 LBS

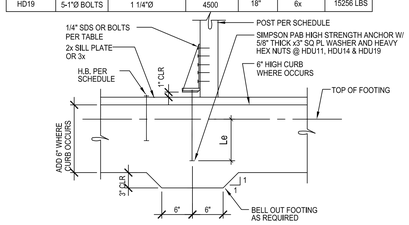

12 TYP HOLDOWN AT NEW FOUNDATION

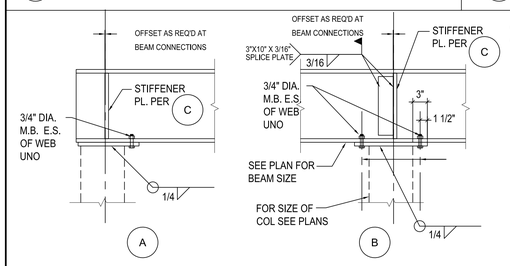

NOTE:

1. COLUMN CAP PLATE SHALL BE THE SAME WIDTH AS BEAM FLANGE OR COLUMN DIMENSION +1/2" (WHICHEVER IS GREATER). THICKNESS SAME AS BEAM FLANGE (1/2" MIN)

2. USE 5/8" DIA M.B. WHEN FLANGE = 4"

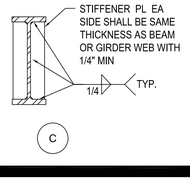

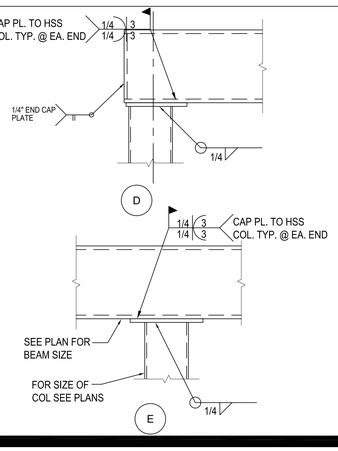

14 TYPICAL BEAM TO COLUMN

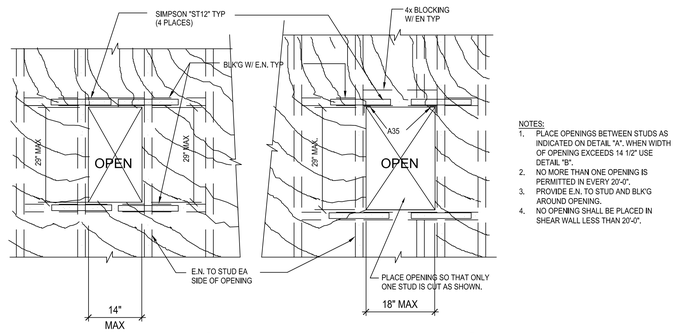

NOTES:
1. PLACE OPENINGS BETWEEN STUDS AS INDICATED ON DETAIL "A", WHEN WIDTH OF OPENING EXCEEDS 14 1/2" USE DETAIL "B".
2. NO MORE THAN ONE OPENING IS PERMITTED IN EVERY 20'-0".
3. PROVIDE E.N. TO STUD AND BLK'G AROUND OPENING.
4. NO OPENING SHALL BE PLACED IN SHEAR WALL LESS THAN 20'-0".

16 SMALL OPENING IN SHEAR WALL

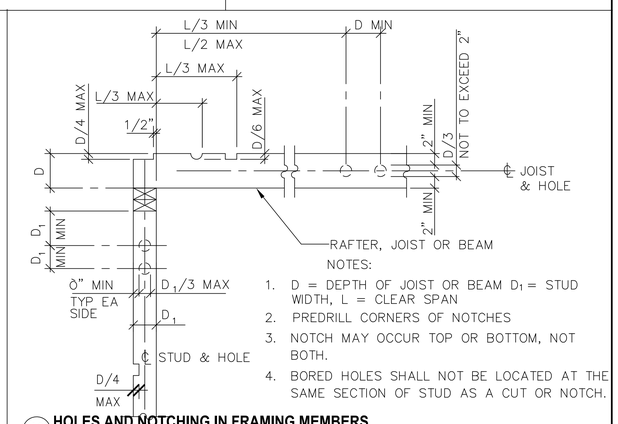

NOTES:
1. D = DEPTH OF JOIST OR BEAM D_1 = STUD WIDTH, L = CLEAR SPAN
2. PREDRILL CORNERS OF NOTCHES
3. NOTCH MAY OCCUR TOP OR BOTTOM, NOT BOTH.
4. BORED HOLES SHALL NOT BE LOCATED AT THE SAME SECTION OF STUD AS A CUT OR NOTCH.

18 HOLES AND NOTCHING IN FRAMING MEMBERS

PRINT DATE:
FILE PATH:

DSA STAMP

STUDIO W ARCHITECTS

Studio W Architects
1930 H Street
Sacramento, California 95811
[T] 916.254.5600
www.StudioW-Architects.com

ARCHITECT	ENGINEER
LICENSED ARCHITECT BRYAN P. WHITMORE No. C 30345 Ren. 9/30/25 STATE OF CALIFORNIA	REGISTERED PROFESSIONAL ENGINEER STRUCTURAL No. 2998 Exp. 6-30-26 STATE OF CALIFORNIA
DATE SIGNED: 06/24/2024	DATE SIGNED: 06/24/2024

GENERAL NOTES

1. This sheet is part of a set and is not to be used alone.
2. This sheet is not to be used for construction unless the architect's stamp and signature appear on the drawings and the status box indicated drawings have been released for construction.
3. These plans and prints thereof, as instruments of service, are owned by the architect and are for use on this project only. Reproduction and/or distribution without the prior written consent of the architect is forbidden.
4. Copyright Studio W Associates, Inc. 2022.

REVISION HISTORY

DRAWING STATUS

	DATE
○ DSA PLAN CHECK	
● DSA BACK CHECK	06/24/2024
○ BIDDING	
○ CONSTRUCTION	

KEY PLAN

BUENA PARK USD
6885 ORANGETHORPE AVE
BUENA PARK, CA 90620

SCHEMATIC DESIGN

CARL E. GILBERT ELEMENTARY SCHOOL
TK/PK CLASSROOMS & EARLY LEARNING BUILDING
7255 8TH STREET, BUENA PARK, CA 90621

TYPICAL FRAMING DETAILS

Date	Project Number
06/24/2024	24-002
Application Number	Drawing Number
04-123212	S1.3
Drawn / Author	Checked / Checker

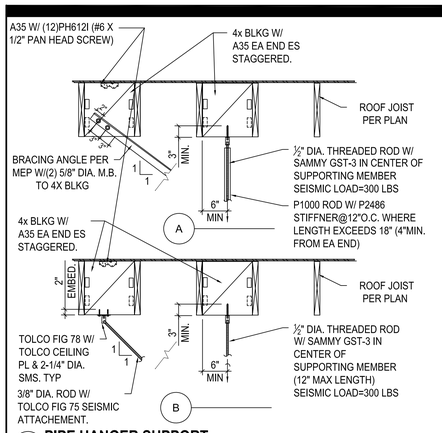

1 PIPE HANGER SUPPORT
3/4"= 1'-0"

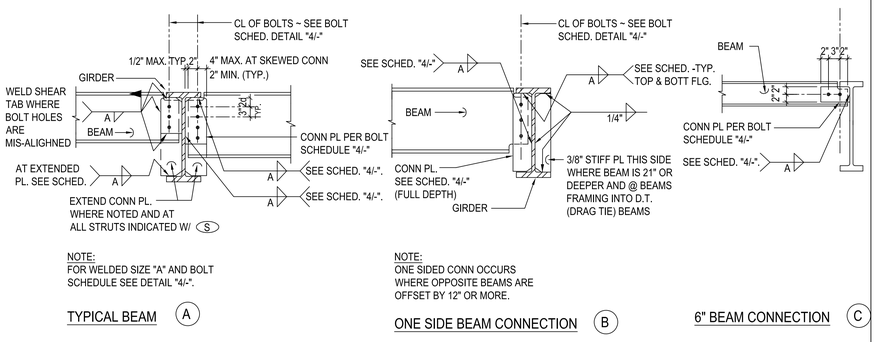

2 TYPICAL BEAM TO BEAM CONNECTION

SIMPLE BEAM CONNECTION SCHEDULE			
SHEAR PL. CONNECTION			
MEMBER (DEPTH)	# OF BOLTS	CONN PL "t"	WELD SIZE "A"
6"	2	3/8"	1/4"
8" - 10"	2	3/8"	1/4"
12" - 14"	3	3/8"	1/4"
15" - 16"	4	3/8"	1/4"
18"	5	1/2"	5/16"
20" & 21"	5	1/2"	5/16"
24"	6	5/8"	5/16"
27"	7	5/8"	5/16"
30" & 33"	8	5/8"	5/16"
36"	9	5/8"	5/16"

4 TYPICAL BOLT SCHEDULE

NOTES:

1. FILLET WELD SIZE SHALL BE AS SHOWN UNLESS A GREATER SIZE IS REQUIRED BY A.I.S.C. TABLE J2.4.
2. d = DIAMETER OF BOLT
3. BOLTS SHALL BE 1" DIA A490SC AT FLOORS AND 1" DIA A307 @ ROOFS (ALL DRAG TIE BEAMS (D.T.) SHALL BE CONNECTED W/A490SC AT EITHER ROOF OR FLOOR).
4. WHERE NUMBER OF REQ'D BOLTS PER PLAN ARE MORE THAN NUMBER OF BOLTS IN SCHEDULE, USE MAXIMUM BOLTS POSSIBLE IN FIRST ROW AND BALANCE IN SECOND ROW WITH 3" FROM FIRST ROW. (2 BOLTS MIN AT SECOND ROW) BOLTS IN SECOND ROW SHALL BE PLACED EQUALLY BETWEEN TOP AND BOTTOM BOLTS IN FIRST ROW.
5. INSTALLATION OF HIGH STRENGTH BOLTS IN SLIP CRITICAL JOINT SHALL BE TENSIONED BY CALIBRATED WRENCH. UNDER CONTINUOUS INSPECTION BY SPECIAL INSPECTOR WRENCH SHALL BECALIBRATED AT LEAST TWICE A DAY.

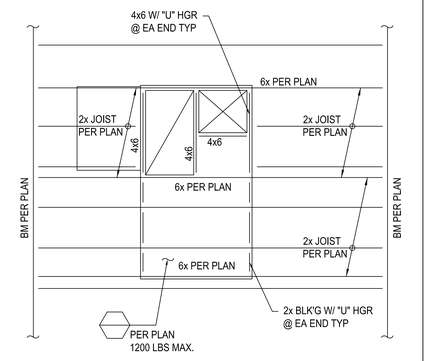

8 TYPICAL FRAMING @ HVAC UNIT
1/2" = 1'-0"

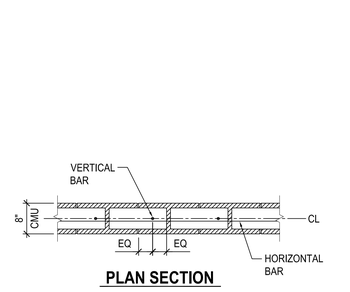

PLAN SECTION

9 DETAIL FOR CLR. DISTANCE

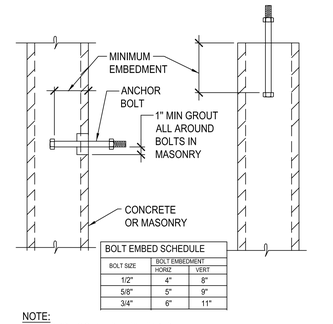

BOLT EMBED SCHEDULE		
BOLT SIZE	BOLT EMBEDMENT	
	HORIZ.	VERT.
1/2"	4"	8"
5/8"	5"	9"
3/4"	6"	11"

NOTE:
ANCHOR BOLTS SHALL BE HEX HEADED BOLTS CONFORMING TO ASTM A307. HEX HEAD TO CONFORM ANSI/ASME B18-2-1.

10 BOLT EMBEDMENT SCHEDULE

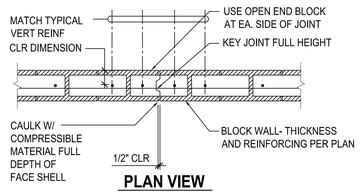

PLAN VIEW

NOTES :

1. PROVIDE VERTICAL CONTRACTION JOINTS IN WALL AT 25'-0"O.C. MAX. U.N.O. ON PLANS.
2. STOP EVERY OTHER HORIZONTAL REINFORCEMENT AT 2" FROM JOINT. AND ADD 180 DEGREE HOOK PER 12/- TYP BOTH SIDES. HORIZONTAL REINF. AT ROOF AND FLOOR SHALL BE CONTINUOUS.
3. SEE ARCH. DWG'S. FOR LOCATIONS.
4. ALL CHORD BAR & LINTEL BAR SHALL BE CONTINUOUS THRU EXPANSION JOINT.

11 CONTRACTION JOINT DETAIL

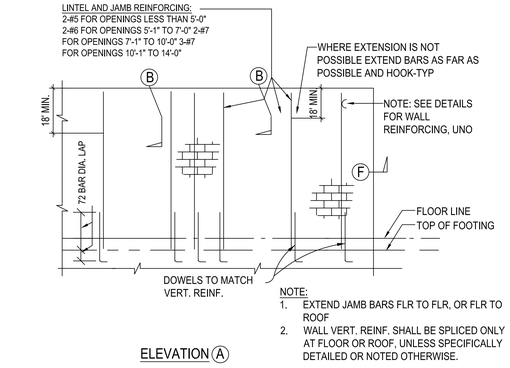

13 TYPICAL CMU WALL DETAILING

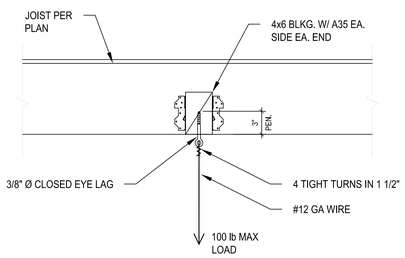

16 HANGER WIRE TO FRAMING
1 1/2" = 1'-0"

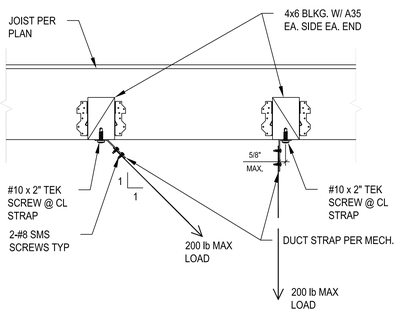

17 DUCT STRAPS TO FRAMING
1 1/2" = 1'-0"

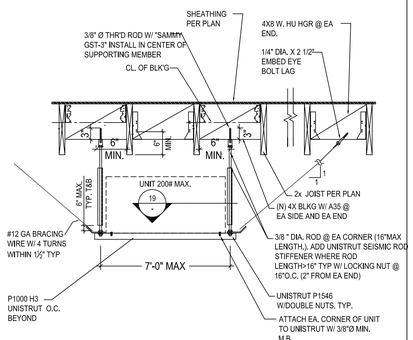

18 UNIT SUPPORT DETAIL

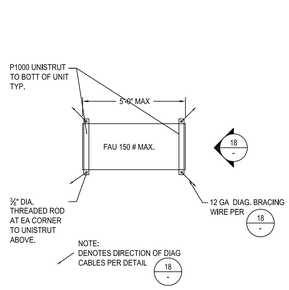

PLAN VIEW
INDOOR SUSPENDED UNITS (150 LBS)

19

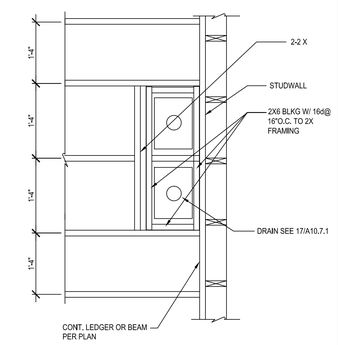

20 FRAMING AT ROOF DRAIN

DSA STAMP

STUDIO W ARCHITECTS

Studio W Architects
1930 H Street
Sacramento, California 95811
[T] 916.254.5600
www.StudioW-Architects.com

ARCHITECT	ENGINEER
LICENSED ARCHITECT BRYAN P. WHITMORE No. C 30345 Ren. 9/30/25 STATE OF CALIFORNIA	REGISTERED PROFESSIONAL ENGINEER No. 2998 Exp. 6-30-26 STRUCTURAL STATE OF CALIFORNIA
DATE SIGNED: 06/24/2024	DATE SIGNED: 06/24/2024

GENERAL NOTES

1. This sheet is part of a set and is not to be used alone.
2. This sheet is not to be used for construction unless the architect's stamp and signature appear on the drawings and the status box indicated drawings have been released for construction.
3. These plans and prints thereof, as instruments of service, are owned by the architect and are for use on this project only. Reproduction and/or distribution without the prior written consent of the architect is forbidden.
4. Copyright Studio W Associates, Inc. 2022.

REVISION HISTORY

DRAWING STATUS

	DATE
○ DSA PLAN CHECK	
● DSA BACK CHECK	06/24/2024
○ BIDDING	
○ CONSTRUCTION	

KEY PLAN

BUENA PARK USD
6885 ORANGETHORPE AVE
BUENA PARK, CA 90620

SCHEMATIC DESIGN

CARL E. GILBERT ELEMENTARY SCHOOL
TK/PK CLASSROOMS & EARLY LEARNING BUILDING
7255 8TH STREET, BUENA PARK, CA 90621

TYPICAL FRAMING DETAILS

Date	Project Number
06/24/2024	24-002
Application Number	Drawing Number
04-123212	S1.4
Drawn / Author	Checked / Checker

PRINT DATE:
FILE PATH:

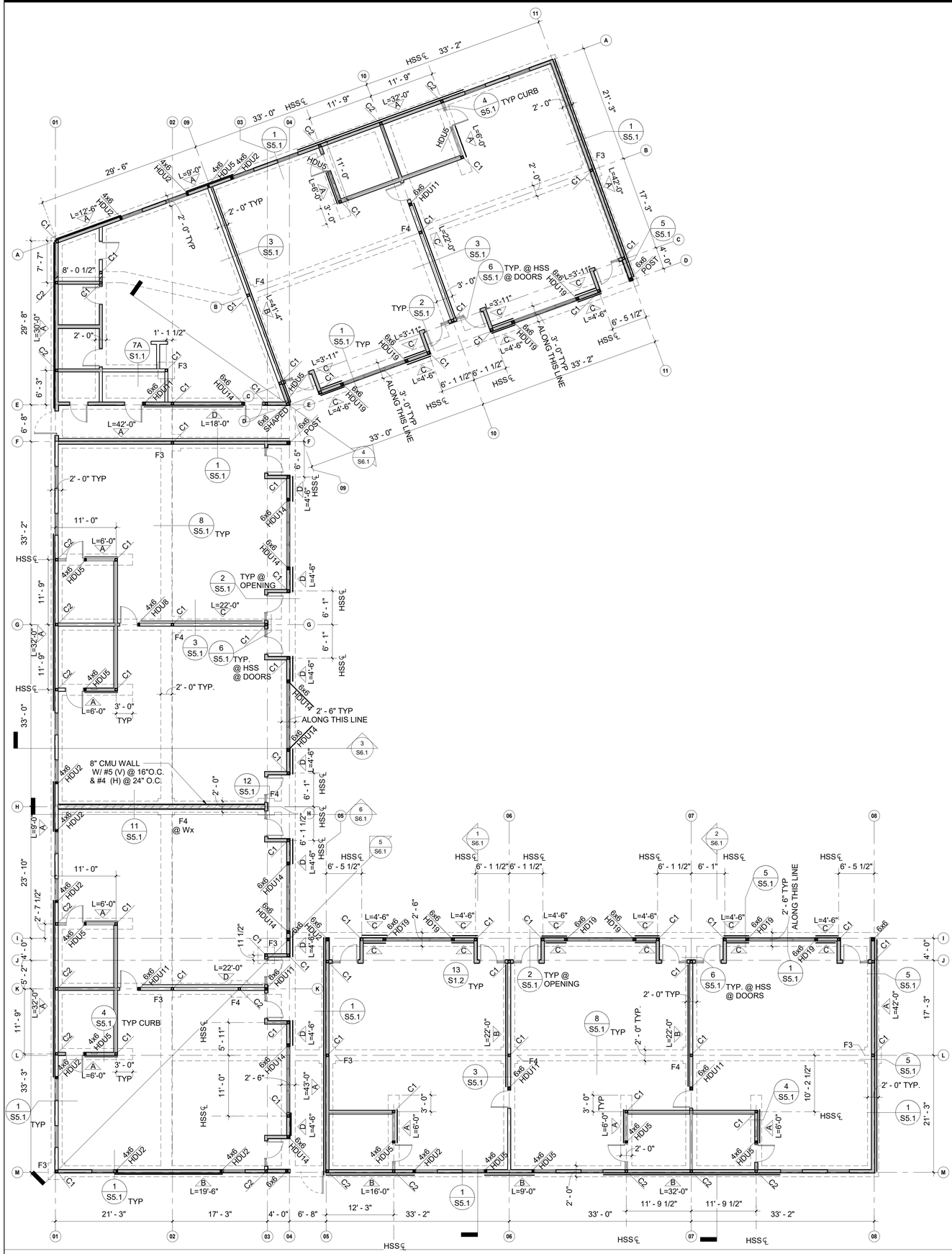

FOUNDATION NOTES:

1. FOR STRUCTURAL NOTES AND TYPICAL DETAILS, REFER TO SHEET S0.1 THROUGH S1.4
2. INDICATES FINISH FLOOR ELEVATION
3. INDICATES CONTINUOUS FOOTING, SEE SECTION DETAIL FOR FOOTING THICKNESS AND REINFORCEMENT.
4. INDICATES 6" MIN. HIGH CONCRETE CURB
5. INDICATES BEARING AND/OR SHEAR WALL FTG.
6. INDICATES SHEAR WALL. SEE DETAIL 6/S1.2 FOR SHEAR WALL SCHEDULE
   L= INDICATES PLYWOOD PANEL LENGTH WHERE ACTUAL WALL IS LONGER THAN MINIMUM LENGTH SPECIFIED ON PLAN, EXTEND SHEAR PANEL & HOLDOWNS ACCORDINGLY TO EDGE OF WALL. REFER TO DETAIL 11/S1.3
7. HD INCICATES HOLDOWN @ END OF SHEARWALL. SEE DETAIL 12/S1.3 FOR TYPICAL HOLDOWN DETAIL
8. ALL HARDWARE TO BE SIMPSON STRONG TIE PRODUCT OR APPROVED EQUAL
9. SEE ARCHITECTURAL DRAWINGS FOR DIMENSIONS NOT SHOWN. COORDINATE ALL POST-COLUMN HOLDOWNS, ETC., BASED ON ARCHITECTURAL DRAWINGS UNLESS NOTED OTHERWISE.
10. SOILS ENGINEER SHALL INSPECT AND APPROVE BOTTOM OF ALL FOUNDATIONS PRIOR TO CONTRACTOR PLACING REINFORCEMENT OR CONCRETE.
11. ALL EXTERIOR STUD WALLS (INCLUDING NON-SHEAR WALLS) SHALL BE COVERED W/ MIN. 15/32" THICK STRUCT 1 PLYWOOD FOR ARCH'L FINISH. OUTSIDE FACE OF PLYWOOD SHALL BE FLUSH WITH OUTSIDE FACE OF CONCRETE CURB. USE 10 d NAILS @ 6" O.C.(EDGE) & 12" O.C. (FIELD) FOR ALL PLYWOOD U.N.O.
12. INDICATES TYPICAL 1 5/8" SLAB RECESS U.N.O. SEE ARCH'L PLAN FOR DETAIL
13. ALL CONCRETE SLAB ON GRADE SHALL BE MIN. 5" THK. WITH #4 @ 18" O.C. EACH WAY OVER 10 MIL POLYETHYLENE VAPOR RETARDER OVER 4" FREE DRAINING SAND OR GRAVEL LAYER COMPACTED TO 90%. REFER TO GEOTECHNICAL REPORT OF ADD'L INFO.
14. S S INDICATES STEPPED FOOTING, SEE DETAIL 6/S1.1

PAD FOOTING SCHEDULE			
MARK	W	H	REINF.
F3	3'-0" SQ.	24"	4 - # 6 T&B
F4	4'-0" SQ.	24"	5 - # 6 T&B

COL SCHEDULE	
C1	HSS 5x5x1/4
C2	HSS 5x5x1/2

FOUNDATION PLAN | 1/8" = 1'-0" | 1

DSA STAMP

STUDIO W ARCHITECTS

Studio W Architects
1930 H Street
Sacramento, California 95811
[T] 916.254.5600
www.StudioW-Architects.com

ARCHITECT	ENGINEER
LICENSED ARCHITECT BRIAN P WHITMORE No. C 30345 Ren. 9/30/25 STATE OF CALIFORNIA	REGISTERED PROFESSIONAL ENGINEER No. 2998 Exp. 6-30-26 Structural STATE OF CALIFORNIA
DATE SIGNED: 06/24/2024	DATE SIGNED: 06/24/2024

GENERAL NOTES
1. This sheet is part of a set and is not to be used alone.
2. This sheet is not to be used for construction unless the architect's stamp and signature appear on the drawings and the status box indicated drawings have been released for construction.
3. These plans and prints thereof, as instruments of service, are owned by the architect and are for use on this project only. Reproduction and/or distribution without the prior written consent of the architect is forbidden.
4. Copyright Studio W Associates, Inc. 2022.

REVISION HISTORY

NO.	REMARKS	DATE

DRAWING STATUS

	DATE
DSA PLAN CHECK	
DSA BACK CHECK	06/24/2024
BIDDING	
CONSTRUCTION	

KEY PLAN

BUENA PARK USD

SCHEMATIC DESIGN

CARL E. GILBERT ELEMENTARY SCHOOL
7255 8TH STREET, BUENA PARK, CA 90621

FOUNDATION PLAN

Date	Project Number
06/24/2024	24-002
Application Number	Drawing Number
04-123212	S2.1
Drawn / Author	Checked / Checker

PRINT DATE: 6/19/2024 4:07:30 PM
FILE PATH: C:\Users\ATTocon\Documents\22078-BPUSD Gilbert\BLDG S21_anamocha.rvt

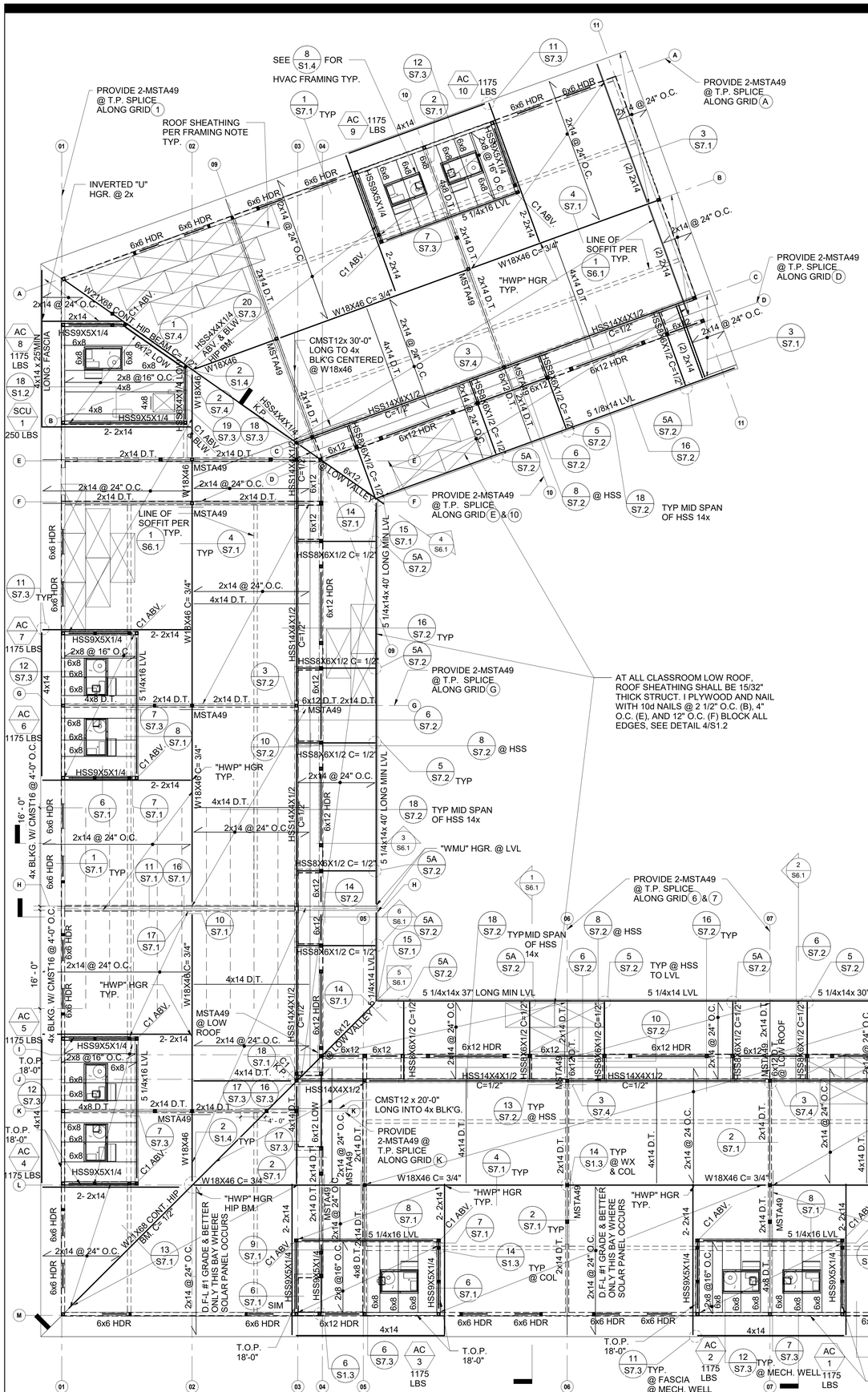

ROOF FRAMING PLAN | 1/8" = 1'-0" | 1

ROOF FRAMING NOTES:

1. FOR STRUCTURAL GENERAL NOTES AND TYPICAL DETAILS, REFER TO SHEET S0.1, THROUGH S1.4
2. SEE GENERAL NOTE ON SHEET S0.1 FOR DESIGN ROOF LIVE AND WIND LOAD.
3. ◯ ◯ INDICATES ROOF DRAIN LOCATION. COORDINATE WITH ARCHITECTURAL ROOF PLAN. DRAING/OVERFLOW DETAIL PER 20/S1.4
4. SEE DETAIL 15/S1.2 FOR TYPICAL FRAMING AT ROOF OPENING UNLESS NOTED OTHERWISE
5. SEE DETAIL 19/S1.2 FOR BLOCKING BETWEEN ROOF JOISTS @ 8'-0" O.C.
6. D.T. DENOTES STRUT MEMBER, ALL STRUT LINES TO RECEIVE BUNDARY NAILING
7. SEE 16, 17 & 18/S1.2 AND 8/S1.4 FOR FRAMING @MECHANICAL UNITS
8. C= DENOTES CAMBER ON STEEL BEAM
9. ALL PLYWOOD SHEATING AT WALLS SHALL EXTEND TO ROOF SHEATHING AND/OR FRAMING
10. ALL HARDWARE TO BE "SIMPSON STRON TIE" PRODUCT OR AN APPROVED EQUIVALENT
11. SEE ARCHITECTURAL DRAWINGS FOR DIMENSIONS NOT SHOWN. COORDINATE ALL POST-COLUMN BASED ON ARCHITECTURAL DRAWINGS UNLESS NOTED OTHERWISE
12. ROOF SHEATHING SHALL BE 15/32" THICK STRUCT 1 PLYWOOD AND NAIL WITH 10d NAILS @ 4" O.C.(E), 4" O.C. (B), AND 12" O.C.(F) UNLESS NOTED OTHERWISE. BLOCK ALL EDGES, SEE 4/S1.2
13. FOR NON-BEARING INT. WALL, SEE DETAIL 2/S1.2 AND 3/S1.2
14. SEE 9/S1.2 FOR HEADER SIZES NOT SHOWN
15. △ INDICATES SHEAR WALL. SEE DETAIL 6/S1.2 FOR SHEAR WALL SCHEDULE
    L= INDICATES PLYWOOD PANEL LENGTH WHERE ACTUAL WALL IS LONGER THAN MINIMUM LENGTH SPECIFIED ON PLAN, EXTEND SHEAR PANEL & HOLDOWNS ACCORDINGLY TO EDGE OF WALL.
16. T.O.P. INDICATES TOP OF PARAPET
17. T.O.S. INDICATE TOP OF PLYWOOD SHEATHING
18. ▶— INDICATES MOMENT CONNECTION. REFER TO 9/S7.3 FOR DETAIL

DSA STAMP

STUDIO W ARCHITECTS

Studio W Architects
1930 H Street
Sacramento, California 95811
[T] 916.254.5600
www.StudioW-Architects.com

ARCHITECT	ENGINEER
LICENSED ARCHITECT BRIAN P WHITMORE No. C 30345 Ren. 9/30/25 STATE OF CALIFORNIA	REGISTERED PROFESSIONAL ENGINEER Exp. 6-30-26 STATE OF CALIFORNIA
DATE SIGNED: 06/24/2024	DATE SIGNED: 06/24/2024

GENERAL NOTES
1. This sheet is part of a set and is not to be used alone.
2. This sheet is not to be used for construction unless the architect's stamp and signature appear on the drawings and the status box indicated drawings have been released for construction.
3. These plans and prints thereof, as instruments of service, are owned by the architect and are for use on this project only. Reproduction and/or distribution without the prior written consent of the architect is forbidden.
4. Copyright Studio W Associates, Inc. 2022.

REVISION HISTORY

NO.	REMARKS	DATE

DRAWING STATUS
- ○ DSA PLAN CHECK
- ● DSA BACK CHECK 06/24/2024
- ○ BIDDING
- ○ CONSTRUCTION

KEY PLAN

BUENA PARK USD

SCHEMATIC DESIGN

CARL E. GILBERT ELEMENTARY SCHOOL
7255 8TH STREET, BUENA PARK, CA 90621

ROOF FRAMING PLAN

Date	Project Number
06/24/2024	24-002
Application Number	Drawing Number
04-123212	S4.1
Drawn / Author	Checked / Checker

PRINT DATE: 6/19/2024 4:07:31 PM
FILE PATH: C:\Users\ATmoody\Documents\2207R-BPUSD Gilbert-BLDG-S21_anarmeotha.rvt

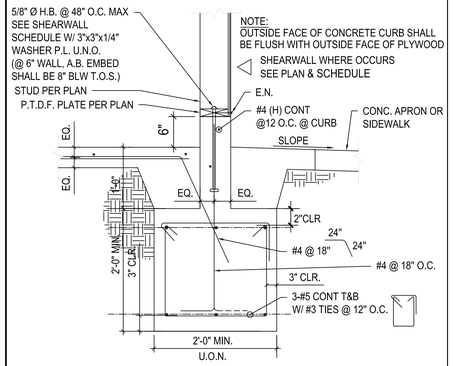

1 EXTERIOR STUD WALL FOOTING

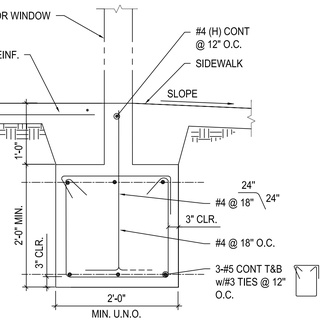

2 FOOTING @ DOOR OPENINGS

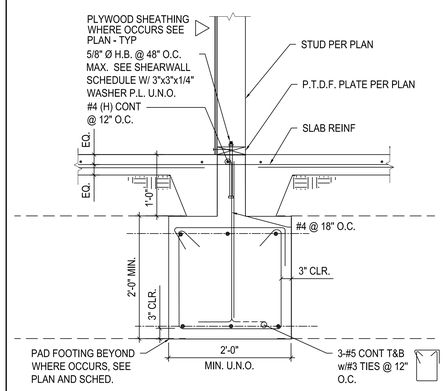

3 INTERIOR STUD WALL FTG

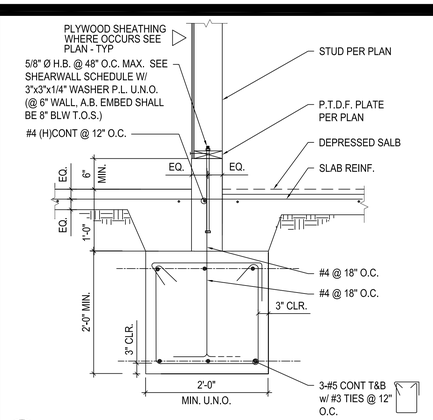

4 INTERIOR STUD WALL AT CURB

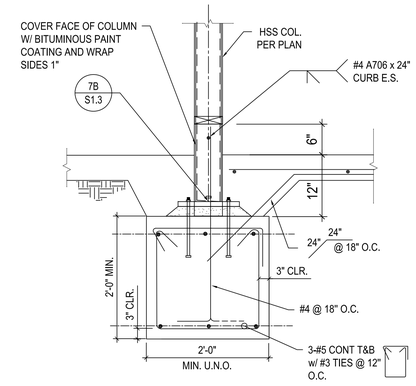

5 COL. @ GRADE BEAM

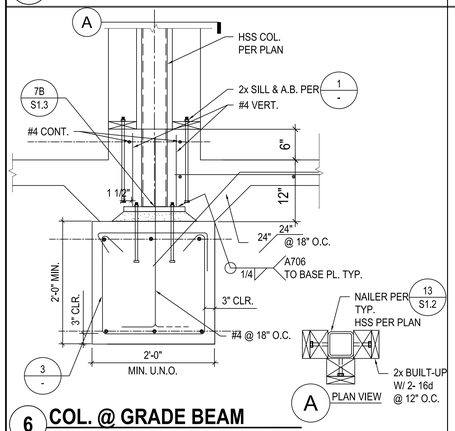

6 COL. @ GRADE BEAM

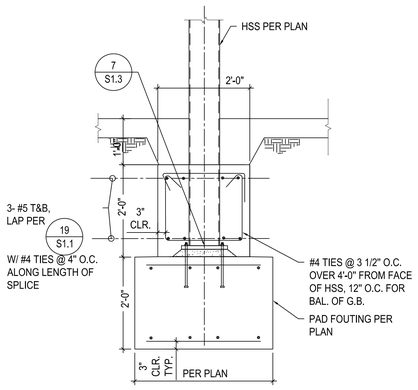

7 DETAIL

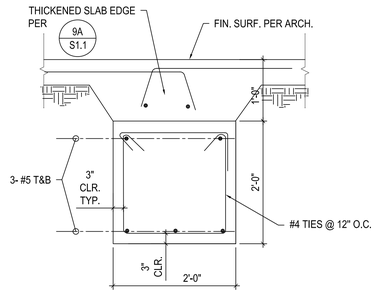

8 DETAIL

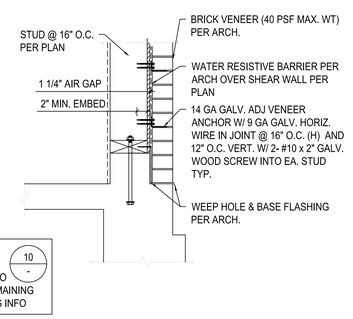

9 BRICK VENEER ANCHORAGE DETAIL

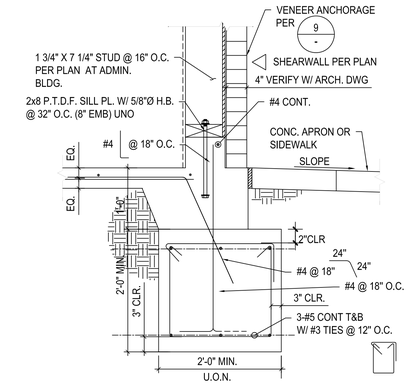

10 FOUNDATION DETAIL AT ADMIN. BLDG

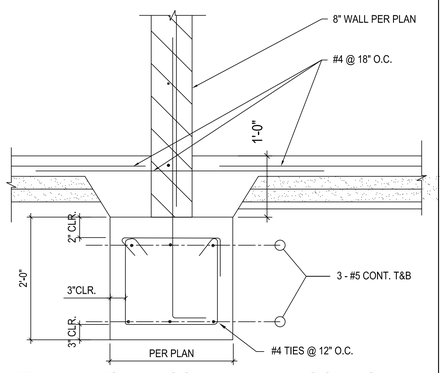

11 INTERIOR MASONRY WALL FOOTING

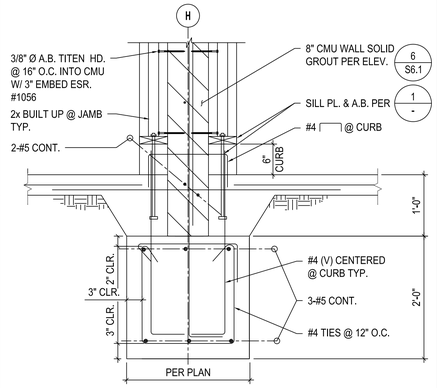

12 DETAIL

STUDIO W ARCHITECTS

Studio W Architects
1930 H Street
Sacramento, California 95811
[T] 916.254.5600
www.StudioW-Architects.com

ARCHITECT	ENGINEER
LICENSED ARCHITECT BRYAN P. WHITMORE No. C 30345 Ren. 9/30/25 STATE OF CALIFORNIA	REGISTERED PROFESSIONAL ENGINEER No. 2998 Exp. 6-30-26 STRUCTURAL STATE OF CALIFORNIA
DATE SIGNED: 06/24/2024	DATE SIGNED: 06/24/2024

GENERAL NOTES

1. This sheet is part of a set and is not to be used alone,
2. This sheet is not to be used for construction unless the architect's stamp and signature appear on the drawings and the status box indicated drawings have been released for construction,
3. These plans and prints thereof, as instruments of service, are owned by the architect and are for use on this project only. Reproduction and/or distribution without the prior written consent of the architect is forbidden.
4. Copyright Studio W Associates, Inc. 2022.

REVISION HISTORY

DRAWING STATUS

	DATE
○ DSA PLAN CHECK	
● DSA BACK CHECK	06/24/2024
○ BIDDING	
○ CONSTRUCTION	

KEY PLAN

BUENA PARK USD
6885 ORANGETHORPE AVE
BUENA PARK, CA 90620

SCHEMATIC DESIGN

CARL E. GILBERT ELEMENTARY SCHOOL
TK/PK CLASSROOMS & EARLY LEARNING BUILDING
7255 8TH STREET, BUENA PARK, CA 90621

FOUNDATION DETAILS

Date	Project Number
06/24/2024	24-002
Application Number	Drawing Number
04-123212	S5.1
Drawn / Author	Checked / Checker

PRINT DATE:
FILE PATH:

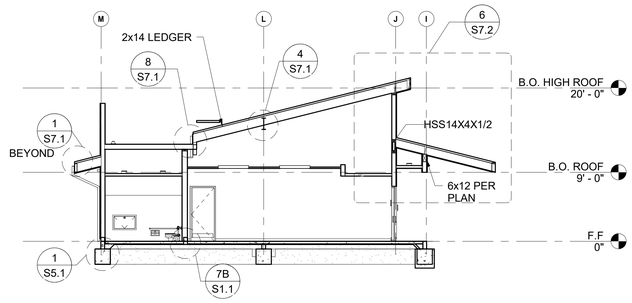

Section 2 | 1/8" = 1'-0" | 2

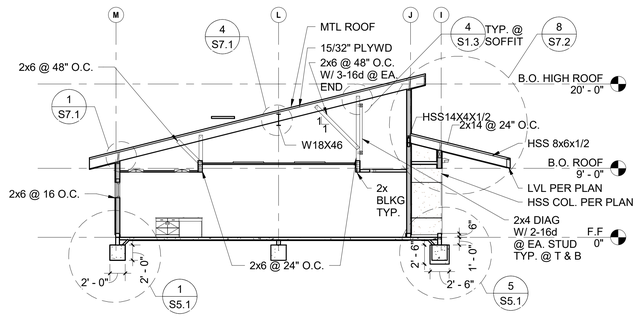

Section 1 | 1/8" = 1'-0" | 1

Section 3 | 1/8" = 1'-0" | 3

ELEVATION | 1/8" = 1'-0" | 4

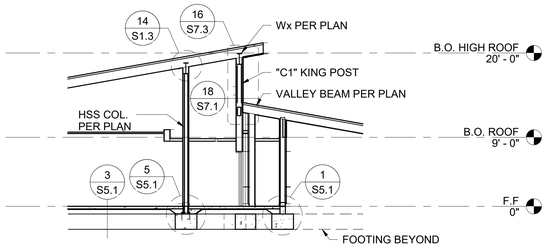

Section 5 | 1/8" = 1'-0" | 5

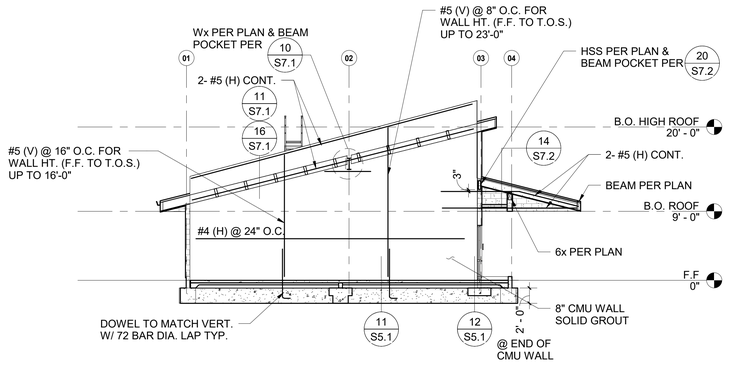

MASONRY WALL ELEVATION @ GRID H | 1/8" = 1'-0" | 6

DSA STAMP

STUDIO W
ARCHITECTS

Studio W Architects
1930 H Street
Sacramento, California 95811
[T] 916.254.5600
www.StudioW-Architects.com

ARCHITECT	ENGINEER
LICENSED ARCHITECT BRIANT P WHITMORE No. C 30345 Ren. 9/30/25 STATE OF CALIFORNIA	REGISTERED PROFESSIONAL ENGINEER No. 2998 Exp. 6-30-26 STATE OF CALIFORNIA
DATE SIGNED: 06/24/2024	DATE SIGNED: 06/24/2024

GENERAL NOTES

1. This sheet is part of a set and is not to be used alone.
2. This sheet is not to be used for construction unless the architect's stamp and signature appear on the drawings and the status box indicated drawings have been released for construction.
3. These plans and prints thereof, as instruments of service, are owned by the architect and are for use on this project only. Reproduction and/or distribution without the prior written consent of the architect is forbidden.
4. Copyright Studio W Associates, Inc. 2022.

REVISION HISTORY

NO.	REMARKS	DATE

DRAWING STATUS

	DATE
○ DSA PLAN CHECK	
● DSA BACK CHECK	06/24/2024
○ BIDDING	
○ CONSTRUCTION	

KEY PLAN

BUENA PARK USD

SCHEMATIC DESIGN

CARL E. GILBERT
ELEMENTARY SCHOOL
7255 8TH STREET, BUENA PARK,
CA 90621

FRAMING BUILDING
SECTIONS

Date	Project Number
06/24/2024	24-002
Application Number	Drawing Number
04-123212	S6.1
Drawn / Author	Checked / Checker

PRINT DATE: 6/19/2024 4:07:31 PM
FILE PATH: C:\Users\ATmccs\Documents\20076-BPUSD Gilbert-BLDG-S21_aramecchia.rvt

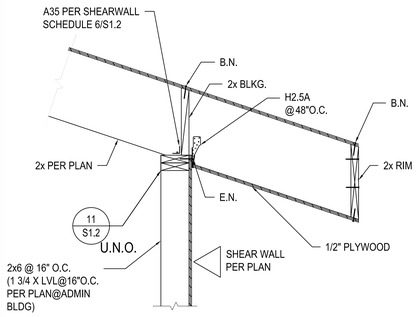

1 ROOF SECTION

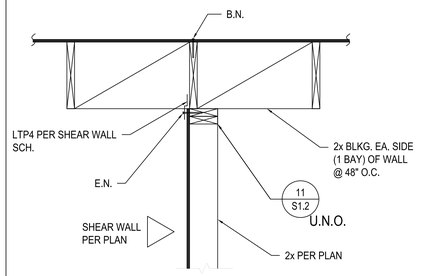

2 ROOF SECTION

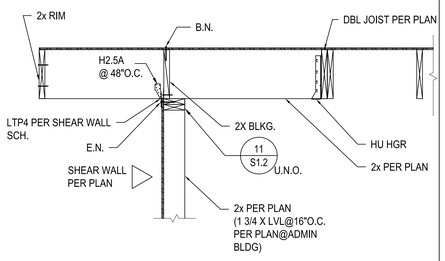

3 ROOF SECTION

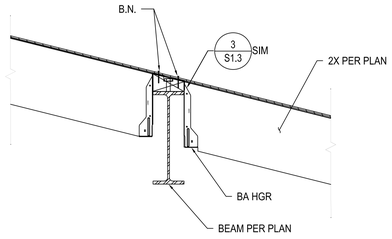

4 ROOF SECTION

BEARING PLATE SCHEDULE	
BEAM SIZE	AT 8" WALL
W18x	5 1/2"x14"x3/4"
HSS14x	5 1/2"x12"x3/4"

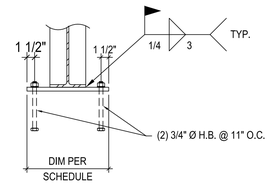

NOTE:
CENTER BEARING PLATE AND ANCHOR BOLT ON CMU WALL U.N.O.
SEE 10 S1.4 FOR MORE INFO ON H.B. TYP.

5 DETAIL

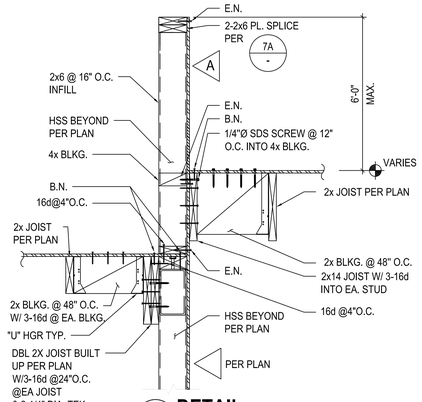

6 DETAIL

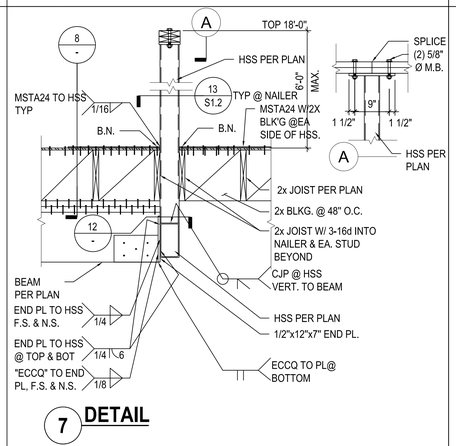

7 DETAIL

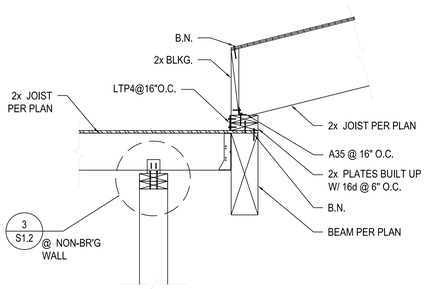

8 DETAIL

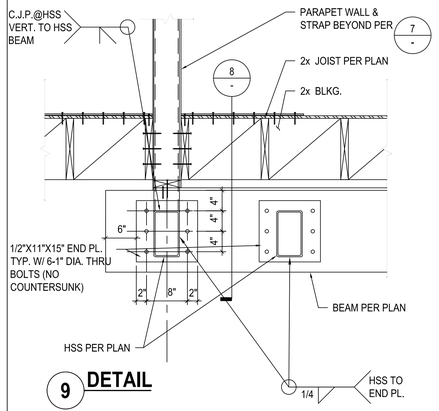

9 DETAIL

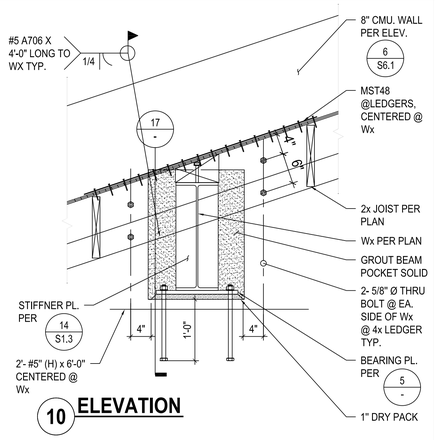

10 ELEVATION

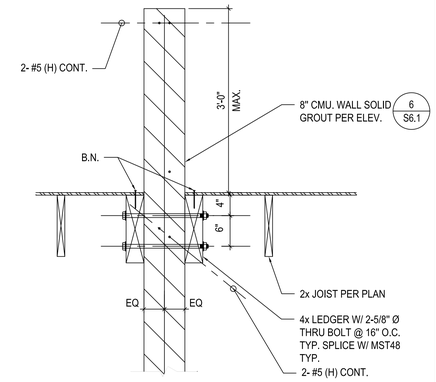

11 DETAIL

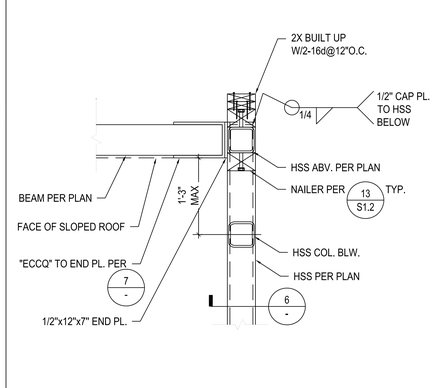

12 PLAN VIEW

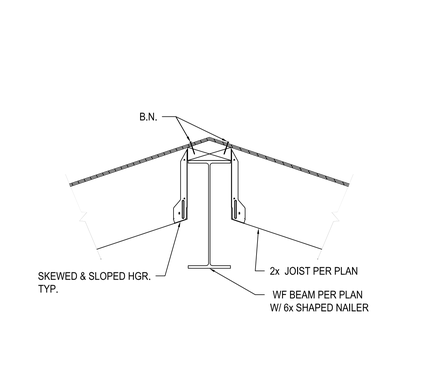

13 DETAIL

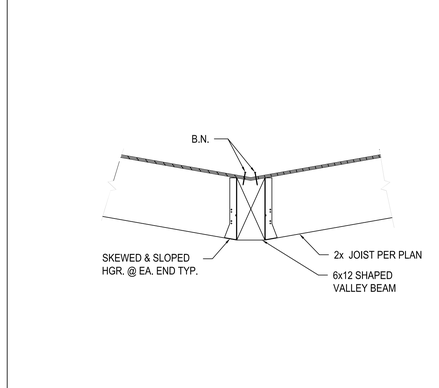

14 DETAIL

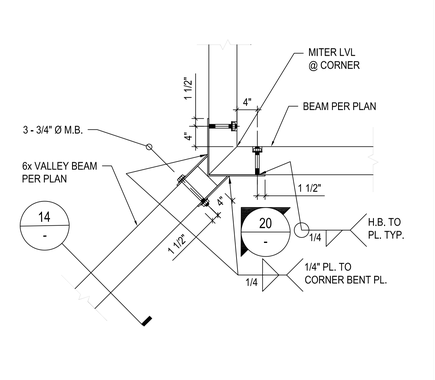

15 PLAN VIEW

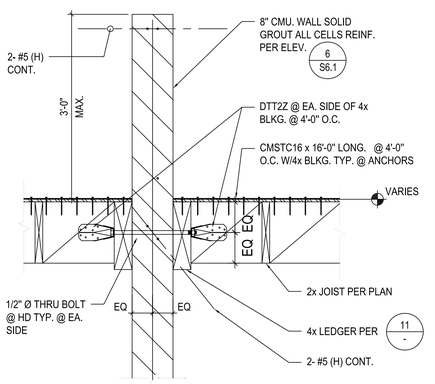

16 DETAIL

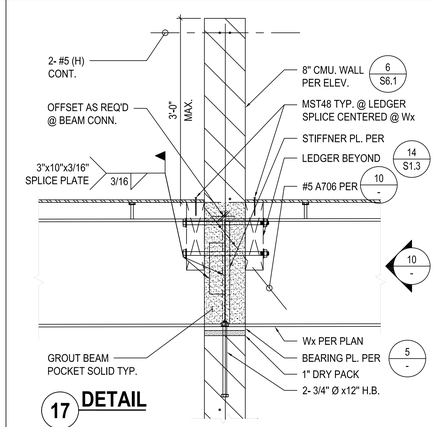

17 DETAIL

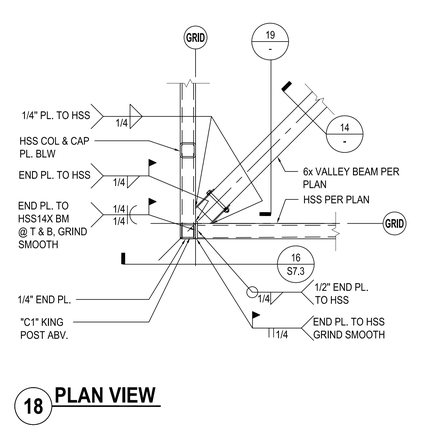

18 PLAN VIEW

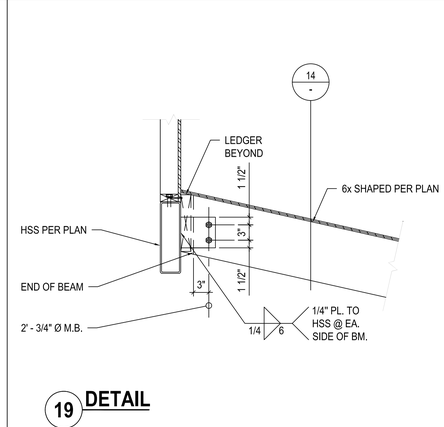

19 DETAIL

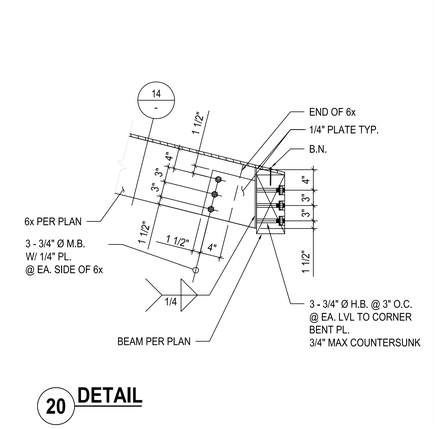

20 DETAIL

DSA STAMP

STUDIO W ARCHITECTS

Studio W Architects
1930 H Street
Sacramento, California 95811
[T] 916.254.5600
www.StudioW-Architects.com

ARCHITECT	ENGINEER
LICENSED ARCHITECT BRIAN P. WHITMORE No. C 30345 Ren. 9/30/25 STATE OF CALIFORNIA	REGISTERED PROFESSIONAL ENGINEER No. 2998 Exp. 6-30-26 STRUCTURAL STATE OF CALIFORNIA
DATE SIGNED: 06/24/2024	DATE SIGNED: 06/24/2024

GENERAL NOTES

1. This sheet is part of a set and is not to be used alone.
2. This sheet is not to be used for construction unless the architect's stamp and signature appear on the drawings and the status box indicated drawings have been released for construction.
3. These plans and prints thereof, as instruments of service, are owned by the architect and are for use on this project only. Reproduction and/or distribution without the prior written consent of the architect is forbidden.
4. Copyright Studio W Associates, Inc. 2022.

REVISION HISTORY

DRAWING STATUS

DATE

- DSA PLAN CHECK
- DSA BACK CHECK 06/24/2024
- BIDDING
- CONSTRUCTION

KEY PLAN

BUENA PARK USD
6885 ORANGETHORPE AVE
BUENA PARK, CA 90620

SCHEMATIC DESIGN

CARL E. GILBERT ELEMENTARY SCHOOL
TK/PK CLASSROOMS & EARLY LEARNING BUILDING
7255 8TH STREET, BUENA PARK, CA 90621

ROOF FRAMING DETAILS

Date	Project Number
06/24/2024	24-002
Application Number	Drawing Number
04-123212	S7.1
Drawn / Author	Checked / Checker

PRINT DATE:
FILE PATH:

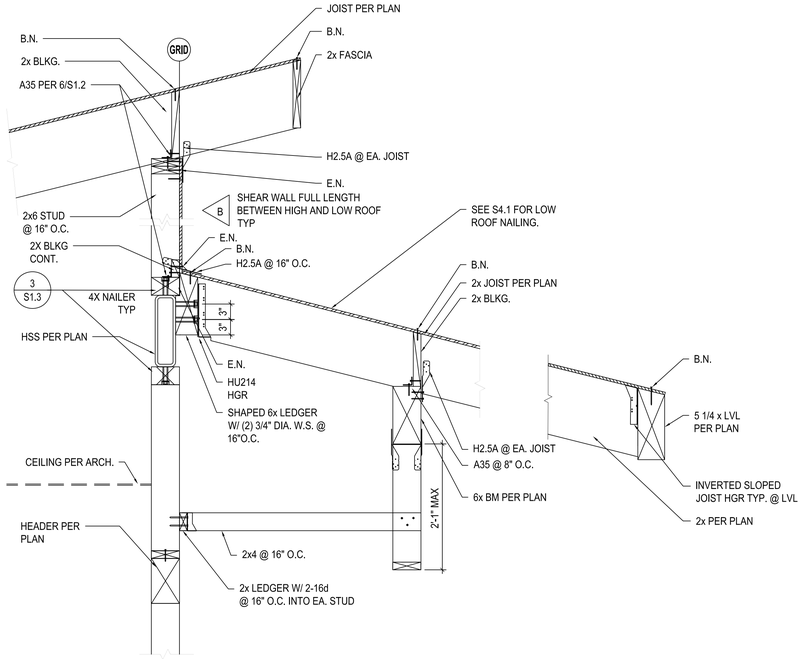

6 **DETAIL**

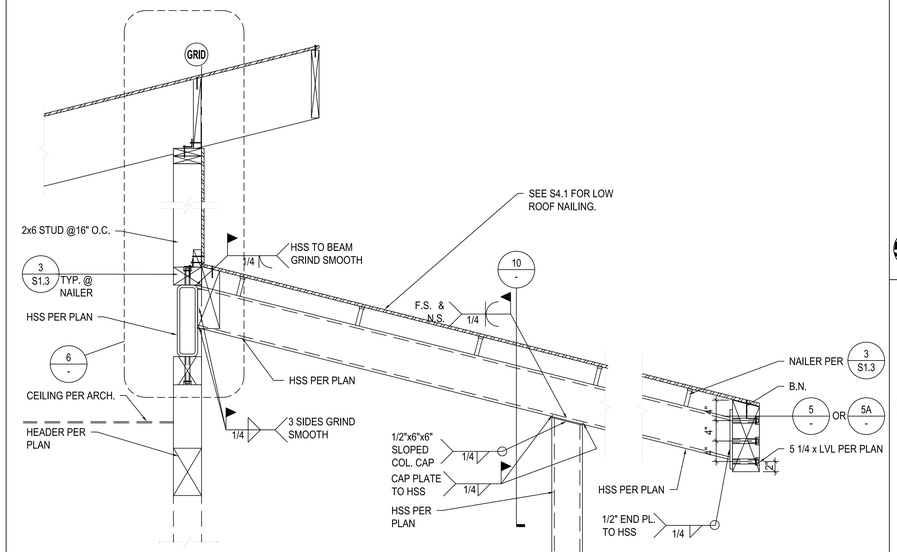

8 **DETAIL**

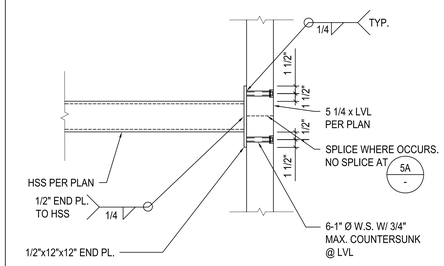

5/5A **PLAN VIEW**

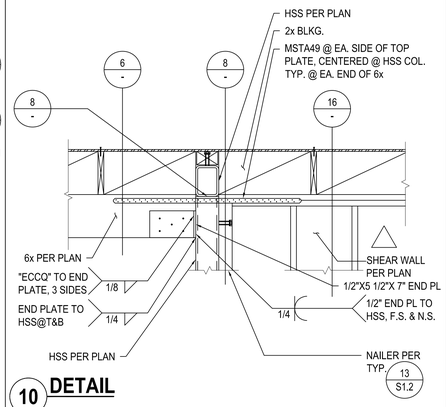

10 **DETAIL**

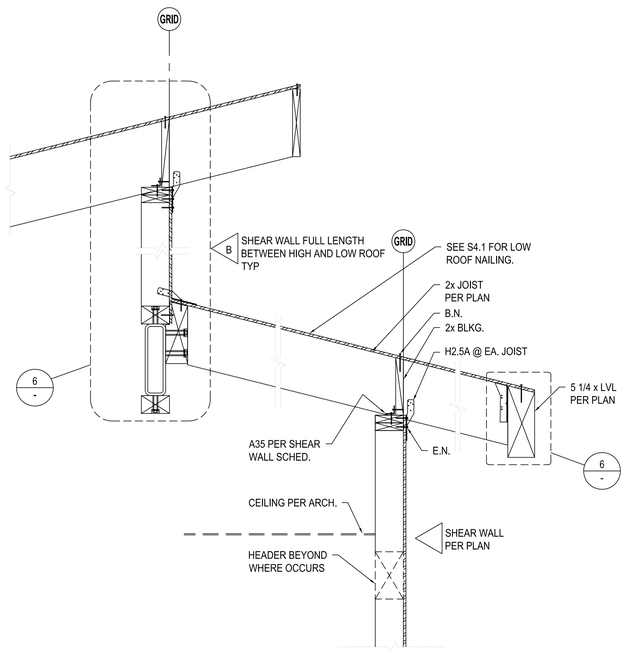

16 **DETAIL**

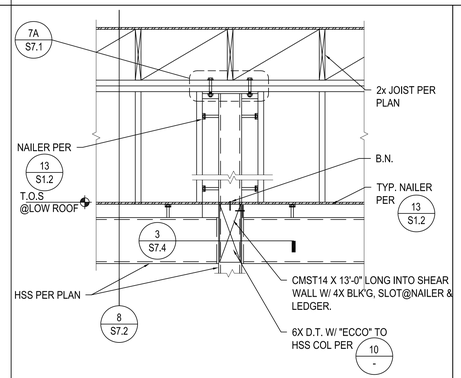

13 **DETAIL**

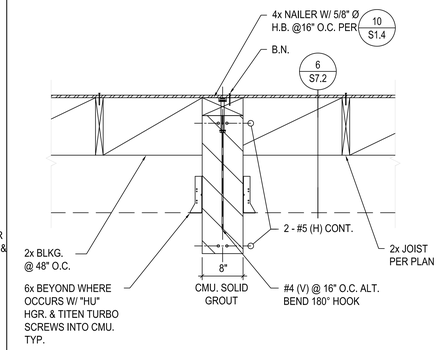

14 **DETAIL**

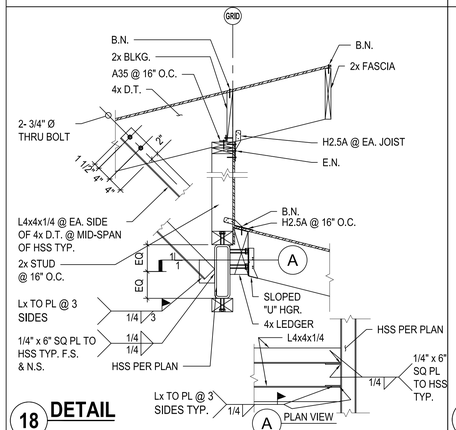

18 **DETAIL**

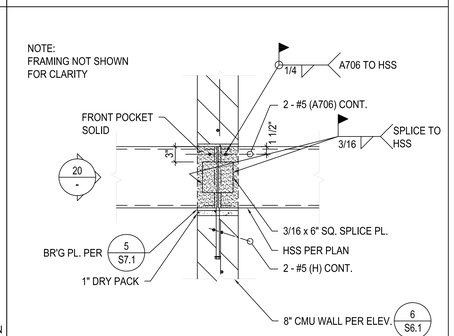

19 **DETAIL**

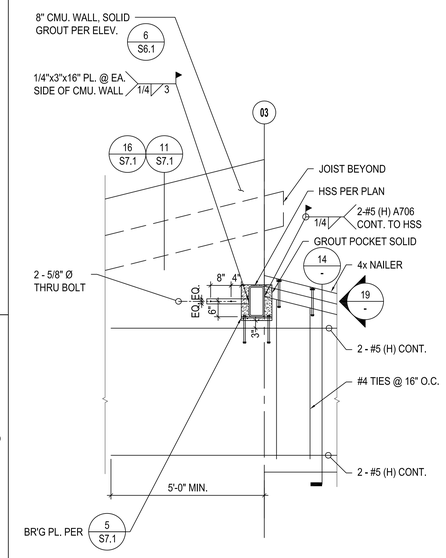

20 **LINTEL ELEVATION**

DSA STAMP

STUDIO W ARCHITECTS

Studio W Architects
1930 H Street
Sacramento, California 95811
[T] 916.254.5600
www.StudioW-Architects.com

ARCHITECT	ENGINEER
LICENSED ARCHITECT BRYAN P. WHITMORE No. C 30345 Ren. 9/30/25 STATE OF CALIFORNIA	REGISTERED PROFESSIONAL ENGINEER STRUCTURAL No. 2998 Exp. 6-30-26 STATE OF CALIFORNIA
DATE SIGNED: 06/24/2024	DATE SIGNED: 06/24/2024

GENERAL NOTES

1. This sheet is part of a set and is not to be used alone.
2. This sheet is not to be used for construction unless the architect's stamp and signature appear on the drawings and the status box indicated drawings have been released for construction.
3. These plans and prints thereof, as instruments of service, are owned by the architect and are for use on this project only. Reproduction and/or distribution without the prior written consent of the architect is forbidden.
4. Copyright Studio W Associates, Inc. 2022.

REVISION HISTORY

DRAWING STATUS

	DATE
○ DSA PLAN CHECK	
● DSA BACK CHECK	06/24/2024
○ BIDDING	
○ CONSTRUCTION	

KEY PLAN

BUENA PARK USD
6885 ORANGETHORPE AVE
BUENA PARK, CA 90620

SCHEMATIC DESIGN

CARL E. GILBERT ELEMENTARY SCHOOL
TK/PK CLASSROOMS & EARLY LEARNING BUILDING
7255 8TH STREET, BUENA PARK, CA 90621

FRAMING DETAILS

Date	Project Number
06/24/2024	24-002
Application Number	Drawing Number
04-123212	S7.2
Drawn / Author	Checked / Checker

PRINT DATE:
FILE PATH:

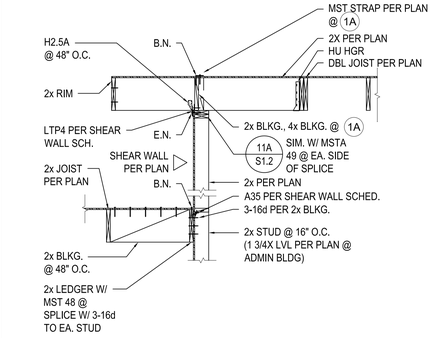

1 **DETAIL**

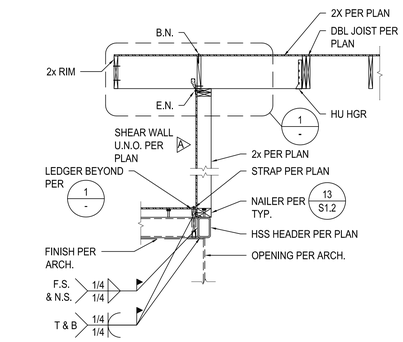

2 **DETAIL**

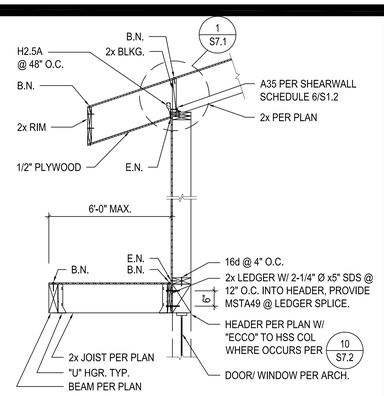

3 **DETAIL**

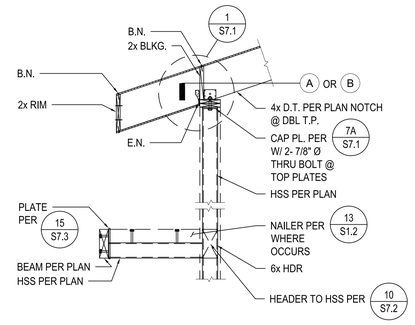

4 **DETAIL**

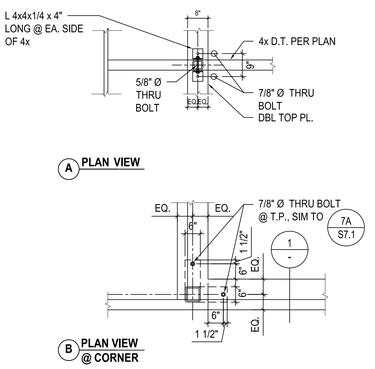

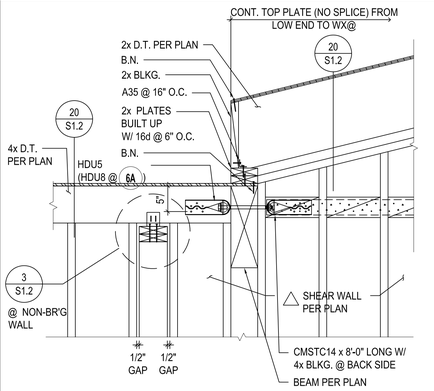

6 **DETAIL**

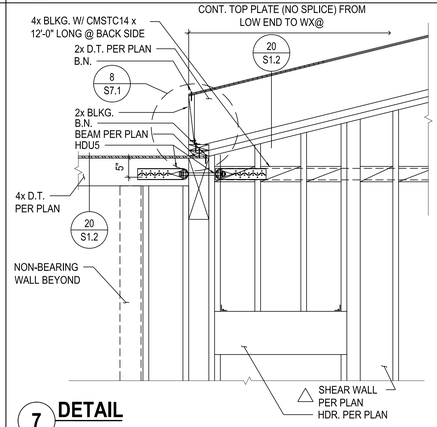

7 **DETAIL**

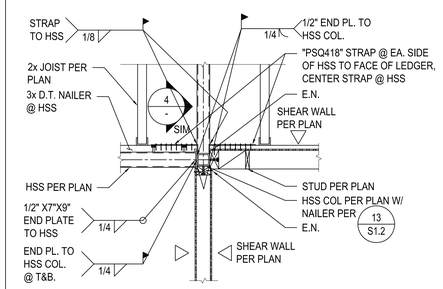

8 **PLAN VIEW**

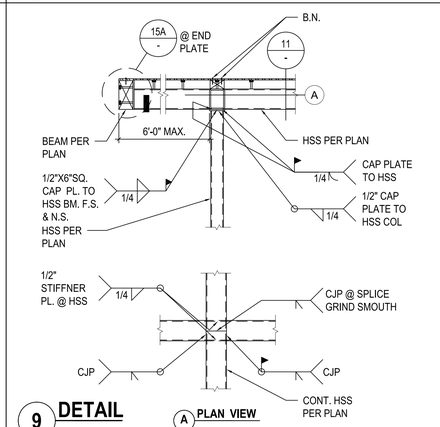

9 **DETAIL**

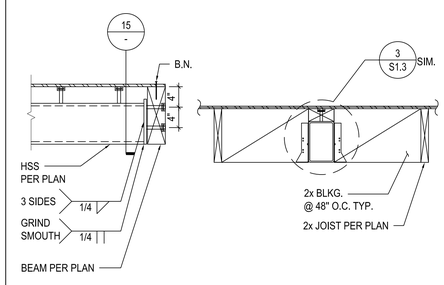

10 **DETAIL** 10B **DETAIL**

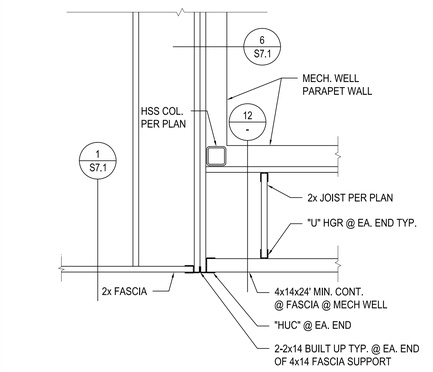

11 **PLAN VIEW @ MECH WELL CORNER**

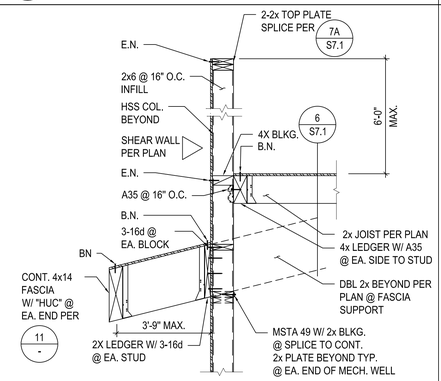

12 **DETAIL**

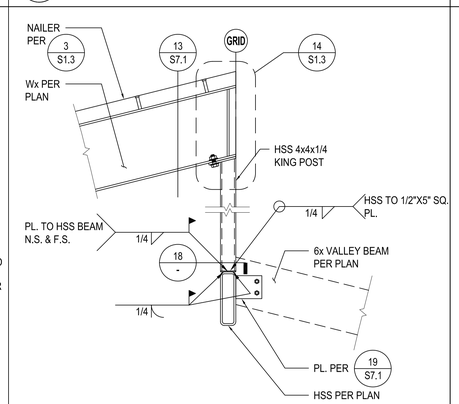

13 **DETAIL**

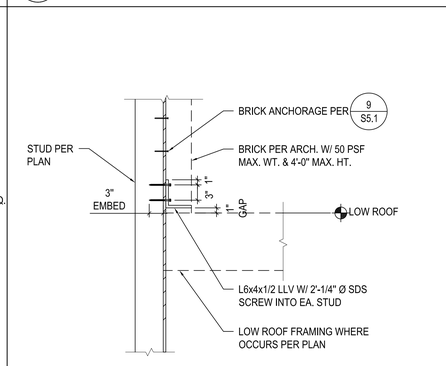

14 **BRICK SUPPORT @ ADMIN BLDG.**

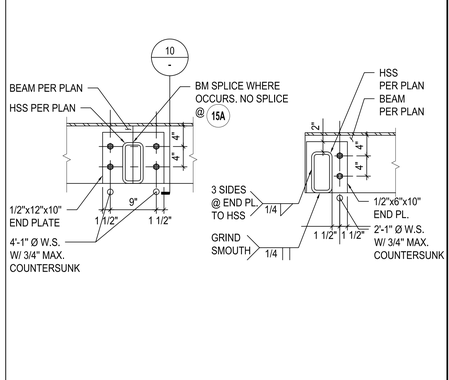

15 **DETAIL** 15B **ELEV @ CORNER**

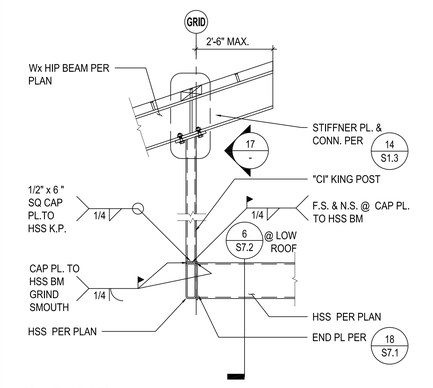

16 **DETAIL**

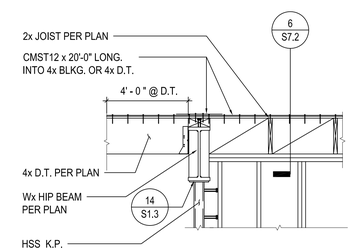

17 **DETAIL**

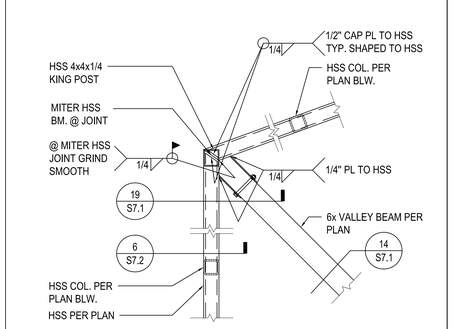

18 **DETAIL**

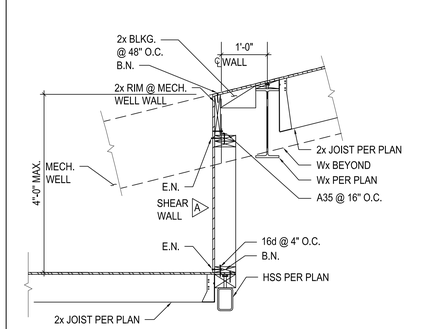

19 **DETAIL**

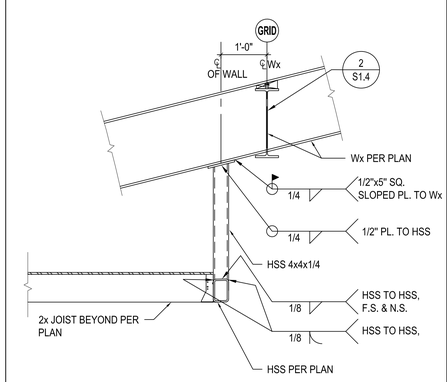

20 **DETAIL**

PRINT DATE:
FILE PATH:

DSA STAMP

STUDIO W ARCHITECTS

Studio W Architects
1930 H Street
Sacramento, California 95811
[T] 916.254.5600
www.StudioW-Architects.com

ARCHITECT	ENGINEER
LICENSED ARCHITECT BRYAN P. WHITMORE No. C 30345 Ren. 9/30/25 STATE OF CALIFORNIA	REGISTERED PROFESSIONAL ENGINEER TYLER J. WOLFE No. 2998 Exp. 6-30-26 STRUCTURAL STATE OF CALIFORNIA
DATE SIGNED: 06/24/2024	DATE SIGNED: 06/24/2024

GENERAL NOTES

1. This sheet is part of a set and is not to be used alone.
2. This sheet is not to be used for construction unless the architect's stamp and signature appear on the drawings and the status box indicated drawings have been released for construction.
3. These plans and prints thereof, as instruments of service, are owned by the architect and are for use on this project only. Reproduction and/or distribution without the prior written consent of the architect is forbidden.
4. Copyright Studio W Associates, Inc. 2022.

REVISION HISTORY

DRAWING STATUS

	DATE
○ DSA PLAN CHECK	
● DSA BACK CHECK	06/24/2024
○ BIDDING	
○ CONSTRUCTION	

KEY PLAN

BUENA PARK USD
6885 ORANGETHORPE AVE
BUENA PARK, CA 90620

SCHEMATIC DESIGN

CARL E. GILBERT ELEMENTARY SCHOOL
TK/PK CLASSROOMS & EARLY LEARNING BUILDING
7255 8TH STREET, BUENA PARK, CA 90621

FRAMING DETAILS

Date	Project Number
06/24/2024	24-002
Application Number	Drawing Number
04-123212	S7.3
Drawn / Author	Checked / Checker

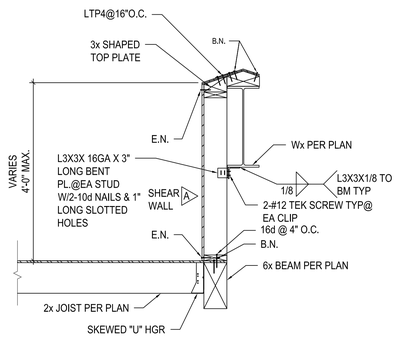

1 DETAIL

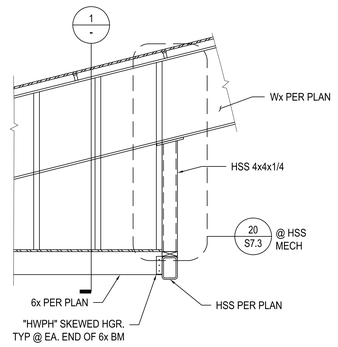

2 DETAIL

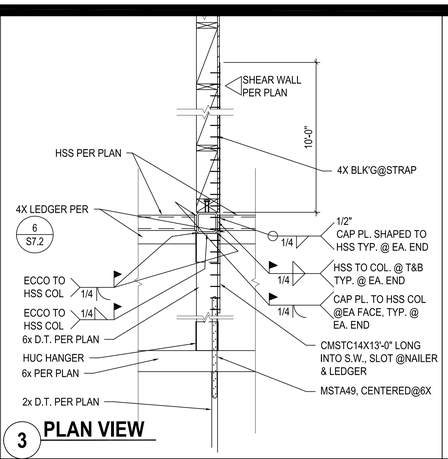

3 PLAN VIEW

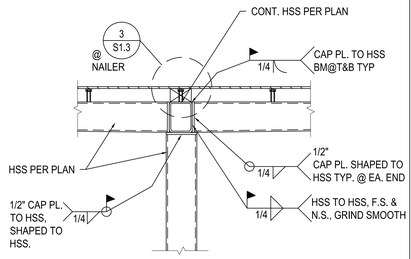

4 DETAIL

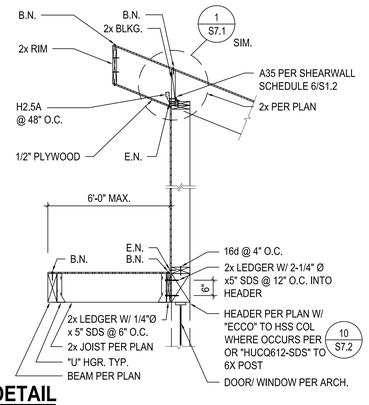

6 DETAIL

DSA STAMP

STUDIO W ARCHITECTS

Studio W Architects
1930 H Street
Sacramento, California 95811
[T] 916.254.5600
www.StudioW-Architects.com

ARCHITECT	ENGINEER
LICENSED ARCHITECT BRIAN P WHITMORE No. C 30345 Ren. 9/30/25 STATE OF CALIFORNIA	REGISTERED PROFESSIONAL ENGINEER No. 2998 Exp. 6-30-26 STRUCTURAL STATE OF CALIFORNIA
DATE SIGNED: 06/24/2024	DATE SIGNED: 06/24/2024

GENERAL NOTES

1. This sheet is part of a set and is not to be used alone.
2. This sheet is not to be used for construction unless the architect's stamp and signature appear on the drawings and the status box indicated drawings have been released for construction.
3. These plans and prints thereof, as instruments of service, are owned by the architect and are for use on this project only. Reproduction and/or distribution without the prior written consent of the architect is forbidden.
4. Copyright Studio W Associates, Inc. 2022.

REVISION HISTORY

DRAWING STATUS

	DATE
○ DSA PLAN CHECK	
● DSA BACK CHECK	06/24/2024
○ BIDDING	
○ CONSTRUCTION	

KEY PLAN

BUENA PARK USD
6885 ORANGETHORPE AVE
BUENA PARK, CA 90620

SCHEMATIC DESIGN

CARL E. GILBERT ELEMENTARY SCHOOL
TK/PK CLASSROOMS & EARLY LEARNING BUILDING
7255 8TH STREET, BUENA PARK, CA 90621

FRAMING DETAILS

Date 06/24/2024	Project Number 24-002
Application Number 04-123212	Drawing Number S7.4
Drawn Author	Checked Checker

PRINT DATE:
FILE PATH:

LEGEND

SYMBOL	ABBR.	DESCRIPTION	SYMBOL	ABBR.	DESCRIPTION
	-	SUPPLY AIR RISER	T	T-STAT	THERMOSTAT (SEE DET. 1/M4.1)
	-	RETURN AIR RISER	H	H	HUMIDISTAT
	-	EXHAUST AIR RISER	TS	TS	TEMPERATURE SENSOR
	SD	SUPPLY AIR GRILLE	OS	OS	OVERRIDE SWITCH
	RG	RETURN AIR GRILLE	PD	PD	PRESSURE DIFFERENTIAL SWITCH
	EG	EXHAUST AIR GRILLE	S	S	SWITCH
	SR	SIDEWALL REGISTER		O.C.	ON CENTER
	TG	TRANSFER AIR GRILLE	HWR	HWR	HOT-WATER RETURN
	(L)	LINED DUCTWORK	HWS	HWS	HOT-WATER SUPPLY
	-	FLEXIBLE CONNECTION	CHWR	CHWR	CHILLED-WATER RETURN
	FC	FLEXIBLE CONNECTION	CHWS	CHWS	CHILLED-WATER SUPPLY
	-	NEW DUCT (SEE PLAN)		I.D.	INSIDE DIAMETER
	-	EXISTING DUCT (SEE PLAN)		O.D.	OUTSIDE DIAMETER
	-	DEMO DUCT (SEE PLAN)		W/	WITH
	MVD	MANUAL VOLUME DAMPER		S/M	SHEET METAL
F/D	FD	AUTOMATIC FIRE DAMPER		S/S	STAINLESS STEEL
S/F	SFD	SMOKE/FIRE DAMPER		G.C.	GENERAL CONTRACTOR
BDD	BDD	BACKDRAFT DAMPER		VTR	VENT THRU ROOF
	DL	DOOR LOUVER		OSA	OUTSIDE AIR
U.C.	UC	UNDERCUT DOOR 3/4"	CD	CD	CONDENSATE DRAIN
RS	RS	REFRIGERANT SUCTION LINE		SOV	SHUT-OFF VALVE
RL	RL	REFRIGERANT LIQUID LINE		VFD	VARIABLE FREQUENCY DRIVE
	S.D.	DUCT SMOKE DETECTOR		OBD	OPPOSED BLADE DAMPER
	P.O.C.	POINT OF CONNECTION			DIRECTION OF PIPE PITCH (DOWN)
	E	ELECTRICAL CONTRACTOR			DIRECTION OF FLOW
	M	MECHANICAL CONTRACTOR			ANCHOR
		REDUCER OR INCREASER			ECCENTRIC REDUCER
		GATE VALVE			TOP CONNECTION, 45° OR 90°
		GLOBE VALVE			BOTTOM CONNECTION, 45° OR 90°
		GATE VALVE W/ 3/4 " HOSE ADAPTER			SIDE CONNECTION
		CHECK VALVE			CAPPED OUTLET
		ANGLE GLOBE VALVE			RISE OR DROP IN PIPE
		BUTTERFLY VALVE			UNION
		BALL VALVE			ORIFICE UNION
		BALANCING VALVE			MANUAL AIR VENT
		CIRCUIT SETTER			STRAINER
		STRAIGHT-THRU MODULATING CONTROL VALVE			THERMOMETER
		THREE-WAY MODULATING CONTROL VALVE			PRESSURE GAGE
		AUTOMATIC FLOW CONTROL VALVE			WATER FLOW MEASURING DEVICE
		SAFETY OR PRESSURE RELIEF VALVE			MONITORED WATER FLOW MEASURING DEVICE
		PRESSURE REDUCING VALVE			TEST PLUG (PRESSURE/TEMPERATURE)
CO2	CO2	CARBON DIOXIDE SENSOR			

MEP COMPONENT ANCHORAGE NOTE

ALL MECHANICAL, PLUMBING, AND ELECTRICAL COMPONENTS SHALL BE ANCHORED AND INSTALLED PER THE DETAILS ON THE DSA APPROVED CONSTRUCTION DOCUMENTS. THE FOLLOWING COMPONENTS SHALL BE ANCHORED OR BRACED TO MEET THE FORCE AND DISPLACEMENT REQUIREMENTS PRESCRIBED IN THE 2022 CBC SECTIONS 1617A.1.18 THROUGH 1617A.1.26 AND ASCE 7-16 CHAPTERS 13, 26, AND 30.

1. ALL PERMANENT EQUIPMENT AND COMPONENTS.
2. TEMPORARY OR MOVABLE EQUIPMENT THAT IS PERMANENTLY ATTACHED (E.G. HARD WIRED) TO THE BUILDING UTILITY SERVICES SUCH AS ELECTRICITY, GAS OR WATER. "PERMANENTLY ATTACHED" SHALL INCLUDE ALL ELECTRICAL CONNECTIONS EXCEPT PLUGS FOR 110/220 VOLT RECEPTACLES HAVING A FLEXIBLE CABLE.
3. TEMPORARY, MOVABLE OR MOBILE EQUIPMENT WHICH IS HEAVIER THAN 400 POUNDS OR HAS A CENTER OF MASS LOCATED 4 FEET OR MORE ABOVE THE ADJACENT FLOOR OR ROOF LEVEL THAT DIRECTLY SUPPORT THE COMPONENT IS REQUIRED TO BE RETRAINED IN A MANNER APPROVED BY DSA.

THE FOLLOWING MECHANICAL AND ELECTRICAL COMPONENTS SHALL BE POSITIVELY ATTACHED TO THE STRUCTURE BUT NEED NOT DEMONSTRATE DESIGN COMPLIANCE WITH THE REFERENCE NOTED ABOVE. THESE COMPONENTS SHALL HAVE FLEXIBLE CONNECTIONS PROVIDED BETWEEN THE COMPONENT AND ASSOCIATED DUCTWORK, PIPING, AND CONDUIT. FLEXIBLE CONNECTIONS MUST ALLOW MOVEMENT IN BOTH TRANSVERSE AND LONGITUDINAL DIRECTIONS.

A. COMPONENTS WEIGHING LESS THAN 400 POUNDS AND HAVING A CENTER OF MASS LOCATED 4 FEET OR LESS ABOVE THE ADJACENT FLOOR OR ROOF LEVEL THAT DIRECTLY SUPPORT THE COMPONENT.
B. COMPONENTS WEIGHING LESS THAN 20 POUNDS, OR IN THE CASE OF DISTRIBUTED SYSTEMS, LESS THAN 5 POUNDS PER FOOT, WHICH ARE SUSPENDED FROM A ROOF OR FLOOR OR HUNG FROM A WALL.

THE ANCHORAGE OF ALL MECHANICAL, ELECTRICAL AND PLUMBING COMPONENTS SHALL BE SUBJECT TO THE APPROVAL OF THE DESIGN PROFESSIONAL IN GENERAL RESPONSIBLE CHARGE OR STRUCTURAL ENGINEER DELEGATED RESPONSIBILITY AND ACCEPTANCE BY DSA. THE PROJECT INSPECTOR WILL VERIFY THAT ALL COMPONENTS AND EQUIPMENT HAVE BEEN ANCHORED IN ACCORDANCE WITH THE ABOVE REQUIREMENTS.

PIPING, DUCTWORK, AND ELECTRICAL DISTRIBUTION SYSTEM ANCHORAGE NOTE

PIPING, DUCTWORK, AND ELECTRICAL DISTRIBUTION SYSTEMS SHALL BE BRACED TO COMPLY WITH THE FORCES AND DISPLACEMENTS PRESCRIBED IN ASCE 7-16 SECTION 13.3 AS DEFINED IN ASCE 7-16 SECTION 13.6.5, 13.6.6, 13.6.7, 13.6.8 AND 2022 CBC SECTIONS 1617A.1.24, 1617A.1.25, AND 1617A.1.26.

THE METHOD OF SHOWING BRACING AND ATTACHMENTS TO THE STRUCTURE FOR THE IDENTIFIED DISTRIBUTION SYSTEMS ARE AS NOTED BELOW. WHEN BRACING AND ATTACHMENTS ARE BASED ON A PREAPPROVED INSTALLATION GUIDE (E.G., OSHPD OPM FOR 2022 CBC OR LATER), COPIES OF THE BRACING SYSTEM INSTALLATION GUIDE OR MANUAL SHALL BE AVAILABLE ON THE JOBSITE PRIOR TO THE START OF AND DURING THE HANGING AND BRACING OF THE DISTRIBUTION SYSTEMS.

THE STRUCTURAL ENGINEER OF RECORD SHALL VERIFY THE ADEQUACY OF THE STRUCTURE TO SUPPORT THE HANGER AND BRACE LOADS.

MECHANICAL PIPING (MP), MECHANICAL DUCTS (MD), PLUMBING PIPING (PP), ELECTRICAL SYSTEMS (E):

MP X MD X PP X E_ - OPTION 1: DETAILED ON THE APPROVED DRAWINGS WITH PROJECT SPECIFIC NOTES AND DETAILS.

MP_ MD_ PP_ E_ - OPTION 2: SHALL COMPLY WITH APPLICABLE OSHPD PRE-APPROVAL (OPM #) #_____.

CA GREEN BUILDING STANDARDS NOTES

ENTIRE INSTALLATION SHALL COMPLY WITH THE 2022 CALIFORNIA GREEN BUILDING STANDARDS (CALGREEN) CODE INCLUDING THE FOLLOWING APPLICABLE MANDATORY MEASURES:

1. 5.504.1.3 - PERMANENT HVAC SYSTEM SHALL ONLY BE USED DURING CONSTRUCTION IF NECESSARY TO CONDITION THE BUILDING WITHIN THE REQUIRED TEMPERATURE RANGE FOR MATERIAL AND EQUIPMENT INSTALLATION. IF THE HVAC SYSTEM IS USED DURING CONSTRUCTION, CONTRACTOR SHALL USE MERV 8 MINIMUM RETURN AIR FILTERS. REPLACE ALL FILTERS IMMEDIATELY PRIOR TO OCCUPANCY.
2. 5.504.3 - CONTRACTOR SHALL COVER ALL DUCT AND OTHER RELATED AIR DISTRIBUTION COMPONENT OPENINGS WITH TAPE, PLASTIC, SHEET METAL OR OTHER METHODS ACCEPTABLE TO THE ENFORCING AGENCY DURING STORAGE AND CONSTRUCTION AND UNTIL FINAL STARTUP.
3. 5.504.5.3 - MERV 13 FILTERS ARE REQUIRED FOR HVAC SYSTEMS SERVING REGULARLY OCCUPIED AREAS AND AS INDICATED IN THESE PLANS.
4. 5.504.7 - OUTDOOR SMOKING AREAS SHALL BE MINIMUM 25'-0" FROM ALL BUILDING ENTRIES, OUTDOOR AIR INTAKES, AND OPERABLE WINDOWS.
5. 5.505.1 - INSTALLATION SHALL COMPLY WITH CBC SECTION 1203 AND CHAPTER 14 FOR INDOOR MOISTURE CONTROL.
6. 5.506.2 - DEMAND CONTROL VENTILATION REQUIRED FOR ALL DENSELY OCCUPIED SPACES PER 2022 CALIFORNIA ENERGY CODE REQUIREMENTS.
7. 5.508.1 - HVAC, REFRIGERATION, AND FIRE SUPPRESSION EQUIPMENT SHALL NOT CONTAIN CFCS OR HALONS.

GENERAL NOTES

----- GENERAL NOTES -----

1. ENTIRE INSTALLATION SHALL CONFORM TO THE REQUIREMENTS OF THE 2022 CALIFORNIA MECHANICAL CODE, 2022 CALIFORNIA BUILDING CODE, AND ALL OTHER APPLICABLE CODES AND REGULATIONS, INCLUDING 2022 CALIFORNIA ENERGY CONSERVATION STANDARDS DIVISION T-24.
2. COORDINATE ENTIRE INSTALLATION OF THE HVAC SYSTEM WITH THE WORK OF ALL OTHER TRADES PRIOR TO ANY FABRICATION OR INSTALLATION. PROVIDE ALL FITTINGS, OFFSETS, AND TRANSITIONS AS REQUIRED FOR A COMPLETE WORKABLE INSTALLATION. THE MECHANICAL CONTRACTOR SHALL BE RESPONSIBLE TO COORDINATE ITEMS TO BE PROVIDED BY OTHER TRADES WHERE MENTIONED IN THE CONTRACT DOCUMENTS PRIOR TO BID - NO EXCEPTIONS.
3. COORDINATE THE LOCATIONS OF ALL CEILING DIFFUSERS, REGISTERS, AND GRILLES WITH THE ARCHITECTURAL REFLECTIVE CEILING PLAN. ELECTRICAL LIGHTING LAYOUT AND ARCHITECTURAL ROOM ELEVATIONS. THE ARCHITECT SHALL BE IMMEDIATELY NOTIFIED OF ANY CONFLICTS PRIOR TO FABRICATION AND INSTALLATION.
4. ALL AIR CONDITIONING REFRIGERANT CIRCUIT ACCESS PORTS SHALL BE PROTECTED FORM UNAUTHORIZED ACCESS WITH LOCKING TYPE TAMPER-RESISTANT CAPS.
5. ALL EQUIPMENT, DUCTS, PIPING, AND OTHER DEVICES AND MATERIALS INSTALLED OUTSIDE OF THE BUILDING OR OTHERWISE EXPOSED TO THE WEATHER SHALL BE COMPLETELY WEATHER-PROOFED AND PAINTED TO MATCH, COORDINATE WITH ARCHITECT PRIOR TO PAINTING.
6. ALL DIMENSIONS SHOWN ON THESE PLANS ARE APPROXIMATE AND MUST BE CONFIRMED ON SITE.
7. PRIOR TO OCCUPANCY, THE ENTIRE H.V.A.C. SYSTEMS SHALL BE BALANCED IN ACCORDANCE WITH (AABC) ASSOCIATED AIR BALANCE COUNCIL STANDARDS BY AN INDEPENDANT AIR BALANCE CONTRACTOR. CERTIFICATION SHALL BE PROVIDED BY THE CONTRACTOR FOR AIR AND HYDRONIC AS APPLICABLE. SYSTEMS SHALL BE BALANCED AS INDICATED ON PLANS INCLUDING FRESH AIR VENTILATION. WHERE THERE IS A CONFLICT WITH THE MECHANICAL PLANS, THE AIR BALANCE CONTRACTOR SHALL NOTIFY THE ARCHITECT PRIOR TO BALANCING OF SYSTEM. IF NOT THE AIR BALANCE CONTRACTOR SHALL BEAR ALL COSTS INCURRED FOR WORK THAT MUST BE RE-BALANCED DUE TO CONFLICTS ON CONTRACT DOCUMENTS. CONTRACTOR SHALL PROVIDE THREE COPIES OF THE AIR BALANCE REPORT TO THE ARCHITECT FOR REVIEW AND APPROVAL.
8. FOR INACCESSIBLE AREAS THE CONTRACTOR SHALL PROVIDE ACCESS PANELS FOR ALL DAMPERS, EQUIPMENT, SMOKE DETECTORS, AND CONTROL DEVICES. THESE PANELS SHALL MATCH THE RATING OF THE WALL AND/OR CEILING THAT THEY ARE LOCATED IN. MINIMUM ACCESS PANEL SIZES SHALL BE AS FOLLOWS:

   1) HAND ACCESS: 12"x12"

   2) BODY ACCESS: 30"x30" MIN. WHERE A LARGER ACCESS SIZE IS REQUIRED DUE TO INSTALLATION CONSTRAINTS, THE CONTRACTOR SHALL DO SO AT NO ADDITIONAL COST AND SHALL NOTIFY THE ARCHITECT OF DEVIATIONS PRIOR TO INSTALLATION.
9. ALL EQUIPMENT, ACCESSORIES, AND RELATED PIPING SHALL BE INSTALLED IN STRICT ACCORDANCE WITH THE EQUIPMENT MANUFACTURER'S RECOMMENDATIONS. PROVIDE ALL FITTINGS, TRANSITIONS, DAMPERS, VALVES, AND OTHER DEVICES REQUIRED FOR A COMPLETE WORKABLE INSTALLATION.
10. MAINTENANCE LABEL SHALL BE AFFIXED TO ALL MECHANICAL EQUIPMENT AND A MAINTENANCE MANUAL SHALL BE PROVIDED FOR THE ARCHITECT'S USE.
11. ALL EQUIPMENT WITH MOVING PARTS SHALL BE PROVIDED WITH FLEXIBLE DUCT AND PIPE CONNECTIONS.
12. ALL HVAC EQUIPMENT SHALL BE CERTIFIED BY THE CALIFORNIA ENERGY COMMISSION TO COMPLY WITH LATEST EFFICIENCY STANDARDS.
13. ALL FRESH AIR INTAKES SHALL MEET CODE REQUIRED CLEARANCES FROM EXHAUST, FLUE, FUEL BURNING APPLIANCE AND PLUMBING VENT OUTLETS. FOR GAS/ELECTRIC AIR CONDITIONING UNITS WHERE THE CODE REQUIRED CLEARANCES ARE NOT MET, A FACTORY FLUE GAS DEFLECTOR AND EXTENSION SHALL BE USED TO MINIMIZE THESE CLEARANCES. CONTRACTOR SHALL DETERMINE LOCATIONS WHERE REQUIRED PRIOR TO BID. THIS SHALL BE PROVIDED AT NO ADDITIONAL COST.
14. CONTRACTOR SHALL VERIFY ALL CLEARANCES AND AVAILABLE SPACE FOR DUCTWORK PRIOR TO ORDERING AND/OR FABRICATING MATERIAL.

    CONTRACTOR TO SUBMIT ALL EQUIPMENT, DUCTWORK, AIR DISTRIBUTION DEVICES, AND OTHER ACCESSORIES TO THE ENGINEER FOR APPROVAL PRIOR TO ANY ORDERING OF SUCH ITEMS.
16. CONTRACTOR SHALL PROVIDE SHOP DRAWINGS WITHIN 35 DAYS OF AWARD OF CONTRACT. IF SHOP DRAWINGS ARE NOT PROVIDED TO THE ARCHITECT FOR APPROVAL, AND ANY CONFLICTS OCCUR BETWEEN TRADES, DURING CONSTRUCTION, & ETC. THEN THE CONTRACTOR SHALL BE RESPONSIBLE AND BEAR ALL COST INCURRED FOR ANY REVISIONS AT NO ADDITIONAL COST TO THE ARCHITECT. THE ARCHITECT SHALL BE NOTIFIED IMMEDIATELY PRIOR TO FABRICATION AND INSTALLATION OF ANY CONFLICTS BETWEEN TRADES, DURING CONSTRUCTION, & ETC.
17. CONTRACTOR SHALL BE RESPONSIBLE FOR COMMISSIONING OF EQUIPMENT AS STIPULATED ON TITLE 24 FORM ON PLANS UNLESS NOTED OTHERWISE.

    ----- CONTROLS -----
18. CONTROL SCHEMATICS ARE FOR SEQUENCE ONLY. REFER TO ELECTRICAL DRAWINGS AND SPECIFICATIONS FOR ALL ELECTRICAL DEVICES REQUIRED.
19. ALL LINE VOLTAGE WIRING SHALL BE INSTALLED IN CONDUIT. ALL LINE VOLTAGE CONDUIT AND WIRING, INCLUDING FINAL CONNECTIONS, SHALL BE FURNISHED AND INSTALLED BY THE ELECTRICAL CONTRACTOR AS INDICATED ON THE ELECTRICAL DRAWINGS OR SPECIFIED IN THE ELECTRICAL SECTION OF THE SPECIFICATIONS. ALL ELECTRICAL WORK SHALL BE INSTALLED IN ACCORDANCE WITH ALL APPLICABLE CODES AND REGULATIONS OF ALL GOVERNING BODIES HAVING JURISDICTION THEREOF.

    ALL LOW VOLTAGE CONDUIT AND WIRING AS APPLICABLE, INCLUDING FINAL CONNECTIONS, SHALL BE FURNISHED AND INSTALLED BY THE MECHANICAL CONTRACTOR AS INDICATED ON THE MECHANICAL DRAWINGS OR SPECIFIED IN THE MECHANICAL SECTION OF THE SPECIFICATIONS.

    A1) ALL LOW VOLTAGE WIRING SHALL BE INSTALLED IN CONDUIT IN INACCESSIBLE AREAS.

    A2) ALL LOW VOLTAGE WIRING SHALL BE PLENUM - RATED ABOVE ACCESSIBLE CEILINGS.

    B) WHERE THE CONTROLS CONTRACTOR IS RETAINED BY THE OWNER, THEY SHALL BE RESPONSIBLE FOR THE FOLLOWING:

    1) FURNISH AND INSTALL ALL DEVICES, WIRING, AND TERMINATIONS REQUIRED FOR A COMPLETE AND FUNCTIONAL INSTALLATION.

    2) COORDINATE ALL WORK AND REQUIREMENTS WITH OTHER TRADES INCLUDING GENERAL, MECHANICAL, AND ELECTRICAL CONTRACTORS.

    3) CONTRACTOR SHALL FOLLOW ALL SUBMITTAL REQUIREMENTS PER DRAWINGS AND SPECIFICATIONS.

    ALL THERMOSTATS SHALL BE OF THE ELECTRONIC, PROGRAMMABLE, AUTOMATIC CHANGEOVER TYPE TO SEQUENCE HEATING OR COOLING. SET POINT RANGE SHALL BE 10 DEGREES F. BETWEEN FULL HEATING AND COOLING. THEY SHALL HAVE CAPABILITY OF TERMINATING ALL HEATING AT A TEMPERATURE NO MORE THAN 70 DEGREES F., AND COOLING AT A TEMPERATURE NOT LESS THAN 78 DEGREES F. ADJUSTABLE TEMPERATURE DIFFERENTIAL SHALL BE 1- 1/2 DEGREES F. CONTROL LIMITS SHALL BE FROM 55 DEGREES F. TO 85 DEGREES F. MOUNT AT 48 INCHES ABOVE FLOOR OR AS REQUIRED BY LOCAL AUTHORITIES OR HANDICAP CODES.

    NOTES: 1) THERMOSTATS THAT ARE PART OF AN ENERGY MANAGEMENT SYSTEM SHALL FOLLOW CONTROL SPECIFICATIONS AND DRAWING REQUIREMENTS.

    2) SHOULD THE LOCATION OF THE THERMOSTAT NOT MEET THE CBC HEIGHT REQUIREMENTS DUE TO OBSTRUCTIONS, THEN AN ALTERNATE LOCATION SHALL BE PROPOSED OR REQUESTED BY THE CONTRACTOR THAT SHALL BE APPROVED BY THE ARCHITECT.

    CONTROLS CONTRACTOR AND AIR BALANCE CONTRACTOR SHALL COORDINATE WORK AND PERFORM NECESSARY TASKS AS REQUIRED TO OBTAIN AIR AND WATER FLOW QUANTITIES FOR SYSTEMS SHOWN HEREIN.

    CONTROLS SHALL BE PROVIDED TO PROVIDE THE MINIMUM RATE OF OUTDOOR AIR REQUIRED BY THE STATE ENERGY REGULATIONS.

    ----- AIR DISTRIBUTION -----

    ALL DUCTWORK SHALL BE SHEET METAL CONSTRUCTED OR SPIRAL, ERECTED, AND TESTED IN ACCORDANCE WITH THE MOST RESTRICTIVE OF LOCAL REGULATIONS, PROCEDURES DETAILED IN THE ASHRAE HANDBOOK OF FUNDAMENTALS, CHAPTER 6 OF THE MECHANICAL CODE, OR THE APPLICABLE STANDARDS ADOPTED BY THE SHEET METAL AND AIR CONDITIONING CONTRACTORS NATIONAL ASSOCIATION.
25. ALL FLEXIBLE DUCTWORK SHALL NOT EXCEED FIVE FEET IN LENGTH TO RESPECTIVE DIFFUSERS, GRILLES, AND REGISTERS, OR OTHER AIR DEVICES.
26. PROVIDE SEISMIC RESTRAINTS TO ALL DUCTWORK, PIPE, AND EQUIPMENT SUPPORTS.SUSPENDED EQUIPMENT SHALL BE PROVIDED WITH SEISMIC ANCHORAGE AND ISOLATION SUPPORTS.
27. ALL DUCT TURNS IN RECTANGULAR SUPPLY, RETURN, AND EXHAUST DUCTS SHALL HAVE TURNING VANES UNLESS OTHERWISE NOTED.
28. DUCTWORK HANDLING CONDITIONED AIR SHALL BE INSULATED OR LINED AS INDICATED ON DRAWINGS. SUPPLY AND RETURN DUCT INSULATION SHALL BE MIN. 1.5" THICK, 3/4 LB./CUBIC FT. DENSITY AND HAVE A MIN. VALUE OF R-8 WHERE LOCATED IN ONE OR MORE OF THE FOLLOWING SPACES:

    A) OUTDOORS, OR

    B) IN A SPACE BETWEEN THE ROOF AND AN INSULATED CEILING, OR

    C) IN A SPACE DIRECTLY UNDER A ROOF WITH FIXED VENTS OR OPENINGS TO THE OUTSIDE OR UNCONDITIONED SPACES, OR

    D) IN AN UNCONDITIONED CRAWLSPACE; OR

    E) IN OTHER UNCONDITIONED SPACES

    PER 2022 CEC, OTHERWISE PROVIDE R-4.2 WHEN LOCATED IN CONDITIONED ATTIC SPACES ABOVE CEILINGS . ALL DUCTWORK EXPOSED ON ROOF SHALL BE INTERNALLY LINED WITH 1.5" THICK, 1.5LB./CUBIC FT. DENSITY DUCT LINER UNLESS OTHERWISE INDICATED OR SPECIFIED. ALL DUCT SIZES ARE SHEET METAL SIZES. ALL DUCT JOINTS SHALL BE SEALED PER CHAPTER 6 MECHANICAL CODE REQUIREMENTS. PROVIDE PIPING AND DUCT INSULATION IN ACCORDANCE WITH THE LATEST STANDARDS OF THE CALIFORNIA ENERGY COMMISSION.
29. ALL INSULATION, DUCT LINING, AND MATERIALS EXPOSED WITHIN DUCTS OR PLENUMS SHALL BE NONCOMBUSTIBLE OR SHALL HAVE A FLAME-SPREAD INDEX NOT GREATER THAN TWENTY-FIVE (25) AND A SMOKE DEVELOPED INDEX NOT GREATER THAN FIFTY (50) WHEN TESTED AS A COMPOSITE PER APPLICABLE TESTING STANDARDS.
30. MANUAL VOLUME DAMPERS SHALL BE PROVIDED IN ALL DUCT BRANCHES TO INDIVIDUAL DIFFUSERS, GRILLES, AND REGISTERS, AS WELL AS FRESH AIR INTAKE DUCTS. DAMPERS SHALL BE LOCATED AT THE BRANCH DUCT LOCATIONS. THE MECHANICAL CONTRACTOR SHALL COORDINATE LOCATIONS OF DAMPERS WITH THE AIR BALANCE CONTRACTOR, SO THEY ARE ACCESSIBLE PRIOR TO INSTALLATION. IN LOCATIONS WHERE THESE DAMPERS ARE INACCESSIBLE, CABLE OPERATED ADJUSTMENT CONTROLS SHALL BE PROVIDED AT NO ADDITIONAL COST. OPPOSED BLADE DAMPERS SHALL NOT BE PERMITTED UNLESS NOTED OTHERWISE.
31. AUTOMATIC FIRE DAMPER REQUIREMENTS ARE AS FOLLOWS:

    A) PROVIDE AUTOMATIC FIRE DAMPERS AT ALL PENETRATIONS OF FIRE-RATED CEILINGS AND WALLS THROUGHOUT. CONTRACTOR SHALL COORDINATE FIRE-RATED AREAS WITH THE ARCHITECTURAL DRAWINGS AND OTHER TRADES PRIOR TO INSTALL AND SHALL NOTIFY PERTINENT PARTIES PRIOR TO ANY WORK PERFORMED IN THESE AREAS. IN ADDITION, CONTRACTOR SHALL BE RESPONSIBLE TO PROVIDE PROPER ACCESS FOR DAMPERS INSTALLED. THE DAMPER FIRE RATING SHALL BE COMPATIBLE WITH THE CEILING/WALL RATING.

    B) LOCATION OF FIRE-RATED CEILINGS AND WALLS ARE AS INDICATED ON THE ARCHITECTURAL DRAWINGS.

    C) FIRE AND/OR SMOKE DAMPER(S) SHALL BE PROVIDED AS REQUIRED BY THE LATEST CALIFORNIA BUILDING CODE.

    D) CONTRACTOR SHALL FURNISH FLUSH MOUNTED FIRE AND/OR SMOKE DAMPERS, SO THAT DAMPER DO NOT EXTEND PASS WALLS. FOR AREAS WITHOUT CEILINGS FOR QUALITY WORKMENSHIP.
32. CONTRACTOR SHALL PERFORM MAINTENANCE ON ALL EXISTING FIRE AND SMOKE/FIRE DAMPERS PER MANUFACTURER'S PROVISIONS. ANY FAILURES OR NON-OPERATING DAMPERS SHALL BE REPLACED AND SHALL CONFORM TO CURRENT CODE REGULATIONS.
33. ALL DUCTWORK PASSING THROUGH FIRE RATED CORRIDORS AND LOBBIES SHALL BE MIN. 26 GAGE SHEET METAL CONSTRUCTION.
34. ALL DUCTWORK, PIPING, CONDUIT, & ETC. PENETRATING FIRE RATED CONSTRUCTION SHALL HAVE APPROVED FIRE STOPPING.
35. DUCT SYSTEMS USED WITH BLOWER TYPE EQUIPMENT WHICH ARE PORTIONS OF A HEATING, COOLING, ABSORPTION, EVAPORATIVE COOLING OR OUTDOOR AIR VENTILATION SYSTEM SHALL BE SIZED IN ACCORDANCE WITH CHAPTER 17 OF THE CALIFORNIA MECHANICAL CODE.
36. THE ANCHORAGE AND SUPPORTING STRUCTURAL ELEMENTS FOR AIRDUCTS SHALL BE DESIGNED TO WITHSTAND THE LATER FORCES AS REQUIRED BY THE BUILDING CODE, TITLE 24, PART 2.

DSA STAMP

STUDIO W ARCHITECTS

Studio W Architects
424 32nd Street, Suite D/E
Newport Beach, California 92663
[T] 949.774.2920
www.StudioW-Architects.com

PDS
Pocock Design Solutions Inc.

ARCHITECT	ENGINEER
LICENSED ARCHITECT BRYAN P WHITMORE No. C 30345 Ren. 9/30/23 STATE OF CALIFORNIA	REGISTERED PROFESSIONAL ENGINEER ADRIAN R. GOSSMAN No. M38828 Exp. 3/31/25 MECHANICAL STATE OF CALIFORNIA
DATE SIGNED: 06/24/2024	DATE SIGNED: 06/24/2024

GENERAL NOTES

1. This sheet is part of a set and is not to be used alone.
2. This sheet is not to be used for construction unless the architect's stamp and signature appear on the drawings and the status box indicated drawings have been released for construction.
3. These plans and prints thereof, as instruments of service, are owned by the architect and are for use on this project only. Reproduction and/or distribution without the prior written consent of the architect is forbidden.
4. Copyright Studio W Associates, Inc. 2022.

REVISION HISTORY

NO.	REMARKS	DATE

DRAWING STATUS

	DATE
○ DSA PLAN CHECK	03/29/2024
● DSA BACK CHECK	06/24/2024
○ BIDDING	
○ CONSTRUCTION	

KEY PLAN

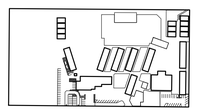

BUENA PARK SD
6885 ORANGETHORPE AVE
BUENA PARK, CA 90620

DESIGN DEVELOPMENT

CARL E. GILBERT ELEMENTARY SCHOOL
TK/PK CLASSROOMS & EARLY LEARNING BUILDING
7255 8TH STREET, BUENA PARK, CA 90621

MECHANICAL LEGEND AND GENERAL NOTES

Date	Project Number
06/24/2024	23076
Application Number	Drawing Number
04-123212	M0.1
Drawn / Checked	
TL / PDS	

PRINT DATE: 6/18/2024 4:29:50 PM
FILE PATH: C:\Users\tlim\Documents\23076-BPUSD Gilbert-BLDG-M21_tlim@pocockdesignsolutions.com.rvt

PACKAGED HEAT PUMP A/C UNIT SCHEDULE

SYM	MFR & MODEL #	AREA SERVICED	NOMINAL TONS	COOLING CAPACITY TOTAL	COOLING CAPACITY SENSIBLE	SEER/ SEER2	HEATING CAPACITY OUTPUT	HEATING CAPACITY COP/ HSPF	CFM	MIN. OA CFM	DCV CFM	ESP	FAN PWR (HP)	FAN MOTOR TYPE	A/C ELECTRICAL V	A/C ELECTRICAL PH	A/C ELECTRICAL MCA	A/C ELECTRICAL MOCP	PE/ECON ELECTRICAL V	PE/ECON ELECTRICAL PH	PE/ECON ELECTRICAL MCA	PE/ECON ELECTRICAL MOCP	MAX OPER. WEIGHT (LBS) UNIT	CURB	P.E./ECON	TOTAL	REMARKS	WIRING DETAIL	CONTROL DETAIL	ANCHORAGE DETAIL
AC 1	CARRIER 50GCQJ06A2M5	CLASSROOM 100	5	61,350	47,330	17.00/ 16.00	55,900	3.80/ 8.9	2,000	450	180	1.00	1.11	DIRECT	208	3	33	45	208	3	4.9	8.8	615	365	195	1,175	1, 2, 3, 4, 5, 6, 7, 8	3 M4.2	2 MS.1	8 M4.1
AC 2	CARRIER 50GCQJ06A2M5	CLASSROOM 101	5	61,350	47,330	17.00/ 16.00	55,900	3.80/ 8.9	2,000	450	180	1.00	1.11	DIRECT	208	3	33	45	208	3	4.9	8.8	615	365	195	1,175	1, 2, 3, 4, 5, 6, 7, 8	3 M4.2	2 MS.1	8 M4.1
AC 3	CARRIER 50GCQJ06A2M5	CLASSROOM 102	5	61,350	47,330	17.00/ 16.00	55,900	3.80/ 8.9	2,000	450	180	1.00	1.11	DIRECT	208	3	33	45	208	3	4.9	8.8	615	365	195	1,175	1, 2, 3, 4, 5, 6, 7, 8	3 M4.2	2 MS.1	8 M4.1
AC 4	CARRIER 50GCQJ06A2M5	CLASSROOM 103	5	61,350	47,330	17.00/ 16.00	55,900	3.80/ 8.9	2,000	450	180	1.00	1.11	DIRECT	208	3	33	45	208	3	4.9	8.8	615	365	195	1,175	1, 2, 3, 4, 5, 6, 7, 8	3 M4.2	2 MS.1	8 M4.1
AC 5	CARRIER 50GCQJ06A2M5	CLASSROOM 104	5	61,350	47,330	17.00/ 16.00	55,900	3.80/ 8.9	2,000	450	180	1.00	1.11	DIRECT	208	3	33	45	208	3	4.9	8.8	615	365	195	1,175	1, 2, 3, 4, 5, 6, 7, 8	3 M4.2	2 MS.1	8 M4.1
AC 6	CARRIER 50GCQJ06A2M5	CLASSROOM 105	5	61,350	47,330	17.00/ 16.00	55,900	3.80/ 8.9	2,000	450	180	1.00	1.11	DIRECT	208	3	33	45	208	3	4.9	8.8	615	365	195	1,175	1, 2, 3, 4, 5, 6, 7, 8	3 M4.2	2 MS.1	8 M4.1
AC 7	CARRIER 50GCQJ06A2M5	CLASSROOM 106	5	61,350	47,330	17.00/ 16.00	55,900	3.80/ 8.9	2,000	450	180	1.00	1.11	DIRECT	208	3	33	45	208	3	4.9	8.8	615	365	195	1,175	1, 2, 3, 4, 5, 6, 7, 8	3 M4.2	2 MS.1	8 M4.1
AC 8	CARRIER 50GCQJ06A2M5	EARLY LEARNING WORKROOM 109	5	61,350	47,330	17.00/ 16.00	55,900	3.80/ 8.9	2,000	450	180	1.00	1.11	DIRECT	208	3	33	45	208	3	4.9	8.8	615	365	195	1,175	1, 2, 3, 4, 5, 6, 7, 8	3 M4.2	2 MS.1	8 M4.1
AC 9	CARRIER 50GCQJ06A2M5	CLASSROOM 110	5	61,350	47,330	17.00/ 16.00	55,900	3.80/ 8.9	2,000	450	180	1.00	1.11	DIRECT	208	3	33	45	208	3	4.9	8.8	615	365	195	1,175	1, 2, 3, 4, 5, 6, 7, 8	3 M4.2	2 MS.1	8 M4.1
AC 10	CARRIER 50GCQJ06A2M5	CLASSROOM 111	5	61,350	47,330	17.00/ 16.00	55,900	3.80/ 8.9	2,000	450	180	1.00	1.11	DIRECT	208	3	33	45	208	3	4.9	8.8	615	365	195	1,175	1, 2, 3, 4, 5, 6, 7, 8	3 M4.2	2 MS.1	8 M4.1

1. SEPARATE POWER CONNECTION FOR AC UNIT AND POWER EXHAUST.
2. HIGH STATIC DIRECT DRIVE FAN W/ VFD CONTROLLER.
3. 100% DRY BULB ECONOMIZER W/JADE CONTROLLER AND CO2 ROOM SENSOR FOR DCV OPERATION.
4. MODULATING CENTRIFUGAL POWER EXHAUST.
5. 2" VIBRATION ISOLATION SPRING CURB.
6. AUTOMATIC SHUT-OFF NOT REQUIRED PER 2022 CMC, SECTION 608.1.
7. 2" MERV 13 FILTERS.
8. SYSTEM-VU CONTROLLER.

NOTES:
A. SPACE PRESSURE TUBING (SPT) FURNISHED AND INSTALLED BY CONTRACTOR CONTRACTOR SHALL ROUTE SPT INSIDE SPACE AWAY FROM DOORS, OPERABLE WINDOWS, AND MINIMUM 3 FT. AWAY FROM SUPPLY AND RETURN AIR GRILLES. CONNECT SPT TO KELE RPS-W ROOM STATIC PRESSURE SENSOR AND LOCATE IN CEILING. PAINT SENSOR PLATE TO PATCH CEILING COLOR.

FAN COIL SCHEDULE

SYM	MFR & MODEL #	MAX. CFM	ESP	MIN. OSA CFM	ELECTRICAL V	ELECTRICAL PH	ELECTRICAL HZ	ELECTRICAL FLA	ELECTRICAL MCA	ELECTRICAL MOCP	UNIT WT (LB)	INTERLOCK WITH	REMARKS	WIRING DETAIL	ANCHORAGE DETAIL
FC 1	CARRIER FV4CNB006L00	1,600	0.75	120	208	1	60	6.8	8.5	15	200	HP 1	1, 2	5 M4.2	13 M4.1

1. BACNET COMPATIBLE THERMOSTAT.
2. CONDENSATE PUMP. PROVIDE 120V POWER.

HEAT PUMP UNIT SCHEDULE

SYM	MFR & MODEL #	COOLING CAPACITY (BTU/HR)	SEER/ EER	HEATING CAPACITY (BTU/HR)	COP	ELECTRICAL V	ELECTRICAL PH	ELECTRICAL HZ	ELECTRICAL MCA	ELECTRICAL MOCP	UNIT WT (LB)	INTERLOCK WITH	REMARKS	WIRING DETAIL	ANCHORAGE DETAIL
HP 1	CARRIER 25HHA448A005	47,660	15.0/ 12.0	47,590	4.00	208	3	60	18.6	30	250	FC 1	1	5 M4.2	1 M4.2

1. NEOPRENE PADS.

SPLIT SYSTEM INDOOR WALL MOUNTED FAN COIL UNIT SCHEDULE

SYM	MFR & MODEL #	ROOM SERVICED	MAX. CFM	ELECTRICAL	UNIT WT (LB)	OUTDOOR UNIT	REMARKS	WIRING DETAIL	ANCHORAGE DETAIL
SFC 1	CARRIER 40MAHBQ24XA3	MDF A122	719	POWERED BY OUTDOOR UNIT	45	SCU 1	1, 2, 3	4 M4.2	9 M4.1

1. EXTERNAL CONDENSATE PUMP, LITTLE GIANT VCMX-20ULST, OR EQUAL. PROVIDE 120V POWER.
2. BACNET COMPATIBLE THERMOSTAT.
3. POWERED BY OUTDOOR UNIT.

SPLIT SYSTEM OUTDOOR CONDENSING UNIT SCHEDULE

SYM	MFR & MODEL #	ROOM SERVICED	COOLING CAPACITY (BTU/HR)	SEER/ EER	ELECTRICAL V	ELECTRICAL PH	ELECTRICAL HZ	ELECTRICAL MCA	ELECTRICAL MOCP	UNIT WT (LB)	INDOOR UNIT	REMARKS	WIRING DETAIL	ANCHORAGE DETAIL
SCU 1	CARRIER 38MARBQ24AA3	MDF A122	24,000	21.5/ 13.0	208	1	60	25	35	140	SFC 1	1	4 M4.2	10 M4.1

1. NEOPRENE PADS.

EXHAUST FAN SCHEDULE

SYM	MFR & MODEL #	AREA SERVICED	CFM	ESP	BHP	HP	ELECTRICAL V	ELECTRICAL PH	FAN RPM	WT. (LBS)	REMARKS	WIRING DETAIL	ANCHORAGE DETAIL
EF 1	GREENHECK SP-A90-130-VG	STUDENT RR 100A	100	0.2	12 W	-	115	1	960	20	1, 2, 4	7 M4.2	12 M4.1
EF 2	GREENHECK SP-A90-130-VG	STUDENT RR 101A	100	0.2	12 W	-	115	1	960	20	1, 2, 4	7 M4.2	12 M4.1
EF 3	GREENHECK SP-A90-130-VG	STUDENT RR 102A	100	0.2	12 W	-	115	1	960	20	1, 2, 4	7 M4.2	12 M4.1
EF 4	GREENHECK SP-A90-130-VG	STUDENT RR 103A	100	0.2	12 W	-	115	1	960	20	1, 2, 4	7 M4.2	12 M4.1
EF 5	GREENHECK SP-A90-130-VG	STUDENT RR 104A	100	0.2	12 W	-	115	1	960	20	1, 2, 4	7 M4.2	12 M4.1
EF 6	GREENHECK SP-A90-130-VG	STUDENT RR 105A	100	0.2	12 W	-	115	1	960	20	1, 2, 4	7 M4.2	12 M4.1
EF 7	GREENHECK SP-A90-130-VG	STUDENT RR 106A	100	0.2	12 W	-	115	1	960	20	1, 2, 4	7 M4.2	12 M4.1
EF 8	GREENHECK SQ-80-VG	ELECTRICAL ROOM 108	250	0.3	0.04	1/10	115	1	1,390	60	1, 2, 3, 6	8 M4.2	11 M4.1
EF 9	GREENHECK SQ-80-VG	RR 109A, 109B, CUST. 109C	300	0.3	0.05	1/10	115	1	1,535	60	1, 2, 5	6 M4.2	11 M4.1
EF 10	GREENHECK SP-A90-130-VG	STUDENT RR 110A	100	0.2	12 W	-	115	1	960	20	1, 2, 4	7 M4.2	12 M4.1
EF 11	GREENHECK SP-A90-130-VG	STUDENT RR 111A	100	0.2	12 W	-	115	1	960	20	1, 2, 4	7 M4.2	12 M4.1

1. MANUFACTURE HANGER BRACKET.
2. DUCTED TO ROOF JACK.
3. LINE VOLTAGE T-STAT
4. INTERLOCK W/ LIGHT SWITCH.
5. INTERLOCK W/ EMS.
6. INLET GUARD.

GRAVITY VENTILATOR SCHEDULE

SYM	MFR & MODEL #	CFM	PD (IN. WG)	THROAT SIZE (IN)	THROAT AREA (SQ IN)	THROAT VEL. (FPM)	HOOD SIZE (IN)	CONNECTED TO	WEIGHT (LBS)	REMARKS	ANCHORAGE DETAIL
GV 1	GREENHECK GRSI-8	160	0.032	8	53.28	432	20.5	FC 1	25	1, 2	2 M4.2

1. ROOF CURB.
2. BACKDRAFT DAMPER

AIR DISTRIBUTION SCHEDULE

SYM.	MANUF & MODEL	NECK SIZE	FACE SIZE	CFM RANGE	MAX. NECK VELOCITY	MAX. N.C.	T. P. DROP	TYPE	DAMPER	REMARKS
- SD-1	PRICE PDMC	6"Ø 8"Ø 10"Ø 12"Ø 14"Ø 16"Ø 18"Ø	24"x24"	0 - 80 85 - 175 180 - 275 280 - 390 395 - 480 485 - 600 605 - 780	500	25	0.075	MODULAR PERFOR.	MVD	FRAME TYPE 3 FOR T-BAR
- RG-1	PRICE PDDR	6"Ø 8"Ø 10"Ø 12"Ø 14"Ø 16"Ø 18"Ø	24"x24"	0 - 80 85 - 175 180 - 275 280 - 390 395 - 480 485 - 600 605 - 780	500	25	0.016	PERFOR.	MVD	FRAME TYPE 3 FOR T-BAR
- SR-1	PRICE 520L	20"x12"	22"x14"	790 - 810	500	25	0.016	LOUVERED ADJUSTABLE	MVD	BORDER TYPE N FOR SIDEWALL MOUNT
- RG-2	PRICE 530L	34"x16" 36"x18"	36"x18" 38"x20"	1590 - 1610 1990 - 2010	500	25	.067	LOUVERED ADJUSTABLE	MVD	BORDER TYPE N FOR SIDEWALL MOUNT
- EG-1	PRICE 530L	6"x6" 8"x8" 10"x10" 12"x12" 14"x14" 16"x16" 18"x18" 22"x20"	8"x8" 10"x10" 12"x12" 14"x14" 16"x16" 18"x18" 20"x20" 24"x22"	0 - 90 95 - 195 200 - 300 305 - 450 455 - 590 595 - 800 805 - 1040 1045 - 1400	500	25	.067	LOUVERED	MVD	BORDER TYPE N FOR SURFACE MOUNT AND SIDEWALL MOUNT

LEGEND

- CFM
- AIR DISTRIBUTION DEVICE

SD	SUPPLY DIFFUSER
SR	SUPPLY REGISTER
RG	RETURN GRILLE
EG	EXHAUST GRILLE
TG	TRANSFER GRILLE

NOTES:
1. NOT ALL DIFFUSER/GRILLE TYPES OR SIZES MAY BE USED ON THIS PROJECT.

DSA STAMP

STUDIO W ARCHITECTS

Studio W Architects
424 32nd Street, Suite D/E
Newport Beach, California 92663
[T] 949.774.2920
www.StudioW-Architects.com

PDS Pocock Design Solutions Inc.

ARCHITECT	ENGINEER
LICENSED ARCHITECT BRYAN P WHITMORE No. C 30345 Ren. 9/30/23 STATE OF CALIFORNIA	REGISTERED PROFESSIONAL ENGINEER ADRIAN R. GOSSMAN No. M3828 Exp. 3/31/26 MECHANICAL STATE OF CALIFORNIA
DATE SIGNED: 06/24/2024	DATE SIGNED: 06/24/2024

GENERAL NOTES

1. This sheet is part of a set and is not to be used alone.
2. This sheet is not to be used for construction unless the architect's stamp and signature appear on the drawings and the status box indicated drawings have been released for construction.
3. These plans and prints thereof, as instruments of service, are owned by the architect and are for use on this project only. Reproduction and/or distribution without the prior written consent of the architect is forbidden.
4. Copyright Studio W Associates, Inc. 2022.

REVISION HISTORY

NO.	REMARKS	DATE

DRAWING STATUS

	DATE
○ DSA PLAN CHECK	03/29/2024
● DSA BACK CHECK	06/24/2024
○ BIDDING	
○ CONSTRUCTION	

KEY PLAN

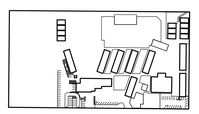

BUENA PARK SD
6885 ORANGETHORPE AVE
BUENA PARK, CA 90620

DESIGN DEVELOPMENT

CARL E. GILBERT ELEMENTARY SCHOOL
TK/PK CLASSROOMS & EARLY LEARNING BUILDING
7255 8TH STREET, BUENA PARK, CA 90621

MECHANICAL SCHEDULE

Date	Project Number
06/24/2024	23076
Application Number	Drawing Number
04-123212	M0.2
Drawn / Checked	
TL / PDS	

PRINT DATE: 6/18/2024 4:29:50 PM
FILE PATH: C:\Users\tlim\Documents\23076-BPUSD Gilbert-BLDG-M21_tedj@pocockdesignsolutions.com.rvt

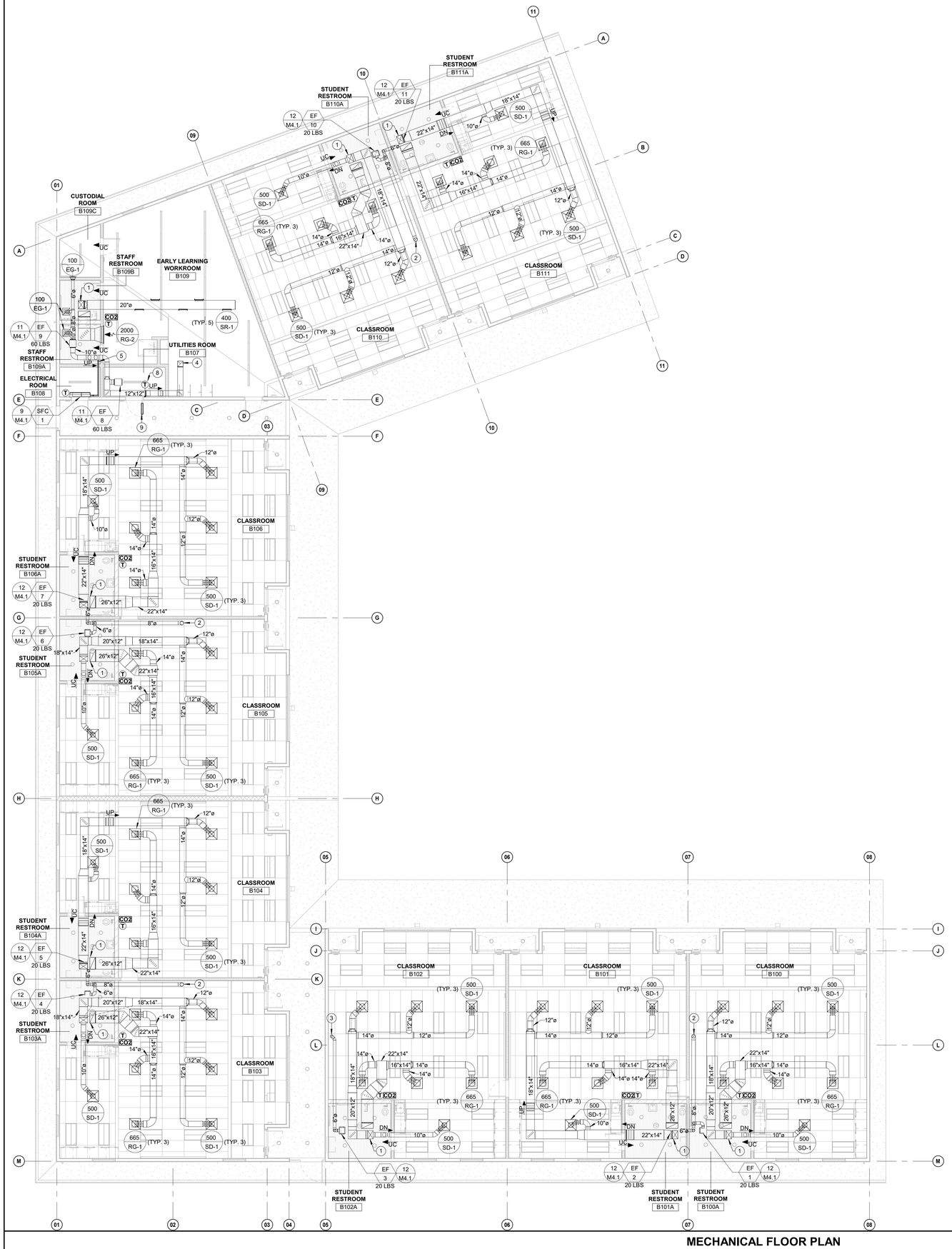

CONSTRUCTION NOTES

1. MANUAL VOLUME DAMPERS SHALL BE PROVIDED IN ALL DUCT BRANCHES TO INDIVIDUAL DIFFUSERS. DAMPERS SHALL BE LOCATED AS CLOSE TO THE MAIN DUCT AS POSSIBLE.
2. PROVIDE MAXIMUM 5'-0" OF ACOUSTICAL FLEX DUCT TO EACH DIFFUSER LOCATED IN T-BAR CEILINGS. FLEXIBLE DUCT SHALL NOT BE USED TO REPLACE ANY OFFSETS OR ELBOWS PER 2022 CMC REQUIREMENTS. ALL DIFFUSERS LOCATED IN HARD-LID CEILINGS SHALL HAVE RIGID CONNECTIONS.
3. PROVIDE REMOTE CABLE OPERATED CONTROLS FOR ALL VOLUME DAMPERS LOCATED ABOVE HARD-LID CEILINGS.
4. COORDINATE ENTIRE INSTALLATION OF THE HVAC SYSTEM WITH THE WORK OF ALL OTHER TRADES PRIOR TO ANY FABRICATION OR INSTALLATION. PROVIDE ALL FITTINGS, OFFSETS, AND TRANSITIONS AS REQUIRED FOR A COMPLETE WORKABLE INSTALLATION.
5. COORDINATE THE LOCATIONS OF ALL CEILING DIFFUSERS, REGISTERS, AND GRILLES WITH THE ARCHITECTURAL REFLECTIVE CEILING PLAN, ELECTRICAL LIGHTING LAYOUT, AND ARCHITECTURAL ROOM ELEVATIONS. COORDINATE AND PAINT ALL DIFFUSERS PER ARCHITECTURAL REQUIREMENTS.
6. AT THE TIME OF ROUGH INSTALLATION, OR DURING STORAGE ON THE CONSTRUCTION SITE AND UNTIL FINAL STARTUP OF THE HEATING, COOLING, AND VENTILATION EQUIPMENT, ALL DUCT AND OTHER RELATED AIR DISTRIBUTION COMPONENT OPENINGS SHALL BE COVERED WITH TAPE, PLASTIC, SHEET METAL, OR OTHER ACCEPTABLE METHODS TO REDUCE THE AMOUNT OF DUST, WATER, AND DEBRIS WHICH MAY ENTER THE SYSTEM.
7. MECHANICAL CONTRACTOR SHALL COORDINATE ALL DOOR LOUVER AND UNDERCUT LOCATIONS WITH THE APPROPRIATE TRADES PRIOR TO BID.
8. ALL EXPOSED DUCTWORK SHALL BE INTERNALLY LINED.

CONSTRUCTION KEY NOTES

1. 12"X18" SUPPLY DUCT AND 26"X12" RETURN DUCT UP THRU ROOF TO AC UNIT. SEE M3.1 FOR CONTINUATION.
2. 8"Ø EXHAUST DUCT UP THRU ROOF TO ROOF JACK. SEE M3.1 FOR CONTINUATION.
3. 6"Ø EXHAUST DUCT UP THRU ROOF TO ROOF JACK. SEE M3.1 FOR CONTINUATION.
4. 12"X12" EXHAUST DUCT UP THRU ROOF TO ROOF JACK. SEE M3.1 FOR CONTINUATION.
5. REFRIGERANT PIPING UP THRU ROOF. SEE M3.1 FOR CONTINUATION. ALL REFRIGERANT PIPING TO BE INSULATED.
6. REFRIGERANT PIPING UP THRU WALL. ALL REFRIGERANT PIPING TO BE INSULATED. EXPOSED REFRIGERANT PIPING TO BE WRAPPED IN ALUMINUM JACKTING.
7. 8"Ø OSA DUCT UP THRU ROOF. SEE M3.1 FOR CONTINUATION.
8. LINE-VOLTAGE THERMOSTAT.
9. DOOR LOUVER.

NORTH

MECHANICAL FLOOR PLAN

SCALE 1/8" = 1'-0" | 1

DSA STAMP

STUDIO W ARCHITECTS

Studio W Architects
424 32nd Street, Suite D/E
Newport Beach, California 92663
[T] 949.774.2920
www.StudioW-Architects.com

PDS Pocock Design Solutions Inc.

ARCHITECT	ENGINEER
LICENSED ARCHITECT BRYAN P WHITMORE No. C 30345 Ren. 9/30/23 STATE OF CALIFORNIA	REGISTERED PROFESSIONAL ENGINEER ANDREW R. GOSSMAN No. M38838 Exp. 3/31/26 MECHANICAL STATE OF CALIFORNIA
DATE SIGNED: 06/24/2024	DATE SIGNED: 06/24/2024

GENERAL NOTES

1. This sheet is part of a set and is not to be used alone.
2. This sheet is not to be used for construction unless the architect's stamp and signature appear on the drawings and the status box indicated drawings have been released for construction.
3. These plans and prints thereof, as instruments of service, are owned by the architect and are for use on this project only. Reproduction and/or distribution without the prior written consent of the architect is forbidden.
4. Copyright Studio W Associates, Inc. 2022.

REVISION HISTORY

NO.	REMARKS	DATE

DRAWING STATUS

	DATE
○ DSA PLAN CHECK	03/29/2024
● DSA BACK CHECK	06/24/2024
○ BIDDING	
○ CONSTRUCTION	

KEY PLAN

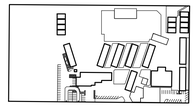

BUENA PARK SD
6885 ORANGETHORPE AVE
BUENA PARK, CA 90620

DESIGN DEVELOPMENT

CARL E. GILBERT ELEMENTARY SCHOOL
TK/PK CLASSROOMS & EARLY LEARNING BUILDING
7255 8TH STREET, BUENA PARK, CA 90621

MECHANICAL FLOOR PLAN

Date	Project Number
06/24/2024	23076
Application Number	Drawing Number
04-123212	M2.1
Drawn / Checked	
TL / PDS	

PRINT DATE: 6/18/2024 4:29:54 PM
FILE PATH: C:\Users\tim\Documents\23076-BPUSD Gilbert\BLDG\M21_tedi@pocockdesignsolutions.com.rvt

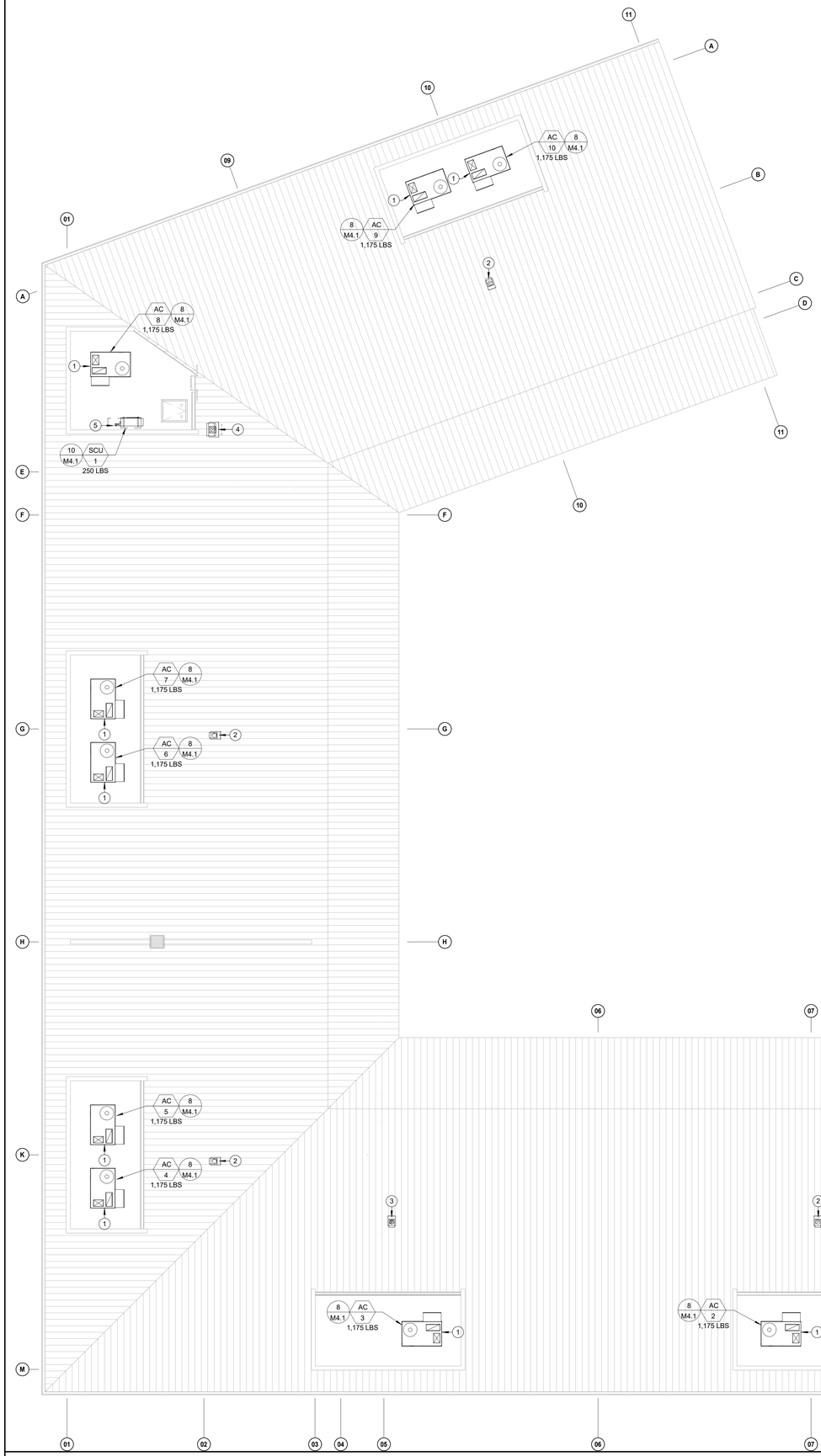

CONSTRUCTION NOTES

1. CONTRACTOR SHALL COORDINATE EXACT EQUIPMENT PAD SIZES AND LOCATIONS WITH OTHER TRADES PRIOR TO INSTALLATION.
2. MAINTAIN MANUFACTURER MIN. CLEARANCES ON ALL ROOF-TOP MECHANICAL EQUIPMENT.
3. FRESH AIR INTAKES SHALL BE 10'-0" MIN. AWAY FROM ALL EXHAUST OUTLETS, PLUMBING VENTS, AND FLUES.

CONSTRUCTION KEY NOTES

1. AC UNIT W/ 12"X18" SUPPLY DUCT AND 26"X12" RETURN DUCT DOWN THRU ROOF. SEE M2.1 FOR CONTINUATION.
2. ROOF JACK, GREENHECK RJ-6X9 OR EQUAL, W/ 8"Ø EXHAUST DUCT DOWN THRU ROOF. SEE M2.1 FOR CONTINUATION.
3. ROOF JACK, GREENHECK RJ-6X9 OR EQUAL, W/ 6"Ø EXHAUST DUCT DOWN THRU ROOF. SEE M2.1 FOR CONTINUATION.
4. ROOF JACK, GREENHECK RJ-10X10 OR EQUAL, W/ 12"X12" EXHAUST DUCT DOWN THRU ROOF. SEE M2.1 FOR CONTINUATION.
5. REFRIGERANT PIPING DOWN THRU ROOF. SEE M2.1 FOR CONTINUATION AND 7/M4.1 FOR PIPING PENETRATION DETAIL. ALL REFRIGERANT PIPING TO BE INSULATED. EXPOSED REFRIGERANT PIPING TO BE WRAPPED IN ALUMINUM JACKTING.
6. GRAVITY VENTILATOR W/ 8"Ø OSA DUCT DOWN THRU ROOF. SEE M2.1 FOR CONTINUATION.

NORTH

MECHANICAL ROOF PLAN

SCALE 1/8" = 1'-0" | 1

DSA STAMP

STUDIO W ARCHITECTS

Studio W Architects
424 32nd Street, Suite D/E
Newport Beach, California 92663
[T] 949.774.2920
www.StudioW-Architects.com

PDS Pocock Design Solutions Inc.

ARCHITECT	ENGINEER
LICENSED ARCHITECT BRYAN P WHITMORE No. C 30345 Ren. 9/30/23 STATE OF CALIFORNIA	REGISTERED PROFESSIONAL ENGINEER ANDREW R. GOSSMAN No. M3828 Exp. 3/31/26 MECHANICAL STATE OF CALIFORNIA
DATE SIGNED: 06/24/2024	DATE SIGNED: 06/24/2024

GENERAL NOTES

1. This sheet is part of a set and is not to be used alone.
2. This sheet is not to be used for construction unless the architect's stamp and signature appear on the drawings and the status box indicated drawings have been released for construction.
3. These plans and prints thereof, as instruments of service, are owned by the architect and are for use on this project only. Reproduction and/or distribution without the prior written consent of the architect is forbidden.
4. Copyright Studio W Associates, Inc. 2022.

REVISION HISTORY

NO.	REMARKS	DATE

DRAWING STATUS

	DATE
○ DSA PLAN CHECK	03/29/2024
● DSA BACK CHECK	06/24/2024
○ BIDDING	
○ CONSTRUCTION	

KEY PLAN

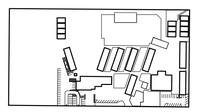

BUENA PARK SD
6885 ORANGETHORPE AVE
BUENA PARK, CA 90620

DESIGN DEVELOPMENT

CARL E. GILBERT ELEMENTARY SCHOOL
TK/PK CLASSROOMS & EARLY LEARNING BUILDING
7255 8TH STREET, BUENA PARK, CA 90621

MECHANICAL ROOF PLAN

Date 06/24/2024	Project Number 23076
Application Number 04-123212	Drawing Number M3.1
Drawn TL	Checked PDS

PRINT DATE: 6/18/2024 2:29:5 PM
FILE PATH: C:\Users\tim\Documents\23076-BP-USD Gilbert-BLDG-M21_tim@pocockdesignsolutions.com.rvt

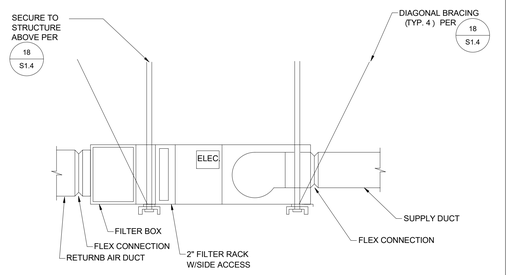

FC - MAX WEIGHT: 200 LBS.

DUCTED FAN COIL ANCHORAGE

SCALE	
NONE	13

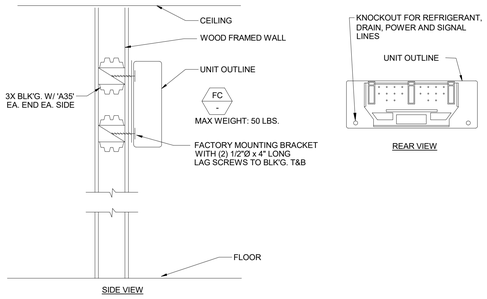

NOTES:
1. MAINTAIN MFR. RECOMMENDED MIN. CLEARANCES.
2. REFRIGERANT IS METERED BY CAPILLARY TUBES IN THE OUTDOOR UNIT. INSULATE BOTH REFRIGERANT LINES.
3. REFRIGERANT, DRAIN, AND POWER CONNECTIONS MAY BE MADE IN UNIT REAR, BOTTOM, LEFT SIDE OR RIGHT SIDE.
4. INSTALLATION SHALL COMPLY WITH MFR. GUIDELINES.

SFC 1 MAX WEIGHT: 45 LBS.

TYPICAL DUCTLESS HIGH WALL FAN COIL UNIT DETAIL

SCALE	
NONE	9

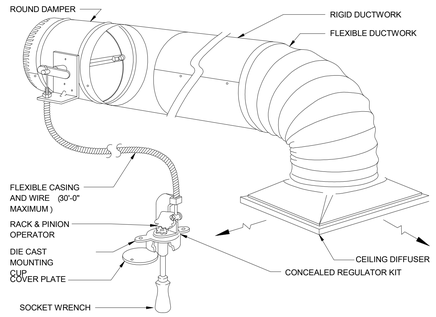

PROVIDE IN ALL AREAS WITH GYP./HARD CEILING.

NOTES:
1. COORDINATE EXACT LOCATION OF CEILING MOUNTED CONCEALED REGULATOR WITH ARCHITECT PRIOR TO INSTALLATION.

STANDARD DAMPER CONSTRUCTION:
1. GALVANIZED STEEL WITH ROLLED BEAD STIFFENERS - 22 TO 18 GA.
2. REINFORCED BLADE, SELF LUBRICATING BEARINGS
3. WORM GEAR MOUNTING PLATE
4. 3/8 SQUARE (FLAT/FLAT) AXLES ASSURES NON SLIP CONNECTION
5. OPERATING TEMPERATURE = -40° - 200° F.
6. MAX VELOCITY = 1500 FPM
7. FURNISHED 1/8 UNDERSIZED FOR MALE SLIP-IN

CABLE TERMINATION:
1. RT-CCM ROUND MINIATURE CEILING CUP
2. RT-MB MOUNTING BRACKET US PATENT #5,702,298 CANADIAN PATENT #2,185,311

TYPICAL REMOTE CABLE CONTROL SYSTEM DETAIL

SCALE	
NONE	6

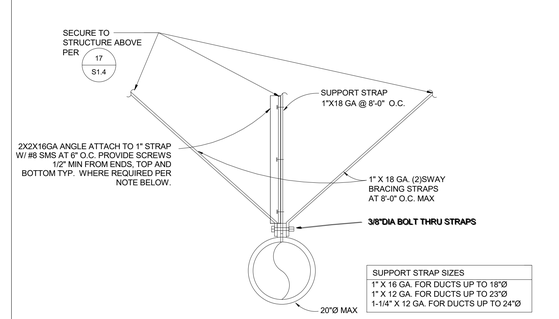

NOTE:
1. MAXIMUM DUCTWORK WEIGHT SHALL BE 8 LB/FT
2. THE VERTICAL ANGLE IS TO BE ADDED WHEREVER REQUIRED TO AVOID IMPACT TO ADJACENT COMPONENTS WHICH WOULD CREATE A HAZARD (FALLING, GAS BREAKAGE, ETC.) OR OTHERWISE DAMAGE ESSENTIAL LIFE-SAFETY SYSTEM PER CBC 2022 SECTION 1617.1.25 REQUIREMENTS.

TYPICAL ROUND DUCT ANCHORAGE DETAIL

SCALE	
NONE	3

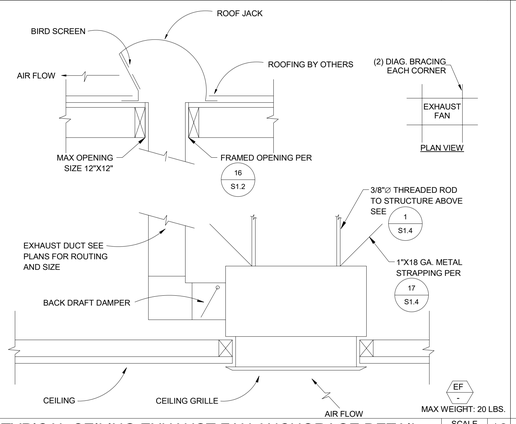

EF - MAX WEIGHT: 20 LBS.

TYPICAL CEILING EXHAUST FAN ANCHORAGE DETAIL

SCALE	
NONE	12

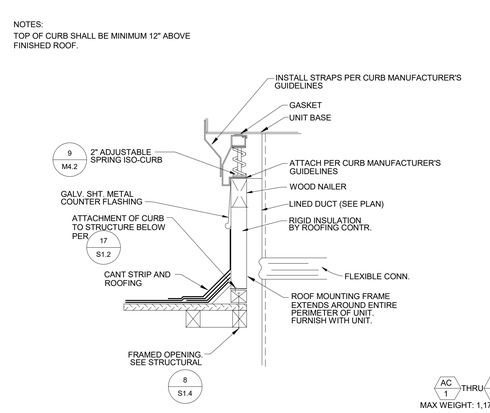

AC 1 THRU AC 10 MAX WEIGHT: 1,175 LBS.

TYPICAL ROOFTOP A/C UNIT ANCHORAGE DETAIL

SCALE	
NONE	8

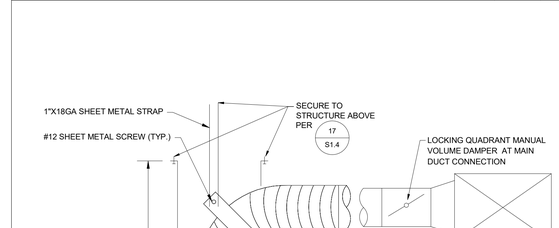

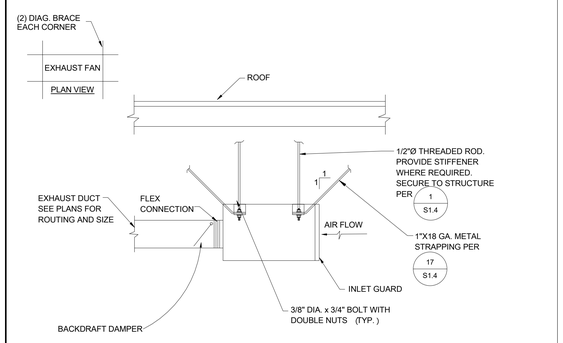

EF - MAX OPER. WEIGHT: 60 LBS.

TYPICAL IN-LINE EF ANCHORAGE DETAIL

SCALE	
NONE	11

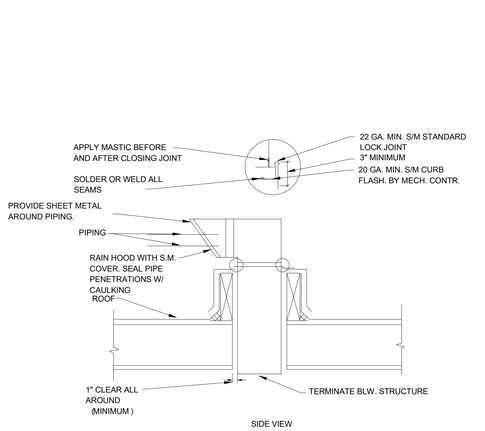

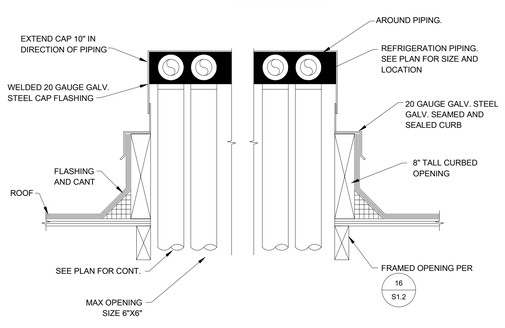

TYPICAL REFRIGERANT PIPE PENETRATION DETAIL

SCALE	
NONE	7

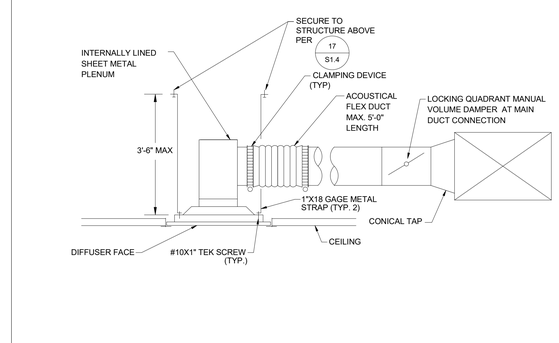

NOTE:
FLEXIBLE DUCT SHALL NOT EXCEED 5'-0" IN LENGTH AND SHALL NOT BE USED IN LIEU OF A RIGID ELBOW OR TRANSITION PER CMC REQUIREMENTS.

TYPICAL CEILING DIFFUSER INSTALLATION DETAIL

SCALE	
NONE	2

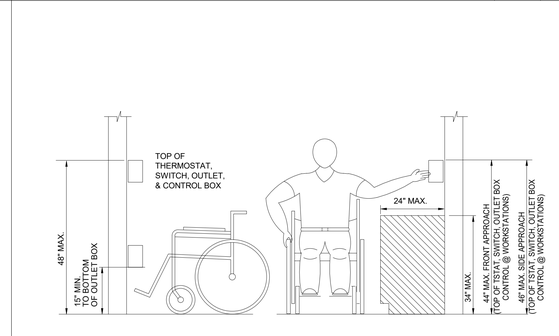

DUCT TRANSITION REQUIREMENTS

SCALE	
NONE	5

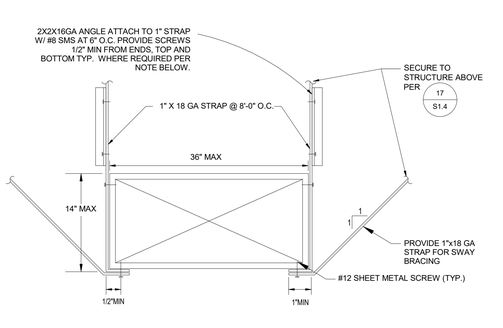

NOTE:
1. MAXIMUM DUCTWORK WEIGHT SHALL BE 15 LB/FT
2. THE VERTICAL ANGLE IS TO BE ADDED WHEREVER REQUIRED TO AVOID IMPACT TO ADJACENT COMPONENTS WHICH WOULD CREATE A HAZARD (FALLING, GAS BREAKAGE, ETC.) OR OTHERWISE DAMAGE ESSENTIAL LIFE-SAFETY SYSTEM PER CBC 2022 SECTION 1617.1.25 REQUIREMENTS.

TYPICAL RECT. DUCT ANCHORAGE DETAIL

SCALE	
NONE	4

TYPICAL CONTROL DEVICE MOUNTING DETAIL

SCALE	
NONE	1

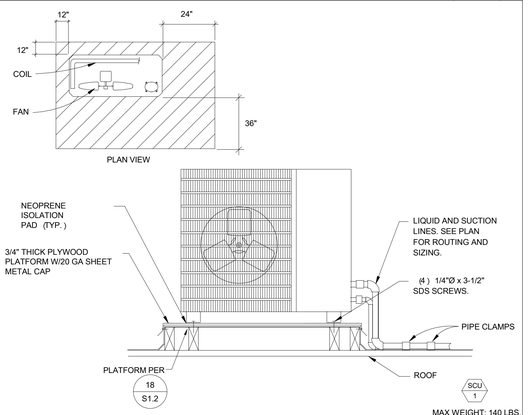

SCU 1 MAX WEIGHT: 140 LBS.

TYPICAL CONDENSING UNIT ON ROOF DETAIL

SCALE	
NONE	10

STUDIO W ARCHITECTS

Studio W Architects
424 32nd Street, Suite D/E
Newport Beach, California 92663
[T] 949.774.2920
www.StudioW-Architects.com

PDS Pocock Design Solutions Inc.

ARCHITECT	ENGINEER
LICENSED ARCHITECT BRYAN P WHITMORE No. C 30345 Ren. 9/30/23 STATE OF CALIFORNIA	REGISTERED PROFESSIONAL ENGINEER ANDREW R. GOSSMAN No. M38838 Exp. 3/31/26 MECHANICAL STATE OF CALIFORNIA
DATE SIGNED: 06/24/2024	DATE SIGNED: 06/24/2024

GENERAL NOTES
1. This sheet is part of a set and is not to be used alone.
2. This sheet is not to be used for construction unless the architect's stamp and signature appear on the drawings and the status box indicated drawings have been released for construction.
3. These plans and prints thereof, as instruments of service, are owned by the architect and are for use on this project only. Reproduction and/or distribution without the prior written consent of the architect is forbidden.
4. Copyright Studio W Associates, Inc. 2022.

REVISION HISTORY

NO.	REMARKS	DATE

DRAWING STATUS

	DATE
○ DSA PLAN CHECK	03/29/2024
● DSA BACK CHECK	06/24/2024
○ BIDDING	
○ CONSTRUCTION	

KEY PLAN

BUENA PARK SD
6885 ORANGETHORPE AVE
BUENA PARK, CA 90620

DESIGN DEVELOPMENT

CARL E. GILBERT ELEMENTARY SCHOOL
TK/PK CLASSROOMS & EARLY LEARNING BUILDING
7255 8TH STREET, BUENA PARK, CA 90621

MECHANICAL DETAILS

Date	Project Number
06/24/2024	23076
Application Number	Drawing Number
04-123212	M4.1
Drawn / Checked	
TL / PDS	

PRINT DATE: 6/18/2024 4:29:55 PM
FILE PATH: C:\Users\tim\Documents\23076-BPUSD Gilbert-BLDG-M21_tlek@pocockdesignsolutions.com.rvt

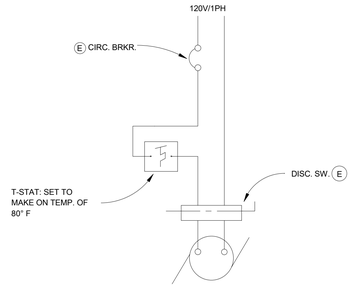

LEGEND:

(E) PROVIDED BY ELEC.

(M) PROVIDED BY MECH.

TYPICAL EXHAUST FAN WIRING DIAGRAM DETAIL — SCALE: NONE — 8

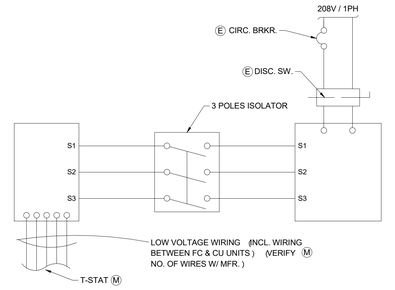

LEGEND:

(E) PROVIDED BY ELEC.

(M) PROVIDED BY MECH.

NOTE: INSTALL PER MANUFACTURER'S GUIDELINES.

TYPICAL SPLIT SYSTEM WIRING DIAGRAM DETAIL — SCALE: NONE — 4

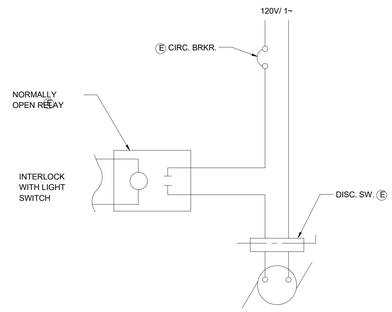

LEGEND:

(E) PROVIDED BY ELEC.

(M) PROVIDED BY MECH.

TYPICAL EXHAUST FAN WIRING DIAGRAM DETAIL — SCALE: NONE — 7

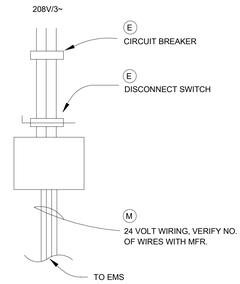

LEGEND:

(E) PROVIDED BY ELEC.

(M) PROVIDED BY MECH.

TYPICAL PACKAGED A/C UNIT WIRING DIAGRAM DETAIL — SCALE: NONE — 3

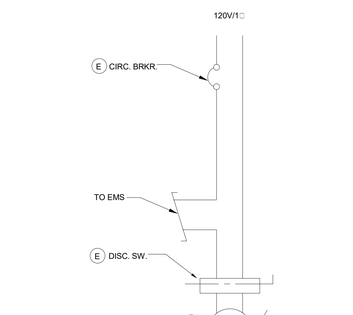

LEGEND:

(E) PROVIDED BY ELEC.

(M) PROVIDED BY MECH.

TYPICAL EXHAUST FAN WIRING DIAGRAM DETAIL — SCALE: NONE — 6

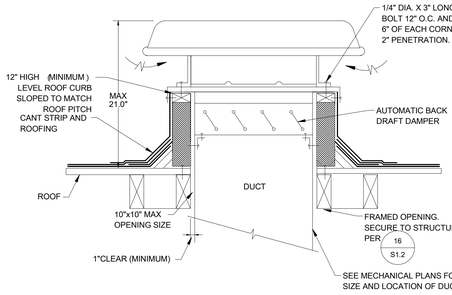

GV

MAX OPER. WEIGHT: 25 LBS.

TYPICAL GRAVITY VENTILATOR ANCHORAGE DETAIL — SCALE: NONE — 2

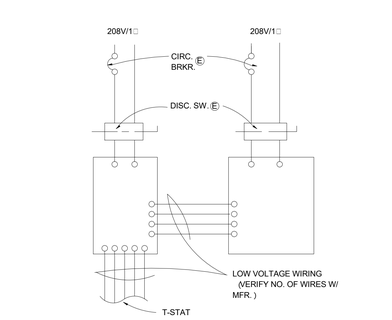

LEGEND:

(E) PROVIDED BY ELEC.

(M) PROVIDED BY MECH.

TYPICAL SPLIT SYSTEM WIRING DIAGRAM DETAIL — SCALE: NONE — 5

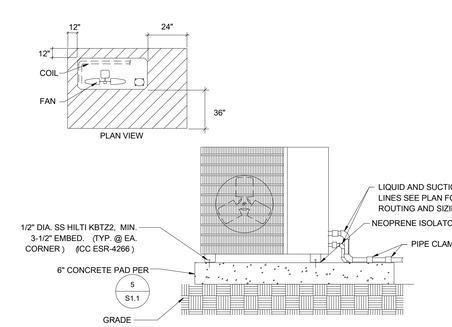

HP

1

MAX WEIGHT: - LBS.

TYPICAL CONDENSING UNIT ON GRADE DETAIL — SCALE: NONE — 1

MicroMetl — Date: — Weight: 347lbs (US) 157.4kg (Metric) — Part Number: CRBV-SRT12HA-1112-P10 — RTU: — Submitted to: — Approved by: — Notes:

Vibration Isolation - Structurally Calculated Curb 21 Inches Tall / 11 Inch Curb Base, Full Perimeter, Non Insulated, With Power Exhaust Option . The Adjustable Deflection Spring Housing Meets California CBC, Seismic Requirements

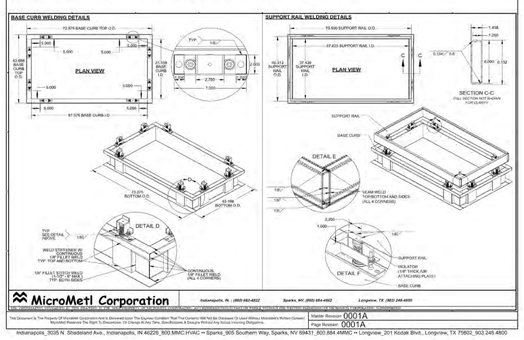

This Document Is The Property Of MicroMetl Corporation And Is Delivered Upon The Express Condition That The Contents Will Not Be Disclosed To Used Without MicroMetl's Written Consent. MicroMetl Reserves The Right To Discontinue, Or Change At Any Time, Specifications & Designs Without Any Notice Incurring Obligations.

Master Revision: 0001A — Page Revision: 0001A

Indianapolis_3035 N. Shadeland Ave., Indianapolis, IN 46226_800.MMC.HVAC ~ Sparks_905 Southern Way, Sparks, NV 89431_800.884.4MMC ~ Longview_201 Kodak Blvd., Longview, TX 75602_903.248.4800

MicroMetl — Date: — Weight: 347lbs (US) 157.4kg (Metric) — Part Number: CRBV-SRT12HA-1112-P10 — RTU: — Submitted to: — Approved by: — Notes:

Vibration Isolation - Structurally Calculated Curb 21 Inches Tall / 11 Inch Curb Base, Full Perimeter, Non Insulated, With Power Exhaust Option . The Adjustable Deflection Spring Housing Meets California CBC, Seismic Requirements

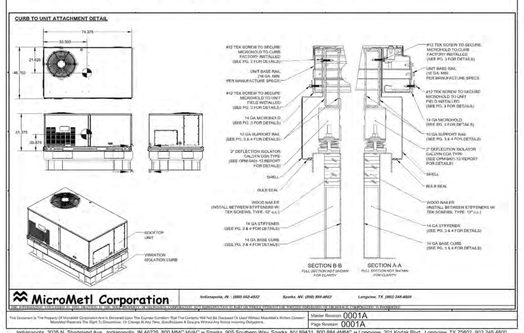

This Document Is The Property Of MicroMetl Corporation And Is Delivered Upon The Express Condition That The Contents Will Not Be Disclosed To Used Without MicroMetl's Written Consent. MicroMetl Reserves The Right To Discontinue, Or Change At Any Time, Specifications & Designs Without Any Notice Incurring Obligations.

Master Revision: 0001A — Page Revision: 0001A

Indianapolis_3035 N. Shadeland Ave., Indianapolis, IN 46226_800.MMC.HVAC ~ Sparks_905 Southern Way, Sparks, NV 89431_800.884.4MMC ~ Longview_201 Kodak Blvd., Longview, TX 75602_903.248.4800

MicroMetl — Date: — Weight: 347lbs (US) 157.4kg (Metric) — Part Number: CRBV-SRT12HA-1112-P10 — RTU: — Submitted to: — Approved by: — Notes:

Vibration Isolation - Structurally Calculated Curb 21 Inches Tall / 11 Inch Curb Base, Full Perimeter, Non Insulated, With Power Exhaust Option . The Adjustable Deflection Spring Housing Meets California CBC, Seismic Requirements

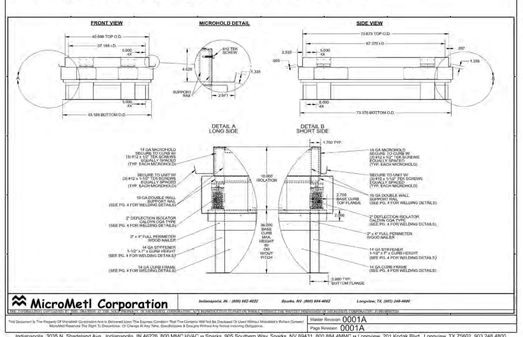

This Document Is The Property Of MicroMetl Corporation And Is Delivered Upon The Express Condition That The Contents Will Not Be Disclosed To Used Without MicroMetl's Written Consent. MicroMetl Reserves The Right To Discontinue, Or Change At Any Time, Specifications & Designs Without Any Notice Incurring Obligations.

Master Revision: 0001A — Page Revision: 0001A

Indianapolis_3035 N. Shadeland Ave., Indianapolis, IN 46226_800.MMC.HVAC ~ Sparks_905 Southern Way, Sparks, NV 89431_800.884.4MMC ~ Longview_201 Kodak Blvd., Longview, TX 75602_903.248.4800

MicroMetl — Date: — Weight: 347lbs (US) 157.4kg (Metric) — Part Number: CRBV-SRT12HA-1112-P10 — RTU: — Submitted to: — Approved by: — Notes:

Vibration Isolation - Structurally Calculated Curb 21 Inches Tall / 11 Inch Curb Base, Full Perimeter, Non Insulated, With Power Exhaust Option . The Adjustable Deflection Spring Housing Meets California CBC, Seismic Requirements

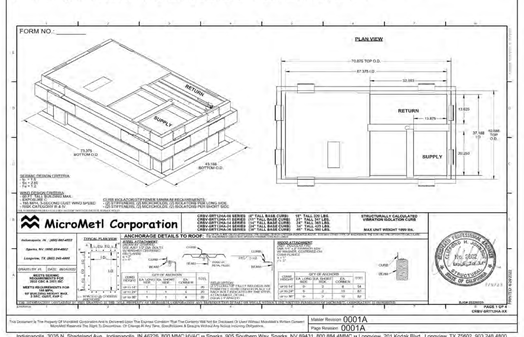

This Document Is The Property Of MicroMetl Corporation And Is Delivered Upon The Express Condition That The Contents Will Not Be Disclosed To Used Without MicroMetl's Written Consent. MicroMetl Reserves The Right To Discontinue, Or Change At Any Time, Specifications & Designs Without Any Notice Incurring Obligations.

Master Revision: 0001A — Page Revision: 0001A

Indianapolis_3035 N. Shadeland Ave., Indianapolis, IN 46226_800.MMC.HVAC ~ Sparks_905 Southern Way, Sparks, NV 89431_800.884.4MMC ~ Longview_201 Kodak Blvd., Longview, TX 75602_903.248.4800

TYPICAL CURB DETAIL — SCALE: NONE — 9

PRINT DATE: 6/18/2024 4:29:59 PM
FILE PATH: C:\Users\tim\Documents\23076-BP-SSD Gilbert-BUDG-M21_tw@pcockdesignsolutions.com.rvt

DSA STAMP

STUDIO W ARCHITECTS

Studio W Architects
424 32nd Street, Suite D/E
Newport Beach, California 92663
[T] 949.774.2920
www.StudioW-Architects.com

PDS Pocock Design Solutions Inc.

ARCHITECT	ENGINEER
LICENSED ARCHITECT BRYAN P WHITMORE No. C 30345 Ren. 9/30/23 STATE OF CALIFORNIA	REGISTERED PROFESSIONAL ENGINEER ANDREW R. GOSSMAN No. M3828 Exp. 3/31/25 MECHANICAL STATE OF CALIFORNIA
DATE SIGNED: 06/24/2024	DATE SIGNED: 06/24/2024

GENERAL NOTES

1. This sheet is part of a set and is not to be used alone.
2. This sheet is not to be used for construction unless the architect's stamp and signature appear on the drawings and the status box indicated drawings have been released for construction.
3. These plans and prints thereof, as instruments of service, are owned by the architect and are for use on this project only. Reproduction and/or distribution without the prior written consent of the architect is forbidden.
4. Copyright Studio W Associates, Inc. 2022.

REVISION HISTORY

NO.	REMARKS	DATE

DRAWING STATUS

	DATE
○ DSA PLAN CHECK	03/29/2024
● DSA BACK CHECK	06/24/2024
○ BIDDING	
○ CONSTRUCTION	

KEY PLAN

BUENA PARK SD
6885 ORANGETHORPE AVE
BUENA PARK, CA 90620

DESIGN DEVELOPMENT

CARL E. GILBERT ELEMENTARY SCHOOL
TK/PK CLASSROOMS & EARLY LEARNING BUILDING
7255 8TH STREET, BUENA PARK, CA 90621

MECHANICAL DETAILS

Date 06/24/2024	Project Number 23076
Application Number 04-123212	Drawing Number M4.2
Drawn TL	Checked PDS

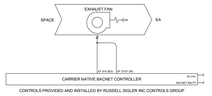

Exhaust Fans

EF-9 shall run based on an occupied time schedule (configurable)
Exhaust fan status will be monitored through a current sensing switch. If the current switch does not detect fan status after a start command has been sent to the associated exhaust fan, an alarm will be generated to the I-Vu web server

CONTROL PANEL DETAIL (CP-1: EF-9)

SCALE NONE | 3

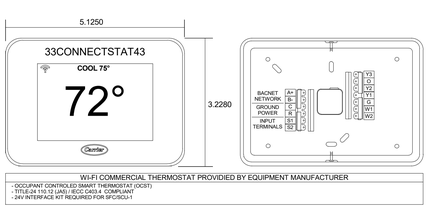

WI-FI COMMERCIAL THERMOSTAT PROVIDIED BY EQUIPMENT MANUFACTURER
- OCCUPANT CONTROLED SMART THERMOSTAT (OCST)
- TITLE-24 110.12 (JA5) / IECC C403.4 COMPLIANT
- 24V INTERFACE KIT REQUIRED FOR SFC/SCU-1

Split System

Indoor Fan
During Occupied periods, fan shall operate continuously. During Unoccupied periods, fan shall operate when the space temperature exceeds the unoccupied heating or cooling setpoints. The fan operates at one speed only and provides on/off operation.

Heating Mode
When space temperature is below the occupied heating setpoint, unit shall operate in the heating mode. Unit shall stage available heat stages to satisfy demand in the occupied space.

Cooling Mode
When space temperature is above occupied cooling setpoint, unit shall operate in the cooling mode. Unit shall enable available cooling stages to satisfy demand in the occupied space.

SPLIT SYSTEM DETAIL (FC/HP-1 & SFC/SCU-1)

SCALE NONE | 4

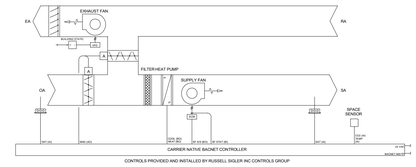

Packaged Heat Pump

Indoor Fan
During Occupied periods, the fan shall operate continuously. During Unoccupied periods, the fan shall operate when the space temperature exceeds the unoccupied heating or cooling setpoints. The fan operates at 1 of 2 speeds depending on the mode of operation and load conditions. During vent only mode and low load conditions, the fan operates at low speed. If load conditions increase or if there is a call for heating, the fan operates at high speed.

Heating Mode
When space temperature is below the occupied heating setpoint, unit shall operate in the heating mode. Unit shall stage available heat stages to satisfy demand in the occupied space.

Cooling Mode
When space temperature is above occupied cooling setpoint, unit shall operate in the cooling mode. Unit shall enable available cooling stages to satisfy demand in the occupied space.

Economizer
Economizer shall close when fan is off or during a loss of power. During occupied hours when fan is energized, the economizer shall open to adjustable minimum position. When outside air temperature is below 71F and occupied space requires cooling, economizer shall open. If economizer air is not sufficient to meet the demand in the occupied space, unit shall enable available mechanical cooling stages to satisfy demand in the occupied space.

CO2 Control
Unit shall monitor space CO2 when the supply fan is energized. When CO2 is above setpoint of 1000 PPM, economizer shall modulate open toward an adjustable maximum CO2 position. As the CO2 level in the space increases above the setpoint, the minimum positions of the dampers will be increased proportionally, until the maximum ventilation setting is reached. As the space CO2 level decreases because of the increase in fresh air, the outdoor-damper will follow the higher demand condition from the DCV mode or from the free-cooling mode.

Power Exhaust
The exhaust fan shall modulate to maintain the room pressure setpoint (as determined by air balancer). Not controlled through EMS.

2C/1H HEAT PUMP W/ ECON& PE DETAIL (AC-1 THRU AC-10)

SCALE NONE | 2

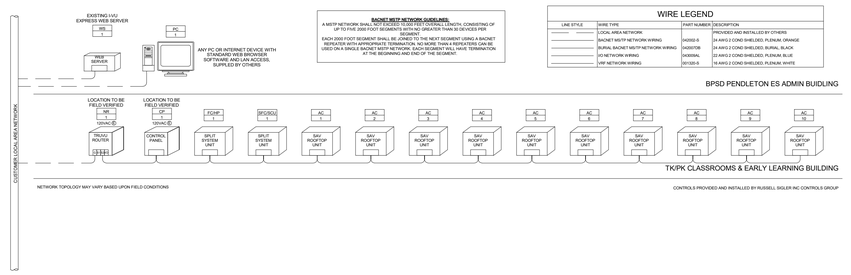

BACS RISER DIAGRAM

SCALE NONE | 1

DSA STAMP

STUDIO W ARCHITECTS

Studio W Architects
424 32nd Street, Suite D/E
Newport Beach, California 92663
[T] 949.774.2920
www.StudioW-Architects.com

PDS
Pocock Design Solutions Inc.

ARCHITECT	ENGINEER
LICENSED ARCHITECT BRYAN P WHITMORE No. C 30345 Ren. 9/30/23 STATE OF CALIFORNIA	REGISTERED PROFESSIONAL ENGINEER ADRIER R. GOSSMAN No. M3828 Exp. 3/31/26 MECHANICAL STATE OF CALIFORNIA
DATE SIGNED: 06/24/2024	DATE SIGNED: 06/24/2024

GENERAL NOTES
1. This sheet is part of a set and is not to be used alone.
2. This sheet is not to be used for construction unless the architect's stamp and signature appear on the drawings and the status box indicated drawings have been released for construction.
3. These plans and prints thereof, as instruments of service, are owned by the architect and are for use on this project only. Reproduction and/or distribution without the prior written consent of the architect is forbidden.
4. Copyright Studio W Associates, Inc. 2022.

REVISION HISTORY

NO.	REMARKS	DATE

DRAWING STATUS

	DATE
○ DSA PLAN CHECK	03/29/2024
● DSA BACK CHECK	06/24/2024
○ BIDDING	
○ CONSTRUCTION	

KEY PLAN

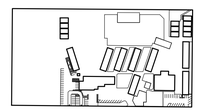

BUENA PARK SD
6885 ORANGETHORPE AVE
BUENA PARK, CA 90620

DESIGN DEVELOPMENT

CARL E. GILBERT ELEMENTARY SCHOOL
TK/PK CLASSROOMS & EARLY LEARNING BUILDING
7255 8TH STREET, BUENA PARK, CA 90621

CONTROL DETAILS

Date 06/24/2024
Project Number 23076
Application Number 04-123212
Drawing Number M5.1
Drawn TL
Checked PDS

PRINT DATE: 6/18/2024 4:29:59 PM
FILE PATH: C:\Users\tim\Documents\23076-BPUSD Gilbert-BLDG-M21_tw4@pocockdesignsolutions.com.rvt

CERTIFICATE OF COMPLIANCE - NONRESIDENTIAL PERFORMANCE COMPLIANCE METHOD — NRCC-PRF-E

Nonresidential Performance Compliance Method — (Page 4 of 21)

C2. TDV ENERGY COMPLIANCE RESULTS FOR PERFORMANCE COMPONENTS (Annual TDV Energy Use, kBtu/ft² - yr)

COMPLIES[2]			
Energy Component	**Standard Design (TDV)**	**Proposed Design (TDV)**	**Compliance Margin (TDV)[1]**
Space Heating	2.1	3.43	-1.33
Space Cooling	56.89	50.82	6.07
Indoor Fans	93.65	23.64	70.01
Heat Rejection	0	0	0
Pumps & Misc.	0	0	0
Domestic Hot Water	20.77	20.77	0
Indoor Lighting	31.91	31.91	0
Flexibility	---	---	---
EFFICIENCY COMPLIANCE TOTAL	**205.32**	**130.57**	**74.75 (36.4%)**
Photovoltaics	---	---	---
Batteries	---	---	---
TOTAL COMPLIANCE	**205.32**	**130.57**	**74.75 (36.4%)**

[1] *Notes: This number in parenthesis following the Compliance Margin in column 4, represents the Percent Better than Standard.*

CERTIFICATE OF COMPLIANCE - NONRESIDENTIAL PERFORMANCE COMPLIANCE METHOD — NRCC-PRF-E

Nonresidential Performance Compliance Method — (Page 3 of 21)

C1. COMPLIANCE SUMMARY

COMPLIES[1]			
	Time Dependent Valuaton (TDV)		Source Energy Use
	Efficiency[2] (kBtu/ft² - yr)	Total[2] (kBtu/ft² - yr)	Total[2] (kBtu/ft² - yr)
Standard Design	205.32	205.32	14.62
Proposed Design	130.57	130.57	8.39
Compliance Margins	**74.75**	**74.75**	**6.23**
	Pass	**Pass**	**Pass**

[1] *Efficiency measures include improvements like a better building envelope and more efficient equipment*
[2] *Compliance Totals include efficiency, photovoltaics and batteries*
[3] *Building complies when efficiency and total compliance margins are greater than or equal to zero and unmet load hour limits are not exceeded*

CERTIFICATE OF COMPLIANCE - NONRESIDENTIAL PERFORMANCE COMPLIANCE METHOD — NRCC-PRF-E

Nonresidential Performance Compliance Method — (Page 2 of 21)

B. PROJECT SUMMARY

Table B shows which building components are included in the performance calculation. If indicated as not included, the project must show compliance prescriptively if within the permit application.

Building Components Complying via Performance					Building Components Complying Prescriptively		
Envelope (See Table G)	Nonres	Performance	Solar Thermal Water Heating (See Table I)	☐ Performance	The following building components are ONLY eligible for prescriptive compliance and should be documented on the NRCC form listed if within the scope of the permit application (i.e. compliance will not be shown on the NRCC-PRF-E).		
	MultiFam	Not Included		☒ Not Included			
Mechanical (See Table H)	Nonres	Performance	Covered Process: Commercial Kitchens (see Table J)	☐ Performance	Indoor Lighting (Unconditioned) 140.6 & 170.2(e)	NRCC-LTI-E is required	
	MultiFam	Not Included		☒ Not Included	Outdoor Lighting 140.7 & 170.2(e)	NRCC-LTO-E is required	
Domestic Hot Water (See Table I)	Nonres	Not Included	Covered Process: Laboratory Exhaust (see Table J)	☐ Performance	Sign Lighting 140.8 & 170.2(e)	NRCC-LTS-E is required	
	MultiFam	Not Included		☒ Not Included	**Building Components Complying with Mandatory Measures**		
Lighting (Indoor Conditioned, see Table K)	Nonres	Performance	Photovoltaics (see Table F)	☒ Performance	Electrical power systems, commissioning, solar ready, elevator and escalator requirements are mandatory and should be documented on the NRCC form listed if applicable (i.e. compliance will not be shown on the NRCC-PRF-E)		
	MultiFam	Not Included		☐ Not Included	Electrical Power Distribution 110.11	NRCC-ELC-E is required	
			Battery (see Table F)	☐ Performance	Commissioning 120.8	NRCC-CXR-E is required	
				☒ Not Included	Solar and Battery 110.10	NRCC-SAB-E is required	

CERTIFICATE OF COMPLIANCE - NONRESIDENTIAL PERFORMANCE COMPLIANCE METHOD — NRCC-PRF-E

Nonresidential Performance Compliance Method — (Page 1 of 21)

Project Name:	Carl E. Gilbert Elementary School	**Date Prepared:**	2024-03-12

A. General Information

1	Project Name	Carl E. Gilbert Elementary School			
2	Run Title	Title 24 Analysis			
3	Project Location	7255 8th Street			
4	City	Buena Park	5	Standards Version	Compliance 2022
6	Zip code	90621	7	Compliance Software (version)	EnergyPro 9.1
8	Climate Zone	8	9	Building Orientation (deg)	0
10	Building Type(s)	• Nonresidential	11	Weather File	FULLERTON_STYP20.epw
12	Project Scope	• New complete scope	13	Number of Dwelling Units	0
14	Total Conditioned Floor Area in Scope (ft²)	12109	15	Total # of hotel/motel rooms	0
16	Total Unconditioned Floor Area (ft²)	0	17	Fuel Type	Natural gas
18	Nonresidential Conditioned Floor Area	12109	19	Total # of Stories (Habitable Above Grade)	1
20	Residential Conditioned Floor Area	0			

CERTIFICATE OF COMPLIANCE - NONRESIDENTIAL PERFORMANCE COMPLIANCE METHOD — NRCC-PRF-E

Nonresidential Performance Compliance Method — (Page 8 of 21)

C7. ENERGY USE SUMMARY

Energy Component	Standard Design Site (MWh)	Proposed Design Site (MWh)	Margin (MWh)	Standard Design Site (MBtu)	Proposed Design Site (MBtu)	Margin (MBtu)
Space Heating	0.6	1.1	-0.5	---	---	---
Space Cooling	21.2	17.8	3.4	---	---	---
Indoor Fans	40.5	9.5	31	---	---	---
Heat Rejection	---	---	---	---	---	---
Pumps & Misc.	---	---	---	---	---	---
Domestic Hot Water	10.4	10.4	0	---	---	---
Indoor Lighting	14.9	14.9	0	---	---	---
Flexibility	---	---	---	---	---	---
EFFICIENCY TOTAL	**87.6**	**53.7**	**33.9**	**0**	**0**	**0**
Photovoltaics	---	---	---	---	---	---
Batteries	---	---	---	---	---	---
ENERGY USE SUBTOTAL	**87.6**	**53.7**	**33.9**	**0**	**0**	**0**
Receptacle	33	33	0	---	---	---
Process	---	---	---	---	---	---
Other Ltg	---	---	---	---	---	---
Process Motors	---	---	---	---	---	---
ENERGY USE TOTAL	**120.6**	**86.7**	**33.9**	**0**	**0**	**0**

CERTIFICATE OF COMPLIANCE - NONRESIDENTIAL PERFORMANCE COMPLIANCE METHOD — NRCC-PRF-E

Nonresidential Performance Compliance Method — (Page 7 of 21)

C5. SOURCE ENERGY RESULTS FOR NON-REGULATED COMPONENTS[1]

Non-Regulated Energy Component	Standard Design (SOURCE)	Proposed Design (SOURCE)	Compliance Margin (SOURCE)[1]
Receptacle	5.07	5.07	---
Process	---	---	---
Other Ltg	---	---	---
Process Motors	---	---	---
TOTAL (TOTAL COMPLIANCE + NON-REGULATED COMPONENTS)	**19.69**	**13.46**	**6.23 (31.6%)**

[1] *Notes: This table is not used for Energy Code Compliance.*

C6. 'ABOVE CODE' QUALIFICATIONS:

☐ This project is pursuing CalGreen Tier 1 ☐ This project is pursuing CalGreen Tier 2

CERTIFICATE OF COMPLIANCE - NONRESIDENTIAL PERFORMANCE COMPLIANCE METHOD — NRCC-PRF-E

Nonresidential Performance Compliance Method — (Page 6 of 21)

C4. SOURCE ENERGY COMPLIANCE RESULTS FOR PERFORMANCE COMPONENTS (Annual SOURCE Energy Use, kBtu/ft² /yr)

COMPLIES[2]			
Energy Component	**Standard Design (SOURCE)**	**Proposed Design (SOURCE)**	**Compliance Margin (SOURCE)[1]**
Space Heating	0.26	0.44	-0.18
Space Cooling	2.22	1.82	0.4
Indoor Fans	7.88	1.87	6.01
Heat Rejection	0	0	0
Pumps & Misc.	0	0	0
Domestic Hot Water	1.69	1.69	0
Indoor Lighting	2.57	2.57	0
Flexibility	---	---	---
EFFICIENCY COMPLIANCE TOTAL	**14.62**	**8.39**	**6.23 (42.6%)**
Photovoltaics	---	---	---
Batteries	---	---	---
TOTAL COMPLIANCE	**14.62**	**8.39**	**6.23 (42.6%)**

[1] *Notes: This number in parenthesis following the Compliance Margin in column 4, represents the Percent Better than Standard.*

CERTIFICATE OF COMPLIANCE - NONRESIDENTIAL PERFORMANCE COMPLIANCE METHOD — NRCC-PRF-E

Nonresidential Performance Compliance Method — (Page 5 of 21)

C3. TDV ENERGY RESULTS FOR NON-REGULATED COMPONENTS[1]

Non-Regulated Energy Component	Standard Design (TDV)	Proposed Design (TDV)	Compliance Margin (TDV)[1]
Receptacle	68.88	68.88	---
Process	---	---	---
Other Ltg	---	---	---
Process Motors	---	---	---
TOTAL (TOTAL COMPLIANCE + NON-REGULATED COMPONENTS)	**274.2**	**159.45**	**74.75 (27.3%)**

[1] *Notes: This table is not used for Energy Code Compliance.*

CERTIFICATE OF COMPLIANCE - NONRESIDENTIAL PERFORMANCE COMPLIANCE METHOD — NRCC-PRF-E

Nonresidential Performance Compliance Method — (Page 12 of 21)

G6A. OPAQUE DOOR SUMMARY (NONRESIDENTIAL)

01	02	03	04
Assembly Name	**Area (ft²)**	**Overall U-factor**	**Status[1]**
Metal Door13	357	0.7	N

[1] *Status: N - New, A - Altered, E - Existing*

G7A. FENESTRATION ASSEMBLY SUMMARY (NONRESIDENTIAL)

01	02	03	04	05	06	07	08	09
Fenestration Assembly Name	**Fenestration Type/ Product Type / Frame Type**	**Certification Method[1]**	**Assembly Method**	**Area (ft²)**	**Overall U-factor**	**Overall SHGC**	**Overall VT**	**Status[2]**
PPG SOLARBAN 90 Clear	Vertical fenestration Fixed window N/A	NFRC	Manufactured	1,177.5	0.29	0.23	0.51	N

[1] *Notes: Newly installed fenestration shall have a certified NFRC Label Certificate or use the CEC default tables found in Table 110.6-A and Table 110.6-B. Center of Glass (COG) values are for the glass-only, determined by the manufacturer, and are shown for ease of verification. Site-built fenestration values are calculated per Nonresidential Appendix NA6 and are used in the analysis.*
[2] *Status: N - New, A - Altered, E - Existing*

H1. DRY SYSTEM EQUIPMENT (FURNACES, AIR HANDLING UNITS, HEAT PUMPS, VRF, ECONOMIZERS ETC.)

01	02	03	04	05	06	07	08	09	10	11	12
			Heating				Cooling				
Equipment Name	**Equipment Type**	**Qty**	**Total Heating Output (kBtu/h)**	**Supp Heat Output (kBtu/h)**	**Efficiency Unit**	**Efficiency**	**Total Cooling Output (kBtu/h)**	**Efficiency Unit**	**Efficiency**	**Economizer Type (if present)**	**Status[1]**
AC-1	Package SZ VAV Heat Pump Air System	1	58.22	0	N/A	NA	58.9	EER SEER	12.2 17	Differential DB	N

[1] *Status: N - New, A - Altered, E - Existing*

CERTIFICATE OF COMPLIANCE - NONRESIDENTIAL PERFORMANCE COMPLIANCE METHOD — NRCC-PRF-E

Nonresidential Performance Compliance Method — (Page 11 of 21)

G4. NONRESIDENTIAL AIR BARRIER

01	02
Building Story Name	**Air Barrier**
Com-Floor 1	No air barrier

G5. OPAQUE SUBFACE ASSEMBLY SUMMARY

01	02	03	04	05	06		07	08	09	10
					Continuous R-Value					
Surface Name	**Construction Type**	**Area (ft²)**	**Framing Type**	**Cavity R-Value**	**Interior**	**Exterior**	**Units**	**Value**	**Description of Assembly Layers**	**Status[1]**
Slab On Graded	Underground Floor	12,109	N/A	0	N/A	N/A	F-factor	0.73	Slab Type =Unheated slab on grade Insulation Orientation =None Insulation R-Value =none	N
R-30 Roof No Attic8	Roof	12,109	Wood	30	N/A	N/A	U-factor	0.034	Asphaltshingled_25in Vapor permeable felt - 1/8 in. Plywood - 1/2 in. Air - Cavity - Wall Roof Ceiling - 4 in. or more Composite-1 Gypsum Board - 1/2 in.	N
R-19 Wall10	Exterior Wall	9,747	Wood	19	N/A	N/A	U-factor	0.0723	Stucco - 7/8 in. Vapor permeable felt - 1/8 in. Composite-2 Gypsum Board - 1/2 in.	N

[1] *Status: N - New, A - Altered, E - Existing*

CERTIFICATE OF COMPLIANCE - NONRESIDENTIAL PERFORMANCE COMPLIANCE METHOD — NRCC-PRF-E

Nonresidential Performance Compliance Method — (Page 10 of 21)

F1B. PV BATTERY BUILDING TYPE(S)

01	02	03
Building Occupancy Type[1] (From Table 140.10-A/B and 170.2-U/V)	**Conditioned Floor Area (ft²)**	**Unconditioned Floor Area (ft²)**
Grocery	0	0
High-Rise Multifamily	0	0
Office, Financial Institutions, Unleased Tenant Space	12109	0
Retail	0	0
School	0	0
Warehouse	0	0
Auditorium, Convention Center, Hotel/Motel, Library, Medical Office Building/Clinic, Restaurant, Theater	0	0
None	0	0

[1] *Building Occupancy Types are defined in Section 100.1 of the Energy Code*

G1. ENVELOPE GENERAL INFORMATION (conditioned spaces only)

01	02	03	04
Opaque Surfaces & Orientation	**Total Gross Surface Area (ft²)**	**Total Fenestration Area (ft²)**	**Window to Wall Ratio (%)**
North-Facing[1]	3065	356	11.62
East-Facing[2]	3069	313.5	10.22
South-Facing[3]	2519	316	12.54
West-Facing[4]	1094	192	17.55
Total	**9747**	**1177.5**	**12.08**
Roof	12109	0	0

Notes
[1] *North-Facing is oriented to within 45 degrees of true north, including 45 00'00" east of north (NE), but excluding 45 00'00" west of north (NW).*
[2] *East-Facing is oriented to within 45 degrees of true east, including 45 00'00" south of east (SE), but excluding 45 00'00" north of east (NE),*
[3] *South-Facing is oriented to within 45 degrees of true south, including 45 00'00" west of south (SW), but excluding 45 00'00" east of south (SE),*
[4] *West-Facing is oriented to within 45 degrees of true west, including 45 00'00" north of west (NW), but excluding 45 00'00" south of west (SW),*

CERTIFICATE OF COMPLIANCE - NONRESIDENTIAL PERFORMANCE COMPLIANCE METHOD — NRCC-PRF-E

Nonresidential Performance Compliance Method — (Page 9 of 21)

C8. ENERGY USE INTENSITY (EUI)

	Standard Design (kBtu/ft² / yr)	Proposed Design (kBtu/ft² / yr)	Margin (kBtu/ft² / yr)	Margin Percentage
GROSS EUI[1]	33.98	24.43	9.55	28.1
NET EUI[2]	33.98	24.43	9.55	28.1

[1] *Notes: Gross EUI is Energy Use Total (not including PV)/Total Building Area. Net EUI is Energy Use Total (including PV)/Total Building Area.*

D1. EXCEPTIONAL CONDITIONS

• The project uses the Simplified Geometry Performance Modeling Approach which is not capable of modeling daylighting controls and assumes the prescriptive Secondary Daylit Control requirements are met. PRESCRIPTIVE COMPLIANCE documentation (form NRCC-LTI-02-E) for the requirements of section 140.6(d) Automatic Daylighting Controls in Secondary Daylit Zones is required.
• The building does not include service water heating. Verify that service water heating is not required and is not included in the design.
• Project is claiming Exception 2 to Section 140.10(c): No PV system is required where the required PV system size is less than 4 kWdc.
• PV/Battery Building Type has been modified from software defaults for one or more spaces. Review project's PV/Battery Building Type(s) with documentation author. Refer to Energy Code section 140.10 for Nonresidential or 170.2(g) for more information.

F1. REQUIRED PV SYSTEMS

01	02	03	04	05	06	07	08	09	10	11	12
DC System Size (kWdc)	**Exception[1]**	**Module Type**	**Array Type**	**Power Electronics**	**CFI**	**Azimuth (deg)**	**Tilt Input**	**Array Angle (deg)**	**TIR: (≥ in 12)**	**Inverter Eff. (%)**	**Annual Solar Access (%)**

[1] *See Table D1 for any PV exceptions used.*

DSA STAMP

STUDIO W ARCHITECTS
Studio W Architects
424 32nd Street, Suite D/E
Newport Beach, California 92663
[T] 949.774.2920
www.StudioW-Architects.com
PDS Pocock Design Solutions Inc.

ARCHITECT	ENGINEER
LICENSED ARCHITECT BRYAN P WHITMORE No. C 30345 Ren. 9/30/23 STATE OF CALIFORNIA	REGISTERED PROFESSIONAL ENGINEER ANDREW R. GOGERTY No. M38828 Exp. 3/31/26 MECHANICAL STATE OF CALIFORNIA
DATE SIGNED: 06/24/2024	DATE SIGNED: 06/24/2024

GENERAL NOTES
1. This sheet is part of a set and is not to be used alone.
2. This sheet is not to be used for construction unless the architect's stamp and signature appear on the drawings and the status box indicated drawings have been released for construction.
3. These plans and prints thereof, as instruments of service, are owned by the architect and are for use on this project only. Reproduction and/or distribution without the prior written consent of the architect is forbidden.
4. Copyright Studio W Associates, Inc. 2022.

REVISION HISTORY

NO.	REMARKS	DATE

DRAWING STATUS

	DATE
○ DSA PLAN CHECK	03/29/2024
● DSA BACK CHECK	06/24/2024
○ BIDDING	
○ CONSTRUCTION	

KEY PLAN

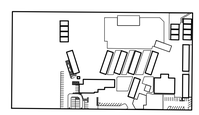

BUENA PARK SD
6885 ORANGETHORPE AVE
BUENA PARK, CA 90620

DESIGN DEVELOPMENT

CARL E. GILBERT ELEMENTARY SCHOOL
TK/PK CLASSROOMS & EARLY LEARNING BUILDING
7255 8TH STREET, BUENA PARK, CA 90621

TITLE 24

Date	Project Number
06/24/2024	23076
Application Number	Drawing Number
04-123212	M6.1
Drawn: TL	Checked: PDS

PRINT DATE: 6/18/2024 4:30:05 PM
FILE PATH: C:\Users\tim\Documents\23076-BP\SD_Gilbert-BLDG-M21_tim@pocockdesignsolutions.com.rvt

CERTIFICATE OF COMPLIANCE - NONRESIDENTIAL PERFORMANCE COMPLIANCE METHOD NRCC-PRF-E

Nonresidential Performance Compliance Method (Page 16 of 21)

H8. SYSTEM SPECIAL FEATURES

01	02	03	04
System Name	Equipment Type	Interlocks per 140.4(o)[1]	Other Special Features and Controls
AC-3	Package SZ VAV Heat Pump Air System	N/A	Zone(s) With CO2 Sensor Vent. Control Differential DB
AC-4	Package SZ VAV Heat Pump Air System	N/A	Zone(s) With CO2 Sensor Vent. Control Differential DB
AC-5	Package SZ VAV Heat Pump Air System	N/A	Zone(s) With CO2 Sensor Vent. Control Differential DB
AC-6	Package SZ VAV Heat Pump Air System	N/A	Zone(s) With CO2 Sensor Vent. Control Differential DB
AC-7	Package SZ VAV Heat Pump Air System	N/A	Zone(s) With CO2 Sensor Vent. Control Differential DB
AC-8	Package SZ VAV Heat Pump Air System	N/A	Zone(s) With CO2 Sensor Vent. Control Differential DB
AC-9	Package SZ VAV Heat Pump Air System	N/A	Zone(s) With CO2 Sensor Vent. Control Differential DB
AC-10	Package SZ VAV Heat Pump Air System	N/A	Zone(s) With CO2 Sensor Vent. Control Differential DB

Notes: This table includes controls related to the performance path only. For projects using the prescriptive path, mandatory and prescriptive controls requirements are documented on the NRCC-MCH-E.

[1] *Yes = interlocks are provided, No = interlocks are not provided, NA means no operable openings.*

H9. NONRESIDENTIAL / COMMON USE AREA & HOTEL/MOTEL VENTILATION

01	02	03	04	05	06	07
Zone Name	Mechanical Ventilation				Conditioned Area (sf)	DCV or Occupant Sensor Controls, or Both
	Ventilation Function	# of People	Supply OA CFM	Exhaust CFM		
1-Classroom	Education - Classrooms (ages 5-8)	29.18	443.46	0	1167	DCV
2-Classroom	Education - Classrooms (ages 5-8)	29.25	444.6	0	1170	DCV

CERTIFICATE OF COMPLIANCE - NONRESIDENTIAL PERFORMANCE COMPLIANCE METHOD NRCC-PRF-E

Nonresidential Performance Compliance Method (Page 15 of 21)

H3. NONRESIDENTIAL / COMMON USE AREA FAN SYSTEMS SUMMARY

01	02	03	04	05	06	07	08	09	10	11	12	13
Name or Item Tag	Qty	Design OA CFM	Supply Fan				Return / Relief Fan					Status[1]
			CFM	Power	Power Units	Control	Fan Type	CFM	Power	Power Units	Control	
AC-1	1	443.46	2,000	1.11	BHP	VSD	N/A	N/A	N/A	N/A	N/A	N
AC-2	1	444.6	2,000	1.11	BHP	VSD	N/A	N/A	N/A	N/A	N/A	N
AC-3	1	442.32	2,000	1.11	BHP	VSD	N/A	N/A	N/A	N/A	N/A	N
AC-4	1	444.6	2,000	1.11	BHP	VSD	N/A	N/A	N/A	N/A	N/A	N
AC-5	1	441.18	2,000	1.11	BHP	VSD	N/A	N/A	N/A	N/A	N/A	N
AC-6	1	441.18	2,000	1.11	BHP	VSD	N/A	N/A	N/A	N/A	N/A	N
AC-7	1	441.56	2,000	1.11	BHP	VSD	N/A	N/A	N/A	N/A	N/A	N
AC-8	1	330.6	2,000	1.11	BHP	VSD	N/A	N/A	N/A	N/A	N/A	N
AC-9	1	447.64	2,000	1.11	BHP	VSD	N/A	N/A	N/A	N/A	N/A	N
AC-10	1	443.08	2,000	1.11	BHP	VSD	N/A	N/A	N/A	N/A	N/A	N
FC-1/HP-1	1	111	1,600	0.5	BHP	Constant Vol	N/A	N/A	N/A	N/A	N/A	N

[1] *Status: N - New, A - Altered, E - Existing*

H8. SYSTEM SPECIAL FEATURES

01	02	03	04
System Name	Equipment Type	Interlocks per 140.4(o)[1]	Other Special Features and Controls
AC-1	Package SZ VAV Heat Pump Air System	N/A	Zone(s) With CO2 Sensor Vent. Control Differential DB
AC-2	Package SZ VAV Heat Pump Air System	N/A	Zone(s) With CO2 Sensor Vent. Control Differential DB

Notes: This table includes controls related to the performance path only. For projects using the prescriptive path, mandatory and prescriptive controls requirements are documented on the NRCC-MCH-E.

[1] *Yes = interlocks are provided, No = interlocks are not provided, NA means no operable openings.*

CERTIFICATE OF COMPLIANCE - NONRESIDENTIAL PERFORMANCE COMPLIANCE METHOD NRCC-PRF-E

Nonresidential Performance Compliance Method (Page 14 of 21)

H1. DRY SYSTEM EQUIPMENT (FURNACES, AIR HANDLING UNITS, HEAT PUMPS, VRF, ECONOMIZERS ETC.)

01	02	03	04	05	06	07	08	09	10	11	12
Equipment Name	Equipment Type	Qty	Heating				Cooling			Economizer Type (if present)	Status[1]
			Total Heating Output (kBtu/h)	Supp Heat Output (kBtu/h)	Efficiency Unit	Efficiency	Total Cooling Output (kBtu/h)	Efficiency Unit	Efficiency		
AC-10	Package SZ VAV Heat Pump Air System	1	58.22	0	N/A	NA	58.9	EER SEER	12.2 17	Differential DB	N
FC-1/HP-1	Single Zone Heat Pump (SZHP) Air System	1	47.91	0	N/A	NA	43.69	EER SEER	11.5 14	No Economizer	N

[1] *Status: N - New, A - Altered, E - Existing*

CERTIFICATE OF COMPLIANCE - NONRESIDENTIAL PERFORMANCE COMPLIANCE METHOD NRCC-PRF-E

Nonresidential Performance Compliance Method (Page 13 of 21)

H1. DRY SYSTEM EQUIPMENT (FURNACES, AIR HANDLING UNITS, HEAT PUMPS, VRF, ECONOMIZERS ETC.)

01	02	03	04	05	06	07	08	09	10	11	12
Equipment Name	Equipment Type	Qty	Heating				Cooling			Economizer Type (if present)	Status[1]
			Total Heating Output (kBtu/h)	Supp Heat Output (kBtu/h)	Efficiency Unit	Efficiency	Total Cooling Output (kBtu/h)	Efficiency Unit	Efficiency		
AC-2	Package SZ VAV Heat Pump Air System	1	58.22	0	N/A	NA	58.9	EER SEER	12.2 17	Differential DB	N
AC-3	Package SZ VAV Heat Pump Air System	1	58.22	0	N/A	NA	58.9	EER SEER	12.2 17	Differential DB	N
AC-4	Package SZ VAV Heat Pump Air System	1	58.22	0	N/A	NA	58.9	EER SEER	12.2 17	Differential DB	N
AC-5	Package SZ VAV Heat Pump Air System	1	58.22	0	N/A	NA	58.9	EER SEER	12.2 17	Differential DB	N
AC-6	Package SZ VAV Heat Pump Air System	1	58.22	0	N/A	NA	58.9	EER SEER	12.2 17	Differential DB	N
AC-7	Package SZ VAV Heat Pump Air System	1	58.22	0	N/A	NA	58.9	EER SEER	12.2 17	Differential DB	N
AC-8	Package SZ VAV Heat Pump Air System	1	58.22	0	N/A	NA	58.9	EER SEER	12.2 17	Differential DB	N
AC-9	Package SZ VAV Heat Pump Air System	1	58.22	0	N/A	NA	58.9	EER SEER	12.2 17	Differential DB	N

[1] *Status: N - New, A - Altered, E - Existing*

CERTIFICATE OF COMPLIANCE - NONRESIDENTIAL PERFORMANCE COMPLIANCE METHOD NRCC-PRF-E

Nonresidential Performance Compliance Method (Page 20 of 21)

I. DECLARATION OF REQUIRED CERTIFICATES OF INSTALLATION

Selections made by Documentation Author indicate which Certificates of Installation must be submitted for the features to be recognized for compliance. These documents must be retained and provided to the building inspector during construction and can be found online

Building Component	Form/Title
Indoor Lighting	NRCI-LTI-01-E - Must be submitted for all buildings
Indoor Lighting	NRCI-LTI-E - Indoor Lighting (for all buildings)

M. DECLARATION OF REQUIRED CERTIFICATES OF ACCEPTANCE

Selections made by Documentation Author indicate which Certificates of Acceptance must be submitted for the features to be recognized for compliance. These documents must be provided to the building inspector during construction and must be completed through an Acceptance Test Technician Certification Provider (ATTCP).

Building Component	Form/Title
Envelope	NRCA-ENV-02-F - NRFC label verification for fenestration
Indoor Lighting	NRCA-LTI-02-A - Occupancy Sensors and Automatic Time Switch Controls.
Indoor Lighting	NRCA-LTI-04-A - Demand Responsive Lighting Controls.
Mechanical	NRCA-MCH-02-A - Outdoor Air must be submitted for all newly installed HVAC units. Note: MCH-02-A can be performed in conjunction with MCH-07-A Supply Fan VFD Acceptance (if applicable) since testing activities overlap
Mechanical	NRCA-MCH-03-A - Constant Volume Single Zone HVAC
Mechanical	NRCA-MCH-05-A - Air Economizer Controls
Mechanical	NRCA-MCH-06-A Demand Control Ventilation Systems must be submitted for all systems required to employ demand controlled ventilation (refer to) can vary outside ventilation flow rates based on maintaining interior carbon dioxide (CO2) concentration setpoints.
Mechanical	NRCA-MCH-12-A FDD for Packaged Direct Expansion Units

N. DECLARATION OF REQUIRED CERTIFICATES OF VERIFICATION

Selections made by Documentation Author indicate which Certificates of Verification must be submitted for the features to be recognized for compliance. These documents must be retained and provided to the building inspector during construction and can be found online

There are no Certificates of Verification applicable to this project

CERTIFICATE OF COMPLIANCE - NONRESIDENTIAL PERFORMANCE COMPLIANCE METHOD NRCC-PRF-E

Nonresidential Performance Compliance Method (Page 19 of 21)

K1. INDOOR CONDITIONED LIGHTING GENERAL INFO

01	02	03	04	05	06
Occupancy Type[1]	Conditioned Floor Area[2] (ft²)	Installed Lighting Power (Watts)	Lighting Control Credits (Watts)	Additional (Custom) Allowance	
				Area Category Footnotes (Watts)	Area Category Footnotes (Watts)
Classroom, Lecture, or Training Vocational	11369	6821.4	0	0	0
Office (250 square feet)	740	444	0	0	0
Building Totals:	**12109**	**7265.4**	**0**	**0**	**0**

[1] *See Table 140.6-C*

[2] *See NRCC-LTI- if for unconditioned spaces*

[3] *Lighting information for existing spaces modeled is not included in this table*

K4. INDOOR CONDITIONED LIGHTING MANDATORY LIGHTING CONTROL

Building Level Controls	
01	02
Mandatory Demand Response 110.12(c)	Shut-Off Controls 130.1(c) & 160.5(b)4C
Required	Required

See NRCC-LTI-E for mandatory controls

L. DECLARATION OF REQUIRED CERTIFICATES OF INSTALLATION

Selections made by Documentation Author indicate which Certificates of Installation must be submitted for the features to be recognized for compliance. These documents must be retained and provided to the building inspector during construction and can be found online

Building Component	Form/Title
Envelope	NRCI-ENV-01-E - Must be submitted for all buildings
Envelope	NRCI-ENV-E - Envelope (for all buildings)
Mechanical	NRCI-MCH-01-E - Must be submitted for all buildings
Mechanical	NRCI-MCH-E - For all buildings with Mechanical Systems

CERTIFICATE OF COMPLIANCE - NONRESIDENTIAL PERFORMANCE COMPLIANCE METHOD NRCC-PRF-E

Nonresidential Performance Compliance Method (Page 18 of 21)

H11. ZONAL SYSTEM AND TERMINAL UNIT SUMMARY

01	02	03	04	05	06	07	08	09	10	11	12
System ID	System Type	Qty	Rated Capacity (kBtuh)		Airflow (cfm)			Fan			VSD
			Heating	Cooling	Design	Min.	Min. Ratio	Power	Power Units	Cycles	
3-Classroom-Trm	Variable Air Volume No Reheat Box	1	N/A	N/A	2,000	1,000	0.5	N/A	N/A	N/A	☐
4-Classroom-Trm	Variable Air Volume No Reheat Box	1	N/A	N/A	2,000	1,000	0.5	N/A	N/A	N/A	☐
5-Classroom-Trm	Variable Air Volume No Reheat Box	1	N/A	N/A	2,000	1,000	0.5	N/A	N/A	N/A	☐
6-Classroom-Trm	Variable Air Volume No Reheat Box	1	N/A	N/A	2,000	1,000	0.5	N/A	N/A	N/A	☐
7-Classroom-Trm	Variable Air Volume No Reheat Box	1	N/A	N/A	2,000	1,000	0.5	N/A	N/A	N/A	☐
8-Classroom-Trm	Variable Air Volume No Reheat Box	1	N/A	N/A	2,000	1,000	0.5	N/A	N/A	N/A	☐
9-Classroom-Trm	Variable Air Volume No Reheat Box	1	N/A	N/A	2,000	1,000	0.5	N/A	N/A	N/A	☐
10-Classroom-Trm	Variable Air Volume No Reheat Box	1	N/A	N/A	2,000	1,000	0.5	N/A	N/A	N/A	☐
11-Office-Trm	Uncontrolled	1	N/A	N/A	1,600	N/A	0	N/A	N/A	N/A	☐

CERTIFICATE OF COMPLIANCE - NONRESIDENTIAL PERFORMANCE COMPLIANCE METHOD NRCC-PRF-E

Nonresidential Performance Compliance Method (Page 17 of 21)

H9. NONRESIDENTIAL / COMMON USE AREA & HOTEL/MOTEL VENTILATION

01	02	03	04	05	06	07
Zone Name	Mechanical Ventilation				Conditioned Area (sf)	DCV or Occupant Sensor Controls, or Both
	Ventilation Function	# of People	Supply OA CFM	Exhaust CFM		
3-Classroom	Education - Classrooms (ages 5-8)	29.1	442.32	0	1164	DCV
4-Classroom	Education - Classrooms (ages 5-8)	29.25	444.6	0	1170	DCV
5-Classroom	Education - Classrooms (ages 5-8)	29.02	441.18	0	1161	DCV
6-Classroom	Education - Classrooms (ages 5-8)	29.02	441.18	0	1161	DCV
7-Classroom	Education - Classrooms (ages 5-8)	29.05	441.56	0	1162	DCV
8-Classroom	Education - Classrooms (ages 5-8)	21.75	330.6	0	870	DCV
9-Classroom	Education - Classrooms (ages 5-8)	29.45	447.64	0	1178	DCV
10-Classroom	Education - Classrooms (ages 5-8)	29.15	443.08	0	1166	DCV
11-Office	Office - Office space	3.7	111	0	740	N/A

H11. ZONAL SYSTEM AND TERMINAL UNIT SUMMARY

01	02	03	04	05	06	07	08	09	10	11	12
System ID	System Type	Qty	Rated Capacity (kBtuh)		Airflow (cfm)			Fan			VSD
			Heating	Cooling	Design	Min.	Min. Ratio	Power	Power Units	Cycles	
1-Classroom-Trm	Variable Air Volume No Reheat Box	1	N/A	N/A	2,000	1,000	0.5	N/A	N/A	N/A	☐
2-Classroom-Trm	Variable Air Volume No Reheat Box	1	N/A	N/A	2,000	1,000	0.5	N/A	N/A	N/A	☐

CERTIFICATE OF COMPLIANCE - NONRESIDENTIAL PERFORMANCE COMPLIANCE METHOD NRCC-PRF-E

Nonresidential Performance Compliance Method (Page 21 of 21)

Documentation Author's Declaration Statement

I. I certify that this Certificate of Compliance documentation is accurate and complete.

Documentation Author Name: Ted Lim	Documentation Author Signature: Ted Lim
Company: Pocock Design Solutions	Signature Date: 03/15/2024
Address: 14451 Chambers Rd. Ste 210	CEA/HERS Certification Identification (if applicable):
City/State/Zip: Tustin, CA 92780	Phone: 949-417-3903

Responsible Person's Declaration statement

I certify the following under penalty of perjury, under the laws of the State of California:

1. The information provided on this Certificate of Compliance is true and correct.
2. I am eligible under Division 3 of the Business and Professions Code to accept responsibility for the building design or system design identified on this Certificate of Compliance (responsible designer)
3. The energy features and performance specifications, materials, components, and manufactured devices for the building design or system design identified on this Certificate of Compliance conform to the requirements of Title 24, Part 1 and Part 6 of the California Code of Regulations.
4. The building design features or system design features identified on this Certificate of Compliance are consistent with the information provided on other applicable compliance documents, worksheets, calculations, plans and specifications submitted to the enforcement agency for approval with this building permit application.
5. I understand that a registered copy of this Certificate of Compliance shall be made available with the building permit(s) issued for the building, and made available to the enforcement agency for all applicable inspections, and I will take the necessary steps to accomplish this requirement.
6. I understand that a registered copy of this Certificate of Compliance is required to be included with the documentation the builder provides to the building owner at occupancy, and I will take the necessary steps to accomplish these requirements.

Responsible Designer Name: Brian P Whitmore	Responsible Designer Signature:
Company: Studio W Architects	
Address: 424 32nd Street, Suite D/E	Date Signed:
City/State/Zip: Newport Beach, CA 92663	License #: C-30345
Phone: 9497742920	Title: Scope:
Responsible Designer Name: Andrew Gossman	Responsible Designer Signature: Andrew Gossman
Company: Pocock Design Solutions	
Address: 14451 Chambers Road, Suite 210	Date Signed: 03/15/2024
City/State/Zip: Tustin, CA 92780	License #: M35839
Phone: 9494173903	Title: Scope:

PRINT DATE: 6/18/2024 4:30:01 PM
FILE PATH: C:\Users\tim\Documents\23076-BPUSD_GilbertBLDG-M21_tw@pocockdesignsolutions.com.rvt

DSA STAMP

STUDIO W ARCHITECTS

Studio W Architects
424 32nd Street, Suite D/E
Newport Beach, California 92663
[T] 949.774.2920
www.StudioW-Architects.com

PDS Pocock Design Solutions Inc.

ARCHITECT	ENGINEER
LICENSED ARCHITECT BRIAN P WHITMORE No. C 30345 Ren. 9/30/23 STATE OF CALIFORNIA	REGISTERED PROFESSIONAL ENGINEER ANDREW R. GOSSMAN No. M35839 Exp. 3/31/25 MECHANICAL STATE OF CALIFORNIA
DATE SIGNED: 06/24/2024	DATE SIGNED: 06/24/2024

GENERAL NOTES

1. This sheet is part of a set and is not to be used alone.
2. This sheet is not to be used for construction unless the architect's stamp and signature appear on the drawings and the status box indicated drawings have been released for construction.
3. These plans and prints thereof, as instruments of service, are owned by the architect and are for use on this project only. Reproduction and/or distribution without the prior written consent of the architect is forbidden.
4. Copyright Studio W Associates, Inc. 2022.

REVISION HISTORY

NO.	REMARKS	DATE

DRAWING STATUS

	DATE
○ DSA PLAN CHECK	03/29/2024
● DSA BACK CHECK	06/24/2024
○ BIDDING	
○ CONSTRUCTION	

KEY PLAN

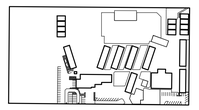

BUENA PARK SD
6885 ORANGETHORPE AVE
BUENA PARK, CA 90620

DESIGN DEVELOPMENT

CARL E. GILBERT ELEMENTARY SCHOOL
TK/PK CLASSROOMS & EARLY LEARNING BUILDING
7255 8TH STREET, BUENA PARK, CA 90621

TITLE 24

Date	Project Number
06/24/2024	23076
Application Number	Drawing Number
04-123212	M6.2
Drawn TL	Checked PDS

FIXTURE SCHEDULE

ITEM	FIXTURE	ROUGH-IN CONNECTIONS						DESCRIPTION
		TRAP	WASTE	VENT	HOT WATER	COLD WATER	GAS	
WC 1	WATER CLOSET (ACCESSIBLE)	INT	4"	2"	--	1"	--	AMERICAN STANDARD (A/S) NO. 3461.001 "MADERA FLOWISE 16-1/2" HEIGHT ELONGATED FLUSHOMETER TOILET", SIPHON JET, FLOOR MOUNTED, ELONGATED BOWL, 16-1/2" HIGH. COMPLETE WITH SLOAN ROYAL NO. 111-1.28 GPF FLUSH VALVE, OLSONITE NO. 95SSCT SEAT AND A/S BOLT CAPS.
WC 2	WATER CLOSET (AGE 3-4)	INT	4"	2"	--	1"	--	AMERICAN STANDARD (A/S) NO. 2282.001 "BABY DEVORO FLOWISE ROUND FRONT FLUSHOMETER TOILET", SIPHON JET, FLOOR MOUNTED, ROUND BOWL, 10" HIGH. COMPLETE WITH SLOAN ROYAL 111-1.28 GPF FLUSH VALVE WITH NO. V-500-A VACUUM BREAKER, F-2-A COUPLING NUT, AND NO. F-190 1-1/2" X 2" OFFSET TUBE OUTLET, OLSONITE NO. 126CC SEAT AND A/S BOLT CAPS.
WC 3	WATER CLOSET (AGE 3-4, ACCESSIBLE)	INT	4"	2"	--	1"	--	AMERICAN STANDARD (A/S) NO. 2282.001 "BABY DEVORO FLOWISE ROUND FRONT FLUSHOMETER TOILET", SIPHON JET, FLOOR MOUNTED, ROUND BOWL, 10" HIGH. COMPLETE WITH SLOAN ROYAL 111-1.28 GPF FLUSH VALVE WITH NO. V-500-A VACUUM BREAKER, F-2-A COUPLING NUT, AND NO. F-190 1-1/2" X 2" OFFSET TUBE OUTLET, OLSONITE NO. 126CC SEAT AND A/S BOLT CAPS. MOUNT FLUSH VALVE OFFSET AS REQUIRED TO CLEAR HANDICAP GRAB BARS. TRIM FLUSH VALVE OFFSET AND ROUGH-IN FLUSH VALVE AS REQUIRED TO LOCATE HANDLE AT LOWEST POSSIBLE ELEVATION ABOVE GRAB BAR.
L 1	LAVATORY (ACCESSIBLE, CW ONLY)	1-1/4"	2"	1-1/2"	--	1/2"	--	AMERICAN STANDARD (A/S) NO. 0355.012 "LUCERNE WALL HUNG LAVATORY", 20" X 18", WALL HUNG. COMPLETE WITH CHICAGO NO. 3400-E39VPABCP METER FAUCET 0.35 GPM NON-AERATING SPRAY, McGUIRE NO. 155A 1-1/4" OUTLET "OPEN GRID P.O. PLUG", McGUIRE NO. PW8090NC0 1-1/4" L.A. PATTERN P-TRAP WITH TRAP AND SUPPLY COVERS, GALVANIZED NIPPLE AND CHROMIUM PLATED BRASS CASING, CHICAGO NO. 1017-ABCP LOOSE KEY STOP WITH RIGID SUPPLY, AND ZURN NO. Z-1231-EZR-WL ADJUSTABLE CONCEALED ARM CARRIER W/ SLEEVE FOR WASTE. MOUNT IN ACCORDANCE WITH ADA REQUIREMENTS.
L 2	LAVATORY (ACCESSIBLE, TW)	1-1/4"	2"	1-1/2"	1/2"TW	--	--	AMERICAN STANDARD (A/S) NO. 0355.012 "LUCERNE WALL HUNG LAVATORY", 20" X 18", WALL HUNG. COMPLETE WITH CHICAGO NO. 3400-E39VPABCP METER FAUCET 0.35 GPM NON-AERATING SPRAY AND VANDAL RESISTANT COVER PLATE, McGUIRE NO. 155A 1-1/4" OUTLET "OPEN GRID P.O. PLUG", McGUIRE NO. PW8090NC0 1-1/4" L.A. PATTERN P-TRAP WITH TRAP AND SUPPLY COVERS, GALVANIZED NIPPLE AND CHROMIUM PLATED BRASS CASING, CHICAGO NO. 1017-ABCP LOOSE KEY STOPS WITH RIGID SUPPLIES, AND ZURN NO. Z-1231-EZR-WL ADJUSTABLE CONCEALED ARM CARRIER W/ SLEEVE FOR WASTE. MOUNT IN ACCORDANCE WITH ADA REQUIREMENTS.
S 1	SINK (CLASSROOM, ACCESSIBLE, STAINLESS STEEL, CW ONLY)	1-1/2"	2"	1-1/2"	--	3/4"	--	HAWS NO. 4210ADA "SINK" LESS STRAINER, 25" X 17" X 5" DEEP, SINGLE COMPARTMENT, 18 GAUGE TYPE 302 STAINLESS STEEL, SELF-RIMMING. COMPLETE WITH JUST NO. JSB-10-VR BUBBLER, CHICAGO NO. 350-E35VPCABCP FAUCET WITH 1.5 GPM AERATOR, McGUIRE NO. 152 1-1/2" OUTLET "WIDE TOP SINK STRAINER", McGUIRE NO. PW8090NC0 1-1/2" L.A. PATTERN P-TRAP WITH TRAP AND SUPPLY COVERS, GALVANIZED NIPPLE AND CHROMIUM PLATED BRASS CASING, AND CHICAGO NO. 1017-ABCP LOOSE KEY STOP WITH RIGID SUPPLY. MOUNT IN ACCORDANCE WITH ADA REQUIREMENTS.
SS 1	SERVICE SINK	3"	3"	2"	3/4"	3/4"	--	CECO NO. 871 "CORNER SERVICE SINK", ENAMELED CAST IRON, CORNER FLOOR MOUNTED, COMPLETE WITH CHICAGO NO. 445-PVB-CP FAUCET, CECO NO. B71-3" 3" DIAMETER DRAIN WITH FLAT CHROME STRAINER, CECO NO. B-872 COATED WIRE RIM GUARD AND HOSE.
TP 1	TRAP PRIMER (SINGLE DRAIN)	--	--	--	--	1/2"	--	MIFAB NO. MR-500 TRAP PRIMER VALVE, BRASS BODY, ADJUSTABLE, COMPLETE WITH 1/2" COPPER TYPE "L" PIPE TO RECEPTOR. INSTALL PER MANUFACTURER'S RECOMMENDATIONS, COMPLETE BEHIND ACCESS PANEL WITH SHUT-OFF VALVE.

ITEM	FIXTURE	ROUGH-IN CONNECTIONS						DESCRIPTION
		TRAP	WASTE	VENT	HOT WATER	COLD WATER	GAS	
WHA 1	WATER HAMMER ARRESTOR	--	--	--	--	--	--	ZURN NO. Z-1700 SERIES "SHOKTROL" WATER HAMMER ARRESTOR COMPLETE BEHIND ACCESS PANEL. INSTALL PER MANUFACTURER'S RECOMMENDATIONS.
FD 1	FLOOR DRAIN	2"	2"	1-1/2"	--	--	--	ZURN NO. ZN-415-BZ1-P, CAST IRON BODY, COMPLETE WITH ROUND NICKEL-BRONZE TOP, CLAMPING COLLAR, 1/2" TRAP PRIMER CONNECTION AND P-TRAP.
RD 1	ROOF DRAIN	SEE PLAN FOR SIZES						ZURN NO. ZC121-DP-84, 12" CAST IRON BODY, COMPLETE WITH ADJUSTABLE EXTENSION SLEEVE, FLASHING COLLAR, STAINLESS STEEL GRAVEL STOP, CAST IRON DOME STRAINER, SUMP RECEIVER, AND UNDERDECK CLAMP.
OD 1	ROOF DRAIN	SEE PLAN FOR SIZES						ZURN NO. ZC121-DP-84-89, 12" CAST IRON BODY, COMPLETE WITH CAST IRON DOME STRAINER, UNDERDECK CLAMP, AND 2" HIGH WATER DAM.
DF 1	DRINKING FOUNTAIN W/BOTTLE FILLER (ACCESSIBLE, PEDESTAL)	1-1/2"	2"	1-1/2"	--	3/4"	--	HAWS NO. 3612FBFA, OUTDOOR FILTERED, STAINLESS STEEL, PEDESTAL MOUNTED ADA COMPLIANT BOTTLE BOTTLE FILLER & HI-LO DRINKING FOUNTAIN WITH GREEN POWDER-COATED COLOR FINISH. INCLUDES VANDAL RESISTANT STAINLESS STEEL PUSH BUTTON VALVE AND LEAD-FREE BUBBLER. INSTALL WITH 32" SQUARE X 6" THICK CONCRETE SLAB PER MANUFACTURER'S RECOMMENDATION. DRINKING FOUNTAIN WILL SERVE AGES 3-4. REFER TO ARCHITECTURAL FOR FURTHER DETAILS.
DN 1	DOWNSPOUT NOZZLE	SEE PLAN FOR SIZES						ZURN NO. 1775, STAINLESS STEEL FRAME WITH FABRICATED SECURED PERFORATED STAINLESS STEEL HINGED STRAINER, THREADED INLET AND DECORATIVE FACE OF WALL FLANGE AND OUTLET NOZZLE.
ET 1	EXPANSION TANK	--	--	--	--	--	--	WILKINS NO. WXT-8, 2 GALLON, DIAPHRAGM TYPE, PRE-PRESSURIZED, WELDED EXTERIOR, BUTYL DIAPHRAGM AND EPOXY COATED EXTERIOR W/ MAPA MXC-8 EXPANSION TANK CAGE.
HB 1	HOSE BIBB (FREE STANDING, ROOF)	--	--	--	--	3/4"	--	ACORN NO. 8126-CR "BENT NOSE" HOSE BIBB, FREE STANDING, CHROME-PLATED ROUGH, WITH INTEGRAL VACUUM BREAKER, LOOSE KEY OPERATION. SUPPLY PIPING SHALL BE SECURELY FASTENED TO ROOF DECKING WITH 3/4" NIBCO NO. 724-5-A "HY-SET HANGER COUPLING".
RHB 1	RECESSED HOSE BIBB	--	--	--	--	3/4"	--	ACORN NO. 8104, RECESSED WALL MOUNTED, STAINLESS STEEL BOX, WITH INTEGRAL VACUUM BREAKER AND LOCKING DOOR.
MV 1	MIXING VALVE	--	--	--	1/2"	1/2"	--	SYMMONS NO. 8210CK-B-T "MAXLINE", WATER TEMPERATURE LIMITING VALVE, COMPLETE WITH INTEGRAL CHECKS AND DUAL STAINLESS STEEL STRAINERS, STAINLESS STEEL RECESSED WALL CABINET, AND SEPARATE CHECK STOPS.

WATER HEATER SCHEDULE

ITEM	MANUFACTURER	MODEL NO.	SERVICE	LOCATION	STORAGE	ELECTRICAL DEMANDS				RECOVERY CAPACITY @ 60°F	INLET TEMP °F	OUTLET TEMPER °F	OPER. WT. LBS.	REMARKS
						VOLT	PHASE	KW/AMP	CYCLE					
WH 1	AO SMITH	DEL-20	DOMESTIC HOT WATER	SEE PLANS	20 GALLONS	208	1	3.0	60	20 GPH	60	120	240 LBS.	MUST HAVE ASHRAE STICKER OR OTHERWISE COMPLY WITH TITLE 24 REQUIREMENT FOR SERVICE WATER HEATERS.

GENERAL NOTES

1. BEFORE COMMENCEMENT OF WORK, THE CONTRACTOR SHALL VERIFY THE EXACT LOCATIONS, ELEVATIONS AND CHARACTERISTICS OF ALL UTILITIES AND PIPING, AND SHALL IMMEDIATELY NOTIFY THE ARCHITECT OF ANY DISCREPANCIES.
2. ALL ACCESSIBLE WATER CLOSETS SHALL HAVE FLUSH VALVE WITH HANDLE ON OPEN SIDE.
3. ALL VALVES, UNIONS, ETC. TO BE SAME SIZE AS PIPE UNLESS OTHERWISE INDICATED ON DRAWINGS.
4. ALL PLUMBING FIXTURE VENTS TO TERMINATE A MINIMUM OF 12 INCHES FROM ANY VERTICAL SURFACE AND 10 FEET FROM ANY OUTSIDE AIR INTAKES.
5. EXACT LOCATIONS AND MOUNTING HEIGHTS OF PLUMBING FIXTURES SHALL BE OBTAINED FROM THE ARCHITECTURAL DRAWINGS.
6. ALL EXTERIOR GAS COCKS, WATER SHUT OFF VALVES AND/OR SEWER CLEANOUTS BELOW GROUND SHALL BE INSTALLED IN YARD BOXES WITH THE COVERS CONSPICUOUSLY MARKED "GAS", "WATER", AND "SEWER" RESPECTIVELY.
7. CONNECTION BETWEEN INCOMPATIBLE MATERIALS ABOVE GRADE AND INSIDE BUILDING SHALL BE MADE WITH TWO (2) DIELECTRIC UNIONS SEPARATED BY A TWELVE INCH (12") SECTION OF RED BRASS PIPE.
8. ALL CLEANOUTS SHALL BE INSTALLED WHERE READILY ACCESSIBLE. THE CONTRACTOR SHALL COORDINATE ALL CLEANOUT LOCATIONS WITH EQUIPMENT, CABINETS, ETC., AND THE ARCHITECT PRIOR TO ANY INSTALLATION.
9. THE CONTRACTOR SHALL COORDINATE ALL CLEANOUT LOCATIONS WITH THE ARCHITECT PRIOR TO ANY INSTALLATION.
10. SEE ARCHITECTURAL DRAWINGS FOR ACCESSIBLE FIXTURE LOCATIONS AND MOUNTING HEIGHTS. INSULATE ALL EXPOSED HOT WATER AND DRAIN PIPING BELOW ACCESSIBLE LAVATORIES AND SINKS.
11. ALL PLUMBING WORK SHALL BE INSTALLED SO AS TO AVOID INTERFERENCE WITH ELECTRICAL AND MECHANICAL EQUIPMENT AND STRUCTURAL FRAMING.
12. ALL WORK AND MATERIAL SHALL BE PERFORMED AND INSTALLED IN COMPLIANCE WITH CALIFORNIA PLUMBING CODE 2022.
13. THESE DRAWINGS INDICATE THE SEWER, WATER, AND STORM DRAIN SYSTEMS TO POINT OF CONNECTION 5'-0" OUTSIDE OF THE BUILDING. CONTINUATION OF THESE SYSTEMS IS SHOWN ON THE CIVIL DRAWINGS AND IS SPECIFIED UNDER ANOTHER SECTION OF THE SPECIFICATIONS. THE PIPING SHALL BE INSTALLED TO MEET THE INVERT ELEVATIONS SHOWN ON THE CIVIL DRAWINGS.
14. INSULATION (SEE SPECIFICATION FOR TYPE REQUIRED) AND COVERING ON PIPE AND TUBING SHALL HAVE A FLAME SPREAD RATING NOT TO EXCEED 25 AND A SMOKE DENSITY NOT TO EXCEED 450 WHEN TESTED IN ACCORDANCE WITH 2022 C.B.C. SECTION 720.3.
15. MATERIALS EXPOSED WITHIN DUCTS OR PLENUMS SHALL HAVE A FLAME-SPREAD INDEX OF NOT MORE THAN 25 AND A SMOKE-DEVELOPED INDEX OF NOT MORE THAN 50 WHERE TESTED IN ACCORDANCE WITH ASTM E84 OR UL 723. CMC 2022, CHAPTERS 7, 9 ,& 11.
16. ANY ALTERATIONS TO A STRUCTURAL MEMBER, SUCH AS CUTTING, BORING, BRAZING, DRILLING, WELDING, ETC. SHALL HAVE PRIOR WRITTEN APPROVAL OF ARCHITECT, STRUCTURAL ENGINEER AND DSA.
17. M.E.P. COMPONENT ANCHORAGE NOTE:

    ALL MECHANICAL, PLUMBING, AND ELECTRICAL COMPONENTS SHALL BE ANCHORED AND INSTALLED PER THE DETAILS ON THE DSA APPROVED CONSTRUCTION DOCUMENTS. WHERE NO DETAIL IS INDICATED, THE FOLLOWING COMPONENTS SHALL BE ANCHORED OR BRACED TO MEET THE FORCE AND DISPLACEMENT REQUIREMENTS PRESCRIBED IN THE 2022 CBC, SECTIONS 1617A.1.18 THROUGH 1617A.1.26 AND ASCE 7-16 CHAPTERS 13, 26 AND 30.

    1. ALL PERMANENT EQUIPMENT AND COMPONENTS.
    2. TEMPORARY OR MOVABLE EQUIPMENT THAT IS PERMANENTLY ATTACHED (E.G. HARD WIRE) TO THE BUILDING UTILITY SERVICES SUCH AS ELECTRICITY, GAS OR WATER.
    3. TEMPORARY, MOVABLE, OR MOBILE EQUIPMENT WHICH IS HEAVIER THAN 400 POUNDS OR HAS A CENTER MASS LOCATED 4 FEET OR MORE ABOVE THE ADJACENT FLOOR OR ROOF LEVEL THAT DIRECTLY SUPPORT THE COMPONENT IS REQUIRED TO BE RESTRAINED IN A MANNER APPROVER BY DSA.

    THE FOLLOWING MECHANICAL AND ELECTRICAL COMPONENTS SHALL BE POSITIVELY ATTACHED TO THE STRUCTURE, BUT NEED NOT DEMONSTRATE DESIGN COMPLIANCE WITH THE REVERENCES NOTED ABOVE. THESE COMPONENTS SHALL HAVE FLEXIBLE CONNECTIONS PROVIDED BETWEEN THE COMPONENT AND ASSOCIATED DUCTWORK, PIPING, AND CONDUIT. FLEXIBLE CONNECTIONS MUST ALLOW MOVEMENTS IN BOTH TRANSVERSE AND LONGITUDINAL DIRECTIONS:

    A. COMPONENTS WEIGHING LESS THAN 400 POUNDS AND HAVE A CENTER OF MASS LOCATED 4 FEET OR LESS ABOVE THE ADJACENT FLOOR OR ROOF LEVEL THAT DIRECTLY SUPPORT THE COMPONENT.
    B. COMPONENTS WEIGHING LESS THAN 20 POUNDS, OR IN THE CASE OF DISTRIBUTED SYSTEMS, LESS THAN 5 POUNDS PER FOOT, WHICH ARE SUSPENDED FROM A ROOF OR FLOOR OR HUNG FROM A WALL

    THE ANCHORAGE OF ALL MECHANICAL, ELECTRICAL, AND PLUMBING COMPONENTS SHALL BE THE SUBJECT TO THE APPROVAL OF THE DESIGN PROFESSIONAL IN GENERAL RESPONSIBLE CHARGE OR STRUCTURAL ENGINEER DELEGATED RESPONSIBILITY AND ACCEPTANCE THE DSA. THE PROJECT INSPECTOR WILL VERIFY THAT ALL COMPONENTS AND EQUIPMENT HAVE BEEN ANCHORED IN ACCORDANCE WITH ABOVE REQUIREMENTS.
18. PIPING, DUCTWORK, AND ELECTRICAL DISTRIBUTION SYSTEM BRACING NOTE:

    PIPING, DUCTWORK, AND ELECTRICAL DISTRIBUTION SYSTEMS SHALL BE BRACED TO COMPLY WITH THE FORCE AND DISPLACEMENTS PRESCRIBED IN ASCE 7-16 SECTION 13.3, AS DEFINED IN ASCE 7-16 SECTION 13.6.5, 13.6.6, 13.6.7, 13.6.8, AND 2022 CBC SECTIONS 1617A.1.24, 1617A.1.25, AND 1616A.1.26.

    THE METHOD OF SHOWING BRACING AND ATTACHMENTS TO THE STRUCTURE FOR THE IDENTIFIED DISTRIBUTION SYSTEM ARE AS NOTED BELOW. WHEN BRACING AND ATTACHMENTS ARE BASED ON A PREAPPROVED INSTALLATION GUIDE (E.G. OSHPD OPM FOR 2022 CBC OR LATER), COPIES OF THE BRACING SYSTEM INSTALLATION GUIDE OR MANUAL SHALL BE AVAILABLE ON THE JOBSITE PRIOR TO THE START OF AND DURING THE HANGING AND BRACING OF THE DISTRIBUTION SYSTEMS. THE STRUCTURAL ENGINEER OF RECORD SHALL VERIFY THE ADEQUACY OF THE STRUCTURE TO SUPPORT THE HANGER AND BRACE LOADS.

    MECHANICAL PIPING (MP), MECHANICAL DUCTS (MD), PLUMBING PIPING (PP), ELECTRICAL DISTRIBUTION SYSTEMS (E):

    MP [ ] MD [ ] PP [X] E [ ] - OPTION 1: DETAILED ON THE APPROVED DRAWINGS WITH PROJECT SPECIFIC NOTES AND DETAILS.

    MP [ ] MD [ ] PP [ ] E [ ] - OPTION 2: SHALL COMPLY WITH THE APPLICABLE OSHPD PRE-APPROVAL (OPM #) #0043-13.

LEGEND

SYMBOL	ABBREVIATION	DESCRIPTION
	S OR W	SOIL OR WASTE BELOW FLOOR OR GRADE
SD	SD	STORM DRAIN ABOVE FLOOR
SD	SD	STORM DRAIN BELOW FLOOR OR GRADE
OD	OD	OVERFLOW DRAIN ABOVE FLOOR
	V	SANITARY VENT
	CW	COLD WATER
	HW	HOT WATER
CD	CD	CONDENSATE DRAIN
TP	TP	TRAP PRIMER
TW	TW	TEMPER WATER
		DIRECTION OF FLOW
	SOV	SHUT-OFF VALVE
	FCO	FLOOR CLEANOUT
	WCO	WALL CLEANOUT
		RISER UP
		RISER DOWN
	ABV	ABOVE
	AP	ACCESS PANEL
	BEL	BELOW
	CLG	CEILING
	CONT	CONTINUATION
	COTG	CLEANOUT TO GRADE
	DN	DOWN
	FLR	FLOOR
	FFE	FINISH FLOOR ELEVATION
	I.E.	INVERT ELEVATION
	POC	POINT OF CONNECTION
	PLCS	PLACES
	SLVE	SLEEVE
	VTR	VENT THRU ROOF
	YB	YARD BOX

DSA STAMP

STUDIO W ARCHITECTS

Studio W Architects
424 32nd Street, Suite D/E
Newport Beach, California 92663
[T] 949.774.2920
www.StudioW-Architects.com

PDS Pocock Design Solutions Inc.

ARCHITECT

LICENSED ARCHITECT
BRYAN P. WHITMORE
No. C 30345
Ren. 9/30/23
STATE OF CALIFORNIA

DATE SIGNED: 06/24/2024

ENGINEER

REGISTERED PROFESSIONAL ENGINEER
ANDREW R. GOSSMAN
No. M3868
Exp. 3/31/26
MECHANICAL
STATE OF CALIFORNIA

DATE SIGNED: 06/24/2024

GENERAL NOTES

1. This sheet is part of a set and is not to be used alone.
2. This sheet is not to be used for construction unless the architect's stamp and signature appear on the drawings and the status box indicated drawings have been released for construction.
3. These plans and prints thereof, as instruments of service, are owned by the architect and are for use on this project only. Reproduction and/or distribution without the prior written consent of the architect is forbidden.
4. Copyright Studio W Associates, Inc. 2022.

REVISION HISTORY

NO.	REMARKS	DATE

DRAWING STATUS

	DATE
○ DSA PLAN CHECK	03/29/2024
● DSA BACK CHECK	06/24/2024
○ BIDDING	
○ CONSTRUCTION	

KEY PLAN

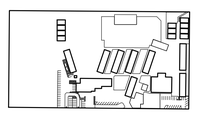

BUENA PARK SD
6885 ORANGETHORPE AVE
BUENA PARK, CA 90620

DESIGN DEVELOPMENT

CARL E. GILBERT ELEMENTARY SCHOOL
TK/PK CLASSROOMS & EARLY LEARNING BUILDING
7255 8TH STREET, BUENA PARK, CA 90621

PLUMBING LEGEND, SCHEDULE, AND GENERAL NOTES

Date	Project Number
06/24/2024	23076
Application Number	Drawing Number
04-123212	P0.1
Drawn / Author	Checked / Checker

PRINT DATE: 6/19/2024 1:09:09 PM
FILE PATH: C:\Users\EMartinez\OneDrive - Pocock Design Solutions\Documents\23076-BPUSD Gilbert-BLDG-P21 Esperanza\ESXUZ.rvt

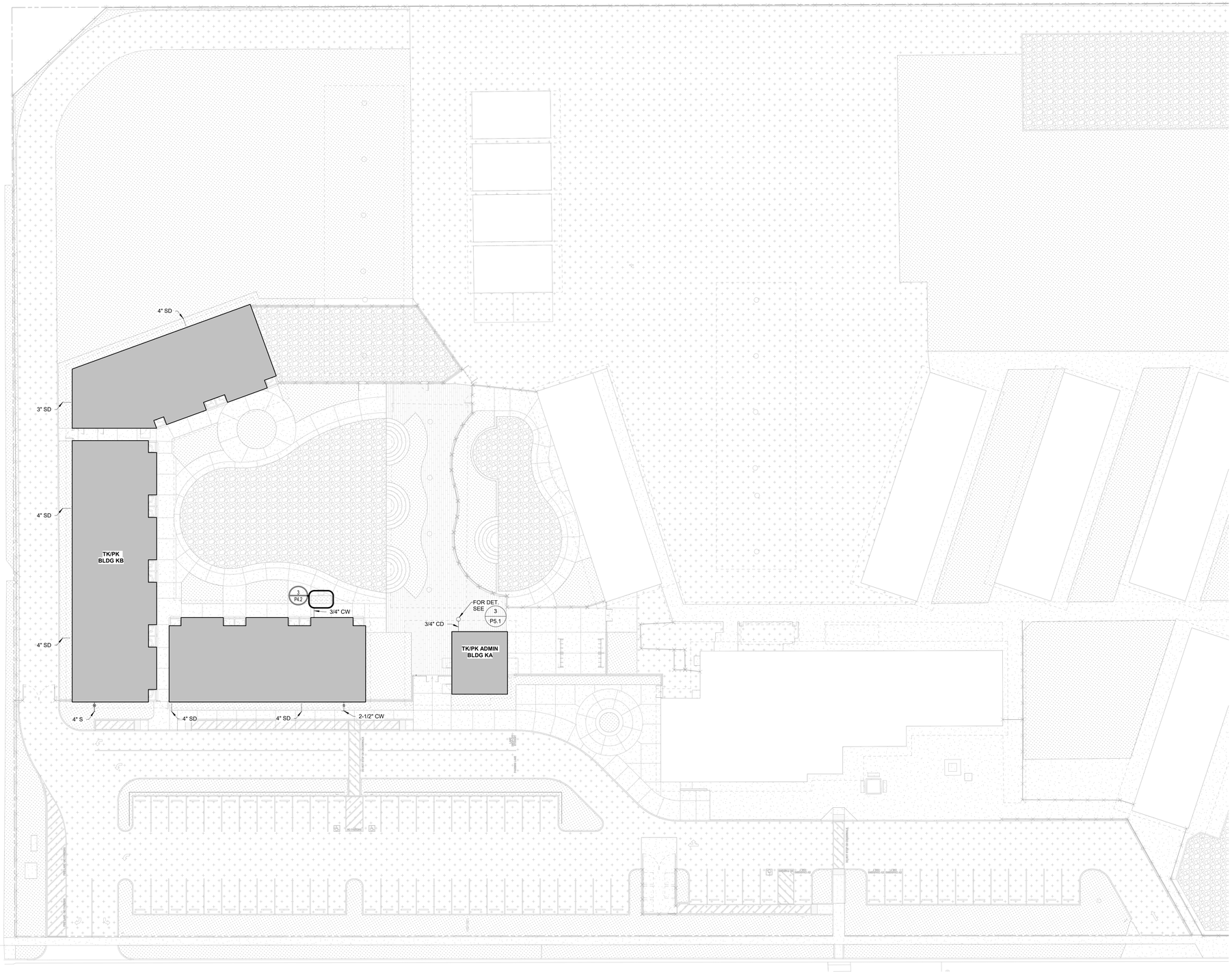

CONSTRUCTION NOTES:

1. FOR CONTINUATION OF ALL UTILITIES SEE CIVIL ENGINEERING DRAWINGS.

NORTH

SCALE 3/64" = 1'-0"

PLUMBING ENLARGED SITE PLAN

1

PRINT DATE: 6/19/2024 1:09:14 PM
FILE PATH: C:\Users\EMartinez\OneDrive - Pocock Design Solutions\Documents\23076-BPUSD Gilbert-BLDG-P21. Esperanza\ASXUZ.rvt

DSA STAMP

STUDIO W
ARCHITECTS

Studio W Architects
424 32nd Street, Suite D/E
Newport Beach, California 92663
[T] 949.774.2920
www.StudioW-Architects.com

PDS
Pocock Design Solutions Inc.

ARCHITECT	ENGINEER
LICENSED ARCHITECT BRYAN P WHITMORE No. C 30345 Ren. 9/30/23 STATE OF CALIFORNIA	REGISTERED PROFESSIONAL ENGINEER ADRIAN R. GOSSMAN No. M3828 Exp. 3/31/25 MECHANICAL STATE OF CALIFORNIA
DATE SIGNED: 06/24/2024	DATE SIGNED: 06/24/2024

GENERAL NOTES

1. This sheet is part of a set and is not to be used alone.
2. This sheet is not to be used for construction unless the architect's stamp and signature appear on the drawings and the status box indicated drawings have been released for construction.
3. These plans and prints thereof, as instruments of service, are owned by the architect and are for use on this project only. Reproduction and/or distribution without the prior written consent of the architect is forbidden.
4. Copyright Studio W Associates, Inc. 2022.

REVISION HISTORY

NO.	REMARKS	DATE

DRAWING STATUS

	DATE
○ DSA PLAN CHECK	03/29/2024
● DSA BACK CHECK	06/24/2024
○ BIDDING	
○ CONSTRUCTION	

KEY PLAN

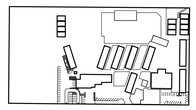

BUENA PARK SD
6885 ORANGETHORPE AVE
BUENA PARK, CA 90620

DESIGN DEVELOPMENT

CARL E. GILBERT
ELEMENTARY SCHOOL
TK/PK CLASSROOMS & EARLY LEARNING BUILDING
7255 8TH STREET, BUENA PARK, CA 90621

PLUMBING ENLARGED SITE PLAN

Date 06/24/2024	Project Number 23076
Application Number 04-123212	Drawing Number P1.1
Drawn Author	Checked Checker

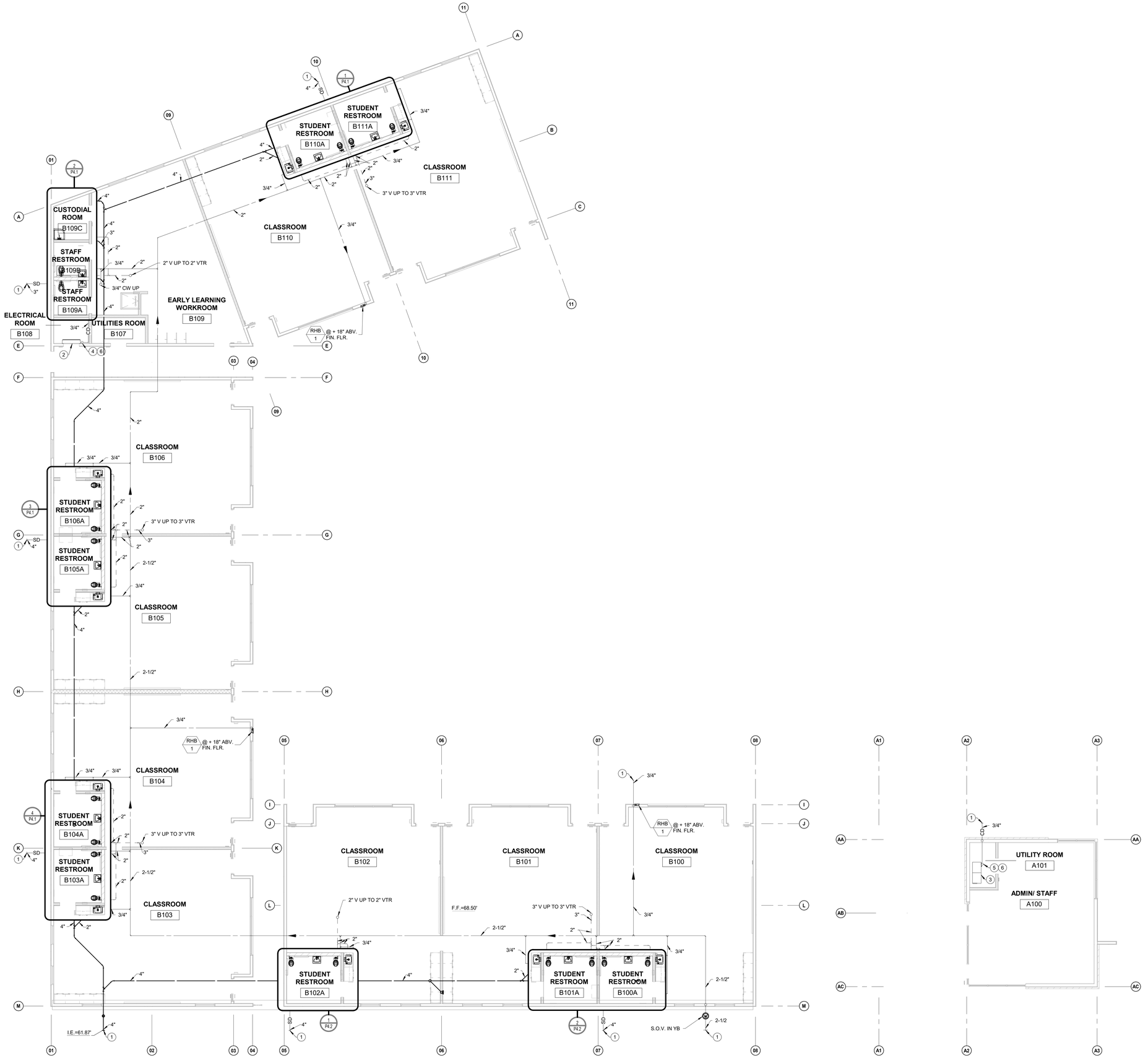

CONSTRUCTION NOTES:

1. ALL HORIZONTAL STORM DRAIN PIPING ABOVE CEILING SHALL SLOPE AT 1% UNLESS OTHERWISE NOTED.
2. ALL CONDENSATE DRAIN PIPING ABOVE CEILING SHALL SLOPE AT 1% UNLESS OTHERWISE NOTED.
3. ALL SLEEVES THRU FOOTINGS SHALL BE MINIMUM TWO PIPE SIZES LARGER THAN THE PIPE GOING THRU IT, PROVIDE ALL SLEEVES.
4. ALL STORM DRAIN LINES, WASTE LINES & COLD WATER LINES INTO FOOTINGS SHALL BE DOUBLE HALF LAP WRAPPED WITH 1/8" THICK "ARMOFLEX" INSULATION. ALSO, THE CONTRACTOR SHALL PROVIDE BLOCKED OUT AREAS IN THE FOOTING FOR STORM DRAIN LINES, WASTE LINES & COLD WATER LINES. ALL PIPING SHALL AVOID THE LOWER 9" OF THE FOOTING.

CONSTRUCTION KEY NOTES:

1. FOR CONTINUATION OF ALL UTILITIES SEE SHEET P1.1.
2. FAN COIL ON WALL, SEE MECHANICAL DRAWINGS FOR EXACT LOCATION.
3. FAN COIL ABOVE CEILING, SEE MECHACNICAL DRAWINGS FOR EXACT LOCATION.
4. P.O.C. 3/4" CONDENSATE TO CONDENSATE PUMP ON WALL.
5. P.O.C. 3/4" CONDENSATE TO CONDENSATE PUMP ABOVE CEILING.
6. CONDENSATE PUMP PROVIDED BY MECHANICAL CONTRACTOR.

NORTH

SCALE 1/8" = 1'-0"

1

PLUMBING FLOOR PLAN

DSA STAMP

STUDIO W ARCHITECTS

Studio W Architects
424 32nd Street, Suite D/E
Newport Beach, California 92663
[T] 949.774.2920
www.StudioW-Architects.com

Pocock Design Solutions Inc.

ARCHITECT	ENGINEER
LICENSED ARCHITECT BRIAN P WHITMORE No. C 30345 Ren. 9/30/23 STATE OF CALIFORNIA	REGISTERED PROFESSIONAL ENGINEER ANDREW R GOSMAN No. M30609 Exp. 3/31/26 MECHANICAL STATE OF CALIFORNIA
DATE SIGNED: 06/24/2024	DATE SIGNED: 06/24/2024

GENERAL NOTES

1. This sheet is part of a set and is not to be used alone.
2. This sheet is not to be used for construction unless the architect's stamp and signature appear on the drawings and the status box indicated drawings have been released for construction.
3. These plans and prints thereof, as instruments of service, are owned by the architect and are for use on this project only. Reproduction and/or distribution without the prior written consent of the architect is forbidden.
4. Copyright Studio W Associates, Inc. 2022.

REVISION HISTORY

NO.	REMARKS	DATE

DRAWING STATUS

	DATE
DSA PLAN CHECK	03/29/2024
DSA BACK CHECK	06/24/2024
BIDDING	
CONSTRUCTION	

KEY PLAN

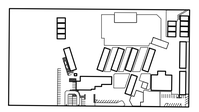

BUENA PARK SD
6885 ORANGETHORPE AVE
BUENA PARK, CA 90620

DESIGN DEVELOPMENT

CARL E. GILBERT ELEMENTARY SCHOOL
TK/PK CLASSROOMS & EARLY LEARNING BUILDING
7255 8TH STREET, BUENA PARK, CA 90621

PLUMBING FLOOR PLAN

Date	Project Number
06/24/2024	23076
Application Number	Drawing Number
04-123212	P2.1
Drawn	Checked
Author	Checker

PRINT DATE: 6/19/2024 1:09:15 PM
FILE PATH: C:\Users\EMartinez\OneDrive - Pocock Design Solutions\Documents\23076-BPUSD Gilbert-BLDG-P21_EsperanzaSXUZ.rvt

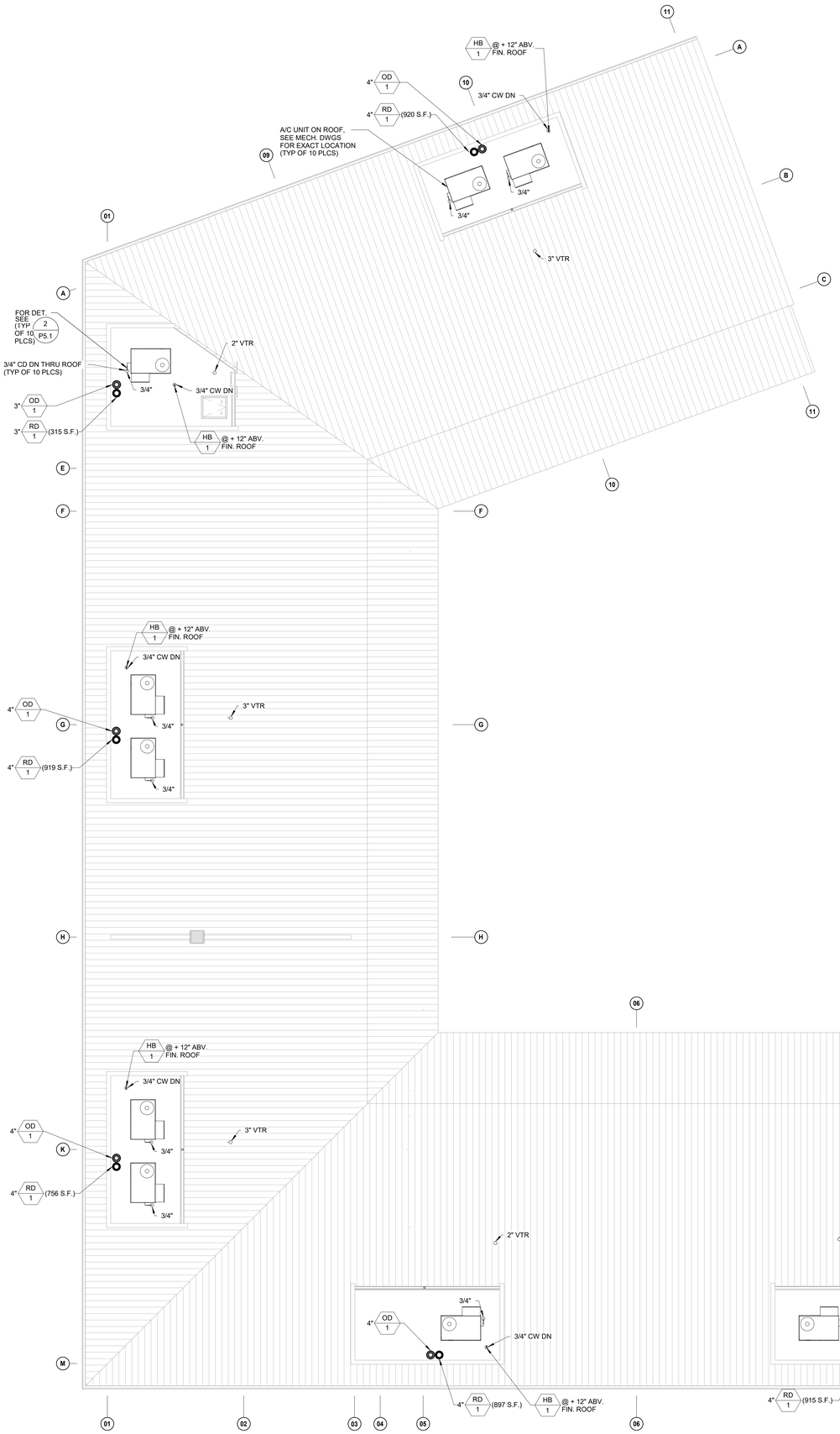

CONSTRUCTION NOTES:

1. ALL STORM DRAIN PIPE SIZES ARE BASED ON CALIFORNIA PLUMBING CODE 2022 TABLE 1103.1 & 1103.2 AT 5" RAINFALL PER HOUR.

NORTH

PLUMBING ROOF PLAN

SCALE 1/8" = 1'-0"

1

PRINT DATE: 6/19/2024 1:09:18 PM
FILE PATH: C:\Users\EMartinez\OneDrive - Pocock Design Solutions\Documents\23076-BPUSD Gilbert\BLDG-P21, Esperanza\ASXU2.rvt

DSA STAMP

STUDIO W ARCHITECTS

Studio W Architects
424 32nd Street, Suite D/E
Newport Beach, California 92663
[T] 949.774.2920
www.StudioW-Architects.com

Pocock Design Solutions Inc.

ARCHITECT	ENGINEER
LICENSED ARCHITECT BRYAN P WHITMORE No. C 30345 Ren. 9/30/23 STATE OF CALIFORNIA	REGISTERED PROFESSIONAL ENGINEER ADRIER R. GOSSMAN No. M3828 Exp. 3/31/25 MECHANICAL STATE OF CALIFORNIA
DATE SIGNED: 06/24/2024	DATE SIGNED: 06/24/2024

GENERAL NOTES

1. This sheet is part of a set and is not to be used alone.
2. This sheet is not to be used for construction unless the architect's stamp and signature appear on the drawings and the status box indicated drawings have been released for construction.
3. These plans and prints thereof, as instruments of service, are owned by the architect and are for use on this project only. Reproduction and/or distribution without the prior written consent of the architect is forbidden.
4. Copyright Studio W Associates, Inc. 2022.

REVISION HISTORY

NO.	REMARKS	DATE

DRAWING STATUS

	DATE
○ DSA PLAN CHECK	03/29/2024
● DSA BACK CHECK	06/24/2024
○ BIDDING	
○ CONSTRUCTION	

KEY PLAN

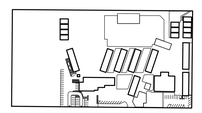

BUENA PARK SD
6885 ORANGETHORPE AVE
BUENA PARK, CA 90620

DESIGN DEVELOPMENT

CARL E. GILBERT ELEMENTARY SCHOOL
TK/PK CLASSROOMS & EARLY LEARNING BUILDING
7255 8TH STREET, BUENA PARK, CA 90621

PLUMBING ROOF PLAN

Date 06/24/2024	Project Number 23076
Application Number 04-123212	Drawing Number P3.1
Drawn Author	Checked Checker

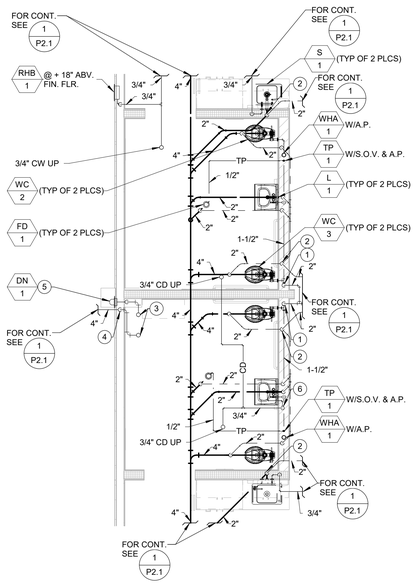

CONSTRUCTION KEY NOTES:

1. 2" CW DN IN WALL W/ S.O.V. & A.P.
2. 2" V UP TO ABV. CLG.
3. 4" SD & OD UP
4. 4" SD DN IN WALL
5. 4" OD SPILL THRU WALL @ + 9'-4" ABV FIN FLR
6. 3/4" CD DN IN WALL,CONNECT TO LAV TAILPIECE

PLUMBING ENLARGED PLAN - STUDENT RESTROOMS 103A AND 104A

SCALE 1/4" = 1'-0" | 4

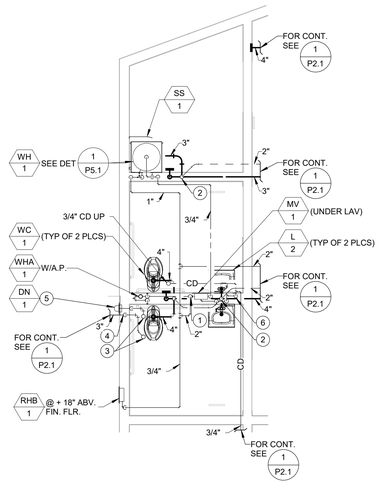

CONSTRUCTION KEY NOTES:

1. 2" CW DN IN WALL W/ S.O.V. & A.P.
2. 2" V UP TO ABV. CLG.
3. 3" SD & OD UP
4. 3" SD DN IN WALL
5. 3" OD SPILL THRU WALL @ + 9'-4" ABV FIN FLR
6. 3/4" CD DN IN WALL,CONNECT TO LAV TAILPIECE

PLUMBING ENLARGED PLAN - CUSTODIAL ROOM AND STAFF RESTROOMS 107 AND 108A

SCALE 1/4" = 1'-0" | 2

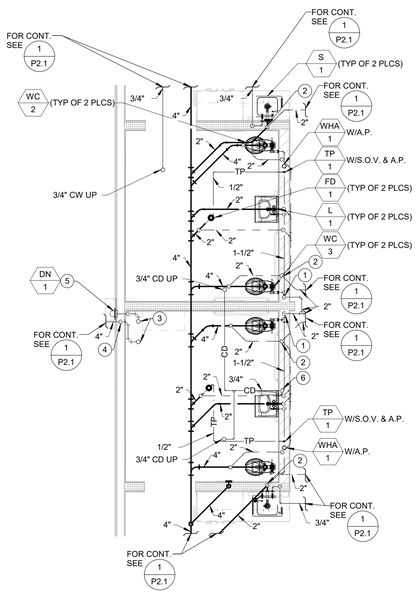

CONSTRUCTION KEY NOTES:

1. 2" CW DN IN WALL W/ S.O.V. & A.P.
2. 2" V UP TO ABV. CLG.
3. 4" SD & OD UP
4. 4" SD DN IN WALL
5. 4" OD SPILL THRU WALL @ + 9'-4" ABV FIN FLR
6. 3/4" CD DN IN WALL,CONNECT TO LAV TAILPIECE

PLUMBING ENLARGED PLAN - STUDENT RESTROOMS 105A AND 106A

SCALE 1/4" = 1'-0" | 3

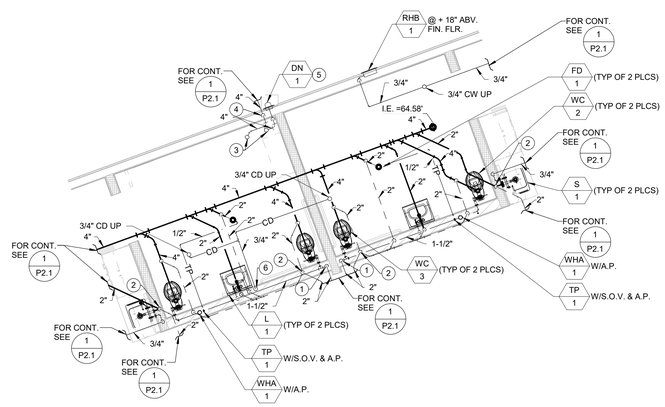

CONSTRUCTION KEY NOTES:

1. 2" CW DN IN WALL W/ S.O.V. & A.P.
2. 2" V UP TO ABV. CLG.
3. 4" SD & OD UP
4. 4" SD DN IN WALL
5. 4" OD SPILL THRU WALL @ + 9'-4" ABV FIN FLR
6. 3/4" CD DN IN WALL,CONNECT TO LAV TAILPIECE

PLUMBING ENLARGED PLAN - STUDENT RESTROOMS 109A AND 110A

SCALE 1/4" = 1'-0" | 1

PRINT DATE: 6/19/2024 1:09:21 PM
FILE PATH: C:\Users\EMartinez\OneDrive - Pocock Design Solutions\Documents\23076-BPUSD Gilbert-MLDG-PS1 Esperanza\ESNJZ.rvt

DSA STAMP

STUDIO W ARCHITECTS

Studio W Architects
424 32nd Street, Suite D/E
Newport Beach, California 92663
[T] 949.774.2920
www.StudioW-Architects.com

PDS Pocock Design Solutions Inc.

ARCHITECT	ENGINEER
LICENSED ARCHITECT BRYAN P WHITMORE No. C 30345 Ren. 9/30/23 STATE OF CALIFORNIA	REGISTERED PROFESSIONAL ENGINEER ANDREW R. GOSSMAN No. M3828 Exp. 3/31/26 MECHANICAL STATE OF CALIFORNIA
DATE SIGNED: 06/24/2024	DATE SIGNED: 06/24/2024

GENERAL NOTES

1. This sheet is part of a set and is not to be used alone.
2. This sheet is not to be used for construction unless the architect's stamp and signature appear on the drawings and the status box indicated drawings have been released for construction.
3. These plans and prints thereof, as instruments of service, are owned by the architect and are for use on this project only. Reproduction and/or distribution without the prior written consent of the architect is forbidden.
4. Copyright Studio W Associates, Inc. 2022.

REVISION HISTORY

NO.	REMARKS	DATE

DRAWING STATUS

	DATE
DSA PLAN CHECK	03/29/2024
DSA BACK CHECK	06/24/2024
BIDDING	
CONSTRUCTION	

KEY PLAN

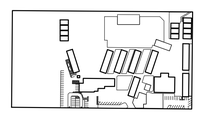

BUENA PARK SD
6885 ORANGETHORPE AVE
BUENA PARK, CA 90620

DESIGN DEVELOPMENT

CARL E. GILBERT ELEMENTARY SCHOOL
TK/PK CLASSROOMS & EARLY LEARNING BUILDING
7255 8TH STREET, BUENA PARK, CA 90621

PLUMBING ENLARGED PLANS

Date	Project Number
06/24/2024	23076
Application Number	Drawing Number
04-123212	P4.1
Drawn / Author	Checked / Checker

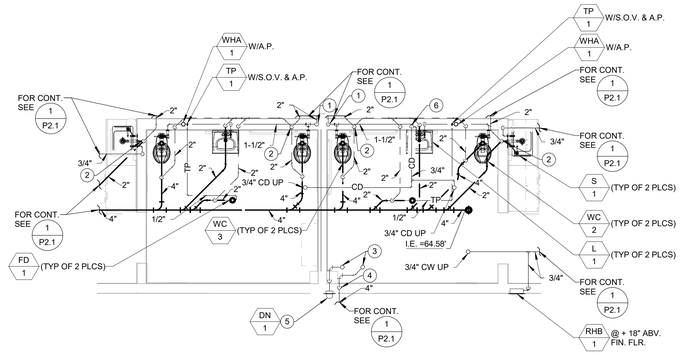

CONSTRUCTION KEY NOTES:

1. 2" CW DN IN WALL W/ S.O.V. & A.P.
2. 2" V UP TO ABV. CLG.
3. 4" SD & OD UP
4. 4" SD DN IN WALL
5. 4" OD SPILL THRU WALL @ + 9'-4" ABV FIN FLR
6. 3/4" CD DN IN WALL,CONNECT TO LAV TAILPIECE

PLUMBING ENLARGED PLAN - STUDENT RESTROOMS 100A AND 101A — SCALE 1/4" = 1'-0" — 2

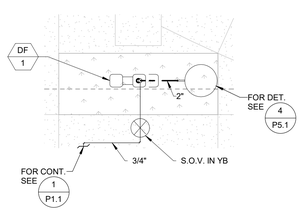

PLUMBING DRINKING FOUNTAIN ENLARGED PLAN — SCALE 1/4" = 1'-0" — 3

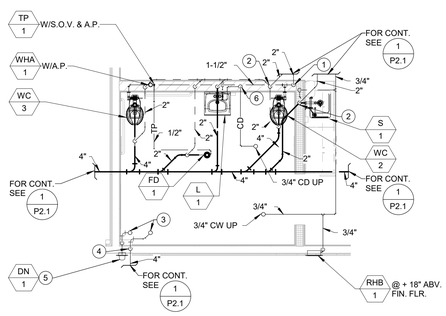

CONSTRUCTION KEY NOTES:

1. 2" CW DN IN WALL W/ S.O.V. & A.P.
2. 2" V UP TO ABV. CLG.
3. 4" SD & OD UP
4. 4" SD DN IN WALL
5. 4" OD SPILL THRU WALL @ + 9'-4" ABV FIN FLR
6. 3/4" CD DN IN WALL,CONNECT TO LAV TAILPIECE

PLUMBING ENLARGED PLAN - STUDENT RESTROOM 102A — SCALE 1/4" = 1'-0" — 1

DSA STAMP

STUDIO W ARCHITECTS

Studio W Architects
424 32nd Street, Suite D/E
Newport Beach, California 92663
[T] 949.774.2920
www.StudioW-Architects.com

Pocock Design Solutions Inc.

ARCHITECT	ENGINEER
LICENSED ARCHITECT BRIAN P WHITMORE No. C 30345 Ren. 9/30/23 STATE OF CALIFORNIA	REGISTERED PROFESSIONAL ENGINEER ANDREW R. GOSMAN No. M39839 Exp. 3/31/24 MECHANICAL STATE OF CALIFORNIA
DATE SIGNED: 06/24/2024	DATE SIGNED: 06/24/2024

GENERAL NOTES

1. This sheet is part of a set and is not to be used alone.
2. This sheet is not to be used for construction unless the architect's stamp and signature appear on the drawings and the status box indicated drawings have been released for construction.
3. These plans and prints thereof, as instruments of service, are owned by the architect and are for use on this project only. Reproduction and/or distribution without the prior written consent of the architect is forbidden.
4. Copyright Studio W Associates, Inc. 2022.

REVISION HISTORY

NO.	REMARKS	DATE

DRAWING STATUS

		DATE
○	DSA PLAN CHECK	03/29/2024
●	DSA BACK CHECK	06/24/2024
○	BIDDING	
○	CONSTRUCTION	

KEY PLAN

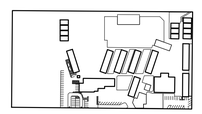

BUENA PARK SD
6885 ORANGETHORPE AVE
BUENA PARK, CA 90620

DESIGN DEVELOPMENT

CARL E. GILBERT ELEMENTARY SCHOOL
TK/PK CLASSROOMS & EARLY LEARNING BUILDING
7255 8TH STREET, BUENA PARK, CA 90621

PLUMBING ENLARGED PLANS

Date	Project Number
06/24/2024	23076
Application Number	Drawing Number
04-123212	P4.2
Drawn / Checked	
Author / Checker	

PRINT DATE: 6/19/2024 1:09:22 PM
FILE PATH: C:\Users\EMartinez\OneDrive - Pocock Design Solutions\Documents\23076-BPUSD Gilbert-BLDG-P21_Esperanza\4SXUZ.rvt

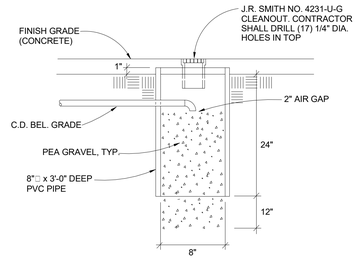

HARDSCAPE

DRYWELL DETAIL FOR CONDENSATE

SCALE	
NONE	3

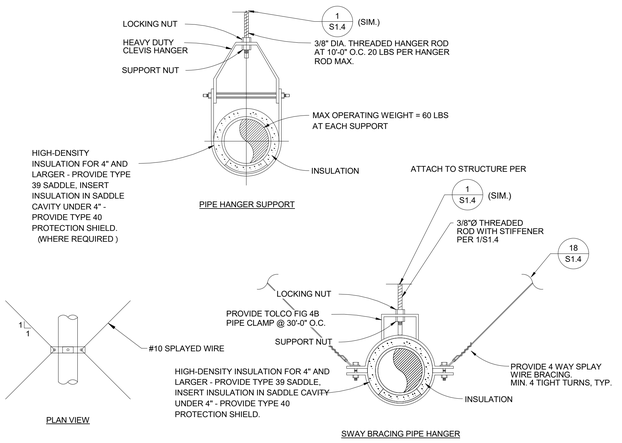

NOTE: PROVIDE SUPPORT AT 5'-0" MAX FROM ENDS AND ANY CHANGE OF DIRECTION.

SUSPENDED PIPE SUPPORT

SCALE	
NONE	5

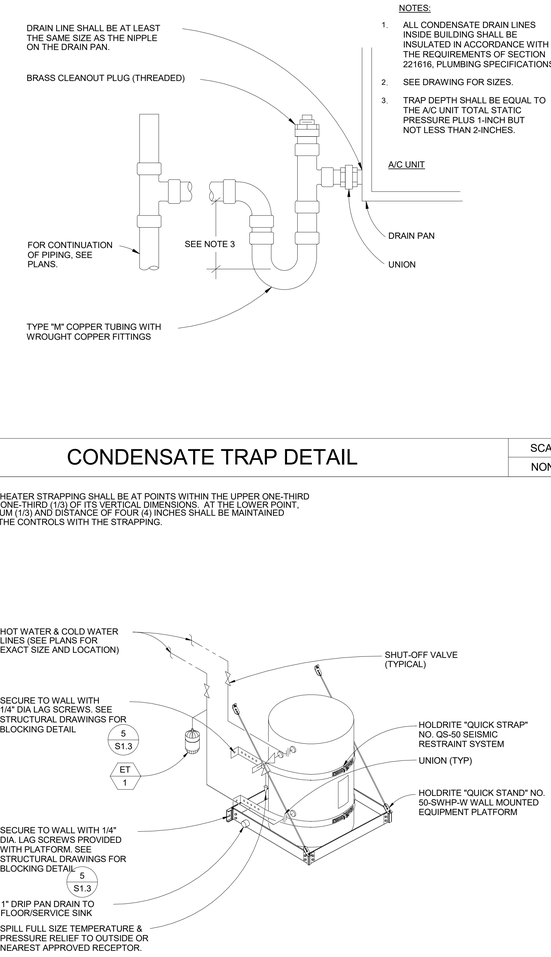

NOTES:

1. ALL CONDENSATE DRAIN LINES INSIDE BUILDING SHALL BE INSULATED IN ACCORDANCE WITH THE REQUIREMENTS OF SECTION 221616, PLUMBING SPECIFICATIONS.
2. SEE DRAWING FOR SIZES.
3. TRAP DEPTH SHALL BE EQUAL TO THE A/C UNIT TOTAL STATIC PRESSURE PLUS 1-INCH BUT NOT LESS THAN 2-INCHES.

CONDENSATE TRAP DETAIL

SCALE	
NONE	2

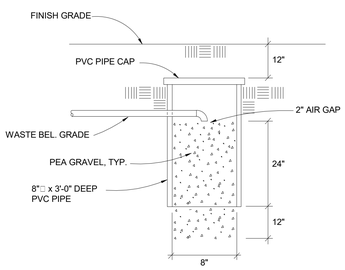

LANDSCAPE

DRYWELL DETAIL FOR WASTE

SCALE	
NONE	4

NOTE:
WATER HEATER STRAPPING SHALL BE AT POINTS WITHIN THE UPPER ONE-THIRD LOWER ONE-THIRD (1/3) OF ITS VERTICAL DIMENSIONS. AT THE LOWER POINT, A MINIMUM (1/3) AND DISTANCE OF FOUR (4) INCHES SHALL BE MAINTAINED ABOVE THE CONTROLS WITH THE STRAPPING.

ELECTRIC WATER HEATER ON PLATFORM DETAIL

SCALE	
NONE	1

DSA STAMP

STUDIO W ARCHITECTS

Studio W Architects
424 32nd Street, Suite D/E
Newport Beach, California 92663
[T] 949.774.2920
www.StudioW-Architects.com

PDS
Pocock Design Solutions Inc.

ARCHITECT	ENGINEER
LICENSED ARCHITECT BRYAN P WHITMORE No. C 30345 Ren. 9/30/23 STATE OF CALIFORNIA	REGISTERED PROFESSIONAL ENGINEER ANDREW R. GOSSMAN No. M3828 Exp. 3/31/25 MECHANICAL STATE OF CALIFORNIA
DATE SIGNED: 06/24/2024	DATE SIGNED: 06/24/2024

GENERAL NOTES

1. This sheet is part of a set and is not to be used alone.
2. This sheet is not to be used for construction unless the architect's stamp and signature appear on the drawings and the status box indicated drawings have been released for construction.
3. These plans and prints thereof, as instruments of service, are owned by the architect and are for use on this project only. Reproduction and/or distribution without the prior written consent of the architect is forbidden.
4. Copyright Studio W Associates, Inc. 2022.

REVISION HISTORY

NO.	REMARKS	DATE

DRAWING STATUS

	DATE
○ DSA PLAN CHECK	03/29/2024
● DSA BACK CHECK	06/24/2024
○ BIDDING	
○ CONSTRUCTION	

KEY PLAN

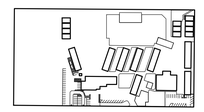

BUENA PARK SD
6885 ORANGETHORPE AVE
BUENA PARK, CA 90620

DESIGN DEVELOPMENT

CARL E. GILBERT ELEMENTARY SCHOOL
TK/PK CLASSROOMS & EARLY LEARNING BUILDING
7255 8TH STREET, BUENA PARK, CA 90621

PLUMBING DETAILS

Date	Project Number
06/24/2024	23076
Application Number	Drawing Number
04-123212	P5.1
Drawn / Checked	
Author / Checker	

PRINT DATE: 6/19/2024 1:09:23 PM
FILE PATH: C:\Users\EMartinez\OneDrive - Pocock Design Solutions\Documents\23076-BPUSD Gilbert\BLDG-P21_Esgenoza4SKWJZ.rvt

LIGHT FIXTURE SCHEDULE

TYPE	DESCRIPTION	WATTS	MOUNTING	COLOR TEMP.	CRI	LUMENS
1	LED 2' X 4' WITH STEEL HOUSING, HINGED AND LATCHED DOOR FRAME, CURVED ACRYLIC DIFFUSER, 0-10 VOLT DIMMABLE, WITH EXTENDED 10 YEAR WARRANTY. FINELITE #HPR SERIES OR EQUAL	27	RECESSED	3500K	80	3800
2	LED DOWNLIGHT WITH 6-INCH OPEN APERTURE, SATIN REFLECTOR, TEXTURED WHITE TRIM FLANGE, 65-DEGREE LIGHT DISTRIBUTION, 0-10 VOLT DIMMABLE, AND 5-YEAR WARRANTY. HE WILLIAMS #6DR-TL SERIES OR EQUAL	14	RECESSED	3500K	80	1400
4	LED WALL SCONCE WITH DIE CAST ALUMINUM HOUSING, 19" W X 6"H. X 4"D, TEMPERED GLASS LENS, DARK SKY COMPLIANT, NON-DIMMED, COLOR AS SELECTED BY ARCHITECT, AND 5-YEAR WARRANTY. HE WILLIAMS #VWMV SERIES OR EQUAL.	16	WALL SEE B/E0.5	4000K	80	1600
5	LED VANDAL RESISTANT DOWNLIGHT WITH 5.5" APERTURE, DIFFUSE POLYCARBONATE LENS, WIDE LIGHT DISTRIBUTION, NON=DIMMED, WITH 5-YEAR WARRANTY. HE WILLIAMS #V6DR SERIES OR EQUAL.	15	RECESSED	4000K	80	1100
6	LED AREA LIGHT, WITH DIE CAST ALUMINUM HOUSING, HINGED AND GASKETED DOOR FOR ELECTRICAL COMPONENTS, POLYCARBONATE LENS, TYPE 3 LIGHT DISTRIBUTION, INTEGRAL MOTION SENSOR, 0-10VOLT DIMMABLE. MOUNTED TO 25'H X 5" DIAMETER NON-TAPERED STEEL POLE, ENTIRE ASSEMBLY RATED FOR STEADY 90MPH WIND WITH 1.3 GUST FACTOR. , POLE AND FIXTURE DARK BRONZE FINISH. ALS #AL6A SERIES LIGHT WITH POLE	150	POLE	4000K	80	20000
7	COMPACT LED FLOODLIGHT WITH DIE CAST ALUMINUM HOUSING, TEMPERED GLASS LENS, NON-DIMMABLE, WITH DARK BRONZE FINISH. ALS # FDB90 SERIES OR EQUAL	90	YOKE	4000K	80	13500
8	LED POST TOP LUMINAIRE WITH DIE CAST ALUMINUM HOUSING, TYPE 5 LIGHT DISTRIBUTION, COLOR AS SELECTED BY ARCHITECT, WITH INTEGRAL MOTION SENSOR,MOUNTED TO 12'H X 4" DIAMETER NON-TAPERED STEEL POLE. ARCHIPELIGO #LPTP SERIES OR EQUAL	70	POLE SEE E/E0.5	4000K		8600
9	LED STRIPLIGHT WITH STEEL HOUSING, SQUARE ACRYLIC LENS, NON-DIMMABLE. HE WILLAMS #7SS SERIES OR EQUAL	20	CHAIN HUNG	3500K	80	2900
10	LED 1' X 4' WITH STEEL HOUSING, HINGED AND LATCHED REGRESSED ALUMINUM DOOR FRAME, 0.156" PRISMATIC ACRYLIC LENS, NON-DIMMED. HE WILLIAMS #50 SERIES OR EQUAL	20	RECESSED	3500K	80	2600
11	LED DIRECT / INDIRECT WITH EXTRUDED ALUMINUM HOUSING, 4'SQAUE X 4' LONG, SUITABLE FOR CONTINUOUS ROW MOUNTING, COLOR AS SELECTED BY ARCHITECT, WIDESPREAD OPTICS WITH TOP GLOW, 0-10 VOLT DIMMABLE. FINELIGHT #HO4 SERIES OR EQUAL	36	AIRCRAFT CABLE SEE A/E0.5	3500K	80	3900, 60% UP 40% DOWN

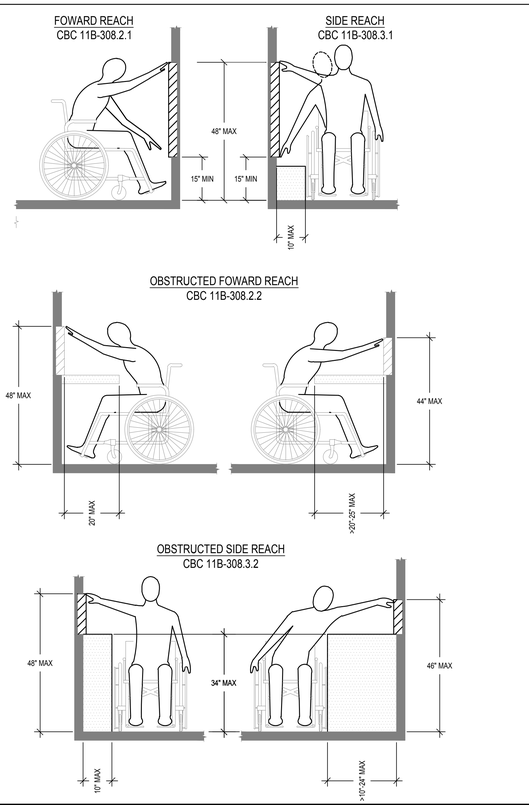

MOUNTING HEIGHT OVER OBSTRUCTIONS

SYMBOL LIST

(ALL SYMBOLS NOT NECESSARILY USED ON THESE DRAWINGS)
ALL SYMBOL DESCRIPTIONS ARE SUBJECT TO MODIFICATION AS NOTED ON THE DRAWINGS

A.F.F.	ABOVE FINISH FLOOR
A.F.G.	ABOVE FINISH GRADE
AWG	AMERICAN WIRE GAUGE
AMP, A	AMPERE
A.I.C.	AMPERES INTERRUPTING CAPACITY (SYMMETRICAL)
AF/AT	AMP FRAME, AMP TRIP
AS/AF	AMP SWITCH, AMP FUSE
CIRC.,CKT.	CIRCUIT
CB	CIRCUIT BREAKER
C	CONDUIT
C.O.	CONDUIT ONLY.
CONN	CONNECTED
DIA	DIAMETER
EMCS	ENERGY MANAGEMENT CONTROL SYSTEM
EMT	ELECTRICAL METALLIC TUBING
EWC	ELECTRIC WATER COOLER
E-O-L	END-OF-LINE CIRCUIT TERMINATOR.
EF	EXHAUST FAN
FT or '	FEET
FA	FIRE ALARM
FLA	FULL LOAD AMPS
GFI	GROUND FAULT INTERRUPTER.
GRD	GROUND
HVAC	HEATING, VENTILATING AND AIR CONDITIONING
H.,W.,D.,L.	HEIGHT, WIDTH, DEPTH, LENGTH
HP	HORSEPOWER
IN. or "	INCHES
IG	ISOLATED GROUND
J-BOX	JUNCTION BOX
KVA	KILOVOLT AMPERES
KW	KILOWATT
LCL	LONG CONTINUOUS LOAD
L.F.	LINEAR FEET
LTG, LTS	LIGHTING
MCB	MAIN CIRCUIT BREAKER
MLO	MAIN LUGS ONLY
MCM	THOUSAND CIRCULAR MILS
MTD	MOUNTED
NEC	NATIONAL ELECTRICAL CODE
NO. or #	NUMBER
PH. or Φ	PHASE
PROVIDE	FURNISH, INSTALL AND CONNECT.
REC, RECEPT	RECEPTACLE
U.N.O.	UNLESS NOTED OTHERWISE

FUSED SAFETY SWITCH (DISCONNECT), HORSE POWER RATED. MOUNT ON WALL +45", OR ON EQUIPMENT +36". PROVIDE SWITCH AND FUSES SIZED PER EQUIPMENT MANUFACTURER REQUIREMENTS.

CONDUIT, INSTALLED CONCEALED IN WALL OR IN CEILING SPACE.
- 3/4" C - 2 #12,1#12 GRD.
- 3/4" C - 3 #12,1#12 GRD.
- 3/4" C - 4 #12,1#12 GRD.
- 3/4" C - 5 #12,1#12 GRD.
- 3/4" C - 6 #12,1#12 GRD.
- 1" C - 7 #12,1#12 GRD.
- 1" C - 8 #12,1#12 GRD.
- 1 1/4" C - 9 #12,1#12 GRD.

CONDUIT, INSTALLED CONCEALED IN OR UNDER FLOOR, UNDER ROOF, OR BELOW GRADE, 3/4" CONDUIT MINIMUM.

HOMERUN TO PANEL "B" FOR CIRCUITS 5 AND 7 WITH SEPARATE NEUTRALS.

UNDERGROUND CONDUIT STUBOUT, STUB 5'-0" FROM BUILDING OR WALKWAY, CAP, MARK AND RECORD.

IP CLOCK, ON FLUSH WALL MOUNTED OUTLET BOX, +90", WITH CLOCK. PROVIDE 3/4"C. STUB TO ACCESSIBLE CEILING SPACE WHERE SUCH CEILING EXISTS. PROVIDE CATEGORY 6 CABLE HOMERUN FROM CLOCK TO DESIGNATED MDF/IDF.

EXTERIOR IP SPEAKER AND VANDALPROOF GRILLE ON FLUSH IN WALL BACKBOX, WITH 3/4" CONDUIT STUBBED INTO NEAREST ACCESSIBLE CEILING SPACE WHERE SUCH CEILING SPACE EXISTS. PROVIDE CAT 6 COMPUTER CABLE FROM SPEAKER TO DESIGNATED MDF/IDF.

INTRUSION DETECTION SYSTEM KEY PAD, FLUSH WALL MOUNTED +45" WITH 1"C., STUBBED TO ACCESSIBLE CEILING SPACE. PROVIDE CABLE FROM KEYPAD TO INTRUSION DETECTION CONTROL PANEL.

INTRUSION DETECTION SYSTEM DOOR CONTACTS MOUNTED FLUSH IN-DOOR. PROVIDE CABLE FROM CONTACT TO DESIGNATED TERMINAL CABINET.

INTRUSION DETECTION SYSTEM MOTION SENSOR, ON FLUSH CEILING MOUNTED OUTLET BOX. PROVIDE CABLE FROM SENSOR TO DESIGNATED TERMINAL CABINET.

IP SPEAKER, HOUSING & GRILLE, FLUSH CEILING MOUNTED. FOR INTERCOM/PUBLIC ADDRESS. PROVIDE CATAGORY 6 CABLE HOMERUN TO DESGNATED MDF/IDF.

INTRUSION DETECTION SYSTEM - 3/4"C., WITH CONDUCTORS AS SPECIFIED.

3/4"C. WITH LOW VOLTAGE COMMUNICATIONS CABLE FOR LIGHTING CONTROL.

COMPUTER/DATA PROCESSING SYSTEM - 3/4"C. WITH CAT 6 CABLING AS SPECIFIED.
D1 - 1"C. WITH CABLING AS SPECIFIED.
D2 - 1 1/4"C. WITH CABLING AS SPECIFIED.
D3 - 1 1/2"C. WITH CABLING AS SPECIFIED.

3/4"C. WITH AUDIO-VIDEO CABLING PER SPECIFICATIONS.

3/4"C. WITH SPEAKER CABLE FOR ONE SPEAKER ZONE.

3/4"C. WITH SPEAKER CABLE FOR TWO SPEAKER ZONES.

LOW VOLTAGE POWER-LIMITED CABLE SUSPENDED ON J-HOOKS ABOVE CEILING.

COMPUTER OUTLET WITH ONE (1)CATEGORY 6 COMPUTER CONNECTOR, ON FLUSH WALL MOUNTED OUTLET BOX, +18", UNLESS NOTED OTHERWISE. "C" INDICATES FLUSH WALL MOUNTED OUTLET BOX +6" ABOVE COUNTER SPLASH. PROVIDE 3/4" CONDUIT INTO CEILING SPACE. PROVIDE CATEGORY 6 CABLE FROM EACH CONNECTOR TO BUILDING IDF.

COMPUTER OUTLET WITH TWO (2)CATEGORY 6 COMPUTER CONNECTORS. ON FLUSH WALL MOUNTED OUTLET BOX, +18", UNLESS NOTED OTHERWISE. "C" INDICATES FLUSH WALL MOUNTED OUTLET BOX + 6" ABOVE COUNTER SPLASH. PROVIDE 3/4" CONDUIT INTO CEILING SPACE. PROVIDE CATEGORY 6 CABLE FROM EACH CONNECTOR TO BUILDING IDF.

COMPUTER/VOICE OUTLET THREE (3) CATEGORY 6 COMPUTER CONNECTORS ON FLUSH WALL MOUNTED OUTLET BOX, +18", UNLESS NOTED OTHERWISE. PROVIDE 1" CONDUIT INTO CEILING SPACE. PROVIDE CATEGORY 6 CABLE FROM EACH CONNECTOR TO BUILDING IDF.

MOTOR CONNECTION. PROVIDE FUSED SAFETY SWITCH (DISCONNECT), HORSE POWER RATED, WALL MOUNTED, +45" OR EQUIPMENT MOUNTED, +36". PROVIDE SWITCH AND FUSES SIZED PER EQUIPMENT MANUFACTURER REQUIREMENTS.

CCTV CAMERA OUTLET PROVIDE FLUSH WALL MOUNTED WEATHERPROOF GASKETED OUTLET BOX AND 3/4"C. STUB INTO NEAREST ACCESSIBLE CEILING SPACE WHERE SUCH SPACE EXISTS. PROVIDE CATEGORY 6 CABLE FROM NEAREST MDF/IDF TO OUTLET BOX WITH 12-INCHES OF SLACK CABLE COILED IN BOX WITH MODULAR CONNECTOR.

2-GANG X 2.5-INCH DEEP OUTLET BOX FOR A/V CONTROL, FLUSH WALL MOUNTED AT +45", WITH 1 1/4"C.O. STUBBED INTO ACCESSIBLE CEILING SPACE.

AUDIO VIDEO OUTLET WITH AUDIO VIDEO INPUTS IN FLUSH WALL MOUNTED OUTLET BOX AT +18", UNLESS NOTED OTHERWISE. PROVIDE 1 1/4" CONDUIT FROM THE BOX TO ACCESSIBLE CEILING SPACE.

WALL MOUNT ULTRA SHORT THROW PROJECTOR. VERIFY EXACT MOUNTING LOCATION PRIOR TO INSTALLATION.

AUDIO/VIDEO SYSTEM FLUSH IN CEILING SPEAKER (EXTRON # FF120).
VERIFY EXACT LOCATION OF SPEAKER IN ROOM WITH MANUFACTURER PRIOR TO INSTALLATION.

COMPUTER OUTLET WITH TWO (2) CAT 6A CONNECTORS ON FLUSH CEILING MOUNTED OUTLET BOX FOR WIRELESS ACCESS DEVICE. PROVIDE CAT 6A CABLE FROM EACH CONNECTOR TO DESIGNATED IDF.

LIGHTING FIXTURE, RECESS MOUNTED, WITH OUTLET BOX.

LIGHTING FIXTURE, SURFACE OR PENDANT MOUNTED ON FLUSH MOUNTED OUTLET BOX.

STRIP OR INDUSTRIAL LIGHTING FIXTURE, SURFACE, CHAIN OR PENDANT MOUNTED ON FLUSH MOUNTED OUTLET BOX.

LIGHTING FIXTURE, RECESS MOUNTED, WITH OUTLET BOX.

LIGHTING FIXTURE, SURFACE OR FLUSH MOUNTED AS INDICATED ON FIXTURE SCHEDULE, ON WALL MOUNTED OUTLET BOX, +90". STEM INDICATES WALL MOUNTED OUTLET BOX, TYPICAL.

FIXTURE SHADED INDICATES OUTLET ON EMERGENCY LIGHT LIGHTING CIRCUIT.

POST TOP LIGHTING STANDARD, POLE MOUNTED LUMINAIRE AND POLE SUPPORT BASE.

LIGHTING FIXTURE RECESSED MOUNTED WITH OUTLET BOX AND REMOTE MOUNTED JUNCTION BOX CONCEALED ABOVE ACCESSIBLE CEILING. PROVIDE FLEXIBLE CONDUIT CONNECTION 6 FT. MAXIMUM LENGTH, 1/2" DIAMETER MINIMUM, FROM JUNCTION BOX TO FIXTURE OUTLET. PROVIDE CONDUCTORS IN CONDUIT, QUANTITY AS REQUIRED FOR INDICATED CIRCUITS AND SWITCHING CONTROLS, #12 (AWG) MINIMUM.

LIGHTING STANDARD WITH SINGLE ARM MOUNTED LUMINAIRE AND POLE SUPPORT BASE.

LIGHTING STANDARD WITH TWIN ARM MOUNTED LUMINAIRES AND POLE SUPPORT BASE.

FIXTURE SCHEDULE DESIGNATION: "2" INDICATES FIXTURE TYPE, "100" INDICATES FIXTURE TOTAL WATTAGE.

SINGLE POLE TOGGLE SWITCH, ON FLUSH WALL MOUNTED OUTLET BOX, +45". INSTALL MULTIPLE SWITCHES UNDER COMMON COVER PLATE. SUBSCRIPT OR SUPERSCRIPT AT SWITCH SYMBOL INDICATES THE FOLLOWING:
2 - DOUBLE POLE 4 - FOUR WAY M - MANUAL MOTOR STARTERS
3 - THREE WAY P - PILOT LIGHT K - KEY OPERATED
R - SPDT MOMENTARY CONTACT RELAY SWITCH V - VAPOR PROOF
a,b,c,d, ETC. - MULTIPLE SWITCHES WITH IDENTIFICATION OF OUTLET CONTROLLED.

COMBINATION ON/OFF/DIMMER SWITCH FOR LOW VOLTAGE CONTROL OF LIGHTING, ON FLUSH WALL MOUNTED OUTLET BOX, +45".

LINE VOLTAGE LIGHTING CONTROL OCCUPANCY MOTION SENSOR ON FLUSH CEILING MOUNTED OUTLET BOX.

LIGHTING CONTROL SYSTEM LOW VOLTAGE OCCUPANCY MOTION SENSOR ON FLUSH CEILING MOUNTED OUTLET BOX.

LIGHTING CONTROL SYSTEM LOW VOLTAGE OCCUPANCY MOTION SENSOR ON SURFACE CEILING MOUNTED OUTLET BOX.

LIGHTING SENSOR, CEILING MOUNTED, FOR LOW VOLTAGE DAYLIGHTING CONTROL.

LIGHTING SENSOR ON SURFACE CEILING MOUNTED, FOR LOW VOLTAGE DAYLIGHTING CONTROL.

ROOM LIGHTING CONTROLLER IN ACCESSIBLE CEILING SPACE OR AS NOTED.

RECEPTACLE CONTROLLER, OPERATED BY LIGHTING OCCUPANCY SENSOR. SEE LIGHTING PLANS AND SHEET ELC-1 FOR ADDITIONAL INFORMATION.

FLUSH WALL MOUNTED 2-GANG OUTLET BOX AT +45" WITH 3/4" C. STUBBED TO CEILING SPACE AND CONTAINING TEACHER'S SWITCH BANK FOR LOW VOLTAGE CONTROL OF ROOM LIGHTS.

FLUSH WALL MOUNTED 2-GANG OUTLET BOX AT +45" WITH 3/4" C. STUBBED TO CEILING SPACE AND CONTAINING SWITCH FOR LOW VOLTAGE CONTROL OF ROOM LIGHTS.

DUPLEX CONVENIENCE RECEPTACLE VERTICAL ON FLUSH WALL MOUNTED OUTLET BOX AT +18" SPLIT-WIRED WITH ONE-HALF CONTROLLED BY OCCUPANCY SENSOR AND LABELED.

DUPLEX CONVENIENCE RECEPTACLE VERTICAL ON FLUSH WALL MOUNTED OUTLET BOX, +18". STEM INDICATES WALL MOUNTED OUTLET BOX, TYPICAL.
"C" INDICATES OUTLET MOUNTED +6" ABOVE COUNTER BACK SPLASH.

DOUBLE DUPLEX (FOUR-PLEX) CONVENIENCE RECEPTACLE ON ONE FLUSH WALL MOUNTED OUTLET BOX +18".

SINGLE RECEPTACLE, NEMA CONFIGURATION PER EQUIPMENT MANUFACTURER REQUIREMENTS, ON FLUSH WALL MOUNTED OUTLET BOX, +18".

DUPLEX CONVENIENCE RECEPTACLE HORIZONTAL ON FLUSH WALL MOUNTED OUTLET BOX, +6" ABOVE COUNTER SPLASH.

DUPLEX CONVENIENCE RECEPTACLE WITH INTERNAL GROUND FAULT INTERRUPTER, HORIZONTAL ON FLUSH WALL MOUNTED OUTLET BOX, +6" ABOVE COUNTER SPLASH.

DUPLEX CONVENIENCE RECEPTACLE WITH INTERNAL GROUND FAULT INTERRUPTER, VERTICAL ON FLUSH WALL MOUNTED OUTLET BOX, +18".
"C" INDICATES OUTLET MOUNTED +6" ABOVE COUNTER BACK SPLASH.

DUPLEX CONVENIENCE RECEPTACLE, WITH INTERNAL GROUND FAULT INTERRUPTER, IN FLUSH WALL MOUNTED ENCLOSURE WITH HINGED DOOR, LOCK AND KEY, +18".

DUPLEX CONVENIENCE RECEPTACLE, WITH INTERNAL GROUND FAULT INTERRUPTER, ON FLUSH WALL MOUNTED OUTLET BOX WITH METALLIC WEATHERPROOF LOCKABLE "IN-USE" DOOR COVER, +18".

DUPLEX CONVENIENCE RECEPTACLE, IN FLUSH FLOOR OUTLET BOX, UNLESS NOTED OTHERWISE.

JUNCTION BOX, FLUSH WALL MOUNTED, +18".

JUNCTION BOX CONCEALED ABOVE ACCESSIBLE CEILING.

INDICATES CONNECTION TO EQUIPMENT AS REQUIRED, TYPICAL.

WALL MOUNTED PANELBOARD, ADJACENT LINE INDICATES PANEL FRONT. ADJACENT BALLOON INDICATES PANEL DESIGNATION "A", SEE DRAWING E-1 FOR PANEL SCHEDULE.

TERMINAL CABINET OR EQUIPMENT CABINET. ADJACENT LINE INDICATES CABINET FRONT.

FLOOR STANDING SWITCHGEAR ADJACENT BALLOON INDICATES EQUIPMENT DESIGNATION "DBA", SEE DRAWING E-1 FOR SINGLE LINE DIAGRAM AND/OR SCHEDULE.

CIRCUIT BREAKER

SCHOOL EQUIPMENT ANCHORAGE NOTES

MEP COMPONENT ANCHORAGE NOTE

PIPING,DUCTWORK, AND ELECTRICAL DISTRIBUTION SYSTEM SHALL BE ANCHORED OR BRACED TO MEET THE FORCE AND DISPLACEMENT REQUIREMENTS PRESCRIBED IN THE 2022 CBC SECTIONS 1617A.1.18 THROUGH 1617A.1.26 AND ASCE 7-16 CHAPTER 13, 26 AND 30.

1. ALL PERMANENT EQUIPMENT AND COMPONENTS.
2. TEMPORARY, MOVABLE OR MOBILE EQUIPMENT THAT IS PERMANENTLY ATTACHED (E.G. HARD WIRED) TO THE BUILDING UTILITY SERVICES SUCH AS ELECTRICITY, GAS OR WATER. "PERMANENTLY ATTACHED" SHALL INCLUDE ALL ELECTRICAL CONNECTIONS EXCEPT PLUGS FOR 110/220 VOLT RECEPTACLES HAVING A FLEXIBLE CABLE.
3. TEMPORARY, MOVABLE OR MOBILE EQUIPMENT WHICH IS HEAVIER THAN 400 POUNDS OR HAS A CENTER OF MASS LOCATED 4 FEET OR MORE ABOVE THE ADJACENT FLOOR OR ROOF LEVEL THAT DIRECTLY SUPPORT THE COMPONENT ARE REQUIRED TO BE RESTRAINED IN A MANNER APPROVED BY DSA.

THE FOLLOWING MECHANICAL AND ELECTRICAL COMPONENTS SHALL BE POSITIVELY ATTACHED TO THE STRUCTURE BUT NEED NOT DEMONSTRATE DESIGN COMPLIANCE WITH REFERENCES NOTED ABOVE. THESE COMPONENTS SHALL HAVE FLEXIBLE CONNECTIONS PROVIDED BETWEEN THE COMPONENT AND ASSOCIATED DUCTWORK, PIPING, AND CONDUIT. FLEXIBLE CONNECTIONS MUST ALLOW MOVEMENT IN BOTH TRANSVERSE AND LONGITUDINAL DIRECTIONS:

A. COMPONENTS WEIGHING LESS THAN 400 POUNDS AND HAVE A CENTER OF MASS LOCATED 4 FEET OR LESS ABOVE THE ADJACENT FLOOR OR ROOF LEVEL THAT DIRECTLY SUPPORT THE COMPONENT.
B. COMPONENTS WEIGHING LESS THAN 20 POUNDS, OR IN THE CASE OF DISTRIBUTED SYSTEMS, LESS THAN 5 POUNDS PER FOOT, WHICH ARE SUSPENDED FROM A ROOF OR FLOOR OR HUNG FROM A WALL.

THE ANCHORAGE OF ALL MECHANICAL, ELECTRICAL AND PLUMBING COMPONENTS SHALL BE SUBJECT TO THE APPROVAL OF THE DESIGN PROFESSIONAL IN GENERAL RESPONSIBLE CHARGE OR STRUCTURAL ENGINEER DELEGATED RESPONSIBILITY AND ACCEPTANCE BY DSA. THE PROJECT INSPECTOR WILL VERIFY THAT ALL COMPONENTS AND EQUIPMENT HAVE BEEN ANCHORED IN ACCORDANCE WITH ABOVE REQUIREMENTS.

APPLICABLE CODE :2022 CBC

PIPING, DUCTWORK, AND ELECTRICAL DISTRIBUTION SYSTEM BRACING NOTE

PIPING, DUCTWORK, AND ELECTRICAL DISTRIBUTION SYSTEMS SHALL BE BRACED TO COMPLY WITH THE FORCES AND DISPLACEMENTS PRESCRIBED IN ASCE 7-16 SECTION 13.3 AS DEFINED IN ASCE 7-16 SECTIONS 13.6.5, 13.6.6, 13.6.7, 13.6.8; AND 2022 CBC, SECTIONS 1617A.1.24, 1617A.1.25 AND 1617A.1.26.

THE METHOD OF SHOWING BRACING AND ATTACHMENTS TO THE STRUCTURE FOR THE IDENTIFIED DISTRIBUTION SYSTEM ARE AS NOTED BELOW. WHEN BRACING AND ATTACHMENTS ARE BASED ON A PREAPPROVED INSTALLATION GUIDE (e.g., HCAI OPM FOR 2013 CBC OR LATER), COPIES OF THE BRACING SYSTEM INSTALLATION GUIDE OR MANUAL SHALL BE AVAILABLE ON THE JOBSITE PRIOR TO THE START OF AND DURING THE HANGING AND BRACING OF THE DISTRIBUTION SYSTEMS. THE STRUCTURAL ENGINEER OF RECORD SHALL VERIFY THE ADEQUACY OF THE STRUCTURE TO SUPPORT THE HANGER AND BRACE LOADS.

MECHANICAL PIPING (MP), MECHANICAL DUCTS (MD), PLUMBING PIPING (PP), ELECTRICAL DISTRIBUTION SYSTEMS (E):

MP☐ MD☐ PP☐ E ☒ - OPTION 1: DETAILED ON THE APPROVED DRAWINGS WITH PROJECT SPECIFIC NOTES AND DETAILS.

MP☐ MD☐ PP☐ E ☐ - OPTION 2: SHALL COMPLY WITH HCAI (OSHPD) PRE-APPROVAL (OPM#) #_____AS INCLUDED IN THESE DRAWINGS WITH PROJECT SPECIFIC NOTES AND DETAILS.

DSA STAMP

STUDIO W ARCHITECTS

Studio W Architects
1930 H Street
Sacramento, California 95811
[T] 916.254.5600
www.StudioW-Architects.com

FBA Engineering
Consulting Electrical Engineers
150 Paularino Avenue Suite A120
Costa Mesa, CA 92626
949.852.9995 • 949.852.1657 (fax)
fbaeng.com
FBA Job Number: 1022.036

ARCHITECT	ENGINEER
LICENSED ARCHITECT BRIAN P WHITMORE No. C 30345 Ren. 9/30/25 STATE OF CALIFORNIA	REGISTERED PROFESSIONAL ENGINEER STEPHEN M. DUDEK No. E 10372 Exp. 09-30-24 ELECTRICAL STATE OF CALIFORNIA
DATE SIGNED: 06/24/2024	DATE SIGNED: 06/24/2024

GENERAL NOTES

1. This sheet is part of a set and is not to be used alone.
2. This sheet is not to be used for construction unless the architect's stamp and signature appear on the drawings and the status box indicated drawings have been released for construction.
3. These plans and prints thereof, as instruments of service, are owned by the architect and are for use on this project only. Reproduction and/or distribution without the prior written consent of the architect is forbidden.
4. Copyright Studio W Associates, Inc. 2022.

REVISION HISTORY

NO.	REMARKS	DATE

DRAWING STATUS

DATE
- ○ DSA PLAN CHECK
- ● DSA BACK CHECK 06/24/2024
- ○ BIDDING
- ○ CONSTRUCTION

KEY PLAN

BUENA PARK USD
6885 ORANGETHORPE AVE
BUENA PARK, CA 90620

SCHEMATIC DESIGN

CARL E. GILBERT ELEMENTARY SCHOOL
TK/PK CLASSROOMS & EARLY LEARNING BUILDING
7255 8TH STREET, BUENA PARK, CA 90621

SYMBOL LIST, NOTES AND SHEET INDEX

Date 06/24/2024	Project Number 23076
Application Number XX-XXXXXX	Drawing Number E0.1
Drawn BM	Checked SZ

FBA Engineering / Plot Date: 6/24/2024 11:52 AM / Plotted by: Garren Rigonan / Drawing Location: I:\1022\036\ED\1_1022.028_SYMBOL LIST.dwg

CARL E. GILBERT ELEMENTARY SCHOOL — PROJECT NO. 1022.038

VOLTS 120/208, PHASE 3PH, 4W, MTG SURFACE — PANELBOARD C — LOCATION ADMIN — MAIN 100A-3P, BUS 225A

CKT	A	B	C	TYPE	BKR	OUTLET QUAN	DESCRIPTION
1	360	-----	-----	R	20/1	2	RECEPTACLE
3	-----	360	-----	R	20/1	2	RECEPTACLE
5	-----	-----	540	R	20/1	3	RECEPTACLE
7	360	-----	-----	R	20/1	2	RECEPTACLE
9	-----	180	-----	R	20/1	1	RECEPTACLE
11	-----	-----	20	L	20/1	1	LIGHTS
13	750	-----	-----	L	20/1	4	LIGHTS
15	-----	500	-----	G	20/1	1	EIF
17	-----	-----	500	G	20/1	1	EIF
19	-----	-----	-----		20/1		SPARE
21	-----	-----	-----		20/1		SPARE
23	-----	-----	-----		20/1		SPARE
25	-----	-----	-----		20/1		SPARE
27	-----	-----	-----		20/1		SPARE
29	-----	-----			20/1		SPARE
A 2	2230	-----	-----	R	20/3	1	HEAT PUMP
B 4	-----	2230	-----	R	--	-	---
C 6	-----	-----	2230	R	--	-	---
A 8	1000	-----	-----	R	20/2	1	FAN COIL UNIT
B 10	-----	1000	-----	R	--	-	---
C 12	-----	-----	200	R	20/1	1	INTRUSION PANEL
A 14	-----	-----			20/1		PROVISION
B 16	-----	-----			20/1		PROVISION
C 18	-----	-----			20/1		PROVISION
A 20	-----	-----			20/1		PROVISION
B 22	-----	-----			20/1		PROVISION
C 24	-----	-----			20/1		PROVISION
A 26	-----	-----			20/1		PROVISION
B 28	-----	-----			20/1		PROVISION
C 30	-----	-----			20/1		PROVISION

CONNECTED: VA 4700 / 4270 / 3490 = TOTAL 12460; AMPS 39 / 36 / 29 = TOTAL 35

L.C.L. @ 125% = 963; RECEPT. ( ) 10 kVA @ 50% = 10345; KITCHEN @ 65% = ; OTHER LOAD @ 100% = 1000; TOTAL VA = 12308; TOTAL AMPS = 34

LOAD TYPE: G - GENERAL (100%); L - L.C.L. (125%); R - RECEPTACLE (50%) (10 kVA @ 100%); K - KITCHEN (65%); M - MOTOR (100%); M1 - MOTOR (125%); X - X-RAY (100%); X1 - X-RAY (50%)

CARL E. GILBERT ELEMENTARY SCHOOL — PROJECT NO. 1022.038

VOLTS 120/208, PHASE 3PH, 4W, MTG SURFACE — PANELBOARD A — LOCATION ELECTRICAL ROOM — MAIN MLO, BUS 225A

CKT	A	B	C	TYPE	BKR	OUTLET QUAN	DESCRIPTION
1	566	-----	-----	L	20/1	21	ROOM 110 LIGHTS
3	-----	566	-----	L	20/1	21	ROOM 111 LIGHTS
5	-----	-----	566	L	20/1	21	ROOM 106 LIGHTS
7	566	-----	-----	L	20/1	21	ROOM 105 LIGHTS
9	-----	566	-----	L	20/1	21	ROOM 104 LIGHTS
11	-----	-----	566	L	20/1	21	ROOM 103 LIGHTS
13	500	-----	-----	L	20/1	1	INVERTER
15	-----	-----			20/1		PROVISION
17	-----	-----			20/1		PROVISION
19	-----	-----			20/1		PROVISION
21	-----	-----			20/1		PROVISION
23	-----	-----			20/1		PROVISION
25	-----	-----			20/1		PROVISION
27	-----	-----			20/1		PROVISION
29	-----	-----			20/1		PROVISION
31	-----	-----			20/1		PROVISION
33	-----	-----			20/1		PROVISION
35	-----	-----			20/1		PROVISION
37	-----	-----			20/1		PROVISION
39	-----	-----			20/1		PROVISION
41	-----	-----			20/1		PROVISION
A 2	140	-----	-----	L	20/1	6	UTILITY ROOM LIGHTS
B 4	-----	93	-----	L	20/1	5	EXTERIOR LIGHTS
C 6	-----	-----	93	L	20/1	5	EXTERIOR LIGHTS
A 8	566	-----	-----	L	20/1	21	ROOM 102 LIGHTS
B 10	-----	566	-----	L	20/1	21	ROOM 101 LIGHTS
C 12	-----	-----	566	L	20/1	21	ROOM 100 LIGHTS
A 14	126	-----	-----	L	20/1	21	EXTERIOR LIGHTS
B 16	-----	126	-----	L	20/1	21	EXTERIOR LIGHTS
C 18	-----	-----	756	L	20/1	21	ROOM 109 LIGHTS
A 20	-----	-----	-----	L	20/1	1	FLOODLIGHTS
B 22	-----	-----	-----	L	20/1	1	FLOODLIGHTS
C 24	-----	-----	450	L	20/1	5	POST TOP LIGHTS
A 26	450	-----	-----	L	20/1	5	POST TOP LIGHTS
B 28	-----	-----			20/1		SPARE
C 30	-----	-----			20/1		SPARE
A 32	-----	-----			20/1		SPARE
B 34	-----	-----			20/1		SPARE
C 36	-----	-----			20/1		SPARE
A 38	-----	-----			20/1		SPARE
B 40	-----	-----			20/1		SPARE
C 42	-----	-----			20/1		SPARE

CONNECTED: VA 2914 / 1917 / 2997 = TOTAL 7828; AMPS 24 / 16 / 25 = TOTAL 22

L.C.L. @ 125% = 9785; RECEPT. ( ) 10 kVA @ 50% = ; KITCHEN @ 65% = ; OTHER LOAD @ 100% = ; TOTAL VA = 9785; TOTAL AMPS = 27

LOAD TYPE: G - GENERAL (100%); L - L.C.L. (125%); R - RECEPTACLE (50%) (10 kVA @ 100%); K - KITCHEN (65%); M - MOTOR (100%); M1 - MOTOR (125%); X - X-RAY (100%); X1 - X-RAY (50%)

CARL E. GILBERT ELEMENTARY SCHOOL — PROJECT NO. 1022.038

VOLTS 120/208, PHASE 3PH, 4W, MTG SURFACE — PANELBOARD B — LOCATION ELECTRICAL RM — MAIN MLO, BUS 225A

CKT	A	B	C	TYPE	BKR	OUTLET QUAN	DESCRIPTION
1	720	-----	-----	R	20/1	4	ROOM 106 RECEPTACLES
3	-----	720	-----	R	20/1	4	ROOM 105 RECEPTACLES
5	-----	-----	720	R	20/1	4	ROOM 106 RECEPTICLES
7	720	-----	-----	R	20/1	4	ROOM 106 RECEPTACLES
9	-----	720	-----	R	20/1	4	ROOM 104 RECEPTACLES
11	-----	-----	720	R	20/1	4	ROOM 103 RECEPTICLES
13	720	-----	-----	R	20/1	4	ROOM 102 RECEPTACLES
15	-----	720	-----	R	20/1	4	ROOM 102 RECEPTICLES
17	-----	-----	720	R	20/1	4	ROOM 100 RECEPTACLES
19	720	-----	-----	R	20/1	4	ROOM 100 RECEPTICLES
21	-----	720	-----	R	20/1	4	ROOM 110 RECEPTICLES
23	-----	-----	720	R	20/1	4	ROOM 110 RECEPTACLES
25	720	-----	-----	R	20/1	4	ROOM 110 RECEPTACLES
27	-----	720	-----	R	20/1	4	ROOM 111 RECEPTICLES
29	-----	-----	720	R	20/1	4	ROOM 109 RECEPTACLES
31	900	-----	-----	R	20/1	5	ROOM 109 RECEPTICLES
33	-----	1800	-----	G	30/1	1	WATER HEATER
35	-----	-----	1800	G	--	-	---
37	1000	-----	-----	G	20/1	1	EIF RACK
39	-----	1000	-----	G	20/1	1	EIF RACK
41	-----	-----			20/1		SPARE
43		-----	-----		20/1		SPARE
45	-----		-----		20/1		SPARE
47	-----	-----			20/1		SPARE
49		-----	-----		20/1		SPARE
51	-----		-----		20/1		SPARE
53	-----	-----			20/1		SPARE
A 2	720	-----	-----	R	20/1	4	ROOM 105 RECEPTACLES
B 4	-----	720	-----	R	20/1	4	ROOM 105 RECEPTICLES
C 6	-----	-----	720	R	20/1	4	ROOM 104 RECEPTACLES
A 8	720	-----	-----	R	20/1	4	ROOM 104 RECEPTACLES
B 10	-----	720	-----	R	20/1	4	ROOM 103 RECEPTICLES
C 12	-----	-----	720	R	20/1	4	ROOM 103 RECEPTACLES
A 14	720	-----	-----	R	20/1	4	ROOM 101 RECEPTACLES
B 16	-----	720	-----	R	20/1	4	ROOM 101 RECEPTICLES
C 18	-----	-----	720	R	20/1	4	ROOM 101 RECEPTACLES
A 20	720	-----	-----	R	20/1	4	ROOM 100 RECEPTACLES
B 22	-----	720	-----	R	20/1	4	ROOM 111 RECEPTICLES
C 24	-----	-----	720	R	20/1	3	ROOM 111 RECEPTACLES
A 26	900	-----	-----	R	20/1	5	UTILITY ROOM LIGHTS
B 28	-----	500	-----	G	20/1	1	FIRE ALARM PANEL
C 30	-----	-----	500	G	20/1	1	INTRUSION
A 32	1800	-----	-----		30/1	4	FLOOR CLEAN RECEPT.
B 34	-----	1800	-----		30/1	3	FLOOR CLEAN RECEPT.
C 36	-----	-----	1800		30/1	2	FLOOR CLEAN RECEPT.
A 38		-----	-----		20/1		PROVISION
B 40	-----		-----		20/1		PROVISION
C 42	-----	-----			20/1		PROVISION
A 44		-----	-----		20/1		PROVISION
B 46	-----		-----		20/1		PROVISION
C 48	-----	-----			20/1		PROVISION
A 50		-----	-----		20/1		PROVISION
B 52	-----		-----		20/1		PROVISION
C 54	-----	-----			20/1		PROVISION

CONNECTED: VA 11080 / 11580 / 10580 = TOTAL 33240; AMPS 92 / 97 / 88 = TOTAL 92

L.C.L. @ 125% = ; RECEPT. ( ) 10 kVA @ 50% = 15620; KITCHEN @ 65% = ; OTHER LOAD @ 100% = 12000; TOTAL VA = 27620; TOTAL AMPS = 77

LOAD TYPE: G - GENERAL (100%); L - L.C.L. (125%); R - RECEPTACLE (50%) (10 kVA @ 100%); K - KITCHEN (65%); M - MOTOR (100%); M1 - MOTOR (125%); X - X-RAY (100%); X1 - X-RAY (50%)

LOAD SUMMARY

LIGHTING	10KW
HVAC	140KW
RECEPTACLES	25KW
WATER HEATER	3KW
PUMPS	25KW
EV CHARGERS	10KW
TOTAL	303KW

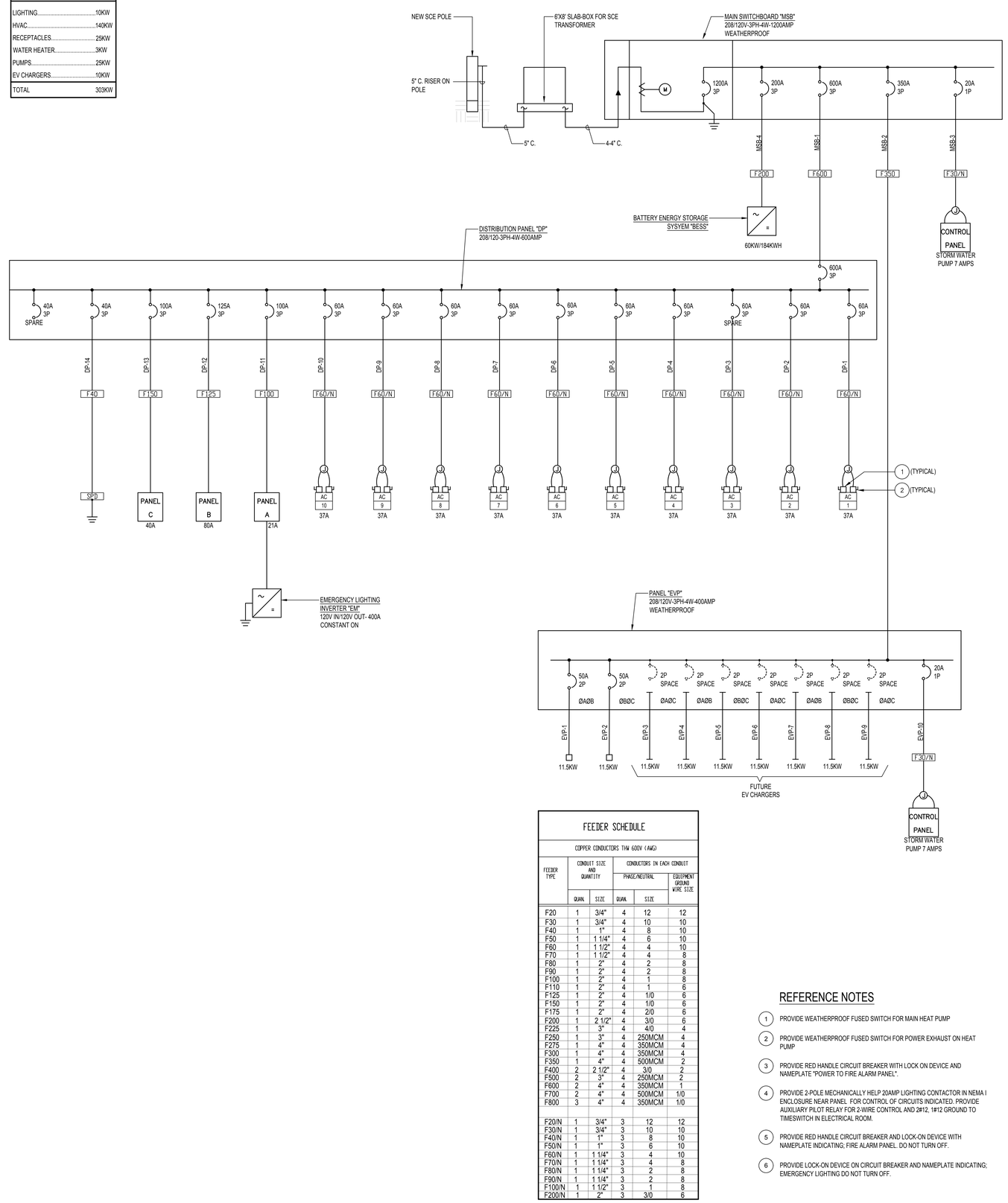

FEEDER SCHEDULE

COPPER CONDUCTORS THW 600V (AWG)

FEEDER TYPE	CONDUIT SIZE AND QUANTITY		CONDUCTORS IN EACH CONDUIT		
			PHASE/NEUTRAL		EQUIPMENT GROUND WIRE SIZE
	QUAN.	SIZE	QUAN.	SIZE	
F20	1	3/4"	4	12	12
F30	1	3/4"	4	10	10
F40	1	1"	4	8	10
F50	1	1 1/4"	4	6	10
F60	1	1 1/2"	4	4	10
F70	1	1 1/2"	4	4	8
F80	1	2"	4	2	8
F90	1	2"	4	2	8
F100	1	2"	4	1	8
F110	1	2"	4	1	6
F125	1	2"	4	1/0	6
F150	1	2"	4	1/0	6
F175	1	2"	4	2/0	6
F200	1	2 1/2"	4	3/0	6
F225	1	3"	4	4/0	4
F250	1	3"	4	250MCM	4
F275	1	4"	4	350MCM	4
F300	1	4"	4	350MCM	4
F350	1	4"	4	500MCM	2
F400	2	2 1/2"	4	3/0	2
F500	2	3"	4	250MCM	2
F600	2	4"	4	350MCM	1
F700	2	4"	4	500MCM	1/0
F800	3	4"	4	350MCM	1/0
F20/N	1	3/4"	3	12	12
F30/N	1	3/4"	3	10	10
F40/N	1	1"	3	8	10
F50/N	1	1"	3	6	10
F60/N	1	1 1/4"	3	4	10
F70/N	1	1 1/4"	3	4	8
F80/N	1	1 1/4"	3	2	8
F90/N	1	1 1/4"	3	2	8
F100/N	1	1 1/2"	3	1	8
F200/N	1	2"	3	3/0	6

REFERENCE NOTES

1. PROVIDE WEATHERPROOF FUSED SWITCH FOR MAIN HEAT PUMP
2. PROVIDE WEATHERPROOF FUSED SWITCH FOR POWER EXHAUST ON HEAT PUMP
3. PROVIDE RED HANDLE CIRCUIT BREAKER WITH LOCK ON DEVICE AND NAMEPLATE "POWER TO FIRE ALARM PANEL".
4. PROVIDE 2-POLE MECHANICALLY HELP 20AMP LIGHTING CONTACTOR IN NEMA I ENCLOSURE NEAR PANEL FOR CONTROL OF CIRCUITS INDICATED. PROVIDE AUXILIARY PILOT RELAY FOR 2-WIRE CONTROL AND 2#12, 1#12 GROUND TO TIMESWITCH IN ELECTRICAL ROOM.
5. PROVIDE RED HANDLE CIRCUIT BREAKER AND LOCK-ON DEVICE WITH NAMEPLATE INDICATING; FIRE ALARM PANEL. DO NOT TURN OFF.
6. PROVIDE LOCK-ON DEVICE ON CIRCUIT BREAKER AND NAMEPLATE INDICATING; EMERGENCY LIGHTING DO NOT TURN OFF.

DSA STAMP

STUDIO W ARCHITECTS

Studio W Architects
1930 H Street
Sacramento, California 95811
[T] 916.254.5600
www.StudioW-Architects.com

FBA Engineering
Consulting Electrical Engineers
150 Paularino Avenue Suite A120
Costa Mesa, CA 92626
949.852.9995 • 949.852.1657 (fax)
fbaeng.com
FBA Job Number: 1022.038

ARCHITECT: LICENSED ARCHITECT, BRIAN P WHITMORE, No. C 30345, Ren. 9/30/25, STATE OF CALIFORNIA — DATE SIGNED: 06/24/2024

ENGINEER: REGISTERED PROFESSIONAL ENGINEER, STEPHEN N. ZAJICK, No. E 10372, Exp. 09-30-24, ELECTRICAL — DATE SIGNED: 06/24/2024

GENERAL NOTES
1. This sheet is part of a set and is not to be used alone.
2. This sheet is not to be used for construction unless the architect's stamp and signature appear on the drawings and the status box indicated drawings have been released for construction.
3. These plans and prints thereof, as instruments of service, are owned by the architect and are for use on this project only. Reproduction and/or distribution without the prior written consent of the architect is forbidden.
4. Copyright Studio W Associates, Inc. 2022.

REVISION HISTORY

NO.	REMARKS	DATE

DRAWING STATUS — DATE
- ○ DSA PLAN CHECK
- ● DSA BACK CHECK 06/24/2024
- ○ BIDDING
- ○ CONSTRUCTION

KEY PLAN

BUENA PARK USD
6885 ORANGETHORPE AVE
BUENA PARK, CA 90620

SCHEMATIC DESIGN

CARL E. GILBERT ELEMENTARY SCHOOL
TK/PK CLASSROOMS & EARLY LEARNING BUILDING
7255 8TH STREET, BUENA PARK, CA 90621

SINGLE LINE DIAGRAM

Date 06/24/2024 | Project Number 23076
Application Number XX-XXXXXX | Drawing Number E0.2
Drawn BM | Checked SZ

FBA Engineering / Plot Date: 6/24/2024 11:52 AM / Plotted by: Garren Rignan / Drawing Location: I:\1022\038\E\0.2_1022.038_SINGLE LINE DIAGRAM.dwg

FIRE ALARM SYSTEM EQUIPMENT SCHEDULE

EDWARDS EST3

SYMBOL	DESCRIPTION	MANUFACTURER MODEL NO.#	MNT. HEIGHT REQ.	BACKBOX REQ.	CSFM NO.#	NOTES
	FIRE ALARM CONTROL PANEL	EDWARDS EST4 SERIES	-	-	7170-1657:0508	
P	ADDRESSABLE PULL STATION	EDWARDS SIGA-270	FIELD VERIFY LOC. +48" TO TOP OF BOX	4S DEEP BOX W/EXT. RING	7170-1657:0129	
	FA ADDRESSABLE PHOTOELECTRIC SMOKE DETECTOR	EDWARDS SIGA-PD	FLUSH ON CEILING	4S BOX W/3-0 GANG RING	7272-1657:0331	
	FA 135° DEGREE ADDRESSABLE HEAT DETECTOR (AREA COVERAGE)	EDWARDS SIGA-HFD	ATTIC SPACE	4S BOX W/3-0 GANG RING	7270-1657:0333	
WP	FA EXTERIOR WALL SPEAKER (WEATHERRPOOF)	EDWARDS WG4RN-S	WALL MNT. +90" A.F.G. TO TOP OF BOX	WP BACKBOX	7320-1657:0289	
#cd	CEILING STROBE AND SPEAKER (#cd DENOTES CANDELA RATING)	EDWARDS GCSVRF	CEILING MOUNTED	4S BOX	7320-1657:0516	

FIRE ALARM SYSTEM SEQUENCE OF OPERATIONS

SYSTEM OUTPUTS \ SYSTEM INPUTS		AREA SMOKE DET.	AREA OR ATTIC SPACE HEAT DET.	FACP-RPS AMP PANEL 120VAC PWR LOSS	FACP-RPS-AMP PANEL LOW BATT OR BATT LOSS / BATT FAIL	GROUND FAULT	OPEN CKT.	NAC CKT. SHORT	NOTES	
A	ANNUNCIATE ALARM CONDITION AND ACTIVATE ALARM SIGNAL AT MAIN FACP/FAVE AND REMOTE ANNUNCIATOR	X	X							A
B	ANNUNCIATE SUPERVISORY CONDITION AT FIRE ALARM CONTROL PANEL AND REMOTE ANNUNCIATOR									B
C	ANNUNCIATE TROUBLE CONDITION AND SOUND BUZZER AT FACP/FAVE AND REMOTE ANNUNCIATOR	WIRING FAULT	WIRING FAULT	X	X	X	X	X	[1]	C
D	ACTIVATE ALL NOTIFICATION AUDIBLE/VISUALS THROUGHOUT THE FACILITY/CAMPUS ON ALARM	X	X						(1)	D
E	TRANSMIT ALARM, TROUBLE OR SUPERVISORY SIGNALS TO 24HR CENTRAL MONITORING STATION	X	X	X	X	X	X	X		E

NOTES:
[1] INDICATE TROUBLE ON WIRING FAULT OR DEVICE AS REQUIRED.
[2] SHUTDOWN ONLY AIR HANDLER EQUIPMENT IN THE BUILDING OR AREA WHERE ALARM CONDITION OCCURS.

*** FIRE ALARM SYSTEM SHALL TRANSMIT THE ALARM, SUPERVISORY AND TROUBLE SIGNALS THROUGH THE TELEPHONE LINES TO AN APPROVED MONITOR COMPANY IN ACCORDANCE WITH NFPA 72. THE MONITOR COMPANY SHALL BE LISTED AS EITHER UUFX (CENTRAL STATION) OR UUUS (REMOTE & PROPRIETARY) BY THE UNDERWRITERS LABORATORY INC. ***

FIRE ALARM SYSTEM CALCULATIONS

FACP BATTERY BACKUP CALCULATION

		STAND-BY	ALARM
	FACP PANEL CURRENT LOAD =	0.1220	2.2900
	SUB-TOTAL-A	0.1220	2.2900
QTY	DEVICE	STAND-BY	ALARM
59	SMOKE DETECTOR	0.0021	0.1180
38	HEAT DETECTOR	0.0013	0.0760
1	PULL STATION	0.0003	0.0040
	SUB-TOTAL-B	0.0036	0.1980
	SUB-TOTAL-A	0.1220	2.2900
	+ SUB-TOTAL-B	+ 0.0036	+ 0.1980
	TOTAL LOAD =	0.1256	2.4880

TOTAL STAND-BY LOAD X 24 HOURS	=	0.126	X	24	=	3.015 A-HR
TOTAL ALARM CURRENT X 15 MINUTES	=	2.488	X	0.250	=	0.622 A-HR
TOTAL ADDITIONAL MINIMUM AMP HOURS OF BATTERIES =						3.637 A-HR
25% ADDITIONAL LOAD TO MINIMUM AMP HOURS OF BATTERIES					=	4.547 A-HR

NOTES:
PROVIDE BATTERY RATED MINIMUM 7 AMP-HOURS

EDWARDS EST3 BPS10A NAC EXPANDER PANEL

NAC PANEL EST4			STAND BY CURRENT (AMPS)	ALARM CURRENT (AMPS)	
		MAIN CIRCUIT BRD	0.0750	0.0750	
		POWER SUPV. RELAY	0.0150	0.0150	
	NAC CKT	LOCATION		CKT DRAW	VDROP%
NAC / OUTPUT #1 -	V1	BLDG KB1 & KB2	0.0000	0.2800	3.42
NAC / OUTPUT #2 -	V2	BLDG KB2	0.0000	0.2450	2.99
NAC / OUTPUT #3 -	V3	BLDG KB1	0.0000	0.1750	2.14
NAC / OUTPUT #4 -	V4	BLDG KA	0.0000	0.0350	0.43
		TOTAL CURRENT DRAW=	0.0900	0.8250	

TOTAL STAND-BY CURRENT X 24 HOURS	0.0900	X	24	=	2.160 A-HR	
TOTAL ALARM CURRENT X 15 MINUTES	0.8250	X	0.250	=	0.206 A-HR	
TOTAL MINIMUM AMP HOURS OF BATTERIES	=				2.366 A-HR	
ADDITIONAL 25% DERATING SAFETY FACTOR =					2.9570 A-HR	
MINIMUM SIZE BATTERY REQUIRED =					10.0 A-HR	

NOTES:
1. BATTERY CALCULATION BASED ON 24 HOURS OF STAND BY AND 15 MINS. OF ALARM TIME
2. PROVIDE MINIMUM OF (2) 12VOLT-10 AH BATTERIES FOR SECONDARY BACKUP POWER.

VOLTAGE DROP FORMULA

$$VDROP = \frac{\text{DISTANCE X TOTAL CURR. X 21.6}}{\text{CIRCULAR MILS}}$$

$$VDROP\ \% = \frac{\text{VOLTAGE DROP X 100}}{\text{NAC CKT = 21.5 SPEAKER CKT=70}}$$

		CIRCUIT	PANEL	CIRCUIT	PANEL	CIRCUIT	PANEL	CIRCUIT	PANEL	CIRCUIT	PANEL	
MANUFACTURER - EDWARDS		V1	EST4	V2	EST4	V3	EST4	V4	EST4	S1	EST4	
		QTY	CURR.	QTY	CURR.	QTY	CURR.	QTY	CURR.	QTY	CURR.	
Ceiling Speaker/Strobes-SPSRL	Draw (Amps)											QTY
15cd - 20X20	0.035	4	0.140	4	0.140	3	0.105	0	0.000		0.000	11
75cd - 45X45	0.035	4	0.140	3	0.105	2	0.070	1	0.035		0.000	10
Speakers-70.7v	Draw (Amps)											QTY
1/2 Watt Speaker (70.7v)	0.007		0.000		0.000		0.000		0.000	20	0.140	20
1 Watt Weatherproof Speaker (70.7v)	0.014		0.000		0.000		0.000		0.000	7	0.098	7

CIRCUIT CURREN DRAW (AMPS)	0.280	AMPS	0.245	AMPS	0.175	AMPS	0.035	AMPS	0.238	AMPS
MAX. WIRE LENGTH	500	FT.	500	FT.	500	FT.	500	FT.	1000	FT.
% VOLTAGE DROP	3.42	%	2.99	%	2.14	%	0.43	%	5.82	%
WIRE SIZE (CIRC. MILLS) # AWG	14	4110	14	4110	14	4110	14	4110	14	4110
	V1	EST4	V2	EST4	V3	EST4	V4	EST4	S1	EST4
	CIRCUIT	PANEL	CIRCUIT	PANEL	CIRCUIT	PANEL	CIRCUIT	PANEL	CIRCUIT	PANEL

DSA ADDITIONAL PLAN NOTES

1. APPLICABLE STANDARD NFPA STANDARD 72 (2022) AS AMENDED IN CBC CHAPTER 35.
2. INSTALLATION OF THE SYSTEMS SHALL NOT BE STARTED UNTIL DETAILED DESIGN DOCUMENTS AND SPECIFICATIONS, INCLUDING STATE FIRE MARSHAL LISTING NUMBERS FOR EACH COMPONENT OF THE SYSTEM HAS BEEN APPROVED BY DSA.
3. UPON COMPLETION OF THE INSTALLATION OF THE SYSTEMS, A SATISFACTORY TEST OF THE ENTIRE SYSTEM SHALL BE MADE IN THE PRESENCE OF A DSA PROJECT INSPECTOR (PJ).
4. A STAMPED SET OF APPROVED FIRE ALARM DESIGN DOCUMENTS SHALL BE ON THE JOB SITE AND USED FOR INSTALLATION.
5. ANY DISCREPANCIES BETWEEN THE DRAWINGS AND THE CODE OR RECOGNIZED STANDARDS SHALL BE BROUGHT TO THE ATTENTION OF DSA AND THE ARCHITECT/ENGINEER OF THE PROJECT.
6. DSA, ARCHITECT, ENGINEER AND OWNER SHALL BE NOTIFIED A MINIMUM OF 48 HOURS PRIOR TO THE FINAL INSPECTION AND/OR TESTING.
7. ALL MEMBRANE AND THROUGH-PENETRATIONS OF RATED ASSEMBLIES SHALL BE PROTECTED BY AN APPROVED FIRE STOP SYSTEM AS IDENTIFIED IN CBC CHAPTER 7, UL OR OTHER LAB TESTING CRITERIA. APPROVED TYPES OF MATERIALS SHALL BE IDENTIFIED WITHIN THE FIRE ALARM SECTION OF THE PROJECT SPECIFICATIONS.
8. WALL MOUNTED VISUAL NOTIFICATION DEVICES SHALL HAVE THEIR BOTTOMS MOUNTED AT 80" MINIMUM AND 96" MAXIMUM ABOVE FINISHED FLOOR AS MEASURED TO THE LENS.
9. WALL MOUNTED AUDIBLE NOTIFICATION DEVICES SHALL HAVE THEIR TOPS MOUNTED AT 90" MINIMUM AND 100" MAXIMUM ABOVE FINISHED FLOOR AND NO CLOSER THEN 6" TO A HORIZONTAL STRUCTURE.
10. AUDIBLE DEVICES SHALL HAVE A SOUND LEVEL AT LEAST 15dB ABOVE AVERAGE AMBIENT SOUND LEVEL OR 5dB ABOVE THE MAXIMUM SOUND LEVEL HAVING A DURATION OF AT LEAST 60 SECONDS,WHICHEVER IS GREATER, MEASURE 5 FEET ABOVE THE FLOOR IN THE AREA REQUIRED TO BE SERVED BY THE SYSTEM USING A-WEIGHTED SCALE (dBA)
11. AUDIBLE DEVICES SHALL BE SYNCHRONIZED TEMPORAL CODE 3 PATTERN
12. THE CONTRACTOR SHALL ADJUST/INSTALL ALL DEVICES TO MAXIMIZE PERFORMANCE AND TO MINIMIZE FALSE ALARMS.
13. VISUAL DEVICES SHOULD NOT EXCEED 2 FLASHES PER SECOND AND SHOULD NOT BE SLOWER THAN 1 FLASH EVERY SECOND. THE DEVICE SHALL HAVE A PULSING LIGHT SOURCE NOT LESS THAN 15-CANDELA. VISUAL DEVICES WITHIN 55' FROM EACH OTHER SHALL BE SYNCHRONIZED.
14. UNDERGROUND AND EXTERIOR CONDUITS TO HAVE WATERTIGHT FITTINGS AND WIRE LISTED FOR WET LOCATIONS.
15. ALL FIRE ALARM WIRING SHALL BE FPL (FIRE POWER LIMITED) OR FPLP (FIRE POWER LIMITED PLENUM) AS REQUIRED FOR APPLICATION. WIRING IN CONDUIT ABOVE GROUND MAY BE THHN OR THWN.
16. PER THE CEC, ALL WIRING IS TO BE PULLED THROUGH EACH JUNCTION BOX AND CONNECTED DIRECTLY TO EACH FIRE DEVICE. DO NOT SPLICE THE WIRE. THERE MUST BE AT LEAST 6" OF LEAD WIRE FROM THE BOX TO THE DEVICE. ALL BOXES TO BE SIZED PER CEC.
17. SMOKE DETECTORS SHALL NOT BE ANY CLOSER THAN 1' FOOT FROM FIRE SPRINKLERS OR 3'FEET FROM ANY SUPPLY DIFFUSER. IN THE AREA OF CONSTRUCTION OR WHERE POSSIBLE DAMAGE/CONTAMINATION COULD OCCUR ON NEWLY INSTALLED FIRE ALARM DEVICES, DEVICES SHALL BE COVERED UNTIL THAT AREA IS READY TO BE TURNED OVER TO THE OWNER.
18. ALL FIRE ALARM CIRCUITS SHALL BE IN CONDUIT, APPROVED SURFACE RACEWAY OR OPEN RUN ABOVE CEILINGS. UNDER FLOORS AND IN WALLS IN A NEAT AND PROTECTED MANNER AS INDICATED ON THE DESIGN DOCUMENTS.
19. FIRE ALARM PANEL REMOTES AND COMPONENTS SHALL BE SECURED TO MOUNTING SURFACES PER MANUFACTURERS SPECIFICATIONS. NO SINGLE DEVICE SHALL EXCEED THE WEIGHT OF 20LBS WITHOUT SPECIAL MOUNTING DETAILS.
20. A DEDICATED BRANCH CIRCUIT SHALL BE PROVIDED FOR FIRE ALARM EQUIPMENT. THIS CIRCUIT SHALL BE ENERGIZED FROM THE COMMON USE AREA PANEL AND SHALL HAVE NO OTHER OUTLETS. THE BREAKER SHALL HAVE A RED LOCKING DEVICE TO BLOCK THE HANDLE IN THE "ON" POSITION AND BE LABELED AS FOLLOWS.

A. "FIRE ALARM" FOR FIRE ALARM SYSTEMS.
B. "EMERGENCY COMMUNICATIONS" FOR EMERGENCY COMMUNICATIONS SYSTEMS OR
C. "IRE ALARM/ECS" FOR COMBINATION FIRE ALARM AND COMMUNCATIONS SYSTEMS.

21. THE INSTALLING CONTRACTOR SHALL PROVIDE A COMPLETED RECORD OF COMPLETION PER NFPA 72, FIGURE 7.8.2(A) THROUGH (I) AS APPLICABLE.
22. CONTROL PANELS AND REMOTE ANNUNCIATORS SHALL BE INSTALLED WITH THEIR BOTTOMS MOUNTED AT 48" ABOVE FINISHED FLOOR.
23. THE INSTALLING CONTRACTOR SHALL PROVIDE SYSTEM PROGRAMMING FOR SUPERVISORY MONITORING PER CFC SECTION 901.6.2
24. SUPERVISORY MONITORING SHALL BE TESTED AND VERIFIED AND SENDING CORRECT SIGNALS IN CONJUNCTION WITH FINAL ACCEPTANCE TEST.
25. OWNER SHALL BE RESPONSIBLE FOR ESTABLISHING AND MAINTAINING A FIRE ALARM SYSTEM MONITORING CONTRACT.

FIRE ALARM SYSTEM NOTES

FIRE ALARM COMPLETE PLAN SUBMITTAL

1.0 PROJECT INFORMATION

A. OCCUPANCY GROUP
REFER TO ARCHITECTURAL DRAWINGS.

B. CONSTRUCTION TYPE
REFER TO ARCHITECTURAL DRAWINGS.

FIRE ALARM NOTE:
FIRE ALARM SUBMITTAL IS A COMPLETE PLAN SUBMITTAL IN ACCORDANCE WITH CFC-901.1 AND 907.1.1.

C. PENETRATIONS OF FIRE RATED WALLS SHALL BE PROTECTED IN ACCORDANCE WITH CALIFORNIA BUILDING CODE, PART 2, CHAPTER 7, TITLE 24. REFER TO THE ARCHITECTURAL PLANS FOR FIRE-RATE CORRIDOR(S), OCCUPANCY SEPARATION(S) AND AREA SEPARATION WALL(S).

D. UPON COMPLETION OF SYSTEM INSTALLATION, THE SYSTEM SHALL BE TESTED IN THE PRESENCE OF AND IN A MANNER ACCEPTABLE TO THE ENFORCING AGENCY.

E. PROVIDE A STATEMENT OF COMPLIANCE WHEN REQUESTING INSPECTION CFC 901.2.1

F. THE FIRE ALARM SYSTEM DESIGN FOR THIS PROJECT IS ADDRESSABLE AND FULLY AUTOMATIC VOICE EVACUATION SYSTEM.

2.0 APPLICABLE CODES AND STANDARDS

2.0 APPLICABLE CODES AND STANDARDS

2022 CALIFORNIA ADMINISTRATIVE CODE (CAC), PART 1, TITLE 24 CCR
2022 CALIFORNIA BUILDING CODE (CBC), PART 2, TITLE 24 CCR
2022 CALIFORNIA ELECTRICAL CODE (CEC), PART 3, TITLE 24 CCR
2022 CALIFORNIA MECHANICAL CODE (CMC), PART 4, TITLE 24 CCR
2022 CALIFORNIA PLUMBING CODE (CPC), PART 5, TITLE 24 CCR
2022 CALIFORNIA ENERGY CODE, PART 6, TITLE 24 CCR
2022 CALIFORNIA FIRE CODE (CFC), PART 9, TITLE 24 CCR
2022 CALIFORNIA EXISTING BUILDING CODE (CEBC), PART 10, TITLE 24 CCR
2022 CALIFORNIA GREEN BUILDING STANDARDS CODE (CALGREEN), PART 11, TITLE 24 CCR
2022 CALIFORNIA REFERENCED STANDARDS CODE, PART 12, TITLE 24 CCR
TITLE 19 CCR, PUBLIC SAFETY, STATE FIRE MARSHAL REGULATIONS

B. PARTIAL LIST OF APPLICABLE STANDARDS

NFPA 72 NATIONAL FIRE ALARM AND SIGNALING CODE 2022 EDITION (CA AMENDED)

3.0 UPON RECEIPT OF THE CERTIFICATE OF COMPLIANCE, THE INSTALLER SHALL SUPPLY THE OWNER WITH A WRITTEN OPERATING, TESTING AND MAINTENANCE INSTRUCTIONS, POINT-TO-POINT AS -BUILT DRAWINGS AND EQUIPMENT SPECIFICATIONS.

4.0 NFPA 72 CHAPTER 10,14 INSPECTION TESTING AND MAINTENANCE COMPLETE THE INSPECTION AND TESTING FORM IN ITS ENTIRETY SUBMIT A COPY TO THE DISTRICT, ARCHITECT AND DSA DIVISION OF FIRE AND LIFE SAFETY.

5.0 OCCUPANCY PROHIBITED TO ANY PORTION OF BUILDING UNTIL FIRE ALARM SYSTEM HAS BEEN TESTED AND APPROVED. CBC 901.5; CFC 901.5.1 RECORD DRAWINGS OF ALL INSPECTION, TEST SHALL BE MAINTAINED ON PREMISES MINIMUM THREE YEARS. CFC 901.6.2 (5 YEARS PER TITLE 14) SMOKE DETECTORS TO UTILIZE CALIBRATED MANUFACTURE SENSITIVITY TEST INSTRUMENT. CFC 907.9.4

6.0 CONTRACTOR SHALL PROVIDE 24 HOUR FIRE WATCH IN CASE EXISTING CAMPUS FIRE ALARM SYSTEM IS SHUTDOWN OR DURING THE DURATION OF THE CONSTRUCTION PHASE.(IF APPLICABLE TO THE PROJECT). REFER TO DSA DOCUMENT IR F-2 FOR MORE INFORMATION AND REQUIREMENTS.

FIRE ALARM GENERAL NOTES

1. THE FIRE ALARM SHALL CONFORM TO ARTICLE 760 OF THE CALIFORNIA ELECTRICAL CODE.
2. UPON COMPLETION OF THE INSTALLATION OF THE FIRE ALARM SYSTEM, A SATISFACTORY TEST OF THE ENTIRE SYSTEM SHALL BE MADE IN THE PRESENCE OF THE AUTHORITY HAVING JURISDICTION (FIRE MARSHAL). THE CONTRACTOR SHALL PROVIDE ALL NECESSARY TEST EQUIPMENT (e.g. DIGITAL AMMETER, DECIBEL METER) AND VERIFY THAT THE GROUND FAULT DETECTION FOR THE FIRE ALARM SYSTEM IS OPERATIONAL DURING TESTING AND REMAINS SO ONCE THE SYSTEM IS APPROVED. UPON APPROVAL OF THE FIRE ALARM SYSTEM, THE CONTRACTOR SHALL PROVIDE THE OWNER WITH COMPLETE SET OF OPERATING INSTRUCTIONS FOR THE SYSTEM.
3. AN APPROVED, STAMPED SET OF THE FIRE ALARM PLANS SHALL BE ON THE JOB SITE AND USED FOR INSTALLATION. ANY DEVIATIONS FROM THE APPROVED PLANS, INCLUDING SUBSTITUTION OF DEVICES, SHALL BE APPROVED BY THE INSPECTOR OF RECORD.
4. ANY DISCREPANCIES BETWEEN THE DRAWINGS AND THE CODE OR RECOGNIZED STANDARDS SHALL BE BROUGHT TO THE ATTENTION OF THE INSPECTOR OF RECORD.
5. ALL DEVICES OF THE FIRE ALARM SYSTEM SHALL BE APPROVED AND LISTED BY THE CALIFORNIA STATE FIRE MARSHAL.
6. ALL TERMINAL CABINETS AND JUNCTION BOXES SHALL BE CLEARLY MARKED THAT THE ENCLOSURE IS PART OF THE FIRE ALARM SYSTEM.
7. THE CONTRACTOR SHALL LOCATE ALL SMOKE DETECTION DEVICES A MINIMUM OF 36" FROM ANY MECHANICAL REGISTERS.
8. THESE DRAWINGS ARE DIAGRAMMATIC IN NATURE. WIRE LENGTHS USED TO CALCULATE VOLTAGE DROPS REPRESENT ESTIMATES BASED ON MEASUREMENTS OF SCALED FLOOR PLAN DRAWINGS. CONTRACTOR TO ROUTE CONDUIT AS FIELD CONDITIONS REQUIRE. CONTRACTOR TO INSTALL ALL DEVICES ACCORDING TO MANUFACTURERS INSTRUCTIONS AND IN COMPLIANCE WITH ALL APPLICABLE CODES.
9. ALL WIRING TO BE IN CONDUIT. ALL CONDUIT IS TO BE A 3/4" MINIMUM. IF FLEX CONDUIT IS USED TO TRANSITION DOWN TO CEILING DEVICE THE FLEX CAN BE NO LONGER THAN 5 FEET.

NOTIFICATION APPLIANCE NOTATION LEGEND

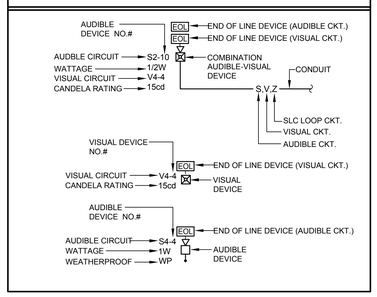

CABLE / WIRE SCHEDULE

TAG	CIRCUIT	CONDUCTORS	TYPE	MIN. SIZE CONDUIT
B	MISC.	2 #14AWG (SOLID)	THHN	3/4"C.
C	SYNC	2 #12AWG (SOLID)	THHN	3/4"C.
P	24VDC	2 #14AWG	THHN	3/4"C.
S	SPEAKER	2 #14AWG TSP TWISTED/SHIELDED	FPLR	3/4"C.
V	STROBE	2 #14AWG	THHN	3/4"C.
Z	SLC LOOP	2 #16AWG TWISTED	FPLR	3/4"C.
AR	DIGITAL AUDIO LP	2 #18AWG TPNS TWIST-PR-NON SHLD	FPLR	3/4"C.

ALL FIRE ALARM SYSTEM CABLING-WIRE-CONDUCTORS SHALL BE INSTALLED IN RED CONDUIT. MINIMUM SIZE CONDUITS SHALL BE 3/4".

DSA STAMP

STUDIO W ARCHITECTS
Studio W Architects
1930 H Street
Sacramento, California 95811
[T] 916.254.5600
www.StudioW-Architects.com

FBA Engineering
Consulting Electrical Engineers
150 Paularino Avenue Suite A120
Costa Mesa, CA 92626
949.852.9995 • 949.852.1657 (fax)
fbaeng.com
FBA Job Number: 1022.036

ARCHITECT	ENGINEER
LICENSED ARCHITECT BRYAN P WHITMORE No. C 30345 Ren. 9/30/25 STATE OF CALIFORNIA	REGISTERED PROFESSIONAL ENGINEER STEPHEN N. DAJKA No. E 10372 Exp. 09-30-24 ELECTRICAL STATE OF CALIFORNIA
DATE SIGNED: 06/24/2024	DATE SIGNED: 06/24/2024

GENERAL NOTES
1. This sheet is part of a set and is not to be used alone.
2. This sheet is not to be used for construction unless the architect's stamp and signature appear on the drawings and the status box indicated drawings have been released for construction.
3. These plans and prints thereof, as instruments of service, are owned by the architect and are for use on this project only. Reproduction and/or distribution without the prior written consent of the architect is forbidden.
4. Copyright Studio W Associates, Inc. 2022.

REVISION HISTORY

NO.	REMARKS	DATE

DRAWING STATUS

	DATE
○ DSA PLAN CHECK	
● DSA BACK CHECK	06/24/2024
○ BIDDING	
○ CONSTRUCTION	

KEY PLAN

BUENA PARK USD
6885 ORANGETHORPE AVE
BUENA PARK, CA 90620

SCHEMATIC DESIGN

CARL E. GILBERT ELEMENTARY SCHOOL
TK/PK CLASSROOMS & EARLY LEARNING BUILDING
7255 8TH STREET, BUENA PARK, CA 90621

FIRE ALARM SYSTEM INFORMATION

Date 06/24/2024
Project Number 23076
Application Number XX-XXXXXX
Drawing Number E0.3
Drawn BM
Checked SZ

FBA Engineering / Plot Date: 6/24/2024 11:52 AM / Plotted by: Garren Rgonan / Drawing Location: I:\1022036\ED\0.3_1022036-FIRE ALARM SYSTEM PLAN AND INFORMATION.dwg

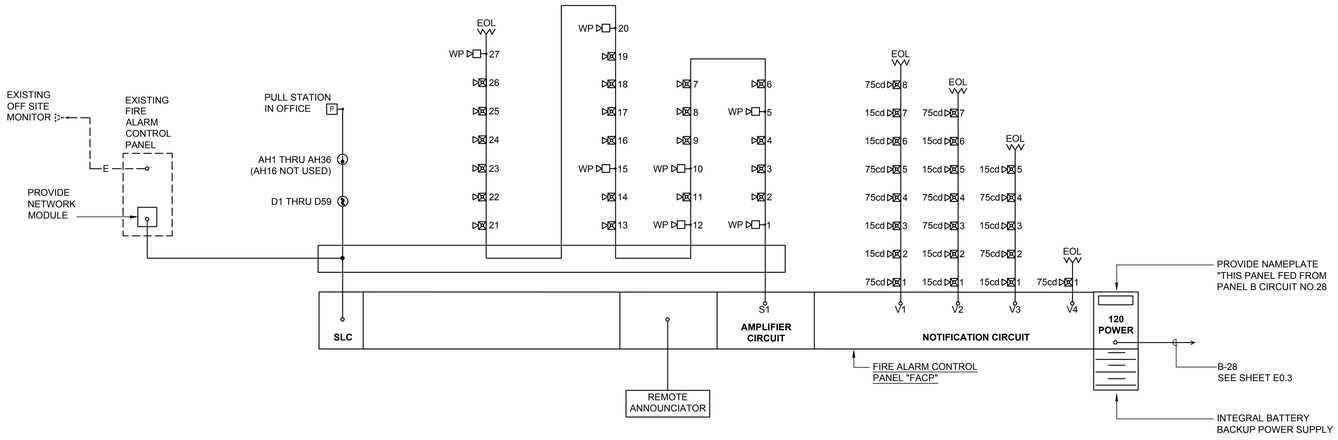

FIRE ALARM RISER DIAGRAM

1 N.T.S.

REFERENCE NOTES

1. PROVIDE AND INSTALL NEW FIRE ALARM TRANSPONDER PANEL. TRANSPONDER PANEL TO CONNECT TO THE LOCKER ROOM EXISTING FACP PANEL.
2. EXISTING FIRE ALARM TERMINAL CABINET.
3. CONNECT TO HVAC SHUTDOWN CONTROL CIRCUIT FOR ROOFTOP UNIT HP-1. SEE NOTE 32 SHEET E1.0.

DSA STAMP

STUDIO W ARCHITECTS

Studio W Architects
1930 H Street
Sacramento, California 95811
[T] 916.254.5600
www.StudioW-Architects.com

FBA Engineering
Consulting Electrical Engineers
150 Paularino Avenue Suite A120
Costa Mesa, CA 92626
949.852.9995 • 949.852.1657 (fax)
fbaeng.com
FBA Job Number: 1022.038

ARCHITECT

LICENSED ARCHITECT BRYAN P WHITMORE No. C 30345 Ren. 9/30/25 STATE OF CALIFORNIA

DATE SIGNED: 06/24/2024

ENGINEER

REGISTERED PROFESSIONAL ENGINEER STEPHEN N. DAJKA No. E 10372 Exp. 09-30-24 ELECTRICAL STATE OF CALIFORNIA

DATE SIGNED: 06/24/2024

GENERAL NOTES

1. This sheet is part of a set and is not to be used alone.
2. This sheet is not to be used for construction unless the architect's stamp and signature appear on the drawings and the status box indicated drawings have been released for construction.
3. These plans and prints thereof, as instruments of service, are owned by the architect and are for use on this project only. Reproduction and/or distribution without the prior written consent of the architect is forbidden.
4. Copyright Studio W Associates, Inc. 2022.

REVISION HISTORY

NO.	REMARKS	DATE

DRAWING STATUS

	DATE
○ DSA PLAN CHECK	
● DSA BACK CHECK	06/24/2024
○ BIDDING	
○ CONSTRUCTION	

KEY PLAN

BUENA PARK USD
6885 ORANGETHORPE AVE
BUENA PARK, CA 90620

SCHEMATIC DESIGN

CARL E. GILBERT ELEMENTARY SCHOOL
TK/PK CLASSROOMS & EARLY LEARNING BUILDING
7255 8TH STREET, BUENA PARK, CA 90621

FIRE ALARM PLAN AND RISER DIAGRAM

Date	Project Number
06/24/2024	23076
Application Number	Drawing Number
XX-XXXXXX	E0.4
Drawn / Checked	
BM / SZ	

FBA Engineering / Plot Date: 6/24/2024 11:52 AM / Plotted by: Garren Rigonan / Drawing Location: I:\1022\038\E\E0.4_1022038_FIRE ALARM PLAN AND RISER DIAGRAM.dwg

FRAMED WALL PENETRATION DETAIL

U.L. SYSTEM NO. WL 1001

F RATINGS 1,2,3 AND 4 HR (SEE ITEMS 2 AND 3)
T RATINGS 0, 1, 2, 3, AND 4 HR (SEE ITEM 3)

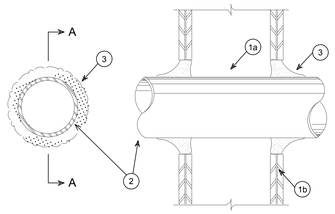

SECTION A-A
NOT TO SCALE

1. WALL ASSEMBLY - THE 1,2,3, OR 4 HR FIRE-RATED GYPSUMWALLBOARD/STUD WALL ASSEMBLY SHALL BE CONSTRUCTED OF THE MATERIALS AND IN THE MANNER DESCRIBED I THE INDIVIDUAL U300 OR U400 SERIES WALL OR PARTITION DESIGNS IN THE UL FIRE RESISTANCE DIRECTORY AND SHALL INCLUDE THE FOLLOWING CONSTRUCTION FEATURES:

   a. STUDS - WALL FRAMING MAY CONSIST OF EITHER WOOD m STUDS (MAX 2H FIRE RATED ASSEMBLIES) OR STEEL CHANNEL STUDS. WOOD STUDS TO CONSIST OF NOM 2 BY 4 IN. LUMBER SPACED 16 IN. OC WITH NOM 2 BY 4 IN. LUMBER END PLATES AND CROSS BRACES. STEEL STUDS TO BE MIN 3-5/8 IN. WIDE BY 1-3/8 IN. DEEP CHANNELS SPACED MAX 24 IN. ON CENTER.

   b. WALLBOARD, GYPSUM*- NOM 1/2 OR 5/8 IN. THICK, 4 FT. WIDE WITH SQUARE OR TAPERED EDGES. THE GYPSUM WALLBOARD TYPE, THICKNESS, NUMBER OF LAYERS, FASTENER AND SHEET ORIENTATION SHALL BE AS SPECIFIED IN THE INDIVIDUAL U300 OR U400 SERIES DESIGN IN THE UL FIRE RESISTANCE DIRECTORY. MAX DIAM OF OPENING IS 13-1/2 IN.

2. PIPE OR CONDUIT- NOM 12 IN. DIAM (OR SMALLER) SCHEDULE 10 (OR HEAVIER) STEEL PIPE, NOM 6 IN. DIAM (OR SMALLER) STEEL CONDUIT, NOM 4 IN. DIAM (OR SMALLER) STEEL ELECTRICAL METALLIC TUBING OR SMALLER) FLEXIBLE STEEL CONDUIT. WHEN COPPER PIPE OR FLEXIBLE STEEL CONDUIT IS USED, MAX F RATING OF FIRESTOP SYSTEM (ITEM 3) IS 2 H. STEEL PIPES OR CONDUITS LARGER THAN 4 IN. DIAM MAY ONLY BE USED IN WALLS CONSTRUCTED USING STEEL CHANNEL STUDS. A MAX OF ONE PIPE OR CONDUIT IS PERMITTED IN THE FIRE STOP SYSTEM. PIPE OR CONDUIT TO BE INSTALLED NEAR CENTER OF STUD CAVITY WIDTH AND TO BE RIGIDLY SUPPORTED ON BOTH SIDES OF WALL ASSEMBLY.

3. FILL, VOID OR CAVITY MATERIAL*-CAULK- CAULK FILL MATERIAL INSTALLED TO COMPLETELY FILL ANNULAR SPACE BETWEEN PIPE OR CONDUIT AND GYPSUM WALLBOARD AND WITH A MIN 1/4 IN. DIAM BEAD OF CAULK APPLIED TO PERIMETER OF PIPE OR CONDUIT AT ITS EGRESS FROM THE WALL. CAULK INSTALLED SYMMETRICALLY ON BOTH SIDES OF WALL ASSEMBLY. THE HOURLY F RATING OF THE FIRESTOP SYSTEM IS DEPENDENT UPON THE HOURLY FIRE RATING OF THE WALL ASSEMBLY IN WHICH IT IS INSTALLED, AS SHOWN IN THE FOLLOWING TABLE. THE HOURLY T RATING OF THE FIRESTOP SYSTEM IS DEPENDENT UPON THE TYPE OR SIZE OF THE PIPE OR CONDUIT AND THE HOURLY FIRE RATING OF THE WALL ASSEMBLY IN WHICH IT IS INSTALLED, AS TABULATED BELOW:

THROUGH OPENING	ANNULAR SPACE, IN	F RATING, HR	T RATING, HR
1	0 TO 3/16	1 OR 2	0+, 1, OR 2
1	1/4 TO 1/2	3 OR 4	3 OR 4
4	O TO 1/4	1 OR 2	O
6	1/4 TO 3/8	3 OR 4	O
12	3/16 TO 3/8	1 OR 2	O

+WHEN COPPER PIPE IS USED, T RATING IS 0 H.
MINNESOTA MINING AND MFG CO. - CP-25, WB+
* BEARING THE UL CLASSIFICATION MARKING

CONDUIT PENETRATION THRU 4-HOUR WALL

SCALE NONE | G

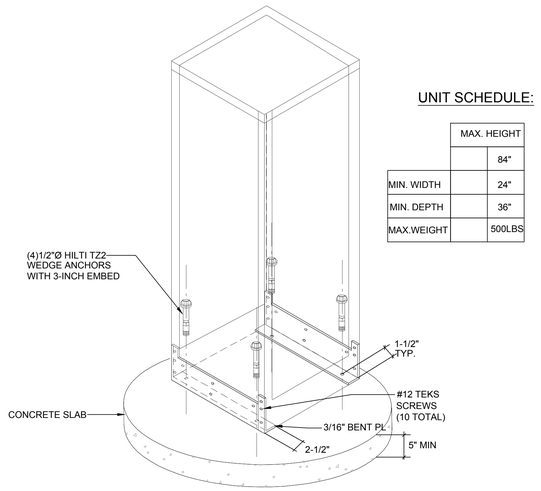

UNIT SCHEDULE:

	MAX. HEIGHT	
		84"
MIN. WIDTH		24"
MIN. DEPTH		36"
MAX.WEIGHT		500LBS

IDF RACK ANCHORAGE DETAIL

SCALE NONE | F

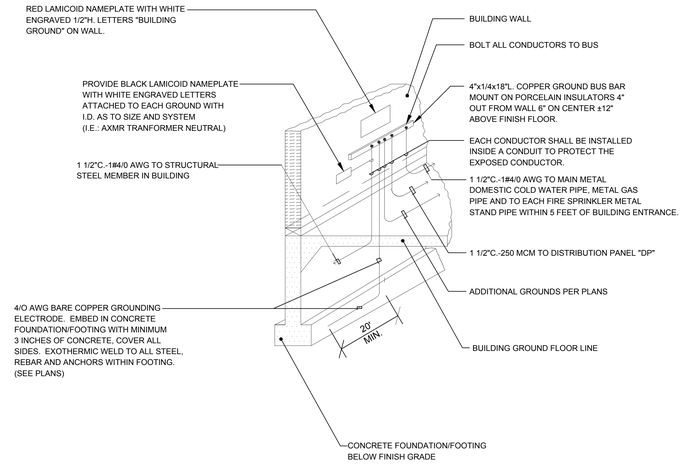

BUILDING ELECTRICAL SERVICE GROUND BUS DETAIL

SCALE NONE | C

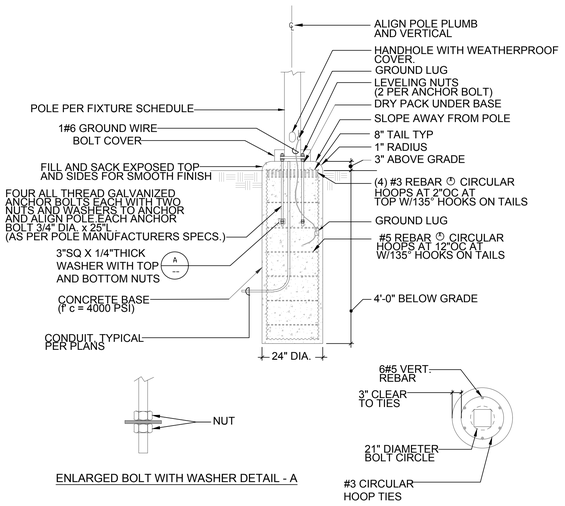

ENLARGED BOLT WITH WASHER DETAIL - A

SEMI-FLUSH POLE BASE DETAIL

SCALE NONE | E

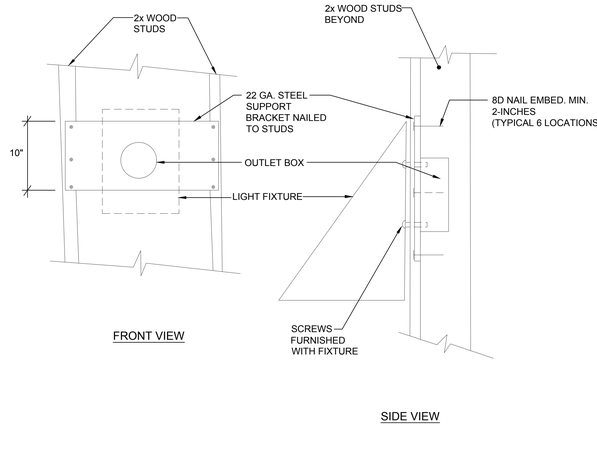

WALL MOUNTED FIXTURE MOUNTING DETAIL

SCALE NONE | B

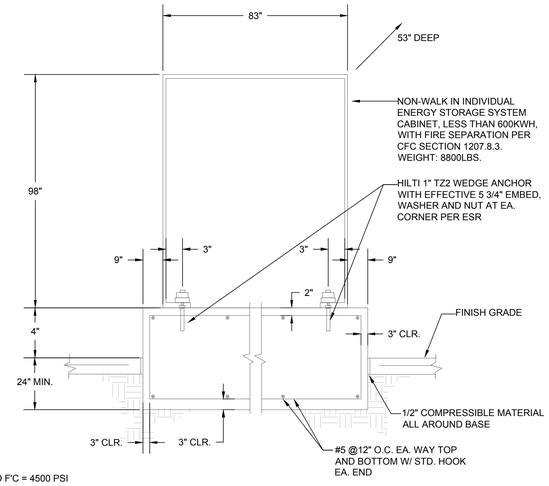

CONCRETE PAD F'C = 4500 PSI

BESS CONCRETE BASE DETAIL

SCALE NONE | D

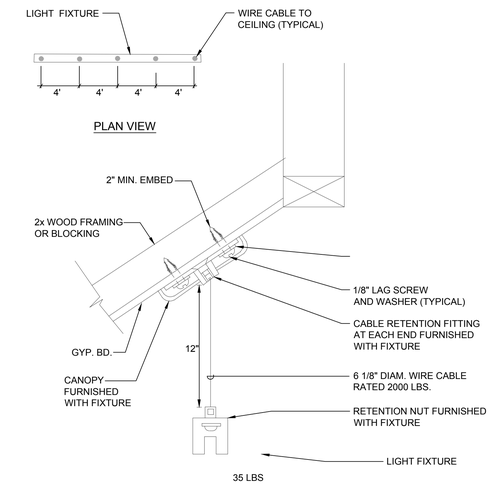

PENDANT LIGHT MOUNTING DETAIL

SCALE NONE | A

DSA STAMP

STUDIO W ARCHITECTS

Studio W Architects
1930 H Street
Sacramento, California 95811
[T] 916.254.5600
www.StudioW-Architects.com

FBA Engineering
Consulting Electrical Engineers
150 Paularino Avenue Suite A120
Costa Mesa, CA 92626
949.852.9995 • 949.852.1657 (fax)
fbaeng.com
FBA Job Number: 1022.038

ARCHITECT	ENGINEER
LICENSED ARCHITECT BRIAN P WHITMORE No. C 30345 Ren. 9/30/25 STATE OF CALIFORNIA	REGISTERED PROFESSIONAL ENGINEER STEPHEN R. DAJTAS No. E 10372 Exp. 09-30-24 ELECTRICAL STATE OF CALIFORNIA
DATE SIGNED: 06/24/2024	DATE SIGNED: 06/24/2024

GENERAL NOTES

1. This sheet is part of a set and is not to be used alone.
2. This sheet is not to be used for construction unless the architect's stamp and signature appear on the drawings and the status box indicated drawings have been released for construction.
3. These plans and prints thereof, as instruments of service, are owned by the architect and are for use on this project only. Reproduction and/or distribution without the prior written consent of the architect is forbidden.
4. Copyright Studio W Associates, Inc. 2022.

REVISION HISTORY

NO.	REMARKS	DATE

DRAWING STATUS

	DATE
○ DSA PLAN CHECK	
● DSA BACK CHECK	06/24/2024
○ BIDDING	
○ CONSTRUCTION	

KEY PLAN

BUENA PARK USD
6885 ORANGETHORPE AVE
BUENA PARK, CA 90620

SCHEMATIC DESIGN

CARL E. GILBERT ELEMENTARY SCHOOL
TK/PK CLASSROOMS & EARLY LEARNING BUILDING
7255 8TH STREET, BUENA PARK, CA 90621

ELECTRICAL DETAILS

Date 06/24/2024	Project Number 23076
Application Number XX-XXXXXX	Drawing Number E0.5
Drawn BM	Checked SZ

FBA Engineering / Plot Date: 6/24/2024 11:52 AM / Plotted by: Garren Rigonan / Drawing Location: I:\1022\038\ED\5_1022.028_ELECTRICAL DETAILS.dwg

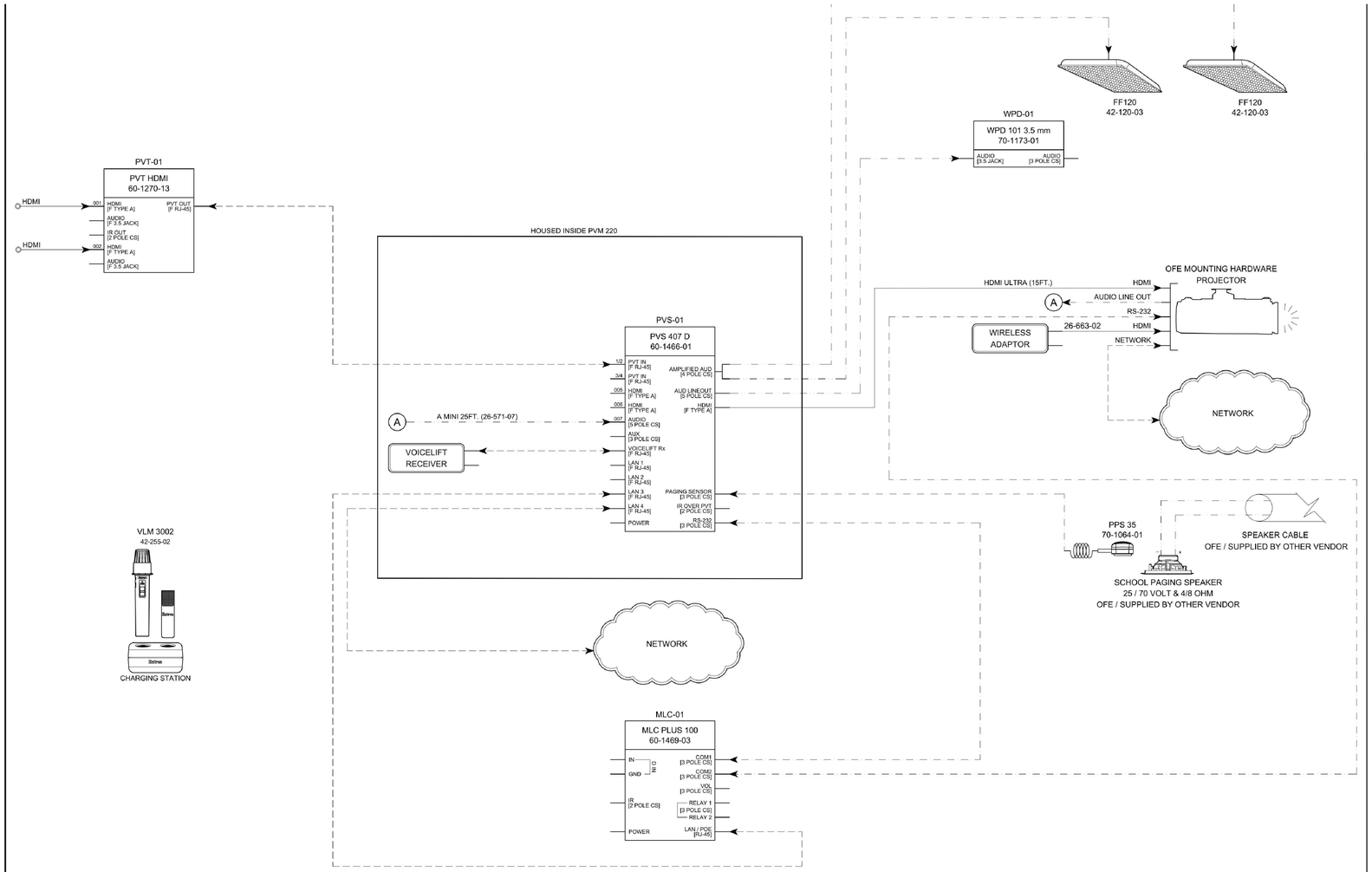

NOTES:

1. THIS IS A CONCEPTUAL BASED DRAWING AND IS NOT INTENDED FOR WIRING DIAGRAM USE.
2. PROJECTOR/DISPLAYS MUST HAVE 2 HDMI INPUTS.

DSA STAMP

STUDIO W ARCHITECTS

Studio W Architects
1930 H Street
Sacramento, California 95811
[T] 916.254.5600
www.StudioW-Architects.com

FBA Engineering
Consulting Electrical Engineers
150 Paularino Avenue Suite A120
Costa Mesa, CA 92626
949.852.9995 • 949.852.1657 (fax)
fbaeng.com
FBA Job Number: 1022.038

ARCHITECT | ENGINEER

LICENSED ARCHITECT BRIAN P WHITMORE No. C 30345 Ren. 9/30/25 STATE OF CALIFORNIA

REGISTERED PROFESSIONAL ENGINEER STEPHEN N. DAJKA No. E 10372 Exp. 09-30-24 ELECTRICAL STATE OF CALIFORNIA

DATE SIGNED: 06/24/2024

GENERAL NOTES

1. This sheet is part of a set and is not to be used alone.
2. This sheet is not to be used for construction unless the architect's stamp and signature appear on the drawings and the status box indicated drawings have been released for construction.
3. These plans and prints thereof, as instruments of service, are owned by the architect and are for use on this project only. Reproduction and/or distribution without the prior written consent of the architect is forbidden.
4. Copyright Studio W Associates, Inc. 2022.

REVISION HISTORY

NO.	REMARKS	DATE

DRAWING STATUS

DATE

- ○ DSA PLAN CHECK
- ● DSA BACK CHECK 06/24/2024
- ○ BIDDING
- ○ CONSTRUCTION

KEY PLAN

BUENA PARK USD
6885 ORANGETHORPE AVE
BUENA PARK, CA 90620

SCHEMATIC DESIGN

CARL E. GILBERT ELEMENTARY SCHOOL
TK/PK CLASSROOMS & EARLY LEARNING BUILDING
7255 8TH STREET, BUENA PARK, CA 90621

CLASSROOM A/V DIAGRAM

Date	Project Number
06/24/2024	23076
Application Number	Drawing Number
XX-XXXXXX	E0.6
Drawn: BM	Checked: SZ

FBA Engineering / Plot Date: 6/24/2024 11:52 AM / Plotted by: Garren Rigonan / Drawing Location: I:\1022\038\E0.6_1022.028_CLASSROOM A/V DIAGRAM.dwg

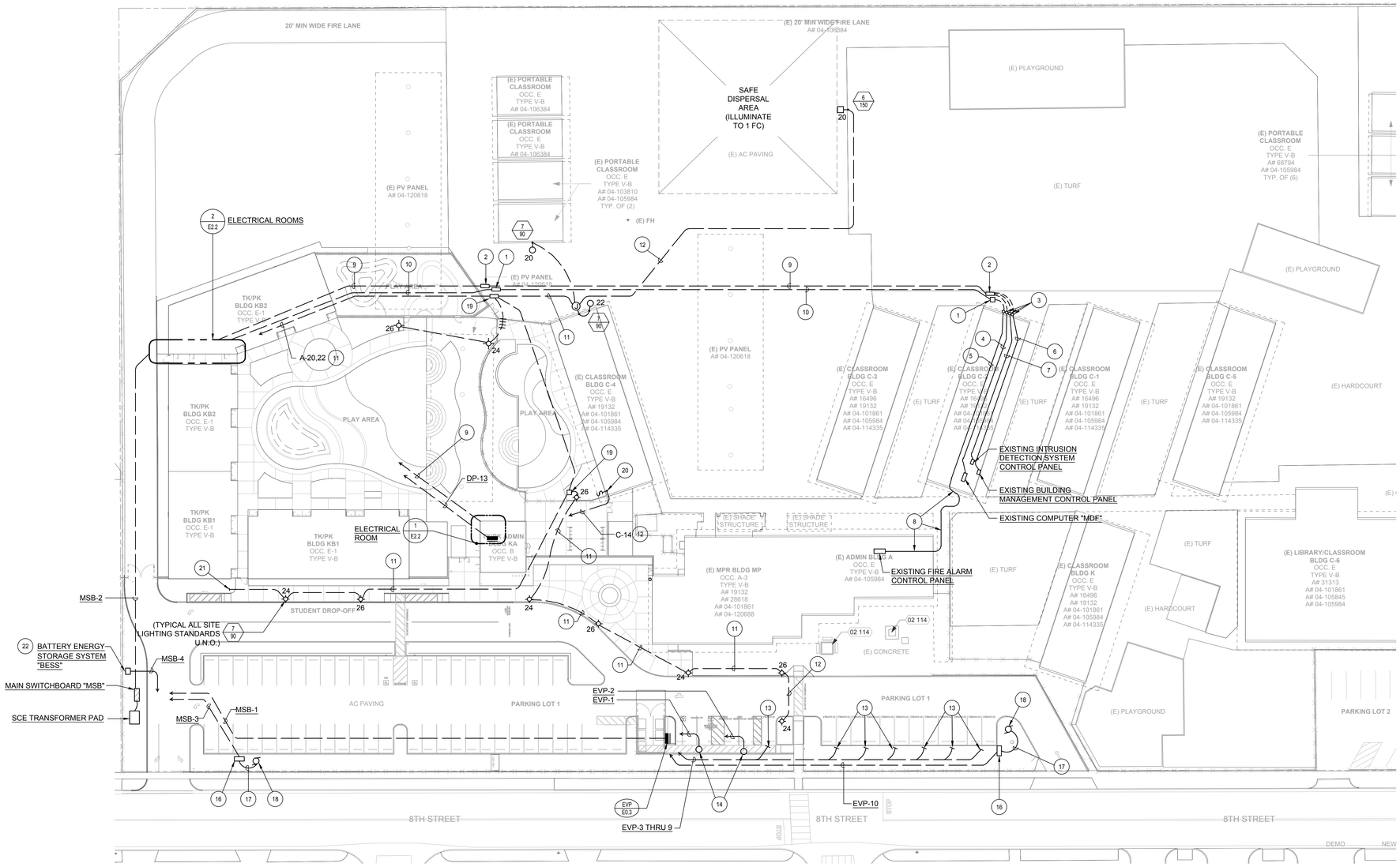

PLAN NOTES

NUMBER	NOTE
1	11" x 17" x 18"D. BOTTOMLESS CONCRETE PULLBOX WITH COVER MARKED "FIRE ALARM".
2	2' x 3'x 3'D. CONCRETE PULLBOX WITH COVER MARKED "SIGNAL".
3	3 RIGID GALVANIZED STEEL CONDUIT RISERS EXPOSED ON WALL.
4	4"C. WITH COMPUTER / STRUCTURED CABLING RUN THRU ACCESSIBLE CEILING SPACE.
5	2"C. WITH FIRE ALARM CABLING RUN THRU ACCESSIBLE CEILING SPACE.
6	2"C. WITH BMS SYSTEM CABLING RUN THRU ACCESSIBLE CEILING SPACE.
7	2"C. WITH INTRUSION DETECTION SYSTEM CABLING RUN THRU ACCESSIBLE CEILING SPACE.
8	2"C. WITH FIRE ALARM CABLING RUN EXPOSED ON ROOF.
9	PROVIDE THE FOLLOWING CONDUITS BELOW GRADE AND CABLING FOR EACH SYSTEM PER SPECIFICATIONS: 4"C. (COMPUTER / STRUCTURED CABLING) 2"C. (INTRUSION DETECTION) 2"C. (FIRE ALARM).
10	2"C. WITH FIRE ALARM CABLING.
11	4#6, 1#6 GROUND – 1"C.
12	2#6, 1#6 GROUND – 1".
13	STUB CONDUITS BELOW GRADE FOR FUTURE ELECTRIC VEHICLE CHARGER.
14	CONNECT TO ELECTRIC VEHICLE CHARGER.
15	BUILDING MOUNTED LIGHTS PER SHEET E2.1
16	DUPLEX STORM WATER PUMP CONTROLLER FURNISHED WITH PUMP SYSTEM. PROVIDE ELECTRICAL CONNECTIONS PER INSTRUCTIONS FURNISHED WITH CONTROLLER.
17	PROVIDE 3#10, 1#10 GROUND TO EACH OF TWO (2) PUMP MOTORS IN STORM WATER PIT PER INSTRUCTIONS FURNISHED WITH PUMP CONTROLLER. ALSO PROVIDE CONDUIT AND CONTROL WIRING FROM CONTROLLER TO PIT AND CONNECT PER INSTRUCTIONS FURNISHED WITH CONTROLLER.
18	STORM WATER PUMP SYSTEM PIT PER DETAIL 1 SHEET C-5.01.
19	11"x17"x18"D. BOTTOMLESS CONCRETE PULLBOX WITH COVER MARKED "LIGHTING".
20	CONNECT TO IRRIGATION CONTROLLER.
21	STUB AND CAP 3/4"C.O.
22	PROVIDE WEATHERPROOF BATTERY ENERGY STORAGE SYSTEM ANCHORED TO CONCRETE PAD PER DETAIL D SHEET E0.4.

SCALE: 1"= 30'

SITE ELECTRICAL PLAN

1
1"=30'-0"

DSA STAMP

STUDIO W ARCHITECTS

Studio W Architects
1930 H Street
Sacramento, California 95811
[T] 916.254.5600
www.StudioW-Architects.com

FBA Engineering
Consulting Electrical Engineers
150 Paularino Avenue Suite A120
Costa Mesa, CA 92626
949.852.9995 • 949.852.1657 (fax)
fbaeng.com
FBA Job Number: 1022.036

ARCHITECT	ENGINEER
LICENSED ARCHITECT BRIAN P WHITMORE No. C 30345 Ren. 9/30/25 STATE OF CALIFORNIA	REGISTERED PROFESSIONAL ENGINEER STEPHEN M. ZAJAC No. E 10372 Exp. 09-30-24 ELECTRICAL STATE OF CALIFORNIA
DATE SIGNED: 06/24/2024	DATE SIGNED: 06/24/2024

GENERAL NOTES

1. This sheet is part of a set and is not to be used alone.
2. This sheet is not to be used for construction unless the architect's stamp and signature appear on the drawings and the status box indicated drawings have been released for construction.
3. These plans and prints thereof, as instruments of service, are owned by the architect and are for use on this project only. Reproduction and/or distribution without the prior written consent of the architect is forbidden.
4. Copyright Studio W Associates, Inc. 2022.

REVISION HISTORY

NO.	REMARKS	DATE

DRAWING STATUS

	DATE
○ DSA PLAN CHECK	
● DSA BACK CHECK	06/24/2024
○ BIDDING	
○ CONSTRUCTION	

KEY PLAN

BUENA PARK USD
6885 ORANGETHORPE AVE
BUENA PARK, CA 90620

SCHEMATIC DESIGN

CARL E. GILBERT ELEMENTARY SCHOOL
TK/PK CLASSROOMS & EARLY LEARNING BUILDING
7255 8TH STREET, BUENA PARK, CA 90621

SITE ELECTRICAL PLAN

Date	Project Number
06/24/2024	23076
Application Number	Drawing Number
XX-XXXXXX	E1.1
Drawn BM	Checked SZ

FBA Engineering / Plot Date: 6/24/2024 11:52 AM / Plotted by: Garren Rigonan / Drawing Location: I:\1022\0386\E1.1_1022 029_SITE ELECTRICAL PLAN.dwg

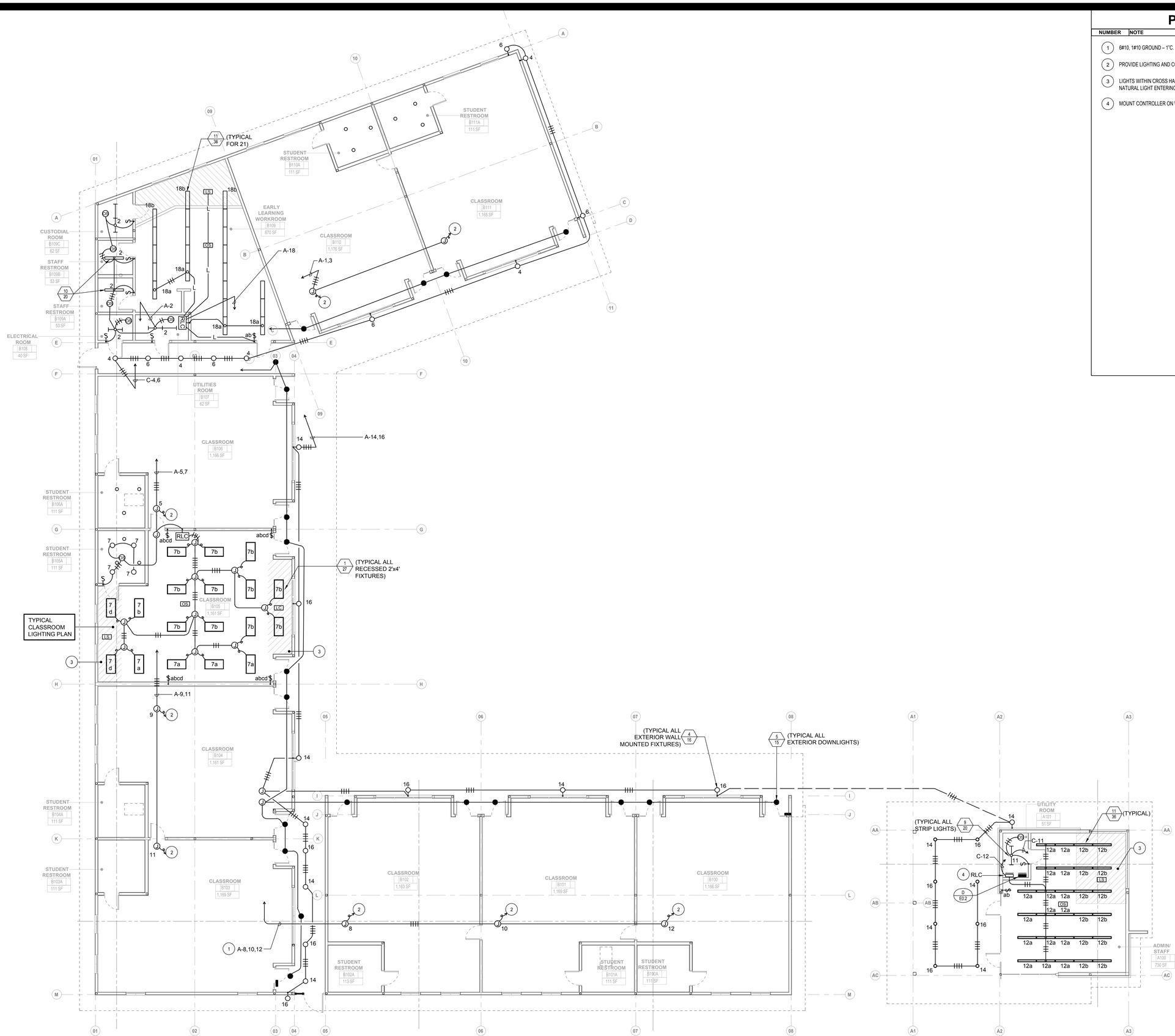

PLAN NOTES

NUMBER	NOTE
1	6#10, 1#10 GROUND – 1"C.
2	PROVIDE LIGHTING AND CONTROLS SIMILAR TO TYPICAL CLASSROOM.
3	LIGHTS WITHIN CROSS HATCHED AREA SHALL AUTOMATICALLY DIM IN RESPONSE TO NATURAL LIGHT ENTERING ROOM.
4	MOUNT CONTROLLER ON WALL NEXT TO PANEL.

LIGHTING PLAN

1
1/8"=1'-0"

DSA STAMP

STUDIO W ARCHITECTS

Studio W Architects
1930 H Street
Sacramento, California 95811
[T] 916.254.5600
www.StudioW-Architects.com

FBA Engineering
Consulting Electrical Engineers
150 Paularino Avenue Suite A120
Costa Mesa, CA 92626
949.852.9995 • 949.852.1657 (fax)
fbaeng.com
FBA Job Number: 1022.038

ARCHITECT	ENGINEER
LICENSED ARCHITECT BRIAN P WHITMORE No. C 30345 Ren. 9/30/25 STATE OF CALIFORNIA	REGISTERED PROFESSIONAL ENGINEER STEPHEN R. DAJTA No. E 10372 Exp. 09-30-24 ELECTRICAL STATE OF CALIFORNIA
DATE SIGNED: 06/24/2024	DATE SIGNED: 06/24/2024

GENERAL NOTES

1. This sheet is part of a set and is not to be used alone.
2. This sheet is not to be used for construction unless the architect's stamp and signature appear on the drawings and the status box indicated drawings have been released for construction.
3. These plans and prints thereof, as instruments of service, are owned by the architect and are for use on this project only. Reproduction and/or distribution without the prior written consent of the architect is forbidden.
4. Copyright Studio W Associates, Inc. 2022.

REVISION HISTORY

NO.	REMARKS	DATE

DRAWING STATUS

	DATE
○ DSA PLAN CHECK	
● DSA BACK CHECK	06/24/2024
○ BIDDING	
○ CONSTRUCTION	

KEY PLAN

BUENA PARK USD
6885 ORANGETHORPE AVE
BUENA PARK, CA 90620

SCHEMATIC DESIGN

CARL E. GILBERT ELEMENTARY SCHOOL
TK/PK CLASSROOMS & EARLY LEARNING BUILDING
7255 8TH STREET, BUENA PARK, CA 90621

LIGHTING PLAN

Date	Project Number
06/24/2024	23076
Application Number	Drawing Number
XX-XXXXXX	E2.1
Drawn / Checked	
BM / SZ	

FBA Engineering / Plot Date: 6/24/2024 11:52 AM / Plotted by: Garren Rigonan / Drawing Location: I:\1022\038\E2.1_1022.028_LIGHTING PLAN.dwg

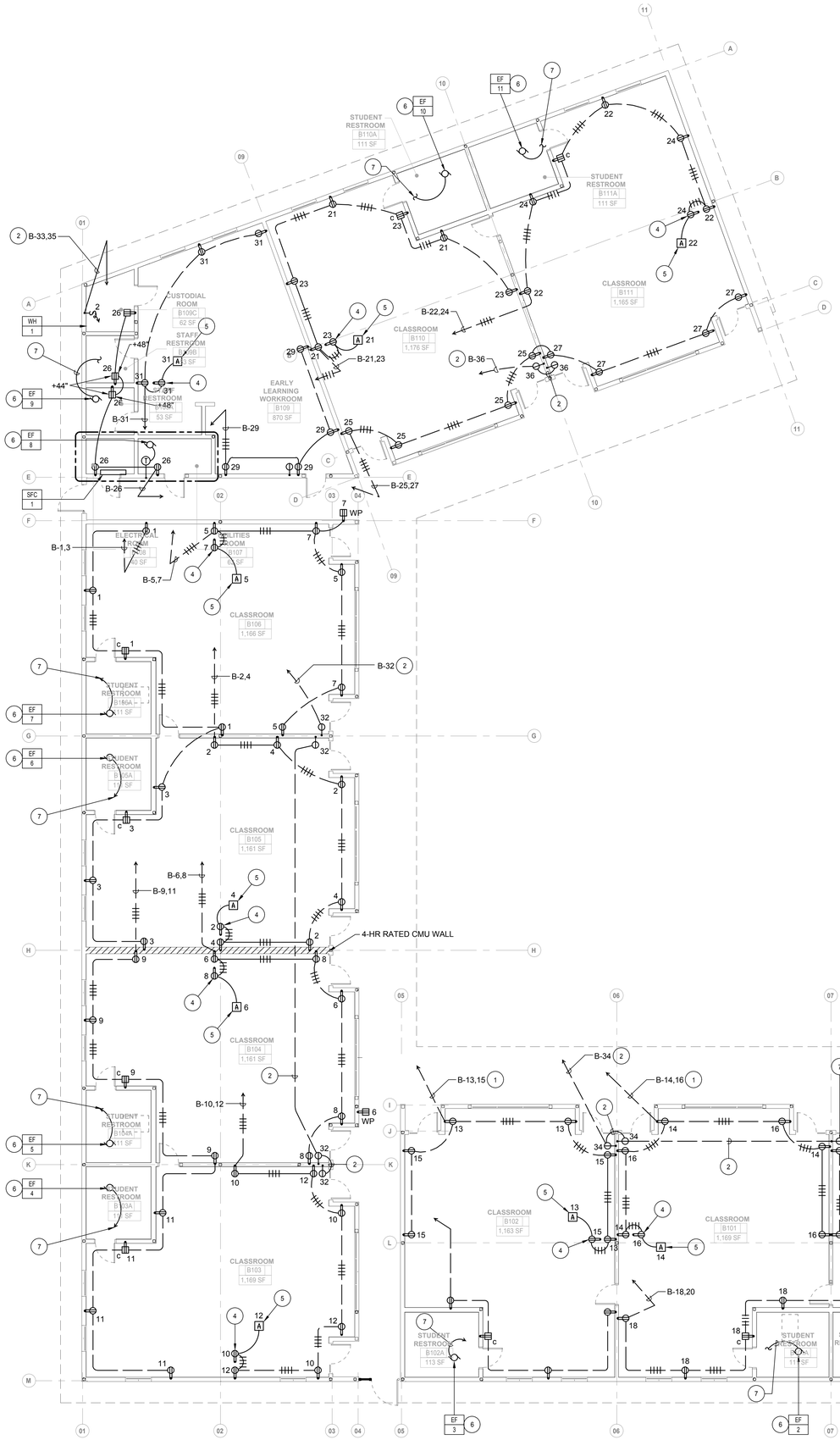

POWER PLAN

1
1/8"=1'-0"

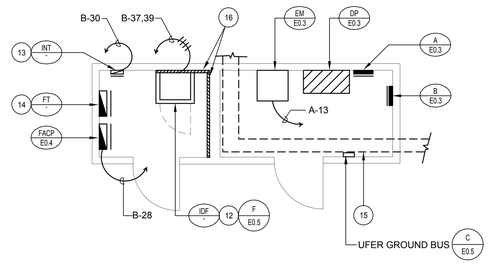

ENLARGED ELECTRICAL ROOM PLAN

2
1/4"=1'-0"

PLAN NOTES

NUMBER	NOTE
1	4#10, 1#12 GROUND - 3/4"C.
2	2#10, 1#10 GROUND - 3/4"C.
3	2#8, 1#8 GROUND - 1"C.
4	MOUNT RECEPTACLE ABOVE WHITE BOARD FOR VIDEO PROJECTOR. COORDINATE EXACT LOCATION WITH PROJECTOR INSTALLER.
5	CONNECT TO AUDIO-VIDEO "PLENUM-VAULT" AMPLIFIER IN CEILING SPACE.
6	PROVIDE MANUAL MOTOR STARTER TOGGLE SWITCH AT FAN.
7	2#12, 1#12 GROUND DOWN TO LOAD SIDE OF LIGHT SWITCH SO FAN IS POWERED BY SAME CIRCUIT AS LIGHT.
8	3#10, 1#10 GROUND - 3/4"C.
9	3/4"C. WITH CONTROL WIRING TO FAN COIL UNIT.
10	CONNECT TO POWER SUPPLY IN INTRUSION DETECTION CABINET.
11	CONNECT TO IDF RACK.
12	FLOOR STANDING IDF RACK.
13	18"W. x 30"H. x 6"D. TERMINAL CABINET FOR INTRUSION DETECTION SYSTEM.
14	18"W. x 30"H. x 6"D. TERMINAL CABINET FOR FIRE ALARM HVAC DUCT.
15	DO NOT MOUNT ELECTRICAL EQUIPMENT ON WALL BELOW DUCT.
16	3/4" PLYWOOD BACKBOARD FROM FLOOR TO +8' ON WALL.
17	30A-120V RECEPTACLE IN FLUSH OUTLET BOX AT +18".

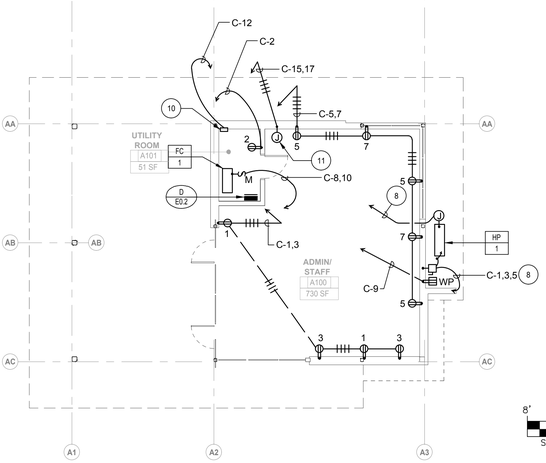

8' 0 4' 8'
SCALE: 1/8"= 1'-0"

N E S W

DSA STAMP

STUDIO W ARCHITECTS

Studio W Architects
1930 H Street
Sacramento, California 95811
[T] 916.254.5600
www.StudioW-Architects.com

FBA Engineering
Consulting Electrical Engineers
150 Paularino Avenue Suite A120
Costa Mesa, CA 92626
949.852.9995 • 949.852.1657 (fax)
fbaeng.com
FBA Job Number: 1022.038

ARCHITECT	ENGINEER
LICENSED ARCHITECT BRIAN P WHITMORE No. C 30345 Ren. 9/30/25 STATE OF CALIFORNIA	REGISTERED PROFESSIONAL ENGINEER STEPHEN N. DAJKA No. E 10372 Exp. 09-30-24 ELECTRICAL STATE OF CALIFORNIA
DATE SIGNED: 06/24/2024	DATE SIGNED: 06/24/2024

GENERAL NOTES

1. This sheet is part of a set and is not to be used alone.
2. This sheet is not to be used for construction unless the architect's stamp and signature appear on the drawings and the status box indicated drawings have been released for construction.
3. These plans and prints thereof, as instruments of service, are owned by the architect and are for use on this project only. Reproduction and/or distribution without the prior written consent of the architect is forbidden.
4. Copyright Studio W Associates, Inc. 2022.

REVISION HISTORY

NO.	REMARKS	DATE

DRAWING STATUS

	DATE
○ DSA PLAN CHECK	
● DSA BACK CHECK	06/24/2024
○ BIDDING	
○ CONSTRUCTION	

KEY PLAN

BUENA PARK USD
6885 ORANGETHORPE AVE
BUENA PARK, CA 90620

SCHEMATIC DESIGN

CARL E. GILBERT ELEMENTARY SCHOOL
TK/PK CLASSROOMS & EARLY LEARNING BUILDING
7255 8TH STREET, BUENA PARK, CA 90621

POWER PLAN

Date	Project Number
06/24/2024	23076
Application Number	Drawing Number
XX-XXXXXX	E2.2
Drawn / Checked	
BM / SZ	

FBA Engineering / Plot Date: 6/24/2024 11:52 AM / Plotted by: Garren Rigonan / Drawing Location: I:\1022\038\E2.2_1022.028_POWER PLAN.dwg

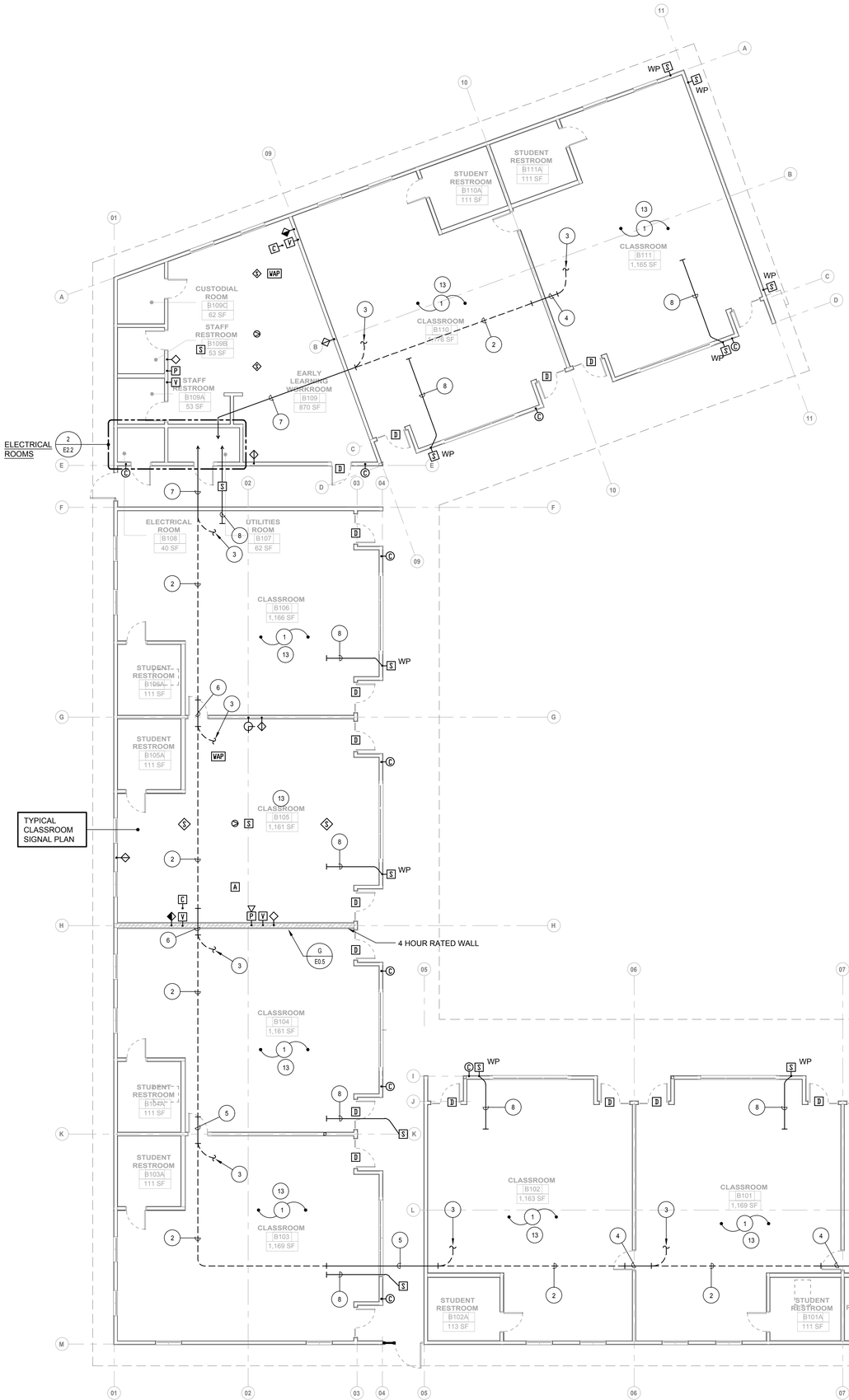

PLAN NOTES

NUMBER	NOTE
1	PROVIDE PROJECTOR SYSTEM, AUDIO-VIDEO OUTLETS, CLOCK, SPEAKERS, MOTION SENSORS, COMPUTER OUTLETS, WIRELESS ACCESS DEVICE, CONDUITS AND CABLING SIMILAR TO TYPICAL CLASSROOM SIGNAL PLAN.
2	APPROXIMATE LOCATION OF LOW VOLTAGE CABLING SUSPENDED ABOVE ACCESSIBLE CEILING FOR SERVICE TO LOW VOLTAGE OUTLETS.
3	PROVIDE LOW VOLTAGE CABLING TO SIGNAL SYSTEM OUTLETS IN ROOM.
4	PROVIDE THE FOLLOWING CONDUITS STUBBED BETWEEN ACCESSIBLE CEILING SPACES FOR LOW VOLTAGE CABLING AS FOLLOWS: 1"C. INTRUSION DETECTION 2"C. STRUCTURED CABLING FOR COMPUTER
5	PROVIDE THE FOLLOWING CONDUITS STUBBED BETWEEN ACCESSIBLE CEILING SPACES FOR LOW VOLTAGE CABLING AS FOLLOWS: 1"C. INTRUSION DETECTION 3"C. STRUCTURED CABLING FOR COMPUTER
6	PROVIDE THE FOLLOWING CONDUITS STUBBED BETWEEN ACCESSIBLE CEILING SPACES FOR LOW VOLTAGE CABLING AS FOLLOWS: 2"C. INTRUSION DETECTION 4"C. STRUCTURED CABLING FOR COMPUTER
7	PROVIDE THE FOLLOWING CONDUITS STUBBED FROM ACCESSIBLE CEILING SPACE TO RESPECTIVE TERMINALS IN ELECTRICAL ROOM FOR LOW VOLTAGE CABLING AS FOLLOWS: 2"C. INTRUSION DETECTION 4"C. STRUCTURED CABLING FOR COMPUTER
8	PROVIDE 3/4"C. STUBBED INTO ACCESSIBLE CEILING SPACE FOR LOW VOLTAGE CABLING TO SPEAKER.
9	2" C. STUBBED INTO ACCESSIBLE CEILING SPACE FOR INTRUSION DETECTION SYSTEM CABLING.
10	3" C. STUBBED INTO ACCESSIBLE CEILING SPACE FOR COMPUTER CABLING
11	18" W X 30"H X 6" D TERMINAL CABINET
12	WALL MOUNTED RACK
13	PROVIDE PORTABLE ASSISTIVE LISTENING SYSTEM FOR USE IN ROOM PER SECTION 275126

DSA STAMP

STUDIO W ARCHITECTS

Studio W Architects
1930 H Street
Sacramento, California 95811
[T] 916.254.5600
www.StudioW-Architects.com

FBA Engineering
Consulting Electrical Engineers
150 Paularino Avenue Suite A120
Costa Mesa, CA 92626
949.852.9995 • 949.852.1657 (fax)
fbaeng.com
FBA Job Number: 1022.038

ARCHITECT

LICENSED ARCHITECT
BRIAN P WHITMORE
No. C 30345
Ren. 9/30/25
STATE OF CALIFORNIA
DATE SIGNED: 06/24/2024

ENGINEER

REGISTERED PROFESSIONAL ENGINEER
STEPHEN R. ZAJAC
No. E 10372
Exp. 09-30-24
ELECTRICAL
STATE OF CALIFORNIA
DATE SIGNED: 06/24/2024

GENERAL NOTES

1. This sheet is part of a set and is not to be used alone.
2. This sheet is not to be used for construction unless the architect's stamp and signature appear on the drawings and the status box indicated drawings have been released for construction.
3. These plans and prints thereof, as instruments of service, are owned by the architect and are for use on this project only. Reproduction and/or distribution without the prior written consent of the architect is forbidden.
4. Copyright Studio W Associates, Inc. 2022.

REVISION HISTORY

NO.	REMARKS	DATE

DRAWING STATUS

	DATE
○ DSA PLAN CHECK	
● DSA BACK CHECK	06/24/2024
○ BIDDING	
○ CONSTRUCTION	

KEY PLAN

BUENA PARK USD
6885 ORANGETHORPE AVE
BUENA PARK, CA 90620

SCHEMATIC DESIGN

CARL E. GILBERT ELEMENTARY SCHOOL
TK/PK CLASSROOMS & EARLY LEARNING BUILDING
7255 8TH STREET, BUENA PARK, CA 90621

SIGNAL PLAN

Date	Project Number
06/24/2024	23076
Application Number	Drawing Number
XX-XXXXXX	E2.3
Drawn / Checked	
BM / SZ	

SIGNAL PLAN

1
1/8"=1'-0"

FBA Engineering / Plot Date: 6/24/2024 11:52 AM / Plotted by: Garren Rigonan / Drawing Location: I:\1022\038\E2.3_1022.028_SIGNAL PLAN.dwg

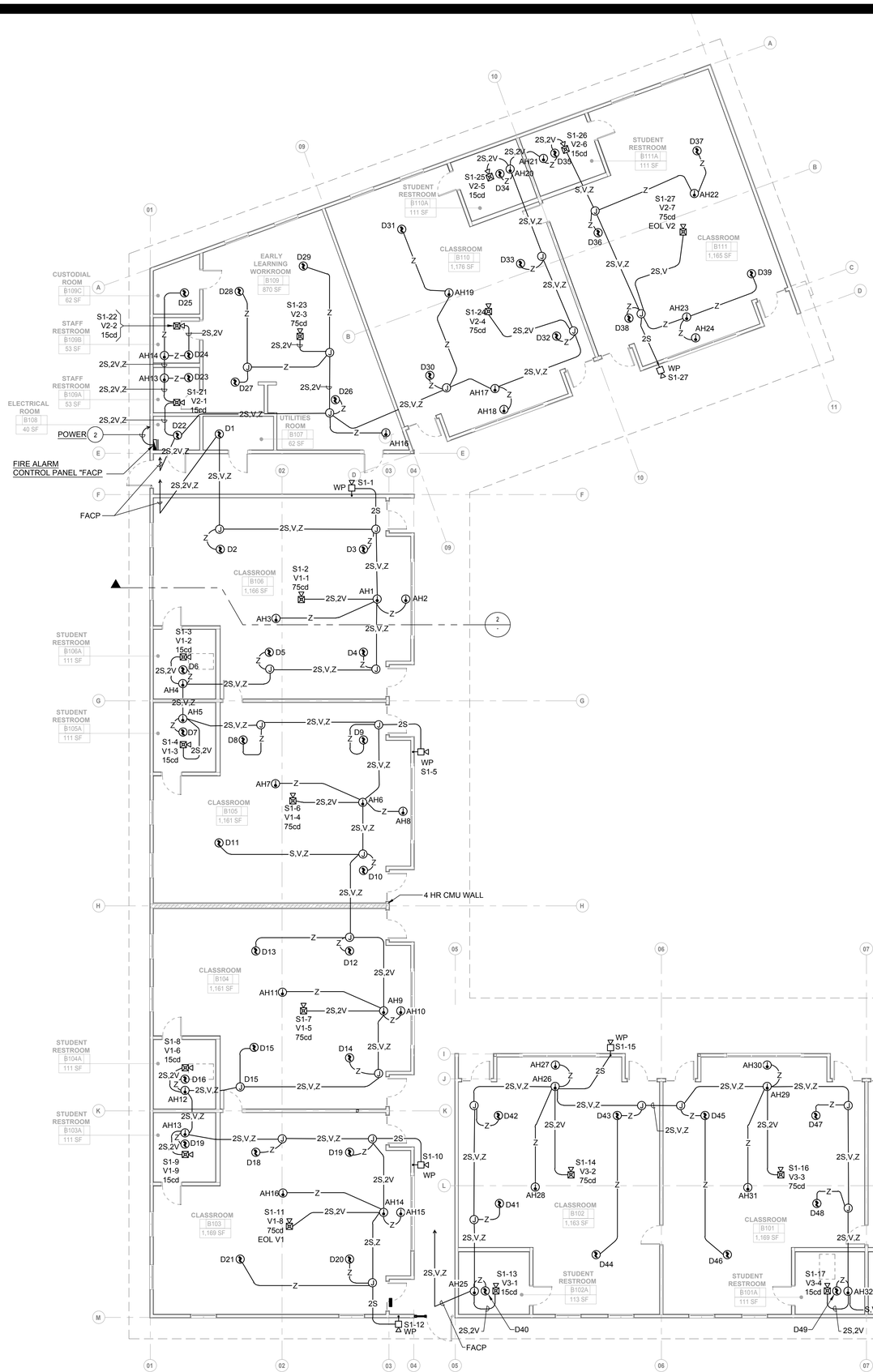

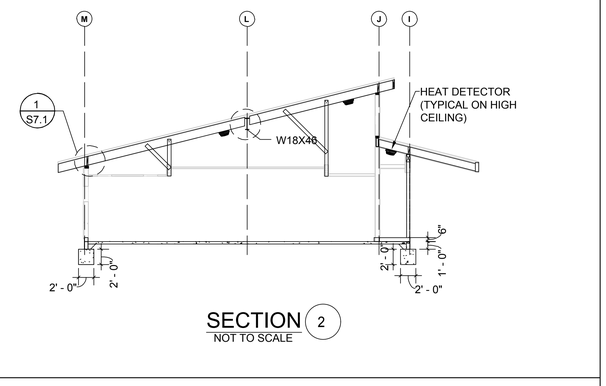

SECTION 2
NOT TO SCALE

PLAN NOTES

NUMBER	NOTE
1	12" W X 18" H X 4" D. CABINET PAINTED RED FOR FIRE ALARM
2	POWER CONNECTION PER PLAN SHEET E2.2

DSA STAMP

STUDIO W ARCHITECTS

Studio W Architects
1930 H Street
Sacramento, California 95811
[T] 916.254.5600
www.StudioW-Architects.com

FBA Engineering
Consulting Electrical Engineers
150 Paularino Avenue Suite A120
Costa Mesa, CA 92626
949.852.9995 • 949.852.1657 (fax)
fbaeng.com
FBA Job Number: 1022.038

ARCHITECT	ENGINEER
LICENSED ARCHITECT BRIAN P WHITMORE No. C 30345 Ren. 9/30/25 STATE OF CALIFORNIA	REGISTERED PROFESSIONAL ENGINEER STEPHEN R. DAVIS No. E 10372 Exp. 09-30-24 ELECTRICAL STATE OF CALIFORNIA
DATE SIGNED: 06/24/2024	DATE SIGNED: 06/24/2024

GENERAL NOTES

1. This sheet is part of a set and is not to be used alone.
2. This sheet is not to be used for construction unless the architect's stamp and signature appear on the drawings and the status box indicated drawings have been released for construction.
3. These plans and prints thereof, as instruments of service, are owned by the architect and are for use on this project only. Reproduction and/or distribution without the prior written consent of the architect is forbidden.
4. Copyright Studio W Associates, Inc. 2022.

REVISION HISTORY

NO.	REMARKS	DATE

DRAWING STATUS

	DATE
○ DSA PLAN CHECK	
● DSA BACK CHECK	06/24/2024
○ BIDDING	
○ CONSTRUCTION	

KEY PLAN

BUENA PARK USD
6885 ORANGETHORPE AVE
BUENA PARK, CA 90620

SCHEMATIC DESIGN

CARL E. GILBERT ELEMENTARY SCHOOL
TK/PK CLASSROOMS & EARLY LEARNING BUILDING
7255 8TH STREET, BUENA PARK, CA 90621

FIRE ALARM PLAN

8' 0 4' 8'
SCALE: 1/8"= 1'-0"

Date	Project Number
06/24/2024	23076
Application Number XX-XXXXXX	Drawing Number E2.4
Drawn BM / Checked SZ	

FIRE ALARM PLAN
1
1/8"=1'-0"

FBA Engineering / Plot Date: 6/24/2024 4:52 PM / Plotted by: Trevor C. Flores / Drawing Location: I:\1022\038\E2.4_ 1022038_FIRE ALARM PLAN.dwg

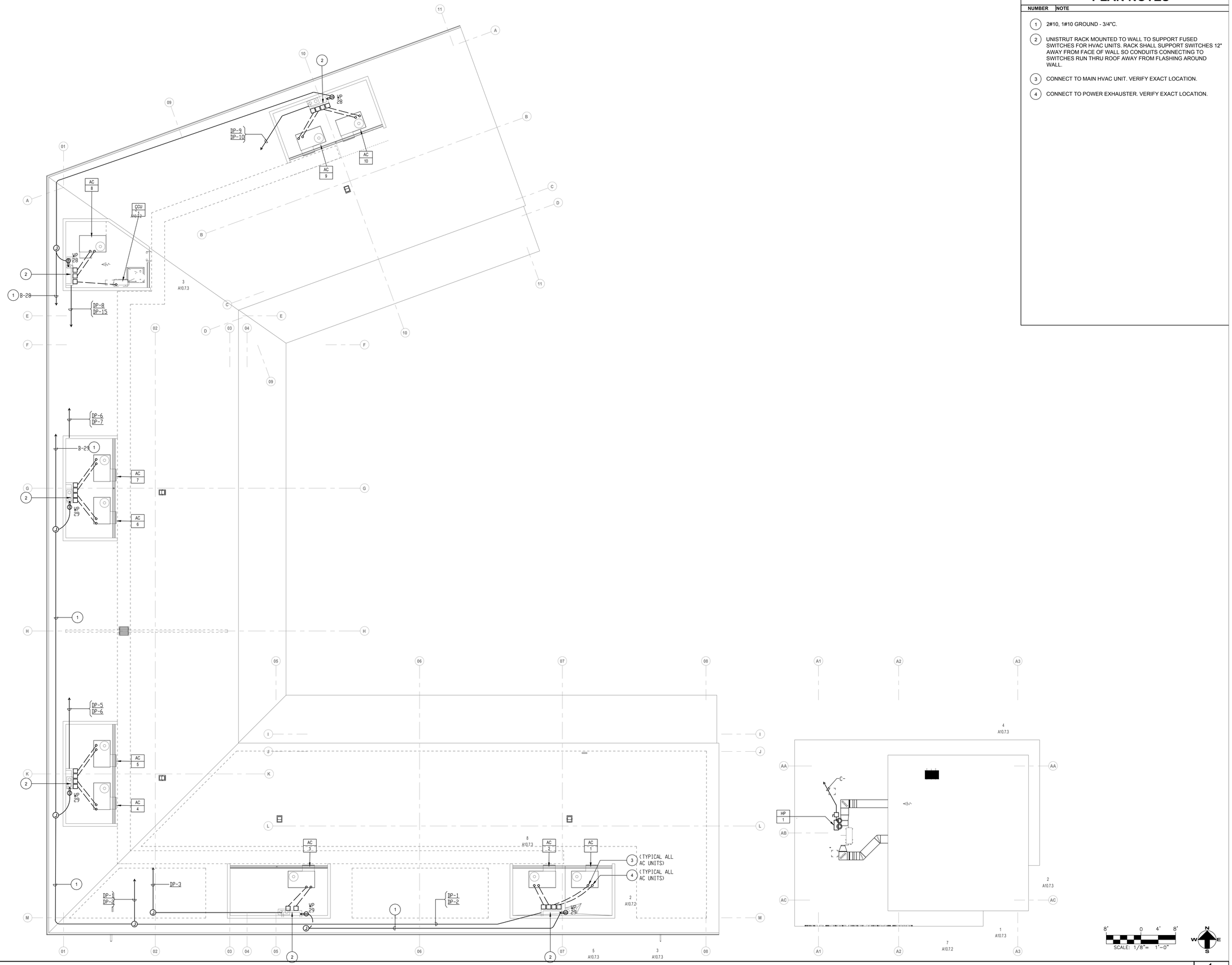

PLAN NOTES

NUMBER	NOTE
1	2#10, 1#10 GROUND - 3/4"C.
2	UNISTRUT RACK MOUNTED TO WALL TO SUPPORT FUSED SWITCHES FOR HVAC UNITS. RACK SHALL SUPPORT SWITCHES 12" AWAY FROM FACE OF WALL SO CONDUITS CONNECTING TO SWITCHES RUN THRU ROOF AWAY FROM FLASHING AROUND WALL.
3	CONNECT TO MAIN HVAC UNIT. VERIFY EXACT LOCATION.
4	CONNECT TO POWER EXHAUSTER. VERIFY EXACT LOCATION.

ROOF ELECTRICAL PLAN

1
1/8"=1'-0"

DSA STAMP

STUDIO W ARCHITECTS

Studio W Architects
1930 H Street
Sacramento, California 95811
[T] 916.254.5600
www.StudioW-Architects.com

FBA Engineering
Consulting Electrical Engineers
150 Paularino Avenue Suite A120
Costa Mesa, CA 92626
949.852.9995 • 949.852.1657 (fax)
fbaeng.com
FBA Job Number: 1022.038

ARCHITECT

LICENSED ARCHITECT
BRIAN P WHITMORE
No. C 30345
Ren. 9/30/25
STATE OF CALIFORNIA
DATE SIGNED: 06/24/2024

ENGINEER

REGISTERED PROFESSIONAL ENGINEER
STEPHEN R. DAITCH
No. E 10372
Exp. 09-30-24
ELECTRICAL
STATE OF CALIFORNIA
DATE SIGNED: 06/24/2024

GENERAL NOTES

1. This sheet is part of a set and is not to be used alone.
2. This sheet is not to be used for construction unless the architect's stamp and signature appear on the drawings and the status box indicated drawings have been released for construction.
3. These plans and prints thereof, as instruments of service, are owned by the architect and are for use on this project only. Reproduction and/or distribution without the prior written consent of the architect is forbidden.
4. Copyright Studio W Associates, Inc. 2022.

REVISION HISTORY

NO.	REMARKS	DATE

DRAWING STATUS

	DATE
○ DSA PLAN CHECK	
● DSA BACK CHECK	06/24/2024
○ BIDDING	
○ CONSTRUCTION	

KEY PLAN

BUENA PARK USD
6885 ORANGETHORPE AVE
BUENA PARK, CA 90620

SCHEMATIC DESIGN

CARL E. GILBERT ELEMENTARY SCHOOL
TK/PK CLASSROOMS & EARLY LEARNING BUILDING
7255 8TH STREET, BUENA PARK, CA 90621

ROOF ELECTRICAL PLAN

Date	Project Number
06/24/2024	23076
Application Number	Drawing Number
XX-XXXXXX	E2.5
Drawn / Checked	
BM / SZ	

FBA Engineering / Plot Date: 6/24/2024 11:52 AM / Plotted by: Garren Rignan / Drawing Location: I:\1022\038\E2.5_1022.028_ROOF ELECTRICAL PLAN.dwg

STATE OF CALIFORNIA
Indoor Lighting CALIFORNIA ENERGY COMMISSION

CERTIFICATE OF COMPLIANCE		NRCC-LTI-E
This document is used to demonstrate compliance with requirements in 110.9, 110.12(c), 130.0, 130.1, 140.6 and 141.0(b)2 for indoor lighting scopes using the prescriptive path for nonresidential and hotel/motel occupancies. It is also used to document compliance with requirements in 160.5, 170.2(e) and 180.2(b)4 for indoor lighting scopes using the prescriptive path for multifamily occupancies. Multifamily includes dormitory and senior living facilities.		
Project Name: Carl E. Gilbert Elementary School - TK/PK Classrooms & Early Learning Building	**Report Page:**	**(Page 1 of 9)**
Project Address: 7255 8th Street	**Date Prepared:**	3/21/2024

A. GENERAL INFORMATION				
01	Project Location (city)	Buena Park	04	Total Conditioned Floor Area (ft²)	12,109
02	Climate Zone	8	05	Total Unconditioned Floor Area (ft²)	1,260
03	Occupancy Types Within Project (select all that apply):		06	# of Stories (Habitable Above Grade)	1

● Classroom ● Office ● Support Areas ● Warehouse

B. PROJECT SCOPE

This table includes any lighting systems that are within the scope of the permit application and are demonstrating compliance using the prescriptive path outlined in 140.6 / 170.2(e) or 141.0(b)2 / 180.2(b)4 for alterations.

Scope of Work	Conditioned Spaces		Unconditioned Spaces	
01	02	03	04	05
My Project Consists of (check all that apply):.	Calculation Method	Area (ft²)	Calculation Method	Area (ft²)
☒ New Lighting System	Area Category Method	12109	Area Category Method	1260
☐ New Lighting System - Parking Garage				
Total Area of Work (ft²)	12109		1260	

STATE OF CALIFORNIA
Indoor Lighting CALIFORNIA ENERGY COMMISSION

CERTIFICATE OF COMPLIANCE		NRCC-LTI-E
Project Name: Carl E. Gilbert Elementary School - TK/PK Classrooms & Early Learning Building	**Report Page:**	**(Page 2 of 9)**
	Date Prepared:	3/21/2024

C. COMPLIANCE RESULTS

If any cell on this table says "DOES NOT COMPLY" or "COMPLIES with Exceptional Conditions" refer to Table D. for guidance.

Lighting in conditioned and unconditioned spaces must not be combined for compliance per 140.6(b)1 / 170.2(e)	Allowed Lighting Power per 140.6(b) / 170.2(e) (Watts)						Adjusted Lighting Power per 140.6(a) / 170.2(e) (Watts)					Compliance Results
	01	02	03	04		05	06	07		08		09
	Complete Building 140.6(c)1	Area Category 140.6(c)2 / 170.2(e)4	Area Category Additional 140.6(c)2G / 170.2(e)4Av (+)	Tailored 140.6(c)3 / 170.2(e)4B (+)	=	**Total Allowed** (Watts)	Total Designed (Watts)	Adjustments PAF Lighting Control Credits 140.6(a)2 / 170.2(e)1B (-)	=	**Total Adjusted** (Watts) *Includes Adjustments		**05 must be >= 08 140.6 / 170.2(e)**
	(See Table I)	(See Table I)	(See Table J)	(See Table K)			(See Table F)	(See Table P)				
Conditioned		7,265.4	0		=	7,265	≥ 7,258	0	=	7258		COMPLIES
Unconditioned		767.4	0		=	768	≥ 664	0	=	664		COMPLIES
Controls Compliance (See Table H for Details)												COMPLIES
Rated Power Reduction Compliance (See Table Q for Details)												

D. EXCEPTIONAL CONDITIONS

This table is auto-filled with uneditable comments because of selections made or data entered in tables throughout the form.

E. ADDITIONAL REMARKS

This table includes remarks made by the permit applicant to the Authority Having Jurisdiction.

STATE OF CALIFORNIA
Indoor Lighting CALIFORNIA ENERGY COMMISSION

CERTIFICATE OF COMPLIANCE		NRCC-LTI-E
Project Name: Carl E. Gilbert Elementary School - TK/PK Classrooms & Early Learning Building	**Report Page:**	**(Page 3 of 9)**
	Date Prepared:	3/21/2024

F. INDOOR LIGHTING FIXTURE SCHEDULE

This table includes all planned permanent and portable lighting other than dwelling unit/ hotel/ motel room lighting. Multifamily dwelling unit and hotel/motel room lighting is documented in Table T. If using Table T to document lighting in multifamily common use areas providing shared provisions for living, eating, cooking or sanitation, those luminaires are not included here.

Designed Wattage: Conditioned Spaces

01	02	03	04	05	06	07	08	09	10	
Name or Item Tag	Complete Luminaire Description	Modular (Track) Fixture	Small Aperture & Color Change[1]	Watts per luminaire[2]	How is Wattage determined	Total Number of Luminaires	Excluded per 140.6(a)3 / 170.2(e)2C	Design Watts	Field Inspector	
									Pass	Fail
TYPE 1	TYPE 1- 2X4' WITH STEEL HOUSING	No	NA	27	Mfr. Spec	108	No	2,916	☐	☐
TYPE 2	TYPE 2- LED DOWNLIGHT WITH 6" OPEN APERTURE	No	NA	14	Mfr. Spec	27	No	378	☐	☐
TYPE 3	TYPE 3- LED CURVILINEAR DOWNLIGHT WITH ALUMINUM HOUSING	No	NA	72	Mfr. Spec	39	No	2,808	☐	☐
TYPE 3A	TYPE 3A- LED CURVILINEAR DOWNLIGHT WITH UP AND DOWN LIGHT, PENDANT MOUNTED	No	NA	136	Mfr. Spec	4	No	544	☐	☐
TYPE 3B	TYPE 3B- LED CURVILEAR DOWNLIGHT WITH UPP AND DOWN LIGHT, 6 SECTION CONNECTION	No	NA	204	Mfr. Spec	3	No	612	☐	☐
						Total Designed Watts: CONDITIONED SPACES		7,258		

Designed Wattage: Unconditioned Spaces

01	02	03	04	05	06	07	08	09	10	
Name or Item Tag	Complete Luminaire Description	Modular (Track) Fixture	Small Aperture & Color Change[1]	Watts per luminaire[2]	How is Wattage determined	Total Number of Luminaires	Excluded per 140.6(a)3 / 170.2(e)2C	Design Watts	Field Inspector	
									Pass	Fail
TYPE 10	TYPE 10- LED 1'X4' WITH STEEL HOUSING	No	NA	20	Mfr. Spec	2	No	40	☐	☐

STATE OF CALIFORNIA
Indoor Lighting CALIFORNIA ENERGY COMMISSION

CERTIFICATE OF COMPLIANCE		NRCC-LTI-E
Project Name: Carl E. Gilbert Elementary School - TK/PK Classrooms & Early Learning Building	**Report Page:**	**(Page 4 of 9)**
	Date Prepared:	3/21/2024

F. INDOOR LIGHTING FIXTURE SCHEDULE

TYPE 2	TYPE 2- LED DOWNLIGHT WITH 6" OPEN APERTURE	No	NA	14	Mfr. Spec	36	No	504	☐	☐
TYPE 9	TYPE 9- LED STRIPLIGHT WITH STEEL HOUSING	No	NA	20	Mfr. Spec	6	No	120	☐	☐
						Total Designed Watts: UNCONDITIONED SPACES		664		

[1]*FOOTNOTE: Design Watts for small aperture and color changing luminaires which qualify per 140.6(a)4B / 170.2(e)2D is adjusted to be 75% /80% of their rated wattage. Table F automatically makes this adjustment, the permit applicant should enter full rated wattage in column 05.*

[2]*Authority Having Jurisdiction may ask for Luminaire cut sheets to confirm wattage used for compliance per 130.0(c) / 160.5(b). Wattage used must be the maximum rated for the luminaire, not the lamp.*

G. MODULAR LIGHTING SYSTEMS

This section does not apply to this project.

H. INDOOR LIGHTING CONTROLS (Not including PAFs)

This table includes lighting controls for conditioned and unconditioned spaces.

Building Level Controls

01	02	03	
		Field Inspector	
		Pass	Fail
Mandatory Demand Response 110.12(c)	Shut-off controls 130.1(c) / 160.5(b)4C		
Required >= 4,000W subject to multilevel	See Area/Space Level Controls	☐	☐

STATE OF CALIFORNIA
Indoor Lighting CALIFORNIA ENERGY COMMISSION

CERTIFICATE OF COMPLIANCE		NRCC-LTI-E
Project Name: Carl E. Gilbert Elementary School - TK/PK Classrooms & Early Learning Building	**Report Page:**	**(Page 5 of 9)**
	Date Prepared:	3/21/2024

H. INDOOR LIGHTING CONTROLS (Not including PAFs)

Area Level Controls

04	05	06	07	08	09	10	11	12	
Area Description	Complete Building or Area Category Primary Function Area	Manual Area Controls 130.1(a) / 160.5(b)4A	Multi-Level Controls 130.1(b) / 160.5(b)4B	Shut-Off Controls 130.1(c) // 160.5(b)4C	Primary/Sky lit Daylighting 130.1(d) / 160.5(b)4D	Secondary Daylighting 130.1(d) / 160.5(b)4D	Interlocked Systems 140.6(a)1/ 170.2(e)2A	Field Inspector	
								Pass	Fail
CLASSROOMS	Classroom, Lecture, or Training Vocational	Readily Accessible	Dimmer	Occupancy Sensor	Included	Included	No	☐	☐
RESTROOMS	Restroom	Readily Accessible	NA: Restrooms	Occupancy Sensor	NA: Rm < 24sf Glazing	NA: Rm < 24sf Glazing	No	☐	☐
OFFICES	Office (>250 square feet)	Readily Accessible	Dimmer	Occupancy Sensor	Included	Included	No	☐	☐
							13		
							Plan Sheet Showing Daylit Zones:		

I. LIGHTING POWER ALLOWANCE: COMPLETE BUILDING OR AREA CATEGORY METHODS

Each area complying using the Complete Building or Area Category Methods per 140.6(b) are included in this table. Column 06 indicates if additional lighting power allowances per 140.6(c) or adjustments per 140.6(a) are being used .

Conditioned Spaces

01	02	03	04	05	06	
Area Description	Complete Building or Area Category Primary Function Area	Allowed Density (W/ft²)	Area (ft²)	Allowed Wattage (Watts)	Additional Allowance / Adjustment	
					Area Category	PAF
Classroom	Classroom, Lecture, or Training Vocational	0.6	1,167	700.2	No	No
Classroom	Classroom, Lecture, or Training Vocational	0.6	1,170	702	No	No
Classroom	Classroom, Lecture, or Training Vocational	0.6	1,164	698.4	No	No
Classroom	Classroom, Lecture, or Training Vocational	0.6	1,170	702	No	No

STATE OF CALIFORNIA
Indoor Lighting CALIFORNIA ENERGY COMMISSION

CERTIFICATE OF COMPLIANCE		NRCC-LTI-E
Project Name: Carl E. Gilbert Elementary School - TK/PK Classrooms & Early Learning Building	**Report Page:**	**(Page 6 of 9)**
	Date Prepared:	3/21/2024

I. LIGHTING POWER ALLOWANCE: COMPLETE BUILDING OR AREA CATEGORY METHODS

Classroom	Classroom, Lecture, or Training Vocational	0.6	1,161	696.6	No	No
Classroom	Classroom, Lecture, or Training Vocational	0.6	1,161	696.6	No	No
Classroom	Classroom, Lecture, or Training Vocational	0.6	1,162	697.2	No	No
Classroom	Classroom, Lecture, or Training Vocational	0.6	870	522	No	No
Classroom	Classroom, Lecture, or Training Vocational	0.6	1,178	706.8	No	No
Classroom	Classroom, Lecture, or Training Vocational	0.6	1,166	699.6	No	No
Office	Office (>250 square feet)	0.6	740	444	No	No
			TOTALS:	12,109	7,265.4	See Tables J, or P for detail

Unconditioned Spaces

01	02	03	04	05	06	
Area Description	Complete Building or Area Category Primary Function Area	Allowed Density (W/ft²)	Area (ft²)	Allowed Wattage (Watts)	Additional Allowance / Adjustment	
					Area Category	PAF
RESTROOM	Restroom	0.65	105	68.2	No	No
RESTROOM	Restroom	0.65	105	68.2	No	No
RESTROOM	Restroom	0.65	107	69.6	No	No
RESTROOM	Restroom	0.65	105	68.2	No	No
RESTROOM	Restroom	0.65	105	68.2	No	No
RESTROOM	Restroom	0.65	105	68.2	No	No
RESTROOM	Restroom	0.65	105	68.2	No	No
RESTROOM	Restroom	0.65	108	70.2	No	No
STORAGE	Commercial Industrial Warehouse	0.4	114	45.6	No	No
ELECT. ROOM	Electrical Mechancial Telephone Room	0.4	40	16	No	No
RESTROOM	Restroom	0.65	105	68.2	No	No
RESTROOM	Restroom	0.65	105	68.2	No	No
STORAGE	Commercial Industrial Warehouse	0.4	51	20.4	No	No
			TOTALS:	1,260	767.4	See Tables J, or P for detail

STATE OF CALIFORNIA
Indoor Lighting CALIFORNIA ENERGY COMMISSION

CERTIFICATE OF COMPLIANCE		NRCC-LTI-E
Project Name: Carl E. Gilbert Elementary School - TK/PK Classrooms & Early Learning Building	**Report Page:**	**(Page 7 of 9)**
	Date Prepared:	3/21/2024

J. ADDITIONAL ALLOWANCE: AREA CATEGORY METHOD QUALIFYING LIGHTING SYSTEM

This section does not apply to this project.

K. TAILORED METHOD GENERAL LIGHTING POWER ALLOWANCE

This section does not apply to this project.

L. ADDITIONAL LIGHTING ALLOWANCE: TAILORED WALL DISPLAY

This section does not apply to this project.

M. ADDITIONAL LIGHTING ALLOWANCE: TAILORED FLOOR AND TASK LIGHTING

This section does not apply to this project.

N. ADDITIONAL LIGHTING ALLOWANCE: TAILORED DECORATIVE /SPECIAL EFFECTS

This section does not apply to this project.

O. ADDITIONAL LIGHTING ALLOWANCE: TAILORED VERY VALUABLE MERCHANDISE

This section does not apply to this project.

P. POWER ADJUSTMENT: LIGHTING CONTROL CREDIT (POWER ADJUSTMENT FACTOR (PAF))

This section does not apply to this project.

Q. RATED POWER REDUCTION COMPLIANCE FOR ONE-FOR-ONE ALTERATIONS

This section does not apply to this project.

STATE OF CALIFORNIA
Indoor Lighting CALIFORNIA ENERGY COMMISSION

CERTIFICATE OF COMPLIANCE		NRCC-LTI-E
Project Name: Carl E. Gilbert Elementary School - TK/PK Classrooms & Early Learning Building	**Report Page:**	**(Page 8 of 9)**
	Date Prepared:	3/21/2024

R. 80% LIGHTING POWER FOR ALL ALTERATIONS - CONTROLS EXCEPTIONS

This section does not apply to this project.

S. DAYLIGHT DESIGN POWER ADJUSTMENT FACTOR (PAF)

This section does not apply to this project.

T. DWELLING UNIT LIGHTING

This section does not apply to this project.

U. DECLARATION OF REQUIRED CERTIFICATES OF INSTALLATION

Selections have been made based on information provided in this document. If any selections have been changed by permit applicant, an explanation should be included in Table E. Additional Remarks. These documents must be provided to the building inspector during construction and can be found online

Form/Title
NRCI-LTI-E - Must be submitted for all buildings

V. DECLARATION OF REQUIRED CERTIFICATES OF ACCEPTANCE

Selections have been made based on information provided in this document. If any selections have been changed by the permit applicant, an explanation should be included in Table E. Additional Remarks. These documents must be provided to the building inspector during construction and any with "-A" in the form name must be completed through an Acceptance Test Technician Certification Provider (ATTCP). For more information visit: http://www.energy.ca.gov/title24/attcp/providers.html

Form/Title	Systems/Spaces To Be Field Verified
NRCA-LTI-02-A - Must be submitted for occupancy sensors and automatic time switch controls.	CLASSROOMS; RESTROOMS; OFFICES;
NRCA-LTI-03-A - Must be submitted for automatic daylight controls.	CLASSROOMS; OFFICES;
NRCA-LTI-04-A - Must be submitted for demand responsive lighting controls.	Whole Building Demand Response;

STATE OF CALIFORNIA
Indoor Lighting CALIFORNIA ENERGY COMMISSION

CERTIFICATE OF COMPLIANCE		NRCC-LTI-E
Project Name: Carl E. Gilbert Elementary School - TK/PK Classrooms & Early Learning Building	**Report Page:**	**(Page 9 of 9)**
Project Address: 7255 8th Street	**Date Prepared:**	3/21/2024

DOCUMENTATION AUTHOR'S DECLARATION STATEMENT

I certify that this Certificate of Compliance documentation is accurate and complete.

Documentation Author Name: Stephen R. Zajicek P.E.	Documentation Author Signature:
Company: FBA Engineering	Signature Date: 2024-03-21
Address: 150 Paularino Avenue Suite A120	CEA/ HERS Certification Identification (if applicable): E10372
City/State/Zip: Costa Mesa CA 92626	Phone: 949-852-9995

RESPONSIBLE PERSON'S DECLARATION STATEMENT

I certify the following under penalty of perjury, under the laws of the State of California:

1. The information provided on this Certificate of Compliance is true and correct.
2. I am eligible under Division 3 of the Business and Professions Code to accept responsibility for the building design or system design identified on this Certificate of Compliance (responsible designer)
3. The energy features and performance specifications, materials, components, and manufactured devices for the building design or system design identified on this Certificate of Compliance conform to the requirements of Title 24, Part 1 and Part 6 of the California Code of Regulations.
4. The building design features or system design features identified on this Certificate of Compliance are consistent with the information provided on other applicable compliance documents, worksheets, calculations, plans and specifications submitted to the enforcement agency for approval with this building permit application.
5. I will ensure that a completed signed copy of this Certificate of Compliance shall be made available with the building permit(s) issued for the building, and made available to the enforcement agency for all applicable inspections. I understand that a completed signed copy of this Certificate of Compliance is required to be included with the documentation the builder provides to the building owner at occupancy.

Responsible Designer Name: Stephen R. Zajicek P.E.	Responsible Designer Signature:
Company: FBA Engineering	Date Signed: 2024-03-21
Address: 150 Paularino Ave. Suite A120	License: E10372
City/State/Zip: Costa Mesa CA 92626	Phone: 949-852-9995

DSA STAMP

STUDIO W ARCHITECTS
Studio W Architects
1930 H Street
Sacramento, California 95811
[T] 916.254.5600
www.StudioW-Architects.com

FBA Engineering
Consulting Electrical Engineers
150 Paularino Avenue Suite A120
Costa Mesa, CA 92626
949.852.9995 ● 949.852.1657 (fax)
fbaeng.com
FBA Job Number: 1022.036

ARCHITECT: LICENSED ARCHITECT BRIAN P WHITMORE No. C 30345 Ren. 9/30/25 STATE OF CALIFORNIA
DATE SIGNED: 06/24/2024

ENGINEER: REGISTERED PROFESSIONAL ENGINEER STEPHEN R. ZAJICEK No. E 10372 Exp. 09-30-24 ELECTRICAL STATE OF CALIFORNIA
DATE SIGNED: 06/24/2024

GENERAL NOTES
1. This sheet is part of a set and is not to be used alone.
2. This sheet is not to be used for construction unless the architect's stamp and signature appear on the drawings and the status box indicated drawings have been released for construction.
3. These plans and prints thereof, as instruments of service, are owned by the architect and are for use on this project only. Reproduction and/or distribution without the prior written consent of the architect is forbidden.
4. Copyright Studio W Associates, Inc. 2022.

REVISION HISTORY

NO.	REMARKS	DATE

DRAWING STATUS
- ○ DSA PLAN CHECK
- ● DSA BACK CHECK 06/24/2024
- ○ BIDDING
- ○ CONSTRUCTION

KEY PLAN

BUENA PARK USD
6885 ORANGETHORPE AVE
BUENA PARK, CA 90620

SCHEMATIC DESIGN

CARL E. GILBERT ELEMENTARY SCHOOL
TK/PK CLASSROOMS & EARLY LEARNING BUILDING
7255 8TH STREET, BUENA PARK, CA 90621

INDOOR TITLE 24

Date 06/24/2024
Project Number 23076
Application Number XX-XXXXXX
Drawing Number E3.1
Drawn BM
Checked SZ

FBA Engineering / Plot Date: 6/24/2024 11:52 AM / Plotted by: Garren Rigonan / Drawing Location: I:\1022\028\E3.1_1022.028_INDOOR T24.dwg

STATE OF CALIFORNIA
Outdoor Lighting
CALIFORNIA ENERGY COMMISSION

CERTIFICATE OF COMPLIANCE		NRCC-LTO-E
Project Name: Carl E. Gilbert Elementary School - TK/PK Classrooms & Early Learning Building	Report Page:	(Page 1 of 7)
Project Address: 7255 8th Street	Date Prepared:	3/21/2024

A. GENERAL INFORMATION

01	Project Location (city)	Buena Park	04	Total Illuminated Hardscape Area (ft²)	62175
02	Climate Zone	8			
03	Outdoor Lighting Zone per Title 24 Part 1	10.114 or as designated by Authority Having Jurisdiction (AHJ):			
☐ LZ-0: Very Low - Undeveloped Parkland	☒ LZ-2: Moderate - Urban Clusters	☐ LZ-4: High - Must be reviewed by CA Energy Commission for Approval			
☐ LZ-1: Low - Rural Areas	☐ LZ-3: Moderately High - Urban Areas				
05	Occupancy Types within Project				
● Classroom ● Office ● Support Areas ● Warehouse					

B. PROJECT SCOPE

This table includes outdoor lighting systems that are within the scope of the permit application and are demonstrating compliance using the prescriptive path outlined in 140.7 / 170.2(e)6 or 141.0(b)2L / 180.2(b)4Bv for alterations.

My Project Consists of:

01	02	
☒ New Lighting System	Must Comply with Allowances from 140.7 / 170.2(e)6	
☐ Altered Lighting System	Is your alteration increasing the connected lighting load (Watts)?	○ Yes ○ No
03	04	05
% of Existing Luminaires Being Altered[1]	Sum Total of Luminaires Being Added or Altered	Calculation Method
☐ < 10% ☐ >= 10% and < 50% ☐ >= 50%		

Please proceed to Table F. Outdoor Lighting Fixture Schedule to define the project's luminaires.

[1] *FOOTNOTES: % of Existing Luminaires Being Altered = (Sum Total of Luminaires Being Added or Altered / Existing Luminaires within the Scope of the Permit Application) x 100.*

STATE OF CALIFORNIA
Outdoor Lighting
CALIFORNIA ENERGY COMMISSION

CERTIFICATE OF COMPLIANCE		NRCC-LTO-E
Project Name: Carl E. Gilbert Elementary School - TK/PK Classrooms & Early Learning Building	Report Page:	(Page 2 of 7)
	Date Prepared:	3/21/2024

C. COMPLIANCE RESULTS

Results in this table are automatically calculated from data input and calculations in Tables F through N. Note: If any cell on this table says "COMPLIES with Exceptional Conditions" refer to Table D. Exceptional Conditions for guidance or see applicable Table referenced below.

Calculations of Total Allowed Lighting Power (Watts) 140.7 / 170.2(e)6 or 141.0(b)2L / 180.2(b)4Bv															Compliance Results		
01		02		03		04		05	OR	06	=	07		08	09		
General Hardscape Allowance 140.7(d1) / 170.2(e)6 (See Table I)	+	Per Application 140.7(d)2 / 170.2(e)6 (See Table J)	+	Sales Frontage 140.7(d)2 (See Table K)	+	Ornamental 140.7(d)2 / 170.2(e)6 (See Table L)	+	Per Specific Area 140.7(d)2 / 170.2(e)6 (See Table M)		Existing Power Allowance 141.0(b)2L / 180.2(b)4Bv (See Table N)		**Total Allowed** (Watts)	≥	**Total Actual** (Watts)	**07 must be >= 08**		
1,584	+	---	+	---	+	---	+	---	OR	---	=	1,584	≥	1,582	COMPLIES		
Shielding Compliance (See Table G for Details)															N/A		
Controls Compliance (See Table H for Details)															Not applicable		

D. EXCEPTIONAL CONDITIONS

This table is auto-filled with uneditable comments because of selections made or data entered in tables throughout the form.

E. ADDITIONAL REMARKS

This table includes remarks made by the permit applicant to the Authority Having Jurisdiction.

STATE OF CALIFORNIA
Outdoor Lighting
CALIFORNIA ENERGY COMMISSION

CERTIFICATE OF COMPLIANCE		NRCC-LTO-E
Project Name: Carl E. Gilbert Elementary School - TK/PK Classrooms & Early Learning Building	Report Page:	(Page 3 of 7)
	Date Prepared:	3/21/2024

F. OUTDOOR LIGHTING FIXTURE SCHEDULE

For new or altered lighting systems demonstrating compliance with 140.7 / 170.2(e)6 all new luminaires being installed and any existing luminaires remaining or being moved within the spaces covered by the permit application are included in the Table below. For altered lighting systems using the Existing Power method per 141.0(b)2L only new luminaires being installed and replacement luminaires being installed as part of the project scope are included (ie, existing luminaires remaining or existing luminaires being moved are not included). Outdoor lighting attached to multifamily buildings and controlled from the inside of a dwelling unit are included in Table H. and are not included here. All other multifamily outdoor lighting is included here.

Designed Wattage:

01	02	03	04	05	06	07	08	09	10
Name or Item Tag	Complete Luminaire Description	Watts per luminaire[1, 2]	How is Wattage determined	Total Number Luminaires[2]	Luminaire Status[3]	Excluded per 140.7(a) / 170.2(e)6A	Design Watts	Cutoff Req. > 6,200 initial lumen output 130.2(b) / 160.5(c)1[4]	Field Inspector: Pass / Fail
TYPE 4	TYPE 4- LED WALL SCONCE WITH ALUMINUM HOUSING 19"W X 6"H X 4"D ☐ Linear	16	Mfr. Spec	22	New	☐	352	NA: < 6200 lumens	☐ ☐
TYPE 5	TYPE 5- LED VANDAL RESISTAND DOWNLIGHT WITH 5.5" APERTURE ☐ Linear	15	Mfr. Spec	30	New	☐	450	NA: < 6200 lumens	☐ ☐
TYPE 6	TYPE 6- LED AREA LIGHT WITH DIE CAST HOUSING, TYPE 3 DISTRIBUTION ☐ Linear	150	Mfr. Spec	1	New	☐	150	NA: < 6200 lumens	☐ ☐
TYPE 7	TYPE 7- COMPACT LED FLOODLIGHT WITH CAST ALUMINUM HOUSING ☐ Linear	90	Mfr. Spec	7	New	☐	630	NA: < 6200 lumens	☐ ☐
						Total Design Watts:	1582		

* NOTES: Selections with a * require a note in the space below explaining how compliance is achieved.
EX: Luminaire is lighting a statue; EXCEPTION 2 to 130.2(b)

[1] *FOOTNOTES: Authority Having Jurisdiction may ask for Luminaire cut sheets to confirm wattage used for compliance per 130.0(c) / 160.5(b)*
[2] *For linear luminaires, wattage should be indicated as W/lf instead of Watts/luminaire. Total linear feet should be indicated in column 05 instead of number of luminaires.*
[3] *Select "New" for new luminaires in a new outdoor lighting project, or for added luminaires in an alteration. Select "Altered" for replacement luminaires in an alteration. Select "Existing to Remain" for existing luminaires within the project scope that are not being altered and are remaining. Select "Existing Reinstalled" for existing luminaires which are being removed and reinstalled as part of the project scope.*

STATE OF CALIFORNIA
Outdoor Lighting
CALIFORNIA ENERGY COMMISSION

CERTIFICATE OF COMPLIANCE		NRCC-LTO-E
Project Name: Carl E. Gilbert Elementary School - TK/PK Classrooms & Early Learning Building	Report Page:	(Page 4 of 7)
	Date Prepared:	3/21/2024

F. OUTDOOR LIGHTING FIXTURE SCHEDULE

For new or altered lighting systems demonstrating compliance with 140.7 / 170.2(e)6 all new luminaires being installed and any existing luminaires remaining or being moved within the spaces covered by the permit application are included in the Table below. For altered lighting systems using the Existing Power method per 141.0(b)2L only new luminaires being installed and replacement luminaires being installed as part of the project scope are included (ie, existing luminaires remaining or existing luminaires being moved are not included). Outdoor lighting attached to multifamily buildings and controlled from the inside of a dwelling unit are included in Table H. and are not included here. All other multifamily outdoor lighting is included here.

Designed Wattage:

01	02	03	04	05	06	07	08	09	10

[4] *Compliance with mandatory shielding requirements is required for luminaires with initial lumen output >= 6,200 unless exempted by 130.2(b)/ 160.5(c)*

G. SHIELDING REQUIREMENTS (BUG)

This section does not apply to this project.

H. OUTDOOR LIGHTING CONTROLS

This table demonstrates compliance with controls requirements for all new or altered luminaires installed as part of the permit application. For alteration projects, luminaires which are existing to remain (ie untouched) and luminaires which are removed and reinstalled (wiring only) do not need to be included in this table even if they are within the spaces covered by the permit application.
Outdoor lighting for nonresidential buildings, parking garages and common service areas in multifamily buildings must be documented separately from outdoor lighting attached to multifamily buildings and controlled from the inside of a dwelling unit

Mandatory Controls for Nonresidential Occupancies, Parking Garages & Common Areas in Multifamily Buildings

01	02	03	04	05	
Area Description	Shut-Off 130.2(c)1 / 160.5(c)	Auto-Schedule 130.2(c)2 / 160.5(c)	Motion Sensor 130.2(c)3 / 160.5(c)	Field Inspector	
				Pass	Fail

[1] *FOOTNOTE: Text has been abbreviated, please refer to Table 160.5-A to confirm compliance with the specific light source technologies listed.*
[2] *Authority having jurisdiction may ask for cutsheets or other documentation to confirm compliance of light source.*
[3] *Recessed luminaires marked for use in fire-rated installations, and recessed luminaires installed in non-insulated ceilings are excepted from ii and iii.*

STATE OF CALIFORNIA
Outdoor Lighting
CALIFORNIA ENERGY COMMISSION

CERTIFICATE OF COMPLIANCE		NRCC-LTO-E
Project Name: Carl E. Gilbert Elementary School - TK/PK Classrooms & Early Learning Building	Report Page:	(Page 5 of 7)
	Date Prepared:	3/21/2024

I. LIGHTING POWER ALLOWANCE (per 140.7 / 170.2(e))

This table includes areas using allowance calculations per 140.7 / 170.2(e). General Hardscape Allowance is per Table 140.7-A/Table 170.2-R while "Use it or lose it" Allowances are per Table 140.7-B /Table 170.2-S. Indicate which allowances are being used to expand sections for user input. Luminaires that qualify for one of the "Use it or lose it" allowances shall not qualify for another "Use it or lose it" allowance.
Outdoor lighting attached to multifamily buildings and controlled from the inside of a dwelling unit are included in Table H. and are not included here. All other multifamily outdoor lighting is included here.

	01				
	"Use it or lose it" Allowance (select all that apply) (select all that apply)				
☒ General Hardscape Allowance Table I (below)	☐ Per Application Table J	☐ Sales Frontage Table K	☐ Ornamental Table L	☐ Per Specific Area Table M	

Calculated General Hardscape Lighting Power Allowance per Table 140.7-A for Nonresidential & Hotel/Motel

02	03	04	05	06	07	08	09
Area Description	Area Wattage Allowance (AWA)			Linear Wattage Allowance (LWA)			Total General AWA + LWA (Watts)
	Illuminated Area (ft²)	Allowed Density (W/ft²)	Area Allowance (Watts)	Perimeter Length (lf)	Allowed Density (W/lf)	Linear Allowance (Watts)	
Undefined Ext Task	62175	0.019	1181.3	1350	0.2	202.5	1384
					Initial Wattage Allowance for Entire Site (Watts):		200
					Instances of Initial Wattage Allowance (LZ 0 only)[1]		
					Total General Hardscape Allowance (Watts):		1584

J. LIGHTING ALLOWANCE: PER APPLICATION

This section does not apply to this project.

K. LIGHTING ALLOWANCE: SALES FRONTAGE

This section does not apply to this project.

L. LIGHTING ALLOWANCE: ORNAMENTAL

This section does not apply to this project.

STATE OF CALIFORNIA
Outdoor Lighting
CALIFORNIA ENERGY COMMISSION

CERTIFICATE OF COMPLIANCE		NRCC-LTO-E
Project Name: Carl E. Gilbert Elementary School - TK/PK Classrooms & Early Learning Building	Report Page:	(Page 6 of 7)
	Date Prepared:	3/21/2024

M. LIGHTING ALLOWANCE: PER SPECIFIC AREA

This section does not apply to this project.

N. EXISTING CONDITIONS POWER ALLOWANCE (alterations only)

This section does not apply to this project.

O. DECLARATION OF REQUIRED CERTIFICATES OF INSTALLATION

Selections have been made based on information provided in this document. If any selection has been changed by permit applicant, an explanation should be included in Table E. Additional Remarks. These documents must be provided to the building inspector during construction and can be found online

Form/Title
NRCI-LTO-E - Must be submitted for all buildings

P. DECLARATION OF REQUIRED CERTIFICATES OF ACCEPTANCE

There are no NRCA forms required for this project.

STATE OF CALIFORNIA
Outdoor Lighting
CALIFORNIA ENERGY COMMISSION

CERTIFICATE OF COMPLIANCE		NRCC-LTO-E
Project Name: Carl E. Gilbert Elementary School - TK/PK Classrooms & Early Learning Building	Report Page:	(Page 7 of 7)
Project Address: 7255 8th Street	Date Prepared:	3/21/2024

DOCUMENTATION AUTHOR'S DECLARATION STATEMENT

I certify that this Certificate of Compliance documentation is accurate and complete.

Documentation Author Name: Stephen R. Zajicek P.E.	Documentation Author Signature:
Company: FBA Engineering	Signature Date: 2024-03-21
Address: 150 Paularino Avenue Suite A120	CEA/ HERS Certification Identification (if applicable): E10372
City/State/Zip: Costa Mesa CA 92626	Phone: 949-852-9995

RESPONSIBLE PERSON'S DECLARATION STATEMENT

I certify the following under penalty of perjury, under the laws of the State of California:

1. The information provided on this Certificate of Compliance is true and correct.
2. I am eligible under Division 3 of the Business and Professions Code to accept responsibility for the building design or system design identified on this Certificate of Compliance (responsible designer)
3. The energy features and performance specifications, materials, components, and manufactured devices for the building design or system design identified on this Certificate of Compliance conform to the requirements of Title 24, Part 1 and Part 6 of the California Code of Regulations.
4. The building design features or system design features identified on this Certificate of Compliance are consistent with the information provided on other applicable compliance documents, worksheets, calculations, plans and specifications submitted to the enforcement agency for approval with this building permit application.
5. I will ensure that a completed signed copy of this Certificate of Compliance shall be made available with the building permit(s) issued for the building, and made available to the enforcement agency for all applicable inspections. I understand that a completed signed copy of this Certificate of Compliance is required to be included with the documentation the builder provides to the building owner at occupancy.

Responsible Designer Name: Stephen R. Zajicek P.E.	Responsible Designer Signature:
Company: FBA Engineering	Date Signed: 2024-03-21
Address: 150 Paularino Ave. Suite A120	License: E10372
City/State/Zip: Costa Mesa CA 92626	Phone: 949-852-9995

DSA STAMP

STUDIO W ARCHITECTS
Studio W Architects
1930 H Street
Sacramento, California 95811
[T] 916.254.5600
www.StudioW-Architects.com

FBA Engineering
Consulting Electrical Engineers
150 Paularino Avenue Suite A120
Costa Mesa, CA 92626
949.852.9995 ● 949.852.1657 (fax)
fbaeng.com
FBA Job Number: 1022.028

ARCHITECT: LICENSED ARCHITECT BRIAN P. WHITMORE No. C 30345 Ren. 9/30/25 STATE OF CALIFORNIA
DATE SIGNED: 06/24/2024

ENGINEER: REGISTERED PROFESSIONAL ENGINEER STEPHEN R. ZAJICEK No. E 10372 Exp. 09-30-24 ELECTRICAL CALIFORNIA
DATE SIGNED: 06/24/2024

GENERAL NOTES
1. This sheet is part of a set and is not to be used alone.
2. This sheet is not to be used for construction unless the architect's stamp and signature appear on the drawings and the status box indicated drawings have been released for construction.
3. These plans and prints thereof, as instruments of service, are owned by the architect and are for use on this project only. Reproduction and/or distribution without the prior written consent of the architect is forbidden.
4. Copyright Studio W Associates, Inc. 2022.

REVISION HISTORY

NO.	REMARKS	DATE

DRAWING STATUS
- ○ DSA PLAN CHECK
- ● DSA BACK CHECK 06/24/2024
- ○ BIDDING
- ○ CONSTRUCTION

KEY PLAN

BUENA PARK USD
6885 ORANGETHORPE AVE
BUENA PARK, CA 90620

SCHEMATIC DESIGN

CARL E. GILBERT ELEMENTARY SCHOOL
TK/PK CLASSROOMS & EARLY LEARNING BUILDING
7255 8TH STREET, BUENA PARK, CA 90621

OUTDOOR TITLE 24

Date 06/24/2024
Project Number 23076
Application Number XX-XXXXXX
Drawing Number E3.2
Drawn BM
Checked SZ

FBA Engineering / Plot Date: 6/24/2024 11:52 AM / Plotted by: Garren Rigonan / Drawing Location: I:\1022\028\E3.2_1022.028_OUTDOOR T24.dwg

STATE OF CALIFORNIA
Solar And Battery CALIFORNIA ENERGY COMMISSION

CERTIFICATE OF COMPLIANCE	NRCC-SAB-E
This document is used to demonstrate compliance with prescriptive PV and battery requirements in 140.10/ 170.2 for nonresidential, multifamily and mixed-use buildings and prescriptive solar thermal requirements in 170.2(d)3C for multifamily and hotel/ motel occupancies. When PV/battery/solar thermal requirements don't apply or are traded using the performance approach, this document demonstrates compliance with mandatory solar readiness requirements in 110.10/ 160.8 for newly constructed buildings which are either multifamily ten stories or fewer, hotel/motel ten stories or fewer or all other nonresidential buildings three stories or fewer. It is also used to demonstrate compliance with solar readiness in 110.10/ 160.8 for additions to nonresidential, multifamily or hotel/motel building types which add more than 2,000 ft² of roof area. Alterations, or additions of less than 2,000 ft² of roof area, are not required to comply with solar readiness, solar PV and battery requirements and do not need to complete this document.	
Project Name: Carl E. Gilbert Elementary School - TK/PK Classrooms & Early Learning Building	**Report Page:** (Page 1 of 6)
Project Address: 7255 8th Street	**Date Prepared:** 3/21/2024

A. GENERAL INFORMATION					
01	Project Location (city)	Buena Park	04	Building Occupancies	All Other OccupanciesOfficeSupport AreasWarehouse
02	Climate Zone	8	05	Construction Type	New construction
03	Conditioned Floor Area (ft²)	12109	06	Number of Stories	Bldg <= 3 stories

B. PROJECT SCOPE

The compliance path the project is using to comply per 110.10(b)1B/ 140.10/ 170.2(g and h) is indicated below.

Compliance with Solar Photovoltaic (PV) and Battery Requirements in 140.10/ 170.2(g and h)		
01		
☒	Provided PV system and battery storage sized per 140.10/ 170.2 (g and h)	The project has included an installed PV system and battery storage system per requirements in 140.10/ 170.2(g and h) as documented in Table J.
☐	Exception to PV and Battery: Not enough Solar Access Roof Area	The total of all available Solar Access Roof Area(s) of the project site is less than three percent of the conditioned floor area as documented in Table J.
☐	Exception to PV and Battery: Required PV < 4kW	The required PV system size is less than 4 kW dc as documented in Table J..
☐	Exception to PV and Battery: No contiguous Solar Access Roof Area	The Solar Access Roof Area(s) of the project site contains less than 80 contiguous square feet as documented in Table J.
☐	Exception to PV and Battery: Can't meet snow load	The project has a roof design where the enforcement authority has verified it is not possible for the PV system, including panels, modules, components, supports, and attachments to the roof structure, to meet ASCE 7-16 Chapter 7, Snow Loads.
☐	Exception to PV and Battery: Multi-tenant without VNEM or Community Solar	The project is a multi-tenant building in an area where a load serving entity does not provide either a Virtual Net Metering (VNEM) or community solar program.
☐	The prescriptive PV/battery requirement has been traded off using the performance compliance approach as documented on the PRF Certificate of Compliance form.	

STATE OF CALIFORNIA
Solar And Battery CALIFORNIA ENERGY COMMISSION

CERTIFICATE OF COMPLIANCE	NRCC-SAB-E
Project Name: Carl E. Gilbert Elementary School - TK/PK Classrooms & Early Learning Building	**Report Page:** (Page 2 of 6)
	Date Prepared: 3/21/2024

Compliance with Solar Thermal Water Heating Requirements in 170.2(d)3C (Multifamily and hotel/ motel occupancies only)	
01	
☐	The project includes a hotel/motel or multifamily occupancy with a gas or propane central water-heating system (serves 2+ dwelling units) and includes a permanently installed domestic solar water-heating system to comply with 170.2(d)3C and Reference Residential Appendix RA4, as documented in Table H. Compliance meets Exception 2 to solar ready requirements in 110.10(b).

C. COMPLIANCE RESULTS

Results in this table are automatically calculated from data input and calculations in Tables F through I. Note: If any cell on this table says "DOES NOT COMPLY" or "COMPLIES with Exceptional Conditions" refer to Table D. for guidance or see the applicable Table referenced below.

Allocated Solar Zone				Installed PV System				Installed SWH System				Smart Tstat and Alternative EE Measure		Compliance Results
01		02		03		04		05		06		07	08	
Required Minimum Area (ft²)	<=	Designated Area (ft²)	OR	Required Minimum DC Power Rating (Watts)	<=	Designed DC Power Rating (Watts)	OR	Required Minimum Solar Savings Fraction	<=	Designed/Rated Solar Savings Fraction	OR	JA5 Compliant Thermostat Specified?	Alternative Energy Efficiency Measure	
(See Table F)				(See Tables G or J)				(See Table H)				(See Table I)		
	<=		OR	19,982	<=	19,982	OR		<=		OR			
Location in construction documents showing the location for inverters and metering equipment and a pathway for the routing of conduit/ plumbing to the electrical service/ water heating system per §110.10(c).														
Battery storage system design meets the minimum requirements in Joint Appendix JA12 and the minimum energy (kWh)/ power (kW) capacity per Table J.														COMPLIES

D. EXCEPTIONAL CONDITIONS

This table is auto-filled with uneditable comments because of selections made or data entered in tables throughout the form.

STATE OF CALIFORNIA
Solar And Battery CALIFORNIA ENERGY COMMISSION

CERTIFICATE OF COMPLIANCE	NRCC-SAB-E
Project Name: Carl E. Gilbert Elementary School - TK/PK Classrooms & Early Learning Building	**Report Page:** (Page 3 of 6)
	Date Prepared: 3/21/2024

E. ADDITIONAL REMARKS

This table is includes remarks made by the permit applicant to the Authority Having Jurisdiction.

EXISTING PV SYSTEM ON CAMPUS

F. ALLOCATED SOLAR ZONE

This section does not apply to this project.

G. PERMANENTLY INSTALLED SOLAR PV FOR SOLAR READY EXCEPTION

This section does not apply to this project.

H. PERMANENTLY INSTALLED SOLAR HOT WATER SYSTEMS

This section does not apply to this project.

I. SMART THERMOSTATS AND ALTERNATIVE EFFICIENCY MEASURE FOR SOLAR READY EXCEPTION

This section does not apply to this project.

STATE OF CALIFORNIA
Solar And Battery CALIFORNIA ENERGY COMMISSION

CERTIFICATE OF COMPLIANCE	NRCC-SAB-E
Project Name: Carl E. Gilbert Elementary School - TK/PK Classrooms & Early Learning Building	**Report Page:** (Page 4 of 6)
	Date Prepared: 3/21/2024

J. PHOTOVOLTAIC (PV) AND BATTERY SYSTEMS

This table documents compliance with prescriptive photovoltaic and battery system requirements in 140.10/ 170.2(g and h). Unless the project meets one of the listed exceptions, or trades-off PV in an energy model using performance path, 140.10/ 170.2(g and h) requires installed photovoltaic and battery systems for newly constructed buildings. The installed PV systems must meet the minimum requirements in Joint Appendix 11.

Photovoltaic (PV) System

01	02	03	04	05	06	07	08
Occupancy	Conditioned Floor Area (ft²)	Area of New Roof[1] (ft²)	Roof Area < 70% Solar Access[2] (ft²)	Plansheet or Document showing Solar Access Calculations	Occupied Roof Area[3] (ft²)	Solar Access Roof Area (SARA) (ft²)	Min Size of PV System Required (kWdc)
School or Classroom	11,518	18,719	0	E2.5	10,718	8,001	18.77
School or Classroom	741	2,337	0	E2.5	1,166	1,171	1.21
					Total Min Size PV System Required for all Spaces (kWdc):		19.98
					Total Size PV System in Design (kWdc):		19.98

[1]FOOTNOTES: Includes the area of the building's roof space capable of structurally supporting a PV system and the area of all roof space on covered parking areas, carports, and all other newly constructed structures on the site that are compatible with supporting a PV system per Title 24, Part 2 Section 1511.2.
[2]Solar access must be determined using CEC approved solar access calculation tools found at https://www.energy.ca.gov/programs-and-topics/programs/building-energy-efficiency-standards/solar-assessment-tools.
[3]As specified by CBC Section 503.1.4.

STATE OF CALIFORNIA
Solar And Battery CALIFORNIA ENERGY COMMISSION

CERTIFICATE OF COMPLIANCE	NRCC-SAB-E
Project Name: Carl E. Gilbert Elementary School - TK/PK Classrooms & Early Learning Building	**Report Page:** (Page 5 of 6)
	Date Prepared: 3/21/2024

Battery Storage System

01	02	03	04	05
Space Type	Min Size of PV System Required (kWdc)	Rated Single Charge-Discharge AC Efficiency of Battery System[1]	Min Battery Rated Energy Capacity Required (kWh)	Min Power Capacity of Battery Required (kWdc)
School or Classroom	18.77	90	36.96	8.64
		Total Min Energy (kWh) and Power (kW) Capacity Required	39.33	9.19
		Total Energy (kWh) and Power (kW) Capacity in Design	40	10

[1]FOOTNOTE: Rated single charge-discharge cycle AC to AC (round trip) efficiency of the battery storage system

School or Classroom	1.21	90	2.38	0.56
		Total Min Energy (kWh) and Power (kW) Capacity Required	39.33	9.19
		Total Energy (kWh) and Power (kW) Capacity in Design	40	10

[1]FOOTNOTE: Rated single charge-discharge cycle AC to AC (round trip) efficiency of the battery storage system

K. DECLARATION OF REQUIRED CERTIFICATES OF INSTALLATION

Selections have been made based on information provided in this document. If any selections have been changed by the permit applicant, an explanation should be included Table E. Additional Remarks and ExceptionalConditionMessageCCSABE += UserChangedSelectionInCI. These documents must be provided to the building inspector during construction and can be found online

Form/Title
NRCI-SAB-01-E - Must be submitted for all buildings that must comply with solar readiness or PV/Battery requirements.

L. DECLARATION OF REQUIRED CERTIFICATES OF ACCEPTANCE

There are no forms required for this project.

STATE OF CALIFORNIA
Solar And Battery CALIFORNIA ENERGY COMMISSION

CERTIFICATE OF COMPLIANCE	NRCC-SAB-E
Project Name: Carl E. Gilbert Elementary School - TK/PK Classrooms & Early Learning Building	**Report Page:** (Page 6 of 6)
Project Address: 7255 8th Street	**Date Prepared:** 3/21/2024

DOCUMENTATION AUTHOR'S DECLARATION STATEMENT

I certify that this Certificate of Compliance documentation is accurate and complete.

Documentation Author Name:	Documentation Author Signature:
Stephen R. Zajicek P.E.	
Company: FBA Engineering	Signature Date: 2024-03-21
Address: 150 Paularino Avenue Suite A120	CEA/ HERS Certification Identification (if applicable): E10372
City/State/Zip: Costa Mesa CA 92626	Phone: 949-852-9995

RESPONSIBLE PERSON'S DECLARATION STATEMENT

I certify the following under penalty of perjury, under the laws of the State of California:
1. The information provided on this Certificate of Compliance is true and correct.
2. I am eligible under Division 3 of the Business and Professions Code to accept responsibility for the building design or system design identified on this Certificate of Compliance (responsible designer)
3. The energy features and performance specifications, materials, components, and manufactured devices for the building design or system design identified on this Certificate of Compliance conform to the requirements of Title 24, Part 1 and Part 6 of the California Code of Regulations.
4. The building design features or system design features identified on this Certificate of Compliance are consistent with the information provided on other applicable compliance documents, worksheets, calculations, plans and specifications submitted to the enforcement agency for approval with this building permit application.
5. I will ensure that a completed signed copy of this Certificate of Compliance shall be made available with the building permit(s) issued for the building, and made available to the enforcement agency for all applicable inspections. I understand that a completed signed copy of this Certificate of Compliance is required to be included with the documentation the builder provides to the building owner at occupancy.

Responsible Designer Name: Stephen R. Zajicek	Responsible Designer Signature:
Company: FBA Engineering	Date Signed: 2024-03-21
Address: 150 Paularino Ave, Suite A120	License: E10372
City/State/Zip: Costa Mesa CA 92626	Phone: 949-852-9995

DSA STAMP

STUDIO W ARCHITECTS
Studio W Architects
1930 H Street
Sacramento, California 95811
[T] 916.254.5600
www.StudioW-Architects.com

FBA Engineering
Consulting Electrical Engineers
150 Paularino Avenue Suite A120
Costa Mesa, CA 92626
949.852.9995 ▪ 949.852.1657 (fax)
fbaeng.com
FBA Job Number: 1022.038

ARCHITECT	ENGINEER
LICENSED ARCHITECT BRIAN P WHITMORE No. C 30345 Ren. 9/30/25 STATE OF CALIFORNIA	REGISTERED PROFESSIONAL ENGINEER STEPHEN R. ZAJICEK No. E 10372 Exp. 09-30-24 ELECTRICAL STATE OF CALIFORNIA
DATE SIGNED: 06/24/2024	DATE SIGNED: 06/24/2024

GENERAL NOTES
1. This sheet is part of a set and is not to be used alone.
2. This sheet is not to be used for construction unless the architect's stamp and signature appear on the drawings and the status box indicated drawings have been released for construction.
3. These plans and prints thereof, as instruments of service, are owned by the architect and are for use on this project only. Reproduction and/or distribution without the prior written consent of the architect is forbidden.
4. Copyright Studio W Associates, Inc. 2022.

REVISION HISTORY

NO.	REMARKS	DATE

DRAWING STATUS
DATE
- ○ DSA PLAN CHECK
- ● DSA BACK CHECK 06/24/2024
- ○ BIDDING
- ○ CONSTRUCTION

KEY PLAN

BUENA PARK USD
6885 ORANGETHORPE AVE
BUENA PARK, CA 90620

SCHEMATIC DESIGN

CARL E. GILBERT ELEMENTARY SCHOOL
TK/PK CLASSROOMS & EARLY LEARNING BUILDING
7255 8TH STREET, BUENA PARK, CA 90621

SOLAR AND BATTERY TITLE 24

Date	Project Number
06/24/2024	23076
Application Number	Drawing Number
XX-XXXXXX	E3.3
Drawn BM / Checked SZ	

FBA Engineering / Plot Date: 6/24/2024 11:52 AM / Plotted by: Garren Rigonan / Drawing Location: I:\1022\038\E3.3_1022.028_SOLAR AND BATTERY T24.dwg