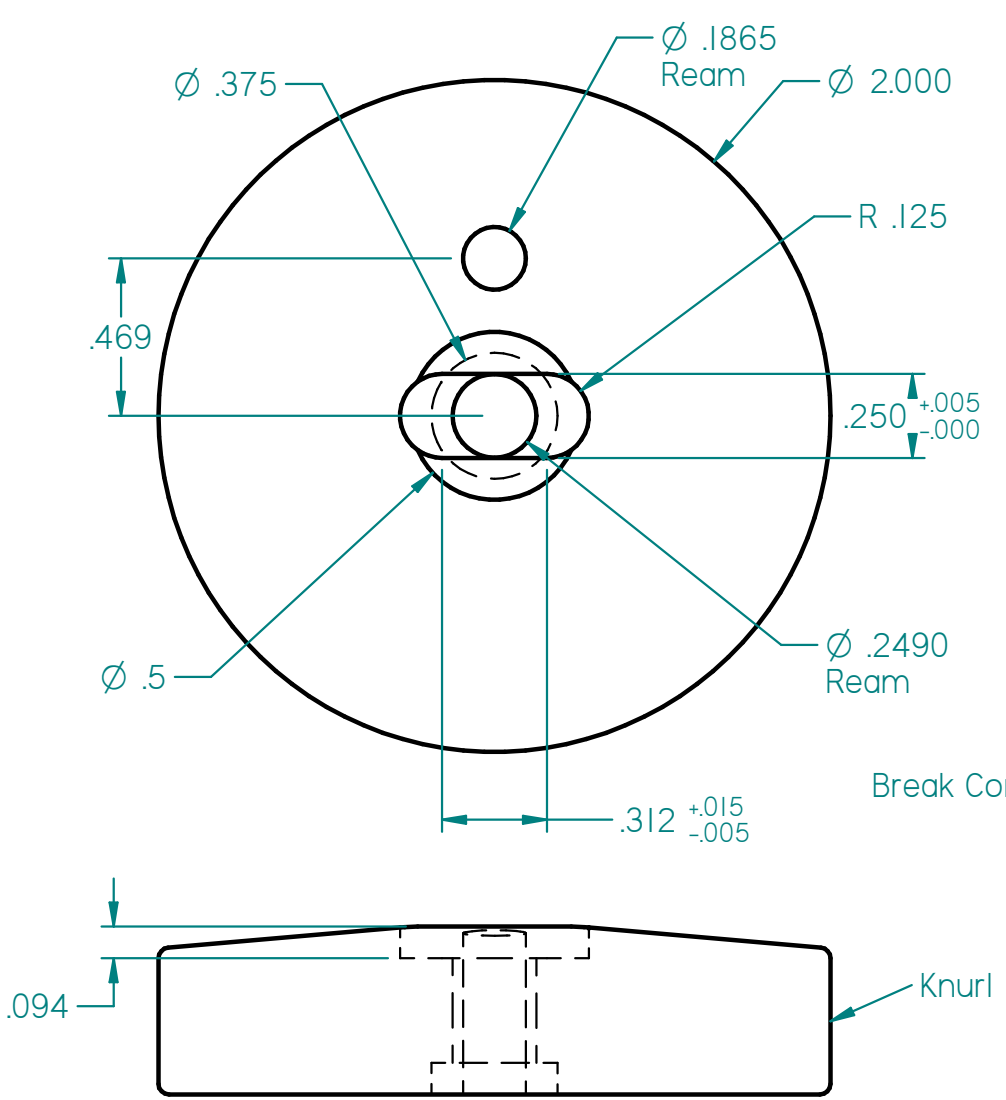

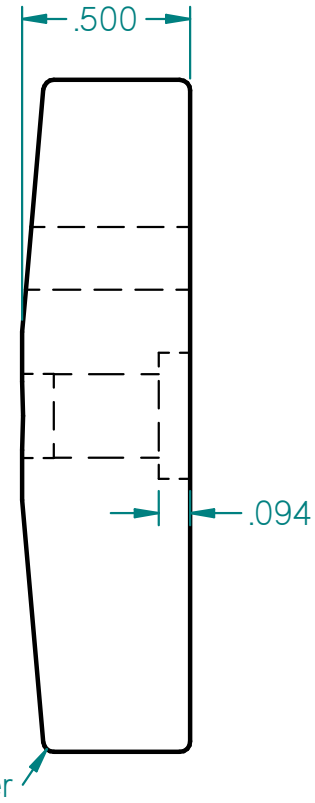

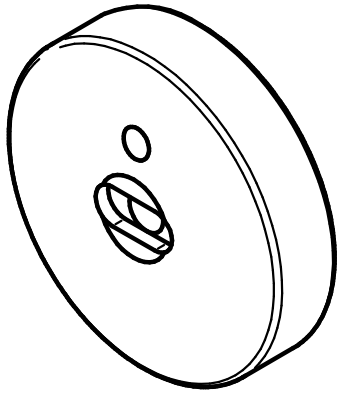

Order of operations::

Qty: 2

Date: 6/28/2014

Dailey's Designs	
UNLESS OTHERWISE SPECIFIED DIMENSIONS ARE IN INCHES ANGLES ±1° FRACTION ±.1/64" 2 PL. ±.010 3 PL ±.005 4PL ±.0005	Rear Wheel MATERIAL 2" Dia. Steel

SOLID EDGE ACADEMIC COPY