DEHESA ELEMENTARY SCHOOL
MODERNIZATION OF BUILDINGS A & B
DEHESA SCHOOL DISTRICT

ABBREVIATIONS

&	AND			INV.	Invert	REG	Register
L	Angle	(E)	Existing			RE	Reinforce or Reinforcing
@	At	E	East	JAN.	Janitor		
A.B.	Anchor Bolt	EA.	Each	JST.	Joist	REIF	Reinforcing
ABV.	Above	E.A.	Exhaust Fan	JT.	Joint	RCP	Reinforced Concrete
AC.	Asphalt Concrete	EF.	Each Face			RD	Roof Drain
A/C	Air Conditioning	E.J.	Expansion Joint	KIT.	Kitchen	REM	Remove
ACOUS.	Acoustical	ELEC.	Electrical	K.P.	Kick Plate	RA	Return Air
A.C.T.	Acoustical Ceiling Tile	ELEV.	Elevator	KVA.	Kilovolt Amperes	RH	Right Hand
A.A.	Area Drain	EMER.	Emergency	KW	Kilowatt	R	Riser
ADJ.	Adjustable	ENCL.	Enclosure			RD	Roof Drain
AGGR.	Aggregate	E.P.	Electrical Panelboard	MAS.	Masonry	ROW	Right Of Way
AFF	Above Finish Floor	EQ.	Equal	MAT'L	Material	RM	Room
AL.	Aluminum	EQUIP.	Equipment	MAX.	Maximum	RO	Rough Opening
A.P.	Access Panel	E.W.	Each Way	MB	Machine Bolt		
APPROX.	Approximate	E.W.C.	Electric Water Cooler	M.C.	Medicine Cabinet	SEC.	Section
ARCH.	Architectural	EH.	Exhaust	MECH.	Mechanical	SHT.	Sheet
A.S.C.	Above Suspended Ceiling	EXPO.	Exposed	MFG.	Manufacturer	SHTNG.	Sheathing
		EXP.	Expansion	MET.	Metal	SIM.	Similar
A.S.	Automated Sprinkler	EXT.	Exterior	M.H.	Manhole	SC.	Solid Core
ASPH.	Asphalt			MECH.	Minimum	S.	South
AUTO.	Automatic	FAS.	Fasten(er)	MIR.	Mirror	SQ.	Square
		F.A.	Fire Alarm	MISC.	Miscellaneous	SS	Stainless Steel
BD.	Board	F.B.	Face Brick	M.O.	Masonry Opening	STOR.	Storage
B.F.G.	Below Finish Grade	F.C.O.	Floor Cleanout	MTD.	Mounted	STR.	Structural
BITUM.	Bituminous	F.D.	Floor Drain	MS	Metal Screw	SUS.	Suspended
BLDG.	Building	FDN.	Foundation	MTL.	Metal	SYN.	Synthetic
BLK.	Block	F.E.	Fire Extinguisher				
BLKG	Blocking	F.E.C.	Fire Extinguisher Cabinet	LBL.	Label	T.	Tread
B.M.	Bench Mark			LAB	Laboratory	T.B.	Towel Bar
BM	Beam	F.F.	Finish Floor	LAD.	ladder	T&B	Top and Bottom
B.O.D.	Bottom of Deck	F.G.	Finish Grade	LB	Lag Bolt	T.C.	Top of Concrete / Curb
B.O.J.	Bottom of Joist(s)	F.H.	Fire Hydrant	LAM	Laminate		
B.O.S.	Bottom of Structure	F.H.C.	Fire Hose Cabinet	LAV	Lavatory	TEL.	Telephone
BRG.	Bearing	FIN.	Finish	L	Length	TEM.	Tempered
BRK.	Brick	F.L.	Flow Line	LH	Left Hand	TER.	Terrazzo
BTM.	Bottom	FLR.	Floor	LT	Light	T.F.	Top of Footing
B.T.U.	British Thermal Unit	FLUOR	Fluorescent	LW	Light Weight	T&G	Tongue and Groove
		F.O.C	Face of Concrete	LL	Live Load	THK.	Thick
C	Conduit	F.O.F	Face of Finish	LVR	Louver	T.O.P	Top of Parapet
CC	Center to Center	F.O.M	Face of Masonry			T.O.R	Top of Roof
CAB	Cabinet	F.O.S.	Face of Stud	N	North	T.O.S.	Top of Structure
C.B.	Catch Basin	FPRF.	Fireproofing	(N)	New	TOM	Top Of Masonry
C.D.	Ceiling Diffuser	FT.	Feet	N.I.C.	Not in Contract	T.P	Top of Pavement
CEM	Cement	FTG.	Footing	NO.	Number	T.P.D.	Toilet Paper Dispenser
CER	Ceramic	FUT.	Future	NOM.	Nominal	T.S.	Top of Slab (Surface)
C.F.	Cubic Feet	F.V.	Field Verify	N.T.S.	Not to Scale	T.T.B.	Telephone Terminal Backboard
C.F.M.	Cubic Feet per Minute	GA.	Gauge	O.A.	Outside Air	T.V.	Television
C.G.	Corner Guard	GALV.	Galvanized	O/A	Overall	T.W.	Top of Wall
C.I.	Cast Iron	G.B.	Grab Bar	OBS.	Obscure	TYP.	Typical
C.I.P	Cast-in-place or Cast Iron Pipe	G.C.	General Contractor	O.C.	On Center		
		GL.	Glass	O.D.	Outside Diameter or Outside Dimension	U.N.O	Unless Otherwise Noted
CKT.BKR	Circuit Breaker	G.I.	Galvanized Iron			UOS	Underside Of Structure
CLG.	Ceiling	GND.	Ground				
CL.	Center Line	GPDW.	Gypsum Drywall	OFF.	Office	(V)	Verify
CLR.	Clear	GR.	Grade	O.H.	Opposite Hand	VAR	Varies
C.M.U.	Concrete Masonry Unit	G.V.	Gate Valve	OPNG.	Opening	VCT	Vinyl Composition Tile
		GYP.	Gypsum	OPP.	Opposite	V.B.	Vapor Barrier
CNTR.	Counter	GWB	Gypsum Wall Board or Glass White Board	OVHD.	Overhead	VERT.	Vertical
C.O.	Cleanout	GWB.				VEST.	Vestibule
C.O.T.G	Cleanout to Grade			PNT	Paint	V.I.F.	Verify in Field
COL.	Column	H	Height or	PNL	Panel	V.T.R	Vent Through Roof
CONC.	Concrete	HT.				V.W.C.	Vinyl Wall Covering
CT.	Ceramic Tile	HB	Hose Bibb	PTD	Paper Towel Dispenser		
CTR.	Center	H.B.	Hollow Core			W.	West
CTSK.	Countersink	HD.	Head	PTR	Paper Towel Receptacle	W.	Width
C.W.	Cold Water	HDR.	Header			W/	With
D	Drain	HDW.	Hardware	PAR	Parallel	WC	Water Closet
DBL.	Double	H.M.	Hollow Metal	PK	Parking	WCO	Wall Cleanout
DEPT.	Department	HNDRL	Handrail	PTN	partition	WD.	Wood
DET.	Detail	HORIZ.	Horizontal	PVMT	Pavement	WF.	Wide Flange
D.F.	Drinking Fountain	H.V.A.C.	Heating, Ventilation Air Conditioning	PERF	Perforate	WIN	Window
DIA	Diameter			PER	Perimeter	WH	Water Heater
DIM.	Dimension			PLAS	Plaster	W/O	Without
DISP.	Dispenser	I.D.	Inside Diameter			WP	Waterproof
DMT.	Demountable	I.E.	Invert Elevation	QT	Quarry Tile	WSCT	Wainscot
DN.	Down	I.F.	Inside Face			WT	Weight
D.O.	Door Opening	IN.	Inch	R	Riser	WWF	Welded Wire Fabric
DR.	Drain	INC.	Include	RAD	Radius	WWM	Welded Wire Mesh
D.S.	Downspout	INFO.	Information	RB	Rubber Base		
DWG.	Drawing(s)	INSUL.	Insulation	REF	Reference		
DWR.	Drawer	INT.	Interior	REFR	Refrigerator		

DEMOLITION NOTES:

1. All items to be removed, relocated or reused shall be handled with proper care and stored in a safe place to prevent damage; or in the event of damage or loss, replaced at the Contractor's expense.
2. Prior to the commencement of any demolition work, a minimum of 12 hours notice shall be given to the school administration. Work shall not commence until receipt of written Notice to Proceed.
3. Where demolition work impacts daily school operations, at the discretion of the school administration, demolition work shall be performed during off hours.
4. When it is necessary to remove partitions of existing construction including floors, walls and ceilings to install new building systems or related work, these areas shall be replaced or repaired to match the existing adjacent surfaces.
5. Floors/Pavement: Sawcut edges shall be sharp, straight and square.
6. Walls: As required, due to new construction, neatly remove existing plaster or gypsum board at walls. Edges shall be sharp, straight and square.
7. Following completion of work, new plaster, or gypsum board, or other new materials required to match existing adjacent construction shall be applied, filled and textured to match adjacent surfaces, then sealed and painted. Paint shall match existing adjacent paint in material, type and color. Prior to painting, obtain approval of color from Architect.
8. These demolition plans reference general items and conditions. Variations may occur within areas and shall be treated as similar conditions.
9. Key notes reference general elements for salvage or disposal. Various other items incidental, ancillary, hidden elements and the like may occur and should be removed according to the needs and design intent of the new construction.
10. In areas of demolition and removal of elements, surfaces including carpet, are to be patched, repaired and finished to match existing adjacent construction where exposed. Where existing finishes are to be hidden with new material, these surfaces shall be restored to provide adequate suitability and strength for new construction.
11. Contractor shall comply with the following sections of the Standard Specifications for Public works Construction:
    a) Protection.
    b) Removal
    c) Relocation
    d) Project Site Maintenance
    e) Protection & Restoration of Existing Improvements
    f) Public Convenience & Safety
12. Contractor shall dispose of demolition materials in a legal and acceptable manner.
13. Contractor shall make available to Owner any materials or equipment listed for demolition, disposal, removal, etc. upon Owner's request.
14. Contractor shall keep operating equipment or materials, indicated for re-use, relocation, or Owner requested equipment retention, etc., in a safe manner to protect the material's or equipment's condition. Owner shall have the first right of refusal for any items or materials scheduled or required for demolition. The Contractor shall provide the District 2 working days notice to identify materials to be retained by the District prior to any demolition, removal, or retention. The Contractor shall provide a list to the District of those items to be retained by the District.
15. The construction, remodel or demolition of a building shall comply with CBC & CFC, CHAPTER 33.
16. No demolition shall begin until plans including the demolition work have been approved by DSA.

SYMBOLS LEGEND

02 41 19.100	KEYNOTE REFERENCE. REFER TO "REFERENCE KEYNOTE" TOP RIGHT HAND CORNER OF SHEET. FIRST SIX (6) NUMBERS DENOTE THE MAIN SPECIFICATION SECTION FOR THE ITEM KEYNOTED. THE NUMBERS AFTER THE DECIMAL POINT ARE SEQUENTIAL NUMBERING OF THE KEYNOTES. NOTE ALL SPECIFICATIONS ARE APPLICABLE TO THE PROJECT.
XX A-X	DETAIL CUT, FLAG INDICATES DIRECTION OF DETAIL VIEW.
XX A-X	BUILDING SECTION CUT, FLAG INDICATES DIRECTION OF DETAIL VIEW.
XX A-X	BUILDING WALL SECTION CUT, FLAG INDICATES DIRECTION OF DETAIL VIEW.
XX	DETAIL KEYNOTE REFERENCE.
XXXX-X	DOOR, REFERENCE DOOR SCHEDULE SHEET AND THE RECONSTRUCTION FLOOR PLAN SHEET
ROOM NAME 1 XXXX 2 4 X/X-XXX 3	ROOM NAME, NUMBER AND INTERIOR ELEVATION SHEET DESIGNATION, REFERENCE PLANS AND INTERIOR ELEVATIONS; PERIMETER NUMBERS REFERENCE WALL ELEVATIONS. SEE FINISH SCHEDULE ELEVATION NUMBERS LEGEND ON A-8.1 FOR ADDITIONAL INFORMATION.
002 ADD, ASI, RFI,CCD	ADDENDUM (ADD), ARCHITECTURAL SUPPLEMENTAL INSTRUCTIONS (ASI), REQUEST FOR INFORMATION (RFI), OR CONSTRUCTION CHANGE DOCUMENT DESIGNATION.
XX	WINDOW, REFERENCE DOOR AND WINDOW SCHEDULE SHEET AND THE RECONSTRUCTION FLOOR PLAN SHEET
XX	WALL TYPE REFERENCE
OL 2 / OF 100 / 158 SF	OCCUPANCY LOAD, OCCUPANCY FACTOR, AND SQUARE FOOTAGE DESIGNATION, REFERENCE EXIT ANALYSIS PLANS ON SHEET A-2.1.
T	TEMPERED SAFETY GLAZING

NOTES

1. A DSA-CERTIFIED PROJECT INSPECTOR (CLASS 3 OR BETTER) IS REQUIRED FOR THIS PROJECT.
2. ALL WORK SHALL CONFORM TO 2022 EDITION OF CALIFORNIA CODE OF REGULATIONS (CCR).
3. CHANGES TO THE APPROVED DRAWINGS AND SPECIFICATIONS SHALL BE MADE BY ADDENDA OR CONSTRUCTION CHANGE DOCUMENTS (CCD) APPROVED BY DSA AS REQUIRED BY SECTION 4-338, PART 1, TITLE 24 CCR.
4. A "DSA CERTIFIED" PROJECT INSPECTOR EMPLOYED BY THE DISTRICT (OWNER) AND APPROVED BY DSA SHALL PROVIDE CONTINUOUS INSPECTION OF THE WORK. THE DUTIES OF THE INSPECTOR ARE DEFINED IN SECTION 4-342, PART 1 TITLE 24, CCR.
5. DSA ACCEPTED TESTING LABORATORY DIRECTLY EMPLOYED BY THE DISTRICT (OWNER) SHALL CONDUCT ALL THE REQUIRED TESTS AND INSPECTIONS FOR THE PROJECT.
6. THE INTENT OF THESE DRAWINGS AND SPECIFICATIONS IS THAT THE WORK OF THE ALTERATION, REHABILITATION, OR RECONSTRUCTION IS TO BE IN ACCORDANCE WITH TITLE 24, CCR. SHOULD ANY EXISTING CONDITIONS SUCH AS DETERIORATION OR NON-COMPLYING CONSTRUCTION BE DISCOVERED WHICH IS NOT COVERED BY THE CONTRACT DOCUMENTS WHEREIN THE FINISHED WORK WILL NOT COMPLY WITH TITLE 24, CCR, A CONSTRUCTION CHANGE DOCUMENT (CCD), OR A SEPARATE SET OF PLANS AND SPECIFICATIONS, DETAILING AND SPECIFYING THE REQUIRED WORK SHALL BE SUBMITTED TO AND APPROVED BY DSA BEFORE PROCEEDING WITH THE WORK. (SECTION 4-317(c), PART 1, TITLE 24, CCR)
7. GRADING PLANS, DRAINAGE IMPROVEMENTS, ROAD AND ACCESS REQUIREMENTS AND ENVIRONMENTAL HEALTH CONSIDERATIONS SHALL COMPLY WITH ALL LOCAL ORDINANCES.
11. FIRE PROTECTION DURING DEMOLITION AND CONSTRUCTION SHALL COMPLY WITH 2022 CBC CHAPTER 33

ACCESSIBILITY NOTES:

1. Exit doors shall be openable from the inside without the use of a key or special knowledge. Hand-activated door opening hardware shall be centered between 36 inches and 44 inches above the floor. Latching and locking doors that are hand-activated and which are in a path of travel, shall be operable with a single effort by lever-type hardware, by panic bars, push-pull activating bars, or other hardware designed to provide passage without requiring the ability to grasp the opening hardware. Locked exit doors shall operate as above in egress direction.
2. Maximum effort to operate doors shall not exceed 5 pounds for exterior doors and 5 pounds for interior doors, such pull or push effort being applied at right angles to hinged doors and at the center plane of sliding or folding doors. The sweep period of door closers shall be adjusted so the door will take at least three seconds to move three inches from the latch from an open position of 70 degrees from the leading edge.
3. Thresholds shall not exceed 1/2 inch maximum beveled height. Vertical elevation changes shall not exceed 1/4 inch maximum height.
4. Accessible fixtures shall be installed in strict accordance with California Plumbing Code, 2022 Edition, Chapter 15, Plumbing Requirements for the Accommodation of Physically Disabled Persons and the Americans with Disabilities Act.
5. Exposed lavatory P-Trap assembly and hot water supply shall be insulated with pre-manufactured vinyl covered insulating foam P-Trap and valve and supply cover.
6. The force required to operate lavatory or sink faucets shall be no greater than a 5-pound force. Self-closing faucets shall have minimum 10 second cycle time.
7. All carpet shall be glue down application.
8. All pedestrian gates within the accessible route, if any, shall have non-grip hardware mounted at 34" - 44" above the finish grade with 24" provided at the strike side of the gate. Paving shall be provided at 24" beyond the gate opening at the strike side to provide accessible maneuvering clearance. Alternately, gates may be provided with a sign that reads: "Barrier free access route for persons with disabilities. Lock open during any public function and during school hours." Reference drawing signage details, if applicable.
9. All routes of travel steeper than 1:20 shall be provided with handrails. Reference drawing ramp and/or handrail details, if applicable.

DEFERRED APPROVALS:

1. NONE

MATERIALS LEGEND

MASONRY, CONCRETE, EXT. PLASTER, STEEL, ROUGH WOOD FRAMING, PLYWOOD, RIGID INSULATION INSULATION, BATT INSULATION, GYPSUM BOARD, FINISHED WOOD, EARTH, CERAMIC TILE CONCRETE

PROJECT SCOPE

THE PROJECT INCLUDES SITE WORK, MODERNIZATION OF EXISTING BUILDINGS AND REQUIRED WORK NEEDED FOR THE CERTIFICATION OF A#04-102319. THE SCOPE OF THE MODERNIZATION INCLUDES BUILDINGS A & B. THE MODERNIZATION INCLUDES BUT IS NOT LIMITED TO ENLARGING AND MODERNIZING THE LIBRARY IN BUILDING A, MODERNIZE BUILDING B:KINDERGARTEN CLASSROOMS, STAFF LOUNGE, GREEN ROOM, COPY ROOM AND REQUIRED ACCESSIBLE SITE UPGRADES. THE CERTIFICATION REQUIREMENTS OF A#04-102319 INCLUDE RESTROOM ITEM: URINAL SCREEN REPLACEMENT BLDG. A AND DOORHARDWARE ALTERATIONS AT BLDGS. A & B.

THE PROJECT IS TO INCLUDE ALL LABOR, MATERIAL AND EQUIPMENT TO PROVIDE IMPROVEMENTS TO THE EXISTING FACILITY.

APPLICABLE CODES

LIST OF APPLICABLE CODES

2022 CALIFORNIA ADMINISTRATIVE CODE (CAC), PART 1, TITLE 24 CCR

2022 CALIFORNIA BUILDING CODE (CBC), PART 2, TITLE 24 CCR

2022 CALIFORNIA ELECTRICAL CODE (CEC), PART 3, TITLE 24 CCR

2022 CALIFORNIA MECHANICAL CODE (CMC) PART 4, TITLE 24 CCR

2022 CALIFORNIA PLUMBING CODE (CPC), PART 5, TITLE 24 CCR

2022 CALIFORNIA FIRE CODE, PART 9, TITLE 24 CCR

2022 CALIFORNIA EXISTING BUILDING CODE (CEBC), PART 10 TITLE 24 CCR

2022 CALIFORNIA GREEN BUILDING CODE (CAL GREEN), PART 11, TITLE 24 CCR

2022 CALIFORNIA REFERENCED STANDARDS, PART 12, TITLE 24 CCR

TITLE 19 CCR, PUBLIC SAFETY, STATE FIRE MARSHAL REGULATIONS

APPLICABLE STANDARDS

For a list of applicable standards, including California amendments to the NFPA Standards, refer to CBC Chapter 35 and CFC Chapter 80.

PROJECT DIRECTORY

Client/ District:
Dehesa School District
4612 Dehesa Road
El Cajon, CA 92019
Phone: (619) 444-2161

Architect:
Sprotte + Watson Architecture
450 S. Melrose Rd., Suite 200
Vista, CA 92081-6664
Phone (760) 639-4120
Fax (760) 639-4125

Civil Engineer:
Snipes-Dye Associates
8348 Center Drive, Suite G
La Mesa, CA 91942
Phone: (619) 697-9234

Structural Engineer:
Wiseman + Rohy Structural Engineers
9915 Mira Mesa Blvd., Suite 200
San Diego, CA 92131
Phone: (858) 536-5166
Fax: (858) 536-5163

Mechanical/Plumbing Engineer:
Turpin & Rattan
4719 Palm Ave.
La Mesa, CA 91941
Phone: (619) 466-6224
Fax: (619) 466-6233

Electrical Engineer:
Turpin & Rattan
4719 Palm Ave.
La Mesa, CA 91941
Phone: (619) 466-6224
Fax: (619) 466-6233

Acoustic Engineer:
Salas O'Brien
1935 N Marshall Ave.
El Cajon, CA 92020
Phone: (619) 596-4800

VICINITY MAP

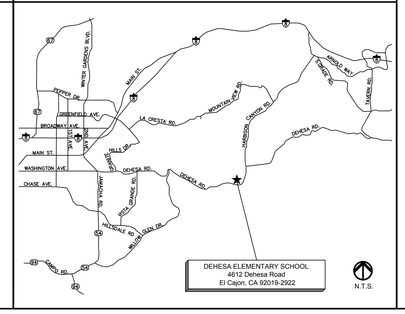

SHEET INDEX

TOTAL SHEETS: 99

TITLE
A-01 SHEET INDEX, PROJECT DIRECTORY, CODES, ABBREVIATIONS, SYMBOLS
A-02 GENERAL NOTES REFERENCE KEYNOTES

CIVIL SHEETS
C-000 TITLE SHEET AND NOTES
C-100 DETAILS
C-200 KEY MAP
C-201 DRAINAGE PLAN
C-202 DRAINAGE PLAN

ARCHITECTURAL SHEETS
A-1.0 OVERALL DEMOLITION SITE PLAN
A-1.1 OVERALL SITE PLAN
A-A2.0 BUILDING A ADMIN DEMOLITION PLAN
A-A2.1 BUILDING A ADMIN FLOOR PLAN
A-A3.0 BUILDING A ADMIN DEMOLITION RCP
A-A3.1 BUILDING A ADMIN RCP
A-A5.0 BUILDING A ADMIN EXTERIOR ELEVATIONS
A-A5.1 BUILDING A ADMIN EXTERIOR ELEVATIONS
A-A9.0 BUILDING A ADMIN INTERIOR DEMOLITION ELEVATIONS
A-A9.1 BUILDING A ADMIN INTERIOR ELEVATIONS
A-B2.0 BUILDING B KINDERGARTEN DEMOLITION PLAN
A-B2.1 BUILDING B KINDERGARTEN FLOOR PLAN
A-B3.0 BUILDING B KINDERGARTEN DEMOLITION RCP
A-B3.1 BUILDING B KINDERGARTEN RCP
A-B4.1 BUILDING B KINDERGARTEN ROOF PLAN
A-B5.0 BUILDING B KINDERGARTEN EXTERIOR DEMOLITION ELEVATIONS
A-B5.1 BUILDING B KINDERGARTEN EXTERIOR ELEVATIONS
A-B9.0 BUILDING B KINDERGARTEN INTERIOR DEMOLITION ELEVATIONS
A-B9.1 BUILDING B KINDERGARTEN INTERIOR ELEVATIONS
A-B9.2 BUILDING B KINDERGARTEN INTERIOR ELEVATIONS
A-8.0 DOOR & WINDOW SCHEDULE
A-8.1 FINISH SCHEDULE, FINISH LEGEND, FINISH PLANS
A-8.2 FINISH PLANS INSTALLATION GUIDE
A-10.1 SITE DETAILS
A-10.2 PLAN DETAILS & WALL TYPES
A-10.3 CEILING DETAILS & ROOF DETAILS
A-10.5 CASEWORK DETAILS
A-10.7 SIGNAGE & ACCESS DETAILS
A-10.8 DOOR & WINDOW DETAILS
A-10.9 EXISTING RESTROOMS

STRUCTURAL SHEETS
S1.1 STRUCTURAL NOTES
S1.2 TYPICAL DETAILS
S2.1 BUILDING A FRAMING & FOUNDATION PLANS
S2.2 BUILDING B FRAMING & FOUNDATION PLANS

MECHANICAL SHEETS
M-0.1 MECHANICAL GENERAL NOTES, SCHEDULES, AND ABBREVIATIONS
M-0.2 MECHANICAL SCHEDULE
M-1.1 SITE PLAN - MECHANICAL
M-A2.0 BUILDING A - ADMIN DEMO - MECHANICAL
M-A2.1 BUILDING A - ADMIN - MECHANICAL
M-B2.0 BUILDING B - KINDERGARTEN FLOOR PLAN - DEMO - MECHANICAL
M-B2.1 BUILDING B - KINDERGARTEN FLOOR PLAN - MECHANICAL
M-B2.3 BUILDING B - KINDERGARTEN ROOF PLAN - MECHANICAL
M-5.0 MECHANICAL DETAILS

PLUMBING SHEETS
P-0.1 PLUMBING GENERAL NOTES, SCHEDULES, AND ABBREVIATIONS
P-1.1 SITE PLAN PLUMBING
P-A2.0 BUILDING A - ADMIN FLOOR PLANS DEMO - PLUMBING
P-A2.1 BUILDING A - ADMIN FLOOR PLAN - PLUMBING
P-B2.0 BUILDING B - KINDERGARTEN DEMO PLANS - PLUMBING
P-B2.1 BUILDING B - KINDERGARTEN FLOOR PLANS - PLUMBING
P-5.0 PLUMBING DETAILS

ELECTRICAL SHEETS
E-0.1 ELECTRICAL LEGEND AND ABREVIATIONS
E-0.2 ELECTRICAL GENERAL NOTES
E-0.3 INTERIOR LIGHTING FIXTURE SCHEDULE
E-1.1 SITE PLAN - ELECTRICAL
E-A2.0 BUILDING A - ADMIN DEMO - ELECTRICAL
E-A2.1 BUILDING A - FLOOR PLAN - POWER
E-A3.0 BUILDING A - ADMIN DEMO - LIGHTING
E-A3.1 BUILDING A - ADMIN FLOOR PLAN - LIGHTING
E-B2.0 BUILDING B - KINDERGARTEN FLOOR PLANS - POWER
E-B3.0 BUILDING B - KINDERGARTEN FLOOR PLANS - LIGHTING
E-5.0 ELECTRICAL DETAILS
E-6.0 SINGLE LINE DIAGRAM AND PANEL RISER
E-7.0 TITLE 24 COMPLIANCE - BLDG A
E-7.1 TITLE 24 COMPLIANCE - BLDG B

FIRE ALARM SHEETS
EF-0.1 FIRE ALARM LEGEND, ABBREVIATIONS, NOTES
EF-0.2 FIRE ALARM RISER DIAGRAM
EF-1.1 SITE PLAN - FIRE ALARM
EF-A2.0 BUILDING A - ADMIN FLOOR PLAN - FIRE ALARM
EF-B2.0 BUILDING B - KINDERGARTEN FLOOR PLAN - FIRE ALARM
EF-6.0 FIRE ALARM CALCULATIONS

TECHNOLOGY SHEETS
ET-0.1 TECHNOLOGY GENERAL NOTES, SCHEDULES AND ABBREVIATIONS
ET-0.2 TECHNOLOGY MATERIAL LIST AND SYMBOL LEGEND
ET-1.1 SITE PLAN - TECHNOLOGY DEMOLITION
ET-1.2 SITE - TECHNOLOGY
ET-A2.0 BUILDING A - ADMIN DEMO - TECHNOLOGY
ET-A2.1 BUILDING A - ADMIN FLOOR PLAN - TECHNOLOGY
ET-A2.2 BUILDING A - ADMIN FLOOR PLAN - TECHNOLOGY PATHWAYS
ET-B2.0 BUILDING B - KINDERGARTEN DEMO - TECHNOLOGY
ET-B2.1 BUILDING B - KINDERGARTEN FLOOR PLAN - TECHNOLOGY
ET- B2.2 BUILDING B - KINDERGARTEN FLOOR PLAN - TECHNOLOGY PATHWAYS
ET-3.1 TELECOMMUNICATIONS SYSTEM RISER DIAGRAM
ET-3.2 TELECOMMUNICATIONS GROUNDING AND BONDING RISER DIAGRAM
ET-3.3 INTRUSION DETECTION SYSTEM RISER DIAGRAM
ET-3.4 AUDIO VISUAL SYSTEM RISER DIAGRAM
ET-3.5 AUDIO VISUAL SYSTEM RISER DIAGRAM
ET-4.1 MDF ELEVATION AND ENLARGED PLAN
ET-4.2 IDF-B ELEVATIONS AND ENLARGED PLAN
ET-5.1 TECHNOLOGY DETAILS - PATHWAYS
ET-5.2 TECHNOLOGY DETAILS - SUPPORT
ET-5.3 TECHNOLOGY DETAILS - TELECOMMUNICATIONS GROUNDING AND BONDING
ET-5.4 TECHNOLOGY DETAILS - LABELING
ET-5.5 TECHNOLOGY DETAILS - AUDIO/VISUAL

IDENTIFICATION STAMP
DIV. OF THE STATE ARCHITECT
APP: 04-122772 INC:
REVIEWED FOR
SS ☑ FLS ☑ ACS ☑
DATE: 03/26/2024

SPROTTE | WATSON
ARCHITECTURE + PLANNING

REGISTERED ARCHITECT
C12359
STATE OF CALIFORNIA

CONSULTANT

DEHESA ELEMENTARY SCHOOL
CONSTRUCTION DOCUMENTS
DEHESA SCHOOL DISTRICT
4612 DEHESA ROAD
EL CAJON, CA 92019

REVISIONS

DESCRIPTION
SHEET INDEX, PROJECT DIRECTORY, CODES, ABBREVIATIONS, SYMBOLS

DATE
01.25.24

JOB #
22-0400

SHEET #
A-0.1

GENERAL NOTES:

GENERAL
An inspector employed by the Owner and approved by the Division of the State Architect, in accordance with the requirements of the California Code of Regulations, Title 24, will be assigned to the work. His duties are specifically defined in Title 24, Part 1, Section 4-342 and shall include continuous inspection of the work. Inspector shall be Class 3 or better.

Consumption of alcoholic beverages, tobacco or similar products, illegal drugs or similar products is strictly prohibited on District property. Radios and other audio devices are not allowed within the District's premises.

The term "contractor" shall pertain to the General Contractor and any subcontractors.

PHASING/TIMELINE
The school may be occupied and operational during project construction. The Contractor shall coordinate and schedule with the District a sequence for the work. The Contractor shall notify the school personnel when construction noises will be excessive. The Contractor shall reschedule work if so required by the school personnel.

Contractor shall provide written requests for any anticipated mechanical, electrical or plumbing shutdowns at least three days prior to event. Work requiring shutdown may be required to be performed outside normal school hours. Written requests shall provide the following information:

Systems Affected
Areas Affected
Planned Time and Length of Interruption

Work shall not commence until receipt of written Notice to Proceed.

Where service interruption impacts daily school operations, at the discretion of the school administration, these interruptions shall be made during off hours.

Contractor shall coordinate with Owner for staging or storing of materials, phasing and hours of construction.

Prior to the commencement of any demolition work, a minimum of 12 hours notice shall be given to the school administration. Work shall not commence until receipt of written Notice to Proceed.

CONTRACTOR RESPONSIBILITIES
Contractor shall be responsible to remove or relocate any materials as required and to temporarily disconnect and store any items as required to perform any new work or install any new materials to be provided in these plans. This shall include, but is not limited to, casework, light fixtures, mechanical equipment, electrical equipment, metal studs, gypsum wallboard, lath and plaster, conduits, low voltage systems, mechanical ducts, and other similar construction. It shall be the responsibility of the contractor to restore any portions of work removed or relocated to its preconstruction location or condition unless otherwise noted in the Construction Documents. Existing equipment and/or systems scheduled to be reinstalled or reconnected shall be fully operational upon completion or reinstallation or reconnection unless contractor has notified the owner in writing prior to the start of construction that the specific systems and/or equipment were inoperative prior to the start of work.

The Contractor shall review all operational systems within the campus prior to starting work and provide a listing of non-operational components to the District and the Architect. These systems shall include, but are not limited to, Telephone, Data, Public Address, Security, Clock, Electrical, Lighting, Mechanical Controls, and Fire Alarm. It shall be assumed all systems are operational and fully functioning unless identified in writing by the Contractor. It shall be the responsibility of the contractor to maintain these systems in operational order or to restore these systems to operational order upon completion of the work, with the exception of those items found initially to be non-operational and determined by the District and Architect to remain non-operational. The maintenance of systems operation does not apply to items specifically designated to be replaced by new systems.

Contractor shall be responsible to replace or repair any finishes or systems removed or required to be replaced as a result of the new work identified in these plans, matching the removed material's configuration, texture, color and finish of the original application of material. This includes, but is not limited to roofing, ceilings, acoustical ceilings, wall and floor systems. Any framing, suspension systems, bracing or similar elements removed as a necessity of the new work shall be replaced, matching the original condition. In no case shall the contractor remove or alter any of the structural systems necessary for the buildings structural integrity without prior authorization of the design engineer responsible for the work.

Not all locations for repair may be noted due to the access needs for installation or work required. Contractor shall review the project's requirements and site conditions for evaluation of work necessary to repair as result of the new work required. These areas may include, but not necessarily limited to, partitions, soffits, gypsum drywall ceilings, plaster ceilings, suspended acoustical ceilings, walls, chases, parapets, plenums, mechanical ducts, electrical conduits, etc. The contractor shall repair existing finishes and re-establish existing systems connections disturbed or damaged due to the installation of new work.

The contractor shall provide adequate and safe braces and connections to support the component parts of the structure, until the structure itself is sufficiently complete to support itself.

For existing floors, ceilings, partitions, and services to remain, the contractor shall be responsible for protecting all finishes and materials, and repairing or replacing all items that are damaged or soiled during the course of construction.

All required exits from occupied portions of the building and path of travel to safe dispersal area and public way shall be maintained at all times. The contractor shall immediately clean dust and dirt from corridor areas not protected by dust screens.

The contractor shall be responsible for keeping work area in a neat and safe condition. All trash and debris shall be removed from site and disposed of in a lawful manner. Area of work shall be thoroughly and completely cleaned and ready for occupancy upon completion of work.

The Contractor shall assume sole and complete responsibility for job site conditions during the course of construction of this project, including safety of all persons and property. This requirement shall apply continuously and not be limited to normal working hours. The Contractor shall defend, indemnify, and hold the Architect free and harmless from any and all claims, demands and all liability, real or alleged, in connection with the performance of work on this project, except for liability arising from the sole negligence of the Architect.

Prior to delivery of materials to the construction zone and removal of waste from the site, the Contractor shall check with the school personnel for an acceptable access route and time. Under no circumstances shall the Contractor, his subcontractors, or any of their employees use any area outside the construction zone without prior clearance from the school personnel.

Storage of all materials, equipment and supplies shall be limited to scheduled areas of work in progress, or to designated exterior locations approved and arranged with the Owner.

During the construction period, the Contractor shall be responsible for providing adequate barricades around the limits of work to insure the safety of students, staff, the public and the construction in progress.

The Contractor shall provide adequate and competent supervision at each site while construction is in progress.

The Contractor will be responsible for providing dumpsters, telephone, toilet facilities, etc. for the use of his personnel during construction. School facilities shall not be used.

The Contractor shall be responsible to comply with 2022 C.F.C, Chapter 33 for fire safety during the process of construction.

Typical notes and details shall apply unless shown otherwise on these plans. Where a construction detail is not shown or noted, the detail shall be the same for similar works.

Contractor operations shall not block, hinder, impede or otherwise inhibit the use of required exits at any time. Contractor shall maintain unobstructed access to fire extinguishers, fire hydrants, temporary fire protection facilities, stairways and other access routes for fire-fighting equipment and or personnel.

CONSTRUCTION DRAWINGS
The intent of these drawings and specifications is that the work of the alteration, rehabilitation or reconstruction is to be in accordance with Title 24, California Code of Regulations. Should any existing conditions such as deterioration or non-complying construction be discovered which is not covered by the contract documents wherein the finished work will not comply with Title 24, California Code of Regulations, a Construction Change Directive (CCD), or a separate set of plans and specifications, detailing and specifying the required work shall be submitted to and approved by the Division of State Architect before proceeding with the work.

It is the intent of these drawings to indicate a complete and finished product matching and/or abutting existing construction in a neat and professional manner.

It is the Contractor's responsibility to field verify and locate all existing utilities in the construction area prior to commencing work.

Where a construction detail is not shown or noted, the detail shall be the same as for similar work.

The Contractor shall refer to specifications provided, for a complete list of general conditions, special conditions, materials, installation methodology, related documents, quality assurance submittals, job conditions, products, execution, etc.

All drawings, though noted to scale, are for illustration only. The Contractor and his subcontractors shall not scale the drawings.

The Contractor shall verify all existing dimensions in the field prior to commencing with construction.

All substitutions shall be by change order in accordance with Section 4-338, PART 1, Title 24, CCR

These drawings represent the finished project and do not include the method of construction. The Contractor is responsible for temporary bracing, shoring and support necessary to achieve the finished project. The Contractor is responsible for determining and enforcing all construction load limits on any structure.

The drawings shall be bid and constructed in its entirety unless specified otherwise. Drawings shall be coordinated between trades and between all of the drawings to each other in their entirety. In the event there is a discrepancy between the Civil, Landscape, Architectural, Structural, Mechanical, Electrical or Plumbing drawings it shall be assumed that the more stringent or more costly methodology for construction shall be utilized for construction, with the Architect making the final determination of the methodology utilized.

BUILDING SYSTEM COORDINATION
The Contractor shall, wherever possible, route conduits, piping or ductwork in a concealed location, or when not possible, to route systems in the least conspicuous location in a neat and professional manner as approved by the Architect and the Owner.

When installing drilled in anchors or power driven pins into existing reinforced concrete, use care to avoid cutting or damaging the reinforcing bars. Exercise extreme caution. Maintain min. 1" clear from pins to bars.

Dust screens of either plastic or plywood partitions shall be maintained adjacent to and separating areas of construction from adjoining occupied areas. Screens shall be relocated as necessary. The Contractor shall advise and coordinate the screen locations with school personnel. Required exits and occupant circulation within buildings shall be maintained.

Work which creates an inordinate amount of noise to disturb the occupants shall be scheduled after hours or during periods when the area is not occupied.

SITE
Where paving, walks and/or landscape areas including irrigation systems are disturbed or damaged during construction, they shall be repaired and/or replaced to match existing conditions.

The Contractor is responsible for modifying existing grades or pavement slopes, where site work is required within these drawings.

Grade or pavement within five feet of any building perimeter, shall not exceed a slope of 1/4 inch per foot drainage away from the building(s). Existing drainage swales which may be interrupted by the installation of new construction shall be modified so as to direct drainage away from buildings and walkways and to maintain continuation of existing site drainage disposal.

The General Contractor shall remove all irrigation lines and sprinkler heads to a distance of five feet beyond the limits of new construction. After installation of the building(s) and related pavement, walks and ramps, the General Contractor shall modify the configuration of the sprinkler lines and heads within the limits of construction and reconnect the irrigation lines disturbed due to construction. Contractor shall rework irrigation heads and lines, so as to insure full coverage of planting and lawn areas to remain. Direct sprinklers away from all buildings and walkways. Replant landscape areas damaged due to construction with planting to match adjacent landscaped areas.Site plans utilities not specifically defined with horizontal or vertical control requirements shall be considered diagrammatic and shall not be utilized for service run lengths and exact locations.

Where play equipment is to be removed, the District shall be responsible for removal of play structures except masonry ball walls, where occurring, which shall be the Contractors responsibility for removal.

Where construction creates excess earth, all excess soil spoils shall be removed from the site(s) unless specifically noted otherwise, and shall be deposited off premises in a legal and acceptable manner.

The Contractor will be responsible for locating all above and below grade utilities prior to commencing work. Utilities found to be in conflict with the proposed construction shall be brought to the attention of the Inspector and the Architect immediately and prior to commencing work. The Contractor will be responsible for repairing any utilities damaged during the course of construction.

MATERIALS
Classification of interior finishes shall be based on their flame-spread index as set forth in Table 803.9, CBC and as specified.

Interior finishes shall not have a smoke density greater than 450 or flame spread greater than 25 when tested in accordance with ASTM E84.

Insulation and covering on pipe and tubing, acoustical ceilings, fiberglass reinforced plastic panels, shall have a flame-spread rating not to exceed 25 and a smoke density not to exceed 450 when tested in accordance with ASTM E84.

HAZARDOUS MATERIALS
Hazardous Materials, if encountered, shall be removed in accordance with state and local regulations. The project includes abatement of hazardous materials for which specifications and drawings have been prepared by an independent consultant employed by the District.

CEILING
Not all ceiling materials and systems within the plans are defined by notation or illustration. It is incumbent of the contractor to field verify, prior to bidding, the ceiling conditions and systems for determining the materials required to be removed for access or required for replacement to perform the work within the plans.

WALLS
All penetrations into sound rated partitions, floors, or ceiling assemblies shall be sealed with approved resilient acoustic sealant. Electrical devices, recessed items, etc. Shall be sealed or lined to maintain integrity of the acoustic assembly.

Thoroughly caulk, flash and/or seal around all wall and/or roof penetrations that are made as part of contract work to create a watertight condition.

All electrical, mechanical and plumbing penetrations through fire resistive area separation and corridor assemblies, including conduits and piping, shall be tightly and solidly sealed with an approved firestopping compound as indicated within the drawings or specifications. Where services penetrate an area separation wall, the section passing through the wall surface and the fixture connections thereto shall be only of metal.

All penetrations through fire rated walls, floors and ceilings shall be sealed with a material capable of preventing the passage of hot gasses.

No pipes, ducts, sleeves, chases, etc. shall be placed in slabs, beams, or walls, unless specifically shown or noted, nor shall any structural member be cut for pipes, ducts, etc. unless specifically detailed.

All framing nailing shall be in accordance with CBC Chapter 23, including roof framing.

ROOF
All penetrations, such as pipes, conduits, ducts, etc., through the roof membrane, when required, shall be thoroughly flashed with roof jacks, foamed or sealed with sealant compatible to the roofing membrane, or counter flashed to provide appropriate weather resistance. Nails, screws, bolts or other fastenings penetrating the roof membrane shall not be used unless specifically detailed or approved by the architect of record. All roof sleepers, whether indicated in the drawings or required, shall be oriented on the roof to reduce drainage blockage.

New roof work, where required, shall be integrated into the existing roofing to continue to provide positive drainage to gutters, roof drains or to the roof's edge and to provide weather resistance. All detailing shall conform to the latest edition of the national roofing contractors manual or the manufacture's recommendations.

Construction materials shall be evenly distributed if placed on framed roofs. Loads shall not exceed the allowable loading for the supporting members and their connections.

Contractor shall contact the District's Maintenance and Operations facilities to verify existing life of warranty and to perform all work with labor, materials and installation methods and design criteria to maintain the original warranty where integrating new work into existing roof conditions.

REPAIRS
The contractor shall repair at his expense any utility lines damaged, during construction.

Any construction installed in conflict with the contract documents shall be corrected by the Contractor at his own expense, and at no expense to the Owner or Architect.

Contractor shall repair exposed finishes matching adjacent material's configuration, texture, color and finish for those areas which have materials removed. This would include, but is not limited to holes, adhesives etc. in walls left from removed furnishings, finishes or casework.

Contractor shall not alter or remove any shear or bearing walls unless identified on the drawings and appropriate details are provided and approved by DSA. The contractor shall shall take precautions to maintain all apparent structural elements of the building. Upon any discovery of any shear walls, columns, bearing walls, etc., indicated for removal, but not specifically identified as such shall be brought to the attention of the architect immediately without proceeding with any further removal to insure structural integrity.

DEMOLITION
Owner shall have first right of refusal on all demolition and/or salvaged items.

All items to be removed, relocated or reused shall be handled with proper care and stored in a safe place to prevent damage, or in the event of damage or loss, replaced at the Contractor's expense.

Where demolition work impacts daily school operations, at the discretion of the school administration, demolition work shall be performed during off hours.

When it is necessary to remove partitions of existing construction including floors, walls and ceilings to install new building systems or related work, these areas shall be replaced or repaired to match the existing adjacent surfaces.

Floors/Pavement: Sawcut edges shall be sharp, straight and square with no overcuts.

Walls: As required, due to new construction, neatly remove existing plaster or gypsum board at walls. Edges shall be sharp, straight and square.

Following completion of work, new plaster, or gypsum board, or other new materials required to match existing adjacent construction shall be applied, filled and textured to match adjacent surfaces, then sealed and painted. Paint shall match existing adjacent paint in material, type and color. Prior to painting, obtain approval of color from Architect.

Demolition notations reference general items and conditions. Variations may occur within areas and shall be treated as similar conditions. Contractor shall coordinate materials noted for demolition to the new work requirements to insure any materials hidden from view or exposed may be required to remain for future new work or maintenance of building systems operations.

Key notes reference general elements for salvage or disposal. Various other items incidental, ancillary, hidden elements and the like may occur and should be removed according to the needs and design intent of the new construction.

In areas of demolition and removal of elements, surfaces including carpet, are to be patched, repaired and finished to match existing adjacent construction where exposed. Where existing finishes are to be hidden with new material, these surfaces shall be restored to provide adequate suitability and strength with the following sections of the Standard Specifications for Public Works Construction:

a) Protection
b) Removal
c) Relocations
d) Project Site Maintenance
e) Protection and Restoration of Existing Improvements
f) Public Convenience and Safety

Contractor shall dispose of demolition materials in a legal and acceptable manner.

Contractor shall make available to Owner any materials or equipment listed for demolition, disposal, removal, etc. upon Owner's request.

Contractor shall keep operating equipment or materials, indicated for re-use, relocation, or Owner requested equipment retention, etc., in a safe manner to protect the material's or equipments' condition. Owner shall have the first right of refusal for any items or materials scheduled or required for demolition. The Contractor shall provide the District 2 working days notice to identify materials to be retained by the District prior to any demolition, removal, or retention. The Contractor shall provide a list to the District of those items to be retained by the District.

For fire safety during the construction, remodel or demolition of a building shall comply with 2022 CBC & C.F.C. Chapter 33.

INVESTIGATIONS
The contractor shall report any variations or discrepancies in site conditions or contract documents to the design engineer responsible for the work for clarification prior to proceeding with work. Proceeding on any phase of the work without notification shall imply acceptance of the conditions for the work intended. Typical notes and details shall apply unless shown otherwise on these plans. The Contractor shall field verify all existing conditions including but not limited to, structure, mechanical, plumbing, electrical, equipment, and all other existing systems, and make necessary provisions to maintain the integrity of said systems prior to the commencement of demolition, if any. All possible care shall be exercised by the Contractor to insure that any said utility will not be the cause of endangerment to the life or health of any person.

It shall be the responsibility of the Contractor to check with the architectural drawings before the installation of any mechanical, plumbing, electrical or other construction. Any discrepancies between or within the architectural and consulting engineer's drawings shall be brought to the Architect's attention for clarification before commencing with the work. Failure of the Contractor to seek clarification from the Architect prior to installing questionable construction will be cause to hold the Contractor responsible for revising the work to meet the intent of the drawings.

The Contractor shall request from the District all Record Documents, "As-Builts," or other Owner supplied documents prior to beginning any demolition or construction to examine and determine any conditions where conflicts, hardships or similar problematic issues may occur. The Contractor shall notify the Architect of any conditions where these potential conflicts may arise prior to any demolition or construction.

The Contractor shall field verify all existing dimensions, services, points of connection, utilities and irrigation lines in the construction area prior to commencing work. The Contractor shall repair, at his expense, any utility lines damaged during the completion of the contract.

Unless specifically noted otherwise in the Construction Documents, all existing building systems and equipment within the limits of work are considered to be in satisfactory working order prior to the start of construction. All building systems and equipment within the limits of new work, or affected by the scope of new work, shall be fully functional upon completion of the new work. Unless the contractor has notified and identified to the owner in writing prior to the start of construction that specific systems and/or equipment are inoperative or faulty at the start of work, the contractor shall be potentially responsible for making the system back into an operational manner.

ACCESSIBILITY
1. Exit doors shall be openable from the inside without the use of a key or special knowledge. Hand-activated door opening hardware shall be centered between 34 inches and 44 inches above the floor. Latching and locking doors that are hand-activated shall be operable with a single effort by lever-type hardware, by panic bars, push-pull activating bars, or other hardware designed to provide passage without requiring tight, grasping, pinching or twisting of the wrist. Locked exit doors shall operate as above in egress direction.
2. Maximum effort to operate doors shall not exceed 5 pounds for exterior doors and 5 pounds for interior doors, such pull or push effort being applied at right angles to hinged doors and at the center plane of sliding or folding doors. 11B-404.2.8.1 Door Closers and Gates Closers. Door closers and gate closers shall be adjusted so that from an open position of 90 degrees, the time required to move the door to a position of 12 degrees from the latch is 5 seconds minimum.
3. Thresholds shall not exceed 1/2 inch maximum beveled height with a slope not steeper than 1:2 Vertical elevation changes shall not exceed 1/4 inch maximum height within the first 1/4 inch.
4. Accessible fixtures shall be installed in strict accordance with California Plumbing Code, 2022 Edition, Chapter 15, Plumbing Requirements for the Accommodation of Physically Disabled Persons and the Americans with Disabilities Act.
5. Exposed lavatory P-Trap assembly and hot water supply shall be insulated with pre-manufactured vinyl covered insulating foam P-Trap and valve and supply cover.
6. The force required to operate lavatory or sink faucets shall be no greater than a 5-pound force. Self-closing faucets shall have minimum 10 second cycle time.
7. All carpet shall be glue down application.
8. All routes of travel steeper than 1:20 shall be provided with handrails. Reference drawing ramp and/or handrail details, if applicable.

ADDITIONAL NOTES:

The California Energy Code section 10-103 requires Acceptance testing on all newly installed lighting controls, mechanical systems, envelopes, and process equipment after installation and before project completion. An Acceptance test is a functional performance test to help ensure that newly installed equipment is operating and in compliance with the Energy Code.

Lighting controls acceptance tests must be performed by a certified lighting controls Acceptance Test Technician (ATT).

Mechanical system acceptance tests must be performed by a certified mechanical ATT for projects submitted on or after October 1, 2021.

Envelope and process equipment acceptance tests shall be performed by the installing contractor, engineer/architect of record or the owner's agent.

A list of certified ATT can be found at:
https://www.energy.ca.gov/programs-and-topics/programs/acceptance-test-technician-certification-provider-program/acceptance.

The Acceptance Testing procedures must be repeated, and deficiencies must be corrected by the builder or installing contractor until the construction/installation of the specified systems conform and pass the required acceptance criteria.

Project inspectors will collect the forms to confirm that the required Acceptance Tests have been completed.

REFERENCE KEYNOTES

DIVISION 00 - NOT IN CONTRACT
00 00 00.05 - REFRIDGERATOR- O.F.O.I.
00 00 00.06 - DISHWASHER- O.F.O.I.
00 00 00.07 - MICROWAVE- O.F.O.I.

DIVISION 01 - GENERAL
01 00 00.03 - THIS DASHED LINE INDICATES ROOF OVERHANG ABOVE.
01 00 00.08 - EXISTING PARKING STRIPPING TO REMAIN.
01 00 00.09 - EXISTING PLAY EQUIPMENT TO REMAIN.
01 00 00.10 - EXISTING ACCESSIBLE DRINKING FOUNTAIN. REF. DETAIL 18/A-10.7.
01 00 00.12 - EXISTING TRASH ENCLOSURE TO REMAIN.
01 00 00.13 - EXISTING ACCESSIBLE PARKING STRIPPING TO REMAIN.
01 00 00.14 - EXISTING GATE TO REMAIN.
01 00 00.15 - EXISTING FENCE TO REMAIN.
01 00 00.16 - EXISTING ASPHALT TO REMAIN.
01 00 00.18 - EXISTING RAMP TO REMAIN A# 50205.
01 00 00.19 - EXISTING CONCRETE STAIRS TO REMAIN,
01 00 00.20 - EXISTING LUNCH SHELTER TO REMAIN. PROTECT IN PLACE.
01 00 00.21 - 20' WIDE FIRE LANE
01 00 00.22 - EXISTING FIRE HYDRANT
01 00 00.23 - EXISTING BUILDING IN THE SCOPE OF WORK.
01 00 00.24 - PROPERTY LINE
01 00 00.25 - EXISTING 24'X40' RELOCATABLE CLASSROOM, NOT IN CONTRACT (N.I.C.)
01 00 00.39 - EXISTING PLAY FIELD TO REMAIN
01 00 00.40 - EXISTING DIRT AREA TO REMAIN.
01 00 00.41 - PATH OF TRAVEL FOR OVERALL SITE PER ACCESSIBLE REQUIREMENTS
01 00 00.65 - EXISTING GATE TO BE REMOVED AND RE-INSTALLED TO MEET ACCESSIBILITY REQUIREMENTS. REF. 20/A-10.1.
01 10 00.01 - BUILDING NOT IN CONTRACT, NOT IN SCOPE OF WORK.
01 56 39.01 - EXISTING LANDSCAPE AREA TO REMAIN PROTECT.

DIVISION 02 - EXISTING CONDITIONS
02 41 19.02 - REMOVE ALL FLOORING IN THE ROOM TO CLEAN BARE CONC. FOR NEW FLOOR FINISH.
02 41 19.03 - REMOVE NON-BEARING WALL FOR NEW WORK AS INDICATED.
02 41 19.06 - REMOVE CASEWORK ENTIRELY INCLUDING ALL ASSOCIATED ITEMS SUCH AS COUNTERTOPS, BACK AND SIDE SPLASHES, HARDWARE, AND FASTENERS TO CLEAN BARE FLOOR AND WALL SUBSTRATE.
02 41 19.07 - MOVEABLE CABINETS AND BOOKSHELVES TO BE REMOVED.
02 41 19.08 - REMOVE RUBBER BASE.
02 41 19.09 - REMOVE SINK BASE CABINET.
02 41 19.11 - REMOVE 12" X 12" ACOUSTICAL CEILING TILE FINISH INCLUDING FASTENERS, SUCH AS STAPLES. REMOVE TO BARE CLEAN SUBSTRATE.
02 41 19.12 - CAREFULLY REMOVE ALL WINDOW SHADES, ASSOCIATED HARDWARE AND FASTENERS, RETURN TO OWNER.
02 41 19.15 - REMOVE SURFACE MOUNTED WIRE MOULD AND CONDUIT PER ELECTRICAL DRAWINGS E, EF, AND ET SHEETS.
02 41 19.17 - REMOVE ACOUSTICAL CEILING PANELS AND SUSPENDED CEILING GRID.
02 41 19.19 - REMOVE CLOCK AND DELIVER TO DISTRICT.
02 41 19.25 - REMOVE CEILING REGISTER PER MECHANICAL DRAWINGS.
02 41 19.29 - REMOVE ALL SHELVING IN THE ROOM INCLUDING ALL ASSOCIATED ITEMS SUCH AS BRACKETS, SHELVES, AND FASTENERS.
02 41 19.31 - REMOVE BOARDS WITH COAT HOOKS AND ALL ASSOCIATED ITEMS (WHERE OCCURS). SALVAGE, RETURN TO OWNER.
02 41 19.37 - REMOVE, STORE, PROTECT FIRE EXTINGUISHER AND MOUNTING BRACKET FOR RE-INSTALLATION.
02 41 19.38 - REMOVE DOOR, FRAME AND WINDOW (WHERE OCCURS)
02 41 19.40 - REMOVE PORTION OF WOOD FRAMED WALL AS REQUIRED FOR NEW WORK.
02 41 19.45 - REMOVE WHITE BOARD AND/OR CHALK BOARD.
02 41 19.59 - REMOVE THERMOSTAT, REFERENCE MECHANICAL PLANS
02 41 19.67 - EXISTING ELECTRICAL PANEL TO REMAIN, PROTECT IN PLACE.
02 41 19.70 - REMOVE TACKABLE WALL BOARD.
02 41 19.86 - REMOVE FOLDING PARTITION IN ITS ENTIRETY. INCLUDING BUT NOT LIMITED TO, TRACKS AND ALL ASSOCIATED HARDWARE.
02 41 19.93 - EXISTING DOOR, FRAME AND/OR DOOR/WINDOW SYSTEM TO REMAIN.
02 41 19.95 - EXISTING COVERED WALK TO REMAIN.
02 41 19.96 - REMOVE EXISITNG LIGHT FIXTURES UNLESS NOTED OTHERWISE, REF. ELECTRICAL PLANS.
02 41 19.111 - REMOVE EXISTING WINDOW SYSTEM
02 41 19.133 - REMOVE EXISTING TOILET FLUSH VALVE AND ASSOCIATED ITEMS AS REQUIRED TO MEET ACCESSIBLE CLEANCES AT GRAB BAR.
02 41 19.144 - REMOVE SURFACE MOUNTED PAPER TOWEL DISPENSER RETURN TO CLIENT.
02 41 19.160 - REMOVE EXISTING TRIM. SALVAGE AND REFURISH FOR RE-USE WHERE APPROPRIATE.
02 41 19.171 - REMOVE EXISTING EXTERIOR PAINT ON DOORS, TRIMS AND FRAMES FOR NEW PAINT.
02 41 19.208 - EXISTING SWITCHES. REF. ELECTRICAL.
02 41 19.209 - REMOVE AND REINSTALL EXISTING IDF RACK PER ELECTRICAL.
02 41 19.211 - REMOVE EXISTING SURFACE MOUNT ELECTRICAL OUTLET BOX PER ELECTRICAL.
02 41 19.212 - REMOVE EXISTING ELECTRICAL OUTLET PER ELECTRICAL.
02 41 19.322 - REMOVE EXISTING PROJECTOR, MOUNT AND ALL ASSOCIATED PARTS. RETAIN FOR DISTRICT USE.
02 41 19.327 - REMOVE EXISTING HVAC MECHANICAL UNIT PER MECHANICAL.
02 41 19.330 - REMOVE EXISTING REFRIGERATOR.
02 41 19.350 - REMOVE CONCRETE WALK.
02 41 19.351 - REMOVE TRUNCATED DOMES.
02 41 19.352 - REMOVE STRIPING
02 41 19.353 - REMOVE GATE AND FENCING FOR NEW WORK.
02 41 19.354 - REMOVE EXISTING CHAINLINK FENCE, POSTS AS REQUIRED PER CIVIL.
02 41 19.355 - REMOVE OVERHEAD ELECTRICAL CABLE PER ELECTRICAL DRAWINGS.
02 41 19.356 - REMOVE EXISING AREA DRAINS
02 41 19.357 - EXISITING WOOD TRIM TO REMAIN. REFURBISH, PAINT, REPLACE IN KIND ONLY WHERE NEEDED.
02 41 19.358 - REMOVE EXISTING DOOR AND WINDOW & FRAMING SYSTEMS. SALVAGE, REFURBISH AND RE-USE WOOD DOOR IN SAME LOCATION.
02 41 19.359 - EXISTING EXTERIOR SIGNS, ARTWORK, TACKBOARDS, CAREFULLY REMOVE, PROTECT, STORE PRIOR TO PAINTING. RE-INSTALL ONCE PAINT IS DRY AND READY TO RECEIVE ITEMS.
02 41 19.360 - RELOCATE ARTWORK AS SHOWN UNLESS OTHERWISED DIRECTED BY ARCHITECT.
02 41 19.361 - EXISTING FIRE EXTINGUISHER RECESS.
02 41 19.362 - CAREFULLY REMOVE DEHESA SCHOOL SIGN AND RETURN TO DISTRICT.
02 41 19.363 - RELOCATE TACKBOARD AS SHOWN UNLESS OTHERWISE INDICATED BY ARCHITECT.
02 41 19.364 - EXISTING DONOR WALL PLAQUES TO REMAIN. PROTECT IN PLACE AND CAREFULLY PAINT AROUND.
02 41 19.365 - EXISTING DOWNSPOUTS PROTECT IN PLACE.
02 41 19.366 - REMOVE EXISTING ROOM SIGNAGE
02 41 19.367 - EXISING DOOR INSTALLED IN NEW FRAME.
02 41 19.368 - REMOVE EXISTING SURFACE MOUNTED SOAP DISPENSER.
02 41 19.380 - REMOVE EXISTING HOSE BIB.
02 41 19.381 - REMOVE EXISTING CLEAN-OUT CAP AND REPLACE WITH FLAT SMOOTH CAP.
02 41 19.388 - REMOVE EXISTING PARKING LOT TOW AWAY & ISA DIRECTIONAL SIGNAGE.
02 41 19.389 - REMOVE EXISTING SIGNAGE.
02 41 19.390 - EXISTING SKYLIGHT TO REMAIN. PROTECT IN PLACE.
02 41 19.400 - EXISTING PARKING DIRECTIONAL SIGN INDICATING LOCATION OF ACCESSIBLE PARKING.
02 41 19 370 - EXISTING WOOD DOOR PAINTED AND ATTACHED IN NEW FRAME. REF. DOOR SCHEDULE, DOOR DETAILS AND DOOR HARDWARE SPECS.

DIVISION 05 - METALS
05 52 13.01 - PROVIDE GALVANIZED TUBE CANE DETECTION RAILS, REF. DETAIL 19/A-10.7.

DIVISION 06 - WOOD, PLASTICS, AND COMPOSITES
06 10 00.03 - PROVIDE IN-FILL WALL. REMOVE EXISITNG PLASTER AS REQUIRED TO PROVIDE A FLUSH SEAMLESS FINISH FROM NEW TO EXISTING. REF. DETAILS 18 & 19/A-10.2
06 10 00.06 - PROVIDE INFILL OF EXISTING OPENING, G.W.B. FINISH AT THE INTERIOR AND PLASTER AT THE EXTERIOR.
06 41 13.02 - PROVIDE NEW INSTRUCTIONAL CASEWORK. REF. DETAIL 27/A-10.5.
06 41 13.03 - PROVIDE PLASTIC LAMINATED BASE CABINET PER DETAILS 2 & 5/A-10.5.
06 41 13.04 - PROVIDE PLASTIC LAMINATED UPPER CABINET PER DETAIL 2/A-10.5.
06 41 13.05 - PROVIDE PLASTIC LAMINATED TALL CABINET. REF. DETAIL 4/A-10.5
06 41 16.02 - PROVIDE PLASTIC LAMINATED FACED ARCHITECTURAL CABINETS, REF. INTERIOR ELEVATIONS.
06 41 16.04 - PROVIDE ACCESSIBLE SINK BASE CABINET, REF. DETAIL 10/A-10.5 FOR REQUIRED CLEARANCES.
06 41 16.05 - PROVIDE ACCESSIBLE SINK BASE CABINET. REF. DETAIL 29/A-10.5.
06 41 16.10 - PROVIDE PLASTIC LAMINATE BOOK SHELVES WITH ADJUSTABLE SHELVING, CASEWORK. NO DOORS.
06 41 16.21 - WORK STATION COUNTER. REF. DETAIL 20/A-10.5.
06 41 16.22 - PROVIDE GROMMET PER SPECIFICATIONS.

DIVISION 08 - OPENINGS
08 11 13.01 - PROVIDE HOLLOW METAL FRAMED DOOR AND/OR DOOR/WINDOW SYSTEM (WHERE APPLICABLE), REF. OPENING SCHEDULES AND SPECS.
08 11 13.02 - PROVIDE HOLLOW METAL WINDOW FRAME AND GLAZING PER OPENING SCHEDULE AND SPECS.
08 14 16.01 - PROVIDE SOLID CORE WOOD DOORS PER SPECIFICATIONS. REF. DETAIL 12/A-10.8. FOR DOOR HEAD CONDITION.
08 51 13.00 - PROVIDE ALUMINUM STOREFRONT WINDOW FRAME AND GLAZING SYSTEM PER OPENING SCHEDULE AND SPECS.
08 51 13.01 - PROVIDE ALUMINUM STORE FRONT DOOR AND OR WINDOW SYSTEM AND GLAZING (WHERE APPLICABLE) PER OPENING SCHEDULE AND SPECS.

DIVISION 09 - FINISHES
09 29 00.00 - GYPSUM BOARD
09 29 00.09 - PROVIDE G.W.B. SOFFIT AND ASSOCIATED FRAMING ABOVE NEW RECEPTION DESK.
09 51 13.01 - PROVIDE 24" X 48" ACOUSTICAL CEILING PANELS AND NEW SUSPENDED CEILING GRID.
09 51 13.06 - PROVIDE 24" X 60" ACOUSTICAL CEILING PANELS AND SUSPENDED CEILING GRID SYSTEM.
09 65 13.03 - PREPARE WALL AND INSTALL RESILIENT BASE
09 65 19.00 - RESILIENT TILE FLOORING
09 68 13.00 - TILE CARPETING
09 72 60.01 - PROVIDE TACWALL. REF. SPECIFICATIONS AND DETAIL 13/A-10.2.
09 84 13.00 - FABRIC WRAPPED PANELS, REF. SPECIFICATIONS AND DETAIL 8/A-10.2.

DIVISION 10 - SPECIALITIES
10 11 00.01 - PROVIDE MARKER BOARD, REFERENCE INTERIOR ELEVATIONS FOR SIZE. INSTALL PER SPECIFICATIONS AND DETAIL 18/A-10.5
10 11 00.11 - PROVIDE SLIDING MARKER BOARDS.NUMBER OF PANELS AS INDICATED. ALL PANELS EQUAL SIZE, AND HEIGHT. REF. SPECS.
10 11 16.01 - PROVIDE FLAT SCREEN TV/MONITOR AND WALL MOUNT, REF. ELECTRICAL FOR ADDITIONAL INFO. IF TV/MONITOR PROJECTS MORE THAN 4" FROM FACE OF WALL, BOTTOM OF TV/MONITOR SHALL BE A MIN. OF 80" A.F.F.
10 14 19.01 - PROVIDE TACTILE ROOM IDENTIFICATION SIGNAGE. REF. OPENING SCHEDULE AND DETAIL 10/A-10.7
10 14 19.03 - PROVIDE WALL MOUNTED RESTROOM IDENTIFICATION- PICTOGRAM SIGN. REFERENCE DETAIL 5/A-10.7
10 14 19.04 - PROVIDE DOOR MOUNTED GEOMETRIC SYMBOL PER DETAIL 5/A-10.7
10 14 19.05 - PROVIDE WALL MOUNTED TACTILE RESTROOM SIGNAGE PER DETAIL 5/A-10.7
10 14 19.06 - PROVIDE EXTERIOR MOUNTED TACTILE ROOM SIGNAGE PER DETAIL 10/A-10.7
10 14 19.07 - PROVIDE INTERIOR MOUNTED TACTILE ROOM IDENTIFICATION SIGNAGE PER DETAIL 10/A-10.7
10 14 19.08 - PROVIDE TACTILE EXIT SIGNAGE PER DETAIL 2 & 13 E1/A-10.7
10 14 19.11 - PROVIDE WALL MOUNTED (DO NOT INSTALL ON GLASS) ASSISTIVE LISTENING SIGN. THIS SIGN IS REQUIRED AND IS TYPICAL AT ALL CLASSROOMS & ASSEMBLY AREAS, REF. DETAIL 14/A-10.7.
10 14 23.02 - PROVIDE ISA DIRECTIONAL SIGN PER DETAIL 29/A-10.1.
10 14 23.03 - PROVIDE TOW AWAY SIGN PER DETAIL 30/A-10.1.
10 14 23.04 - PROVIDE "NO PARKING, NO STUDENT DROP-OFF OR PICK-UP". REF. DETAIL 25/A10.1
10 28 00.02 - PAPER TOWEL DISPENSER
10 28 00.08 - SOAP DISPENSER
10 44 13.01 - PROVIDE FULLY-RECESSED FIRE EXTINGUISHER CABINET AND FIRE EXTINGUISHER. REF. DETAIL 3/A-10.2.
10 44 16.02 - PROVIDE RECESSED FIRE EXTINGUISHER CABINET AND FIRE EXTINGUISHER PER SPECS & DETAIL 3/A-10.2, REF. DETAIL17/A-10.5. FOR MOUNTING HEIGHT.
10 44 16.03 - PROVIDE SURFACE MOUNTED FIRE EXTINGUISHER, REF. SPECS, AND DETAIL17/A-10.5 FOR MOUNTING HEIGHT.

DIVISION 22 - PLUMBING
22 00 00.10 - EXISTING DRINKING FOUNTAIN & BOTTLE FILLER TO REMAIN.
22 42 13.09 - PROVIDE NEW ACCESSIBLE FLUSH VALVE.

DIVISION 23 - HEATING, VENTILATING, AND AIR CONDITIONING
23 05 00.03 - PROVIDE EXAHUST FAN PER MECHANICAL DRAWINGS AND DETAILS 24/A-10.3 & 5/M5.0
23 05 00.07 - EXISTING ROOFTOP HVAC UNITS TO REMAIN.
23 37 13.00 - DIFFUSERS, REGISTERS, AND GRILLS

DIVISION 26-27-28 - ELECTRICAL
26 00 00.12 - PROVIDE ELECTRICAL PENDENT LIGHT FIXTURE. REFERENCE ELLECTRICAL DRAWINGS.
26 24 16.10 - EXISTING ELECTRICAL PANEL.
26 24 16.12 - EXISTING ELECTRICAL
26 24 16.20 - NEW ELECTRICAL PANEL.
26 51 00.01 - PROVIDE LIGHT FIXTURES PER ELECTRICAL.
27 11 00.01 - RELOCATED AND RE-INSTALLED IDF CABINET. REF. ELECTRICAL DRAWINGS.

DIVISION 32 - EXTERIOR IMPROVEMENTS
32 13 13.02 - PROVIDE TRUNCATED DOMES. REFEFRENCE CIVIL DWGS.
32 13 13.05 - PROVIDE CONCRETE FLATWORK, REF. CIVIL
32 13 16.05 - PROVIDE AC PAVING OVERLAY, REF. CIVIL. ALL TRANSITIONS TO BE FLUSH.
32 17 23.03 - PROVIDE STRIPING FOR ACCESSIBLE PASSENGER DROP-OFF AND LOADING ZONE.
32 31 13.01 - CHAINLINK FENCE AND POSTS TO MATCH EXISTING. LOCATE IN ORIGINAL LOCATION. PROVIDE SLATS TO MATCH EXISTING GATES. REF. CIVIL FOR EXTENT.
32 31 19.01 - PROVIDE GATE AND FENCE ASSEMBLY PER DETAIL 6/A-10.1.
32 31 19.02 - STEEL FENCING

DIVISION 33 - UTILITIES
33 44 16.01 - UTILITY TRENCH DRAIN. REF. CIVIL.

IDENTIFICATION STAMP
DIV. OF THE STATE ARCHITECT
APP: 04-122772 INC:
REVIEWED FOR
SS ☑ FLS ☑ ACS ☑
DATE: 03/26/2024

SPROTTE | WATSON
ARCHITECTURE | PLANNING

LICENSED ARCHITECT
C12359
REN. OCTOBER 2025
STATE OF CALIFORNIA

CONSULTANT

DEHESA ELEMENTARY SCHOOL
CONSTRUCTION DOCUMENTS
DEHESA SCHOOL DISTRICT
4612 DEHESA ROAD
EL CAJON, CA 92019

REVISIONS

DESCRIPTION
GENERAL NOTES
REFERENCE KEYNOYES

DATE
01.25.24

JOB #
22-0400

SHEET #
A-0.2

GENERAL NOTES

1. CONTRACTOR SHALL BE RESPONSIBLE TO VERIFY HORIZONTAL AND VERTICAL ALIGNMENT OF ALL EXISTING AND PROPOSED IMPROVEMENTS TO BE MET BY WORK TO BE DONE PRIOR TO CONSTRUCTION. IN THE EVENT THAT THE ALIGNMENT IS IN CONFLICT WITH THE WORK TO BE DONE, CONTRACTOR SHALL NOTIFY ARCHITECT IMMEDIATELY AND NOTIFY THE DISTRICT REPRESENTATIVE OF THE CONFLICT.
2. THE LOCATION OF EXISTING UNDERGROUND FACILITIES ARE INDICATED ON THE PLANS AS A RESULT OF A SEARCH OF THE AVAILABLE RECORDS, AND FIELD SURVEY OF VISIBLE APPURTENANCES. LOCATIONS OF BELOW GRADE FACILITIES HAVE NOT BEEN FIELD VERIFIED. CONTRACTOR IS DIRECTED TO REQUEST UTILITY MARK OUT AND TO EXCAVATE AND VERIFY LOCATIONS PRIOR TO EXCAVATIONS. ENGINEER OF WORK DOES NOT ASSUME RESPONSIBILITY FOR THE ACCURACY OF ANY UTILITY LOCATIONS INDICATED ON THE PLANS. CALL UNDERGROUND SERVICE ALERT AT 1-800-422-4133 AT LEAST TWO WORKING DAYS BEFORE STARTING CONSTRUCTION.
3. ENGINEER OF WORK IS NOT RESPONSIBLE FOR JOB SAFETY.

ADDITIONAL NOTES

1. ALL JOIN LINES SHALL BE SAW CUT ON A NEAT, STRAIGHT LINE PARALLEL WITH THE JOIN. THE CUT EDGE SHALL BE PROTECTED FROM CRUSHING, AND ALL BROKEN EDGES SHALL BE RECUT PRIOR TO PAVING.
2. DURING THE PERIOD OF CONSTRUCTION, THE CONTRACTOR SHALL FURNISH, ERECT AND MAINTAIN SUCH WARNINGS, SIGNS, STOP SIGNS, BARRICADES AND OTHER SAFETY MEASURES IN CONFORMANCE WITH THE W.A.T.C.H. MANUAL.
3. CONTRACTOR SHALL REINSTALL PAVEMENT MARKINGS, STRIPING AND SIGNING THAT HAS BEEN DISTURBED BY HIS OPERATION.
4. THE CONTRACTOR SHALL PROVIDE SAFE AND CONTINUOUS PASSAGE FOR PEDESTRIAN AND VEHICULAR TRAFFIC AT ALL TIMES.
5. IT IS THE CONTRACTOR'S RESPONSIBILITY TO VERIFY THE LOCATION OF EXISTING IMPROVEMENTS. CONTRACTOR SHALL, IN ADVANCE OF CONSTRUCTING IMPROVEMENTS, NOTIFY THE DISTRICT REPRESENTATIVE OF ANY CONFLICTS BETWEEN THE PROPOSED DESIGN AND EXISTING IMPROVEMENTS. THE DISTRICT REPRESENTATIVE SHALL REVIEW THE CONFLICTS AND MAKE RECOMMENDATIONS FOR RESOLUTION IN A TIMELY MANNER.
6. CONVENIENT ACCESS TO WALKWAYS, AND BUILDINGS ALONG THE LINE OF WORK SHALL BE MAINTAINED, AND TEMPORARY CROSSINGS SHALL BE PROVIDED AND MAINTAINED IN GOOD CONDITION. NOT MORE THAN ONE CROSSING OR INTERSECTING STREET OR ROAD SHALL BE CLOSED AT ANY ONE TIME WITHOUT THE APPROVAL OF THE ARCHITECT.
7. THE CONTRACTOR SHALL PROVIDE AND MAINTAIN SUCH FENCES, BARRIERS, DIRECTIONAL SIGNS, LIGHTS, AND FLAGMEN AS ARE NECESSARY TO GIVE ADEQUATE WARNING TO THE PUBLIC AT ALL TIMES OF ANY DANGEROUS CONDITIONS TO BE ENCOUNTERED AS A RESULT OF THE CONSTRUCTION WORK AND TO GIVE DIRECTIONS TO THE PUBLIC.
8. THE CONTRACTOR SHALL PROTECT IN-PLACE EXISTING IMPROVEMENTS OR FACILITIES, UTILITY FACILITIES, TREES AND SHRUBBERY THAT ARE NOT TO BE REMOVED.
9. IN ACCORDANCE WITH GENERALLY ACCEPTED CONSTRUCTION PRACTICES, THE CONTRACTOR SHALL BE SOLELY AND COMPLETELY RESPONSIBLE FOR CONDITIONS OF THE JOB SITE, INCLUDING SAFETY OF ALL PERSONS AND PROPERTY DURING PERFORMANCE OF THE WORK. AND CONTRACTOR SHALL FULLY COMPLY WITH ALL LOCAL, STATE AND FEDERAL LAWS, RULES, REGULATIONS, AND ORDERS RELATING TO SAFETY TO THE PUBLIC AND WORKMEN.
10. DUST SHALL BE CONTROLLED AT ALL TIMES BY APPROVED METHODS.
11. STREETS, WALKWAYS AND PLAZAS SHALL BE KEPT CLEAN AND FREE FROM DIRT AND/OR DEBRIS. THE CONTRACTOR SHALL BE RESPONSIBLE FOR ALL COSTS INCURRED IN STREET CLEANING NECESSITATED BY HIS OPERATION.
12. CAL-OSHA PERMITS SHALL BE REQUIRED FOR ANY TRENCH WORK OVER 5' IN DEPTH. EVIDENCE MUST BE PRESENTED TO THE CITY PRIOR TO PERMIT ISSUANCE. IT SHALL BE THE RESPONSIBILITY OF THE CONTRACTOR TO OBTAIN AN EXCAVATION PERMIT FROM THE DIVISION OF INDUSTRIAL SAFETY AND ADHERE TO ALL PROVISIONS OF THE STATE CONSTRUCTION SAFETY ORDER.

GRADING NOTES

1. THE MINIMUM GRADIENT FOR GRADED SWALES SHALL BE 1% UNLESS OTHERWISE SHOWN.
2. THE MINIMUM GRADIENT OF FINISHED GRADE AWAY FROM STRUCTURES SHALL BE 2% UNLESS OTHERWISE INDICATED ON THE PLAN.
3. FINISH GRADE SHALL BE DETERMINED AS THE ELEVATION OF ANY PAVING OR LANDSCAPE MATERIAL PLACED ON GRADE. IT IS THE CONTRACTOR'S RESPONSIBILITY TO UNDERCUT GRADE TO ALLOW FOR PLACEMENT OF LANDSCAPE MATERIALS.
4. IT SHALL BE THE RESPONSIBILITY OF THE CONTRACTOR TO HANDLE ANY EXPORT OF EXCESS MATERIAL FOR THE SITE. RESPONSIBILITY SHALL INCLUDE ALL PERMITS AND APPROVALS BY THE APPROPRIATE AGENCIES. THE DISTRICT AND ENGINEER OF WORK WILL NOT ASSUME ANY RESPONSIBILITY FOR THE REMOVAL, TRANSPORTATION OR PLACEMENT OF EXCESS MATERIAL.
5. THE MAXIMUM GRADED OR LANDSCAPED SLOPE GRADIENT SHALL BE 2:1 (HORIZONTAL TO VERTICAL).
6. DUST SHALL BE CONTROLLED AT ALL TIMES BY APPROVED METHODS.
7. CONTRACTOR SHALL BE RESPONSIBLE FOR THE TIMELY REMOVAL OF ALL SPOIL MATERIALS CREATED BY THE DEMOLITION OF EXISTING IMPROVEMENTS.
8. IT IS THE CONTRACTOR'S RESPONSIBILITY TO VERIFY THE LOCATION OF EXISTING IMPROVEMENTS. CONTRACTOR SHALL, IN ADVANCE OF CONSTRUCTING IMPROVEMENTS, NOTIFY THE DISTRICT REPRESENTATIVE OF ANY CONFLICTS BETWEEN THE PROPOSED DESIGN AND EXISTING IMPROVEMENTS. THE DISTRICT REPRESENTATIVE SHALL REVIEW THE CONFLICTS AND MAKE RECOMMENDATIONS FOR RESOLUTION IN A TIMELY MANNER.
9. SIDEWALK FINISHES AND JOINT DETAILS SHALL BE SPECIFIED ON THE LANDSCAPE ARCHITECTURAL AND/OR ARCHITECTURAL DRAWINGS.

EXISTING UTILITIES NOTE

1. THE EXISTING UTILITIES SHOWN IN THESE PLANS ARE COMPILED FROM RECORDS PROVIDED BY THE DEHESA SCHOOL DISTRICT. IT HAS BEEN DISCOVERED THAT IN SOME CASES THE RECORD UTILITY DOCUMENTS SHOW UTILITIES IN DIFFERENT LOCATIONS THAN ACTUALLY INSTALLED AND ALSO SHOW UTILITIES THAT WERE NOT INSTALLED. THESE CONSTRUCTION DOCUMENTS SHOW UTILITY LOCATIONS BASED UPON THE RECORD UTILITY DRAWINGS WITH MODIFICATIONS BASED UPON INCIDENTAL DISCREPANCIES DISCOVERED DURING THE COURSE OF DESIGN.
2. WARNING - THE CONTRACTOR SHOULD BE AWARE THAT THERE ARE LIKELY TO BE DISCREPANCIES BETWEEN THE EXISTING UTILITIES SHOWN AND FIELD CONDITIONS. UTILITIES.

TOPOGRAPHIC SURVEY

THE TOPOGRAPHIC SURVEY FOR DEHESA ELEMENTARY SCHOOL WAS PREPARED BY SNIPES -DYE ASSOCIATES.

THE BENCHMARK FOR THIS SURVEY IS COUNTY OF SAN DIEGO STANDARD CONCRETE MONUMENT WITH SDCO DISC STAMPED BM EC137 1966WITH STEEL FNC PST AS MARKER PST, 0.7 MI W ALONG DEHESA RD FROM DEHESA SCHOOL, ABT 50 FT N OF C/L AND 35 FT N OF N END OF 18 IN CULVERT , ELEVATION = 498.301, NGVD29.

WORK TO BE DONE

THE GRADING AND IMPROVEMENTS CONSIST OF THE FOLLOWING WORK TO BE DONE IN ACCORDANCE WITH THESE PLANS, THE STANDARD DRAWINGS LISTED BELOW AND SAN DIEGO REGIONAL STANDARD DRAWINGS (SDRSD).

STANDARD SPECIFICATIONS

WHEN REFERRED TO BY THE STANDARD DRAWINGS, THE STANDARD SPECIFICATIONS SHALL MEAN THE STANDARD SPECIFICATIONS FOR PUBLIC WORKS CONSTRUCTION (2015 EDITION), SAN DIEGO REGIONAL STANDARD DRAWINGS (SDRSD) AND WATER AGENCIES STANDARDS (LATEST VERSION).

LEGEND

IMPROVEMENT	STD. DWG.	SYMBOL
EXISTING CONTOUR		440
EXISTING ELEVATION		438.4
FIRE HYDRANT		
EXISTING OVERHEAD LIGHT		
EXISTING TREE/PALM TREE W/ TRUNK DIAMETER		
EXISTING WATER LINE (AS-BUILT)		W(ab)
EXISTING FIRE LINE (AS-BUILT)		F(ab)
EXISTING STORM DRAIN (AS-BUILT)		SD(ab)
EXISTING GAS LINE (AS-BUILT)		G(ab)
EXISTING ELECTRIC LINE (AS-BUILT)		E(ab)
EXISTING SEWER LINE (AS-BUILT)		S(ab)
PROPOSED CONTOUR		440
PROPOSED ELEVATION		439.71
PROPOSED CONC. SIDEWALK PAVEMENT (PEDESTRIAN AREAS) (COLOR & PATTERN PER ARCHITECT PLANS)	G-7, G-9/C-100	
LIMIT OF GRADING		
SAWCUT LINE		
DIRECTION OF DRAINAGE		
PROPOSED A.C. OVERLAY	C-100	
PROPOSED TRENCH DRAIN	C-100	
PROPOSED DETECTABLE WARNINGS	C-100	

SHEET INDEX

C-000	TITLE SHEET
C-100	DETAILS
C-200	KEY MAP
C-201 - 202	DRAINAGE PLAN

Snipes-Dye associates
civil engineers and land surveyors
8348 CENTER DRIVE, STE. G, LA MESA, CA 91942
TELEPHONE (619) 697-9234 FAX (619) 460-2033
2/20/24
WILLIAM A. SNIPES R.C.E. 50477
EXPIRES 06-30-25

REGISTERED PROFESSIONAL ENGINEER WILLIAM A. SNIPES No. 50477 Exp. 06-30-25 CIVIL STATE OF CALIFORNIA

IDENTIFICATION STAMP
DIV. OF THE STATE ARCHITECT
APP: 04-122772 INC:
REVIEWED FOR
SS ☑ FLS ☑ ACS ☑
DATE: 03/26/2024

SPROTTE | WATSON
ARCHITECTURE | PLANNING

REGISTERED ARCHITECT C12359 STATE OF CALIFORNIA

CONSULTANT

DEHESA ELEMENTARY SCHOOL
CONSTRUCTION DOCUMENTS
DEHESA SCHOOL DISTRICT
4612 DEHESA ROAD
EL CAJON, CA 92019

REVISIONS

DESCRIPTION

TITLE SHEET AND NOTES

DATE

01.25.24

JOB #

SHEET #

C-000

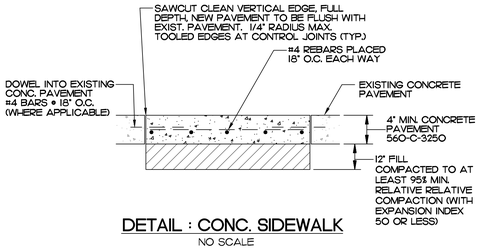

DETAIL : CONC. SIDEWALK
NO SCALE

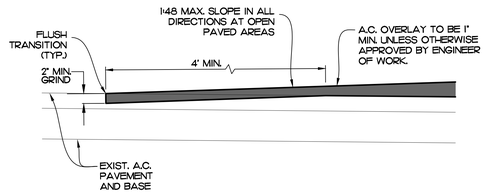

DETAIL : A.C. PAVEMENT GRIND AND OVERLAY
NO SCALE

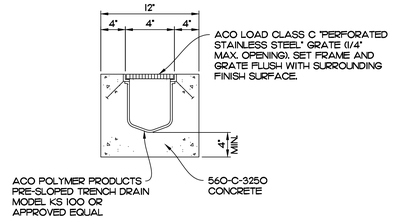

DETAIL : 4" TRENCH DRAIN
NO SCALE

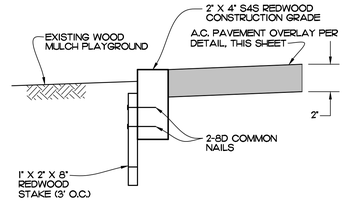

DETAIL - REDWOOD HEADER
NO SCALE

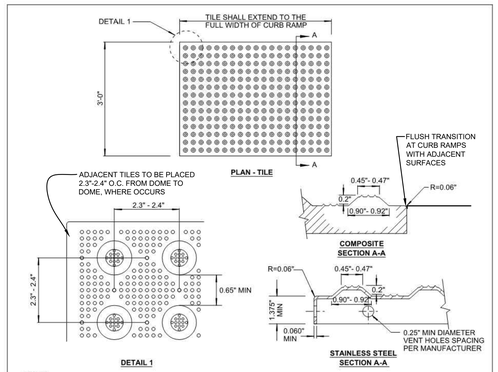

NOTES:

1. THE DETECTABLE WARNING TILE SHALL BE SLIP RESISTANT AND SHALL CONSIST OF AN INLINE PATTERN OF RAISED TRUNCATED DOMES. THE TILE SHALL BE PLACED WHERE THE DOMES ARE IN LINE WITH THE DIRECTION OF TRAVEL.
2. COLOR: THE DETECTABLE WARNING TILE SHALL BE YELLOW COLOR NO. 33538 OF SAE AMS-STD-595A. TO COMPLY WITH CBC SECTION 11B-705.1.1.3.1.
3. MATERIAL: CAST-IN-PLACE STAINLESS STEEL IS THE REQUIRED MATERIAL FOR THE DETECTABLE WARNING TILE.

   EXCEPTION:
   1. CAST-IN-PLACE DETECTABLE WARNING TILE OF COMPOSITE MATERIAL MAY BE USED ON RESIDENTIAL AREAS ONLY. WHEN RESIDENTIAL AREAS ARE WITHIN THE BOUNDARY OF A MIXED-USE OR OTHER NON-RESIDENTIAL ZONES, STAINLESS STEEL IS REQUIRED AT CURB RAMPS.

   2. STAINLESS STEEL DETECTABLE WARNING TILE (DWT) SHALL NOT BE TRIMMED. SITUATIONS WHERE THE DWT MUST BE TRIMMED TO CONFORM TO THE CURB RAMP CONFIGURATION IN MIXED-USED OR NON-RESIDENTIAL ZONE, CONTRACTORS SHALL USE CAST-IN-PLACE REPLACEABLE COMPOSITE DWT. FASTENER/ANCHOR MUST BE RELOCATED TO PROVIDE EQUIVALENT ANCHORAGE ALONG THE TRIMMED EDGE.
4. DETECTABLE WARNING TILE PRODUCTS SHALL BE **PER THE CITY'S APPROVED MATERIALS LIST**.
5. NO VOIDS SHALL BE ALLOWED BELOW THE DETECTABLE WARNING TILES.
6. PROVIDE A ¼" DEEP TOOLED JOINT WITH ¼" RADIUS EDGES AROUND THE PERIMETER OF THE DECTABLE WARNING TILES.

REVISION	BY	APPROVED	DATE
ORIGINAL	FC	A. GIMOUL	12/03
UPDATED	FC	M. GIBSON	12/16
UPDATED	FC	J. NAGELVOORT	09/17
UPDATED	HN	J. NAGELVOORT	06/18
UPDATED	HN	J. NAGELVOORT	04/19
UPDATED	FC	J. NAGELVOORT	09/20

CITY OF SAN DIEGO – STANDARD DRAWING

DETECTABLE WARNING TILES

RECOMMENDED BY THE CITY OF SAN DIEGO STANDARDS COMMITTEE
COORDINATOR — R.C.E. 34599 — DATE 9/22/20
DRAWING NUMBER: **SDG-130**

ACO DRAIN

Type 665D/666D Perforated stainless steel grate (ADA)

Product Features

- Certified to EN 1433 Load Class C - 56,000 lbs - 968 psi
- Uses 'DrainLok' boltless locking system
- Suitable for use with K200, KS200, and H200K-13 channels
- Manufactured from 16 gauge, Grade 304 stainless steel
- Complies with ADA - American Disabilities Act of 1990 Section 4.5.4
- Bicycle Tire Penetration Resistant to AS 3996 - 2006

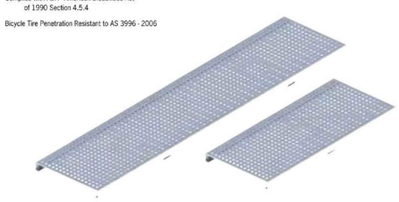

Specifications

General
The surface drainage system shall be ACO Drain K200, KS200, and H200K-13, channels* complete with ACO Type 665D/666D perforated stainless steel grate (ADA) with 'DrainLok' locking as manufactured by ACO Polymer Products, Inc. or similar approved.

Materials
The covers shall be manufactured from stainless steel and have ***minimum*** properties as follows:

- ***Independently certified to meet Load Class C to EN 1433 - 56,000 lbs - 967 psi***
- ***16 gauge, Grade 304 stainless steel***
- ***Intake area of 22.3 sq. in. (143.87 cm²) per half meter of grate***

The overall width of 9.41" (239mm) and overall length of 39.37" (1000mm) (Type 6110) and overall length of 19.69" (500mm) (Type 6130). Perforations measure 0.25" (6.4mm) in diameter.

Installation
The trench drain system and grates shall be installed in accordance with the manufacturer's installation instructions and recommendations.

* delete as appropriate

August 2017 www.ACODrain.us

ACO Specification Information

ACO DRAIN

Type 665D/666D Perforated stainless steel grate (ADA)

Plan view

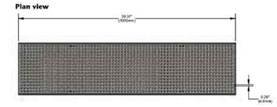

Side elevation

Description	Part No.	Length inches (mm)	Width inches (mm)	Weight lbs.
DrainLok grate				
Type 6650 Perforated stainless steel grate	**138082**	39.37 (1000)	9.41 (239)	21.0
Type 6660 Perforated stainless steel grate	**138083**	19.69 (500)	9.41 (239)	10.5

'DrainLok' locking mechanism

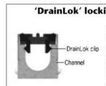

ACO DrainLok™ is a patented, boltless locking system that removes the need for bolts and bars and improves the hydraulic capacity of the channel. The DrainLok™ mechanism simply clips into the channel edge rail for rapid installation. ACO DrainLok™ grates are fitted with an anti-shunt mechanism that restricts unwanted grate movement when installed, improving durability and longevity of the system.

ACO Polymer Products, Inc.
Northeast Sales Office
9470 Pinecone Drive
Mentor, OH 44060
Tel: (440) 639-7230
Toll free: (800) 543-4764
Fax: (440) 639-7235

West Sales Office
805 W. Beechcraft St.
Casa Grande, AZ 85122
Tel: (520) 421-9968
Toll Free: (888) 490-9552
Fax: (520) 421-9899

Southeast Sales Office
4211 Pleasant Road
Fort Mill, SC 29708
Toll free: (800) 543-4764
Fax: (803) 802-1063

Follow us on:

Electronic Contact:
info@ACODrain.us
www.ACODrain.us

© August 2017 ACO Polymer Products, Inc. This information is believed to be accurate but it is not guaranteed to be so. We cannot assume liability for results that lower citizens with our product since conditions of use are beyond the control of the company. It is the customer's responsibility to evaluate suitability and safety of product for his own use. ACO Polymer Products Inc. reserves the right to change the product and specifications without notice.

SPEC INFO ACO

August 2017 www.ACODrain.us

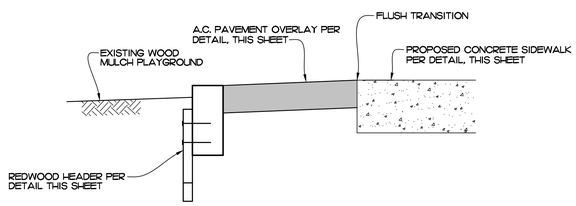

SECTION Y
NO SCALE

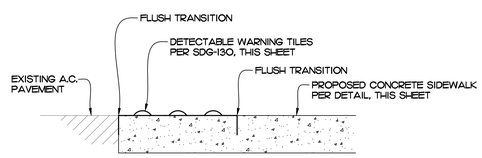

SECTION Z
NO SCALE

Snipes-Dye associates
civil engineers and land surveyors
8348 CENTER DRIVE, STE. C, LA MESA, CA 91942
TELEPHONE (619) 697-3234 FAX (619) 460-2033
2/20/24
WILLIAM A. SNIPES R.C.E. 50477
EXPIRES 06-30-25

REGISTERED PROFESSIONAL ENGINEER — WILLIAM A. SNIPES — R No. 50477 — Exp. 06-30-25 — CIVIL — STATE OF CALIFORNIA

IDENTIFICATION STAMP
DIV. OF THE STATE ARCHITECT
APP: 04-122772 INC:
REVIEWED FOR
SS ☑ FLS ☑ ACS ☑
DATE: 03/26/2024

SPROTTE | WATSON
ARCHITECTURE | PLANNING

REGISTERED ARCHITECT — C12359 — 18 — STATE OF CALIFORNIA

CONSULTANT

DEHESA ELEMENTARY SCHOOL
CONSTRUCTION DOCUMENTS
DEHESA SCHOOL DISTRICT
4612 DEHESA ROAD
EL CAJON, CA 92019

REVISIONS

DESCRIPTION
DETAILS

DATE
01.25.24

JOB #

SHEET #
C-100

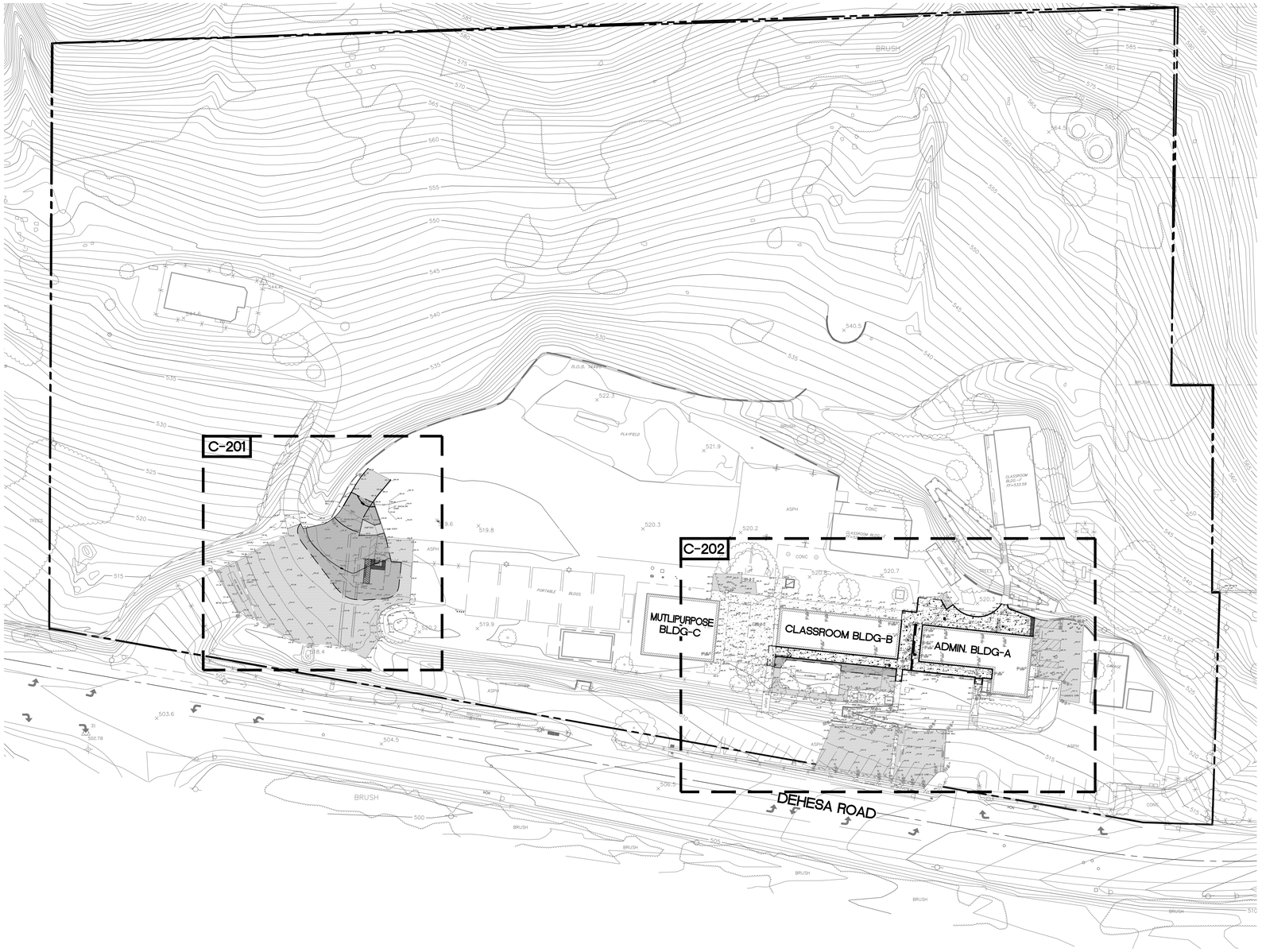

N

SCALE: 1"=40'

Snipes-Dye associates
civil engineers and land surveyors
8348 CENTER DRIVE, STE. G, LA MESA, CA 91942
TELEPHONE (619) 697-9234 FAX (619) 460-2033
2/20/24
WILLIAM A. SNIPES R.C.E. 50477
EXPIRES 06-30-25

REGISTERED PROFESSIONAL ENGINEER
WILLIAM A. SNIPES
No. 50477
Exp. 06-30-25
CIVIL
STATE OF CALIFORNIA

IDENTIFICATION STAMP
DIV. OF THE STATE ARCHITECT
APP: 04-122772 INC:
REVIEWED FOR
SS ☑ FLS ☑ ACS ☑
DATE: 03/26/2024

SPROTTE | WATSON
ARCHITECTURE | PLANNING

REGISTERED ARCHITECT
C12359
STATE OF CALIFORNIA

CONSULTANT

DEHESA ELEMENTARY SCHOOL
CONSTRUCTION DOCUMENTS
DEHESA SCHOOL DISTRICT
4612 DEHESA ROAD
EL CAJON, CA 92019

REVISIONS

DESCRIPTION

KEY MAP

DATE

01.25.24

JOB #

SHEET #

C-200

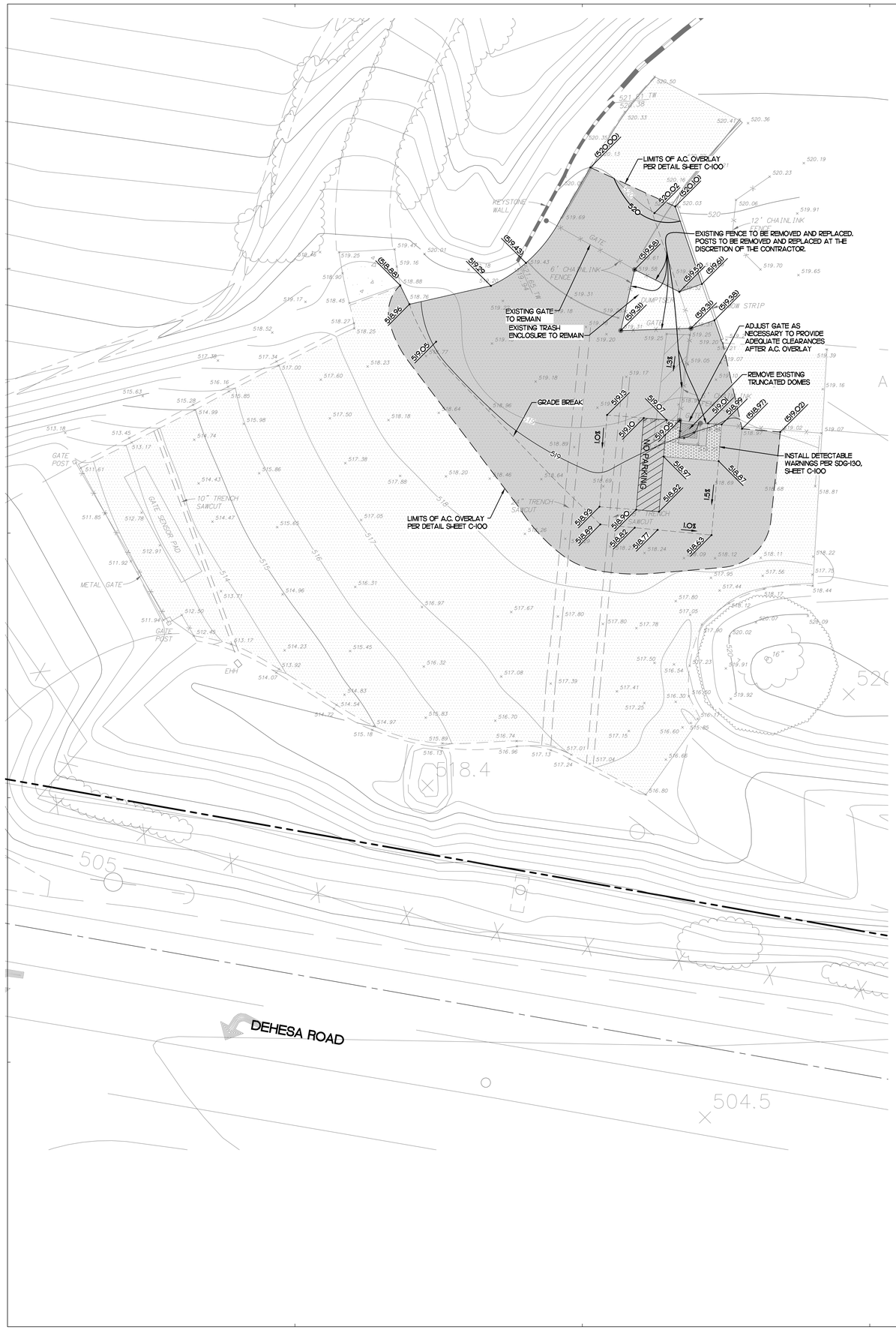

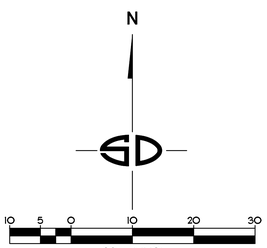

Snipes-Dye associates
civil engineers and land surveyors
8348 CENTER DRIVE, STE. G, LA MESA, CA 91942
TELEPHONE (619) 697-9234 FAX (619) 460-2033
2/20/24
WILLIAM A. SNIPES R.C.E. 50477
EXPIRES 06-30-25

IDENTIFICATION STAMP
DIV. OF THE STATE ARCHITECT
APP: 04-122772 INC:
REVIEWED FOR
SS ☑ FLS ☑ ACS ☑
DATE: 03/26/2024

SPROTTE | WATSON
ARCHITECTURE | PLANNING

C12359

CONSULTANT

DEHESA ELEMENTARY SCHOOL
CONSTRUCTION DOCUMENTS
DEHESA SCHOOL DISTRICT
4612 DEHESA ROAD
EL CAJON, CA 92019

REVISIONS

DESCRIPTION

DRAINAGE PLAN

DATE

01.25.24

JOB #

SHEET #

C-201

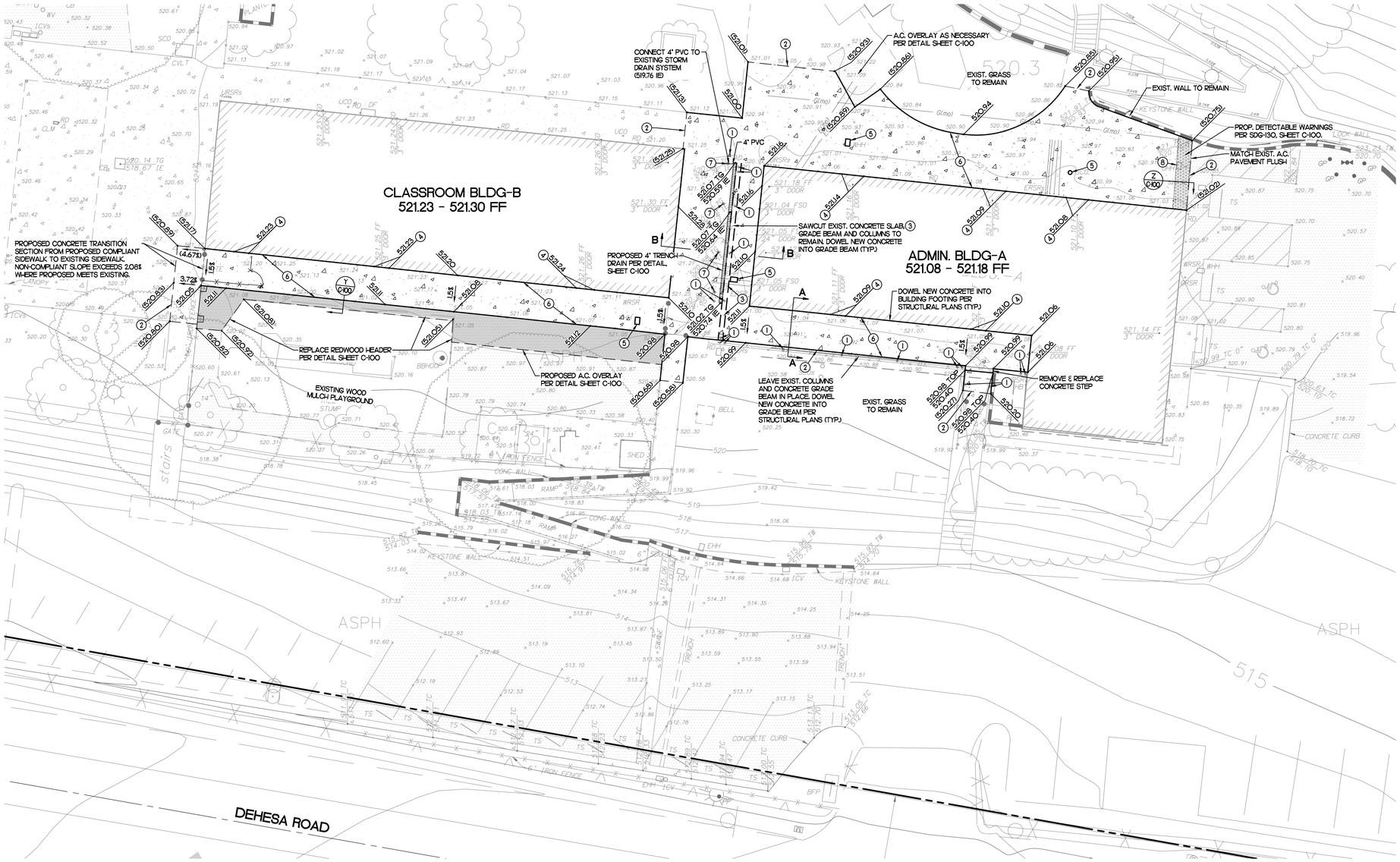

CONSTRUCTION NOTES

1. EXISTING CANOPY COLUMN TO REMAIN.
2. SAWCUT EXISTING PAVEMENT.
3. REMOVE MAXIMUM TOP 4" EXIST. CONCRETE. EXISTING STEEL IN GRADE BEAM TO REMAIN AS FEASIBLE. SEE STRUCTURAL PLANS FOR CONSTRUCTION DETAILS.
4. FINISH CONCRETE TO BE NO MORE THAN 0.02' BELOW FINISH SURFACE AT DOOR.
5. ADJUST UTILITY TO FINISH GRADE.
6. PROPOSED CONCRETE SIDEWALK PER DETAIL SHEET C-100.
7. EXISTING AREA DRAIN TO BE REMOVED AND CAPPED. EXISTING STORM DRAIN PIPE TO REMAIN.
8. RELOCATE EXISTING UTILITY HANDHOLE OUTSIDE OF DETECTABLE WARNING TILES.

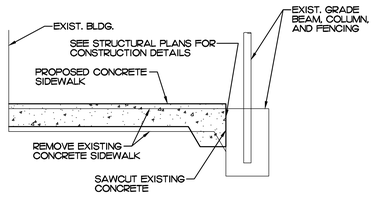

SECTION A-A
NO SCALE

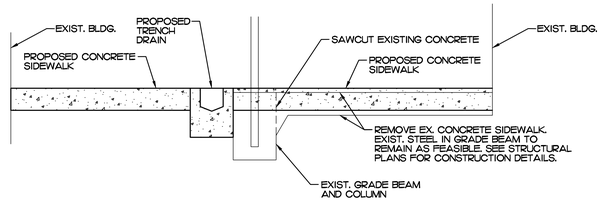

SECTION B-B
NO SCALE

N

10 5 0 10 20 30
SCALE: 1"=10'

Snipes-Dye associates
civil engineers and land surveyors
8348 CENTER DRIVE, STE. G, LA MESA, CA 91942
TELEPHONE (619) 697-9234 FAX (619) 460-2033
2/20/24
WILLIAM A. SNIPES R.C.E. 50477
EXPIRES 06-30-25

REGISTERED PROFESSIONAL ENGINEER WILLIAM A. SNIPES No. 50477 Exp. 06-30-25 CIVIL STATE OF CALIFORNIA

IDENTIFICATION STAMP
DIV. OF THE STATE ARCHITECT
APP: 04-122772 INC:
REVIEWED FOR
SS ☑ FLS ☑ ACS ☑
DATE: 03/26/2024

SPROTTE | WATSON
ARCHITECTURE | PLANNING

REGISTERED ARCHITECT C12359 STATE OF CALIFORNIA

CONSULTANT

DEHESA ELEMENTARY SCHOOL
CONSTRUCTION DOCUMENTS
DEHESA SCHOOL DISTRICT
4612 DEHESA ROAD
EL CAJON, CA 92019

REVISIONS

DESCRIPTION
DRAINAGE PLAN

DATE
01.25.24

JOB #

SHEET #
C-202

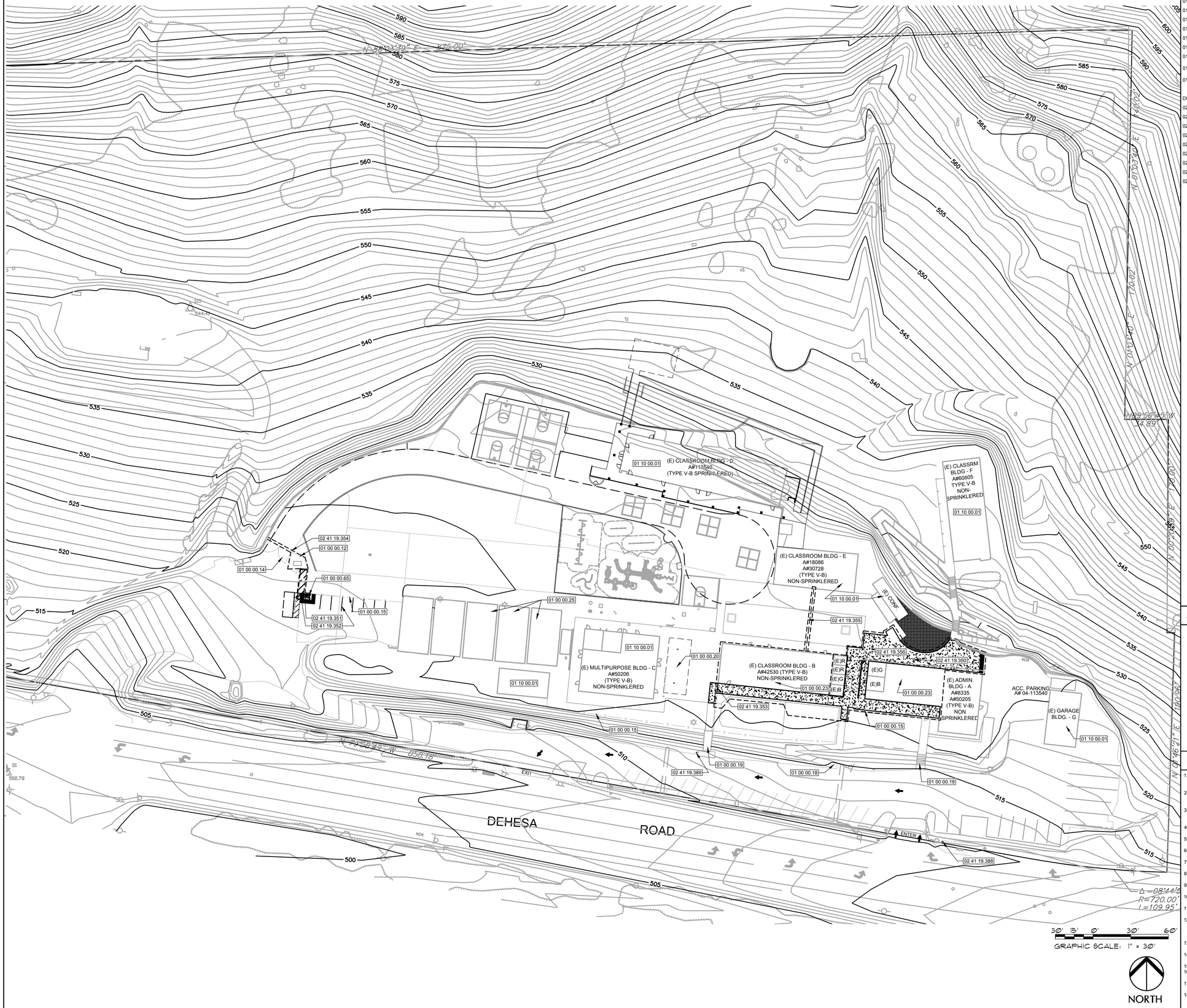

OVERALL DEMOLITION SITE PLAN

1" = 30'

1

REFERENCE KEYNOTES

DIVISION 01 - GENERAL

01 00 00.12	-	EXISTING TRASH ENCLOSURE TO REMAIN.
01 00 00.14	-	EXISTING GATE TO REMAIN.
01 00 00.15	-	EXISTING FENCE TO REMAIN.
01 00 00.18	-	EXISTING RAMP TO REMAIN A# 50205.
01 00 00.19	-	EXISTING CONCRETE STAIRS TO REMAIN.
01 00 00.20	-	EXISTING LUNCH SHELTER TO REMAIN. PROTECT IN PLACE.
01 00 00.23	-	EXISTING BUILDING IN THE SCOPE OF WORK.
01 00 00.25	-	EXISTING 24'X40' RELOCATABLE CLASSROOM, NOT IN CONTRACT (N.I.C.)
01 00 00.65	-	EXISTING GATE TO BE REMOVED AND RE-INSTALLED TO MEET ACCESSIBILITY REQUIREMENTS. REF. 20/A-10.1.
01 10 00.01	-	BUILDING NOT IN CONTRACT, NOT IN SCOPE OF WORK.

DIVISION 02 - EXISTING CONDITIONS

02 41 19.350	-	REMOVE CONCRETE WALK.
02 41 19.351	-	REMOVE TRUNCATED DOMES.
02 41 19.352	-	REMOVE STRIPING
02 41 19.353	-	REMOVE GATE AND FENCING FOR NEW WORK.
02 41 19.354	-	REMOVE EXISTING CHAINLINK FENCE, POSTS AS REQUIRED PER CIVIL.
02 41 19.355	-	REMOVE OVERHEAD ELECTRICAL CABLE PER ELECTRICAL DRAWINGS.
02 41 19.356	-	REMOVE EXISING AREA DRAINS
02 41 19.388	-	REMOVE EXISTING PARKING LOT TOW AWAY & ISA DIRECTIONAL SIGNAGE.
02 41 19.389	-	REMOVE EXISTING SIGNAGE.

SITE DEMO LEGEND

- SCHOOL PROPERTY LINE
- DECORATIVE METAL FENCE
- DEMO OVERHEAD CABLE
- DEMO FENCE & GATE
- CONCRETE FLATWORK TO BE REMOVED
- TRUNCATED DOMES TO BE REMOVED
- SCOPE OF WORK LIMITS

DEMOLITION GENERAL NOTES

1. THESE GENERAL NOTES PROVIDE WORK SCOPE FOR THE CONTRACT DOCUMENTS AND PERTAIN TO THE WORK IN THE SAME MANNER AS THE REQUIREMENTS OF THE DRAWINGS AND SPECIFICATIONS.
2. KEYNOTES ARE INDICATED AT ONLY A PORTION OF THE ELEMENTS. ELEMENTS ILLUSTRATED SIMILARLY, MIRRORED DESIGN AND SIMILAR CONDITIONS SHALL BE APPLIED SIMILARLY. QUANTITIES WILL NOT BE DENOTED BY KEYNOTES.
3. THE CONTRACTOR SHALL COORDINATE ALL DEMOLITION WORK REQUIRED TO PERFORM THE NEW WORK REQUIREMENTS. DEMOLITION EXTENTS ARE INDICATED TO THE GREATEST DEGREE POSSIBLE, BUT EXACT EXTENTS SHALL BE DETERMINED IN THE FIELD.
4. NOT ALL ITEMS TO BE REMOVED HAVE BEEN SHOWN FOR CLARITY. CONTRACTOR TO VERIFY EXISTING CONDITIONS.
5. THE CONTRACTOR SHALL, TO THE GREATEST DEGREE POSSIBLE MINIMIZE WASTE MATERIALS DIVERTED TO THE LANDFILL BY RECYCLING PRODUCT OR WASTE.
6. THE CONTRACTOR SHALL PROTECT EXISTING ELEMENTS SCHEDULED TO REMAIN FROM DAMAGE DERIVED FROM THE DEMOLITION ACTIVITIES.
7. REFERENCE ALL DRAWINGS, SPECIFICATIONS, AND APPENDICES AT THE END OF THE SPECIFICATIONS FOR ADDITIONAL INFORMATION.
8. KEYNOTES WITHOUT ARROWS DENOTE AN ITEM OR REGION OF THE GENERAL AREA IN WHICH THEY ARE LOCATED AND ARE REFERENCING.
9. DASHED LINES REPRESENT MATERIALS FOR REMOVAL OR RELOCATION UNLESS OTHERWISE NOTED. REFERENCE KEYNOTES.
10. MOVEABLE FURNISHINGS AND EQUIPMENT, SUCH AS TABLES, CHAIRS, BOOK SHELVING AND EQUIPMENT ARE NOT ILLUSTRATED IN THE DEMOLITION PLANS.
11. THE DISTRICT EMPLOYS THE FIRST RIGHT OF REFUSAL FOR ITEMS FOR SALVAGE OR RECLAMATION.
12. THE CONTRACTOR PRIOR TO ANY DEMOLITION WORK SHALL REVIEW ALL REGIONS OF WORK AND NOTIFY THE DISTRICT WITH A WRITTEN LISTING OF ANY NON OPERATIONAL OR BROKEN MATERIAL SUCH AS, BUT NOT LIMITED TO LIGHTING, LIGHTING LENSES, FANS, ETC. TO AVOID RESPONSIBILITY FOR REPAIR OR REPLACEMENT.
13. FIRE PROTECTION DURING DEMOLITION AND CONSTRUCTION SHALL BE IN ACCORDANCE WITH CBC CHAPTER 33.
14. NOT ALL HATCH PATTERNS THAT ARE SHOWN IN LEGEND MAY BE USED, REFERENCE DRAWINGS, (PLANS, ELEVATIONS ETC..) FOR APPLICABLE HATCH PATTERNS.
15. REMOVE ALL FINISHES DOWN TO STRUCTURE UNLESS OTHERWISE NOTED.
16. CUTTING HOLES IN EXISTING SHEAR WALLS FOR MODIFICATIONS SHALL BE MINIMAL, 3"X3". AVOID STUDS, HEADERS AND ADDITIONAL STRUCTURAL ELEMENTS.
17. PATCH AND REPAIR ALL DAMAGED OR REMOVED PORTIONS OF EXISTING BUILDINGS TO REMAIN TO APPEAR AS NEW.
18. ALL HAZARDOUS BUILDING MATERIALS IDENTIFIED IN THE 2022 ASBESTOS HAZARD EMERGENCY RESPONSE ACT 3 YEAR INSPECTION LOCATED IN AREAS BEING MODIFIED SHALL BE REMOVED IN ACCORDANCE WITH DEHESA SCHOOL DISTRICT.
19. ALL DEMOLITION SHALL COMPLY WITH CH. 33 CBC AND CHAPTER 33 CFC.

IDENTIFICATION STAMP
DIV. OF THE STATE ARCHITECT
APP: 04-122772 INC:
REVIEWED FOR
SS ☑ FLS ☑ ACS ☑
DATE: 03/26/2024

SPROTTE | WATSON
ARCHITECTURE | PLANNING

C12359

CONSULTANT

DEHESA ELEMENTARY SCHOOL
CONSTRUCTION DOCUMENTS
DEHESA SCHOOL DISTRICT
4612 DEHESA ROAD
EL CAJON, CA 92019

REVISIONS

DESCRIPTION

OVERALL
DEMOLITION
SITE PLAN

DATE

01.25.24

JOB #

22-0400

SHEET #

A-1.0

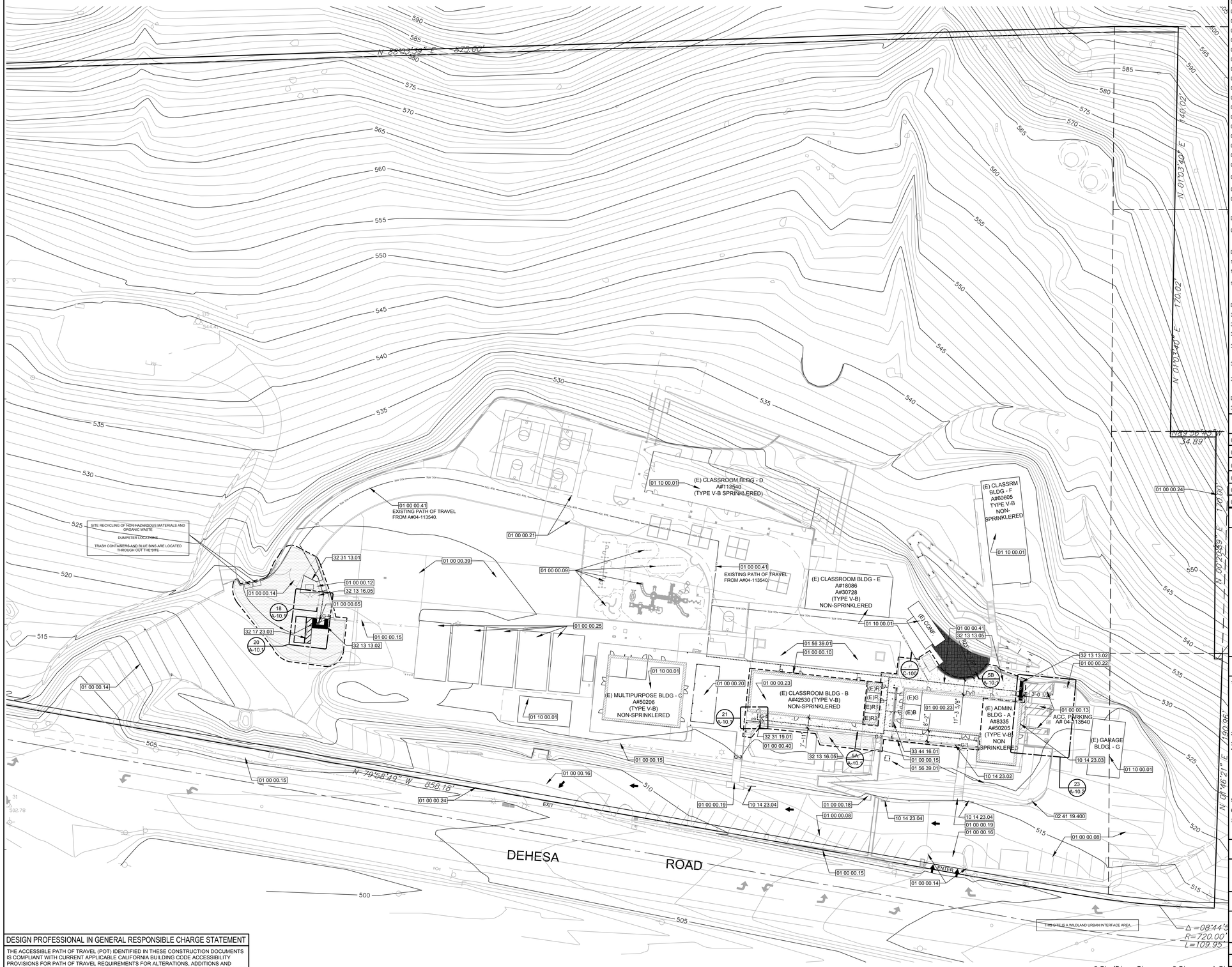

DESIGN PROFESSIONAL IN GENERAL RESPONSIBLE CHARGE STATEMENT

THE ACCESSIBLE PATH OF TRAVEL (POT) IDENTIFIED IN THESE CONSTRUCTION DOCUMENTS IS COMPLIANT WITH CURRENT APPLICABLE CALIFORNIA BUILDING CODE ACCESSIBILITY PROVISIONS FOR PATH OF TRAVEL REQUIREMENTS FOR ALTERATIONS, ADDITIONS AND STRUCTURAL REPAIRS. AS PART OF THE DESIGN OF THIS PROJECT, THE POT WAS EXAMINED AND ANY ELEMENTS, COMPONENTS OR PORTIONS OF THE POT THAT WERE DETERMINED TO BE NONCOMPLIANT 1) HAVE BEEN IDENTIFIED AND 2) THE CORRECTIVE WORK NECESSARY TO BRING THEM INTO COMPLIANCE HAVE BEEN INCLUDED WITHIN THE SCOPE OF THIS PROJECT'S WORK THROUGH DETAILS, DRAWINGS AND SPECIFICATIONS INCORPORATED INTO THESE CONSTRUCTION DOCUMENTS. ANY NONCOMPLIANT ELEMENTS, COMPONENTS OR PORTIONS OF THE POT THAT WILL NOT BE CORRECT BY THIS PROJECT BASED ON VALUATION THRESHOLD LIMITATIONS OR A FINDING OF UNREASONABLE HARDSHIP ARE SO INDICATED IN THESE CONSTRUCTION DOCUMENTS.

DURING CONSTRUCTION, IF POT ITEMS WITHIN THE SCOPE OF THE PROJECT REPRESENTED AS CODE COMPLIANT ARE FOUND TO BE NONCONFORMING BEYOND REASONABLE CONSTRUCTION TOLERANCES, THEY SHALL BE BROUGHT INTO COMPLIANCE WITH THE CBC AS PART OF THIS PROJECT BY MEANS OF A CONSTRUCTION CHANGE DOCUMENT.

POT Accessible Route and Site Arrival Points per 11B-206.2.1 Site Arrival Points exception
for connection to the public right away.
2. An accessible route shall not be required between site arrival points and the building or facility entrance if the only means of access between them is a vehicular way not providing pedestrian access.

OVERALL SITE PLAN

1" = 30'

1

REFERENCE KEYNOTES

DIVISION 01 - GENERAL

01 00 00.08	-	EXISTING PARKING STRIPPING TO REMAIN.
01 00 00.09	-	EXISTING PLAY EQUIPMENT TO REMAIN.
01 00 00.10	-	EXISTING ACCESSIBLE DRINKING FOUNTAIN. REF. DETAIL 18/A-10.7.
01 00 00.12	-	EXISTING TRASH ENCLOSURE TO REMAIN.
01 00 00.13	-	EXISTING ACCESSIBLE PARKING STRIPPING TO REMAIN.
01 00 00.14	-	EXISTING GATE TO REMAIN.
01 00 00.15	-	EXISTING FENCE TO REMAIN.
01 00 00.16	-	EXISTING ASPHALT TO REMAIN.
01 00 00.18	-	EXISTING RAMP TO REMAIN A# 50205.
01 00 00.19	-	EXISTING CONCRETE STAIRS TO REMAIN.
01 00 00.20	-	EXISTING LUNCH SHELTER TO REMAIN. PROTECT IN PLACE.
01 00 00.21	-	20' WIDE FIRE LANE
01 00 00.22	-	EXISTING FIRE HYDRANT
01 00 00.23	-	EXISTING BUILDING IN THE SCOPE OF WORK.
01 00 00.24	-	PROPERTY LINE
01 00 00.25	-	EXISTING 24'X40' RELOCATABLE CLASSROOM, NOT IN CONTRACT (N.I.C.)
01 00 00.39	-	EXISTING PLAY FIELD TO REMAIN
01 00 00.40	-	EXISTING DIRT AREA TO REMAIN.
01 00 00.41	-	PATH OF TRAVEL FOR OVERALL SITE PER ACCESSIBLE REQUIREMENTS
01 00 00.65	-	EXISTING GATE TO BE REMOVED AND RE-INSTALLED TO MEET ACCESSIBILITY REQUIREMENTS. REF. 20/A-10.1.
01 10 00.01	-	BUILDING NOT IN CONTRACT, NOT IN SCOPE OF WORK.
01 56 39.01	-	EXISTING LANDSCAPE AREA TO REMAIN PROTECT.

DIVISION 02 - EXISTING CONDITIONS

02 41 19.400	-	EXISTING PARKING DIRECTIONAL SIGN INDICATING LOCATION OF ACCESSIBLE PARKING.

DIVISION 10 - SPECIALITIES

10 14 23.02	-	PROVIDE ISA DIRECTIONAL SIGN PER DETAIL 29/A-10.1.
10 14 23.03	-	PROVIDE TOW AWAY SIGN PER DETAIL 30/A-10.1.
10 14 23.04	-	PROVIDE "NO PARKING, NO STUDENT DROP-OFF OR PICK-UP". REF. DETAIL 25/A10.1

DIVISION 32 - EXTERIOR IMPROVEMENTS

32 13 13.02	-	PROVIDE TRUNCATED DOMES. REFEFRENCE CIVIL DWGS.
32 13 13.05	-	PROVIDE CONCRETE FLATWORK, REF. CIVIL
32 13 16.05	-	PROVIDE AC PAVING OVERLAY, REF. CIVIL. ALL TRANSITIONS TO BE FLUSH.
32 17 23.03	-	PROVIDE STRIPING FOR ACCESSIBLE PASSENGER DROP-OFF AND LOADING ZONE.
32 31 13.01	-	CHAINLINK FENCE AND POSTS TO MATCH EXISTING. LOCATE IN ORIGINAL LOCATION. PROVIDE SLATS TO MATCH EXISTING GATES. REF. CIVIL FOR EXTENT.
32 31 19.01	-	PROVIDE GATE AND FENCE ASSEMBLY PER DETAIL 6/A-10.1.

DIVISION 33 - UTILITIES

33 44 16.01	-	UTILITY TRENCH DRAIN. REF. CIVIL.

ACCESSIBLE RESTROOMS

(E) G	GIRLS RESTROOM A# 04-102319 & REF. SHEET A-10.9 FOR EXISTING CONDITIONS, BUILDING A.
(E) B	BOYS RESTROOM A# 04-102319 & REF. SHEET A-10.9 FOR EXISTING CONDITIONS, BUILDING A.
(E) R	STAFF RESTROOM 1 A# 04-113540 & REF. SHEET A-10.9 FOR EXISTING CONDITIONS, BUILDING B.
(E) R	STAFF RESTROOM 2 A# 04-113540 & REF. SHEET A-10.9 FOR EXISTING CONDITIONS, BUILDING B.
(E) R1	RESTROOM 1 A# 04-102319 & REF. SHEET A-10.9 FOR EXISTING CONDITIONS, BUILDING B.
(E) R2	RESTROOM 2 A# 04-102319 & REF. SHEET A-10.9 FOR EXISTING CONDITIONS, BUILDING B.

SITE PLAN LEGEND

- CONCRETE PAVEMENT.
- ASPHALT OVERLAY.
- TRUNCATED DOMES.
- LANDSCAPE (DIRT/GRASS)
- SCOPE OF WORK LIMITS
- ACCESSIBLE P.O.T. A# 04-113540
- ACCESSIBLE P.O.T.

OVERALL SITE PLAN GENERAL NOTES

1. THIS SITE PLAN PROVIDES ILLUSTRATION FOR THE FOLLOWING ACCESSIBLE REQUIREMENTS FOR THE PROJECT.
   1.1. ACCESSIBLE PARKING LOCATION.
   1.2. ACCESSIBLE VAN PARKING LOCATION.
   1.3. ACCESSIBLE LOADING AND UNLOADING ZONE.
   1.4. ACCESSIBLE TOW SIGN NOTIFICATION.
   1.5. ACCESSIBLE PATH OF TRAVEL.
   1.6. ACCESSIBLE RESTROOM FACILITIES FOR STUDENTS
   1.6. ACCESSIBLE RESTROOM FACILITIES FOR STAFF.
   1.7. ACCESSIBLE PARKING QUANTITIES AND OVERALL PARKING QUANTITIES.
2. THIS SITE PLAN ILLUSTRATES FORMER DIVISION OF THE STATE ARCHITECT APPLICATIONS COMPLETED ON THE CAMPUS
3. REFERENCE PLANS FOR DETAILED REQUIREMENTS.
4. PATH OF TRAVEL (P.O.T.) AS INDICATED IS A BARRIER FREE ACCESS ROUTE WITHOUT ANY ABRUPT VERTICAL CHANGES EXCEEDING 1/2" BEVELED AT 1:2 MAXIMUM SLOPE, EXCEPT THAT LEVEL CHANGES DO NOT EXCEED 1/4" VERTICAL AND IS AT LEAST 48" WIDE. SURFACE IS A SLIP RESISTANT, STABLE AND FIRM. CROSS-SLOPE DOES NOT EXCEED 2% AND SLOPE IN THE DIRECTION OF TRAVEL IS LESS THAN 5% UNLESS OTHERWISE INDICATED. (P.O.T.) SHALL BE MAINTAINED FREE OF OVERHANGING OBSTRUCTIONS TO 80" MINIMUM (11B-307.4) AND PROTRUDING OBJECTS GREATER THAN 4" PROJECTION FROM WALL AND ABOVE 27" AND LESS THAN 80" (11B-307.2). ARCHITECT TO VERIFY THAT ALL BARRIERS IN THE PATH OF TRAVEL HAVE BEEN REMOVED OR WILL BE REMOVED UNDER THIS PROJECT AND PATH OF TRAVEL COMPLIES WITH CBC.
5. ANY CHANGES IN PAVING ELEVATION IN THE PEDESTRIAN PATH OF TRAVEL (P.O.T.) SHALL COMPLY WITH DETAIL 7/A-10.1.
6. THE PATH OF TRAVEL (P.O.T.) SHALL BE FREE OF PROTRUDING OBJECTS AS ILLUSTRATED BY DETAIL 2/A-10.1.
7. OPENINGS IN GRATES OR STRAINERS LOCATED IN PEDESTRIAN WAYS OR IN P.O.T. SHALL NOT ALLOW PASSAGE OF A SPHERE MORE THAN 1/2" IN DIAMETER. ELONGATED OPENINGS SHALL BE PLACED SO THAT THE LONG DIMENSION IS PERPENDICULAR TO THE DOMINANT DIRECTION OF TRAVEL IN COMPLIANCE WITH CBC SECTION 11B-302.3.

PARKING ANALYSIS

EXISTING PARKING
TOTAL PARKING SPACES: 33
TOTAL ACCESSIBLE SPACES: 2
TOTAL PASSENGER DROP-OFF SPACES: 1
TOTAL BUS SPACES: 5

GATE SCHEDULE

MARK	MATERIAL	WIDTH	HEIGHT	PANIC HARDWARE	HARDWARE GROUP	FINISH	DETAILS	NOTES
G-1	DM	4'-0"	6'-0"	Y	-	GALV		EXISTING GATE TO REMAIN, NO CHANGE
G-2	DM	4'-0"	6'-0"	Y	-	GALV		EXISTING GATE TO REMAIN, NO CHANGE
G-3	DM	5'-0"	6'-0"	N	-	GALV		EXISTING GATE TO REMAIN, NO CHANGE
G-4	CH	4'-0"	6'-0"	Y	G02	GALV	24/A-10.2	EXISTING GATE TO BE REMOVED & RE-INSTALLED TO MEET ACCESSIBILTY REQUIREMENTS.
G-5	DM	4'-0"	6'-0"	Y	G01	GALV	6/A-10.1	NEW GATE

NOTES:
1. EXISTING GATES DO NOT REQUIRE PANIC HARDWARE AS THEY DO NOT LEAD TO A PUBLIC WAY OR SAFE DISPERSAL AREA.

SCHEDULE ABBREVIATIONS:
CH CHAINLINK
DM DECORATIVE METAL
GALV GALVANIZED FINISH

GENERAL NOTES:
1. GATES IN ACCESSIBLE PATH OF TRAVEL SHALL OPERATE WITH 5 LBS OF FORCE.
3. GATES IN ACCESSIBLE PATH OF TRAVEL SHALL HAVE CLEARANCES PER CBC 11B-404.2.4.1
3 GATES AND FENCES SHALL BE HOT DIPPED GALVANIZED PER SPECS.

IDENTIFICATION STAMP
DIV. OF THE STATE ARCHITECT
APP: 04-122772 INC:
REVIEWED FOR
SS ☑ FLS ☑ ACS ☑
DATE: 03/26/2024

SPROTTE | WATSON
ARCHITECTURE + PLANNING

CONSULTANT

REVISIONS

DESCRIPTION

OVERALL SITE PLAN

DATE

01.25.24

JOB #

22-0400

SHEET #

A-1.1

DEHESA ELEMENTARY SCHOOL
CONSTRUCTION DOCUMENTS
DEHESA SCHOOL DISTRICT
4612 DEHESA ROAD
EL CAJON, CA 92019

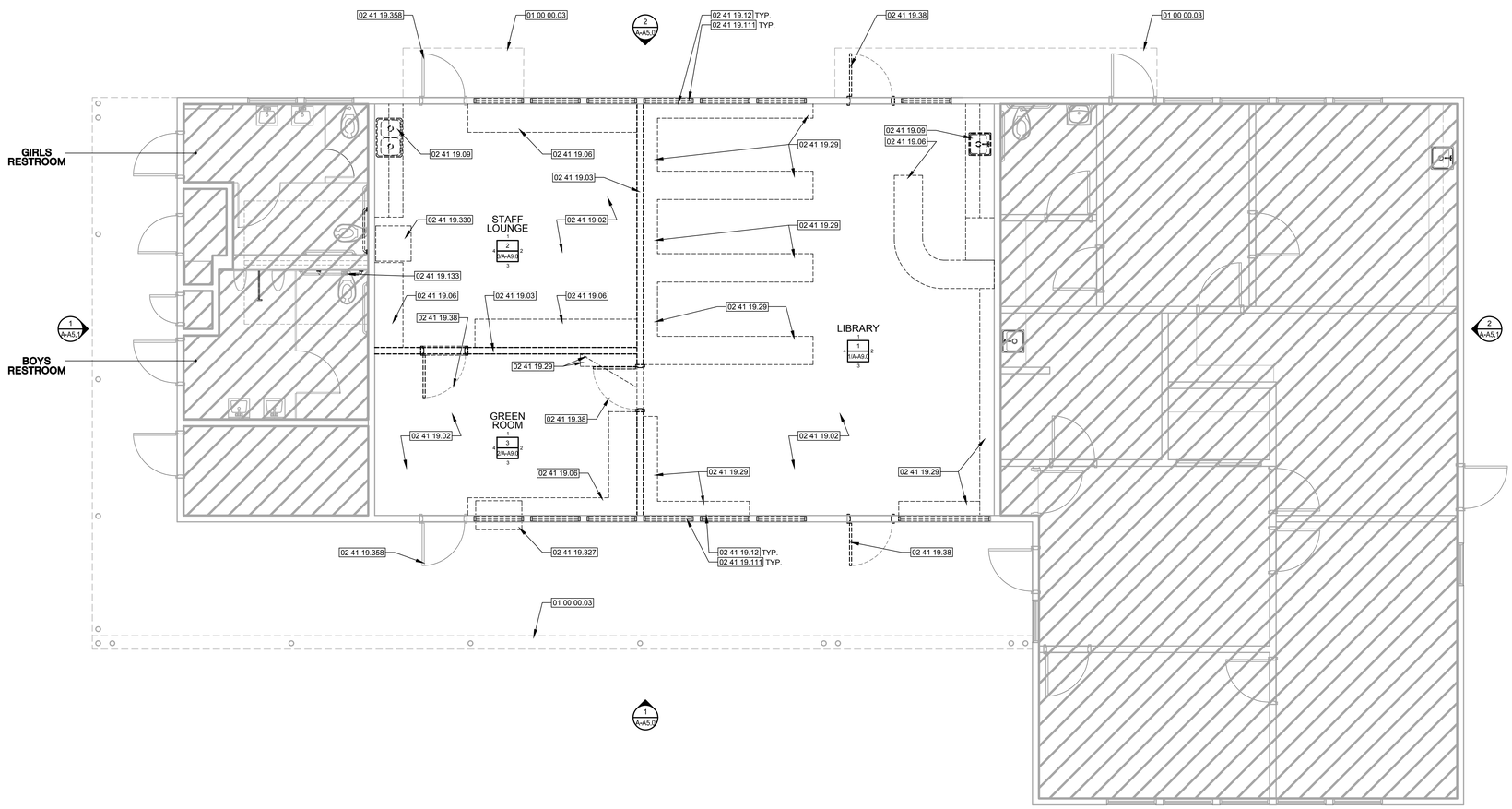

REFERENCE KEYNOTES

DIVISION 01 - GENERAL

01 00 00.03	-	THIS DASHED LINE INDICATES ROOF OVERHANG ABOVE.

DIVISION 02 - EXISTING CONDITIONS

02 41 19.02	-	REMOVE ALL FLOORING IN THE ROOM TO CLEAN BARE CONC. FOR NEW FLOOR FINISH.
02 41 19.03	-	REMOVE NON-BEARING WALL FOR NEW WORK AS INDICATED.
02 41 19.06	-	REMOVE CASEWORK ENTIRELY INCLUDING ALL ASSOCIATED ITEMS SUCH AS COUNTERTOPS, BACK AND SIDE SPLASHES, HARDWARE, AND FASTENERS TO CLEAN BARE FLOOR AND WALL SUBSTRATE.
02 41 19.09	-	REMOVE SINK BASE CABINET.
02 41 19.12	-	CAREFULLY REMOVE ALL WINDOW SHADES, ASSOCIATED HARDWARE AND FASTENERS, RETURN TO OWNER.
02 41 19.29	-	REMOVE ALL SHELVING IN THE ROOM INCLUDING ALL ASSOCIATED ITEMS SUCH AS BRACKETS, SHELVES, AND FASTENERS.
02 41 19.38	-	REMOVE DOOR, FRAME AND WINDOW (WHERE OCCURS)
02 41 19.111	-	REMOVE EXISTING WINDOW SYSTEM
02 41 19.133	-	REMOVE EXISTING TOILET FLUSH VALVE AND ASSOCIATED ITEMS AS REQUIRED TO MEET ACCESSIBLE CLEANCES AT GRAB BAR.
02 41 19.327	-	REMOVE EXISTING HVAC MECHANICAL UNIT PER MECHANICAL.
02 41 19.330	-	REMOVE EXISTING REFRIGERATOR.
02 41 19.358	-	REMOVE EXISTING DOOR AND WINDOW & FRAMING SYSTEMS. SALVAGE, REFURBISH AND RE-USE WOOD DOOR IN SAME LOCATION.

LEGEND - FLOOR PLAN - DEMOLITION

- REMOVE DOOR ASSEMBLY PER KEYNOTES
- EXISTING WOOD STUD WALL TO REMAIN
- REMOVE EXISTING WOOD STUD NON-BEARING WALL
- REMOVE WINDOW ASSEMBLY
- EXISTING BUILDING, NO WORK.

DEMOLITION GENERAL NOTES

1. THESE GENERAL NOTES PROVIDE WORK SCOPE FOR THE CONTRACT DOCUMENTS AND PERTAIN TO THE WORK IN THE SAME MANNER AS THE REQUIREMENTS OF THE DRAWINGS AND SPECIFICATIONS.
2. KEYNOTES ARE INDICATED AT ONLY A PORTION OF THE ELEMENTS. ELEMENTS ILLUSTRATED SIMILARLY, MIRRORED DESIGN AND SIMILAR CONDITIONS SHALL BE APPLIED SIMILARLY. QUANTITIES WILL NOT BE DENOTED BY KEYNOTES.
3. THE CONTRACTOR SHALL COORDINATE ALL DEMOLITION WORK REQUIRED TO PERFORM THE NEW WORK REQUIREMENTS. DEMOLITION EXTENTS ARE INDICATED TO THE GREATEST DEGREE POSSIBLE, BUT EXACT EXTENTS SHALL BE DETERMINED IN THE FIELD.
4. NOT ALL ITEMS TO BE REMOVED HAVE BEEN SHOWN FOR CLARITY. CONTRACTOR TO VERIFY EXISTING CONDITIONS.
5. THE CONTRACTOR SHALL, TO THE GREATEST DEGREE POSSIBLE MINIMIZE WASTE MATERIALS DIVERTED TO THE LANDFILL BY RECYCLING PRODUCT OR WASTE.
6. THE CONTRACTOR SHALL PROTECT EXISTING ELEMENTS SCHEDULED TO REMAIN FROM DAMAGE DERIVED FROM THE DEMOLITION ACTIVITIES.
7. REFERENCE ALL DRAWINGS, SPECIFICATIONS, AND APPENDICES AT THE END OF THE SPECIFICATIONS FOR ADDITIONAL INFORMATION.
8. KEYNOTES WITHOUT ARROWS DENOTE AN ITEM OR REGION OF THE GENERAL AREA IN WHICH THEY ARE LOCATED AND ARE REFERENCING.
9. DASHED LINES REPRESENT MATERIALS FOR REMOVAL OR RELOCATION UNLESS OTHERWISE NOTED. REFERENCE KEYNOTES.
10. MOVEABLE FURNISHINGS AND EQUIPMENT, SUCH AS TABLES, CHAIRS, BOOK SHELVING AND EQUIPMENT ARE NOT ILLUSTRATED IN THE DEMOLITION PLANS.
11. THE DISTRICT EMPLOYS THE FIRST RIGHT OF REFUSAL FOR ITEMS FOR SALVAGE OR RECLAMATION.
12. THE CONTRACTOR PRIOR TO ANY DEMOLITION WORK SHALL REVIEW ALL REGIONS OF WORK AND NOTIFY THE DISTRICT WITH A WRITTEN LISTING OF ANY NON OPERATIONAL OR BROKEN MATERIAL SUCH AS, BUT NOT LIMITED TO LIGHTING, LIGHTING LENSES, FANS, ETC. TO AVOID RESPONSIBILITY FOR REPAIR OR REPLACEMENT.
13. FIRE PROTECTION DURING DEMOLITION AND CONSTRUCTION SHALL BE IN ACCORDANCE WITN CBC CHAPTER 33.
14. NOT ALL HATCH PATTERNS THAT ARE SHOWN IN LEGEND MAY BE USED, REFERENCE DRAWINGS, (PLANS, ELEVATIONS ETC..) FOR APPLICABLE HATCH PATTERNS.
15. REMOVE ALL FINISHES DOWN TO STRUCTURE UNLESS OTHERWISE NOTED.
16. CUTTING HOLES IN EXISTING SHEAR WALLS FOR MODIFICATIONS SHALL BE MINIMAL, 3"X3". AVOID STUDS, HEADERS AND ADDITIONAL STRUCTURAL ELEMENTS.
17. PATCH AND REPAIR ALL DAMAGED OR REMOVED PORTIONS OF EXISTING BUILDINGS TO REMAIN TO APPEAR AS NEW.
18. ALL HAZARDOUS BUILDING MATERIALS IDENTIFIED IN THE 2022 ASBESTOS HAZARD EMERGENCY RESPONSE ACT 3 YEAR INSPECTION LOCATED IN AREAS BEING MODIFIED SHALL BE REMOVED IN ACCORDANCE WITH DEHESA SCHOOL DISTRICT.
19. ALL DEMOLITION SHALL COMPLY WITH CH. 33 CBC AND CHAPTER 33 CFC.

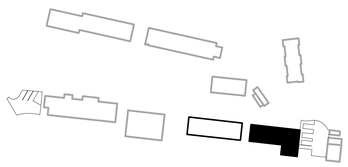

NORTH

IDENTIFICATION STAMP
DIV. OF THE STATE ARCHITECT
APP: 04-122772 INC:
REVIEWED FOR
SS ☑ FLS ☑ ACS ☑
DATE: 03/26/2024

SPROTTE | WATSON
ARCHITECTURE | PLANNING

CONSULTANT

DEHESA ELEMENTARY SCHOOL
CONSTRUCTION DOCUMENTS
DEHESA SCHOOL DISTRICT
4612 DEHESA ROAD
EL CAJON, CA 92019

REVISIONS

DESCRIPTION

BUILDING A ADMIN DEMOLITION PLAN

DATE

01.25.24

JOB #

22-0400

SHEET #

A-A2-0

BUILDING A ADMIN DEMOLITION PLAN | 1/4" = 1'-0" | 1 | KEY PLAN | N.T.S.

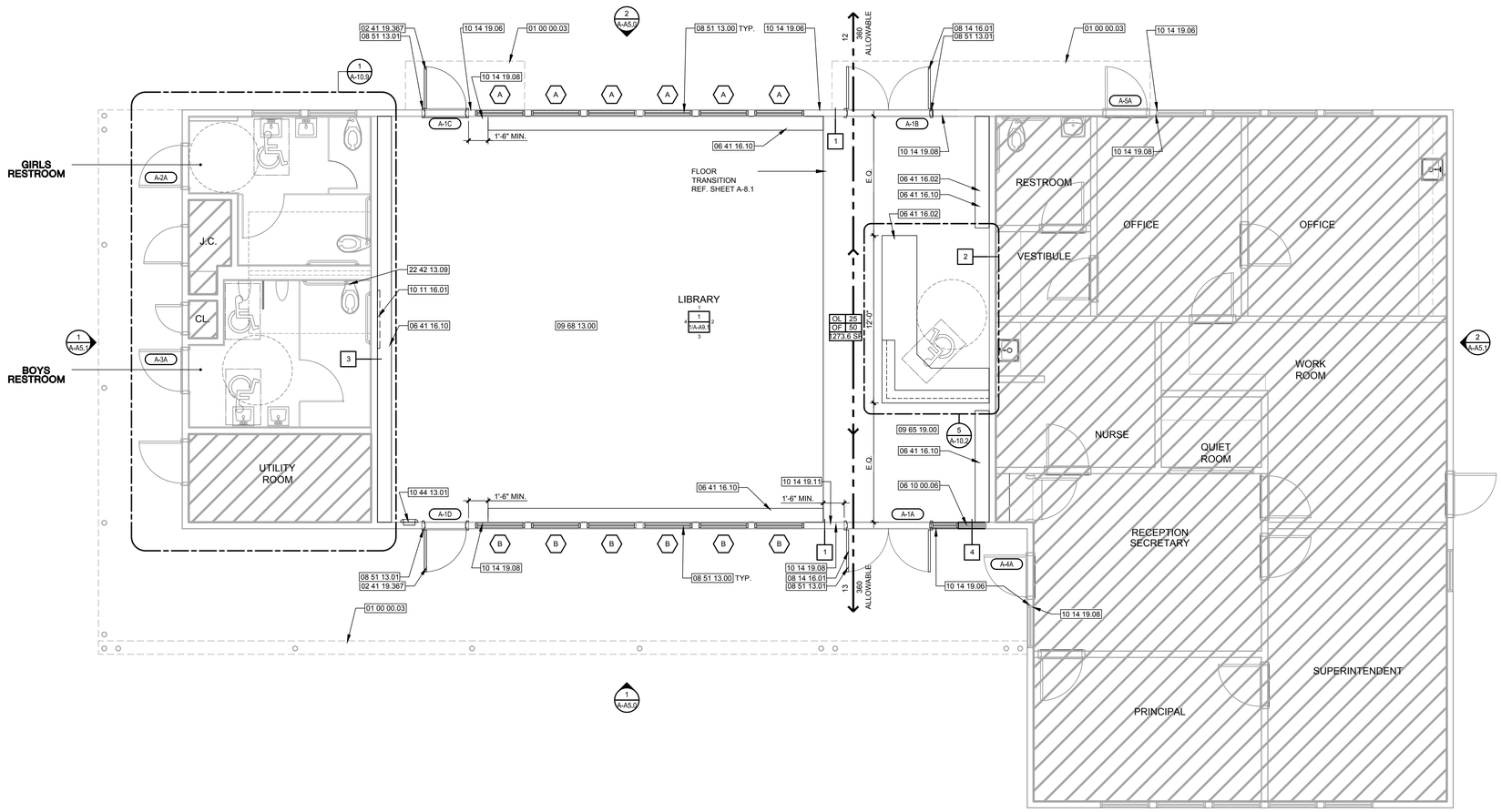

NOTE:
PIPE GUARDS TO BE INCLUDED ON NEW EXPOSED PIPING AND REPLACED OR ADDED AS NECESSARY ON EXISTING EXPOSED PIPING UNDER SINKS AND LAVATORIES.

REFERENCE KEYNOTES

DIVISION 01 - GENERAL

01 00 00.03 - THIS DASHED LINE INDICATES ROOF OVERHANG ABOVE.

DIVISION 02 - EXISTING CONDITIONS

02 41 19.367 - EXISING DOOR INSTALLED IN NEW FRAME.

DIVISION 06 - WOOD, PLASTICS, AND COMPOSITES

06 10 00.06 - PROVIDE INFILL OF EXISTING OPENING, G.W.B. FINISH AT THE INTERIOR AND PLASTER AT THE EXTERIOR.

06 41 16.02 - PROVIDE PLASTIC LAMINATED FACED ARCHITECTURAL CABINETS, REF. INTERIOR ELEVATIONS.

06 41 16.10 - PROVIDE PLASTIC LAMINATE BOOK SHELVES WITH ADJUSTABLE SHELVING, CASEWORK. NO DOORS.

DIVISION 08 - OPENINGS

08 14 16.01 - PROVIDE SOLID CORE WOOD DOORS PER SPECIFICATIONS. REF. DETAIL 12/A-10.8. FOR DOOR HEAD CONDITION.

08 51 13.00 - PROVIDE ALUMINUM STOREFRONT WINDOW FRAME AND GLAZING SYSTEM PER OPENING SCHEDULE AND SPECS.

08 51 13.01 - PROVIDE ALUMINUM STORE FRONT DOOR AND OR WINDOW SYSTEM AND GLAZING (WHERE APPLICABLE) PER OPENING SCHEDULE AND SPECS.

DIVISION 09 - FINISHES

09 65 19.00 - RESILIENT TILE FLOORING

09 68 13.00 - TILE CARPETING

DIVISION 10 - SPECIALITIES

10 11 16.01 - PROVIDE FLAT SCREEN TV/MONITOR AND WALL MOUNT, REF. ELECTRICAL FOR ADDITIONAL INFO. IF TV/MONITOR PROJECTS MORE THAN 4" FROM FACE OF WALL, BOTTOM OF TV/MONITOR SHALL BE A MIN. OF 80" A.F.F.

10 14 19.06 - PROVIDE EXTERIOR MOUNTED TACTILE ROOM SIGNAGE PER DETAIL 10/A-10.7

10 14 19.08 - PROVIDE TACTILE EXIT SIGNAGE PER DETAIL 2 & 13 E1/A-10.7

10 14 19.11 - PROVIDE WALL MOUNTED (DO NOT INSTALL ON GLASS) ASSISTIVE LISTENING SIGN. THIS SIGN IS REQUIRED AND IS TYPICAL AT ALL CLASSROOMS & ASSEMBLY AREAS, REF. DETAIL 14/A-10.7.

10 44 13.01 - PROVIDE FULLY-RECESSED FIRE EXTINGUISHER CABINET AND FIRE EXTINGUISHER. REF. DETAIL 3/A-10.2.

DIVISION 22 - PLUMBING

22 42 13.09 - PROVIDE NEW ACCESSIBLE FLUSH VALVE.

LEGEND - FLOOR PLAN - NEW WORK

PROVIDE NEW DOOR ASSEMBLY, FRAME, HARDWARE, THRESHOLD, OPENING FLASHING, PATCH AND PAINT ADJACENT ASSEMBLIES TO MATCH EXISTING PAINT DOOR AND FRAME.

PROVIDE NEW WINDOW/ STOREFRONT SYSTEM

EXISTING WOOD STUD WALL TO REMAIN

PROVIDE NEW WOOD STUD NON-BEARING WALL @ 16" O.C. REFERENCE DETAIL 8/S1.2 13/S1.2 AND WALL TYPES ON A-10.2

EXISTING BUILDING, NO WORK.

FLOOR PLAN GENERAL NOTES

1. REFERENCE SPECIFICATIONS, TITLE SHEET, GENERAL NOTES & APPLICABLE DRAWINGS & NOTES ON STRUCTURAL, MECHANICAL, ELECTRICAL, PLUMBING AND CIVIL DRAWINGS FOR ADDITIONAL INFO.
2. REFERENCE ABBREVIATIONS, MATERIAL LEGEND & SYMBOLS LEGEND ON SHEET A-0.1 FOR NOTATIONS AND DEFINITIONS.
3. ALL DIMENSIONS FOR FRAMING AND WALLS ARE TO FACE OF STUDS OR FACE OF FINISH WHERE THE FINISH IS NOT BEING REMOVED, UNLESS NOTED OTHERWISE. "CLEAR" DIMENSIONS ARE TO FACE OF FINISH MATERIAL.
4. KEYNOTES ARE INDICATED AT ONLY A PORTION OF THE BUILDING ELEMENTS. ELEMENTS ILLUSTRATED SIMILARLY, MIRRORED DESIGN, AND SIMILAR CONDITIONS SHALL BE ASSUMED TO BE NOTED SIMILARLY. QUANTITIES SHALL NOT BE DENOTED BY KEYNOTES.
5. KEYNOTES WITHOUT ARROWS DENOTE AN ITEM OR REGION OF THE GENERAL AREA IN WHICH THEY ARE LOCATED AND ARE REFERENCING.
6. ALL INTERIOR WALLS SHALL BE FRAMED TO ROOF STRUCTURE FRAMING UNDERSIDE. ALL NON-BEARING INTERIOR WALLS SHALL BE PROVIDED WITH 1/2" GAP FOR DEFLECTION AT CONNECTION TO STRUCTURE. REFERENCE STRUCTURAL DRAWINGS.
7. ALL NEW WALLS AND WALLS WHERE THE FINISH IS BEING REMOVED SHALL BE PROVIDED WITH GWB FULL HEIGHT TO THE GREATEST EXTENT POSSIBLE & PROVIDED WITH INSULATION OR SOUND ATTENUATION BATT INSULATION.
8. CABINET ANCHORAGE FASTENERS TO WALLS, BLOCKING OR BACKING SHALL BE PER DETAIL 6/A-10.5.
9. ELEMENTS REQUIRING BLOCKING SHALL BE PER APPLICABLE DETAILS.
10. REFERENCE DETAILS 17/A-10.5. FOR ACCESSIBLE MOUNTING HEIGHTS. REFERENCE SHEET A-8.1 FOR FINISH SCHEDULE AND INTERIOR ELEVATIONS ON SHEETS A-A9.1, A-B9.1 & A-B9.2. FOR WALL FINISH EXTENTS.
11. MAXIMUM FLAME SPREAD OF INTERIOR WALL & CEILING FINISHES SHALL COMPLY WITH CBC SECTION 803. EXIT ENCLOSURES & EXIT PASSAGEWAYS SHALL BE CLASS B: FLAME SPREAD INDEX NOT TO EXCEED 75 AND SMOKE-DEVELOPMENT INDEX NOT TO EXCEED 450. CORRIDORS, ROOMS, AND ENCLOSED SPACES SHALL BE CLASS C: FLAME SPREAD INDEX NOT TO EXCEED 200 AND SMOKE-DEVELOPMENT INDEX NOT TO EXCEED 450.
12. BATT INSULATION, PIPE INSULATION SHALL HAVE A FLAME SPREAD INDEX NOT TO EXCEED 25 AND A SMOKE-DEVELOPMENT INDEX NOT TO EXCEED 450 IN ACCORDANCE WITH CBC 720.2
13. REFERENCE DETAIL 17/A-10.5 FOR MOUNTING HEIGHTS OF FURNITURE, FIXTURES AND EQUIPMENT.
14. PROVIDE MIN. CLEARANCE AT ALL DOORS PER CBC 11B-404-2.4.1
15. PROVIDE APPROPRIATELY SIZED STAINLESS STEEL ACCESS DOORS IN TOILET ROOMS FOR ITEMS OR EQUIPMENT REQUIRING ACCESS BEHIND FRAMED ASSEMBLIES SUCH AS TRAP PRIMER MANIFOLDS, VALVES, JUNCTION BOXES, DUCTWORK DAMPERS, OR SUCH EQUIPMENT OR NEEDS. PAINTED STEEL PANEL DOORS MAY BE USED ELSEWHERE.
16. ALL EXPOSED STEEL TO BE PAINTED TO MATCH ADJACENT SURFACE.
17. FOR SIGNAGE TYPES AND LOCATION SEE PLANS AND SHEETS A-8.0 AND A-10.7.
18. ALL DIMENSIONS FOR ACCESS COMPLIANCE ARE TO FACE OF FINISH UNLESS NOTED OTHERWISE.
19. UNLESS NOTED OTHERWISE, ALL ELEMENTS SHOWN ON PLANS SHALL BE CONTRACTOR FURNISHED AND INSTALLED.
20. ALL EXTERIOR DOORS HAVE THE ABILITY TO BE LOCKED FROM THE "INSIDE" THEREFORE ALL INTERIOR DOORS ARE "PROTECTED".

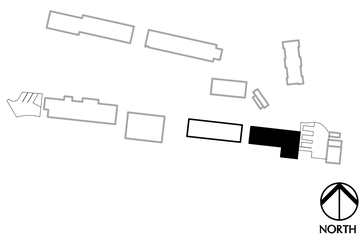

BUILDING A ADMIN FLOOR PLAN | 1/4" = 1'-0" | 1

KEY PLAN | N.T.S.

IDENTIFICATION STAMP
DIV. OF THE STATE ARCHITECT
APP: 04-122772 INC:
REVIEWED FOR
SS ☑ FLS ☑ ACS ☑
DATE: 03/26/2024

SPROTTE | WATSON
ARCHITECTURE | PLANNING

REGISTERED ARCHITECT
C12359
STATE OF CALIFORNIA

CONSULTANT

DEHESA ELEMENTARY SCHOOL
CONSTRUCTION DOCUMENTS
DEHESA SCHOOL DISTRICT
4612 DEHESA ROAD
EL CAJON, CA 92019

REVISIONS

DESCRIPTION

BUILDING A ADMIN FLOOR PLAN

DATE

01.25.24

JOB #

22-0400

SHEET #

A-A2-1

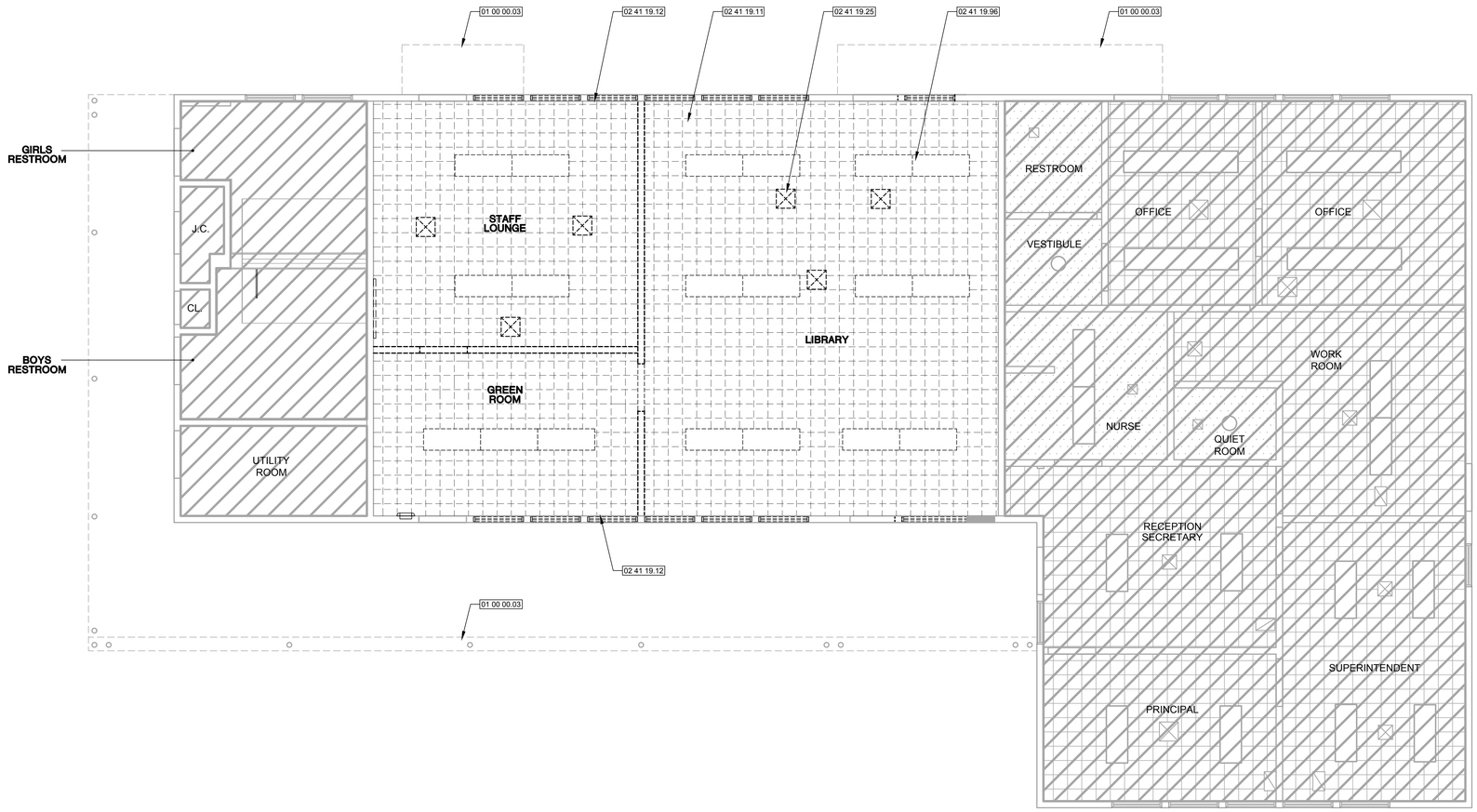

NORTH

REFERENCE KEYNOTES

DIVISION 01 - GENERAL

01 00 00.03 - THIS DASHED LINE INDICATES ROOF OVERHANG ABOVE.

DIVISION 02 - EXISTING CONDITIONS

02 41 19.11 - REMOVE 12" X 12" ACOUSTICAL CEILING TILE FINISH INCLUDING FASTENERS, SUCH AS STAPLES. REMOVE TO BARE CLEAN SUBSTRATE.

02 41 19.12 - CAREFULLY REMOVE ALL WINDOW SHADES, ASSOCIATED HARDWARE AND FASTENERS, RETURN TO OWNER.

02 41 19.25 - REMOVE CEILING REGISTER PER MECHANICAL DRAWINGS.

02 41 19.96 - REMOVE EXISITNG LIGHT FIXTURES UNLESS NOTED OTHERWISE, REF. ELECTRICAL PLANS.

LEGEND - RCP - DEMOLITION

REMOVE 12"X 12" ACOUSTICAL CEILING TILE FINISH INCLUDING FASTENERS SUCH AS STAPLES. REMOVE TO CLEAN BARE WOOD STRIPPING. EXISTING WOOD STRIPING AND FRAMING SHALL REMAIN, PROTECT IN PLACE.

REMOVE 24"X 48" ACOUSTICAL CEILING PANEL, GRID AND ASSOCIATED ITEMS.

REMOVE LIGHT FIXTURE. REF. ELEC. FOR ADDITIONAL INFORMATION.

REMOVE MECHANICAL REGISTER, REF. MECH. FOR ADDITIONAL INFORMATION.

EXISTING BUILDING, NO WORK.

DEMOLITION GENERAL NOTES

1. THESE GENERAL NOTES PROVIDE WORK SCOPE FOR THE CONTRACT DOCUMENTS AND PERTAIN TO THE WORK IN THE SAME MANNER AS THE REQUIREMENTS OF THE DRAWINGS AND SPECIFICATIONS.
2. KEYNOTES ARE INDICATED AT ONLY A PORTION OF THE ELEMENTS. ELEMENTS ILLUSTRATED SIMILARLY, MIRRORED DESIGN AND SIMILAR CONDITIONS SHALL BE APPLIED SIMILARLY. QUANTITIES WILL NOT BE DENOTED BY KEYNOTES.
3. THE CONTRACTOR SHALL COORDINATE ALL DEMOLITION WORK REQUIRED TO PERFORM THE NEW WORK REQUIREMENTS. DEMOLITION EXTENTS ARE INDICATED TO THE GREATEST DEGREE POSSIBLE, BUT EXACT EXTENTS SHALL BE DETERMINED IN THE FIELD.
4. NOT ALL ITEMS TO BE REMOVED HAVE BEEN SHOWN FOR CLARITY. CONTRACTOR TO VERIFY EXISTING CONDITIONS.
5. THE CONTRACTOR SHALL, TO THE GREATEST DEGREE POSSIBLE MINIMIZE WASTE MATERIALS DIVERTED TO THE LANDFILL BY RECYCLING PRODUCT OR WASTE.
6. THE CONTRACTOR SHALL PROTECT EXISTING ELEMENTS SCHEDULED TO REMAIN FROM DAMAGE DERIVED FROM THE DEMOLITION ACTIVITIES.
7. REFERENCE ALL DRAWINGS, SPECIFICATIONS, AND APPENDICES AT THE END OF THE SPECIFICATIONS FOR ADDITIONAL INFORMATION.
8. KEYNOTES WITHOUT ARROWS DENOTE AN ITEM OR REGION OF THE GENERAL AREA IN WHICH THEY ARE LOCATED AND ARE REFERENCING.
9. DASHED LINES REPRESENT MATERIALS FOR REMOVAL OR RELOCATION UNLESS OTHERWISE NOTED. REFERENCE KEYNOTES.
10. MOVEABLE FURNISHINGS AND EQUIPMENT, SUCH AS TABLES, CHAIRS, BOOK SHELVING AND EQUIPMENT ARE NOT ILLUSTRATED IN THE DEMOLITION PLANS.
11. THE DISTRICT EMPLOYS THE FIRST RIGHT OF REFUSAL FOR ITEMS FOR SALVAGE OR RECLAMATION.
12. THE CONTRACTOR PRIOR TO ANY DEMOLITION WORK SHALL REVIEW ALL REGIONS OF WORK AND NOTIFY THE DISTRICT WITH A WRITTEN LISTING OF ANY NON OPERATIONAL OR BROKEN MATERIAL SUCH AS, BUT NOT LIMITED TO LIGHTING, LIGHTING LENSES, FANS, ETC. TO AVOID RESPONSIBILITY FOR REPAIR OR REPLACEMENT.
13. FIRE PROTECTION DURING DEMOLITION AND CONSTRUCTION SHALL BE IN ACCORDANCE WITN CBC CHAPTER 33.
14. NOT ALL HATCH PATTERNS THAT ARE SHOWN IN LEGEND MAY BE USED, REFERENCE DRAWINGS, (PLANS, ELEVATIONS ETC..) FOR APPLICABLE HATCH PATTERNS.
15. REMOVE ALL FINISHES DOWN TO STRUCTURE UNLESS OTHERWISE NOTED.
16. CUTTING HOLES IN EXISTING SHEAR WALLS FOR MODIFICATIONS SHALL BE MINIMAL, 3"X3". AVOID STUDS, HEADERS AND ADDITIONAL STRUCTURAL ELEMENTS.
17. PATCH AND REPAIR ALL DAMAGED OR REMOVED PORTIONS OF EXISTING BUILDINGS TO REMAIN TO APPEAR AS NEW.
18. ALL HAZARDOUS BUILDING MATERIALS IDENTIFIED IN THE 2022 ASBESTOS HAZARD EMERGENCY RESPONSE ACT 3 YEAR INSPECTION LOCATED IN AREAS BEING MODIFIED SHALL BE REMOVED IN ACCORDANCE WITH DEHESA SCHOOL DISTRICT.
19. ALL DEMOLITION SHALL COMPLY WITH CH. 33 CBC AND CHAPTER 33 CFC.

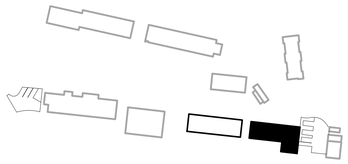

NORTH

IDENTIFICATION STAMP
DIV. OF THE STATE ARCHITECT
APP: 04-122772 INC:
REVIEWED FOR
SS ☑ FLS ☑ ACS ☑
DATE: 03/26/2024

SPROTTE | WATSON
ARCHITECTURE | PLANNING

REGISTERED ARCHITECT
C12359
STATE OF CALIFORNIA

CONSULTANT

DEHESA ELEMENTARY SCHOOL
CONSTRUCTION DOCUMENTS
DEHESA SCHOOL DISTRICT
4612 DEHESA ROAD
EL CAJON, CA 92019

REVISIONS

DESCRIPTION

BUILDING A ADMIN DEMOLITION RCP

DATE

01.25.24

JOB #

22-0400

SHEET #

A-A3-0

BUILDING A ADMIN DEMOLITION RCP | 1/4" = 1'-0" | 1 | KEY PLAN | N.T.S.

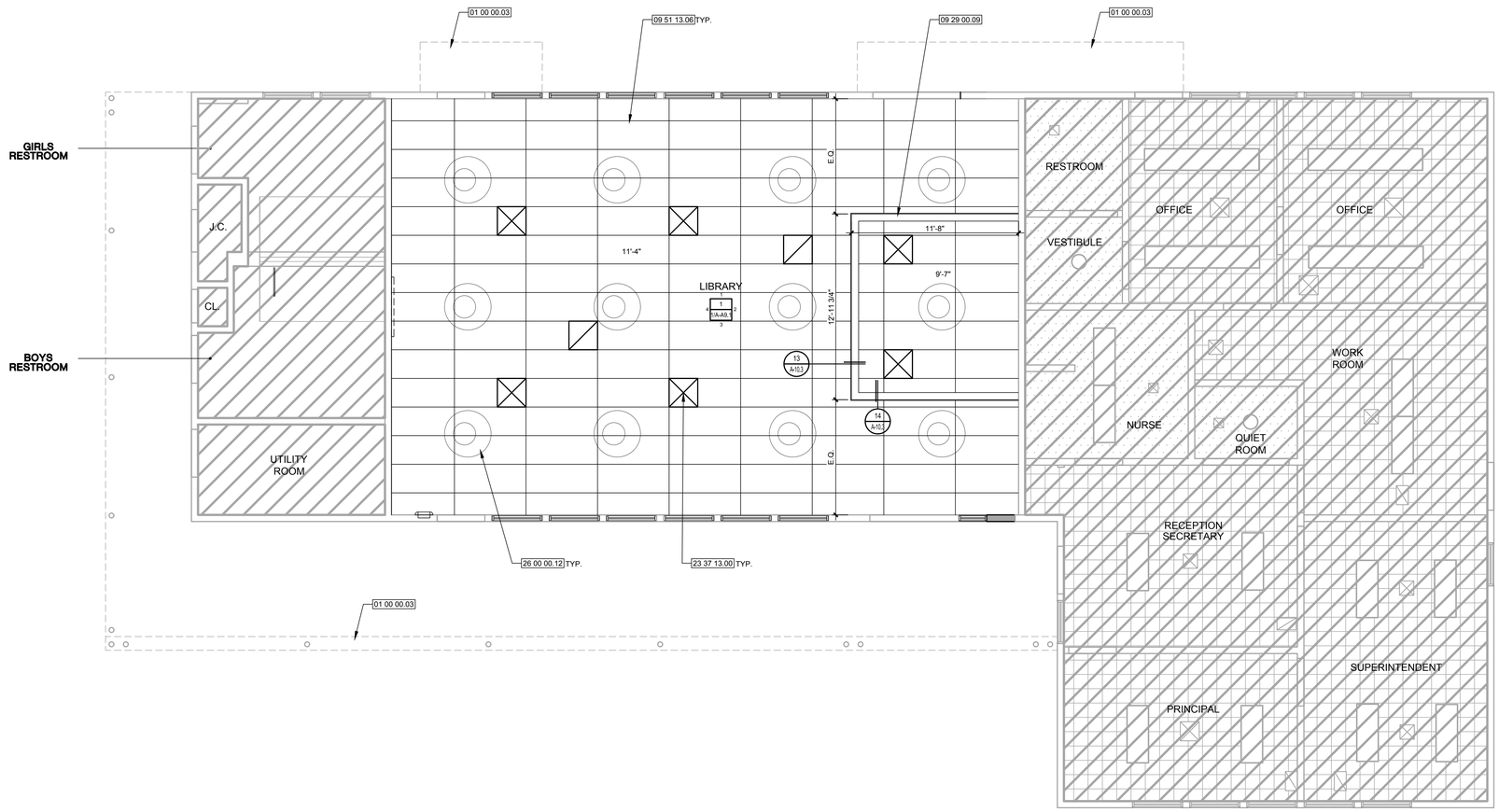

NORTH

REFERENCE KEYNOTES

DIVISION 01 - GENERAL

01 00 00.03 - THIS DASHED LINE INDICATES ROOF OVERHANG ABOVE.

DIVISION 09 - FINISHES

09 29 00.09 - PROVIDE G.W.B. SOFFIT AND ASSOCIATED FRAMING ABOVE NEW RECEPTION DESK.

09 51 13.06 - PROVIDE 24" X 60" ACOUSTICAL CEILING PANELS AND SUSPENDED CEILING GRID SYSTEM.

DIVISION 23 - HEATING, VENTILATING, AND AIR CONDITIONING

23 37 13.00 - DIFFUSERS, REGISTERS, AND GRILLS

DIVISION 26-27-28 - ELECTRICAL

26 00 00.12 - PROVIDE ELECTRICAL PENDENT LIGHT FIXTURE. REFERENCE ELLECTRICAL DRAWINGS.

REFLECTED CEILING PLAN GENERAL NOTES

1. REFERENCE SPECIFICATIONS, APPLICABLE DRAWINGS AND NOTES ON ARCHITECTURAL PLANS AND ELEVATIONS, STRUCTURAL, MECHANICAL, ELECTRICAL AND PLUMBING DRAWINGS FOR ADDITIONAL INFORMATION.
2. KEYNOTES ARE INDICATED AT ONLY A PORTION OF THE ELEMENTS. ELEMENTS ILLUSTRATED SIMILARLY, MIRRORED DESIGN AND SIMILAR CONDITIONS SHALL BE ASSUMED TO BE NOTED SIMILARLY. QUANTITIES WILL NOT BE DENOTED BY KEYNOTES.
3. KEYNOTES WITHOUT ARROWS DENOTE AN ITEM OR REGION OF THE GENERAL AREA IN WHICH THEY ARE LOCATED AND ARE REFERENCING.
4. REFERENCE ABBREVIATIONS ON SHEET A-0.1 FOR TYPICAL DEFINITIONS.
5. ALL DIMENSIONS FOR FRAMING AND WALLS ARE TO FACE OF STUDS UNLESS NOTED OTHERWISE OR IDENTIFIED BY CENTERLINE NOTATIONS.
6. NOT ALL CEILING ELEMENTS, INCLUDING BUT NOT LIMITED TO: SPEAKERS, MOTION DETECTORS, SMOKE DETECTORS, SECURITY DEVICES, MECHANICAL REGISTERS AND DIFFUSERS ARE INDICATED. REFERENCE MECHANICAL AND ELECTRICAL DRAWINGS.
7. REFERENCE ELECTRICAL DRAWINGS FOR LIGHT FIXTURE TYPES.
8. CONTRACTOR TO PROVIDE ACCESS PANELS PER MECHANICAL AND ELECTRICAL DRAWING REQUIREMENTS.
9. REFERENCE SHEET A-10.3 FOR ALL SUSPENDED CEILING DETAILS.
10. REFERENCE DETAIL 8/A-10.3 FOR SUSPENSION CEILING WIRE CONNECTIONS. MAXIMUM FLAME SPREAD OF INTERIOR WALL AND CEILING FINISHES SHALL COMPLY WITH CBC SECTION 803. EXIT ENCLOSURES AND EXIT PASSAGEWAYS SHALL BE CLASS B: FLAME SPREAD INDEX NOT TO EXCEED 75 AND SMOKE-DEVELOPMENT INDEX NOT TO EXCEED 450. CORRIDORS, ROOMS, AND ENCLOSED SPACES SHALL BE CLASS C: FLAME SPREAD INDEX NOT TO EXCEED 200 AND SMOKE-DEVELOPMENT INDEX NOT TO EXCEED 450.
11. BATT INSULATION, PIPE INSULATION SHALL HAVE A FLAME SPREAD INDEX NOT TO EXCEED 25 AND A SMOKE-DEVELOPMENT INDEX NOT TO EXCEED 450 IN ACCORDANCE WITH CBC 719.2.

REFLECTED CEILING PLAN LEGEND

- 2' x 4' OR 2' X 5' ACOUSTIC CEILING TILE AS SHOWN PER PLAN AND FINISH SCHEDULE. (NOTE MAIN RUNNERS ARE 4' O.C. WITH HANGER WIRES 4' O.C. FOR THE 2'X5' CEILING SYSTEM, CROSS TEES ARE 4' AND 5'.)
- 2X2 LIGHT FIXTURE. REF. ELEC.
- PENDANT LIGHT FIXTURE. REF. ELEC.
- PENDANT LIGHT FIXTURE. REF. ELEC.
- SUPPLY GRILLE, REF. MECH.
- RETURN GRILLE, REF. MECH.

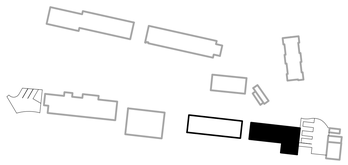

NORTH

IDENTIFICATION STAMP
DIV. OF THE STATE ARCHITECT
APP: 04-122772 INC:
REVIEWED FOR
SS ☑ FLS ☑ ACS ☑
DATE: 03/26/2024

SPROTTE | WATSON
ARCHITECTURE | PLANNING

REGISTERED ARCHITECT
C12359
STATE OF CALIFORNIA

CONSULTANT

DEHESA ELEMENTARY SCHOOL
CONSTRUCTION DOCUMENTS
DEHESA SCHOOL DISTRICT
4612 DEHESA ROAD
EL CAJON, CA 92019

REVISIONS

DESCRIPTION

BUILDING A
ADMIN RCP

DATE

01.25.24

JOB #

22-0400

SHEET #

A-A3-1

BUILDING A ADMIN RCP | 1/4" = 1'-0" | 1 | KEY PLAN | N.T.S.

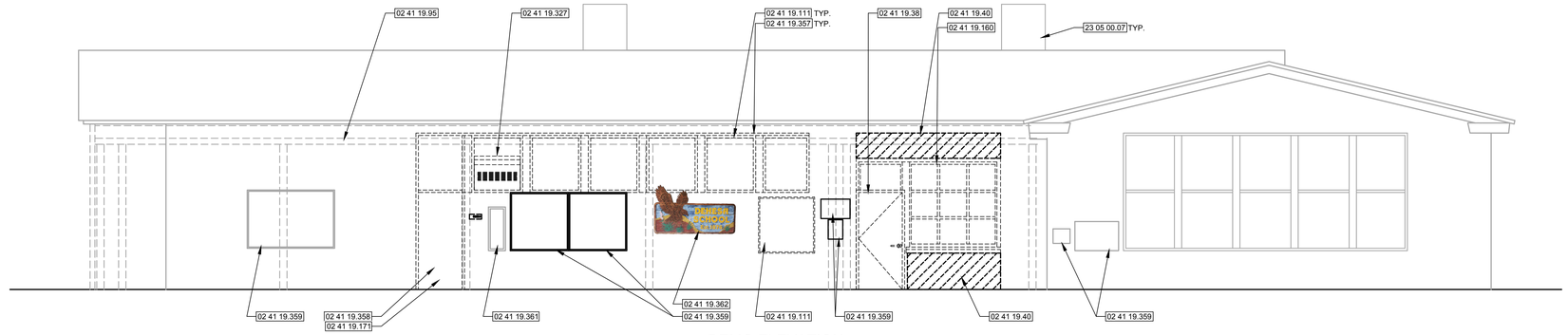

DEMO ELEVATION

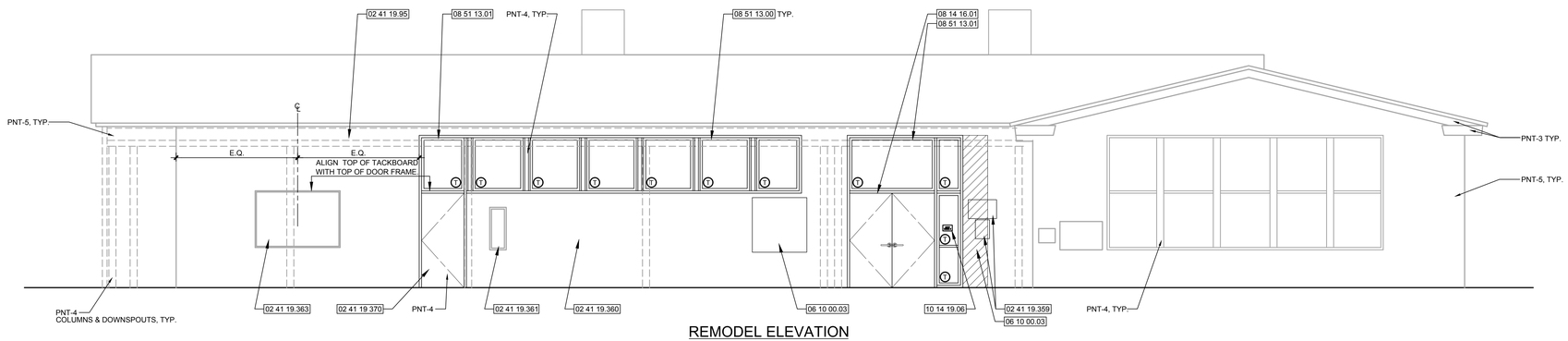

REMODEL ELEVATION

BUILDING A ADMIN EXTERIOR SOUTH ELEVATIONS | 1/4" = 1'-0" | 1

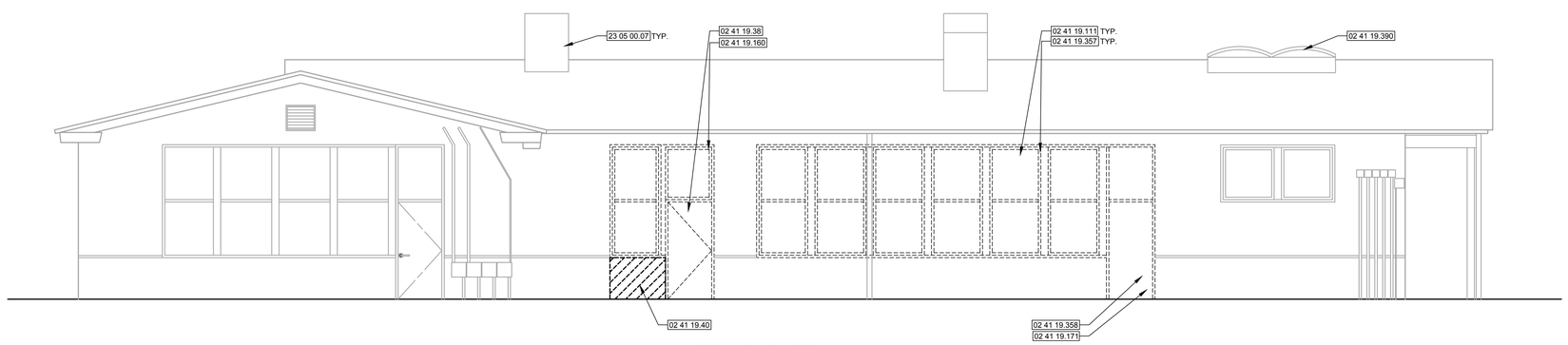

DEMO ELEVATION

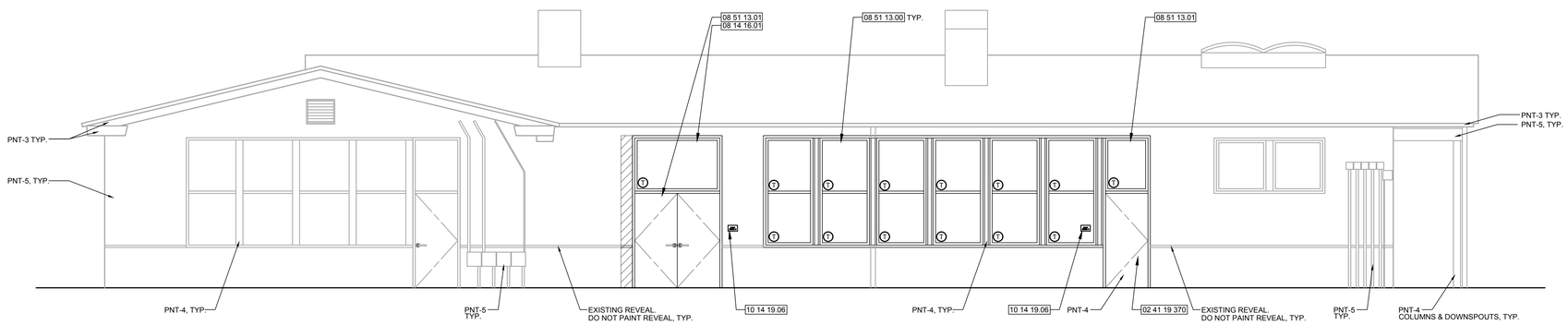

REMODEL ELEVATION

BUILDING A ADMIN EXTERIOR NORTH ELEVATIONS | 1/4" = 1'-0" | 2

REFERENCE KEYNOTES

DIVISION 02 - EXISTING CONDITIONS

02 41 19.38	-	REMOVE DOOR, FRAME AND WINDOW (WHERE OCCURS)
02 41 19.40	-	REMOVE PORTION OF WOOD FRAMED WALL AS REQUIRED FOR NEW WORK.
02 41 19.95	-	EXISTING COVERED WALK TO REMAIN.
02 41 19.111	-	REMOVE EXISTING WINDOW SYSTEM
02 41 19.160	-	REMOVE EXISTING TRIM. SALVAGE AND REFURISH FOR RE-USE WHERE APPROPRIATE.
02 41 19.171	-	REMOVE EXISTING EXTERIOR PAINT ON DOORS, TRIMS AND FRAMES FOR NEW PAINT.
02 41 19.327	-	REMOVE EXISTING HVAC MECHANICAL UNIT PER MECHANICAL.
02 41 19.357	-	EXISITING WOOD TRIM TO REMAIN. REFURBISH, PAINT, REPLACE IN KIND ONLY WHERE NEEDED.
02 41 19.358	-	REMOVE EXISTING DOOR AND WINDOW & FRAMING SYSTEMS. SALVAGE, REFURBISH AND RE-USE WOOD DOOR IN SAME LOCATION.
02 41 19.359	-	EXISTING EXTERIOR SIGNS, ARTWORK, TACKBOARDS, CAREFULLY REMOVE, PROTECT, STORE PRIOR TO PAINTING. RE-INSTALL ONCE PAINT IS DRY AND READY TO RECEIVE ITEMS.
02 41 19.360	-	RELOCATE ARTWORK AS SHOWN UNLESS OTHERWISED DIRECTED BY ARCHITECT.
02 41 19.361	-	EXISTING FIRE EXTINGUISHER RECESS.
02 41 19.362	-	CAREFULLY REMOVE DEHESA SCHOOL SIGN AND RETURN TO DISTRICT.
02 41 19.363	-	RELOCATE TACKBOARD AS SHOWN UNLESS OTHERWISE INDICATED BY ARCHITECT.
02 41 19.390	-	EXISTING SKYLIGHT TO REMAIN. PROTECT IN PLACE.
02 41 19 370	-	EXISTING WOOD DOOR PAINTED AND ATTACHED IN NEW FRAME. REF. DOOR SCHEDULE, DOOR DETAILS AND DOOR HARDWARE SPECS.

DIVISION 06 - WOOD, PLASTICS, AND COMPOSITES

06 10 00.03	-	PROVIDE IN-FILL WALL. REMOVE EXISITNG PLASTER AS REQUIRED TO PROVIDE A FLUSH SEAMLESS FINISH FROM NEW TO EXISTING. REF. DETAILS 18 & 19/A-10.2

DIVISION 08 - OPENINGS

08 14 16.01	-	PROVIDE SOLID CORE WOOD DOORS PER SPECIFICATIONS. REF. DETAIL 12/A-10.8. FOR DOOR HEAD CONDITION.
08 51 13.00	-	PROVIDE ALUMINUM STOREFRONT WINDOW FRAME AND GLAZING SYSTEM PER OPENING SCHEDULE AND SPECS.
08 51 13.01	-	PROVIDE ALUMINUM STORE FRONT DOOR AND OR WINDOW SYSTEM AND GLAZING (WHERE APPLICABLE) PER OPENING SCHEDULE AND SPECS.

DIVISION 10 - SPECIALITIES

10 14 19.06	-	PROVIDE EXTERIOR MOUNTED TACTILE ROOM SIGNAGE PER DETAIL 10/A-10.7

DIVISION 23 - HEATING, VENTILATING, AND AIR CONDITIONING

23 05 00.07	-	EXISTING ROOFTOP HVAC UNITS TO REMAIN.

EXTERIOR ELEVATION GENERAL NOTES

1. REFERENCE SPECIFICATIONS, TITLE SHEET GENERAL NOTES AND APPLICABLE DRAWINGS AND NOTES ON ARCHITECTURAL PLANS AND ELEVATIONS, STRUCTURAL, MECHANICAL, ELECTRICAL, PLUMBING AND CIVIL DRAWINGS FOR ADDITIONAL INFORMATION.
2. NOT ALL KEYNOTES MAY BE USED OR REFERENCED.
3. KEYNOTES ARE INDICATED AT ONLY A PORTION OF THE ELEMENTS. ELEMENTS ILLUSTRATED SIMILARLY, MIRRORED DESIGN AND SIMILAR CONDITIONS SHALL BE ASSUMED TO BE NOTED SIMILARLY. QUANTITIES WILL NOT BE DENOTED BY KEYNOTES.
4. KEYNOTES WITHOUT ARROWS DENOTE AN ITEM OR REGION OF THE GENERAL AREA IN WHICH THEY ARE LOCATED AND ARE REFERENCING.
5. REFERENCE ABBREVIATIONS ON SHEET A-0.1 FOR TYPICAL DEFINITIONS.
6. DIMENSIONS FOR MIRRORED OR SYMMETRICAL CONSTRUCTION MAY BE ILLUSTRATED AT ONE SIDE AND SHALL BE ASSUMED SIMILAR FOR THE OTHER.
7. NOT ALL EXTERIOR ELEMENTS MAY BE ILLUSTRATED.
8. PROVIDE PREPARATION TO REMOVE ALL LOOSE PAINT, MINOR PLASTER REPAIR, CRACK REPAIR AND PROVIDE PRIME PAINT AND FINISH PAINT FINISH AT ALL NEW AND EXISTING PLASTER FINISHES, DOORS, DOOR FRAMES, WINDOW FRAMES, METAL TRIM, PIPES, CONDUITS, LOUVERS, FASCIAS, EXPOSED WOOD TRIM AND SIDING, AND OTHER SUCH CURRENTLY PAINTED MATERIALS AND EXPOSED NEW WORK ELEMENTS.
9. ALL REPAIR OF PLASTER FINISHES SHALL BE FLUSH TO ADJACENT FINISHES AND MATCH TEXTURES AS CLOSELY AS POSSIBLE. WHERE EXPANSION OR CONTROL JOINTS OCCUR, CONTINUE JOINTS THROUGH NEW MATERIAL TO MATCH.
10. MECHANICAL UNITS, VENTS, AND OTHER SIMILAR COMPONENTS MAY NOT BE ILLUSTRATED IN ELEVATION. REFERENCE ROOF PLANS AND MECHANICAL PLANS FOR UNIT LOCATIONS.
11. FOR NEW PLASTER/PLASTER TIE-IN DETAILS REFERENCE 18 & 19/A-10.2.
12. REMOVE ARTWORK, SIGNS, TACKBOARDS CAREFULLY PRIOR TO PAINTING. RE-INSTALL ONCE PAINT IS DRY AND READY TO RECEIVE ITEMS. VERIFY IF SIGN(S) IS BEING REPLACED OR RE-INSTALLED AS IS.
13. ALL EXTERIOR ELEVATIONS OF THE BUILDINGS IN THE SCOPE OF WORK ARE TO BE PAINTED.

DEMOLITION GENERAL NOTES

1. THESE GENERAL NOTES PROVIDE WORK SCOPE FOR THE CONTRACT DOCUMENTS AND PERTAIN TO THE WORK IN THE SAME MANNER AS THE REQUIREMENTS OF THE DRAWINGS AND SPECIFICATIONS.
2. KEYNOTES ARE INDICATED AT ONLY A PORTION OF THE ELEMENTS. ELEMENTS ILLUSTRATED SIMILARLY, MIRRORED DESIGN AND SIMILAR CONDITIONS SHALL BE APPLIED SIMILARLY. QUANTITIES WILL NOT BE DENOTED BY KEYNOTES.
3. THE CONTRACTOR SHALL COORDINATE ALL DEMOLITION WORK REQUIRED TO PERFORM THE NEW WORK REQUIREMENTS. DEMOLITION EXTENTS ARE INDICATED TO THE GREATEST DEGREE POSSIBLE, BUT EXACT EXTENTS SHALL BE DETERMINED IN THE FIELD.
4. NOT ALL ITEMS TO BE REMOVED HAVE BEEN SHOWN FOR CLARITY. CONTRACTOR TO VERIFY EXISTING CONDITIONS.
5. THE CONTRACTOR SHALL, TO THE GREATEST DEGREE POSSIBLE MINIMIZE WASTE MATERIALS DIVERTED TO THE LANDFILL BY RECYCLING PRODUCT OR WASTE.
6. THE CONTRACTOR SHALL PROTECT EXISTING ELEMENTS SCHEDULED TO REMAIN FROM DAMAGE DERIVED FROM THE DEMOLITION ACTIVITIES.
7. REFERENCE ALL DRAWINGS, SPECIFICATIONS, AND APPENDICES AT THE END OF THE SPECIFICATIONS FOR ADDITIONAL INFORMATION.
8. KEYNOTES WITHOUT ARROWS DENOTE AN ITEM OR REGION OF THE GENERAL AREA IN WHICH THEY ARE LOCATED AND ARE REFERENCING.
9. DASHED LINES REPRESENT MATERIALS FOR REMOVAL OR RELOCATION UNLESS OTHERWISE NOTED. REFERENCE KEYNOTES.
10. MOVEABLE FURNISHINGS AND EQUIPMENT, SUCH AS TABLES, CHAIRS, BOOK SHELVING AND EQUIPMENT ARE NOT ILLUSTRATED IN THE DEMOLITION PLANS.
11. THE DISTRICT EMPLOYS THE FIRST RIGHT OF REFUSAL FOR ITEMS FOR SALVAGE OR RECLAMATION.
12. THE CONTRACTOR PRIOR TO ANY DEMOLITION WORK SHALL REVIEW ALL REGIONS OF WORK AND NOTIFY THE DISTRICT WITH A WRITTEN LISTING OF ANY NON OPERATIONAL OR BROKEN MATERIAL SUCH AS, BUT NOT LIMITED TO LIGHTING, LIGHTING LENSES, FANS, ETC. TO AVOID RESPONSIBILITY FOR REPAIR OR REPLACEMENT.
13. FIRE PROTECTION DURING DEMOLITION AND CONSTRUCTION SHALL BE IN ACCORDANCE WITN CBC CHAPTER 33.
14. NOT ALL HATCH PATTERNS THAT ARE SHOWN IN LEGEND MAY BE USED, REFERENCE DRAWINGS, (PLANS, ELEVATIONS ETC.,) FOR APPLICABLE HATCH PATTERNS.
15. REMOVE ALL FINISHES DOWN TO STRUCTURE UNLESS OTHERWISE NOTED.
16. CUTTING HOLES IN EXISTING SHEAR WALLS FOR MODIFICATIONS SHALL BE MINIMAL, 3"X3". AVOID STUDS, HEADERS AND ADDITIONAL STRUCTURAL ELEMENTS.
17. PATCH AND REPAIR ALL DAMAGED OR REMOVED PORTIONS OF EXISTING BUILDINGS TO REMAIN TO APPEAR AS NEW.
18. ALL HAZARDOUS BUILDING MATERIALS IDENTIFIED IN THE 2022 ASBESTOS HAZARD EMERGENCY RESPONSE ACT 3 YEAR INSPECTION LOCATED IN AREAS BEING MODIFIED SHALL BE REMOVED IN ACCORDANCE WITH DEHESA SCHOOL DISTRICT.
19. ALL DEMOLITION SHALL COMPLY WITH CH. 33 CBC AND CHAPTER 33 CFC.

IDENTIFICATION STAMP
DIV. OF THE STATE ARCHITECT
APP: 04-122772 INC:
REVIEWED FOR
SS ☑ FLS ☑ ACS ☑
DATE: 03/26/2024

SPROTTE | WATSON
ARCHITECTURE | PLANNING

REGISTERED ARCHITECT
C12359
STATE OF CALIFORNIA

CONSULTANT

DEHESA ELEMENTARY SCHOOL
CONSTRUCTION DOCUMENTS
DEHESA SCHOOL DISTRICT
4612 DEHESA ROAD
EL CAJON, CA 92019

REVISIONS

DESCRIPTION
BUILDING A ADMIN EXTERIOR ELEVATIONS

DATE
01.25.24

JOB #
22-0400

SHEET #
A-A5-0

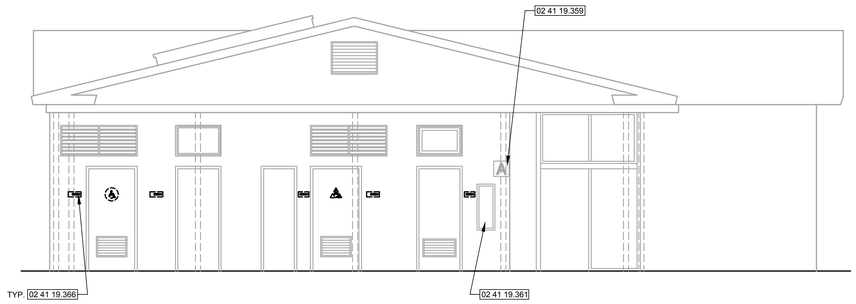

DEMO ELEVATION

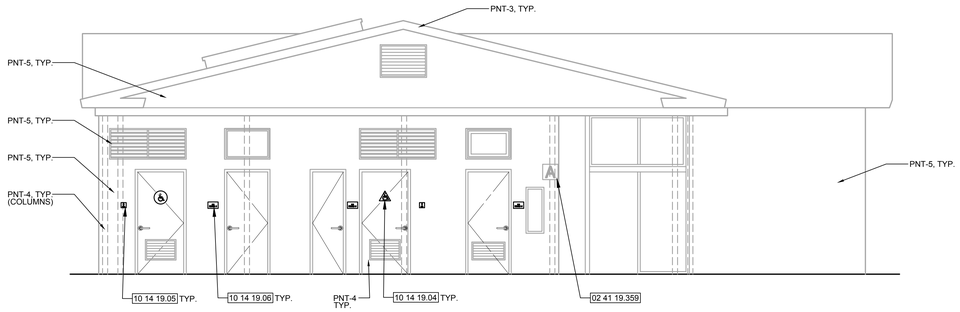

REMODEL ELEVATION

BUILDING A ADMIN EXTERIOR WEST ELEVATIONS | 1/4" = 1'-0" | 1

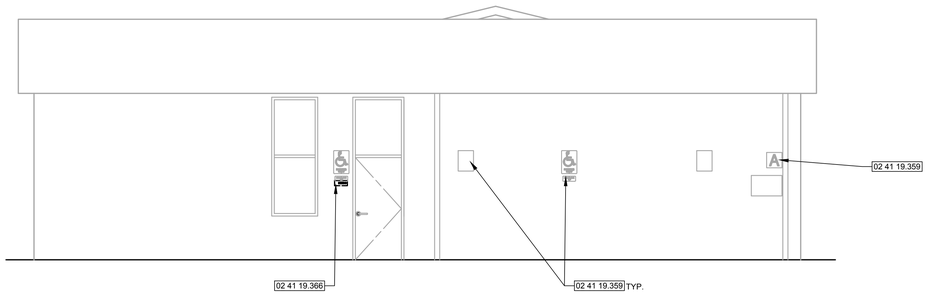

DEMO ELEVATION

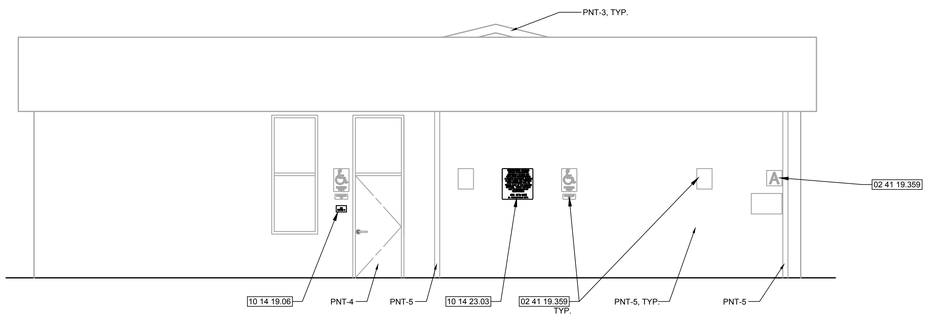

REMODEL ELEVATION

BUILDING A ADMIN EXTERIOR EAST ELEVATIONS | 1/4" = 1'-0" | 2

REFERENCE KEYNOTES

DIVISION 02 - EXISTING CONDITIONS

02 41 19.359	-	EXISTING EXTERIOR SIGNS, ARTWORK, TACKBOARDS, CAREFULLY REMOVE, PROTECT, STORE PRIOR TO PAINTING. RE-INSTALL ONCE PAINT IS DRY AND READY TO RECEIVE ITEMS.
02 41 19.361	-	EXISTING FIRE EXTINGUISHER RECESS.
02 41 19.366	-	REMOVE EXISTING ROOM SIGNAGE

DIVISION 10 - SPECIALITIES

10 14 19.04	-	PROVIDE DOOR MOUNTED GEOMETRIC SYMBOL PER DETAIL 5/A-10.7
10 14 19.05	-	PROVIDE WALL MOUNTED TACTILE RESTROOM SIGNAGE PER DETAIL 5/A-10.7
10 14 19.06	-	PROVIDE EXTERIOR MOUNTED TACTILE ROOM SIGNAGE PER DETAIL 10/A-10.7
10 14 23.03	-	PROVIDE TOW AWAY SIGN PER DETAIL 30/A-10.1.

EXTERIOR ELEVATION GENERAL NOTES

1. REFERENCE SPECIFICATIONS, TITLE SHEET GENERAL NOTES AND APPLICABLE DRAWINGS AND NOTES ON ARCHITECTURAL PLANS AND ELEVATIONS, STRUCTURAL, MECHANICAL, ELECTRICAL, PLUMBING AND CIVIL DRAWINGS FOR ADDITIONAL INFORMATION.
2. NOT ALL KEYNOTES MAY BE USED OR REFERENCED.
3. KEYNOTES ARE INDICATED AT ONLY A PORTION OF THE ELEMENTS. ELEMENTS ILLUSTRATED SIMILARLY, MIRRORED DESIGN AND SIMILAR CONDITIONS SHALL BE ASSUMED TO BE NOTED SIMILARLY. QUANTITIES WILL NOT BE DENOTED BY KEYNOTES.
4. KEYNOTES WITHOUT ARROWS DENOTE AN ITEM OR REGION OF THE GENERAL AREA IN WHICH THEY ARE LOCATED AND ARE REFERENCING.
5. REFERENCE ABBREVIATIONS ON SHEET A-0.1 FOR TYPICAL DEFINITIONS.
6. DIMENSIONS FOR MIRRORED OR SYMMETRICAL CONSTRUCTION MAY BE ILLUSTRATED AT ONE SIDE AND SHALL BE ASSUMED SIMILAR FOR THE OTHER.
7. NOT ALL EXTERIOR ELEMENTS MAY BE ILLUSTRATED.
8. PROVIDE PREPARATION TO REMOVE ALL LOOSE PAINT, MINOR PLASTER REPAIR, CRACK REPAIR AND PROVIDE PRIME PAINT AND FINISH PAINT FINISH AT ALL NEW AND EXISTING PLASTER FINISHES, DOORS, DOOR FRAMES, WINDOW FRAMES, METAL TRIM, PIPES, CONDUITS, LOUVERS, FASCIAS, EXPOSED WOOD TRIM AND SIDING, AND OTHER SUCH CURRENTLY PAINTED MATERIALS AND EXPOSED NEW WORK ELEMENTS.
9. ALL REPAIR OF PLASTER FINISHES SHALL BE FLUSH TO ADJACENT FINISHES AND MATCH TEXTURES AS CLOSELY AS POSSIBLE. WHERE EXPANSION OR CONTROL JOINTS OCCUR, CONTINUE JOINTS THROUGH NEW MATERIAL TO MATCH.
10. MECHANICAL UNITS, VENTS, AND OTHER SIMILAR COMPONENTS MAY NOT BE ILLUSTRATED IN ELEVATION. REFERENCE ROOF PLANS AND MECHANICAL PLANS FOR UNIT LOCATIONS.
11. FOR NEW PLASTER/PLASTER TIE-IN DETAILS REFERENCE 18 & 19/A-10.2.
12. REMOVE ARTWORK, SIGNS, TACKBOARDS CAREFULLY PRIOR TO PAINTING. RE-INSTALL ONCE PAINT IS DRY AND READY TO RECEIVE ITEMS. VERIFY IF SIGN(S) IS BEING REPLACED OR RE-INSTALLED AS IS.
13. ALL EXTERIOR ELEVATIONS OF THE BUILDINGS IN THE SCOPE OF WORK ARE TO BE PAINTED.

DEMOLITION GENERAL NOTES

1. THESE GENERAL NOTES PROVIDE WORK SCOPE FOR THE CONTRACT DOCUMENTS AND PERTAIN TO THE WORK IN THE SAME MANNER AS THE REQUIREMENTS OF THE DRAWINGS AND SPECIFICATIONS.
2. KEYNOTES ARE INDICATED AT ONLY A PORTION OF THE ELEMENTS. ELEMENTS ILLUSTRATED SIMILARLY, MIRRORED DESIGN AND SIMILAR CONDITIONS SHALL BE APPLIED SIMILARLY. QUANTITIES WILL NOT BE DENOTED BY KEYNOTES.
3. THE CONTRACTOR SHALL COORDINATE ALL DEMOLITION WORK REQUIRED TO PERFORM THE NEW WORK REQUIREMENTS. DEMOLITION EXTENTS ARE INDICATED TO THE GREATEST DEGREE POSSIBLE, BUT EXACT EXTENTS SHALL BE DETERMINED IN THE FIELD.
4. NOT ALL ITEMS TO BE REMOVED HAVE BEEN SHOWN FOR CLARITY. CONTRACTOR TO VERIFY EXISTING CONDITIONS.
5. THE CONTRACTOR SHALL, TO THE GREATEST DEGREE POSSIBLE MINIMIZE WASTE MATERIALS DIVERTED TO THE LANDFILL BY RECYCLING PRODUCT OR WASTE.
6. THE CONTRACTOR SHALL PROTECT EXISTING ELEMENTS SCHEDULED TO REMAIN FROM DAMAGE DERIVED FROM THE DEMOLITION ACTIVITIES.
7. REFERENCE ALL DRAWINGS, SPECIFICATIONS, AND APPENDICES AT THE END OF THE SPECIFICATIONS FOR ADDITIONAL INFORMATION.
8. KEYNOTES WITHOUT ARROWS DENOTE AN ITEM OR REGION OF THE GENERAL AREA IN WHICH THEY ARE LOCATED AND ARE REFERENCING.
9. DASHED LINES REPRESENT MATERIALS FOR REMOVAL OR RELOCATION UNLESS OTHERWISE NOTED. REFERENCE KEYNOTES.
10. MOVEABLE FURNISHINGS AND EQUIPMENT, SUCH AS TABLES, CHAIRS, BOOK SHELVING AND EQUIPMENT ARE NOT ILLUSTRATED IN THE DEMOLITION PLANS.
11. THE DISTRICT EMPLOYS THE FIRST RIGHT OF REFUSAL FOR ITEMS FOR SALVAGE OR RECLAMATION.
12. THE CONTRACTOR PRIOR TO ANY DEMOLITION WORK SHALL REVIEW ALL REGIONS OF WORK AND NOTIFY THE DISTRICT WITH A WRITTEN LISTING OF ANY NON OPERATIONAL OR BROKEN MATERIAL SUCH AS, BUT NOT LIMITED TO LIGHTING, LIGHTING LENSES, FANS, ETC. TO AVOID RESPONSIBILITY FOR REPAIR OR REPLACEMENT.
13. FIRE PROTECTION DURING DEMOLITION AND CONSTRUCTION SHALL BE IN ACCORDANCE WITN CBC CHAPTER 33.
14. NOT ALL HATCH PATTERNS THAT ARE SHOWN IN LEGEND MAY BE USED, REFERENCE DRAWINGS, (PLANS, ELEVATIONS ETC..) FOR APPLICABLE HATCH PATTERNS.
15. REMOVE ALL FINISHES DOWN TO STRUCTURE UNLESS OTHERWISE NOTED.
16. CUTTING HOLES IN EXISTING SHEAR WALLS FOR MODIFICATIONS SHALL BE MINIMAL, 3"X3". AVOID STUDS, HEADERS AND ADDITIONAL STRUCTURAL ELEMENTS.
17. PATCH AND REPAIR ALL DAMAGED OR REMOVED PORTIONS OF EXISTING BUILDINGS TO REMAIN TO APPEAR AS NEW.
18. ALL HAZARDOUS BUILDING MATERIALS IDENTIFIED IN THE 2022 ASBESTOS HAZARD EMERGENCY RESPONSE ACT 3 YEAR INSPECTION LOCATED IN AREAS BEING MODIFIED SHALL BE REMOVED IN ACCORDANCE WITH DEHESA SCHOOL DISTRICT
19. ALL DEMOLITION SHALL COMPLY WITH CH. 33 CBC AND CHAPTER 33 CFC.

IDENTIFICATION STAMP
DIV. OF THE STATE ARCHITECT
APP: 04-122772 INC:
REVIEWED FOR
SS ☑ FLS ☑ ACS ☑
DATE: 03/26/2024

SPROTTE | WATSON
ARCHITECTURE | PLANNING

REGISTERED ARCHITECT
C12359
STATE OF CALIFORNIA

CONSULTANT

DEHESA ELEMENTARY SCHOOL
CONSTRUCTION DOCUMENTS
DEHESA SCHOOL DISTRICT
4612 DEHESA ROAD
EL CAJON, CA 92019

REVISIONS

DESCRIPTION

BUILDING A ADMIN EXTERIOR ELEVATIONS

DATE

01.25.24

JOB #

22-0400

SHEET #

A-A5-1

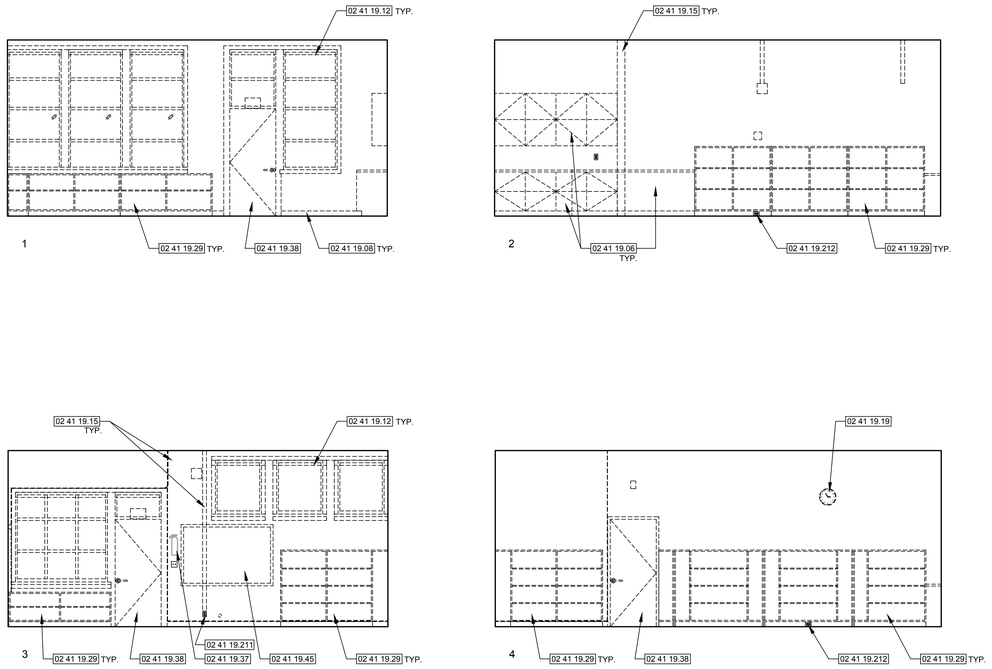

LIBRARY INTERIOR DEMOLITION ELEVATIONS | 1/4" = 1'-0" | 1

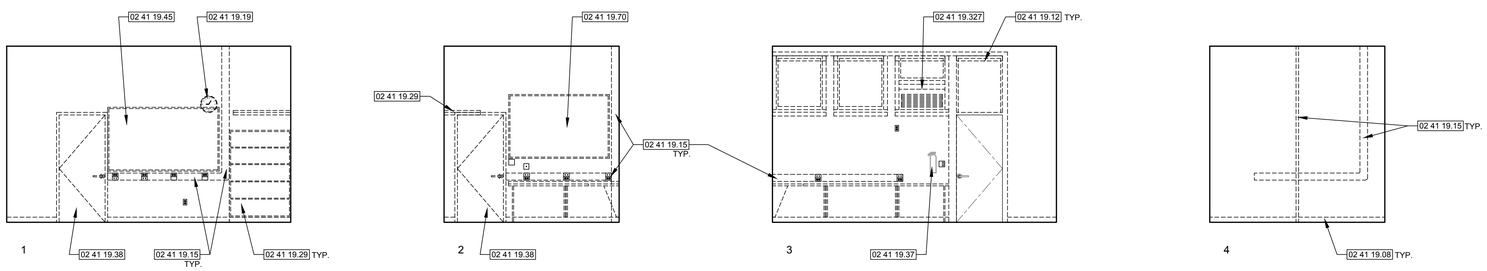

GREEN ROOM INTERIOR DEMOLITION ELEVATIONS | 1/4" = 1'-0" | 2

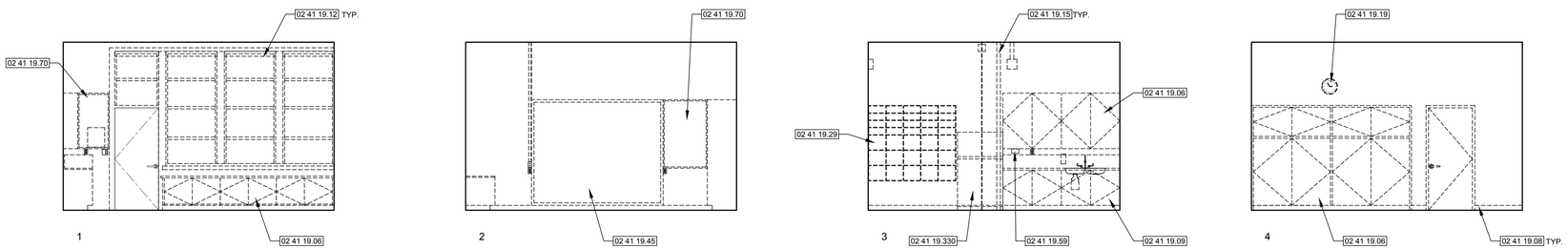

STAFF LOUNGE INTERIOR DEMOLITION ELEVATIONS | 1/4" = 1'-0" | 3

REFERENCE KEYNOTES

DIVISION 02 - EXISTING CONDITIONS

02 41 19.06	-	REMOVE CASEWORK ENTIRELY INCLUDING ALL ASSOCIATED ITEMS SUCH AS COUNTERTOPS, BACK AND SIDE SPLASHES, HARDWARE, AND FASTENERS TO CLEAN BARE FLOOR AND WALL SUBSTRATE.
02 41 19.08	-	REMOVE RUBBER BASE.
02 41 19.09	-	REMOVE SINK BASE CABINET.
02 41 19.12	-	CAREFULLY REMOVE ALL WINDOW SHADES, ASSOCIATED HARDWARE AND FASTENERS, RETURN TO OWNER.
02 41 19.15	-	REMOVE SURFACE MOUNTED WIRE MOULD AND CONDUIT PER ELECTRICAL DRAWINGS E, EF, AND ET SHEETS.
02 41 19.19	-	REMOVE CLOCK AND DELIVER TO DISTRICT.
02 41 19.29	-	REMOVE ALL SHELVING IN THE ROOM INCLUDING ALL ASSOCIATED ITEMS SUCH AS BRACKETS, SHELVES, AND FASTENERS.
02 41 19.37	-	REMOVE, STORE, PROTECT FIRE EXTINGUISHER AND MOUNTING BRACKET FOR RE-INSTALLATION.
02 41 19.38	-	REMOVE DOOR, FRAME AND WINDOW (WHERE OCCURS)
02 41 19.45	-	REMOVE WHITE BOARD AND/OR CHALK BOARD.
02 41 19.59	-	REMOVE THERMOSTAT, REFERENCE MECHANICAL PLANS
02 41 19.70	-	REMOVE TACKABLE WALL BOARD.
02 41 19.211	-	REMOVE EXISTING SURFACE MOUNT ELECTRICAL OUTLET BOX PER ELECTRICAL.
02 41 19.212	-	REMOVE EXISTING ELECTRICAL OUTLET PER ELECTRICAL.
02 41 19.327	-	REMOVE EXISTING HVAC MECHANICAL UNIT PER MECHANICAL.
02 41 19.330	-	REMOVE EXISTING REFRIGERATOR.

DEMOLITION GENERAL NOTES

1. THESE GENERAL NOTES PROVIDE WORK SCOPE FOR THE CONTRACT DOCUMENTS AND PERTAIN TO THE WORK IN THE SAME MANNER AS THE REQUIREMENTS OF THE DRAWINGS AND SPECIFICATIONS.
2. KEYNOTES ARE INDICATED AT ONLY A PORTION OF THE ELEMENTS. ELEMENTS ILLUSTRATED SIMILARLY, MIRRORED DESIGN AND SIMILAR CONDITIONS SHALL BE APPLIED SIMILARLY. QUANTITIES WILL NOT BE DENOTED BY KEYNOTES.
3. THE CONTRACTOR SHALL COORDINATE ALL DEMOLITION WORK REQUIRED TO PERFORM THE NEW WORK REQUIREMENTS. DEMOLITION EXTENTS ARE INDICATED TO THE GREATEST DEGREE POSSIBLE, BUT EXACT EXTENTS SHALL BE DETERMINED IN THE FIELD.
4. NOT ALL ITEMS TO BE REMOVED HAVE BEEN SHOWN FOR CLARITY. CONTRACTOR TO VERIFY EXISTING CONDITIONS.
5. THE CONTRACTOR SHALL, TO THE GREATEST DEGREE POSSIBLE MINIMIZE WASTE MATERIALS DIVERTED TO THE LANDFILL BY RECYCLING PRODUCT OR WASTE.
6. THE CONTRACTOR SHALL PROTECT EXISTING ELEMENTS SCHEDULED TO REMAIN FROM DAMAGE DERIVED FROM THE DEMOLITION ACTIVITIES.
7. REFERENCE ALL DRAWINGS, SPECIFICATIONS, AND APPENDICES AT THE END OF THE SPECIFICATIONS FOR ADDITIONAL INFORMATION.
8. KEYNOTES WITHOUT ARROWS DENOTE AN ITEM OR REGION OF THE GENERAL AREA IN WHICH THEY ARE LOCATED AND ARE REFERENCING.
9. DASHED LINES REPRESENT MATERIALS FOR REMOVAL OR RELOCATION UNLESS OTHERWISE NOTED. REFERENCE KEYNOTES.
10. MOVEABLE FURNISHINGS AND EQUIPMENT, SUCH AS TABLES, CHAIRS, BOOK SHELVING AND EQUIPMENT ARE NOT ILLUSTRATED IN THE DEMOLITION PLANS.
11. THE DISTRICT EMPLOYS THE FIRST RIGHT OF REFUSAL FOR ITEMS FOR SALVAGE OR RECLAMATION.
12. THE CONTRACTOR PRIOR TO ANY DEMOLITION WORK SHALL REVIEW ALL REGIONS OF WORK AND NOTIFY THE DISTRICT WITH A WRITTEN LISTING OF ANY NON OPERATIONAL OR BROKEN MATERIAL SUCH AS, BUT NOT LIMITED TO LIGHTING, LIGHTING LENSES, FANS, ETC. TO AVOID RESPONSIBILITY FOR REPAIR OR REPLACEMENT.
13. FIRE PROTECTION DURING DEMOLITION AND CONSTRUCTION SHALL BE IN ACCORDANCE WITN CBC CHAPTER 33.
14. NOT ALL HATCH PATTERNS THAT ARE SHOWN IN LEGEND MAY BE USED, REFERENCE DRAWINGS, (PLANS, ELEVATIONS ETC..) FOR APPLICABLE HATCH PATTERNS.
15. REMOVE ALL FINISHES DOWN TO STRUCTURE UNLESS OTHERWISE NOTED.
16. CUTTING HOLES IN EXISTING SHEAR WALLS FOR MODIFICATIONS SHALL BE MINIMAL, 3"X3". AVOID STUDS, HEADERS AND ADDITIONAL STRUCTURAL ELEMENTS.
17. PATCH AND REPAIR ALL DAMAGED OR REMOVED PORTIONS OF EXISTING BUILDINGS TO REMAIN TO APPEAR AS NEW.
18. ALL HAZARDOUS BUILDING MATERIALS IDENTIFIED IN THE 2022 ASBESTOS HAZARD EMERGENCY RESPONSE ACT 3 YEAR INSPECTION LOCATED IN AREAS BEING MODIFIED SHALL BE REMOVED IN ACCORDANCE WITH DEHESA SCHOOL DISTRICT.
19. ALL DEMOLITION SHALL COMPLY WITH CH. 33 CBC AND CHAPTER 33 CFC.

IDENTIFICATION STAMP
DIV. OF THE STATE ARCHITECT
APP: 04-122772 INC:
REVIEWED FOR
SS ☑ FLS ☑ ACS ☑
DATE: 03/26/2024

SPROTTE | WATSON
ARCHITECTURE | PLANNING

REGISTERED ARCHITECT
C12359
STATE OF CALIFORNIA

CONSULTANT

DEHESA ELEMENTARY SCHOOL
CONSTRUCTION DOCUMENTS
DEHESA SCHOOL DISTRICT
4612 DEHESA ROAD
EL CAJON, CA 92019

REVISIONS

DESCRIPTION
BUILDING A ADMIN INTERIOR DEMOLITION ELEVATIONS

DATE
01.25.24

JOB #
22-0400

SHEET #
A-A9-0

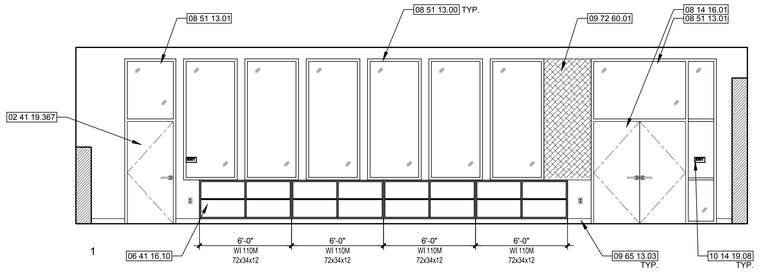

1

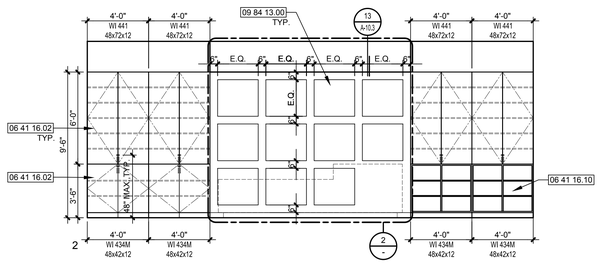

2

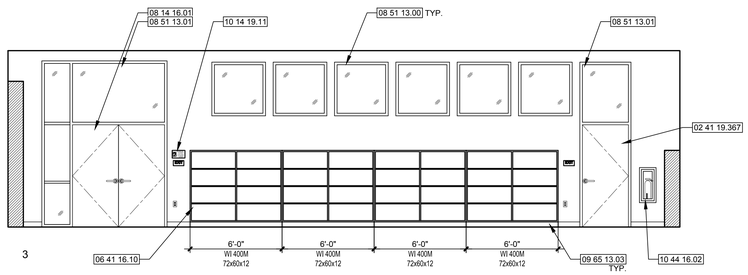

3

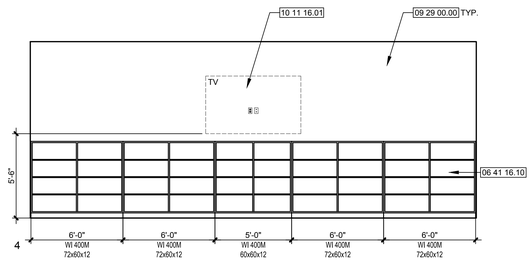

4

LIBRARY INTERIOR ELEVATIONS | 1/4" = 1'-0" | 1

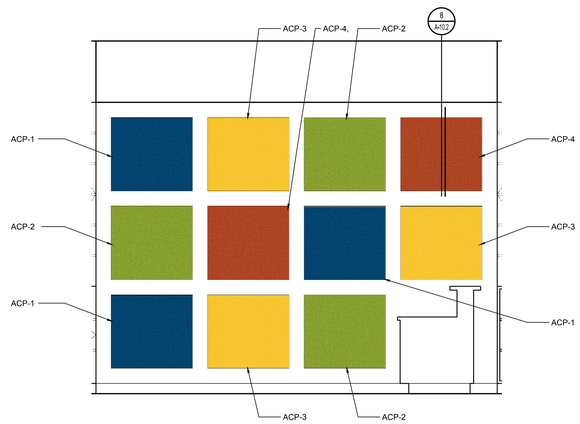

ENLARGED ACP LAYOUT | 1/2" = 1'-0" | 2

REFERENCE KEYNOTES

DIVISION 02 - EXISTING CONDITIONS

02 41 19.367 - EXISING DOOR INSTALLED IN NEW FRAME.

DIVISION 06 - WOOD, PLASTICS, AND COMPOSITES

06 41 16.02 - PROVIDE PLASTIC LAMINATED FACED ARCHITECTURAL CABINETS, REF. INTERIOR ELEVATIONS.

06 41 16.10 - PROVIDE PLASTIC LAMINATE BOOK SHELVES WITH ADJUSTABLE SHELVING, CASEWORK. NO DOORS.

DIVISION 08 - OPENINGS

08 14 16.01 - PROVIDE SOLID CORE WOOD DOORS PER SPECIFICATIONS. REF. DETAIL 12/A-10.8. FOR DOOR HEAD CONDITION.

08 51 13.00 - PROVIDE ALUMINUM STOREFRONT WINDOW FRAME AND GLAZING SYSTEM PER OPENING SCHEDULE AND SPECS.

08 51 13.01 - PROVIDE ALUMINUM STORE FRONT DOOR AND OR WINDOW SYSTEM AND GLAZING (WHERE APPLICABLE) PER OPENING SCHEDULE AND SPECS.

DIVISION 09 - FINISHES

09 29 00.00 - GYPSUM BOARD

09 65 13.03 - PREPARE WALL AND INSTALL RESILIENT BASE

09 72 60.01 - PROVIDE TACWALL. REF. SPECIFICATIONS AND DETAIL 13/A-10.2.

09 84 13.00 - FABRIC WRAPPED PANELS, REF. SPECIFICATIONS AND DETAIL 8/A-10.2.

DIVISION 10 - SPECIALITIES

10 11 16.01 - PROVIDE FLAT SCREEN TV/MONITOR AND WALL MOUNT, REF. ELECTRICAL FOR ADDITIONAL INFO. IF TV/MONITOR PROJECTS MORE THAN 4" FROM FACE OF WALL, BOTTOM OF TV/MONITOR SHALL BE A MIN. OF 80" A.F.F.

10 14 19.08 - PROVIDE TACTILE EXIT SIGNAGE PER DETAIL 2 & 13 E1/A-10.7

10 14 19.11 - PROVIDE WALL MOUNTED (DO NOT INSTALL ON GLASS) ASSISTIVE LISTENING SIGN. THIS SIGN IS REQUIRED AND IS TYPICAL AT ALL CLASSROOMS & ASSEMBLY AREAS, REF. DETAIL 14/A-10.7.

10 44 16.02 - PROVIDE RECESSED FIRE EXTINGUISHER CABINET AND FIRE EXTINGUISHER PER SPECS & DETAIL 3/A-10.2, REF. DETAIL17/A-10.5. FOR MOUNTING HEIGHT.

INTERIOR ELEVATIONS GENERAL NOTES

1. REFERENCE SPECIFICATIONS, APPLICABLE DRAWINGS AND NOTES ON ARCHITECTURAL PLANS AND ELEVATIONS, STRUCTURAL, MECHANICAL, ELECTRICAL, PLUMBING AND CIVIL DRAWINGS FOR ADDITIONAL INFORMATION.
2. KEYNOTES ARE INDICATED AT ONLY A PORTION OF THE ELEMENTS. ELEMENTS ILLUSTRATED SIMILARLY, MIRRORED DESIGN AND SIMILAR CONDITIONS SHALL BE ASSUMED TO BE NOTED SIMILARLY. QUANTITIES WILL NOT BE DENOTED BY KEYNOTES.
3. KEYNOTES WITHOUT ARROWS DENOTE AN ITEM OR REGION OF THE GENERAL AREA IN WHICH THEY ARE LOCATED AND ARE REFERENCING.
4. REF. ABBREVIATIONS ON SHEET A-0.1 FOR TYPICAL DEFINITIONS.
5. ALL WALL MOUNTED CASEWORK WITH PLUMBING FIXTURES SHALL BE PROVIDED WITH 4" REAR & SIDE SPLASHES TYPICAL UNLESS NOTED OTHERWISE.
6. ALL CASEWORK DRAWERS & CABINET DOORS SHALL BE PROVIDED WITH LOCKS. EXCEPT AT SINK CABINETS. ALL U-SHAPED PULLS ARE TO BE ORIENTED PARALLEL TO FINISHED FLOOR.
7. CONTRACTOR SHALL PROVIDE PAINTED FINISH AT ALL EXPOSED INTERIOR DOORS, FRAMES, TRIMWORK & WALLS INCLUDING PLASTER & GYPSUM WALLBOARD NOT PROVIDED WITH OTHER FINISHES SUCH AS VINYL TACK SURFACES, FRP, OR TILE. REFERENCE FINISH SCHEDULE FOR ADDITIONAL INFORMATION.
8. MAXIMUM FLAME SPREAD OF INTERIOR WALL AND CEILING FINISHES SHALL COMPLY WITH CBC CHAPTER 8 AND TITLE 19. EXIT ENCLOSURES AND EXIT PASSAGEWAYS SHALL BE CLASS B: FLAME SPREAD INDEX NOT TO EXCEED 75 AND SMOKE-DEVELOPMENT INDEX NOT TO EXCEED 450. CORRIDORS, ROOMS, AND ENCLOSED SPACES SHALL BE CLASS C: FLAME SPREAD INDEX NOT TO EXCEED 200 AND SMOKE-DEVELOPMENT INDEX NOT TO EXCEED 450.
9. BATT INSULATION, PIPE INSULATION SHALL HAVE A FLAME SPREAD INDEX NOT TO EXCEED 25 AND A SMOKE-DEVELOPMENT INDEX NOT TO EXCEED 450 IN ACCORDANCE WITH CBC 719.2.
10. CASEWORK WHERE INSTALLED WITHIN NON-RECTILINEAR ROOMS OR CORNERS SHALL BE PROVIDED WITH CLOSURE PANELS AT ALL CONDITIONS TO AVOID GAPS & VOIDS, BOTH AT CASEWORK TOPS AND SIDES.
11. MARKER OR WHITE BOARD LOCATIONS SHALL BE CONFIRMED PRIOR TO INSTALLATION.
12. FOR TYPICAL F.F.E. MOUNTING HEIGHTS, SEE DETAIL 17/A-10.5.
13. FOR TYPICAL CASEWORK DETAILS, SEE SHEET A-10.5.
14. REFERENCE DETAILS 13/A.10.2 FOR TACKWALL DETAILS.
15. UNLESS NOTED OTHERWISE, ALL ELEMENTS SHOWN ON PLANS SHALL BE CONTRACTOR FURNISHED AND INSTALLED.
16. AN ATTENDANT WILL BE AVAILABLE DURING LIBRARY HOURS TO ASSIST PERSONS WITH DISABILITIES.
17. CASEWORK: WI (WOODWORK INSTITUTE) W (WIDTH) x H (HEIGHT) x D (DEPTH). M (MODIFIED).

IDENTIFICATION STAMP
DIV. OF THE STATE ARCHITECT
APP: 04-122772 INC:
REVIEWED FOR
SS ☑ FLS ☑ ACS ☑
DATE: 03/26/2024

SPROTTE WATSON ARCHITECTURE + PLANNING

CONSULTANT

DEHESA ELEMENTARY SCHOOL
CONSTRUCTION DOCUMENTS
DEHESA SCHOOL DISTRICT
4612 DEHESA ROAD
EL CAJON, CA 92019

REVISIONS

DESCRIPTION

BUILDING A ADMIN INTERIOR ELEVATIONS

DATE

01.25.24

JOB #

22-0400

SHEET #

A-A9-1

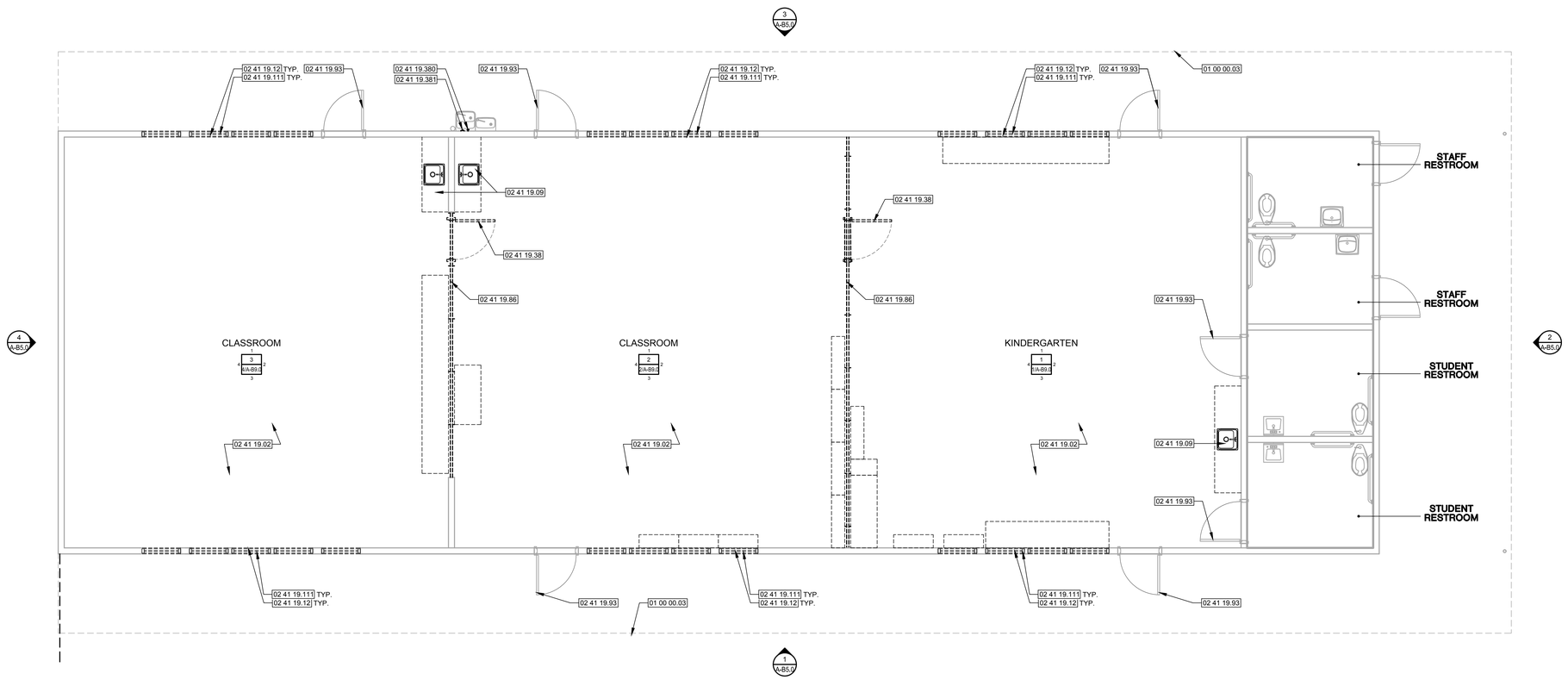

NORTH

REFERENCE KEYNOTES

DIVISION 01 - GENERAL

01 00 00.03	-	THIS DASHED LINE INDICATES ROOF OVERHANG ABOVE.

DIVISION 02 - EXISTING CONDITIONS

02 41 19.02	-	REMOVE ALL FLOORING IN THE ROOM TO CLEAN BARE CONC. FOR NEW FLOOR FINISH.
02 41 19.09	-	REMOVE SINK BASE CABINET.
02 41 19.12	-	CAREFULLY REMOVE ALL WINDOW SHADES, ASSOCIATED HARDWARE AND FASTENERS, RETURN TO OWNER.
02 41 19.38	-	REMOVE DOOR, FRAME AND WINDOW (WHERE OCCURS)
02 41 19.86	-	REMOVE FOLDING PARTITION IN ITS ENTIRETY. INCLUDING BUT NOT LIMITED TO, TRACKS AND ALL ASSOCIATED HARDWARE.
02 41 19.93	-	EXISTING DOOR, FRAME AND/OR DOOR/WINDOW SYSTEM TO REMAIN.
02 41 19.111	-	REMOVE EXISTING WINDOW SYSTEM
02 41 19.380	-	REMOVE EXISTING HOSE BIB.
02 41 19.381	-	REMOVE EXISTING CLEAN-OUT CAP AND REPLACE WITH FLAT SMOOTH CAP.

LEGEND - FLOOR PLAN - DEMOLITION

- REMOVE DOOR ASSEMBLY PER KEYNOTES
- EXISTING WOOD STUD WALL TO REMAIN
- REMOVE EXISTING WOOD STUD NON-BEARING WALL
- REMOVE WINDOW ASSEMBLY
- EXISTING BUILDING, NO WORK.

DEMOLITION GENERAL NOTES

1. THESE GENERAL NOTES PROVIDE WORK SCOPE FOR THE CONTRACT DOCUMENTS AND PERTAIN TO THE WORK IN THE SAME MANNER AS THE REQUIREMENTS OF THE DRAWINGS AND SPECIFICATIONS.
2. KEYNOTES ARE INDICATED AT ONLY A PORTION OF THE ELEMENTS. ELEMENTS ILLUSTRATED SIMILARLY, MIRRORED DESIGN AND SIMILAR CONDITIONS SHALL BE APPLIED SIMILARLY. QUANTITIES WILL NOT BE DENOTED BY KEYNOTES.
3. THE CONTRACTOR SHALL COORDINATE ALL DEMOLITION WORK REQUIRED TO PERFORM THE NEW WORK REQUIREMENTS. DEMOLITION EXTENTS ARE INDICATED TO THE GREATEST DEGREE POSSIBLE, BUT EXACT EXTENTS SHALL BE DETERMINED IN THE FIELD.
4. NOT ALL ITEMS TO BE REMOVED HAVE BEEN SHOWN FOR CLARITY. CONTRACTOR TO VERIFY EXISTING CONDITIONS.
5. THE CONTRACTOR SHALL, TO THE GREATEST DEGREE POSSIBLE MINIMIZE WASTE MATERIALS DIVERTED TO THE LANDFILL BY RECYCLING PRODUCT OR WASTE.
6. THE CONTRACTOR SHALL PROTECT EXISTING ELEMENTS SCHEDULED TO REMAIN FROM DAMAGE DERIVED FROM THE DEMOLITION ACTIVITIES.
7. REFERENCE ALL DRAWINGS, SPECIFICATIONS, AND APPENDICES AT THE END OF THE SPECIFICATIONS FOR ADDITIONAL INFORMATION.
8. KEYNOTES WITHOUT ARROWS DENOTE AN ITEM OR REGION OF THE GENERAL AREA IN WHICH THEY ARE LOCATED AND ARE REFERENCING.
9. DASHED LINES REPRESENT MATERIALS FOR REMOVAL OR RELOCATION UNLESS OTHERWISE NOTED. REFERENCE KEYNOTES.
10. MOVEABLE FURNISHINGS AND EQUIPMENT, SUCH AS TABLES, CHAIRS, BOOK SHELVING AND EQUIPMENT ARE NOT ILLUSTRATED IN THE DEMOLITION PLANS.
11. THE DISTRICT EMPLOYS THE FIRST RIGHT OF REFUSAL FOR ITEMS FOR SALVAGE OR RECLAMATION.
12. THE CONTRACTOR PRIOR TO ANY DEMOLITION WORK SHALL REVIEW ALL REGIONS OF WORK AND NOTIFY THE DISTRICT WITH A WRITTEN LISTING OF ANY NON OPERATIONAL OR BROKEN MATERIAL SUCH AS, BUT NOT LIMITED TO LIGHTING, LIGHTING LENSES, FANS, ETC. TO AVOID RESPONSIBILITY FOR REPAIR OR REPLACEMENT.
13. FIRE PROTECTION DURING DEMOLITION AND CONSTRUCTION SHALL BE IN ACCORDANCE WITN CBC CHAPTER 33.
14. NOT ALL HATCH PATTERNS THAT ARE SHOWN IN LEGEND MAY BE USED, REFERENCE DRAWINGS, (PLANS, ELEVATIONS ETC..) FOR APPLICABLE HATCH PATTERNS.
15. REMOVE ALL FINISHES DOWN TO STRUCTURE UNLESS OTHERWISE NOTED.
16. CUTTING HOLES IN EXISTING SHEAR WALLS FOR MODIFICATIONS SHALL BE MINIMAL, 3"X3". AVOID STUDS, HEADERS AND ADDITIONAL STRUCTURAL ELEMENTS.
17. PATCH AND REPAIR ALL DAMAGED OR REMOVED PORTIONS OF EXISTING BUILDINGS TO REMAIN TO APPEAR AS NEW.
18. ALL HAZARDOUS BUILDING MATERIALS IDENTIFIED IN THE 2022 ASBESTOS HAZARD EMERGENCY RESPONSE ACT 3 YEAR INSPECTION LOCATED IN AREAS BEING MODIFIED SHALL BE REMOVED IN ACCORDANCE WITH DEHESA SCHOOL DISTRICT.
19. ALL DEMOLITION SHALL COMPLY WITH CH. 33 CBC AND CHAPTER 33 CFC.

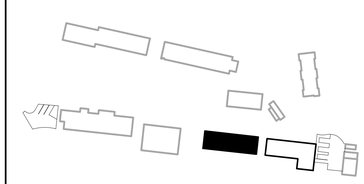

NORTH

IDENTIFICATION STAMP
DIV. OF THE STATE ARCHITECT
APP: 04-122772 INC:
REVIEWED FOR
SS ☑ FLS ☑ ACS ☑
DATE: 03/26/2024

SPROTTE | WATSON
ARCHITECTURE | PLANNING

REGISTERED ARCHITECT
C12359
STATE OF CALIFORNIA

CONSULTANT

DEHESA ELEMENTARY SCHOOL
CONSTRUCTION DOCUMENTS
DEHESA SCHOOL DISTRICT
4612 DEHESA ROAD
EL CAJON, CA 92019

REVISIONS

DESCRIPTION

BUILDING B
KINDERGARTEN
DEMOLITION PLAN

DATE

01.25.24

JOB #

22-0400

SHEET #

A-B2-0

BUILDING B KINDERGARTEN DEMOLITION PLAN | 1/4" = 1'-0" | 1

KEY PLAN | N.T.S.

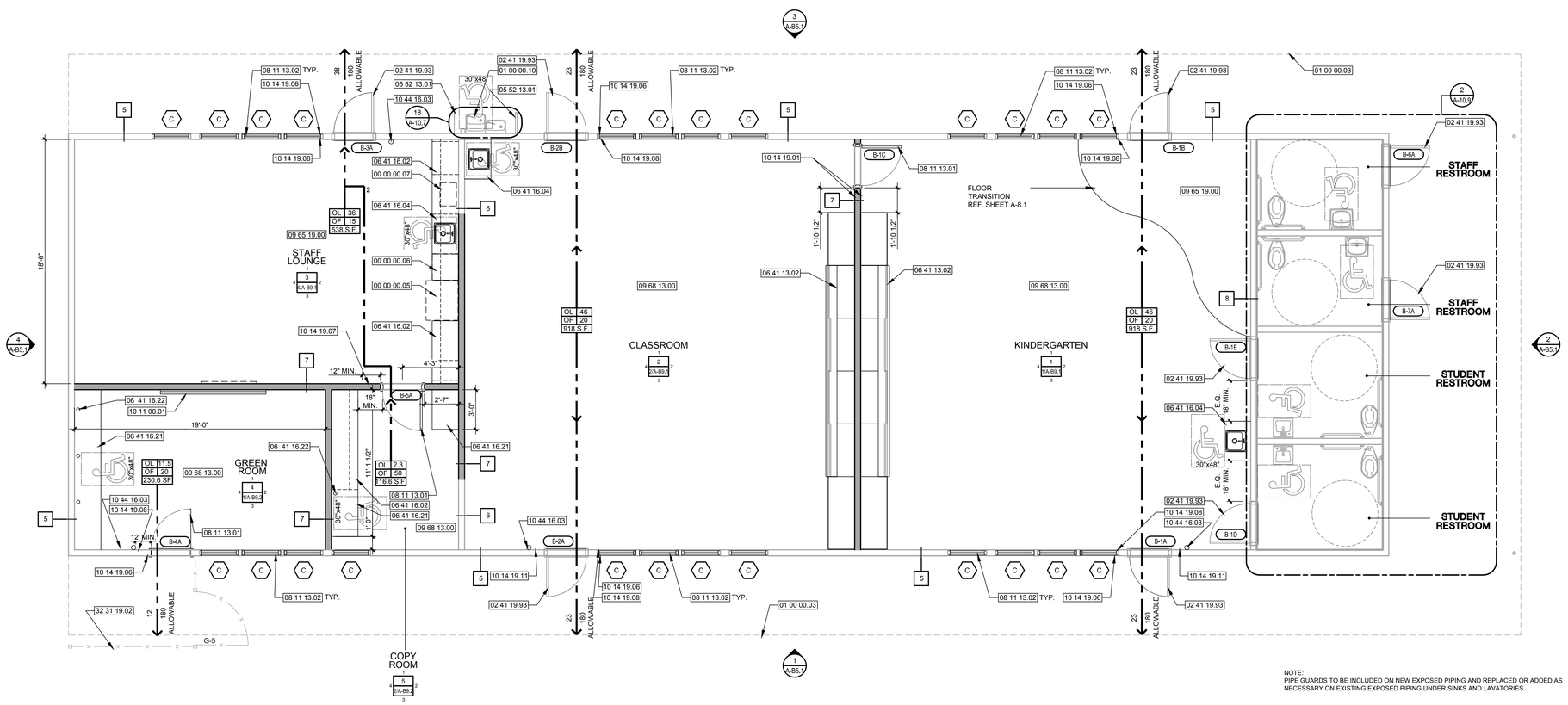

NORTH

NOTE:
PIPE GUARDS TO BE INCLUDED ON NEW EXPOSED PIPING AND REPLACED OR ADDED AS NECESSARY ON EXISTING EXPOSED PIPING UNDER SINKS AND LAVATORIES.

REFERENCE KEYNOTES

DIVISION 00 - NOT IN CONTRACT

00 00 00.05	-	REFRIDGERATOR- O.F.O.I.
00 00 00.06	-	DISHWASHER- O.F.O.I.
00 00 00.07	-	MICROWAVE- O.F.O.I.

DIVISION 01 - GENERAL

01 00 00.03	-	THIS DASHED LINE INDICATES ROOF OVERHANG ABOVE.
01 00 00.10	-	EXISTING ACCESSIBLE DRINKING FOUNTAIN. REF. DETAIL 18/A-10.7.

DIVISION 02 - EXISTING CONDITIONS

02 41 19.93	-	EXISTING DOOR, FRAME AND/OR DOOR/WINDOW SYSTEM TO REMAIN.

DIVISION 05 - METALS

05 52 13.01	-	PROVIDE GALVANIZED TUBE CANE DETECTION RAILS, REF. DETAIL 19/A-10.7.

DIVISION 06 - WOOD, PLASTICS, AND COMPOSITES

06 41 13.02	-	PROVIDE NEW INSTRUCTIONAL CASEWORK. REF. DETAIL 27/A-10.5.
06 41 16.02	-	PROVIDE PLASTIC LAMINATED FACED ARCHITECTURAL CABINETS, REF. INTERIOR ELEVATIONS.
06 41 16.04	-	PROVIDE ACCESSIBLE SINK BASE CABINET, REF. DETAIL 10/A-10.5 FOR REQUIRED CLEARANCES.
06 41 16.21	-	WORK STATION COUNTER. REF. DETAIL 20/A-10.5.
06 41 16.22	-	PROVIDE GROMMET PER SPECIFICATIONS.

DIVISION 08 - OPENINGS

08 11 13.01	-	PROVIDE HOLLOW METAL FRAMED DOOR AND/OR DOOR/WINDOW SYSTEM (WHERE APPLICABLE), REF. OPENING SCHEDULES AND SPECS.
08 11 13.02	-	PROVIDE HOLLOW METAL WINDOW FRAME AND GLAZING PER OPENING SCHEDULE AND SPECS.

DIVISION 09 - FINISHES

09 65 19.00	-	RESILIENT TILE FLOORING
09 68 13.00	-	TILE CARPETING

DIVISION 10 - SPECIALITIES

10 11 00.01	-	PROVIDE MARKER BOARD, REFERENCE INTERIOR ELEVATIONS FOR SIZE. INSTALL PER SPECIFICATIONS AND DETAIL 1B/A-10.5
10 14 19.01	-	PROVIDE TACTILE ROOM IDENTIFICATION SIGNAGE. REF. OPENING SCHEDULE AND DETAIL 10/A-10.7
10 14 19.06	-	PROVIDE EXTERIOR MOUNTED TACTILE ROOM SIGNAGE PER DETAIL 10/A-10.7
10 14 19.07	-	PROVIDE INTERIOR MOUNTED TACTILE ROOM IDENTIFICATION SIGNAGE PER DETAIL 10/A-10.7
10 14 19.08	-	PROVIDE TACTILE EXIT SIGNAGE PER DETAIL 2 & 13 E1/A-10.7
10 14 19.11	-	PROVIDE WALL MOUNTED (DO NOT INSTALL ON GLASS) ASSISTIVE LISTENING SIGN. THIS SIGN IS REQUIRED AND IS TYPICAL AT ALL CLASSROOMS & ASSEMBLY AREAS, REF. DETAIL 14/A-10.7.
10 44 16.03	-	PROVIDE SURFACE MOUNTED FIRE EXTINGUISHER, REF. SPECS, AND DETAIL17/A-10.5 FOR MOUNTING HEIGHT.

DIVISION 32 - EXTERIOR IMPROVEMENTS

32 31 19.02	-	STEEL FENCING

LEGEND - FLOOR PLAN - NEW WORK

- PROVIDE NEW DOOR ASSEMBLY, FRAME, HARDWARE, THRESHOLD, OPENING FLASHING, PATCH AND PAINT ADJACENT ASSEMBLIES TO MATCH EXISTING PAINT DOOR AND FRAME.
- PROVIDE NEW WINDOW/ STOREFRONT SYSTEM
- EXISTING WOOD STUD WALL TO REMAIN
- PROVIDE NEW WOOD STUD NON-BEARING WALL @ 16" O.C. REFERENCE DETAIL 8/S1.2 13/S1.2 AND WALL TYPES ON A-10.2
- EXISTING BUILDING, NO WORK.

FLOOR PLAN GENERAL NOTES

1. REFERENCE SPECIFICATIONS, TITLE SHEET, GENERAL NOTES & APPLICABLE DRAWINGS & NOTES ON STRUCTURAL, MECHANICAL, ELECTRICAL, PLUMBING AND CIVIL DRAWINGS FOR ADDITIONAL INFO.
2. REFERENCE ABBREVIATIONS, MATERIAL LEGEND & SYMBOLS LEGEND ON SHEET A-0.1 FOR NOTATIONS AND DEFINITIONS.
3. ALL DIMENSIONS FOR FRAMING AND WALLS ARE TO FACE OF STUDS OR FACE OF FINISH WHERE THE FINISH IS NOT BEING REMOVED, UNLESS NOTED OTHERWISE. "CLEAR" DIMENSIONS ARE TO FACE OF FINISH MATERIAL.
4. KEYNOTES ARE INDICATED AT ONLY A PORTION OF THE BUILDING ELEMENTS. ELEMENTS ILLUSTRATED SIMILARLY, MIRRORED DESIGN, AND SIMILAR CONDITIONS SHALL BE ASSUMED TO BE NOTED SIMILARLY. QUANTITIES SHALL NOT BE DENOTED BY KEYNOTES.
5. KEYNOTES WITHOUT ARROWS DENOTE AN ITEM OR REGION OF THE GENERAL AREA IN WHICH THEY ARE LOCATED AND ARE REFERENCING.
6. ALL INTERIOR WALLS SHALL BE FRAMED TO ROOF STRUCTURE FRAMING UNDERSIDE. ALL NON-BEARING INTERIOR WALLS SHALL BE PROVIDED WITH 1/2" GAP FOR DEFLECTION AT CONNECTION TO STRUCTURE. REFERENCE STRUCTURAL DRAWINGS.
7. ALL NEW WALLS AND WALLS WHERE THE FINISH IS BEING REMOVED SHALL BE PROVIDED WITH GWB FULL HEIGHT TO THE GREATEST EXTENT POSSIBLE & PROVIDED WITH INSULATION OR SOUND ATTENUATION BATT INSULATION.
8. CABINET ANCHORAGE FASTENERS TO WALLS, BLOCKING OR BACKING SHALL BE PER DETAIL 8/A-10.5.
9. ELEMENTS REQUIRING BLOCKING SHALL BE PER APPLICABLE DETAILS.
10. REFERENCE DETAILS 17/A-10.5. FOR ACCESSIBLE MOUNTING HEIGHTS. REFERENCE SHEET A-8.1 FOR FINISH SCHEDULE AND INTERIOR ELEVATIONS ON SHEETS A-A9.1, A-B9.1 & A-B9.2. FOR WALL FINISH EXTENTS.
11. MAXIMUM FLAME SPREAD OF INTERIOR WALL & CEILING FINISHES SHALL COMPLY WITH CBC SECTION 803. EXIT ENCLOSURES & EXIT PASSAGEWAYS SHALL BE CLASS B: FLAME SPREAD INDEX NOT TO EXCEED 75 AND SMOKE-DEVELOPMENT INDEX NOT TO EXCEED 450. CORRIDORS, ROOMS, AND ENCLOSED SPACES SHALL BE CLASS C: FLAME SPREAD INDEX NOT TO EXCEED 200 AND SMOKE-DEVELOPMENT INDEX NOT TO EXCEED 450.
12. BATT INSULATION, PIPE INSULATION SHALL HAVE A FLAME SPREAD INDEX NOT TO EXCEED 25 AND A SMOKE-DEVELOPMENT INDEX NOT TO EXCEED 450 IN ACCORDANCE WITH CBC 720.2
13. REFERENCE DETAIL 17/A-10.5 FOR MOUNTING HEIGHTS OF FURNITURE, FIXTURES AND EQUIPMENT.
14. PROVIDE MIN. CLEARANCE AT ALL DOORS PER CBC 11B-404-2.4.1
15. PROVIDE APPROPRIATELY SIZED STAINLESS STEEL ACCESS DOORS IN TOILET ROOMS FOR ITEMS OR EQUIPMENT REQUIRING ACCESS BEHIND FRAMED ASSEMBLIES SUCH AS TRAP PRIMER MANIFOLDS, VALVES, JUNCTION BOXES, DUCTWORK DAMPERS, OR SUCH EQUIPMENT OR NEEDS. PAINTED STEEL PANEL DOORS MAY BE USED ELSEWHERE.
16. ALL EXPOSED STEEL TO BE PAINTED TO MATCH ADJACENT SURFACE.
17. FOR SIGNAGE TYPES AND LOCATION SEE PLANS AND SHEETS A-8.0 AND A-10.7.
18. ALL DIMENSIONS FOR ACCESS COMPLIANCE ARE TO FACE OF FINISH UNLESS NOTED OTHERWISE.
19. UNLESS NOTED OTHERWISE, ALL ELEMENTS SHOWN ON PLANS SHALL BE CONTRACTOR FURNISHED AND INSTALLED.
20. ALL EXTERIOR DOORS HAVE THE ABILITY TO BE LOCKED FROM THE "INSIDE" THEREFORE ALL INTERIOR DOORS ARE "PROTECTED".

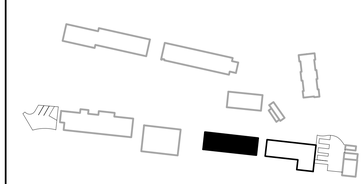

NORTH

IDENTIFICATION STAMP
DIV. OF THE STATE ARCHITECT
APP: 04-122772 INC:
REVIEWED FOR
SS ☑ FLS ☑ ACS ☑
DATE: 03/26/2024

SPROTTE | WATSON
ARCHITECTURE | PLANNING

CONSULTANT

DEHESA ELEMENTARY SCHOOL
CONSTRUCTION DOCUMENTS
DEHESA SCHOOL DISTRICT
4612 DEHESA ROAD
EL CAJON, CA 92019

REVISIONS

DESCRIPTION
BUILDING B
KINDERGARTEN
FLOOR PLAN

DATE
01.25.24

JOB #
22-0400

SHEET #
A-B2-1

BUILDING B KINDERGARTEN FLOOR PLAN | 1/4" = 1'-0" | 1 | KEY PLAN | N.T.S.

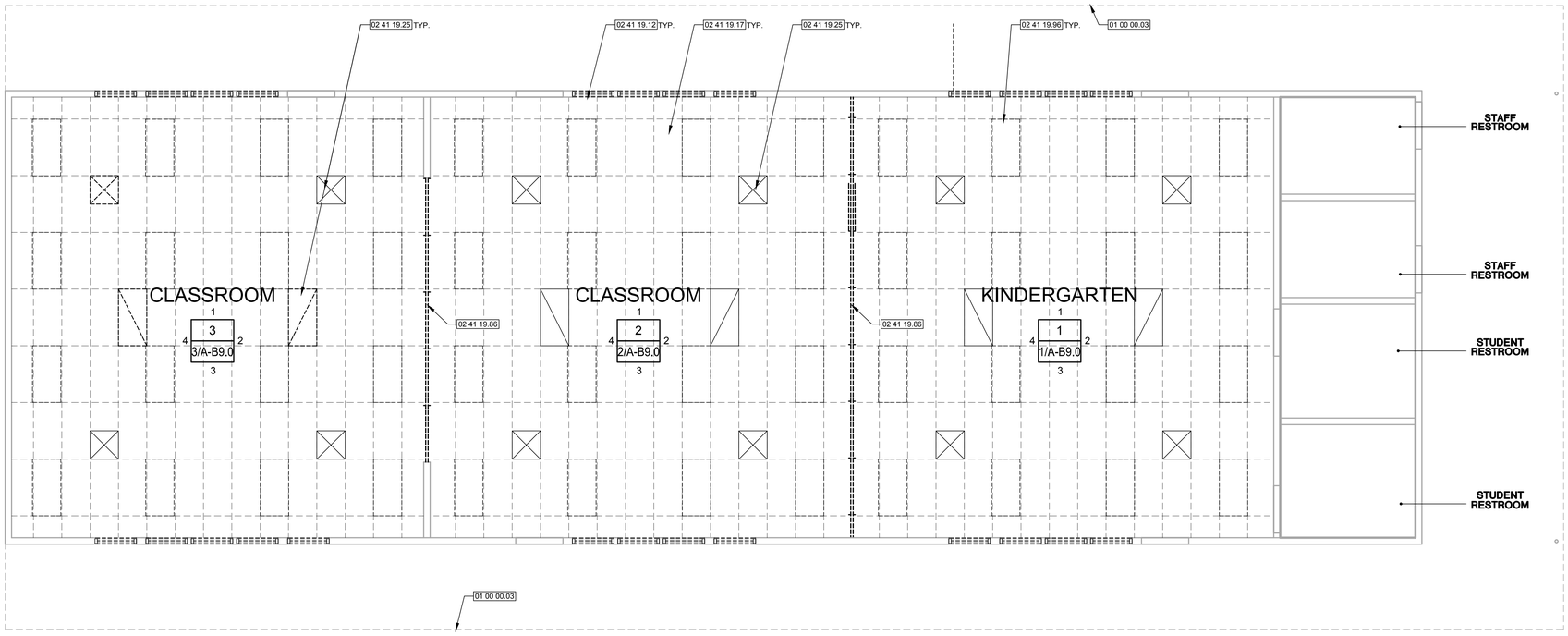

NORTH

REFERENCE KEYNOTES

DIVISION 01 - GENERAL

01 00 00.03 - THIS DASHED LINE INDICATES ROOF OVERHANG ABOVE.

DIVISION 02 - EXISTING CONDITIONS

02 41 19.12 - CAREFULLY REMOVE ALL WINDOW SHADES, ASSOCIATED HARDWARE AND FASTENERS, RETURN TO OWNER.

02 41 19.17 - REMOVE ACOUSTICAL CEILING PANELS AND SUSPENDED CEILING GRID.

02 41 19.25 - REMOVE CEILING REGISTER PER MECHANICAL DRAWINGS.

02 41 19.86 - REMOVE FOLDING PARTITION IN ITS ENTIRETY. INCLUDING BUT NOT LIMITED TO, TRACKS AND ALL ASSOCIATED HARDWARE.

02 41 19.96 - REMOVE EXISITNG LIGHT FIXTURES UNLESS NOTED OTHERWISE, REF. ELECTRICAL PLANS.

LEGEND - RCP - DEMOLITION

REMOVE 12"X 12" ACOUSTICAL CEILING TILE FINISH INCLUDING FASTENERS SUCH AS STAPLES. REMOVE TO CLEAN BARE WOOD STRIPPING. EXISTING WOOD STRIPING AND FRAMING SHALL REMAIN, PROTECT IN PLACE.

REMOVE 24"X 48" ACOUSTICAL CEILING PANEL, GRID AND ASSOCIATED ITEMS.

REMOVE LIGHT FIXTURE. REF. ELEC. FOR ADDITIONAL INFORMATION.

REMOVE MECHANICAL REGISTER, REF. MECH. FOR ADDITIONAL INFORMATION.

EXISTING BUILDING, NO WORK.

DEMOLITION GENERAL NOTES

1. THESE GENERAL NOTES PROVIDE WORK SCOPE FOR THE CONTRACT DOCUMENTS AND PERTAIN TO THE WORK IN THE SAME MANNER AS THE REQUIREMENTS OF THE DRAWINGS AND SPECIFICATIONS.
2. KEYNOTES ARE INDICATED AT ONLY A PORTION OF THE ELEMENTS. ELEMENTS ILLUSTRATED SIMILARLY, MIRRORED DESIGN AND SIMILAR CONDITIONS SHALL BE APPLIED SIMILARLY. QUANTITIES WILL NOT BE DENOTED BY KEYNOTES.
3. THE CONTRACTOR SHALL COORDINATE ALL DEMOLITION WORK REQUIRED TO PERFORM THE NEW WORK REQUIREMENTS. DEMOLITION EXTENTS ARE INDICATED TO THE GREATEST DEGREE POSSIBLE, BUT EXACT EXTENTS SHALL BE DETERMINED IN THE FIELD.
4. NOT ALL ITEMS TO BE REMOVED HAVE BEEN SHOWN FOR CLARITY. CONTRACTOR TO VERIFY EXISTING CONDITIONS.
5. THE CONTRACTOR SHALL, TO THE GREATEST DEGREE POSSIBLE MINIMIZE WASTE MATERIALS DIVERTED TO THE LANDFILL BY RECYCLING PRODUCT OR WASTE.
6. THE CONTRACTOR SHALL PROTECT EXISTING ELEMENTS SCHEDULED TO REMAIN FROM DAMAGE DERIVED FROM THE DEMOLITION ACTIVITIES.
7. REFERENCE ALL DRAWINGS, SPECIFICATIONS, AND APPENDICES AT THE END OF THE SPECIFICATIONS FOR ADDITIONAL INFORMATION.
8. KEYNOTES WITHOUT ARROWS DENOTE AN ITEM OR REGION OF THE GENERAL AREA IN WHICH THEY ARE LOCATED AND ARE REFERENCING.
9. DASHED LINES REPRESENT MATERIALS FOR REMOVAL OR RELOCATION UNLESS OTHERWISE NOTED. REFERENCE KEYNOTES.
10. MOVEABLE FURNISHINGS AND EQUIPMENT, SUCH AS TABLES, CHAIRS, BOOK SHELVING AND EQUIPMENT ARE NOT ILLUSTRATED IN THE DEMOLITION PLANS.
11. THE DISTRICT EMPLOYS THE FIRST RIGHT OF REFUSAL FOR ITEMS FOR SALVAGE OR RECLAMATION.
12. THE CONTRACTOR PRIOR TO ANY DEMOLITION WORK SHALL REVIEW ALL REGIONS OF WORK AND NOTIFY THE DISTRICT WITH A WRITTEN LISTING OF ANY NON OPERATIONAL OR BROKEN MATERIAL SUCH AS, BUT NOT LIMITED TO LIGHTING, LIGHTING LENSES, FANS, ETC. TO AVOID RESPONSIBILITY FOR REPAIR OR REPLACEMENT.
13. FIRE PROTECTION DURING DEMOLITION AND CONSTRUCTION SHALL BE IN ACCORDANCE WITN CBC CHAPTER 33.
14. NOT ALL HATCH PATTERNS THAT ARE SHOWN IN LEGEND MAY BE USED, REFERENCE DRAWINGS, (PLANS, ELEVATIONS ETC..) FOR APPLICABLE HATCH PATTERNS.
15. REMOVE ALL FINISHES DOWN TO STRUCTURE UNLESS OTHERWISE NOTED.
16. CUTTING HOLES IN EXISTING SHEAR WALLS FOR MODIFICATIONS SHALL BE MINIMAL, 3"X3". AVOID STUDS, HEADERS AND ADDITIONAL STRUCTURAL ELEMENTS.
17. PATCH AND REPAIR ALL DAMAGED OR REMOVED PORTIONS OF EXISTING BUILDINGS TO REMAIN TO APPEAR AS NEW.
18. ALL HAZARDOUS BUILDING MATERIALS IDENTIFIED IN THE 2022 ASBESTOS HAZARD EMERGENCY RESPONSE ACT 3 YEAR INSPECTION LOCATED IN AREAS BEING MODIFIED SHALL BE REMOVED IN ACCORDANCE WITH DEHESA SCHOOL DISTRICT.
19. ALL DEMOLITION SHALL COMPLY WITH CH. 33 CBC AND CHAPTER 33 CFC.

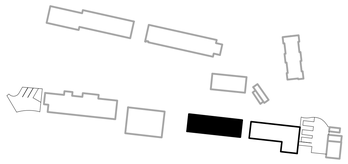

NORTH

IDENTIFICATION STAMP
DIV. OF THE STATE ARCHITECT
APP: 04-122772 INC:
REVIEWED FOR
SS ☑ FLS ☑ ACS ☑
DATE: 03/26/2024

SPROTTE | WATSON
ARCHITECTURE | PLANNING

REGISTERED ARCHITECT
C12359
STATE OF CALIFORNIA

CONSULTANT

DEHESA ELEMENTARY SCHOOL
CONSTRUCTION DOCUMENTS
DEHESA SCHOOL DISTRICT
4612 DEHESA ROAD
EL CAJON, CA 92019

REVISIONS

DESCRIPTION

BUILDING B
KINDERGARTEN
DEMOLITION RCP

DATE

01.25.24

JOB #

22-0400

SHEET #

A-B3-0

BUILDING B KINDERGARTEN DEMOLITION RCP | 1/4" = 1'-0" | 1

KEY PLAN | N.T.S.

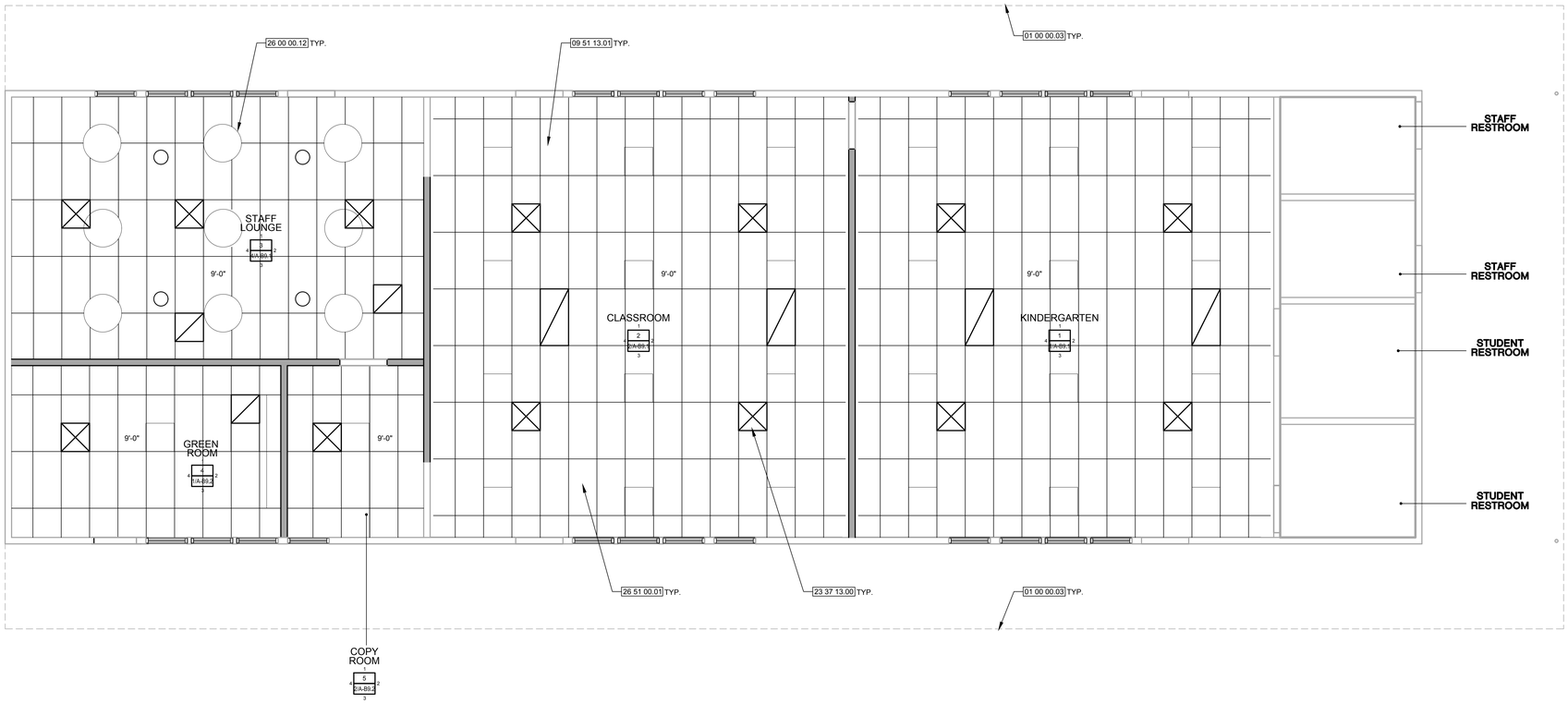

NORTH

REFERENCE KEYNOTES

DIVISION 01 - GENERAL

01 00 00.03 - THIS DASHED LINE INDICATES ROOF OVERHANG ABOVE.

DIVISION 09 - FINISHES

09 51 13.01 - PROVIDE 24" X 48" ACOUSTICAL CEILING PANELS AND NEW SUSPENDED CEILING GRID.

DIVISION 23 - HEATING, VENTILATING, AND AIR CONDITIONING

23 37 13.00 - DIFFUSERS, REGISTERS, AND GRILLS

DIVISION 26-27-28 - ELECTRICAL

26 00 00.12 - PROVIDE ELECTRICAL PENDENT LIGHT FIXTURE. REFERENCE ELLECTRICAL DRAWINGS.

26 51 00.01 - PROVIDE LIGHT FIXTURES PER ELECTRICAL.

REFLECTED CEILING PLAN GENERAL NOTES

1. REFERENCE SPECIFICATIONS, APPLICABLE DRAWINGS AND NOTES ON ARCHITECTURAL PLANS AND ELEVATIONS, STRUCTURAL, MECHANICAL, ELECTRICAL AND PLUMBING DRAWINGS FOR ADDITIONAL INFORMATION.
2. KEYNOTES ARE INDICATED AT ONLY A PORTION OF THE ELEMENTS. ELEMENTS ILLUSTRATED SIMILARLY, MIRRORED DESIGN AND SIMILAR CONDITIONS SHALL BE ASSUMED TO BE NOTED SIMILARLY. QUANTITIES WILL NOT BE DENOTED BY KEYNOTES.
3. KEYNOTES WITHOUT ARROWS DENOTE AN ITEM OR REGION OF THE GENERAL AREA IN WHICH THEY ARE LOCATED AND ARE REFERENCING.
4. REFERENCE ABBREVIATIONS ON SHEET A-0.1 FOR TYPICAL DEFINITIONS.
5. ALL DIMENSIONS FOR FRAMING AND WALLS ARE TO FACE OF STUDS UNLESS NOTED OTHERWISE OR IDENTIFIED BY CENTERLINE NOTATIONS.
6. NOT ALL CEILING ELEMENTS, INCLUDING BUT NOT LIMITED TO. SPEAKERS, MOTION DETECTORS, SMOKE DETECTORS, SECURITY DEVICES, MECHANICAL REGISTERS AND DIFFUSERS ARE INDICATED. REFERENCE MECHANICAL AND ELECTRICAL DRAWINGS.
7. REFERENCE ELECTRICAL DRAWINGS FOR LIGHT FIXTURE TYPES.
8. CONTRACTOR TO PROVIDE ACCESS PANELS PER MECHANICAL AND ELECTRICAL DRAWING REQUIREMENTS.
9. REFERENCE SHEET A-10.3 FOR ALL SUSPENDED CEILING DETAILS.
10. REFERENCE DETAIL 8/A-10.3 FOR SUSPENSION CEILING WIRE CONNECTIONS. MAXIMUM FLAME SPREAD OF INTERIOR WALL AND CEILING FINISHES SHALL COMPLY WITH CBC SECTION 803. EXIT ENCLOSURES AND EXIT PASSAGEWAYS SHALL BE CLASS B: FLAME SPREAD INDEX NOT TO EXCEED 75 AND SMOKE-DEVELOPMENT INDEX NOT TO EXCEED 450. CORRIDORS, ROOMS, AND ENCLOSED SPACES SHALL BE CLASS C: FLAME SPREAD INDEX NOT TO EXCEED 200 AND SMOKE-DEVELOPMENT INDEX NOT TO EXCEED 450.
11. BATT INSULATION, PIPE INSULATION SHALL HAVE A FLAME SPREAD INDEX NOT TO EXCEED 25 AND A SMOKE-DEVELOPMENT INDEX NOT TO EXCEED 450 IN ACCORDANCE WITH CBC 719.2.

REFLECTED CEILING PLAN LEGEND

- 2' x 4' OR 2' X 5' ACOUSTIC CEILING TILE AS SHOWN PER PLAN AND FINISH SCHEDULE. (NOTE MAIN RUNNERS ARE 4' O.C. WITH HANGER WIRES 4' O.C. FOR THE 2'X5' CEILING SYSTEM, CROSS TEES ARE 4' AND 5'.)
- 2X2 LIGHT FIXTURE. REF. ELEC.
- PENDANT LIGHT FIXTURE. REF. ELEC.
- PENDANT LIGHT FIXTURE. REF. ELEC.
- SUPPLY GRILLE, REF. MECH.
- RETURN GRILLE, REF. MECH.

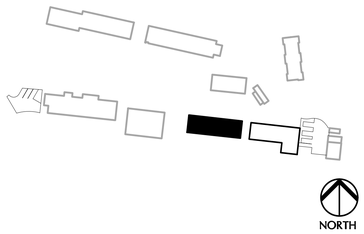

IDENTIFICATION STAMP
DIV. OF THE STATE ARCHITECT
APP: 04-122772 INC:
REVIEWED FOR
SS ☑ FLS ☑ ACS ☑
DATE: 03/26/2024

SPROTTE | WATSON
ARCHITECTURE | PLANNING

C12359

CONSULTANT

DEHESA ELEMENTARY SCHOOL
CONSTRUCTION DOCUMENTS
DEHESA SCHOOL DISTRICT
4612 DEHESA ROAD
EL CAJON, CA 92019

REVISIONS

DESCRIPTION

BUILDING B
KINDERGARTEN
RCP

DATE

01.25.24

JOB #

22-0400

SHEET #

A-B3-1

BUILDING B KINDERGARTEN RCP | 1/4" = 1'-0" | 1 | KEY PLAN | N.T.S.

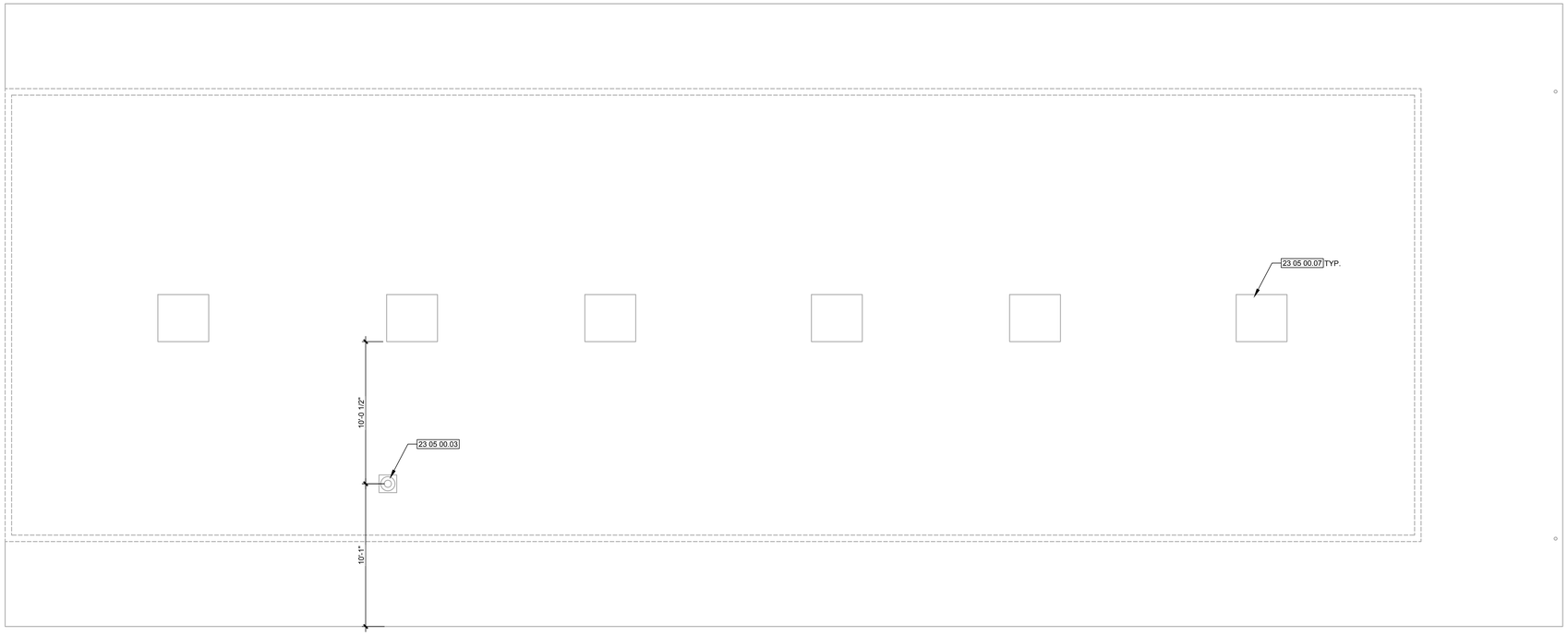

NORTH

REFERENCE KEYNOTES

DIVISION 23 - HEATING, VENTILATING, AND AIR CONDITIONING

23 05 00.03	-	PROVIDE EXAHUST FAN PER MECHANICAL DRAWINGS AND DETAILS 24/A-10.3 & 5/M5.0
23 05 00.07	-	EXISTING ROOFTOP HVAC UNITS TO REMAIN.

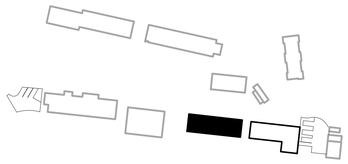

NORTH

IDENTIFICATION STAMP
DIV. OF THE STATE ARCHITECT
APP: 04-122772 INC:
REVIEWED FOR
SS ☑ FLS ☑ ACS ☑
DATE: 03/26/2024

SPROTTE | WATSON
ARCHITECTURE | PLANNING

REGISTERED ARCHITECT
C12359
STATE OF CALIFORNIA

CONSULTANT

DEHESA ELEMENTARY SCHOOL
CONSTRUCTION DOCUMENTS
DEHESA SCHOOL DISTRICT
4612 DEHESA ROAD
EL CAJON, CA 92019

REVISIONS

DESCRIPTION

BUILDING B
KINDERGARTEN
ROOF PLAN

DATE

01.25.24

JOB #

22-0400

SHEET #

A-B4-1

BUILDING B KINDERGARTEN ROOF PLAN | 1/4" = 1'-0" | 1 | KEY PLAN | N.T.S.

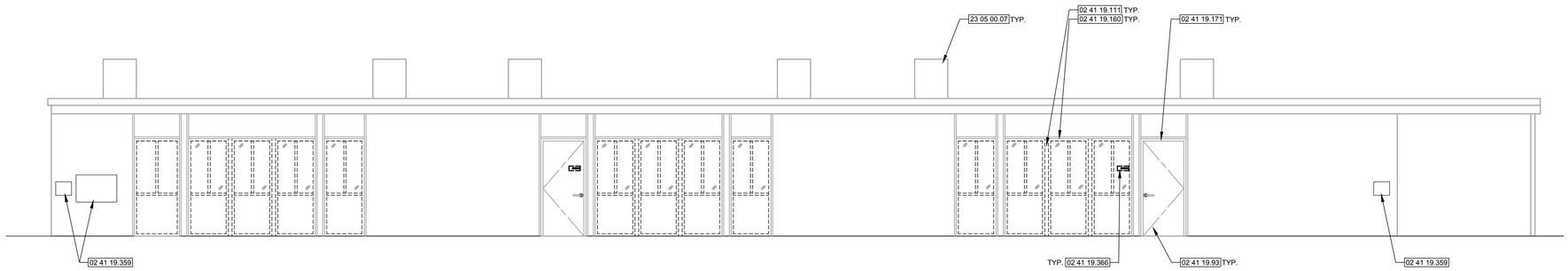

BUILDING B KINDERGARTEN EXTERIOR SOUTH DEMOLITION ELEVATIONS | 1/4" = 1'-0" | 1

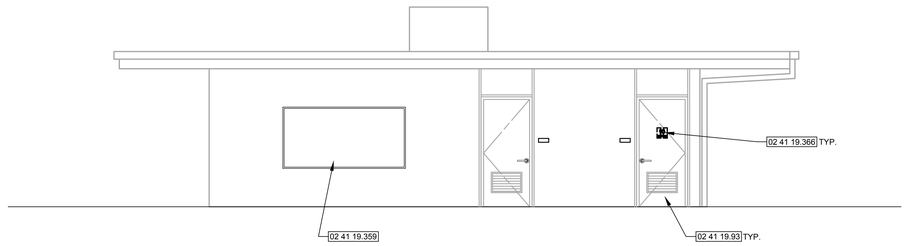

BUILDING B KINDERGARTEN EXTERIOR EAST DEMOLITION ELEVATIONS | 1/4" = 1'-0" | 2

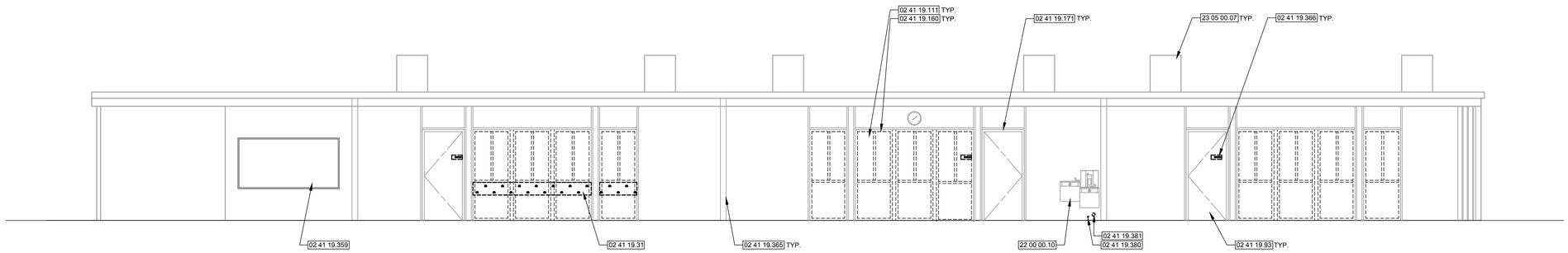

BUILDING B KINDERGARTEN EXTERIOR NORTH DEMOLITION ELEVATIONS | 1/4" = 1'-0" | 3

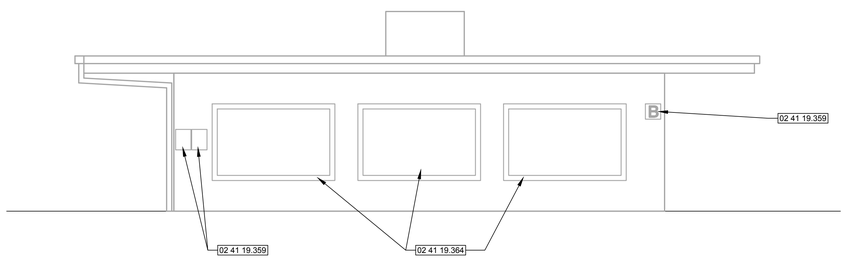

BUILDING B KINDERGARTEN EXTERIOR WEST DEMOLITION ELEVATIONS | 1/4" = 1'-0" | 4

REFERENCE KEYNOTES

DIVISION 02 - EXISTING CONDITIONS

02 41 19.31	-	REMOVE BOARDS WITH COAT HOOKS AND ALL ASSOCIATED ITEMS (WHERE OCCURS). SALVAGE, RETURN TO OWNER.
02 41 19.93	-	EXISTING DOOR, FRAME AND/OR DOOR/WINDOW SYSTEM TO REMAIN.
02 41 19.111	-	REMOVE EXISTING WINDOW SYSTEM
02 41 19.160	-	REMOVE EXISTING TRIM. SALVAGE AND REFURISH FOR RE-USE WHERE APPROPRIATE.
02 41 19.171	-	REMOVE EXISTING EXTERIOR PAINT ON DOORS, TRIMS AND FRAMES FOR NEW PAINT.
02 41 19.359	-	EXISTING EXTERIOR SIGNS, ARTWORK, TACKBOARDS, CAREFULLY REMOVE, PROTECT, STORE PRIOR TO PAINTING. RE-INSTALL ONCE PAINT IS DRY AND READY TO RECEIVE ITEMS.
02 41 19.364	-	EXISTING DONOR WALL PLAQUES TO REMAIN. PROTECT IN PLACE AND CAREFULLY PAINT AROUND.
02 41 19.365	-	EXISTING DOWNSPOUTS PROTECT IN PLACE.
02 41 19.366	-	REMOVE EXISTING ROOM SIGNAGE
02 41 19.380	-	REMOVE EXISTING HOSE BIB.
02 41 19.381	-	REMOVE EXISTING CLEAN-OUT CAP AND REPLACE WITH FLAT SMOOTH CAP.

DIVISION 22 - PLUMBING

22 00 00.10	-	EXISTING DRINKING FOUNTAIN & BOTTLE FILLER TO REMAIN.

DIVISION 23 - HEATING, VENTILATING, AND AIR CONDITIONING

23 05 00.07	-	EXISTING ROOFTOP HVAC UNITS TO REMAIN.

DEMOLITION GENERAL NOTES

1. THESE GENERAL NOTES PROVIDE WORK SCOPE FOR THE CONTRACT DOCUMENTS AND PERTAIN TO THE WORK IN THE SAME MANNER AS THE REQUIREMENTS OF THE DRAWINGS AND SPECIFICATIONS.
2. KEYNOTES ARE INDICATED AT ONLY A PORTION OF THE ELEMENTS. ELEMENTS ILLUSTRATED SIMILARLY, MIRRORED DESIGN AND SIMILAR CONDITIONS SHALL BE APPLIED SIMILARLY. QUANTITIES WILL NOT BE DENOTED BY KEYNOTES.
3. THE CONTRACTOR SHALL COORDINATE ALL DEMOLITION WORK REQUIRED TO PERFORM THE NEW WORK REQUIREMENTS. DEMOLITION EXTENTS ARE INDICATED TO THE GREATEST DEGREE POSSIBLE, BUT EXACT EXTENTS SHALL BE DETERMINED IN THE FIELD.
4. NOT ALL ITEMS TO BE REMOVED HAVE BEEN SHOWN FOR CLARITY. CONTRACTOR TO VERIFY EXISTING CONDITIONS.
5. THE CONTRACTOR SHALL, TO THE GREATEST DEGREE POSSIBLE MINIMIZE WASTE MATERIALS DIVERTED TO THE LANDFILL BY RECYCLING PRODUCT OR WASTE.
6. THE CONTRACTOR SHALL PROTECT EXISTING ELEMENTS SCHEDULED TO REMAIN FROM DAMAGE DERIVED FROM THE DEMOLITION ACTIVITIES.
7. REFERENCE ALL DRAWINGS, SPECIFICATIONS, AND APPENDICES AT THE END OF THE SPECIFICATIONS FOR ADDITIONAL INFORMATION.
8. KEYNOTES WITHOUT ARROWS DENOTE AN ITEM OR REGION OF THE GENERAL AREA IN WHICH THEY ARE LOCATED AND ARE REFERENCING.
9. DASHED LINES REPRESENT MATERIALS FOR REMOVAL OR RELOCATION UNLESS OTHERWISE NOTED. REFERENCE KEYNOTES.
10. MOVEABLE FURNISHINGS AND EQUIPMENT, SUCH AS TABLES, CHAIRS, BOOK SHELVING AND EQUIPMENT ARE NOT ILLUSTRATED IN THE DEMOLITION PLANS.
11. THE DISTRICT EMPLOYS THE FIRST RIGHT OF REFUSAL FOR ITEMS FOR SALVAGE OR RECLAMATION.
12. THE CONTRACTOR PRIOR TO ANY DEMOLITION WORK SHALL REVIEW ALL REGIONS OF WORK AND NOTIFY THE DISTRICT WITH A WRITTEN LISTING OF ANY NON OPERATIONAL OR BROKEN MATERIAL SUCH AS, BUT NOT LIMITED TO LIGHTING, LIGHTING LENSES, FANS, ETC. TO AVOID RESPONSIBILITY FOR REPAIR OR REPLACEMENT.
13. FIRE PROTECTION DURING DEMOLITION AND CONSTRUCTION SHALL BE IN ACCORDANCE WITH CBC CHAPTER 33.
14. NOT ALL HATCH PATTERNS THAT ARE SHOWN IN LEGEND MAY BE USED, REFERENCE DRAWINGS, (PLANS, ELEVATIONS ETC..) FOR APPLICABLE HATCH PATTERNS.
15. REMOVE ALL FINISHES DOWN TO STRUCTURE UNLESS OTHERWISE NOTED.
16. CUTTING HOLES IN EXISTING SHEAR WALLS FOR MODIFICATIONS SHALL BE MINIMAL, 3"X3". AVOID STUDS, HEADERS AND ADDITIONAL STRUCTURAL ELEMENTS.
17. PATCH AND REPAIR ALL DAMAGED OR REMOVED PORTIONS OF EXISTING BUILDINGS TO REMAIN TO APPEAR AS NEW.
18. ALL HAZARDOUS BUILDING MATERIALS IDENTIFIED IN THE 2022 ASBESTOS HAZARD EMERGENCY RESPONSE ACT 3 YEAR INSPECTION LOCATED IN AREAS BEING MODIFIED SHALL BE REMOVED IN ACCORDANCE WITH DEHESA SCHOOL DISTRICT.
19. ALL DEMOLITION SHALL COMPLY WITH CH. 33 CBC AND CHAPTER 33 CFC.

IDENTIFICATION STAMP
DIV. OF THE STATE ARCHITECT
APP: 04-122772 INC:
REVIEWED FOR
SS ☑ FLS ☑ ACS ☑
DATE: 03/26/2024

SPROTTE | WATSON
ARCHITECTURE | PLANNING

REGISTERED ARCHITECT
C12359
STATE OF CALIFORNIA

CONSULTANT

DEHESA ELEMENTARY SCHOOL
CONSTRUCTION DOCUMENTS
DEHESA SCHOOL DISTRICT
4612 DEHESA ROAD
EL CAJON, CA 92019

REVISIONS

DESCRIPTION
BUILDING B KINDERGARTEN EXTERIOR DEMOLITION ELEVATIONS

DATE
01.25.24

JOB #
22-0400

SHEET #
A-B5-0

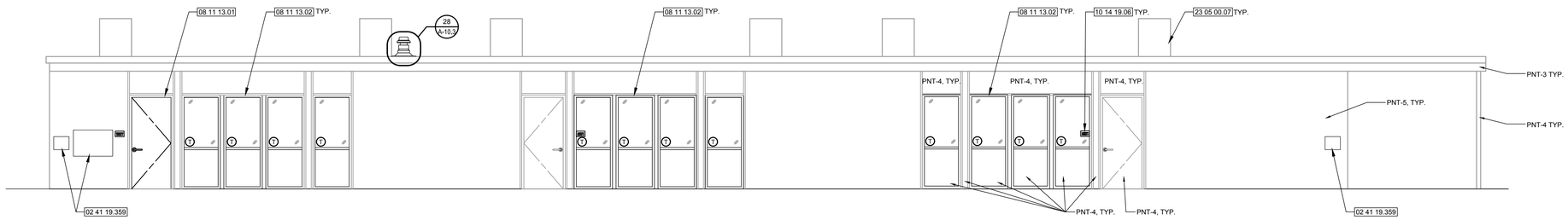

BUILDING B KINDERGARTEN EXTERIOR SOUTH ELEVATIONS | 1/4" = 1'-0" | 1

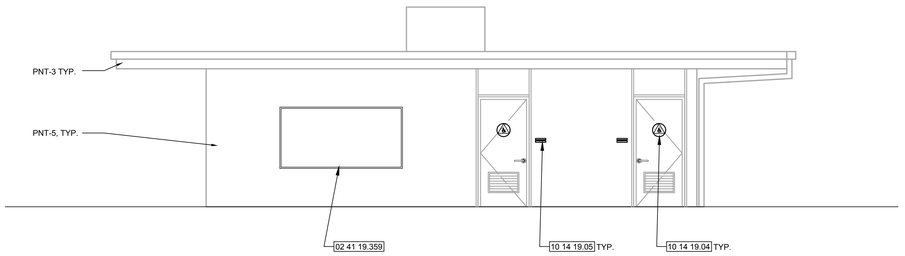

BUILDING B KINDERGARTEN EXTERIOR EAST ELEVATIONS | 1/4" = 1'-0" | 2

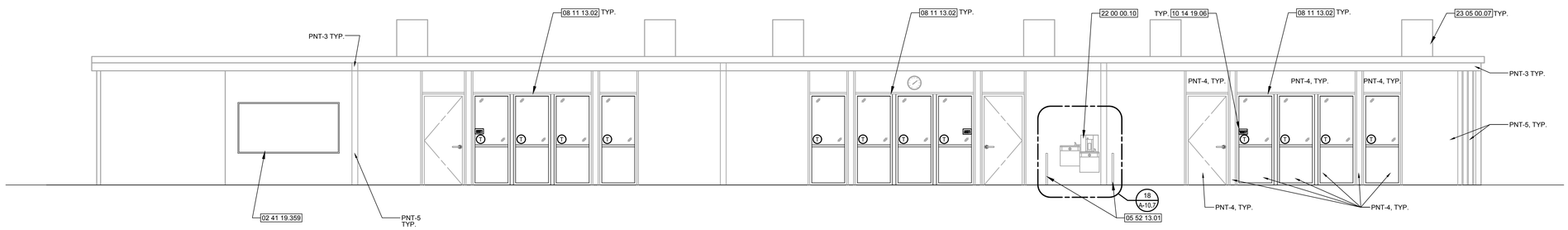

BUILDING B KINDERGARTEN EXTERIOR NORTH ELEVATIONS | 1/4" = 1'-0" | 3

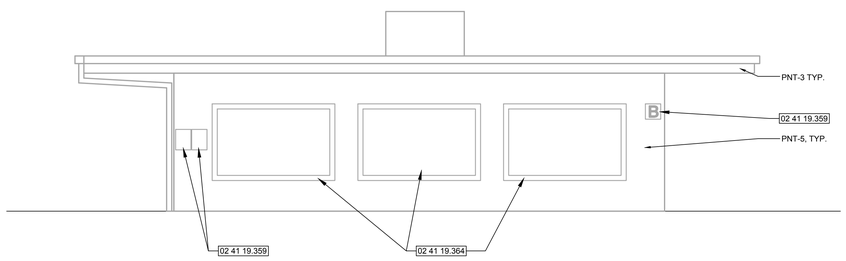

BUILDING B KINDERGARTEN EXTERIOR WEST ELEVATIONS | 1/4" = 1'-0" | 4

REFERENCE KEYNOTES

DIVISION 02 - EXISTING CONDITIONS

02 41 19.359	-	EXISTING EXTERIOR SIGNS, ARTWORK, TACKBOARDS, CAREFULLY REMOVE, PROTECT, STORE PRIOR TO PAINTING. RE-INSTALL ONCE PAINT IS DRY AND READY TO RECEIVE ITEMS.
02 41 19.364	-	EXISTING DONOR WALL PLAQUES TO REMAIN. PROTECT IN PLACE AND CAREFULLY PAINT AROUND.

DIVISION 05 - METALS

05 52 13.01	-	PROVIDE GALVANIZED TUBE CANE DETECTION RAILS, REF. DETAIL 19/A-10.7.

DIVISION 08 - OPENINGS

08 11 13.01	-	PROVIDE HOLLOW METAL FRAMED DOOR AND/OR DOOR/WINDOW SYSTEM (WHERE APPLICABLE), REF. OPENING SCHEDULES AND SPECS.
08 11 13.02	-	PROVIDE HOLLOW METAL WINDOW FRAME AND GLAZING PER OPENING SCHEDULE AND SPECS.

DIVISION 10 - SPECIALITIES

10 14 19.04	-	PROVIDE DOOR MOUNTED GEOMETRIC SYMBOL PER DETAIL 5/A-10.7
10 14 19.05	-	PROVIDE WALL MOUNTED TACTILE RESTROOM SIGNAGE PER DETAIL 5/A-10.7
10 14 19.06	-	PROVIDE EXTERIOR MOUNTED TACTILE ROOM SIGNAGE PER DETAIL 10/A-10.7

DIVISION 22 - PLUMBING

22 00 00.10	-	EXISTING DRINKING FOUNTAIN & BOTTLE FILLER TO REMAIN.

DIVISION 23 - HEATING, VENTILATING, AND AIR CONDITIONING

23 05 00.07	-	EXISTING ROOFTOP HVAC UNITS TO REMAIN.

EXTERIOR ELEVATION GENERAL NOTES

1. REFERENCE SPECIFICATIONS, TITLE SHEET GENERAL NOTES AND APPLICABLE DRAWINGS AND NOTES ON ARCHITECTURAL PLANS AND ELEVATIONS, STRUCTURAL, MECHANICAL, ELECTRICAL, PLUMBING AND CIVIL DRAWINGS FOR ADDITIONAL INFORMATION.
2. NOT ALL KEYNOTES MAY BE USED OR REFERENCED.
3. KEYNOTES ARE INDICATED AT ONLY A PORTION OF THE ELEMENTS. ELEMENTS ILLUSTRATED SIMILARLY, MIRRORED DESIGN AND SIMILAR CONDITIONS SHALL BE ASSUMED TO BE NOTED SIMILARLY. QUANTITIES WILL NOT BE DENOTED BY KEYNOTES.
4. KEYNOTES WITHOUT ARROWS DENOTE AN ITEM OR REGION OF THE GENERAL AREA IN WHICH THEY ARE LOCATED AND ARE REFERENCING.
5. REFERENCE ABBREVIATIONS ON SHEET A-0.1 FOR TYPICAL DEFINITIONS.
6. DIMENSIONS FOR MIRRORED OR SYMMETRICAL CONSTRUCTION MAY BE ILLUSTRATED AT ONE SIDE AND SHALL BE ASSUMED SIMILAR FOR THE OTHER.
7. NOT ALL EXTERIOR ELEMENTS MAY BE ILLUSTRATED.
8. PROVIDE PREPARATION TO REMOVE ALL LOOSE PAINT, MINOR PLASTER REPAIR, CRACK REPAIR AND PROVIDE PRIME PAINT AND FINISH PAINT FINISH AT ALL NEW AND EXISTING PLASTER FINISHES, DOORS, DOOR FRAMES, WINDOW FRAMES, METAL TRIM, PIPES, CONDUITS, LOUVERS, FASCIAS, EXPOSED WOOD TRIM AND SIDING, AND OTHER SUCH CURRENTLY PAINTED MATERIALS AND EXPOSED NEW WORK ELEMENTS.
9. ALL REPAIR OF PLASTER FINISHES SHALL BE FLUSH TO ADJACENT FINISHES AND MATCH TEXTURES AS CLOSELY AS POSSIBLE. WHERE EXPANSION OR CONTROL JOINTS OCCUR, CONTINUE JOINTS THROUGH NEW MATERIAL TO MATCH.
10. MECHANICAL UNITS, VENTS, AND OTHER SIMILAR COMPONENTS MAY NOT BE ILLUSTRATED IN ELEVATION. REFERENCE ROOF PLANS AND MECHANICAL PLANS FOR UNIT LOCATIONS.
11. FOR NEW PLASTER/PLASTER TIE-IN DETAILS REFERENCE 18 & 19/A-10.2.
12. REMOVE ARTWORK, SIGNS, TACKBOARDS CAREFULLY PRIOR TO PAINTING. RE-INSTALL ONCE PAINT IS DRY AND READY TO RECEIVE ITEMS. VERIFY IF SIGN(S) IS BEING REPLACED OR RE-INSTALLED AS IS.
13. ALL EXTERIOR ELEVATIONS OF THE BUILDINGS IN THE SCOPE OF WORK ARE TO BE PAINTED.

IDENTIFICATION STAMP
DIV. OF THE STATE ARCHITECT
APP: 04-122772 INC:
REVIEWED FOR
SS ☑ FLS ☑ ACS ☑
DATE: 03/26/2024

SPROTTE WATSON ARCHITECTURE + PLANNING

REGISTERED ARCHITECT
C12359
STATE OF CALIFORNIA

CONSULTANT

DEHESA ELEMENTARY SCHOOL
CONSTRUCTION DOCUMENTS
DEHESA SCHOOL DISTRICT
4612 DEHESA ROAD
EL CAJON, CA 92019

REVISIONS

DESCRIPTION
BUILDING B KINDERGARTEN EXTERIOR ELEVATIONS

DATE
01.25.24

JOB #
22-0400

SHEET #
A-B5-1

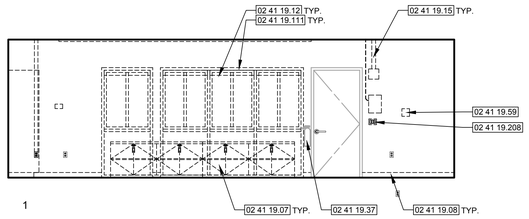

1

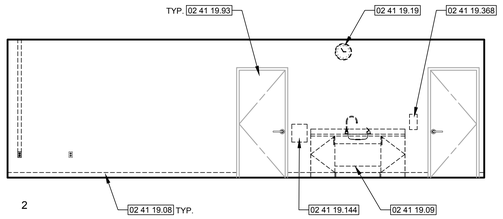

2

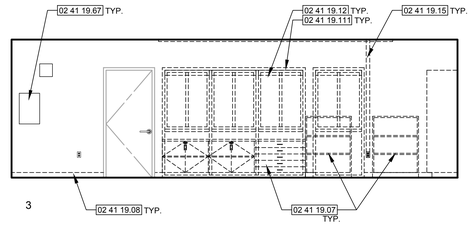

3

KINDERGARTEN CLASSROOM INTERIOR DEMOLITION ELEVATIONS | 1/4" = 1'-0" | 1

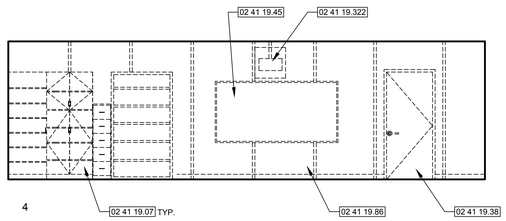

4

KINDERGARTEN CLASSROOM CONTINUED

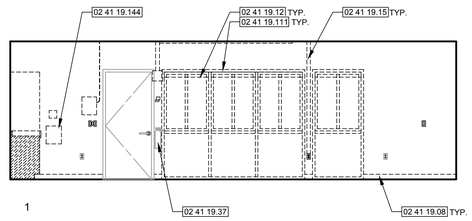

1

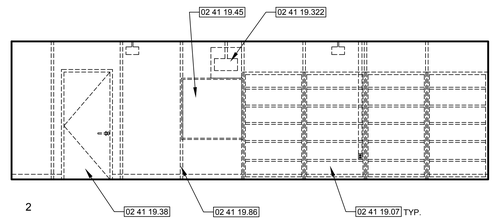

2

SECOND CLASSROOM INTERIOR DEMOLITION ELEVATIONS | 1/4" = 1'-0" | 2

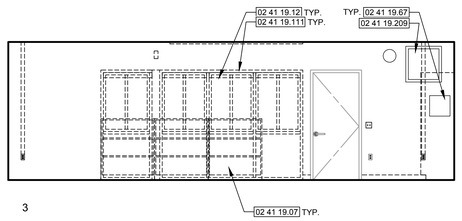

3

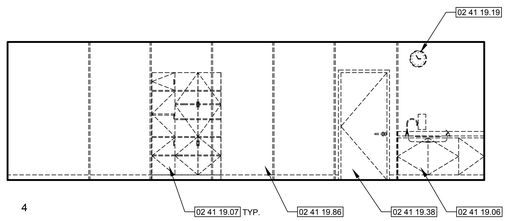

4

SECOND CLASSROOM CONTINUED

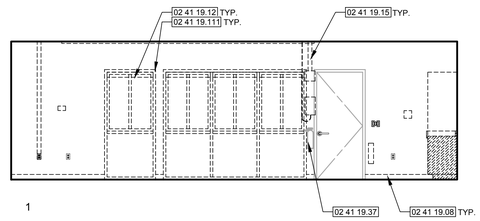

1

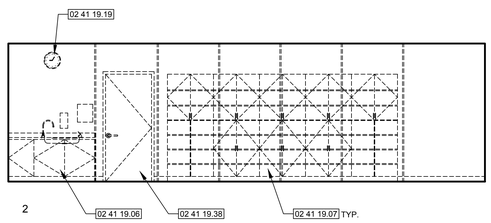

2

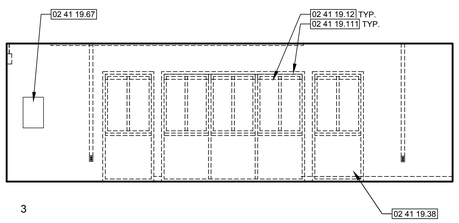

3

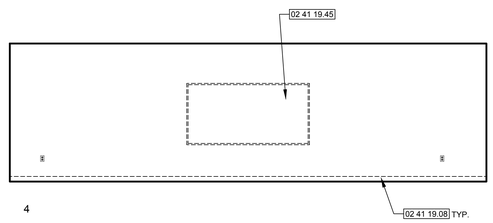

4

THIRD CLASSROOM INTERIOR DEMOLITION ELEVATIONS | 1/4" = 1'-0" | 3

REFERENCE KEYNOTES

DIVISION 02 - EXISTING CONDITIONS

02 41 19.06	-	REMOVE CASEWORK ENTIRELY INCLUDING ALL ASSOCIATED ITEMS SUCH AS COUNTERTOPS, BACK AND SIDE SPLASHES, HARDWARE, AND FASTENERS TO CLEAN BARE FLOOR AND WALL SUBSTRATE.
02 41 19.07	-	MOVEABLE CABINETS AND BOOKSHELVES TO BE REMOVED.
02 41 19.08	-	REMOVE RUBBER BASE.
02 41 19.09	-	REMOVE SINK BASE CABINET.
02 41 19.12	-	CAREFULLY REMOVE ALL WINDOW SHADES, ASSOCIATED HARDWARE AND FASTENERS, RETURN TO OWNER.
02 41 19.15	-	REMOVE SURFACE MOUNTED WIRE MOULD AND CONDUIT PER ELECTRICAL DRAWINGS E, EF, AND ET SHEETS.
02 41 19.19	-	REMOVE CLOCK AND DELIVER TO DISTRICT.
02 41 19.37	-	REMOVE, STORE, PROTECT FIRE EXTINGUISHER AND MOUNTING BRACKET FOR RE-INSTALLATION.
02 41 19.38	-	REMOVE DOOR, FRAME AND WINDOW (WHERE OCCURS)
02 41 19.45	-	REMOVE WHITE BOARD AND/OR CHALK BOARD.
02 41 19.59	-	REMOVE THERMOSTAT, REFERENCE MECHANICAL PLANS
02 41 19.67	-	EXISTING ELECTRICAL PANEL TO REMAIN, PROTECT IN PLACE.
02 41 19.86	-	REMOVE FOLDING PARTITION IN ITS ENTIRETY. INCLUDING BUT NOT LIMITED TO, TRACKS AND ALL ASSOCIATED HARDWARE.
02 41 19.93	-	EXISTING DOOR, FRAME AND/OR DOOR/WINDOW SYSTEM TO REMAIN.
02 41 19.111	-	REMOVE EXISTING WINDOW SYSTEM
02 41 19.144	-	REMOVE SURFACE MOUNTED PAPER TOWEL DISPENSER RETURN TO CLIENT.
02 41 19.208	-	EXISTING SWITCHES. REF. ELECTRICAL.
02 41 19.209	-	REMOVE AND REINSTALL EXISTING IDF RACK PER ELECTRICAL.
02 41 19.322	-	REMOVE EXISTING PROJECTOR, MOUNT AND ALL ASSOCIATED PARTS. RETAIN FOR DISTRICT USE.
02 41 19.368	-	REMOVE EXISTING SURFACE MOUNTED SOAP DISPENSER.

DEMOLITION GENERAL NOTES

1. THESE GENERAL NOTES PROVIDE WORK SCOPE FOR THE CONTRACT DOCUMENTS AND PERTAIN TO THE WORK IN THE SAME MANNER AS THE REQUIREMENTS OF THE DRAWINGS AND SPECIFICATIONS.
2. KEYNOTES ARE INDICATED AT ONLY A PORTION OF THE ELEMENTS. ELEMENTS ILLUSTRATED SIMILARLY, MIRRORED DESIGN AND SIMILAR CONDITIONS SHALL BE APPLIED SIMILARLY. QUANTITIES WILL NOT BE DENOTED BY KEYNOTES.
3. THE CONTRACTOR SHALL COORDINATE ALL DEMOLITION WORK REQUIRED TO PERFORM THE NEW WORK REQUIREMENTS. DEMOLITION EXTENTS ARE INDICATED TO THE GREATEST DEGREE POSSIBLE, BUT EXACT EXTENTS SHALL BE DETERMINED IN THE FIELD.
4. NOT ALL ITEMS TO BE REMOVED HAVE BEEN SHOWN FOR CLARITY. CONTRACTOR TO VERIFY EXISTING CONDITIONS.
5. THE CONTRACTOR SHALL, TO THE GREATEST DEGREE POSSIBLE MINIMIZE WASTE MATERIALS DIVERTED TO THE LANDFILL BY RECYCLING PRODUCT OR WASTE.
6. THE CONTRACTOR SHALL PROTECT EXISTING ELEMENTS SCHEDULED TO REMAIN FROM DAMAGE DERIVED FROM THE DEMOLITION ACTIVITIES.
7. REFERENCE ALL DRAWINGS, SPECIFICATIONS, AND APPENDICES AT THE END OF THE SPECIFICATIONS FOR ADDITIONAL INFORMATION.
8. KEYNOTES WITHOUT ARROWS DENOTE AN ITEM OR REGION OF THE GENERAL AREA IN WHICH THEY ARE LOCATED AND ARE REFERENCING.
9. DASHED LINES REPRESENT MATERIALS FOR REMOVAL OR RELOCATION UNLESS OTHERWISE NOTED. REFERENCE KEYNOTES.
10. MOVEABLE FURNISHINGS AND EQUIPMENT, SUCH AS TABLES, CHAIRS, BOOK SHELVING AND EQUIPMENT ARE NOT ILLUSTRATED IN THE DEMOLITION PLANS.
11. THE DISTRICT EMPLOYS THE FIRST RIGHT OF REFUSAL FOR ITEMS FOR SALVAGE OR RECLAMATION.
12. THE CONTRACTOR PRIOR TO ANY DEMOLITION WORK SHALL REVIEW ALL REGIONS OF WORK AND NOTIFY THE DISTRICT WITH A WRITTEN LISTING OF ANY NON OPERATIONAL OR BROKEN MATERIAL SUCH AS, BUT NOT LIMITED TO LIGHTING, LIGHTING LENSES, FANS, ETC. TO AVOID RESPONSIBILITY FOR REPAIR OR REPLACEMENT.
13. FIRE PROTECTION DURING DEMOLITION AND CONSTRUCTION SHALL BE IN ACCORDANCE WITN CBC CHAPTER 33.
14. NOT ALL HATCH PATTERNS THAT ARE SHOWN IN LEGEND MAY BE USED, REFERENCE DRAWINGS, (PLANS, ELEVATIONS ETC..) FOR APPLICABLE HATCH PATTERNS.
15. REMOVE ALL FINISHES DOWN TO STRUCTURE UNLESS OTHERWISE NOTED.
16. CUTTING HOLES IN EXISTING SHEAR WALLS FOR MODIFICATIONS SHALL BE MINIMAL, 3"X3". AVOID STUDS, HEADERS AND ADDITIONAL STRUCTURAL ELEMENTS.
17. PATCH AND REPAIR ALL DAMAGED OR REMOVED PORTIONS OF EXISTING BUILDINGS TO REMAIN TO APPEAR AS NEW.
18. ALL HAZARDOUS BUILDING MATERIALS IDENTIFIED IN THE 2022 ASBESTOS HAZARD EMERGENCY RESPONSE ACT 3 YEAR INSPECTION LOCATED IN AREAS BEING MODIFIED SHALL BE REMOVED IN ACCORDANCE WITH DEHESA SCHOOL DISTRICT.
19. ALL DEMOLITION SHALL COMPLY WITH CH. 33 CBC AND CHAPTER 33 CFC.

IDENTIFICATION STAMP
DIV. OF THE STATE ARCHITECT
APP: 04-122772 INC:
REVIEWED FOR
SS ☑ FLS ☑ ACS ☑
DATE: 03/26/2024

SPROTTE | WATSON
ARCHITECTURE | PLANNING

REGISTERED ARCHITECT
C12359
STATE OF CALIFORNIA

CONSULTANT

DEHESA ELEMENTARY SCHOOL
CONSTRUCTION DOCUMENTS
DEHESA SCHOOL DISTRICT
4612 DEHESA ROAD
EL CAJON, CA 92019

REVISIONS

DESCRIPTION

BUILDING B
KINDERGARTEN
INTERIOR DEMOLITION
ELEVATIONS

DATE

01.25.24

JOB #

22-0400

SHEET #

A-B9-0

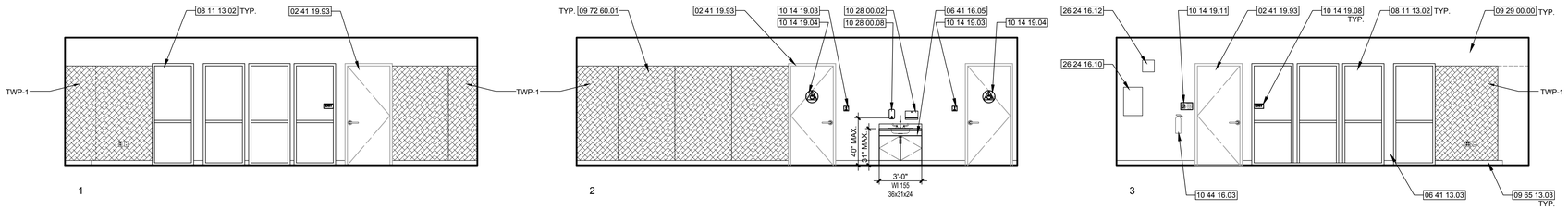

KINDERGARTEN CLASSROOM INTERIOR ELEVATIONS | 1/4" = 1'-0" | 1

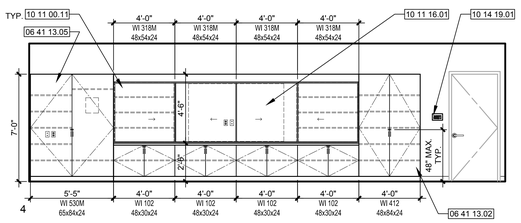

KINDERGARTEN CLASSROOM CONTINUED

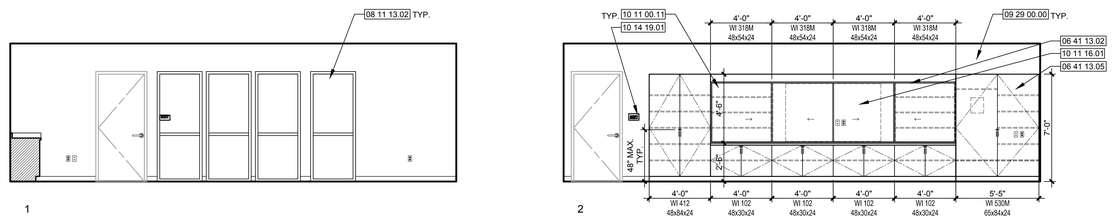

SECOND CLASSROOM INTERIOR ELEVATIONS | 1/4" = 1'-0" | 2

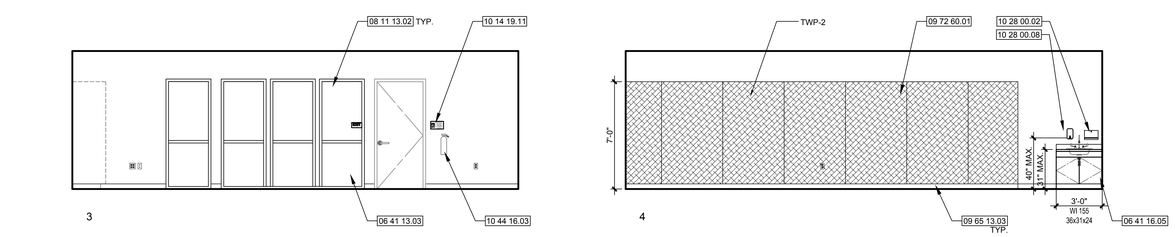

SECOND CLASSROOM CONTINUED

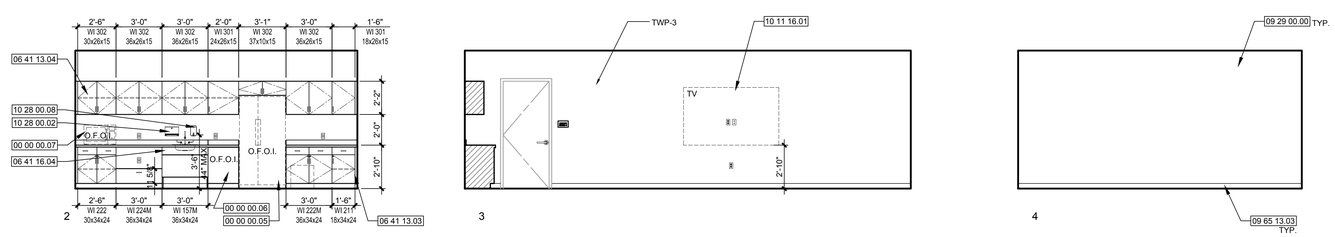

STAFF LOUNGE INTERIOR ELEVATIONS | 1/4" = 1'-0" | 4

REFERENCE KEYNOTES

DIVISION 00 - NOT IN CONTRACT

00 00 00.05	-	REFRIDGERATOR- O.F.O.I.
00 00 00.06	-	DISHWASHER- O.F.O.I.
00 00 00.07	-	MICROWAVE- O.F.O.I.

DIVISION 02 - EXISTING CONDITIONS

02 41 19.93	-	EXISTING DOOR, FRAME AND/OR DOOR/WINDOW SYSTEM TO REMAIN.

DIVISION 06 - WOOD, PLASTICS, AND COMPOSITES

06 41 13.02	-	PROVIDE NEW INSTRUCTIONAL CASEWORK. REF. DETAIL 27/A-10.5.
06 41 13.03	-	PROVIDE PLASTIC LAMINATED BASE CABINET PER DETAILS 2 & 5/A-10.5.
06 41 13.04	-	PROVIDE PLASTIC LAMINATED UPPER CABINET PER DETAIL 2/A-10.5.
06 41 13.05	-	PROVIDE PLASTIC LAMINATED TALL CABINET. REF. DETAIL 4/A-10.5
06 41 16.04	-	PROVIDE ACCESSIBLE SINK BASE CABINET, REF. DETAIL 10/A-10.5 FOR REQUIRED CLEARANCES.
06 41 16.05	-	PROVIDE ACCESSIBLE SINK BASE CABINET. REF. DETAIL 29/A-10.5.

DIVISION 08 - OPENINGS

08 11 13.02	-	PROVIDE HOLLOW METAL WINDOW FRAME AND GLAZING PER OPENING SCHEDULE AND SPECS.

DIVISION 09 - FINISHES

09 29 00.00	-	GYPSUM BOARD
09 65 13.03	-	PREPARE WALL AND INSTALL RESILIENT BASE
09 72 60.01	-	PROVIDE TACWALL. REF. SPECIFICATIONS AND DETAIL 13/A-10.2.

DIVISION 10 - SPECIALITIES

10 11 00.11	-	PROVIDE SLIDING MARKER BOARDS.NUMBER OF PANELS AS INDICATED. ALL PANELS EQUAL SIZE, AND HEIGHT. REF. SPECS.
10 11 16.01	-	PROVIDE FLAT SCREEN TV/MONITOR AND WALL MOUNT, REF. ELECTRICAL FOR ADDITIONAL INFO. IF TV/MONITOR PROJECTS MORE THAN 4" FROM FACE OF WALL, BOTTOM OF TV/MONITOR SHALL BE A MIN. OF 80" A.F.F.
10 14 19.01	-	PROVIDE TACTILE ROOM IDENTIFICATION SIGNAGE. REF. OPENING SCHEDULE AND DETAIL 10/A-10.7
10 14 19.03	-	PROVIDE WALL MOUNTED RESTROOM IDENTIFICATION- PICTOGRAM SIGN. REFERENCE DETAIL 5/A-10.7
10 14 19.04	-	PROVIDE DOOR MOUNTED GEOMETRIC SYMBOL PER DETAIL 5/A-10.7
10 14 19.08	-	PROVIDE TACTILE EXIT SIGNAGE PER DETAIL 2 & 13 E1/A-10.7
10 14 19.11	-	PROVIDE WALL MOUNTED (DO NOT INSTALL ON GLASS) ASSISTIVE LISTENING SIGN. THIS SIGN IS REQUIRED AND IS TYPICAL AT ALL CLASSROOMS & ASSEMBLY AREAS, REF. DETAIL 14/A-10.7.
10 28 00.02	-	PAPER TOWEL DISPENSER
10 28 00.08	-	SOAP DISPENSER
10 44 16.03	-	PROVIDE SURFACE MOUNTED FIRE EXTINGUISHER, REF. SPECS, AND DETAIL17/A-10.5 FOR MOUNTING HEIGHT.

DIVISION 26-27-28 - ELECTRICAL

26 24 16.10	-	EXISTING ELECTRICAL PANEL.
26 24 16.12	-	EXISTING ELECTRICAL

INTERIOR ELEVATIONS GENERAL NOTES

1. REFERENCE SPECIFICATIONS, APPLICABLE DRAWINGS AND NOTES ON ARCHITECTURAL PLANS AND ELEVATIONS, STRUCTURAL, MECHANICAL, ELECTRICAL, PLUMBING AND CIVIL DRAWINGS FOR ADDITIONAL INFORMATION.
2. KEYNOTES ARE INDICATED AT ONLY A PORTION OF THE ELEMENTS. ELEMENTS ILLUSTRATED SIMILARLY, MIRRORED DESIGN AND SIMILAR CONDITIONS SHALL BE ASSUMED TO BE NOTED SIMILARLY. QUANTITIES WILL NOT BE DENOTED BY KEYNOTES.
3. KEYNOTES WITHOUT ARROWS DENOTE AN ITEM OR REGION OF THE GENERAL AREA IN WHICH THEY ARE LOCATED AND ARE REFERENCING.
4. REF. ABBREVIATIONS ON SHEET A-0.1 FOR TYPICAL DEFINITIONS.
5. ALL WALL MOUNTED CASEWORK WITH PLUMBING FIXTURES SHALL BE PROVIDED WITH 4" REAR & SIDE SPLASHES TYPICAL UNLESS NOTED OTHERWISE.
6. ALL CASEWORK DRAWERS & CABINET DOORS SHALL BE PROVIDED WITH LOCKS. EXCEPT AT SINK CABINETS. ALL U-SHAPED PULLS ARE TO BE ORIENTED PARALLEL TO FINISHED FLOOR.
7. CONTRACTOR SHALL PROVIDE PAINTED FINISH AT ALL EXPOSED INTERIOR DOORS, FRAMES, TRIMWORK & WALLS INCLUDING PLASTER & GYPSUM WALLBOARD NOT PROVIDED WITH OTHER FINISHES SUCH AS VINYL TACK SURFACES, FRP, OR TILE. REFERENCE FINISH SCHEDULE FOR ADDITIONAL INFORMATION.
8. MAXIMUM FLAME SPREAD OF INTERIOR WALL AND CEILING FINISHES SHALL COMPLY WITH CBC CHAPTER 8 AND TITLE 19. EXIT ENCLOSURES AND EXIT PASSAGEWAYS SHALL BE CLASS B: FLAME SPREAD INDEX NOT TO EXCEED 75 AND SMOKE-DEVELOPMENT INDEX NOT TO EXCEED 450. CORRIDORS, ROOMS, AND ENCLOSED SPACES SHALL BE CLASS C: FLAME SPREAD INDEX NOT TO EXCEED 200 AND SMOKE-DEVELOPMENT INDEX NOT TO EXCEED 450.
9. BATT INSULATION, PIPE INSULATION SHALL HAVE A FLAME SPREAD INDEX NOT TO EXCEED 25 AND A SMOKE-DEVELOPMENT INDEX NOT TO EXCEED 450 IN ACCORDANCE WITH CBC 719.2.
10. CASEWORK WHERE INSTALLED WITHIN NON-RECTILINEAR ROOMS OR CORNERS SHALL BE PROVIDED WITH CLOSURE PANELS AT ALL CONDITIONS TO AVOID GAPS & VOIDS, BOTH AT CASEWORK TOPS AND SIDES.
11. MARKER OR WHITE BOARD LOCATIONS SHALL BE CONFIRMED PRIOR TO INSTALLATION.
12. FOR TYPICAL F.F.E. MOUNTING HEIGHTS, SEE DETAIL 17/A-10.5.
13. FOR TYPICAL CASEWORK DETAILS, SEE SHEET A-10.5.
14. REFERENCE DETAILS 13/A.10.2 FOR TACKWALL DETAILS.
15. UNLESS NOTED OTHERWISE, ALL ELEMENTS SHOWN ON PLANS SHALL BE CONTRACTOR FURNISHED AND INSTALLED.
16. AN ATTENDANT WILL BE AVAILABLE DURING LIBRARY HOURS TO ASSIST PERSONS WITH DISABILITIES.
17. CASEWORK: WI (WOODWORK INSTITUTE) W (WIDTH) x H (HEIGHT) x D (DEPTH). M (MODIFIED).

IDENTIFICATION STAMP
DIV. OF THE STATE ARCHITECT
APP: 04-122772 INC:
REVIEWED FOR
SS ☑ FLS ☑ ACS ☑
DATE: 03/26/2024

SPROTTE WATSON ARCHITECTURE + PLANNING

CONSULTANT

DEHESA ELEMENTARY SCHOOL
CONSTRUCTION DOCUMENTS
DEHESA SCHOOL DISTRICT
4612 DEHESA ROAD
EL CAJON, CA 92019

REVISIONS

DESCRIPTION

BUILDING B
KINDERGARTEN
INTERIOR
ELEVATIONS

DATE

01.25.24

JOB #

22-0400

SHEET #

A-B9-1

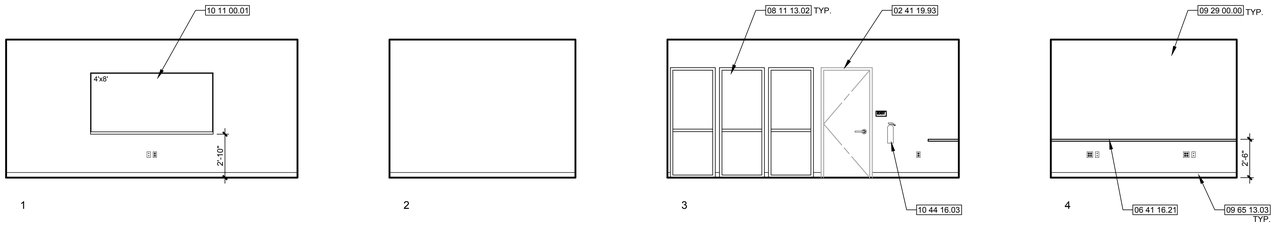

GREEN ROOM INTERIOR ELEVATIONS | 1/4" = 1'-0" | 1

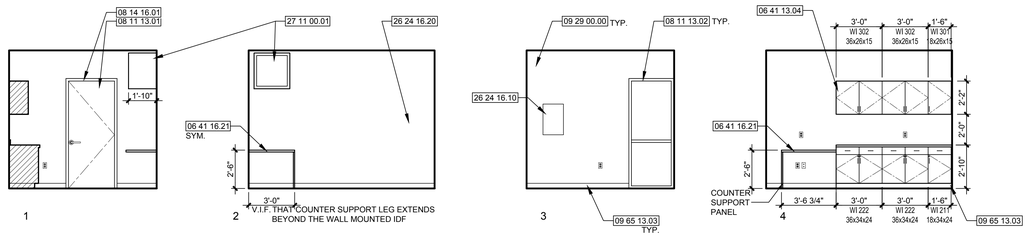

COPY ROOM INTERIOR ELEVATIONS | 1/4" = 1'-0" | 2

INTERIOR ELEVATIONS GENERAL NOTES

1. REFERENCE SPECIFICATIONS, APPLICABLE DRAWINGS AND NOTES ON ARCHITECTURAL PLANS AND ELEVATIONS, STRUCTURAL, MECHANICAL, ELECTRICAL, PLUMBING AND CIVIL DRAWINGS FOR ADDITIONAL INFORMATION.
2. KEYNOTES ARE INDICATED AT ONLY A PORTION OF THE ELEMENTS. ELEMENTS ILLUSTRATED SIMILARLY, MIRRORED DESIGN AND SIMILAR CONDITIONS SHALL BE ASSUMED TO BE NOTED SIMILARLY. QUANTITIES WILL NOT BE DENOTED BY KEYNOTES.
3. KEYNOTES WITHOUT ARROWS DENOTE AN ITEM OR REGION OF THE GENERAL AREA IN WHICH THEY ARE LOCATED AND ARE REFERENCING.
4. REF. ABBREVIATIONS ON SHEET A-0.1 FOR TYPICAL DEFINITIONS.
5. ALL WALL MOUNTED CASEWORK WITH PLUMBING FIXTURES SHALL BE PROVIDED WITH 4" REAR & SIDE SPLASHES TYPICAL UNLESS NOTED OTHERWISE.
6. ALL CASEWORK DRAWERS & CABINET DOORS SHALL BE PROVIDED WITH LOCKS. EXCEPT AT SINK CABINETS. ALL U-SHAPED PULLS ARE TO BE ORIENTED PARALLEL TO FINISHED FLOOR.
7. CONTRACTOR SHALL PROVIDE PAINTED FINISH AT ALL EXPOSED INTERIOR DOORS, FRAMES, TRIMWORK & WALLS INCLUDING PLASTER & GYPSUM WALLBOARD NOT PROVIDED WITH OTHER FINISHES SUCH AS VINYL TACK SURFACES, FRP, OR TILE. REFERENCE FINISH SCHEDULE FOR ADDITIONAL INFORMATION.
8. MAXIMUM FLAME SPREAD OF INTERIOR WALL AND CEILING FINISHES SHALL COMPLY WITH CBC CHAPTER 8 AND TITLE 19. EXIT ENCLOSURES AND EXIT PASSAGEWAYS SHALL BE CLASS B: FLAME SPREAD INDEX NOT TO EXCEED 75 AND SMOKE-DEVELOPMENT INDEX NOT TO EXCEED 450. CORRIDORS, ROOMS, AND ENCLOSED SPACES SHALL BE CLASS C: FLAME SPREAD INDEX NOT TO EXCEED 200 AND SMOKE-DEVELOPMENT INDEX NOT TO EXCEED 450.
9. BATT INSULATION, PIPE INSULATION SHALL HAVE A FLAME SPREAD INDEX NOT TO EXCEED 25 AND A SMOKE-DEVELOPMENT INDEX NOT TO EXCEED 450 IN ACCORDANCE WITH CBC 719.2.
10. CASEWORK WHERE INSTALLED WITHIN NON-RECTILINEAR ROOMS OR CORNERS SHALL BE PROVIDED WITH CLOSURE PANELS AT ALL CONDITIONS TO AVOID GAPS & VOIDS, BOTH AT CASEWORK TOPS AND SIDES.
11. MARKER OR WHITE BOARD LOCATIONS SHALL BE CONFIRMED PRIOR TO INSTALLATION.
12. FOR TYPICAL F.F.E. MOUNTING HEIGHTS, SEE DETAIL 17/A-10.5.
13. FOR TYPICAL CASEWORK DETAILS, SEE SHEET A-10.5.
14. REFERENCE DETAILS 13/A.10.2 FOR TACKWALL DETAILS.
15. UNLESS NOTED OTHERWISE, ALL ELEMENTS SHOWN ON PLANS SHALL BE CONTRACTOR FURNISHED AND INSTALLED.
16. AN ATTENDANT WILL BE AVAILABLE DURING LIBRARY HOURS TO ASSIST PERSONS WITH DISABILITIES.
17. CASEWORK: WI (WOODWORK INSTITUTE) W (WIDTH) x H (HEIGHT) x D (DEPTH). M (MODIFIED).

REFERENCE KEYNOTES

DIVISION 02 - EXISTING CONDITIONS

02 41 19.93 - EXISTING DOOR, FRAME AND/OR DOOR/WINDOW SYSTEM TO REMAIN.

DIVISION 06 - WOOD, PLASTICS, AND COMPOSITES

06 41 13.04 - PROVIDE PLASTIC LAMINATED UPPER CABINET PER DETAIL 2/A-10.5.

06 41 16.21 - WORK STATION COUNTER. REF. DETAIL 20/A-10.5.

DIVISION 08 - OPENINGS

08 11 13.01 - PROVIDE HOLLOW METAL FRAMED DOOR AND/OR DOOR/WINDOW SYSTEM (WHERE APPLICABLE), REF. OPENING SCHEDULES AND SPECS.

08 11 13.02 - PROVIDE HOLLOW METAL WINDOW FRAME AND GLAZING PER OPENING SCHEDULE AND SPECS.

08 14 16.01 - PROVIDE SOLID CORE WOOD DOORS PER SPECIFICATIONS. REF. DETAIL 12/A-10.8. FOR DOOR HEAD CONDITION.

DIVISION 09 - FINISHES

09 29 00.00 - GYPSUM BOARD

09 65 13.03 - PREPARE WALL AND INSTALL RESILIENT BASE

DIVISION 10 - SPECIALITIES

10 11 00.01 - PROVIDE MARKER BOARD, REFERENCE INTERIOR ELEVATIONS FOR SIZE. INSTALL PER SPECIFICATIONS AND DETAIL 18/A-10.5

10 44 16.03 - PROVIDE SURFACE MOUNTED FIRE EXTINGUISHER, REF. SPECS, AND DETAIL17/A-10.5 FOR MOUNTING HEIGHT.

DIVISION 26-27-28 - ELECTRICAL

26 24 16.10 - EXISTING ELECTRICAL PANEL.

26 24 16.20 - NEW ELECTRICAL PANEL.

27 11 00.01 - RELOCATED AND RE-INSTALLED IDF CABINET. REF. ELECTRICAL DRAWINGS.

IDENTIFICATION STAMP
DIV. OF THE STATE ARCHITECT
APP: 04-122772 INC:
REVIEWED FOR
SS ☑ FLS ☑ ACS ☑
DATE: 03/26/2024

SPROTTE | WATSON
ARCHITECTURE | PLANNING

CONSULTANT

DEHESA ELEMENTARY SCHOOL
CONSTRUCTION DOCUMENTS
DEHESA SCHOOL DISTRICT
4612 DEHESA ROAD
EL CAJON, CA 92019

REVISIONS

DESCRIPTION

BUILDING B
KINDERGARTEN
INTERIOR
ELEVATIONS

DATE

01.25.24

JOB #

22-0400

SHEET #

A-B9-2

DOOR SCHEDULE

	OPENING NO.	FRAME NEW	FRAME EXISTING	FRAME ASSEMBLY RATING	FRAME TYPE	FRAME MATERIAL	FRAME BLINDS TYPE	FRAME BLINDS LOCATION	FRAME FINISH	DOOR TYPE	DOOR MATERIAL	DOOR WIDTH	DOOR HEIGHT	DOOR THICKNESS	DOOR GLASS TYPE	DOOR BLINDS TYPE	DOOR LOUVER	DOOR UNDERCUT	DOOR PANIC HARDWARE	DOOR HARDWARE GROUP	DOOR FINISH	OPENING DETAILS HEAD	OPENING DETAILS JAMB	OPENING DETAILS SILL	OPENING DETAILS THRESHOLD	SIGN TYPE (X) NO. OF SIGNS	SECURITY HARDWARE	REMARKS	NOTES	OPENING NO.
BLDG. A	A-1A	●		-	B	AL	-	-	FF	B	WD	6'-0" PR	6'-8"	1 3/4"	-	-	-	-	-	01	CAA	12/A-10.8	17/A-10.8	18/A-10.8	18/A-10.8	A,B, E & G	YES	MODIFY EXISTING OPENING, 1,3	-	A-1A
	A-1B	●		-	B	AL	-	-	FF	B	WD	6'-0" PR	6'-8"	1 3/4"	-	-	-	-	-	01	CAA	12/A-10.8	17/A-10.8	18/A-10.8	18/A-10.8	A,B & E	YES	MODIFY EXISTING OPENING, 1,3	-	A-1B
	A-1C	●		-	A	AL	-	-	FF	A	WD	3'-0"	6'-8"	1 3/4"	-	-	-	-	PH	05	PNT	12/A-10.8	9A-10.8	18/A-10.8	18/A-10.8	A,B & E	YES	PROVIDE NEW ACC THRESHOLD & SIGNAGE	EXISTING DOOR TO BE REUSED	A-1C
	A-1D	●		-	A	AL	-	-	FF	A	WD	3'-0"	6'-8"	1 3/4"	-	-	-	-	-	06	PNT	12/A-10.8	17/A-10.8	18/A-10.8	18/A-10.8	E	YES	PROVIDE NEW ACC THRESHOLD & SIGNAGE	EXISTING DOOR TO BE REUSED	A-1D
	A-2A		●	-	A	HM	-	-	PNT	A	HM	3'-0"	6'-8"	1 3/4"	-	-	-	-	-	11	PNT	-	-	-	-	C & D		NO CHANGE, 4	EXISTING DOOR TO BE REUSED LOCKABLE FROM THE INSIDE	A-2A
	A-3A		●	-	A	HM	-	-	PNT	A	HM	3'-0"	6'-8"	1 3/4"	-	-	-	-	-	11	PNT	-	-	-	-	C & D		NO CHANGE, 4	EXISTING DOOR TO BE REUSED LOCKABLE FROM THE INSIDE	A-3A
	A-4A		●	-	A	HM	-	-	PNT	A	HM	3'-0"	6'-8"	1 3/4"	-	-	-	-	-	07	PNT	-	-	-	-	A,B & E			EXISTING DOOR TO REMAIN	A-4A
	A-5A		●	-	A	HM	-	-	PNT	A	HM	3'-0"	6'-8"	1 3/4"	-	-	-	-	-	11	PNT	-	-	-	-	A,B & E		NO CHANGE	EXISTING DOOR TO REMAIN	A-5A
BLDG. B	B-1A		●	-	A	HM	-	-	PNT	A	HM	3'-0"	7'-0"	1 3/4"	-	-	-	-	PH	08	PNT	-	-	-	-	A,B,E & G	YES	ACC THRESHOLD & SIGNAGE	EXISTING DOOR TO BE REUSED	B-1A
	B-1B		●	-	A	HM	-	-	PNT	A	HM	3'-0"	7'-0"	1 3/4"	-	-	-	-	PH	08	PNT	-	-	-	-	A,B & E	YES	ACC THRESHOLD & SIGNAGE	EXISTING DOOR TO BE REUSED	B-1B
	B-1C	●		-	A	HM	-	-	PNT	A	HM	3'-0"	7'-0"	1 3/4"	-	-	-	-	-	02	PNT	25/A-10.8	30/A-10.8	-	-	B	YES	5		B-1C
	B-1D		●	-	A	HM	-	-	PNT	A	HM	3'-0"	6'-8"	1 3/4"	-	-	-	-	-	11	PNT	-	-	-	-	C & D		NO CHANGE, 4		B-1D
	B-1E		●	-	A	HM	-	-	PNT	A	HM	3'-0"	6'-8"	1 3/4"	-	-	-	-	-	11	PNT	-	-	-	-	C & D		NO CHANGE, 4		B-1E
	B-2A		●	-	A	HM	-	-	PNT	A	HM	3'-0"	7'-0"	1 3/4"	-	-	-	-	PH	08	PNT	-	-	-	-	A,B,E & G	YES	ACC THRESHOLD & SIGNAGE	EXISTING DOOR TO BE REUSED	B-2A
	B-2B		●	-	A	HM	-	-	PNT	A	HM	3'-0"	7'-0"	1 3/4"	-	-	-	-	PH	08	PNT	-	-	-	-	A,B & E	YES	ACC THRESHOLD & SIGNAGE	EXISTING DOOR TO BE REUSED	B-2B
	B-3A		●	-	A	HM	-	-	PNT	A	HM	3'-0"	7'-0"	1 3/4"	-	-	-	-	PH	08	PNT	-	-	-	-	A,B & E	YES	ACC THRESHOLD & SIGNAGE	EXISTING DOOR TO BE REUSED	B-3A
	B-4A	●		-	A	HM	-	-	PNT	A	HM	3'-0"	7'-0"	1 3/4"	-	-	-	-	-	03	PNT	19/A-10.8	26 & 27/A-10.8	25/A-10.8	25/A-10.8	A,B & E	YES	-		B-4A
	B-5A	●		-	A	HM	-	-	PNT	A	HM	3'-0"	7'-0"	1 3/4"	-	-	-	-	-	04	PNT	25/A-10.8	30/A-10.8	-	-	B		-		B-5A
	B-6A		●	-	A	HM	-	-	PNT	A	HM	3'-0"	6'-8"	1 3/4"	-	-	-	-	-	09	PNT	-	-	-	-	C & D		4	LOCKABLE FROM THE INSIDE	B-6A
	B-7A		●	-	A	HM	-	-	PNT	A	HM	3'-0"	6'-8"	1 3/4"	-	-	-	-	-	10	PNT	-	-	-	-	C & D		4	LOCKABLE FROM THE INSIDE	B-7A

PATH OF TRAVEL; DOOR & GATE NOTES:

The clear opening width for a door shall be 32 inches minimum. For a swinging door it shall be measured between the face of the door and the stop, with the door open 90 degrees. There shall be no projections into it below 34": up to 4" maximum projections are allowed between 34" and 80" above the finish floor or ground. Door closers and stops shall be permitted to be 78" minimum above the finish floor or ground. CBC 11B-404.2.3.

Handles, pulls, latches, locks, and other operable parts on accessible doors shall comply with CBC Section 11B-309.4 and shall be operable with one hand and shall not require tight grasping, pinching, or twisting of the wrist. Operable parts of such hardware shall be 34" minimum and 44" maximum above finish floor or ground. Where sliding doors are in the fully open position, operating hardware shall be exposed and usable from both sides. CBC Section 11N-404.2.7.

The levers of lever actuated latches or locks for doors and accessible gates shall be curved with a return to within 1/2 inches of the gate surfaces to prevent catching on the clothing or persons per California Referenced Standards Code. T-24 Part 12, Section 12-10-202, item (F).

The force for pushing or pulling open a door shall be as follows, per CBC Section 11B-404.2.9:
-interior hinged doors, sliding or folding doors, and exterior hinged doors: 5 pounds (22.2N) maximum.

Case by case exceptions may be allowed for required fire doors when specifically allowed by DSA (the appropriate administrative authority), but not to exceed 15 pounds (66.7N). These forces do not apply to the force required to retract latch bolts or disengage other devices that hold the door in a closed position.

The force required for activating any operable parts, such as lever hardware, or disengaging other devices shall be 5 pounds (22.2N) maximum to comply with CBC Section 11B-309.4.

Door closing speed shall be as follows per CBC 11B-404.2.8:
-Closer shall be adjuted so that the required time to move a door from an open position of 90 degrees to a position of 12 degrees from the latch is 5 seconds minimum.
-Spring hinges shall be adjusted so that the required time to move a door from an open position to 70 degrees to the closed position is 1.5 seconds minimum.

Thresholds shall comply with CBC section 11B-404.2.5.

Floor stops shall not be located in the path of travel and 4" maximum from walls.

Hardware (including panic hardware) shall not be provided with "Night Latch" (NL) function for any accessible doors or gates unless the following conditions are met: (Such conditions must be clearly demonstrated and indicated in the specifications)
-Such hardware has a "dogging" feature.
-It is dogged during the time the facility is open.
-Such "dogging" operation is performed only by employees as their job function (non-public use).

Emergency Exit & Panic Hardware shall comply with SFM Standard 12-10-3, section 12-10-302:
(a) The cross-bar shall extend across not less than one half the width of the door/gate.
(d) The ends of the cross-bar shall be curved, guarded or otherwise designed to prevent catching on the clothing of persons during egress.

Swing doors and gates surfaces within 10" of the finish floor or ground shall have a smooth surfaces on the push side extending the full width of the door or gate. Parts creating horizontal or vertical joints in these surfaces shall be within 1/16" of the same plane as the other and be free of sharp or abrasive edges, Cavities created by added kick plates shall be capped. CBC section 11B-404.2.10.

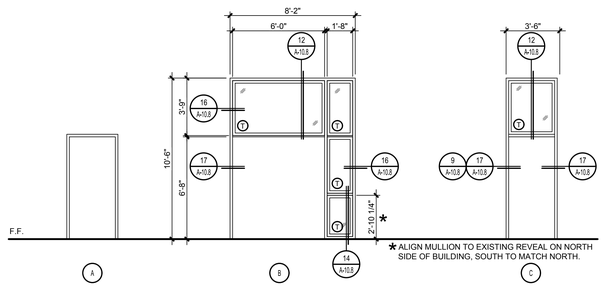

DOOR FRAME TYPES 1/4"=1'-0" 2

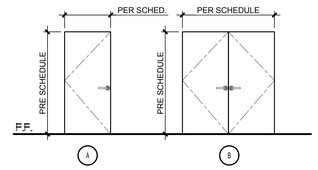

DOOR TYPES 1/4"=1'-0" 1

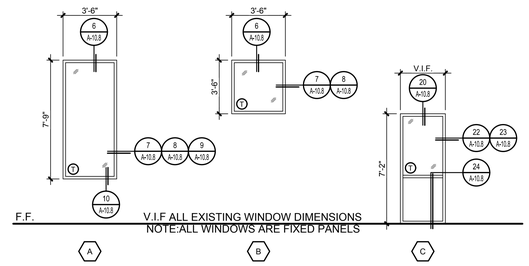

WINDOW SCHEDULE 1/4"=1'-0" 3

OPENING KEY NOTES

OPENING NUMBERING

WHERE MORE THAN ONE OPENING OCCURS PER ROOM, AN END HYPHEN IS ADDED TO ROOM NUMBER AND OPENINGS ARE NUMBERED A, B, C....

ROOM OPENING LTR.
XXX-B

GLASS TYPE

G-01 EXTERIOR INSULATED DUAL PANE LOW-E SOLARBAN 90 GLAZING UNITS.

SCHEDULE ABBREVIATIONS

(E)	EXISTING	EXT	EXTERIOR	BAA	BRONZE ANOD. AL.
PR	PAIR	PP	PUSH PULL	PNT	PAINT
WD	WOOD	L	LEVER	RG	ROLLING GATE
HM	HOLLOW METAL	PH	PANIC HARWARE	CLG	CHAIN LINK GATE.
AL	ALUMINUM	CL	CHAIN LINK	TSG	TUBE STEEL GATE
BLK	BLOCK	STL	STEEL	SEG	S.E.G.
WDW	WINDOW	Y	YES	TBS	TO BE SELECTED
SS	STAINLESS ST.	N	NO	VLSD	VERTICAL LIFT SECTIONAL DOOR
SKY	SKYLIGHT	GL	GLASS	FF	FACTORY FINISH
LVR	LOUVER	OCCS	OVERHEAD COILING COUNTER SHUTTER		
OCSD	OVERHEAD COILING SERVICE DOOR	RUD	ROLL UP DOOR		
IN	INTERIOR	CAA	CLEAR ANOD. ALUM.		

SCHEDULE REMARKS KEYNOTES

1. SIGNAGE MOUNTED ON ADJACENT GLAZING.
2. SIGNAGE MOUNTED ON ADJACENT WALL.
3. ADJACENT SIGNS SHALL HAVE MATCHING HEIGHT AND/OR WIDTH, PROVIDE LAYOUT OF ADJACENT SIGNS IN SIGN SUBMITTAL.
4. SIGNAGE MOUNTED ON WALL AND ON DOOR.
5. ROOM IDENTIFICATION SIGNAGE ON BOTH SIDES OF DOOR.

SIGN TYPE

A. INTERNATIONAL SYMBOL OF ACCESSIBILITY 'ENTRANCE SIGN', SEE DETAIL 11/A-10.7.

B. ROOM IDENTIFICATION SIGNAGE, SEE DETAIL 10/A-10.7.

C. RESTROOM DOOR GEOMETRIC SYMBOL, SEE DETAIL 2 & 5/A-10.7

D. RESTROOM IDENTIFICATION SIGNAGE & PICTOGRAM SEE DETAIL 2 & 5/A-10.7. REFERENCE ROOM NAME FOR SIGN TYPE.

E. 'EXIT' SIGN, SEE DETAIL 13/A-10.7, TYPE 'E1'

F. 'EXIT ROUTE' SIGN, SEE DETAIL 13/A-10.7, TYPE 'E2'

G. "ASSITIVE LISTENING SYSTEM" SEE DETAIL 14/A-10.7.

OPENING GENERAL NOTES

1. REFERENCE SPECIFICATIONS FOR ADDITIONAL INFORMATION.
2. ALL EXTERIOR OPENINGS SHALL BE THOROUGHLY CAULKED AND SEALED FOR WEATHER RESISTANT INTEGRITY.
3. ALL EXTERIOR OPENINGS WITHOUT OVERHANGS, SHALL BE PROVIDED WITH "Z" SHAPED GALVANIZED SHEET METAL FLASHING AT HEAD CONDITIONS.
4. DIMENSIONS FOR MIRRORED OR SYMMETRICAL CONSTRUCTION MAY BE ILLUSTRATED AT ONE SIDE AND SHALL BE ASSUMED SIMILAR FOR THE OTHER.
5. KEYNOTES MAY BE INDICATED AT ONLY A PORTION OF THE BUILDING ELEMENTS. SIMILAR CONSTRUCTION OR BUILDING ELEMENTS SHALL BE ASSUMED TO BE NOTED SIMILARLY.
6. REFERENCE MECHANICAL DRAWINGS FOR UNDERCUTS.
7. EXIT DOORS SHALL BE OPERABLE FROM THE INSIDE WITHOUT THE USE OF KEY, ANY SPECIAL KNOWLEDGE OR EFFORT.
8. MOUNTING HEIGHT OF LATCHING HARDWARE SHALL BE 34" TO 44" A.F.F PER CBC SECTION 11B-404.2.7.MAXIMUM EFFORT TO OPERATE A DOOR SHALL NOT EXCEED 5 POUNDS FOR EXTERIOR DOORS THAT ARE HAND ACTIVATED AND 5 POUNDS FOR INTERIOR DOORS WITH SUCH PULL OR PUSH EFFORT AT RIGHT ANGLES TO HINGED DOORS AND AT THE CENTER OF PLANE OF SLIDING OR FOLDING DOORS. *THE AUTHORITY HAVING JURISDICTION, MAY INCREASE THE MAXIMUM EFFORT TO OPERATE FIRE DOORS TO ACHIEVE POSITIVE LATCHING, BUT NOT TO EXCEED 15 LBS MAX. AND SHALL BE IDENTIFIED ON PLANS FOR CASE-BY-CASE CONDITIONS.
9. ALL HARDWARE SHALL MEET THE REQUIREMENTS OF CBC SECTIONS 11B-404.2.7 AND 11B-309.4
10. THRESHOLDS SHALL COMPLY WITH CBC SECTIONS 11B-404.2.5, 11B-302 AND 11B-303
11. FLOOR STOPS, WHERE SPECIFIED, SHALL NOT BE LOCATED IN THE PATH OF TRAVEL AND 4" MAXIMUM FROM WALLS.
12. PANIC HARDWARE SHALL BE MOUNTED 36" TO 44" ABOVE FINISH FLOOR SURFACE. THE UNLATCHING FORCE SHALL NOT EXCEED 15 POUNDS APPLIED IN THE DIRECTION OF TRAVEL. PANIC HARDWARE SHALL COMPLY WITH CBC SECTION 1010.1.3 & 1010.2.3.
13. CONTRACTOR SHALL COORDINATE SIGN TEXT WITH ARCHITECT.
14. SUBMIT SIGNAGE LIST TO DISTRICT FOR APPROVAL.
15. ALL RESTROOM, IDENTIFICATION, AND EXIT SIGNAGE SHALL BE LOCATED PER DETAILS ON SHEET A-10.7.
16. "I" WITHIN A CIRCLE ILLUSTRATES TEMPERED GLASS LOCATIONS.
17. ALL GLAZING SHALL BE ADEQUATELY SHIMMED FOR DEFLECTION AND THERMAL EXPANSION.
18. ALL EXTERIOR DOORS HAVE THE ABILITY TO BE LOCKED FROM THE "INSIDE" THEREFORE ALL INTERIOR DOORS ARE "PROTECTED".
19. FOR DOOR AND FRAME PAINT COLORS REFERENCE FINISH LEGEND ON SHEET A-8.1.

IDENTIFICATION STAMP
DIV. OF THE STATE ARCHITECT
APP: 04-122772 INC:
REVIEWED FOR
SS ☑ FLS ☑ ACS ☑
DATE: 03/26/2024

SPROTTE WATSON ARCHITECTURE + PLANNING

REGISTERED ARCHITECT
C12359
STATE OF CALIFORNIA

CONSULTANT

DEHESA ELEMENTARY SCHOOL
CONSTRUCTION DOCUMENTS
DEHESA SCHOOL DISTRICT
4612 DEHESA ROAD
EL CAJON, CA 92019

REVISIONS

DESCRIPTION
DOOR & WINDOW SCHEDULES

DATE
01.25.24

JOB #
22-0400

SHEET #
A-8.0

FINISH SCHEDULE

	ROOM NO.	ROOM NAME	FLOOR	BASE	WALLS								WAINSCOT		CEILING		INT. ELEV. SHEET	ROOM NO.	NOTES
					ELEVATION 1		ELEVATION 2		ELEVATION 3		ELEVATION 4								
			MATERIAL	MATERIAL	MATERIAL	COLOR	MATERIAL	COLOR	MATERIAL	COLOR	MATERIAL	COLOR	MATERIAL	HEIGHT	MATERIAL	HEIGHT			
BUILDING A	A-1	LIBRARY	CPT/RF-1	RB-1	TWP/PNT-1	-	ACP/PNT-1	-	PNT-1	-	PNT-1	-	-	-	ACT-2	+-11'-4"	1/A-A9.1	A-1	-
BUILDING B	B-1	KINDERGARTEN CLASSROOM	CPT/RF-1	RB-1	TWP/PNT-1	-	TWP/PNT-1	-	PNT-1	-	PNT-1	-	-	-	ACT-1	9'-0"	1/A-B9.1	B-1	-
	B-2	SECOND CLASSROOM	CPT	RB-1	PNT-1	-	PNT-1	-	PNT-1	-	TWP/PNT-1	-	-	-	ACT-1	9'-0"	2/A-B9.1	B-2	-
	B-3	STAFF LOUNGE	RFT-1	RB-1	TWP/PNT-1	-	PNT-1	-	PNT-1	-	PNT-1	-	-	-	ACT-1	9'-0"	4/A-B9.1	B-3	-
	B-4	GREEN ROOM	CPT	RB-1	PNT-1	-	PNT-2	-	PNT-1	-	PNT-1	-	-	-	ACT-1	9'-0"	1/A-B9.2	B-4	-
	B-5	COPY ROOM	CPT	RB-1	PNT-1	-	PNT-1	-	PNT-1	-	PNT-1	-	-	-	ACT-1	9'-0"	2A-B9.2	B-5	-

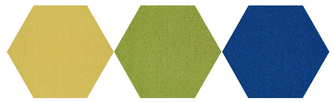

PLANE HEX 5T054
54211 Yellow, 54326 Green, 54429 Royal
Size: 28.8" x 24.9"
Installation: random

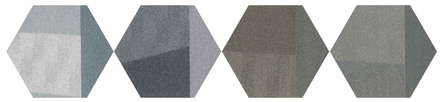

BASE HEX 5T159
59501 Scale, 59581 Connect, 59104 Shift, 59518 Proportion
Size: 28.8" x 24.9"
Installation: random

CARPET TILES FOR BLDG. B-KINDERGARTEN | 3

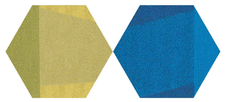

COLOR SHIFT HEX 5T161
59325 Sublime, 59429 Electric
Size: 28.8" x 24.9"
Installation: random

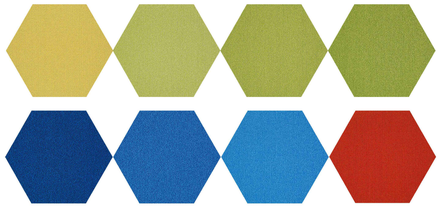

PLANE HEX 5T054
54211 Yellow, 54284 Citron, 54325 Chartreuse, 54326 Green
54429 Royal, 54432 Wave, 54436 Cyan, 54870 Poppy
Size: 28.8" x 24.9"
Installation: random

CARPET TILES FOR BUILDING A-ADMIN. | 2

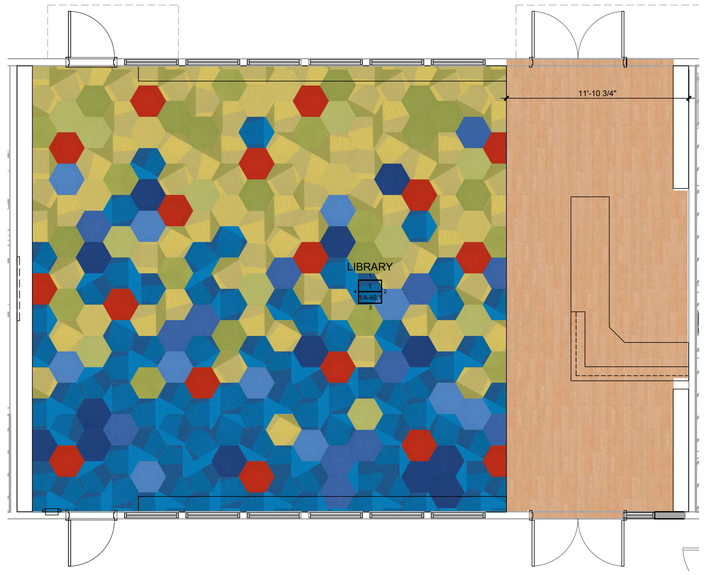

LVT-1 AMTICO SIGNATURE/WOOD/MAPLE/AROW6840/6" X 36" INSTALLED VERTICAL ASHLAR

NORTH

BUILDING A ADMIN FINISH PLAN | 1/4" = 1'-0" | 1

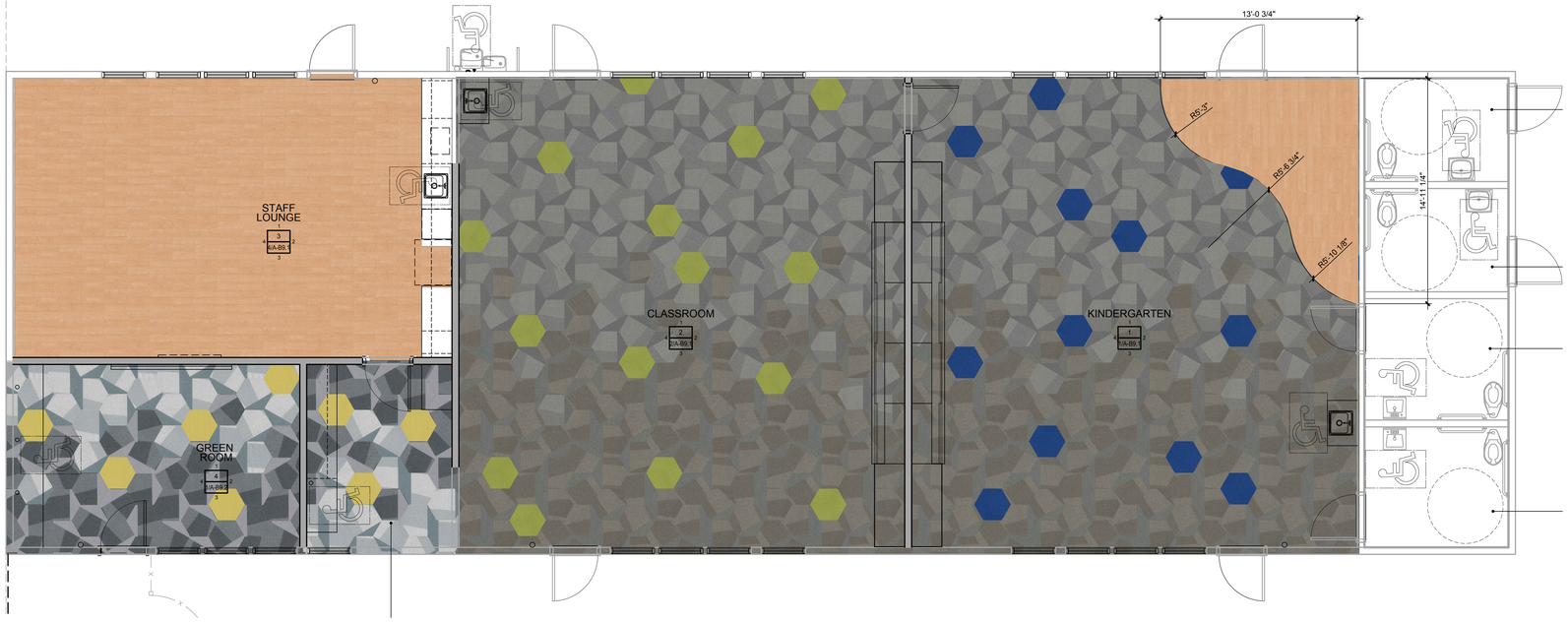

LVT-1 AMTICO SIGNATURE/WOOD/MAPLE/AROW6840/6" X 36" INSTALLED VERTICAL ASHLAR

NORTH

BUILDING B KINDERGARTEN FINISH PLAN | 1/4" = 1'-0" | 4

FINISH SCHEDULE GENERAL NOTES

1. REFERENCE SPECIFICATIONS, APPLICABLE NOTES ON MECHANICAL, ELECTRICAL AND PLUMBING DRAWINGS FOR ADDITIONAL INFORMATION.
2. FINISHES OR SUBSTRATES DENOTED WITHIN THE SCHEDULE ARE FOR THE PREDOMINANT AREA TO BE IDENTIFIED. VARIATIONS MAY OCCUR AND SHALL BE ADDRESSED AS SIMILAR TO THE INTENT AS WHAT IS IDENTIFIED.
3. REFERENCE DETAIL 16/A-10.2 FOR TYPICAL FLOOR TRANSITION DETAILS.
4. ALL FINISHES SHALL COMPLY WITH CBC, CFC, AND TITLE 19 C.C.R.
5. PAINT FINISH ON WALL SURFACES SHALL INCLUDE EXPOSED CONDUITS, BUT SHALL EXCLUDE PRE-FINISHED ITEMS SUCH AS GRILLS.
6. REFERENCE INT. ELEVATIONS FOR MULTIPLE WALL FINISHES.
7. ALL FLOOR FINISHES SHALL HAVE A COEFFICIENT OF FRICTION GREATER THAN OR EQUAL TO 0.6, PER ASTM C1028.
8. REFERENCE PLANS & INTERIOR ELEVATIONS FOR COLOR LOCATION.
9. ALL FLOOR FINISHES SHALL BE FIRM, STABLE AND SLIP RESISTANT.

FINISH/MATERIAL ABBREVIATIONS

ACT	ACOUSTICAL CEILING TILE	PT	PORCELAIN TILE
CBB	CEMENT BACKER UNIT	PNT	PAINT
CCB	CONCRETE COVED BASE	QT	QUARRY TILE
CMB	CONCRETE MASONRY BOARD	RB	RESILIENT BASE
CONC	CONCRETE	RBF	RUBBER FLOOR
CPT	CARPET	RF	RESILIENT FLOOR
CT	CERAMIC TILE	SC	SEALED CONCRETE
EP	EPOXY	SF	SEALED FINISH
EP-TER	EPOXY TERRAZZO	SS	STAINLESS STEEL
EXC	EXPOSED CONCRETE	SSUR	SOLID SURFACING
FF	FACTORY FINISH	STAIN	CONCRETE STAIN
FRP	FIBERGLASS REINFORCED PLASTIC	STL	STEEL FLOOR
GL	GLASS	SV	SHEET VINYL
GP	GYPSUM PLASTER	TBS	TO BE SELECTED (STANDARD COLORS)
GWB	GYPSUM WALL BOARD	TCT	TECTUM PANELS
IGWB	IMPACT RESISTANT GYPSUM WALL BOARD	TER	TERRAZZO
MCT	METAL CEILING TILE	TWP	TACWALL
MD	METAL DECK	U.O.J.	UNDERNEATH OF JOIST
MWB	METAL WRAPPED BASE	VCT	VINYL COMPOSITION TILE
PE	PLASTIC EGGCRATE	VTS	VINYL TACK SURFACE
PL	PLASTIC LAMINATE	VWC	VINYL WALL COVERING
PLA	PLASTER	WD	WOOD

FINISH LEGEND

WALL FINISHES

PAINT
- PNT — SHERWIN WILLIAMS: COLORS;
- PNT-1 — SW 7757 HIGH REFLECTIVE WHITE
- PNT-2 — ROSCO CHROMA KEY GREEN RF5711, REF. SPECS.
- PNT-3 — SW 6215 ROCKY RIVER, SATIN (TRIM, FASCIA-MATCH EXISTING)
- PNT-4 — SW 6185 ESCAPE GRAY, SEMI GLOSS (DOORS, PANELS-MATCH EXISTING)
- PNT-5 — TUFF-COAT, SANDSTONE (EXTERIOR BUILDING-MATCH EXISTING)

WALL COVERING

ACOUSTIC WALL PANELS
- ACP — LAMVIN: MAHARAM, MANNER 466177, COLORS;
- ACP-1 — 025 VIVID
- ACP-2 — 020 PARAKEET
- ACP-3 — 046 PASSERINE
- ACP-4 — 014 PEEL

TAC WALL PANELS
- TWP — KOROSEAL:
- TWP-1 — DEEP SEA
- TWP-2 — BOTANICAL
- TWP-3 — ACORN
- TWP-4 — HARBOR

FLOOR FINISH

CARPET TILE
- CPT — SHAW CONTRACT: HEX
  COLOR SHIFT HEX 5T161, COLORS:
- CPT-1 — 59325 SUBLIME
- CPT-2 — 59429 ELECTRIC
  PLANE HEX 5T054, COLORS:
- CPT-3 — 54211 YELLOW
- CPT-4 — 54284 CITRON
- CPT-5 — 54325 CHARTREUSE
- CPT-6 — 54326 GREEN
- CPT-7 — 54429 ROYAL
- CPT-8 — 54432 WAVE
- CPT-9 — 54436 CYAN
- CPT-10 — 54870 POPPY
  BASE HEX 5T159, COLORS:
- CPT-11 — 59501 SCALE
- CPT-12 — 59581 CONNECT
- CPT-13 — 59104 SHIFT
- CPT-14 — 59518 PROPORTION

RESILIENT FLOORING
- RF — MANNINGTON: AMTICO SIGNATURE XPRESS COLLECTION
- RF-1 — WOOD, MAPLE

RUBBER BASE
- RB — JOHNSONITE: COLORS:
- RB-1 — 08 ICICLE

ALUMINUM BASE
- DIAMOND LIFE: 6" HIGH, ANOZIDED ALUMINUM BASE

PLASTIC LAMINATE
- PL — FORMICA:
- PL-1 — 9237-58, SAND MAPLE MATTE FINISH

SOLID SURFACE
- SSUR — AVONITE:
- SSUR-1 — ALPINE SHIMMER 8206 (LIBRARY RECEPTION DESK)

CEILING FINISH

ACOUSTIC CEILING TILE
- ACT — ARMSTRONG: ACOUSTICAL LAYIN CEILING SUSPENSION SYSTEM AND ACOUSTICAL CEILING TILES
- ACT-1 — 2X4 ULTIMA HIGH NRC, BEVELED TEGULAR 1944 (NRC .80)
- ACT-2 — 2X5 ULTIMA HIGH NRC, BEVELED TEGULAR 1933 (NRC .80)

IDENTIFICATION STAMP
DIV. OF THE STATE ARCHITECT
APP: 04-122772 INC:
REVIEWED FOR
SS ☑ FLS ☑ ACS ☑
DATE: 03/26/2024

SPROTTE | WATSON
ARCHITECTURE + PLANNING

LICENSED ARCHITECT
C12359
STATE OF CALIFORNIA

CONSULTANT

DEHESA ELEMENTARY SCHOOL
CONSTRUCTION DOCUMENTS
DEHESA SCHOOL DISTRICT
4612 DEHESA ROAD
EL CAJON, CA 92019

REVISIONS

DESCRIPTION

FINISH SCHEDULE
FINISH LEGEND
FINISH PLANS

DATE
01.25.24

JOB #
22-0400

SHEET #
A-8.1

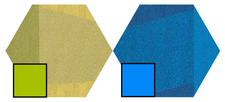

COLOR SHIFT HEX 5T161
59325 Sublime, 59429 Electric
Size: 28.8" x 24.9"
Installation: random

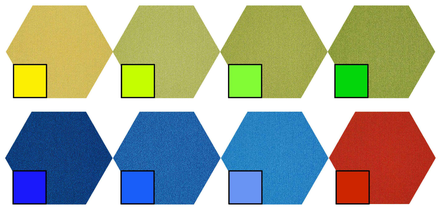

PLANE HEX 5T054
54211 Yellow, 54284 Citron, 54325 Chartreuse, 54326 Green
54429 Royal, 54432 Wave, 54436 Cyan, 54870 Poppy
Size: 28.8" x 24.9"
Installation: random

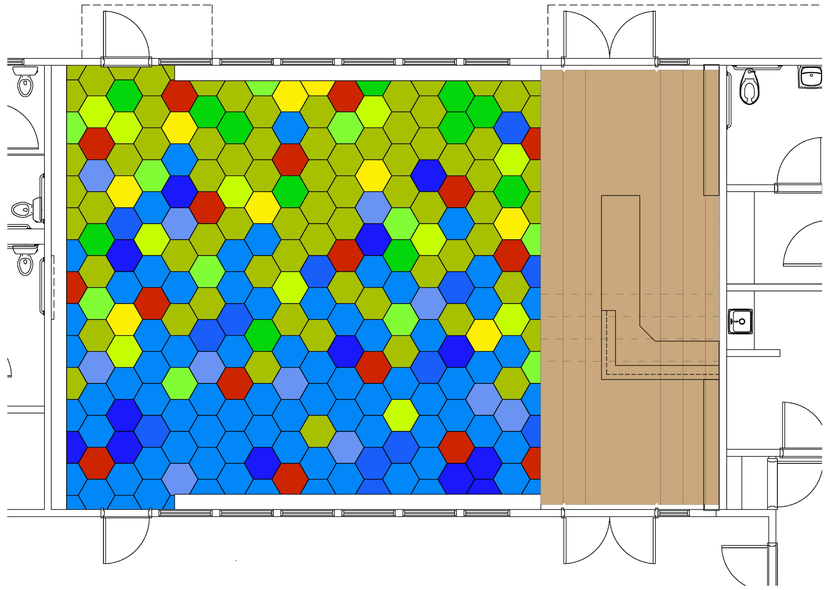

LVT-1 AMTICO SIGNATURE/WOOD/MAPLE/AROW6840/6" X 36" INSTALLED VERTICAL ASHLAR

NORTH

BUILDING A ADMIN FINISH PLAN INSTALL GUIDE | 1/4" = 1'-0" | 1

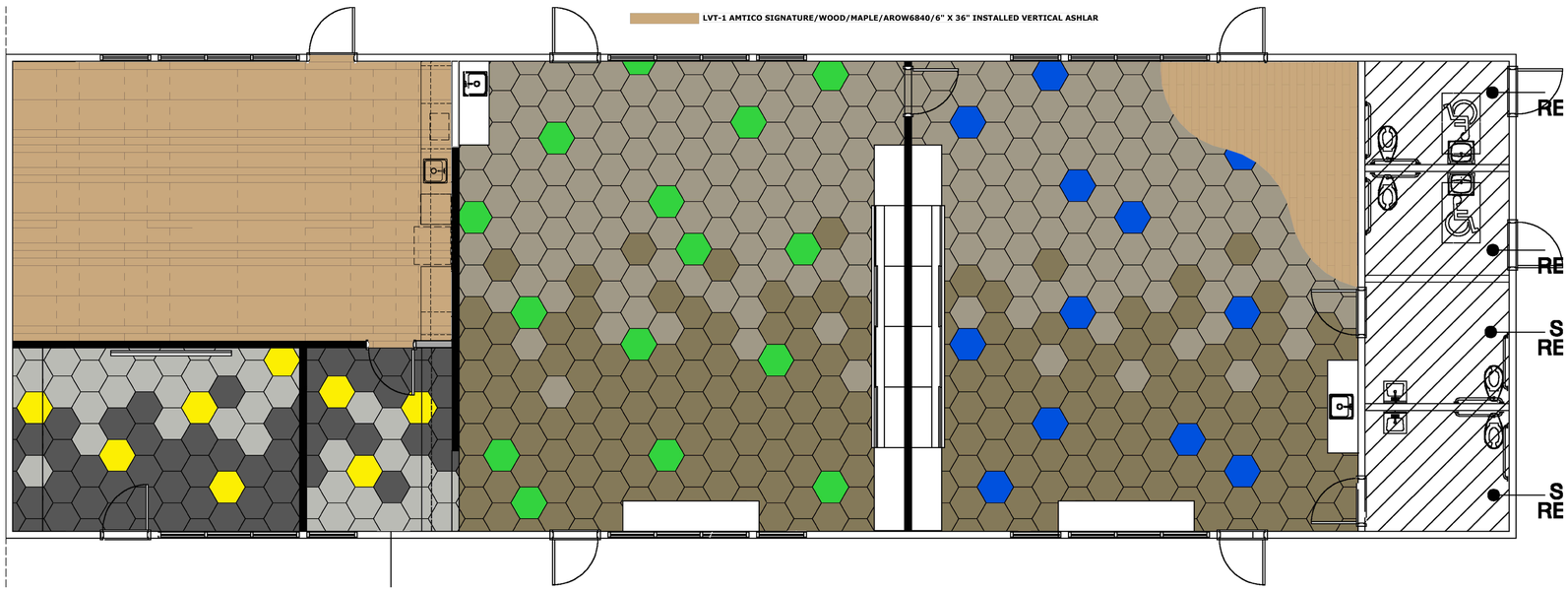

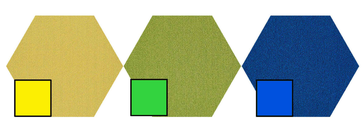

PLANE HEX 5T054
54211 Yellow, 54326 Green, 54429 Royal
Size: 28.8" x 24.9"
Installation: random

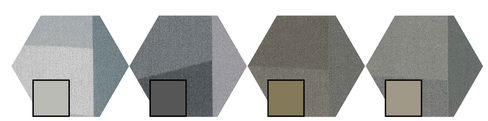

BASE HEX 5T159
59501 Scale, 59581 Connect, 59104 Shift, 59518 Proportion
Size: 28.8" x 24.9"
Installation: random

NORTH

BUILDING B KINDERGARTEN FINISH PLAN INSTALL GUIDE | 1/4" = 1'-0" | 2

FINISH SCHEDULE GENERAL NOTES

1. REFERENCE SPECIFICATIONS, APPLICABLE NOTES ON MECHANICAL, ELECTRICAL AND PLUMBING DRAWINGS FOR ADDITIONAL INFORMATION.
2. FINISHES OR SUBSTRATES DENOTED WITHIN THE SCHEDULE ARE FOR THE PREDOMINANT AREA TO BE IDENTIFIED. VARIATIONS MAY OCCUR AND SHALL BE ADDRESSED AS SIMILAR TO THE INTENT AS WHAT IS IDENTIFIED.
3. REFERENCE DETAIL 16/A-10.2 FOR TYPICAL FLOOR TRANSITION DETAILS.
4. ALL FINISHES SHALL COMPLY WITH CBC, CFC, AND TITLE 19 C.C.R.
5. PAINT FINISH ON WALL SURFACES SHALL INCLUDE EXPOSED CONDUITS, BUT SHALL EXCLUDE PRE-FINISHED ITEMS SUCH AS GRILLS.
6. REFERENCE INT. ELEVATIONS FOR MULTIPLE WALL FINISHES.
7. ALL FLOOR FINISHES SHALL HAVE A COEFFICIENT OF FRICTION GREATER THAN OR EQUAL TO 0.6, PER ASTM C1028.
8. REFERENCE PLANS & INTERIOR ELEVATIONS FOR COLOR LOCATION.
9. ALL FLOOR FINISHES SHALL BE FIRM, STABLE AND SLIP RESISTANT.

FINISH/MATERIAL ABBREVIATIONS

ACT	ACOUSTICAL CEILING TILE	PT	PORCELAIN TILE
CBB	CEMENT BACKER UNIT	PNT	PAINT
CCB	CONCRETE COVED BASE	QT	QUARRY TILE
CMB	CONCRETE MASONRY BOARD	RB	RESILIENT BASE
CONC	CONCRETE	RBF	RUBBER FLOOR
CPT	CARPET	RF	RESILIENT FLOOR
CT	CERAMIC TILE	SC	SEALED CONCRETE
EP	EPOXY	SF	SEALED FINISH
EP-TER	EPOXY TERRAZZO	SS	STAINLESS STEEL
EXC	EXPOSED CONCRETE	SSUR	SOLID SURFACING
FF	FACTORY FINISH	STAIN	CONCRETE STAIN
FRP	FIBERGLASS REINFORCED PLASTIC	STL	STEEL FLOOR
GL	GLASS	SV	SHEET VINYL
GP	GYPSUM PLASTER	TBS	TO BE SELECTED (STANDARD COLORS)
GWB	GYPSUM WALL BOARD		
IGWB	IMPACT RESISTANT GYPSUM WALL BOARD	TCT	TECTUM PANELS
		TER	TERRAZZO
MCT	METAL CEILING TILE	TWP	TACWALL
MD	METAL DECK	U.O.J.	UNDERNEATH OF JOIST
MWB	METAL WRAPPED BASE	VCT	VINYL COMPOSITION TILE
PE	PLASTIC EGGCRATE		
PL	PLASTIC LAMINATE	VTS	VINYL TACK SURFACE
PLA	PLASTER	VWC	VINYL WALL COVERING
		WD	WOOD

FINISH LEGEND

WALL FINISHES

PAINT

	PNT	SHERWIN WILLIAMS: COLORS;
	PNT-1	SW 7757 HIGH REFLECTIVE WHITE
	PNT-2	ROSCO CHROMA KEY GREEN RF5711, REF. SPECS.
	PNT-3	SW 6215 ROCKY RIVER, SATIN (TRIM, FASCIA-MATCH EXISTING)
	PNT-4	SW 6185 ESCAPE GRAY, SEMI GLOSS (DOORS, PANELS-MATCH EXISTING)
	PNT-5	TUFF-COAT, SANDSTONE (EXTERIOR BUILDING-MATCH EXISTING)

WALL COVERING

ACOUSTIC WALL PANELS

	ACP	LAMVIN: MAHARAM, MANNER 466177, COLORS;
	ACP-1	025 VIVID
	ACP-2	020 PARAKEET
	ACP-3	046 PASSERINE
	ACP-4	014 PEEL

TAC WALL PANELS

	TWP	KOROSEAL:
	TWP-1	DEEP SEA
	TWP-2	BOTANICAL
	TWP-3	ACORN
	TWP-4	HARBOR

FLOOR FINISH

CAREPT TILE

	CPT	SHAW CONTRACT: HEX
		COLOR SHIFT HEX 5T161, COLORS:
	CPT-1	59325 SUBLIME
	CPT-2	59429 ELECTRIC
		PLANE HEX 5T054, COLORS:
	CPT-3	54211 YELLOW
	CPT-4	54284 CITRON
	CPT-5	54325 CHARTREUSE
	CPT-6	54326 GREEN
	CPT-7	54429 ROYAL
	CPT-8	54432 WAVE
	CPT-9	54436 CYAN
	CPT-10	54870 POPPY
		BASE HEX 5T159, COLORS:
	CPT-11	59501 SCALE
	CPT-12	59581 CONNECT
	CPT-13	59104 SHIFT
	CPT-14	59518 PROPORTION

RESILIENT FLOORING

	RF	MANNINGTON: AMTICO SIGNATURE XPRESS COLLECTION
	RF-1	WOOD, MAPLE

RUBBER BASE

	RB	JOHNSONITE: COLORS:
	RB-1	08 ICICLE

ALUMINUM BASE

		DIAMOND LIFE: 6" HIGH, ANOZIDED ALUMINUM BASE

PLASTIC LAMINATE

	PL	FORMICA:
	PL-1	9237-58, SAND MAPLE MATTE FINISH

SOLID SURFACE

	SSUR	AVONITE:
	SSUR-1	ALPINE SHIMMER 8206 (LIBRARY RECEPTION DESK)

CEILING FINISH

ACOUSTIC CEILING TILE

	ACT	ARMSTRONG: ACOUSTICAL LAYIN CEILING SUSPENSION SYSTEM AND ACOUSTICAL CEILING TILES
	ACT-1	2X4 ULTIMA HIGH NRC, BEVELED TEGULAR 1944 (NRC .80)
	ACT-2	2X5 ULTIMA HIGH NRC, BEVELED TEGULAR 1933 (NRC .80)

IDENTIFICATION STAMP
DIV. OF THE STATE ARCHITECT
APP: 04-122772 INC:
REVIEWED FOR
SS ☑ FLS ☑ ACS ☑
DATE: 03/26/2024

SPROTTE WATSON ARCHITECTURE + PLANNING

CONSULTANT

DEHESA ELEMENTARY SCHOOL
CONSTRUCTION DOCUMENTS
DEHESA SCHOOL DISTRICT
4612 DEHESA ROAD
EL CAJON, CA 92019

REVISIONS

DESCRIPTION
FINISH PLANS

DATE
01.25.24

JOB #
22-0400

SHEET #
A-8.2

ORNAMENTAL STEEL FENCE & GATE PLAN — 3/8"=1'-0" — 21

KEYNOTES
1. GALVANIZED STEEL FENCE AND GATE, REF. DETAIL 6/-.
2. EXISTING BUILDING.
3. LINE OF EXISTING OVERHANG.
4. EXISTING GALVANIZED STEEL FENCE.
5. CONCRETE WALK, REF. CIVIL SHEETS.
6. EXISTING CONCRETE HARDSCAPE.

GENERAL NOTES
1. REFERENCE CIVIL, STRUCTURAL AND SPECIFICATIONS FOR ADDITIONAL INFORMATION.

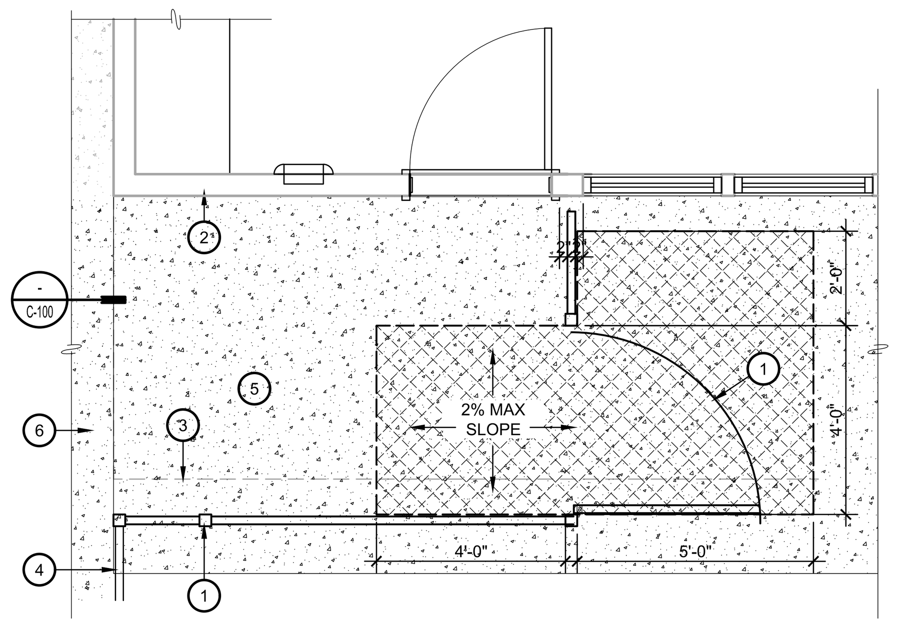

O.S. POST & FOOTING SCHEDULE — NTS — 16

ORNAMENTAL STEEL FENCE POST FOOTING SCHEDULE
POSTS AT MAX. 8'-0" O.C.

MAXIMUM FENCE HEIGHT	MINIMUM LINE POST SIZE	LINE POST FOOTING DIMENSIONS	MINIMUM TERMINAL POST SIZE	TERMINAL POST FOOTING DIMENSIONS
11'-6"	3" x 3" x 1/4"	18" Ø x 4'-3"	3" x 3" x 1/4"	18" Ø x 4'-9"

ORNAMENTAL STEEL GATE POST FOOTING SCHEDULE
MAX. 11'-6" GATE HEIGHT

MAX. GATE LEAF WIDTH	GATE POST SIZE	GATE POST FOOTING DIMENSIONS
4'-0"	3" x 3" x 1/4"	18" Ø x 4'-9"

ORNAMENTAL STEEL FENCE & GATE — 3/8"=1'-0" — 6

KEYNOTES
1. 3" x 3" x 1/4" GALVANIZED TUBULAR STEEL (T.S.) FENCE POSTS, TYP.
2. CANTILEVERED FENCE END FRAME: 3" x 1 3/4" x 3/16" GALVANIZED T.S. (WHERE FENCE LINE ENDS AT BUILDING)
3. 1 3/4" x 1 3/4" x 3/16" GALVANIZED T.S. TOP AND BOTTOM RAIL.
4. 1" x 1" x 12 GA. T.S. PICKETS - EQUALLY SPACED - 4" MAX. O.C.
5. GATE CLOSURE AND HINGE PER HARDWARE SPECS.
6. 2" X 2" X 3/16" STEEL HSS GATE FRAME, GAP AROUND GATE TO BE EQUAL AT TOP & SIDE. HINGE WIDTH TO SET GAP WIDTH.
7. PANIC HARDWARE, ASSEMBLY PER HARDWARE GROUP.
8. TUBE STEEL KICK PLATE, REF. DETAIL 12/-.
9. TYPICAL FENCE POST FOOTING: 1'-6" DIA. x 4'-3" DEEP WITH (6) #6 VERTICAL, EQ. SPACED AND #3 CLOSED TIES AT 9" O.C. VERT. MAINTAIN 3" MINIMUM REBAR COVERAGE. REF. 16/- FOR ADDITIONAL POST FOOTINGS.
10. CONCRETE WALK.
11. VERIFY SUFFICIENT CLEARANCE OF FENCE POST FOOTINGS TO NOT UNDERMINE BUILDING FOUNDATIONS / GRADE BEAMS.
12. ADJACENT BUILDING WALL, WHERE OCCURS.
13. BOTTOM OF ADJACENT BUILDING FOUNDATION.
14. SECURITY PULL REF. HARDWARE GROUP AND NOTES. PREP HSS WITH FLAME CUT OR LAZER CUT REGIONS FOR HARDWARE INSTALLATION.
15. GALV. 3/8" STEEL PLATE GATE STOP WELDED TO FRAME.

GENERAL NOTES
1. ALL COMPONENTS OF FENCING SHALL BE G-90 GALVANIZED STEEL.
2. EASE ALL EDGES GRIND WELDS SMOOTH. TOUCH-UP GALVANIZATION.
3. ALL WELDED CONNECTIONS TO BE 3/16" FILLET, ALL AROUND.
4. MAINTAIN POSTS VERTICAL AT ALL LOCATIONS.
5. GATE OPERATING FORCE SHALL BE MAX. 5 LBS.
6. GATE HARDWARE: SEE HARDWARE SPECS. AND GATE SCHEDULE.
7. ADJUST GATE CLOSING SPEED TO 1.5 SECONDS MIN. (11B-404.2.8)
8. DOOR AND GATE SPRING HINGES SHALL BE ADJUSTED SO THAT FROM THE OPEN POSITION OF 70 DEGREES, THE DOOR OR GATE SHALL MOVE TO THE CLOSED POSITION IN 1.5 SECONDS MINIMUM. (CBC 11B-404.2.8.2)

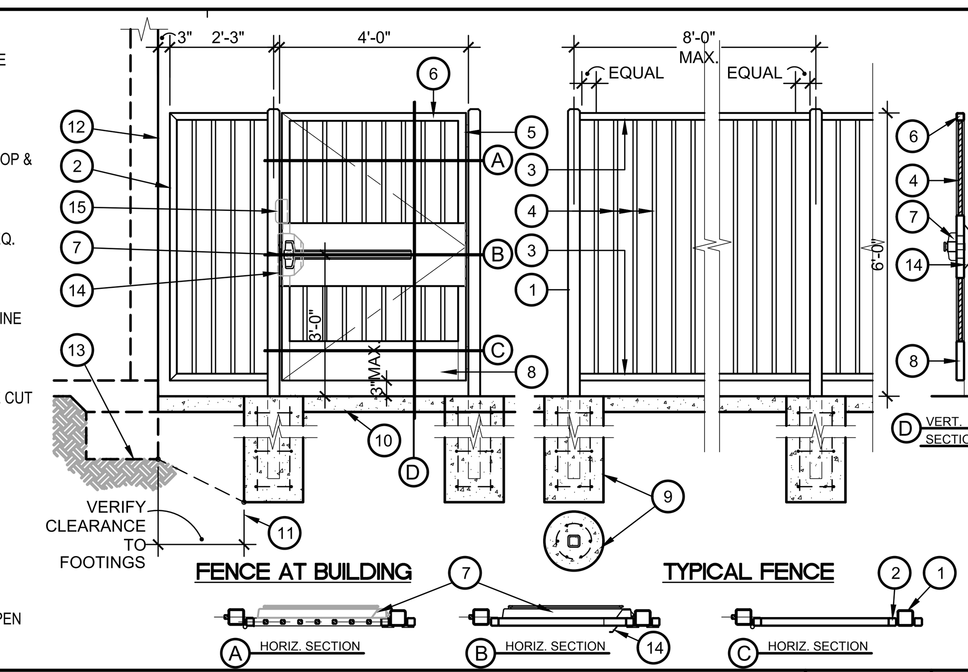

CLEARANCE AT GATES — 1/2"=1'-0" — 1

KEYNOTES
1. 24" MIN. CLEAR AT PULL SIDE.
2. 12" MIN. CLEAR AT PUSH SIDE OF GATE, ONLY REQUIRED IF GATE IS EQUIPPED WITH BOTH A LATCH AND A CLOSER.

GENERAL NOTES
1. DETAIL ILLUSTRATES SIMILAR CONDITIONS FOR SITE GATES IN P.O.T.
2. REFERENCE CBC 2022 FIGURE 11B-404.2.4.1 AND TABLE 11B-404.2.4.1.

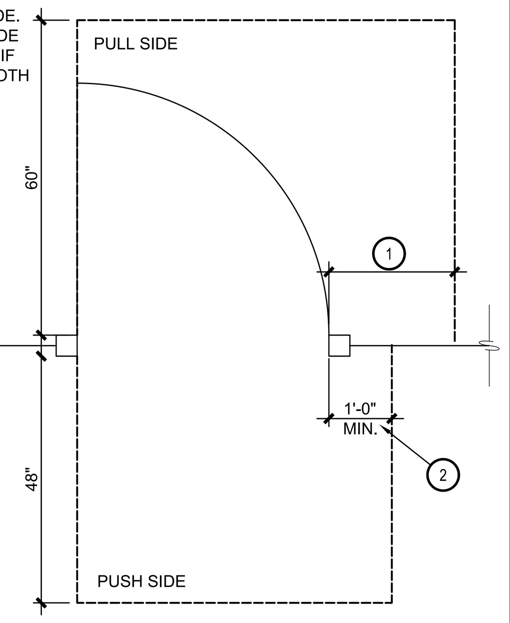

NOT USED — 27

LOADING AND UNLOADING SIGN — 1 1/2" = 1'-0" — 22

KEYNOTES
1. PROVIDE ACCESSIBLE SIGNAGE WITH WHITE IMAGE AND LETTERS ON A BLUE BACKGROUND. ENAMEL PAINTED .08" ALUMINUM SIGN MOUNTED AT 80" ABOVE GRADE MEASURED FROM BOTTOM OF THE SIGN. LETTERS TO BE A MIN. OF 2" HIGH.
2. ANCHOR EACH SIGN WITH 2- 5/16" CARRIAGE BOLTS, CUT BOLTS 1/8" BEYOND NUT AND FLATTEN TO DETER REMOVAL.

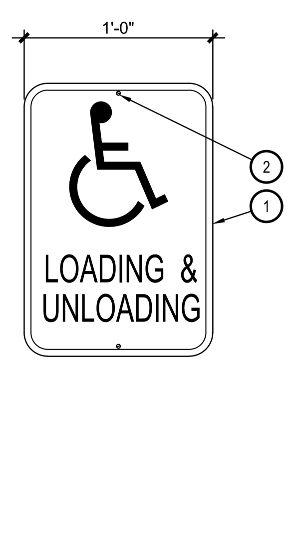

GENERAL NOTES
1. BLUE COLOR TO BE #15090 PER FED. STD. 595C.
2. ISA PROPORTIONS SHALL MATCH CBC FIGURE 11B-703.7.2.1 SIGN SURFACE SHALL BE REFLECTIVE.
3. THE SPACING BETWEEN THE BASELINES OF SEPARATE LINES OF CHARACTERS WITHIN A MESSAGE SHALL BE 135% MIN. AND 170% MAX. OF THE CHARACTER HEIGHT, TYPICAL.
4. ATTACH SIGN TO FENCE. REF. DETAIL 20/-.

NOT USED — 17

ORNAMENTAL FENCE KICKPLATE — 1 1/2"=1'-0" — 12

KEYNOTES
1. LINE INDICATES GATE FRAME BEYOND.
2. TUBE STEEL PICKET PER GATE DETAILS.
3. 2" X 10" X 3/16" HSS KICKPLATE.
4. FINISH SURFACE, REF. CIVIL.

GENERAL NOTES
1. ALL WELDS TO BE GROUND SMOOTH PRIOR TO FINISH.
2. ALL WELDED CONNECTIONS TO BE FILLET, ALL AROUND, REF. SPECS.

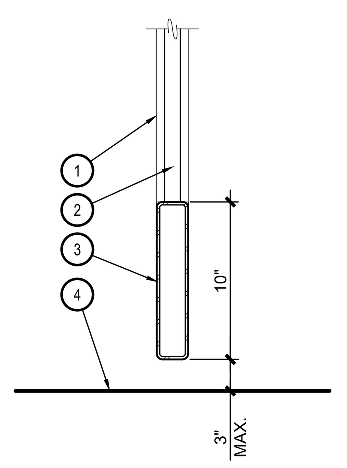

ACCESSIBLE ROUTE TRANSITION — 12"=1'-0" — 7

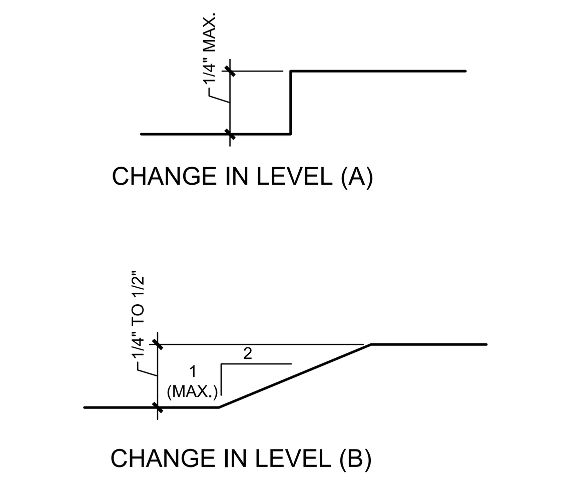

CHANGE IN LEVEL (A)

CHANGE IN LEVEL (B)

ACCESSIBLE ROUTE 1/4" VERTICAL MAX AND 1/4" BEVELED MAXIMUM AT 1:2 ALLOWABLE HEIGHT CHANGE

OBJECTS IN PATH OF TRAVEL — 3/8"=1'-0" — 2

KEYNOTES
1. 4" MAX. PROJECTION INTO PEDESTRIAN CIRCULATION AREA.
2. PROJECT-OUT WINDOW.
3. PROJECTION AREA.

GENERAL NOTES
1. OBJECTS PROJECTING FROM WALLS WITH THEIR LEADING EDGES BETWEEN 27" AND 80" ABOVE THE FINISHED FLOOR SHALL PROTRUDE NO MORE THAN 4" INTO WALKS, HALLS, CORRIDORS, PASSAGEWAYS OR AISLES.

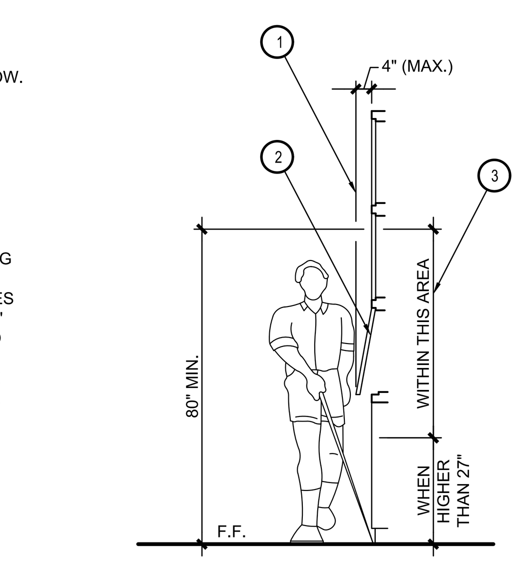

WHEEL STOP/BUMPER — 1"=1'-0" — 28

KEYNOTES
1. #6 X 16" LG. REINF. BAR
2. PRECAST CONC. WHEEL STOP, SET IN CONSTRUCTION ADHESIVE.
3. A.C. PAVING

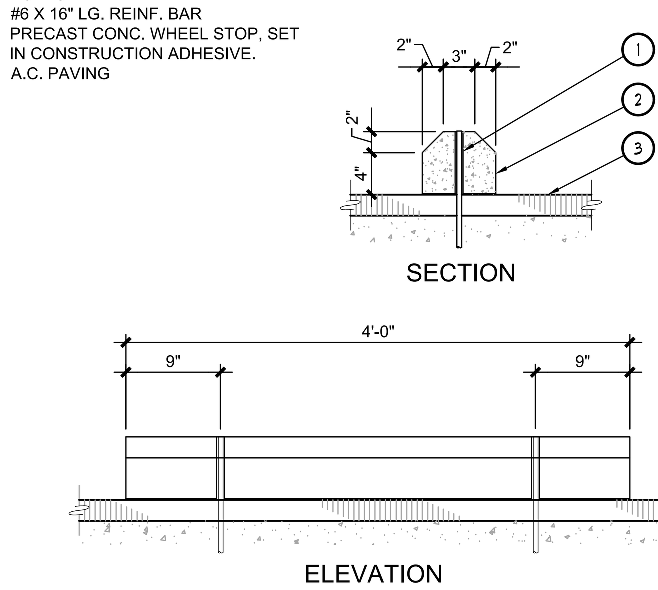

SECTION

ELEVATION

ACCESSIBLE PARKING SYMBOL — 1" = 1'-0" — 23

KEYNOTES
1. BLUE PAINT BACKGROUND COLOR SHALL APPROXIMATE FS 15090 IN FEDERAL STANDARD 595C.
2. WHITE PAINT FIGURE AND BORDER.

GENERAL NOTES
1. CENTER SYMBOL AT END OF DRIVE LANE OF THE PARKING STALL AND CENTERED WITHIN THE PARKING SPACE.

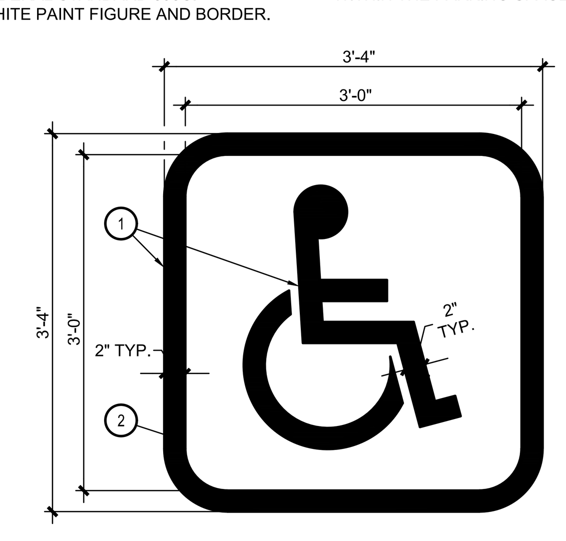

CHAIN LINK FENCE — 1/4"=1'-0" — 18

KEYNOTES
1. END OR CORNER POST, STEEL PIPE.
2. LINE POST, STEEL PIPE.
3. TENSION BAR.
4. TRUSS ROD WITH TIGHTNER AT ALL CORNERS, ANCHOR ENDS AND GATE POSTS.
5. TOP RAIL, STEEL POST.
6. TENSION WIRE, 6GA. GALV. COIL SPRING STEEL WIRE.
7. STRETCHER AT ENDS.
8. TIE WIRE, 9GA. AT 14".
9. CHAIN LINK FABRIC TO MATCH EXISTING, REF. SPEC. KNUCKLED TOP EDGE.
10. HORIZONTAL BRACE, STEEL PIPE AT CORNERS, ANCHORS AND ENDS.
11. DIA. CORNER FOOTING: DIA.= 4X OUTSIDE DIA. OF POST. 1'-6" MIN.
12. DIA. INTERMEDIATE FOOTING: DIA.= 3X OUTSIDE DIAMETER OF POST.
13. FOOTING DEPTH SHALL BE A MIN. 24" PLUS AN ADDITIONAL 3" FOR EACH 1 FT. INCREASE IN FENCE HEIGHT OVER 4 FT. EXAMPLE: 10'-0" HIGH FENCE HAS A FOOTING DEPTH OF 3'-6".
14. DIA. @ GATE POST: DIA. =5X OUTSIDE DIA. OF POST.

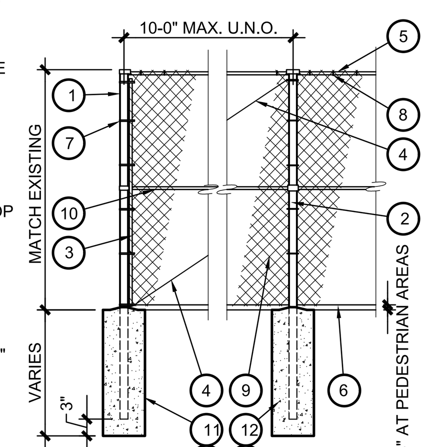

GENERAL NOTES
1. ALL FOOTINGS SHALL BE 520-C-2500 CONCRETE.
2. CHAIN LINK FENCE & GATES SHALL CONFORM TO SECTION 206-6 OF THE STANDARD SPECIFICATIONS FOR PUBLIC WORKS CONSTRUCTION UNLESS SPECIFICALLY NOTED ON THIS DRAWING.
3. REF. PLANS AND SPECIFICATIONS FOR ADDITIONAL INFORMATION.

NOT USED — 13

NOT USED — 8

CONCRETE JOINTS — 3"=1'-0" — 3

KEYNOTES
1. EXPANSION MATERIAL 1/2" BELOW TOP SURFACE AND EXTENDING FULL DEPTH
2. #4 BAR 6" FROM EDGE AND 18" O.C.
3. BUILDING WALL OR COLUMN, WHERE OCCURS
4. SEALANT DEPTH EQUAL TO JOINT WIDTH.
5. 1/4" RADIUS, TYPICAL AT BOTH SIDE OF JOINT.

GENERAL NOTES
1. MEDIUM BROOM FINISH UNLESS NOTED OTHERWISE. t= THICKNESS PER PLAN.

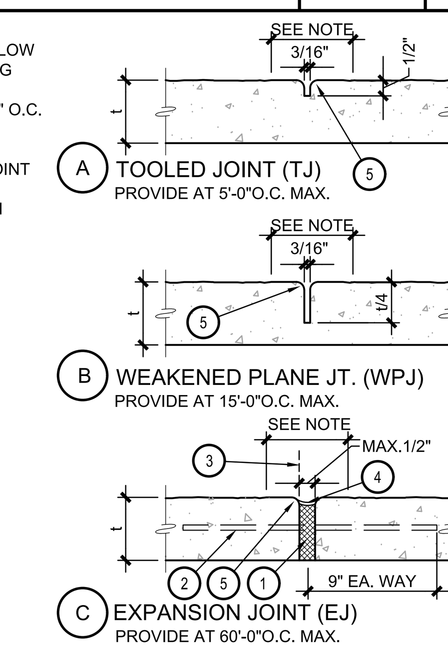

A TOOLED JOINT (TJ) PROVIDE AT 5'-0"O.C. MAX.

B WEAKENED PLANE JT. (WPJ) PROVIDE AT 15'-0"O.C. MAX.

C EXPANSION JOINT (EJ) PROVIDE AT 60'-0"O.C. MAX.

ISA DIRECTIONAL SIGN — 3" = 1'-0" — 29

KEYNOTES:
1. INTERNATIONAL SYMBOL OF ACCESSIBILITY (I.S.A.) SYMBOL SHALL BE WHITE (11B-703.7.2.1).
2. BLUE BACKGROUND. THE BLUE SHALL BE EQUAL TO COLOR NUMBER 15090 IN FEDERAL STANDARD 595C. (11B-703.7.2.1).
3. DIRECTIONAL ARROW SHALL BE WHITE.

GENERAL NOTES:
1. MOUNT SIGN TO FENCE OR WALL WHERE OCCURS 48" A.F.F.

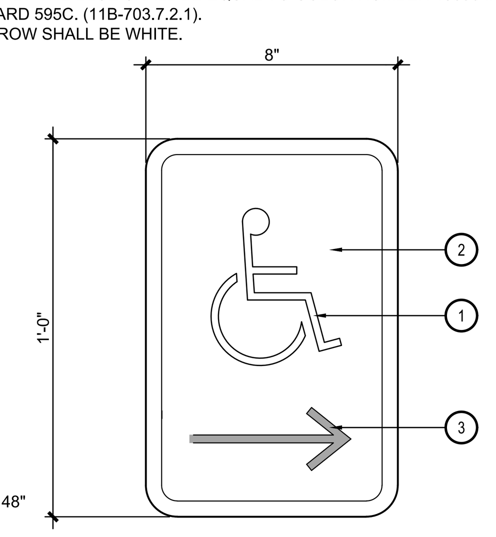

SIGN FOOTING AND POST — 1" = 1'-0" — 24

KEYNOTES:
1. ACORN STYLE POST CAP.
2. SIGN PER SIGN DETAIL. SIGN CONFIGURATION MAY VARY FROM ILLUSTRATION.
3. ANCHOR EACH SIGN WITH 2- 5/16" CARRIAGE BOLTS, CUT BOLTS 1/8" BEYOND NUT AND FLATTEN TO DETER REMOVAL.
4. 2 3/8" O.D. DIAMETER GALVANIZED PIPE SET 24" INTO A 10" DIAMETER x 26" DEEP FOOTING. REF. GENERAL NOTE #2
5. CROWN TOP FOR DRAINAGE AT GRADE, 2% MAX. SLOPE.
6. FINISHED GRADE OR PAVING.
7. 10" DIA. CONCRETE FOOTING.

GENERAL NOTES:
1. THIS DETAIL IS FOR THE SIGNAGE FOOTING AND POLE. REFERENCE SPECIFIC SIGN DETAILS FOR THE SIGN VERBIAGE, COLOR, SIZE AND CONSTRUCTION.
2. GALVANIZED PIPE TO BE SS-20 BY ALLIED TUBE AND CONDUIT OR EQUAL. www.alliedtube.com

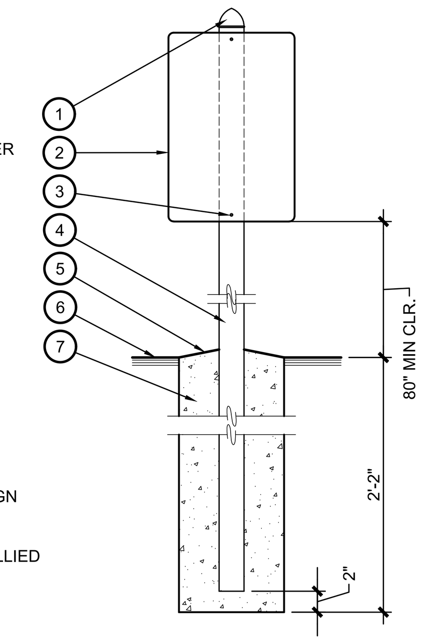

ACC. PASSENGER DROP OFF — 3/16" = 1'-0" — 20

KEYNOTES
1. EXISTING ASPHALT DRIVE.
2. EXISTING 6'-0" HIGH GALV. CHAIN LINK FENCING ALONG BACKSIDE OF LOADING ZONE.
3. EXISTING GATE TO BE REMOVED AND RE-INSTALLED TO PROVIDE REQUIRED ACCESSIBLE CLEARANCES.
4. "ACCESSIBLE LOADING & UNLOADING ZONE" SIGNAGE ON FENCE. REF. DETAIL 22/-.
5. TRUNCATED DOME SURFACE FLUSH WITH ASHALT PAVING CIVIL DWGS.
6. BLUE 4" WIDE PERIMETER PAINT. BLUE COLOR SHALL BE FEDERAL BLUE #15090 PER STANDARDS 595C.
7. WHITE 4" DIAGONAL STRIPING AT 36" O.C. AT LOADING/UNLOADING AREA AS SHOWN.
8. 12" HIGH WHITE "NO PARKING" LETTERING.
9. CROSS HATCHED AREA, WITH DARK DASHED BORDER, INDICATES AREA WHERE SLOPES SHALL NOT EXCEED 2% IN ANY DIRECTION.
10. EXISTING TRASH ENCLOSURE.

GENERAL NOTES
1. REF. SITE PLAN, CIVIL DWGS & SPECIFICATIONS.
2. REF. DETAILS 18/A-10.1 AS REQUIRED.
3. REF. DETAILS 20, 24 & 25 FOR C.L. GATE MODIFICATIONS.

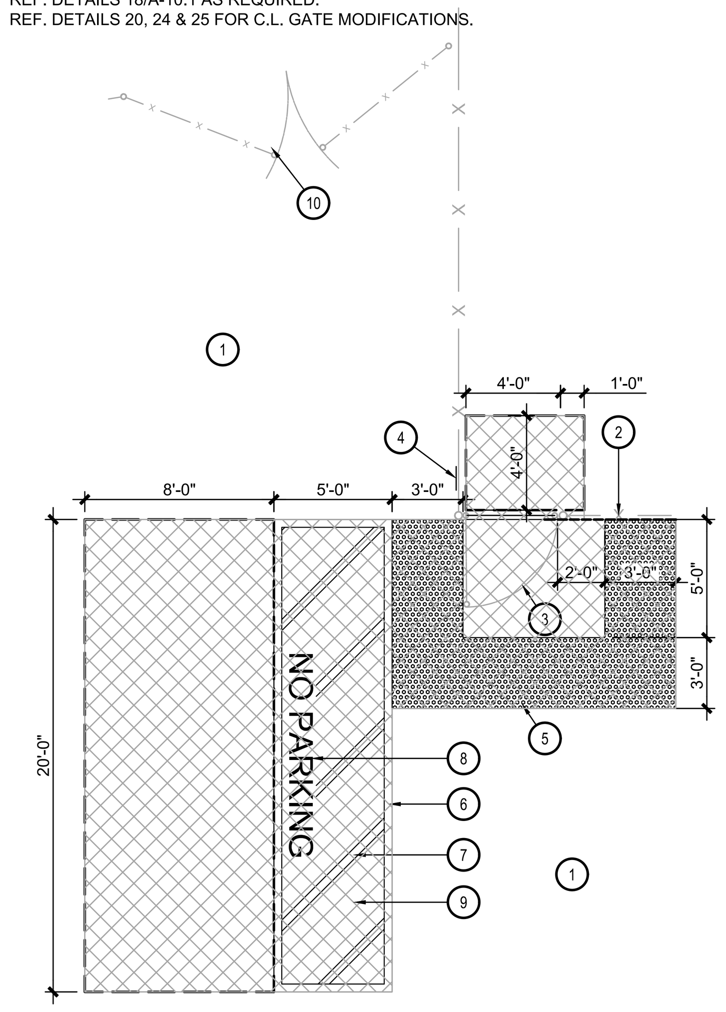

FENCE PANEL ATTACHMENT — 3"=1'-0" — 14

KEYNOTES
1. TUBE STEEL FENCE POST, ALL POSTS TO HAVE EXPOSED END WELDED CLOSED TO PREVENT WATER INTRUSION, REF. DETAIL 6/- FOR POST & FOOTING INFO.
2. 1" x 1" x 12GA T.S. SQUARE PICKETS @ 4" O.C. MAX. EQ. SPACING.
3. 1 3/4" x 1 3/4" x 3/16" TUBE STEEL TOP AND BOTTOM RAILS. RAILS TO BE WELDED TO POSTS IN THE FIELD, WELDS TO BE CONTINUOUS FILLET WELD PER SPECS. TOP RAIL TO BE LEVEL, BOTTOM RAIL TO FOLLOW EXISTING GRADE UNLESS NOTED OTHERWISE.

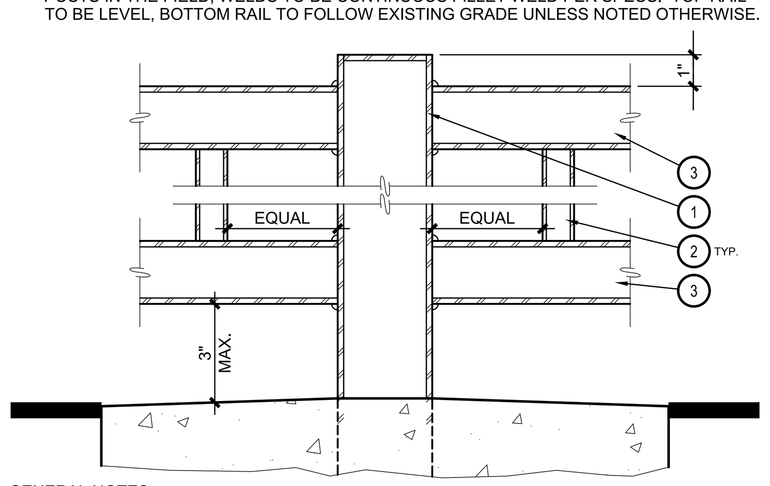

GENERAL NOTES
1. ALL WELDS SHALL BE GROUND SMOOTH, PRIOR TO FINISH.
2. ALL STEEL GATE AND FENCE MATERIALS SHALL BE POWDER COATED BLACK..

CONCRETE PAVING EDGES — 1 1/2"=1'-0" — 5

KEYNOTES
1. CONCRETE PAVING, THICKNESS AND FINISH PER SITE PLAN. 4" UNLESS NOTED OTHERWISE. MEDIUM BROOM FINISH IF NOT NOTED OTHERWISE.
2. AC PAVING PER SITE PLAN. WHERE APPLICABLE.
3. #4 REINF. BAR 6" FROM EDGE AND 24" O.C. EACH WAY.
4. EXPANSION MATERIAL, 1/2" BELOW TOP SURFACE AND EXTENDING FULL DEPTH.
5. 90% COMPACTED SUB-GRADE.
6. 1/2" RADIUSES EDGE.
7. FINISH GRADE AT LANDSCAPE AREA.
8. GRADE OR ADJACENT PAVING WHERE OCCURS.
9. TURNED DOWN CONCRETE STEM WALL.
10. #4 REBAR 20" MIN. LAP.
11. 1/4" RADIUSES EDGE AT BOTH SIDE OF EXPANSION JOINT, TYPICAL.

GENERAL NOTES
1. CONCRETE TO BE PROVIDED WITH NON-SLIP MEDIUM BROOM FINISH.
2. REFERENCE SITE PLAN FOR EXPANSION JOINTS AND CONTROL JOINTS.

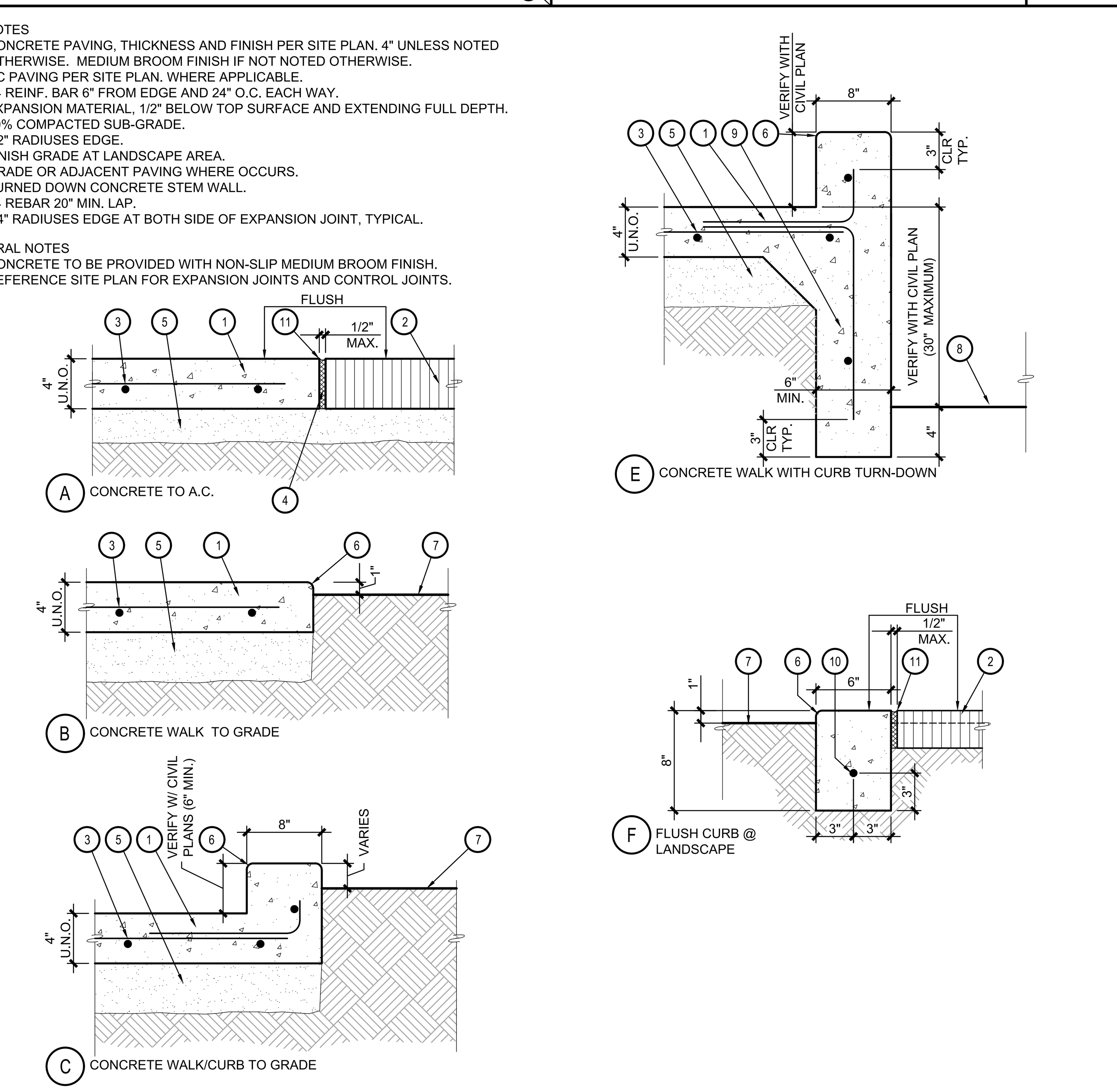

A CONCRETE TO A.C.

B CONCRETE WALK TO GRADE

C CONCRETE WALK/CURB TO GRADE

E CONCRETE WALK WITH CURB TURN-DOWN

F FLUSH CURB @ LANDSCAPE

TOW AWAY SIGN — 1"=1'-0" — 30

KEYNOTES
1. 1" INCH HIGH BLACK LETTERS ON A WHITE ENAMEL PAINTED .08" ALUMINUM SIGN. ATTACH SIGN TO POST WITH 2- 5/16" CARRIAGE BOLTS, CUT BOLT 1/8" BEYOND NUT AND FLATTEN TO DETER REMOVAL. SIGN TO BE MOUNTED TO WALL AT ACCESSIBLE PARKING SPACES.

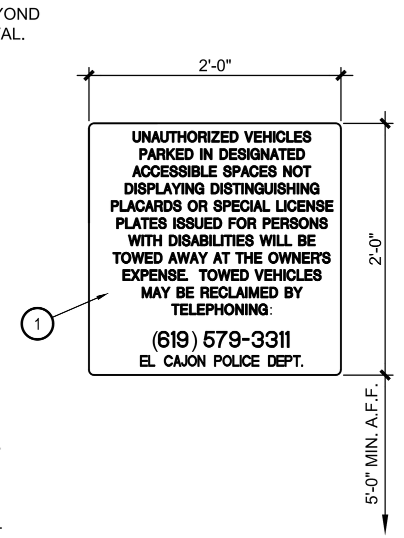

GENERAL NOTES
1. SIGN AND FENCE BRACKET BY "STREET SIGN USA" OR EQUAL. REF. www.streetsignusa.com
2. PHONE NUMBER TO BE VERIFIED BY DISTRICT PRIOR TO FABRICATION.
3. VISUAL CHARACTER SPACING SHALL COMPLY WITH CBC 11B-703.5.9.

ACCESSIBLE VAN PARKING SIGN — 1 1/2"=1'-0" — 25

KEYNOTES
1. BLACK LETTERS ON A WHITE ENAMEL PAINTED .08" ALUMINUM SIGN. ATTACH SIGN TO POST WITH 2- 5/16" CARRIAGE BOLTS, CUT BOLT 1/8" BEYOND NUT AND FLATTEN TO DETER REMOVAL.
2. POST, REF. DETAIL 24/-.

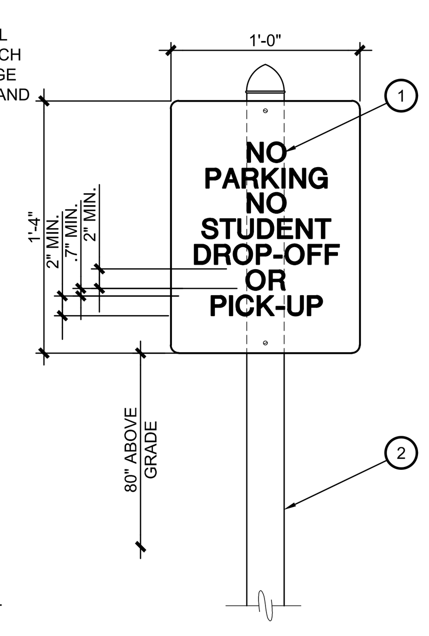

GENERAL NOTES
1. VISUAL CHARACTER SPACING SHALL COMPLY WITH CBC 11B-703.5.9.

NEW CONCRETE @ E BLDG. — 1 1/2"= 1'-0" — 15

KEYNOTES
1. EXISTING CONCRETE FOOTING.
2. EXISTING CONCRETE SLAB.
3. EXISTING WOOD STUD WALL.
4. NEW CONCRETE WALKWAY.
5. EXPANSION JOINT.
6. EXISTING GRADE.
7. EXISTING STUCCO FINISH.
8. 5/8" GYP.BD. FINISH.
9. WALL BASE PER FINISH SCHEDULE.

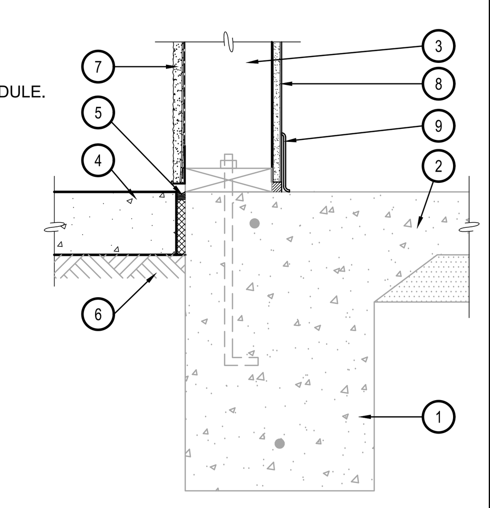

IDENTIFICATION STAMP
DIV. OF THE STATE ARCHITECT
APP: 04-122772 INC:
REVIEWED FOR
SS ☑ FLS ☑ ACS ☑
DATE: 03/26/2024

SPROTTE | WATSON
ARCHITECTURE | PLANNING

LICENSED ARCHITECT — C12359 — REN. OCTOBER 2025 — STATE OF CALIFORNIA

CONSULTANT

DEHESA ELEMENTARY SCHOOL
CONSTRUCTION DOCUMENTS
DEHESA SCHOOL DISTRICT
4612 DEHESA ROAD
EL CAJON, CA 92019

REVISIONS
DESCRIPTION
SITE DETAILS
DATE
01.25.24
JOB #
22-0400
SHEET #
A-10.1

KEYNOTES
1. LINE INDICATES EXISTING BUILDING.
2. EXISTING 4'-0" LONG CONC. WHEEL STOP. REFERENCE DETAIL 28/A-10.1.
3. EXISTING 4" WIDE BLUE PAINTED BORDERLINE AROUND PERIMETER.
4. EXISTING 4" WIDE WHITE STRIPING AT 36" O.C.
5. EXISING 12" HIGH WHITE LETTERS 'NO PARKING'.
6. ACCESSIBLE PARKING STALL.
7. VAN ACCESSIBLE PARKING STALL.
8. EXISTING ISA SYMBOL PER DETAIL 23/A-10.1.
9. EXISTING ACCESSIBLE PARKING SIGN.
10. EXISTING RETAINING WALL TO REMAIN.
11. EXISTING CONCRETE BOLLARDS.
12. EXISTING FIRE HYDRANT.
13. PROVIDE TRUNCATED DOMES BETWEEN EXISTING RETAINING WALL AND EXISTING BUILDING, REF. CIVIL.
14. PROVIDE TOW NOTIFICATION SIGNAGE MOUNTED TO EXISTING BUILDING, REF. DETAIL 30/A-10.1.
15. EXISTING STANDARD PARKING SPACE.
16. EXISTING DOOR IS NOT ON THE POT, IT IS NOT FOR PUBLIC USE.

GENERAL NOTES
1. PAVING NOT TO EXCEED 2% CROSS SLOPE IN EITHER DIRECTION WITHIN ACCESSIBLE PARKING OR ACCESSIBLE DROP-OFF, AND ACCESS AISLES. (CBC 11B-502.4.).
2. REF. CIVIL DWGS FOR ADDITIONAL INFORMATION.

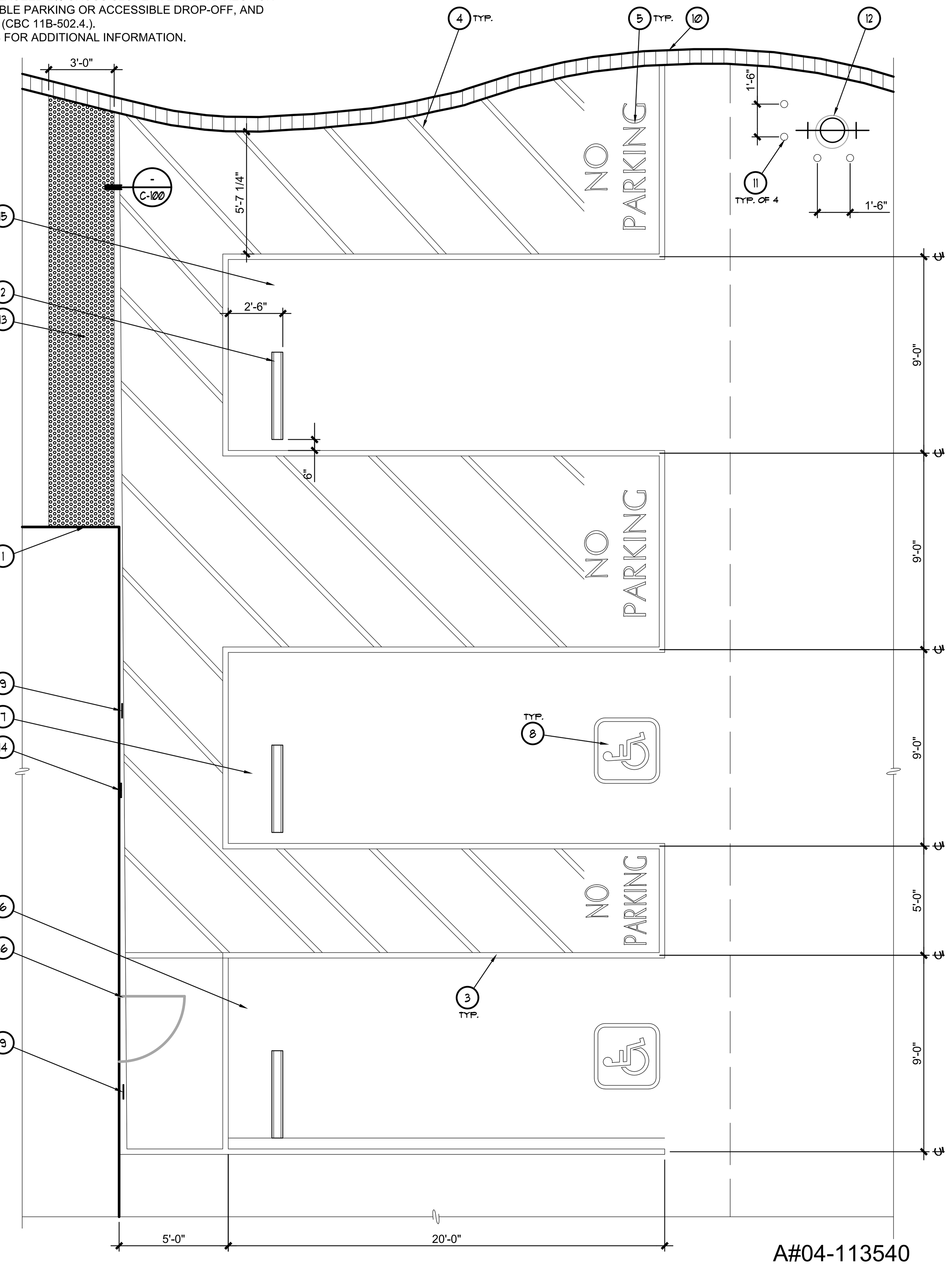

A#04-113540

EAST ACCESSIBLE PARKING SPACES
1/4" = 1'-0" 23

KEYNOTES
1. DOOR WHERE OCCURS
2. MERCER IMPERIAL REDUCER
3. CARPET
4. EXISTING TILE
5. RESILIENT FLOORING TILE

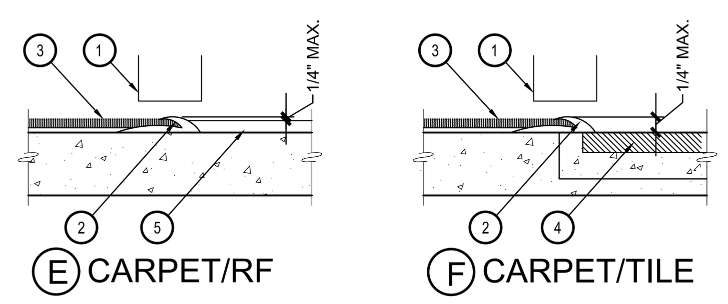

FLOOR TRANSITIONS
3"=1'-0" 16

KEYNOTES
1. CONTINUOUS ACOUSTICAL SEALANT AROUND ENTIRE PEREMETER (TYP.)
2. OUTLET BOX PER SPECIFICATIONS
3. PROVIDE BOX PAD.
4. WALL PER PLAN.

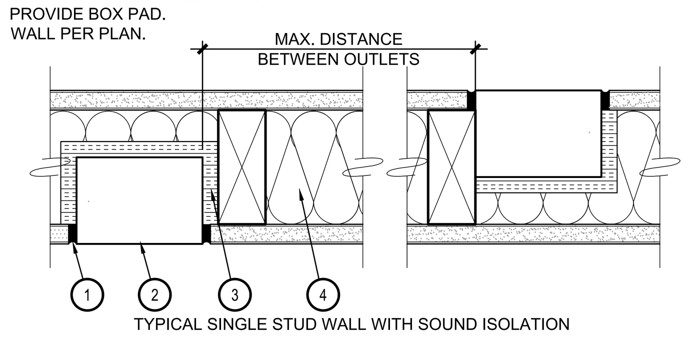

GENERAL NOTES
1. PLACE OUTLET BOXES IN SEPARATE STUD SPACES.
2. AVOID BACK TO BACK OUTLETS.
3. PLUG ALL UNUSED KNOCK-OUTS IN OUTLET BOXES WITH KNOCK-OUT CAPS.
4. BACKING EQUIVALENT TO "LOWERY'S" OUTLET BOX PADS. (HARRY A. LOWERY AND ASSOCIATES INC. ((800) 225-8231)
5. DEPTH OF OUTLET BOX MUST BE COMPATIBLE WITH STUD SIZE IN ORDER TO ACCOMMODATE BOX PAD.
6. ACOUSTICAL BOX PAD REQUIREMENTS APPLIES TO ALL WALLS WITH ACOUSTICAL INSULATION.
7. APPLIES TO POWER, PHONES, DATA, COMMUNICATIONS, ETC.

ACOUSTICAL OUTLET BOX
3" = 1'-0" 17

KEYNOTES:
1. EXISTING 2X WOOD FRAMING.
2. PORTLAND CEMENT PLASTER TO MATCH THICKNESS OF EXISTING CONDITIONS, REF. SPECS.
3. (2) LAYERS OF WEATHER BARRIER, REF. SPECS.
4. SELF-FURRING METAL LATH PROVIDING 1/4" OFFSET FROM SHEATHING, REF. SPECS.
5. PROVIDE WAFER HEAD "LATHERS" TYPE "S" WITH LENGTH THAT PENETRATES INTO WOOD FRAMING 5/8". MUST COMPLY WITH ASTM C1002 AND/OR ASTM C954.
6. PROVIDE SHEATHING AS REQUIRED TO MATCH EXISTING CONDITIONS & THICKNESSES.

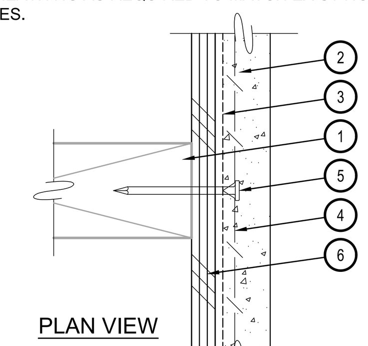

GENERAL NOTES:
1. PLASTER AND LATH SHALL CONFORM TO CHAPTER 25 2022 C.B.C.
2. REFERENCE SPECIFICATIONS FOR ADDITIONAL INFORMATION.

PLASTER TO WOOD FRAMING
6" = 1'-0" 18

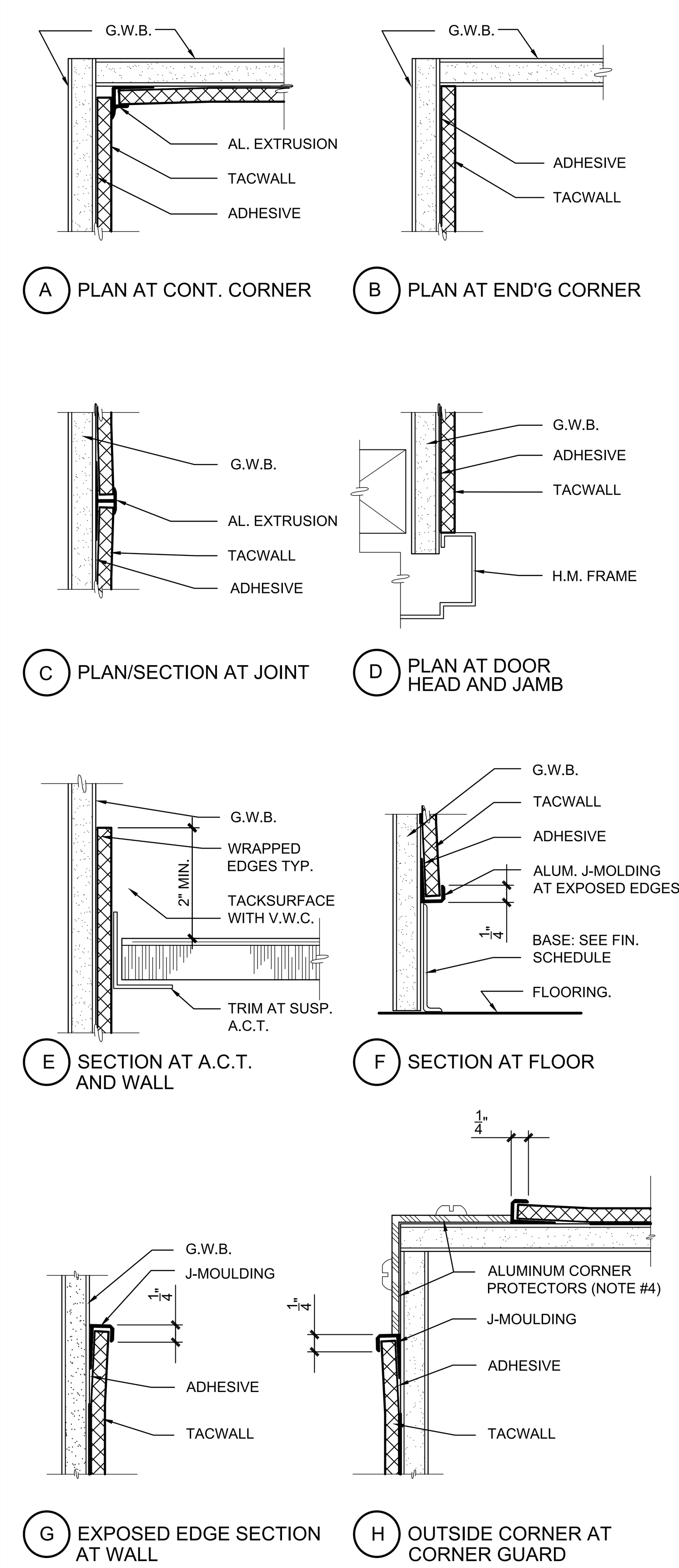

GENERAL NOTES
1. TACK SURFACE TO RUN CONTINUOUS BEHIND NEW CASEWORK WHERE OCCURS.
2. PANEL MIDPOINT JOINTS SHALL ABUTT.
3. PROVIDE J-MOLDING AT ALL EXPOSED ENDS OF PANELS.
4. SET ALUMINUM CORNER GUARDS IN A BEAD OF ADHESIVE. ATTACH THROUGH FACE WITH (3) - #8 TAMPER RESISTANT PAN HEAD SCREWS EACH LEG @ 24" ON CENTER, 6" FROM ENDS.

TACWALL DETAILS
6"=1'-0" 13

KEY NOTES
1. EXISTING (OR NEW AT INFILL) 2X6 WOOD STUDS AT 16" O.C..
2. EXISTING 2X4 WOOD STUDS AT 16" O.C.
3. EXISTING 1/2" PYLWOOD SHEATHING.
4. EXISTING 3/8" PLYWOOD SHEATHING.
5. EXISTING CEMENT PLASTER.
6. EXISTING PLASTER.
7. EXISTING CERAMIC TILE.
8. PLYWOOD SHEATHING TO MATCH EXISITNG.
9. 2X4 WOOD STUDS AT 16" O.C..
10. 6" BATT INSULATION AT WALL CAVITY.
11. 4" BATT INSULATION AT WALL CAVITY.
12. 5/8" GYP. BOARD.
13. 1/2" GYP. BOARD.
14. EXTERIOR PLASTER AND LATH TO MATCH EXISTING ON EXISTING SHEATHING AND NEW WEATHER BARRIER SYSTEM.
15. EXTERIOR PLASTER AND LATH TO MATCH EXISTING OVER WEATHER BARRIER SYSTEM.

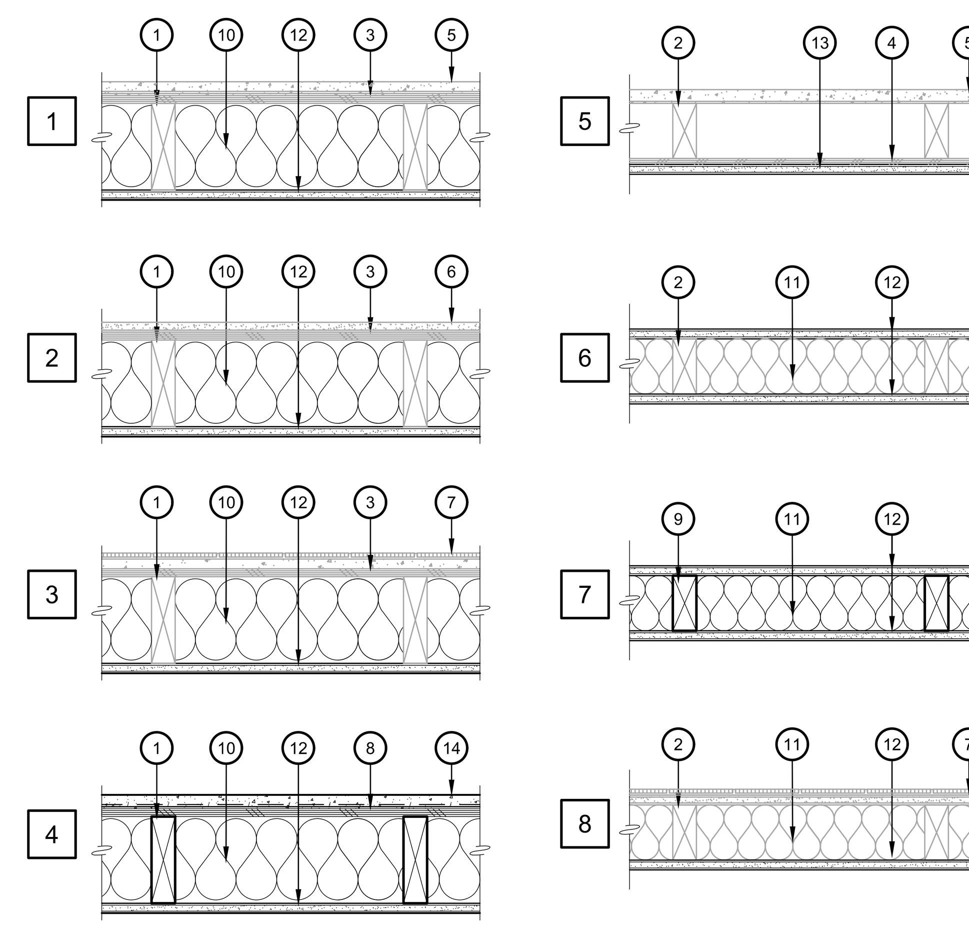

GENERAL NOTES
1. WALL TYPES ARE INDICATED ON THE FLOOR PLANS. REFERENCE THE SQUARE SYMBOLS INTERSECTING THE WALLS.
2. WALL TYPES INDICATED PROVIDE A DESCRIPTION FOR THE PREDOMINANT COMPOSITE SECTION FOR THE PARTICULAR AREA NOTED, AND DO NOT PROVIDE COMPREHENSIVE COMPOSITE SECTIONS FOR THE WALLS ENTIRETY DUE TO THE POSSIBLE VARIATIONS FOR STRUCTURAL PURPOSES. REFERENCE THE INTERIOR FINISH SCHEDULE, INTERIOR ELEVATIONS, BUILDING SECTIONS, AND THE STRUCTURAL DRAWINGS FOR ADDITIONAL INFORMATION.
3. WHERE THERE ARE MORE THAN ONE WALL TYPES INDICATED ON THE PLANS, THERE ARE MULTIPLE COMPOSITE SECTIONS. THE PREDOMINANT WALL TYPES ARE INDICATED.
4. ALL WALLS SHALL BE FRAMED FULL HEIGHT TO STRUCTURAL FRAMING ABOVE UNLESS NOTED OTHERWISE OR DETAILED.
5. REFERENCE STRUCTURAL DRAWINGS FOR ALL WALL FRAMING.
6. ALL G.W.B TO EXTEND TO UNDERSIDE OF DECK AND/OR STRUCTURAL MEMBER, TYPICAL AT EACH WALL U.N.O..
7. NON-LOAD BEARING WALL HEAD CONDITIONS SHALL BE PROVIDED WITH STEEL SLIP TRACK WITH 1/2" DEFLECTION GAP. REFERENCE STR. DWGS.

WALL TYPE LEGEND
1/2" = 1'-0" 2

KEYNOTES
1. GYPSUM WALL BOARD FINISH.
2. SOUND ABSORBING UNIT FABRIC WARPED ACOUSTICAL PANEL WITH 1x2 LET IN AND ADHERED AS REQUIRED FOR FASTENING.
3. PROVIDE WOOD BLOCKING. REF. 8/A-10.5.
4. Z CLIPS T&B AT EACH METAL STUD. MIN. (3) PER PANEL, ATTACHED TO PANEL WITH (2) 1/4" DIA. SMS LENGTH FOR 1-1/2" PENETRATION OF STUDS.
5. CONTINUOUS BAR CLIP T&B FASTEN TO WALL AT EACH METAL STUD WITH 1/4" DIA. SMS LENGTH FOR 1-1/2" PENETRATION OF STUDS.

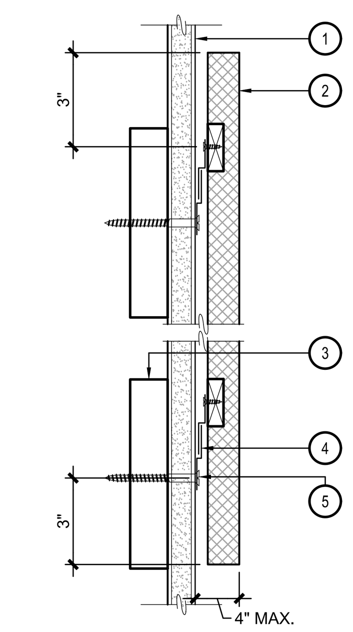

SOUND ABSORBING AWP
3"=1'-0" 8

KEYNOTES
1. 5/8" GYPSUM BOARD.
2. 1/2" GYPSUM BOARD.
3. WOOD STUD WALL.
4. 3/8" PLYWOOD SHEATHING.
5. CABINET (FIRE EXTINGUISHER, ELECTRIC BOX).
6. BACKING AS REQUIRED.
7. FASTENER PER MANUFACTURER, TYPICAL.
8. BATT INSULATION.

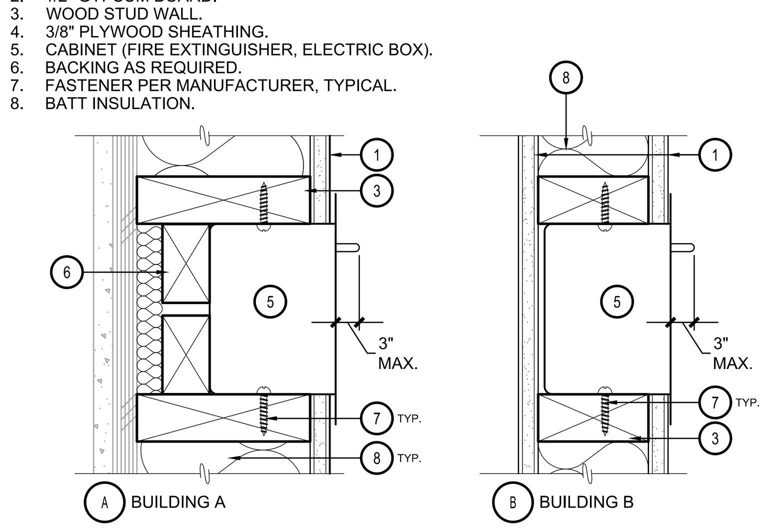

GENERAL NOTES
1. MOUNT F.E. CABINET AT 48" MAX. AFF. TO OPERABLE PARTS.

WALL RECESSED CABINET
3"=1'-0" 3

KEYNOTES:
1. EXISTING CHAIN LINK GATE, WIDTH PER PLAN.
2. CHAIN LINK FENCING PER PLAN.
3. 24" WIDE X 18GA PLATE STEEL WELDED TO GATE AT FRAME TANGENT POINT FOR MOUNTING PANIC DEVICE.
4. GALV. STEEL KICK PLATE PER DETAIL 20/-.
5. PROVIDE 1/4" PLATE STEEL "C" GATE FRAME INTERCEPT. WELD GATE FRAME TO TOP FLANGES OF "C". INTERIOR HEIGHT OF "C" TO PROVIDE HEIGHT AND WIDTH CLEARANCE FOR WELDABLE LOCK BOX. EXTEND JAMB FACE 1/2" FROM GATE FRAME TO ACT AS GATE STOP. REF. DETAIL 25/-.
6. PROVIDE WELDABLE LOCKBOX WELDED WITHIN STEEL "C".
7. PROVIDE PANIC HARDWARE MOUNTED TO PLATE.
8. PROVIDE FENCING OFFSET FOR STEEL "C" AND LOCKBOX PROJECTION AND MOUNTING

GENERAL NOTES:
1. ALL STEEL SHALL BE GALVANIZED.
2. ALL WELDS CONT. 1/8" FILLET.
3. BACK PLATE TO T&B PLATES TO BE FILLET WELDS 1"@ 6" O.C.
4. EASE ALL STEEL AND FENCING COMPONENT ABRASIVE AND SHARP CORNERS.
5. PANIC DEVICE: REF. SPEC. SEC. 08 71 00.
6. WELDABLE LOCKBOX: REF. SPEC. SEC. 08 71 00.
7. REF. DETAIL 18/A-10.1 AND SPECS 32 31 13 FOR ADDITIONAL INFORMATION.
8. DOOR AND GATE SPRING HINGES SHALL BE ADJUSTED SO THAT FROM THE OPEN POSITION OF 70 DEGREES, THE DOOR OR GATE SHALL MOVE TO THE CLOSED POSITION IN 1.5 SECONDS MINIMUM. (CBC 11N-404.2.8.2.
9. THE FORCE FOR PUSHING OR PULLING OPEN A DOOR OR GATE SHALL BE 5 POUNDS (22.2N) MAXIMUM.

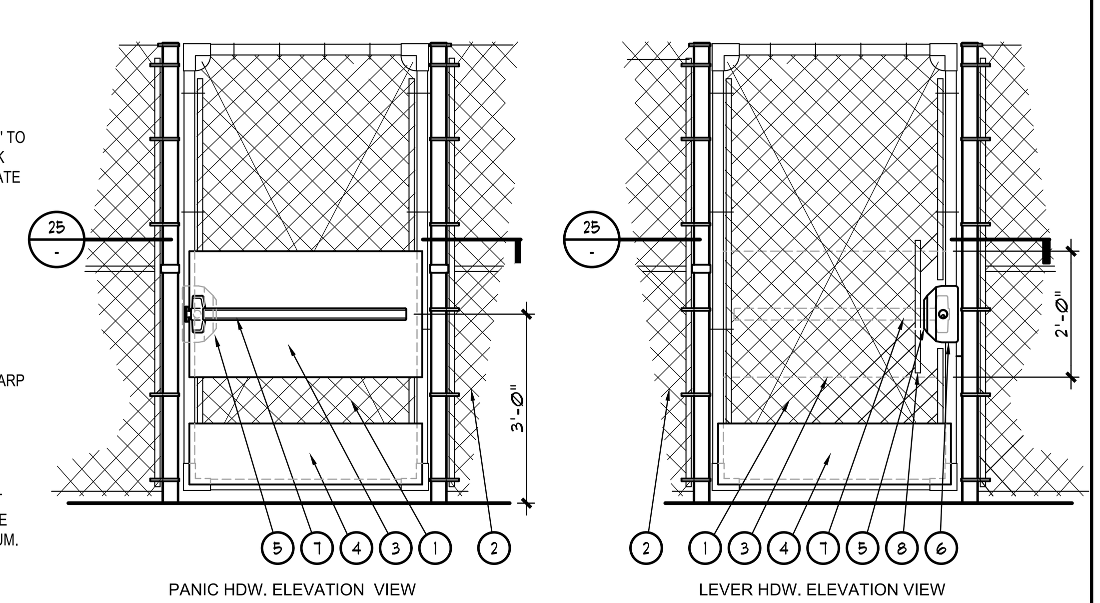

PANIC HARDWARE ON C.L. GATE
3"=1'-0" 24

KEYNOTES
1. EXISTING LATH.
2. EXISTING EXTERIOR PLASTER.
3. EXISTING WEATHER-RESISTIVE BARRIER.
4. CAREFUL DEMOLITION OF PLASTER TO REVEAL 6" OF GOOD WEATHER-BARRIER.
5. NEW WEATHER-RESISTIVE BARRIER, REF. DETAIL 18/-.
6. NEW EXT. PLASTER, REF. DETAIL 18/-.
7. NEW LATH, REF. DETAIL 18/-.
8. LAP NEW WEATHER-RESISTIVE BARRIER MINIMUM 6" WITH EXISTING. LAP IN A WEATHER-BOARD MANNER.
9. LAP NEW LATH MINIMUM 6" WITH EXISTING.

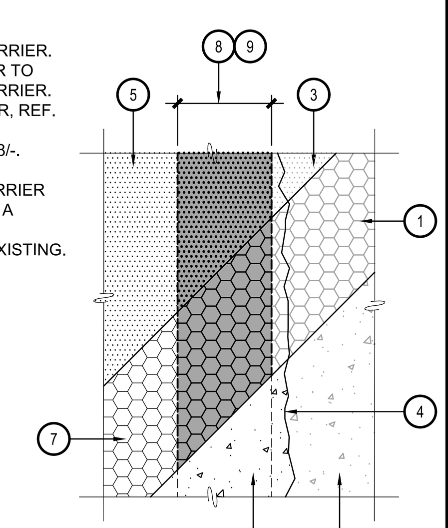

GENERAL NOTES
1. FOR ADDITIONAL INFORMATION REFERENCE SPECIFICATIONS.

EXTERIOR PLASTER TIE-IN
1-1/2"=1'-0" 19

KEYNOTES:
1. 24" HIGH X 18GA STEEL PLATE BACKING TO WIDTH OF GATE FRAME WELDED TO GATE AT FRAME TANGENT POINTS.
2. PROVIDE 1/4" "C" SHAPED PLATE STEEL GATE FRAME INTERCEPT SUPPORT. CUT GATE FRAME TO HEIGHT OF "C" AT EXISTING GATES. WELD GATE PIPE FRAME TO FLANGES OF "C" SUPPORT. REFERENCE ISOMETRIC DETAIL. INTERIOR HEIGHT OF "C" TO PROVIDE HEIGHT AND WIDTH CLEARANCE FOR WELDABLE LOCK BOX. EXTEND EDGE OF "C" SUPPORT. 1/2" FROM GATE FRAME TO ACT AS GATE STOP.
3. PROVIDE WELDABLE LOCKBOX WELDED WITHIN STEEL "C" SUPPORT.
4. PROVIDE PANIC HARDWARE MOUNTED TO PLATE STEEL BACKING.
5. PROVIDE FENCING TENSION BAR OFFSET FOR CHAIN LINK FABRIC CLEARANCE TO STEEL "C" SUPPORT, LOCKBOX AND LEVER TRIM.
6. CHAIN LINK FABRIC TENSION BAR.
7. CHAIN LINK FABRIC.
8. VANDAL RESISTANT S.S. PULL.
9. ANGLES BACK TO BACK 2 X 1 1/2" X 1/8" ANGLES 16" HIGH ALIGNED TO "C" SUPPORT FOR PANIC STRIKE RECEPTOR AND GATE STOP.
10. DASHED LINE ILLUSTRATES GATE FRAME LOCATION.
11. DASHED LINE INDICATED STEEL "C" SUPPORT
12. PROVIDE SELF CLOSING HINGES OR SPRING LOADED GATE CLOSER.
13. PANIC HDW. ROLLER STRIKE.
14. STEEL CUT OUT FOR LOCKBOX HARDWARE MOUNTING AND CONNECTION TO PANIC BAR.

GENERAL NOTES:
1. ALL STEEL SHALL BE GALVANIZED.
2. TAP BACKPLATE FOR HARDWARE FASTENERS WHERE REQUIRED AND ANCHOR WITH TAMPER PROOF FASTENERS.
3. EASE ALL COMPONENTS OF ABRASIVE AND SHARP CORNERS.
4. PANIC DEVICE: REF. SPEC. SEC. 08 71 00.
5. WELDABLE LOCKBOX: REF. SPEC. SEC. 08 71 00.
6. GATE CLOSER AND HINGE: REF. SPEC. SEC. 08 71 00.

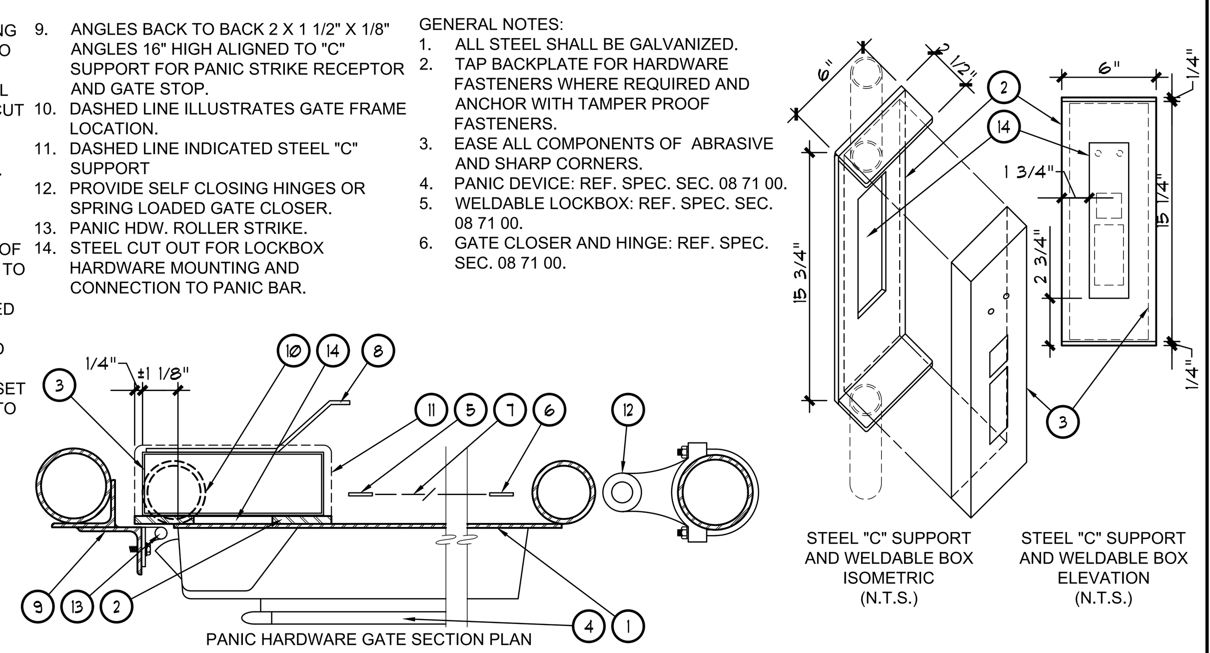

C.L. GATE PANIC HARDWARE PLAN
3"=1'-0" 25

KEYNOTES:
1. PAVING.
2. GATE FRAME.
3. TENSION BAR.
4. C.L. FABRIC.
5. PROVIDE 18 GA G90 GALV. COATED STEEL SHEET WELDED TO GATE FRAME EA. SIDE.
6. PROVIDE 3 DRAIN SLOTS AT BASE.

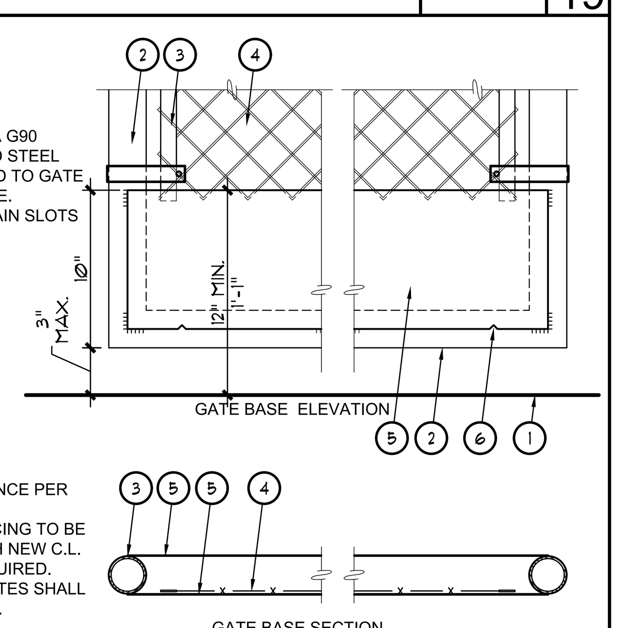

GENERAL NOTES:
1. CHAIN LINK FENCE PER PLAN.
2. EXISTING FENCING TO BE MODIFIED WITH NEW C.L. FABRIC IF REQUIRED.
3. EDGES OF PLATES SHALL BE SMOOTHED.

CHAIN LINK GATE KICKPLATE
1 1/2" = 1'-0" 20

KEYNOTES
1. PLASTIC LAMINATE CASEWORK.
2. WOOD VENEER PLASTIC LAMINATE FINISH. REF. FINISH LEGEND A-8.1.
3. SOLID SURFACE COLOR 1. REF. FINISH LEGEND A-8.1.
4. 2" SATIN CHROME GROMMET AND HOLE COVER.
5. DRAWERS WITH PULLS AND LOCKS.
6. REFERENCE ELECTRICAL DRAWINGS FOR NUMBER AND LOCATION OF POWER AND DATA RECEPTACLES.
7. ACCESSIBLE CLEARANCE.
8. ALUMINUM BASE REF. FINISH LEGEND A-8.1.
9. WI 223 (16X30X24).
10. WI 230M (16X30X24).
11. AV, REF. ET. SHEETS.
12. LOCATION OF RECEPTACLE IS FOR EQUIPMENT.

GENERAL NOTES
1. ALL CASEWORK DRAWERS TO BE PROVIDED WITH LOCKS AND PULLS.
2. ALL SURFACES SEEN CONSIDERED EXPOSED.
3. KEYNOTING SHALL NOT BE INDICATED ON EACH ITEM. SIMILAR OR MIRRORED ILLUSTRATED ITEMS SHALL BE ASSUMED TO BE KEYNOTED SIMILARLY.
4. CASEWORK SHALL BE ANCHORED TO FLOOR SIMILAR TO DETAIL 5/A-10.5 FOR BOTH SIDES OF BASE CABINETRY AND SHELVING UNITS.
5. REFERENCE STRUCTURAL 6A/6/S1.2 & S2.1 FOR SUPPORT AND ADDITIONAL INFORMATION.
6. VERIFY THAT 8 1/2"X 11" HANGING FOLDERS CAN FIT WITHIN FILE CABINET CONSTRUCTION.
7. OPERABLE PARTS FOR ALL ACCESIBLE CASEWORK SHALL COMPLY WITH CBC SECTION 11B-309.

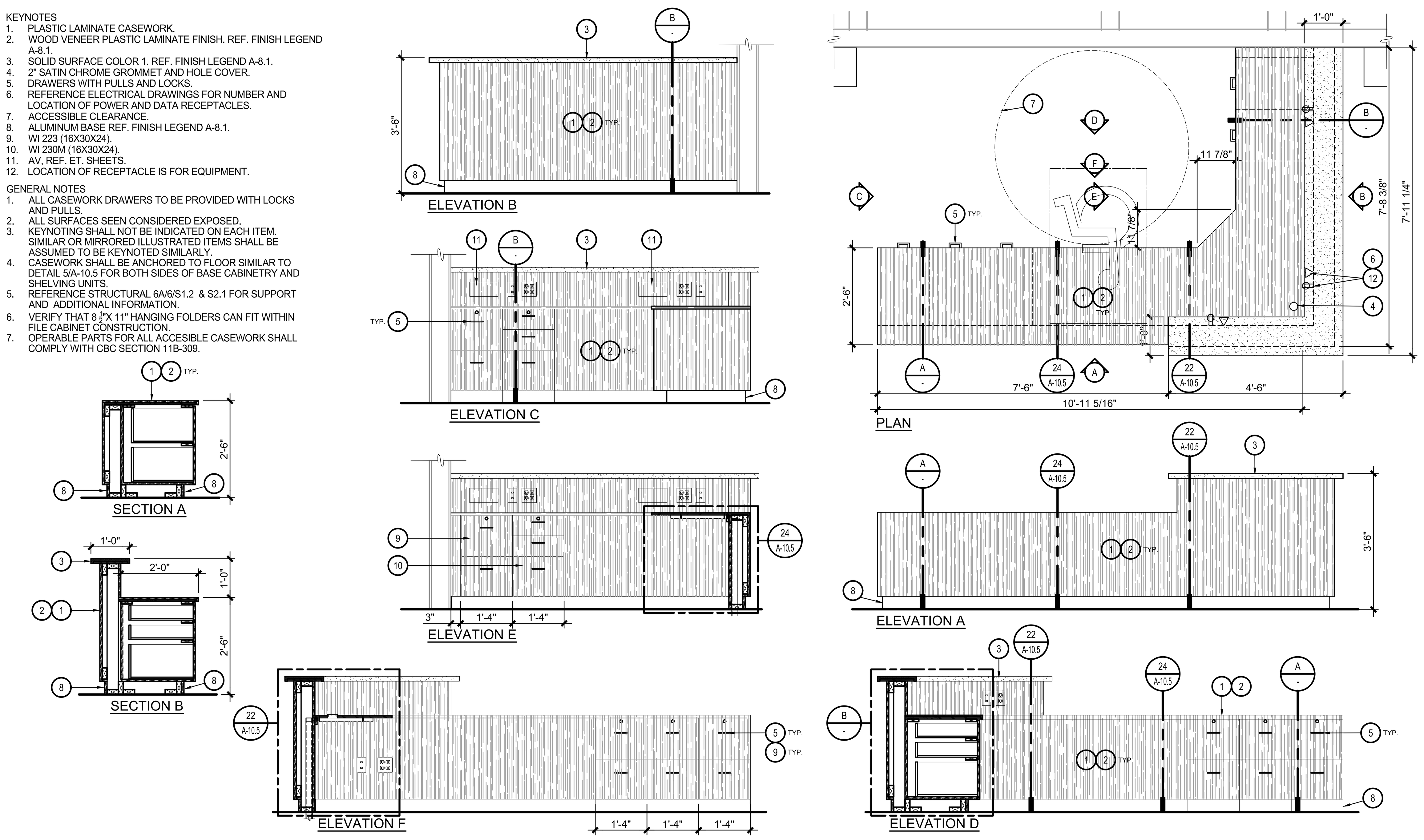

RECEPTION DESK AT LIBRARY
1/2" = 1'-0" 5

IDENTIFICATION STAMP
DIV. OF THE STATE ARCHITECT
APP: 04-122772 INC:
REVIEWED FOR
SS ☑ FLS ☑ ACS ☑
DATE: 03/26/2024

SPROTTE | WATSON
ARCHITECTURE | PLANNING

LICENSED ARCHITECT C12359 REN. OCTOBER 2025 STATE OF CALIFORNIA

CONSULTANT

DEHESA ELEMENTARY SCHOOL
CONSTRUCTION DOCUMENTS
DEHESA SCHOOL DISTRICT
4612 DEHESA ROAD
EL CAJON, CA 92019

REVISIONS

DESCRIPTION

PLAN DETAILS
&
WALL TYPES

DATE
01.25.24

JOB #
22-0400

SHEET #
A-10.2

COMPRESSION STRUT TABLE — NTS — 27

COMPRESSION STRUT EMT SECTION	MAXIMUM LENGTH
1/2" DIAMETER EMT (0.042" WALL THICKNESS)	3'-11"
3/4" DIAMETER EMT (0.049" WALL THICKNESS)	6'-4"
1" DIAMETER EMT (0.057" WALL THICKNESS)	9'-9"
1 1/4" DIAMETER EMT (0.065" WALL THICKNESS)	12'-9"
1 1/2" DIAMETER EMT (0.065" WALL THICKNESS)	14'-9"
2" DIAMETER EMT (0.065" WALL THICKNESS)	18'-10"
COMPRESSION STRUT CHANEL SECTION	MAXIMUM LENGTH
250S125-33	5'-10"
250S137-33	6'-10"
362S137-33	8'-0"
250137-43	8'10"
400S137-43	10'-10"

STRUT TO SAWN TIMBER W/O GYP. BD. — NTS — 17

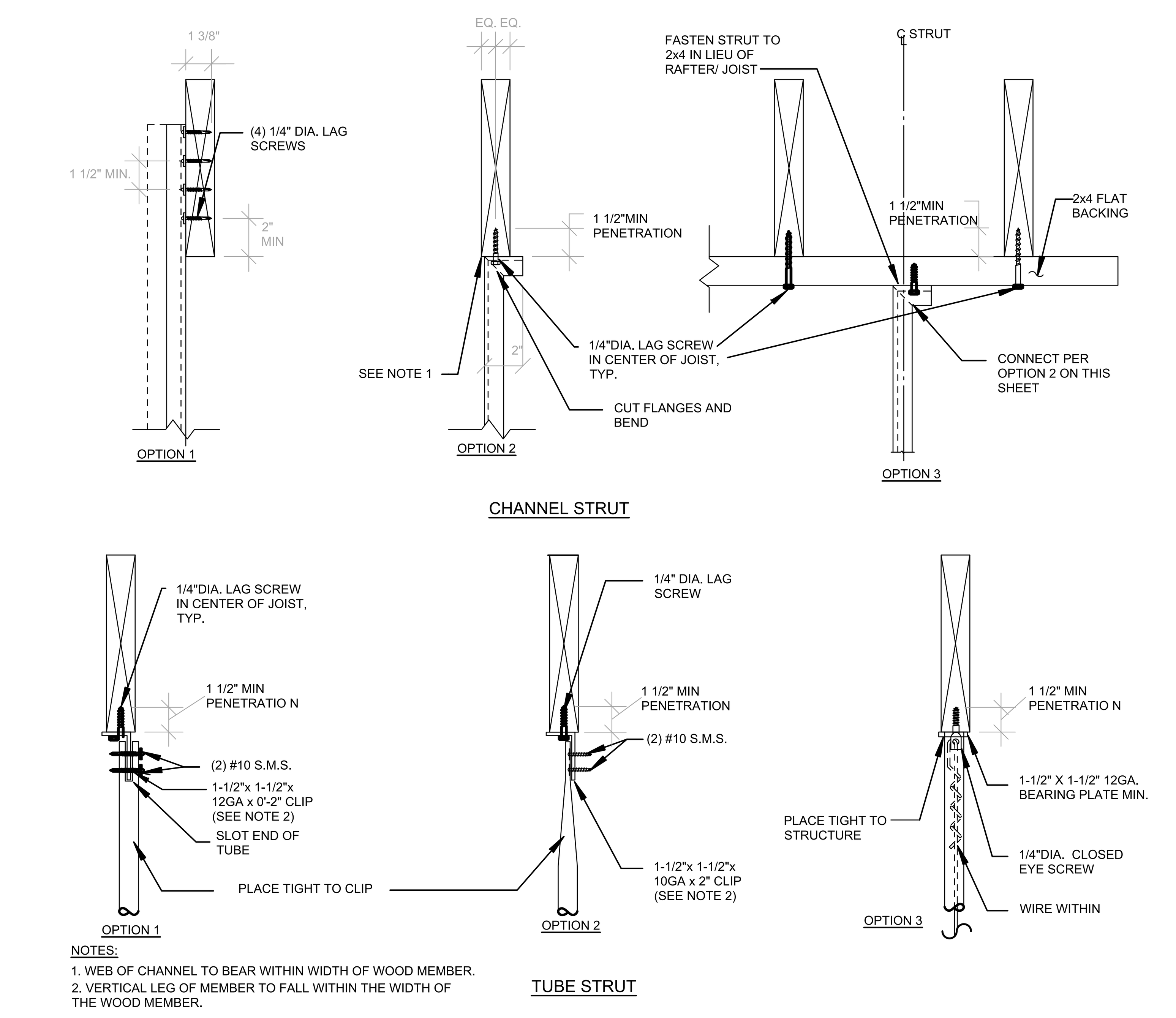

NOTES:
1. WEB OF CHANNEL TO BEAR WITHIN WIDTH OF WOOD MEMBER.
2. VERTICAL LEG OF MEMBER TO FALL WITHIN THE WIDTH OF THE WOOD MEMBER.

SUSPENSION SYST. @ CLG. PERIMETER — 3" = 1'-0" — 11

KEYNOTES
1. 12 GA. HANGER WIRE.
2. WALL FINISH. (TACK SURFACE WHERE OCCURS)
3. MIN. (3) TIGHT TURNS IN 3" TO ACT SYSTEM AND STRUCTURE ANCHOR.
4. A.C.T. SUSPENSION SYSTEM MAIN OR CROSS RUNNER. HEAVY DUTY ACOUSTIC SUSPENSION SYSTEM.
5. # 10x2" LONG WOOD SCREW AT 16" O.C. MAX.
6. ACOUSTIC CEILING TILE.
7. BERC-2 PER ESR-1308 SEISMIC CLIPS OR EQUAL EACH TEE.
8. 7/8" CONTINUOUS WALL ANGLE.
9. 2x6 BLOCKING W/ 3-8d TOENAILS TO EA. STUD.
10. SMS SCREW TO BE TIGHTENED THROUGH RUNNER WEB AT FIXED END CONNECTION
11. OPTIONAL SMS SCREW LOOSE AT FREE END CENTERED IN TRACK.
12. CONNECT BERC-2 CLIP TO WALL ANGLE WITH 2 SCREWS PER ASCE 7-16 SECTION 13.5.6.2.2.

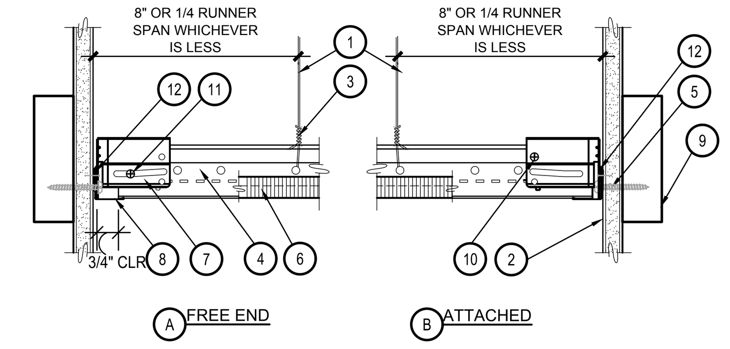

SUSPENSION SYSTEM AT LT. FIXTURE — 3" = 1'-0" — 12

KEYNOTES
1. HEAVY DUTY: (2) 12 GA. SLACK WIRES AT DIAGONAL CORNERS OF LIGHT FIXTURE
2. LIGHT FIXTURE HOUSING
3. LIGHTING FIXTURE TO BE POSITIVELY ATTACHED WITH (4) #8 METAL SCREWS AND INSTALLED THROUGH WEB OF TEE. REFERENCE SPECIFICATIONS FOR GRID CLASSIFICATION.

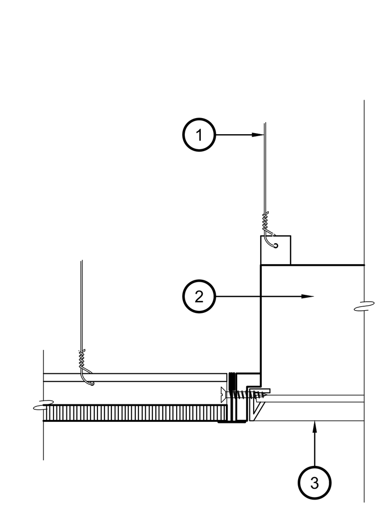

WIRE ATTACHMENTS — 3"=1'-0" — 8

KEYNOTES:
1. (3) 1 1/2" X 9GA. STAPLES OR (3) STRONGHOLD "J" NAILS AT EACH WIRE LOOP, TYP.
2. 12 GA HANGER WIRE
3. 12 GA BRACING WIRE
4. WOOD JOIST OR RAFTER / BLOCKING WITH (2) 16d COMMON NAILS EACH END
5. JOIST OR RAFTER
6. 1/4" DIA. X 3" MIN. GAICO CLOSED EYE SCREWS AT SAME AXIS AS WIRE. PROVIDE 1 1/2" MIN.PENETRATION INTO WOOD MEMBERS
7. 1/4" DIA. CLOSED SCREW EYE WITH 1-1/2" MIN. PENETRATION. ALIGN WITH BRACE WIRE.
8. 4 TURNS IN 1-1/2" AT BRACING WIRE
9. 3 TURNS IN 3" AT THE HANGER WIRE
10. #10x1-1/2" WOOD SCREW AT METAL BACKING, 10d OR #10x3" WOOD SCREW AT WOOD BACKING, TYP AT EACH BOTTOM CORD.
11. 20 GA X 2-1/2" DEEP (250S 137-33) BACKING (ALTERNATE: 2x4): PLACE STUD FLAT, WITHIN 6" OF BRACING WIRE, AND FASTEN TO 3 BOTTOM CHORD MIN.
12. BRIDGING OR FULL DEPTH JOIST BLOCKING WITHIN 24" OF BRACING WIRE CONNECTION.

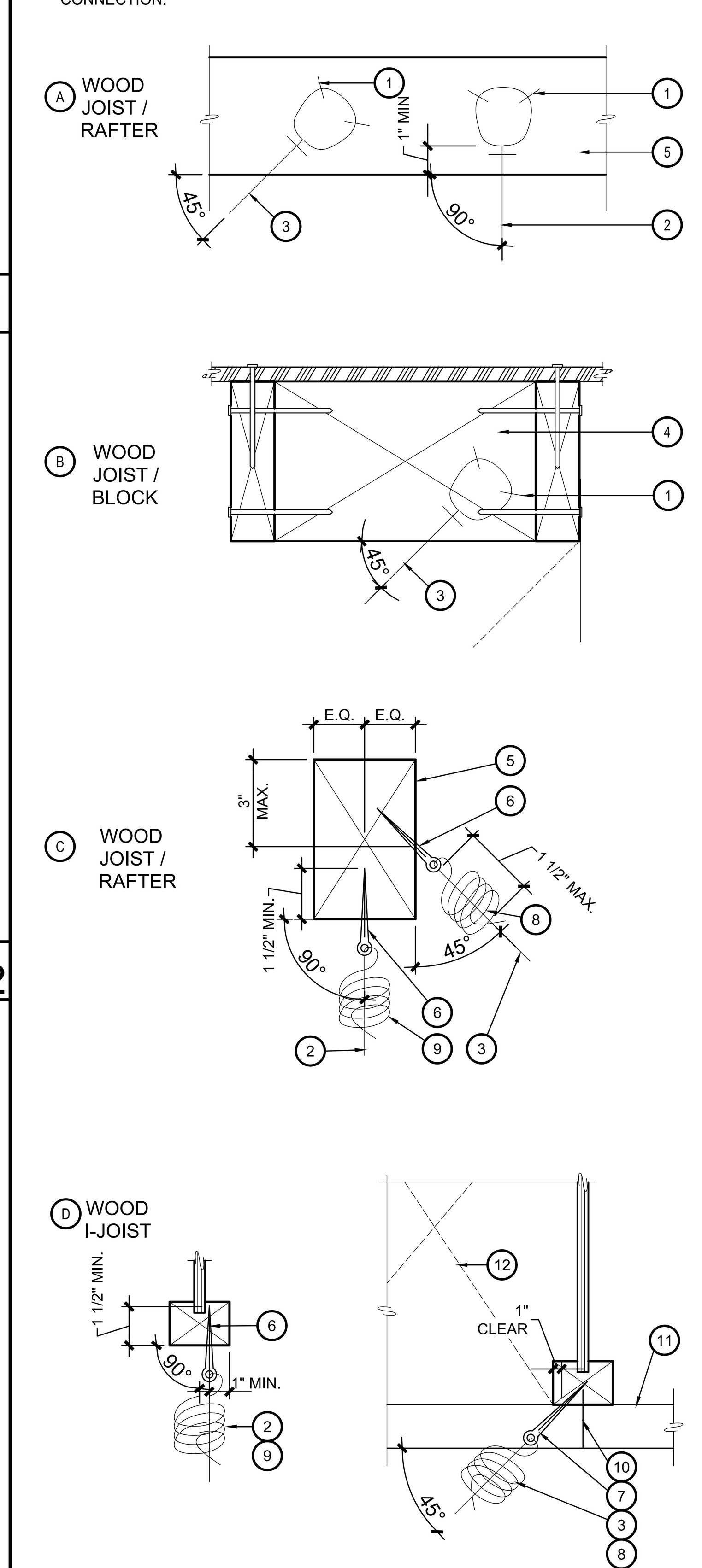

ACOUSTICAL CEILING SUSPENSION SYSTEM — 4

DSA IR 25-2

1. CEILING SYSTEM GENERAL NOTES:

1.01 Ceiling system components shall comply with ASTM C635 and Section 5.1 of ASTM E580.
1.02 The ceiling grid system must be rated heavy duty as defined by ASTM C635.
1.03 Ceiling systems. The following ceiling system(s) is/are part of the scope of this project:

Manufacturer's Name: ARMSTRONG WORLD INDUSTRIES, INC
Product Evaluation Report Type and Number: ICC ES ESR 1308
Manufacturer's Model Number - main runner: PRELUDE -7301 HEAVY DUTY
Manufacturer's catalog number - cross runner: PRELUDE XL-XL7341 (4'), XL7357 (5')

1.04 Seismic Wall Clip: Manufacturer's Model: BERC-2, ESR-1308

1.05 Ceiling panels shall not support any light fixtures, air terminals or devices.

1.06 For acoustical tile panels of any material other than mineral or glass fiber, a ¾" shall be provided between the panel and the wall on the sides of the ceiling free to slip. Clearance between ceiling grid runners and walls shall comply with the details on these drawings regardless of ceiling tile material.

2. MATERIALS:

2.01 Ceiling wire shall be Class 1 zinc coated (galvanized) carbon steel conforming to ASTM A641. Wire shall be #12 gauge (0.106" diameter) with soft temper and minimum ultimate tensile strength = 70 ksi.

2.02 Galvanized sheet steel (including that used for metal stud and track compression struts/post) shall conform to ASTM A653, or other equivalent sheet steel listed in Section A3.1 of the North American Specification for the Design of Cold-Formed Steel Structural Members, (AISI S100). Material 43 mil (18 gauge) and lighter shall have minimum yield strength of 33 ksi. Material 54 mil (16 gauge) and heavier shall have a minimum yield strength of 50 ksi.

2.03 Electrical metallic tube (EMT) shall be ANSI C80.3/UL 797 carbon steel with G90 galvanizing. EMT shall have minimum yield strength (Fy) of 30 ksi and minimum ultimate strength (Fu) of 48 ksi.

3. ATTACHMENT OF HANGER AND BRACING WIRES:

3.01 Separate all ceiling hanger and bracing wires at least six (6) inches from all unbraced ducts, pipes, conduit, etc.

3.02 Hanger and bracing wires shall not attach to or bend around obstructions including but not limited to: piping, ductwork, conduit and equipment.

3.03 Hanger wires that are more than one (horizontal) in six (vertical) out of plumb shall have counter-sloping wires.

3.04 Slack safety wires shall be considered hanger wires for installation and testing requirements.

3.05 Hanger and bracing wire anchorage to the structure shall be installed such that the direction of the anchorage aligns with the direction of the wire. Bracing wire ceiling clips shall be bent as shown in the details and rotated as required to align with the direction of the wire. Screws in wood shall be installed to align with the direction of the wire.

4. FASTENERS AND WELDING:

4.01 Sheet metal screws shall comply with ASTM C1513, ASME B18.6.3. Penetration of screws through joined material shall not be less than three exposed threads.

4.02 Expansion anchors shall be: N/A

4.03 Power-Actuated Fasteners shall be: N/A

4.04 If not otherwise specified in the evaluation report, power-actuated fasteners installed in steel shall be installed so the entire pointed end of the fastener is driven through the steel member.

4.05 Power-actuated fasteners in concrete are not permitted for bracing wires.

4.06 Concrete reinforcement and prestressing tendons shall be located by non-destructive means prior to installing post - installed anchor.

4.07 Welding shall be in accordance with AWS D1.3 using E60XX series electrodes.

5. TESTING:

5.01 All field testing must be performed in the presence of the project inspector.

5.02 Post-installed anchors in concrete used to support hanger wires shall be tested at a frequency of 10 percent. Power actuated fasteners in concrete shall be field tested for 200 lbs. in tension. All other post-installed anchors in concrete shall be tested in accordance with CBC Section 1910A5.

5.03 Post-installed anchors in concrete used to attach bracing wires shall be tested at a frequency of 50 percent in accordance with CBC Section 1910A5.

6. LUMINAIRES:

6.01 All luminaires shall be positively attached to the ceiling suspension systems by mechanical means to resist a horizontal force equal to the weight of the luminaire. A minimum of two screws or approved fasteners are required at each luminaire, per ASTM E580, Section 5.3.1.

6.02 Surface-mounted luminaires shall be attached to the main runner with at least two positive clamping devices. The clamping device shall completely surround the supporting ceiling runner and be made of steel with a minimum thickness of #14 gauge. Rotational spring catches are not permitted. A #12 gauge slack safety wire shall be connected from each clamping device to the structure above. Provide additional supports when a luminaire is eight (8) feet or longer or exceeds 56 lb. Maximum spacing between supports shall not exceed eight (8) feet.

6.03 Luminaires weighing less than or equal to 10 lb. supported directly on the ceiling runners shall have a minimum of one (1) #12 gauge slack safety wire connected from the fixture housing to the structure above.

6.04 Luminaires weighing greater than 10 pounds. but less than or equal to 56 lbs. supported directly on the ceiling runners, shall have a minimum of two (2) #12 gauge slack safety wires connected from the fixture housing at diagonal corners to the structure above.

Exception: All luminaires greater than two by four feet weighing less than 56 lbs. shall have a #12 gauge slack safety wire at each corner.

6.05 All Luminaires weighing greater than 56 lb. shall be independently supported from structure above. See support details on these drawings for more information.

7. SERVICES WITHIN THE CEILING:

7.01 All flexible sprinkler hose fitting mounting brackets, ceiling-mounted air terminals or other services shall be positively attached to the ceiling suspension systems by mechanical means. Screws or approved fasteners are required. A minimum of two attachments are required at each component.

7.02 Ceiling-mounted services weighing less than or equal to 20 pounds shall have one #12 gauge slack safety wire attached from the terminal or service to the structure above.

7.03 Ceiling-mounted services weighing less more than 20 pounds but less than or equal to 56 pounds shall have two #12 gauge slack safety wires (at diagonal corners) connected from the terminal or service to the structure above.

7.04 Ceiling-mounted services weighing more than 56 pounds shall be independently supported from the structure above. See support details on these drawings for more information.

8. OTHER DEVICES WITHIN THE CEILING:

8.01 All lightweight miscellaneous devices, such as strobe lights, occupancy sensors, speakers, exit signs, etc., shall be attached to the ceiling grid. In addition, devices weighing more than 10 pounds. shall have a #12 gauge slack safety wire anchored to the structure above. Devices weighing more than 20 pounds shall be supported independently from the structure above.

J:\22-0400 DEHESA SCHOOL MODERNIZATION\22-0400, CONST DOCS\DWGS, DETAILS\SUSPENSION SYSTEM NOTES.DWG

ROOF EXHAUST FLASHING — NTS — 28

KEYNOTES
1. HPR MODIFIED MEMBRANE FLASHING PLY, 9" MIN. ON FIELD.
2. ROOF DECK & FRAMING, REF. STRUCTURAL.
3. CANT STRIP AS REQUIRED.
4. BASE FLASHING PLY 6" MIN. ON FIELD.
5. HPR FLASHING FASTENED 8" O.C.
6. METAL EXHAUST FAN COVER.
7. HPR MODIFIED MEMBRANE.
8. NAILED BASE SHEET.
9. FELT BASE PLIES.
10. ROSIN PAPER.

GENERAL NOTES
1. ALL PLIES SET IN BITUMEN, SEE SPECIFICATIONS FOR SURFACING.
2. REF. SPECS FOR ADDITIONAL INFO.
3. REF. DETAIL 5/M-5.0.

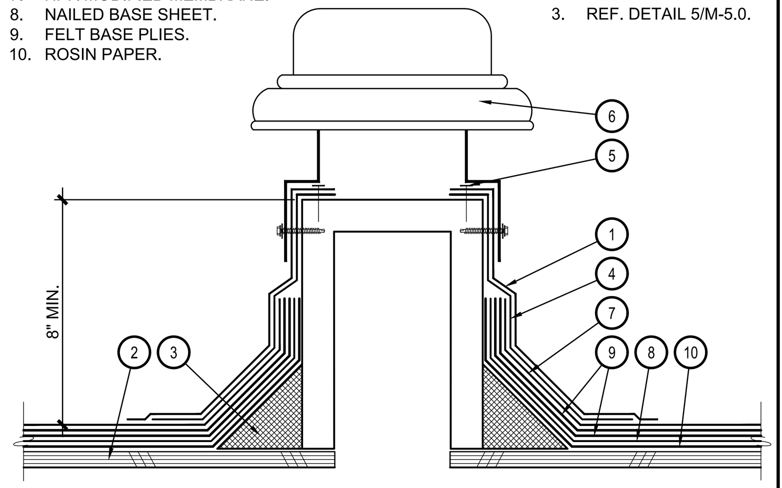

HANGER & BRACE WIRE TURNS — 6" = 1'-0" — 23

KEYNOTES
1. FOR CONNECTION TO STRUCTURE, REF. 8/-.
2. 3 TURNS @ HANGER WIRE TYP. @ EA. END
3. 4 TURNS @ BRACE WIRES TYP. @ EA. END
4. #12 GAGE WIRE

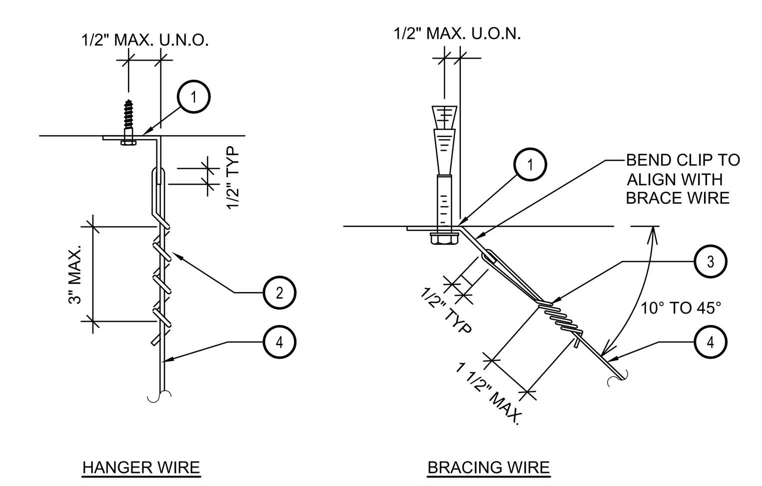

COMPRESSION STRUT-CHANNEL — 1 1/2" = 1'-0" — 19

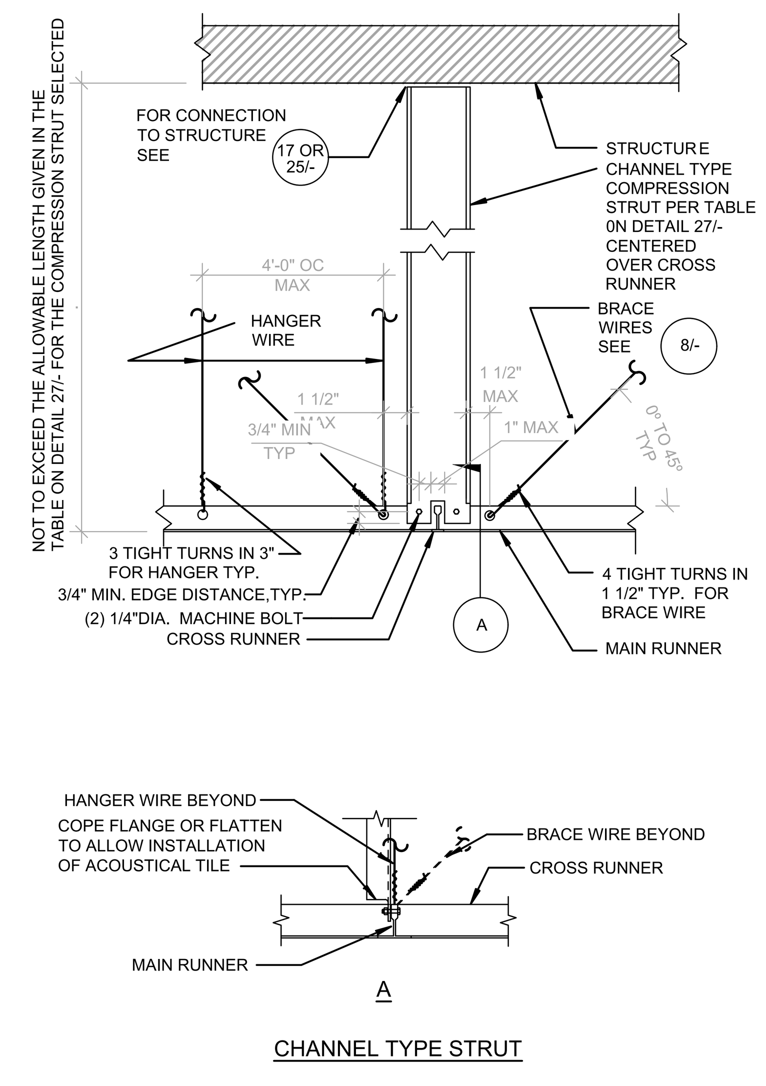

SOFFIT FRAMING @ ACT CEILING — 1" = 1'-0" — 13

KEYNOTES:
1. EXISTING STRUCTURE TO REMAIN.
2. 2x6 STUD FRAMING AT 16" O.C.
3. DBL. 2X BLOCKING.
4. 2x4 DIAGONAL BRACE W/ (2) 16d NAILS EA. END.
5. CONT. 2x6 W/ 1/4" DIA. LAG SCREW AT EA. STUD.
6. 5/8" GYPSUM BOARD FINISH.
7. ACOUSTIC TILE SUSPENSION SYSTEM CEILING.

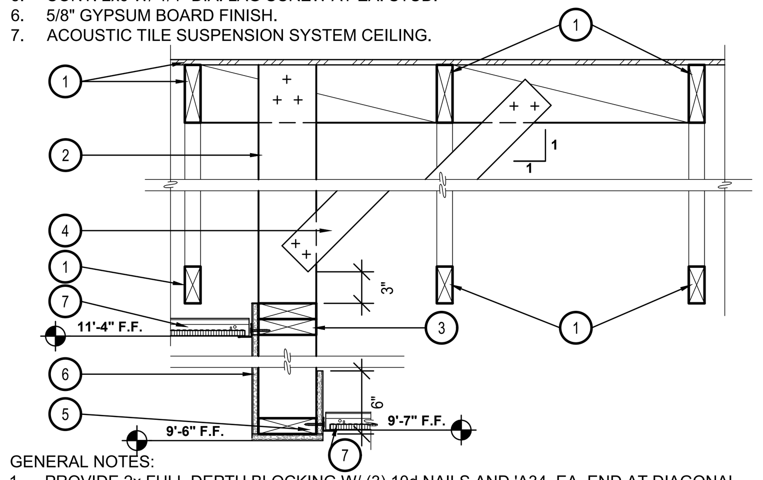

GENERAL NOTES:
1. PROVIDE 2x FULL DEPTH BLOCKING W/ (3) 10d NAILS AND 'A34, EA. END AT DIAGONAL BRACING PERPENDICULAR TO ROOF FRAMING.
2. REFERENCE STRUCTURAL DETAIL 12/S1.2 FOR ADDITIONAL INFORMATION.

SOFFIT FRAMING — 1" = 1'-0" — 14

KEYNOTES:
1. EXISTING STRUCTURE TO REMAIN.
2. 2x6 STUD FRAMING AT 16" O.C.
3. DBL. 2x BLOCKING.
4. 2x4 DIAGONAL BRACE W/ (2) 16d NAILS EA. END.
5. CONT. 2x6 W/ 1/4" LAG SCREW AT EA. STUD.
6. 5/8" GYPSUM BOARD FINISH.
7. ACOUSTIC TILE SUSPENSION SYSTEM CEILING.

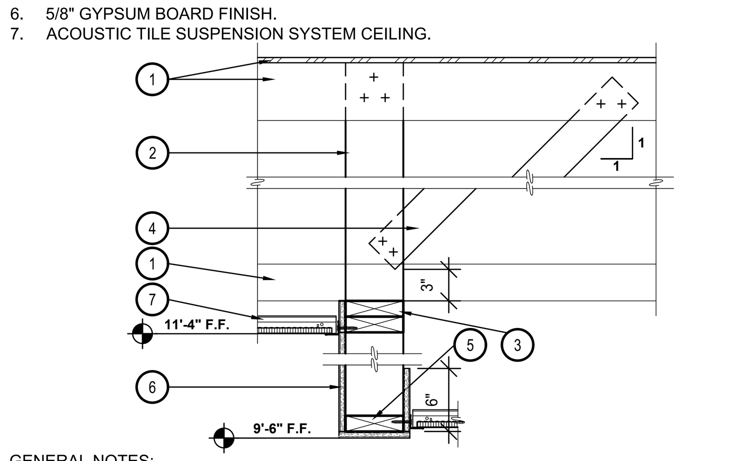

GENERAL NOTES:
1. PROVIDE 2x FULL DEPTH BLOCKING W/ (3) 10d NAILS AND 'A34, EA. END AT DIAGONAL BRACING PERPENDICULAR TO ROOF FRAMING.
2. REFERENCE STRUCTURAL DETAIL 11/S1.2 FOR ADDITIONAL INFORMATION.

CEILING WIRE SPLICES — N.T.S. — 9

KEYNOTES
1. (4) TURNS IN 1 1/2" TYPICAL AT EACH END
2. (3) TURNS IN 3" TYPICAL AT EACH END
3. BRACE OR HANGER WIRE
4. HANGER WIRE

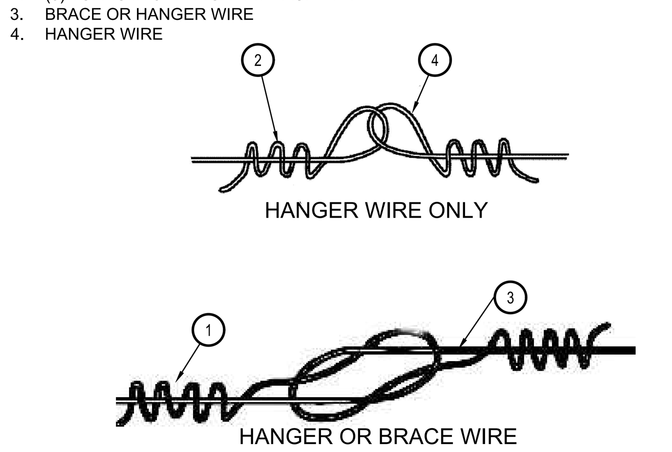

GENERAL NOTES
1. NOTE: WIRE SPLICES ARE SHOWN LOOSELY TIED FOR ILLUSTRATIVE PURPOSES ONLY AND SHALL BE DRAWN TIGHT TO COMPLETE INSTALLATION WHEN CONSTRUCTED.

STRUT TO EXISTING WOOD I-JOIST — 3" = 1'-0" — 25

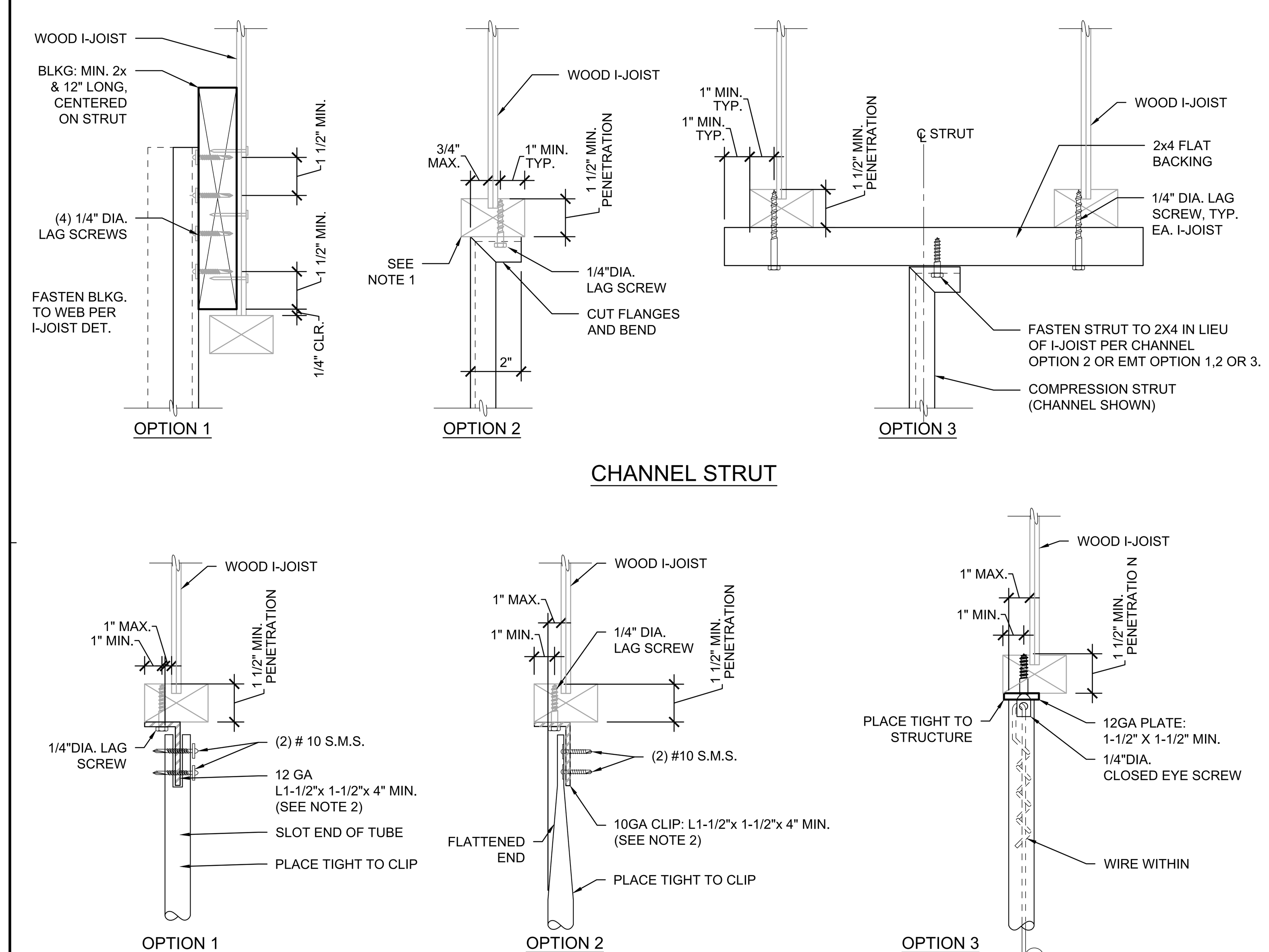

GENERAL NOTES
1. WEB OF CHANNEL TO BEAR WITHIN WIDTH OF WOOD MEMBER.
2. VERTICAL LEG OF MEMBER TO FALL WITHIN THE WIDTH OF THE WOOD MEMBER.
3. NO. 14 WOOD SCREW MAY BE USED IN LIEU OF 1/4" LAG SCREW

COMPRESSION STRUT- EMT TYPE — 1"=1'-0" — 20

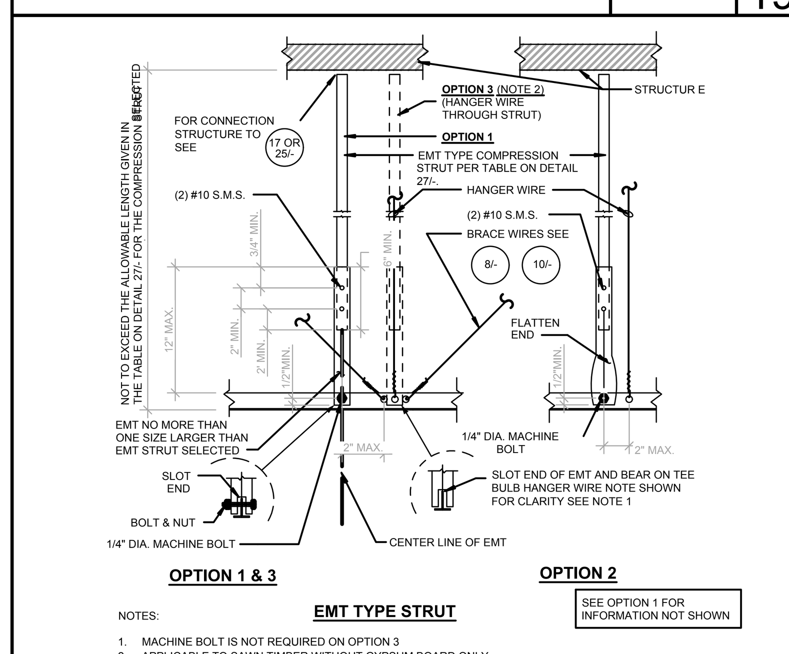

NOTES:
1. MACHINE BOLT IS NOT REQUIRED ON OPTION 3
2. APPLICABLE TO SAWN TIMBER WITHOUT GYPSUM BOARD ONLY.

ROOF PENETRATION AT PIPE — 3" = 1'-0" — 15

KEYNOTES
1. EXISTING ROOF SHEATHING.
2. EXISTING ROOF FRAMING.
3. VENT PENETRATION
4. EXISITING SINGLE-PLY PVC ROOFING SYSTEM, PATCH & REPAIR PER MAUNFACTURER.
5. CONTINUOUS BEAD OF SINGLE PLY LVOC CAULK - SLOPE TO SHED WATER AWAY FROM PIPE.
6. GALVANIZED SHEET METAL UMBRELLA FLASHING WITH MINIMUM 1" WIDE S.S. CLAMPING RING (SEE CHAPTER 8 OF SMACNA 7 TH EDITION FOR ADDITIONAL INFO.) PROVIDE 1/2" GAP BETWEEN BOTTOM OF UMBRELLA & FLASHING BOOT.
7. MIN. 1" WIDE S.S. CLAMPING RING.
8. PRE-MOLDED PVC FLASHING BOOT.
9. 1 1/2" MINIMUM WELD - CONTINUOUS AROUND BOOT PERIMETER.
10. SEALING MASTIC BETWEEN PIPE AND NECK OF UMBRELLA FLASHING.
11. APPROVED FASTENER & PLATE, MIN. (4) AROUND PERIMETER OF PIPE.

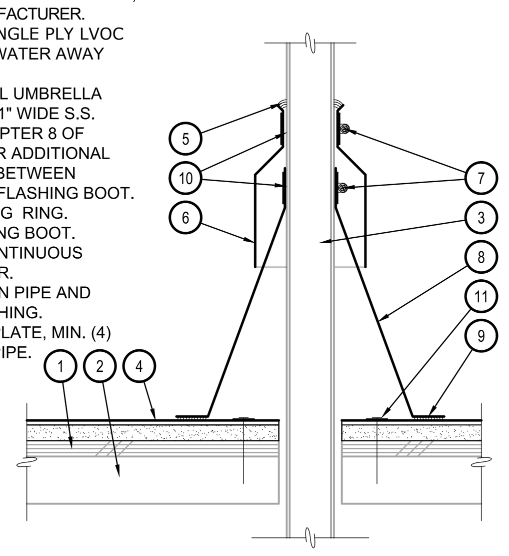

SUSPENSION & LAT. BRACING ASSEMBLY — 1/4"=1'-0" — 10

KEYNOTES
1. COMPRESSION STRUTS: . COMPRESSION STRUT SHALL NOT REPLACE HANGER WIRE. SEE DETAILS 19 & 20/- FOR COMPRESSION STRUT.
2. 12 GA. BRACING WIRE W/ MIN. 4 TIGHT TURNS IN 1 1/2" BOTH ENDS OF WIRE (TYP.) REF. DETAILS 8, AND 9/-.
3. 12 GA. VERTICAL HANGER WIRE AT 4'-0" EACH WAY (4' OC. AT MAIN RUNNER) MIN. (3) TIGHT TURNS IN 3" BOTH ENDS (TYP.).
4. MAIN RUNNER.
5. CROSS RUNNER.
6. 1 1/2" (MAXIMUM) FROM BRACING WIRES TO COMPRESSION STRUT AND CROSS RUNNERS.

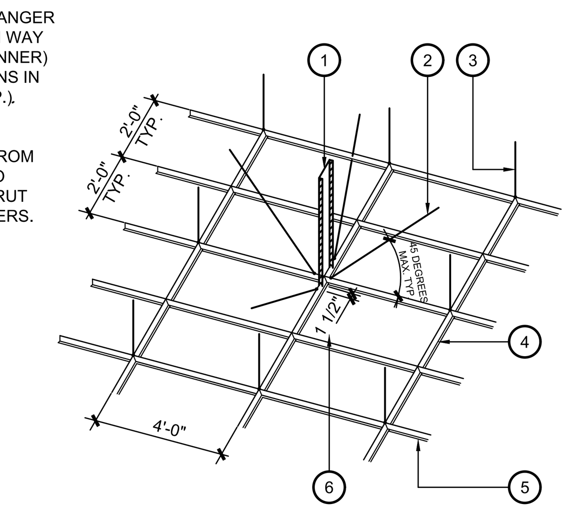

TYP. CLG. PLAN FOR 12'-0" x 12'-0" — 1/8" = 1'-0" — 5

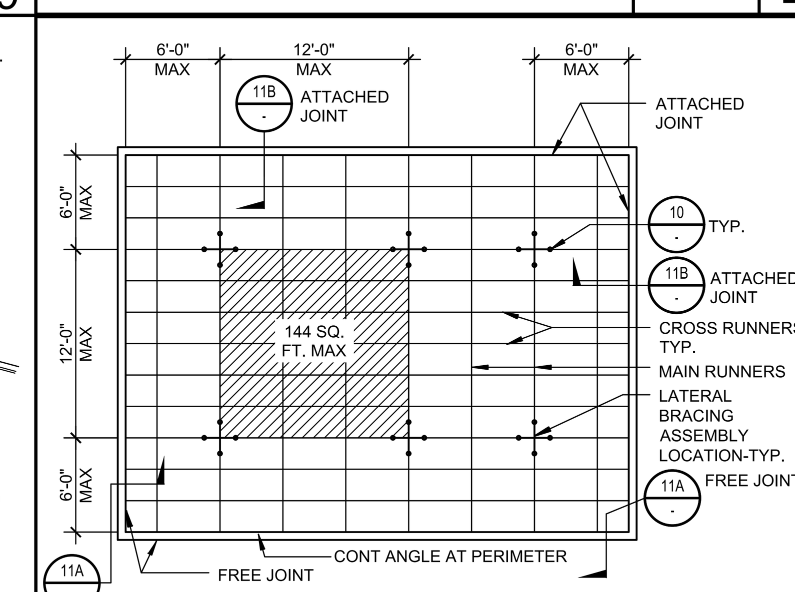

NOTE: BRACING WIRES AND COMPRESSION STRUT SHALL OCCUR AT EVERY 144 SQ. FT. MAX. IN ROOMS OVER 144 SQ. FT.

IDENTIFICATION STAMP
DIV. OF THE STATE ARCHITECT
APP: 04-122772 INC:
REVIEWED FOR
SS ☑ FLS ☑ ACS ☑
DATE: 03/26/2024

SPROTTE | WATSON
ARCHITECTURE | PLANNING

LICENSED ARCHITECT — C12359 — REN. OCTOBER 2025 — STATE OF CALIFORNIA

CONSULTANT

DEHESA ELEMENTARY SCHOOL
CONSTRUCTION DOCUMENTS
DEHESA SCHOOL DISTRICT
4612 DEHESA ROAD
EL CAJON, CA 92019

REVISIONS

DESCRIPTION
CEILING & ROOF DETAILS

DATE
01.25.24

JOB #
22-0400

SHEET #
A-10.3

KEYNOTES
1. WALL FINISH PER FINISH SCHEDULE.
2. WOOD BLOCKING PER DETAIL 8/-.
3. WOOD STUD WALL. PROVIDE BLOCKING AS REQUIRED.
4. MAP RAIL.
5. PLASTIC LAMINATED FINISH TYPICAL AT ALL EXPOSED SURFACES.
6. HORIZONTAL SLIDING. MARKERBOARD PANELS.
7. ADJUSTABLE PLASTIC LAMINATE SHELVES (REF. INT. ELEVS. FOR NUMBER OF SHELVES PER UNIT).
8. ALUMINUM TRAY WITH END CLOSURE, WHERE APPLICABLE.
9. PLYWOOD SUB-TOP WITH PLASTIC LAMINATED FINISH AT ALL EXPOSED SURFACES.
10. CASEWORK ANCHORAGE PER DETAIL 7/-.
11. LOCKABLE PLASTIC LAMINATE FLUSH DOOR.
12. 4" TOPSET RUBBER BASE PER FINISH SCHEDULE.

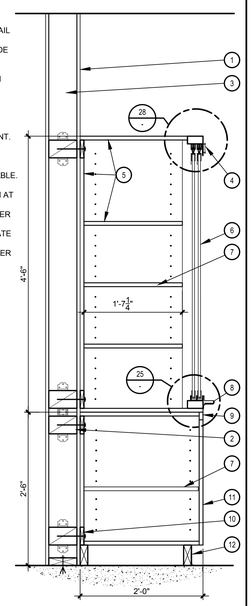

GENERAL NOTES
1. ALL CASEWORK IS TO BE PLASTIC LAMINATE, TYPICAL.

INSTRUCTION WALL SECTION — 1" =1'-0" — 27

KEYNOTES
1. 4" WOOD STUD WALL FRAMING.
2. PLASTIC LAMINATE COUNTER TOP OVER 3/4" PLYWOOD SUBSTRATE, EDGE DETAIL REF. DETAIL 13/-.
3. 3/4" PLYWOOD SUBSTRATE. ATTACH TO SUPPORT BRACKETS WITH CONSTRUCTION ADHESIVE AND (4) 1"x #10 R.H.W.S., ATTACH TO LEDGER FROM TOP W/ 2"x #8 F.H.W.S AT 12" O.C., PRE-DRILL ALL HOLES.
4. TUBE STEEL SUPPORT BRACKET. REFERENCE STRUCTURAL DETAIL 6A/6/S 1.2 & S2.1.
5. CLEAR ANODIZED ALUMINUM BASE REF. FINISH SCHEDULE AND SPECS.
6. PLASTIC LAMINATE REFERENCE FINISH LEGEND ON SHEET A-8.1 AND SPECIFICATION SECTION 06 41 16
7. SOLID SURFACE FINISH REFERENCE FINISH SCHEDULE & SPECS 12 36 61.16.
8. 2" DIA. SATIN CHROME GROMMET AT EACH WORK SPACE, LOCATE WITHIN 3" OF CENTER SUPPORT.

GENERAL NOTES:
1. NO SHARP PROTRUSIONS OR ABRASIVE FINISHES BELOW COUNTER. GRIND AND SMOOTH ALL EDGES.
2. BRACKETS MUST BE INSTALLED PRIOR TO INSTALLATION OF GYPSUM WALL BOARD. PATCH PER MANUFACTURERS RECOMMENDATIONS.
3. NO OUTLETS, SWITCHES, ETC. TO BE MOUNTED ON WALL AT STATIONS DEEPER THAN 24" AND DESIGNATED AS ACCESSIBLE ON FLOOR PLAN.

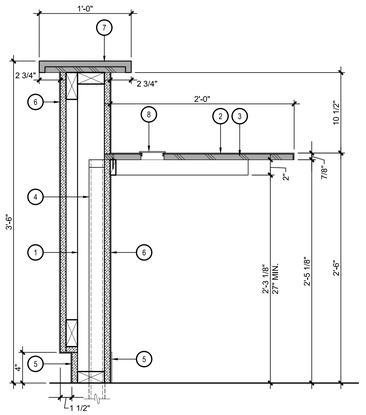

LIBRARY DESK — 1 1/2" = 1'-0" — 22

KEYNOTES:
1. DASHED LINE INDICATES CABINETRY
2. PHONE.
3. THERMOSTAT.
4. PAPER TOWEL DISPENSER.
5. SOAP DISPENSER.
6. FIRE EXTINGUISHER.
7. RECESSED FIRE EXTINGUISHER CABINET. 4" MAX. PROJECTION FROM WALL, REF.3/A-10.2.
8. MARKER BOARD OR TACKBOARD.
9. ELECTRICAL OUTLET.
10. OPERABLE MECHANISM OR HANDLE (ACCESSIBLE).
11. SANITARY NAPKIN DISPENSER 4" MAX. PROJECTION.
12. ELECTRIC HAND DRYER, 4" MAX. PROJECTION

GENERAL NOTES:
1. ILLUSTRATION INDICATES TYPICAL MOUNTING HEIGHTS. ADDITIONAL EQUIPMENT OR DEVICES NOT SHOWN SHALL COMPLY WITH THE DIMENSIONAL REQUIREMENTS BELOW.
2. REFERENCE SPECIFICATIONS FOR ADDITIONAL INFORMATION.
3. FORWARD APPROACH FOR DEVICES MOUNTED ABOVE COUNTER ASSUMES THAT DIRECTLY BELOW THE DEVICE, THE COUNTER HAS A 30" MIN. WIDE X 27" MIN. HIGH X A DEPTH EQUAL TO THE DEPTH OF THE DEVICE FROM THE COUNTER FRONT CLEAR OPENING. CBC 11B-306 & 11B-308.

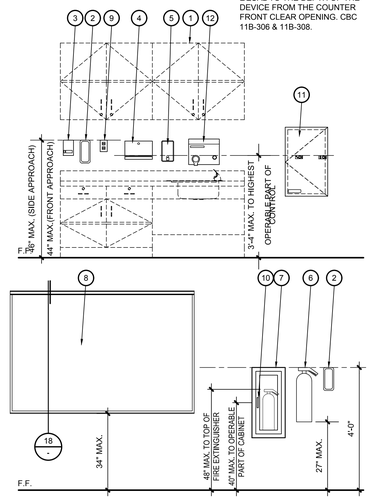

FFE MOUNTING HEIGHTS — 1/2"=1'-0" — 17

KEYNOTES
a MINIMUM WOOD BLOCKING 3X, REFERENCE DETAIL 8/-. FOR BLOCKING ANCHORAGE TO WALL.
b MINIMUM ANCHOR QUANTITIES: 2 TOP AND 2 BOTTOM THROUGH 1x4CABINET FRAME BACKING WITHIN 9" OF CABINET EDGES. ADDITIONAL ANCHORS SHALL BE EQUALLY SPACED HORIZONTALLY
c QUANTITY DIVIDED BETWEEN TOP AND BOTTOM OF UNIT.
d BOOKCASE OR STORAGE CABINETS GREATER THAN 4 FEET AND NOT EXCEEDING 7 FEET IN HEIGHT.
e UPPER CABINETS NOT EXCEEDING 30 INCHES IN HEIGHT.
f BASE CABINETS NOT EXCEEDING 36" IN HEIGHT
g PROVIDE FLOOR ANCHORAGE AT TOE SPACE PER DETAIL 5/-.
h PROVIDE SUPPORT CORBELS PER PLANS, BUT NOT EXCEEDING 48" O.C.

CABINET TYPE	WOOD BACKING BETWEEN WOOD STUDS (a)	
	MIN. QTY. (b)(c)	SPACING SPACING
30" DEEP STORAGE/BOOKCASE CABINETS (d)	12	6" O.C.
24" DEEP STORAGE/BOOKCASE CABINETS (d)	10	8" O.C.
15" DEEP STORAGE/BOOKCASE CABINETS (d)	6	16" O.C.
15" UPPER CABINETS (e)	6	12" O.C.
24" DEEP BASE CABINETS (f)(g)	6	16" O.C.
30" DEEP BASE CABINETS (f)(g)	8	16" O.C.
24" DEEP BASE WORK COUNTERTOP (h)		16" O.C.
30" DEEP BASE WORK COUNTERTOP (h)		16" O.C.
REFERENCE DETAILS	2, 4, 15 & 27/-	

GENERAL NOTES
1. SCREWS SHALL BE # 12 W.S. WITH 1 1/2" MIN. EMBED INTO BLOCKING.
2. EXPOSED SCREW HEADS SHALL BE PROVIDED WITH SELF ADHESIVE COVERS TO MATCH CABINET FINISH.
3. PROVIDE WASHER BETWEEN FASTENER AND METAL LOCKER.

CASEWORK ANCHORAGE FASTENERS — NONE — 6

KEYNOTES:
1. 2x SUB WALL. PROVIDE BLOCKING AS REQUIRED AND AS NOTED.
2. WALL FINISH PER FINISH SCHEDULE
3. 3x BLOCKING WITH A34's TOP AND BOTTOM AT EACH END, TYPICAL. REFERENCE DETAIL 8/-.
4. 4" TOPSET RUBBER BASE PER FINISH SCHEDULE
5. WALL HUNG CABINET, ATTACHMENT PER DETAIL 12/-.
6. PLASTIC LAMINATE FLUSH DOORS.
7. 1 X 4 DF/L#1 CONTINUOUS LEDGER. PER DETAIL 7/-.
8. BASE CABINET, ATTACHMENT PER DETAIL 12/-.
9. ADJUSTABLE SHELF, TYPICAL
10. CONTINUOUS 2X4 SLEEPER REFERENCE DETAIL 5/-.
11. BACKSPLASH RETURN AT SIDE WALLS
12. BACKSPLASH WITH INTEGRAL COVE
13. PLASTIC LAMINATE COUNTERTOP
14. PLASTIC LAMINATE FLUSH DOOR

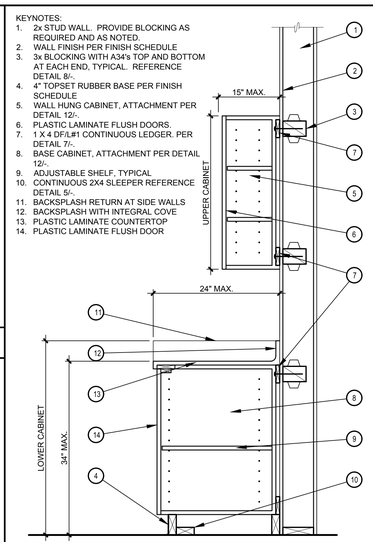

GENERAL NOTES:
1. EXTEND TOP, SIDES AND EXPOSED BOTTOM OF CABINETS TO WALL, TYPICAL. VERIFY SPACING REQUIREMENTS WITH CABINET MANUFACTURE. SIMILAR ANCHORAGE FOR TALL CABINETS, EXCEPT ANCHOR AT TOP AND BOTTOM.
2. ANCHOR CASEWORK AT MASONRY WALLS w/ 3/8" DIA. RAMSET DYNABOLT SLEEVE ANCHORS (16" O.C.) w/ 2" MIN. PENETRATION, TYPICAL WHERE OCCURS.
3. EXPOSED OR OPEN SHELVING TO BE PROVIDED WITH POST TYPE SHELF BRACKETS OR SCREWS TO PREVENT LATERAL SHELF MOVEMENT.
4. THIS DETAIL IDENTIFIES THE PRIMARY ELEMENTS OF THE CASEWORK AND ATTACHMENTS TO EXISTING WALL CONDITIONS. VARIATIONS MAY OCCUR BASED UPON THE INTERIOR ELEVATIONS AND W.I.C. STANDARDS.

CABINET ATTACH TO NEW WALLS — 1"=1'-0" — 2

KEYNOTES
1. CASEWORK. PLASTIC LAMINATE COUNTERTOP.
2. FRAMING.
3. SOLID SURFACE COUNTERTOP.
4. PLYWOOD SUBSTRATE.

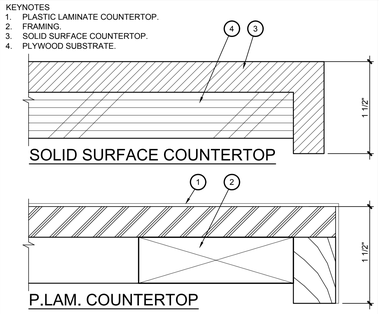

CABINET FASTENER LOCATIONS — 3/8"=1'-0" — 12

KEYNOTES
1. 2x SUB WALL FRAMING
2. WALL FINISH.
3. PROVIDE 3X BLOCKING WITH A34 EA. SIDE AT CASEWORK BACK, TOP AND BOTTOM, REF. DETAIL 8/-.
4. CASEWORK TOP.
5. CASEWORK BACK.
6. CASEWORK FASTENER TO BLOCKING. REF. DETAIL 6/-.

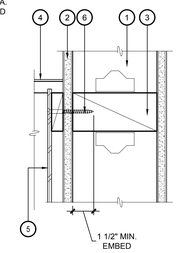

GENERAL NOTES:
1. DETAIL INDICATES BASIC STRUCTURAL COMPONENTS. NOT ALL FINISHES MAY BE INDICATED.
2. PROVIDE SIMILAR BLOCKING AT CASEWORK BOTTOM.

CASEWORK ANCHORAGE — 3"=1'-0" — 7

KEYNOTES
1. 4" WOOD STUD WALL FRAMING.
2. PLASTIC LAMINATE COUNTER TOP OVER 3/4" PLYWOOD SUBSTRATE, EDGE DETAIL REF. DETAIL 13/-.
3. 3/4" PLYWOOD SUBSTRATE. ATTACH TO SUPPORT BRACKETS WITH CONSTRUCTION ADHESIVE AND (4) 1"x #10 R.H.W.S., ATTACH TO LEDGER FROM TOP W/ 2"x #8 F.H.W.S AT 12" O.C., PRE-DRILL ALL HOLES.
4. TUBE STEEL SUPPORT BRACKET. REFERENCE STRUCTURAL DETAIL 6A/6/S1.2 & S2.1
5. PLASTIC LAMINATE REFERENCE FINISH LEGEND ON SHEET A-8.1 AND SPECIFICATION SECTION 06 41 16
6. CLEAR ANODIZED ALUMINUM BASE PER FINISH SCHEDULE AND SPEC SECTION 05 50 00.

GENERAL NOTES:
1. NO SHARP PROTRUSIONS OR ABRASIVE FINISHES BELOW COUNTER. GRIND AND SMOOTH ALL EDGES.
2. BRACKETS MUST BE INSTALLED PRIOR TO INSTALLATION OF GYPSUM WALL BOARD. PATCH PER MANUFACTURERS RECOMMENDATIONS.
3. NO OUTLETS, SWITCHES, ETC. TO BE MOUNTED ON WALL AT STATIONS DEEPER THAN 24" AND DESIGNATED AS ACCESSIBLE ON FLOOR PLAN.

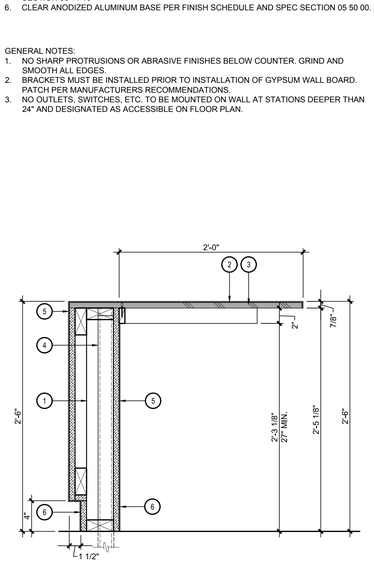

LIBRARY DESK 2 — 1 1/2" = 1'-0" — 24

KEYNOTES
1. 4" WOOD STUD WALL FRAMING.
2. PLASTIC LAMINATE COUNTER TOP OVER 3/4" PLYWOOD SUBSTRATE, EDGE DETAIL REF. DETAIL 13/-.
3. 3/4" PLYWOOD SUBSTRATE. ATTACH TO SUPPORT BRACKETS WITH CONSTRUCTION ADHESIVE AND (4) 1"x #10 R.H.W.S., ATTACH TO LEDGER FROM TOP W/ 2"x #8 F.H.W.S AT 12" O.C., PRE-DRILL ALL HOLES.
4. TUBE STEEL SUPPORT BRACKET. REFERENCE STRUCTURAL DETAIL 6A/6/S1.2 & S2.1
5. PLASTIC LAMINATE REFERENCE FINISH LEGEND ON SHEET A-8.1 AND SPECIFICATION SECTION 06 41 16
6. CLEAR ANODIZED ALUMINUM BASE PER FINISH SCHEDULE AND SPEC SECTION 05 50 00.
7. BLOCKING PER DETAIL 8/-.

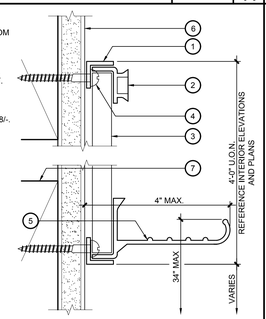

WALL MOUNTED MARKER BOARD — 6"=1'-0" — 18

KEYNOTES:
1. WOOD STUD WALL. PROVIDE BACKING AS REQUIRED AND AS NOTED.
2. WALL FINISH PER FINISH SCHEDULE
3. WOOD BLOCKING PER DETAIL 8/-.
4. PLASTIC LAMINATE FLUSH DOORS.
5. CONTINUOUS LEDGER. TYPICAL AT FOUR (4) LOCATIONS. ATTACHED PER DETAIL 7/-
6. BASE CABINET, ATTACHMENT PER DETAIL 12/-.
7. ADJUSTABLE SHELF, TYPICAL
8. CONTINUOUS 2X4 SLEEPER REFERENCE DETAIL 5/-.
9. PLAM COUNTERTOP
10. RUBBER BASE, REF. FINISH SCHEDULE.

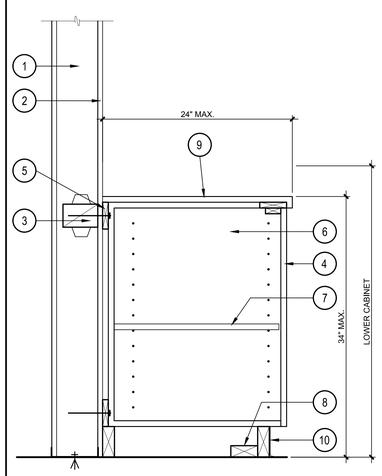

TYPICAL EDGE DETAIL — 12" = 1'-0" — 13

KEYNOTES
1. 4" BACK SPLASH.
2. FAUCET, 5 POUND MAX. OPERATING FORCE
3. SINK PER PLUMBING DRAWINGS. SINK MUST HAVE CENTER REAR DRAIN, CENTER OF DRAIN TO BE 1"-1 3/4" FROM FRONT EDGE OF COUNTER.
4. REMOVABLE PANEL FOR PLUMBING ACCESS. 6:1 SLOPE.
5. NO DOORS, 32" CLEAR, NO TOE BASE
6. CONTINUE FLOORING MATERIAL TO BACK WALL OF CASEWORK.
7. CASEWORK ANCHORED TO WALLS PER DETAILS 6 & 7/-.
8. KEKU OR EQUAL PANEL CLIPS, (2) PER SIDE AS SHOWN.

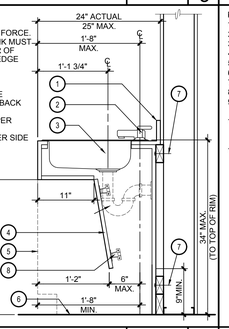

GENERAL NOTES
1. DETAIL PRIMARY FUNCTION IS TO PROVIDE DIMENSIONAL CRITERIA FOR ACCESSIBILITY. REF. INT ELEVATIONS AND SPECS FOR ADDTL INFO.
2. PIPE INSULATION SHALL HAVE A FLAME SPREAD INDEX NOT TO EXCEED 25 AND A SMOKE-DEVELOPMENT INDEX NOT TO EXCEED 450 IN ACCORDANCE WITH CBC 719.2.
3. DIMENSIONS THAT ARE TAKEN FROM THE WALL, ARE FROM THE FACE OF FINISH.
4. GARBAGE DISPOSAL WILL NOT WORK FOR THIS CONDITION.

ACCESSIBLE SINK CABINET — 1"=1'-0" — 10

KEYNOTES
1. GYPSUM WALL BOARD.
2. SIMPSON A-34 AT EACH SIDE OF STUD AT EACH END.
3. NEW 2x WOOD STUD AT BRACKET.
4. #12 S.M.S., 5 TOTAL.
5. FLUSH MOUNT SUPPORT BRACKET. BRACKET TO BE INSTALLED PRIOR TO INSTALLATION OF GYPSUM WALL BOARD.
6. BATT INSULATION.

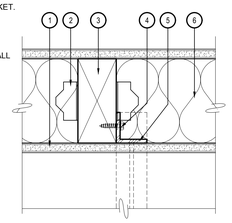

GENERAL NOTES
1. DETAIL INDICATES BASIC STRUCTURAL COMPONENTS. NOT ALL FINISHES MAY BE INDICATED.

FLUSH MOUNT COUNTER BRACKET — 3"=1'-0" — 9

KEYNOTES:
1. WOOD STUD WALL FRAMING PER PLANS.
2. WALL FINISH PER PLANS.
3. 3X BLOCKING. MATCH STUD WIDTH. PROVIDE WHERE REQUIRED FOR ELEMENTS SUCH AS, BUT NOT LIMITED TO, MILLWORK, GRAB BAR, HANDRAILING, DOWNSPOUT, WATER HEATER AND OTHER SIMILAR ELEMENTS REQUIRING ANCHORAGE BACKING SUPPORT. REFERENCE DRAWINGS FOR VARIOUS LOCATIONS. 4X MATERIAL MAY BE SUBSTITUTED FOR 3X MATERIAL. 4X BLOCKING SHALL BE PROVIDED WHERE SPECIFICALLY NOTED FOR 4X BLOCKING ELSEWHERE.
4. SIMPSON A-34 AT TOP & BOTTOM OF BLOCKING AT EACH END.

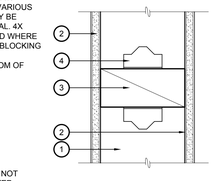

GENERAL NOTES
1. DETAIL INDICATES BASIC STRUCTURAL COMPONENTS. NOT ALL FINISHES MAY BE INDICATED.

WOOD WALL BLOCKING — 3"=1'-0" — 8

KEYNOTES:
1. WOOD FRAMED WALL. PROVIDE BLOCKING AS REQUIRED AND AS NOTED.
2. WALL FINISH PER FINISH SCHEDULE
3. WOOD BLOCKING PER DETAIL 8/-.
4. PLASTIC LAMINATE FLUSH DOORS.
5. 1 X 4 DF/L#1 CONTINUOUS LEDGER. PER DETAIL 7/-.
6. TALL CABINET, ATTACHMENT PER DETAILS 6 & 12/-.
7. ADJUSTABLE SHELF, TYP.
8. CONTINUOUS 2X4 SLEEPER REF. DETAIL 5/-.
9. 4" TOP SET RUBBER BASE PER FINISH SCHEDULE

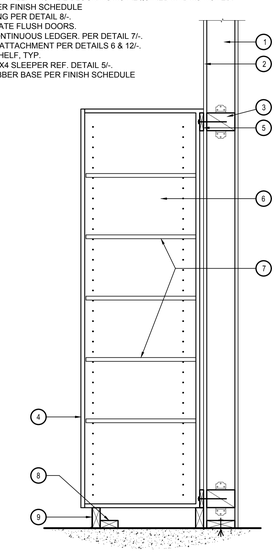

GENERAL NOTES:
1. EXTEND TOP, SIDES AND EXPOSED BOTTOM OF CABINETS TO WALL, TYPICAL. VERIFY SPACING REQUIREMENTS WITH CABINET MANUFACTURE.
2. EXPOSED OR OPEN SHELVING TO BE PROVIDED WITH POST TYPE SHELF BRACKETS OR SCREWS TO PREVENT LATERAL SHELF MOVEMENT.
3. THIS DETAIL IDENTIFIES THE PRIMARY ELEMENTS OF THE CASEWORK AND ATTACHMENTS TO NEW WALL CONDITIONS. VARIATIONS MAY OCCUR BASED UPON THE INTERIOR ELEVATIONS AND W.I.C. STANDARDS.

TALL CABINET ATTACH TO NEW WALLS — 1"=1'-0" — 4

KEYNOTES
1. CASEWORK DOOR/DRAWER FACE.
2. CASEWORK BOTTOM.
3. CASEWORK TOE SPACE.
4. CASEWORK SIDE PANEL.
5. FLOOR FINISH PER FINISH SCHEDULE.
6. RUBBER BASE REF. FINISH SCHEDULE.
7. 3" #10 F.H.W.S. AT 24" O.C. MIN.
8. HILTI X-CP 72 FASTENER AT 24" O.C.
9. CONTINUOUS 2X4 SLEEPER BETWEEN CASEWORK END PANELS.
10. CASEWORK END PANELS NOTCHED AT ADJOINING CASEWORK MODULES TO ALLOW SLEEPER CONTINUATION.
11. CONCRETE SUBFLOOR.

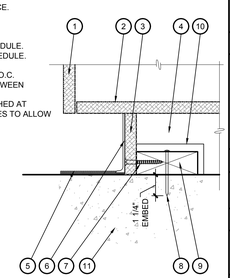

BASE CAB. TOE SPACE ANCHOR. — 3"=1'-0" — 5

KEYNOTES
1. TOP OF CABINET. PLASTIC LAMINATE FINISH ON ALL EXPOSED SURFACES.
2. END OF VERTICAL DIVIDER.
3. MARKER BOARD FRAME.
4. MAP RAIL WITH CORK INSERT. INSTALL WITH 1 1/2"MIN. CLEARANCE TO SOFFIT.
5. HORIZONTAL SLIDING MARKER BOARD (2 PANELS).

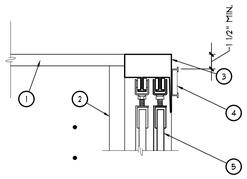

INSTRUCTION WALL DETAIL — 3"=1'-0" — 28

KEYNOTES
1. 4" BACK SPLASH.
2. FAUCET, 5 POUND MAX. OPERATING FORCE
3. SINK PER PLUMBING SHEETS.
4. CABINET DOORS
5. CASEWORK ANCHORED PER DETAILS 6 & 7.

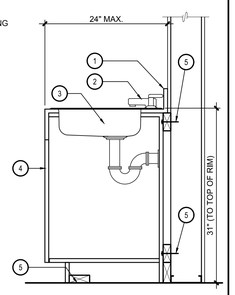

GENERAL NOTES
1. DETAIL IS TO BE USED AT KINDERGARTEN ONLY. ACCESSIBILITY IS PARALLEL APPROACH. REACH RANGE AND HEIGHT DIMENSIONS ARE BASED ON AGES 5-8 PER CBC 11B-606.2 EXCEPTION 5.

ACCESS. SINK CABINET @ KINDER — 1"=1'-0" — 29

KEYNOTES
1. HORIZONTAL SLIDING MARKERBOARD (2 PANELS)
2. BOTTOM GUIDE CHANNEL.
3. TRAY WITH END CLOSURE.
4. PLYWOOD SUBTOP WITH PLASTIC LAMINATE FINISH ON ALL EXPOSED SURFACES.
5. PLASTIC LAMINATE FLUSH DOOR.
6. BOTTOM OF CABINET.
7. END OF VERTICAL DIVIDER.
8. BRACKET HOLES.

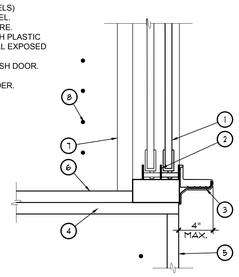

INSTRUCTION WALL DETAIL — 3"=1'-0" — 25

KEYNOTES
1. 2" MOUNTING ANGLE 24"O.C. TOP AND BOTTOM ONLY
2. MAP RAIL
3. MARKERBOARD
4. FASTENERS PER SPEC.
5. EXTRUDED ALUM. TRAY. 4" MAX. PROJECTION FROM WALL.
6. GYPSUM BOARD.
7. BLOCKING PER DETAIL 8/-.

WORK STATION COUNTER SECTION — 1 1/2" = 1'-0" — 20

KEYNOTES:
1. WOOD STUD WALL. PROVIDE BACKING AS REQUIRED AND AS NOTED.
2. WALL FINISH PER FINISH SCHEDULE
3. WOOD BLOCKING PER DETAIL 8/-.
4. PLASTIC LAMINATE FLUSH DOORS.
5. CONTINUOUS LEDGER. TYPICAL AT FOUR (4) LOCATIONS. ATTACHED PER DETAIL 7/-
6. BASE CABINET, ATTACHMENT PER DETAIL 12/-.
7. ADJUSTABLE SHELF, TYPICAL
8. CONTINUOUS 2X4 SLEEPER REFERENCE DETAIL 5/-.
9. PLAM COUNTERTOP
10. RUBBER BASE, REF. FINISH SCHEDULE.

NON WET AREA LOW CABINET — 1 1/2" = 1'-0" — 15

IDENTIFICATION STAMP
DIV. OF THE STATE ARCHITECT
APP: 04-122772 INC:
REVIEWED FOR
SS ☑ FLS ☑ ACS ☑
DATE: 03/26/2024

SPROTTE WATSON ARCHITECTURE + PLANNING

CONSULTANT

DEHESA ELEMENTARY SCHOOL
CONSTRUCTION DOCUMENTS
DEHESA SCHOOL DISTRICT
4612 DEHESA ROAD
EL CAJON, CA 92019

REVISIONS

DESCRIPTION
CASEWORK DETAILS

DATE
01.25.24

JOB #
22-0400

SHEET #
A-10.5

KEYNOTES
1. ROOM IDENTIFICATION SIGNAGE OR "EXIT" SIGNAGE LOCATED AT STRIKE SIDE OF DOOR. REF. OPENING SCHEDULE AND DETAILS 2,5,10,13 AND 14/-. STACK SIGNS WHERE OCCUR.
2. ASSISTIVE LISTENING SIGN WHERE OCCURS.
3. MAX. OCCUPANCY SIGN WHERE OCCURS.
4. LIGHT SWITCH.
5. THERMOSTAT WHERE OCCURS.
6. FIRE EXTINGUISHER CABINET WHEN SHOWN NEXT TO THE STRIKE SIDE OF A DOOR.

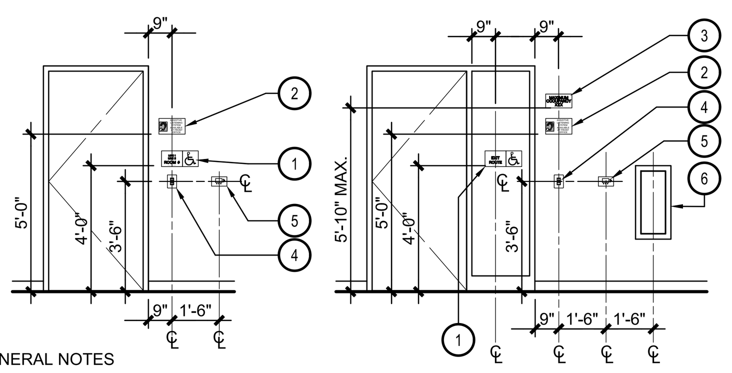

GENERAL NOTES
1. WHERE DOORS ARE MIRRORED ITEMS ARE MIRRORED.
2. NOTE, THESE ARE TYPICAL CONDITIONS AND LOCATIONS MAY VARY AS REQUIRED PER PLAN.

SIGN & EQUIP. DEVICE LOCATION 1/4" = 1'-0" 16

KEYNOTES
1. INTERNATIONAL SYMBOL OF ACCESSIBILITY (I.S.A.) SYMBOL SHALL BE WHITE. (11B-703.7.2.1)
2. BLUE BACKGROUND. THE BLUE SHALL BE EQUAL TO COLOR NUMBER 15090 IN THE FEDERAL STANDARD 595C. (11B-703.7.2.1)

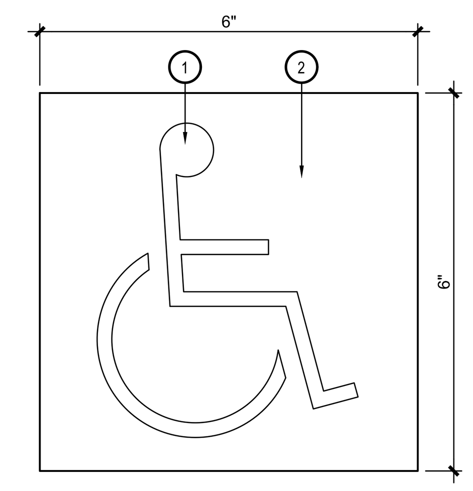

INTERNATIONAL SYMBOL OF ACCESSIBILITY 6"=1'-0" 11

KEYNOTES
1. 4" MAX. PROJECTION INTO PEDESTRIAN CIRCULATION AREA.
2. PROJECT-OUT WINDOW.
3. PROJECTION AREA.

GENERAL NOTES
1. OBJECTS PROJECTING FROM WALLS WITH THEIR LEADING EDGES BETWEEN 27" AND 80" ABOVE THE FINISHED FLOOR SHALL PROTRUDE NO MORE THAN 4" INTO WALKS, HALLS, CORRIDORS, PASSAGEWAYS OR AISLES.

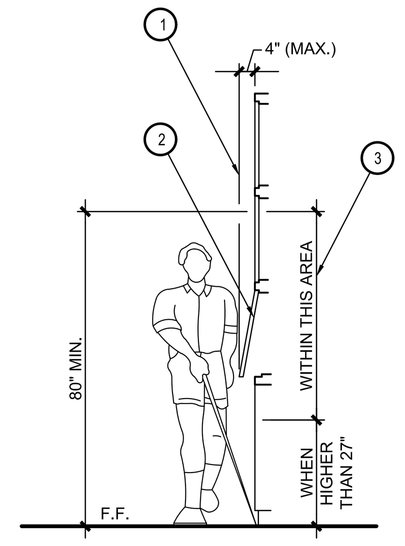

OBJECTS IN PATH OF TRAVEL 3/8"=1'-0" 6

KEYNOTES
1. 24" MIN. CLEAR AT EXTERIOR DOORS & GATES.
2. PROVIDE 18" MIN. CLEAR AT INTERIOR DOORS.
3. 12" MIN. CLEAR REQUIRED IF DOOR IS EQUIPPED WITH BOTH A LATCH AND A CLOSER.

GENERAL NOTES
1. DETAIL ILLUSTRATES SIMILAR CONDITIONS FOR SITE GATES IN P.O.T.
2. REFERENCE CBC 2022 FIGURE 11B-404.2.4.1 AND TABLE 11B-404.2.4.1

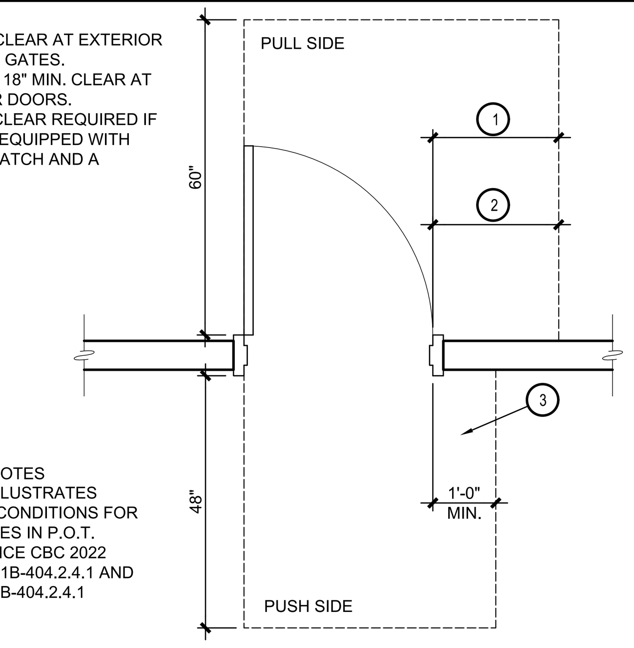

CLEARANCE AT DOORS 1/2"=1'-0" 1

KEYNOTES
1. EXISTING "HI-LO" ACCESSIBLE DRINKING.
2. BUBBLER LOCATED WITHIN 5" OF THE FRONT OF THE FOUNTAIN.
3. PUSH BUTTON OPERATION NOT REQUIRING A FORCE GREATER THAN 5 LBS.
4. DASHED LINE INDICATES AREA OF MAXIMUM ENCROACHMENT TO ALLOW FOR ACCESSIBILITY.
5. CANE DETECTION WARNING RAIL AT EACH SIDE, PER DETAIL 19/-.
6. BOTTLE FILLER STATION.
7. SENSOR FOR BOTTLE FILLING STATION.

GENERAL NOTES
1. THIS DETAIL PROVIDES BASIC DIMENSIONAL REQUIREMENTS FOR AN ACCESSIBLE DRINKING FOUNTAIN. ALL OTHER REQUIREMENTS OF 2022 CBC SECTION 11B-602 SHALL BE MET.
3. DIMENSIONS THAT ARE TAKEN FROM THE WALL ARE FROM FACE OF FINISH.
4. THE SPOUT SHALL PROVIDE A FLOW OF WATER 4 INCHES HIGH MINIMUM.IF THE SPOUT IS LOCATED LESS THAN 3 INCHES FROM THE FRONT OF THE UNIT, THE ANGLE OF THE STREAM SHALL BE 30 DEGREES MAX. WHERE LOCATED BETWEEN 3 INCHES AND 5 INCHES FROM THE FRONT OF THE UNIT, THE ANGLE OF THE STREAM SHALL BE 15 DEGREES MAX. RELATIVE TO THE FRONT FACE (ORIENTATION OF WALL SURFACE).

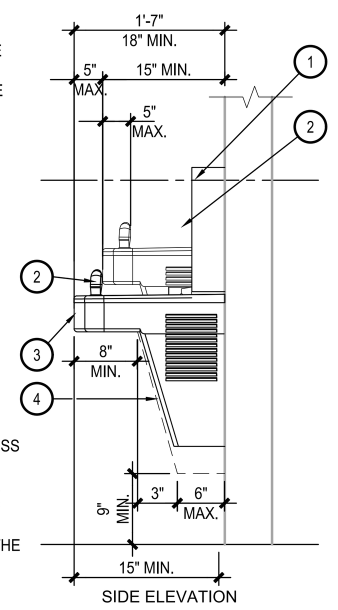

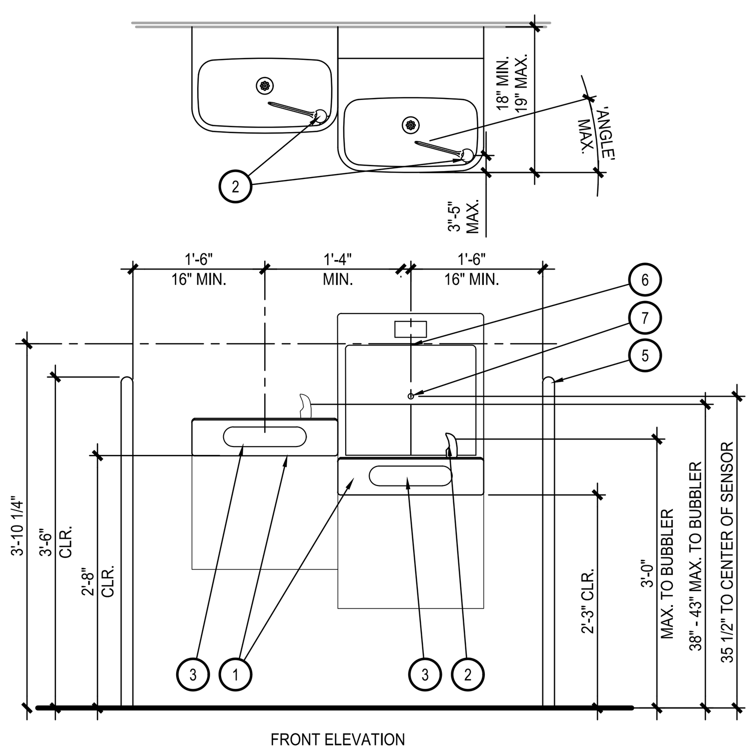

ACCESSIBLE DRINKING FOUNTAIN 3/4" = 1'-0" 18

KEYNOTES
1. 1/32" RAISED CHARACTERS AND SYMBOLS, TYPICAL
2. GRADE 2 BRAILLE TO MATCH COPY, TYPICAL
3. SQUARE CORNER, TYPICAL

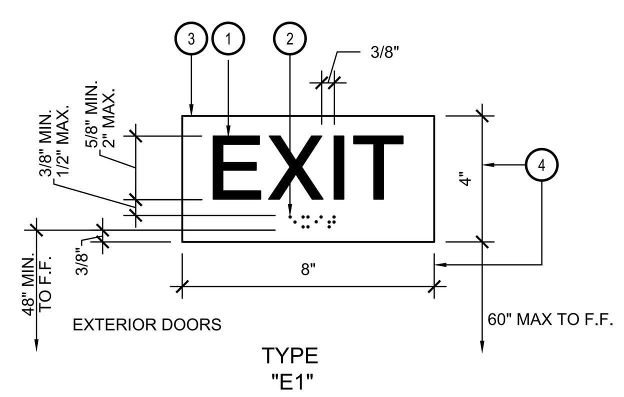

TYPE "E1"

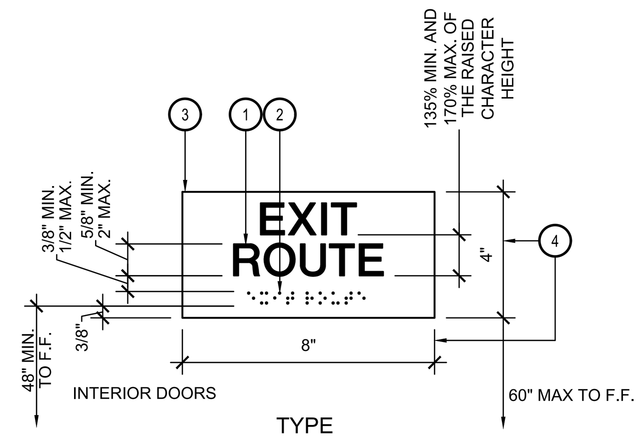

TYPE "E2"

GENERAL NOTES
1. REFERENCE OPENING SCHEDULE AND PLANS FOR SIGN LOCATION. VERIFY ALL TEXT WITH ARCHITECT PRIOR TO FABRICATION. TEXT SIZE: 1-1/4".
2. REFERENCE SPECIFICATION SECTION 10 14 23 FOR SIGNAGE MATERIAL.
3. REF. DETAIL 2 & 16/- FOR SIGNAGE LOCATIONS AND HEIGHT REQUIREMENTS.
4. REF. DETAIL 5/A- GENERAL NOTES 4 & 5 WHEN SIGNS ARE LOCATED ON GLASS.
5. LINE SPACING IS PER CBC SECTION 11B-703.2.8

EXIT SIGNAGE 3"=1'-0" 13

KEYNOTES:
1. 1/32" RAISED CHARACTERS AND SYMBOLS, TYPICAL
2. GRADE 2 BRAILLE TO MATCH COPY, TYPICAL.
3. SQUARE CORNER, TYPICAL.
4. PROVIDE DIE CAST ALUM. SIGNS WITH ENAMEL FINISH AT EXTERIOR LOCATIONS AND ACRYLIC PANEL SIGNS AT INTERIOR LOCATIONS.

TYPICAL TACTILE SIGN

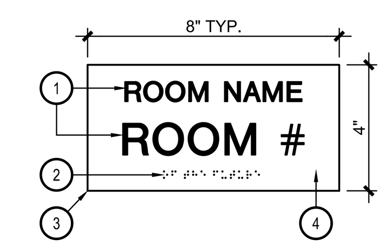

GENERAL NOTES:
1. REFERENCE OPENING SCHEDULE, PLANS AND DETAILS 2 & 15/- FOR LOCATIONS AND DETAILS 5, 10, 13 AND 14/- FOR SIGN TYPES DESIGNATIONS.
2. VERIFY ALL TEXT WITH ARCHITECT PRIOR TO FABRICATION.
3. REFERENCE SPECIFICATION SECTION 10 14 23 FOR SIGNAGE MATERIAL.
4. SIGNAGE MOUNTED TO GLASS SHALL BE PROVIDED WITH FULL BED OF SILICONE SEALANT MATCHING SIGN COLOR. NO PRESSURE SENSITIVE TAPES.
5. SIGNAGE MOUNTED TO GLASS SHALL HAVE AN EQUAL SIZED SIGN MOUNTED TO THE OPPOSITE SIDE OF THE GLASS. SIGN CAN BE LEFT BLANK IF APPROPRIATE.

RAISED CHARACTERS PER CBC 11B-703.2:
- CHARACTER DEPTH: CHARACTERS ON SIGNS SHALL BE RAISED 1/32 INCH (0.8 MM) MIN. AND SHALL BE SANS SERIF UPPERCASE CHARACTERS. DUPLICATE IN GRADE 2 BRAILLE.
- CHARACTER HEIGHT: RAISED CHARACTERS SHALL BE 5/8 INCH (15.9 MM) MIN. AND 2 INCHES (51 MM) HIGH MAX.
- FINISH AND CONTRAST: CHARACTERS, SYMBOLS AND THEIR BACKGROUND SHALL HAVE A NON-GLARE FINISH. CHARACTERS SHALL CONTRAST WITH THEIR BACKGROUNDS WITH EITHER LIGHT CHARACTERS ON DARK BACKGROUND OR DARK CHARACTERS ON LIGHT BACKGROUND.
- PROPORTIONS: RAISED CHARACTERS ON SIGNS SHALL BE SELECTED FROM FONTS WHERE THE WIDTH OF THE UPPERCASE LETTER "O" 60% MINIMUM AND 110% MAXIMUM OF THE HEIGHT OF THE UPPERCASE LETTER 'I'. STROKE THICKNESS OF THE UPPERCASE LETTER "I" SHALL BE A MAXIMUM 15% & 10% MIN. WHEN COMBINING TACTILE AND VISUAL CHARACTERS OF THE HEIGHT OF THE CHARACTER.
- LINE SPACING: SPACING BETWEEN THE BASELINES OF SEPARATE LINES OF RAISED CHARACTERS WITHIN A MESSAGE SHALL BE 135 % MINIMUM AND 170% MAXIMUM OF THE RAISED CHARACTER HEIGHT.

BRAILLE PER CBC 11B-703.3:
- CALIFORNIA GRACE 2 BRAILLE SHALL BE USED WHEREVER BRAILLE IS REQUIRED IN OTHER PORTIONS OF THESE STANDARDS.
- DOTS SHALL BE 0.10 INCH (2.5MM) ON CENTER BETWEEN TWO DOTS IN SAME CELL.
- DOTS SHALL BE 0.30 INCH (7.6MM) SPACE BETWEEN CORRESPONDING DOTS IN ADJACENT CELLS.
- DOTS SHALL BE 0.395 INCH (10MM) TO 0.4 INCH (10.2MM) BETWEEN CORRESPONDING DOTS FROM ONE CELL DIRECTLY BELOW.
- DOTS SHALL BE RAISED A MINIMUM OF .025 INCH (0.6MM) TO A MAX OF .037 INCH (0.9MM) ABOVE BACKGROUND AND HAVE A BASE DIAMETER OF 0.059 INCH (1.5MM) TO 0.063 INCH (1.6MM).
- REQUIRED ROUNDED OR DOMED CALIFORNIA BRAILLE DOTS. EACH DISTINCT AND SEPARATE. DOTS WITH STRAIGHT SIDES, FLAT TOPS OR SQUARE DOTS ARE NOT ACCEPTABLE.
- FOR ADDITIONAL INFORMATION REFERENCE DETAIL 15/- AND CBC FIGURE 11B-703.3.1.

BRAILLE DOT

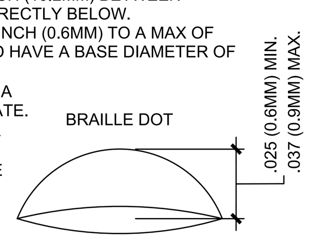

TACTILE REQUIREMENTS FOR SIGNS 3" = 1'-0" 8

KEYNOTES
1. GEOMETRIC SYMBOL PER DETAIL 5/- AT TOILET ROOM DOORS.
2. ROOM IDENTIFICATION SIGNAGE OR "EXIT" SIGNAGE LOCATED AT STRIKE SIDE OF DOOR. REF. OPENING SCHEDULE AND DETAILS 5 AND 10/-

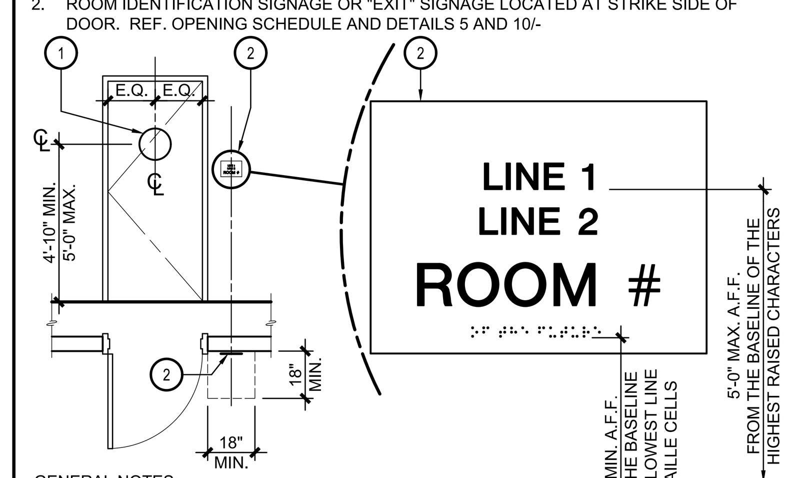

GENERAL NOTES:
1. WHERE ADJACENT WALL OR WINDOW CONFIGURATIONS PREVENT MOUNTING OF SIGNAGE AS INDICATED (OR AT DOUBLE DOORS), MOUNT PER CBC 11B-703.4.2.
2. REFERENCE DETAIL 8/- GENERAL NOTES 4 & 5 WHEN SIGNS ARE LOCATED ON GLASS.

DOOR SIGNAGE LOCATION NTS 2

KEYNOTES
1. 1/32" MIN. RAISED CHARACTERS AND SYMBOLS, TYPICAL. TEXT SHALL BE SANS SERIF UPPERCASE.
2. CALIFORNIA CONTRACTED GRADE 2 BRAILLE TO MATCH COPY, TYPICAL
3. SQUARE, TYPICAL
4. 1/4" THICK, EQUILATERAL TRIANGLE MOUNTED ON A 1/4" THICK, 12" DIAMETER CIRCLE WITH ACCESSIBLE INSIGNIA. SYMBOLS ARE TO CONTRAST MIN. 70% IN COLOR AND SIGN TO CONTRAST MIN. 70% WITH DOOR. CENTER ON DOOR AT 60" FROM BOTTOM OF DOOR TO CENTER LIINE OF SIGN.
5. 1/4" THICK MENS AND WOMENS SIGNS. SIGNS ARE TO BE DISTINCTLY DIFFERENT IN COLOR AND CONTRAST MIN. 70% FROM DOOR. CENTER ON DOOR AT 60" FROM BOTTOM OF DOOR TO CENTER LINE OF SIGN.
6. IMAGES SHOWN FOR REFERENCE TO WHAT SHOULD BE SHOWN FOR SINGLE GENDER RESTROOMS. SAME REQUIREMENTS ARE APPLIED AS THE UNISEX ILLUSTRATED SIGN.
7. OPAQUE WHITE ACRYLIC PLASTIC BACK.
8. PAINTED SYMBOL, SIGN, ETC., ON INTERIOR FACE OF CLEAR PLASTIC
9. CLEAR ACRYLIC PLASTIC
10. PERMANENTLY ADHERE SHEETS TOGETHER.
11. 1/16" MINIMUM ROUNDED EDGE, TYP.
12. 1/8" MINIMUM RADIUS AT VERTICE, TYP.

F.

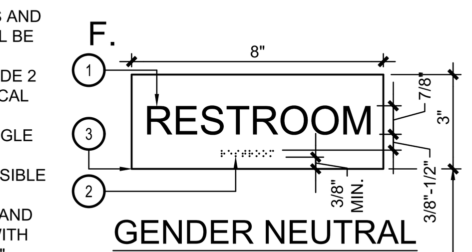

GENDER NEUTRAL

DIMENSION TO BE 4" AS REQUIRED PER LETTERING SIZE.

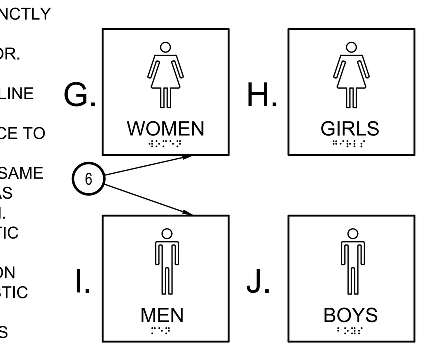

WALL MTD. SIGNS

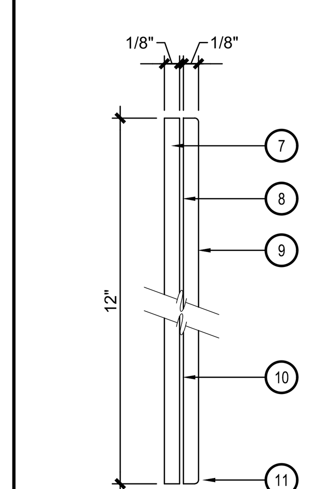

DOOR SIGN SECTION

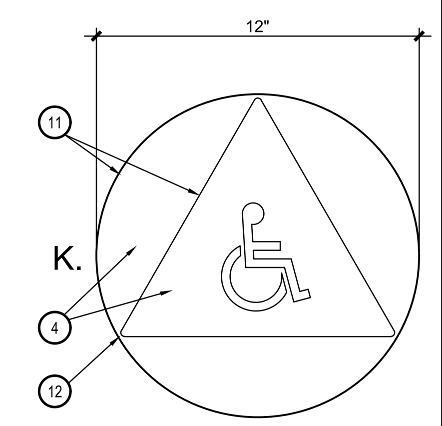

GENDER NEUTRAL

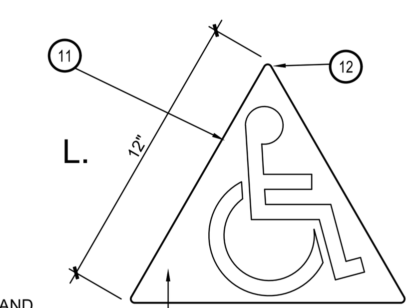

MEN & BOYS

GENERAL NOTES
1. REFERENCE OPENING SCHEDULE AND PLANS FOR SIGN LOCATION AND VERBIAGE. VERIFY ALL TEXT W/ ARCHITECT PRIOR TO FABRICATION.
2. REFERENCE SPECIFICATION SECTION 10.14.23 FOR SIGNAGE MATERIAL.
3. FINISH AND CONTRAST OF CHARACTERS, SYMBOLS AND THERE BACKGROUNDS SHALL HAVE A NON-GLARE FINISH. CHARACTERS AND SYMBOLS SHALL CONTRAST MIN. 70% WITH THEIR BACKGROUND, EITHER LIGHT CHARACTERS ON A DARK BACKGROUND OR DARK CHARACTERS ON A LIGHT BACKGROUND.
4. ATTACH DOOR SIGN USING (3) FLAT HEAD SCREWS, COUNTER SUNK W/ ADHESIVE.
5. REF. DETAIL 2/- FOR SIGN LOCATION MOUNTING REQUIREMENTS.
6. REFER TO DETAIL 8/- FOR TACTILE SIGN REQUIREMENTS.

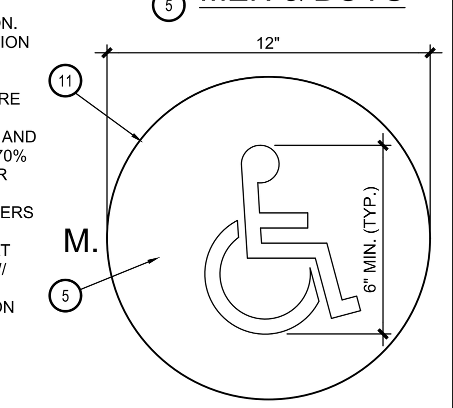

WOMEN & GIRLS

DOOR MTD. SYMBOLS

RESTROOM SIGNAGE 3" = 1'-0" 5

KEYNOTES:
1. FACE OF FINISH
2. 2" DIA. EXTRA STRONG SCH. 80 GALV. STEEL PIPE WARNING RAILING SET IN NON-SHRINK GROUT
3. 12" DIA. CONC. FOOTING FLUSH WITH EXISTING CONC. PAVING

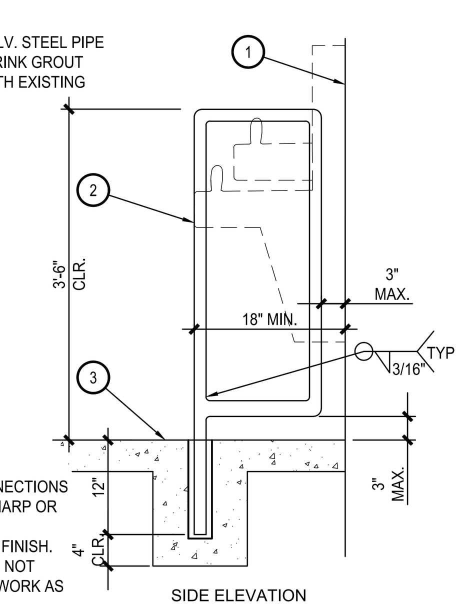

GENERAL NOTES:
1. CONT. WELD PERIMETER ALL CONNECTIONS
2. GRIND ALL WELDS SMOOTH, NO SHARP OR ABRASIVE SURFACES
3. TOUCH UP BUFF OUT GALV. STEEL FINISH.
4. SPECIAL INSPECTION & TESTING IS NOT REQUIRED FOR HANDRAIL WELDS WORK AS SHOWN.

WARNING RAIL 3/4" = 1'-0" 19

KEYNOTES:
1. ASSISTIVE LISTENING SYSTEM SIGNAGE. 0.10 ALUMINUM SHEET WITH WHITE ENAMEL FINISH.
2. ASSISTIVE LISTENING SYMBOL PER CBC11B-703.7.2.4
3. 5/8" HIGH BLACK HELVETICA LETTERING.

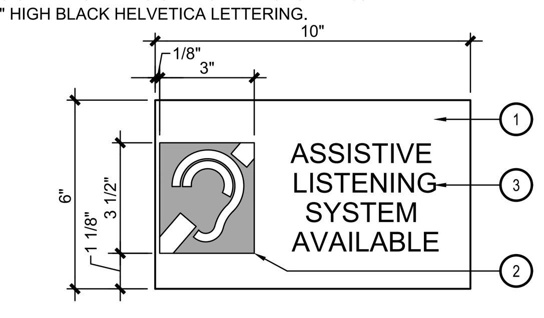

GENERAL NOTES:
1. SIGNAGE SHALL COMPLY WITH SPECS 10 14 23.
2. LOCATE SIGNS PER SHEETS A-A2-1,A-A9-1, A-B2-1, A-B9-1 AND DETAIL 16/-.
3. LOCATE SIGNAGE 60" A.F.F. TO ALLOW A PERSON TO APPROACH WITHIN 3" WITHOUT ENCOUNTERING A PROTRUDING OBJECT.
4. SIGNAGE FINISH SHALL BE NON-GLARE EGGSHELL WITH 11-19 DEGREE GLOSS ON A 60 DEGREE GLOSSMETER.
5. SIGNAGE VISUAL CHARACTERS SHALL COMPLY WITH CBC SECTIONS 11B-703.5, THROUGH 11B-703.5.9

ASSISTIVE LISTENING SIGNAGE 3" = 1'-0" 14

KEYNOTES
1. SQUARE, TYPICAL.
2. 1/32" RAISED CHARACTERS AND SYMBOLS, TYPICAL
3. 3/4" HIGH TEXT WHERE ILLUSTRATED IN MEDIUM TEXT, TYP. U.N.O.
4. 1" HIGH TEXT WHERE ILLUSTRATED IN LARGE TEXT, TYP. U.N.O.
5. CALIFORNIA CONTRACTED GRADE 2 BRAILLE TO MATCH COPY, TYPICAL.

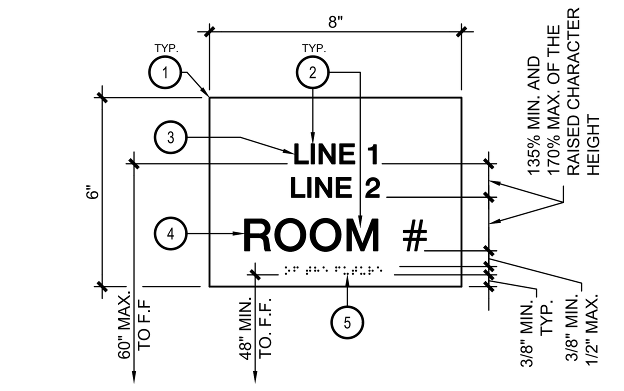

A SIGNAGE AT MULTI-LINE ROOM NAME

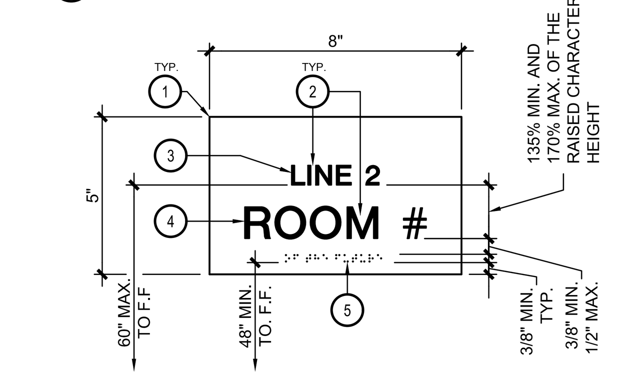

B SIGNAGE AT SINGLE-LINE ROOM NAME

GENERAL NOTES
1. REFERENCE OPENING SCHEDULE AND PLANS FOR SIGN LOCATION.
2. VERIFY ALL TEXT WITH ARCHITECT PRIOR TO FABRICATION.
3. REFERENCE DETAIL 8/- FOR ADDITIONAL INFORMATION FOR BRAILLE AND SIGNAGE REQUIREMENTS.
4. SIGNAGE BACKGROUND TO CONTRAST TO WALL OR GLASS.
5. SIGNAGE MOUNTED TO GLASS SHALL BE PROVIDED WITH FULL BED OF SILICONE SEALANT MATCHING SIGN COLOR. NO PRESSURE SENSITIVE TAPES.
6. EXTERIOR SIGNS SHALL BE MOUNTED WITH SILICONE SEALANT AT PERIMETER OF THE SIGN AND WITH A MIN. OF 2 FLUSH ANTI-VANDAL STAINLESS STEEL FASTENERS
7. REFERENCE SPECIFICATION SECTION 10 14 23 FOR SIGNAGE MATERIAL.
8. FOR MOUNTING HEIGHTS, REFERENCE DETAIL 2 & 16/-.
9. FOR MOUNTING LOCATION REFERENCE OPENING SCHEDULE AND PLANS.

ROOM IDENTIFICATION SIGNAGE 3" = 1'- 0" 10

KEYNOTES:
1. MIRROR (LOCATION PER PLAN).
2. SURFACE MOUNTED OFCI SOAP DISPENSER.
3. ELECTRIC HAND DRYER WHERE OCCURS (PER PLAN).
4. LAVATORY.
5. INSULATE WASTE AND ALL WATER LINES WHERE SUPPLIED. NO SHARP OR ABRASIVE SURFACES.
6. FINISHED FLOOR.
7. SURFACE MOUNTED PAPER TOWEL DISPENSER.

GENERAL NOTES:
1. LOCATE ALL ACCESSIBLE COMPONENTS OF TOILET ACCESSORIES, WITHIN 40" OF FIN. FLR.
2. THIS DETAIL PROVIDES ACCESSIBLE DIMENSIONAL CRITERIA, REFER TO INTERIOR ELEVATIONS, FIXTURE SCHEDULES AND ENLARGED PLANS FOR ADDITIONAL INFORMATION.
3. DIMENSIONS THAT ARE TAKEN FROM WALL ARE FROM FACE OF FINISH.

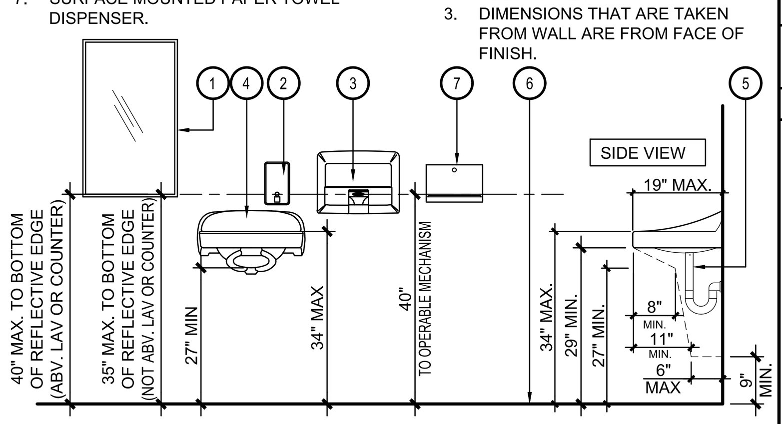

ACCESSIBLE LAVATORY 1/2"=1'-0" 20

MEASUREMENT RANGE	MINIMUM IN INCHES MAXIMUM IN INCHES
DOT BASE DIAMETER	0.059" (1.5 mm) to 0.063" (1.6 mm)
DISTANCE BETWEEN TWO DOTS IN THE SAME CELL ¹	0.100" (2.5 mm)
DISTANCE BETWEEN CORRESPONDING DOTS IN ADJACENT CELLS ¹	0.300" (7.6 mm)
DOT HEIGHT	0.025" (0.6 mm) to 0.037" (0.9 mm)
DISTANCE BETWEEN CORRESPONDING DOTS FROM ONE CELL DIRECTLY BELOW ¹	0.395" (10 mm) to 0.400" (10.2 mm)

1. MEASURED CENTER TO CENTER.

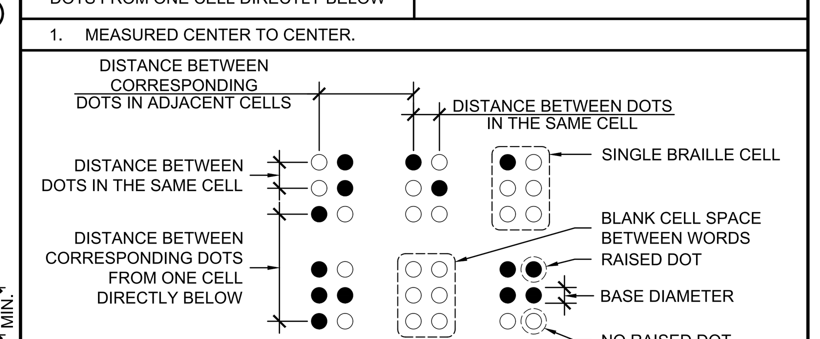

BRAILLE MEASUREMENT N.T.S. 15

IDENTIFICATION STAMP
DIV. OF THE STATE ARCHITECT
APP: 04-122772 INC:
REVIEWED FOR
SS ☑ FLS ☑ ACS ☑
DATE: 03/26/2024

SPROTTE | WATSON
ARCHITECTURE | PLANNING

LICENSED ARCHITECT C12359 REN. OCTOBER 2025 STATE OF CALIFORNIA

CONSULTANT

DEHESA ELEMENTARY SCHOOL
CONSTRUCTION DOCUMENTS
DEHESA SCHOOL DISTRICT
4612 DEHESA ROAD
EL CAJON, CA 92019

REVISIONS

DESCRIPTION
SIGNAGE & ACCESS DETAILS

DATE
01.25.24

JOB #
22-0400

SHEET #
A-10.7

KEYNOTES:
1. EXISTING EXTERIOR WALL W/ 2x's PER PLAN.
2. EXISTING 3/8" PLYWOOD.
3. DOOR PER SCHEDULE.
4. EXISTING CEMENT PLASTER.
5. 1/2" GYP.BD.
6. 1/2" WIDE SEALANT AND BACKER ROD.
7. PAINTED WOOD TRIM TO MATCH EXISTING.
8. CEMENT PLASTER TO MATCH EXISTING.

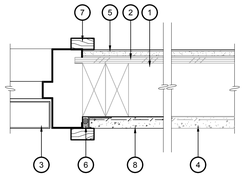

GENERAL NOTES:
1. REFERENCE AS-BUILTS FOR FRAMING CONDITIONS.
2. PROVIDE OPENING FLASHING PER 4/-.
3. ATTACH FRAME PER DETAIL 28/-.

EXT. H.M FRAME WINDOW JAMB 2 — 3"=1'-0" — 26

KEYNOTES
1. EXISTING WALL AND HEADER.
2. HARDIE BOARD OVER 1/2" STRIPPING.
3. PAINTED WOOD TRIM TO MATCH EXISTING.
4. 22 GA. "Z" G.I. SHT. MET. FLASHING WITH 2" UP LEG ON PLYWOOD.
5. HOLLOW METAL FRAME.
6. DOOR OR WINDOW PER OPENING SCHEDULE

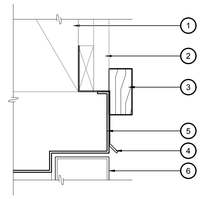

GENERAL NOTES
1. ATTACHMENT REF. DETAIL 28/-.

HM FRAME DRIP FLASHING — 6"=1'-0" — 21

KEYNOTES:
1. EXISTING EXTERIOR WALL W/ 2x'S.
2. EXISTING 3/8" SHEATHING.
3. WINDOW PER SCHEDULE.
4. AL. STOREFRONT.
5. 3/8" MIN. WIDE SEALANT AND BACKER ROD.
6. EXISTING WOOD, REFURBISH AND PAINT.
7. WOOD SHIM.
8. WOOD TO MATCH WINDOW JAMB CONDITIONS.
9. CEMENT PLASTER WITH J MOLD.
10. EXISTING PLASTER.
11. BATT INSULATION.
12. 5/8" GYP. BD.

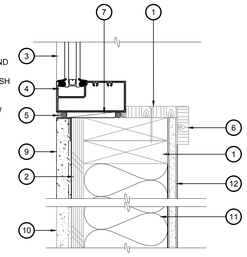

GENERAL NOTES:
1. REFERENCE AS-BUILTS FOR EXISTING CONDITIONS.
2. PROVIDE OPENING FLASHING PER 4/-.
3. REPLACE EXISTING WOOD MEMBERS IN KIND, ONLY WHERE REQUIRING REPLACEMENT. PREP & PAINT.
4. ATTACH FRAME WITH #10 SCREWS @ 16" O.C., TYP.

AL. STOREFRONT WINDOW JAMB — 3"=1'-0" — 16

KEYNOTES:
1. EXISTING EXTERIOR WALL W/ 4X6 HEADER.
2. EXISTING PLYWOOD.
3. EXISTING WOOD JOIST.
4. WINDOW PER SCHEDULE.
5. 5/8" GYP.BD.
6. 3/8" MIN. WIDE SEALANT AND BACKER ROD.
7. EXISTING METAL FLASHING.
8. EXISTING WOOD, REFURBISH AND PAINT.
9. EXISTING 2x.
10. WOOD SHIM.
11. CEILING PER PLAN.
12. DOOR PER SCHEDULE.

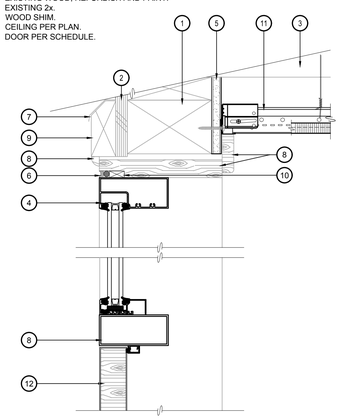

GENERAL NOTES:
1. REFERENCE AS-BUILTS FOR EXISTING CONDITIONS.
2. PROVIDE OPENING FLASHING PER 1.2 & 4/-.
3. REPLACE EXISTING WOOD MEMBERS IN KIND, ONLY WHERE REQUIRING REPLACEMENT. PREP & PAINT.
4. REFERENCE DETAIL 15/- FOR SILL INFORMATION.
5. ATTACH FRAME WITH #10 SCREWS @ 16" O.C., TYP.

SHEET NO.—NAME
SHEET NO.—NAME

KEYNOTES:
1. EXISTING EXTERIOR WALL WITH 4X6 HEADER.
2. EXISTING PLYWOOD.
3. EXISTING WOOD JOIST.
4. WINDOW PER SCHEDULE.
5. 5/8" GYP.BD.
6. 3/8" MIN. WIDE SEALANT AND BACKER ROD.
7. EXISTING METAL FLASHING.
8. EXISTING WOOD, REFURBISH AND PAINT.
9. EXISTING 2x.
10. WOOD SHIM.
11. CEILING PER PLAN.

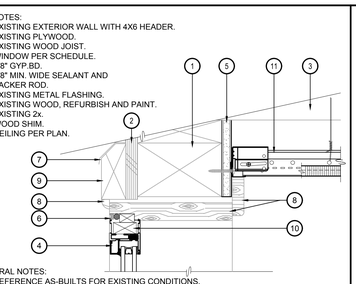

GENERAL NOTES:
1. REFERENCE AS-BUILTS FOR EXISTING CONDITIONS.
2. PROVIDE OPENING FLASHING PER 4/-.
3. REPLACE EXISTING WOOD MEMBERS IN KIND, ONLY WHERE REQUIRING REPLACEMENT. PREP & PAINT.
4. ATTACH FRAME WITH #10 SCREWS @ 16" O.C., TYP.

EXT. AL WINDOW HEAD — 3"=1'-0" — 6

KEYNOTES
1. SOLDERED HEAD FLASHING.
2. JAMB RETURN METAL. TUCK UNDER HEAD FLASHING AND SEAL.
3. HIGH TEMPERATURE SELF-ADHERED MEMBRANE (HTSAM) HEAD, LAP OVER METAL HEAD FLASHING.
4. HTSAM JAMB, LAP INTO OPENING AND EXTEND OVER THRESHOLD PAN END-DAMS.
5. 4" MIN.
6. 2" MIN.

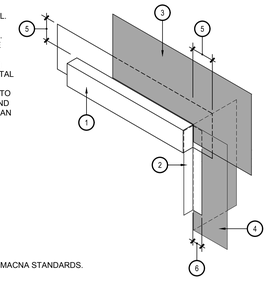

GENERAL NOTES
1. SHEET METAL PER SMACNA STANDARDS.

HEAD FLASHING DIAGRAM — NTS — 1

KEYNOTES:
1. EXISTING EXTERIOR WALL W/ 2x'S PER PLAN.
2. EXISTING 3/8" PLYWOOD.
3. WINDOW PER SCHEDULE.
4. BATT INSULATION.
5. 5/8" GYP.BD.
6. 1/2" WIDE SEALANT AND BACKER ROD.
7. PAINTED WOOD TRIM TO MATCH EXISTING.
8. PAINTED WOOD TO MATCH EXISTING.
9. DOOR PER SCHEDULE.

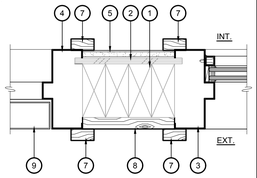

GENERAL NOTES:
1. REFERENCE AS-BUILTS FOR FRAMING CONDITIONS.
2. PROVIDE OPENING FLASHING PER 4/-.
3. ATTACH WINDOW FRAME WITH #10 SCREWS @ 16" O.C., TYP.
4. ATTACH DOOR FAME PER DETAIL 28/-.

EXT. H.M FRAME DOOR JAMB 2 — 3"=1'-0" — 27

KEYNOTES:
1. EXISTING EXTERIOR WALL W/ 2x's PER PLAN.
2. EXISTING 3/8" PLYWOOD.
3. WINDOW PER SCHEDULE.
4. BATT INSULATION.
5. 5/8" GYP.BD.
6. 1/2" WIDE SEALANT AND BACKER ROD.
7. PAINTED WOOD TRIM TO MATCH EXISTING.
8. PAINTED WOOD TO MATCH EXISTING.

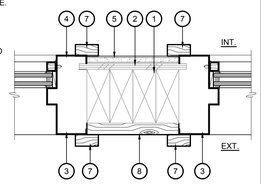

GENERAL NOTES:
1. REFERENCE AS-BUILTS FOR FRAMING CONDITIONS.
2. PROVIDE OPENING FLASHING PER 4/-.
3. ATTACH FRAME WITH #10 SCREWS @ 16" O.C., TYP.

EXT. H.M FRAME WINDOW JAMB 2 — 3"=1'-0" — 22

KEYNOTES
1. INTERIOR FINISH PER PLAN AND FINISH SCHEDULE.
2. ALUM. STOREFRONT DOOR FRAME, REFERENCE SPEC. SECTION 08 41 13.
3. DOOR PER DOOR SCHEDULE.
4. DOOR THRESHOLD BEDSET THRESHOLD IN WEATHER BARRIER SEALANT.
5. STAINLESS STEEL SILL PAN FLASHING WITH HEMMED BACK DAM AND 4" END DAMS AND RETUNS , SHINGLE WITH SAM AND WRB; BED IN WB SEALANT OVER SELF-ADHESIVE MEMBRANE. REF. DETAIL 2/-.
6. CONCRETE HARDSCAPE.
7. EXISTING CONCRETE SLAB.

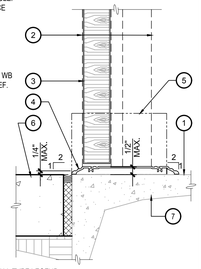

GENERAL NOTES
1. FOR ADDITIONAL INFORMATION REFERENCE WALL TYPE LEGEND, STRUCTURAL DRAWINGS AND SPECIFICATIONS.

AL. STOREFRONT DOOR JAMB — 3"=1'-0" — 17

KEYNOTES:
1. EXISTING EXTERIOR WALL WITH 4X6 HEADER.
2. EXISTING PLYWOOD.
3. EXISTING WOOD JOIST.
4. WINDOW PER SCHEDULE.
5. 5/8" GYP.BD.
6. 3/8" MIN. WIDE SEALANT AND BACKER ROD.
7. EXISTING METAL FLASHING.
8. EXISTING WOOD, REFURBISH AND PAINT.
9. EXISTING 2x.
10. WOOD SHIM.
11. CEILING PER PLAN.
12. REF. DETAIL 2 & 15/- FOR SILL INFORMATION.

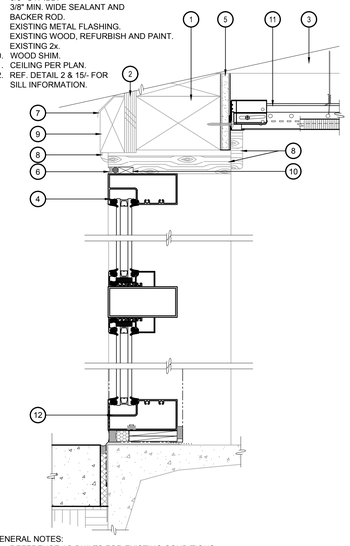

GENERAL NOTES:
1. REFERENCE AS-BUILTS FOR EXISTING CONDITIONS.
2. PROVIDE OPENING FLASHING PER 4/-.
3. REPLACE EXISTING WOOD MEMBERS IN KIND, ONLY WHERE REQUIRING REPLACEMENT. PREP & PAINT.
4. ATTACH FRAME WITH #10 SCREWS @ 16" O.C., TYP.

ALUM. STOREFRONT HEAD — SCALE — 12

KEYNOTES:
1. EXISTING EXTERIOR WALL.
2. EXISTING PLYWOOD SHEATHING.
3. WINDOW PER SCHEDULE.
4. BATT INSULATION.
5. 5/8" GYP.BD.
6. CEMENT PLASTER TO MATCH EXISTING.
7. J-MOLDING.
8. 3/8" MIN. WIDE SEALANT AND BACKER ROD.
9. EXISTING CEMENT PLASTER.
10. EXISTING WOOD, REFURBISH AND PAINT.
11. EXISTING 2x.
12. WOOD SHIM.

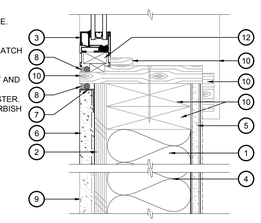

GENERAL NOTES:
1. REFERENCE AS-BUILTS FOR EXISTING CONDITIONS.
2. PROVIDE OPENING FLASHING PER 4/-.
3. REPLACE EXISTING WOOD MEMBERS IN KIND, ONLY WHERE REQUIRING REPLACEMENT. PREP & PAINT.
4. ATTACH FRAME WITH #10 SCREWS @ 16" O.C., TYP.

EXT. AL. FRAME WINDOW JAMB — 3"=1'-0" — 7

WELDED CONNECTION
ANCHOR TO STUD WITH (2) #10x2" WOOD SCREWS EACH SIDE.
16GA "Z" SPACER

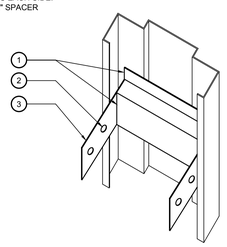

TYP. FRAME ANCHOR FOR WOOD — 3"=1'-0" — 28

KEYNOTES
1. WALL.
2. GLAZING OR DOOR ROUGH OPENING.
3. DASHED LINE INDICATES DOOR/ WINDOW FRAME.
4. SELF ADHERING FLASHING INSTALLED W/ ROLLER TOOL FOR WRINKLE FREE INSTALLATION. TEST SUBSTRATE AND PRIME OVER PLASTER UNDERLAYMENT, TYP. (SPEC. SECTION 07 25 00)
5. DASHED LINES INDICATE FLASHING BENEATH.

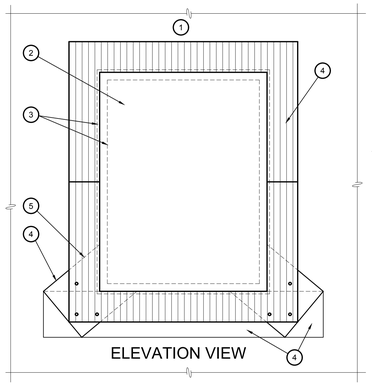

GENERAL NOTES
1. INSTALL WEATHER BARRIER PER SPEC. SECTION 07 25 00.
2. INSTALL FLASHING PER SPECS.

THRESHOLD FLASHING DIAGRAM — 2

KEYNOTES:
1. PROVIDE BATT INSULATION, REF. WALL LEGEND ON SHEET A-10.2.
2. PROVIDE DOOR HEADER AT HEAD CONDITIONS PER STR. DWGS.
3. PROVIDE INTERIOR FINISHES PER FINISH SCHEDULE.
4. PROVIDE HOLLOW METAL DOOR FRAME, REF. OPENING SCHEDULE
5. PROVIDE DOOR PER OPENING SCHEDULE.

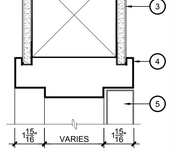

GENERAL NOTES:
1. JAMB CONDITION IS SIMILAR.
2. ATTACHMENT, REF. DETAIL 28/-.

INTERIOR H.M. DOOR HEADER — 3"=1'-0" — 29

KEYNOTES
1. INTERIOR FINISH PER PLAN AND FINISH SCHEDULE.
2. HOLLOW METAL WINDOW SYSTEM, REFERENCE SPEC. SECTION 08 41 13.
3. HIGH TEMPERATURE SELF-ADHESIVE MEMBRANE (HTSAM).
4. SEAL HTSAM WITH 2" FOIL TAPE CENTERED ON HTSAM EDGE.
5. STAINLESS STEEL SILL PAN FLASHING WITH 4" END DAMS, CRIMP AT REAR. ALL JOINTS TO BE SOLDERED. SET PAN IN BED OF WEATHER-BARRIER (WB) SEALANT OVER HTSAM. SHINGLE END-DAMS WITH HTSAM AND WRB. USE WALL BOARD RETURN TO COVER INTERIOR EXPOSED FLASHING.
6. 3/4" OPEN CELL BACKER ROD AND WB SEALANT WITH PVC COATED RETICULATED FOAM WEEPS AT 24" O.C. (ALIGN WITH VERTICALS).
7. INTERIOR AIR SEAL WITH 3/4" BACKER ROD AND SEALANT.
8. SOLID SHIM PACK, SET IN BED OF WB SEALANT AND FILL AT ANCHOR POINTS.
9. HARDIE BOARD PANELS, INSTALL PER MANUF.
10. GLAZING PER SPECIFICATIONS.
11. SIMPSON A21 CLIP W/ 2 10d x1.5" NAIL TO 2X4 STUD & 2 #10 SHEET METAL SCREWS TO HOLLOW MT. FRAME EA. SIDE TOP & BOTTOM .

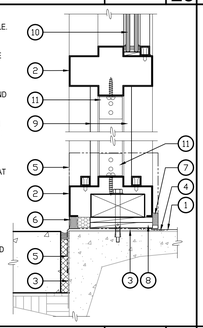

GENERAL NOTES
1. FOR ADDITIONAL INFORMATION REFERENCE AS-BUILTS AND SPECIFICATIONS.

HM SILL DETAIL @ BLDG. B — 3"=1'-0" — 24

KEYNOTES:
1. EXISTING EXTERIOR WALL W/ 2x'S.
2. EXISTING 3/8" SHEATHING.
3. DOOR PER SCHEDULE.
4. AL. STOREFRONT.
5. 3/8" MIN. WIDE SEALANT AND BACKER ROD.
6. EXISTING WOOD, REFURBISH AND PAINT.
7. WOOD SHIM.
8. WOOD TO MATCH WINDOW JAMB CONDITIONS.
9. CEMENT PLASTER WITH J MOLD.
10. EXISTING PLASTER.
11. BATT INSULATION.
12. 5/8" GYP. BD.

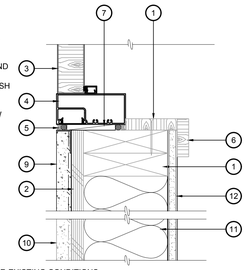

GENERAL NOTES:
1. REFERENCE AS-BUILTS FOR EXISTING CONDITIONS.
2. PROVIDE OPENING FLASHING PER 4/-.
3. REPLACE EXISTING WOOD MEMBERS IN KIND, ONLY WHERE REQUIRING REPLACEMENT. PREP & PAINT.
4. ATTACH FRAME WITH #10 SCREWS @ 16" O.C., TYP.

EXTERIOR H.M. DOOR HEAD @ B — 3"=1'-0" — 19

KEYNOTES:
1. INTERIOR FINISH PER PLAN AND FINISH SCHEDULE.
2. ALUMINUM STOREFRONT SYSTEM, REFERENCE SPEC. SECTION 08 41 13.
3. HIGH TEMPERATURE SELF-ADHESIVE MEMBRANE (HTSAM).
4. SEAL HTSAM WITH 2" FOIL TAPE CENTERED ON HTSAM EDGE.
5. STAINLESS STEEL SILL PAN FLASHING WITH 4" END DAMS, CRIMP AT REAR. ALL JOINTS TO BE SOLDERED. SET PAN IN BED OF WEATHER-BARRIER (WB) SEALANT OVER HTSAM. SHINGLE END-DAMS WITH HTSAM AND WRB. USE WALL BOARD RETURN TO COVER INTERIOR EXPOSED FLASHING.
6. 3/4" OPEN CELL BACKER ROD AND WB SEALANT WITH PVC COATED RETICULATED FOAM WEEPS AT 24" O.C. (ALIGN WITH VERTICALS).
7. INTERIOR AIR SEAL WITH 3/4" BACKER ROD AND SEALANT.
8. SOLID SHIM PACK, SET IN BED OF WB SEALANT AND FILL AT ANCHOR POINTS.

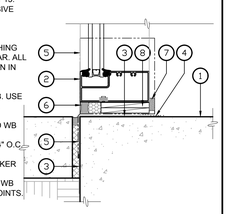

GENERAL NOTES
1. FOR ADDITIONAL INFORMATION REFERENCE WALL TYPE LEGEND, STRUCTURAL DRAWINGS AND SPECIFICATIONS.
2. REFERENCE DETAIL 2/- FOR FLASHING DIAGRAM.
3. ATTACH FRAME WITH #10 SCREWS @ 16" O.C., TYP.

ALUMINUM STOREFRONT — 3"= 1-0" — 14

KEYNOTES:
1. EXISTING EXTERIOR WALL W/ 4X6 POST.
2. WINDOW PER SCHEDULE.
3. 3/8" MIN. WIDE SEALANT AND BACKER ROD.
4. EXISTING WOOD, REFURBISH AND PAINT.
5. EXISTING SHIM.
6. WOOD SHIM.
7. NOTCH OUT WOOD AS REQUIRED TO ACCOMMODATE THE WINDOW.
8. EXISTING WINDOW SILL.
9. WOOD DOOR PER PLAN.
10. SHIM AS REQUIRED.
11. AL. STOREFRONT.

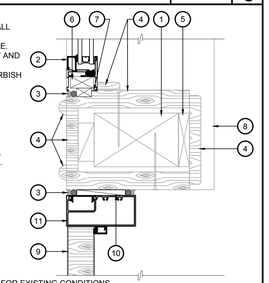

GENERAL NOTES:
1. REFERENCE AS-BUILTS FOR EXISTING CONDITIONS.
2. PROVIDE OPENING FLASHING PER 4/-.
3. REPLACE EXISTING WOOD MEMBERS IN KIND, ONLY WHERE REQUIRING REPLACEMENT. PREP & PAINT.
4. ATTACH FRAME WITH #10 SCREWS @ 16 " O.C., TYP.

EXT. AL. FRAME DOOR-WIN-JAMB — 3"=1'-0" — 9

KEYNOTES
1. DRIP EDGE PER DETAILS 1& 21/- FOR EXTERIOR DOORS SEE HEAD DETAILS.
2. FRAME ANCHOR PER DETAIL 28/-.
3. HOLLOW METAL FRAME PER SPECS.
4. WHERE CONCRETE CURB OCCURS USE HILTI KWIK HUS-EZ (KH-EZ)-3/8" DIA. EMBEDDED INTO CONCRETE CURB MIN. 1-1/2", GRIND AND FILL SMOOTH. WHERE NO CURB OCCURS USE FRAME ANCHOR PER 28/-
5. GROUT FIRST 6" OF DOOR FRAME JAMB W/ NON-SHRINK CONC. GROUT
6. PROVIDE OPENING FLASHING PERIMETER OF DOOR FRAMES IN EXTERIOR WALLS PER DETAIL 4/-.
7. TRANSOM WHERE OCCURS

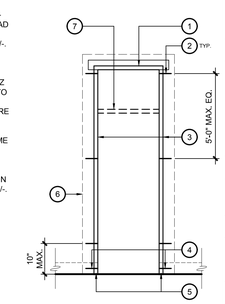

OPENING FLASHING — 1" = 1'-0" — 4

KEYNOTES:
1. PROVIDE BATT INSULATION,
2. PROVIDE WALL FRAMING, WHERE APPLICABLE PER WALL LEGEND AND STR. DWGS. REFERENCE GENERAL NOTE #1 FOR EXISTING CONDITIONS.
3. PROVIDE INTERIOR FINISHES PER FINISH SCHEDULE
4. PROVIDE HOLLOW METAL DOOR FRAME, REF. OPENING SCHEDULE
5. PROVIDE DOOR PER OPENING SCHEDULE.

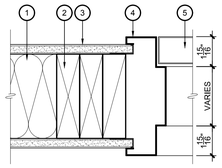

GENERAL NOTES:
1. HEAD CONDITION IS SIMILAR.
2. FOR ATTACHMENT REF. DETAIL 28/-.

INTERIOR H.M. DOOR JAMB — 3"=1'-0" — 30

KEYNOTES
1. INTERIOR FINISH PER PLAN AND FINISH SCHEDULE.
2. HOLLOW METAL DOOR FRAME, REFERENCE SPEC. SECTION 08 41 13.
3. DOOR PER DOOR SCHEDULE.
4. DOOR THRESHOLD WITH BACKSTOP AND BULB GASKET. BEDSET THRESHOLD IN WEATHER BARRIER SEALANT.
5. STAINLESS STEEL SILL PAN FLASHING WITH HEMMED BACK DAM AND 4" END DAMS AND RETUNS , SHINGLE WITH SAM AND WRB; BED IN WB SEALANT OVER SELF-ADHESIVE MEMBRANE. REF. DETAIL 2/-.
6. WATER DEFLECTOR.
7. CONCRETE HARDSCAPE.
8. EXISTING CONCRETE SLAB.

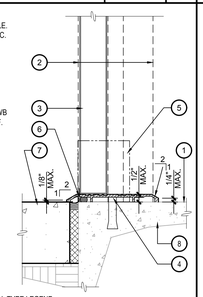

GENERAL NOTES
1. FOR ADDITIONAL INFORMATION REFERENCE WALL TYPE LEGEND, STRUCTURAL DRAWINGS AND SPECIFICATIONS.

EXTERIOR DOOR THRESHOLD — 3"=1'-0" — 25

KEYNOTES:
1. EXISTING EXTERIOR WALL W/ 2x'S.
2. EXISTING 3/8" SHEATHING.
3. DOOR PER SCHEDULE.
4. AL. STOREFRONT.
5. 3/8" MIN. WIDE SEALANT AND BACKER ROD.
6. EXISTING WOOD, REFURBISH AND PAINT.
7. WOOD SHIM.
8. WOOD TO MATCH WINDOW JAMB CONDITIONS.
9. CEMENT PLASTER WITH J MOLD.
10. EXISTING PLASTER.
11. BATT INSULATION.
12. 5/8" GYP. BD.

GENERAL NOTES:
1. REFERENCE AS-BUILTS FOR EXISTING CONDITIONS.
2. PROVIDE OPENING FLASHING PER 4/-.
3. REPLACE EXISTING WOOD MEMBERS IN KIND, ONLY WHERE REQUIRING REPLACEMENT. PREP & PAINT.
4. ATTACH FRAME WITH #10 SCREWS @ 16" O.C., TYP.

EXT. H.M. WINDOW HEAD @ B — 3"=1'-0" — 20

KEYNOTES:
1. EXISTING EXTERIOR WALL W/ 4X6 HEADER.
2. EXISTING PLYWOOD.
3. EXISTING WOOD JOIST.
4. WINDOW PER SCHEDULE.
5. 5/8" GYP.BD.
6. 3/8" MIN. WIDE SEALANT AND BACKER ROD.
7. EXISTING METAL FLASHING.
8. EXISTING WOOD, REFURBISH AND PAINT.
9. EXISTING 2x.
10. WOOD SHIM.
11. CEILING PER PLAN.
12. DOOR PER SCHEDULE.

GENERAL NOTES:
1. REFERENCE AS-BUILTS FOR EXISTING CONDITIONS.
2. PROVIDE OPENING FLASHING PER 1.2 & 4/-.
3. REPLACE EXISTING WOOD MEMBERS IN KIND, ONLY WHERE REQUIRING REPLACEMENT. PREP & PAINT.
4. REFERENCE DETAIL 15/- FOR SILL INFORMATION.
5. ATTACH FRAME WITH #10 SCREWS @ 16" O.C., TYP.

SHEET NO.—NAME
SHEET NO.—NAME

STOREFRONT SILL — 3" = 1'-0" — 15

KEYNOTES:
1. EXISTING EXTERIOR WALL.
2. EXISTING PLYWOOD.
3. WINDOW PER SCHEDULE.
4. BATT INSULATION.
5. 5/8" GYP BD.
6. CEMENT PLASTER TO MATCH EXISTING.
7. J-MOLDING.
8. 3/8" MIN. WIDE SEALANT AND BACKER ROD.
9. EXISTING CEMENT PLASTER.
10. EXISTING METAL PAN.
11. EXISTING WOOD, REFURBISH AND PAINT.
12. EXISTING 2x.
13. WOOD SHIM.

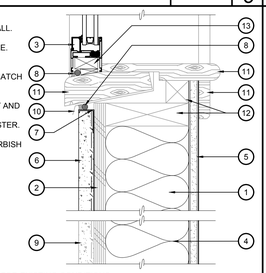

GENERAL NOTES:
1. REFERENCE AS-BUILTS FOR EXISTING CONDITIONS.
2. PROVIDE OPENING FLASHING PER 4/-.
3. REPLACE EXISTING WOOD MEMBERS IN KIND, ONLY WHERE REQUIRING REPLACEMENT. PREP & PAINT.
4. ATTACH FRAME WITH #10 SCREWS @ 16" O.C., TYP.

EXT. AL. WINDOW FRAME SILL @ A — 3"=1'-0" — 10

KEYNOTES
1. DRIP EDGE PER DETAILS 1& 21/- FOR EXTERIOR DOORS SEE HEAD DETAILS.
2. FRAME ANCHOR PER DETAIL 28/-.
3. HOLLOW METAL FRAME PER SPECS.
4. WHERE CONCRETE CURB OCCURS USE HILTI KWIK HUS-EZ (KH-EZ)-3/8" DIA. EMBEDDED INTO CONCRETE CURB MIN. 1-1/2", GRIND AND FILL SMOOTH. WHERE NO CURB OCCURS USE FRAME ANCHOR PER 28/-
5. GROUT FIRST 6" OF DOOR FRAME JAMB W/ NON-SHRINK CONC. GROUT
6. PROVIDE OPENING FLASHING PERIMETER OF DOOR FRAMES IN EXTERIOR WALLS PER DETAIL 4/-.
7. TRANSOM WHERE OCCURS

HOLLOW METAL FRAME ELEVATION — 3/8"=1'-0" — 5

IDENTIFICATION STAMP
DIV. OF THE STATE ARCHITECT
APP: 04-122772 INC:
REVIEWED FOR
SS ☑ FLS ☑ ACS ☑
DATE: 03/26/2024

SPROTTE | WATSON
ARCHITECTURE + PLANNING

CONSULTANT

REVISIONS

DESCRIPTION
DOOR & WINDOW DETAILS

DATE
01.25.24

JOB #
22-0400

SHEET #
A-10.8

DEHESA ELEMENTARY SCHOOL
CONSTRUCTION DOCUMENTS
DEHESA SCHOOL DISTRICT
4612 DEHESA ROAD
EL CAJON, CA 92019

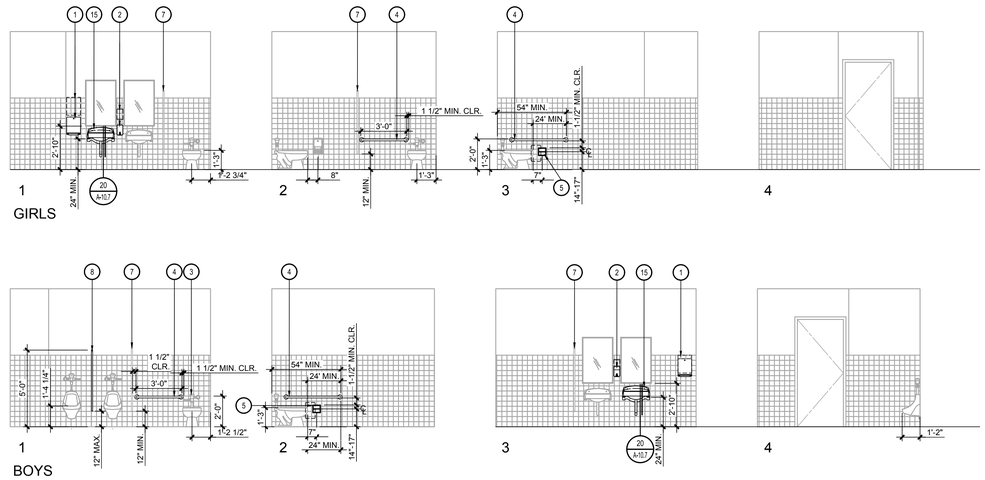

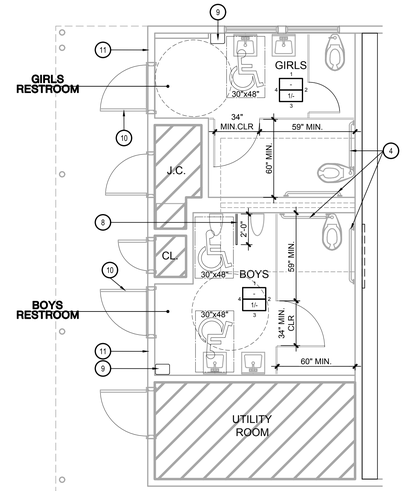

CHILDREN'S MOUNTING HEIGHTS FOR AGES 5-8
PLUMBING FIXTURES ARE EXISTING TO REMAIN

A#04-102319

EXISTING GIRLS & BOYS RESTROOMS BUILDING A | 1/4" = 1'-0" | 1

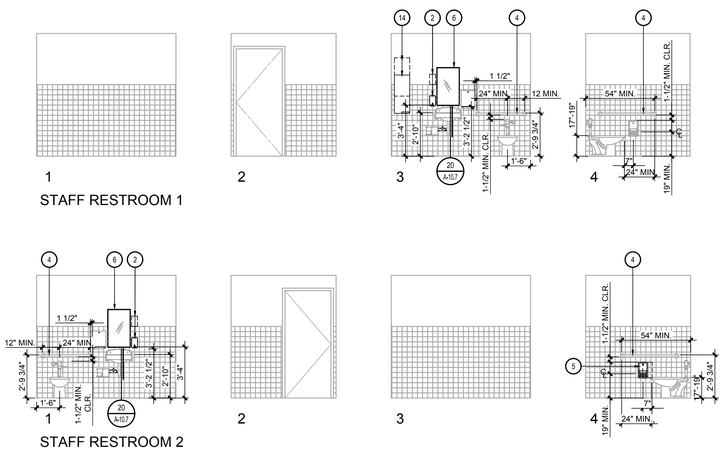

EXISTING STAFF RESTROOMS BUILDING B | 1/4" = 1'-0" | 3

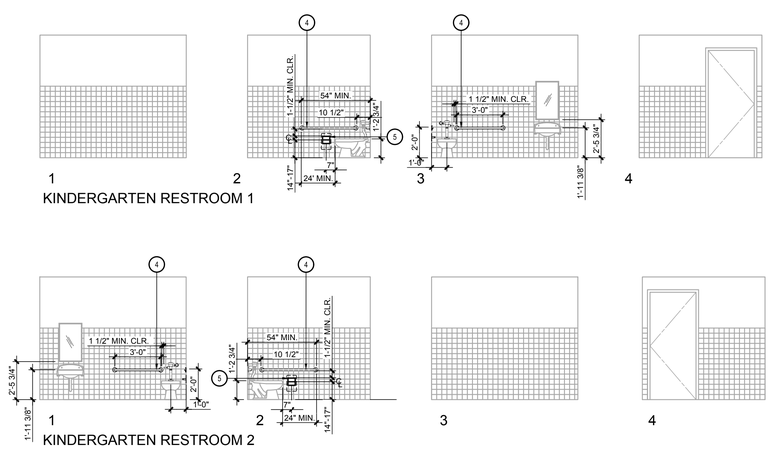

CHILDREN'S USE AGES 5 TO 8

EXISTING KINDERGARTEN RESTROOMS BUILDING B | 1/4" = 1'-0" | 4

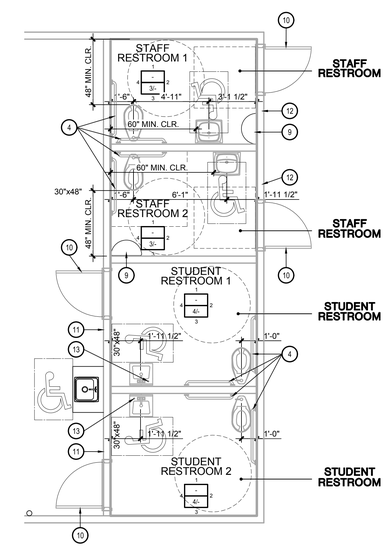

STUDENT RESTROOMS ARE KINDERGARTEN, CHILDREN'S MOUNTING HEIGHTS FOR AGES 5-8
STAFF RESTROOMS ARE ADULT DIMENSIONS.
PLUMBING FIXTURES ARE EXISTING TO REMAIN

A#04-102319

EXISTING RESTROOMS BUILDING B | 1/4" = 1'-0" | 2

KEYNOTES

1. REMOVE AND RELOCATE SURFACE MOUNTED PAPER TOWEL DISPENSER TO A MAX. HGT. OF 40" AFF. TO HIGHEST PART OF OPERABLE CONTROL.
2. REMOVE AND RELOCATE SURFACE MOUNTED SOAP DISPENSER TO A MAX. HGT. OF 40" AFF. TO HIGHEST PART OF OPERABLE CONTROL.
3. REMOVE AND REPLACE FLUSH VALVE. REFERENCE PLUMBING DRAWINGS.
4. REMOVE AND RELOCATE EXISTING GRAB BAR TO BE AS SHOWN (DIMENSIONED) IN ELEVATIONS INORDER TO MEET CURRENT ACCESSIBLE CODE. BOTH GRAB BARS TO BE THE SAME HEIGHT. REPLACE TILE WHERE REQUIRED. MATCH EXISTING TILE.
5. REMOVE RECESSED TOILET TISSUE DISPENSER. PROVIDE NEW TOILET TISSUE DISPENSER AS SHOWN, REF. SPEC. SECTION 10 28 00. REPLACE TILE WHERE REQUIRED. MATCH EXISTING TILE.
6. REMOVE EXISTING SURFACE MOUNTED MIRROR AND SHELF. PROVIDE NEW MIRROR IN LOCATION SHOWN, 40" MAX. TO BOTTOM OF REFLECTIVE SURFACE. REF. SPEC. SECTION 10 28 00.
7. EXISTING TOILET PARTITION TO REMAIN.
8. REMOVE EXISTING URINAL SCREEN AND PROVIDE NEW 24" DEEP URINAL SCREEN MAINTAINING ACCESSIBLE CLEARANCES.
9. PORTABLE TRASH CONTAINER OFOI. CONTAINER MAY NOT ENCROACH INTO ACCESSIBLE CLEARANCES.
10. PROVIDE RESTROOM DOOR GEOMETRIC SYMBOL. SEE DETAIL 5/A-10.7.
11. PROVIDE RESTROOM WALL MOUNTED PICTOGRAM SIGN PER DETAIL 5/A-10.7.
12. PROVIDE RESTROOM WALL MOUNTED ROOM IDENTIFICATION SIGN PER DETAIL 5/A-10.7.
13. EXISTING SINK MOUNTED SOAP DISPENSER.
14. REMOVE AND RELOCATE EXISTING SANITARY NAPKIN DISPENSER TO MAX. HGT. OF 40" AFF. TO HIGHEST PART OF OPERABLE CONTROL.
15. REMOVE AND RELOCATE EXISTING SINK AS SHOWN TO PROVIDE REQUIRED ACCESSIBLE CLEARANCES PER CBC. REF. DIMENSIONS SHOWN AND DETAIL INDICATED. PATCH AND REPAIR WALL AND TILE AS REQUIRED.

NOTE:

1. PIPE GUARDS TO BE INCLUDED ON NEW EXPOSED PIPING AND REPLACED OR ADDED AS NECESSARY ON EXISTING EXPOSED PIPING UNDER SINKS AND LAVATORIES.
2. PARTITION COMPONENTS AT TOE CLEARANCES SHALL BE SMOOTH WITHOUT SHARP EDGES OR ABRASIVE SURFACES.

FLOOR PLAN GENERAL NOTES

1. REFERENCE SPECIFICATIONS, TITLE SHEET, GENERAL NOTES & APPLICABLE DRAWINGS & NOTES ON STRUCTURAL, MECHANICAL, ELECTRICAL, PLUMBING AND CIVIL DRAWINGS FOR ADDITIONAL INFO.
2. REFERENCE ABBREVIATIONS, MATERIAL LEGEND & SYMBOLS LEGEND ON SHEET A-0.1 FOR NOTATIONS AND DEFINITIONS.
3. ALL DIMENSIONS FOR FRAMING AND WALLS ARE TO FACE OF STUDS OR FACE OF FINISH WHERE THE FINISH IS NOT BEING REMOVED. UNLESS NOTED OTHERWISE. "CLEAR" DIMENSIONS ARE TO FACE OF FINISH MATERIAL.
4. KEYNOTES ARE INDICATED AT ONLY A PORTION OF THE BUILDING ELEMENTS. ELEMENTS ILLUSTRATED SIMILARLY, MIRRORED DESIGN, AND SIMILAR CONDITIONS SHALL BE ASSUMED TO BE NOTED SIMILARLY. QUANTITIES SHALL NOT BE DENOTED BY KEYNOTES.
5. KEYNOTES WITHOUT ARROWS DENOTE AN ITEM OR REGION OF THE GENERAL AREA IN WHICH THEY ARE LOCATED AND ARE REFERENCING.
6. ALL INTERIOR WALLS SHALL BE FRAMED TO ROOF STRUCTURE FRAMING UNDERSIDE. ALL NON-BEARING INTERIOR WALLS SHALL BE PROVIDED WITH 1/2" GAP FOR DEFLECTION AT CONNECTION TO STRUCTURE. REFERENCE STRUCTURAL DRAWINGS.
7. ALL NEW WALLS AND WALLS WHERE THE FINISH IS BEING REMOVED SHALL BE PROVIDED WITH GWB FULL HEIGHT TO THE GREATEST EXTENT POSSIBLE & PROVIDED WITH INSULATION OR SOUND ATTENUATION BATT INSULATION.
8. CABINET ANCHORAGE FASTENERS TO WALLS, BLOCKING OR BACKING SHALL BE PER DETAIL 6/A-10.5.
9. ELEMENTS REQUIRING BLOCKING SHALL BE PER APPLICABLE DETAILS.
10. REFERENCE DETAILS 17/A-10.5. FOR ACCESSIBLE MOUNTING HEIGHTS. REFERENCE SHEET A-8.1 FOR FINISH SCHEDULE AND INTERIOR ELEVATIONS ON SHEETS A-A9.1, A-B9.1 & A-B9.2. FOR WALL FINISH EXTENTS.
11. MAXIMUM FLAME SPREAD OF INTERIOR WALL & CEILING FINISHES SHALL COMPLY WITH CBC SECTION 803. EXIT ENCLOSURES & EXIT PASSAGEWAYS SHALL BE CLASS B: FLAME SPREAD INDEX NOT TO EXCEED 75 AND SMOKE-DEVELOPMENT INDEX NOT TO EXCEED 450. CORRIDORS, ROOMS, AND ENCLOSED SPACES SHALL BE CLASS C: FLAME SPREAD INDEX NOT TO EXCEED 200 AND SMOKE-DEVELOPMENT INDEX NOT TO EXCEED 450.
12. BATT INSULATION, PIPE INSULATION SHALL HAVE A FLAME SPREAD INDEX NOT TO EXCEED 25 AND A SMOKE-DEVELOPMENT INDEX NOT TO EXCEED 450 IN ACCORDANCE WITH CBC 720.2
13. REFERENCE DETAIL 17/A-10.5 FOR MOUNTING HEIGHTS OF FURNITURE, FIXTURES AND EQUIPMENT.
14. PROVIDE MIN. CLEARANCE AT ALL DOORS PER CBC 11B-404-2.4.1
15. PROVIDE APPROPRIATELY SIZED STAINLESS STEEL ACCESS DOORS IN TOILET ROOMS FOR ITEMS OR EQUIPMENT REQUIRING ACCESS BEHIND FRAMED ASSEMBLIES SUCH AS TRAP PRIMER MANIFOLDS, VALVES, JUNCTION BOXES, DUCTWORK DAMPERS, OR SUCH EQUIPMENT OR NEEDS. PAINTED STEEL PANEL DOORS MAY BE USED ELSEWHERE.
16. ALL EXPOSED STEEL TO BE PAINTED TO MATCH ADJACENT SURFACE.
17. FOR SIGNAGE TYPES AND LOCATION SEE PLANS AND SHEETS A-8.0 AND A-10.7.
18. ALL DIMENSIONS FOR ACCESS COMPLIANCE ARE TO FACE OF FINISH UNLESS NOTED OTHERWISE.
19. UNLESS NOTED OTHERWISE, ALL ELEMENTS SHOWN ON PLANS SHALL BE CONTRACTOR FURNISHED AND INSTALLED.
20. ALL EXTERIOR DOORS HAVE THE ABILITY TO BE LOCKED FROM THE "INSIDE" THEREFORE ALL INTERIOR DOORS ARE "PROTECTED".

INTERIOR ELEVATIONS GENERAL NOTES

1. REFERENCE SPECIFICATIONS, APPLICABLE DRAWINGS AND NOTES ON ARCHITECTURAL PLANS AND ELEVATIONS, STRUCTURAL, MECHANICAL, ELECTRICAL, PLUMBING AND CIVIL DRAWINGS FOR ADDITIONAL INFORMATION.
2. KEYNOTES ARE INDICATED AT ONLY A PORTION OF THE ELEMENTS. ELEMENTS ILLUSTRATED SIMILARLY, MIRRORED DESIGN AND SIMILAR CONDITIONS SHALL BE ASSUMED TO BE NOTED SIMILARLY. QUANTITIES WILL NOT BE DENOTED BY KEYNOTES.
3. KEYNOTES WITHOUT ARROWS DENOTE AN ITEM OR REGION OF THE GENERAL AREA IN WHICH THEY ARE LOCATED AND ARE REFERENCING.
4. REF. ABBREVIATIONS ON SHEET A-0.1 FOR TYPICAL DEFINITIONS.
5. ALL WALL MOUNTED CASEWORK WITH PLUMBING FIXTURES SHALL BE PROVIDED WITH 4" REAR & SIDE SPLASHES TYPICAL UNLESS NOTED OTHERWISE.
6. ALL CASEWORK DRAWERS & CABINET DOORS SHALL BE PROVIDED WITH LOCKS. EXCEPT AT SINK CABINETS. ALL U-SHAPED PULLS ARE TO BE ORIENTED PARALLEL TO FINISHED FLOOR.
7. CONTRACTOR SHALL PROVIDE PAINTED FINISH AT ALL EXPOSED INTERIOR DOORS, FRAMES, TRIMWORK & WALLS INCLUDING PLASTER & GYPSUM WALLBOARD NOT PROVIDED WITH OTHER FINISHES SUCH AS VINYL TACK SURFACES, FRP, OR TILE. REFERENCE FINISH SCHEDULE FOR ADDITIONAL INFORMATION.
8. MAXIMUM FLAME SPREAD OF INTERIOR WALL AND CEILING FINISHES SHALL COMPLY WITH CBC CHAPTER 8 AND TITLE 19. EXIT ENCLOSURES AND EXIT PASSAGEWAYS SHALL BE CLASS B: FLAME SPREAD INDEX NOT TO EXCEED 75 AND SMOKE-DEVELOPMENT INDEX NOT TO EXCEED 450. CORRIDORS, ROOMS, AND ENCLOSED SPACES SHALL BE CLASS C: FLAME SPREAD INDEX NOT TO EXCEED 200 AND SMOKE-DEVELOPMENT INDEX NOT TO EXCEED 450.
9. BATT INSULATION, PIPE INSULATION SHALL HAVE A FLAME SPREAD INDEX NOT TO EXCEED 25 AND A SMOKE-DEVELOPMENT INDEX NOT TO EXCEED 450 IN ACCORDANCE WITH CBC 719.2.
10. CASEWORK WHERE INSTALLED WITHIN NON-RECTILINEAR ROOMS OR CORNERS SHALL BE PROVIDED WITH CLOSURE PANELS AT ALL CONDITIONS TO AVOID GAPS & VOIDS, BOTH AT CASEWORK TOPS AND SIDES.
11. MARKER OR WHITE BOARD LOCATIONS SHALL BE CONFIRMED PRIOR TO INSTALLATION.
12. FOR TYPICAL F.F.E. MOUNTING HEIGHTS, SEE DETAIL 17/A-10.5.
13. FOR TYPICAL CASEWORK DETAILS, SEE SHEET A-10.5.
14. REFERENCE DETAILS 13/A-10.2 FOR TACKWALL DETAILS.
15. UNLESS NOTED OTHERWISE, ALL ELEMENTS SHOWN ON PLANS SHALL BE CONTRACTOR FURNISHED AND INSTALLED.
16. AN ATTENDANT WILL BE AVAILABLE DURING LIBRARY HOURS TO ASSIST PERSONS WITH DISABILITIES.
17. CASEWORK: WI (WOODWORK INSTITUTE) W (WIDTH) x H (HEIGHT) x D (DEPTH). M (MODIFIED).

IDENTIFICATION STAMP
DIV. OF THE STATE ARCHITECT
APP: 04-122772 INC:
REVIEWED FOR
SS ☑ FLS ☑ ACS ☑
DATE: 03/26/2024

SPROTTE WATSON ARCHITECTURE + PLANNING

REGISTERED ARCHITECT
C12359
STATE OF CALIFORNIA

CONSULTANT

DEHESA ELEMENTARY SCHOOL
CONSTRUCTION DOCUMENTS
DEHESA SCHOOL DISTRICT
4612 DEHESA ROAD
EL CAJON, CA 92019

REVISIONS

DESCRIPTION
EXISTING RESTROOMS

DATE
01.25.24

JOB #
22-0400

SHEET #
A-10.9

CONCRETE-EPOXY ANCHORED REINFORCEMENT & THREADED RODS

1. SPECIAL INSPECTION IS REQUIRED.
2. MATERIALS: (ICC ESR 3814)
   EPOXY ADHESIVE............ HILTI..........HIT RE-500V3
3. INSTALLATION OF REINFORCEMENT AND THREADED RODS:
   A. SHALL BE IN ACCORDANCE WITH ICC ESR 3814.
   B. USE CARBIDE-TIPPED DRILL BITS CONFORMING TO ANSI B212.15.
   C. CLEAN HOLES OF DUST AND DEBRIS USING OIL-FREE COMPRESSED AIR AND A STEEL WIRE BRUSH FOR STANDARD EQUIPMENT AND ANCHORS.
   D. NO CLEANING OF HOLES IS REQUIRED WITH 'HILTI SAFESET' SYSTEM USING HIT-Z OR HIT-Z-R ANCHORS.
4. DO NOT INSTALL REINFORCEMENT OR ANCHORS IN CONCRETE THAT IS LESS THAN 21 DAYS OLD.
5. ANCHORS SHALL BE TENSION TESTED. SEE DETAILS FOR TESTING VALUES.
6. TESTING AND INSPECTIONS SHALL MEET THE REQUIREMENTS OF CBC SECTION 1910A.5.
7. ANCHORS SHALL BE USED ONLY WHERE SPECIFICALLY INDICATED ON PLANS AND DETAILS.

CONCRETE-EXPANSION ANCHORS

1. SPECIAL INSPECTION IS REQUIRED.
2. MATERIALS: (ICC ESR 4266)
   HILTI ANCHORS........ ICC ESR 4266.....................KWIK-BOLT TZ2 (KB-TZ2)
3. INSTALLATION:

ANCHOR DIA.	ANCHOR TORQUE (CARBON STL)	ANCHOR TORQUE (STAINLESS STL.)	MIN EMBED	NOMINAL EMBED
3/8"	30 ft-lb	30 ft-lb	1 1/2"	1 7/8"
1/2"	50 ft-lb	40 ft-lb	2"	2 1/2"
5/8"	40 ft-lb	60 ft-lb	2 3/4"	3 1/4"
3/4"	110 ft-lb	125 ft-lb	3 1/4"	4"

   A. SHALL BE IN ACCORDANCE WITH ICC ESR 4266.
   B. USE CARBIDE-TIPPED DRILL BITS CONFORMING TO ANSI B212.15. DRILL BIT SIZE IS EQUAL TO ANCHOR DIAMETER.
   C. CLEAN HOLES OF DUST AND DEBRIS USING OIL-FREE COMPRESSED AIR AND A STEEL WIRE BRUSH. HOLE DEPTH TO EXCEED EMBEDMENT DEPTH BY TWO ANCHOR DIAMETERS.
4. DO NOT INSTALL ANCHORS IN CONCRETE THAT IS LESS THAN 7 DAYS OLD. CONCRETE SHALL ATTAIN THE MINIMUM DESIGN STRENGTH PRIOR TO INSTALLATION.
5. PROVIDE STAINLESS STEEL ANCHORS OR MECHANICALLY GALVANIZED ANCHORS (PER ASTM B-695) WHERE ANCHORS ARE USED IN EXTERIOR CONDITIONS.
6. TESTS AND INSPECTIONS SHALL MEET THE REQUIREMENTS OF CBC 1910A.5.
7. ANCHORS SHALL BE USED ONLY WHERE SPECIFICALLY INDICATED ON PLANS AND DETAILS.

SHOT-PINS/ POWDER DRIVEN FASTENERS

1. MATERIALS:
   SHOTPINS....................... HILTI 'X-U' (U.O.N.) ICC-ESR-2269
   SHANK DIAMETER............0.157 INCHES
2. INSTALLATION INTO MASONRY

EMBED (IN)	EDGE MIN (IN)	SPACING MIN (IN)
PER DETAIL	4	SEE NOTE 8

3. INSTALLATION INTO CONCRETE

EMBED (IN)	EDGE MIN (IN)	SPACING MIN (IN)
PER DETAIL	3	4

4. INSTALLATION INTO STEEL

EMBED (IN)	EDGE MIN (IN)	SPACING MIN (IN)
SEE NOTE 5	1/2	1

5. FASTENERS SHALL BE DRIVEN TO A PENETRATION WHERE THE SHANK PIERCES THROUGH STEEL BASE MATERIAL, UNLESS USING 3/4 INCH OR GREATER STEEL THICKNESS PROVIDE 1/2 INCH PENETRATION.
6. QUALIFICATION FOR USE OF ALL POWDER ACTUATED TOOLS SHALL MEET ANSI A10.3 STANDARD AS REQUIRED BY THE MANUFACTURER AND SHALL MEET OSHA REQUIREMENTS.
7. WHEN INSTALLING SHOTPINS, USE CARE AND CAUTION TO AVOID CUTTING OR DAMAGING REINFORCING BARS. MAINTAIN A MINIMUM CLEARANCE OF ONE INCH BETWEEN THE SHOTPIN AND THE REINFORCING BAR.
8. NO MORE THAN ONE FASTENER MAY BE INSTALLED IN AN INDIVIDUAL CMU CELL AND BE LOCATED A MINIMUM OF 1" FROM MORTAR JOINTS.
9. FASTENERS ARE TO BE DRIVEN INTO THE CONCRETE AND MASONRY AFTER THE CONCRETE OR MORTAR AND GROUT ATTAIN THEIR SPECIFIED STRENGTH.
10. CONCRETE THICKNESS MUST BE A MINIMUM OF 3 TIMES THE EMBEDMENT DEPTH OF THE FASTENER.
11. FASTENERS SHALL NOT BE USED FOR ATTACHMENT OF PRESERVATIVE-TREATED OR FIRE-RETARDANT-TREATED LUMBER.

WOOD (CBC CHAPTER 23)

1. ALL WOOD MEMBERS SHALL BE DOUGLAS FIR (DF) OR LARCH GRADE MARKED BY A RECOGNIZED GRADING AGENCY (WCLIB & WWPA)
2. WOOD GRADES:
   A. FOR HORIZONTAL MEMBERS:
      2 X 4 SUB-PURLINS: ....GRADE #1 (FOR PANELIZED CONSTRUCTION)
      3 X & LARGER BEAMS & HEADERS: ....GRADE #1
      2 X: ....GRADE #2
   B. FOR VERTICAL MEMBERS:
      2 X & 3 X STUDS: ....GRADE #2
      4 X & LARGER STUDS OR POSTS ....GRADE #1
3. APA RATED SHEATHING CONFORMING TO APA STANDARD PS-1 SHALL BE USED FOR FLOOR, ROOF, AND WALL SHEATHING IN ACCORDANCE WITH CBC SECTION 2303.1.5, TITLE 24, PART 2, CCR. PLYWOOD AND OSB SHALL COMPLY WITH DSA IR 23-6.
4. NOTCHING AND BORING OF STUDS AND JOISTS SHALL BE PERMITTED ONLY AS DETAILED OR APPROVED BY THE ENGINEER.
5. AS A MINIMUM, ALL NAILING SHALL BE WITH COMMON NAILS, EXCEPT AS NOTED IN CBC TABLE 2304.10.2.
6. 10d COMMON NAILS SHALL BE USED FOR ATTACHMENT OF PLYWOOD SHEATHING WITH MINIMUM 1 1/2" PENETRATION INTO FRAMING MEMBER.
7. ALL SILLS OR PLATES RESTING ON CONCRETE OR MASONRY, WHICH IS IN CONTACT WITH EARTH OR RESTING ON FOUNDATIONS, SHALL BE PRESSURE TREATED DOUGLAS FIR. NEWLY EXPOSED SURFACES RESULTING FROM FIELD CUTTING, BORING OR HANDLING SHALL BE FIELD TREATED IN ACCORDANCE WITH AWPA M-4.
8. BOLTS: ALL BOLT HOLES IN WOOD SHALL BE DRILLED 1/32" DIAMETER LARGER THAN NOMINAL BOLT DIAMETERS. BOLTS IN WOOD SHALL NOT BE LESS THAN 7 DIAMETERS FROM THE END AND 4 DIAMETERS FROM THE EDGE OF THE MEMBER. THREAD PROJECTION SHALL BE 1/16 INCH MINIMUM. ALL NUTS SHALL BE TIGHTENED WHEN INSTALLED AND RE-TIGHTENED AT THE COMPLETION OF WORK OR BEFORE CLOSING IN.
9. MACHINE BOLT ANCHOR BOLTS SHALL BE PROVIDED WITH FULL BODY DIAMETER AS FOLLOWS:

NOMINAL SIZE (INCHES)		BODY OR SHANK DIAMETER (INCHES) MAX	MIN
1/2	0.500	0.515	0.482
5/8	0.625	0.642	0.605
3/4	0.750	0.768	0.729
7/8	0.875	0.895	0.852
1	1.000	1.022	0.976

   A. ADOPTED FROM ANSI B18.2.1.
   B. FOR BOLT DIAMETERS NOT INDICATED, REFER TO ASME B18.2.1 AND B18.2.6.
   C. THE BODY AND SHANK OF A BOLT IS THE SMOOTH PORTION BETWEEN THE HEAD AND THE THREADS.
10. LAG SCREWS: SHALL BE FULL BODY DIAMETER ACCORDING TO ANSI B18.2.1 PRE-DRILL LEAD WITH A BIT SIZE OF 40% TO 70% OF THE SHANK DIAMETER FOR THE THREADED PORTION. CLEARANCE HOLE TO BE THE SAME LENGTH AND DIAMETER AS THE UN-THREADED SHANK. LUBRICATE LAGS AND SCREW INTO PLACE.
11. WOOD SCREWS SHALL BE CUT THREAD ACCORDING TO ANSI B18.6.1
12. WASHERS: ALL BOLT HEADS, LAG SCREWS AND NUTS BEARING ON WOOD SHALL HAVE STANDARD CUT WASHERS. SEE SHEARWALL SCHEDULE FOR ADDITIONAL SILL PLATE WASHER REQUIREMENTS.
13. ALL FRAMING ANCHORS, POST CAPS, BASES, HANGERS, STRAPS, ETC., SHALL BE AS MANUFACTURED BY "SIMPSON STRONG-TIE COMPANY" LATEST CATALOG OR ENGINEER APPROVED EQUAL. SUBMIT LOAD COMPARISONS WITH CATALOG AND ICC REPORTS TO THE ENGINEER FOR APPROVAL.
14. TOP PLATES OF ALL WOOD STUD WALLS TO BE 2-2X MINIMUM (SAME WIDTH AS STUDS), LAP 48" (MINIMUM), WITH NOT LESS THAN 6-16D NAILS AT EACH LAP AND NOT MORE THAN 12" BETWEEN NAILS.
15. MOISTURE CONTENT OF WOOD AT TIME OF PLACING SHALL NOT EXCEED 19%.
16. OVER DRIVING OF NAILS THROUGH SHEARWALL, ROOF, OR FLOOR SHEATHING IS NOT ALLOWED. NAILS SHALL BE DRIVEN SO THAT THE HEADS ARE FLUSH WITH THE SURFACE OF SHEATHING.
17. MACHINE APPLIED NAILING TO WOOD FRAMING OR PLYWOOD: SUBJECT TO SATISFACTORY JOB SITE DEMONSTRATION FOR THIS PROJECT AND APPROVAL BY THE ENGINEER AND DSA. IF NAIL-HEADS PENETRATE THE OUTER PLY MORE THAN WOULD BE NORMAL FOR HAND HAMMER OR IF MINIMUM ALLOWABLE EDGE DISTANCES ARE NOT MAINTAINED, THE PERFORMANCE WILL BE DEEMED UNSATISFACTORY AND MACHINE NAILING SHALL BE DISCONTINUED.
18. WHERE ADJACENT WALLS ARE SHEATHED, PROVIDE SHEATHING OVER AND UNDER OPENINGS AND REMAINDER OF UNSHEATHED WALLS.
19. FASTENERS, NAILS AND CONNECTORS IN CONTACT WITH PRESERVATIVE TREATED WOOD SHALL BE GALVANIZED IN ACCORDANCE WITH ASTM A-653 HOT DIPPED ZINC COATED GALVANIZED OR SHALL BE STAINLESS STEEL.
20. WHEN HARDWARE THAT REQUIRES 10d x 1 1/2" NAILS ARE INSTALLED OVER SHEATHING. THE LENGTH OF THE NAILS USED SHALL BE INCREASED BY THE THICKNESS OF THE SHEATHING.
21. STRUCTURAL COMPOSITE LUMBER TO BE MANUFACTURED BY RED BUILT LLC, AND MEET THE REQUIREMENTS OF ICC ESR-2993. GRADE SHALL BE 2.0E-2900Fb.

STRUCTURAL STEEL (CBC CHAPTER 22A)

1. ALL WORKMANSHIP AND MATERIALS SHALL FOR THE DESIGN, FABRICATION, AND ERECTION OF STRUCTURAL STEEL FOR BUILDINGS SHALL CONFORM TO 15th EDITION OF THE AISC MANUAL OF STEEL CONSTRUCTION.
2. MATERIALS:
   WIDE FLANGE..............................ASTM A992.... .... GRADE 50
   CHANNELS............................... ASTM A36.............. GRADE 36
   ANGLES & RODS..............................ASTM A36 .... GRADE 36
   PLATES...ASTM A572 .... GRADE 50
   HSS (TUBES)............................... ASTM A500.... .... GRADE C (FY= 50 KSI)
   HSS (ROUNDS).................................. ASTM A500 .... GRADE C (FY= 46 KSI)
   HSS (PIPES)................................ ASTM A53............... GRADE B (FY= 35 KSI)
   MACHINE BOLTS......................... ASTM A307.............. GRADE A
      NUTS..................................... ASTM A563.... ....HEX, GRADE A
   ANCHOR BOLTS/ RODS*.............. ASTM F1554* .... (SEE PLAN FOR GRADE)
      NUTS*.................................... ASTM A563*........... HEAVY HEX, GRADE A
   HIGH STRENGTH BOLTS*.............. ASTM F3125
      NUTS*.................................... ASTM A563*........... HEAVY HEX, GRADE C
   HARDENED WASHERS.................. ASTM F436
   HEADED STUDS............................ ASTM A108*............ TEST PER CBC SECTION 2213A.2
   NON-SHRINK GROUT...................... ASTM C1107........... 7000 PSI (NON-METALLIC)
   *HIGH STRENGTH BOLTS, NUTS AND WASHERS SHALL BE TESTED PER CBC SECTION 2213A, PART 2, TITLE 24, CCR.
3. ROLLED STRUCTURAL SHAPES SHALL BEAR MILL IDENTIFICATION MARKS IN CONFORMANCE WITH ASTM A6 HSS (TUBES AND ROUNDS) SHALL BEAR MILL IDENTIFICATION IN ACCORDANCE WITH ASTM A500 AND HSS (PIPES) IN ACCORDANCE WITH ASTM A-53.
4. WHEN FABRICATING BEAMS, PLACE NATURAL CAMBER UP.
5. PROVIDE HARDENED WASHERS AS REQUIRED PER THE SPECIFICATION FOR STRUCTURAL JOINTS USING ASTM F3125 GR. A325 OR GR. A490 BOLTS.
6. BOLT HOLES:
   A. TYPICAL STEEL TO STEEL CONNECTIONS...................... BOLT DIAMETER + 1/16 INCH
   B. ANCHOR BOLTS (RODS) & WASHERS............................ PER AISC TABLE 14-2 U.O.N. ON PLANS
7. HEADED AND THREADED ANCHORS: NELSON SELF-FLUXED ANCHORS.
8. NON- SHRINK GROUT SHALL BE INSTALLED IMMEDIATELY AFTER COLUMN IS PLUMBED. CONTRACTOR SHALL NOT LOAD COLUMN ANCHOR BOLTS BEFORE PLACEMENT OF NON-SHRINK GROUT WITHOUT TAKING MEASURES TO PREVENT BUCKLING OF ANCHOR BOLTS UNDER CONSTRUCTION LOAD.
9. ALL WELDING SHALL BE DONE BY THE FLUX-CORE PROCESS USING APPROVED ELECTRODES PER AWS SPECIFICATION E70XX (LOW HYDROGEN ELECTRODES). WELDING SHALL CONFORM TO THE LATEST EDITION OF AWS D1.1 AND AWS D1.4 AND SHALL BE PERFORMED BY CERTIFIED WELDERS QUALIFIED UNDER THE PROCEDURES CONTAINED THEREIN.
10. WHERE WELD LENGTH IS NOT SHOWN, IT SHALL BE THE FULL LENGTH OF THE JOINT.
11. WHERE MINIMUM AISC FILLET WELD THICKNESS REQUIREMENT EXCEEDS WELDS SHOWN ON DETAILS, PROVIDE MINIMUM AISC WELD.
12. ALL WELDS USED IN PRIMARY MEMBERS AND CONNECTIONS IN THE LATERAL FORCE RESISTING SYSTEM SHALL BE MADE WITH A FILLER METAL THAT HAS A MINIMUM CHARPY V-NOTCH TOUGHNESS OF 20 FT-LBS AT MINUS 0 DEGREES FAHRENHEIT AS DETERMINED BY AWS CLASSIFICATION OR MANUFACTURE CERTIFICATION AND 40 FT-LBS AT 70° DEGREES FAHRENHEIT.
13. INSPECTION OF WELDING SHALL CONFORM TO CBC SECTION 1705A.2 TITLE 24, PART 2, CCR.
14. INSPECTION OF SHOP FABRICATION SHALL CONFORM TO CBC SECTION 1704A.2.5, TITLE 24, PART 2, CCR.
15. ALL FULL PENETRATION CONNECTIONS SHALL BE INSPECTED BY AN APPROVED TESTING AGENCY AND SHALL CONFORM TO LATEST EDITION OF AWS D1.1, SECTIONS 5 AND 6.
16. STRESSES OCCURRING DURING FABRICATION, SHIPMENT, AND ERECTION SHALL BE TEMPORARY AND NOT EXCESSIVE. STRESSES AT ALL TIMES SHALL BE LESS THAN DESIGN AND ALLOWABLE STRESSES. THE FULL DESIGN AND LOAD CARRYING CAPACITY OF THE STEELWORK SHALL NOT BE IMPAIRED DUE TO FABRICATION, SHIPMENT, OR ERECTION PROCEDURES. THROUGHOUT THE COMPLETE PROCESS, THE STABILITY OF INDIVIDUAL MEMBERS AND ASSEMBLIES SHALL BE MAINTAINED.
17. ALL ADDITIONAL STEEL REQUIRED FOR ERECTION PURPOSES SHALL BE PROVIDED AT NO ADDITIONAL COST AND SHALL BE REMOVED UNLESS APPROVED BY THE OWNER IN WRITING.
18. STRUCTURAL STEEL SHOP DRAWINGS SHALL BE SUBMITTED TO AND REVIEWED BY THE ENGINEER BEFORE FABRICATION.
19. ALL EXTERIOR EXPOSED STEEL SHALL BE PAINTED OR GALVANIZED. SEE ARCHITECTURAL DRAWINGS FOR REQUIREMENTS.

GENERAL NOTES

1. NOTES AND DETAILS ON THE STRUCTURAL DRAWINGS TAKE PRECEDENCE OVER THESE STANDARD STRUCTURAL NOTES. TYPICAL DETAILS SHALL BE USED WHENEVER APPLICABLE. REFER TO SPECIFICATIONS FOR INFORMATION NOT COVERED BY THESE NOTES OR DRAWINGS. THESE NOTES TAKE PRECEDENCE OVER ANY OTHER BOOK SPECIFICATIONS.
2. THE CONTRACTOR SHALL VERIFY ALL DIMENSIONS, ELEVATIONS, AND SITE CONDITIONS BEFORE STARTING WORK, AND THE ENGINEER/ ARCHITECT SHALL BE IMMEDIATELY NOTIFIED, IN WRITING, OF ANY DISCREPANCIES. IN NO CASE SHALL DIMENSIONS BE SCALED FROM PLANS, SECTIONS, OR DETAILS ON THE STRUCTURAL DRAWINGS.
3. ALL OMISSIONS AND CONFLICTS BETWEEN THE VARIOUS ELEMENTS OF THE DRAWINGS AND/OR SPECIFICATIONS SHALL BE BROUGHT TO THE ATTENTION OF, AND RESOLVED WITH, THE ENGINEER BEFORE PROCEEDING WITH ANY WORK SO INVOLVED.
4. WHERE A CONSTRUCTION DETAIL IS NOT SHOWN OR NOTED, THE DETAIL SHALL BE THE SAME AS FOR OTHER SIMILAR WORK.
5. THE CONTRACTOR SHALL DETERMINE THE LOCATION OF UTILITY SERVICES IN THE AREA TO BE EXCAVATED, BEFORE BEGINNING EXCAVATION.
6. NO PIPES, DUCTS, SLEEVES, CHASES, ETC. SHALL BE PLACED IN SLABS, BEAMS, OR WALLS, NOR SHALL ANY STRUCTURAL MEMBER BE CUT FOR PIPES, DUCTS, ETC. THE CONTRACTOR SHALL OBTAIN PRIOR APPROVAL FOR INSTALLATION OF ANY ADDITIONAL PIPES, DUCTS, ETC.
7. ALL MATERIAL AND WORKMANSHIP SHALL CONFORM TO THE REQUIREMENTS OF THE 2022 CALIFORNIA BUILDING CODE (CBC), TITLE 24, PART 2, CCR WITH CALIFORNIA AMENDMENTS .
8. THE CONTRACTOR SHALL ASSUME SOLE AND COMPLETE RESPONSIBILITY FOR JOB SITE CONDITIONS DURING THE COURSE OF CONSTRUCTION OF THIS PROJECT, INCLUDING SAFETY OF ALL PERSONS AND PROPERTY. THIS REQUIREMENT SHALL APPLY CONTINUOUSLY AND NOT BE LIMITED TO NORMAL WORKING HOURS. THE CONTRACTOR SHALL DEFEND, INDEMNIFY, AND HOLD THE ENGINEER FREE AND HARMLESS FROM ALL CLAIMS, DEMANDS AND ALL LIABILITY, REAL OR ALLEGED, IN CONNECTION WITH THE PERFORMANCE OF WORK ON THIS PROJECT.
9. RETAIN A CALIFORNIA REGISTERED CIVIL ENGINEER TO DESIGN ALL TEMPORARY BRACING, SHORING, AND SUPPORT REQUIRED DURING CONSTRUCTION, INCLUDING CONSTRUCTION LOADS AND EQUIPMENT.
10. INCLUDE ENGINEERING FEES, ENGINEERING DESIGN TIME AND DSA APPROVAL TIME IN THE COST OF PROPOSED MATERIAL ALTERNATES. CONTACT ENGINEER FOR FEE AMOUNT. SUBMIT MATERIAL ALTERNATE FOR REVIEW BEFORE CONSTRUCTION.
11. STRUCTURAL CAD DRAWINGS SHALL NOT BE USED FOR SHOP DRAWINGS UNLESS AN AGREEMENT BETWEEN THE STRUCTURAL ENGINEER AND CONTRACTOR HAS BEEN ESTABLISHED ACCORDING TO CASE DOCUMENT 11. CONTACT ENGINEER FOR FEE AMOUNT.
12. ALL ADDENDA AND CONSTRUCTION CHANGE DOCUMENTS (CCD) SHALL BE SUBMITTED TO DSA FOR APPROVAL PRIOR TO COMPLETING WORK.
13. SHOP DRAWINGS: THE CONTRACTOR SHALL REVIEW SHOP DRAWINGS FOR COMPLETENESS AND COMPLIANCE WITH CONTRACT DOCUMENTS. CONTRACTOR SHALL STAMP SHOP DRAWINGS PRIOR TO SUBMISSION TO ARCHITECT/ENGINEER. THE ARCHITECT'S/ENGINEER'S REVIEW OF THE SHOP DRAWINGS SHALL NOT BE CONSTRUED AS AN AUTHORIZATION TO DEVIATE FROM THE CONTRACT DOCUMENTS. ALSO, SHOP DRAWINGS WILL NOT BE PROCESSED DUE TO INCOMPLETENESS, LACK OF COORDINATION WITH RELEVANT PORTIONS OF CONTRACT DOCUMENTS, LACK OF CALCULATIONS WHEN REQUIRED, OR WHERE DEVIATIONS, MODIFICATIONS, OR SUBSTITUTIONS ARE INDICATED WITHOUT PRIOR WRITTEN APPROVAL FROM THE ARCHITECT/ENGINEER.
14. ANY REFERENCE TO THE WORDS APPROVED, OR APPROVAL IN THESE DOCUMENTS SHALL BE HERE DEFINED TO MEAN GENERAL ACCEPTANCE OR REVIEW AND SHALL NOT RELIEVE THE CONTRACTOR AND/OR HIS SUB-CONTRACTORS OF ANY LIABILITY IN FURNISHING THE REQUIRED MATERIALS OR LABOR SPECIFIED.

SPECIAL INSPECTIONS & TESTING (CBC CHAPTER 17A)

1. SPECIAL INSPECTIONS & TESTING SHALL MEET THE REQUIREMENTS OF CBC CHAPTER 17A TITLE 24, PART 2, CCR.
2. PROJECT INSPECTOR OF RECORD: IN ACCORDANCE WITH TITLE 24, PART 1.
3. CERTIFIED SPECIAL INSPECTORS SHALL:
   A. BE CERTIFIED BY DSA TO PERFORM THE TYPES OF INSPECTIONS SPECIFIED.
   B. PREPARE REPORTS THAT SHALL BE SIGNED BY A CALIFORNIA REGISTERED CIVIL ENGINEER.
   C. OBSERVE THE WORK ASSIGNED FOR CONFORMANCE WITH APPROVED DRAWINGS AND SPECIFICATIONS.
   D. FURNISH INSPECTION REPORTS TO THE ENGINEER AND DSA. DISCREPANCIES SHALL BE BROUGHT TO THE IMMEDIATE ATTENTION OF THE CONTRACTOR FOR CORRECTION; THEN, IF NOT CORRECTED, TO THE ENGINEER AND DSA PER CBC SECTION 1704A.2.4.
   E. SUBMIT TO THE ENGINEER AND DSA A FINAL VERIFIED REPORT, SIGNED BY A CALIFORNIA REGISTERED CIVIL ENGINEER, STATING THAT THE WORK WAS IN CONFORMANCE WITH THE APPROVED DRAWINGS AND SPECIFICATIONS AND THE APPLICABLE WORKMANSHIP PROVISIONS OF CBC TITLE 24, PART 2, CCR.
4. SUMMARY OF CONTINUOUS AND PERIODIC INSPECTIONS:
   A. SPECIAL INSPECTIONS ARE IN ADDITION TO THE CALLED INSPECTIONS REQUIRED BY CAC SECTION 4-342, TITLE 24, PART 1, CCR. SPECIAL INSPECTION IS NOT A SUBSTITUTE FOR INSPECTION BY DSA. SPECIALLY INSPECTED WORK WHICH IS INSTALLED OR COVERED WITHOUT THE APPROVAL OF DSA IS SUBJECT TO REMOVAL OR EXPOSURE.
   B. CONTINUOUS INSPECTION IS REQUIRED DURING THE PERFORMANCE OF THE WORK UNLESS OTHERWISE SPECIFIED.
   C. IT IS THE RESPONSIBILITY OF THE PROJECT INSPECTOR TO INFORM THE SPECIAL INSPECTOR OR INSPECTION AGENCY AT LEAST ONE WORKING DAY BEFORE PERFORMING ANY WORK THAT REQUIRES SPECIAL INSPECTION. ALL WORK PERFORMED WITHOUT REQUIRED SPECIAL INSPECTION IS SUBJECT TO REMOVAL.
5. SEE DSA-103 DOCUMENT FOR LIST OF REQUIRED INSPECTIONS. THIS DOCUMENT SHALL BE CONSIDERED PART OF THE CONSTRUCTION DOCUMENTS.

STRUCTURAL OBSERVATION (CBC CHAPTER 17A)

1. DEFINITION: THE VISUAL OBSERVATION OF THE STRUCTURAL SYSTEM, BY A REGISTERED DESIGN PROFESSIONAL FOR GENERAL CONFORMANCE TO THE APPROVED CONSTRUCTION DOCUMENTS, AT SIGNIFICANT CONSTRUCTION STAGES AND AT COMPLETION OF THE STRUCTURAL SYSTEM. STRUCTURAL OBSERVATION DOES NOT INCLUDE OR WAIVE THE RESPONSIBILITY FOR THE INSPECTIONS REQUIRED BY CAC CHAPTER 4, GROUP 1, ARTICLE 6 AND CHAPTER 17A TITLE24,, CCR OR OTHER SECTIONS OF THE CODE.
2. IN ACCORDANCE WITH CBC SECTION 1704A.6, TITLE 24, CCR THE ENGINEER REQUIRES OBSERVATION DURING CONSTRUCTION OF THE FOLLOWING:
   A. FINAL FRAMING
3. NOTIFICATION: 48 HOURS BEFORE REQUIRED OBSERVATION. DELINQUENT NOTIFICATION MAY REQUIRE DEMOLITION OF COVERED MATERIALS FOR OBSERVATION.
4. THE STRUCTURAL OBSERVER SHALL SUBMIT TO THE BUILDING OFFICIAL A WRITTEN STATEMENT THAT THE SITE VISITS HAVE BEEN MADE AND IDENTIFYING ANY REPORTED DEFICIENCIES WHICH, TO THE BEST OF THE STRUCTURAL OBSERVERS KNOWLEDGE, HAVE BEEN RESOLVED.

DESIGN CRITERIA

1. VERTICAL LOADS:
   A. DEAD LOADS:
      ROOF (SLOPE) ....15 PSF
   B. LIVE LOADS: REDUCIBLE UNLESS NOTED OTHERWISE
      ROOF (SLOPE)..................... 20 PSF
2. LATERAL LOADS:
   A. WIND: PER ASCE 7-16 (CBC 2022)
      BASIC WIND SPEED-3 SECOND GUST (V3s).......... 103 MPH
      TOPOGRAPHIC FACTOR (Kzt)............................. 1.0
      RISK CATEGORY III
      EXPOSURE CATEGORY.. C
      ENCLOSURE CLASSIFICATION............................ ENCLOSED
   B. SEISMIC: PER ASCE 7-16 (CBC 2022)
      RISK CATEGORY.. III
      SEISMIC IMPORTANCE FACTOR (IE)..................... 1.0
         RHO (N-S)... 1.0
         RHO (E-W)... 1.0
      MAPPED SPECTRAL RESPONSE ACCELERATIONS:
         SS= 0.746 G
         S1= 0.275 G
      SITE CLASS:.. D
      SPECTRAL RESPONSE COEFFICIENTS:
         Sds= 0.598 G
         Sd1= 0.376 G
      SEISMIC DESIGN CATEGORY:.................................. D

CONCRETE-SCREW ANCHORS

1. SPECIAL INSPECTION IS REQUIRED.
2. MATERIALS: (ICC ESR 3027)
   SCREW ANCHORS...............HILTI..................KWIK HUS-EZ (KH-EZ)
3. INSTALLATION:

ANCHOR DIA.	MAX. INSTALLATION TORQUE (FT LB) THROUGH STEEL
1/4	18
3/8"	40
1/2"	45
5/8"	85
3/4"	95

   A. SHALL BE IN ACCORDANCE WITH ICC ESR 3027.
   B. USE CARBIDE-TIPPED DRILL BITS CONFORMING TO ANSI B212.15. DRILL BIT SIZE IS EQUAL TO ANCHOR DIAMETER.
   C. CLEAN HOLES OF DUST AND DEBRIS USING OIL-FREE COMPRESSED AIR AND A STEEL WIRE BRUSH.
   D. MINIMUM CONCRETE EDGE DISTANCE SHALL BE 1 3/4".
4. THE CONCRETE MUST HAVE ATTAINED ITS MINIMUM DESIGN STRENGTH PRIOR TO INSTALLATION.
5. USE OF ANCHORS IS LIMITED TO DRY, INTERIOR CONDITIONS.
6. ANCHORS SHALL BE USED ONLY WHERE SPECIFICALLY INDICATED ON PLANS AND DETAILS.

IDENTIFICATION STAMP
DIV. OF THE STATE ARCHITECT
APP: 04-122772 INC:
REVIEWED FOR
SS ☑ FLS ☑ ACS ☑
DATE: 03/26/2024

SPROTTE | WATSON
ARCHITECTURE | PLANNING

LICENSED ARCHITECT
C12359
REN. OCTOBER 2025
STATE OF CALIFORNIA

CONSULTANT

WISEMAN + ROHY
STRUCTURAL ENGINEERS
9915 MIRA MESA BLVD.
SUITE 200
SAN DIEGO, CA 92131
TEL 858 536 5166
FAX 858 536 5163
WWW.WRENGINEERS.COM

All design concepts, ideas and arrangements depicted on these sheets are the property of Wiseman + Rohy and are intended to be used in connection with this specific project only and shall not be used or changed in whole or in part for any other purpose without the written consent of Wiseman + Rohy

REGISTERED PROFESSIONAL ENGINEER
STEVEN D. ROHY
4341
EXP. 12-31-25
STRUCTURAL
STATE OF CALIFORNIA

DEHESA ELEMENTARY SCHOOL
CONSTRUCTION DOCUMENTS
DEHESA SCHOOL DISTRICT
4612 DEHESA ROAD
EL CAJON, CA 92019

REVISIONS

DESCRIPTION

STRUCTURAL NOTES

DATE

01.25.24

JOB #

23016.00

SHEET #

S1.1

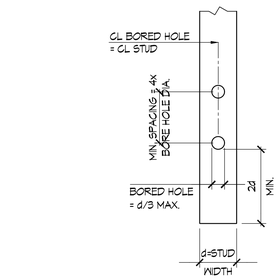

BORING OF WOOD STUDS

NOTE:
1. LARGER HOLES MUST BE APPROVED BY THE STRUCTURAL ENGINEER.

1

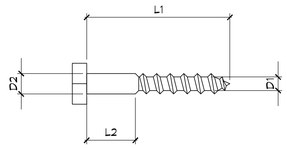

INSTALLATION SEQUENCE

1. DRILL HOLE 40-70% OF D2 FOR DISTANCE OF L1
2. DRILL HOLE OF DIAMETER D2 FOR DISTANCE OF L2
3. RETIGHTEN SCREWS BEFORE FINAL CLOSING IN.

TYP. LAG SCREW INSTALLATION PROCEDURE

2

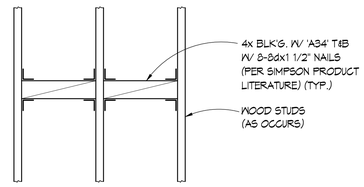

TYP. WOOD STUD BACKING DETAIL

3

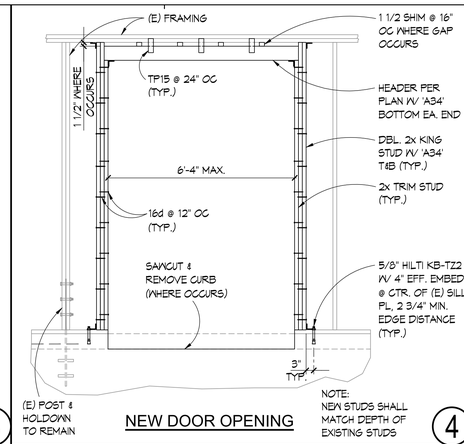

NOTE:
NEW STUDS SHALL MATCH DEPTH OF EXISTING STUDS

NEW DOOR OPENING

4

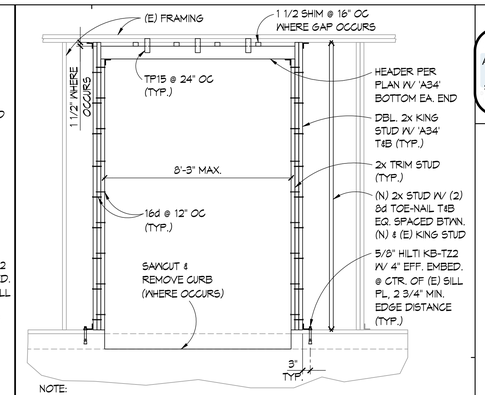

NOTE:
NEW STUDS SHALL MATCH DEPTH OF EXISTING STUDS

NEW DOOR OPENING

5

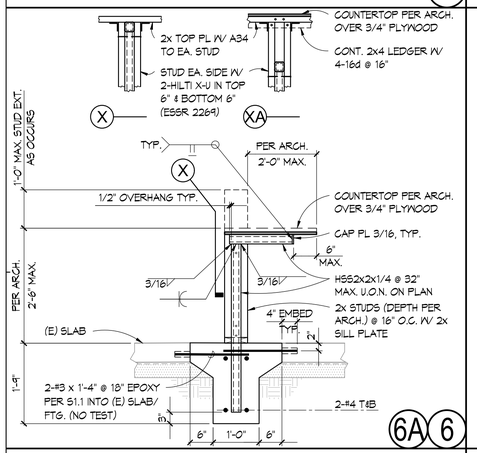

6A 6

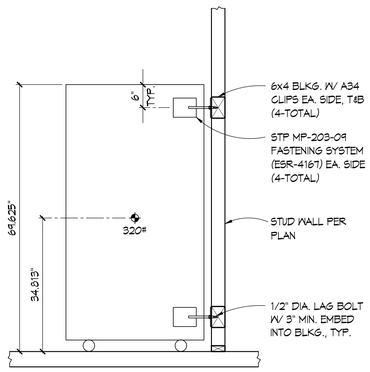

REFRIGERATOR ANCHORAGE

7

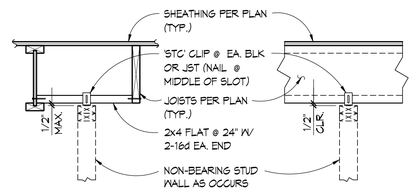

TYP. NON-BEARING WOOD WALL ATTACH

8

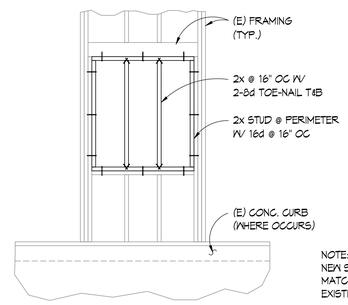

NOTE:
NEW STUDS SHALL MATCH DEPTH OF EXISTING STUDS

TYP. (E) WINDOW INFILL

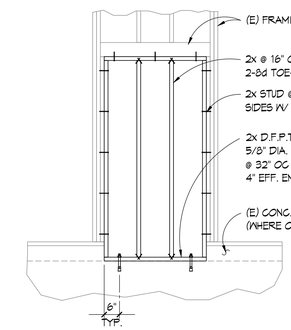

TYP. (E) DOOR INFILL

10

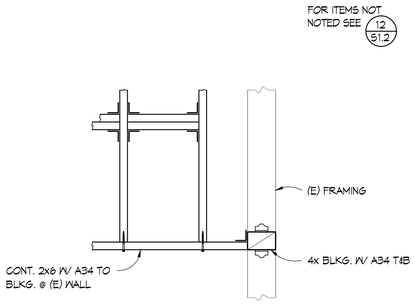

11

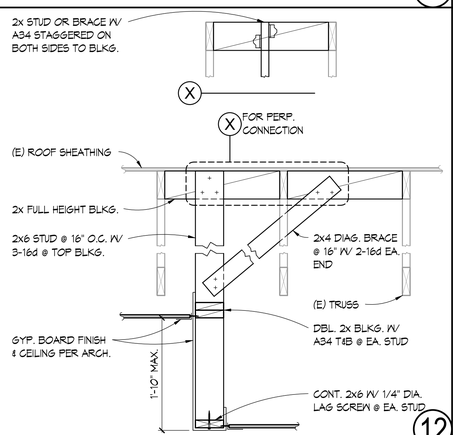

12

NOTE:
SEE 8/S1.2 FOR
TOP OF STUD WALL
CONNECTIONS

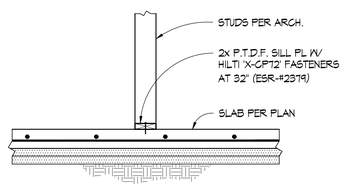

TYP NON-STRUCTURAL PARTITION ATTACHMENT TO SLAB

13

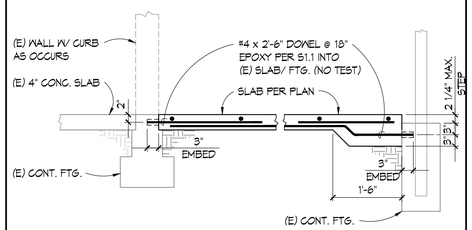

14

15

16

17

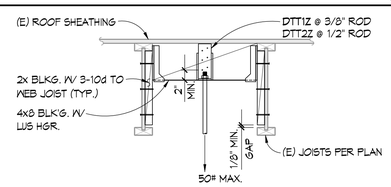

B TYP. HANGING ROD

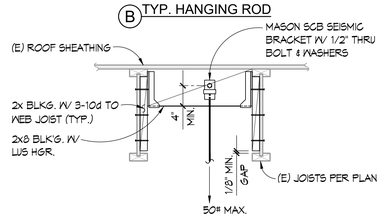

A TYP. WIRE HANGER/BRACE

19

TABLE NO. 2304.10.2 FASTENING

CONNECTION	FASTENING [a]
1. JOISTS TO SILL OR GIRDER, TOENAIL	3-8d
2. BRIDGING TO JOIST, TOENAIL EACH END	2-8d
3. 1" x 6" SUBFLOOR OR LESS TO EACH JOIST, FACE NAIL	2-8d
4. WIDER THAN 1" x 6" SUBFLOOR TO EACH JOIST, FACE NAIL	3-8d
5. 2" SUBFLOOR TO JOIST OR GIRDER, BLIND AND FACE NAIL	2-16d
6. SOLE PLATE TO JOIST OR BLOCKING, TYPICAL FACE NAIL	16d AT 16" O.C.
SOLE PLATE TO JOIST OR BLOCKING, AT BRACED WALL PANELS	3-16d PER 16"
7. TOP PLATE TO STUD, END NAIL	2-16d
8. STUD TO SOLE PLATE	4-8d, TOE NAIL OR
	2-16d, END NAIL
9. DOUBLE STUDS, FACE NAIL	16d AT 24" O.C.
10. DOUBLED TOP PLATES, TYPICAL FACE NAIL	16d AT 16" O.C. [b]
DOUBLE TOP PLATES, LAP SPLICE	8-16d AT 16" [b]
11. BLOCKING BETWEEN JOISTS OR RAFTERS TO TOP PLATE, TOENAIL	3-8d
12. RIM JOIST TO TOP PLATE, TOENAIL	8d AT 6" O.C.
13. TOP PLATES, LAPS AND INTERSECTIONS, FACE NAIL	2-16d
14. CONTINUOUS HEADER, TWO PIECES	16d @ 16" ALONG EACH EDGE
15. CEILING JOISTS TO PLATE, TOENAIL	3-8d
16. CONTINUOUS HEADER TO STUD, TOENAIL	4-8d
17. CEILING JOISTS, LAP OVER PARTITIONS, FACE NAIL	3-16d
18. CEILING JOISTS TO PARALLEL RAFTERS, FACE NAIL	3-16d
19. RAFTER TO PLATE, TOENAIL	3-8d
20. 1" BRACE TO EACH STUD AND PLATE, FACE NAIL	2-8d
21. 1" x 6" SHEATHING OR LESS TO EACH BEARING, FACE NAIL	2-8d
22. WIDER THAN 1" x 6" SHEATHING TO EACH BEARING, FACE NAIL	3-8d
23. BUILT-UP CORNER STUDS	16d AT 24" O.C.

NOTES:
a. COMMON OR BOX NAILS MAY BE USED EXCEPT WHERE OTHERWISE STATED.
b. COMMON NAILS

20

IDENTIFICATION STAMP
DIV. OF THE STATE ARCHITECT
APP: 04-122772 INC:
REVIEWED FOR
SS ☑ FLS ☑ ACS ☑
DATE: 03/26/2024

SPROTTE | WATSON
ARCHITECTURE | PLANNING

CONSULTANT

WISEMAN + ROHY
STRUCTURAL ENGINEERS

All design concepts, ideas and arrangements depicted on these sheets are the property of Wiseman + Rohy and are protected by copyright. Use of them on any specific project only and shall not be used or changed in whole or in part for any other purpose without the written consent of Wiseman + Rohy.

9915 MIRA MESA BLVD.
SUITE 250
SAN DIEGO, CA. 92131
TEL 858.536.5166
FAX 858.536.5163
WWW.WIRONGINEERS.COM

DEHESA ELEMENTARY SCHOOL
CONSTRUCTION DOCUMENTS
DEHESA SCHOOL DISTRICT
4612 DEHESA ROAD
EL CAJON, CA 92019

REVISIONS

DESCRIPTION
TYPICAL DETAILS

DATE
01.25.24

JOB #
23016.00

SHEET #
S1.2

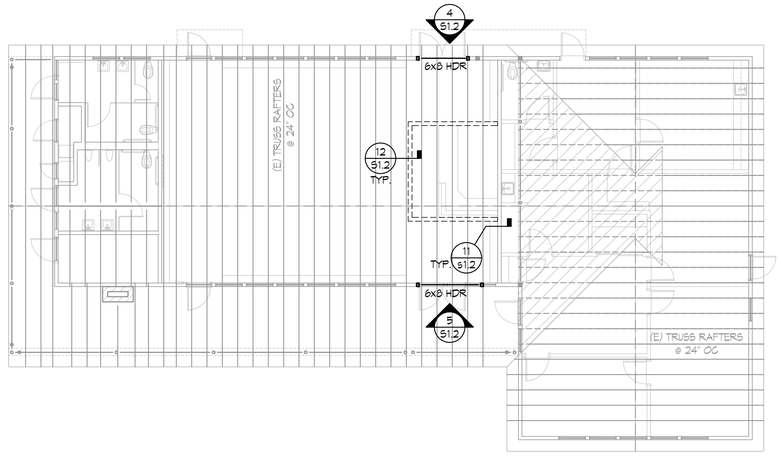

ROOF FRAMING PLAN-BLDG A

SCALE: 1/8" = 1'-0"

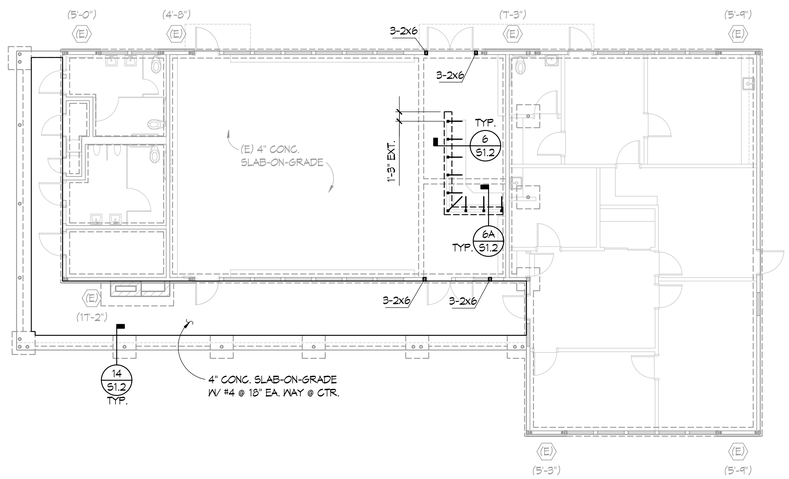

FOUNDATION PLAN-BLDG A

SCALE: 1/8" = 1'-0"

FOUNDATION ROOF FRAMING NOTES

1. SEE GENERAL NOTES AND TYPICAL DETAILS ON SHEETS S1.1 & S1.2. THESE NOTES AND DETAILS SHALL BE USED WHERE APPLICABLE WHETHER SPECIFICALLY REFERENCED OR NOT.
2. CONTRACTOR SHALL COORDINATE THE WORK OF ALL TRADES WITH THE STRUCTURAL REQUIREMENTS INDICATED. REFER TO CIVIL, MECHANICAL, PLUMBING, AND ELECTRICAL DRAWINGS.
3. STRUCTURAL WALLS ARE WALLS THAT RESIST GRAVITY, WIND, AND/OR SEISMIC LOADS. ALL EXTERIOR WOOD FRAME WALLS ARE STRUCTURAL WALLS. ALL EXTERIOR WALLS ARE STRUCTURAL WALLS. WALLS (OR PORTIONS OF WALLS) NOT INDICATED ON THE STRUCTURAL DRAWINGS ARE PARTITION WALLS. REFER TO ARCHITECTURAL PLANS FOR LOCATION AND EXTENT OF PARTITION WALLS.
4. ALL WOOD FRAME STRUCTURAL WALLS ARE 2x6 @ 16" O.C. STUD WALLS, UNLESS OTHERWISE NOTED ON PLANS, DETAILS, OR SHEARWALL SCHEDULE.
5. FOR DIMENSIONS, EXTENT, AND NATURE OF ALL WALLS, REFER TO ARCHITECTURAL DRAWINGS.
6. WHEN HARDWARE THAT REQUIRE 10dx1 1/2" NAILS ARE INSTALLED OVER SHEATHING, THE LENGTH OF NAILS USED SHALL BE INCREASED BY THE THICKNESS OF THE SHEATHING.

LEGEND

4x6 — WOOD POST SIZE. MARK IS INDICATED AT THE BASE OF THE POST.

FRAMING MEMBER BEARING ON TOP OF SUPPORT.

IDENTIFICATION STAMP
DIV. OF THE STATE ARCHITECT
APP: 04-122772 INC:
REVIEWED FOR
SS ☑ FLS ☑ ACS ☑
DATE: 03/26/2024

SPROTTE | WATSON
ARCHITECTURE | PLANNING

LICENSED ARCHITECT
CT2359
RICHARD SPROTTE
STATE OF CALIFORNIA

CONSULTANT

WISEMAN + ROHY
STRUCTURAL ENGINEERS

All design concepts, ideas and arrangements depicted on these sheets are the property of Wiseman + Rohy and are intended for use in connection with this specific project only and shall not be used or changed in whole or in part for any other purpose without the written consent of Wiseman + Rohy

9915 MIRA MESA BLVD.
SUITE 250
SAN DIEGO, CA. 92131
TEL 858.536.5185
FAX 858.536.5183
WWW.WIRENGINEERS.COM

REGISTERED PROFESSIONAL ENGINEER
STEVEN R. ROHY
4341
EXP. 12-31-25
STRUCTURAL
STATE OF CALIFORNIA

DEHESA ELEMENTARY SCHOOL
CONSTRUCTION DOCUMENTS
DEHESA SCHOOL DISTRICT
4612 DEHESA ROAD
EL CAJON, CA 92019

REVISIONS

DESCRIPTION

BUILDING A
FRAMING &
FOUNDATION PLAN

DATE

01.25.24

JOB #

23016.00

SHEET #

S2.1

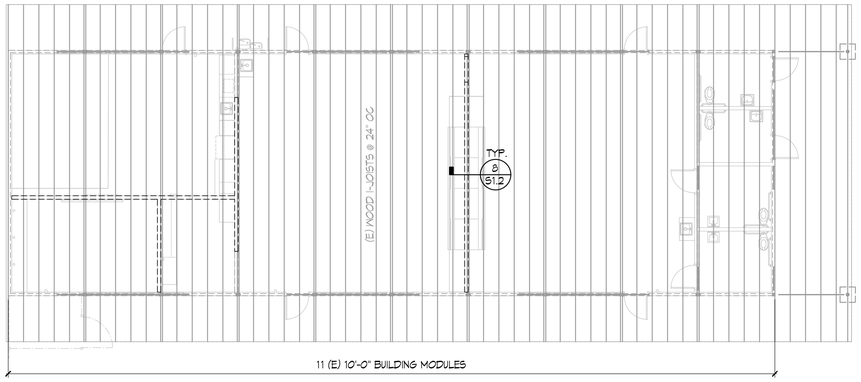

NORTH
HUSON

ROOF FRAMING PLAN-BLDG B

SCALE: 1/8" = 1'-0"

FOUNDATION ROOF FRAMING NOTES

1. SEE GENERAL NOTES AND TYPICAL DETAILS ON SHEETS S1.1 & S1.2. THESE NOTES AND DETAILS SHALL BE USED WHERE APPLICABLE WHETHER SPECIFICALLY REFERENCED OR NOT.
2. CONTRACTOR SHALL COORDINATE THE WORK OF ALL TRADES WITH THE STRUCTURAL REQUIREMENTS INDICATED. REFER TO CIVIL, MECHANICAL, PLUMBING, AND ELECTRICAL DRAWINGS.
3. STRUCTURAL WALLS ARE WALLS THAT RESIST GRAVITY, WIND, AND/OR SEISMIC LOADS. ALL EXTERIOR WOOD FRAME WALLS ARE STRUCTURAL WALLS. ALL EXTERIOR WALLS ARE STRUCTURAL WALLS. WALLS (OR PORTIONS OF WALLS) NOT INDICATED ON THE STRUCTURAL DRAWINGS ARE PARTITION WALLS. REFER TO ARCHITECTURAL PLANS FOR LOCATION AND EXTENT OF PARTITION WALLS.
4. ALL WOOD FRAME STRUCTURAL WALLS ARE 2x6 @ 16" O.C. STUD WALLS, UNLESS OTHERWISE NOTED ON PLANS, DETAILS, OR SHEARWALL SCHEDULE.
5. FOR DIMENSIONS, EXTENT, AND NATURE OF ALL WALLS, REFER TO ARCHITECTURAL DRAWINGS.
6. WHEN HARDWARE THAT REQUIRE 10dx1 1/2" NAILS ARE INSTALLED OVER SHEATHING, THE LENGTH OF NAILS USED SHALL BE INCREASED BY THE THICKNESS OF THE SHEATHING.

LEGEND

4x6 — WOOD POST SIZE. MARK IS INDICATED AT THE BASE OF THE POST.

FRAMING MEMBER BEARING ON TOP OF SUPPORT.

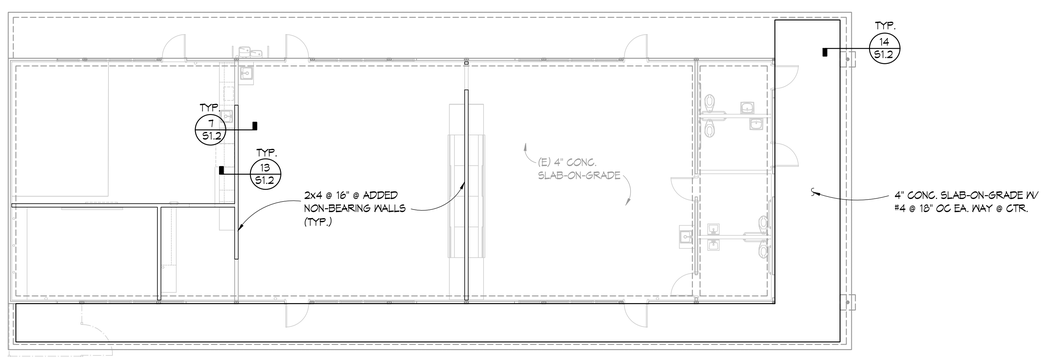

NORTH
HUSON

FOUNDATION PLAN-BLDG B

SCALE: 1/8" = 1'-0"

IDENTIFICATION STAMP
DIV. OF THE STATE ARCHITECT
APP: 04-122772 INC:
REVIEWED FOR
SS ☑ FLS ☑ ACS ☑
DATE: 03/26/2024

SPROTTE | WATSON
ARCHITECTURE | PLANNING

REGISTERED ARCHITECT
CERTIFICATE OF ACCOMPLISHMENT
C12359
RICHARD SPROTTE
STATE OF CALIFORNIA

CONSULTANT

WISEMAN + ROHY
STRUCTURAL ENGINEERS

All design concepts, ideas and arrangements depicted on these sheets are the property of Wiseman + Rohy and are intended for the specified purpose and for this specific project only and shall not be used or changed in whole or in part for any other purpose without the written consent of Wiseman + Rohy

9915 MIRA MESA BLVD.
SUITE 250
SAN DIEGO, CA. 92131
TEL 858.536.5160
FAX 858.536.5163
WWW.WIRONGINEERS.COM

REGISTERED PROFESSIONAL ENGINEER
STEVEN P. ROHY
4341
EXP. 12-31-25
STRUCTURAL
STATE OF CALIFORNIA

DEHESA ELEMENTARY SCHOOL
CONSTRUCTION DOCUMENTS
DEHESA SCHOOL DISTRICT
4612 DEHESA ROAD
EL CAJON, CA 92019

REVISIONS

DESCRIPTION

BUILDING B
FRAMING &
FOUNDATION PLAN

DATE

01.25.24

JOB #

23016.00

SHEET #

S2.2

MECHANICAL LEGEND

SINGLE LINE SYMBOL	DOUBLE LINE SYMBOL	ABBREV.	DESCRIPTION
			EXISTING HVAC TO REMAIN
			EXISTING HVAC TO BE REMOVED
20x12	20x12		DUCT - INSIDE CLEAR DIMENSIONS IN INCHES 1ST DIMENSION, SIDE SHOWN 2ND DIMENSION, NOT SHOWN Ø - ROUND DUCT INSIDE CLEAR DIAMETER IN INCHES
			DIRECTION OF AIR FLOW
UP/DN	UP/DN		DUCT RISES OR DROPS IN DIRECTION OF ARROW
			DUCT TRANSITION
			DUCT CAP
		MVD	MANUAL VOLUME DAMPER
			SQUARE ELBOW W/TURNING VANES
			RADIUS ELBOW
			SUPPLY OR OUTSIDE AIR DUCT UP
			SUPPLY OR OUTSIDE AIR DUCT DOWN
			RETURN AIR DUCT UP
			RETURN AIR DUCT DOWN

DESCRIPTION OF TAGS

REGISTER OR DIFFUSER TAG: S-1 — REGISTER/DIFFUSER TYPE; 800 — CFM

DETAIL CALL OUT: 1 — DETAIL NUMBER; M-1 — SHEET NUMBER

EQUIPMENT TAG: AH — EQUIPMENT TYPE; 2 — UNIT NUMBER

SECTION CALL OUT: A — SECTION NUMBER; M-1 — SHEET NUMBER

MECHANICAL LEGEND

SINGLE LINE SYMBOL	DOUBLE LINE SYMBOL	ABBREV.	DESCRIPTION
			EXHAUST AIR DUCT UP
			EXHAUST AIR DUCT DOWN
			ROUND DUCT UP
			ROUND DUCT DOWN
20"x12"L	20"x12"L	L	LINED DUCT - INSIDE CLEAR DIMENSIONS SHOWN
			SUPPLY AIR TAKEOFF
			RETURN/EXHAUST AIR TAKEOFF
			SUPPLY AIR TAKEOFF - SPIN-IN FITTING WITH DAMPER
			RECTANGULAR SUPPLY DIFFUSER FOUR-WAY AIRFLOW DIRECTION UNLESS OTHERWISE NOTED
			RECTANGULAR RETURN GRILLE
			RECTANGULAR EXHAUST GRILLE
		POC	POINT OF CONNECTION
		POD	POINT OF DISCONNECTION
#			KEYNOTE
RL			REFRIGERANT LIQUID
RS			REFRIGERANT SUCTION
			PIPE TURNING DOWN
			PIPE TURNING UP
T			ROOM WALL MOUNTED TEMPERATURE SENSOR WITH MANUAL ADJUSTMENTS

ANCHORAGE AND BRACING NOTES

1. ALL EQUIPMENT, PIPING, AND DUCTWORK SHALL BE ANCHORED OR BRACED IN ACCORDANCE WITH THE UNIFORM BUILDING CODE. THE CONTRACTOR SHALL BE RESPONSIBLE FOR PROVIDING ANCHORAGE AND/OR BRACING FOR ALL EQUIPMENT REGARDLESS OF WHETHER DETAILED OR SHOWN ON PLANS.
2. ALL DUCTWORK AND PIPING SHALL BE SUPPORTED OR BRACED IN ACCORDANCE WITH THE SMACNA GUIDELINES FOR "SEISMIC RESTRAINTS OF MECHANICAL SYSTEMS AND PLUMBING PIPING SYSTEMS," SUPERSTRUT "SEISMIC RESTRAINT SYSTEM," UNISTRUT CORP. "SEISMIC BRACING FOR DUCTWORK, CONDUIT, AND CABLE TRAY SUPPORTS," OR B-LINE "SEISMIC RESTRAINTS." IF THE PIPE SIZE EXCEEDS THE SIZE INCLUDED IN THESE MANUALS, CUSTOM DESIGNED SUPPORTS ARE REQUIRED. ALL CUSTOM SUPPORTS REQUIRE THE APPROVAL OF A REGISTERED STRUCTURAL ENGINEER.
3. EQUIPMENT ANCHORAGE DETAILING & ENGINEERING CALCULATIONS, TO MEET SELECTED EQUIPMENT MANUFACTURER REQUIREMENTS, ARE TO BE INCLUDED AS PART OF EQUIPMENT SHOP DRAWINGS. CONTRACTOR SHALL FIELD VERIFY HOUSEKEEPING PADS DIMENSIONS BASED ON ANCHORAGE REQUIREMENTS. REFER TO STRUCTURAL DRAWINGS FOR CONCRETE HOUSEKEEPING PAD DESIGN.

ABBREVIATIONS

ABBREV.	DESCRIPTION	ABBREV.	DESCRIPTION
AFF	ABOVE FINISHED FLOOR	HP	HORSEPOWER
AMB	AMBIENT	IN	INCHES
APD	AIR PRESSURE DROP	LAT	LEAVING AIR TEMPERATURE
ARCH	ARCHITECTURAL	L	LENGTH
BDD	BACKDRAFT DAMPER	LB	POUNDS
BHP	BRAKE HORSEPOWER	LDB	LEAVING DRY BULB TEMPERATURE
BOD	BOTTOM OF DUCT	LWB	LEAVING WET BULB TEMPERATURE
BTUH	BTU PER HOUR	LWT	LEAVING WATER TEMPERATURE
CD	CONDENSATE DRAIN	MAX	MAXIMUM
CFM	CUBIC FEET PER MINUTE	MBH	THOUSAND BTU PER HOUR
CLG	CEILING	MCA	MINIMUM CIRCUIT AMPACITY
CONT	CONTINUATION	MIN	MINIMUM
DB	DRY BULB	NC	NORMALLY CLOSED
DIA Ø	DIAMETER	NO	NORMALLY OPEN
DX	DIRECT EXPANSION (REFRIGERANT)	NTS	NOT TO SCALE
EA	EXHAUST AIR	OA	OUTSIDE AIR
EAT	ENTERING AIR TEMPERATURE	OV	OUTLET VELOCITY
EDB	ENTERING DRY BULB TEMPERATURE	PD	PRESSURE PROP
EER	ENERGY EFFICIENCY RATIO	PLBG	PLUMBING
EFF	EFFICIENCY	PSI	POUNDS PER SQUARE INCH
ENT	ENTERING	PSIG	PSI GAUGE
ESP	EXTERNAL STATIC PRESSURE	QTY	QUANTITY
EWB	ENTERING WET BULB TEMPERATURE	RA	RETURN AIR
EWT	ENTERING WATER TEMPERATURE	RH	RELATIVE HUMIDITY
EX	EXISTING	RPM	REVOLUTIONS PER MINUTE
FT	FEET	SA	SUPPLY AIR
FF	FINISHED FLOOR	TG	TRANSFER GRILLE
FLA	FULL LOAD AMPERES	TSP	TOTAL STATIC PRESSURE
FPI	FINS PER INCH	TYP	TYPICAL
FPM	FEET PER MINUTE	UNO	UNLESS NOTED OTHERWISE
FPS	FEET PER SECOND	V/PH/Hz	VOLTS. PHASE, HERTZ
FT	FEET	VD	VOLUME DAMPER
FV	FACE VELOCITY	W	WIDTH
GA	GAUGE	W/	WITH
GPM	GALLONS PER MINUTE	WB	WET BULB
H	HEIGHT	WG	WATER GAUGE
HD	FEET OF WATER	WT	WEIGHT

GENERAL NOTES

1. ALL WORK SHALL COMPLY WITH THE LATEST EDITION(S) OF THE CALIFORNIA BUILDING, MECHANICAL, PLUMBING, AND OTHER APPLICABLE FEDERAL, STATE, AND LOCAL CODES AS ADOPTED AND ENFORCED BY THE LOCAL JURISDICTION HAVING AUTHORITY. IN CASE THE PLANS SHOW MORE STRINGENT REQUIREMENTS, THE PLANS SHALL GOVERN THE DESIGN, HOWEVER THE DESIGN DOCUMENTS SHALL NOT BE INTERPRETED AS AUTHORITY TO VIOLATE CODE(S) OR REGULATION(S).
2. SUBMISSION OF BID IN CONNECTION WITH THIS WORK SHALL IMPLY THAT THE BIDDER HAS EXAMINED THE JOB SITE UNDER WHICH THE CONTRACTOR WILL BE OBLIGATED TO OPERATE UNDER THIS CONTRACT. NO EXTRA CHARGE WILL BE ALLOWED FOR FAILURE OF ANY BIDDER TO EXAMINE THE SITE PRIOR TO BID.
3. WHERE USED, THE TERM "PROVIDE" SHALL MEAN "FURNISH AND INSTALL".
4. IN THE EVENT OF A CONFLICT OR INCONSISTENCY BETWEEN ITEMS INDICATED ON DESIGN PLANS/SPECIFICATIONS WITH CODE REQUIREMENTS, THE MORE STRINGENT STANDARD SHALL PREVAIL.
5. CONTRACTOR SHALL FURNISH LABOR, MATERIALS, EQUIPMENT, APPURTENANCES, AND TRANSPORTATION AS REQUIRED TO PROPERLY INSTALL ALL HVAC SYSTEMS OR RELATED COMPONENTS AS INDICATED ON PLANS AND SPECIFIED HEREIN.
6. ALL EQUIPMENT, MATERIAL AND APPURTENANCES TO BE INSTALLED AS PART OF THE PROJECT SHALL BEAR AN UNDERWRITERS LABORATORIES LABEL (UL), AND INSTALLED IN SUCH A MANNER FOR WHICH THEY ARE DESIGNED AND APPROVED.
7. CONTRACTOR SHALL DOCUMENT AND RELAY ANY MAJOR DEVIATIONS FROM THE DESIGN DOCUMENTS, AND ATTAIN APPROVAL FROM THE OWNER/DESIGN TEAM BEFORE PROCEEDING. CONTRACTOR SHALL PROVIDE AS-BUILT COPIES INDICATING ALL CHANGES/DEVIATIONS MADE DURING CONSTRUCTION.
8. ALL WORK SHALL BE PERFORMED IN A CLEAN AND WORKMANLIKE MANNER. CARE SHALL BE EXERCISED TO MINIMIZE ANY CONVENIENCE OR DISTURBANCE TO OTHER AREAS OF THE BUILDING WHICH ARE TO REMAIN IN OPERATION. ISOLATE WORK AREAS BY MEANS TO KEEP DUST AND DIRT WITHIN THE CONSTRUCTION AREA.
9. NO PIPING, EQUIPMENT, ETC. SHALL BE REMOVED, DISCONNECTED OR SHUT DOWN WITHOUT PRIOR REVIEW WITH THE OWNER'S REPRESENTATIVE TO CONFIRM THAT AREAS TO REMAIN IN OPERATION WILL NOT BE AFFECTED. IF ANY AREAS NOT WITHIN THE SCOPE OF WORK ARE AFFECTED BY ANY SHUTDOWN, REMOVAL OR DISCONNECTION, SUFFICIENT ADVANCE NOTICE MUST BE GIVEN TO THE OWNER'S REPRESENTATIVE INDICATING WHICH AREAS WILL BE AFFECTED, WHEN THE PROPOSED SHUTDOWN WILL OCCUR, AND FOR HOW LONG A PERIOD OF TIME.
10. THE ARRANGEMENT OF EQUIPMENT AND PIPING SHOWN ON THE DRAWINGS IS BASED UPON INFORMATION AVAILABLE TO THE ENGINEER AT THE TIME OF DESIGN AND IS NOT INTENDED TO SHOW EXACT DIMENSIONS PARTICULAR TO A SPECIFIC MANUFACTURER. THE DRAWINGS ARE, IN PART, DIAGRAMMATIC AND SOME FEATURES OF THE ILLUSTRATED EQUIPMENT INSTALLATION MAY REQUIRE REVISION TO MEET ACTUAL EQUIPMENT INSTALLATION REQUIREMENTS. STRUCTURAL SUPPORTS, FOUNDATIONS, CONNECTED PIPING, VALVES, PIPE SUPPORTS AND ELECTRICAL CONDUIT SPECIFIED MAY HAVE TO BE ALTERED OR ADDITIONAL ITEMS REQUIRED TO ACCOMMODATE THE EQUIPMENT PROVIDED. NO ADDITIONAL PAYMENT WILL BE MADE FOR SUCH REVISIONS, ALTERATIONS, AND/OR ADDITIONS.
11. CONTRACTOR SHALL VERIFY ALL DIMENSIONS AT THE SITE MAKING FIELD MEASUREMENTS AND SHOP DRAWINGS NECESSARY FOR FABRICATION OR ERECTION OF HVAC AND PIPING SYSTEMS. MAKE ALLOWANCE FOR BEAMS, PIPES, AND OTHER OBSTRUCTIONS IN BUILDING CONSTRUCTION. CHECK DRAWINGS SHOWING WORK OF OTHER TRADES AND CONSULT WITH THE OWNER'S REPRESENTATIVE IN THE EVENT OF POTENTIAL INTERFERENCE. SHOP DRAWINGS SHALL BE MINIMUM 1/4"=1'-0" SCALE, INDICATING FITTINGS, SIZES, WELDS, AND CONFIGURATIONS AND SUBMITTED IN THE LATEST VERSION OF AUTOCAD TO THE ENGINEER FOR REVIEW.
12. CONTRACTOR SHALL COORDINATE HIS WORK WITH ALL OTHER TRADES PRIOR TO FABRICATION, PURCHASE, AND/OR INSTALLATION OF ALL WORK.
13. BEFORE COMMENCEMENT OF WORK, CONTRACTOR SHALL VERIFY THE EXACT LOCATIONS, ELEVATIONS, AND CHARACTERISTICS OF ALL UTILITIES.
14. EXISTING MATERIALS THAT ARE REMOVED SHALL NOT BE REUSED IN NEW SYSTEMS, EXCEPT WHERE INDICATED AS BEING RELOCATED.
15. ALL EQUIPMENT SHALL BE INSTALLED IN STRICT COMPLIANCE WITH THE MANUFACTURER'S WRITTEN INSTRUCTIONS.
16. GALVANIZED SHEET METAL SHALL BE PROVIDED FOR ALL HVAC DUCT SYSTEMS (EXCEPT WHERE ANOTHER MATERIAL IS INDICATED), AND SHALL BE CONSTRUCTED/SUPPORTED/INSTALLED IN ACCORDANCE WITH THE LATEST EDITION OF THE CALIFORNIA MECHANICAL CODE AND THE LATEST SMACNA STANDARDS.
17. ALL PIPING SHALL BE INSTALLED AS INDICATED ON THE DRAWINGS IN A CLEAN AND WORKMANLIKE MANNER AND BE SUPPORTED AS REQUIRED BY CODES. PIPING SHALL BE SET UP AND DOWN AND OFFSET AS REQUIRED TO SUIT FIELD CONDITIONS. DIELECTRIC COUPLINGS SHALL BE USED WHERE DISSIMILAR METALS ARE JOINED.
18. CONTRACTOR SHALL PROVIDE ALL NECESSARY SUPPORTS FOR FIXTURES, DUCTWORK, PIPING, AND MECHANICAL EQUIPMENT IN ORDER TO COMPLY WITH SEISMIC REQUIREMENTS AS OUTLINED BY THE LATEST EDITION(S) OF THE CALIFORNIA BUILDING CODE, SMACNA INSTALLATION STANDARDS, AND ALL RELATED LOCAL ORDINANCES.
19. CONTRACTOR SHALL NOT BORE, NOTCH, CUT, OR PENETRATE INTO A STRUCTURAL MEMBER WITHOUT WRITTEN APPROVAL FROM THE OWNER'S REPRESENTATIVE OR STRUCTURAL ENGINEER OF RECORD.
20. PRIOR TO OCCUPANCY ALL HVAC SYSTEMS SHALL BE BALANCED IN ACCORDANCE WITH AABC OR NEBB STANDARDS AND ALL CONTRACT DOCUMENTS BY AN INDEPENDENT AIR BALANCE CONTRACTOR. CONTRACTOR SHALL PROVIDE CERTIFICATION OF OUTSIDE AIR VENTILATION RATES AND THAT ALL SYSTEMS HAVE BEEN BALANCED IN ACCORDANCE WITH THE CONTRACT DOCUMENTS.
21. ALL FLEXIBLE DUCTWORK SHALL NOT EXCEED 5'-0" IN LENGTH TO RESPECTIVE AIR DEVICE, SHALL BE INSTALLED PER MANUFACTURER'S LISTING STRETCHED AS TIGHT AS POSSIBLE, AND SHALL MEET THE REQUIREMENTS OF NFPA 90A SECTION 4.3.2 IN CONSTRUCTION AND INSTALLATION.
22. MANUAL VOLUME DAMPERS SHALL BE PROVIDED IN ALL DUCT BRANCHES TO INDIVIDUAL DIFFUSERS, GRILLES, AND REGISTERS.
23. COVER ALL OPENINGS IN EQUIPMENT, PIPING, DUCTS, AND OTHER SYSTEMS TO EXCLUDE ENTRANCE OF DIRT OR OTHER FOREIGN MATERIAL DURING CONSTRUCTION.

MEP COMPONENT ANCHORAGE NOTE

ALL MECHANICAL, PLUMBING, AND ELECTRICAL COMPONENTS SHALL BE ANCHORED AND INSTALLED PER THE DETAILS ON THE DSA APPROVED CONSTRUCTION DOCUMENTS. THE FOLLOWING COMPONENTS SHALL BE ANCHORED OR BRACED TO MEET THE FORCE AND DISPLACEMENT REQUIREMENTS PRESCRIBED IN THE 2019 CBC, SECTIONS 1617A.1.18 THROUGH 1617A.1.26 AND ASCE 7 CHAPTERS 13, 26 AND 30.

1. ALL PERMANENT EQUIPMENT AND COMPONENTS.
2. TEMPORARY OR MOVABLE OR MOBILE EQUIPMENT THAT IS PERMANENTLY ATTACHED (E.G. HARD WIRED) TO THE BUILDING UTILITY SERVICES SUCH AS ELECTRICITY, GAS OR WATER. "PERMANENTLY ATTACHED" SHALL INCLUDE ALL ELECTRICAL CONNECTIONS EXCEPT PLUGS FOR 110/220 VOLT RECEPTACLES HAVING A FLEXIBLE CABLE.
3. TEMPORARY, MOVABLE, OR MOBILE EQUIPMENT WHICH IS HEAVIER THAN 400 POUNDS OR HAS A CENTER OF MASS LOCATED 4 FEET OR MORE ABOVE ADJACENT FLOOR OR ROOF LEVEL THAT DIRECTLY SUPPORT THE COMPONENT IS REQUIRED TO BE RESTRAINED IN A MANNER APPROVED BY DSA.

THE FOLLOWING MECHANICAL AND ELECTRICAL COMPONENTS SHALL BE POSITIVELY ATTACHED TO THE STRUCTURE, BUT THE ATTACHMENT NEED NOT DEMONSTRATE DESIGN COMPLIANCE WITH THE REFERENCES NOTED ABOVE. THESE COMPONENTS SHALL HAVE FLEXIBLE CONNECTIONS PROVIDED BETWEEN THE COMPONENT AND ASSOCIATED DUCTWORK, PIPING AND CONDUIT. FLEXIBLE CONNECTIONS MUST ALLOW MOVEMENT IN BOTH TRANSVERSE AND LONGITUDINAL DIRECTIONS:

A. COMPONENTS WEIGHING LESS THAN 400 POUNDS AND HAVE A CENTER OF MASS LOCATED 4 FEET OR LESS ABOVE THE ADJACENT FLOOR OR ROOF LEVEL THAT DIRECTLY SUPPORT THE COMPONENT.

B. COMPONENTS WEIGHING LESS THAN 20 POUNDS, OR IN THE CASE OF DISTRIBUTED SYSTEMS, LESS THAN 5 POUNDS PER FOOT, WHICH ARE SUSPENDED FROM A ROOF OR FLOOR OR HUNG FROM A WALL.

THE ANCHORAGE OF ALL MECHANICAL, ELECTRICAL AND PLUMBING COMPONENTS SHALL BE SUBJECT TO THE APPROVAL OF THE DESIGN PROFESSIONAL IN GENERAL RESPONSIBLE CHARGE OR STRUCTURAL ENGINEER DELEGATED RESPONSIBILITY AND ACCEPTANCE BY DSA. THE PROJECT INSPECTOR WILL VERIFY THAT ALL COMPONENTS AND EQUIPMENT HAVE BEEN ANCHORED IN ACCORDANCE WITH THE ABOVE REQUIREMENTS.

PIPING, DUCTWORK, AND ELECTRICAL DISTRIBUTION SYSTEM BRACING NOTE

PIPING, DUCTWORK, AND ELECTRICAL DISTRIBUTION SYSTEMS SHALL BE BRACED TO COMPLY WITH THE FORCES AND DISPLACEMENTS PRESCRIBED IN ASCE 7 SECTION 13.3 AS DEFINED IN ASCE 7-16 SECTION 13.6.5, 13.6.6, 13.6.7, 13.6.8, AND 2019 CBC, SECTIONS 16167A.1.24, 1617A1.25 AND 1617A.1.26

THE METHOD OF SHOWING BRACING AND ATTACHMENTS TO THE STRUCTURE FOR IDENTIFIED DISTRIBUTION SYSTEM ARE AS NOTED BELOW. WHEN BRACING AND ATTACHMENTS ARE BASED ON A PRE-APPROVED INSTALLATION GUIDE (E.G., OSHPD OPM FOR 2013 CBC OR LATER), COPIES OF THE BRACING SYSTEM INSTALLATION GUIDE OR MANUAL SHALL BE AVAILABLE ON THE JOBSITE PRIOR TO THE START OF AND DURING THE HANGING AND BRACING OF THE DISTRIBUTION SYSTEMS. THE STRUCTURAL ENGINEER OF RECORD SHALL VERIFY THE ADEQUACY OF THE STRUCTURE TO SUPPORT THE HANGER AND BRACE LOADS.

MECHANICAL PIPING (MP), MECHANICAL DUCTS (MD), PLUMBING PIPING (PP), ELECTRICAL DISTRIBUTION SYSTEMS (E):

MP ☒ MD ☒ PP ☐ E ☐ - OPTION 1: DETAILED ON THE APPROVED DRAWINGS WITH PROJECT SPECIFIC NOTES AND DETAILS.

MP ☐ MD ☐ PP ☐ E ☐ - OPTION 2: SHALL COMPLY WITH THE APPLICABLE OSHPD PRE-APPROVAL (OPM#) # 0043 .

IDENTIFICATION STAMP
DIV. OF THE STATE ARCHITECT
APP: 04-122772 INC:
REVIEWED FOR
SS ☑ FLS ☑ ACS ☑
DATE: 03/26/2024

SPROTTE | WATSON
ARCHITECTURE | PLANNING

LICENSED ARCHITECT C12359 REN. OCTOBER 2025 STATE OF CALIFORNIA

CONSULTANT

REGISTERED PROFESSIONAL ENGINEER CHRISTOPHER HAMMETT No. M37567 exp. 9/30/25 MECHANICAL STATE OF CALIFORNIA

01/25/24

TURPIN & RATTAN Engineering, Inc.
Consulting Engineers
4719 PALM AVENUE
LA MESA, CA 91941-5221
619 / 466 / 6224 fax 466 / 6233
E-MAIL: engineer@treisd.com

TREI PROJECT # 22277.S01
C.Aramburo 02/29/24 – 11:00am

DEHESA ELEMENTARY SCHOOL
CONSTRUCTION DOCUMENTS
DEHESA SCHOOL DISTRICT
4612 DEHESA ROAD
EL CAJON, CA 92019

REVISIONS

DESCRIPTION

MECHANICAL GENERAL NOTES, SCHEDULES, AND ABBREVIATIONS

DATE

01.25.24

JOB #

22-0400

SHEET #

M-0.1

7/12/2018 1:34:44 PM

EXHAUST FAN SCHEDULE

GENERAL DATA						DESIGN				ELECTRICAL DATA						
TAG	MANUFACTURER	MODEL NO	AREA SERVED	LOCATION	TYPE	CFM	ESP (IN)	FAN RPM	SOUND POWER (SONES)	MOTOR HP(WATTS)	V/PH/Hz	FLA	CONTROL	REMARKS	EQUIPMENT SUPPORT DETAILS	OPERATING WEIGHT (LBS.)
EF B-1	GREENHECK	SP-A50-90-VG	BLDG B COPY ROOM 5	COPY ROOM 5 CEILING	CEILING MOUNTED	70	0.51	838	2.0	(6)	115/1/60	0.83	OCCUPANCY SENSOR	PROVIDE BACKDRAFT DAMPER, VARI-GREEN EC MOTOR WITH MOUNTED POTENTIOMETER DIAL, ALL WIRING AND CONNECTIONS REQUIRED FOR FAN OPERATION,, GREENHECK RCC-7 ROOF CAP WITH CURB.	4 M-5.0	12

EXISTING PACKAGE ROOFTOP HEAT PUMP UNIT SCHEDULE (FOR REFERENCE ONLY)

					AIRSIDE DATA							COOLING INFORMATION									COMPRESSOR		HEATING INFORMATION					ELECTRICAL DATA						
TAG	MANUFACTURER	MODEL	AREA SERVED	LOCATION	MIN. OCCUPIED OA CFM	MIN. DCV OA CFM	DESIGN CFM	ESP (IN. WG)	RPM	FAN BHP	MOTOR TYPE	NOMINAL TONNAGE	REFRIGERANT TYPE	AMBIENT TEMP. (°F)	EAT (°F DB/WB)	LAT (°F DB/WB)	GROSS CAPACITY	MIN. AHRI EER	MIN. AHRI SEER (IEER)	QTY.	TYPE	OA AMBIENT TEMP. (°F)	EAT (°F DB)	LAT (°F DB)	TOTAL HEATING CAPACITY (MBH)	MIN. HSPF (COP)	V/PH/Hz	UNIT FLA	UNIT MCA	UNIT MOCP	MIN. SCCR 1	REMARKS	OPERATING WEIGHT (LB)
AC A-1	TRANE	4WCY5024A100AB	LIBRARY	BUILDING A ROOF	-	-	800	-	-	-	BELT	2 TONS	R-410A	-	-/-	-/-	25.0	12.0	15.0	2	SCROLL	-	-	-	22.4	8.3	208/1/60	-	-	-	-	-	357
AC A-2	TRANE	4WCY5036A100AB	LIBRARY	BUILDING A ROOF	-	-	1,400	-	-	-	BELT	3 TONS	R-410A	-	-/-	-/-	36.0	12.0	15.0	2	SCROLL	-	-	-	32.6	8.4	208/1/60	-	-	-	-	-	364
AC B-1	TRANE	4WHC4024A1000AA	TEACHER'S LOUNGE	BUILDING B ROOF	-	-	800	-	-	-	DIRECT DRIVE	2 TONS	R-410A	-	-/-	-/-	24.8	13.6	16.0	2	SCROLL	-	-	-	21.2	8.2	208/1/60	-	-	-	-	-	275
AC B-2	TRANE	4WHC3024A1000AA	TEACHER'S LOUNGE / COPY ROOM	BUILDING B ROOF	-	-	800	-	-	-	DIRECT DRIVE	2 TONS	R-410A	-	-/-	-/-	24.8	13.6	16.0	2	SCROLL	-	-	-	21.2	8.2	208/1/60	-	-	-	-	-	275
AC B-3	TRANE	4WHC4024A1000AA	KINDERGARTEN	BUILDING B ROOF	-	-	800	-	-	-	DIRECT DRIVE	2 TONS	R-410A	-	-/-	-/-	24.8	13.6	16.0	2	SCROLL	-	-	-	21.2	8.2	208/1/60	-	-	-	-	-	275
AC B-4	TRANE	4WHC4024A1000AA	KINDERGARTEN	BUILDING B ROOF	-	-	800	-	-	-	DIRECT DRIVE	2 TONS	R-410A	-	-/-	-/-	24.8	13.6	16.0	2	SCROLL	-	-	-	21.2	8.2	208/1/60	-	-	-	-	-	275
AC B-5	TRANE	4WHC3024A1000AA	KINDERGARTEN	BUILDING B ROOF	-	-	800	-	-	-	DIRECT DRIVE	2 TONS	R-410A	-	-/-	-/-	24.8	13.6	16.0	2	SCROLL	-	-	-	21.2	8.2	208/1/60	-	-	-	-	-	275
AC B-6	TRANE	4WHC3024A1000AA	KINDERGARTEN	BUILDING B ROOF	-	-	800	-	-	-	DIRECT DRIVE	2 TONS	R-410A	-	-/-	-/-	24.8	13.6	16.0	2	SCROLL	-	-	-	21.2	8.2	208/1/60	-	-	-	-	-	275

AIR DEVICE SCHEDULE

UNIT NO	TYPE	STYLE	NECK SIZE	CFM RANGE	MODEL	ACCESSORIES
S1 -	SUPPLY AIR	24X24 SQUARE CEILING MODULAR CORE	8"x8"	0-230	FOR INSTALLATION IN LAY-IN CEILING: PRICE PDMC PERFORATED FACE FOR INSTALLATION IN HARD LID CEILING: PRICE SMCD	OPPOSED BLADE DAMPER
			10"x10"	231-350		
			12"x12"	351-500		
			14"x14"	501-680		
			16"x16"	681-880		
R1 -	RETURN AIR	PERFORATED RETURN GRILLE	6"x6"	200	TITUS PAR	
			8"x8"	300		
			10"x10"	400		
			12"x12"	500		
			15"x15"	750		
			18"x18"	1,000		
			22"x22"	1126-1600		

NOTES: SELECT FRAME TYPES BASED ON THE CEILING TYPE.

IDENTIFICATION STAMP
DIV. OF THE STATE ARCHITECT
APP: 04-122772 INC:
REVIEWED FOR
SS ☑ FLS ☑ ACS ☑
DATE: 03/26/2024

SPROTTE WATSON ARCHITECTURE + PLANNING

LICENSED ARCHITECT C12359 STATE OF CALIFORNIA

CONSULTANT

REGISTERED PROFESSIONAL ENGINEER CHRISTOPHER HAMMETT No. M27567 exp. 12-31-24 MECHANICAL STATE OF CALIFORNIA
01/25/24

TURPIN & RATTAN Engineering, Inc.
Consulting Engineers
4719 PALM AVENUE
LA MESA, CA 91941-5221
619 / 466 / 6224 fax 466 / 6233
E-MAIL: engineer@trreid.com
TREI PROJECT # 22277.501
h:\ecams 01/25/24 - 2:07pm

DEHESA ELEMENTARY SCHOOL
CONSTRUCTION DOCUMENTS
DEHESA SCHOOL DISTRICT
4612 DEHESA ROAD
EL CAJON, CA 92019

REVISIONS

DESCRIPTION
MECHANICAL SCHEDULE

DATE
01.25.24

JOB #
22-0400

SHEET #
M-0.2

7/12/2018 1:34:44 PM

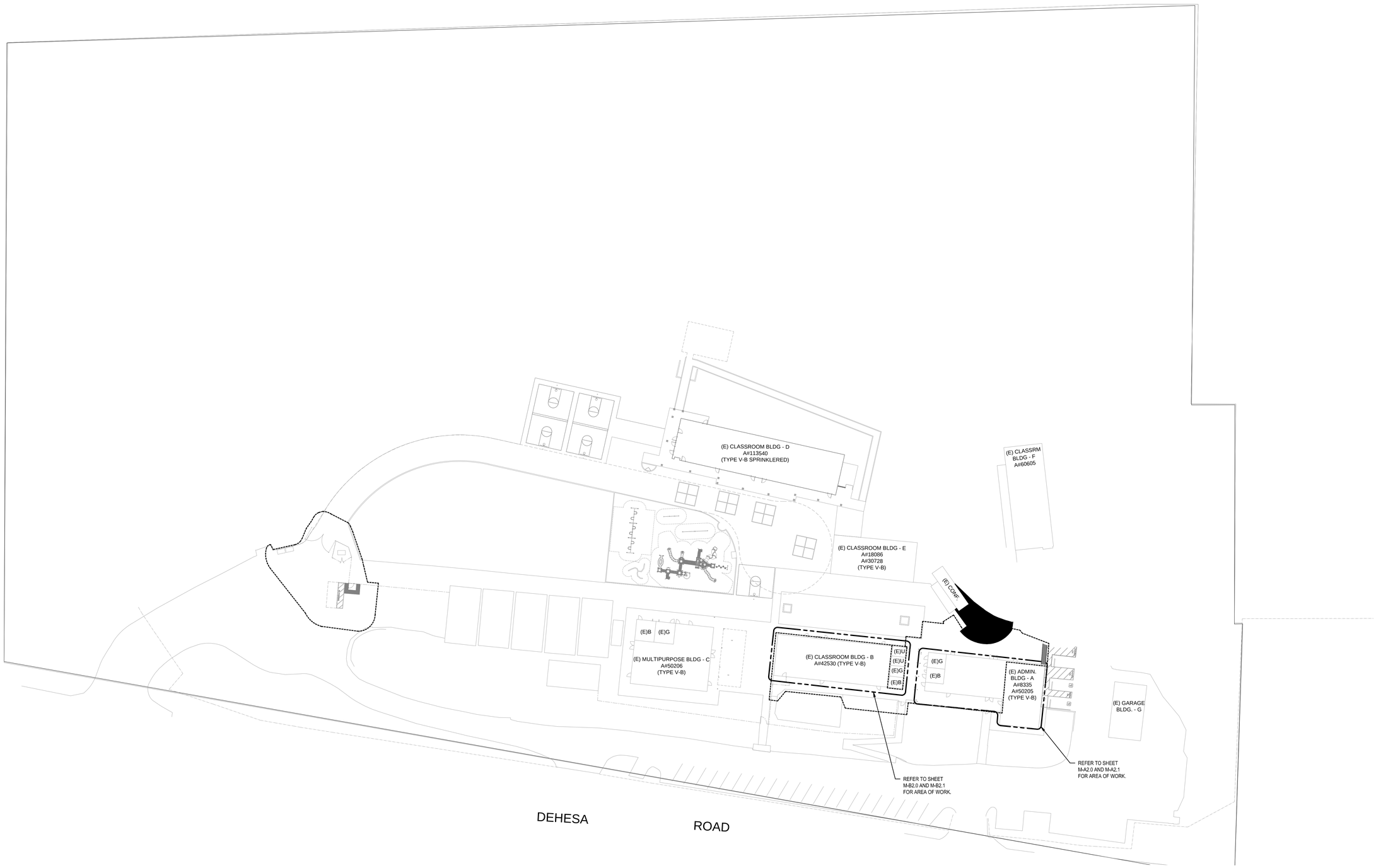

SITE PLAN - MECHANICAL

SCALE: 1" = 30'

0 15' 30' 60' 90'

1" = 30'

NORTH

IDENTIFICATION STAMP
DIV. OF THE STATE ARCHITECT
APPROVED
APP: 04-122772 INC:
REVIEWED FOR
SS ☑ FLS ☑ ACS ☑
DATE: 03/26/2024

SPROTTE | WATSON
ARCHITECTURE | PLANNING

REGISTERED ARCHITECT
C12359
REG. EXP. 12-31-24
STATE OF CALIFORNIA

CONSULTANT

REGISTERED PROFESSIONAL ENGINEER
CHRISTOPHER RAMIREZ
No. M27567
exp. 12-31-24
MECHANICAL
STATE OF CALIFORNIA
01/25/24

TURPIN & RATTAN
Engineering, Inc.
Consulting Engineers
4719 PALM AVENUE
LA MESA, CA 91941-5221
619 / 466 / 6224 fax 466 / 6233
E-MAIL: engineer@trreid.com

TREI PROJECT # 22277.S01
h:\rezano 01/25/24 - 2:07pm

DEHESA ELEMENTARY SCHOOL
CONSTRUCTION DOCUMENTS
DEHESA SCHOOL DISTRICT
4612 DEHESA ROAD
EL CAJON, CA 92019

REVISIONS

DESCRIPTION

SITE PLAN - MECHANICAL

DATE

01.25.24

JOB #

22-0400

SHEET #

M-1.1

7/12/2018 1:34:44 PM

KEYNOTES

- MD1 REMOVE EXISTING AIR DEVICE, CAP DUCTWORK FOR FUTURE RECONNECTION.
- MD2 REMOVE WINDOW MOUNTED AC UNIT AND ALL ASSOCIATED APPURTENANCES.
- MD3 REMOVE EXISTING THERMOSTAT, PROTECT AND STORE FOR FUTURE REINSTALLATION.
- MD5 EXISTING DUCTWORK TO REMAIN.

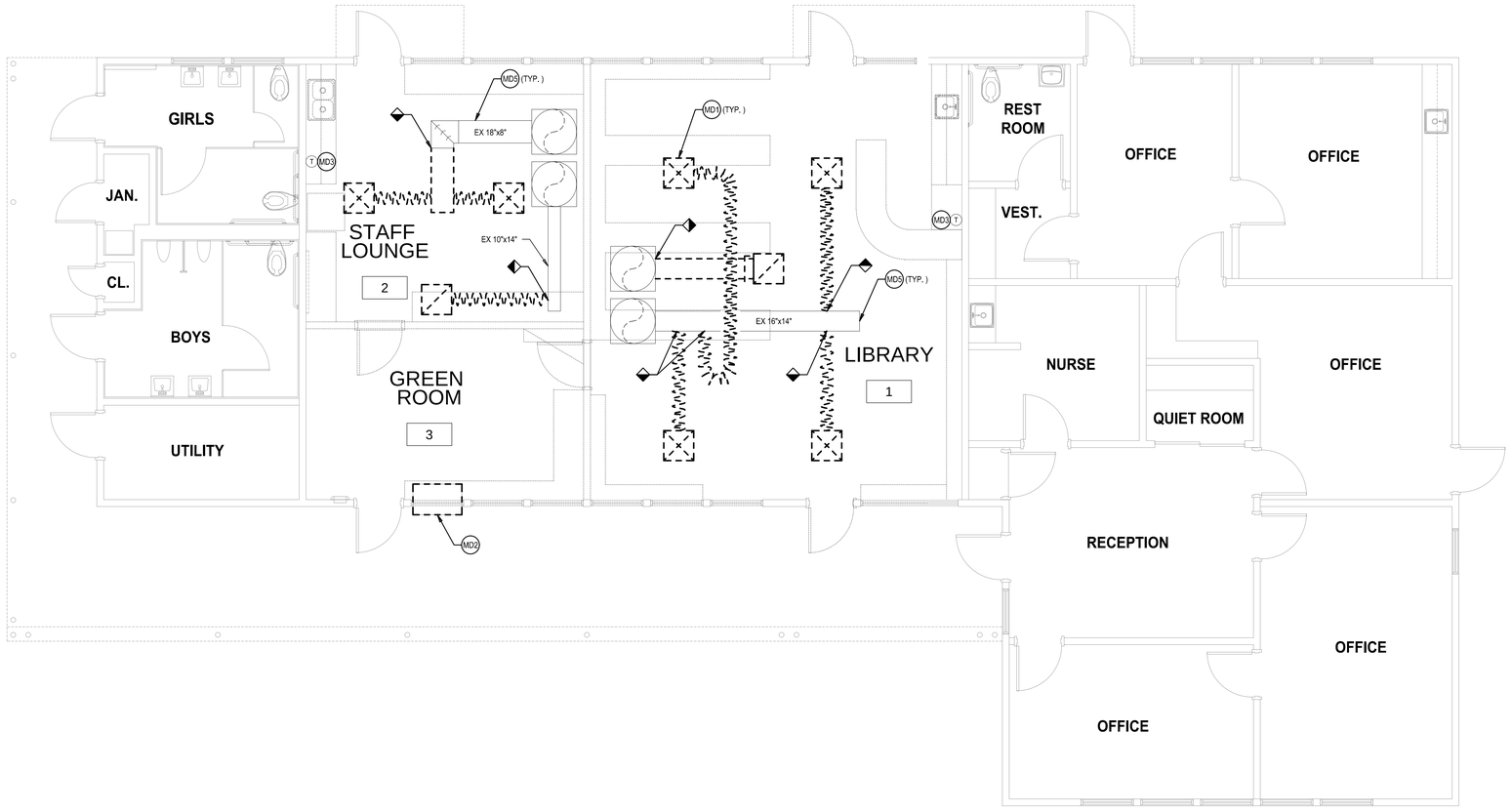

BUILDING A - ADMIN DEMO PLAN - MECHANICAL

SCALE: 1/4" = 1'-0"

0 2' 4' 8' 12'

1/4" = 1'-0"

NORTH

IDENTIFICATION STAMP
DIV. OF THE STATE ARCHITECT
APP: 04-122772 INC:
REVIEWED FOR
SS ☑ FLS ☑ ACS ☑
DATE: 03/26/2024

SPROTTE | WATSON
ARCHITECTURE | PLANNING

REGISTERED MECHANICAL ENGINEER
C12359
STATE OF CALIFORNIA

CONSULTANT

REGISTERED PROFESSIONAL ENGINEER
CHRISTOPHER RAMIREZ
No. M27567
exp. 12-31-24
MECHANICAL
STATE OF CALIFORNIA
01/25/24

TURPIN & RATTAN
Engineering, Inc.
Consulting Engineers
4719 PALM AVENUE
LA MESA, CA 91941-5221
619 / 466 / 6224 fax 466 / 6233
E-MAIL: engineer@trinet.com
TRE: PROJECT # 22277.S01
h:\scans 01/25/24 - 2:07pm

DEHESA ELEMENTARY SCHOOL
CONSTRUCTION DOCUMENTS
DEHESA SCHOOL DISTRICT
4612 DEHESA ROAD
EL CAJON, CA 92019

REVISIONS

DESCRIPTION

BUILDING A - ADMIN DEMO PLAN - MECHANICAL

DATE

01.25.24

JOB #

22-0400

SHEET #

M-A2.0

7/12/2018 1:34:44 PM

SHEET NOTES

1. PROVIDE MANUAL VOLUME DAMPERS PER DETAIL 2/M-5.0.
2. REBALANCE EXISTING MECHANICAL EQUIPMENT PER AIRFLOWS SHOWN ON PLAN. REFER TO MECHANICAL SCHEDULES FOR REVISED MINIMUM OUTSIDE AIR RATES.

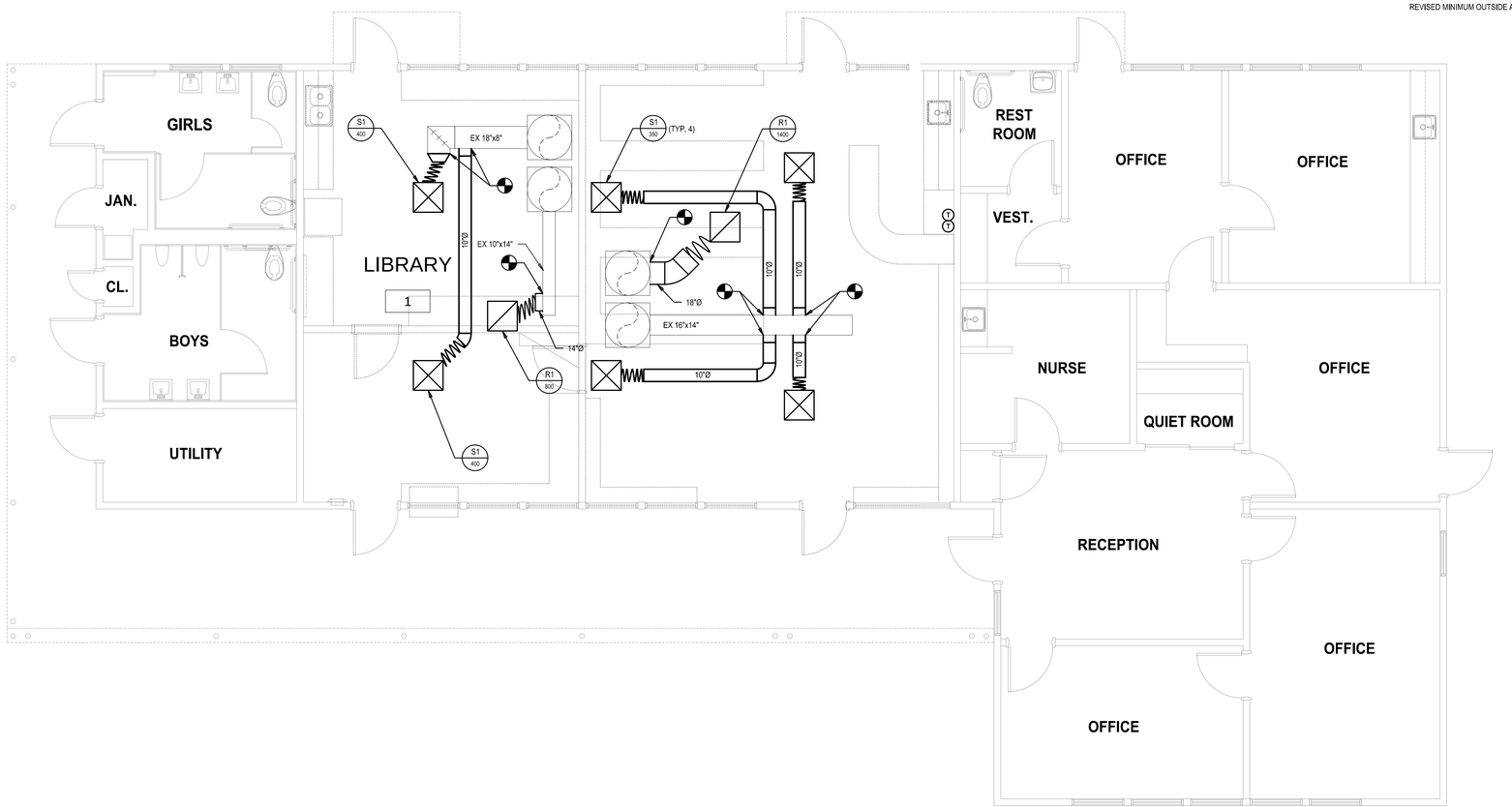

BUILDING A - ADMIN FLOOR PLAN - MECHANICAL

SCALE: 1/4" = 1'-0"

0 2' 4' 8' 12'

1/4" = 1'-0"

NORTH

IDENTIFICATION STAMP
DIV. OF THE STATE ARCHITECT
APPROVED
APP: 04-122772 INC:
REVIEWED FOR
SS ☑ FLS ☑ ACS ☑
DATE: 03/26/2024

SPROTTE | WATSON
ARCHITECTURE | PLANNING

REGISTERED ARCHITECT
C12359
STATE OF CALIFORNIA

CONSULTANT

REGISTERED PROFESSIONAL ENGINEER
CHRISTOPHER RAMNEY
No. M27567
exp. 12-31-24
MECHANICAL
STATE OF CALIFORNIA
01/25/24

TURPIN & RATTAN
Engineering, Inc.
Consulting Engineers
4719 PALM AVENUE
LA MESA, CA 91941-5221
619 / 466 / 6224 fax 466 / 6233
E-MAIL: engineer@trreiid.com
TREI PROJECT # 22277.S01
h:\ecams 01/25/24 - 2:07pm

DEHESA ELEMENTARY SCHOOL
CONSTRUCTION DOCUMENTS
DEHESA SCHOOL DISTRICT
4612 DEHESA ROAD
EL CAJON, CA 92019

REVISIONS

DESCRIPTION
BUILDING A - ADMIN FLOOR PLAN - MECHANICAL

DATE
01.25.24

JOB #
22-0400

SHEET #
M-A2.1

7/12/2018 1:34:44 PM

KEYNOTES

- MD1 REMOVE EXISTING AIR DEVICE, CAP DUCTWORK FOR FUTURE RECONNECTION.
- MD4 EXISTING THERMOSTAT TO REMAIN, PROTECT IN PLACE.
- MD5 EXISTING DUCTWORK TO REMAIN.
- MD6 REMOVE EXISTING DUCTWORK, CAP DUCT MAIN FOR FUTURE RECONNECTION.

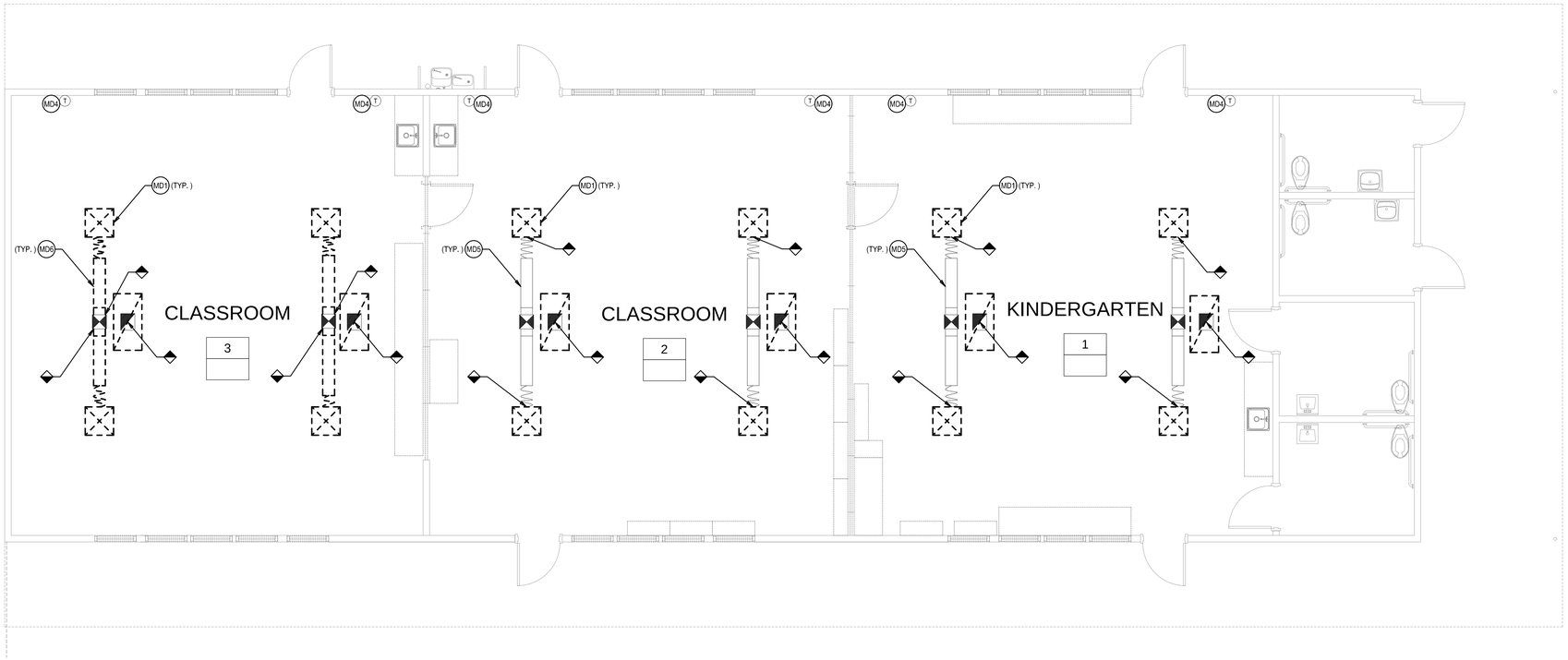

BUILDING B - KINDERGARTEN DEMO PLAN - MECHANICAL

SCALE: 1/4" = 1'-0"

0 2' 4' 8' 12'

1/4" = 1'-0"

NORTH

IDENTIFICATION STAMP
DIV. OF THE STATE ARCHITECT
APP: 04-122772 INC:
REVIEWED FOR
SS ☑ FLS ☑ ACS ☑
DATE: 03/26/2024

SPROTTE | WATSON
ARCHITECTURE | PLANNING

C12359

CONSULTANT

No. M27567
exp. 12-31-24
01/25/24

TURPIN & RATTAN Engineering, Inc.
Consulting Engineers
4719 PALM AVENUE
LA MESA, CA 91941-5221
619 / 466 / 6224 fax 466 / 6233
E-MAIL: engineer@trreid.com

TREI PROJECT # 22277.S01
h:\ecams 01/25/24 - 2:07pm

DEHESA ELEMENTARY SCHOOL
CONSTRUCTION DOCUMENTS
DEHESA SCHOOL DISTRICT
4612 DEHESA ROAD
EL CAJON, CA 92019

REVISIONS

DESCRIPTION

BUILDING B - KINDERGARTEN DEMO PLAN - MECHANICAL

DATE

01.25.24

JOB #

22-0400

SHEET #

M-B2.0

7/12/2018 1:34:44 PM

SHEET NOTES

1. PROVIDE MANUAL VOLUME DAMPERS PER DETAIL 2/M-5.0.
2. REBALANCE EXISTING MECHANICAL EQUIPMENT PER AIRFLOWS SHOWN ON PLAN. REFER TO MECHANICAL SCHEDULES FOR REVISED MINIMUM OUTSIDE AIR RATES.

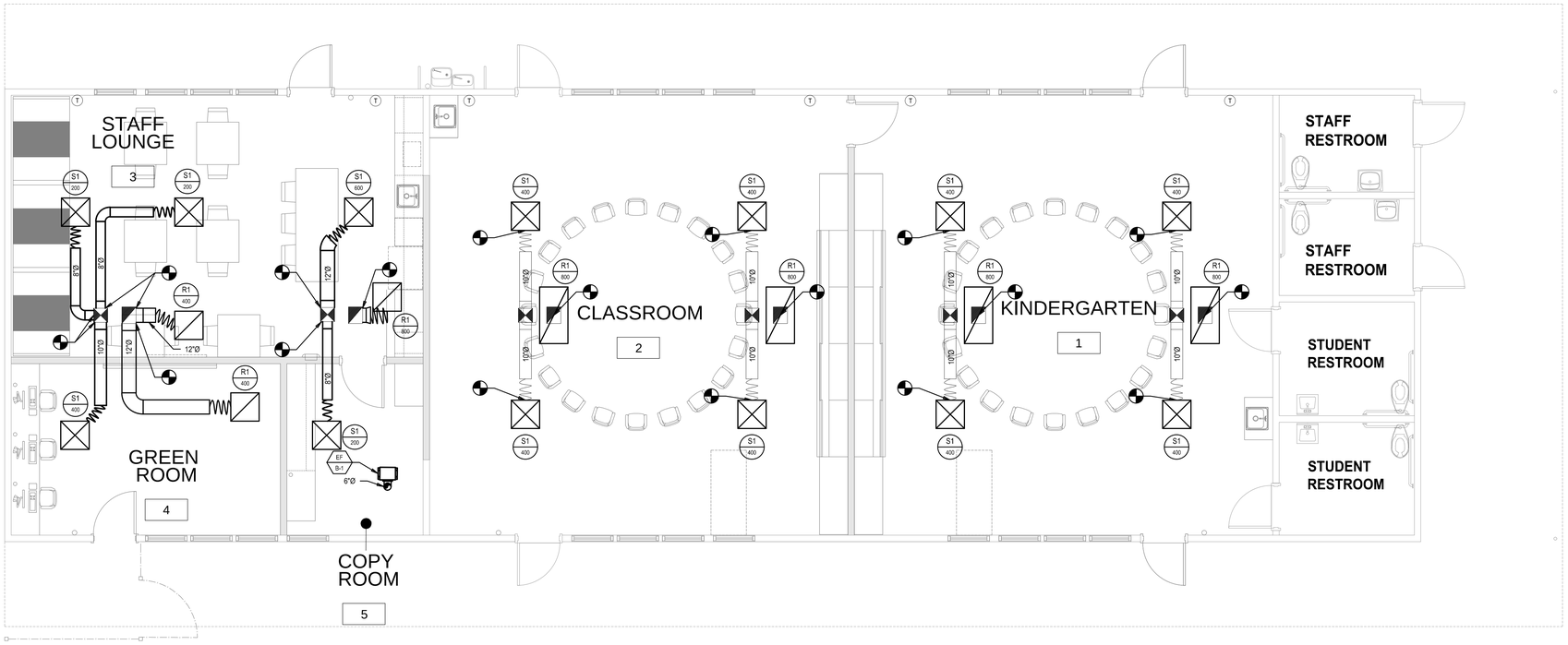

BUILDING B - KINDERGARTEN FLOOR PLAN - MECHANICAL

SCALE: 1/4" = 1'-0"

0 2' 4' 8' 12'

1/4" = 1'-0"

NORTH

IDENTIFICATION STAMP
DIV. OF THE STATE ARCHITECT
APP: 04-122772 INC:
REVIEWED FOR
SS ☑ FLS ☑ ACS ☑
DATE: 03/26/2024

SPROTTE | WATSON
ARCHITECTURE | PLANNING

C12359
REGISTERED ARCHITECT
STATE OF CALIFORNIA

CONSULTANT

REGISTERED PROFESSIONAL ENGINEER
CHRISTOPHER RAMNEY
No. M27567
exp. 12-31-24
MECHANICAL
STATE OF CALIFORNIA
01/25/24

TURPIN & RATTAN Engineering, Inc.
Consulting Engineers
4719 PALM AVENUE
LA MESA, CA 91941-5221
619 / 466 / 6224 fax 466 / 6233
E-MAIL: engineer@trreisd.com
TREI PROJECT # 22277.S01
h:\ecamo 01/25/24 - 2:07pm

DEHESA ELEMENTARY SCHOOL
CONSTRUCTION DOCUMENTS
DEHESA SCHOOL DISTRICT
4612 DEHESA ROAD
EL CAJON, CA 92019

REVISIONS

DESCRIPTION

BUILDING B - KINDERGARTEN FLOOR PLAN - MECHANICAL

DATE

01.25.24

JOB #

22-0400

SHEET #

M-B2.1

7/12/2018 1:34:44 PM

KEYNOTES

M1 GREENHECK RCC-7 ROOF CAP, REFER TO DETAIL 5/M-5.0.

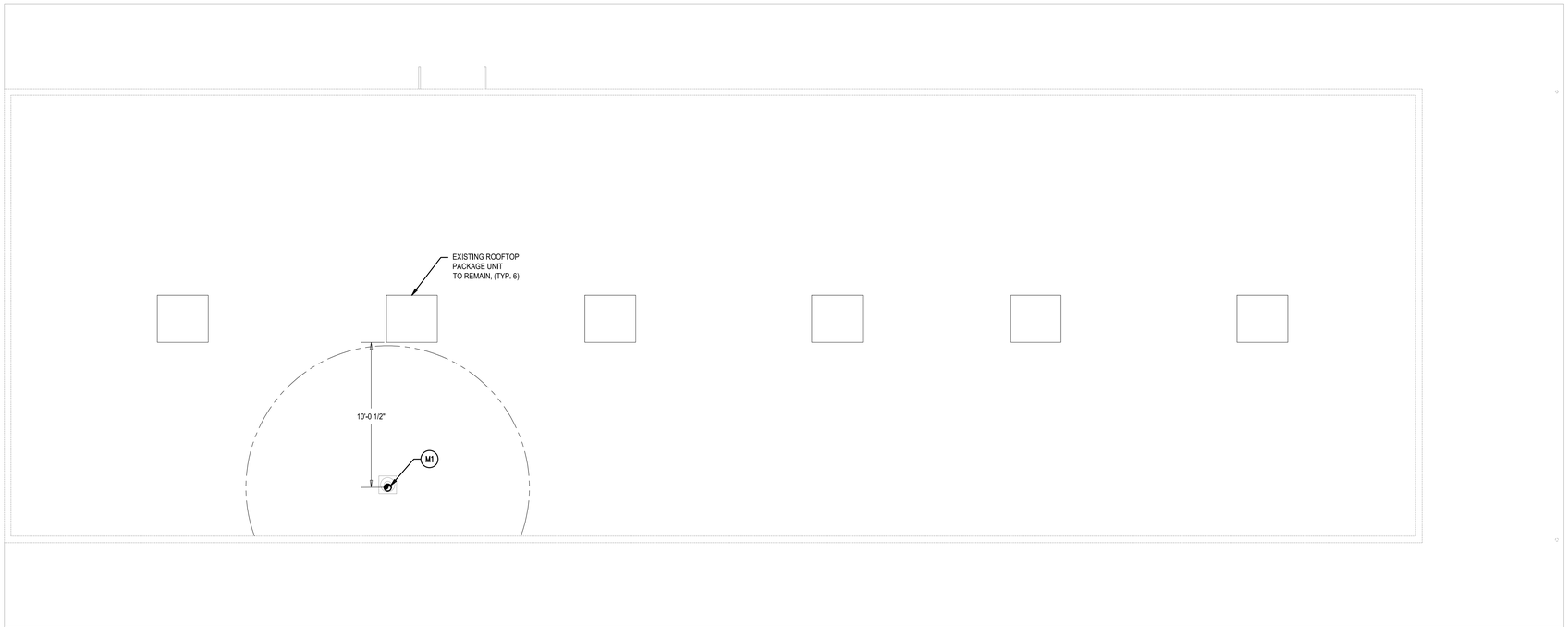

BUILDING B - KINDERGARTEN ROOF PLAN - MECHANICAL

SCALE: 1/4" = 1'-0"

0 2' 4' 8' 12'

1/4" = 1'-0"

NORTH

IDENTIFICATION STAMP
DIV. OF THE STATE ARCHITECT
APP: 04-122772 INC:
REVIEWED FOR
SS ☑ FLS ☑ ACS ☑
DATE: 03/26/2024

SPROTTE | WATSON
ARCHITECTURE | PLANNING

CONSULTANT

LICENSED PROFESSIONAL ENGINEER
CHRISTOPHER RAMMET
No. M27567
EXP. 12-31-24
MECHANICAL
STATE OF CALIFORNIA
01/25/24

TURPIN & RATTAN
ENGINEERING, INC.
CONSULTING ENGINEERS
4719 PALM AVENUE
LA MESA, CA 91941-5221
619 / 466 / 8224 FAX 466 / 6233
E-MAIL: ENGINEER@TREIEG.COM
TRE! PROJECT # 22277.501
n:\22400 01\25\24 - 2:10PM

DEHESA ELEMENTARY SCHOOL
CONSTRUCTION DOCUMENTS
DEHESA SCHOOL DISTRICT
4612 DEHESA ROAD
EL CAJON, CA 92019

REVISIONS

DESCRIPTION

BUILDING B - KINDERGARTEN ROOF PLAN - MECHANICAL

DATE

01.25.24

JOB #

22-0400

SHEET #

M-B2.3

7/12/2018 1:34:44 PM

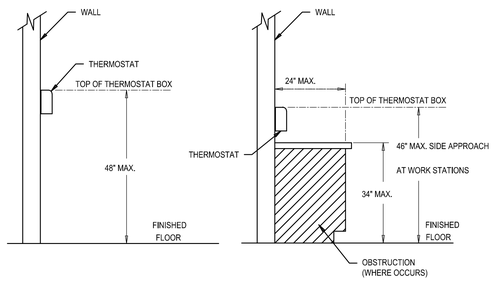

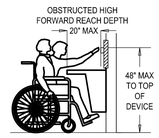

OBSTRUCTED HIGH FORWARD REACH

OBSTRUCTED HIGH FORWARD REACH

THERMOSTAT MOUNTING DETAIL

NO SCALE

1 / M-5.0

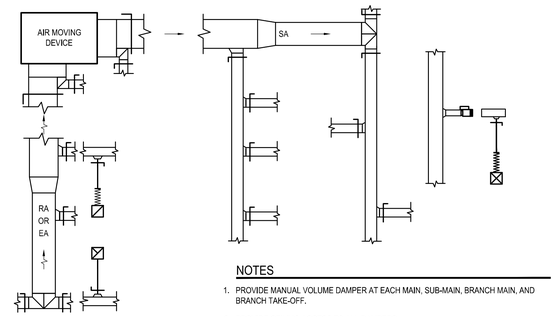

NOTES

1. PROVIDE MANUAL VOLUME DAMPER AT EACH MAIN, SUB-MAIN, BRANCH MAIN, AND BRANCH TAKE-OFF.
2. PROVIDE CEILING ACCESS TO ALL DAMPERS
3. PROVIDE CABLE OPERATED REMOTE DAMPERS IN HARD LIDS PER AIR DISTRIBUTION SCHEDULE.

TYPICAL MANUAL VOLUME DAMPER LOCATION DIAGRAM

NO SCALE

2 / M-5.0

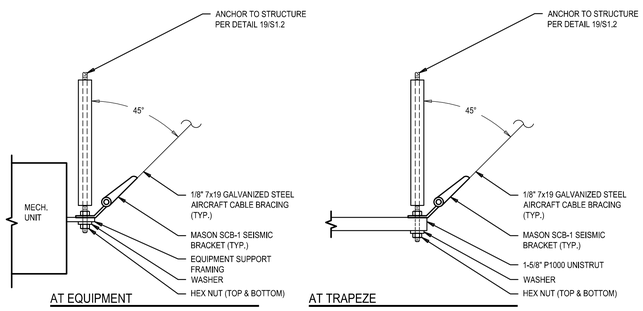

CABLE BRACING ATTACHMENT DETAILS

NO SCALE

3 / M-5.0

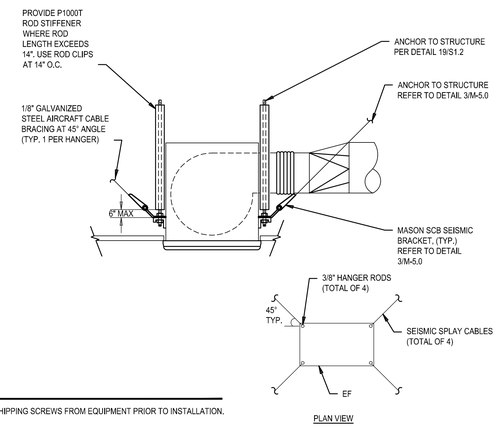

NOTES

1. REMOVE SHIPPING SCREWS FROM EQUIPMENT PRIOR TO INSTALLATION.

CEILING EXHAUST FAN DETAIL

NO SCALE

4 / M-5.0

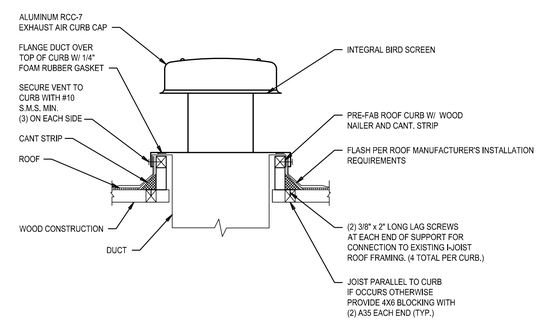

EXHAUST AIR CURB CAP DETAIL

NO SCALE

5 / M-5.0

IDENTIFICATION STAMP
DIV. OF THE STATE ARCHITECT
APP: 04-122772 INC:
REVIEWED FOR
SS ☑ FLS ☑ ACS ☑
DATE: 03/26/2024

SPROTTE WATSON ARCHITECTURE + PLANNING

CONSULTANT

REGISTERED PROFESSIONAL ENGINEER CHRISTOPHER HAMMETT No. M27567 exp. 12-31-24 MECHANICAL STATE OF CALIFORNIA

01/25/24

TURPIN & RATTAN Engineering, Inc.
Consulting Engineers
4719 PALM AVENUE
LA MESA, CA 91941-5221
619 / 466 / 6224 fax 466 / 6233
E-MAIL: engineer@trineid.com
TREI PROJECT # 22277.S01
h:\scans 01/25/24 - 2:07pm

DEHESA ELEMENTARY SCHOOL
CONSTRUCTION DOCUMENTS
DEHESA SCHOOL DISTRICT
4612 DEHESA ROAD
EL CAJON, CA 92019

REVISIONS

DESCRIPTION

MECHANICAL DETAILS

DATE

01.25.24

JOB #

22-0400

SHEET #

M-5.0

7/12/2018 1:34:44 PM

PIPING MATERIAL SCHEDULE

PIPE	MATERIAL
SANITARY SEWER, WASTE AND VENT ABOVE GRADE	NO HUB CAST IRON - SERVICE WEIGHT [1]
SANITARY SEWER, WASTE AND VENT BELOW GRADE	ASTM D2665 SOLID CORE BELL END SCH. 40 PVC DWV INSTALLED PER ASTM D2321 [1]
POTABLE WATER ABOVE GRADE	COPPER TYPE `L' - SOLDERED JOINTS [4] IN CHEMICAL ROOMS: SCH. 40 STAINLESS STEEL
POTABLE WATER BELOW GRADE	ASTM D2665 SOLID CORE BELL END SCH. 80 PVC
STORM DRAIN & OVERFLOW STORM DRAIN ABOVE GRADE	NO HUB CAST IRON - SERVICE WEIGHT [1]
STORM DRAIN & OVERFLOW STORM DRAIN BELOW GRADE	ASTM D2665 SOLID CORE BELL END SCH. 40 PVC DWV INSTALLED PER ASTM D2321 [1]
NATURAL GAS PIPING ABOVE GRADE	SCH. 40 GRADE A BLACK STEEL [5]
NATURAL GAS PIPING BELOW GRADE	BUTT FUSION POLYETHYLENE
INTERIOR CONDENSATE DRAIN PIPING	INSULATED COPPER TYPE `M' [3, 4]
EXTERIOR CONDENSATE DRAIN PIPING	COPPER TYPE `M'

NOTE: ALL CAST IRON COUPLINGS SHALL BE HEAVY DUTY. HUSKY SD 4000 OR EQUAL.

1. NEW SANITARY SEWER AND WASTE PIPING SHALL BE SLOPED AT 1/4" PER FOOT (2%) MIN.
2. PROVIDE 6MIL MINIMUM POLYETHYLENE WRAP ALONG ENTIRE LENGTH OF PIPE AND FITTINGS. MINIMUM 12" OVERLAP AT EACH END OF PIPE. NORTHTOWN POLYWRAP-C OR EQUAL.
3. INSULATION WITH ASTM E84 FLAME SPREAD RATING NOT GREATER THAN 25 AND SMOKE DEVELOPED RATING NOT GREATER THAN 50.
4. PROVIDE ALL INSULATED DOMESTIC HOT WATER, HOT WATER CIRCULATING AND CONDENSATE DRAIN PIPING WITH METAL JACKETING, PER SECTION 609.11 CPC
5. ALL STEEL GAS PIPING 2" AND SMALLER SHALL HAVE THREADED JOINTS. ALL PIPING 2 1/2" AND LARGER SHALL HAVE WELED JOINTS.

PLUMBING LEGEND

SYMBOL	ABBR.	DESCRIPTION
	B/G	BELOW GRADE
	DFU	DRAINAGE FIXTURE UNITS
	ET	EXPANSION TANK
	FF	FINISHED FLOOR
	FVFU	FLUSH VALVE FIXTURE UNIT
	FTFU	FLUSH TANK FIXTURE UNIT
	GPF	GALLONS PER FLUSH
	GPM	GALLONS PER MINUTE
	IE	INVERT ELEVATION
	L	LAVATORY
	SS	SANITARY SEWER
	TYP	TYPICAL
	U	URINAL
	VTR	VENT THRU ROOF
	V/PH/Hz	VOLTS/PHASE/HERTZ
	WC	WATER CLOSET
	WH	WATER HEATER
	WSFU	WATER SUPPLY FIXTURE UNITS

PLUMBING LEGEND

SYMBOL	ABBR.	DESCRIPTION
	POC	POINT OF CONNECTION
	(EX)	DENOTES EXISTING (SHOWN LIGHT)
	R	REMOVE EXISTING EQUIPMENT OR PIPING
	W OR S	WASTE OR SOIL PIPING ABOVE GRADE
	W OR S	WASTE OR SOIL PIPING BELOW GRADE
	V	SANITARY VENT PIPING
CD	CD	CONDENSATE DRAIN PIPING (AIR CONDITIONING)
	CW	COLD WATER PIPING
	HW	HOT WATER PIPING
	HWR	HOT WATER RECIRCULATING PIPING
TW	TW	TEMPERED WATER PIPING (86 DEGREES F)
	TWR	TEMPERED WATER RECIRCULATING PIPING
TP	TP	TRAP PRIMER LINE PIPING
G	G	GAS PIPING (0" W.C. TO 14" W.C.)
MPG	MPG	MEDIUM PRESSURE GAS PIPING (15" W.C. TO 5 PSI)
SD	SD	STORM DRAIN PIPING
OSD	OSD	OVERFLOW STORM DRAIN PIPING
	BV	BALL VALVE
	GC	GAS COCK
	PRV	PRESSURE REDUCING VALVE
	GPR	GAS PRESSURE REGULATOR
	RPBP	REDUCED PRESSURE BACKFLOW PREVENTER
	P&TRV	PRESSURE & TEMPERATURE RELIEF VALVE
	FD	FLOOR DRAIN
	FS	FLOOR SINK
	GCO	GRADE CLEANOUT IN YARD BOX
	FCO	FLOOR CLEANOUT
	WCO	WALL CLEANOUT
	2WCO	TWO WAY CLEAN-OUT
	HB	HOSE BIBB
	TP	TRAP PRIMER
	WHA 'X'	WATER HAMMER ARRESTER (P.D.I. SIZE)
	U	UNION
		CAPPED PIPE END (DRIP LEG)
	DN	PIPE TURNING DOWN
	UP	PIPE TURNING UP
		VALVE ON RISE OR DROP
	VTR	VENT THRU ROOF
	AP	ACCESS PANEL

GENERAL NOTES

GENERAL NOTES:

1. ALL WORK OF THIS SECTION SHALL FULLY CONFORM TO THE REQUIREMENTS OF THE 2022 CALIFORNIA PLUMBING CODE (C.P.C.), 2022 CALIFORNIA BUILDING CODE (C.B.C.), 2022 CALIFORNIA MECHANICAL CODE (C.M.C.), CALIFORNIA ADMINISTRATIVE CODE TITLE 24, THE CALIFORNIA GREEN STANDARDS MODEL CODE, THE AMERICAN SOCIETY OF TESTING AND MATERIALS AND APPLICABLE NFPA STANDARDS.
2. SUBSTITUTIONS: BIDDERS WISHING TO OBTAIN APPROVAL OF AN ARTICLE, DEVICE, PRODUCT, MATERIAL, FIXTURE, FORM OR TYPE OF CONSTRUCTION OTHER THAN THOSE SPECIFIED BY NAME, MAKE OR CATALOG NUMBER, SHALL REQUEST VERBAL APPROVAL FROM THE ARCHITECT NOT LESS THAN TEN (10) DAYS BEFORE THE BID DUE DATE. WRITTEN APPROVAL CANNOT BE FINALIZED UNTIL SUBMITTALS ARE EXAMINED.
3. THE SPECIFICATIONS ARE AN INTEGRAL PART OF THESE DOCUMENTS AND THE REQUIREMENTS THEREIN MUST BE INCLUDED IN THE INTERPRETATION OF THE DRAWINGS AND IMPLEMENTATION OF WORK.

UTILITY NOTES:

1. WATER, SEWER AND STORM DRAIN PIPING ON THE PLUMBING PLANS IS SHOWN UP TO THE 5-FOOT LINE. FOR CONTINUATION, SEE CIVIL DRAWINGS. VERIFY ALL POINT OF CONNECTIONS PRIOR TO INSTALLATION OF ANY PIPING.
2. LOCATIONS AND DEPTHS OF EXISTING UNDERGROUND UTILITIES AND OTHER UNDERGROUND OBSTRUCTIONS AND CONDITIONS ARE GENERALLY UNKNOWN AND IF SHOWN ARE AT APPROXIMATE LOCATIONS. CONTRACTOR SHALL HIRE A UTILITY LOCATING SERVICE TO LOCATE ALL EXISTING PLUMBING AND OTHER UNDERGROUND UTILITIES PRIOR TO DIGGING. VERIFY EXACT LOCATION SIZE AND EXTENT OF ALL OBSTRUCTIONS AND OTHER CONDITIONS WHICH MAY AFFECT THE PROPOSED WORK UNDER THE PROJECT. TAKE EVERY PRECAUTION TO PREVENT DAMAGE TO EXISTING WORK, INCLUDING HAND DIGGING AROUND EXISTING UTILITIES, TREE ROOT SYSTEMS, AND HARDSCAPE FEATURES. ANY DAMAGE TO EXISTING UTILITIES OR STRUCTURES SHALL BE IMMEDIATELY REPAIRED OR REPLACED IN ACCORDANCE WITH THE CLIENT'S DIRECTION AT THE CONTRACTOR'S EXPENSE.
3. CONTRACTOR SHALL EXERCISE EXTREME CARE TO AVOID DAMAGE IN EXPOSING UNDERGROUND SERVICES. IN ADDITION TO WHAT IS NOTED ABOVE, THE CONTRACTOR SHOULD REQUEST THAT UTILITY AGENCIES LOCATE AND MARK ANY UNDERGROUND PIPING OR CABLES THAT MAY BE IN THE AREA OF WORK. WHERE AN UNDERGROUND FACILITY IS ENCOUNTERED WHICH IS NOT SHOWN ON THE PLANS OR MENTIONED IN ANY OTHER CONTRACT DOCUMENT, THE CONTRACTOR SHALL DISCONTINUE THE EXCAVATION AND IMMEDIATELY CALL THE ARCHITECT FOR INSPECTION.
4. PRIOR TO INSTALLATION OF ANY SEWER AND STORM DRAIN LINES, THE CONTRACTOR SHALL PHYSICALLY VERIFY THE ELEVATION, SIZE AND MATERIAL AT THE POINT OF CONNECTION. IF THE ACTUAL ELEVATION IS HIGHER THAN INDICATED AND THE BUILDING SEWER OR DRAIN CANNOT BE INSTALLED AS SHOWN, THE CONTRACTOR SHALL NOT PROCEED WITH THE CONSTRUCTION OF SAID LINES AND SHALL IMMEDIATELY INFORM THE ARCHITECT.
5. IN ADDITION TO THE UTILITY LOCATION WORK NOTED ABOVE, THE CONTRACTOR SHALL PROVIDE VIDEO RECORDING OF EXISTING UNDERGROUND SEWER LINES. RECORDING SHALL INCLUDE ALL EXISTING PIPING, WHETHER DIRECTLY AFFECTED BY NEW WORK OR NOT. ALL PIPES RECORDED ON THE VIDEO SHALL BE SHOWN WITH DIMENSIONS TO PERMANENT WALLS ON FULL SIZE AND 11X17 DRAWINGS WITH REFERENCES TO RESPECTIVE VIDEO. A WRITTEN REPORT SHALL BE PROVIDED EVALUATING EACH SEPARATE PIPE AND IDENTIFYING AREAS WHERE REPLACEMENT MAY BE REQUIRED. TWO COPIES OF THE VIDEOS, DRAWINGS AND REPORTS SHALL BE SUBMITTED TO THE ARCHITECT PRIOR TO COMMENCEMENT OF WORK.
6. EACH VENT SHALL RISE VERTICALLY TO A POINT NOT LESS THAN SIX (6) INCHES ABOVE THE FLOOD-LEVEL RIM OF THE FIXTURE SERVED BEFORE OFFSETTING HORIZONTALLY OR BEFORE BEING CONNECTED TO ANY OTHER VENT.

3.0 PSI PER 100' LENGTH PIPE SIZING

PIPE SIZE	GPM	VELOCITY	FIXTURE UNITS FLUSH TANK	FIXTURE UNITS FLUSH VALVE
1/2"	1.75	2.5	--	--
3/4"	4.8	3.2	4.0	--
1"	10	3.9	12	--
1 1/4"	17	4.5	24	3.75
1 1/2"	27	5.1	45	10
2"	58	6.2	155	63
2 1/2"	104	7.2	380	245
3"	170	8.0	778	700
4"	278	8.0	1550	1500

GENERAL NOTES

FIXTURES:

1. ALL FIXTURES SHALL BE NEW, APPROVED, FREE FROM FLAWS AND BLEMISHES WITH CLEAR AND CLEAN FINISHED SURFACES.
2. FOR FIXTURE LOCATIONS SEE ARCHITECTURAL PLANS.
3. ALL PLUMBING FIXTURES SHOWN ON DRAWINGS AND AS LISTED ON THE DRAWING FIXTURE SCHEDULE SHALL BE FURNISHED AND INSTALLED IN ACCORDANCE WITH MANUFACTURER'S INSTRUCTIONS. FIXTURES AND TRIM SHALL BE PROPERLY ANCHORED AND CAULKED ALONG ALL JOINTS.
4. ALL WALL PENETRATIONS SHALL BE PROVIDED WITH POLISHED CHROME-PLATED CAST BRASS WALL ESCUTCHEONS.
5. HOSE BIBBS: PERMANENT VACUUM BREAKERS SHALL BE INCLUDED WITH ALL HOSE BIBBS.
6. LAVATORY FAUCETS IN RESTROOMS SHALL BE THE SELF- CLOSING TYPE AND SHALL NOT EXCEED A WATER FLOW OF 0.20 GAL/USE.

PIPING:

1. ALL PIPING PENETRATING RATED WALLS OR FLOORS SHALL HAVE FIRESTOP ASSEMBLY MATCHING WALL OR FLOOR RATING. FOR LOCATIONS OF RATED WALLS SEE ARCHITECTURAL DWGS.
2. PIPING PENETRATING FOUNDATION WALLS SHALL BE PROVIDED WITH STANDARD WEIGHT GALVANIZED STEEL PIPE SLEEVES TWO PIPE SIZES LARGER THAN PIPE PASSING THRU AND WITH VOID FILLED WITH MANUFACTURED SLEEVE SEAL SYSTEM (METRAFLEX OR EQUAL).
3. ALL PIPING PENETRATING FOUNDATION WALLS AND FLOORS OR WHICH WILL COME INTO DIRECT CONTACT WITH CONCRETE SHALL BE PROVIDED WITH POLYETHYLENE PIPE SHIELDING INSTALLED PER THE MANUFACTURER'S RECOMMENDATIONS. NORTHTOWN "POLYWRAP" AND "POLYWRAP-C"OR EQUAL.
4. LABEL MEDIUM PRESSURE GAS EVERY FIVE FEET.
5. DOMESTIC HOT WATER PIPING SHALL BE INSULATED PER SECTION 609.12 CPC.

TESTS AND ADJUSTMENTS:

1. THE NEW PLUMBING SYSTEM SHALL BE FLUSHED AND THEN TESTED PER LOCAL CODE REQUIREMENTS AND ALL DEFECTS CORRECTED WITH NEW MATERIALS.
2. NO PIPING WORK, FIXTURES, OR EQUIPMENT SHALL BE CONCEALED OR COVERED UNTIL INSPECTED BY ENGINEER, WHO SHALL BE NOTIFIED WHEN THE WORK IS LEAK-TIGHT AND READY FOR INSPECTION. ALL TESTS SHALL BE REPEATED AS REQUIRED BY THOSE MAKING THE INSPECTION.
3. ALL NEW DOMESTIC WATER PIPING SHALL BE FLUSHED OUT, TESTED AT 150 PSIG AND SHALL BE LEFT UNDER PRESSURE OF SUPPLY MAIN OR A MINIMUM OF 50 PSIG FOR THE REMAINDER OF THE CONSTRUCTION PERIOD. NO AIR TESTING IS ALLOWED. TESTS ARE TO BE APPLIED FOR A MINIMUM PERIOD OF ONE HOUR AND UNTIL TESTS ARE COMPLETE. FINAL PRESSURES AT THE END OF THE TEST PERIOD SHALL BE NOT MORE NOR LESS THAN THAT CAUSED BY EXPANSION OR CONTRACTION OF THE TEST MEDIUM DUE TO TEMPERATURE CHANGES. PROVIDE ADDITIONAL VALVES AS REQUIRED IN THE NEW PIPING DURING CONSTRUCTION TO FACILITATE TESTING.
4. PLUMBING FIXTURES SHALL BE FILLED WITH WATER AND CHECKED FOR LEAKS AND RESTRICTED DRAINAGE FLOW. FAUCET AERATORS AND SHOWER HEADS SHALL BE REMOVED AND CLEANED THOROUGHLY.
5. SOIL, WASTE, VENT AND CONDENSATE PIPING SHALL BE TESTED WITH A MINIMUM OF 10 FOOT OF HEAD AT EACH JOINT FOR A MINIMUM OF THREE HOURS WITH NO LOSS IN HEAD.
6. ALL GAS PIPING SHALL BE TESTED. PIPING CARRYING GAS AT PRESSURE LESS THAN 14 INCH WATER COLUMN SHALL BE TESTED AT NOT LESS THAN 3 PSI FOR A PERIOD OF ONE HOUR MINIMUM WITH NO LOSS IN PRESSURE. PIPING CARRYING GAS AT PRESSURE MORE THAN 14 INCH WATER COLUMN SHALL BE TESTED AT 60 PSI FOR A PERIOD OF ONE HOUR MINIMUM WITH NO LOSS IN PRESSURE. FOLLOWING PRESSURE TEST THE PIPE SYSTEM SHALL BE PURGED WITH INERT GAS PER C.P.C. 1213.6.

PLUMBING FIXTURE SCHEDULE

ITEM	FIXTURE	ROUGH-IN CONNECTIONS					REMARKS
		TRAP	WASTE	VENT	CW	HW	
S-1	SINK	1-1/4"	2"	2"	1/2"	-	JUST CRACF-ADA-1923-A-GR-VRL-CT 23"x19"x5" DEEP, SINGLE COMPARTMENT, 20 GAUGE TYPE 304 STAINLESS STEEL SELF RIM SINK WITH LEDGE AND INTEGRAL OVERFLOW. FAUCET: CHICAGO #350-E35-317XKABCP ADA COMPLIANT TOP MOUNT GOOSENECK, LEVER HANDLE FAUCET, CHROME PLATED BRASS, 1.5 GPM MAXIMUM FLOW RATE (AB1953 COMPLIANT). NO BUBBLER. INSULATE FIXTURE TRAPS AND WATER SUPPLIES WITH TRUEBRO LAV-GUARD WHITE VINYL. PROVIDE COMPLETE WITH QUARTER TURN LOOSE KEY STOPS, STAINLESS STEEL FLEXIBLE HOSES AND PLUG FOR BUBBLER HOLE. OR EQUAL.
S-2	SINK	1-1/2"	2"	2"	1/2"	1/2"	JUST #DLF-ADA-2025-A-GR, 21"x25"x 6" DEEP DOUBLE COMPARTMENT, 18 GAUGE STAINLESS STEEL SELF RIMMING SINK WITH BACK LEDGE, CENTER REAR VANDAL PROOF GRID DRAIN, OFFSET DRAIN WITH TRAP AND INTEGRAL OVERFLOW. FAUCET: CHICAGO 201-AGN8AE35V317AB WITH ADJUSTABLE GOOSENECK SPOUT, AND WRIST BLADE HANDLES, ROSE SPRAY OUTLET. 1.5 GPM MAX. ALL COMPONENTS AB1953 COMPLIANT. PROVIDE QUARTER TURN LOOSE KEY STOPS AND STAINLESS STEEL FLEXIBLE HOSES. OR EQUAL.
FV-1	FLUSH VALVE	-	-	EX	EX	-	SLOAN EBV-89-A BATTERY POWERED, SENSOR OPERATED RETROFIT CONVERSION KIT, ADA COMPLIANT "NO HANDS" OPERATION, CHROME PLATED INFRARED SENSOR HOUSING, ANGLED SENSOR WINDOW, MANUAL OVERRIDE FLUSH BUTTON.

EQUIPMENT SCHEDULE

ITEM	FIXTURE	ROUGH-IN CONNECTIONS						REMARKS
		TRAP	WASTE	VENT	COLD WATER	HOT WATER	GAS	
WH-1	ELECTRIC WATER HEATER	--	--	--	3/4"	3/4"	--	A.O. SMITH DEL-6 ELECTRIC TANK WATER HEATER - WITH 6 GALLON TANK, (1) 3000 WATT 208 V 1 PH ELEMENT, ANODE ROD, P&TRV, HIGH TEMP CUT OFF SWITCH AND DRAIN VALVE. 20 GPH RECOVERY AT 60° F TEMPERATURE RISE. 85 LBS OPERATING WEIGHT. OR EQUAL.

IDENTIFICATION STAMP
DIV. OF THE STATE ARCHITECT
APP: 04-122772 INC:
REVIEWED FOR
SS ☑ FLS ☑ ACS ☑
DATE: 03/26/2024

SPROTTE | WATSON
ARCHITECTURE | PLANNING

LICENSED ARCHITECT C12359 REN. OCTOBER 2025 STATE OF CALIFORNIA

CONSULTANT

REGISTERED PROFESSIONAL ENGINEER CHRISTOPHER HAMMETT No. M37567 exp. 9/30/25 MECHANICAL STATE OF CALIFORNIA

01/25/24

TURPIN & RATTAN Engineering, Inc.
Consulting Engineers
4719 PALM AVENUE
LA MESA, CA 91941-5221
619 / 466 / 6224 fax 466 / 6233
E-MAIL: engineer@treisd.com
TREI PROJECT # 22277.S01
h.lozano 01/25/24 - 2:14pm

DEHESA ELEMENTARY SCHOOL
CONSTRUCTION DOCUMENTS
DEHESA SCHOOL DISTRICT
4612 DEHESA ROAD
EL CAJON, CA 92019

REVISIONS

DESCRIPTION

PLUMBING GENERAL NOTES, SCHEDULES, AND ABBREVIATIONS

DATE

01.25.24

JOB #

22-0400

SHEET #

P-0.1

7/12/2018 1:34:44 PM

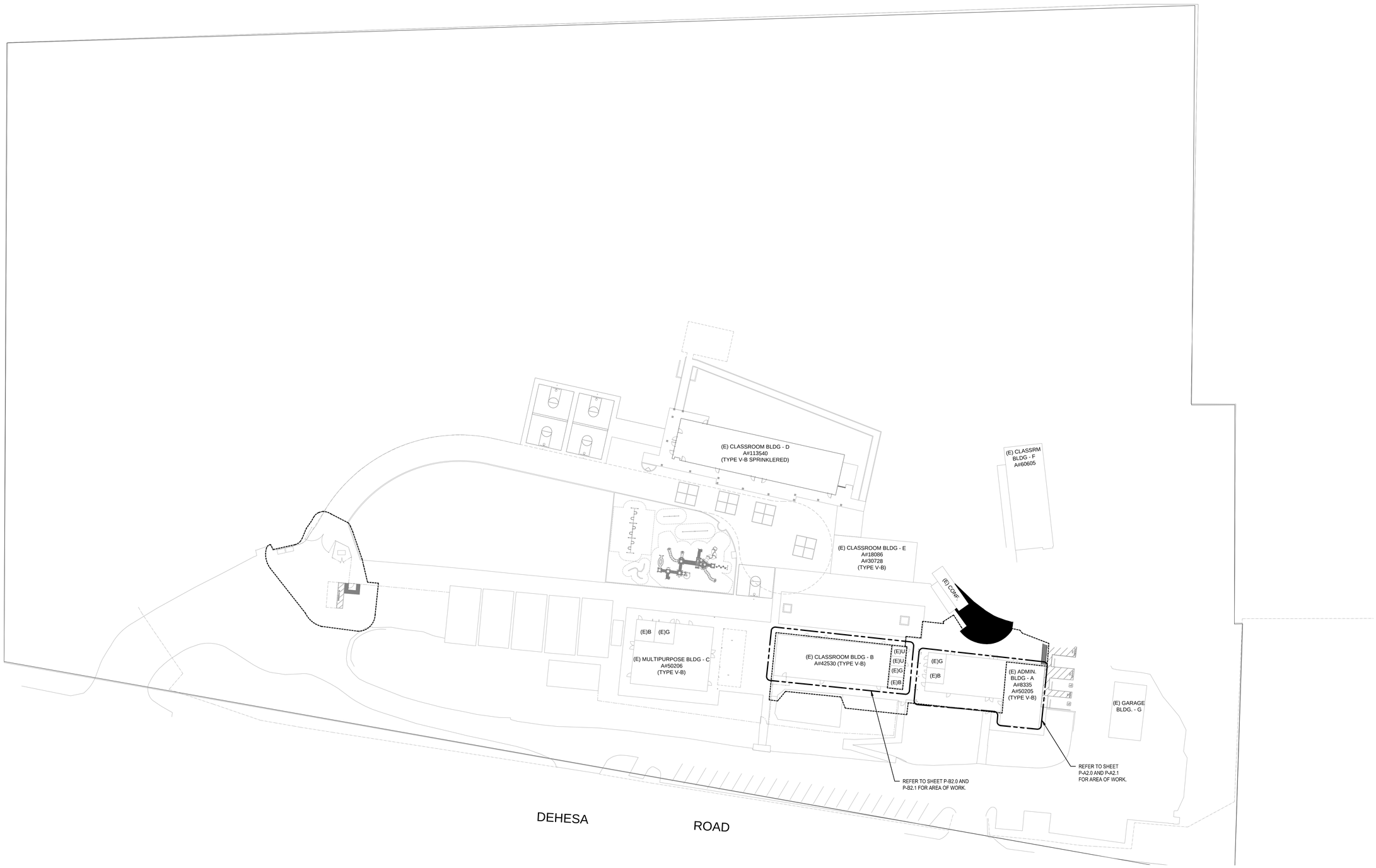

SITE PLAN - PLUMBING

SCALE: 1" = 30'

0 15' 30' 60' 90'

1" = 30'

NORTH

IDENTIFICATION STAMP
DIV. OF THE STATE ARCHITECT
APP: 04-122772 INC:
REVIEWED FOR
SS ☑ FLS ☑ ACS ☑
DATE: 03/26/2024

SPROTTE | WATSON
ARCHITECTURE | PLANNING

CONSULTANT

REGISTERED PROFESSIONAL ENGINEER
CHRISTOPHER RAMIREZ
No. M27567
exp. 12-31-24
MECHANICAL
STATE OF CALIFORNIA
01/25/24

TURPIN & RATTAN
Engineering, Inc.
Consulting Engineers
4719 PALM AVENUE
LA MESA, CA 91941-5221
619 / 466 / 6224 fax 466 / 6233
E-MAIL: engineer@trreid.com

TREI PROJECT # 22277.S01
h:\rezano 01/25/24 - 2:14pm

DEHESA ELEMENTARY SCHOOL
CONSTRUCTION DOCUMENTS
DEHESA SCHOOL DISTRICT
4612 DEHESA ROAD
EL CAJON, CA 92019

REVISIONS

DESCRIPTION

SITE PLAN - PLUMBING

DATE

01.25.24

JOB #

22-0400

SHEET #

P-1.1

7/12/2018 1:34:44 PM

KEYNOTES

PD1 REMOVE EXISTING SINK, CAP ALL PIPING INSIDE WALL AND SEAL AIR AND WATER TIGHT, ADD PAINT TO MATCH WALL.

PD3 REMOVE EXISTING FLUSH VALVE, PROTECT OPENINGS FOR RECONNECTION.

PD4 EXISTING FIXTURES IN THIS ROOM TO REMAIN. PROTECT IN PLACE DURING CONSTRUCTION.

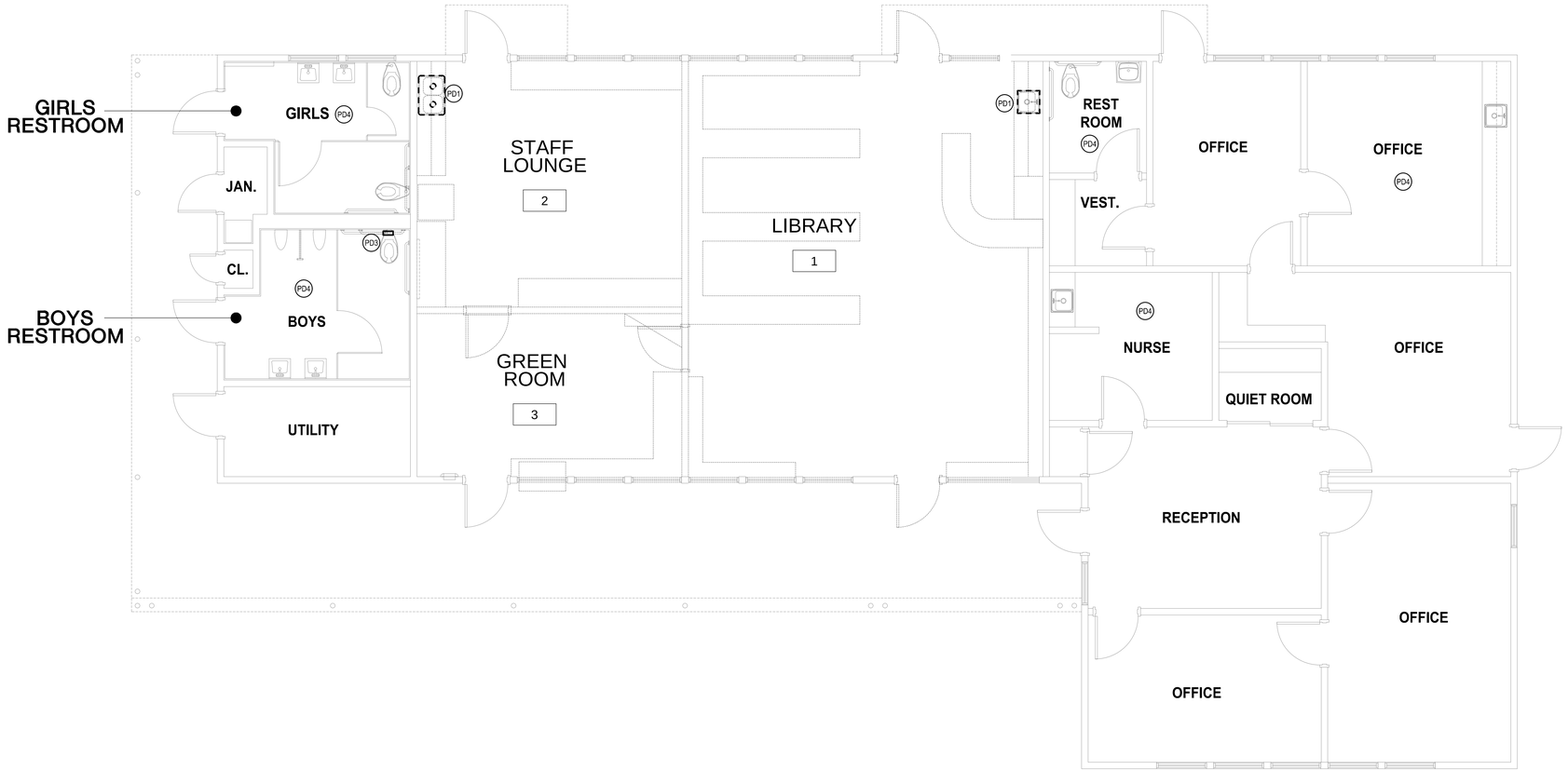

SHEET NOTES

1. ALL DEMOLITION SHALL COMPLY WITH CH. 33 CBC AND CHAPTER 33 CFC.

BUILDING A - ADMIN DEMO PLAN - PLUMBING

SCALE: 1/4" = 1'-0"

0 2' 4' 8' 12'

1/4" = 1'-0"

NORTH

IDENTIFICATION STAMP
DIV. OF THE STATE ARCHITECT
APP: 04-122772 INC:
REVIEWED FOR
SS ☑ FLS ☑ ACS ☑
DATE: 03/26/2024

SPROTTE | WATSON
ARCHITECTURE | PLANNING

CONSULTANT

LICENSED ARCHITECT
C12359
REGISTERED PROFESSIONAL ENGINEER
CHRISTOPHER RAMIREZ
No. M27567
exp. 12-31-24
MECHANICAL
STATE OF CALIFORNIA
01/25/24

TURPIN & RATTAN
Engineering, Inc.
Consulting Engineers
4719 PALM AVENUE
LA MESA, CA 91941-5221
619 / 466 / 6224 fax 466 / 6233
E-MAIL: engineer@trreid.com
TREI PROJECT # 22277.501
h:\ecams 01/25/24 - 2:14pm

DEHESA ELEMENTARY SCHOOL
CONSTRUCTION DOCUMENTS
DEHESA SCHOOL DISTRICT
4612 DEHESA ROAD
EL CAJON, CA 92019

REVISIONS

DESCRIPTION

BUILDING A - ADMIN DEMO PLAN - PLUMBING

DATE

01.25.24

JOB #

22-0400

SHEET #

P-A2.0

7/12/2018 1:34:44 PM

KEYNOTES

P5 PROVIDE FLUSH VALVE FV-1 AT EXISTING WATER CLOSET. RECONNECT TO EXISTING CW PIPING. INSTALL WITH OPERABLE PARTS FACING THE OPEN-SIDE OF THE WATER CLOSET.

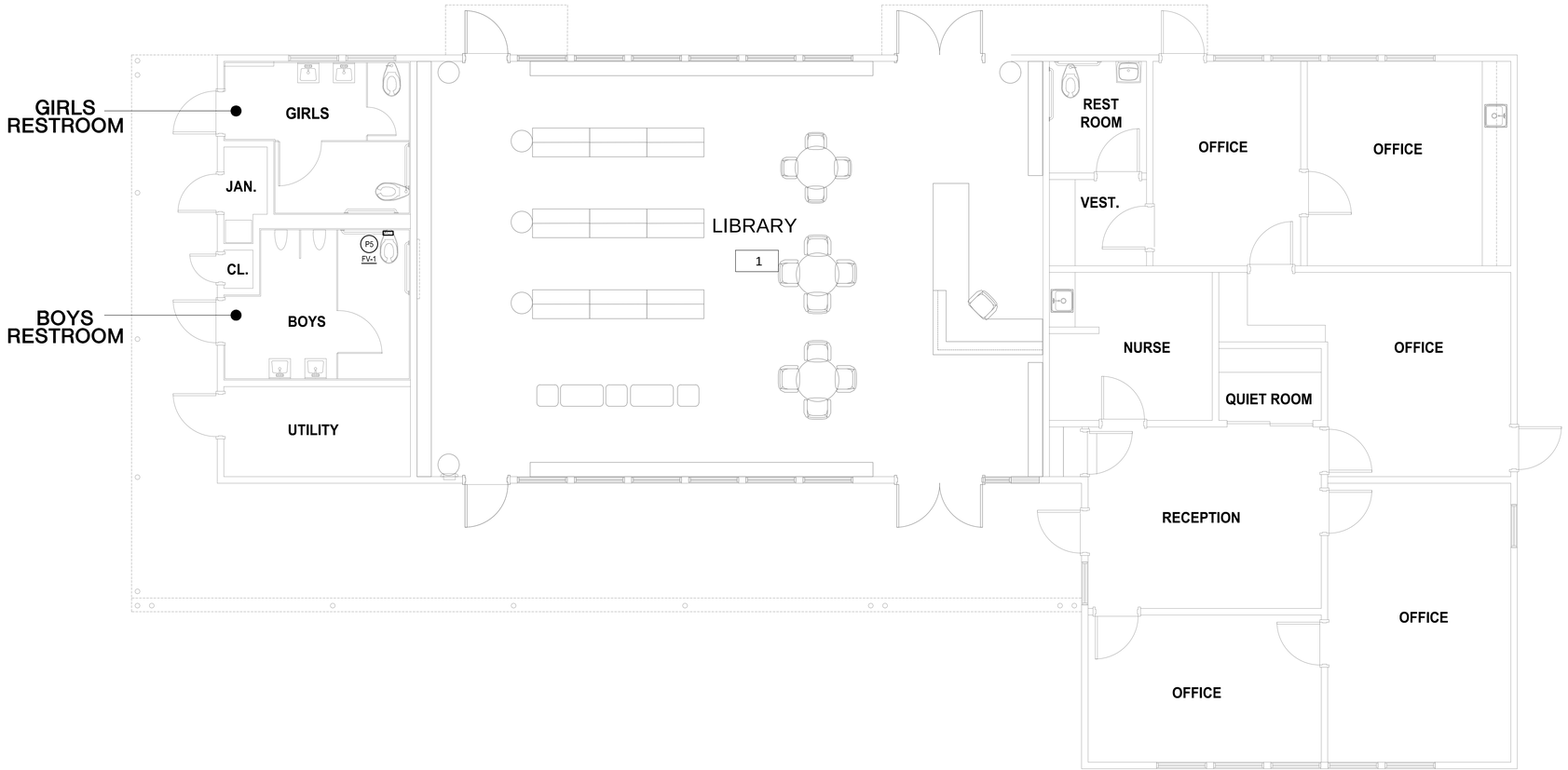

BUILDING A - ADMIN FLOOR PLAN - PLUMBING

SCALE: 1/4" = 1'-0"

0 2' 4' 8' 12'

1/4" = 1'-0"

NORTH

IDENTIFICATION STAMP
DIV. OF THE STATE ARCHITECT
APP: 04-122772 INC:
REVIEWED FOR
SS ☑ FLS ☑ ACS ☑
DATE: 03/26/2024

SPROTTE | WATSON
ARCHITECTURE | PLANNING

CONSULTANT

REGISTERED PROFESSIONAL ENGINEER
CHRISTOPHER RAMIREZ
No. M27567
exp. 12-31-24
MECHANICAL
STATE OF CALIFORNIA
01/25/24

TURPIN & RATTAN Engineering, Inc.
Consulting Engineers
4719 PALM AVENUE
LA MESA, CA 91941-5221
619 / 466 / 6224 fax 466 / 6233
E-MAIL: engineer@trreid.com
TREI PROJECT # 22277.501
h:\ecams 01/25/24 - 2:14pm

DEHESA ELEMENTARY SCHOOL
CONSTRUCTION DOCUMENTS
DEHESA SCHOOL DISTRICT
4612 DEHESA ROAD
EL CAJON, CA 92019

REVISIONS

DESCRIPTION

BUILDING A - ADMIN FLOOR PLAN - PLUMBING

DATE

01.25.24

JOB #

22-0400

SHEET #

P-A2.1

7/12/2018 1:34:44 PM

KEYNOTES

PD2 REMOVE EXISTING SINK, CAP ALL PIPING FOR FUTURE RECONNECTION.

PD4 EXISTING FIXTURES IN THIS ROOM TO REMAIN. PROTECT IN PLACE DURING CONSTRUCTION.

PD5 REMOVE EXISTING HOSE BIBB, CAP PIPING INSIDE WALL AND SEAL WATER TIGHT. PATCH AND REPAIR WALL TO MATCH EXISTING, REFER TO ARCHITECTURAL.

PD6 REMOVE EXISTING CLEAN-OUT FOR FUTURE REPLACEMENT.

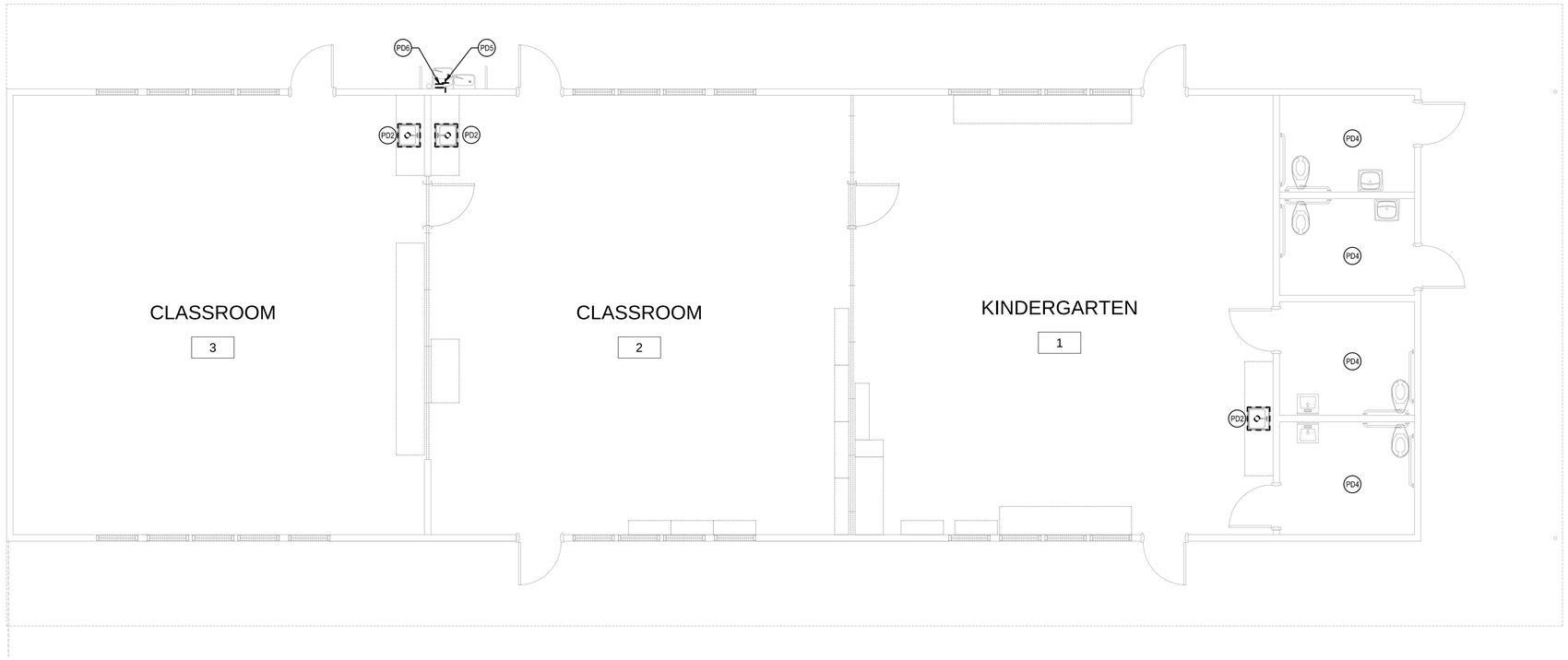

SHEET NOTES

1. ALL DEMOLITION SHALL COMPLY WITH CH. 33 CBC AND CHAPTER 33 CFC.

BUILDING B - KINDERGARTEN DEMO PLAN - PLUMBING

SCALE: 1/4" = 1'-0"

0 2' 4' 8' 12'

1/4" = 1'-0"

NORTH

IDENTIFICATION STAMP
DIV. OF THE STATE ARCHITECT
APP: 04-122772 INC:
REVIEWED FOR
SS ☑ FLS ☑ ACS ☑
DATE: 03/26/2024

SPROTTE | WATSON
ARCHITECTURE | PLANNING

LICENSED ARCHITECT
C12359
REGISTERED PROFESSIONAL ENGINEER
STATE OF CALIFORNIA

CONSULTANT

REGISTERED PROFESSIONAL ENGINEER
CHRISTOPHER RAMIREZ
No. M27567
exp. 12-31-24
MECHANICAL
STATE OF CALIFORNIA
01/25/24

TURPIN & RATTAN
Engineering, Inc.
Consulting Engineers
4719 PALM AVENUE
LA MESA, CA 91941-5221
619 / 466 / 6224 fax 466 / 6233
E-MAIL: engineer@trreid.com

TREI PROJECT # 22277.S01
h:\ecams 01/25/24 - 2:14pm

DEHESA ELEMENTARY SCHOOL
CONSTRUCTION DOCUMENTS
DEHESA SCHOOL DISTRICT
4612 DEHESA ROAD
EL CAJON, CA 92019

REVISIONS

DESCRIPTION
BUILDING B - KINDERGARTEN DEMO PLAN - PLUMBING
DATE
01.25.24
JOB #
22-0400
SHEET #
P-B2.0

7/12/2018 1:34:44 PM

KEYNOTES

- (P1) PROVIDE WATER, WASTE, AND VENT LINES TO DISHWASHER UNIT.
- (P2) PROVIDE 1/2" CW LINE TO THE OATEY MODA 1-VALVE ICE MAKER SUPPLY BOX WITH HAMMER ARRESTOR.
- (P3) CONNECT SINK TO EXISTING UTILITIES, FIELD VERIFY EXACT POINT OF CONNECTION.
- (P4) EXTEND 3/4" CW LINE TO NEW WATER HEATER, FIELD VERIFY EXACT POINT OF CONNECTION. PROVIDE 1/2" HW LINES TO SINK AND DISHWASHER. PROVIDE SHUT OFF VALVE AT PIPE TO DISHWASHER.
- (P6) PROVIDE ZURN Z1446 CLEANOUT W/ ROUND WALL ACCESS COVER AND INSTALL TO EXISTING DRAIN LINE.

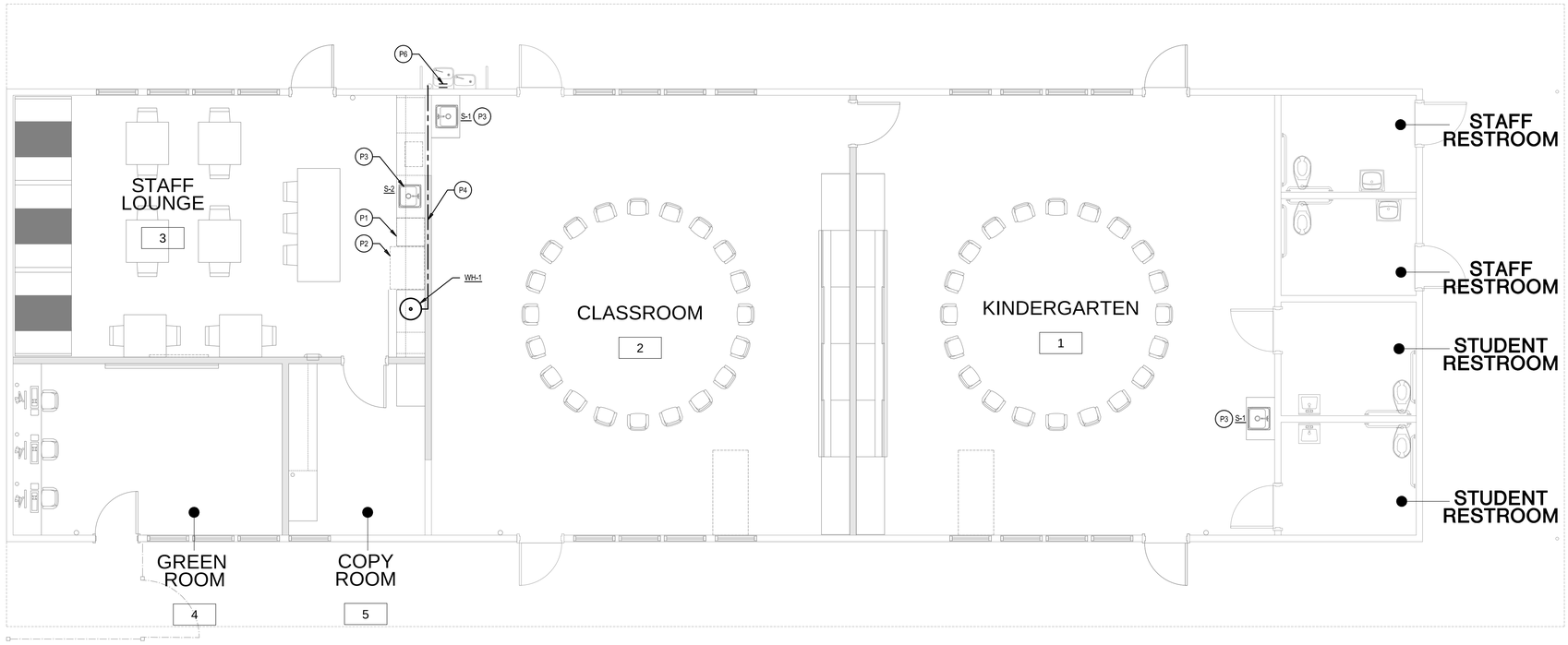

BUILDING B - KINDERGARTEN FLOOR PLAN - PLUMBING

SCALE: 1/4" = 1'-0"

0 2' 4' 8' 12'

1/4" = 1'-0"

NORTH

IDENTIFICATION STAMP
DIV. OF THE STATE ARCHITECT
APP: 04-122772 INC:
REVIEWED FOR
SS ☑ FLS ☑ ACS ☑
DATE: 03/26/2024

SPROTTE | WATSON
ARCHITECTURE | PLANNING

C12359
REGISTERED ARCHITECT
STATE OF CALIFORNIA

CONSULTANT

REGISTERED PROFESSIONAL ENGINEER
CHRISTOPHER HAMMETT
No. M27567
exp. 12-31-24
MECHANICAL
STATE OF CALIFORNIA
01/25/24

TURPIN & RATTAN
Engineering, Inc.
Consulting Engineers
4719 PALM AVENUE
LA MESA, CA 91941-5221
619 / 466 / 6224 fax 466 / 6233
E-MAIL: engineer@trreiid.com
TREI PROJECT # 22277.S01
h:\rcaeno 01/25/24 - 2:14pm

DEHESA ELEMENTARY SCHOOL
CONSTRUCTION DOCUMENTS
DEHESA SCHOOL DISTRICT
4612 DEHESA ROAD
EL CAJON, CA 92019

REVISIONS

DESCRIPTION

BUILDING B - KINDERGARTEN FLOOR PLAN - PLUMBING

DATE

01.25.24

JOB #

22-0400

SHEET #

P-B2.1

7/12/2018 1:34:44 PM

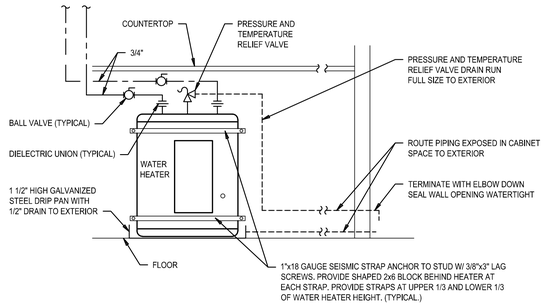

WATER HEATER DETAIL

NO SCALE

1
P-5.0

IDENTIFICATION STAMP
DIV. OF THE STATE ARCHITECT
APP: 04-122772 INC:
REVIEWED FOR
SS ☑ FLS ☑ ACS ☑
DATE: 03/26/2024

SPROTTE | WATSON
ARCHITECTURE | PLANNING

CONSULTANT

REGISTERED PROFESSIONAL ENGINEER
CHRISTOPHER RAMIREZ
No. M27567
exp. 12-31-24
MECHANICAL
STATE OF CALIFORNIA
01/25/24

TURPIN & RATTAN
Engineering, Inc.
Consulting Engineers
4719 PALM AVENUE
LA MESA, CA 91941-5221
619 / 466 / 6224 fax 466 / 6233
E-MAIL: engineer@trreid.com
TREI PROJECT # 22277.501
h:\ecamo 01/25/24 - 2:14pm

DEHESA ELEMENTARY SCHOOL
CONSTRUCTION DOCUMENTS
DEHESA SCHOOL DISTRICT
4612 DEHESA ROAD
EL CAJON, CA 92019

REVISIONS

DESCRIPTION
PLUMBING DETAILS

DATE
01.25.24

JOB #
22-0400

SHEET #
P-5.0

7/12/2018 1:34:44 PM

ELECTRICAL LEGEND

SYMBOL	DESCRIPTION
S	DASHED SYMBOL INDICATES EXISTING FIXTURE, OUTLET, DEVICE OR EQUIPMENT TO BE REMOVED.
$	FINE-LINED SYMBOL INDICATES EXISTING FIXTURE, OUTLET, DEVICE OR EQUIPMENT TO REMAIN.
$	CROSS MARK ON ANY SWITCH SYMBOL INDICATES EXISTING SWITCH OUTLET.
EX	EXISTING CONDUIT TO REMAIN.
R	EXISTING CONDUIT TO BE REMOVED IF IN AN ACCESSIBLE AREA OR TO BE ABANDONED IF IN AN INACCESSIBLE AREA.
R	EXISTING LIGHT FIXTURE TO BE REMOVED AND RELOCATED.
R	NEW LOCATION OF RELOCATED LIGHT FIXTURE.
A	INDICATES FIXTURE TYPE. SEE FIXTURE SCHEDULE FOR LAMP, WATTAGE, AND MOUNTING INFORMATION. TYPICAL FOR ROOM INDICATED, UNLESS OTHERWISE NOTED.
HA-11a	INDICATES CONTROLLING SWITCH LEG.
	DENOTES BRANCH CIRCUIT NUMBER SUPPLYING FIXTURE.
	WHEN USED, DENOTES PANELBOARD SUPPLYING FIXTURE.
	LIGHTING FIXTURE, RECESSED MOUNTED.
	LIGHTING FIXTURE, SURFACE MOUNTED.
	STRIP LIGHTING FIXTURE.
	EXIT SIGN, CEILING MOUNTED. PROVIDE DIRECTIONAL ARROW(S) AS INDICATED. SHADING INDICATES ILLUMINATED FACE(S).
	EXIT SIGN, WALL MOUNTED. PROVIDE DIRECTIONAL ARROW(S) AS INDICATED. SHADING INDICATES ILLUMINATED FACE(S). MOUNT AT +96" AFF TO CENTER OF FIXTURE U.O.N.
	EXIT SIGN, LOW LEVEL TYPE. MOUNT IN ACCORDANCE WITH CBC.
	SURFACE MOUNTED BATTERY POWERED EMERGENCY LIGHTING FIXTURE. MOUNTING HEIGHT TO CENTER OF FIXTURE AS INDICATED.
Sa	SINGLE POLE, SINGLE THROW TOGGLE SWITCH, WALL MOUNTED AT +42" AFF U.O.N. SUBSCRIPT WHERE SHOWN INDICATES FIXTURES CONTROLLED.
S WP	WALL SWITCH, SINGLE POLE, WEATHERPROOF, WALL MOUNTED AT +42" AFF U.O.N.
S T	MANUAL MOTOR STARTER SWITCH WITH THERMAL OVERLOAD PROTECTION. WHERE MOTORS ARE PROVIDED WITH THERMAL PROTECTION BY THE EQUIPMENT MANUFACTURER A MOTOR-RATED SWITCH WITHOUT THERMAL DEVICE SHALL BE PROVIDED. MOUNT SWITCH ADJACENT TO MOTOR IN READILY ACCESSIBLE LOCATION U.O.N.
SS	SCENE SWITCH, WALL MOUNTED AT +42" AFF U.O.N.
DS	DAYLIGHT SENSOR (SINGLE OR MULTI-ZONE). SYMBOL INDICATES A DAYLIGHT SENSOR OR SENSORS ARE REQUIRED IN THE RESPECTIVE DAYLIT/SKYLIT ZONE(S). EXACT TYPE(S), QUANTITY AND PHYSICAL PLACEMENT WITHIN THE RESPECTIVE ZONE SHALL BE DETERMINED BY THE EQUIPMENT VENDOR AT TIME OF BID. COORDINATION WITH THE COMMISSIONING TEAM DURING CONSTRUCTION IS REQUIRED. DAYLIGHT SETTINGS SHALL BE FINALLY ADJUSTED AFTER FURNITURE, FINAL FINISHES, AND ALL LIGHTING EQUIPMENT ARE INSTALLED AND MADE OPERATIONAL. SENSORS SHALL NOT BE PLACED IN DIRECT SUNLIGHT NOR IN DIRECT ILLUMINATION FROM LIGHT FIXTURES. DEVICE SETTINGS SHALL REDUCE ILLUMINATION LIGHTING POWER BY A MINIMUM OF 65% WHEN DAYLIGHT ILLUMINANCE IS 150% OF DESIGN ILLUMINANCE.
OC	INDICATES AN OCCUPANCY SENSOR FEATURE IS REQUIRED IN THIS SPACE/ROOM/AREA. EXACT TYPE(S), QUANTITY AND PHYSICAL PLACEMENT WITHIN THE SPACE/ROOM/AREA SHALL BE DETERMINED BY THE EQUIPMENT VENDOR AT TIME OF BID. COORDINATION WITH THE COMMISSIONING TEAM DURING CONSTRUCTION IS REQUIRED. OCCUPANCY SETTINGS SHALL BE FINALLY ADJUSTED AFTER FURNITURE, FINAL FINISHES, AND ALL LIGHTING EQUIPMENT ARE INSTALLED AND MADE OPERATIONAL.
OC ab	COMBINATION OCCUPANCY SENSOR/WALL SWITCH, WALL MOUNTED AT +42" AFF U.O.N.
DO	COMBINATION MANUAL DIMMER SWITCH / OCCUPANCY SENSOR, MOUNTED AT +42" AFF TO CENTER OF DEVICE, U.O.N.
D	DIMMER SWITCH, WALL MOUNTED AT +42" AFF U.O.N.

ELECTRICAL LEGEND

SYMBOL	DESCRIPTION
	DUPLEX RECEPTACLE, WALL MOUNTED AT +18" AFF U.O.N.
	DUPLEX RECEPTACLE GFCI TYPE, WALL MOUNTED HORIZONTALLY AT HEIGHT INDICATED.
	DUPLEX RECEPTACLE, GFCI TYPE, WALL MOUNTED AT +18" AFF U.O.N.
	DUPLEX RECEPTACLE CONTROLLED BY OCCUPANCY SENSOR, WALL MOUNTED AT +18" AFF U.O.N.
	DOUBLE DUPLEX RECEPTACLE, SPLIT WIRED WITH ONE DUPLEX CONTROLLED BY OCCUPANCY SENSOR, WALL MOUNTED AT +18" AFF U.O.N.
	DUPLEX RECEPTACLE, CEILING MOUNTED.
	DOUBLE DUPLEX RECEPTACLE, CEILING MOUNTED.
	PLUG STRIP WITH OUTLETS OR DEVICES AT +18" ON CENTER, U.O.N. MOUNTING HEIGHT AS INDICATED.
	POWER DISTRIBUTION SWITCHBOARD. (SWBD)
	SURFACE MOUNTED PANELBOARD.
	FLUSH MOUNTED PANELBOARD.
	SURFACE MOUNTED CABINET, AS NOTED.
	FLUSH MOUNTED CABINET, AS NOTED.
	SURFACE MOUNTED COMMUNICATIONS TERMINAL CABINET WITH HINGED DOOR.
	FLUSH MOUNTED COMMUNICATIONS TERMINAL CABINET WITH HINGED DOOR.
J	JUNCTION BOX. SIZED PER CEC, U.O.N.
	MOTOR CONNECTION.
AC 2	MECHANICAL EQUIPMENT REFERENCE.
TC	TIME CONTROLLED SWITCH.
	PULLBOX WITH SCREW COVER, SIZE PER CEC.
	PULLBOX MOUNTED FLUSH WITH GRADE.
	ELECTRICAL HANDHOLE, MOUNTED FLUSH WITH GRADE.
	CONDUIT CONCEALED IN WALL OR CEILING SPACE.
	CONDUIT CONCEALED UNDER FLOOR SLAB OR UNDERGROUND.
	CONDUIT INSTALLED EXPOSED.
W	SURFACE MOUNTED ONE-PIECE METAL OR PLASTIC RACEWAY.
	CONDUIT TURNED UP.
	CONDUIT TURNED DOWN.
	CONDUIT CONTINUATION.
	MULTI-CHANNEL SURFACE RACEWAY UP WALL INTO CEILING SPACE. WIREMOLD SERIES 5400 (OR EQUIVALENT).
	MULTI-CHANNEL SURFACE RACEWAY DOWN WALL TO FLOOR. WIREMOLD SERIES 5400 (OR EQUIVALENT).
	MULTI-CHANNEL SURFACE RACEWAY, WALL MOUNTED AT ELEVATION NOTED. WIREMOLD SERIES 5400 (OR EQUIVALENT).
	MULTI-CHANNEL SURFACE RACEWAY, WALL MOUNTED AT +18" AFF U.O.N. WIREMOLD SERIES 5400 (OR EQUIVALENT).
	MULTI-CHANNEL SURFACE RACEWAY, WALL MOUNTED AT WALL/CEILING INTERSECTION. WIREMOLD SERIES 5400 (OR EQUIVALENT).
E#	ELECTRICAL KEYNOTE REFERENCE (TYPICAL).
1 / E501	INDICATES DETAIL `1' ON SHEET E501 (TYPICAL).

ELECTRICAL LEGEND

SYMBOL	DESCRIPTION
	BRANCH CIRCUIT DESIGNATIONS:
	3/4" CONDUIT WITH 2#12 CONDUCTORS PLUS 1#12 EQUIPMENT GROUNDING CONDUCTOR.
	3/4" CONDUIT WITH 3#12 CONDUCTORS PLUS 1#12 EQUIPMENT GROUNDING CONDUCTOR.
	3/4" CONDUIT WITH 4#12 CONDUCTORS PLUS 1#12 EQUIPMENT GROUNDING CONDUCTOR.
#10	A NUMBER ADJACENT TO THE HASH MARK IN ANY CONDUIT RUN INDICATES THE CONDUCTOR SIZE TO BE USED IN LIEU OF #12 AWG. CONDUIT AND EQUIPMENT GROUNDING CONDUCTOR SHALL BE SIZED PER CEC, U.O.N.
A-1,3	HOMERUN TO INDICATED PANELBOARD (`A'). NUMBERS (1,3) INDICATE BRANCH CIRCUIT NUMBERS. CONDUIT AND WIRE SIZE INDICATED AT HOMERUN SHALL APPLY TO THE ENTIRE CIRCUIT U.O.N.
3/4"-3#8+1#10 EG	INDICATES 3/4" CONDUIT WITH (3) 8 AWG CONDUCTORS + (1) 10 AWG EQUIPMENT GROUND.
3/4"-3#10+3#10N +1#10 EG	INDICATES 3/4" CONDUIT WITH (3) 10 AWG PHASE CONDUCTORS PLUS (3) 10 AWG INDIVIDUAL NEUTRAL CONDUCTORS + (1) 10 AWG EQUIPMENT GROUND.
(2) 3" 3-500KCM +1#1/0 EG	INDICATES TWO (2) 3" CONDUITS WITH THREE (3) 500 kcmil CONDUCTORS PLUS ONE (1) 1/0 AWG EQUIPMENT GROUNDING CONDUCTOR IN EACH CONDUIT.
	WHEN HOMERUN IS NOT SHOWN, BRANCH CIRCUIT NUMBER(S) (AND PANELBOARD) ARE DESIGNATED BY NUMBERS ADJACENT TO OUTLET:
J PA-7, PA-7	DENOTES BRANCH CIRCUIT(S) SUPPLYING OUTLET.
	WHEN USED, DENOTES PANELBOARD SUPPLYING OUTLET.
PA-13,15 #10	DENOTES BRANCH CIRCUIT WIRE SIZE WHEN OTHER THAN 12 AWG.
	BRANCH CIRCUIT WIRING NOTE: EACH SINGLE-POLE BREAKER CIRCUIT SHALL HAVE A DEDICATED NEUTRAL CONDUCTOR. REFER TO THE PANEL SCHEDULES FOR CIRCUIT BREAKER REQUIREMENTS. BRANCH CIRCUITS THAT ORIGINATE FROM SINGLE-POLE CIRCUIT BREAKERS SHALL NOT BE INSTALLED AS PART OF A MULTIWIRE CIRCUIT. HANDLE TIES INSTALLED ON SINGLE-POLE CIRCUIT BREAKERS ARE NOT AN ACCEPTABLE ALTERNATIVE TO THIS REQUIREMENT.

SINGLE LINE DIAGRAM LEGEND

SYMBOL	DESCRIPTION
M	UTILITY METER SOCKET
	FUSE, SIZE AND TYPE AS NOTED
	DISCONNECT SWITCH
	LOW VOLTAGE CIRCUIT BREAKER.

OVERCURRENT DEVICE KEY

60A / 3P / 60A / RKI:
- SWITCH SIZE
- NO. OF POLES
- FUSE SIZE
- FUSE CLASS

250AT / 250AF / 3P / LSI:
- TRIP SETTING
- FRAME SIZE
- NO. OF POLES
- ELECTRONIC TRIP FUNCTIONS, AS NOTED:
  L = LONG TIME PICKUP
  S = SHORT TIME PICKUP
  I = INSTANTANEOUS
  G = GROUND FAULT

ELECTRICAL ABBREVIATIONS

ABBREV.	DESCRIPTION
A, AMP	AMPERE
AC	ALTERNATING CURRENT
AF	AMPS FRAME, OR AMPS FUSE RATING
AFF	ABOVE FINISHED FLOOR
AHJ	AUTHORITY HAVING JURISDICTION
AIC	AMPERES INTERRUPTING CAPACITY
AL	ALUMINUM
AN	ANNUNCIATOR
AT	AMPS TRIP RATING
AS	AMPS SWITCH RATING
AUTO	AUTOMATIC
AWG	AMERICAN WIRE GAUGE
BIL	BASIC IMPULSE LEVEL
C	CONDUIT
CB	CIRCUIT BREAKER
CEC	CALIFORNIA ELECTRICAL CODE (TITLE 24, PART 3).
CEnC	CALIFORNIA ENERGY CODE (TITLE 24, PART 6).
CIR	CIRCUIT
CL	CURRENT LIMITING
COMM	COMMUNICATIONS, OR COMMERCIAL.
C.O.	CONDUIT ONLY
CONN.	CONNECTION
CU	COPPER
DB	DIRECT BURIAL
DEMO	DEMOLISH/DEMOLITION
DIA.	DIAMETER
DN	DOWN
DWG	DRAWING
EA.	EACH
EB	ENCASED BURIAL
EG	EQUIPMENT GROUND, OR EQUIPMENT GROUNDING CONDUCTOR.
ELEC	ELECTRICAL
EHH	ELECTRICAL HANDHOLE
ELEV.	ELEVATION
EMERG.	EMERGENCY
EQUIP.	EQUIPMENT
ES	ENERGY SAVING
EWC	ELECTRIC WATER COOLER
EWH	ELECTRIC WATER HEATER
EX	EXISTING
FA	FIRE ALARM
FAAP	FIRE ALARM ANNUNCIATOR PANEL
FACP	FIRE ALARM CONTROL PANEL
FATC	FIRE ALARM TERMINAL CABINET
FLEX	FLEXIBLE
FT	FOOT, FEET
GA	GAUGE
GEC	GROUNDING ELECTRODE CONDUCTOR
GF	GROUND FAULT
GFCI	GROUND-FAULT CIRCUIT INTERRUPTER
GFI	GROUND-FAULT INTERRUPTER
GFP	GROUND FAULT PROTECTION (FOR EQUIPMENT)
GND	GROUND
HH	HANDHOLE
HP	HORSEPOWER
HPF	HIGH POWER FACTOR
HV	HIGH VOLTAGE
HZ	HERTZ
IBC	INTERNATIONAL BUILDING CODE
IDF	INTERMEDIATE DISTRIBUTION FRAME
IG	ISOLATED GROUND
INST	INSTANTANEOUS
IR	INTERRUPTING RATING
Isc	AVAILABLE SHORT CIRCUIT CURRENT (SYMMETRICAL AMPS)
JB	JUNCTION BOX
K	KILO (K) OR KELVIN
KA	1000 AMPS (kA)
KAIC	1000 AMPS INTERRUPTING CAPACITY (kAIC)
KCM	1000 CIRCULAR MIL (kcmil)
KV	KILOVOLT (kV)
KVA	KILOVOLTAMPS (kVA)
KW	KILOWATT (kW)
KWH	KILOWATTHOUR (kWh)

ELECTRICAL ABBREVIATIONS

ABBREV.	DESCRIPTION
LSI	LONG, SHORT, INSTANTANEOUS TRIP
LSIG	LONG, SHORT, INSTANTANEOUS, GROUND FAULT TRIP
LT	LIGHT
LTG	LIGHTING
LV	LOW VOLTAGE
MAX.	MAXIMUM
MCP	MOTOR CIRCUIT PROTECTOR
MDF	MAIN DISTRIBUTION FRAME
MH	MANHOLE
MIN.	MINIMUM
NC	NORMALLY CLOSED
NEC	NATIONAL ELECTRICAL CODE
NEMA	NATIONAL ELECTRICAL MANUFACTURERS ASSOCIATION
NFPA	NATIONAL FIRE PROTECTION ASSOCIATION
NIC	NOT IN CONTRACT
NO	NORMALLY OPEN
NRTL	NATIONALLY RECOGNIZED TESTING LAB
NTS	NOT TO SCALE
OC	ON CENTER
P	POLE
PH	PHASE
PNL	PANELBOARD, OR PANEL
POC	POINT OF CONNECTION
PIV	POST INDICATOR VALVE
PR	PAIR
PRI	PRIMARY
PVC	POLYVINYLCHLORIDE
RCVR	RECEIVER
RECPT	RECEPTACLE
REQ'D.	REQUIRED
RM.	ROOM
SCCR	SHORT CIRCUIT CURRENT RATING
SEC	SECONDARY
SECT.	SECTION
SFD	SMOKE FIRE DAMPER
SH	SHIELDED
S/N	SOLID NEUTRAL
STP	SHIELDED TWISTED PAIR
SQ.	SQUARE
SW	SWITCH
SWBD	SWITCHBOARD
SYM	SYMMETRICAL
SPD	SURGE PROTECTIVE DEVICE
SSBJ	SUPPLY SIDE BONDING JUMPER
TBB	TELEPHONE BACKBOARD
TEL	TELEPHONE/VOICE
TEMP	TEMPERATURE
TP	TWISTED PAIR
TR	TAMPER-RESISTANT
TS	TEST SWITCH
TVSS	TRANSIENT VOLTAGE SURGE SUPPRESSOR
TYP	TYPICAL
UBC	UNIFORM BUILDING CODE
UFER	CONCRETE ENCASED GROUNDING ELECTRODE
U.G.	UNDERGROUND
UGPS	UNDERGROUND PULL SECTION
UPS	UNINTERRUPTABLE POWER SUPPLY
U.O.N.	UNLESS OTHERWISE NOTED
V	VOLT
VA	VOLT-AMPERES
VFD	VARIABLE FREQUENCY DRIVE
W	WATT, OR WIRE
WP	WEATHERPROOF
W/T	WATERTIGHT
XFMR	TRANSFORMER
XMTR	TRANSMITTER
+45"	MOUNTING HEIGHT ABOVE FINISHED FLOOR TO CENTER OF DEVICE OR FIXTURE U.O.N.
Ø	PHASE
#	NUMBER, OR AWG

IDENTIFICATION STAMP
DIV. OF THE STATE ARCHITECT
APP: 04-122772 INC:
REVIEWED FOR
SS ☑ FLS ☑ ACS ☑
DATE: 03/26/2024

SPROTTE | WATSON
ARCHITECTURE | PLANNING

LICENSED ARCHITECT C12359 REN. OCTOBER 2025 STATE OF CALIFORNIA

CONSULTANT

REGISTERED PROFESSIONAL ENGINEER DALE M. FRANCHAK No.11533 exp.6/30/24 ELECTRICAL STATE OF CALIFORNIA
01/25/24

TURPIN & RATTAN
Engineering, Inc.
Consulting Engineers
4719 PALM AVENUE
LA MESA, CA 91941-5221
619 / 466 / 6224 fax 466 / 6233
E-MAIL: engineer@treisd.com
TREI PROJECT # 22277.S01
h.lozano 01/25/24 - 1:07pm

DEHESA ELEMENTARY SCHOOL
CONSTRUCTION DOCUMENTS
DEHESA SCHOOL DISTRICT
4612 DEHESA ROAD
EL CAJON, CA 92019

REVISIONS

DESCRIPTION

ELECTRICAL LEGEND AND ABBREVIATIONS

DATE
01.25.24

JOB #
22-0400

SHEET #
E-0.1

7/12/2018 1:34:44 PM

GENERAL NOTES

1. ALL WORK SHALL BE IN COMPLIANCE WITH THE 2022 EDITION OF THE CEC.
2. ALL ELECTRICAL DRAWINGS ARE TO BE READ IN CONJUNCTION WITH THE PROJECT SPECIFICATIONS AND ALL OTHER RELATED CONTRACT DOCUMENTS.
3. VERIFY EXACT LOCATION, SIZE, AND EXTENT OF ALL EXISTING UTILITIES, OBSTRUCTIONS AND/OR OTHER CONDITIONS WHICH MAY AFFECT THE PROPOSED WORK UNDER THE PROJECT. THE CONTRACTOR SHALL TAKE EVERY PRECAUTION TO PREVENT DAMAGE TO EXISTING WORK. ANY DAMAGE TO EXISTING UTILITIES OR STRUCTURES DURING CONSTRUCTION SHALL BE IMMEDIATELY REPAIRED OR REPLACED IN ACCORDANCE WITH THE OWNER'S DIRECTION AT THE CONTRACTOR'S EXPENSE.
4. CAREFULLY EXAMINE ALL CONTRACT DRAWINGS/SPECIFICATIONS AND BE RESPONSIBLE FOR THE PROPER FITTING OF MATERIALS AND EQUIPMENT AT EACH LOCATION AS INDICATED WITHOUT SUBSTANTIAL ALTERATION. IN AS MUCH AS THE DRAWINGS ARE GENERALLY DIAGRAMMATIC AND BECAUSE OF THE SMALL SCALE OF THE DRAWINGS, IT IS NOT POSSIBLE TO INDICATE OFFSETS, FITTINGS AND ACCESSORIES WHICH MAY BE REQUIRED. FURNISH FITTINGS REQUIRED TO MEET SUCH CONDITIONS AT NO COST TO THE OWNER.
5. CONDUIT RUNS ARE SHOWN DIAGRAMMATICALLY ONLY AND SHALL BE INSTALLED IN A MANNER TO PREVENT CONFLICTS WITH EQUIPMENT AND STRUCTURAL CONDITIONS. EXPOSED CONDUITS SHALL BE INSTALLED TIGHT AGAINST AND PARALLEL TO BEAMS AND WALLS.
6. ALL EXPOSED CONDUIT RUNS WITHIN THE BUILDING SHALL BE INSTALLED TIGHT AGAINST BOTTOM OF BEAMS UNLESS OTHERWISE NOTED.
7. CONDUITS SHALL BE TERMINATED SO AS TO PERMIT FINAL CONNECTIONS TO MOTORS AND OTHER EQUIPMENT WITHOUT EXTENSIVE USE OF FLEXIBLE CONDUIT.
8. CONDUITS WHICH TERMINATE AT SWITCHBOARD OR PANELBOARDS SHALL BE LOCATED FOR PROPER ALIGNMENT WITHOUT THE NEED FOR AUXILIARY GUTTERS, WIREWAYS OR PANEL EXTENSIONS.
9. THE WIRING DIAGRAMS, QUANTITY AND SIZE OF WIRES AND CONDUITS ARE BASED UPON SELECTED STANDARD COMPONENTS OF ELECTRICAL EQUIPMENT. MODIFICATIONS APPROVED BY THE ARCHITECT/ENGINEER MAY BE MADE BY THE CONTRACTOR AT HIS EXPENSE TO ACCOMMODATE EQUIPMENT ACTUALLY PURCHASED. THE BASIC SEQUENCE AND METHOD OF CONTROL SHALL BE MAINTAINED AS INDICATED ON THE DRAWINGS AND SPECIFICATIONS.
10. ALL DEMOLITION WORK SHALL COMPLY WITH CBC CHAPTER 33 AND CFC CHAPTER 33.
11. ALL PANELBOARDS SHALL BE MOUNTED SO THAT THE DISTANCE FROM THE TOP OF THE HIGHEST POSSIBLE CIRCUIT BREAKER OPERATING HANDLE TO THE FLOOR SHALL NOT EXCEED 6'-6".
12. WHERE PANEL EXTENSIONS ARE REQUIRED TO EXTEND WIRING FROM EXISTING UNDERGROUND CONDUITS, THEY SHALL BE U.L. LISTED AS PANELBOARDS AND SHALL BE FABRICATED BY THE PANELBOARD MANUFACTURER.
13. NAMEPLATES SHALL CONFORM STRICTLY TO INSTRUCTIONS AS SPECIFIED IN THE ELECTRICAL SPECIFICATIONS AND ON THE DRAWINGS. THE FOLLOWING SHALL HAVE NAMEPLATES:

    a. ALL MAIN BREAKERS
    b. ALL FEEDER BREAKERS IN SWITCHBOARDS AND DISTRIBUTION PANELS.
    c. ALL PANELBOARDS AND SWITCHBOARDS
    d. DISCONNECT SWITCHES
    e. COMBINATION MOTOR STARTERS
    f. ENCLOSED CIRCUIT BREAKERS
    g. CONTROL CABINETS
14. ALL FEEDERS AND BRANCH CIRCUITS SHALL HAVE AN INSULATED EQUIPMENT GROUNDING CONDUCTOR ROUTED WITH THE PHASE/NEUTRAL CONDUCTORS. SYSTEM AND EQUIPMENT GROUNDING CONDUCTORS SHALL BE SIZED AND INSTALLED AS REQUIRED BY THE CEC U.O.N.
15. ALL CIRCUIT PROTECTIVE DEVICES SHALL HAVE THE REQUIRED RATINGS AND INTERRUPTING CAPACITY EQUAL TO OR GREATER THAN 110% OF THE AVAILABLE SHORT CIRCUIT CURRENT AT ITS SUPPLY TERMINAL.
16. ALL ELECTRICAL PANELS, LIGHT FIXTURES AND EQUIPMENT RECESSED IN FIRE RATED WALLS AND CEILINGS SHALL BE BOXED WITH EQUIVALENT HOUR RATED CONSTRUCTION.

GENERAL NOTES

17. OUTLET BOXES, UTILIZATION EQUIPMENT CABINETS, CONDUIT SYSTEMS, LIGHTING FIXTURES AND CONVENIENCE OUTLETS SHALL BE GROUNDED AND BONDED IN ALL ELECTRICAL SYSTEMS OPERATING AT 48 VOLTS AND ABOVE. EACH GROUND WIRE SHALL BE TERMINATED AT THE EQUIPMENT GROUND BAR OR TERMINAL. EQUIPMENT GROUND WIRES SHALL BE SIZED PER CEC 250.122.
18. ALL CONDUIT ONLY (C.O.) SHALL HAVE A PULL ROPE CONTAINED WITHIN. LEAVE MINIMUM OF 2'-0" SLACK AT EACH END.
19. ALL CONDUITS SHALL BE A MINIMUM TRADE SIZE OF 3/4".
20. ALL FEEDER AND BRANCH CIRCUIT WIRING SHALL BE COPPER IN RACEWAY, PER SPECIFICATIONS, REGARDLESS OF APPLICATION. NO ALUMINUM WIRING OR MC CABLE OR AC CABLE SHALL BE USED.
21. ALL LIGHTING FIXTURES THAT MAY BE IN CONTACT WITH THE BUILDING'S INSULATION SHALL BE U.L. LISTED FOR SUCH INSTALLATIONS.
22. ALL LIGHTING FIXTURES SHALL BE SUPPORTED FOR SEISMIC RESTRAINT PER REQUIREMENTS OF THE CALIFORNIA BUILDING CODE.
23. ALL EQUIPMENT AND MATERIALS REMOVED BY THE CONTRACTOR SHALL BE LEGALLY DISPOSED OF BY THE CONTRACTOR UNLESS OTHERWISE NOTED.
24. STUB UP AND CAP (6) 3/4" C.O. FROM THE TOP OF EACH FLUSH MOUNTED PANELBOARD TO 6" ABOVE THE ACCESSIBLE CEILING FOR FUTURE USE.
25. FIELD VERIFY EXISTING CONDITIONS AND ADVISE ARCHITECT/ENGINEER OF ANY DISCREPANCIES OR DEVIATIONS BETWEEN PLANS AND ACTUAL CONDITIONS PRIOR TO SUBMITTING BID.
26. IF THERE ARE CONFLICTS WITHIN THESE ELECTRICAL DRAWINGS OR BETWEEN THE ELECTRICAL DRAWINGS AND THE SPECIFICATIONS, OR BETWEEN THE ELECTRICAL DRAWINGS AND ANY MECHANICAL, ARCHITECTURAL, PLUMBING OR STRUCTURAL DRAWING, BID THE MORE EXPENSIVE OR ELABORATE PROCESS OR PROCEDURE SHOWN AND CALL THE DISCREPANCY TO THE ARCHITECT/ENGINEER'S ATTENTION. SHOULD THE CLIENT, IN ITS DISCRETION, CHOOSE TO IMPLEMENT THE CHEAPER OR SIMPLER PROCEDURE AFTER BID OPENING, A CREDIT CHANGE ORDER WILL BE ISSUED TO THE CONTRACTOR.
27. ALL NEW TAPS AT EXISTING SWITCHBOARDS SHALL BE INSTALLED PER SWITCHBOARD MANUFACTURER'S SPECIFICATIONS OR SHALL BE CERTIFIED BY A NRTL CERTIFIED TESTING LAB OR FABRICATOR. THE TAPS SHALL NOT VOID THE U.L. LISTING OF THE EXISTING SWITCHBOARD.
28. ALL COLD WATER PIPE GROUND CONNECTIONS SHALL BE MADE WITHIN 5 FT. OF COLD WATER PIPE ENTRANCE INTO THE BUILDING. (REFERENCE CEC 250.52)
29. WHERE 120V BRANCH CIRCUITS EXCEED 75 FEET IN LENGTH (170 FEET FOR 277V) WIRE SIZE SHALL BE INCREASED TO LIMIT VOLTAGE DROP OF THE BRANCH CIRCUIT PLUS FEEDER TO 5% OR LESS. REFER TO THE BRANCH CIRCUIT VOLTAGE DROP TABLES ON SHEET EXXX FOR REQUIREMENTS. WHEN INCREASED WIRE SIZE IS INDICATED IT SHALL BE PROVIDED THROUGHOUT THE ENTIRE CIRCUIT TO THE LAST OUTLET OR DEVICE.
30. THE FOLLOWING BENDING RADII SHALL BE MAINTAINED FOR ALL UNDERGROUND COMMUNICATION CONDUIT SWEEPS:

CONDUIT SIZE	SWEEP MINIMUM RADIUS
2"	24"
3"	36"
4"	48"

31. COORDINATE ALL DEVICES AT CASEWORK WITH ARCHITECTURAL INTERIOR ELEVATIONS AND CASEWORK SUBMITTALS PRIOR TO ROUGH-IN.
32. ELECTRICAL RECEPTACLE(S) SHALL BE LOCATED WITHIN 18" OF ASSOCIATED TELECOMMUNICATIONS OR AUDIO/VISUAL OUTLET(S) WHERE APPLICABLE. CONTRACTOR SHALL COORDINATE ALL OUTLET LOCATIONS WITH ARCHITECTURAL ELEVATIONS AND CASEWORK SHOP DRAWINGS.
33. COORDINATE ALL FLOOR MOUNTED DEVICES WITH ARCHITECTURAL FURNITURE PLANS PRIOR TO ROUGH-IN.
34. EXIT SIGNS SHALL BE LOCATED AS NECESSARY TO CLEARLY INDICATE THE DIRECTION OF EGRESS TRAVEL. NO POINT SHALL BE MORE THAN 100'-0" FROM THE NEAREST VISIBLE SIGN. EXIT SIGNS SHALL BE READILY VISIBLE FROM ANY DIRECTION OF APPROACH.
35. ALL EXPOSED CABLING ROUTED ABOVE ANY AND ALL CEILINGS SHALL BE PLENUM RATED.
36. WIRING FROM EMERGENCY SOURCES SHALL BE KEPT ENTIRELY SEPARATE AND INDEPENDENT OF ALL OTHER WIRING AND EQUIPMENT, AND SHALL NOT ENTER THE SAME RACEWAY, CABLE BOX OR CABINET WITH OTHER WIRING. (REFERENCE CEC 700.10)

GENERAL NOTES

37. ALL OUTDOOR RECEPTACLES SHALL BE PROVIDED WITH WEATHERPROOF 'WHILE IN USE' COVERS.
38. WHERE ITEMS ARE INDICATED FOR DISCONNECTION OR REMOVAL, REMOVE ALL ASSOCIATED CONDUIT, WIRING, SUPPORTS, AND BOXES BACK TO SOURCE UNLESS OTHERWISE NOTED. REMOVE CONDUIT FLUSH WITH SLAB. PATCH WALLS AND FLOORS NOT SCHEDULED FOR DEMOLITION.
39. SEAL ALL PENETRATIONS OF RATED WALLS WITH U.L. LISTED FIRE STOP SYSTEM.
40. EXPOSED CONDUITS, PULLBOXES AND CONNECTING HARDWARE ASSOCIATED WITH NEW WORK SHALL BE PAINTED TO MATCH THE ADJACENT SURFACE. SURFACES AFFECTED BY DEMOLITION WORK SHALL BE PATCHED, TEXTURED AND PAINTED TO MATCH THE ADJACENT SURFACE.
42. DIVISION 26 CONTRACTOR SHALL CLOSELY COORDINATE THE RACEWAY INSTALLATION WITH THE DIVISION 27 CONTRACTOR. DIVISION 27 SHALL INSTRUCT DIVISION 26 ON THE SPECIAL REQUIREMENTS FOR THE INSTALLATION OF FIBER OPTIC AND CATEGORY 6 RACEWAYS. DIVISION 27 SHALL INSPECT AND ACCEPT RACEWAY SYSTEMS PRIOR TO THE INSTALLATION OF ANY DATA WIRING.
43. FOR ADDITIONAL SYMBOLS REFER TO SHEET ET-0.2.
44. FOR FIRE ALARM SYMBOLS REFER TO SHEET EF-0.1.

TAMPER RESISTANT RECEPTACLES NOTE

TAMPER RESISTANT RECEPTACLES: ALL 15- AND 20-AMPERE 120V AND 250V NON-LOCKING RECEPTACLES PROVIDED BY THIS PROJECT SHALL BE LISTED AS TAMPER RESISTANT PER CEC 406.12 UNLESS OTHERWISE NOTED.

MEP COMPONENT ANCHORAGE NOTE

ALL MECHANICAL, PLUMBING, AND ELECTRICAL COMPONENTS SHALL BE ANCHORED AND INSTALLED PER THE DETAILS ON THE DSA- APPROVED CONSTRUCTION DOCUMENTS. THE FOLLOWING COMPONENTS SHALL BE ANCHORED OR BRACED TO MEET THE FORCE AND DISPLACEMENT REQUIREMENTS PRESCRIBED IN THE 2022 CBC SECTIONS 1617A.1.18 THROUGH 1617A.1.26 AND ASCE 7-16 CHAPTERS 13, 26, AND 30:

1. ALL PERMANENT EQUIPMENT AND COMPONENTS.
2. TEMPORARY, MOVABLE OR MOBILE EQUIPMENT THAT IS PERMANENTLY ATTACHED (E.G. HARD WIRED) TO THE BUILDING UTILITY SERVICES SUCH AS ELECTRICITY, GAS OR WATER. 'PERMANENTLY ATTACHED' SHALL INCLUDE ALL ELECTRICAL CONNECTIONS EXCEPT PLUGS FOR 110/220 VOLT RECEPTACLES HAVING A FLEXIBLE CABLE.
3. TEMPORARY, MOVABLE OR MOBILE EQUIPMENT WHICH IS HEAVIER THAN 400 POUNDS OR HAS A CENTER OF MASS LOCATED 4 FEET OR MORE ABOVE THE ADJACENT FLOOR OR ROOF LEVEL THAT DIRECTLY SUPPORT THE COMPONENT IS REQUIRED TO BE RESTRAINED IN A MANNER APPROVED BY DSA.

THE FOLLOWING MECHANICAL AND ELECTRICAL COMPONENTS SHALL BE POSITIVELY ATTACHED TO THE STRUCTURE BUT NEED NOT DEMONSTRATE DESIGN COMPLIANCE WITH THE REFERENCES NOTED ABOVE. THESE COMPONENTS SHALL HAVE FLEXIBLE CONNECTIONS PROVIDED BETWEEN THE COMPONENT AND ASSOCIATED DUCTWORK, PIPING, AND CONDUIT. FLEXIBLE CONNECTIONS MUST ALLOW MOVEMENT IN BOTH TRANSVERSE AND LONGITUDINAL DIRECTIONS:

A. COMPONENTS WEIGHING LESS THAN 400 POUNDS AND HAVING A CENTER OF MASS LOCATED 4 FEET OR LESS ABOVE THE ADJACENT FLOOR OR ROOF LEVEL THAT DIRECTLY SUPPORT THE COMPONENT.
B. COMPONENTS WEIGHING LESS THAN 20 POUNDS, OR IN THE CASE OF DISTRIBUTED SYSTEMS, LESS THAN 5 POUNDS PER FOOT, WHICH ARE SUSPENDED FROM A ROOF OR FLOOR OR HUNG FROM A WALL.

THE ANCHORAGE OF ALL MECHANICAL, ELECTRICAL AND PLUMBING COMPONENTS SHALL BE SUBJECT TO THE APPROVAL OF THE DESIGN PROFESSIONAL IN GENERAL RESPONSIBLE CHARGE OR STRUCTURAL ENGINEER DELEGATED RESPONSIBILITY AND ACCEPTANCE BY DSA. THE PROJECT INSPECTOR WILL VERIFY THAT ALL COMPONENTS AND EQUIPMENT HAVE BEEN ANCHORED IN ACCORDANCE WITH THE ABOVE REQUIREMENTS.

PIPING, DUCTWORK, AND ELECTRICAL DISTRIBUTION SYSTEM BRACING NOTE

PIPING, DUCTWORK, AND ELECTRICAL DISTRIBUTION SYSTEMS SHALL BE BRACED TO COMPLY WITH THE FORCES AND DISPLACEMENTS PRESCRIBED IN ASCE 7-16 SECTION 13.3 AS DEFINED IN ASCE 7-16 SECTIONS 13.6.5, 13.6.6, 13.6.7, 13.6.8, AND 2022 CBC, SECTIONS 1617A.1.24, 1617A.1.25, AND 1617A.1.26.

THE METHOD OF SHOWING BRACING AND ATTACHMENTS TO THE STRUCTURE FOR THE IDENTIFIED DISTRIBUTION SYSTEM ARE AS NOTED BELOW. WHEN BRACING AND ATTACHMENTS ARE BASED ON A PRE-APPROVED INSTALLATION GUIDE (E.G., HCAi OPM FOR 2013 CBC OR LATER), COPIES OF THE BRACING SYSTEM INSTALLATION GUIDE OR MANUAL SHALL BE AVAILABLE ON THE JOBSITE PRIOR TO THE START OF AND DURING THE HANGING AND BRACING OF THE DISTRIBUTION SYSTEMS. THE STRUCTURAL ENGINEER OF RECORD SHALL VERIFY THE ADEQUACY OF THE STRUCTURE TO SUPPORT THE HANGER AND BRACE LOADS.

MECHANICAL PIPING (MP), MECHANICAL DUCTS (MD), PLUMBING PIPING (PP), ELECTRICAL DISTRIBUTION SYSTEMS (E):

MP ☐ MD ☐ PP ☐ E ☐ - OPTION 1: DETAILED ON THE APPROVED DRAWINGS WITH PROJECT SPECIFIC NOTES AND DETAILS.

MP ☐ MD ☐ PP ☐ E ☒ - OPTION 2: SHALL COMPLY WITH THE APPLICABLE HCAi PRE-APPROVAL (OPM #) 0403, OR APPROVED EQUAL.

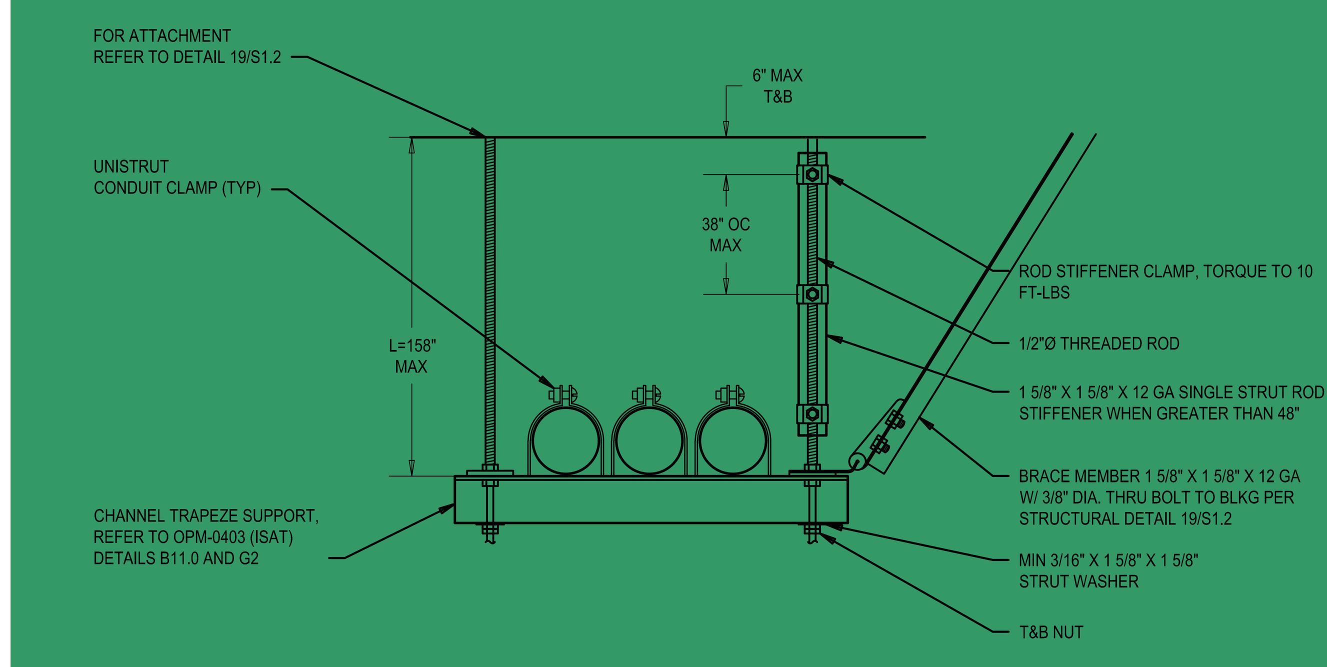

NOTE

OPERATING WEIGHT 60 PLF. REFER TO OPM 0403 FOR ALLOWABLE BRACE ANGLE RANGE AND CONNECTION DETAILS.

CONDUIT TRAPEZE INSTALLATION

NO SCALE

2
E-0.2

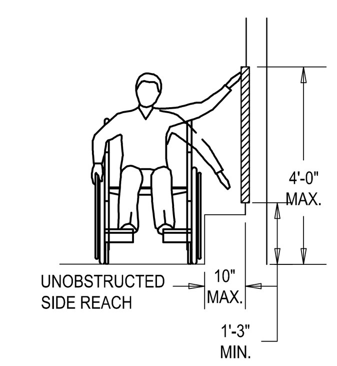

DETAIL NOTES

1. UNOBSTRUCTED: WHERE A CLEAR FLOOR OR GROUND SPACE ALLOWS A PARALLEL APPROACH TO AN ELEMENT AND THE SIDE READ IS UNOBSTRUCTED, THE HIGH SIDE REACH SHALL BE 48 INCHES MAX AND THE LOW SIDE REACH SHALL BE 15INCHES MIN ABOVE FINISH FLOOR OR GROUND.
    A. EXCEPTION: AN OBSTRUCTION SHALL BE PERMITTED BETWEEN THE CLEAR FLOOR OR GROUND SPACE AND THE ELEMENT WHERE THE DEPTH OF THE OBSTRUCTION IS 10 INCHES MAX
2. OBSTRUCTED HIGH REACH: WHERE A CLEAR FLOOR OR GROUND SPACE ALLOWS A PARALLEL APPROACH TO AN ELEMENT AND THE HIGH SIDE REACH IS OVER AN OBSTRUCTION, THE HEIGHT OF THE OBSTRUCTION SHALL BE 34 INCHES MAX AND THE DEPTH OF THE OBSTRUCTION SHALL BE 24 INCHES MAX. THE HIGH SIDE REACH SHALL BE 48 INCHES MAX FOR A REACH DEPTH OF 10 INCHES MAX WHERE THE REACH DEPTH EXCEEDS 10 INCHES, THE HIGH SIDE REACH SHALL BE 46 INCHES MAX FOR A REACH DEPTH OF 24 INCHES MAX.
3. OPERATION: OPERABLE PARTS SHALL BE OPERABLE WITH ONE HAND AND SHALL NOT REQUIRE TIGHT GRASPING, PINCHING, OR TWISTING OF THE WRIST. THE FORCE REQUIRED TO ACTIVATE OPERABLE PARTS SHALL BE 5 POUNDS MAX

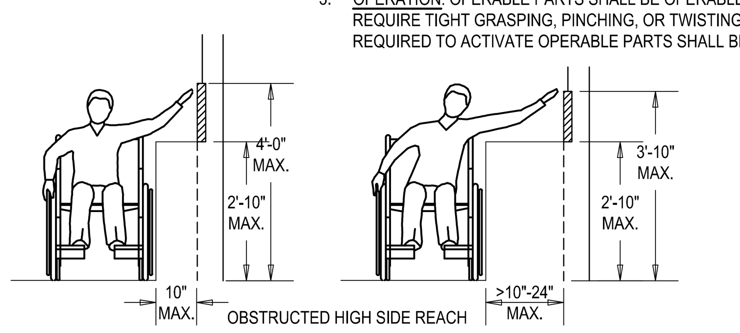

OBSTRUCTED HIGH SIDE REACH

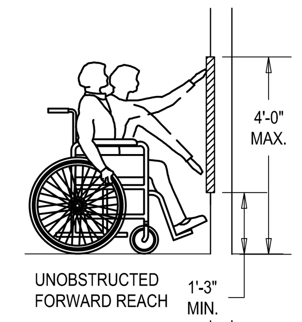

DETAIL NOTES

1. UNOBSTRUCTED: WHERE A FORWARD REACH IS UNOBSTRUCTED, THE HIGH FORWARD REACH SHALL BE 48 INCHES MAX AND THE LOW FORWARD REACH SHALL BE 15 INCHES MIN ABOVE FINISH FLOOR OR GROUND.
2. OBSTRUCTED HIGH REACH: WHERE A CLEAR FLOOR OR GROUND SPACE ALLOWS A FORWARD REACH IS OVER AN OBSTRUCTION, THE CLEAR SPACE SHALL EXTEND BENEATH THE ELEMENT FOR A DISTANCE NOT LESS THAN THE REQUIRED REACH DEPTH OVER THE OBSTRUCTION AND THE DEPTH OF THE OBSTRUCTION SHALL BE 25 INCHES MAX. THE HIGH FORWARD REACH SHALL BE 48 INCHES MAX FOR A REACH DEPTH OF 20 INCHES, THE HIGH FORWARD REACH SHALL BE 44 INCHES MAX FOR A DEPTH OF 25 INCHES MAX
3. OPERATION: OPERABLE PARTS SHALL BE OPERABLE WITH ONE HAND AND SHALL NOT REQUIRE TIGHT GRASPING, PINCHING, OR TWISTING OF THE WRIST. THE FORCE REQUIRED TO ACTIVATE OPERABLE PARTS SHALL BE 5 POUNDS MAX

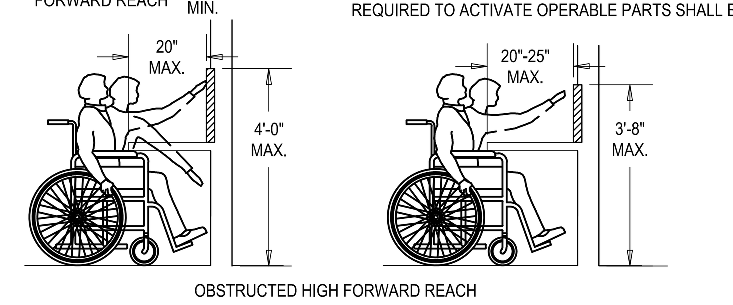

OBSTRUCTED HIGH FORWARD REACH

REACH RANGES - SIDE & FORWARD

NO SCALE

1
E-0.2

NOTE:

1. CONTRACTOR SHALL NOTIFY ELECTRICAL ENGINEER OF CONSTRUCTION DOCUMENT DESIGN CONFLICTS WITH MOUNTING HEIGHT LIMITS OVER OBSTRUCTIONS DETAIL PRIOR TO START OF WORK.

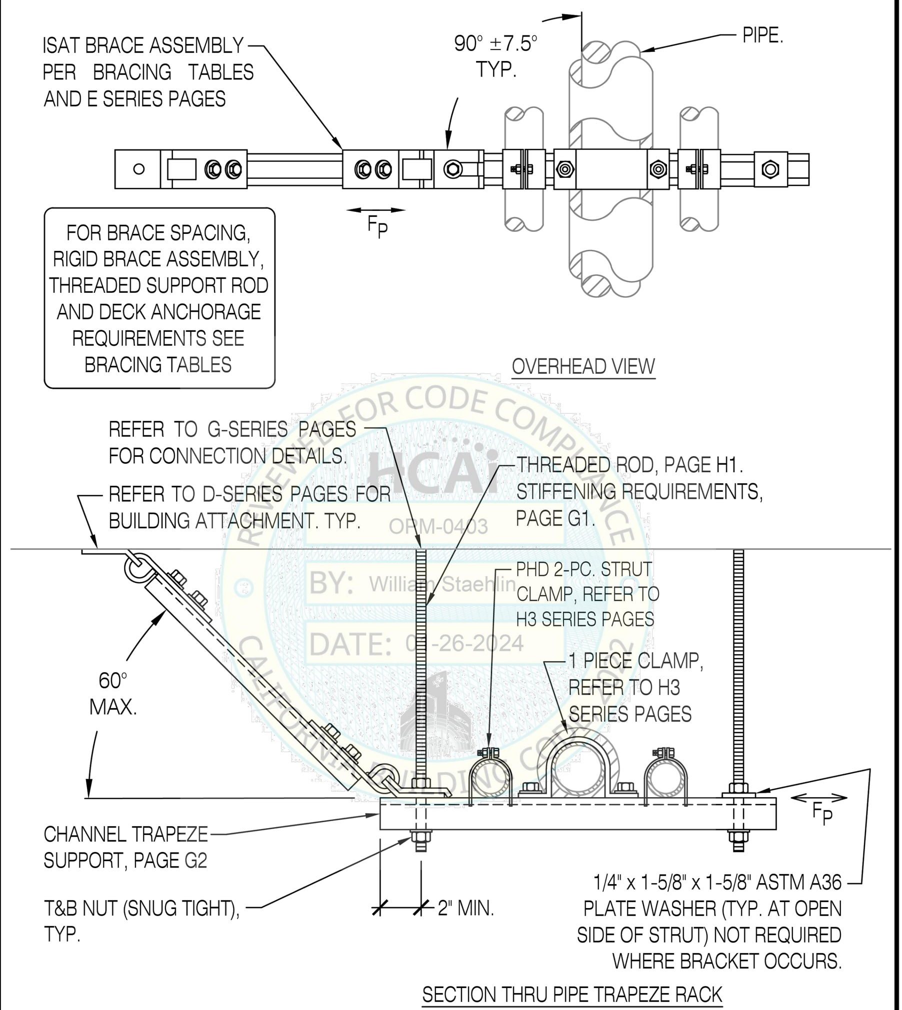

PIPE TRAPEZE RACK
1-WAY TRANSVERSE, RIGID BRACING

International Seismic Application Technology
14848 Northam Street, La Mirada, CA 90638
877-999-4728 (Toll Free) 714-523-0845 (fax)
www.isatsb.com
A Division of Tomarco Contractor Specialties

Rev. 2
06/26/18
Page
B11.0

STRUT CHANNEL
MAXIMUM TRAPEZE VERTICAL LOADS [1, 5]

"A1" SINGLE CHANNEL (1 5/8" X 13/16" X 12 GA) — MAXIMUM TOTAL UNIFORM LOAD

MAXIMUM SPAN Inch	SOLID CHANNEL Lbs	PUNCHED HOLES Lbs	SHORT SLOTS CHANNEL Lbs	DEFLECTION Inch
18	560	510	480	0.05
24	420	380	360	0.09
36	280	250	240	0.19
48	210	190	180	0.34

"A2" BACK TO BACK CHANNEL [3] (1 5/8" X 13/16" X 12 GA) — MAXIMUM TOTAL UNIFORM LOAD

MAXIMUM SPAN Inch	SOLID CHANNEL Lbs	PUNCHED HOLES Lbs	SHORT SLOTS CHANNEL Lbs	DEFLECTION Inch
18	1,270	1,140	1,080	0.03
24	1,170	1,050	990	0.05
36	780	700	660	0.12
48	580	530	500	0.21
60	470	420	400	0.33
72	390	350	330	0.47
96	280	250	240	0.80

"B1" SINGLE CHANNEL (1 5/8" X 1 5/8" X 12 GA) — MAXIMUM TOTAL UNIFORM LOAD

MAXIMUM SPAN Inch	SOLID CHANNEL Lbs	PUNCHED HOLES Lbs	SHORT SLOTS CHANNEL Lbs	DEFLECTION Inch
18	1,870	1,680	1,590	0.03
24	1,400	1,260	1,190	0.05
36	940	840	790	0.10
48	700	630	600	0.18
60	560	510	480	0.29
72	470	420	400	0.42
84	400	380	340	0.57
96	350	320	300	0.74
108	300	270	250	0.90
120	240	220	210	0.99

"B2" BACK TO BACK CHANNEL [3] (1 5/8" X 1 5/8" X 12 GA) — MAXIMUM TOTAL UNIFORM LOAD

MAXIMUM SPAN Inch	SOLID CHANNEL Lbs	PUNCHED HOLES Lbs	SHORT SLOTS CHANNEL Lbs	DEFLECTION Inch
18	2,610	2,350	2,220	0.01
24	2,610	2,350	2,220	0.02
36	2,610	2,350	2,220	0.06
48	1,990	1,790	1,690	0.10
60	1,590	1,430	1,350	0.16
72	1,320	1,190	1,130	0.23
84	1,130	1,020	960	0.32
96	990	890	840	0.42
108	880	790	750	0.53
120	790	710	670	0.65

"C1" SINGLE CHANNEL (1 5/8" X 3 1/4" X 12 GA) — MAXIMUM TOTAL UNIFORM LOAD

MAXIMUM SPAN Inch	SOLID CHANNEL Lbs	PUNCHED HOLES Lbs	SHORT SLOTS CHANNEL Lbs	DEFLECTION Inch
18	5,810	5,230	4,930	0.01
24	4,350	3,920	3,700	0.02
36	2,900	2,610	2,470	0.05
48	2,180	1,960	1,850	0.10
60	1,740	1,570	1,480	0.15
72	1,450	1,310	1,230	0.22
84	1,250	1,120	1,060	0.30
96	1,090	980	930	0.39
108	970	870	820	0.49
120	870	790	740	0.60

"C2" BACK TO BACK CHANNEL [3] (1 5/8" X 3 1/4" X 12 GA) — MAXIMUM TOTAL UNIFORM LOAD

MAXIMUM SPAN Inch	SOLID CHANNEL Lbs	PUNCHED HOLES Lbs	SHORT SLOTS CHANNEL Lbs	DEFLECTION Inch
18	5,130	4,620	4,360	0.00
24	5,130	4,620	4,360	0.01
36	5,130	4,620	4,360	0.02
48	5,130	4,620	4,360	0.04
60	5,130	4,620	4,360	0.08
72	4,440	3,990	3,770	0.12
84	3,800	3,420	3,230	0.16
96	3,330	2,990	2,830	0.21
108	2,960	2,660	2,510	0.26
120	2,660	2,400	2,260	0.33

1. ALLOWANCE INCLUDED FOR CONCURRENT VERTICAL SEISMIC FORCE 0.14 S_{DS} W_P PER ASCE 7-10 SEC. 13.3.1.
2. STRUT SPAN IS THE DISTANCE BETWEEN THE VERTICAL HANGER RODS.
3. REFER TO "G" SERIES PAGES FOR VERTICAL SUPPORT CONNECTIONS.
4. FOR CONCENTRATED LOAD AT CENTER OF SPAN, DIVIDE UNIFORM LOAD BY 2 AND MULTIPLY DEFLECTION BY 0.8.

STRUT CHANNEL TRAPEZE MAXIMUM VERTICAL LOADS

International Seismic Application Technology
14848 Northam Street, La Mirada, CA 90638
877-999-4728 (Toll Free) 714-523-0845 (fax)
www.isatsb.com
A Division of Tomarco Contractor Specialties

Rev. 7
02/23/18
Page
G2

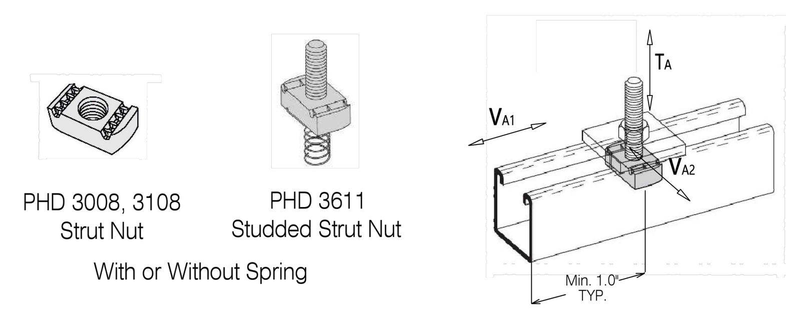

PHD PART#	Thread Size Inch	Pull-Out Strength T_A Lbs	Resistance To Slip (Parallel) V_{A1} Lbs	Shear Strength (Perpend.) V_{A2} Lbs	Bolt [2] Torque Ft-Lbs	Nut Thickness Inch
3008/3108/3611	1/2-13	3,250	1,850	1,415	50	1/2

DESIGN VALUES IN 12 GA. STRUT (ASD) WITHOUT PRYING [1]

Steel : ASTM A-576, Grade M1015 Case Hardened to RC25 Min.

1. Check for unity when determining allowed combined tenion and shear capacity: $T / T_A + V_1 / V_{A1} + V_2 / V_{A2} \leq 1.2$
2. Hex Bolt With Std Hex Nut Only. For Studded Strut Nut With Tite-End Fastener (Pg F14), Tighten Till Hex Head Shears Off.
3. Effects of prying to be analyzed when brace attachments are used.

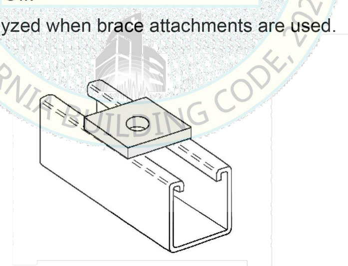

SQUARE WASHER (1-5/8" x 1-5/8" x 1/4" TYP.)
FOR 3/8", 1/2", 5/8" DIA. ROD OR BOLT
STEEL: ASTM A-1011, GRADE 33

STRUT NUTS, SQUARE WASHERS

International Seismic Application Technology
14848 Northam Street, La Mirada, CA 90638
877-999-4728 (Toll Free) 714-523-0845 (fax)
www.isatsb.com
A Division of Tomarco Contractor Specialties

Rev. 10
10/05/18
Page
H3.3

NOTE

REFER TO SHEET E-5.0 FOR OPM-0403 (ISAT) DETAILS H2.1 AND H3.1.6

IDENTIFICATION STAMP
DIV. OF THE STATE ARCHITECT
APP: 04-122772 INC:
REVIEWED FOR
SS ☑ FLS ☑ ACS ☑
DATE: 03/26/2024

SPROTTE | WATSON
ARCHITECTURE | PLANNING

LICENSED ARCHITECT C12359 REN. OCTOBER 2025 STATE OF CALIFORNIA

CONSULTANT

REGISTERED PROFESSIONAL ENGINEER DALE M. FRANCHAK No.11533 exp.6/30/24 ELECTRICAL STATE OF CALIFORNIA
01/25/24

TURPIN & RATTAN
ENGINEERING, INC.
CONSULTING ENGINEERS
4719 PALM AVENUE
LA MESA, CA 91941-5221
619 / 466 / 6224 FAX 466 / 6233
E-MAIL: ENGINEER@TREISD.COM
TREI PROJECT # 22277.S01
M.DELUNA 02/23/24 - 8:38AM

DEHESA ELEMENTARY SCHOOL
CONSTRUCTION DOCUMENTS
DEHESA SCHOOL DISTRICT
4612 DEHESA ROAD
EL CAJON, CA 92019

REVISIONS

DESCRIPTION

ELECTRICAL GENERAL NOTES

DATE

01.25.24

JOB #

22-0400

SHEET #

E-0.2

7/12/2018 1:34:44 PM

LIGHTING FIXTURE SCHEDULE

FIXTURE TYPE	MANUFACTURER AND CATALOG NUMBER (SEE FIXTURE NOTE 3)	EQUIVALENT MANUFACTURER SUBJECT TO APPROVAL OF SHOP DRAWINGS	LAMPS TYPE	LAMPS WATTS	LAMPS COLOR TEMP.	FIXTURE INPUT VOLTS	FIXTURE TOTAL INPUT WATTS	DRIVER TYPE (SEE FIXTURE NOTE 1)	MOUNTING	DESCRIPTION	FIXTURE WEIGHT	MOUNTING DETAILS
A	LITHONIA LIGHTING ENVX-2x2-HRG-4000LM-90CRI-40K-MIN10-EZT-MVOLT	OR EQUAL (INCLUDING EQUAL OR GREATER DELIVERED LUMEN OUTPUT AND EQUAL OR LESS TOTAL FIXTURE WATTAGE)	LED	36	4000°K	120	36	DIMMING	CEILING RECESSED	2' X 2', RECESSED GRID MOUNTED 3547 LUMEN HIGH PERFORMANCE LED TROFFER WITH SMOOTH ACRLYIC LENS, HOURGLASS DESIGN, AND INTEGRAL 0-10V DIMMING DRIVER.	15 LBS	SEE DETAIL 1/E-5.0 AND FIXTURE NOTE 4
B	A-LIGHT ATL2-32-ILS+DLS-40-90CRI-U-S-W-1-D	OR EQUAL (INCLUDING EQUAL OR GREATER DELIVERED LUMEN OUTPUT AND EQUAL OR LESS TOTAL FIXTURE WATTAGE)	LED	75.4	4000°K	120	75.4	DIMMING	SUSPENDED (+96" AFF)	32" DIAMETER SUSPENDED LED FIXTURE, INDIRECT (1879 LUMEN) /DIRECT (5241 LUMEN)	26 LBS	SEE DETAILS 2/E-5.0, 4/E-5.0, 5/E-5.0, AND 7/E-5.0
C	SCHMITZ RAS-1000-840-SP-UNV-DA SHADE: RSH-AS-1000- POPPY ORANGE 420-LEMON 405	OR EQUAL (INCLUDING EQUAL OR GREATER DELIVERED LUMEN OUTPUT AND EQUAL OR LESS TOTAL FIXTURE WATTAGE)	LED	69	4000°K	120	69	DIMMING	SUSPENDED (+96" AFF)	DECORATIVE LED LUMINAIRE WITH 4 1/2" HEIGHT SHADE 6300 LUMEN AND INTEGRAL 0-10V DIMMING DRIVER. OUTSIDE COLOR = POPPY ORANGE (420), INSIDE COLOR = LEMON (405)	11.9 LBS	SEE DETAILS 2/E-5.0, 4/E-5.0, 5/E-5.0, AND 7/E-5.0
C1	SCHMITZ RAS-1000-840-SP-UNV-DA SHADE: RSH-AS-1000- LIME GREEN 418-LEMON 405	OR EQUAL (INCLUDING EQUAL OR GREATER DELIVERED LUMEN OUTPUT AND EQUAL OR LESS TOTAL FIXTURE WATTAGE)	LED	69	4000°K	120	69	DIMMING	SUSPENDED (+96" AFF)	DECORATIVE LED LUMINAIRE WITH 4 1/2" HEIGHT SHADE 6300 LUMEN AND INTEGRAL 0-10V DIMMING DRIVER. OUTSIDE COLOR = LIME GREEN (418), INSIDE COLOR = LEMON (405)	11.9 LBS	SEE DETAILS 2/E-5.0, 4/E-5.0, 5/E-5.0, AND 7/E-5.0
C2	SCHMITZ RAS-1000-840-SP-UNV-DA SHADE: RSH-AS-1000- ROYAL BLUE 416-LEMON 405	OR EQUAL (INCLUDING EQUAL OR GREATER DELIVERED LUMEN OUTPUT AND EQUAL OR LESS TOTAL FIXTURE WATTAGE)	LED	69	4000°K	120	69	DIMMING	SUSPENDED (+96" AFF)	DECORATIVE LED LUMINAIRE WITH 4 1/2" HEIGHT SHADE 6300 LUMEN AND INTEGRAL 0-10V DIMMING DRIVER. OUTSIDE COLOR = ROYAL BLUE (416), INSIDE COLOR = LEMON (405)	11.9 LBS	SEE DETAILS 2/E-5.0, 4/E-5.0, 5/E-5.0, AND 7/E-5.0
C3	SCHMITZ RAS-1000-840-SP-UNV-DA SHADE: RSH-AS-1000- LEMON 405-POPPY ORANGE 420	OR EQUAL (INCLUDING EQUAL OR GREATER DELIVERED LUMEN OUTPUT AND EQUAL OR LESS TOTAL FIXTURE WATTAGE)	LED	69	4000°K	120	69	DIMMING	SUSPENDED (+96" AFF)	DECORATIVE LED LUMINAIRE WITH 4 1/2" HEIGHT SHADE 6300 LUMEN AND INTEGRAL 0-10V DIMMING DRIVER. OUTSIDE COLOR = LEMON (405) , INSIDE COLOR = POPPY ORANGE (420)	11.9 LBS	SEE DETAILS 2/E-5.0, 4/E-5.0, 5/E-5.0, AND 7/E-5.0
D	LUMENPULSE LUMENLINE LL12R-120-C10-Dro 40k-WW-DIM-FGL-TRIM/BODY FINISH	OR EQUAL (INCLUDING EQUAL OR GREATER DELIVERED LUMEN OUTPUT AND EQUAL OR LESS TOTAL FIXTURE WATTAGE)	LED	6W / FT	4000°K	120	60	DIMMING	RECESSED CEILING	ASYMMETRIC WALL WASH LED LINEAR FIXTURE 482 LUMEN/ FT AND INTEGRAL 0-10V DIMMING. FINISHES PER ARCHITECT.	2.38 LBS/FT	SEE DETAIL 1/E-5.0 AND FIXTURE NOTE 4
E	LITHONIA LIGHTING LE SERIES LE-S-FINISH-1-G-ELN-VR-SD-MOUNTING HARDWARE	OR EQUAL (INCLUDING EQUAL OR GREATER DELIVERED LUMEN OUTPUT AND EQUAL OR LESS TOTAL FIXTURE WATTAGE)	LED	-	4000°K	120	-	ELECTRONIC	VARIES (+96" AFF UON)	LED EXIT SIGN WITH DIE-CAST ALUMINUM HOUSING, GREEN LETTERS, DIRECTIONAL ARROWS AS INDICATED, MAINTENANCE FREE NICKEL CADMIUM BATTERY WITH 90 MINUTE RATING AND SELF-DIAGNOSTICS. PROVIDE APPLICABLE MOUNTING REQUIRED AT EACH LOCATION. FINISH PER ARCHITECT.		
X	BEGHELLI TEMPESTA LED TA-LED-ECO-SE-UNV-AT-S	OR EQUAL (INCLUDING EQUAL OR GREATER DELIVERED LUMEN OUTPUT AND EQUAL OR LESS TOTAL FIXTURE WATTAGE)	LED	17	4000°K	120	17	-	SURFACE WALL	17" LONG X 6.5" WIDE X 3.5" DEEP 1300 LUMEN LED EMERGENCY LIGHT FIXTURE WITH NICKEL METAL HYDRIDE BATTERY RATED FOR 90 MINUTE OPERATION, AUTOMATIC AUTOTEST FUNCTION, FLAME RESISTANCE POLYCARBONATE HOUSING, VANDAL RESISTANT CLIPS AND GRAY FINISH. LISTED FOR WET LOCATIONS.	16 LBS	

FIXTURE NOTES

1	FIXTURE CONNECTIONS SHALL BE AS INDICATED ON THE PLANS AND SHALL COMPLY WITH THE APPLICABLE REQUIREMENTS OF TITLE 24, CALIFORNIA ENERGY EFFICIENCY REGULATIONS.
2	ALL TROFFER FIXTURES RECESSED IN SUSPENDED GRID CEILINGS SHALL BE FACTORY FURNISHED WITH EARTHQUAKE CLIPS (EQC), MINIMUM OF 4 PER FIXTURE. IN ADDITION, FIXTURES SHALL BE SUPPORTED FROM THE OVERHEAD BUILDING STRUCTURE, INDEPENDENTLY FROM THE SUSPENDED CEILING SYSTEM.
3	CATALOG NUMBERS ARE BASED ON VENDOR INFORMATION, SALES LITERATURE AND PHOTOMETRIC DATA ON HAND AT THE TIME OF PROJECT DESIGN BY TURPIN & RATTAN ENGINEERING, INC. AND ARE INTENDED TO CONVEY THE FEATURES/PERFORMANCE REQUIRED. EACH FIXTURE MUST BE PROVIDED COMPLETE WITH ALL FITTINGS AS APPROPRIATE FOR PROPER MOUNTING AT THE LOCATIONS INDICATED.
4	MOUNTING SHALL INCLUDE CONCEALED SOLID BLOCKING FOR FIXTURES MOUNTED IN/ON WALLS AND CEILINGS, EXCEPT AT SUSPENDED CEILINGS WHERE SEISMIC ANCHORING AND/OR RESTRAINT SHALL BE PROVIDED. ALL LIGHT FIXTURES SHALL BE INSTALLED PER THE CALIFORNIA BUILDING CODE.

EMERGENCY FIXTURE CONNECTIONS

ALL LIGHT FIXTURES WITH INTEGRAL BATTERY PACKS REQUIRE PERMANENT UNSWITCHED POWER TO ENSURE THE BATTERY IS NEVER ALLOWED TO COMPLETELY DISCHARGE.

DO NOT CONNECT THESE FIXTURES TO TEMPORARY BUILDING CONSTRUCTION POWER.

CONNECT ONLY TO PERMANENT BUILDING POWER WHEN AVAILABLE, AND ACCORDING TO THE RESPECTIVE MANUFACTURER'S RECOMMENDATIONS.

SHEET NOTES

1	LIGHTING CONTROLS VENDOR SHALL BE RESPONSIBLE FOR PROVIDING ALL PLENUM RATED COMMUNICATIONS CABLING WITH TERMINATIONS, TOGETHER WITH COORDINATION AS NECESSARY FOR THE SUPPLY OF ALL INTEGRATED LIGHTING CONTROL INTERFACE DEVICES IN ALL LIGHT FIXTURES IRRESPECTIVE OF FIXTURE MANUFACTURER TO OFFER A FULLY OPERABLE TITLE 24 COMPLIANT LIGHTING CONTROL SYSTEM.
2	CONTRACTOR SHALL PROVIDE TWO (2) WIRELESS CONFIGURATION TOOLS COMPATIBLE WITH THE LIGHTING CONTROL SYSTEM USED ON THIS PROJECT (WATTSTOPPER CAT #LMCT-100, OR EQUAL IF OTHER MANUFACTURER). TURN OVER TO DISTRICT'S REPRESENTATIVE AT PROJECT COMPLETION.
3	THE LIGHTING CONTROL DIAGRAMS ARE REFLECTIVE OF LIGHTING CONTROL SYSTEMS MANUFACTURED BY COOPER-GREENGATE, N-LIGHT OR WATTSTOPPER. OTHER LIGHTING CONTROL SYSTEM MANUFACTURERS MAY NOT BE FULLY OR SATISFACTORILY REPRESENTED HEREIN. ADDITIONAL COMPONENTS MAY BE REQUIRED TO MAKE THE CONTROL SYSTEM FULLY OPERATIVE (AT NO ADDITIONAL COST TO THE DISTRICT) IF ALTERNATIVE MANUFACTURERS ARE SELECTED FOR THIS PROJECT.
4	PRIOR TO INSTALLATION OF LIGHT FIXTURES FOR THIS PROJECT, WE RECOMMEND THAT THE CONTRACTOR 'BENCH-TEST' EACH FIXTURE TYPE WITH THE CHOSEN LIGHTING CONTROL SYSTEM AND EACH TYPE OF DIMMING CONTROL STATION, TO ENSURE FULL COMPATIBILITY AND SATISFACTORY OPERATION OF ALL FIXTURE/CONTROL SYSTEM CONFIGURATIONS.

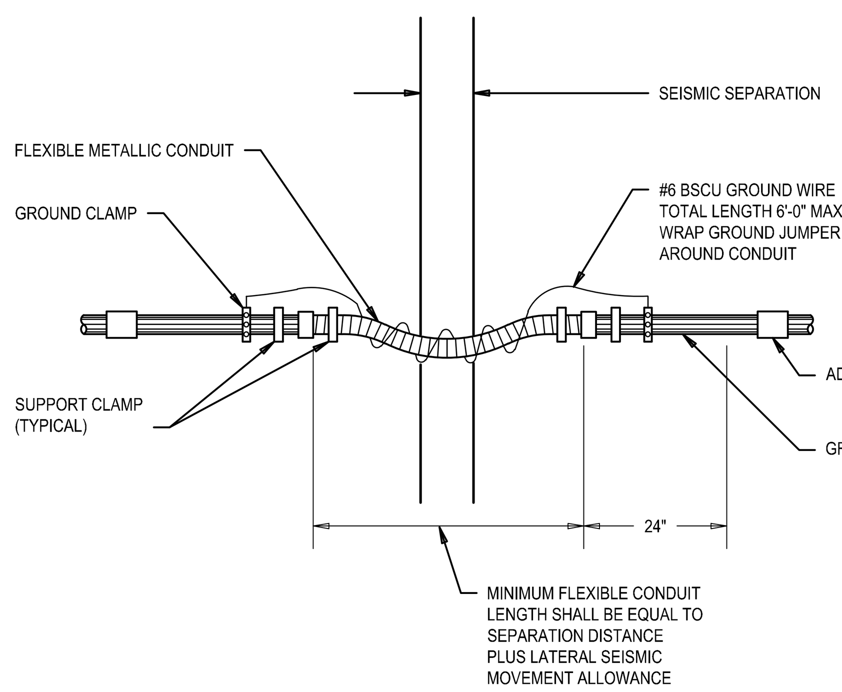

CONDUIT CROSSING AT SEISMIC GAPS (1 / E-0.3)

NO SCALE

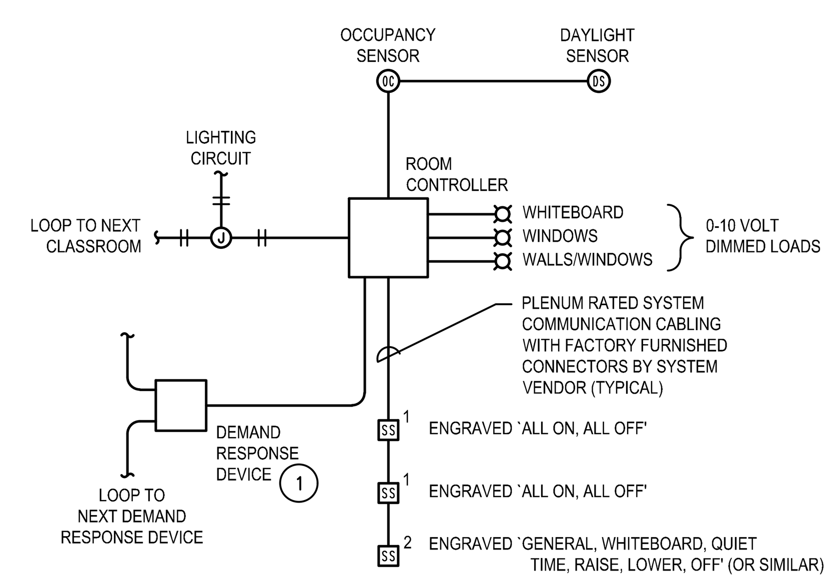

DETAIL KEYNOTES

1. MAY BE INTEGRAL TO ROOM CONTROLLER.

CLASSROOM LIGHTING CONTROL BLOCK DIAGRAM (2 / E-0.3)

NO SCALE

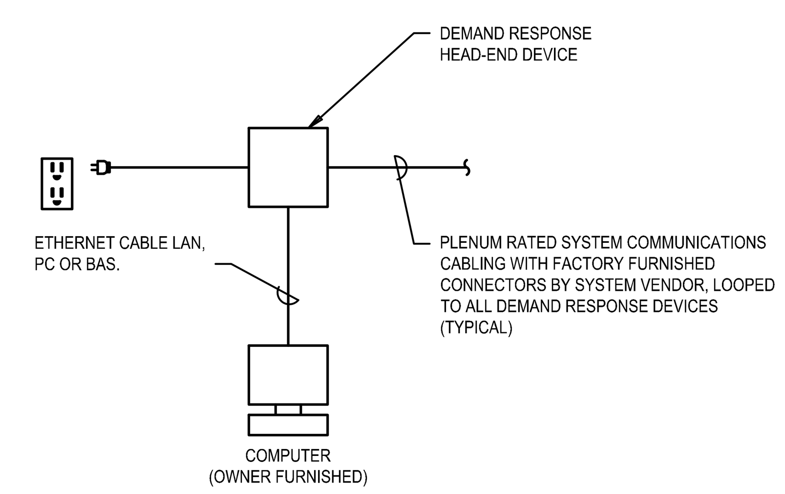

DEMAND RESPONSE HEAD-END CONTROL BLOCK DIAGRAM (3 / E-0.3)

NO SCALE

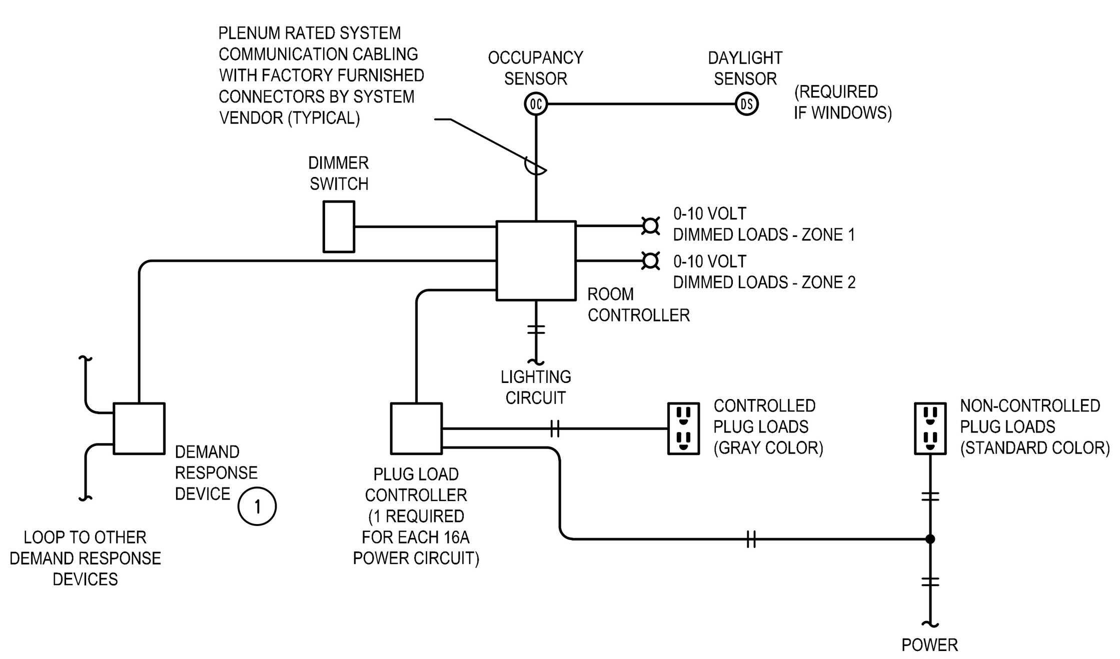

DETAIL KEYNOTES

1. MAY BE INTEGRAL TO ROOM CONTROLLER.

1-2 ZONE OFFICE LIGHTING/POWER CONTROL BLOCK DIAGRAM (4 / E-0.3)

NO SCALE

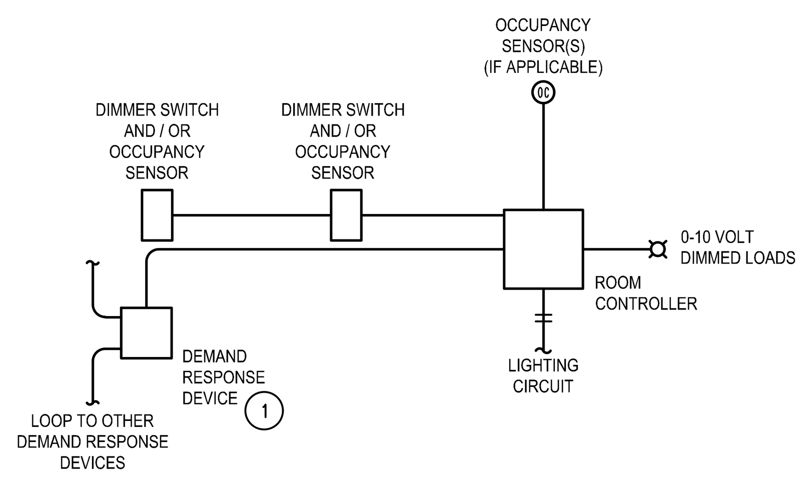

DETAIL KEYNOTES

1. MAY BE INTEGRAL TO ROOM CONTROLLER.

STORAGE AND CORRIDOR LIGHTING CONTROL BLOCK DIAGRAM (5 / E-0.3)

NO SCALE

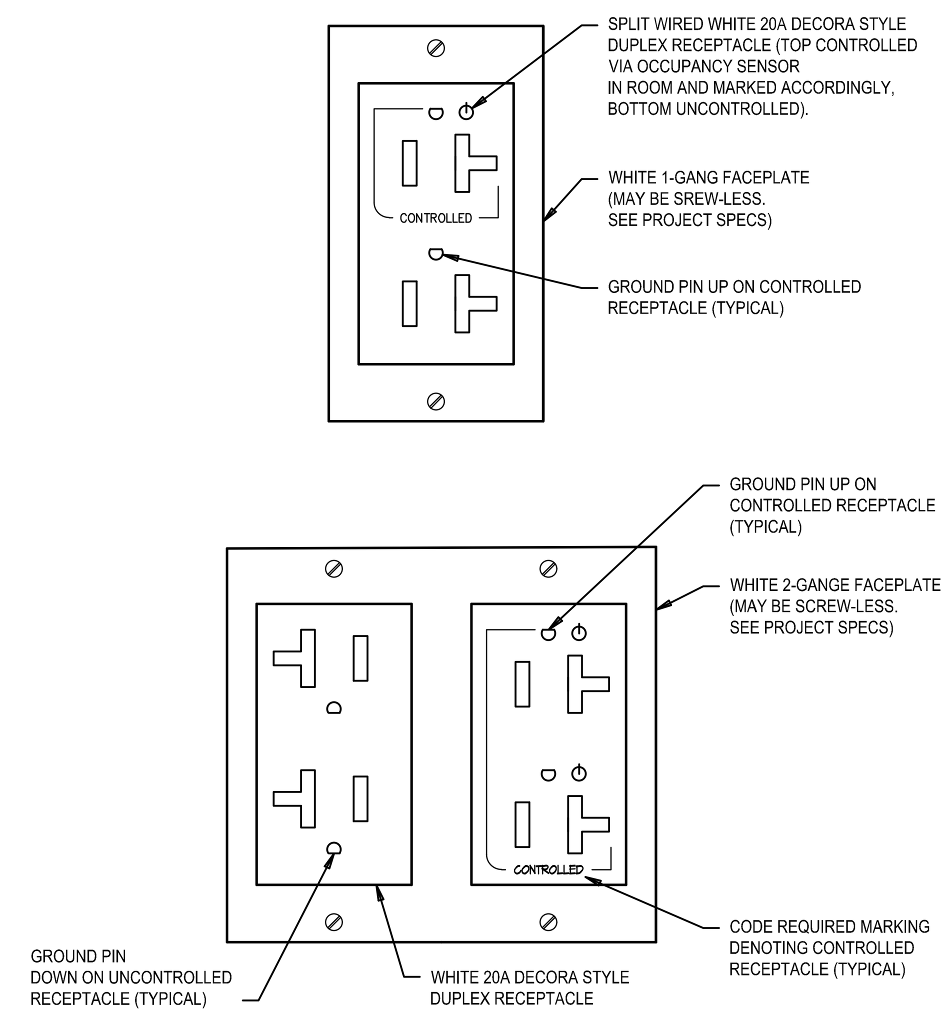

CONTROLLED/UNCONTROLLED RECEPTACLES (6 / E-0.3)

NO SCALE

(SHOWN ON DRAWINGS AS [symbol] AND [symbol] RESPECTIVELY)

LEGEND

SYMBOL	DESCRIPTION
DS	DAYLIGHT SENSOR (SINGLE OR MULTI-ZONE). SYMBOL INDICATES A DAYLIGHT SENSOR OR SENSORS ARE REQUIRED IN THE RESPECTIVE DAYLIT/SKYLIT ZONE(S). EXACT TYPE(S), QUANTITY AND PHYSICAL PLACEMENT WITHIN THE RESPECTIVE ZONE SHALL BE DETERMINED BY THE EQUIPMENT VENDOR AT TIME OF BID. COORDINATION WITH THE COMMISSIONING TEAM DURING CONSTRUCTION IS REQUIRED. DAYLIGHT SETTINGS SHALL BE FINALLY ADJUSTED AFTER FURNITURE, FINAL FINISHES, AND ALL LIGHTING EQUIPMENT ARE INSTALLED AND MADE OPERATIONAL. SENSORS SHALL NOT BE PLACED IN DIRECT SUNLIGHT NOR IN DIRECT ILLUMINATION FROM LIGHT FIXTURES. DEVICE SETTINGS SHALL REDUCE ILLUMINATION LIGHTING POWER BY A MINIMUM OF 65% WHEN DAYLIGHT ILLUMINANCE IS 150% OF DESIGN ILLUMINANCE.
SS	SCENE SWITCH
OC	INDICATES AN OCCUPANCY SENSOR FEATURE IS REQUIRED IN THIS SPACE/ROOM/AREA. EXACT TYPE(S), QUANTITY AND PHYSICAL PLACEMENT WITHIN THE SPACE/ROOM/AREA SHALL BE DETERMINED BY THE EQUIPMENT VENDOR AT TIME OF BID. COORDINATION WITH THE COMMISSIONING TEAM DURING CONSTRUCTION IS REQUIRED. OCCUPANCY SETTINGS SHALL BE FINALLY ADJUSTED AFTER FURNITURE, FINAL FINISHES, AND ALL LIGHTING EQUIPMENT ARE INSTALLED AND MADE OPERATIONAL.

SHEET NOTES

1. LIGHTING CONTROLS VENDOR SHALL BE RESPONSIBLE FOR PROVIDING ALL PLENUM RATED COMMUNICATIONS CABLING WITH FACTORY FURNISHED CONNECTORS, TOGETHER WITH COORDINATION AS NECESSARY FOR THE SUPPLY OF ALL INTEGRATED LIGHTING CONTROL INTERFACE DEVICES IN ALL LIGHT FIXTURES IRRESPECTIVE OF FIXTURE MANUFACTURER TO OFFER A FULLY OPERABLE TITLE 24 COMPLIANT LIGHTING CONTROL SYSTEM.
2. CONTRACTOR SHALL PROVIDE TWO (2) WIRELESS CONFIGURATION TOOLS COMPATIBLE WITH THE LIGHTING CONTROL SYSTEM USED ON THIS PROJECT (WATTSTOPPER CAT #LMCT-100, OR EQUAL IF OTHER MANUFACTURER).TURN OVER TO DISTRICT AT PROJECT COMPLETION.
3. THESE CONTROL DIAGRAMS ARE REFLECTIVE OF LIGHTING CONTROL SYSTEMS MANUFACTURED BY COOPER-GREENGATE, N-LIGHT OR WATTSTOPPER. OTHER LIGHTING CONTROL SYSTEM MANUFACTURERS MAY NOT BE FULLY OR SATISFACTORILY REPRESENTED HEREIN. ADDITIONAL COMPONENTS MAY BE REQUIRED TO MAKE THE CONTROL SYSTEM FULLY OPERATIVE (AT NO ADDITIONAL COST TO THE DISTRICT) IF ALTERNATIVE MANUFACTURERS ARE SELECTED FOR THIS PROJECT.

IDENTIFICATION STAMP
DIV. OF THE STATE ARCHITECT
APP: 04-122772 INC:
REVIEWED FOR
SS ☑ FLS ☑ ACS ☑
DATE: 03/26/2024

SPROTTE | WATSON
ARCHITECTURE | PLANNING

LICENSED ARCHITECT C12359 REN. OCTOBER 2025 STATE OF CALIFORNIA

CONSULTANT

REGISTERED PROFESSIONAL ENGINEER DALE M. FRANCHAK No.11533 exp.6/30/24 ELECTRICAL STATE OF CALIFORNIA

01/25/24

TURPIN & RATTAN Engineering, Inc.
Consulting Engineers
4719 PALM AVENUE
LA MESA, CA 91941-5221
619 / 466 / 6224 fax 466 / 6233
E-MAIL: engineer@treisd.com

TREI PROJECT # 22277.S01
h.lozano 01/25/24 - 1:07pm

DEHESA ELEMENTARY SCHOOL
CONSTRUCTION DOCUMENTS
DEHESA SCHOOL DISTRICT
4612 DEHESA ROAD
EL CAJON, CA 92019

REVISIONS

DESCRIPTION

INTERIOR LIGHTING FIXTURE SCHEDULE

DATE

01.25.24

JOB #

22-0400

SHEET #

E-0.3

7/12/2018 1:34:44 PM

KEYNOTES

057 REMOVE CONDUIT AND WIRING BACK TO SOURCE. REMOVE CONDUIT WHERE ACCESSIBLE AND ABANDON CONDUIT(S) IN PLACE WHERE NOT ACCESSIBLE. REFER TO SINGLE LINE DIAGRAM, SHEET E-6.0 FOR ADDITIONAL INFORMATION.

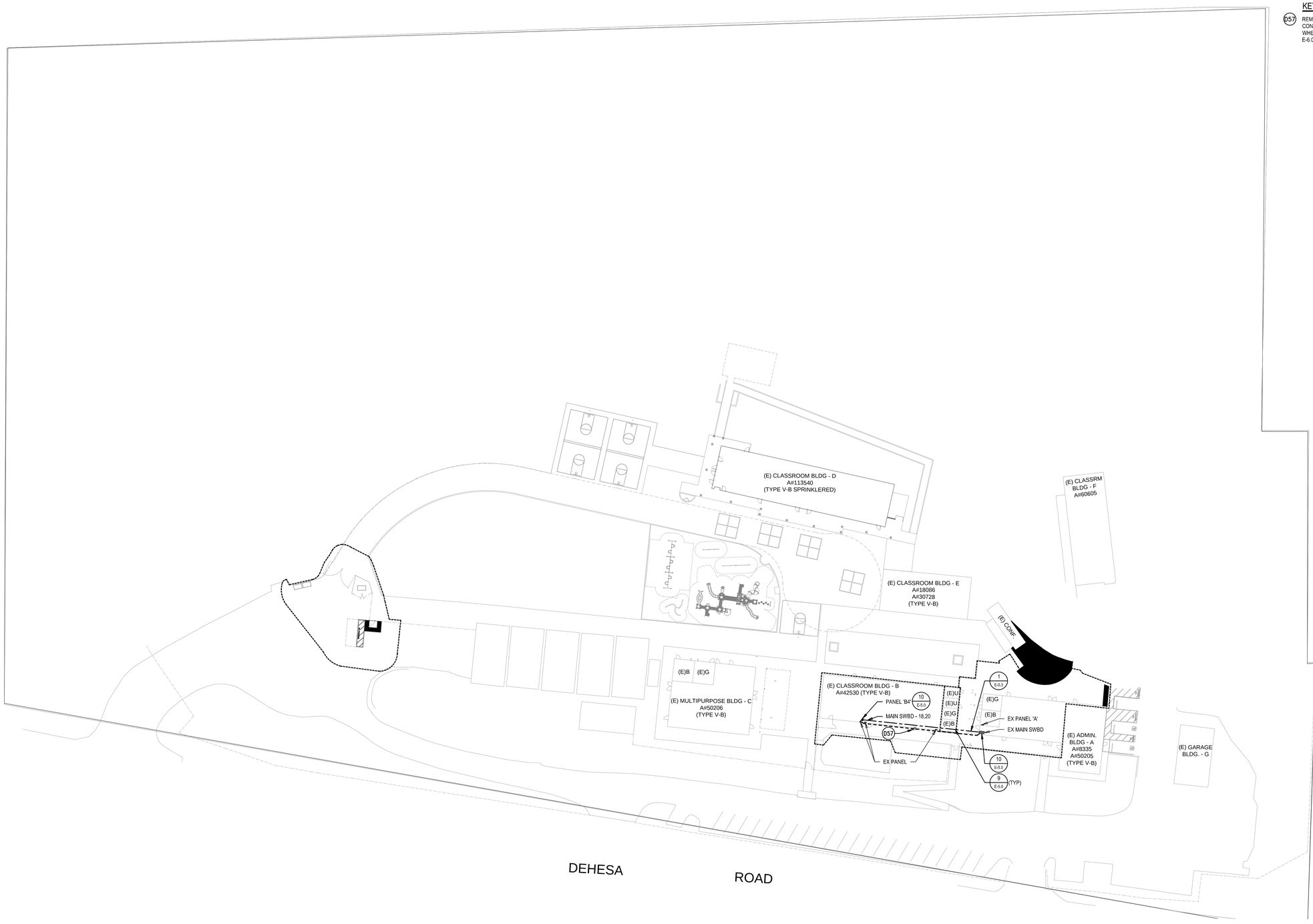

SITE PLAN - ELECTRICAL

SCALE: 1" = 30'

0 15' 30' 60' 90'

1" = 30'

NORTH

IDENTIFICATION STAMP
DIV. OF THE STATE ARCHITECT
APP: 04-122772 INC:
REVIEWED FOR
SS ☑ FLS ☑ ACS ☑
DATE: 03/26/2024

SPROTTE | WATSON
ARCHITECTURE | PLANNING

REGISTERED ARCHITECT
C12359
STATE OF CALIFORNIA

CONSULTANT

REGISTERED PROFESSIONAL ENGINEER
DALE M. FRANCHAK
No.11533
exp.06/30/24
ELECTRICAL
STATE OF CALIFORNIA
01/25/24

TURPIN & RATTAN
Engineering, Inc.
Consulting Engineers
4719 PALM AVENUE
LA MESA, CA 91941-5221
619 / 466 / 6224 fax 466 / 6233
E-MAIL: engineer@trreid.com

TREI PROJECT # 22277.S01
h:\rezano 01/25/24 - 1:07pm

DEHESA ELEMENTARY SCHOOL
CONSTRUCTION DOCUMENTS
DEHESA SCHOOL DISTRICT
4612 DEHESA ROAD
EL CAJON, CA 92019

REVISIONS

DESCRIPTION

SITE PLAN - ELECTRICAL

DATE

01.25.24

JOB #

22-0400

SHEET #

E-1.1

7/12/2018 1:34:44 PM

KEYNOTES

(D53) REMOVE EXISTING ELECTRICAL DEVICES, CONDUIT, SURFACE RACEWAY, WIRE, AND EQUIPMENT FROM EXISTING INTERIOR WALLS TO BE REMOVED, REMOVE ASSOCIATED WIRING BACK TO SOURCE SUPPLY.

(D54) DISCONNECT AND REMOVE EXISTING FIRE ALARM DEVICES, SURFACE RACEWAY, AND WIRING BACK TO EXISTING SOURCE FATC TO REMAIN.

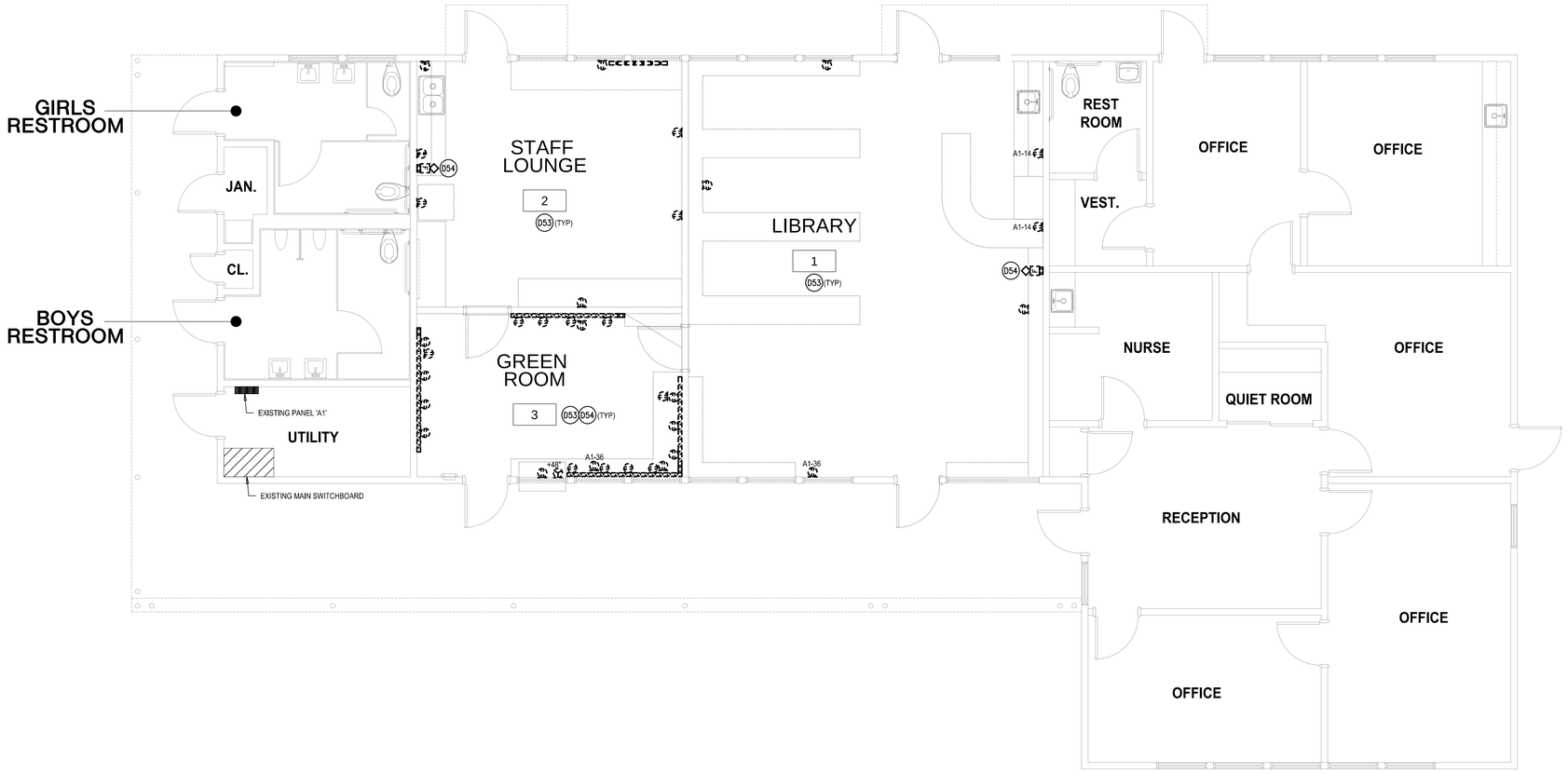

BUILDING A - ADMIN DEMO - ELECTRICAL

SCALE: 1/4" = 1'-0"

0 2' 4' 8' 12'

1/4" = 1'-0"

NORTH

IDENTIFICATION STAMP
DIV. OF THE STATE ARCHITECT
APP: 04-122772 INC:
REVIEWED FOR
SS ☑ FLS ☑ ACS ☑
DATE: 03/26/2024

SPROTTE | WATSON
ARCHITECTURE | PLANNING

REGISTERED PROFESSIONAL ENGINEER
C12359
ELECTRICAL
STATE OF CALIFORNIA

CONSULTANT

REGISTERED PROFESSIONAL ENGINEER
DALE M. FRANCHAK
No.11533
exp.06/30/24
ELECTRICAL
STATE OF CALIFORNIA
01/25/24

TURPIN & RATTAN
Engineering, Inc.
Consulting Engineers
4719 PALM AVENUE
LA MESA, CA 91941-5221
619 / 466 / 6224 fax 466 / 6233
E-MAIL: engineer@trreid.com
TREI PROJECT # 22277.S01
h:\eceno 01/25/24 - 1:07pm

DEHESA ELEMENTARY SCHOOL
CONSTRUCTION DOCUMENTS
DEHESA SCHOOL DISTRICT
4612 DEHESA ROAD
EL CAJON, CA 92019

REVISIONS

DESCRIPTION

BUILDING A - ADMIN DEMO PLAN - ELECTRICAL

DATE

01.25.24

JOB #

22-0400

SHEET #

E-A2.0

7/12/2018 1:34:44 PM

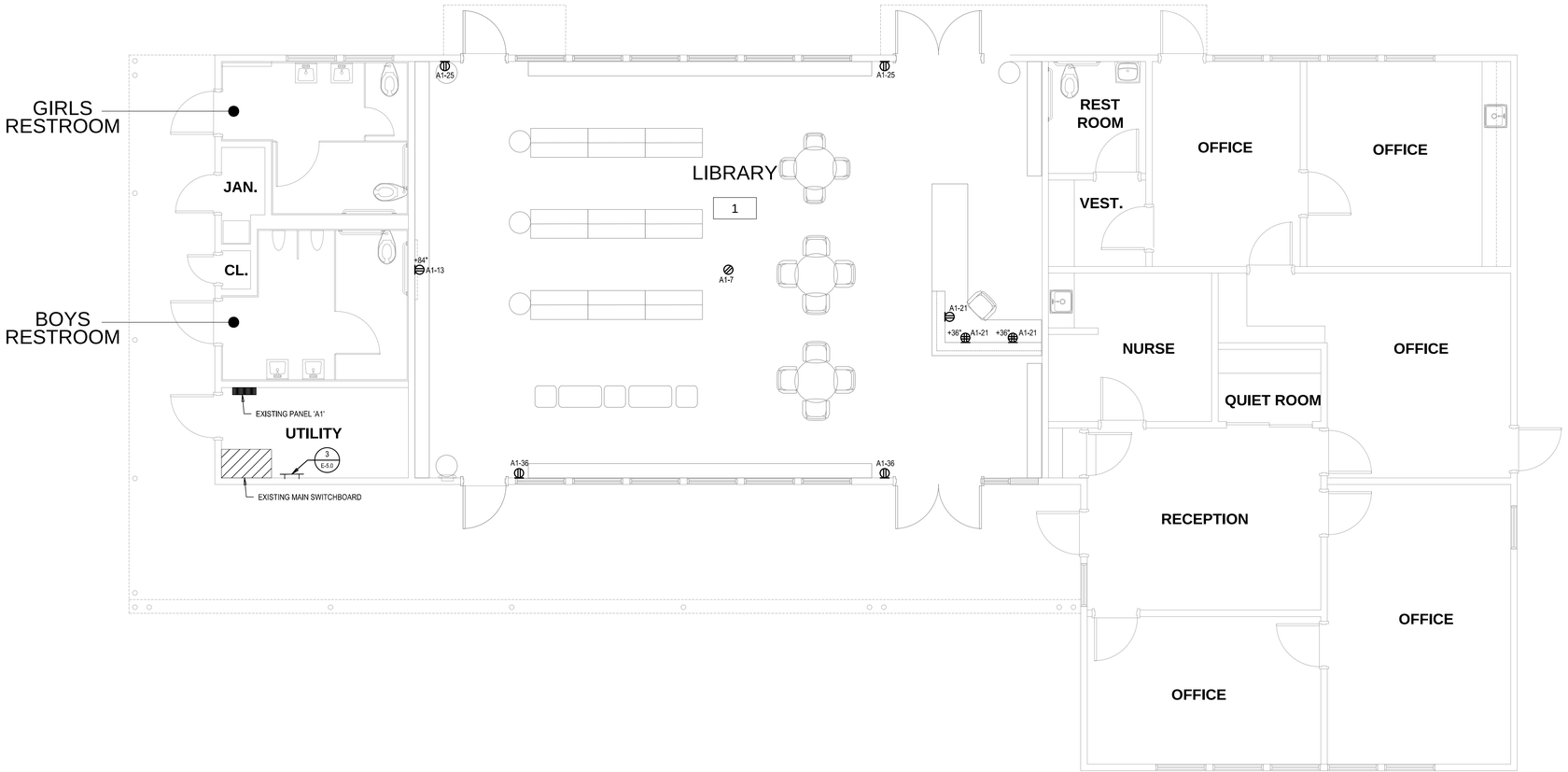

BUILDING A - ADMIN FLOOR PLAN - POWER

SCALE: 1/4" = 1'-0"

0 2' 4' 8' 12'

1/4" = 1'-0"

NORTH

IDENTIFICATION STAMP
DIV. OF THE STATE ARCHITECT
APP: 04-122772 INC:
REVIEWED FOR
SS ☑ FLS ☑ ACS ☑
DATE: 03/26/2024

SPROTTE | WATSON
ARCHITECTURE | PLANNING

CONSULTANT

REGISTERED PROFESSIONAL ENGINEER
DALE M. FRANDSEN
No.11533
exp 06/24
ELECTRICAL
STATE OF CALIFORNIA
01/25/24

TURPIN & RATTAN
Engineering, Inc.
Consulting Engineers
4719 PALM AVENUE
LA MESA, CA 91941-5221
619 / 466 / 6224 fax 466 / 6233
E-MAIL: engineer@trreid.com
TREI PROJECT # 22277.501
h:\eceno 01/25/24 - 1:07pm

DEHESA ELEMENTARY SCHOOL
CONSTRUCTION DOCUMENTS
DEHESA SCHOOL DISTRICT
4612 DEHESA ROAD
EL CAJON, CA 92019

REVISIONS

DESCRIPTION

BUILDING A - ADMIN
FLOOR PLAN - POWER

DATE

01.25.24

JOB #

22-0400

SHEET #

E-A2.1

7/12/2018 1:34:44 PM

KEYNOTES

D52 REMOVE EXISTING LIGHT FIXTURES, CONTROLS, AND REMOVE ASSOCIATED WIRING BACK TO SOURCE SUPPLY.

D55 EXISTING LIGHT FIXTURE(S) AND CONTROLS TO REMAIN.

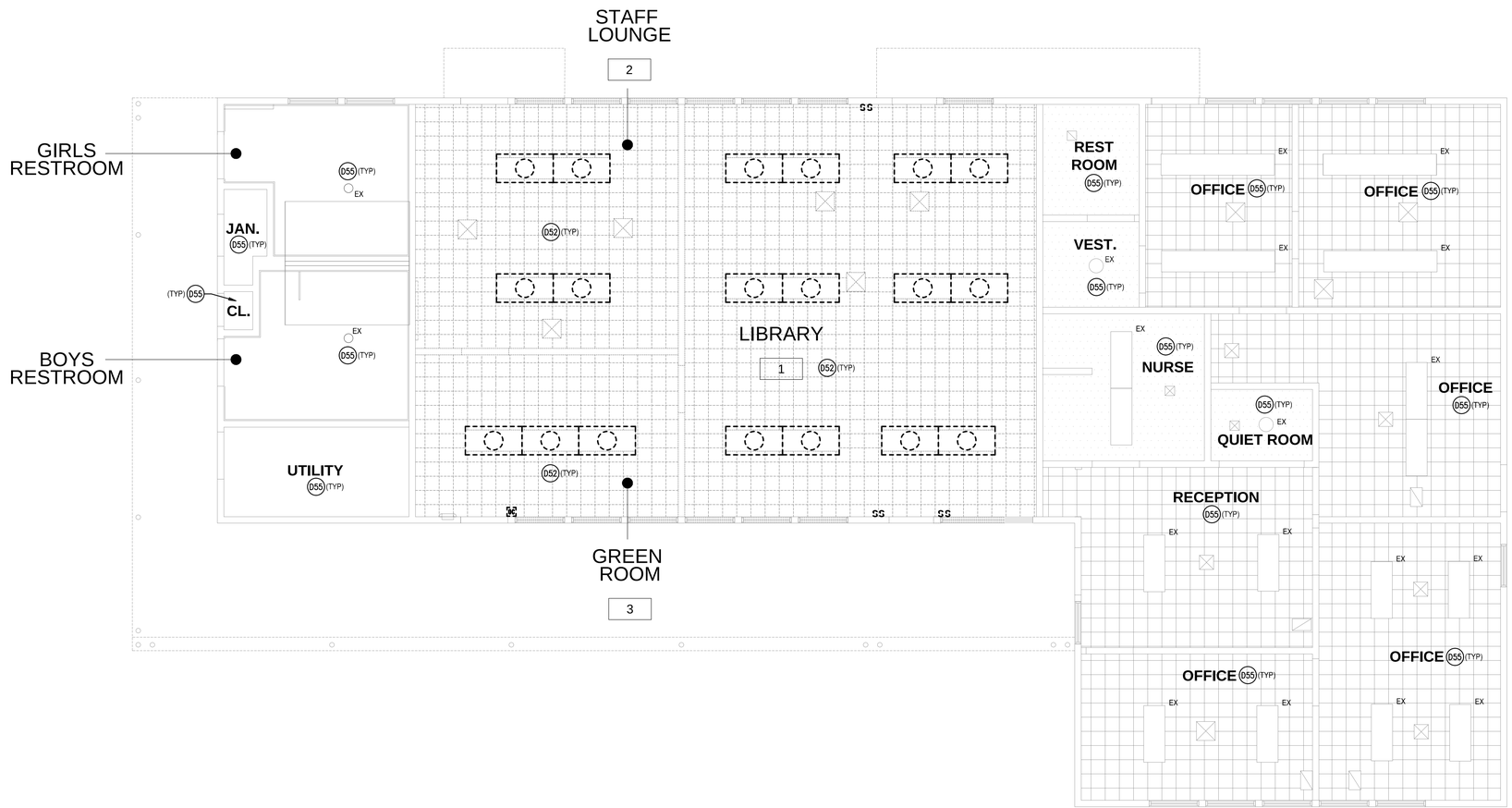

BUILDING A - ADMIN DEMO - LIGHTING

SCALE: 1/4" = 1'-0"

0 2' 4' 8' 12'

1/4" = 1'-0"

NORTH

IDENTIFICATION STAMP
DIV. OF THE STATE ARCHITECT
APP: 04-122772 INC:
REVIEWED FOR
SS ☑ FLS ☑ ACS ☑
DATE: 03/26/2024

SPROTTE | WATSON
ARCHITECTURE | PLANNING

CONSULTANT

REGISTERED PROFESSIONAL ENGINEER
DALE M. FRANDSAN
No.11533
exp. 6/30/24
ELECTRICAL
STATE OF CALIFORNIA
01/25/24

TURPIN & RATTAN Engineering, Inc.
Consulting Engineers
4719 PALM AVENUE
LA MESA, CA 91941-5221
619 / 466 / 6224 fax 466 / 6233
E-MAIL: engineer@trteng.com
TREI PROJECT # 22277.S01
h:\scans 01/25/24 - 1:07pm

DEHESA ELEMENTARY SCHOOL
CONSTRUCTION DOCUMENTS
DEHESA SCHOOL DISTRICT
4612 DEHESA ROAD
EL CAJON, CA 92019

REVISIONS

DESCRIPTION

BUILDING A - ADMIN
DEMO PLAN - LIGHTING

DATE

01.25.24

JOB #

22-0400

SHEET #

E-A3.0

7/12/2018 1:34:44 PM

KEYNOTES

E11 EXISTING LIGHT FIXTURE(S) AND CONTROLS TO REMAIN.

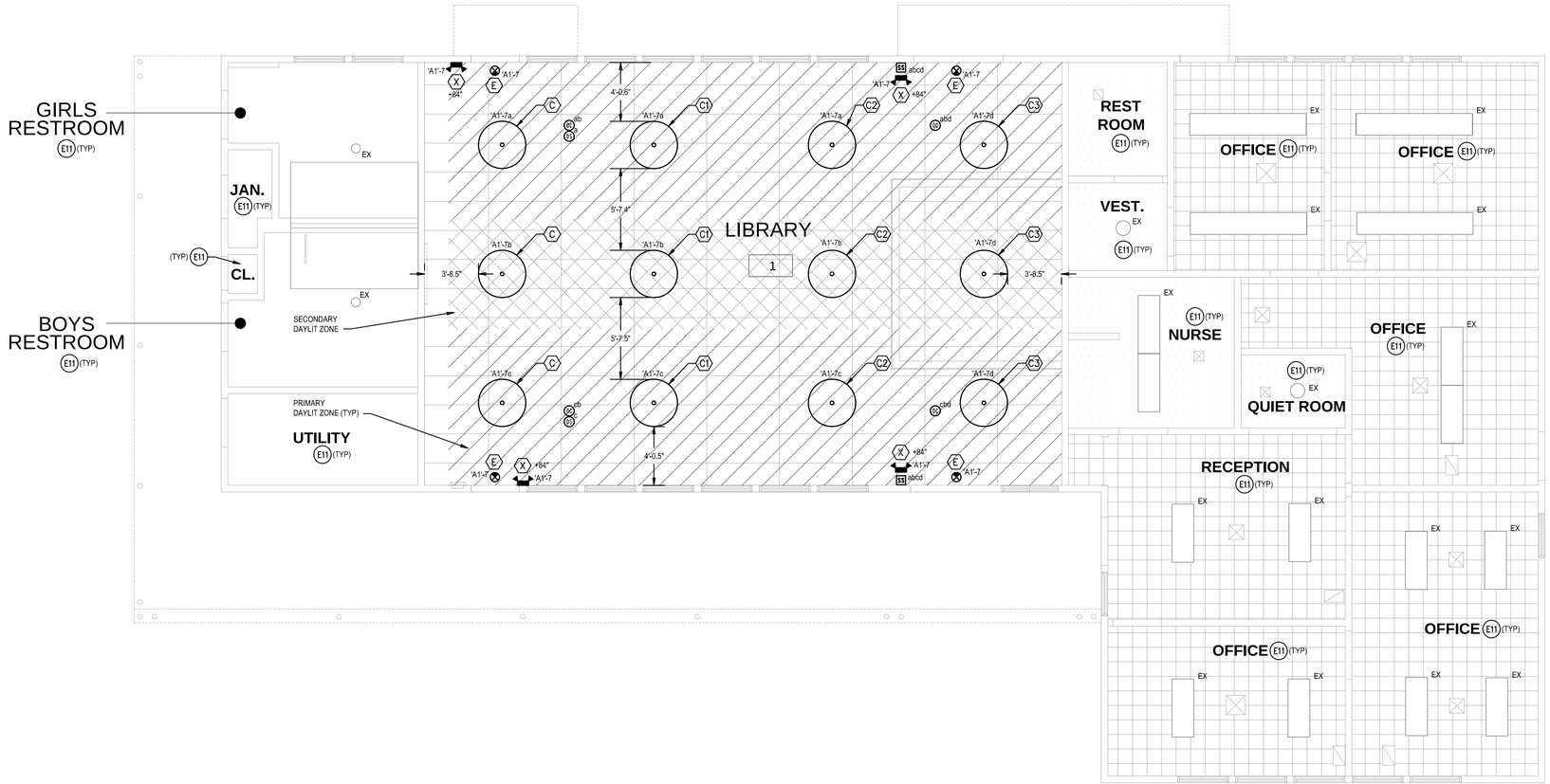

BUILDING A - ADMIN FLOOR PLAN - LIGHTING

SCALE: 1/4" = 1'-0"

0 2' 4' 8' 12'

1/4" = 1'-0"

NORTH

IDENTIFICATION STAMP
DIV. OF THE STATE ARCHITECT
APP: 04-122772 INC:
REVIEWED FOR
SS ☑ FLS ☑ ACS ☑
DATE: 03/26/2024

SPROTTE | WATSON
ARCHITECTURE | PLANNING

CONSULTANT

REGISTERED PROFESSIONAL ENGINEER
DALE M. FRANDSAR
No.11533
exp. 6/30/24
ELECTRICAL
STATE OF CALIFORNIA
01/25/24

TURPIN & RATTAN Engineering, Inc.
Consulting Engineers
4719 PALM AVENUE
LA MESA, CA 91941-5221
619 / 466 / 6224 fax 466 / 6233
E-MAIL: engineer@trreinc.com
TREI PROJECT # 22277.S01
h:\ecams 01/25/24 - 1:07pm

DEHESA ELEMENTARY SCHOOL
CONSTRUCTION DOCUMENTS
DEHESA SCHOOL DISTRICT
4612 DEHESA ROAD
EL CAJON, CA 92019

REVISIONS

DESCRIPTION

BUILDING A - ADMIN FLOOR PLAN - LIGHTING

DATE

01.25.24

JOB #

22-0400

SHEET #

E-A3.1

7/12/2018 1:34:44 PM

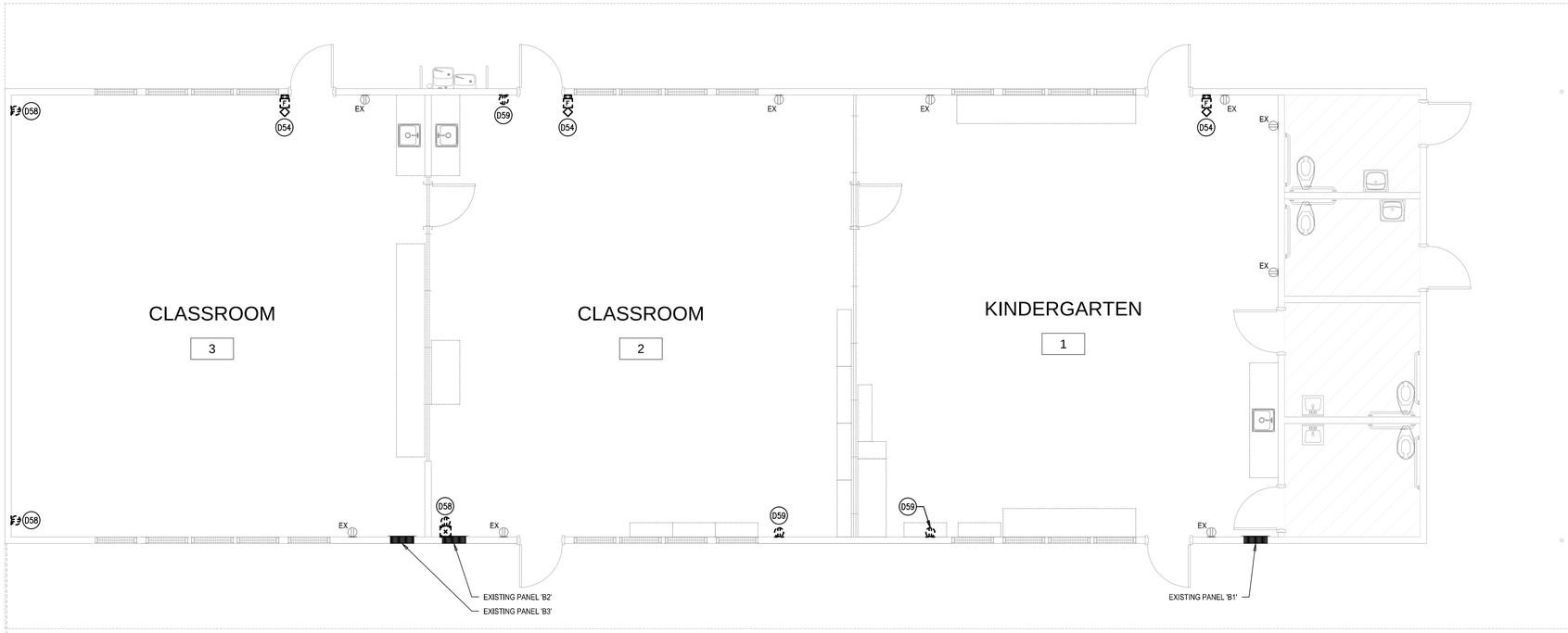

BUILDING B - KINDERGARTEN DEMO PLAN - POWER

SCALE: 1/4" = 1'-0"

NORTH

0 2' 4' 8' 12'

1/4" = 1'-0"

KEYNOTES

- D54 DISCONNECT AND REMOVE EXISTING FIRE ALARM DEVICES, SURFACE RACEWAY, AND WIRING BACK TO EXISTING SOURCE FATC TO REMAIN.
- D58 REMOVE EXISTING ELECTRICAL DEVICE AND CORRESPONDING CONDUIT, SURFACE RACEWAY, AND WIRING BACK TO EXISTING SOURCE PANEL. ABANDON CONDUIT(S) IN PLACE WHERE NOT ACCESSIBLE.
- D59 REPLACE DEVICE, REFER TO NEW PLAN.
- E1 PROVIDE 120V POWER FOR REFRIGERATOR.
- E2 PROVIDE 120V POWER FOR MICROWAVE.
- E3 PROVIDE POWER FOR GARBAGE DISPOSAL. VERIFY ELECTRICAL REQUIREMENTS.
- E4 PROVIDE POWER FOR COPIER. VERIFY ELECTRICAL REQUIREMENTS.
- E9 PROVIDE 120V POWER FOR DISHWASHER.
- E10 CONTROLLED VIA OCCUPANCY SENSOR.

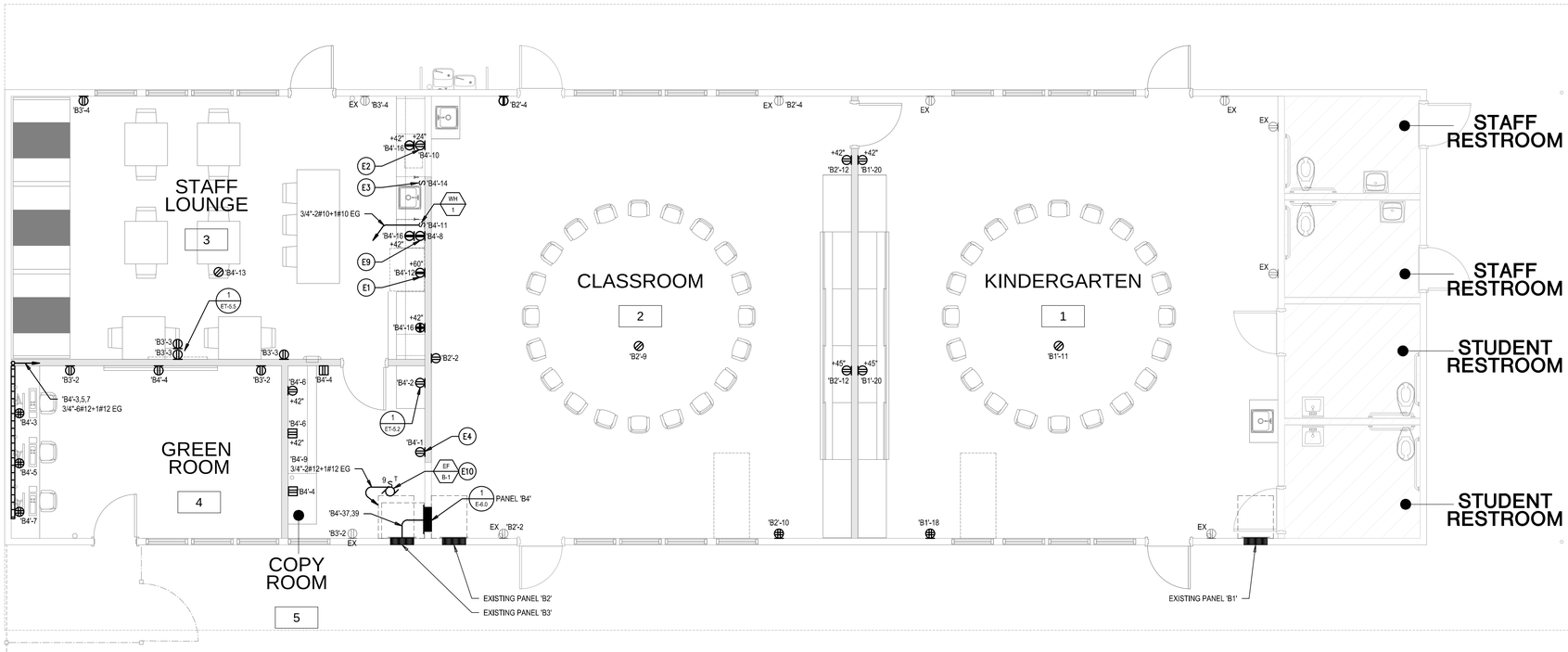

BUILDING B - KINDERGARTEN FLOOR PLAN - POWER

SCALE: 1/4" = 1'-0"

NORTH

0 2' 4' 8' 12'

1/4" = 1'-0"

IDENTIFICATION STAMP
DIV. OF THE STATE ARCHITECT
APP: 04-122772 INC:
REVIEWED FOR
SS ☑ FLS ☑ ACS ☑
DATE: 03/26/2024

SPROTTE WATSON ARCHITECTURE + PLANNING

C12359 REGISTERED ARCHITECT STATE OF CALIFORNIA

CONSULTANT

REGISTERED PROFESSIONAL ENGINEER DALE M. FRANCHAK No.11533 exp.06/30/24 ELECTRICAL STATE OF CALIFORNIA

01/25/24

TURPIN & RATTAN Engineering, Inc.
Consulting Engineers
4719 PALM AVENUE
LA MESA, CA 91941-5221
619 / 466 / 6224 fax 466 / 6233
E-MAIL: engineer@trreid.com

TREI PROJECT # 22277.501

h:\ecaxmi 01/25/24 - 1:07pm

DEHESA ELEMENTARY SCHOOL
CONSTRUCTION DOCUMENTS
DEHESA SCHOOL DISTRICT
4612 DEHESA ROAD
EL CAJON, CA 92019

REVISIONS

DESCRIPTION

BUILDING B - KINDERGARTEN FLOOR PLANS - POWER

DATE

01.25.24

JOB #

22-0400

SHEET #

E-B2.0

7/12/2018 1:34:44 PM

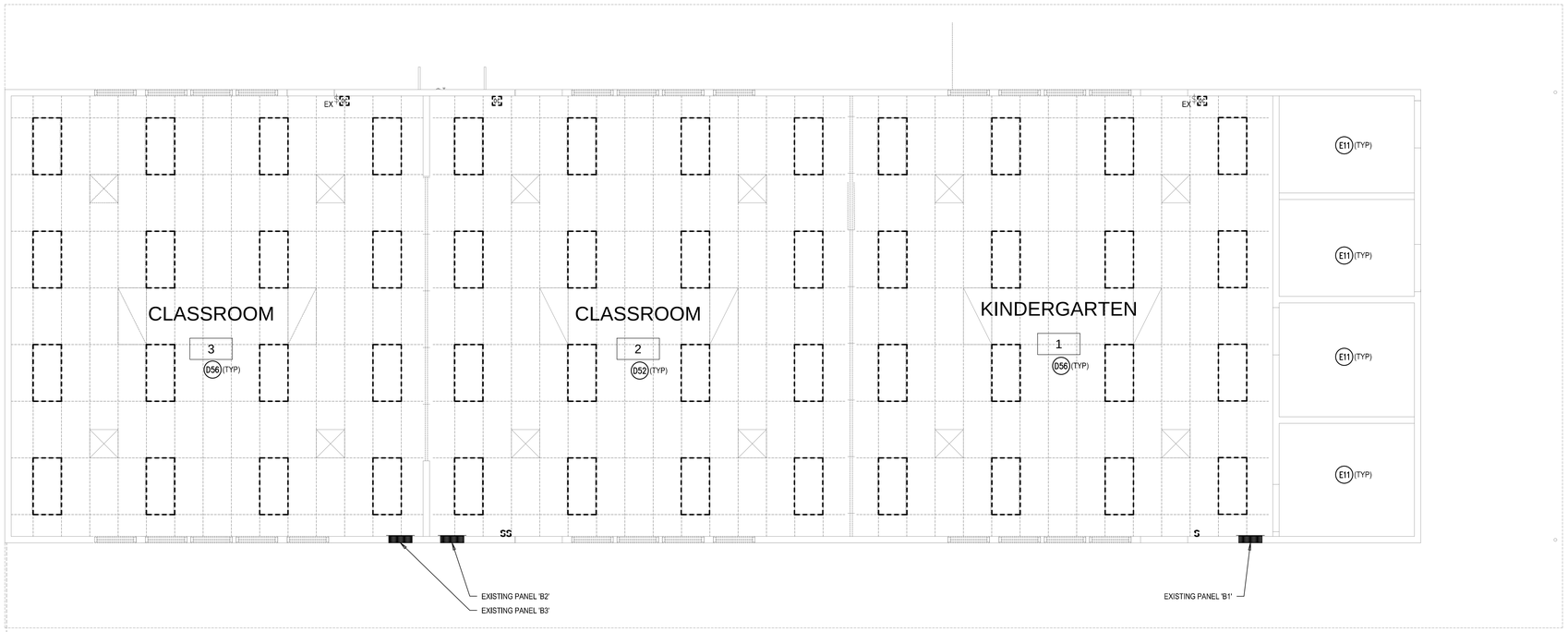

BUILDING B - KINDERGARTEN DEMO PLAN - LIGHTING

SCALE: 1/4" = 1'-0"

NORTH

0 2' 4' 8' 12'

1/4" = 1'-0"

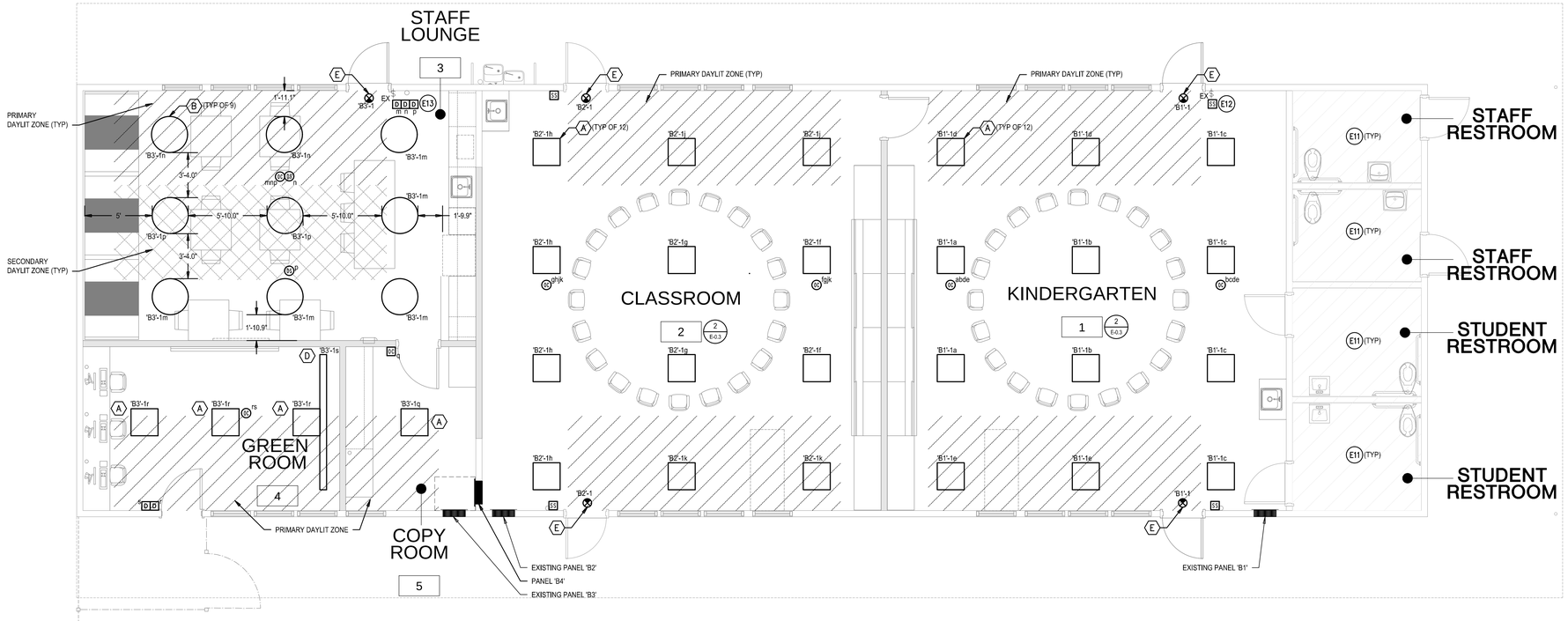

BUILDING B - KINDERGARTEN FLOOR PLAN - LIGHTING

SCALE: 1/4" = 1'-0"

NORTH

0 2' 4' 8' 12'

1/4" = 1'-0"

KEYNOTES

- D52 REMOVE EXISTING LIGHT FIXTURES, CONTROLS, AND REMOVE ASSOCIATED WIRING BACK TO SOURCE SUPPLY.
- D56 REMOVE EXISTING LIGHT FIXTURES, CONTROLS, AND REMOVE ASSOCIATED WIRING BACK TO SOURCE SUPPLY. PROVIDE BLANK FILLER AT SWITCH. SWITCH FOR EXTERIOR LIGHT TO REMAIN.
- E11 EXISTING LIGHT FIXTURE(S) AND CONTROLS TO REMAIN.
- E12 PROVIDE CUT-IN BOX FOR SCENE SWITCH BELOW EXISTING SWITH(ES) TO REMAIN.
- E13 PROVIDE CUT-IN BOXES FOR DIMMER SWITCHES, BELOW EXISTING SWITH(ES) TO REMAIN.

IDENTIFICATION STAMP
DIV. OF THE STATE ARCHITECT
APP: 04-122772 INC:
REVIEWED FOR
SS ☑ FLS ☑ ACS ☑
DATE: 03/26/2024

SPROTTE | WATSON
ARCHITECTURE | PLANNING

CONSULTANT

REGISTERED PROFESSIONAL ENGINEER
DALE M. FRANDSEN
No.11533
exp.06/30/24
ELECTRICAL
STATE OF CALIFORNIA
01/25/24

TURPIN & RATTAN
Engineering, Inc.
Consulting Engineers
4719 PALM AVENUE
LA MESA, CA 91941-5221
619 / 466 / 6224 fax 466 / 6233
E-MAIL: engineer@trreid.com
TREI PROJECT # 22277.501
h:\ecaxmi 01/25/24 - 1:09pm

DEHESA ELEMENTARY SCHOOL
CONSTRUCTION DOCUMENTS
DEHESA SCHOOL DISTRICT
4612 DEHESA ROAD
EL CAJON, CA 92019

REVISIONS

DESCRIPTION

BUILDING B - KINDERGARTEN FLOOR PLANS - LIGHTING

DATE

01.25.24

JOB #

22-0400

SHEET #

E-B3.0

7/12/2018 1:34:44 PM

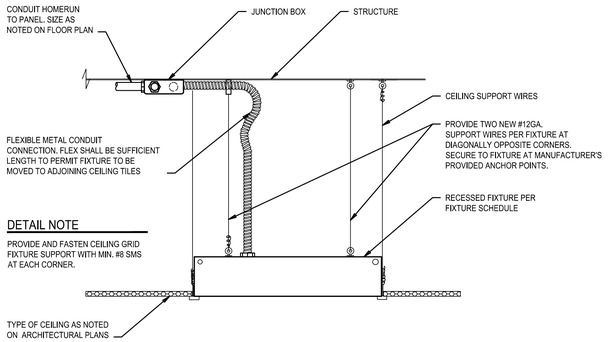

RECESSED FIXTURE SUPPORT DETAIL

NO SCALE

1 / E-5.0

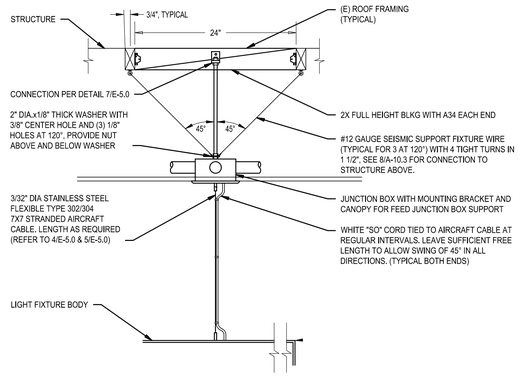

ROOF FRAMING AT BUILDING A

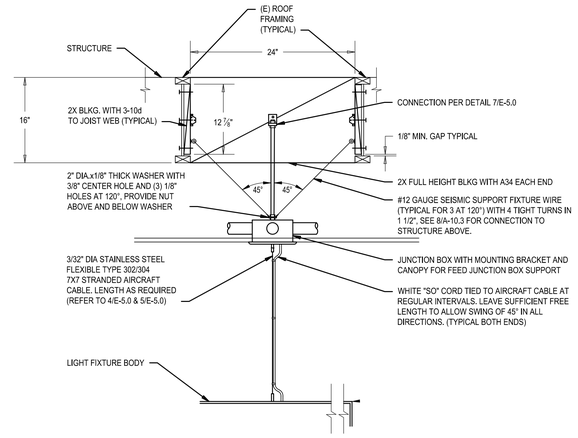

ROOF FRAMING AT BUILDING B

FIXTURE MOUNTING AT SUSPENDED CEILING INSTALLATION - FEED END

NO SCALE

2 / E-5.0

IBT BUSBAR DETAIL NOTES

1. GROUNDING AND BONDING CONNECTIONS TO THE INTERSYSTEM BONDING TERMINATION (IBT) THAT ARE PART OF THE ELECTRICAL POWER DISTRIBUTION SYSTEM(S) GROUNDING ELECTRODE CONDUCTOR (GEC) PATH SHALL BE IRREVERSIBLE VIA EXOTHERMIC CADWELD TYPE CONNECTIONS.
2. BONDING CONNECTIONS THAT ARE PART OF TELECOMMUNICATION OR OTHER SYSTEMS SHALL BE BOLTED TO THE IBT.

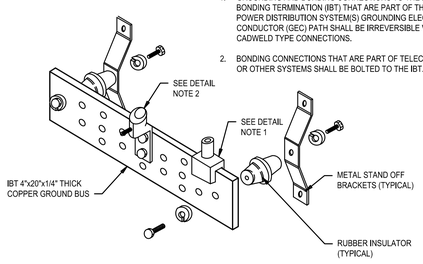

IBT BUSBAR DETAIL

NO SCALE

3 / E-5.0

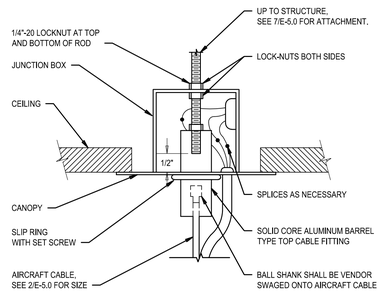

AIRCRAFT CABLE INSTALLATION - FEED END

NO SCALE

4 / E-5.0

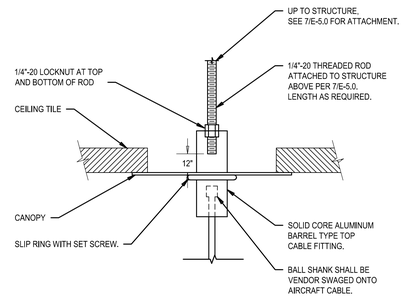

AIRCRAFT CABLE INSTALLATION - NON FEED END

NO SCALE

5 / E-5.0

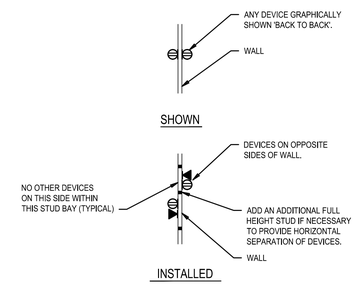

DEVICE OFFSETS AT COMMON WALL

NO SCALE

8 / E-5.0

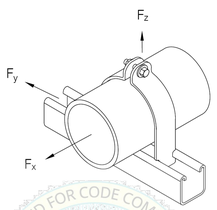

MATERIAL: CLAMP - HOT ROLLED MILD STEEL, ASTM A1011SS, GRADE 33
BOLT - ASTM A307, GRADE A
FLAT WASHER - ANSI/ASME B18.22.1 ON EACH SIDE

PHD Figure Number	Nominal Pipe Size (in)	Bolt + Washer Diameter (in)	Bolt Torque (ft-lbs)	Design Loads, ASD (lbs)		
				Fx	Fy	Fz
2205	1 1/4	1/4	6	145	150	64
2206	1 1/2	5/16	11	195	215	76
2207	2	5/16	11	245	275	106
2008	2 1/2	5/16	11	310	375	159
2009	3	5/16	11	320	330	213
2011	4	5/16	11	295	440	260

1. TRAPEZE STRUT SECTIONAL PROPERTIES MUST MEET OR EXCEED THE SECTIONAL PROPERTIES ON PAGE H2.
2. FOR USE WITH EMT CONDUIT.
3. FACTOR OF SAFETY = 2.0

2 PIECE PHD TRAPEZE CLAMP - FOR USE WITH EMT CONDUIT

International Seismic Application Technology
14848 Northam Street, La Mirada, CA 90638
877-999-4728 (Toll Free) 714-523-0845 (fax)
www.isatsb.com
A Division of Tomarco Contractor Specialties

Rev. 1 12/06/18
Page H3.1.6

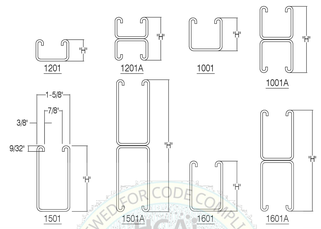

Channel	Steel Gage	Height "H" Inch	Area Of Section Inch 2	MINIMUM ELEMENTS OF SECTION (For Solid) X-X AXIS Moment of Inertia Inch 4	X-X AXIS Section Modulus Inch 3	X-X AXIS Radius of Gyration Inch	Y-Y AXIS Moment of Inertia Inch 4	Y-Y AXIS Section Modulus Inch 3	Y-Y AXIS Radius of Gyration Inch
1201	12	13/16	0.376	0.033	0.068	0.297	0.115	0.142	0.554
1201A	12	1 5/8	0.752	0.148	0.182	0.444	0.230	0.284	0.554
1001	12	1 5/8	0.561	0.189	0.209	0.580	0.239	0.294	0.653
1001A	12	3 1/4	1.122	0.958	0.589	0.924	0.479	0.588	0.653
1501	12	3 1/4	0.902	1.115	0.641	1.112	0.436	0.537	0.695
1501A	12	6 1/2	1.804	6.349	1.953	1.676	0.873	1.074	0.695
1601	12	2 7/16	0.732	0.531	0.401	0.852	0.338	0.416	0.680
1601A	12	4 7/8	1.464	2.874	1.179	1.401	0.676	0.832	0.680

1. BEAM LOAD MAY BE LIMITED BY SPOT WELD SHEAR. REFER TO PHD TECHNICAL DATA.
2. 1001A, 1201A, 1501A AND 1601A
3. TABULATED VALUES ARE SOLID STRUT. STRUT WITH STANDARD HOLES HAVE SECTION PROPERTIES REDUCED BY 0.10. STRUT WITH SLOTS (9/16" WIDE X 1-1/8" LONG 2"OC TYP) HAVE SECTION REDUCED BY 0.15.

'PHD' BRAND CHANNEL PROFILE DESIGNATIONS AND SECTION VALUES, ASTM A653 GRADE 33

International Seismic Application Technology
14848 Northam Street, La Mirada, CA 90638
877-999-4728 (Toll Free) 714-523-0845 (fax)
www.isatsb.com
A Division of Tomarco Contractor Specialties

Rev. 9 07/30/18
Page H2.1

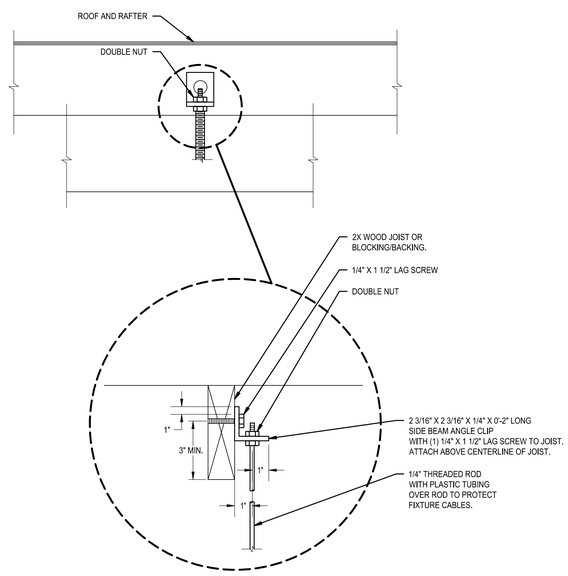

CONNECTION TO STRUCTURE DETAIL

NO SCALE

7 / E-5.0

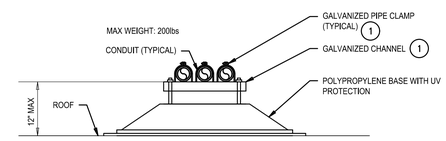

DETAIL KEYNOTES

1. HOT DIP GALVANIZED AFTER FABRICATION AND TOUCH-UP ALL FIELD CUT WITH ZINC RICH PAINT.
2. SUPPORT ASSEMBLY SHALL BE SHALL BE PP10-C BY PHP SYSTEMS/DESIGN.
3. MOUNT PER MANUFACTURERS INSTRUCTIONS.

CONDUIT SUPPORT DETAIL AT ROOF

NO SCALE

9 / E-5.0

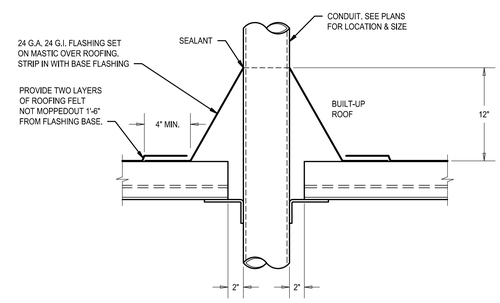

CONDUIT ROOF PENETRATION

NO SCALE

10 / E-5.0

IDENTIFICATION STAMP
DIV. OF THE STATE ARCHITECT
APP: 04-122772 INC:
REVIEWED FOR
SS ☑ FLS ☑ ACS ☑
DATE: 03/26/2024

SPROTTE | WATSON
ARCHITECTURE | PLANNING

C12359

CONSULTANT

REGISTERED PROFESSIONAL ENGINEER
DALE M. FRANDSEN
No.11533
Exp. 06/30/24
ELECTRICAL
STATE OF CALIFORNIA
01/25/24

TURPIN & RATTAN ENGINEERING, INC.
CONSULTING ENGINEERS
4719 PALM AVENUE
LA MESA, CA 91941-5221
619 / 466 / 6224 FAX 466 / 6233
E-MAIL: ENGINEER@TREIEG.COM
TRE: PROJECT # 22277.501
H:\Drawings 03-25-24 - 8:39am

DEHESA ELEMENTARY SCHOOL
CONSTRUCTION DOCUMENTS
DEHESA SCHOOL DISTRICT
4612 DEHESA ROAD
EL CAJON, CA 92019

REVISIONS

DESCRIPTION
ELECTRICAL DETAILS

DATE
01.25.24

JOB #
22-0400

SHEET #
E-5.0

7/12/2018 1:34:44 PM

SHORT CIRCUIT CALCULATION

Project: 22277.S00 Dehesa ES Modernization

Engineer: TREI V7.00
Date: 16-Jan-24 SYSTEM VOLTAGE: 240 PHASE 1

SHORT CIRCUIT CALCULATION PERFORMED PER BUSSMANN "ELECTRICAL PROTECTION HANDBOOK", 2001; LENGTHS SHOWN ARE FOR CALCULATION PURPOSES ONLY, NOT FOR BIDDING.

PANEL OR	CONTINUED		CALC	XFMR	ISC AT	TRANSFORMER PROPERTIES				WIRE MATERIALS								MOTOR	MIN. Isc.
FAULT LOCATON	Y/N	FROM	L-L/L-N	(Y/N)	START	KVA	PRI VOLT	SEC VOLT	IMPED %	SIZE	QTY/PH	WIRE	CONDUIT	CABLE	VOLTS	PHASE	LENGTH	FLA	VALUE
Ex SDG&E					42,000A							--			--				42,000A
Ex Main SWBD	Y	Ex SDG&E	L-L	N	42,000A					350	2	AL	N	N	240	1	0.00	0A	42,000A
PANEL B4	Y	Ex Main SWBD	L-L	N	42,000A	--	--	--	--	3/0	1	CU	M	N	240	1	100.00	0A	11,275A
Ex PANEL B3	Y	PANEL B4	L-L	N	11,275A	--	--	--	--	2	1	CU	M	N	240	1	30.00	63A	7,884A

VOLTAGE DROP CALCULATION

V5.07

PROJECT: Dehesa ES Modernization SYSTEM VOLTAGE: 240
NUMBER: 22277.S00 SYSTEM PHASE: 1
VOLT DROP CALCULATION BASED ON IEEE Std. 241-1983, CHAPTER 3.6 75 DEGREE WIRE; LENGTHS SHOWN ARE FOR CALCULATION PURPOSES ONLY, NOT FOR BIDDING.
PREPARED BY: Turpin & Rattan Engineering, Inc. - La Mesa, CA METRIC (Y/N): N Date: 1/16/2024

LOAD DESCRIPTION	NOMINAL VOLTAGE	SYSTEM PHASE	STARTING VOLTAGE	POWER FACTOR	LENGTH OF CIRCUIT IN FEET	CURRENT IN AMPS	CODE MIN. WIRE SIZE	CODE MIN. WIRE RUNS	ADJUSTED WIRE SIZE	ADJUSTED WIRE RUNS	CODE EQ. GND WIRE SIZE	ADJ. EQ. GND WIRE SIZE	LINE TO NEUTRAL Y/N	MAGNETIC CONDUIT Y/N	WIRE TYPE Copper Aluminum	VOLTS DROPPED	SINGLE RUN PERCENT	ADD % TO OTHER LOAD Y/N	ADD TO WHAT LOAD	ENDING VOLTAGE	TOTAL PERCENT DROPPED
Ex Main SWBD	240	1	240	85%	0.0	480.0	350	2	350	2	1	1	N	Y	A	0.0	0.00%	N		240.0	0.00%
Panel B4	240	1	240	85%	100.0	160.0	3/0	1	3/0	1	6	6	N	Y	C	3.0	1.26%	Y	Ex Main SWBD	237.0	1.26%
Ex Panel B3	240	1	236.975	85%	30.0	80.0	2	1	2	1	8	8	N	Y	C	1.0	0.40%	Y	Panel B4	236.0	1.66%

MAIN SWBD SERVICE CALCULATION (BLDG A)

EXISTING METERED DEMAND:	31.0 KW
X 125% PER CEC:	38.8 KW
KVA @ PF 0.80	48.4 KVA
PANEL A1 LOAD ADDED:	3.0 KVA
PANEL B1 LOAD ADDED:	1.5 KVA
PANEL B2 LOAD ADDED:	1.72 KVA
PANEL B3 LOAD ADDED:	2.4 KVA
PANEL B4 LOAD ADDED:	16.1 KVA
TOTAL LOAD ADDED:	24.8 KVA
APPROXIMATE NEW DEMAND:	73.2 KVA
AMPS AT 240/120V 1-PH	305.0 AMPS

EXISTING SERVICE SIZE: 600 AMPS AT 240/120V 1-PH

PANEL ID: B1 — EXISTING

LOCATION: B1; MAIN: LUGS ONLY; BUS AMPS: 125; MOUNTING: RECESSED; AIC RATING: 10K

FEEDER/SYSTEM — FED FROM: MAIN; FEEDER OC: 100; SYSTEM: 240 /120V, 1-PH,

LOAD TYPES — blank or NON: NON-CONTINUOUS; LCL: LONG-CONTINUOUS; REC: DEMANDABLE RECEPT'S; KIT: KITCHEN; PNL: SUB-FED PNL; UNIT: RESI. UNIT; MTR: MOTOR

CKT	DESCRIPTION	LOAD TYPE	BKR	LOAD (VA) PH. A		LOAD (VA) PH.B		BKR	LOAD TYPE	DESCRIPTION	CKT
1	LTG - KINDERGARTEN 1	LCL	20/1	432	360			20/1	REC	REC - OTHER SIDE	2
3	SPARE		20/1				900	20/1	REC	REC - EXISTING	4
5	GFI MENS & WOMENS RR EAST	REC	20/1	360	900			20/1	REC	REC - EXISTING	6
7	REC - THIS WALL	REC	20/1			180	240	20/1	LCL	LTG - BATH	8
9	SPARE, NOTE 3 (PREV. REC - ROOF)		20/1		400			20/1	LCL	LTG - BREEZEWAY / BATHROOM	10
11	REC - CEILING (AV), NOTE 1	REC	20/1			180	200	20/1	NON	TIME CLOCK	12
13	AC	MTR	50/	3750	3750			50/	MTR	AC	14
15	---	MTR	/2			3750	3750	/2	MTR	---	16
17	SPARE, NOTE 3 (PREV. INSTA HOT)		20/1		360			20/1	REC	TEACHER'S STATION, NOTE 1	18
19	SPARE, NOTE 3 (PREV. INSTA HOT)		20/1				280	20/1	REC	MONITOR & REC, NOTE 1	20

	CONNECTED VA	DEMAND VA	PH A	PH B	
GEN'L LOAD:	200	200	10312	9480	CONNECTED LOAD PER PHASE
LONG CONTIN.:	1072	1340	19792		TOTAL CONNECTED LOAD (VA)
GEN'L RECEPT:	3520	3520	82		AMPS OF TOTAL CONNECTED LOAD
MOTOR LOAD:	15000	+ 25% OF LARGEST	20997.5		TOTAL DEMAND VA (BALANCED)
KITCHEN LOAD:	0	0	95		HIGH PHASE AMPS/LCL

PANEL NOTES:
1. CONNECT NEW BRANCH CIRCUIT TO EXISTING 'SPARE' CIRCUIT BREAKER.
2. REMOVE EXISTING CIRCUIT BREAKER(S) AND PROVIDE NEW BREAKER(S) AS INDICATED. REFER TO SHEET NOTES 1 AND 2.
3. DISCONNECT AND RELOCATE EXISTING BRANCH CIRCUIT TO PANEL 'B4'. BREAKER SHALL BECOME 'SPARE'. VERIFY CIRCUIT BEFORE

PANEL ID: A1 — EXISTING

LOCATION: BLDG A; MAIN: LUGS ONLY; BUS AMPS: 225; MOUNTING: SURFACE; AIC RATING

FEEDER/SYSTEM — FED FROM: MAIN; FEEDER OC: 200; SYSTEM: 240 /120V, 1-PH,

LOAD TYPES — blank or NON: NON-CONTINUOUS; LCL: LONG-CONTINUOUS; REC: DEMANDABLE RECEPT'S; KIT: KITCHEN; PNL: SUB-FED PNL; UNIT: RESI. UNIT; MTR: MOTOR

CKT	DESCRIPTION	LOAD TYPE	BKR	LOAD (VA) PH. A		LOAD (VA) PH.B		BKR	LOAD TYPE	DESCRIPTION	CKT
1	SNAC PANEL	NON	20/1	400	5400			60/	NON	SUB PANEL ADMIN	2
3	INSTA HOT 1	NON	30/1			2880	5400	/2	NON	---	4
5	INSTA HOT 2	NON	30/1	2880	5200			60/	NON	SUB PANEL B	6
7	LTG - LIBRARY	LCL	20/1			848	5200	/2	NON	---	8
9	SIGN	LCL	20/1	500				20/		SPARE, NOTE 2	10
11	SIGN	LCL	20/1			500		/2		---	12
13	MONITOR - LIBRARY, NOTE 1	NON	20/1	100	360			20/1	REC	REC - E. WALL LIBRARY	14
15	SPARE		20/1				540	20/1	REC	RECEPT	16
17	REC - CEILING (AV), NOTE 1	REC	20/1	180	540			20/1	REC	REC - WORK RM NURSE	18
19	SPARE		20/1				500	20/1	LCL	WALKWAY LIGHTS	20
21	REC - LIBRARY DESK, NOTE 1	REC	20/1	900				20/1		SPARE IN ATTIC	22
23	SPARE		20/1					20/1		SPARE IN ATTIC	24
25	REC - N. WALL LIBRARY, NOTE 1	REC	20/1	360	200			20/1	LCL	BATHROOM LIGHTS	26
27	MDF 1	REC	20/1			1200	100	20/1	LCL	SPOTLIGHT - BLDG B	28
29	MDF 2	REC	20/1	1200	360			20/1	REC	REC - ELECTRIC RM	30
31	MDF 3	REC	20/1			1200	180	20/1	REC	REC - CUSTODIAN RM	32
33	A.C. SERVER ROOM	MTR	30/	2172				20/1		SPARE IN ATTIC	34
35	---	MTR	/2			2172	360	20/1	REC	REC - LIBRARY S.W. WALL	36
37	DEDICATED COPIER	NON	20/1	1000				20/1		SPARE IN ATTIC	38
39	DEDICATED SERVER	NON	20/1			1000	360	20/1	REC	BATHROOM - GFI'S	40
41	A.C. TIME CLOCK	NON	20/1	200				20/1		SPARE, NOTE 2	42

	CONNECTED VA	DEMAND VA	PH A	PH B	
GEN'L LOAD:	29660	29660	21952	22440	CONNECTED LOAD PER PHASE
LONG CONTIN.:	2648	3310	44392		TOTAL CONNECTED LOAD (VA)
GEN'L RECEPT:	7740	7740	185		AMPS OF TOTAL CONNECTED LOAD
MOTOR LOAD:	4344	+ 25% OF LARGEST	45597		TOTAL DEMAND VA (BALANCED)
KITCHEN LOAD:	0	0	196		HIGH PHASE AMPS/LCL

PANEL NOTES:
1. CONNECT NEW BRANCH CIRCUIT TO EXISTING 'SPARE' CIRCUIT BREAKER.
2. DISCONNECT AND REMOVE EXISTING BRANCH CIRCUIT. BREAKER SHALL BECOME 'SPARE'. VERIFY CIRCUIT BEFORE DISCONNECTING.

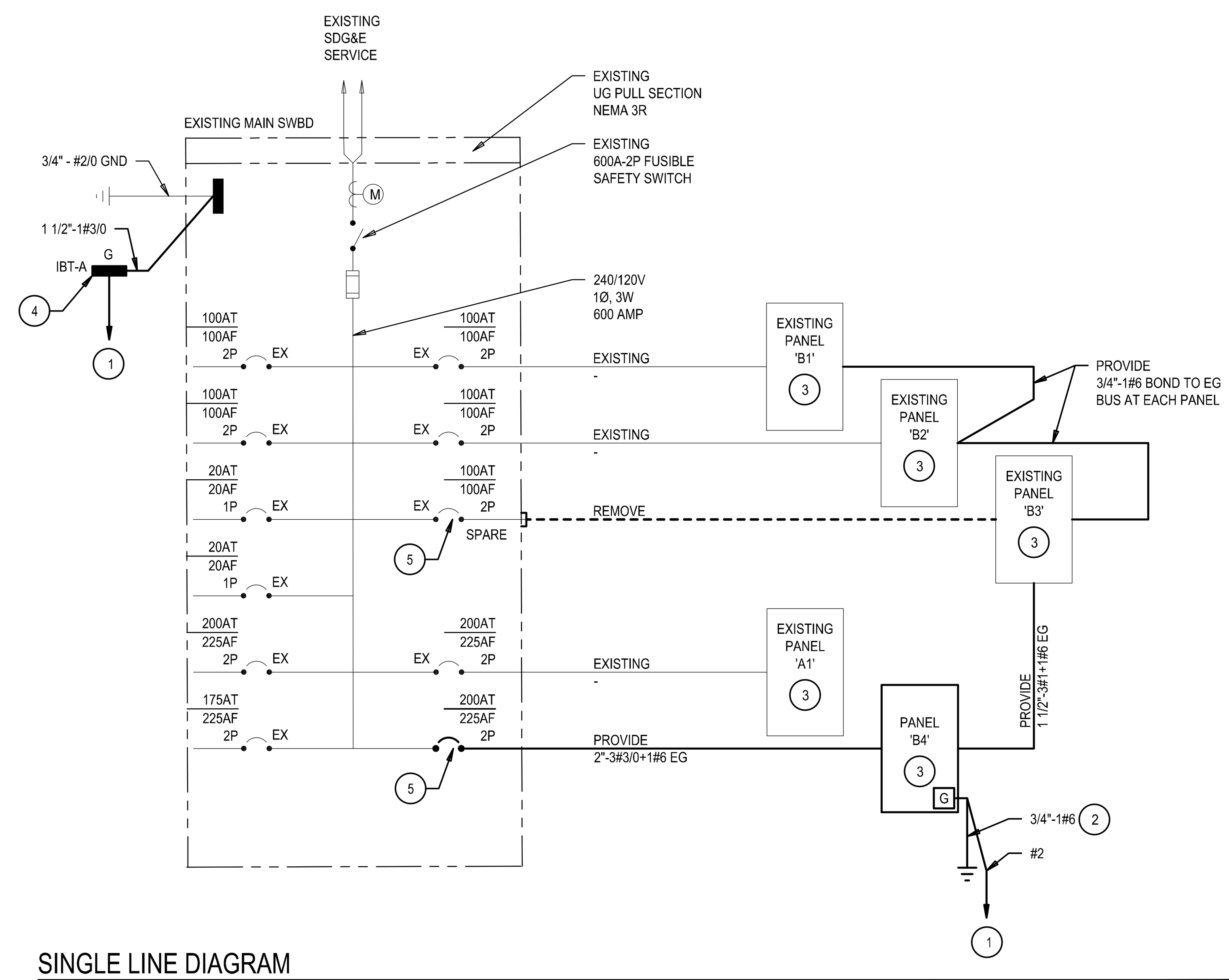

SINGLE LINE DIAGRAM

NO SCALE

KEYNOTES

1. TO COMMUNICATION SYSTEM GROUNDING PBB/SBB. REFER TO SHEET ET-312 FOR COMMUNICATIONS GROUNDING SYSTEM.
2. TO BUILDING STEEL, COLD WATER PIPE, UFER GROUND.
3. NEUTRAL SHALL BE ISOLATED (NOT BONDED) TO EQUIPMENT GROUND.
4. PROVIDE INTERSYSTEM BONDING (IBT) BUS EXTERNAL TO DISTRIBUTION BOARD PER CEC 250.94. REFER TO DETAIL 3/E-5.0.
5. REFER TO PANEL SCHEDULE ON THIS SHEET FOR ADDITIONAL INFORMATION.
6. REMOVE ELECTRICAL WIRING AND ASSOCIATED CONDUIT BACK TO SOURCE PANEL, WHERE NOT ACCESSIBLE, CONDUIT SHALL BE ABANDONED IN PLACE. PATCH ALL HOLES.

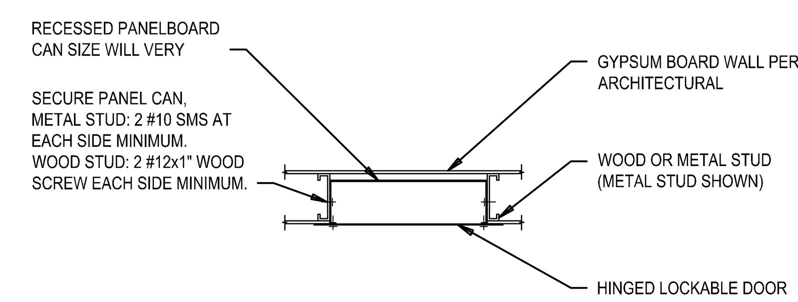

PLAN VIEW

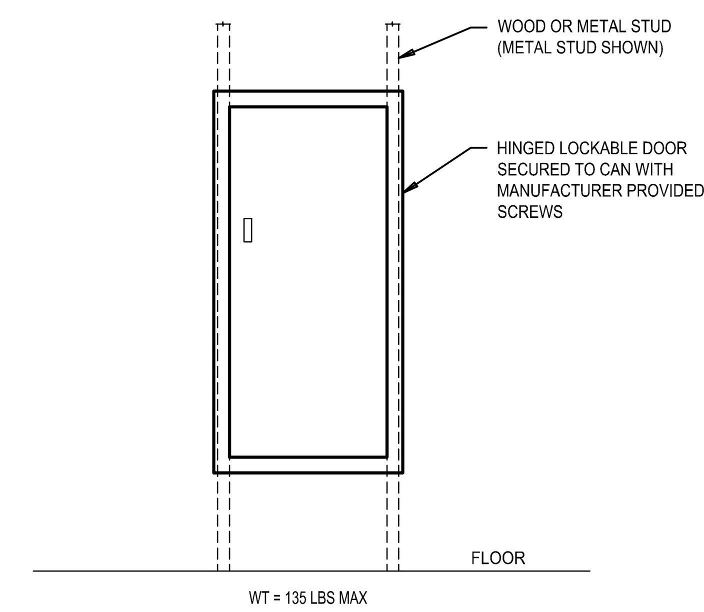

FRONT ELEVATION

RECESSED PANELBOARD ANCHORAGE DETAIL

NO SCALE

1 / E-6.0

PANEL ID: B2 — EXISTING

LOCATION: B2; MAIN: LUGS ONLY; BUS AMPS: 125; MOUNTING: RECESSED; AIC RATING: 10K

FEEDER/SYSTEM — FED FROM: MAIN; FEEDER OC: 100; SYSTEM: 240 /120V, 1-PH,

LOAD TYPES — blank or NON: NON-CONTINUOUS; LCL: LONG-CONTINUOUS; REC: DEMANDABLE RECEPT'S; KIT: KITCHEN; PNL: SUB-FED PNL; UNIT: RESI. UNIT; MTR: MOTOR

CKT	DESCRIPTION	LOAD TYPE	BKR	LOAD (VA) PH. A		LOAD (VA) PH.B		BKR	LOAD TYPE	DESCRIPTION	CKT
1	LTG - CLASSROOM 2	LCL	20/1	432	360			20/1	REC	REC - THIS SIDE & ADJ. WALL, NOTE 3	2
3	WATER FOUNTAIN	NON	20/1			400	360	20/1	REC	REC - OTHER SIDE	4
5	AC	MTR	50/	3750	3750			50/	MTR	AC	6
7	---	MTR	/2			3750	3750	/2	MTR	---	8
9	REC - CEILING (AV), NOTE 1	REC	20/1	180	360			20/1	REC	TEACHER'S STATION, NOTE 1	10
11	BUSSED SPACE						280	20/1	REC	MONITOR & REC, NOTE 2	12

	CONNECTED VA	DEMAND VA	PH A	PH B	
GEN'L LOAD:	400	400	8832	8540	CONNECTED LOAD PER PHASE
LONG CONTIN.:	432	540	17372		TOTAL CONNECTED LOAD (VA)
GEN'L RECEPT:	1540	1540	72		AMPS OF TOTAL CONNECTED LOAD
MOTOR LOAD:	15000	+ 25% OF LARGEST	18417.5		TOTAL DEMAND VA (BALANCED)
KITCHEN LOAD:	0	0	82		HIGH PHASE AMPS/LCL

PANEL NOTES:
1. CONNECT NEW BRANCH CIRCUIT TO EXISTING 'SPARE' CIRCUIT BREAKER.
2. PROVIDE NEW CIRCUIT BREAKER IN EXISTING SPACE. REFER TO SHEET NOTE 1.
3. CONNECT NEW LOAD TO EXISTING CIRCUIT.

PANEL ID: B4 — NEW

LOCATION: B2; MAIN: 200A/2P M.C.B.; BUS AMPS: 225; MOUNTING: RECESSED; AIC RATING: 22K

FEEDER/SYSTEM — FED FROM: MAIN SWBD; FEEDER OC: 200; SYSTEM: 240 /120V, 1-PH,

LOAD TYPES — blank or NON: NON-CONTINUOUS; LCL: LONG-CONTINUOUS; REC: DEMANDABLE RECEPT'S; KIT: KITCHEN; PNL: SUB-FED PNL; UNIT: RESI. UNIT; MTR: MOTOR

CKT	DESCRIPTION	LOAD TYPE	BKR	LOAD (VA) PH. A		LOAD (VA) PH.B		BKR	LOAD TYPE	DESCRIPTION	CKT
1	COPIER - COPY RM	NON	20/1	1000	180			20/1	REC	IDF	2
3	REC - COMPUTER	REC	20/1			360	540	20/1	REC	REC - COPY & GREEN RMS	4
5	REC - COMPUTER	REC	20/1	360	360			20/1	REC	REC - COPY ROOM	6
7	REC - COMPUTER	REC	20/1			360	1068	20/1	NON	DISHWASHER	8
9	EF B-1	MTR	15/1	100	1000			20/1	NON	MICROWAVE	10
11	WTR HTR - STAFF LOUNGE	NON	30/1			3000	1800	20/1	NON	REFRIGERATOR	12
13	REC - CEILING (AV)	REC	20/1	180	900			20/1	MTR	GARBAGE DISPOSAL	14
15	SPARE		20/1				720	20/1	REC	REC - LOUNGE	16
17	SPARE		20/1					20/1		SPARE	18
19	SPARE		20/1					20/1		SPARE	20
21	SPARE		20/1					20/1		SPARE	22
23	SPARE		20/1					20/1		SPARE	24
25	SPARE		20/1					20/1		SPARE	26
27	SPARE		20/1					20/1		SPARE	28
29	B1 - RESTROOM INSTA HOT	NON	20/1	1800				20/1		SPARE	30
31	B1 - RESTROOM INSTA HOT	NON	20/1			1800		20/1		SPARE	32
33	REC - ROOF	REC	20/1	720				20/1		SPARE	34
35	SPARE		20/1					20/1		SPARE	36
37	EXISTING PANEL 'B3'	PNL	100/	9510						BUSSED SPACE	38
39	---	PNL	/2			8400				BUSSED SPACE	40
41	BUSSED SPACE									BUSSED SPACE	42

	CONNECTED VA	DEMAND VA	PH A	PH B	
GEN'L LOAD:	11468	11468	16110	18048	CONNECTED LOAD PER PHASE
LONG CONTIN.:	750	938	34158		TOTAL CONNECTED LOAD (VA)
GEN'L RECEPT:	5940	5940	142		AMPS OF TOTAL CONNECTED LOAD
MOTOR LOAD:	16000	+ 25% OF LARGEST	35283		TOTAL DEMAND VA (BALANCED)
KITCHEN LOAD:	0	0	158		HIGH PHASE AMPS/LCL

PANEL NOTES:

PANEL ID: B3 — EXISTING

LOCATION: B3; MAIN: LUGS ONLY; BUS AMPS: 125; MOUNTING: RECESSED; AIC RATING: 10K

FEEDER/SYSTEM — FED FROM: B4; FEEDER OC: 100; SYSTEM: 240 /120V, 1-PH,

LOAD TYPES — blank or NON: NON-CONTINUOUS; LCL: LONG-CONTINUOUS; REC: DEMANDABLE RECEPT'S; KIT: KITCHEN; PNL: SUB-FED PNL; UNIT: RESI. UNIT; MTR: MOTOR

CKT	DESCRIPTION	LOAD TYPE	BKR	LOAD (VA) PH. A		LOAD (VA) PH.B		BKR	LOAD TYPE	DESCRIPTION	CKT
1	LTG - LOUNGE, COPY RM, & GREEN ROOM, NOTE 1	LCL	20/1	750	540			20/1	REC	REC - COPY RM & GREEN ROOM, NOTE 1	2
3	REC - STAFF LOUNGE & MONITOR, NOTE 1	REC	20/1			540	360	20/1	REC	REC - STAFF LOUNGE, NOTE 1	4
5	AC	MTR	50/	3750	3750			50/	MTR	AC	6
7	---	MTR	/2			3750	3750	/2	MTR	---	8
9	REC - ROOF	REC	20/1	720						BUSSED SPACE	10
11	BUSSED SPACE									BUSSED SPACE	12

	CONNECTED VA	DEMAND VA	PH A	PH B	
GEN'L LOAD:	0	0	9510	8400	CONNECTED LOAD PER PHASE
LONG CONTIN.:	750	938	17910		TOTAL CONNECTED LOAD (VA)
GEN'L RECEPT:	2160	2160	75		AMPS OF TOTAL CONNECTED LOAD
MOTOR LOAD:	15000	+ 25% OF LARGEST	19035		TOTAL DEMAND VA (BALANCED)
KITCHEN LOAD:	0	0	89		HIGH PHASE AMPS/LCL

PANEL NOTES:
1. CONNECT NEW LOAD TO EXISTING CIRCUIT.

SHEET NOTES

1. WHERE NEW CIRCUIT BREAKERS ARE PROVIDED FOR EXISTING SWITCHBOARD OR PANELS, THEY SHALL BE NEW COMPONENTS (NOT RECONDITIONED) AND SHALL MATCH THE EXISTING MANUFACTURER, TYPE, AND AIC RATING.
2. EXISTING CIRCUIT BREAKERS THAT ARE REMOVED SHALL BE PROPERLY HANDLED AND SHALL BE TURNED OVER TO THE DISTRICT REPRESENTATIVE.

IDENTIFICATION STAMP
DIV. OF THE STATE ARCHITECT
APP: 04-122772 INC:
REVIEWED FOR
SS ☑ FLS ☑ ACS ☑
DATE: 03/26/2024

SPROTTE | WATSON
ARCHITECTURE | PLANNING

LICENSED ARCHITECT — C12359 — REN. OCTOBER 2025 — STATE OF CALIFORNIA

CONSULTANT

REGISTERED PROFESSIONAL ENGINEER — DALE M. FRANCHAK — No.11533 — exp.6/30/24 — ELECTRICAL — STATE OF CALIFORNIA
01/25/24

TURPIN & RATTAN Engineering, Inc.
Consulting Engineers
4719 PALM AVENUE
LA MESA, CA 91941-5221
619 / 466 / 6224 fax 466 / 6233
E-MAIL: engineer@treisd.com

TREI PROJECT # 22277.S01
h.lozano 01/25/24 - 1:08pm

DEHESA ELEMENTARY SCHOOL
CONSTRUCTION DOCUMENTS
DEHESA SCHOOL DISTRICT
4612 DEHESA ROAD
EL CAJON, CA 92019

REVISIONS

DESCRIPTION

SINGLE LINE DIAGRAM AND PANEL SCHEDULES

DATE

01.25.24

JOB #

22-0400

SHEET #

E-6.0

7/12/2018 1:34:44 PM

STATE OF CALIFORNIA
Indoor Lighting
CALIFORNIA ENERGY COMMISSION

CERTIFICATE OF COMPLIANCE	**NRCC-LTI-E**

This document is used to demonstrate compliance with requirements in 110.9, 110.12(c), 130.0, 130.1, 140.6 and 141.0(b)2 for indoor lighting scopes using the prescriptive path for nonresidential and hotel/motel occupancies. It is also used to document compliance with requirements in 160.5, 170.2(e) and 180.2(b)4 for indoor lighting scopes using the prescriptive path for multifamily occupancies. Multifamily includes dormitory and senior living facilities.

Project Name:	Dehesa ES Modernization - Bldg A	**Report Page:**	**(Page 1 of 7)**
Project Address:	4612 Dehesa Road	**Date Prepared:**	9/26/2023

A. GENERAL INFORMATION

01	Project Location (city)	El Cajon	04 Total Conditioned Floor Area (ft^2)	2,656
02	Climate Zone	10	05 Total Unconditioned Floor Area (ft^2)	0
03	Occupancy Types Within Project (select all that apply):		06 # of Stories (Habitable Above Grade)	1

● Library

B. PROJECT SCOPE

This table includes any lighting systems that are within the scope of the permit application and are demonstrating compliance using the prescriptive path outlined in 140.6 / 170.2(e) or 141.0(b)2 / 180.2(b)4 for alterations.

Scope of Work	Conditioned Spaces		Unconditioned Spaces	
01	02	03	04	05
My Project Consists of (check all that apply):	Calculation Method	Area (ft^2)	Calculation Method	Area (ft^2)
☐ New Lighting System				
☐ New Lighting System - Parking Garage				
☒ Altered Lighting System	Area Category Method	2656	Area Category Method	0
Total Area of Work (ft^2)	2656		0	

STATE OF CALIFORNIA
Indoor Lighting
CALIFORNIA ENERGY COMMISSION

CERTIFICATE OF COMPLIANCE			**NRCC-LTI-E**
Project Name:	Dehesa ES Modernization - Bldg A	**Report Page:**	**(Page 2 of 7)**
		Date Prepared:	9/26/2023

C. COMPLIANCE RESULTS

If any cell on this table says "DOES NOT COMPLY" or "COMPLIES with Exceptional Conditions" refer to Table D. for guidance.

Lighting in conditioned and unconditioned spaces must not be combined for compliance per 140.6(b)1 / 170.2(e)	Allowed Lighting Power per 140.6(b) / 170.2(e) (Watts)						Adjusted Lighting Power per 140.6(a) / 170.2(e) (Watts)				Compliance Results
	01	02	03	04		05	06	07		08	09
	Complete Building 140.6(c)1	Area Category 140.6(c)2 / 170.2(e)4	Area Category Additional 140.6(c)2G / 170.2(e)4Av (+)	Tailored 140.6(c)3 / 170.2(e)4B (+)	=	**Total Allowed** (Watts)	≥ Total Designed (Watts)	Adjustments PAF Lighting Control Credits 140.6(a)2 / 170.2(e)1B (-)	=	**Total Adjusted** (Watts) *Includes Adjustments	**05 must be >= 08 140.6 / 170.2(e)**
	(See Table I)	(See Table I)	(See Table J)	(See Table K)			(See Table F)	(See Table P)			
Conditioned		2,124.8	0		=	2,125	≥ 828	0	=	828	COMPLIES
Unconditioned					=		≥		=		
Controls Compliance (See Table H for Details)											COMPLIES
Rated Power Reduction Compliance (See Table Q for Details)											

D. EXCEPTIONAL CONDITIONS

This table is auto-filled with uneditable comments because of selections made or data entered in tables throughout the form.

E. ADDITIONAL REMARKS

This table includes remarks made by the permit applicant to the Authority Having Jurisdiction.

STATE OF CALIFORNIA
Indoor Lighting
CALIFORNIA ENERGY COMMISSION

CERTIFICATE OF COMPLIANCE			**NRCC-LTI-E**
Project Name:	Dehesa ES Modernization - Bldg A	**Report Page:**	**(Page 3 of 7)**
		Date Prepared:	9/26/2023

F. INDOOR LIGHTING FIXTURE SCHEDULE

This table includes all planned permanent and portable lighting other than dwelling unit/ hotel/ motel room lighting. Multifamily dwelling unit and hotel/motel room lighting is documented in Table T. If using Table T to document lighting in multifamily common use areas providing shared provisions for living, eating, cooking or sanitation, those luminaires are not included here.

Designed Wattage: Conditioned Spaces

01	02	03	04	05	06	07	08	09	10	
Name or Item Tag	Complete Luminaire Description	Modular (Track) Fixture	Small Aperture & Color Change[1]	Watts per luminaire[2]	How is Wattage determined	Total Number of Luminaires	Excluded per 140.6(a)3 / 170.2(e)2C	Design Watts	Field Inspector	
									Pass	Fail
C, C1, C2, C3	LED Pendant	No	NA	69	Mfr. Spec	12	No	828	☐	☐
Total Designed Watts: CONDITIONED SPACES								828		

[1]FOOTNOTE: Design Watts for small aperture and color changing luminaires which qualify per 140.6(a)4B / 170.2(e)2D is adjusted to be 75% /80% of their rated wattage. Table F automatically makes this adjustment, the permit applicant should enter full rated wattage in column 05.

[2]Authority Having Jurisdiction may ask for Luminaire cut sheets to confirm wattage used for compliance per 130.0(c) / 160.5(b). Wattage used must be the maximum rated for the luminaire, not the lamp.

G. MODULAR LIGHTING SYSTEMS

This section does not apply to this project.

H. INDOOR LIGHTING CONTROLS (Not including PAFs)

This table includes lighting controls for conditioned and unconditioned spaces.

Building Level Controls

01	02	03	
		Field Inspector	
		Pass	Fail
Mandatory Demand Response 110.12(c)	Shut-off controls 130.1(c) / 160.5(b)4C	☐	☐
Required >= 4,000W subject to multilevel	Whole Building Auto Time Switch		

STATE OF CALIFORNIA
Indoor Lighting
CALIFORNIA ENERGY COMMISSION

CERTIFICATE OF COMPLIANCE			**NRCC-LTI-E**
Project Name:	Dehesa ES Modernization - Bldg A	**Report Page:**	**(Page 4 of 7)**
		Date Prepared:	9/26/2023

H. INDOOR LIGHTING CONTROLS (Not including PAFs)

Area Level Controls

04	05	06	07	08	09	10	11	12	
Area Description	Complete Building or Area Category Primary Function Area	Manual Area Controls 130.1(a) / 160.5(b)4A	Multi-Level Controls 130.1(b) / 160.5(b)4B	Shut-Off Controls 130.1(c) // 160.5(b)4C	Primary/Skylit Daylighting 130.1(d) / 160.5(b)4D	Secondary Daylighting 130.1(d) / 160.5(b)4D	Interlocked Systems 140.6(a)1/ 170.2(e)2A	Field Inspector	
								Pass	Fail
					13				
					Plan Sheet Showing Daylit Zones:				

I. LIGHTING POWER ALLOWANCE: COMPLETE BUILDING OR AREA CATEGORY METHODS

Each area complying using the Complete Building or Area Category Methods per 140.6(b) are included in this table. Column 06 indicates if additional lighting power allowances per 140.6(c) or adjustments per 140.6(a) are being used .

Conditioned Spaces

01	02	03	04	05	06	
Area Description	Complete Building or Area Category Primary Function Area	Allowed Density (W/ft^2)	Area (ft^2)	Allowed Wattage (Watts)	Additional Allowance / Adjustment	
					Area Category	PAF
Library Zone - Reading Area	Library - Reading Area	0.8	1,328	1,062.4	No	No
Library Zone - Stacks	Library - Reading Area	0.8	1,328	1,062.4	No	No
		TOTALS:	2,656	2,124.8	See Tables J, or P for detail	

J. ADDITIONAL ALLOWANCE: AREA CATEGORY METHOD QUALIFYING LIGHTING SYSTEM

This section does not apply to this project.

STATE OF CALIFORNIA
Indoor Lighting
CALIFORNIA ENERGY COMMISSION

CERTIFICATE OF COMPLIANCE			**NRCC-LTI-E**
Project Name:	Dehesa ES Modernization - Bldg A	**Report Page:**	**(Page 5 of 7)**
		Date Prepared:	9/26/2023

K. TAILORED METHOD GENERAL LIGHTING POWER ALLOWANCE

This section does not apply to this project.

L. ADDITIONAL LIGHTING ALLOWANCE: TAILORED WALL DISPLAY

This section does not apply to this project.

M. ADDITIONAL LIGHTING ALLOWANCE: TAILORED FLOOR AND TASK LIGHTING

This section does not apply to this project.

N. ADDITIONAL LIGHTING ALLOWANCE: TAILORED DECORATIVE /SPECIAL EFFECTS

This section does not apply to this project.

O. ADDITIONAL LIGHTING ALLOWANCE: TAILORED VERY VALUABLE MERCHANDISE

This section does not apply to this project.

P. POWER ADJUSTMENT: LIGHTING CONTROL CREDIT (POWER ADJUSTMENT FACTOR (PAF))

This section does not apply to this project.

Q. RATED POWER REDUCTION COMPLIANCE FOR ONE-FOR-ONE ALTERATIONS

This section does not apply to this project.

R. 80% LIGHTING POWER FOR ALL ALTERATIONS - CONTROLS EXCEPTIONS

This section does not apply to this project.

STATE OF CALIFORNIA
Indoor Lighting
CALIFORNIA ENERGY COMMISSION

CERTIFICATE OF COMPLIANCE			**NRCC-LTI-E**
Project Name:	Dehesa ES Modernization - Bldg A	**Report Page:**	**(Page 6 of 7)**
		Date Prepared:	9/26/2023

S. DAYLIGHT DESIGN POWER ADJUSTMENT FACTOR (PAF)

This section does not apply to this project.

T. DWELLING UNIT LIGHTING

This section does not apply to this project.

U. DECLARATION OF REQUIRED CERTIFICATES OF INSTALLATION

Selections have been made based on information provided in this document. If any selections have been changed by permit applicant, an explanation should be included in Table E. Additional Remarks. These documents must be provided to the building inspector during construction and can be found online

Form/Title
NRCI-LTI-E - Must be submitted for all buildings

V. DECLARATION OF REQUIRED CERTIFICATES OF ACCEPTANCE

There are no NRCA forms required for this project.

STATE OF CALIFORNIA
Indoor Lighting
CALIFORNIA ENERGY COMMISSION

CERTIFICATE OF COMPLIANCE			**NRCC-LTI-E**
Project Name:	Dehesa ES Modernization - Bldg A	**Report Page:**	**(Page 7 of 7)**
Project Address:	4612 Dehesa Road	**Date Prepared:**	9/26/2023

DOCUMENTATION AUTHOR'S DECLARATION STATEMENT

I certify that this Certificate of Compliance documentation is accurate and complete.

Documentation Author Name: Max DeLuna	Documentation Author Signature:
Company: Turpin & Rattan Engineering, Inc.	Signature Date: 2023-09-26
Address: 4719 Palm Avenue	CEA/ HERS Certification Identification (if applicable):
City/State/Zip: La Mesa CA 91941-5221	Phone: 619.466.6224

RESPONSIBLE PERSON'S DECLARATION STATEMENT

I certify the following under penalty of perjury, under the laws of the State of California:

1. The information provided on this Certificate of Compliance is true and correct.
2. I am eligible under Division 3 of the Business and Professions Code to accept responsibility for the building design or system design identified on this Certificate of Compliance (responsible designer)
3. The energy features and performance specifications, materials, components, and manufactured devices for the building design or system design identified on this Certificate of Compliance conform to the requirements of Title 24, Part 1 and Part 6 of the California Code of Regulations.
4. The building design features or system design features identified on this Certificate of Compliance are consistent with the information provided on other applicable compliance documents, worksheets, calculations, plans and specifications submitted to the enforcement agency for approval with this building permit application.
5. I will ensure that a completed signed copy of this Certificate of Compliance shall be made available with the building permit(s) issued for the building, and made available to the enforcement agency for all applicable inspections. I understand that a completed signed copy of this Certificate of Compliance is required to be included with the documentation the builder provides to the building owner at occupancy.

Responsible Designer Name: Dale Franchak	Responsible Designer Signature:
Company: Turpin & Rattan Engineering, Inc	Date Signed: 2023-09-26
Address: 4719 Palm Avenue	License: 11533
City/State/Zip: La Mesa CA 91941	Phone: 619-466-6224

IDENTIFICATION STAMP
DIV. OF THE STATE ARCHITECT
APP: 04-122772 INC:
REVIEWED FOR
SS ☑ FLS ☑ ACS ☑
DATE: 03/26/2024

SPROTTE | WATSON
ARCHITECTURE + PLANNING

LICENSED ARCHITECT
C12359
STATE OF CALIFORNIA

CONSULTANT

REGISTERED PROFESSIONAL ENGINEER
DALE W. FRANCHAK
No.11533
exp. 06/24
ELECTRICAL
STATE OF CALIFORNIA
01/25/24

TURPIN & RATTAN
Engineering, Inc.
Consulting Engineers
4719 PALM AVENUE
LA MESA, CA 91941-5221
619 / 466 / 6224 fax 466 / 6233
E-MAIL: engineer@trengi.com
TREI PROJECT # 22277.S01
h:\ecamo 01/25/24 - 1:08pm

DEHESA ELEMENTARY SCHOOL
CONSTRUCTION DOCUMENTS
DEHESA SCHOOL DISTRICT
4612 DEHESA ROAD
EL CAJON, CA 92019

REVISIONS

DESCRIPTION
TITLE 24 COMPLIANCE - BLDG A

DATE
01.25.24

JOB #
22-0400

SHEET #
E-7.0

7/12/2018 1:34:44 PM

STATE OF CALIFORNIA
Indoor Lighting
CALIFORNIA ENERGY COMMISSION

CERTIFICATE OF COMPLIANCE		NRCC-LTI-E
Project Name: Dehesa ES Modernization - Bldg B	Report Page:	(Page 1 of 8)
Project Address: 4612 Dehesa Road	Date Prepared:	10/12/2023

This document is used to demonstrate compliance with requirements in 110.9, 110.12(c), 130.0, 130.1, 140.6 and 141.0(b)2 for indoor lighting scopes using the prescriptive path for nonresidential and hotel/motel occupancies. It is also used to document compliance with requirements in 160.5, 170.2(e) and 180.2(b)4 for indoor lighting scopes using the prescriptive path for multifamily occupancies. Multifamily includes dormitory and senior living facilities.

A. GENERAL INFORMATION

01	Project Location (city)	El Cajon	04 Total Conditioned Floor Area (ft²)	2,744
02	Climate Zone	10	05 Total Unconditioned Floor Area (ft²)	0
03	Occupancy Types Within Project (select all that apply):		06 # of Stories (Habitable Above Grade)	1

● Classroom ● All Other Occupancies

B. PROJECT SCOPE

This table includes any lighting systems that are within the scope of the permit application and are demonstrating compliance using the prescriptive path outlined in 140.6 / 170.2(e) or 141.0(b)2 / 180.2(b)4 for alterations.

Scope of Work	Conditioned Spaces		Unconditioned Spaces	
01	02	03	04	05
My Project Consists of (check all that apply):	Calculation Method	Area (ft²)	Calculation Method	Area (ft²)
☐ New Lighting System				
☐ New Lighting System - Parking Garage				
☒ Altered Lighting System	Area Category Method	2744	Area Category Method	0
Total Area of Work (ft²)	2744		0	

STATE OF CALIFORNIA
Indoor Lighting
CALIFORNIA ENERGY COMMISSION

CERTIFICATE OF COMPLIANCE		NRCC-LTI-E
Project Name: Dehesa ES Modernization - Bldg B	Report Page:	(Page 2 of 8)
	Date Prepared:	10/12/2023

C. COMPLIANCE RESULTS

If any cell on this table says "DOES NOT COMPLY" or "COMPLIES with Exceptional Conditions" refer to Table D. for guidance.

Lighting in conditioned and unconditioned spaces must not be combined for compliance per 140.6(b)1 / 170.2(e)	Allowed Lighting Power per 140.6(b) / 170.2(e) (Watts)						Adjusted Lighting Power per 140.6(a) / 170.2(e) (Watts)				Compliance Results
	01	02	03	04		05	06	07		08	09
	Complete Building 140.6(c)1 (See Table I)	Area Category 140.6(c)2 / 170.2(e)4 (See Table I)	Area Category Additional 140.6(c)2G / 170.2(e)4Av (+) (See Table J)	Tailored 140.6(c)3 / 170.2(e)4B (+) (See Table K)	=	**Total Allowed** (Watts) ≥	Total Designed (Watts) (See Table F)	Adjustments PAF Lighting Control Credits 140.6(a)2 / 170.2(e)1B (-) (See Table P)	=	**Total Adjusted** (Watts) *Includes Adjustments	**05 must be >= 08 140.6 / 170.2(e)**
Conditioned		1,632.9	0		=	1,633 ≥	1,687	68	=	1619	COMPLIES
Unconditioned					=	≥			=		
Controls Compliance (See Table H for Details)											COMPLIES
Rated Power Reduction Compliance (See Table Q for Details)											

D. EXCEPTIONAL CONDITIONS

This table is auto-filled with uneditable comments because of selections made or data entered in tables throughout the form.

E. ADDITIONAL REMARKS

This table includes remarks made by the permit applicant to the Authority Having Jurisdiction.

STATE OF CALIFORNIA
Indoor Lighting
CALIFORNIA ENERGY COMMISSION

CERTIFICATE OF COMPLIANCE		NRCC-LTI-E
Project Name: Dehesa ES Modernization - Bldg B	Report Page:	(Page 3 of 8)
	Date Prepared:	10/12/2023

F. INDOOR LIGHTING FIXTURE SCHEDULE

This table includes all planned permanent and portable lighting other than dwelling unit/ hotel/ motel room lighting. Multifamily dwelling unit and hotel/motel room lighting is documented in Table T. If using Table T to document lighting in multifamily common use areas providing shared provisions for living, eating, cooking or sanitation, those luminaires are not included here.

Designed Wattage: Conditioned Spaces

01	02	03	04	05	06	07	08	09	10	
Name or Item Tag	Complete Luminaire Description	Modular (Track) Fixture	Small Aperture & Color Change[1]	Watts per luminaire[2]	How is Wattage determined	Total Number of Luminaires	Excluded per 140.6(a)3 / 170.2(e)2C	Design Watts	Field Inspector Pass	Fail
A	2' X 2' Recessed LED Troffer	No	NA	36	Mfr. Spec	28	No	1,008	☐	☐
B	32" Dia Suspended LED D/ID - 75.4	No	NA	75.4	Mfr. Spec	9	No	678.6	☐	☐
D	10'-0" Recessed Wall Wash Linear LED	No	NA	60	Mfr. Spec		No	0	☐	☐
Total Designed Watts: CONDITIONED SPACES								1,687		

[1]FOOTNOTE: Design Watts for small aperture and color changing luminaires which qualify per 140.6(a)4B / 170.2(e)2D is adjusted to be 75%/80% of their rated wattage. Table F automatically makes this adjustment, the permit applicant should enter full rated wattage in column 05.

[2]Authority Having Jurisdiction may ask for Luminaire cut sheets to confirm wattage used for compliance per 130.0(c) / 160.5(b). Wattage used must be the maximum rated for the luminaire, not the lamp.

G. MODULAR LIGHTING SYSTEMS

This section does not apply to this project.

H. INDOOR LIGHTING CONTROLS (Not including PAFs)

This table includes lighting controls for conditioned and unconditioned spaces.

Building Level Controls

01	02	03	
		Field Inspector Pass	Fail
Mandatory Demand Response 110.12(c)	Shut-off controls 130.1(c) / 160.5(b)4C	☐	☐

STATE OF CALIFORNIA
Indoor Lighting
CALIFORNIA ENERGY COMMISSION

CERTIFICATE OF COMPLIANCE		NRCC-LTI-E
Project Name: Dehesa ES Modernization - Bldg B	Report Page:	(Page 4 of 8)
	Date Prepared:	10/12/2023

H. INDOOR LIGHTING CONTROLS (Not including PAFs)

Required >= 4,000W subject to multilevel	Whole Building Auto Time Switch	☐	☐

Area Level Controls

04	05	06	07	08	09	10	11	12	
Area Description	Complete Building or Area Category Primary Function Area	Manual Area Controls 130.1(a) / 160.5(b)4A	Multi-Level Controls 130.1(b) / 160.5(b)4B	Shut-Off Controls 130.1(c) / 160.5(b)4C	Primary/Skylit Daylighting 130.1(d) / 160.5(b)4D	Secondary Daylighting 130.1(d) / 160.5(b)4D	Interlocked Systems 140.6(a)1/ 170.2(e)2A	Field Inspector Pass	Fail
					13				
					Plan Sheet Showing Daylit Zones:				

I. LIGHTING POWER ALLOWANCE: COMPLETE BUILDING OR AREA CATEGORY METHODS

Each area complying using the Complete Building or Area Category Methods per 140.6(b) are included in this table. Column 06 indicates if additional lighting power allowances per 140.6(c) or adjustments per 140.6(a) are being used .

Conditioned Spaces

01	02	03	04	05	06	
Area Description	Complete Building or Area Category Primary Function Area	Allowed Density (W/ft²)	Area (ft²)	Allowed Wattage (Watts)	Additional Allowance / Adjustment Area Category	PAF
Computer Room Zone	Copy Room	0.7	252	176.4	No	No
Classrooms	Classroom, Lecture, or Training Vocational	0.6	1,836	1,101.6	No	No
Staff Lounge	Lounge	0.55	538	295.9	No	Yes
Copy Room	Copy Room	0.5	118	59	No	No
		TOTALS:	2,744	1,632.9	See Tables J, or P for detail	

J. ADDITIONAL ALLOWANCE: AREA CATEGORY METHOD QUALIFYING LIGHTING SYSTEM

This section does not apply to this project.

STATE OF CALIFORNIA
Indoor Lighting
CALIFORNIA ENERGY COMMISSION

CERTIFICATE OF COMPLIANCE		NRCC-LTI-E
Project Name: Dehesa ES Modernization - Bldg B	Report Page:	(Page 5 of 8)
	Date Prepared:	10/12/2023

K. TAILORED METHOD GENERAL LIGHTING POWER ALLOWANCE

This section does not apply to this project.

L. ADDITIONAL LIGHTING ALLOWANCE: TAILORED WALL DISPLAY

This section does not apply to this project.

M. ADDITIONAL LIGHTING ALLOWANCE: TAILORED FLOOR AND TASK LIGHTING

This section does not apply to this project.

N. ADDITIONAL LIGHTING ALLOWANCE: TAILORED DECORATIVE /SPECIAL EFFECTS

This section does not apply to this project.

O. ADDITIONAL LIGHTING ALLOWANCE: TAILORED VERY VALUABLE MERCHANDISE

This section does not apply to this project.

STATE OF CALIFORNIA
Indoor Lighting
CALIFORNIA ENERGY COMMISSION

CERTIFICATE OF COMPLIANCE		NRCC-LTI-E
Project Name: Dehesa ES Modernization - Bldg B	Report Page:	(Page 6 of 8)
	Date Prepared:	10/12/2023

P. POWER ADJUSTMENT: LIGHTING CONTROL CREDIT (POWER ADJUSTMENT FACTOR (PAF))

This table includes all areas indicated in Table I or Table K as using a PAF credit described in 140.6(a)2 / 170.2(e)2B.

Conditioned Spaces

01	02									03	04	05	06	07
Area Description	PAF per 140.6(a)2 / 170.2(e)2B[1] (*Can be used in conjunction with other PAF'S)									Luminaires Controlled for PAF Credit				Additional Control Credit Allowance (Watts)
	1	2A	2B	3A*	3B*	4*	5*	6*	7*	Luminaire Name or Item Tag	Luminaire Design Watts	Number of Luminaires	Lighting Controlled (Watts)	
				Pick up to one	Pick up to one		Pick up to one[2]		Pick up to one[2]					
Staff Lounge	☒	☐	☐	☐	☐	☐	☐	☐	☐	B	75.4	9	678.6	67.86
	08									09				
☐	All spaces applying PAF 5, 6 or 7 include a daylight design meeting requirements in 140.3(d). See Table 5.									**Total Power Adjustment (Watts) CONDITIONED SPACES:**				67.86

[1] FOOTNOTES: PAFs outlined in Table 140.6-A /170.2-L include 1) Daylight continuous dimming plus OFF; 2A) Occupant sensors in offices with one sensor per <= 125 ft²; 2B) Occupant sensors in offices with one sensor per 126 - 250 ft²; 3A) Institutional tuning, non-daylit areas and 3B) Institutional tuning, daylit areas; 4) Demand response; 5) Clerestory fenestration; 6) Horizontal slats; 7) Light shelves.

[2] Luminaires that qualify for PAF 5, 6, or 7 can be used in conjunction with PAF 1.

Q. RATED POWER REDUCTION COMPLIANCE FOR ONE-FOR-ONE ALTERATIONS

This section does not apply to this project.

R. 80% LIGHTING POWER FOR ALL ALTERATIONS - CONTROLS EXCEPTIONS

This section does not apply to this project.

STATE OF CALIFORNIA
Indoor Lighting
CALIFORNIA ENERGY COMMISSION

CERTIFICATE OF COMPLIANCE		NRCC-LTI-E
Project Name: Dehesa ES Modernization - Bldg B	Report Page:	(Page 7 of 8)
	Date Prepared:	10/12/2023

S. DAYLIGHT DESIGN POWER ADJUSTMENT FACTOR (PAF)

This table documents clerestories, horizontal slats or light shelves meet the requirements in 140.3(d) / 170.2(e)2B if a Power Adjustment Factor was claimed on Table P. These features must be documented on the architectural plans or where appropriate within the construction documents. This PAF also must be verified in the field with an acceptance test per Table U.

01	Compliance Strategy	

T. DWELLING UNIT LIGHTING

This section does not apply to this project.

U. DECLARATION OF REQUIRED CERTIFICATES OF INSTALLATION

Selections have been made based on information provided in this document. If any selections have been changed by permit applicant, an explanation should be included in Table E. Additional Remarks. These documents must be provided to the building inspector during construction and can be found online

Form/Title
NRCI-LTI-E - Must be submitted for all buildings

V. DECLARATION OF REQUIRED CERTIFICATES OF ACCEPTANCE

Selections have been made based on information provided in this document. If any selections have been changed by the permit applicant, an explanation should be included in Table E. Additional Remarks. These documents must be provided to the building inspector during construction and any with "-A" in the form name must be completed through an Acceptance Test Technician Certification Provider (ATTCP). For more information visit: http://www.energy.ca.gov/title24/attcp/providers.html

Form/TItle	Systems/Spaces To Be Field Verified
NRCA-LTI-02-A - Must be submitted for occupancy sensors and automatic time switch controls.	Whole Building Time Switch;
NRCA-LTI-04-A - Must be submitted for demand responsive lighting controls.	Whole Building Demand Response;

STATE OF CALIFORNIA
Indoor Lighting
CALIFORNIA ENERGY COMMISSION

CERTIFICATE OF COMPLIANCE		NRCC-LTI-E
Project Name: Dehesa ES Modernization - Bldg B	Report Page:	(Page 8 of 8)
Project Address: 4612 Dehesa Road	Date Prepared:	10/12/2023

DOCUMENTATION AUTHOR'S DECLARATION STATEMENT

I certify that this Certificate of Compliance documentation is accurate and complete.

Documentation Author Name: Max DeLuna	Documentation Author Signature:
Company: Turpin & Rattan Engineering, Inc.	Signature Date: 2023-10-12
Address: 4719 Palm Avenue	CEA/ HERS Certification Identification (if applicable):
City/State/Zip: La Mesa CA 91941-5221	Phone: 619.466.6224

RESPONSIBLE PERSON'S DECLARATION STATEMENT

I certify the following under penalty of perjury, under the laws of the State of California:

1. The information provided on this Certificate of Compliance is true and correct.
2. I am eligible under Division 3 of the Business and Professions Code to accept responsibility for the building design or system design identified on this Certificate of Compliance (responsible designer)
3. The energy features and performance specifications, materials, components, and manufactured devices for the building design or system design identified on this Certificate of Compliance conform to the requirements of Title 24, Part 1 and Part 6 of the California Code of Regulations.
4. The building design features or system design features identified on this Certificate of Compliance are consistent with the information provided on other applicable compliance documents, worksheets, calculations, plans and specifications submitted to the enforcement agency for approval with this building permit application.
5. I will ensure that a completed signed copy of this Certificate of Compliance shall be made available with the building permit(s) issued for the building, and made available to the enforcement agency for all applicable inspections. I understand that a completed signed copy of this Certificate of Compliance is required to be included with the documentation the builder provides to the building owner at occupancy.

Responsible Designer Name: Dale Franchak	Responsible Designer Signature:
Company: Turpin & Rattan Engineering, Inc	Date Signed: 2023-10-12
Address: 4719 Palm Avenue	License: 11533
City/State/Zip: La Mesa CA 91941	Phone: 619-466-6224

IDENTIFICATION STAMP
DIV. OF THE STATE ARCHITECT
APP: 04-122772 INC:
REVIEWED FOR
SS ☑ FLS ☑ ACS ☑
DATE: 03/26/2024

SPROTTE | WATSON ARCHITECTURE + PLANNING

REGISTERED PROFESSIONAL ENGINEER
C12359
ELECTRICAL
STATE OF CALIFORNIA

CONSULTANT

REGISTERED PROFESSIONAL ENGINEER
DALE M. FRANCHAK
No.11533
exp. 06/24
ELECTRICAL
STATE OF CALIFORNIA
01/25/24

TURPIN & RATTAN Engineering, Inc.
Consulting Engineers
4719 PALM AVENUE
LA MESA, CA 91941-5221
619 / 466 / 6224 fax 466 / 6233
E-MAIL: engineer@trteid.com
TRE1 PROJECT # 22277.S01
h:\ecamo 01/25/24 - 1:08pm

DEHESA ELEMENTARY SCHOOL
CONSTRUCTION DOCUMENTS
DEHESA SCHOOL DISTRICT
4612 DEHESA ROAD
EL CAJON, CA 92019

REVISIONS

DESCRIPTION
TITLE 24 COMPLIANCE - BLDG B

DATE
01.25.24

JOB #
22-0400

SHEET #
E-7.1

7/12/2018 1:34:44 PM

FIRE ALARM LEGEND

SYMBOL	DESCRIPTION
	DASHED SYMBOL INDICATES EXISTING OUTLET, DEVICE OR EQUIPMENT TO BE REMOVED.
	FINE-LINED SYMBOL INDICATES EXISTING OUTLET, DEVICE OR EQUIPMENT TO REMAIN.
	EXISTING FIRE ALARM MANUAL PULL STATION, WALL MOUNTED AT +45" AFF U.O.N.
	EXISTING FIRE ALARM HORN, WALL MOUNTED AT +92" AFF U.O.N.
15	FIRE ALARM SPEAKER WITH VISUAL INDICATION, CEILING MOUNTED. SUBSCRIPT INDICATES CANDELA RATING. FCI # SPSCW CSFM# 7320-1653:0201
	SMOKE DETECTOR, PHOTOELECTRIC TYPE, CEILING MOUNTED. FCI # ASD-PL3 CSFM# 7272-1703:0501
	HEAT DETECTOR, ATTIC TYPE, MOUNTED ABOVE CEILING. FCI # ATD-L3H CSFM# 7270-1703:0502

FIRE ALARM LEGEND

SYMBOL	DESCRIPTION
	END OF LINE RESISTOR.
M	EXISTING MONITOR MODULE
FACP	EXISTING FIRE ALARM CONTROL PANEL. FCI # ELI-MB-E3 CSFM# 7163-1703:0125
FATC	FIRE ALARM TERMINAL CABINET.
SNAC	FIRE ALARM SUPPLEMENTARY NOTIFICATION APPLIANCE CIRCUIT POWER SUPPLY. FCI # HPF-PS10 CSFM# 7315-1637:0505
	PULLBOX WITH SCREW COVER, SIZE PER CEC.

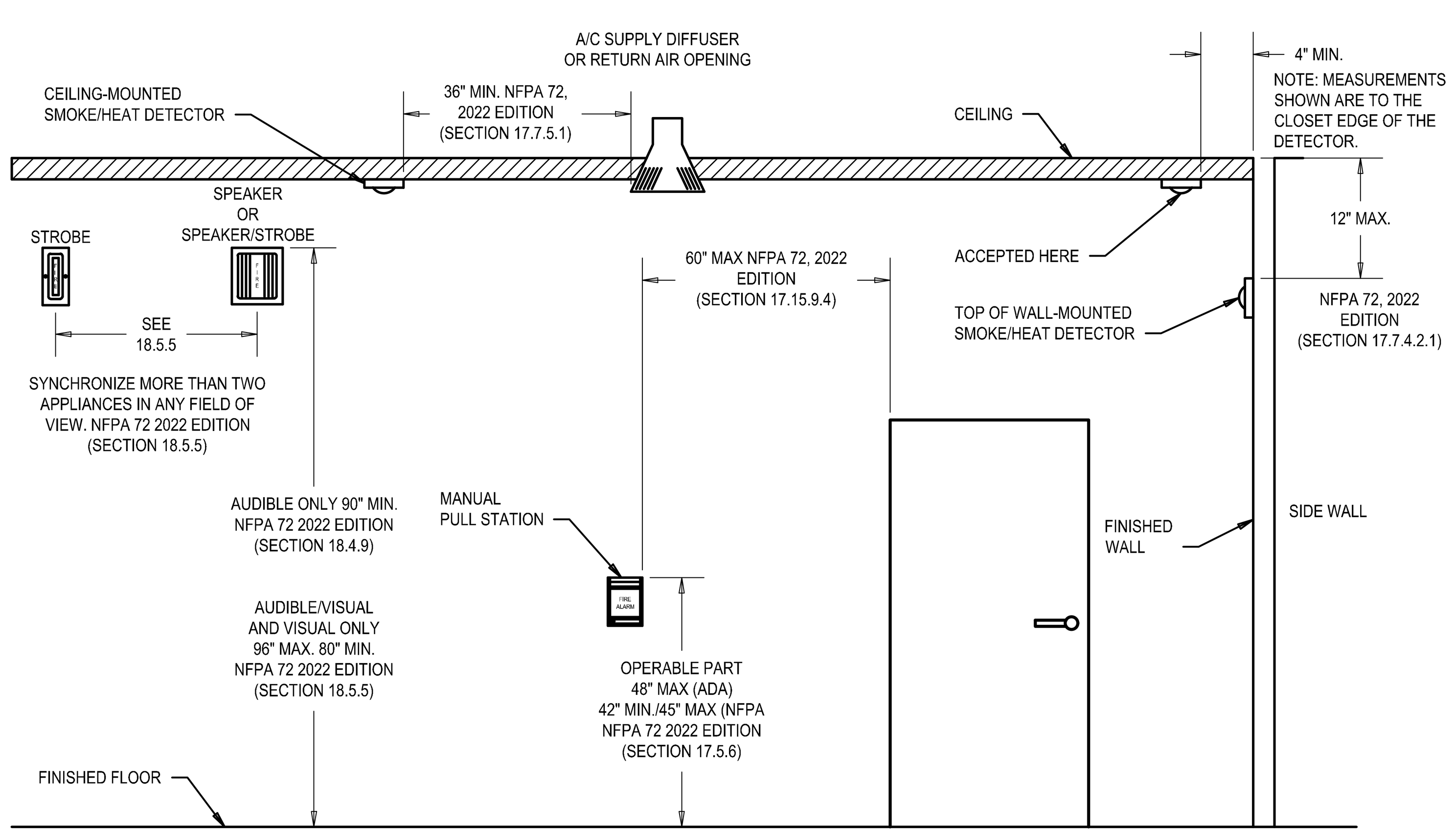

FIRE ALARM DEVICE ELEVATIONS (1, EF-0.1)
NO SCALE

FIRE ALARM GENERAL NOTES

1. APPLICABLE NFPA STANDARD 72 (2022), AS AMENDED IN CBC CHAPTER 35.
2. INSTALLATION OF THE SYSTEMS SHALL NOT BE STARTED UNTIL DETAILED DESIGN DOCUMENTS AND SPECIFICATION INCLUDING STATE FIRE MARSHAL LISTING NUMBERS FOR EACH COMPONENT OF THE SYSTEM HAS BEEN APPROVED BY DSA.
3. UPON COMPLETION OF THE SYSTEM A SATISFACTORY TEST OF THE ENTIRE SYSTEM SHALL BE MADE IN THE PRESENCE OF A DSA PROJECT INSPECTOR.
4. A STAMPED SET OF APPROVED FIRE ALARM DESIGN DOCUMENTS SHALL BE ON THE JOB SITE AND USED FOR INSTALLATION.
5. ANY DISCREPANCIES BETWEEN THE DRAWINGS AND THE CODE OR RECOGNIZED STANDARDS SHALL BE BROUGHT TO THE ATTENTION OF DSA AND THE ENGINEER OF THE PROJECT.
6. DSA, ENGINEER AND OWNER SHALL BE NOTIFIED A MINIMUM OF 48 HOURS PRIOR TO THE FINAL INSPECTION AND / OR TESTING.
7. ALL MEMBRANE AND THROUGH-PENETRATIONS OF RATED ASSEMBLIES SHALL BE PROTECTED BY AN APPROVED FIRE STOP SYSTEM AS IDENTIFIED IN CBC CHAPTER 7, UL OR OTHER LAB TESTING CRITERIA. APPROVED TYPES OF MATERIALS SHALL BE IDENTIFIED WITHIN THE SPECIFICATION WITHIN THE FIRE ALARM SECTION.
8. WALL MOUNTED VISUAL NOTIFICATION DEVICES SHALL HAVE THEIR BOTTOMS MOUNTED AT 80" MINIMUM AND 96" MAXIMUM FROM FINISHED FLOOR AS MEASURED TO THE LENS.
9. WALL MOUNTED AUDIBLE NOTIFICATION DEVICES SHALL HAVE THEIR TOPS MOUNTED AT 90" MAXIMUM FROM FINISHED FLOOR, AND NO CLOSER THAN 6" TO A HORIZONTAL STRUCTURE.
10. AUDIBLE DEVICES TO BE AT LEAST 15 DBA ABOVE THE AVERAGE AMBIENT SOUND LEVEL BUT NOT LESS THAN 75 DBA AT 10 FEET OR MORE THAN 110 DBA AT THE MINIMUM HEARING DISTANCE. SOUND LEVEL SHALL BE MAINTAINED FOR DURATION OF AT LEAST 60 SECONDS, 5 DBA MUST BE MAINTAINED.
11. AUDIBLE DEVICES SHALL BE SYNCHRONIZED TEMPORAL CODE 3 PATTERN.
12. THE CONTRACTOR SHALL ADJUST/INSTALL ALL DEVICES TO MAXIMIZE PERFORMANCE AND TO MINIMIZE FALSE ALARMS.
13. VISUAL DEVICES SHALL NOT EXCEED 2 FLASHES PER SECOND AND SHALL NOT BE SLOWER THAN 1 FLASH EVERY SECOND. THE DEVICE SHALL HAVE A PULSING LIGHT SOURCE NOT LESS THAN 15 CANDELA. VISUAL DEVICES WITHIN SAME VIEW EACH OTHER SHALL BE SYNCHRONIZED.
14. UNDERGROUND AND EXTERIOR CONDUITS SHALL HAVE WATERTIGHT FITTINGS AND WIRE SHALL BE LISTED FOR WET LOCATIONS.
15. ALL FIRE ALARM WIRING SHALL BE FPL OR FPLP (FIRE POWER LIMITED OR FIRE POWER LIMITED PLENUM) AS REQUIRED FOR APPLICATION. WIRING IN CONDUIT ABOVE GROUND MAY BE THHN OR THWN.
16. PER THE CEC ALL WIRING IS TO BE PULLED THROUGH EACH JUNCTION BOX AND CONNECTED DIRECTLY TO EACH FIRE DEVICE. DO NOT SPLICE THE WIRE. THERE MUST BE AT LEAST 6' OF LEAD WIRE FROM THE BOX TO THE DEVICE. ALL BOXES SHALL BE SIZED PER CEC.
17. SMOKE DETECTORS SHALL NOT BE CLOSER THAN 1' FROM FIRE SPRINKLERS OR 3' FROM ANY SUPPLY DIFFUSER. IN AREA OF CONSTRUCTION OR POSSIBLE DAMAGE/CONTAMINATION COULD OCCUR ON NEWLY INSTALLED FIRE ALARM DEVICES, DEVICES SHALL BE COVERED UNTIL THAT AREA IS READY TO BE TURNED OVER TO THE OWNER.
18. ALL FIRE ALARM CIRCUITS SHALL BE IN CONDUIT, APPROVED RACEWAY OR FA-LISTED MC OR AC CABLE WHERE WIRING MUST BE FISHED, UNDER FLOORS AND IN WALLS IN NEAT AND PROTECTED MANNER AS INDICATED ON DESIGN DOCUMENTS. EXPOSED CIRCUITS ARE ONLY PERMITTED WHEN NOTED AS EXPOSED ON DESIGN DOCUMENTS.
19. FIRE ALARM PANEL, REMOTES, AND COMPONENTS SHALL BE SECURED TO MOUNTING SURFACES PER MANUFACTURERS SPECIFICATIONS. NO SINGLE DEVICES SHALL EXCEED THE WEIGHT OF 20 LBS. WITHOUT SPECIAL MOUNTING DETAILS.
20. A DEDICATED BRANCH CIRCUIT SHALL BE PROVIDED FOR FIRE ALARM EQUIPMENT. EACH CIRCUIT SHALL BE ENERGIZED FROM EXISTING COMMON AREA PANEL AND SHALL HAVE NO OTHER OUTLETS. THE BREAKER SHALL HAVE A RED LOCKING DEVICE TO BLOCK THE HANDLE IN THE "ON" POSITION. THE CIRCUIT BREAKER SHALL BE LABELED AS FOLLOWS:
    a. "FIRE ALARM" FOR FIRE ALARM CIRCUITS
    b. "EMERGENCY COMMUNICATIONS" FOR EMERGENCY COMMUNICATIONS SYSTEMS, OR
    c. "FIRE ALARM/EMCS" FOR COMBINATION FIRE ALARM AND COMMUNICATIONS SYSTEMS.
21. THE INSTALLING CONTRACTOR SHALL PROVIDE A COMPLETED RECORD OF COMPLETION PER NFPA 72.
22. THE INSTALLING CONTRACTOR SHALL PROVIDE SYSTEM PROGRAMMING FOR SUPERVISORY MONITORING PER CFC CHAPTER 9.
23. SUPERVISORY MONITORING SHALL BE TESTED AND VERIFIED AS SENDING CORRECT SIGNALS IN CONJUNCTION WITH FINAL ACCEPTANCE TEST.
24. OWNER SHALL BE RESPONSIBLE FOR ESTABLISHING A FIRE SYSTEM MONITORING CONTRACT.
25. FIRE ALARM RECORD DOCUMENTS CABINET: PROVIDE A DOCUMENTATION CABINET INSTALLED AT THE SYSTEM CONTROL PANEL (FACP) OR OTHER APPROVED LOCATION. THE CABINET SHALL BE RED IN COLOR AND PROMINENTLY LABELED "SYSTEM RECORD DOCUMENTS". ALL RECORD AND TESTING DOCUMENTATION SHALL BE STORED IN THE CABINET. CONTENTS SHALL BE ACCESSIBLE BY AUTHORIZED PERSONNEL ONLY. WHERE INSTALLED IN A LOCATION OTHER THAN THE SYSTEM CONTROL PANEL, ITS LOCATION SHALL BE IDENTIFIED AT THE SYSTEM CONTROL PANEL.
26. SYSTEM DOCUMENTS TO BE STORED (AS APPLICABLE):
    a. RECORD DRAWINGS/AS-BUILTS
    b. EQUIPMENT CUT SHEETS AND CSFM LISTINGS
    c. ALTERNATIVE MEANS AND METHODS
    d. PERFORMANCE BASED DESIGN DOCUMENTATION (NFPA 72, 7.3.7)
    e. SYSTEM RECORD OF COMPLETION AND ANY SUPPLEMENTAL TESTING AND INSPECTION DOCUMENTATION (NFPA 72, 7.8.2)
    f. EMERGENCY RESPONSE PLAN (NFPA 72, 7.3.8)
    g. EVALUATION DOCUMENTATION (NFPA 72, 7.3.9)
    h. RISK ANALYSIS DOCUMENTATION (NFPA 72, 7.3.6)
    i. SOFTWARE AND FIRMWARE CONTROL DOCUMENTATION (NFPA 72, 23.2.2)
27. INTERIOR FIRE ALARM CONDUIT SHALL NOT BE LESS THAN 3/4" TRADE SIZE FOR ALL WIRING UP TO AND INCLUDING 2A, 2V, 2Z. WHERE WIRE AND CABLE QUANTITY IS GREATER THAN 2A,2V,2Z THE CONDUIT SIZE SHALL BE INCREASED AS REQUIRED BUT SHALL NOT BE LESS THAN 1" TRADE SIZE.
28. PROVIDE FIRE WATCH FOR ANY SHUT DOWN OF ANY LIFE SAFETY SYSTEM. SEE DSA IR-F2 FOR ADDITIONAL INFORMATION.

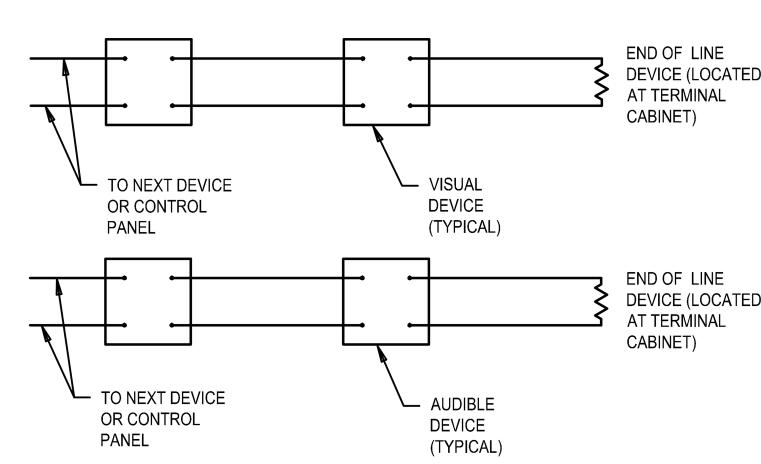

TYPICAL SIGNAL CIRCUIT WIRING DIAGRAM (2, EF-0.1)
NO SCALE

FIRE ALARM SYSTEM DESCRIPTION

THE EXISTING FIRE ALARM SYSTEM IS A FULLY AUTOMATIC FCI SYSTEM. THE SYSTEM IS SUPERVISED BY OFF-SITE DISTRICT PERSONNEL. THERE IS ONE EXISTING FIRE ALARM CONTROL PANEL (A# 04-113540). ANY INITIATING DEVICE ACTIVATED WILL ACTIVATE THE NOTIFICATION DEVICES. FOR TESTING PURPOSES AND FIRE DRILLS, THE EXISTING FIRE ALARM CONTROL PANEL IS EQUIPPED WITH A MANUAL PULLSTATION.

THE EXISTING INITIATING AND AUDIBLE DEVICES ARE CONNECTED TO THIS PANEL.

UNDER THIS PROJECT NEW INITIATING DEVICES AS WELL AS AUDIBLE AND VISUAL DEVICES WILL BE CONNECTED TIED INTO THE EXISTING FIRE ALARM CONTROL PANEL.

FIRE ALARM SYSTEM NOTES

1. THE FIRE ALARM SYSTEM SHOWN ON THESE DRAWINGS SHALL BE USED FOR CONSTRUCTION.

   APPLICABLE CODE FOR FIRE ALARM:
   2022 CALIFORNIA BUILDING CODE, TITLE 24 PART 2
   2022 CALIFORNIA ELECTRICAL CODE, TITLE 24 PART 3
   2022 NFPA 72 WITH CSFM AMENDMENTS
   2022 CALIFORNIA FIRE CODE, TITLE 24 PART 9.
2. THESE DRAWINGS SHALL SERVE AS SHOP DRAWINGS OF THE FIRE ALARM SYSTEM AND HAVE BEEN SUBMITTED TO THE DSA-ORS FOR REVIEW AND APPROVAL.
3. THE LOCATION OF AUTOMATIC DETECTORS, MANUAL STATIONS AND OTHER FIRE ALARM EQUIPMENT AND DEVICES, AS SHOWN ON PLANS, ARE FOR CONSTRUCTION.
4. THE FIRE ALARM SYSTEM SHALL CONFORM TO ARTICLE 760 OF CALIFORNIA ELECTRICAL CODE. UPON COMPLETION OF THE INSTALLATION OF THE FIRE ALARM SYSTEM, A SATISFACTORY TEST OF THE ENTIRE SYSTEM SHALL BE MADE IN THE PRESENCE OF THE FIRE AUTHORITY HAVING JURISDICTION.
5. THE FOLLOWING INFORMATION IS INCLUDED IN THESE PLANS.
   a. IDENTIFICATION OF TYPE OF WIRING USED
   b. FLOOR PLAN SHOWING NEW FIRE ALARM DEVICES.
   c. RISER DIAGRAM AND POINT TO POINT DIAGRAM
   d. CSFM LISTING SHEET SHOWING EXP. DATE FOR ALL COMPONENTS
   e. MFR'S SPEC SHEET ON ALL FIRE ALARM EQUIPMENT
   f. BATTERY AND VOLTAGE DROP CALCULATIONS FOR EACH PANEL WITH A BATTERY
   g. SYMBOLS OF ALL FIRE ALARM DEVICES INSTALLED
   h. ELEVATION DETAIL OF MANUAL STATION, STROBES, HORN/STROBES, AND HORNS
6. SYSTEM OPERATION MATRIX: EFFECT OF THE OPERATION OF EACH FIRE ALARM DEVICE IS SHOWN ON THESE PLANS.
7. STROBE SIGNALING DEVICES FOR THE HEARING IMPAIRED SHALL BE STATE FIRE MARSHAL APPROVED AND LISTED.

ACTION	DEVICES		
	MANUAL PULL STATION	SMOKE/ HEAT/ DUCT DETECTORS	AC POWER FAILURE
SOUND ALARM AT FACP	YES	YES	NO
ACTIVATE RELAY FOR OFF-SITE MONITORING	YES	YES	YES
SOUND TROUBLE BUZZER AT FACP	ON WIRING FAULT	ON WIRING FAULT	YES
ANNUNCIATE AT FACP	YES	YES	YES
ACTIVE SPEAKERS AND VISUALS	YES	YES	NO
DAMPER ACTIVATION	YES	YES	NO
HVAC SHUTDOWN	YES	YES	NO

SEQUENCE OF OPERATION MATRIX (3, EF-0.1)
NO SCALE

SPECIAL NOTE

1. EOL RESISTORS SHALL BE INSTALLED INSIDE EACH FIRE ALARM TERMINAL CABINET.
2. PROVIDE THE FOLLOWING INSIDE EACH FATC CABINET:
   (1) CONTROL MODULE.

FIRE ALARM WIRING SCHEDULE

DESIG.	DESCRIPTION
A	AUDIO CIRCUIT, 1#18 TSP
B	AUDIO CIRCUIT, 1#16 TSP, WET LOCATIONS
P	24V AUX POWER, 2#12 THHN
V	VISUAL CIRCUIT, 2#12 THHN
X	ADDRESSABLE LOOP, 1#16 TP, WET LOCATIONS
Z	ADDRESSABLE LOOP, 1 PR. #18 TSP
S	REPORTING CIRCUIT, 2 PR. #18

* ALL FIRE ALARM WIRING SHALL BE ROUTED IN EMT (SIZED PER FIRE ALARM GENERAL NOTE 27) BUT NOT LESS THAN INDICATED ON FLOOR PLANS
TP = TWISTED PAIR
TSP = TWISTED SHIELDED PAIR

IDENTIFICATION STAMP
DIV. OF THE STATE ARCHITECT
APP: 04-122772 INC:
REVIEWED FOR
SS ☑ FLS ☑ ACS ☑
DATE: 03/26/2024

SPROTTE | WATSON
ARCHITECTURE | PLANNING

LICENSED ARCHITECT C12359 REN. OCTOBER 2025 STATE OF CALIFORNIA

CONSULTANT

REGISTERED PROFESSIONAL ENGINEER DALE M. FRANCHAK No.11533 exp.6/30/24 ELECTRICAL STATE OF CALIFORNIA
01/25/24

TURPIN & RATTAN Engineering, Inc.
Consulting Engineers
4719 PALM AVENUE
LA MESA, CA 91941-5221
619 / 466 / 6224 fax 466 / 6233
E-MAIL: engineer@treisd.com
TREI PROJECT # 22277.S01
h.lozano 01/25/24 - 1:08pm

DEHESA ELEMENTARY SCHOOL
CONSTRUCTION DOCUMENTS
DEHESA SCHOOL DISTRICT
4612 DEHESA ROAD
EL CAJON, CA 92019

REVISIONS

DESCRIPTION
FIRE ALARM LEGEND, ABBREVIATIONS, NOTES

DATE
01.25.24

JOB #
22-0400

SHEET #
EF-0.1

7/12/2018 1:34:44 PM

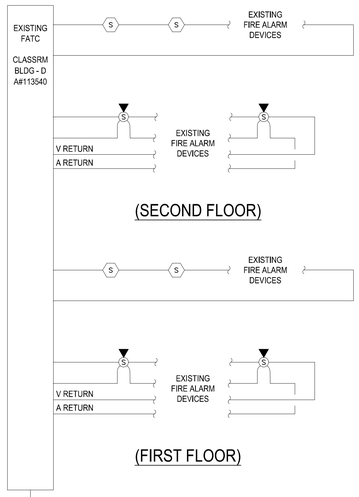

CLASSROOM BUILDING - D

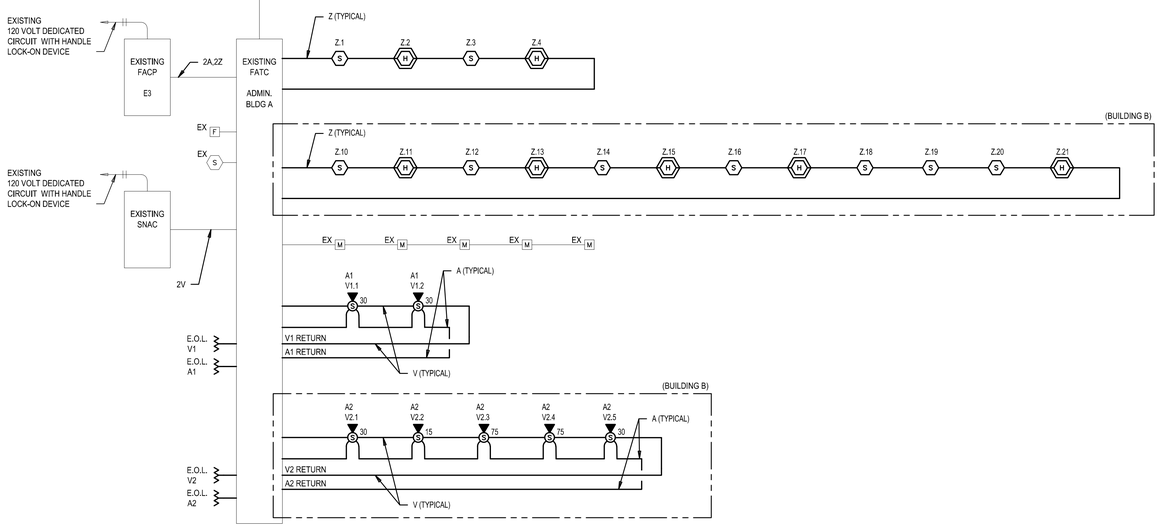

BUILDING A & BUILDING B

FIRE ALARM RISER DIAGRAM

NO SCALE

SHEET NOTES

1. A SINGLE FAULT ON A PATHWAY CONNECT TO THE ADDRESSABLE DEVICES SHALL NOT CAUSE THE LOSS OF THE DEVICES IN MORE THAN ONE ZONE. NFPA #72 SECTION 23.6.1.

SPECIAL NOTE

1. EOL RESISTORS SHALL BE INSTALLED INSIDE EACH FIRE ALARM TERMINAL CABINET.

FIRE ALARM WIRING SCHEDULE	
DESIG.	DESCRIPTION
A	AUDIO CIRCUIT, 1#18 TSP
B	AUDIO CIRCUIT, 1#16 TSP, WET LOCATIONS
P	24V AUX POWER, 2#12 THHN
V	VISUAL CIRCUIT, 2#12 THHN
X	ADDRESSABLE LOOP, 1#16 TP, WET LOCATIONS
Z	ADDRESSABLE LOOP, 1 PR. #18 TSP
S	REPORTING CIRCUIT, 2 PR. #18

* ALL FIRE ALARM WIRING SHALL BE ROUTED IN EMT (SIZED PER FIRE ALARM GENERAL NOTE 27) BUT NOT LESS THAN INDICATED ON FLOOR PLANS
TP = TWISTED PAIR
TSP = TWISTED SHIELDED PAIR

IDENTIFICATION STAMP
DIV. OF THE STATE ARCHITECT
APPROVED
APP: 04-122772 INC:
REVIEWED FOR
SS ☑ FLS ☑ ACS ☑
DATE: 03/26/2024

SPROTTE | WATSON
ARCHITECTURE | PLANNING

REGISTERED ARCHITECT
C12359
STATE OF CALIFORNIA

CONSULTANT

REGISTERED PROFESSIONAL ENGINEER
DALE M. FRANCHAK
No.11533
exp 06/24
ELECTRICAL
STATE OF CALIFORNIA
01/25/24

TURPIN & RATTAN
Engineering, Inc.
Consulting Engineers
4719 PALM AVENUE
LA MESA, CA 91941-5221
619 / 466 / 6224 fax 466 / 6233
E-MAIL: engineer@trreiid.com
TREI PROJECT # 22277.S01
h:\scans 01/25/24 - 1:08pm

DEHESA ELEMENTARY SCHOOL
CONSTRUCTION DOCUMENTS
DEHESA SCHOOL DISTRICT
4612 DEHESA ROAD
EL CAJON, CA 92019

REVISIONS

DESCRIPTION
FIRE ALARM RISER DIAGRAM

DATE
01.25.24

JOB #
22-0400

SHEET #
EF-0.2

7/12/2018 1:34:44 PM

KEYNOTES

D54 AT LIBRARY, GREEN ROOM, AND TEACHER'S LOUNGE DISCONNECT AND REMOVE EXISTING FIRE ALARM DEVICES AND WIRING BACK TO EXISTING SOURCE FATC/ FACP TO REMAIN.

D55 AT CLASSROOM SEPERATING WALLS AND ENTIRE 3RD CLASSROOM DISCONNECT AND REMOVE EXISTING FIRE ALARM DEVICES AND WIRING BACK TO EXISTING SOURCE FATC TO REMAIN.

F1 PROVIDE UPGRADED ADDRESSABLE FIRE ALARM/ VOICE EVACUATION DEVICES TO UPDATED SPACES AND AREAS THAT ARE INTERRUPTED BY NEW WORK, EXISTING FIRE ALARM SYSTEM IN SURROUNDING AREAS TO REMAIN OPERATIONAL AND CONNECTED TO EXISTING FIRE ALARM SYSTEM. WHERE ACCESSIBLE CEILING SPACE ABOVE, NEW DEVICES SHALL BE RECESSED AND CONDUIT SHALL BE CONCEALED.

F2 EXISTING WEATHERPROOF PULLBOX ON ROOF.

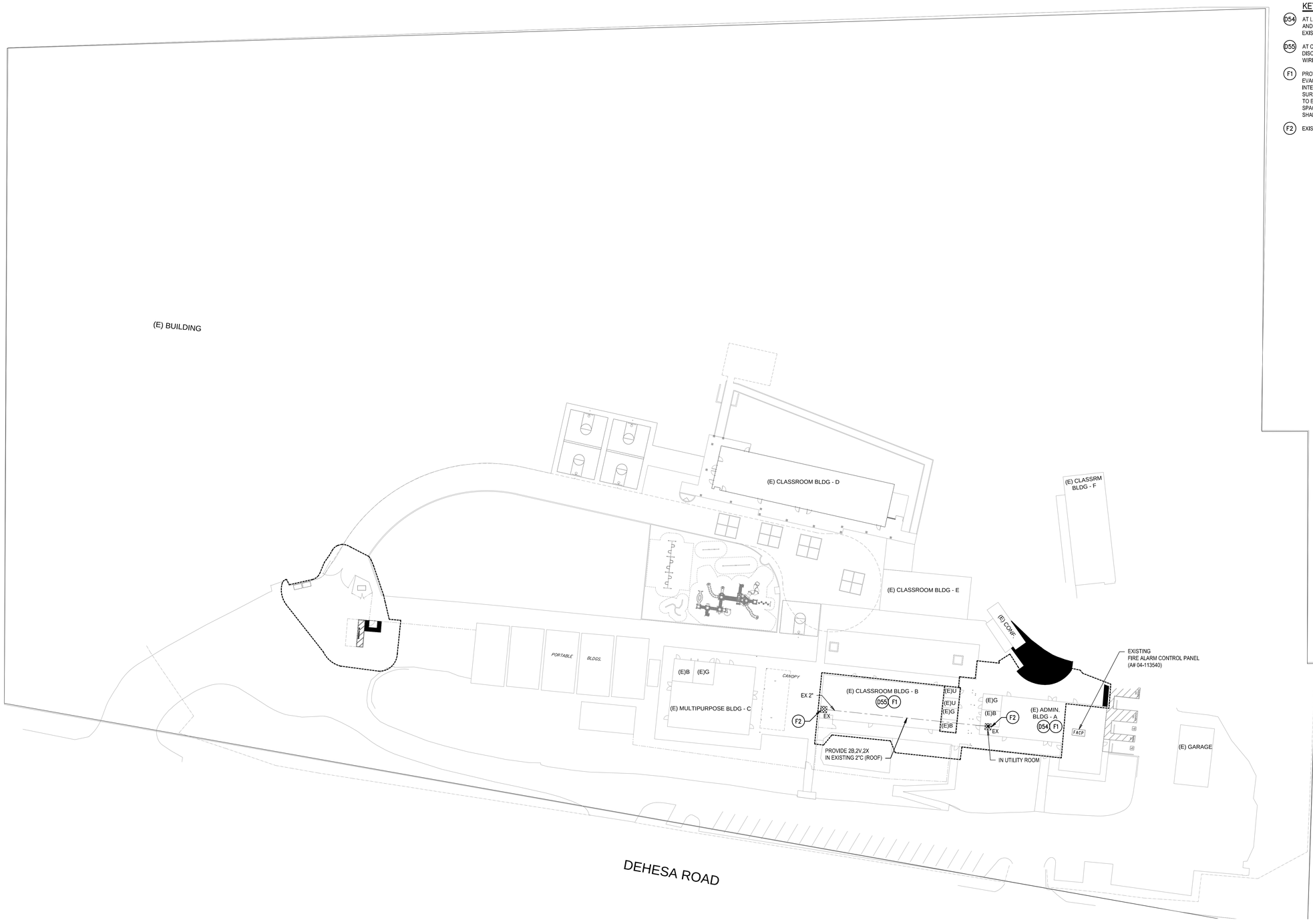

SITE PLAN - FIRE ALARM

SCALE: 1" = 30'

0 15' 30' 60' 90'

1" = 30'

NORTH

FIRE ALARM WIRING SCHEDULE	
DESIG.	DESCRIPTION
A	AUDIO CIRCUIT, 1#18 TSP
B	AUDIO CIRCUIT, 1#16 TSP, WET LOCATIONS
P	24V AUX POWER, 2#12 THHN
V	VISUAL CIRCUIT, 2#12 THHN
X	ADDRESSABLE LOOP, 1#16 TP, WET LOCATIONS
Z	ADDRESSABLE LOOP, 1 PR. #18 TSP
S	REPORTING CIRCUIT, 2 PR. #18

* ALL FIRE ALARM WIRING SHALL BE ROUTED IN EMT (SIZED PER FIRE ALARM GENERAL NOTE 27) BUT NOT LESS THAN INDICATED ON FLOOR PLANS
TP = TWISTED PAIR
TSP = TWISTED SHIELDED PAIR

IDENTIFICATION STAMP
DIV. OF THE STATE ARCHITECT
APP: 04-122772 INC:
REVIEWED FOR
SS ☑ FLS ☑ ACS ☑
DATE: 03/26/2024

SPROTTE | WATSON
ARCHITECTURE | PLANNING

REGISTERED ARCHITECT
C12359
STATE OF CALIFORNIA

CONSULTANT

REGISTERED PROFESSIONAL ENGINEER
DALE M. FRANDSEN
No.11533
exp. 6/30/24
ELECTRICAL
STATE OF CALIFORNIA
01/25/24

TURPIN & RATTAN
Engineering, Inc.
Consulting Engineers
4719 PALM AVENUE
LA MESA, CA 91941-5221
619 / 466 / 6224 fax 466 / 6233
E-MAIL: engineer@trreid.com
TREI PROJECT # 22277.S01
h:\rezano 01/25/24 - 1:09pm

DEHESA ELEMENTARY SCHOOL
CONSTRUCTION DOCUMENTS
DEHESA SCHOOL DISTRICT
4612 DEHESA ROAD
EL CAJON, CA 92019

REVISIONS

DESCRIPTION
SITE PLAN - FIRE ALARM

DATE
01.25.24

JOB #
22-0400

SHEET #
EF-1.1

7/12/2018 1:34:44 PM

KEYNOTES

F3 CONTINUED ON ROOF, REFER TO SITE PLAN, EF-1.1

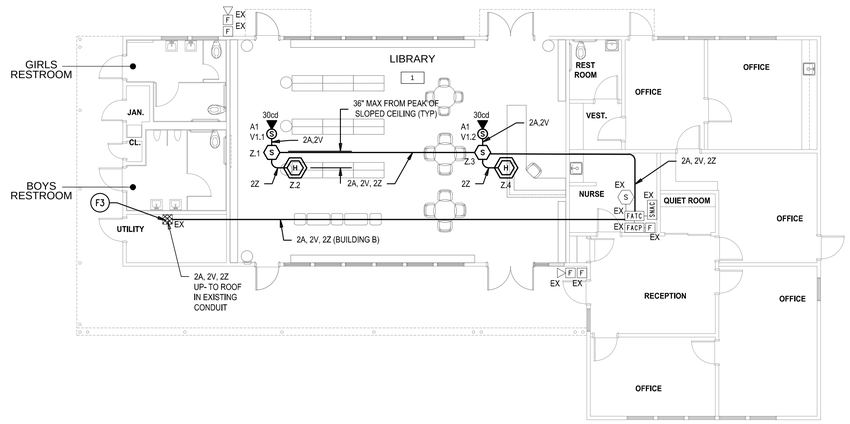

ROOM #	NAME	CEILING TYPE	HEIGHT	EXPOSED BEAMS	ATTIC
A-1	LIBRARY	2' x 4" ACOUSTICAL CEILING TILE	11'-4"	NO	YES

BUILDING A - ADMIN FLOOR PLAN - FIRE ALARM

SCALE: 1/8" = 1'-0"

0 4' 8' 16' 24'

1/8" = 1'-0"

NORTH

SHEET NOTES

1. BUILDING DOES NOT CONTAIN A FUEL-BURNING APPLIANCES OR A FUEL-BURNING FIREPLACE AND IS NOT SUPPLIED BY ANY FORCED-AIR FURNACE AS OUTLINED IN CFC 915.1.3 AND CFC 915.2.3. THEREFORE CARBON MONOXIDE DETECTION SYSTEM IS NOT REQUIRED.
2. FOR REMOVAL OF EXISTING FIRE ALARM DEVICES REFER TO DEMOLITION PLAN ON SHEET E-A2.0.

FIRE ALARM WIRING SCHEDULE	
DESIG.	DESCRIPTION
A	AUDIO CIRCUIT, 1#18 TSP
B	AUDIO CIRCUIT, 1#16 TSP, WET LOCATIONS
P	24V AUX POWER, 2#12 THHN
V	VISUAL CIRCUIT, 2#12 THHN
X	ADDRESSABLE LOOP, 1#16 TP, WET LOCATIONS
Z	ADDRESSABLE LOOP, 1 PR. #18 TSP
S	REPORTING CIRCUIT, 2 PR. #18

* ALL FIRE ALARM WIRING SHALL BE ROUTED IN EMT (SIZED PER FIRE ALARM GENERAL NOTE 27) BUT NOT LESS THAN INDICATED ON FLOOR PLANS
TP = TWISTED PAIR
TSP = TWISTED SHIELDED PAIR

IDENTIFICATION STAMP
DIV. OF THE STATE ARCHITECT
APP: 04-122772 INC:
REVIEWED FOR
SS ☑ FLS ☑ ACS ☑
DATE: 03/26/2024

SPROTTE WATSON ARCHITECTURE PLANNING

REGISTERED PROFESSIONAL ENGINEER
DALE M. FRANDSAY
No.11533
exp. 06/24
ELECTRICAL
STATE OF CALIFORNIA
01/25/24

TURPIN & RATTAN Engineering, Inc.
Consulting Engineers
4719 PALM AVENUE
LA MESA, CA 91941-5221
619 / 466 / 6224 fax 466 / 6233
E-MAIL: engineer@trreid.com

TRE# PROJECT # 22277.S01
h:\ecams 01/25/24 - 1:09pm

DEHESA ELEMENTARY SCHOOL
CONSTRUCTION DOCUMENTS
DEHESA SCHOOL DISTRICT
4612 DEHESA ROAD
EL CAJON, CA 92019

CONSULTANT

REVISIONS

DESCRIPTION: BUILDING A - ADMIN FLOOR PLAN - FIRE ALARM

DATE: 01.25.24

JOB #: 22-0400

SHEET #: EF-A2.0

7/12/2018 1:34:44 PM

KEYNOTES

F2 EXISTING WEATHERPROOF PULLBOX ON ROOF.

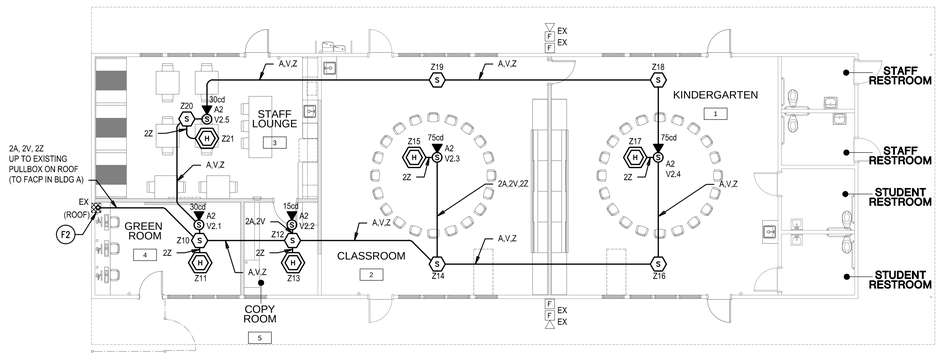

ROOM #	NAME	CEILING TYPE	HEIGHT	EXPOSED BEAMS	ATTIC
B-1	KINDERGARTEN CLASSROOM	2' x 4' ACOUSTIC CEILING TILE	9' - 0"	NO	YES
B-2	SECOND CLASSROOM	2' x 4' ACOUSTIC CEILING TILE	9' - 0"	NO	YES
B-3	STAFF LOUNGE	2' x 4' ACOUSTIC CEILING TILE	9' - 0"	NO	YES
B-4	GREEN ROOM	2' x 4' ACOUSTIC CEILING TILE	9' - 0"	NO	YES
B-5	COPY ROOM	2' x 4' ACOUSTIC CEILING TILE	9' - 0"	NO	YES

BUILDING B - KINDERGARTEN FLOOR PLAN - FIRE ALARM

SCALE: 1/8" = 1'-0"

0 4' 8' 16' 24'

1/8" = 1'-0"

NORTH

SHEET NOTES

1. CLASSROOMS IN THIS BUILDING DO NOT CONTAIN A FUEL-BURNING APPLIANCE AND ARE NOT SUPPLIED BY A FORCED-AIR FURNANCE AS OUTLINED IN CFC 915.1.3 AND CFC 915.2.3 THEREFORE CARBON MONOXIDE DETECTION SYSTEM IS NOT REQUIRED.
2. FOR REMOVAL OF EXISTING FIRE ALARM DEVICES REFER TO DEMOLITION PLAN ON SHEET E-A2.0.

FIRE ALARM WIRING SCHEDULE	
DESIG.	DESCRIPTION
A	AUDIO CIRCUIT, 1#18 TSP
B	AUDIO CIRCUIT, 1#16 TSP, WET LOCATIONS
P	24V AUX POWER, 2#12 THHN
V	VISUAL CIRCUIT, 2#12 THHN
X	ADDRESSABLE LOOP, 1#16 TP, WET LOCATIONS
Z	ADDRESSABLE LOOP, 1 PR. #18 TSP
S	REPORTING CIRCUIT, 2 PR. #18

* ALL FIRE ALARM WIRING SHALL BE ROUTED IN EMT (SIZED PER FIRE ALARM GENERAL NOTE 27) BUT NOT LESS THAN INDICATED ON FLOOR PLANS
TP = TWISTED PAIR
TSP = TWISTED SHIELDED PAIR

IDENTIFICATION STAMP
DIV. OF THE STATE ARCHITECT
APP: 04-122772 INC:
REVIEWED FOR
SS ☑ FLS ☑ ACS ☑
DATE: 03/26/2024

SPROTTE | WATSON
ARCHITECTURE | PLANNING

LICENSED ARCHITECT
C12359
STATE OF CALIFORNIA

CONSULTANT

REGISTERED PROFESSIONAL ENGINEER
DALE M. FRANDAR
No.11533
exp.06/30/24
ELECTRICAL
STATE OF CALIFORNIA
01/25/24

TURPIN & RATTAN
Engineering, Inc.
Consulting Engineers
4719 PALM AVENUE
LA MESA, CA 91941-5221
619 / 466 / 6224 fax 466 / 6233
E-MAIL: engineer@trreid.com

TREI PROJECT # 22277.S01
h:\ecano 01/25/24 - 1:09pm

DEHESA ELEMENTARY SCHOOL
CONSTRUCTION DOCUMENTS
DEHESA SCHOOL DISTRICT
4612 DEHESA ROAD
EL CAJON, CA 92019

REVISIONS

DESCRIPTION

BUILDING B - KINDERGARTEN FLOOR PLAN - FIRE ALARM

DATE

01.25.24

JOB #

22-0400

SHEET #

EF-B2.0

7/12/2018 1:34:44 PM

FIRE ALARM BATTERY CALCULATION

Project: DEHESA ES MODERNIZATION   Project Number: 22277.S00   Date: 26-Aug-18

System Voltage: 24

EXISTING MAIN FIRE ALARM CONTROL PANEL

BUILDING A - ADMINISTRATION

Qty.	Item	Mfgr	Model #	Standby Current	Standby Total	Alarm Current	Alarm Total
1	EX. FACP MAIN BOARD	FCI	ILI-MB-E3	0.081	0.081	0.150	0.15
1	EX. POWER SUPPLY	FCI	PM-9	0.05	0.05	0.05	0.05
1	EX. LCD DISPLAY	FCI	LCD-E3	0.024	0.024	0.028	0.028
1	EX. DIGITAL COMMUNICATOR	FCI	DACT-E3	0.018	0.018	0.018	0.018
1	EX. SWITCH MODULE	FCI	ASM-16	0.011	0.011	0.155	0.155
1	EX. 50W AMPLIFIER	FCI	AM-50	0.049	0.049	2.3	2.3
1	EX. VOICE GATEWAY MODULE	FCI	INI-VGE	0.15	0.15	0.15	0.15
0					0		0
1	EX. SMOKE DETECTOR	FCI	ASD-PL	0.0003	0.0003	0.0065	0.0065
4	EX. MONITOR MODULE	FCI	AMM-2	0.0004	0.0016	0.0006	0.0024
1	EX MONITOR MODULE	FCI	AMM-4	0.0003	0.0003	0.0054	0.0054
9	SMOKE DETECTOR	FCI	ASD-PL2F/B210LP	0.0003	0.0027	0.0065	0.0585
0	HEAT DETECTOR	FCI	ATD-RL2F/B210LP	0.0003	0	0.0065	0
7	ABOVE CEILING HEAT	FCI	ATD-HL2F/B210LP	0.0003	0.0021	0.0065	0.0455
0	MANUAL PULL STATION	FCI	MS-7AF	0.0003	0	0.003	0
0	CONTROL MODULE	FCI	AOM-2RF	0.000375	0	0.0065	0
0	MONITOR MODULE	FCI	AMM-4F	0.000375	0	0.005	0
0					0		0
	EX. 2 STORY CLASSROOM BUILDING						
22	EX. PHOTOELECTRIC SMOKE DETECTOR	FCI	ASD-PL2F	0.0003	0.0066	0.0065	0.143
3	EX. HEAT DETECTOR	FCI	ATD-RL2F	0.0003	0.0009	0.0065	0.0195
1	EX. MONITOR MODULE (FS)	FCI	AMM-2F	0.0004	0.0004	0.0006	0.0006
2	EX. MONITOR MODULE (TS)	FCI	AMM-2F	0.0004	0.0008	0.0006	0.0012
1	EX. MONITOOR MODULE (PIV)	FCI	AMM-2F	0.0004	0.0004	0.0006	0.0006
1	EX. RELAY USED FOR NAC PWR SUPPLY	FCI	AOM-2S	0.0003	0.0003	0.0003	0.0003
5	EX. OUTPUT RELAY CONTROL MODULES	FCI	AOM-2RF	0.0003	0.0015	0.0003	0.0015
1	EX MULTI-VOLT RELAY MODULE	FCI	RIC-1	0	0	0.0180	0.018
Totals					0.4009		**3.154**

Battery Calculation

A) Required Battery Backup (Standby)	24 Hours					
B) Required Battery Backup (Alarm)	15 minutes = 0.25 hours					
C) Allowable Error	25%					
D) Total Standby Backup:	0.4009	x	24	=	9.6216	AH
E) Total Alarm Backup	3.154	x	0.25	=	0.79	AH
F) 25% of D+E	25%	x	10.41	=	2.60	AH
Total AH Required				=	**13.01**	AH

Existing **17** **AH Batteries are sufficient**

FIRE ALARM CALCULATIONS

Project: DEHESA ES MODERNIZATION   Project Number: 22277.S00   Date: 26-Aug-18

System Voltage: 24

LOAD CALCULATION

EXISTING ADMINISTRATION BUILDING SNAC

Qty.	Item	Mfgr	Model #	Standby Current	Standby Total	Alarm Current	Alarm Total
1	15cd Speaker/Strobe (C)	SYSTEM SENSOR	SPSCW	0	0	0.066	0.066
4	30cd Speaker/Strobe (C)	SYSTEM SENSOR	SPSCW	0	0	0.094	0.376
2	75cd Speaker/Strobe (C)	SYSTEM SENSOR	SPSCW	0	0	0.158	0.316
1	S.N.A.C PANEL	FCI	HPF24S8	0.065	0.065	0.145	0.145
Totals					0.065		**0.903**

Battery Calculation

A) Required Battery Backup (Standby)	24 Hours					
B) Required Battery Backup (Alarm)	15 minutes = 0.25 hours					
C) Allowable Error	25%					
D) Total Standby Backup:	0.065	x	24	=	1.56	AH
E) Total Alarm Backup	0.903	x	0.25	=	0.23	AH
F) 25% of D+E	25%	x	1.79	=	0.45	AH
Total AH Required				=	**2.23**	AH

7 **AH Batteries are required.**

CIRCUIT V1

Longest Circuit for Voltage Drop Calculation

Circuit: V1   **Length: 250 LF**

Qty.	Item	Mfgr	Model #	Standby Current	Standby Total	Alarm Current	Alarm Total
0	15cd Speaker/Strobe (C)	SYSTEM SENSOR	SPSCW	0	0	0.066	0
2	30cd Speaker/Strobe (C)	SYSTEM SENSOR	SPSCW	0	0	0.094	0.188
0	75cd Speaker/Strobe (C)	SYSTEM SENSOR	SPSCW	0	0	0.158	0
0	0	0	0	0	0	0	0
0	0	0	0	0	0	0	0
0	0	0	0	0	0	0	0
0	0	0	0	0	0	0	0
0	0	0	0	0	0	0	0
0	0	0	0	0	0	0	0
0	0	0	0	0	0	0	0
0	0	0	0	0	0	0	0
0	0	0	0	0	0	0	0
0	0	0	0	0	0	0	0
0	0	0	0	0	0	0	0
0	0	0	0	0	0	0	0
0	0	0	0	0	0	0	0
0	0	0	0	0	0	0	0
0	0	0	0	0	0	0	0
0	0	0	0	0	0	0	0
2	0	0	0	0	0	0	0
0	0	0	0	0	0	0	0
0	0	0	0	0	0	0	0
0	0	0	0	0	0	0	0
0	0	0	0	0	0	0	0
0	0	0	0	0	0	0	0
0	0	0	0	0	0	0	0
0	0	0	0	0	0	0	0
0	0	0	0	0	0	0	0
0	0	0	0	0	0	0	0
0	0	0	0	0	0	0	0
0	0	0	0	0	0	0	0
0	0	0	0	0	0	0	0
0	S.N.A.C PANEL	FCI	HPF24S8	0.065	0	0.145	0
Totals					0		**0.188**

Voltage Drop Calculation

$$\frac{0.188 \times 250 \times 21.6}{6530} \times \frac{100}{24} = \mathbf{0.65}\ \%$$

CIRCUIT V2

Longest Circuit for Voltage Drop Calculation

Circuit: V2   **Length: 675 LF**

Qty.	Item	Mfgr	Model #	Standby Current	Standby Total	Alarm Current	Alarm Total
1	15cd Speaker/Strobe (C)	SYSTEM SENSOR	SPSCW	0	0	0.066	0.066
2	30cd Speaker/Strobe (C)	SYSTEM SENSOR	SPSCW	0	0	0.094	0.188
2	75cd Speaker/Strobe (C)	SYSTEM SENSOR	SPSCW	0	0	0.158	0.316
0	0	0	0	0	0	0.000	0
0	0	0	0	0	0	0.000	0
0	0	0	0	0	0	0.000	0
0	0	0	0	0	0	0.000	0
0	0	0	0	0	0	0.000	0
0	0	0	0	0	0	0.000	0
0	0	0	0	0	0	0.000	0
0	0	0	0	0	0	0.000	0
0	0	0	0	0	0	0.000	0
0	0	0	0	0	0	0.000	0
0	0	0	0	0	0	0.000	0
0	0	0	0	0	0	0.000	0
0	0	0	0	0	0	0.000	0
0	0	0	0	0	0	0.000	0
0	0	0	0	0	0	0.000	0
0	0	0	0	0	0	0.000	0
1	0	0	0	0	0	0.000	0
2	0	0	0	0	0	0.000	0
2	0	0	0	0	0	0.000	0
0	0	0	0	0	0	0.000	0
0	0	0	0	0	0	0.000	0
0	0	0	0	0	0	0.000	0
0	0	0	0	0	0	0.000	0
0	0	0	0	0	0	0.000	0
0	0	0	0	0	0	0.000	0
0	0	0	0	0	0	0.000	0
0	0	0	0	0	0	0.000	0
0	0	0	0	0	0	0.000	0
0	0	0	0	0	0	0.000	0
0	S.N.A.C PANEL	FCI	HPF24S8	0.065	0	0.145	0
Totals					0		**0.57**

Voltage Drop Calculation

$$\frac{0.57 \times 675 \times 21.6}{6530} \times \frac{100}{24} = \mathbf{5.30}\ \%$$

IDENTIFICATION STAMP
DIV. OF THE STATE ARCHITECT
APP: 04-122772 INC:
REVIEWED FOR
SS ☑ FLS ☑ ACS ☑
DATE: 03/26/2024

SPROTTE | WATSON
ARCHITECTURE | PLANNING

LICENSED ARCHITECT
C12359
STATE OF CALIFORNIA

CONSULTANT

REGISTERED PROFESSIONAL ENGINEER
DALE M. FRANCHAK
No.11533
exp.6/30/24
ELECTRICAL
STATE OF CALIFORNIA
01/25/24

TURPIN & RATTAN ENGINEERING, INC.
CONSULTING ENGINEERS
4719 PALM AVENUE
LA MESA, CA 91941-5221
619 / 466 / 6224 FAX 466 / 6233
E-MAIL: ENGINEER@TREISD.COM
TREI PROJECT # 22277.S01
M.DELUNA 02/15/24 - 10:54AM

DEHESA ELEMENTARY SCHOOL
CONSTRUCTION DOCUMENTS
DEHESA SCHOOL DISTRICT
4612 DEHESA ROAD
EL CAJON, CA 92019

REVISIONS	
DESCRIPTION	FIRE ALARM CALCULATIONS
DATE	01.25.24
JOB #	22-0400
SHEET #	EF-6.0

7/12/2018 1:34:44 PM

GENERAL NOTES

1. EXISTING TELEPHONE, TELECOMMUNICATIONS, FIRE ALARM AND ALL OTHER COMMUNICATION/INTRUSION SYSTEMS SHALL REMAIN IN OPERATION DURING CONSTRUCTION PERIOD. DO NOT REMOVE ANY EXISTING CONNECTIONS, FACE PLATES OR OTHER EXISTING DEVICES. INTERRUPTION TO EXISTING SYSTEM DUE TO CONTRACTORS ACTIONS SHALL BE REPLACED/RECTIFIED BY THE CONTRACTOR AT NO COST TO THE OWNER.
2. THIS DRAWING PACKAGE IS PRESENTED WITH SYMBOLS, REPRESENTATIONS, TEMPLATES AND PARTS LIST OF A SINGLE MANUFACTURER (COMMSCOPE). OTHER OWNER APPROVED MANUFACTURERS SYMBOLS, REPRESENTATIONS, TEMPLATES AND PARTS LISTS REQUIRE A CONVERSION PACKAGE AND SHALL BE REQUESTED USING THE `REQUEST FOR INFORMATION OR REQUEST FOR CLARIFICATION' PROCESS. IF OTHER OWNER APPROVED MANUFACTURERS (ORTRONICS OR LEVITON) ARE PROPOSED TO BE USED IN THE CONSTRUCTION, THE CONTRACTOR SHALL BE RESPONSIBLE FOR ALL ADDITIONAL COST RELATED TO CONVERSION FROM DESIGN PACKAGE AND CONTRACTOR'S SUPPLIED PROPOSED INSTALLATION. PROPOSED INSTALLATION SHALL COMPLY WITH CONVERSION LAYOUTS AND PARTS LISTS. THE CONTRACTOR SHALL `REQUEST CLARIFICATION' FOR ANY QUESTIONS REGARDING THE DESIGN OR IMPLEMENTATION CONSIDERATION WHEN USING THE CONVERSION PROCESS. ADDITIONAL COMPONENTS MAY BE REQUIRED WHEN USING OWNER APPROVED EQUAL MANUFACTURERS.
3. THE FOLLOWING BEND RADII SHALL BE MAINTAINED FOR ALL COMMUNICATION UNDERGROUND CONDUIT SWEEPS.

CONDUIT SIZE	CONDUIT SWEEP RADIUS
2"	24"
3"	36"
4"	48"

4. DIVISION 27 CONTRACTOR SHALL CLOSELY COORDINATE THE RACEWAY INSTALLATION WITH THE DIVISION 26 CONTRACTOR. DIVISION 27 SHALL INSTRUCT THE DIVISION 26 ON THE SPECIAL REQUIREMENTS FOR INSTALLATION OF LOW VOLTAGE CABLING RACEWAYS. DIVISION 27 SHALL INSPECT AND ACCEPT RACEWAY SYSTEMS PRIOR TO THE INSTALLATION OF ANY LOW VOLTAGE WIRING.
5. REFERENCE SPECIFICATIONS, TITLE SHEET GENERAL NOTES AND APPLICABLE DRAWINGS FOR ADDITIONAL INFORMATION.
6. ALL WORK SHALL BE IN COMPLIANCE WITH THE ADA, CALIFORNIA AMENDMENTS (2022 CEC), DSA, AND WHERE APPLICABLE AS AMENDED BY LOCAL ORDINANCES AND CODES OF GOVERNING MUNICIPALITIES.
7. ALL ELECTRICAL/TECHNOLOGY DRAWINGS ARE TO BE READ IN CONJUNCTION WITH THE PROJECT SPECIFICATIONS AND ALL OTHER RELATED CONTRACT DRAWINGS.
8. CAREFULLY EXAMINE ALL CONTRACT DRAWINGS/SPECIFICATIONS AND BE RESPONSIBLE FOR THE PROPER FITTING OF MATERIALS AND EQUIPMENT AT EACH LOCATION AS INDICATED WITHOUT SUBSTANTIAL ALTERATION. IN AS MUCH AS THE DRAWINGS ARE GENERALLY DIAGRAMMATIC AND BECAUSE OF THE SMALL SCALE OF THE DRAWINGS, IT IS NOT POSSIBLE TO INDICATE ALL OFFSETS, FITTINGS AND ACCESSORIES WHICH MAY BE REQUIRED. FURNISHING FITTINGS REQUIRED TO MEET SUCH CONDITIONS SHALL BE AT NO COST TO THE CLIENT.
9. CONDUIT RUNS ARE SHOWN DIAGRAMMATICALLY ONLY AND SHALL BE INSTALLED IN A MANNER TO PREVENT CONFLICTS WITH EQUIPMENT, FOREIGN UTILITY PATHWAYS AND STRUCTURAL CONDITIONS. EXPOSED CONDUITS SHALL BE INSTALLED PARALLEL TO BEAMS AND WALLS.
10. FIELD VERIFY EXISTING CONDITIONS AND ADVISE ENGINEER OF ANY DISCREPANCIES OR DEVIATIONS BETWEEN PLANS AND ACTUAL CONDITIONS PRIOR TO SUBMITTING BID.
11. EQUIPMENT AND MATERIALS REMOVED BY THE CONTRACTOR SHALL BE LEGALLY DISPOSED OF BY THE CONTRACTOR. ACTIVE ELECTRONIC HARDWARE REMOVED BY THE CONTRACTOR SHALL BE GIVEN TO THE OWNER FOR RETENTION OR DISPOSAL.
12. PAINT EXPOSED CONDUITS, COMMUNICATIONS PULL BOXES AND CONNECTING HARDWARE ASSOCIATED WITH NEW WORK TO MATCH THE ADJACENT SURFACE. PATCH, TEXTURE AND PAINT SURFACES AFFECTED BY DEMOLITION WORK TO MATCH THE ADJACENT SURFACE.
13. SUPPORT TELECOMMUNICATIONS, AUDIO/VISUAL, INTERCOM/PUBLIC ADDRESS, INTRUSION DETECTION, MATV AND ALL OTHER LOW VOLTAGE CABLING WITH 'J-HOOK' SUPPORTS EVERY 5' WHERE CABLES ARE NOT SUPPORTED, ROUTED THROUGH CONDUIT OR CABLE TRAY. MAINTAIN 12" CLEARANCE FROM ELECTRICAL, LIGHTING AND EXPOSED ACCESS CONTROL CABLING. REFER TO DETAIL 1/ET-5.2 FOR ADDITIONAL REQUIREMENTS.
14. CEILING MOUNTED COMPONENTS SHALL BE POSITIVELY ATTACHED TO CEILING SUSPENSION SYSTEM BY MECHANICAL MEANS TO RESIST A HORIZONTAL FORCE EQUAL TO THE WEIGHT OF THE COMPONENT. PROVIDE A MINIMUM OF TWO ATTACHMENTS PER COMPONENT.
15. TECHNOLOGY DEVICES ARE DIMENSIONED TO CENTER OF DEVICE U.O.N.
16. TELECOMMUNICATIONS OR AUDIO/VISUAL OUTLET(S) SHALL BE LOCATED WITHIN 18" OF ASSOCIATED ELECTRICAL RECEPTACLE(S) WHERE APPLICABLE. CONTRACTOR SHALL COORDINATE ALL OUTLET LOCATIONS WITH ARCHITECTURAL ELEVATIONS AND CASEWORK SHOP DRAWINGS.
17. COORDINATE REMOVAL AND INSTALLATION OF WIRELESS ACCESS POINT DEVICES WITHIN THE AREA OF CONSTRUCTION WITH DISTRICT PERSONNEL.
18. CONCEPTUAL CONSTRUCTION PHASING HAS BEEN TAKEN INTO CONSIDERATION AND ACCOUNTED FOR ON THE CONSTRUCTION DRAWINGS. CONTRACTOR SHALL ADJUST CONSTRUCTION PHASING AS REQUIRED TO PROVIDE SCOPE OF WORK IN ACCORDANCE WITH THE SPECIFIED CONSTRUCTION DURATION. CONNECTIVITY TO LOW-VOLTAGE SYSTEMS SHALL REMAIN ACTIVE AND OPERATIONAL DURING CONSTRUCTION.
19. VERIFY EXACT LOCATION, SIZE, AND EXTENT OF ALL EXISTING UTILITIES, OBSTRUCTIONS AND/OR OTHER CONDITIONS WHICH MAY AFFECT THE PROPOSED WORK UNDER THE PROJECT. THE CONTRACTOR SHALL TAKE EVERY PRECAUTION TO PREVENT DAMAGE TO EXISTING WORK. ANY DAMAGE TO EXISTING UTILITIES OR STRUCTURES DURING CONSTRUCTION SHALL BE IMMEDIATELY REPAIRED OR REPLACED IN ACCORDANCE WITH THE OWNER'S DIRECTION AT THE CONTRACTOR'S EXPENSE.
20. WALL MOUNTED DEVICES ARE PLACED TO PROVIDE SYSTEM FUNCTIONALITY AND CODE COMPLIANCE, WHILE COORDINATED TO ACCOMMODATE THE ARCHITECTURAL AESTHETICS. CONTRACTOR SHALL PROVIDE FRAMING TO ALLOW HORIZONTAL AND VERTICAL DEVICE BACKBOX ALIGNMENT WITH ARCHITECTURAL ELEMENTS WHERE APPLICABLE. CONTRACTOR SHALL COORDINATE DEVICE BACKBOX LOCATIONS WITH ARCHITECTURAL ELEVATIONS AND CASEWORK SHOP DRAWINGS.
21. WHERE APPLICABLE, VERTICALLY ALIGN ACCESS CONTROL CARD READER BENEATH RESPECTIVE ARCHITECTURAL DOOR SIGNAGE.
22. INTERIOR, EXTERIOR, AND UNDERGROUND CONDUITS SERVING LOW-VOLTAGE SYSTEMS CABLING SHALL NOT EXCEED 180° OF BENDS BETWEEN PULL POINTS.
23. MAINTAIN A MINIMUM OF 12" SEPARATION BETWEEN ENERGIZED ELECTRICAL DEVICES OR ELECTRICAL PATHWAYS AND ALL LOW VOLTAGE CABLING (TELECOMMUNICATIONS, AUDIO/VISUAL, INTERCOM/PUBLIC ADDRESS, INTRUSION DETECTION, ETC.). MAINTAIN A MINIMUM OF 12" SEPARATION BETWEEN TELECOMMUNICATIONS CABLING AND ACCESS CONTROL CABLING.
24. REFER TO THIS SHEET FOR MULTI-CONDUCTOR CABLE WIRING DIAGRAM AND MINIMUM CONDUIT SIZES ALLOWED FOR THIS PROJECT.
25. INSTALL BACK BOX ENCLOSURES AND JUNCTION BOXES PLUMB AND LEVEL. FOR EXTERIOR APPLICATIONS, GRIND UNEVEN EXTERIOR SURFACES TO ALLOW EACH DEVICE OR DEVICE COVER TO REST FLUSH WITH EXTERIOR WALL. GRIND SHALL NOT EXCEED 1/8" AROUND THE FOOT PRINT OF EACH DEVICE OR DEVICE COVER.
26. REFER TO DETAIL 1/E-0.2 FOR ADA MOUNTING HEIGHT LIMITS OVER OBSTRUCTIONS REQUIREMENTS.
27. ALL DEMOLITION WORK SHALL COMPLY WITH CBC CHAPTER 33 AND CFC CHAPTER 33.

MULTI-CONDUCTOR CABLE WIRING DIAGRAM

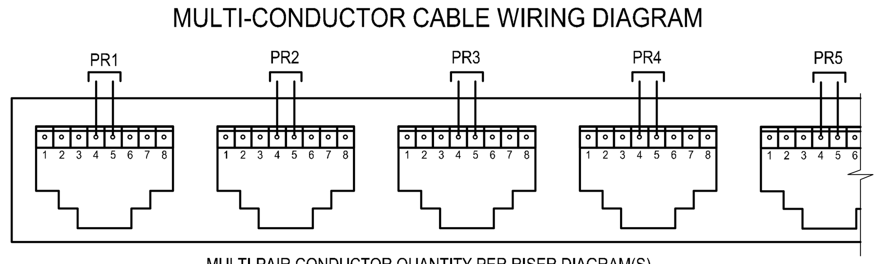

MULTI-PAIR CONDUCTOR QUANTITY PER RISER DIAGRAM(S)

DSA - MEP COMPONENT ANCHORAGE NOTE

1. ALL MECHANICAL, PLUMBING AND ELECTRICAL COMPONENTS SHALL BE ANCHORED AND INSTALLED PER THE DETAILS ON THE DSA APPROVED CONSTRUCTION DOCUMENTS. THE FOLLOWING COMPONENTS SHALL BE ANCHORED OR BRACED TO MEET THE FORCE AND DISPLACEMENT REQUIREMENTS PRESCRIBED IN THE 2022 CBC SECTIONS 1617A.1.18 THROUGH 1617A.1.26 AND ASCE 7-16, CHAPTER 13, 26 & 30.
   1. ALL PERMANENT EQUIPMENT AND COMPONENTS.
   2. TEMPORARY OR MOVABLE EQUIPMENT THAT IS PERMANENTLY ATTACHED (E.G. HARD WIRED) TO THE BUILDING UTILITY SERVICE SUCH AS ELECTRICITY, GAS OR WATER. "PERMANENTLY ATTACHED" SHALL INCLUDE ALL ELECTRICAL CONNECTIONS EXCEPT PLUGS FOR 110/220 VOLT RECEPTACLES HAVING FLEXIBLE CABLE.
   3. TEMPORARY, MOVABLE OR MOBILE EQUIPMENT WHICH IS HEAVIER THAN 400 POUNDS OR HAS A CENTER OF MASS LOCATED 4 FEET OR MORE ABOVE THE ADJACENT FLOOR OR ROOF LEVEL THAT DIRECTLY SUPPORT THE COMPONENT IS REQUIRED TO BE RESTRAINED IN A MANNER APPROVED BY DSA.

   THE FOLLOWING MECHANICAL AND ELECTRICAL COMPONENTS SHALL BE POSITIVELY ATTACHED TO THE STRUCTURE, BUT NEED NOT DEMONSTRATE DESIGN COMPLIANCE WITH THE REFERENCES NOTED ABOVE. THESE COMPONENTS SHALL HAVE FLEXIBLE CONNECTIONS PROVIDED BETWEEN THE COMPONENT AND ASSOCIATED DUCTWORK, PIPING AND CONDUIT. FLEXIBLE CONNECTIONS MUST ALLOW MOVEMENT IN BOTH TRANSVERSE AND LONGITUDINAL DIRECTIONS:
   A. COMPONENTS WEIGHING LESS THAN 400 POUNDS AND HAVE A CENTER OF MASS LOCATED 4 FEET OR LESS ABOVE THE ADJACENT FLOOR OR ROOF LEVEL THAT DIRECTLY SUPPORT THE COMPONENT.
   B. COMPONENTS WEIGHING LESS THAN 20 POUNDS, OR IN THE CASE OF DISTRIBUTED SYSTEMS. LESS THAN 5 POUNDS PER FOOT, WHICH ARE SUSPENDED FROM A ROOF OF FLOOR OR HUNG FROM A WALL.

   THE ANCHORAGE OF ALL MECHANICAL, ELECTRICAL AND PLUMBING COMPONENTS SHALL BE SUBJECT TO THE APPROVAL OF THE DESIGN PROFESSIONAL IN GENERAL RESPONSIBLE CHARGE OR STRUCTURAL ENGINEER DELEGATED RESPONSIBILITY AND ACCEPTANCE BY DSA. THE PROJECT INSPECTOR WILL VERIFY THAT ALL COMPONENTS AND EQUIPMENT HAVE BEEN ANCHORED IN ACCORDANCE WITH THE ABOVE REQUIREMENTS.
2. PIPING, DUCTWORK AND ELECTRICAL DISTRIBUTION SYSTEM BRACING NOTE :
   PIPING, DUCTWORK, AND ELECTRICAL DISTRIBUTION SYSTEMS SHALL BE BRACED TO COMPLY WITH THE FORCES AND DISPLACEMENTS PRESCRIBED IN ASCE 7-16 SECTION 13.3 AS DEFINED IN ASCE 7-16 SECTION 13.6.5, 13.6.6, 13.6.7, 13.6.8 AND 2022 CBC, SECTIONS 1617A.1.24, 1617A.1.25 AND 1617A.1.26.

   THE METHOD OF SHOWING BRACING AND ATTACHMENTS TO THE STRUCTURE FOR IDENTIFIED DISTRIBUTION SYSTEM ARE AS NOTED BELOW. WHEN BRACING AND ATTACHMENTS ARE BASED ON A PRE-APPROVED INSTALLATION GUIDE (E.G., HCAi OPM FOR 2013 CBC OR LATER), COPIES OF THE BRACING SYSTEM INSTALLATION GUIDE OR MANUAL SHALL BE AVAILABLE ON THE JOBSITE PRIOR TO THE START OF AND DURING THE HANGING AND BRACING OF THE DISTRIBUTION SYSTEMS. THE STRUCTURAL ENGINEER OF RECORD SHALL VERIFY THE ADEQUACY OF THE STRUCTURE TO SUPPORT THE HANGER AND BRACE LOADS.

   MECHANICAL PIPING (MP), MECHANICAL DUCTS (MD), PLUMBING PIPE (PP) ELECTRICAL DISTRIBUTION SYSTEMS (E):
   MP ☐ MD ☐ PP ☐ E ☒ - OPTION 1: DETAILED ON THE APPROVED DRAWINGS WITH PROJECT SPECIFIC NOTES AND DETAILS.
   MP ☐ MD ☐ PP ☐ E ☐ - OPTION 2: SHALL COMPLY WITH THE APPLICABLE HCAi PRE-APPROVAL (OPM#)

ASSISTIVE LISTENING DEVICE NOTE FOR PORTABLE SYSTEMS

PROVIDE CODE APPROVED PORTABLE ASSISTIVE LISTENING SYSTEMS. SYSTEMS SHALL BE COMPLETE WITH TRANSMITTER, ANTENNAS AND RECEIVERS. EACH PORTABLE SYSTEM PACKAGE SHALL CONSIST OF THE LISTED ITEMS OR EQUIVALENT. PROVIDE A PORTABLE SYSTEM PACKAGE FOR THE FOLLOWING ASSEMBLY AREAS:

CAMPUS: PROVIDE (2) OF PACKAGE A (FOR CLASSROOMS)
LIBRARY 1: PROVIDE (1) OF PACKAGE B

PROVIDE BATTERY CHARGER AS REQUIRED FOR EACH RECEIVER. PROVIDE ANTENNA, POWER SUPPLY, EAR BUDS, MOUNTING HARDWARE, CORDS, CARRYING CASE, AND ALL OTHER ACCESSORIES REQUIRED FOR COMPLETE PORTABLE SYSTEMS, REFER TO ARCHITECTURAL DRAWINGS FOR ASSISTIVE LISTENING SYSTEM STORAGE LOCATION(S).

PORTABLE ASSISTIVE LISTENING SYSTEM - PACKAGE A (LKS-8-A1 OR EQUAL)

PROVIDE	PART NUMBER & DESCRIPTION:
1	LISTEN TECHNOLOGIES LK-1 PORTABLE LISTENTALK TRANSCEIVER
1	LISTEN TECHNOLOGIES LA-451 HEADSET 1
3	LISTEN TECHNOLOGIES LKR-11 LISTENTALK RECEIVER PRO
3	LISTEN TECHNOLOGIES LA-401 UNIVERSAL EAR SPEAKER
2	LISTEN TECHNOLOGIES LA-438 NECK LOOP (25% OF OVERALL LKR-11 QUANTITY)
4	LISTEN TECHNOLOGIES LA-445-BK BREAKAWAY LANYARD
1	LISTEN TECHNOLOGIES LA-483 SOFT SHELL CASE 4
1	LISTEN TECHNOLOGIES LA-423-01 4-PORT USB CHARGER

PORTABLE ASSISTIVE LISTENING SYSTEM - PACKAGE B

PROVIDE	PART NUMBER & DESCRIPTION:
1	LISTEN TECHNOLOGIES LK-1 PORTABLE LISTENTALK TRANSCEIVER
1	LISTEN TECHNOLOGIES LA-452 HEADSET 2
8	LISTEN TECHNOLOGIES LKR-12 LISTENTALK RECEIVER BASIC
9	LISTEN TECHNOLOGIES LA-401 UNIVERSAL EAR SPEAKER
2	LISTEN TECHNOLOGIES LA-438 NECK LOOP (25% OF OVERALL LKR-12 QUANTITY)
8	LISTEN TECHNOLOGIES LA-445-BK BREAKAWAY LANYARD
1	LISTEN TECHNOLOGIES LA-481 DOCKING STATION CASE 16

MINIMUM CONDUIT SIZES ALLOWED FOR THIS PROJECT

AUDIO / VISUAL	1-1/4" CONDUIT
INTRUSION DETECTION	3/4" CONDUIT
TELECOMMUNICATIONS "VOICE / DATA"	1" CONDUIT

TECHNOLOGY ABBREVIATIONS

ABBREV.	DESCRIPTION
ADA	AMERICANS WITH DISABILITIES ACT
AFF	ABOVE FINISHED FLOOR
ALS	ASSISTIVE LISTENING SYSTEMS
AWG	AMERICAN WIRE GAUGE
AP	ACCESS POINT
AV	AUDIO/VISUAL
BBC	BONDING BACKBONE CONDUCTOR
BDF	BONDING DISTRIBUTION FRAME
C	CONDUIT
CAT / IDF	CATEGORY / INTERMEDIATE DISTRIBUTION FRAME
CATV	COMMUNITY ANTENNA TELEVISION
CCTV	CLOSED CIRCUIT TELEVISION
CEC	CALIFORNIA ELECTRICAL CODE
CMP	COMMUNICATIONS PLENUM
CPB	COMMUNICATIONS PULLBOX
DIA.	DIAMETER
DPDT	DOUBLE POLE, DOUBLE THROW
EX	EXISTING
F	FIXED
GEC	GROUNDING ELECTRODE CONDUCTOR
IP	INTERNET PROTOCOL
I/O	INDOOR/OUTDOOR
LAN	LOCAL AREA NETWORK
MAX.	MAXIMUM
MDF	MAIN DISTRIBUTION FRAME
MIN.	MINIMUM
MM	MULTIMODE
MPOE	MINIMUM POINT OF ENTRY (TELCO)
NIC	NOT IN CONTRACT
OM4	OPTICAL MULTIMODE 4
OFOI	OWNER FURNISHED, OWNER INSTALLED
OFCI	OWNER FURNISHED, CONTRACTOR INSTALLED
OSP	OUTSIDE PLANT
PA	PUBLIC ADDRESS
PBB	PRIMARY BONDING BUSBAR
PDU	POWER DISTRIBUTION UNIT
RBB	RACK BONDING BUSBAR
RJ	REGISTERED JACK
RU	RACK UNIT
SBB	SECONDARY BONDING BUSBAR
SQ.	SQUARE
TBC	TELECOMMUNICATIONS BONDING CONDUCTOR
TBB	TELECOMMUNICATIONS BONDING BACKBONE
TEBC	TELECOMMUNICATIONS EQUIPMENT BONDING CONDUCTOR
TIA	TELECOMMUNICATIONS INDUSTRY ASSOCIATION
T.O.	TELECOMMUNICATIONS OUTLET
TYP	TYPICAL
UPS	UNINTERRUPTIBLE POWER SUPPLY
USB	UNIVERSAL SERIAL BUS
UTP	UNSHIELDED TWISTED-PAIR.
U.O.N.	UNLESS OTHERWISE NOTED
VOIP	VOICE OVER INTERNET PROTOCOL
WAP	WIRELESS ACCESS POINT
WP	WEATHER PROOF
+42"	MOUNTING HEIGHT ABOVE FINISHED FLOOR TO CENTER OF DEVICE OR FIXTURE U.O.N.

IDENTIFICATION STAMP
DIV. OF THE STATE ARCHITECT
APP: 04-122772 INC:
REVIEWED FOR
SS ☑ FLS ☑ ACS ☑
DATE: 03/26/2024

SPROTTE | WATSON
ARCHITECTURE | PLANNING

LICENSED ARCHITECT C12359 REN. OCTOBER 2025 STATE OF CALIFORNIA

CONSULTANT

REGISTERED PROFESSIONAL ENGINEER DALE M. FRANCHAK No.11533 exp.6/30/24 ELECTRICAL STATE OF CALIFORNIA
01/25/24

TURPIN & RATTAN ENGINEERING, INC.
CONSULTING ENGINEERS
4719 PALM AVENUE
LA MESA, CA 91941-5221
619 / 466 / 6224 FAX 466 / 6233
E-MAIL: ENGINEER@TREISD.COM
TREI PROJECT # 22277.S01
H.LOZANO 01/25/24 - 1:39PM

DEHESA ELEMENTARY SCHOOL
CONSTRUCTION DOCUMENTS
DEHESA SCHOOL DISTRICT
4612 DEHESA ROAD
EL CAJON, CA 92019

REVISIONS

DESCRIPTION

TECHNOLOGY GENERAL NOTES, SCHEDULES, AND ABBREVIATIONS

DATE

01.25.24

JOB #

22-0400

SHEET #

ET-0.1

7/12/2018 1:34:44 PM

TECHNOLOGY MATERIAL LIST

1 — 1 RU RACK MOUNTED FIBER OPTIC ENCLOSURE

2 — 12 STRAND DUPLEX SC TYPE FIBER OPTIC ADAPTER PANEL

3 — BLANK FIBER OPITIC ADAPTER PANEL

4 — CATEGORY 6 24 PORT PATCH PANEL

5 — 1 RU HORIZONTAL CABLE MANAGEMENT PANEL

6 — SURGE PROTECTOR
POWER STRIP SURGE PROTECTOR
(2) 15A 120V NEMA 5-15R, (10) 20A 120V NEMA 5-20R RECEPTACLES

7 — 3/16" THICK x 3/4"H x 19"W HORIZONTAL HARD-DRAWN ELECTROLYTIC TOUGH PITCH 110 ALLOY COPPER RACK BONDING BUSBAR (OR EQUIVALENT)

8 — STAINLESS STEEL TELECOMMUNICATIONS OUTLET FACEPLATE
(PORT COUNT SHALL MATCH CATEGORY 6 PORT QUANTITY)

9 — CATEGORY 6 TELECOMMUNICATIONS JACK (RJ45)
(ORANGE)

10 — SURFACE MOUNT MODULE "BISCUIT BLOCK"
(PORT COUNT SHALL MATCH CATEGORY 6 PORT QUANTITY)

TECHNOLOGY LEGEND

SYMBOL	DESCRIPTION
	DASHED SYMBOLS INDICATE EXISTING TELECOMMUNICATIONS OUTLET (VOICE / DATA), OUTLETS, DEVICE OR, EQUIPMENT TO BE REMOVED U.O.N.
	FINE-LINED SYMBOLS INDICATE EXISTING TELECOMMUNICATIONS OUTLET (VOICE / DATA), OUTLETS, DEVICE, OR EQUIPMENT TO REMAIN U.O.N.
2	TELECOMMUNICATIONS OUTLET (DATA ONLY), WALL MOUNTED AT +18" AFF U.O.N., NUMBER INDICATES QUANTITY OF TERMINATED CATEGORY 6 CABLES.
2	TELECOMMUNICATIONS OUTLET (DATA ONLY), MOUNTED WITHIN CEILING SPACE. NUMBER INDICATES QUANTITY OF TERMINATED CATEGORY 6 CABLES.
AV1	EXTRON MLC PLUS 200 - MEDIALINK PLUS CONTROLLER. WALL MOUNTED AT +42" AFF U.O.N. PROVIDE RECESSED 3-GANG DEEP JUNCTION BOX. REFER TO ET-3.5 FOR ADDITIONAL REQUIREMENTS.
AV2	EXTRON PVT HDMI - DUAL DIGITAL HDMI INPUT, WALL MOUNTED AT +18" AFF U.O.N. PROVIDE RECESSED 2-GANG DEEP JUNCTION BOX. REFER TO ET-3.4 AND ET-3.5 FOR ADDITIONAL REQUIREMENTS.
AV3	EXTRON PVT HDMI - DUAL DIGITAL HDMI INPUT AND WPD 101 3.5MM - ONE 3.5MM FEMALE AUDIO OUTPUT, WALL MOUNTED AT +18" AFF U.O.N. PROVIDE RECESSED 3-GANG DEEP JUNCTION BOX. REFER TO ET-3.4 AND ET-3.5 FOR ADDITIONAL REQUIREMENTS.
AV4	EXTRON EBP 200 - 3-GANG 10 BUTTON PANEL, WALL MOUNTED AT +42" AFF U.O.N. PROVIDE RECESSED 3-GANG DEEP JUNCTION BOX. REFER TO ET-3.4 FOR ADDITIONAL REQUIREMENTS.
AV5	EXTRON PVM 220 - PLENUM VAULT ENCLOSURE, CEILING MOUNTED. REFER TO ET-3.4 FOR ADDITIONAL REQUIREMENTS.
AV6	EXTRON PVM 220 - PLENUM VAULT ENCLOSURE, CEILING MOUNTED. REFER TO ET-3.5 FOR ADDITIONAL REQUIREMENTS.
S	EXTRON FF120 AUDIO SYSTEM SPEAKER, MOUNTED FLUSH IN CEILING. REFER TO SHEET ET-3.4 AND ET-3.5 FOR ADDITIONAL REQUIREMENTS.
J	WALL MOUNTED JUNCTION BOX. SIZED PER CEC, U.O.N.
ID	INTRUSION SYSTEM MOTION DETECTOR, 360° PASSIVE INFRARED DETECTION, CEILING MOUNTED.
ID	INTRUSION SYSTEM MOTION DETECTOR, WALL TYPE PASSIVE INFRARED / MICROWAVE DETECTION, WALL MOUNTED AT +96" AFF U.O.N.
DC	DOOR CONTACT, DOUBLE POLE/DOUBLE THROW, FLUSH IN DOOR FRAME U.O.N.
C	WIRELESS CLOCK MOUNTED TO WALL AT +96" AFF U.O.N.
S	AUDIO SYSTEM SPEAKER, WALL MOUNTED AT +96" AFF U.O.N.
PA	PUBLIC ADDRESS SPEAKER, WALL MOUNTED AT +96" AFF. U.O.N.
TV	RG-6 COAXIAL TELEVISION OUTLET, WALL MOUNTED AT +96" AFF. U.O.N.

TECHNOLOGY LEGEND

SYMBOL	DESCRIPTION
	GROUND CONNECTION OR GROUNDING ELECTRODE
	TELEPHONE OR DATA BACKBOARD, FIRE RESISTANT PLYWOOD.
MDF OR IDF	MAIN DISTRIBUTION FRAME OR INTERMEDIATE DISTRIBUTION FRAME.
	TELECOMMUNICATIONS OUTLET AND PROVISIONS FOR AN OWNER FURNISHED, CONTRACTOR INSTALLED CCTV SECURITY CAMERA. PROCURE OWNER'S SECURITY CAMERA MATERIAL LIST AND INSTALL ALL RELATED COMPONENTS (SECURITY CAMERA, MOUNTING HARDWARE, ETC.) FOR A COMPLETE INSTALLATION. FIELD COORDINATE FOCAL POINT(S) WITH THE OWNER.
	PROVISIONS FOR AN OWNER FURNISHED, OWNER INSTALLED WIRELESS ACCESS POINT.
	WIRELESS CLOCK TRANSMITTER.
	12"W X 4"D BASKET TYPE CABLE TRAY (TYPICAL U.O.N).
	COMMUNICATIONS PULLBOX WITH SCREW COVER, SIZED PER ANSI TIA-569-E.
	COMMUNICATIONS PULLBOX, TYPE NEMA 3R.
	COMMUNICATIONS HANDHOLE, MOUNTED FLUSH WITH GRADE.
EX	EXISTING CONDUIT TO REMAIN.
R	SLAB OR UNDERGROUND CONDUIT AND WIRING TO BE REMOVED.
RR	SURFACE RACEWAY AND WIRING TO BE REMOVED.
R	CONCEALED CONDUIT AND WIRING TO BE REMOVED.
R	EXPOSED CONDUIT AND WIRING TO BE REMOVED.
	CONDUIT CONCEALED IN WALL OR CEILING SPACE.
	CONDUIT CONCEALED UNDER FLOOR SLAB OR UNDERGROUND.
	CONDUIT INSTALLED EXPOSED.
	CONDUIT INSTALLED IN RAISED ACCESS FLOOR SPACE.
OH	OVERHEAD DISTRIBUTION LINES.
	CONDUIT TURNED UP.
	CONDUIT TURNED DOWN.
	CONDUIT STUB-OUT TERMINATION.
	CONDUIT STUBBED UP AND CAPPED IN CEILING SPACE.
	CONDUIT SLEEVE(S) IN ACCESSIBLE CEILING SPACE.
	CONDUIT CONTINUATION.
	FLEXIBLE METAL CONDUIT. PROVIDE REQUIRED BRANCH CIRCUIT CONDUCTORS AND EQUIPMENT GROUND CONDUCTOR.
	MULTI-CHANNEL SURFACE RACEWAY UP WALL INTO CEILING SPACE. WIREMOLD SERIES 5400 (OR EQUIVALENT).
	MULTI-CHANNEL SURFACE RACEWAY DOWN WALL TO FLOOR. WIREMOLD SERIES 5400 (OR EQUIVALENT).
	MULTI-CHANNEL SURFACE RACEWAY, WALL MOUNTED AT ELEVATION NOTED. WIREMOLD SERIES 5400 (OR EQUIVALENT).
	MULTI-CHANNEL SURFACE RACEWAY, WALL MOUNTED AT +18" AFF U.O.N. WIREMOLD SERIES 5400 (OR EQUIVALENT).
	MULTI-CHANNEL SURFACE RACEWAY, WALL MOUNTED AT WALL/CEILING INTERSECTION. WIREMOLD SERIES 5400 (OR EQUIVALENT).
	MULTI-CHANNEL SURFACE RACEWAY, CEILING MOUNTED. WIREMOLD SERIES 5400 (OR EQUIVALENT).
W	SURFACE RACEWAY UP WALL INTO CEILING SPACE. WIREMOLD SERIES 2300 (OR EQUIVALENT).
W	SURFACE RACEWAY DOWN WALL TO FLOOR. WIREMOLD SERIES 2300 (OR EQUIVALENT).
W	SURFACE RACEWAY. WIREMOLD SERIES 2300 (OR EQUIVALENT).
1 ET501	INDICATES DETAIL '1' ON SHEET ET501 (TYPICAL).
#	MATERIAL SHOWN WITH CORRESPONDING NUMBER FROM MATERIAL LIST, SHALL BE PROVIDED BY CONTRACTOR.
T#	KEYNOTE REFERENCE (TYPICAL).

IDENTIFICATION STAMP
DIV. OF THE STATE ARCHITECT
APP: 04-122772 INC:
REVIEWED FOR
SS ☑ FLS ☑ ACS ☑
DATE: 03/26/2024

SPROTTE | WATSON
ARCHITECTURE | PLANNING

CONSULTANT

REGISTERED PROFESSIONAL ENGINEER
DALE M. FRANCHAK
No.11533
exp 06/24
ELECTRICAL
STATE OF CALIFORNIA
01/25/24

TURPIN & RATTAN ENGINEERING, INC.
CONSULTING ENGINEERS
4719 PALM AVENUE
LA MESA, CA 91941-5231
619 / 466 / 6224 FAX 466 / 6233
E-MAIL: ENGINEER@TREIEG.COM
TREI PROJECT # 22277.501
PLOTTED 01/25/24 - 1:39PM

DEHESA ELEMENTARY SCHOOL
CONSTRUCTION DOCUMENTS
DEHESA SCHOOL DISTRICT
4612 DEHESA ROAD
EL CAJON, CA 92019

REVISIONS

DESCRIPTION
TECHNOLOGY MATERIAL LIST AND SYMBOL LEGEND

DATE
01.25.24

JOB #
22-0400

SHEET #
ET-0.2

7/12/2018 1:34:44 PM

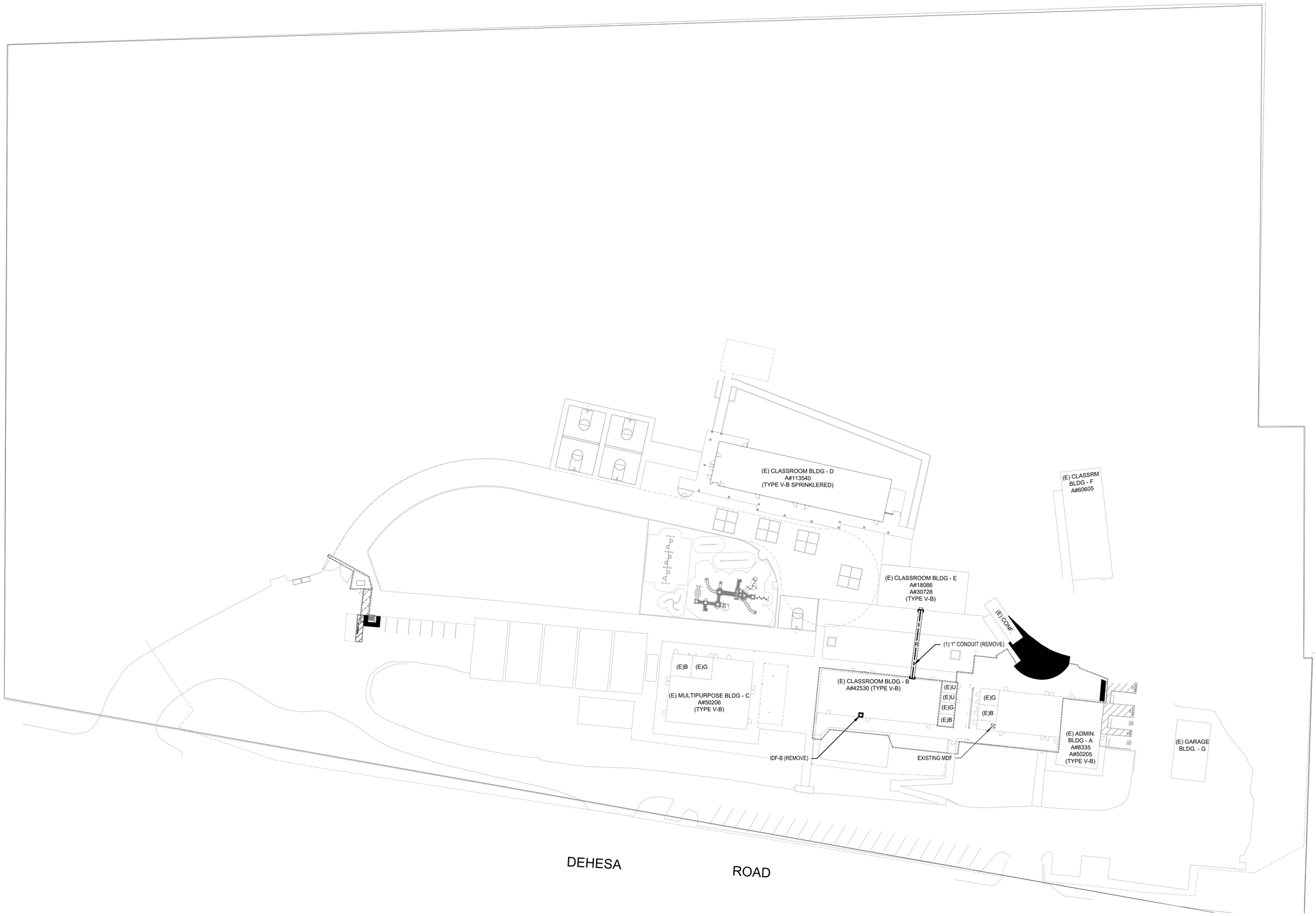

SITE PLAN - TECHNOLOGY DEMOLITION

SCALE: 1" = 30'

0 15' 30' 60' 90'

1" = 30'

NORTH

SITE PLAN SHEET NOTES

1. EXISTING UNDERGROUND CONDUIT DUCTBANK NOT NOTED FOR DEMOLITION IS SHOWN FOR REFERENCE ONLY TO MITIGATE POTENTIAL CONFLICTS DURING DEMOLITION.
2. EXISTING CONDITIONS AND SITE COMPONENTS NOT NOTED FOR DEMOLITION ARE TO REMAIN AND PROTECTED IN PLACE.

IDENTIFICATION STAMP
DIV. OF THE STATE ARCHITECT
APP: 04-122772 INC:
REVIEWED FOR
SS ☑ FLS ☑ ACS ☑
DATE: 03/26/2024

SPROTTE WATSON
ARCHITECTURE PLANNING

LICENSED ARCHITECT
C12359
STATE OF CALIFORNIA

CONSULTANT

REGISTERED PROFESSIONAL ENGINEER
DALE M. FRANDSEN
No.11533
EXP. 06/30/24
ELECTRICAL
STATE OF CALIFORNIA

01/25/24

TURPIN & RATTAN
ENGINEERING, INC.
CONSULTING ENGINEERS
4719 PALM AVENUE
LA MESA, CA 91941-5231
619 / 466 / 6224 FAX 466 / 6233
E-MAIL: ENGINEER@TREIEG.COM

TREI PROJECT # 22277.S01
PLOTTED: 01/25/24 - 1:39PM

DEHESA ELEMENTARY SCHOOL
CONSTRUCTION DOCUMENTS
DEHESA SCHOOL DISTRICT
4612 DEHESA ROAD
EL CAJON, CA 92019

REVISIONS

DESCRIPTION

SITE PLAN -
TECHNOLOGY DEMOLITION

DATE

01.25.24

JOB #

22-0400

SHEET #

ET-1.1

7/12/2018 1:34:44 PM

KEYNOTES

(T01) REFER TO 3/ET-5.4 FOR COMMUNICATIONS PULL BOX LABELING DETAIL AND ADDITIONAL REQUIREMENTS.

SITE PLAN SHEET NOTES

1. PROGRAM LOW-VOLTAGE SYSTEM COMPONENTS TO MATCH THE ACTUAL ROOM NUMBER / NAME SIGNAGE.
2. PROVIDE PORTABLE ALS SYSTEMS IN COMPLIANCE WITH CBC 11B-219. REFER TO THE ASSISTIVE LISTENING SYSTEM (ALS) SCHEDULE ON SHEET ET-0.1 FOR DETAILS AND ADDITIONAL REQUIREMENTS.

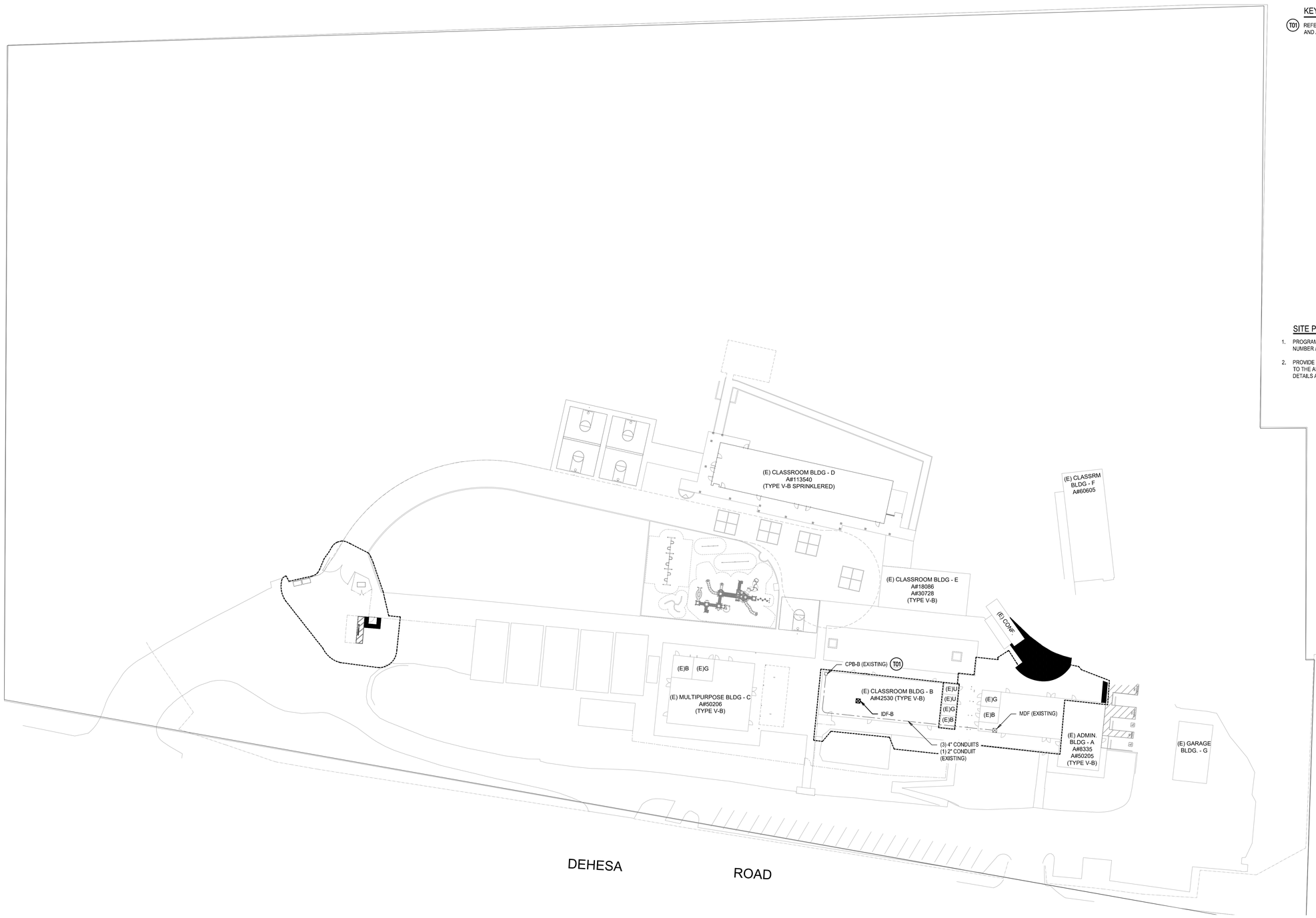

SITE PLAN - TECHNOLOGY

SCALE: 1" = 30'

0 15' 30' 60' 90'

1" = 30'

NORTH

IDENTIFICATION STAMP
DIV. OF THE STATE ARCHITECT
APP: 04-122772 INC:
REVIEWED FOR
SS ☑ FLS ☑ ACS ☑
DATE: 03/26/2024

SPROTTE | WATSON
ARCHITECTURE | PLANNING

REGISTERED ARCHITECT
C12359
STATE OF CALIFORNIA

CONSULTANT

REGISTERED PROFESSIONAL ENGINEER
DALE M. FRANDSEN
No.11533
EXP. 06/30/24
ELECTRICAL
STATE OF CALIFORNIA
01/25/24

TURPIN & RATTAN
ENGINEERING, INC.
CONSULTING ENGINEERS
4719 PALM AVENUE
LA MESA, CA 91941-5231
619 / 466 / 6224 FAX 466 / 6233
E-MAIL: ENGINEER@TRCIEG.COM
TRE: PROJECT # 22277.S01
PLOTTED: 01/25/24 - 1:39PM

DEHESA ELEMENTARY SCHOOL
CONSTRUCTION DOCUMENTS
DEHESA SCHOOL DISTRICT
4612 DEHESA ROAD
EL CAJON, CA 92019

REVISIONS

DESCRIPTION

SITE PLAN - TECHNOLOGY

DATE

01.25.24

JOB #

22-0400

SHEET #

ET-1.2

7/12/2018 1:34:44 PM

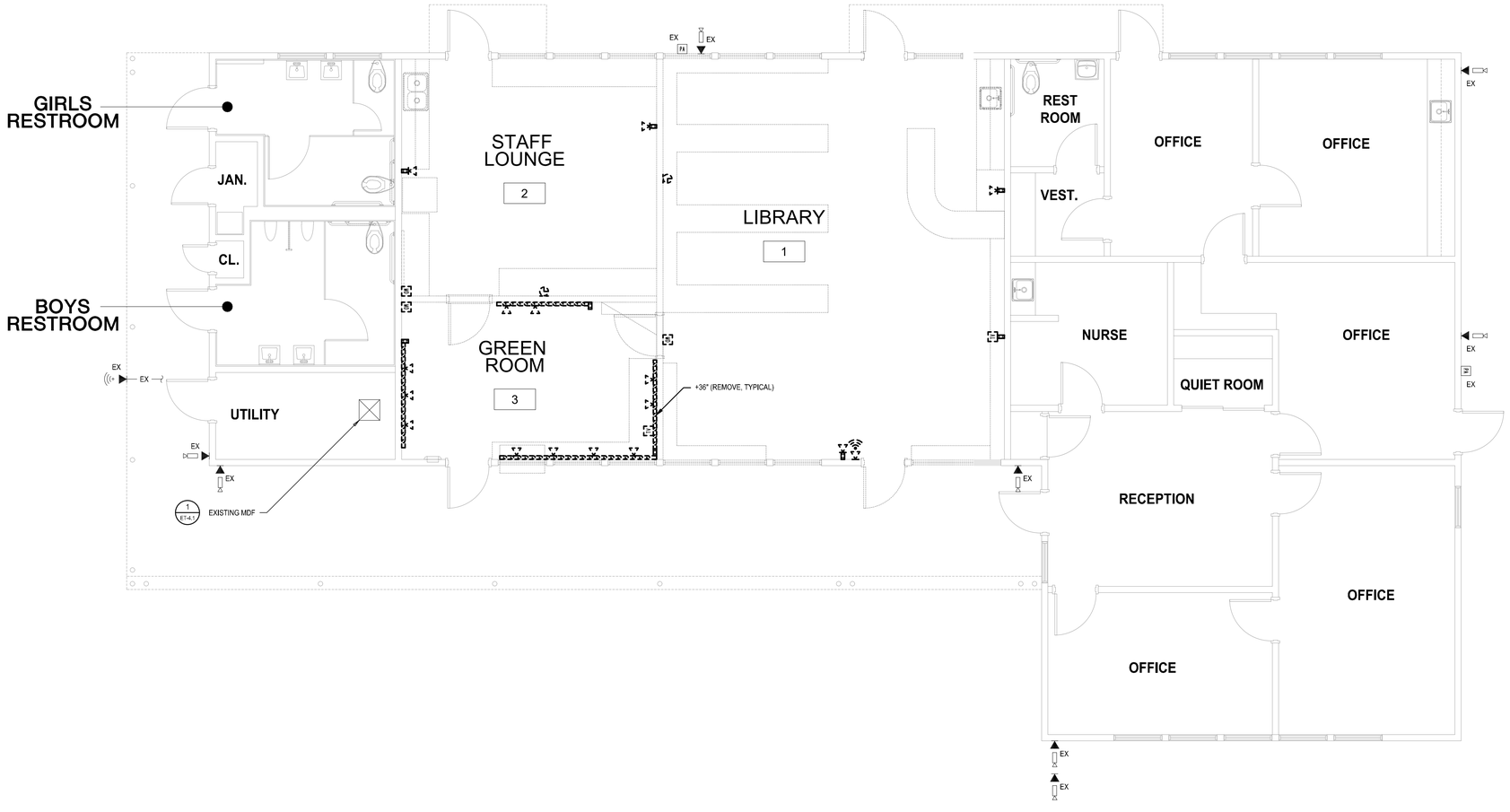

BUILDING A - ADMIN DEMO PLAN - TECHNOLOGY

SCALE: 1/4" = 1'-0"

0 2' 4' 8' 12'

1/4" = 1'-0"

NORTH

SHEET NOTES

1. IN-FILL, PATCH, TEXTURE AND PAINT ALL SURFACES AFFECTED BY DEMOLITION AS REQUIRED TO MATCH THE ADJACENT SURFACE.
2. COORDINATE REMOVAL OF ACTIVE NETWORK ELECTRONICS, WIRELESS ACCESS POINTS (WAP), PROJECTORS, SECURITY CAMERAS, ETC. WITH DISTRICT IT SO THAT THESE DEVICES ARE STORED AND PROTECTED AWAY FROM CONSTRUCTION. REMOVAL AND REINSTALLATION OF THESE DEVICES MUST BE PERFORMED BY DISTRICT PERSONNEL. PROVIDE AN ON-SITE LOCATION TO STORE ALL DEVICES REMOVED UNTIL NEEDED FOR DISTRICT REINSTALLATION.
3. EXISTING PATHWAYS, OUTLETS AND RELATED INFRASTRUCTURE NOT NOTED FOR DEMOLITION ARE TO REMAIN AND PROTECTED IN PLACE.

IDENTIFICATION STAMP
DIV. OF THE STATE ARCHITECT
APP: 04-122772 INC:
REVIEWED FOR
SS ☑ FLS ☑ ACS ☑
DATE: 03/26/2024

SPROTTE | WATSON
ARCHITECTURE | PLANNING

REGISTERED PROFESSIONAL ENGINEER
DALE M. FRANDSEN
No.11533
exp 06/24
ELECTRICAL
STATE OF CALIFORNIA
01/25/24

CONSULTANT

TURPIN & RATTAN
ENGINEERING, INC.
CONSULTING ENGINEERS
4719 PALM AVENUE
LA MESA, CA 91941-5231
619 / 466 / 6224 FAX 466 / 6233
E-MAIL: ENGINEER@TREIEG.COM
TRE1 PROJECT # 22277.501
PLOTTED 01/25/24 - 1:39PM

DEHESA ELEMENTARY SCHOOL
CONSTRUCTION DOCUMENTS
DEHESA SCHOOL DISTRICT
4612 DEHESA ROAD
EL CAJON, CA 92019

REVISIONS

DESCRIPTION

BUILDING A - ADMIN DEMO PLAN - TECHNOLOGY

DATE

01.25.24

JOB #

22-0400

SHEET #

ET-A2.0

7/12/2018 1:34:44 PM

KEYNOTES

- **T02** WIRELESS CLOCK TRANSMITTER SYNCHRONIZED WITH NETWORK TIME TO ACCOMMODATE PROPER PASSING BELL INITIATION.
- **T03** WIRELESS CLOCK SYNCHRONIZED AND INTEGRATED AND WITH THE CLOCK SYSTEM TRANSMITTER. PROVIDE A WIRELESS CLOCK CENTERED ON WALL U.O.N IN EACH OCCUPIED SPACE AND COMMON AREA.
- **T05** INTRUSION DETECTION MOTION SENSOR TO DETECT AN INTRUSION EVENT. PLACE AND INSTALL DETECTOR TO ALLOW OPTIMAL COVERAGE WITHOUT OBSTRUCTION.
- **T06** PROVIDE AUDIO/VISUAL SYSTEM INFRASTRUCTURE TO SUPPORT EACH OWNER FURNISHED, CONTRACTOR INSTALLED DISPLAY WITH (4) FIXED AUDIO / VISUAL SPEAKERS IN EACH TEACHING SPACE.
- **T07** TELECOMMUNICATIONS OUTLET DESIGNATED FOR A CEILING MOUNTED WIRELESS ACCESS POINT (WAP). MOUNT AND SECURE OUTLET TO THE BUILDING STRUCTURE WITHIN THE ACCESSIBLE CEILING SPACE. REFER TO 2/ET-5.4 FOR DETAILS AND ADDITIONAL REQUIREMENTS.
- **T09** TELECOMMUNICATIONS OUTLET TO SUPPORT ADMINISTRATIVE COMPONENTS. REFER TO 1/ET-5.4 FOR TELECOMMUNICATIONS OUTLET LABELING DETAILS AND ADDITIONAL REQUIREMENTS.

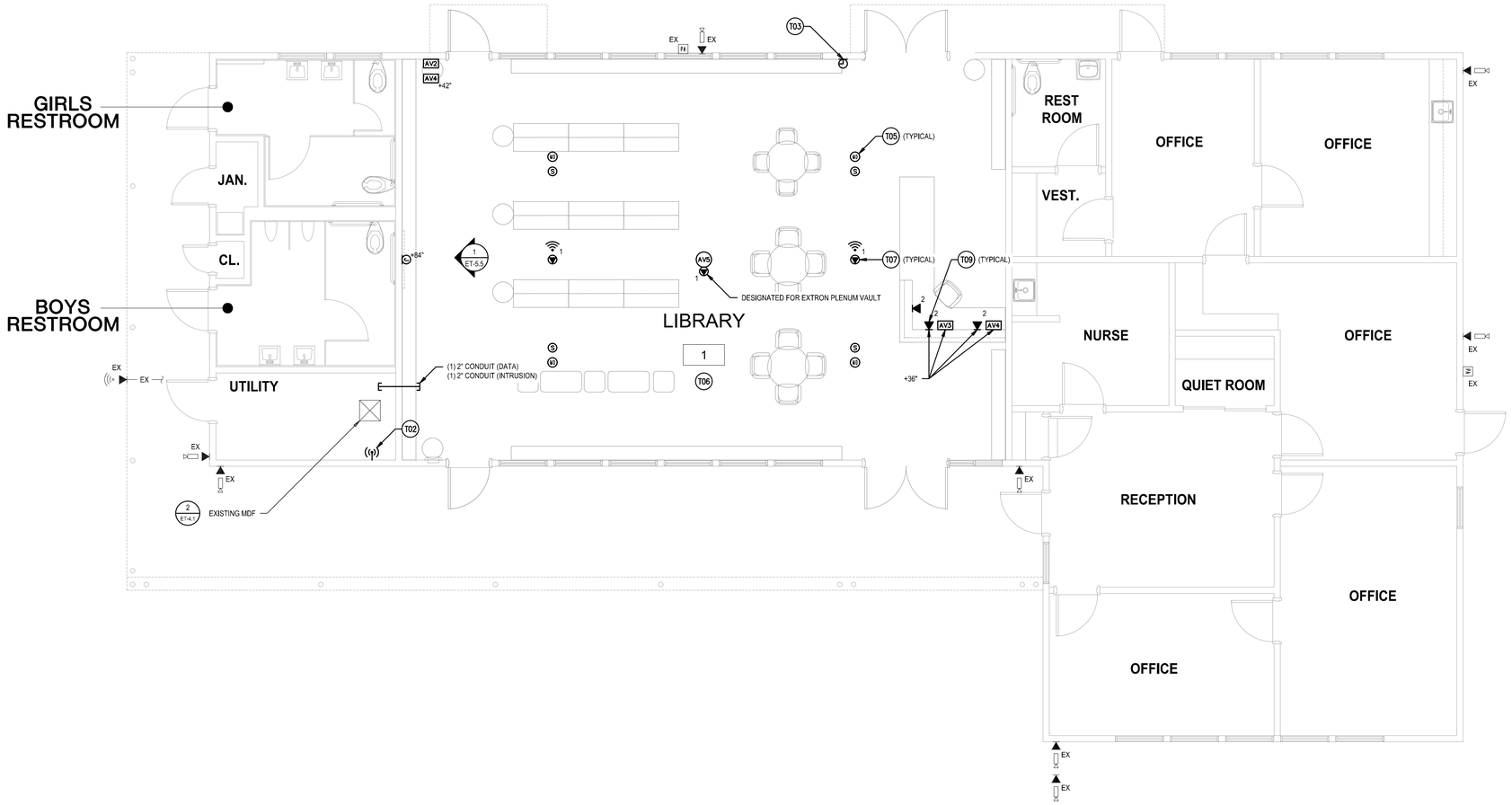

BUILDING A - ADMIN FLOOR PLAN - TECHNOLOGY

SCALE: 1/4" = 1'-0"

0 2' 4' 8' 12'

1/4" = 1'-0"

NORTH

SHEET NOTES

1. REFER TO RISER DIAGRAM(S) ON SHEET ET-3.1 FOR TELECOMMUNICATIONS CABLING AND ADDITIONAL REQUIREMENTS.
2. REFER TO RISER DIAGRAM(S) ON SHEET ET-3.3 FOR INTRUSION DETECTION CABLING AND ADDITIONAL REQUIREMENTS.
3. REFER TO RISER DIAGRAM(S) ON SHEET ET-3.2 FOR TELECOMMUNICATIONS GROUNDING AND BONDING CONDUCTORS AND ADDITIONAL REQUIREMENTS.
4. REFER TO RISER DIAGRAM ON SHEET ET-3.4 FOR AUDIO VISUAL SYSTEM CABLING AND ADDITIONAL REQUIREMENTS.
5. PROVIDE CONDUIT(S) STUBBED INTO ACCESSIBLE CEILING SPACE FROM ALL LOW-VOLTAGE SYSTEM ENCLOSURES, DEVICE BOXES, JUNCTION BOXES, ETC. U.O.N. SOME CONDUIT PATHWAYS SHOWN TO CLARIFY DESIGN INTENT. REFER TO SHEET ET-0.1 FOR MINIMUM CONDUIT SIZES ALLOWED FOR THIS PROJECT.

IDENTIFICATION STAMP
DIV. OF THE STATE ARCHITECT
APP: 04-122772 INC:
REVIEWED FOR
SS ☑ FLS ☑ ACS ☑
DATE: 03/26/2024

SPROTTE | WATSON
ARCHITECTURE | PLANNING

REGISTERED ARCHITECT
C12359
STATE OF CALIFORNIA

CONSULTANT

REGISTERED PROFESSIONAL ENGINEER
DALE M. FRANZAK
No.11533
Exp. 06/24
ELECTRICAL
STATE OF CALIFORNIA
01/25/24

TURPIN & RATTAN ENGINEERING, INC.
CONSULTING ENGINEERS
4719 PALM AVENUE
LA MESA, CA 91941-5231
619 / 466 / 6224 FAX 466 / 6233
E-MAIL: ENGINEER@TREIEG.COM
TRE: PROJECT # 22277.501
PLOTTED 01/25/24 - 1:39PM

DEHESA ELEMENTARY SCHOOL
CONSTRUCTION DOCUMENTS
DEHESA SCHOOL DISTRICT
4612 DEHESA ROAD
EL CAJON, CA 92019

REVISIONS

DESCRIPTION
BUILDING A - ADMIN FLOOR PLAN - TECHNOLOGY

DATE
01.25.24

JOB #
22-0400

SHEET #
ET-A2.1

7/12/2018 1:34:44 PM

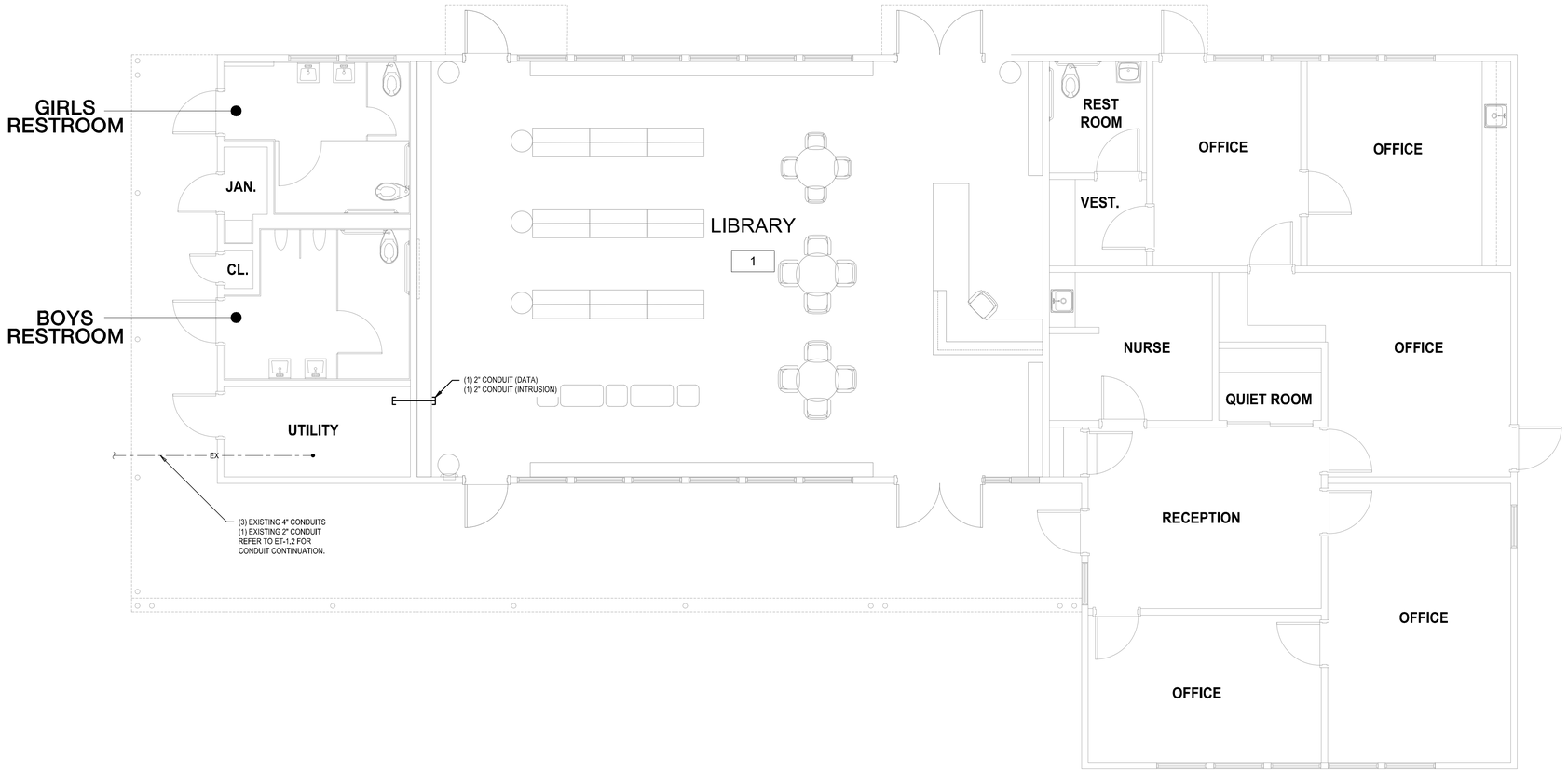

BUILDING A - ADMIN FLOOR PLAN - TECHNOLOGY PATHWAYS

SCALE: 1/4" = 1'-0"

0 2' 4' 8' 12'

1/4" = 1'-0"

NORTH

SHEET NOTES

1. PROVIDE CONDUIT(S) STUBBED INTO ACCESSIBLE CEILING SPACE FROM ALL LOW-VOLTAGE SYSTEM ENCLOSURES, DEVICE BOXES, JUNCTION BOXES, ETC. U.O.N. SOME CONDUIT PATHWAYS SHOWN TO CLARIFY DESIGN INTENT. REFER TO SHEET ET-0.1 FOR MINIMUM CONDUIT SIZES ALLOWED FOR THIS PROJECT.

IDENTIFICATION STAMP
DIV. OF THE STATE ARCHITECT
APP: 04-122772 INC:
REVIEWED FOR
SS ☑ FLS ☑ ACS ☑
DATE: 03/26/2024

SPROTTE | WATSON
ARCHITECTURE | PLANNING

REGISTERED ARCHITECT
C12359
STATE OF CALIFORNIA

CONSULTANT

REGISTERED PROFESSIONAL ENGINEER
DALE M. FRANDAK
No.11533
ELECTRICAL
STATE OF CALIFORNIA
01/25/24

TURPIN & RATTAN
ENGINEERING, INC.
CONSULTING ENGINEERS
4719 PALM AVENUE
LA MESA, CA 91941-5231
619 / 466 / 6224 FAX 466 / 6233
E-MAIL: ENGINEER@TREIEG.COM
TRE: PROJECT # 22277.501
PLOTTED 01/25/24 - 1:39PM

DEHESA ELEMENTARY SCHOOL
CONSTRUCTION DOCUMENTS
DEHESA SCHOOL DISTRICT
4612 DEHESA ROAD
EL CAJON, CA 92019

REVISIONS

DESCRIPTION

BUILDING A - ADMIN FLOOR PLAN - TECHNOLOGY PATHWAYS

DATE

01.25.24

JOB #

22-0400

SHEET #

ET-A2.2

7/12/2018 1:34:44 PM

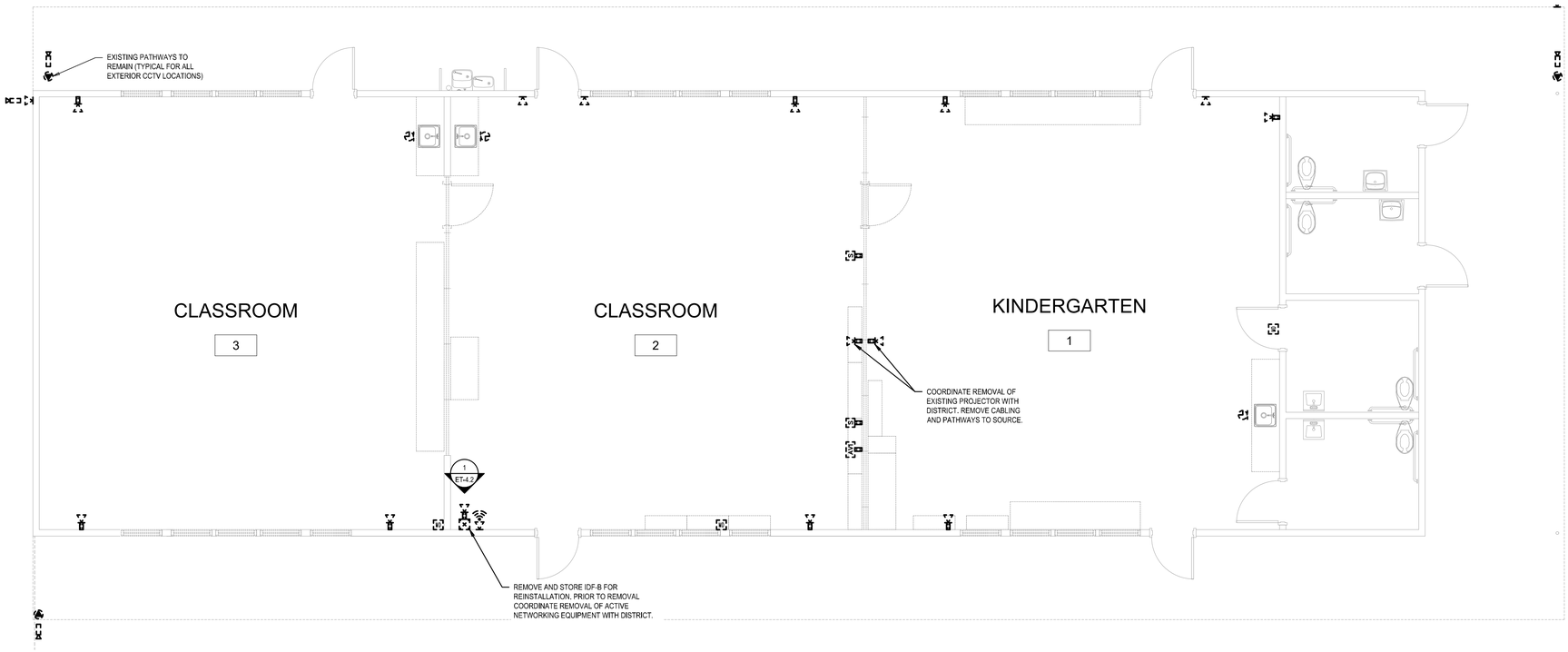

BUILDING B - KINDERGARTEN DEMO PLAN - TECHNOLOGY

SCALE: 1/4" = 1'-0"

0 2' 4' 8' 12'

1/4" = 1'-0"

NORTH

SHEET NOTES

1. IN-FILL, PATCH, TEXTURE AND PAINT ALL SURFACES AFFECTED BY DEMOLITION AS REQUIRED TO MATCH THE ADJACENT SURFACE.
2. COORDINATE REMOVAL OF ACTIVE NETWORK ELECTRONICS, WIRELESS ACCESS POINTS (WAP), PROJECTORS, SECURITY CAMERAS, ETC. WITH DISTRICT IT SO THAT THESE DEVICES ARE STORED AND PROTECTED AWAY FROM CONSTRUCTION. REMOVAL AND REINSTALLATION OF THESE DEVICES MUST BE PERFORMED BY DISTRICT PERSONNEL. PROVIDE AN ON-SITE LOCATION TO STORE ALL DEVICES REMOVED UNTIL NEEDED FOR DISTRICT REINSTALLATION.
3. EXISTING PATHWAYS, OUTLETS AND RELATED INFRASTRUCTURE NOT NOTED FOR DEMOLITION ARE TO REMAIN AND PROTECTED IN PLACE.

IDENTIFICATION STAMP
DIV. OF THE STATE ARCHITECT
APP: 04-122772 INC:
REVIEWED FOR
SS ☑ FLS ☑ ACS ☑
DATE: 03/26/2024

SPROTTE | WATSON
ARCHITECTURE | PLANNING

REGISTERED ARCHITECT
C12359
STATE OF CALIFORNIA

CONSULTANT

REGISTERED PROFESSIONAL ENGINEER
DALE M. FRANCHAK
No.11533
ELECTRICAL
STATE OF CALIFORNIA
01/25/24

TURPIN & RATTAN
ENGINEERING, INC.
CONSULTING ENGINEERS
4719 PALM AVENUE
LA MESA, CA 91941-5231
619 / 466 / 6224 FAX 466 / 6233
E-MAIL: ENGINEER@TRCIEG.COM
TREI PROJECT # 22277.S01
PLOTTED 01/25/24 - 1:39PM

DEHESA ELEMENTARY SCHOOL
CONSTRUCTION DOCUMENTS
DEHESA SCHOOL DISTRICT
4612 DEHESA ROAD
EL CAJON, CA 92019

REVISIONS

DESCRIPTION

BUILDING B - KINDERGARTEN DEMO PLAN- TECHNOLOGY

DATE

01.25.24

JOB #

22-0400

SHEET #

ET-B2.0

7/12/2018 1:34:44 PM

KEYNOTES

T03 WIRELESS CLOCK SYNCHRONIZED AND INTEGRATED AND WITH THE CLOCK SYSTEM TRANSMITTER. PROVIDE A WIRELESS CLOCK CENTERED ON WALL U.O.N IN EACH OCCUPIED SPACE AND COMMON AREA.

T05 INTRUSION DETECTION MOTION SENSOR TO DETECT AN INTRUSION EVENT. PLACE AND INSTALL DETECTOR TO ALLOW OPTIMAL COVERAGE WITHOUT OBSTRUCTION.

T06 PROVIDE AUDIO\VISUAL SYSTEM INFRASTRUCTURE TO SUPPORT EACH OWNER FURNISHED, CONTRACTOR INSTALLED DISPLAY WITH (4) FIXED AUDIO / VISUAL SPEAKERS IN EACH TEACHING SPACE.

T07 TELECOMMUNICATIONS OUTLET DESIGNATED FOR A CEILING MOUNTED WIRELESS ACCESS POINT (WAP). MOUNT AND SECURE OUTLET TO THE BUILDING STRUCTURE WITHIN THE ACCESSIBLE CEILING SPACE. REFER TO 2/ET-5.4 FOR DETAILS AND ADDITIONAL REQUIREMENTS.

T08 TELECOMMUNICATIONS OUTLET TO SUPPORT TEACHING SPACE COMPONENTS. REFER TO 1/ET-5.4 FOR TELECOMMUNICATIONS OUTLET LABELING DETAILS AND ADDITIONAL REQUIREMENTS.

T09 TELECOMMUNICATIONS OUTLET TO SUPPORT ADMINISTRATIVE COMPONENTS. REFER TO 1/ET-5.4 FOR TELECOMMUNICATIONS OUTLET LABELING DETAILS AND ADDITIONAL REQUIREMENTS.

T10 PROVISIONS FOR OFOI EXTERIOR WIRELESS ACCESS POINT LOCATION. MOUNT AND SECURE OUTLET TO THE BUILDING STRUCTURE WITHIN THE ACCESSIBLE CEILING SPACE. REFER TO 2/ET-5.4 FOR DETAILS AND ADDITIONAL REQUIREMENTS.

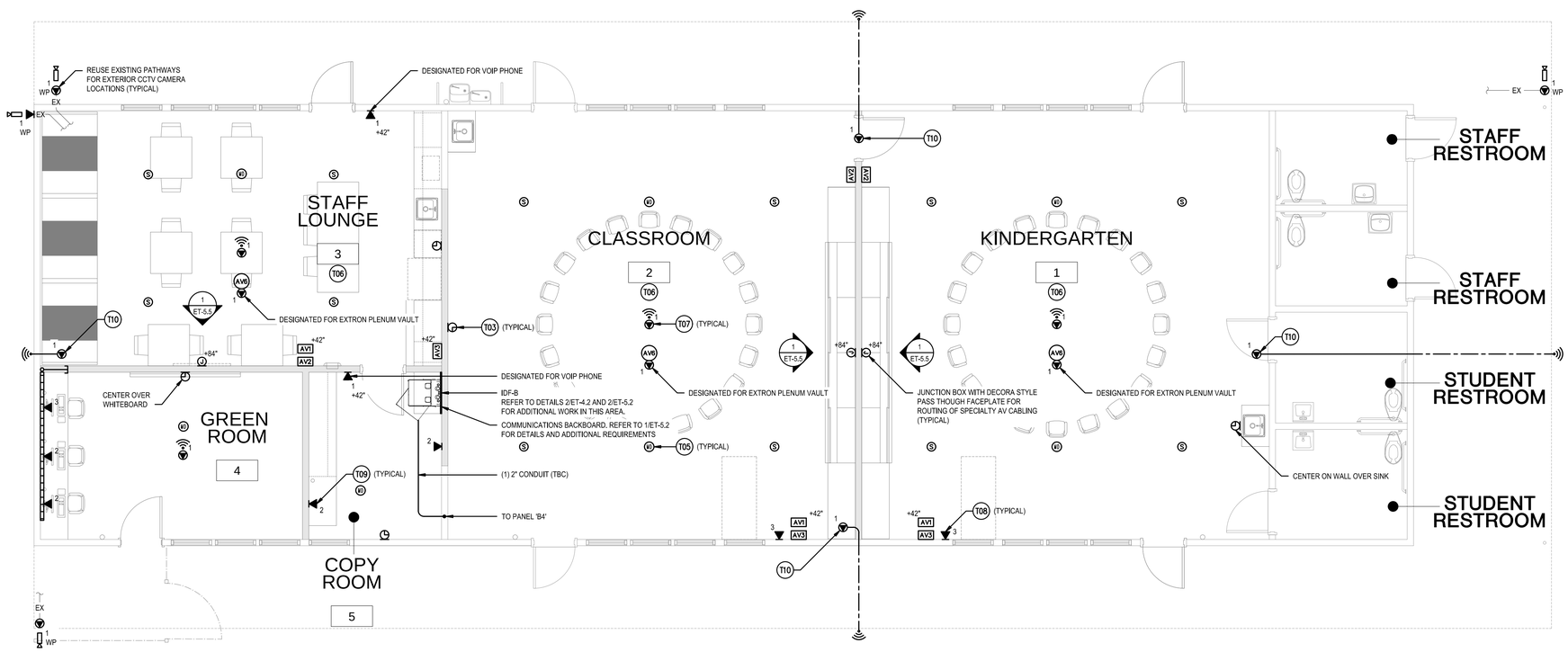

BUILDING B - KINDERGARTEN FLOOR PLAN - TECHNOLOGY

SCALE: 1/4" = 1'-0"

0 2' 4' 8' 12'

1/4" = 1'-0"

NORTH

SHEET NOTES

1. REFER TO RISER DIAGRAM(S) ON SHEET ET-3.1 FOR TELECOMMUNICATIONS CABLING AND ADDITIONAL REQUIREMENTS.
2. REFER TO RISER DIAGRAM(S) ON SHEET ET-3.3 FOR INTRUSION DETECTION CABLING AND ADDITIONAL REQUIREMENTS.
3. REFER TO RISER DIAGRAM(S) ON SHEET ET-3.2 FOR TELECOMMUNICATIONS GROUNDING AND BONDING CONDUCTORS AND ADDITIONAL REQUIREMENTS.
4. REFER TO RISER DIAGRAM ON SHEET ET-3.5 FOR AUDIO VISUAL SYSTEM CABLING AND ADDITIONAL REQUIREMENTS.
5. PROVIDE CONDUIT(S) STUBBED INTO ACCESSIBLE CEILING SPACE FROM ALL LOW-VOLTAGE SYSTEM ENCLOSURES, DEVICE BOXES, JUNCTION BOXES, ETC. U.O.N. SOME CONDUIT PATHWAYS SHOWN TO CLARIFY DESIGN INTENT. REFER TO SHEET ET-0.1 FOR MINIMUM CONDUIT SIZES ALLOWED FOR THIS PROJECT.

IDENTIFICATION STAMP
DIV. OF THE STATE ARCHITECT
APP: 04-122772 INC:
REVIEWED FOR
SS ☑ FLS ☑ ACS ☑
DATE: 03/26/2024

SPROTTE | WATSON
ARCHITECTURE | PLANNING

LICENSED ARCHITECT
C12359
STATE OF CALIFORNIA

CONSULTANT

REGISTERED PROFESSIONAL ENGINEER
DALE M. FRANDSEN
No.11533
ELECTRICAL
STATE OF CALIFORNIA
01/25/24

TURPIN & RATTAN ENGINEERING, INC.
CONSULTING ENGINEERS
4719 PALM AVENUE
LA MESA, CA 91941-5221
619 / 466 / 6224 FAX 466 / 6233
E-MAIL: ENGINEER@TREIEG.COM
TREI PROJECT # 22277.S01
H:\LEGEND 01/25/24 - 1:57PM

DEHESA ELEMENTARY SCHOOL
CONSTRUCTION DOCUMENTS
DEHESA SCHOOL DISTRICT
4612 DEHESA ROAD
EL CAJON, CA 92019

REVISIONS

DESCRIPTION
BUILDING B - KINDERGARTEN FLOOR PLAN - TECHNOLOGY

DATE
01.25.24

JOB #
22-0400

SHEET #
ET-B2.1

7/12/2018 1:34:44 PM

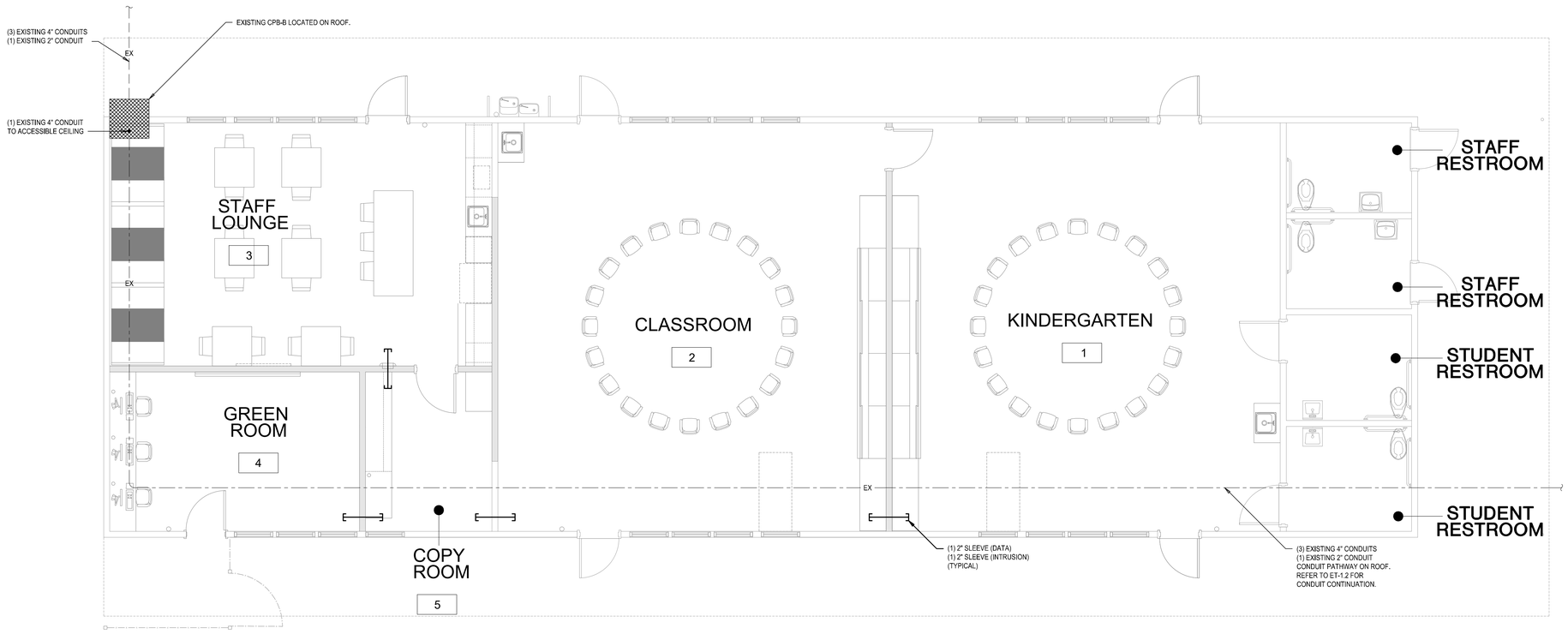

BUILDING B - KINDERGARTEN FLOOR PLAN - TECHNOLOGY PATHWAYS

SCALE: 1/4" = 1'-0"

0 2' 4' 8' 12'

1/4" = 1'-0"

NORTH

SHEET NOTES

1. PROVIDE CONDUIT(S) STUBBED INTO ACCESSIBLE CEILING SPACE FROM ALL LOW-VOLTAGE SYSTEM ENCLOSURES, DEVICE BOXES, JUNCTION BOXES, ETC. U.O.N. SOME CONDUIT PATHWAYS SHOWN TO CLARIFY DESIGN INTENT. REFER TO SHEET ET-0.1 FOR MINIMUM CONDUIT SIZES ALLOWED FOR THIS PROJECT.

IDENTIFICATION STAMP
DIV. OF THE STATE ARCHITECT
APP: 04-122772 INC:
REVIEWED FOR
SS ☑ FLS ☑ ACS ☑
DATE: 03/26/2024

SPROTTE | WATSON
ARCHITECTURE | PLANNING

CONSULTANT

REGISTERED PROFESSIONAL ENGINEER
DALE M. FRANDSEN
No.11533
EXP. 06/30/24
ELECTRICAL
STATE OF CALIFORNIA
01/25/24

TURPIN & RATTAN
ENGINEERING, INC.
CONSULTING ENGINEERS
4719 PALM AVENUE
LA MESA, CA 91941-5231
619 / 466 / 6224 FAX 466 / 6233
E-MAIL: ENGINEER@TRCIEG.COM
TREI PROJECT # 22277.501
PLOTTED 01/25/24 - 1:39PM

DEHESA ELEMENTARY SCHOOL
CONSTRUCTION DOCUMENTS
DEHESA SCHOOL DISTRICT
4612 DEHESA ROAD
EL CAJON, CA 92019

REVISIONS

DESCRIPTION

BUILDING B - KINDERGARTEN FLOOR PLAN - TECHNOLOGY PATHWAYS

DATE

01.25.24

JOB #

22-0400

SHEET #

ET-B2.2

7/12/2018 1:34:44 PM

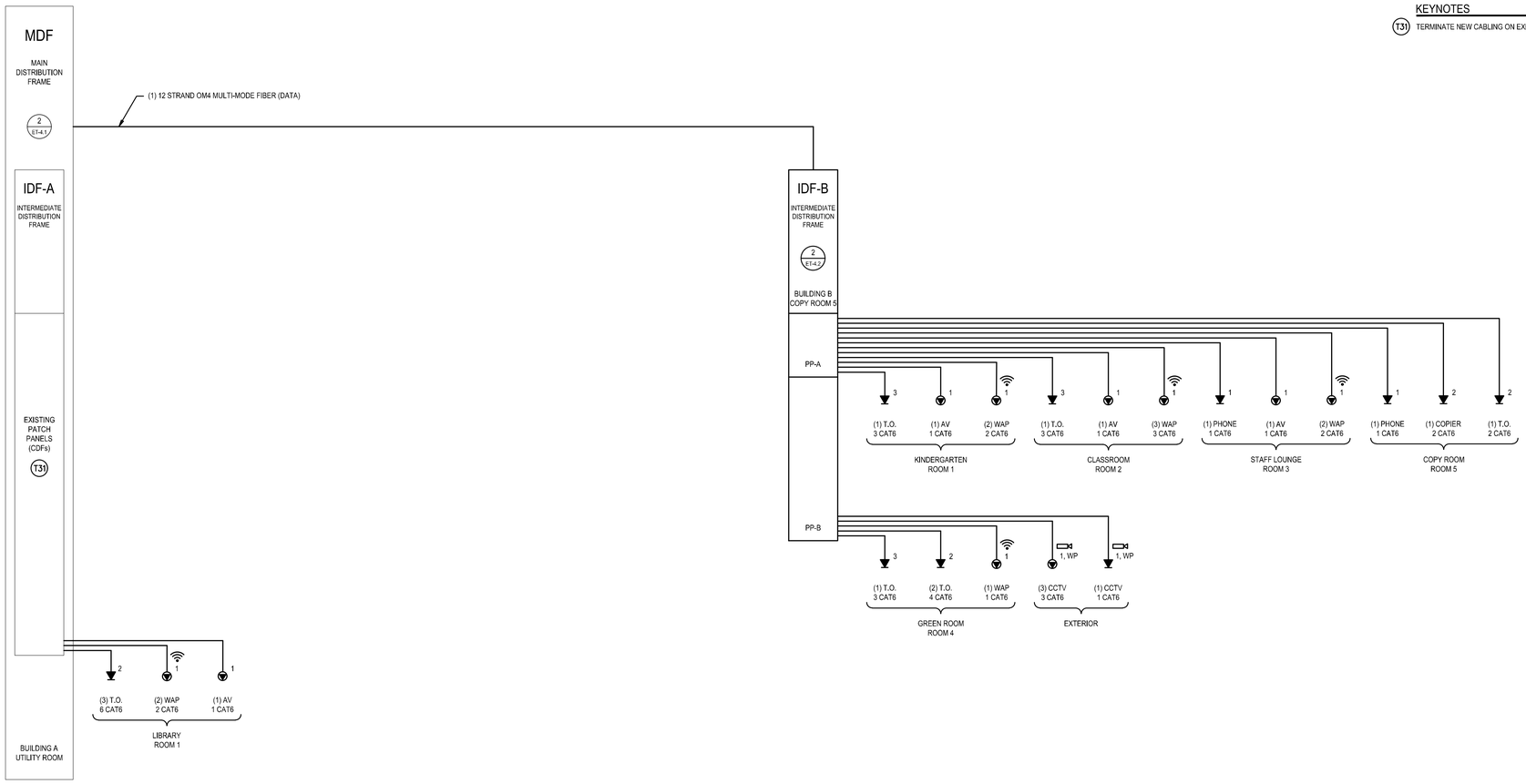

KEYNOTES

T31 TERMINATE NEW CABLING ON EXISTING PATCH PANELS.

SHEET NOTES

1. LOW-VOLTAGE CABLE(S) INSTALLED IN BUILDING INTERIORS SHALL BE COMMUNICATIONS PLENUM CABLE 'CMP' RATED, U.O.N.
2. LOW-VOLTAGE CABLE(S) INSTALLED IN UNDERGROUND OR THROUGH SLAB-ON-GRADE (SOG) CONDUITS SHALL BE RATED FOR AN OUTSIDE PLANT OR WET APPLICATION.

TELECOMMUNICATIONS SYSTEM RISER DIAGRAM

NO SCALE

1
ET-3.1

IDENTIFICATION STAMP
DIV. OF THE STATE ARCHITECT
APP: 04-122772 INC:
REVIEWED FOR
SS ☑ FLS ☑ ACS ☑
DATE: 03/26/2024

SPROTTE WATSON ARCHITECTURE PLANNING

CONSULTANT

REGISTERED PROFESSIONAL ENGINEER
DALE M. FRANCHAK
No.11533
ELECTRICAL
STATE OF CALIFORNIA
01/25/24

TURPIN & RATTAN ENGINEERING, INC.
CONSULTING ENGINEERS
4719 PALM AVENUE
LA MESA, CA 91941-5231
619 / 466 / 6224 FAX 466 / 6233
E-MAIL: ENGINEER@TRCIEG.COM
TRE: PROJECT # 22277.501
PLOTTED 01/25/24 - 1:39PM

DEHESA ELEMENTARY SCHOOL
CONSTRUCTION DOCUMENTS
DEHESA SCHOOL DISTRICT
4612 DEHESA ROAD
EL CAJON, CA 92019

REVISIONS

DESCRIPTION
TELECOMMUNICATIONS SYSTEM RISER DIAGRAM

DATE
01.25.24

JOB #
22-0400

SHEET #
ET-3.1

7/12/2018 1:34:44 PM

DIAGRAM NOTES

1. PROVIDE MACHINE GENERATED LABELING IDENTIFIERS WHERE GROUND WIRES ARE VISIBLE SIGNIFYING ITS USE.
2. WHEN GREEN INSULATION IS NOT AVAILABLE BASED ON AWG SIZE PROVIDE GREEN ELECTRICAL TAPE OVER LAST THREE FEET OF WIRE SHEATH.
3. ALL RACKS, CABINETS, CABLE RUNWAYS, CABLE TRAYS, AND CONDUIT SLEEVES SHALL BE BONDED TO THEIR RESPECTIVE PBB OR SBB USING A MINIMUM #6 AWG (GREEN INSULATED) STRANDED COPPER BONDING CONDUCTOR AND LISTED COMPRESSION TYPE FITTINGS.
4. GROUNDING EQUALIZER "GE" SHALL ESTABLISH AN EQUAL POTENTIAL GROUND PLANE THROUGHOUT THE TELECOMMUNICATIONS GROUNDING SYSTEM.
5. REFER TO ELECTRICAL SINGLE LINE DIAGRAMS FOR ADDITIONAL REQUIREMENTS.
6. AT STEEL CONSTRUCTED BUILDINGS, PROVIDE #6 AWG BOND FROM PBB OR SBB TO STRUCTURAL STEEL.
7. GROUNDING AND BONDING CONNECTIONS TO THE INTERSYSTEM BONDING TERMINATION (IBT-_) THAT ARE PART OF THE ELECTRICAL POWER DISTRIBUTION SYSTEM(S) GROUNDING ELECTRODE CONDUCTOR (GEC) PATH SHALL BE IRREVERSIBLE VIA EXOTHERMIC CADWELD TYPE CONNECTIONS.
8. AT EXISTING ELECTRICAL INSTALLATIONS, THE RELATED TBC MAY BE REDUCED "PIGTAILED" TO MATCH THE EXISTING GEC (BUT NOT LESS THAN #2 AWG) WITHIN 10'-0" OF THE ELECTRICAL PANEL IF THE EXISTING PANEL GROUND BUS CANNOT ACCEPT THE FULL-SIZED CONDUCTOR INDICATED. PROVIDE A JUNCTION BOX SIZED PER CEC AND LABEL "TBC".

ABBREVIATIONS

ABBREV.	DESCRIPTION
ACEG	ALTERNATING CURRENT EQUIPMENT GROUND
BBC	BACKBONE BONDING CONDUCTOR
GE	GROUNDING EQUALIZER
GEC	GROUNDING ELECTRODE CONDUCTOR
IBT-_	INTERSYSTEM BONDING TERMINATION
PBB	PRIMARY BONDING BUSBAR
RBB	RACK BONDING BUSBAR
SBB	SECONDARY BONDING BUSBAR
TBB	TELECOMMUNICATIONS BONDING BACKBONE
TBC	TELECOMMUNICATIONS BONDING CONDUCTOR
TEBC	TELECOMMUNICATIONS EQUIPMENT BONDING CONDUCTOR

TYPICAL COMPONENTS

PBB - 4"x20"x1/4" PRIMARY BONDING BUSBAR (CPI PART NO. 40153-020) REFER TO 1/ET-5.3.
SBB - 4"x20"x1/4" SECONDARY BONDING BUSBAR (CPI PART NO. 40153-020) REFER TO 1/ET-5.3.
RBB - HORIZONTAL RACK BONDING BUSBAR (CPI PART NO. 40161-072) REFER TO 2/ET-5.3. [7]
GE - GROUNDING EQUALIZER (GREEN INSULATED), SIZE PER GROUNDING/BONDING DIAGRAM
GROUND WIRE (GREEN INSULATED), SIZE PER GROUNDING/BONDING DIAGRAM
2 HOLE GROUND LUG
[G] PANEL GROUND BUS

CONDUCTOR LINE TYPE LEGEND

LINE TYPE	DESCRIPTION
————————	TIA-607-D AND CEC COMPLIANCE

KEYNOTE

(T51) PROVIDE CODE COMPLIANT SIZED CONDUIT PATHWAYS BETWEEN TELECOMMUNICATIONS GROUNDING AND BONDING BUSBAR (PBB, SBB) AND RESPECTIVE INTERSYSTEM BONDING TERMINATION (IBT). CONCEAL CONDUIT WHEN POSSIBLE.

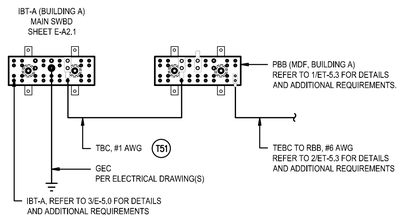

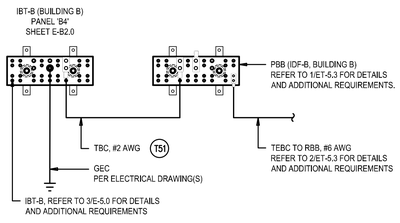

TELECOMMUNICATIONS GROUNDING AND BONDING RISER DIAGRAM

NO SCALE

1
ET-3.2

IDENTIFICATION STAMP
DIV. OF THE STATE ARCHITECT
APP: 04-122772 INC:
REVIEWED FOR
SS ☑ FLS ☑ ACS ☑
DATE: 03/26/2024

SPROTTE WATSON ARCHITECTURE PLANNING

LICENSED ARCHITECT
C12359
REGISTERED PROFESSIONAL ENGINEER
STATE OF CALIFORNIA

CONSULTANT

REGISTERED PROFESSIONAL ENGINEER
DALE M. FRANDSEN
No.11533
exp 06/24
ELECTRICAL
STATE OF CALIFORNIA
01/25/24

TURPIN & RATTAN
ENGINEERING, INC.
CONSULTING ENGINEERS
4719 PALM AVENUE
LA MESA, CA 91941-5231
619 / 466 / 6224 FAX 466 / 6233
E-MAIL: ENGINEER@TREI.BIZ.COM

TREI PROJECT # 22277.501
PLOTDATE: 01/25/24 - 1:40PM

DEHESA ELEMENTARY SCHOOL
CONSTRUCTION DOCUMENTS
DEHESA SCHOOL DISTRICT
4612 DEHESA ROAD
EL CAJON, CA 92019

REVISIONS

DESCRIPTION

TELECOMMUNICATIONS GROUNDING AND BONDING RISER DIAGRAM

DATE

01.25.24

JOB #

22-0400

SHEET #

ET-3.2

7/12/2018 1:34:44 PM

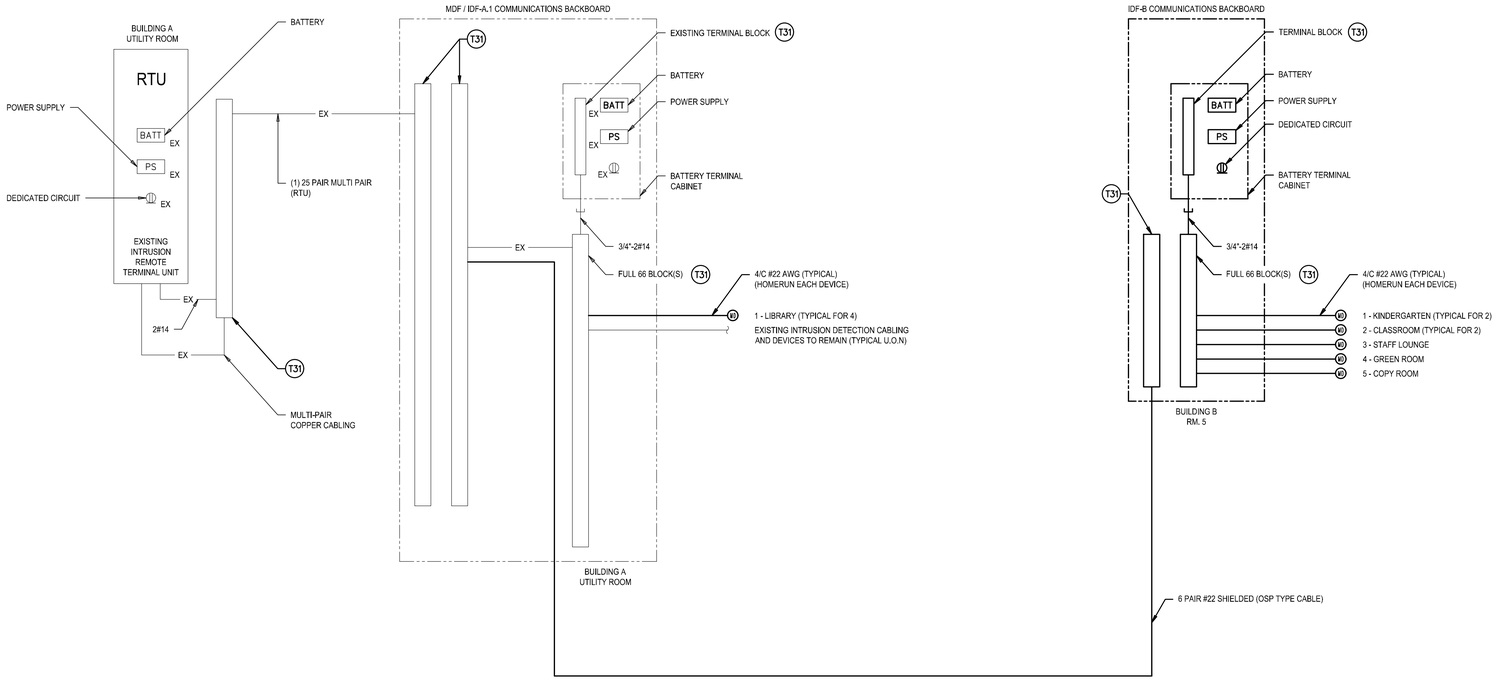

DETAIL NOTES

1. INTERIOR INTRUSION CABLING NOT WITHIN SURFACE RACEWAY OR CONDUIT SHALL BE COMMUNICATIONS PLENUM CABLE "CMP" RATED.
2. REFER TO FLOOR PLANS FOR EXACT ROUTING, CONDUIT SIZES AND LOCATIONS.
3. THE CONTRACTOR'S SHALL COORDINATE EXACT PLACEMENT OF `MD' DEVICES USED FOR OPTIMAL DETECTION.
4. IF INTRUSION LOOP TO EXISTING DEVICES IS DISCONNECTED, CONTRACTOR SHALL RE-ESTABLISH CONNECTIVITY TO BUILDING'S SOURCE INTRUSION CONNECTION.
5. COORDINATE CONNECTION TO DOUBLE POLE, DOUBLE THROW "DPDT" DOOR CONTACT WITH ACCESS CONTROL CONTRACTOR.
6. PROGRAM EACH MOTION DETECTOR AND DOOR CONTACT TO REFLECT THE ACTUAL ROOM NAME / NUMBER THAT IT MONITORS.

KEYNOTE

T31 PROVIDE TERMINATIONS, CROSS-CONNECTS AND PUNCH BLOCKS REQUIRED AT INTRUSION SYSTEM TERMINAL CABINETS WITHIN EACH INTERMEDIATE DISTRIBUTION FRAME ROOM TO ENSURE A FULLY FUNCTIONING CAMPUS WIDE INTRUSION SYSTEM.

INTRUSION DETECTION SYSTEM RISER DIAGRAM

1
ET-3.3

IDENTIFICATION STAMP
DIV. OF THE STATE ARCHITECT
APP: 04-122772 INC:
REVIEWED FOR
SS ☑ FLS ☑ ACS ☑
DATE: 03/26/2024

SPROTTE WATSON ARCHITECTURE + PLANNING

LICENSED ARCHITECT
C12359
REGISTERED PROFESSIONAL ENGINEER
STATE OF CALIFORNIA

CONSULTANT

REGISTERED PROFESSIONAL ENGINEER
DALE M. FRANDSEN
No.11533
EXP. 06/30/24
ELECTRICAL
STATE OF CALIFORNIA
01/25/24

TURPIN & RATTAN ENGINEERING, INC.
CONSULTING ENGINEERS
4719 PALM AVENUE
LA MESA, CA 91941-5231
619 / 466 / 6224 FAX 466 / 6233
E-MAIL: ENGINEER@TREC60.COM
TRE: PROJECT # 22277.501
PLOTTED: 01/25/24 1:40PM

DEHESA ELEMENTARY SCHOOL
CONSTRUCTION DOCUMENTS
DEHESA SCHOOL DISTRICT
4612 DEHESA ROAD
EL CAJON, CA 92019

REVISIONS

DESCRIPTION
INTRUSION DETECTION SYSTEM RISER DIAGRAM

DATE
01.25.24

JOB #
22-0400

SHEET #
ET-3.3

7/12/2018 1:34:44 PM

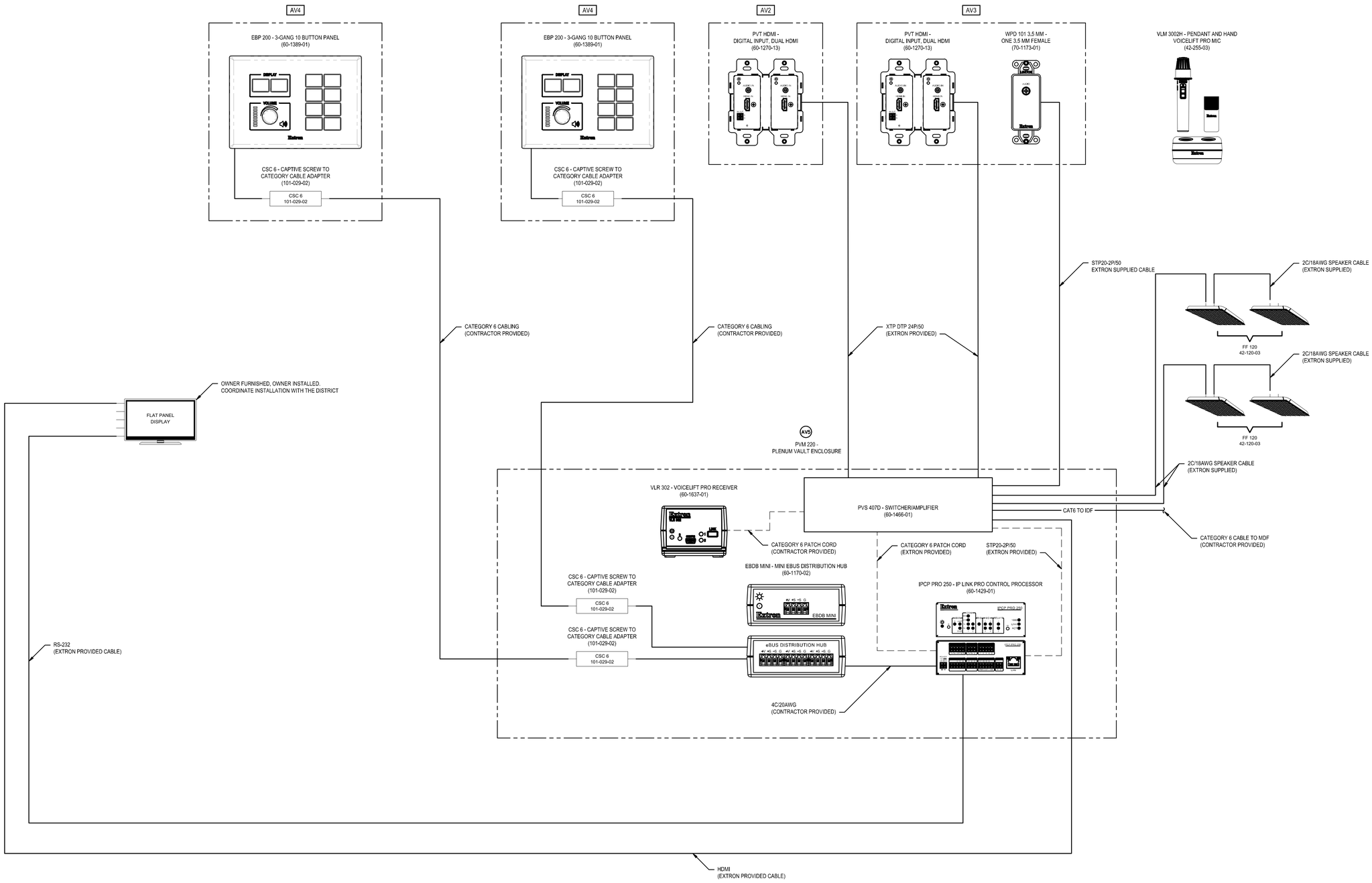

DETAIL NOTES

1. CONTRACTOR SHALL PROVIDE AND INSTALL A FULLY FUNCTIONING AUDIO/VISUAL SYSTEM PER PLANS, DETAILS AND SPECIFICATIONS. PROVIDE PATCH CORDS AS REQUIRED.
2. DATA OUTLETS SHOWN FOR REFERENCE ONLY. CONTRACTOR SHALL INSTALL ACTUAL DATA DROP QUANTITIES PER FLOOR PLANS AND RISER DIAGRAMS.
3. ALL AUDIO/VISUAL INTERFACES TO BE WHITE.
4. REFER TO 1/ET-5.5 FOR ADDITIONAL REQUIREMENTS.

WIRE LEGEND

- COMPONENT PATCH CORD
- CAT6 TO IDF — STRUCTURED CABLING
- WIRE/CABLING IN WALL OR SPECIFIED PATHWAY

AUDIO/VISUAL INTERFACE AND WIRING DETAIL (LIBRARY)

NO SCALE

1
ET-3.4

IDENTIFICATION STAMP
DIV. OF THE STATE ARCHITECT
APP: 04-122772 INC:
REVIEWED FOR
SS ☑ FLS ☑ ACS ☑
DATE: 03/26/2024

SPROTTE WATSON ARCHITECTURE + PLANNING

REGISTERED ARCHITECT
C12359
STATE OF CALIFORNIA

CONSULTANT

REGISTERED PROFESSIONAL ENGINEER
DALE M. FRANDSEN
No.11533
exp 06/24
ELECTRICAL
STATE OF CALIFORNIA
01/25/24

TURPIN & RATTAN ENGINEERING, INC.
CONSULTING ENGINEERS
4719 PALM AVENUE
LA MESA, CA 91941-5231
619 / 466 / 6224 FAX 466 / 6233
E-MAIL: ENGINEER@TREC60.COM
TREI PROJECT # 22277.501
H:\CLEANAS 01\25\24 - 1:40PM

DEHESA ELEMENTARY SCHOOL
CONSTRUCTION DOCUMENTS
DEHESA SCHOOL DISTRICT
4612 DEHESA ROAD
EL CAJON, CA 92019

REVISIONS

DESCRIPTION
AUDIO VISUAL SYSTEM RISER DIAGRAM

DATE
01.25.24

JOB #
22-0400

SHEET #
ET-3.4

7/12/2018 1:34:44 PM

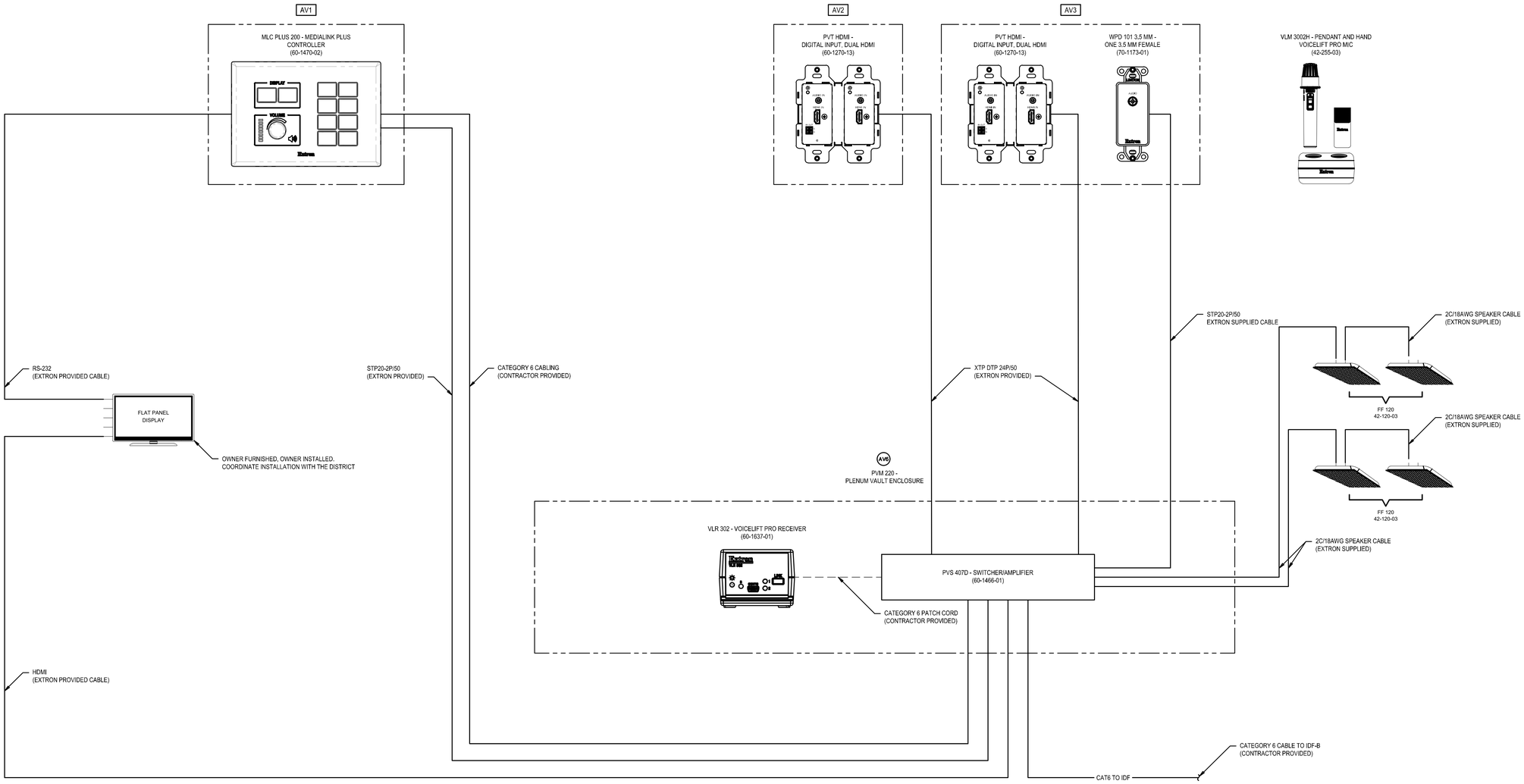

DETAIL NOTES

1. CONTRACTOR SHALL PROVIDE AND INSTALL A FULLY FUNCTIONING AUDIO/VISUAL SYSTEM PER PLANS, DETAILS AND SPECIFICATIONS. PROVIDE PATCH CORDS AS REQUIRED.
2. DATA OUTLETS SHOWN FOR REFERENCE ONLY. CONTRACTOR SHALL INSTALL ACTUAL DATA DROP QUANTITIES PER FLOOR PLANS AND RISER DIAGRAMS.
3. ALL AUDIO/VISUAL INTERFACES TO BE WHITE.
4. REFER TO 1/ET-5.5 FOR ADDITIONAL REQUIREMENTS.

WIRE LEGEND

- COMPONENT PATCH CORD
- CAT6 TO IDF — STRUCTURED CABLING
- WIRE/CABLING IN WALL OR SPECIFIED PATHWAY

AUDIO/VISUAL INTERFACE AND WIRING DETAIL (CLASSROOM/STAFF LOUNGE)

NO SCALE

1 / ET-3.5

IDENTIFICATION STAMP
DIV. OF THE STATE ARCHITECT
APP: 04-122772 INC:
REVIEWED FOR
SS ☑ FLS ☑ ACS ☑
DATE: 03/26/2024

SPROTTE | WATSON ARCHITECTURE + PLANNING

REGISTERED ARCHITECT C12359 STATE OF CALIFORNIA

CONSULTANT

REGISTERED PROFESSIONAL ENGINEER DALE M. FRANDSEN No.11533 EXP. 06/30/24 ELECTRICAL STATE OF CALIFORNIA

01/25/24

TURPIN & RATTAN ENGINEERING, INC.
CONSULTING ENGINEERS
4719 PALM AVENUE
LA MESA, CA 91941-5231
619 / 466 / 6224 FAX 466 / 6233
E-MAIL: ENGINEER@TREIEG.COM

TREI PROJECT # 22277.501
PLOTTED 01/25/24 1:40PM

DEHESA ELEMENTARY SCHOOL
CONSTRUCTION DOCUMENTS
DEHESA SCHOOL DISTRICT
4612 DEHESA ROAD
EL CAJON, CA 92019

REVISIONS

DESCRIPTION

AUDIO VISUAL SYSTEM RISER DIAGRAM

DATE

01.25.24

JOB #

22-0400

SHEET #

ET-3.5

7/12/2018 1:34:44 PM

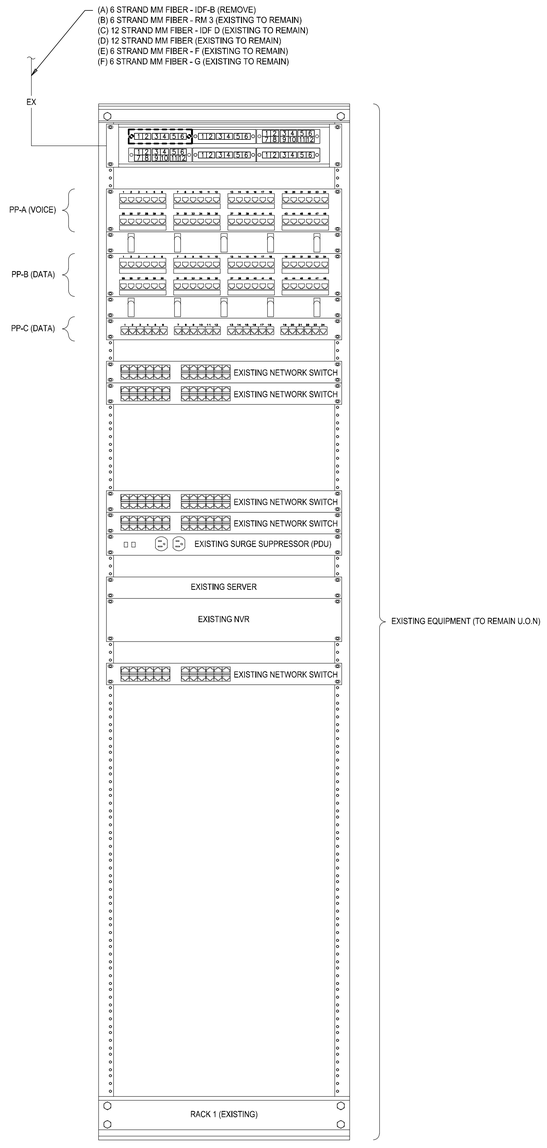

MDF ELEVATION - PARTIAL DEMOLITION DETAIL (BUILDING A) 1 ET-4.1

NO SCALE

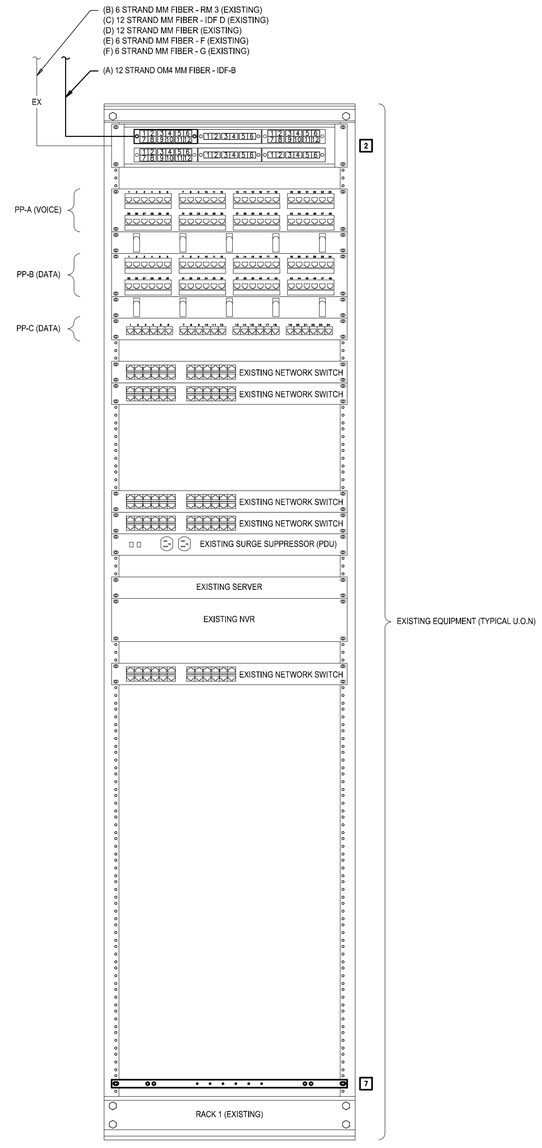

MDF ELEVATION DETAIL (BUILDING A) 2 ET-4.1

NO SCALE

SHEET NOTES

1. REFER TO FLOOR PLANS AND RISER DIAGRAM(S) FOR ADDITIONAL REQUIREMENTS.

IDENTIFICATION STAMP
DIV. OF THE STATE ARCHITECT
APP: 04-122772 INC:
REVIEWED FOR
SS ☑ FLS ☑ ACS ☑
DATE: 03/26/2024

SPROTTE WATSON ARCHITECTURE PLANNING

REGISTERED PROFESSIONAL ENGINEER C12359 STATE OF CALIFORNIA

CONSULTANT

REGISTERED PROFESSIONAL ENGINEER DALE M. FRANDSEN No.11533 exp 06/24 ELECTRICAL STATE OF CALIFORNIA

01/25/24

TURPIN & RATTAN ENGINEERING, INC.
CONSULTING ENGINEERS
4719 PALM AVENUE
LA MESA, CA 91941-5231
619 / 466 / 6224 FAX 466 / 6233
E-MAIL: ENGINEER@TREIEG.COM

TREI PROJECT # 22277.S01
PLOTTED 01/25/24 - 1:40PM

DEHESA ELEMENTARY SCHOOL
CONSTRUCTION DOCUMENTS
DEHESA SCHOOL DISTRICT
4612 DEHESA ROAD
EL CAJON, CA 92019

REVISIONS

DESCRIPTION

MDF ELEVATION AND ENLARGED PLAN

DATE

01.25.24

JOB #

22-0400

SHEET #

ET-4.1

7/12/2018 1:34:44 PM

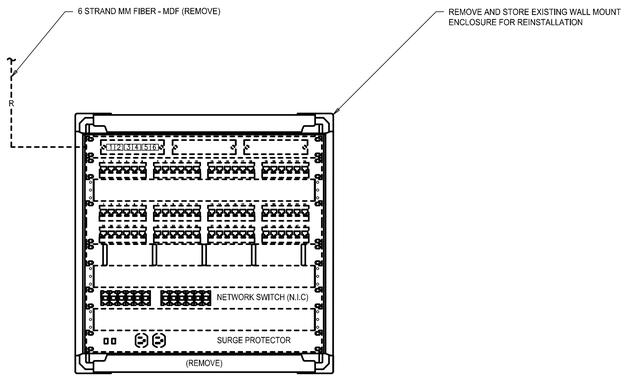

IDF-B ELEVATION - DEMOLITION DETAIL (BUILDING B) 1 ET-4.2

NO SCALE

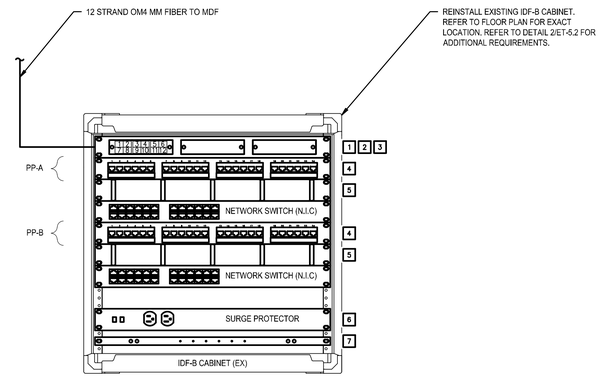

IDF-B ELEVATION DETAIL (BUILDING B) 2 ET-4.2

NO SCALE

SHEET NOTES

1. REFER TO FLOOR PLANS AND RISER DIAGRAM(S) FOR ADDITIONAL REQUIREMENTS.

IDENTIFICATION STAMP
DIV. OF THE STATE ARCHITECT
APP: 04-122772 INC:
REVIEWED FOR
SS ☑ FLS ☑ ACS ☑
DATE: 03/26/2024

SPROTTE | WATSON
ARCHITECTURE | PLANNING

CONSULTANT

REGISTERED PROFESSIONAL ENGINEER
DALE M. FRANDSEN
No.11533
EXP. 06/30/24
ELECTRICAL
STATE OF CALIFORNIA
01/25/24

TURPIN & RATTAN
ENGINEERING, INC.
CONSULTING ENGINEERS
4719 PALM AVENUE
LA MESA, CA 91941-5231
619 / 466 / 6224 FAX 466 / 6233
E-MAIL: ENGINEER@TREIEG.COM
TRE: PROJECT # 22277.501
PLOTTED 01/25/24 - 1:40PM

DEHESA ELEMENTARY SCHOOL
CONSTRUCTION DOCUMENTS
DEHESA SCHOOL DISTRICT
4612 DEHESA ROAD
EL CAJON, CA 92019

REVISIONS

DESCRIPTION

IDF-B ELEVATION AND ENLARGED PLAN

DATE

01.25.24

JOB #

22-0400

SHEET #

ET-4.2

7/12/2018 1:34:44 PM

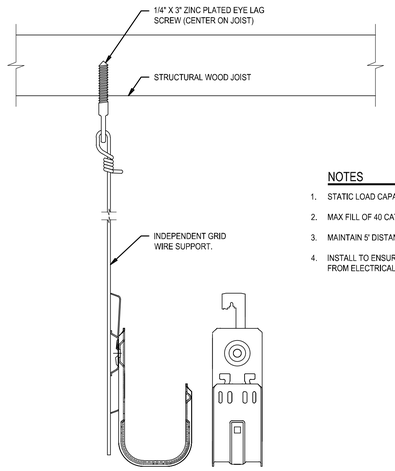

NOTES

1. STATIC LOAD CAPACITY: 30 LBS.
2. MAX FILL OF 40 CATEGORY 6 CABLES
3. MAINTAIN 5' DISTANCE BETWEEN J-HOOK SUPPORTS.
4. INSTALL TO ENSURE NETWORK CABLING HAS 12" CLEARANCE FROM ELECTRICAL AND LIGHTING.

J-HOOK WOOD JOIST INSTALLATION DETAIL

NO SCALE

1
ET-5.1

IDENTIFICATION STAMP
DIV. OF THE STATE ARCHITECT
APP: 04-122772 INC:
REVIEWED FOR
SS ☑ FLS ☑ ACS ☑
DATE: 03/26/2024

SPROTTE | WATSON
ARCHITECTURE | PLANNING

REGISTERED ARCHITECT
C12359
STATE OF CALIFORNIA

CONSULTANT

REGISTERED PROFESSIONAL ENGINEER
DALE M. FRANDSEN
No.11533
ELECTRICAL
STATE OF CALIFORNIA

01/25/24

TURPIN & RATTAN
ENGINEERING, INC.
CONSULTING ENGINEERS
4719 PALM AVENUE
LA MESA, CA 91941-5231
619 / 466 / 6224 FAX 466 / 6233
E-MAIL: ENGINEER@TREIEG.COM

TREI PROJECT # 22277.S01
PLOTTED: 01/25/24 - 1:40PM

DEHESA ELEMENTARY SCHOOL
CONSTRUCTION DOCUMENTS
DEHESA SCHOOL DISTRICT
4612 DEHESA ROAD
EL CAJON, CA 92019

REVISIONS

DESCRIPTION

TECHNOLOGY DETAILS - PATHWAY

DATE

01.25.24

JOB #

22-0400

SHEET #

ET-5.1

7/12/2018 1:34:44 PM

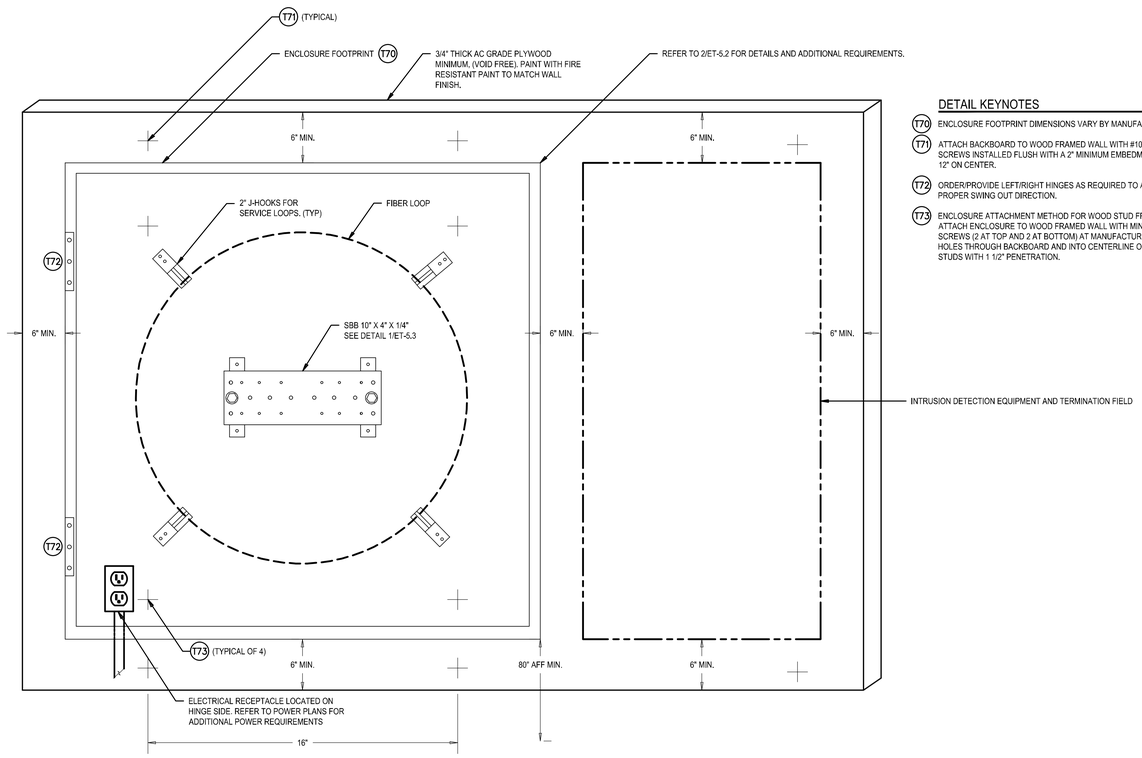

DETAIL KEYNOTES

T70 ENCLOSURE FOOTPRINT DIMENSIONS VARY BY MANUFACTURER.

T71 ATTACH BACKBOARD TO WOOD FRAMED WALL WITH #10 WAFER HEAD WOOD SCREWS INSTALLED FLUSH WITH A 2" MINIMUM EMBEDMENT AND MAINTAIN 12" ON CENTER.

T72 ORDER/PROVIDE LEFT/RIGHT HINGES AS REQUIRED TO ACCOMMODATE PROPER SWING OUT DIRECTION.

T73 ENCLOSURE ATTACHMENT METHOD FOR WOOD STUD FRAMED WALL: ATTACH ENCLOSURE TO WOOD FRAMED WALL WITH MIN. (4), 3/8" DIA LAG SCREWS (2 AT TOP AND 2 AT BOTTOM) AT MANUFACTURE MOUNTING HOLES THROUGH BACKBOARD AND INTO CENTERLINE OF EXISTING 2x STUDS WITH 1 1/2" PENETRATION.

IDF ENCLOSURE AND BACKBOARD DETAIL

NO SCALE

1 / ET-5.2

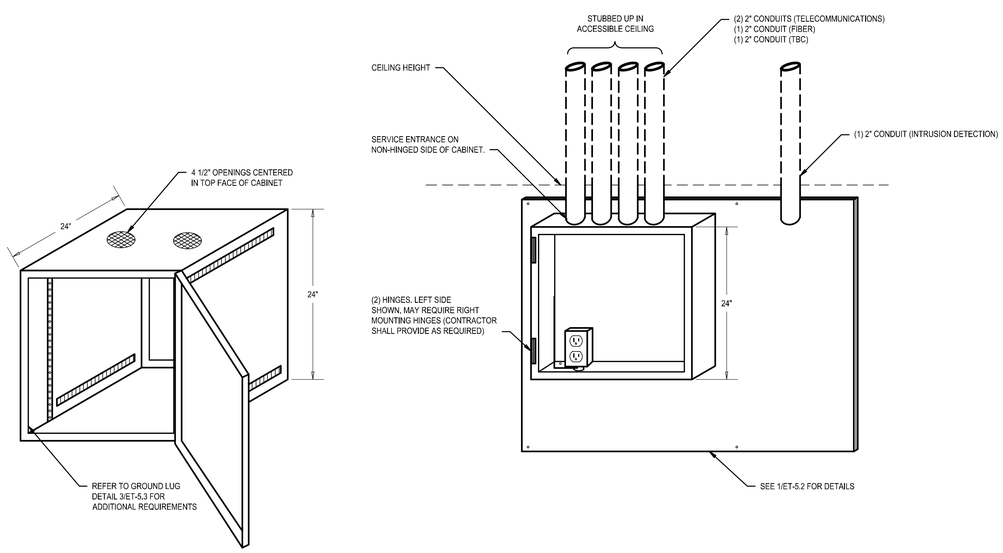

IDF CABINET INSTALLATION DETAIL

NO SCALE

2 / ET-5.2

IDENTIFICATION STAMP
DIV. OF THE STATE ARCHITECT
APP: 04-122772 INC:
REVIEWED FOR
SS ☑ FLS ☑ ACS ☑
DATE: 03/26/2024

SPROTTE | WATSON
ARCHITECTURE + PLANNING

CONSULTANT

REGISTERED PROFESSIONAL ENGINEER
DALE M. FRANDSEN
No.11533
EXP. 06/30/24
ELECTRICAL
STATE OF CALIFORNIA
01/25/24

TURPIN & RATTAN ENGINEERING, INC.
CONSULTING ENGINEERS
4719 PALM AVENUE
LA MESA, CA 91941-5231
619 / 466 / 6224 FAX 466 / 6233
E-MAIL: ENGINEER@TREIEG.COM
TRE: PROJECT # 22277.501
PLOTTED 01/25/24 1:40PM

DEHESA ELEMENTARY SCHOOL
CONSTRUCTION DOCUMENTS
DEHESA SCHOOL DISTRICT
4612 DEHESA ROAD
EL CAJON, CA 92019

REVISIONS

DESCRIPTION

TECHNOLOGY DETAILS - SUPPORT

DATE

01.25.24

JOB #

22-0400

SHEET #

ET-5.2

7/12/2018 1:34:44 PM

DETAIL NOTE

1. GROUNDING AND BONDING CONNECTIONS TO THE INTERSYSTEM BONDING TERMINATION (IBT) THAT ARE PART OF THE ELECTRICAL POWER DISTRIBUTION SYSTEM(S) GROUNDING ELECTRODE CONDUCTOR (GEC) PATH SHALL BE IRREVERSIBLE VIA EXOTHERMIC CADWELD TYPE CONNECTIONS.

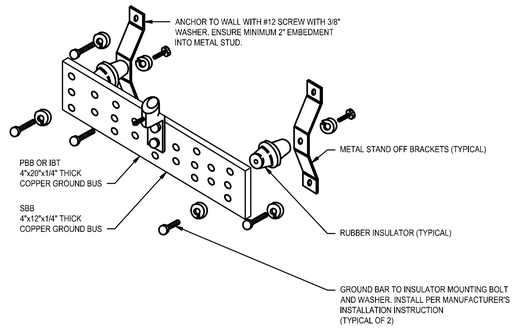

TELECOMMUNICATIONS GROUNDING AND BONDING BUSBAR DETAIL (1 / ET-5.3)

NO SCALE

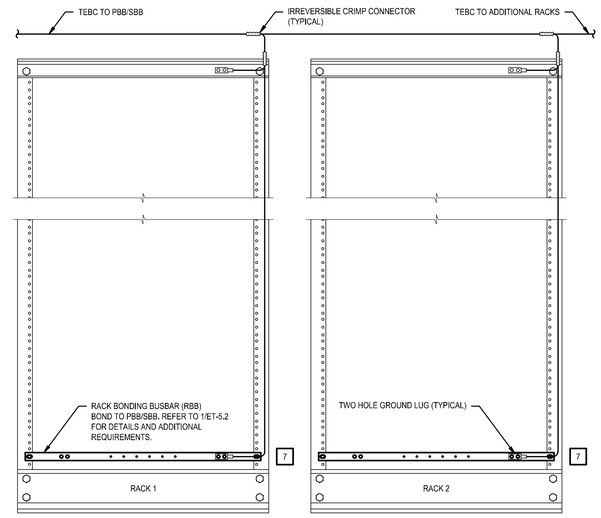

HORIZONTAL RACK BONDING BUSBAR DETAIL "RBB" (2 / ET-5.3)

NO SCALE

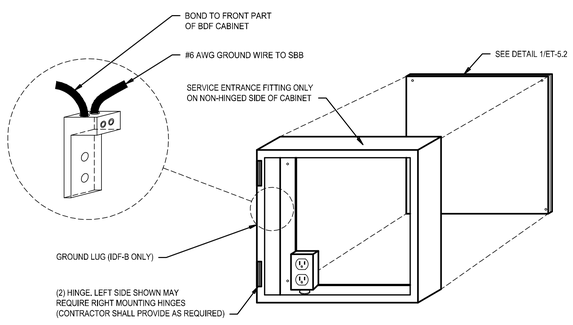

GROUND LUG DETAIL (3 / ET-5.3)

NO SCALE

IDENTIFICATION STAMP
DIV. OF THE STATE ARCHITECT
APP: 04-122772 INC:
REVIEWED FOR
SS ☑ FLS ☑ ACS ☑
DATE: 03/26/2024

SPROTTE | WATSON
ARCHITECTURE | PLANNING

CONSULTANT

REGISTERED PROFESSIONAL ENGINEER
DALE M. FRANZAK
No.11533
EXP. 06/30/24
ELECTRICAL
STATE OF CALIFORNIA
01/25/24

TURPIN & RATTAN ENGINEERING, INC.
CONSULTING ENGINEERS
4719 PALM AVENUE
LA MESA, CA 91941-5231
619 / 466 / 6224 FAX 466 / 6233
E-MAIL: ENGINEER@TREI.SD.COM
TREI PROJECT # 22277.S01
PLOTTED: 01/25/24 - 1:40PM

DEHESA ELEMENTARY SCHOOL
CONSTRUCTION DOCUMENTS
DEHESA SCHOOL DISTRICT
4612 DEHESA ROAD
EL CAJON, CA 92019

REVISIONS

DESCRIPTION

TECHNOLOGY DETAILS - TELECOMMUNICATIONS GROUNDING AND BONDING

DATE

01.25.24

JOB #

22-0400

SHEET #

ET-5.3

7/12/2018 1:34:44 PM

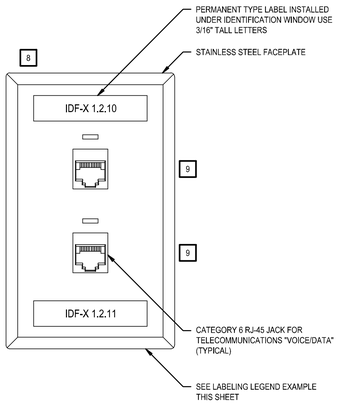

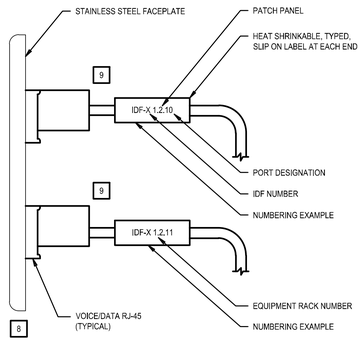

TYPICAL LABELING EXAMPLES	
CABLE	TYPICAL END USE CABINET & TYPE
25 PAIR (VOICE)	IDF-X 25 PAIR VOICE
25 PAIR (INTRUSION)	IIDF-X 25 PAIR INTRUSION
6 PAIR (INTRUSION)	IDF-X 6 PAIR INTRUSION
200 PAIR	BLDG 200 PAIR TELCO TIE
24 FIBERS (DATA)	IDF-X 24 F/O DATA
CAT6 (SPARE)	IDF-X CAT6 SPARE

TELECOMMUNICATIONS "VOICE/DATA" LABELING DETAIL

SCALE: NONE

1 / ET-5.4

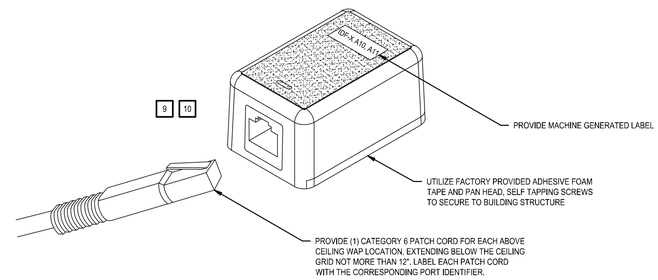

WIRELESS ACCESS POINT DATA OUTLET

NO SCALE

2 / ET-5.4

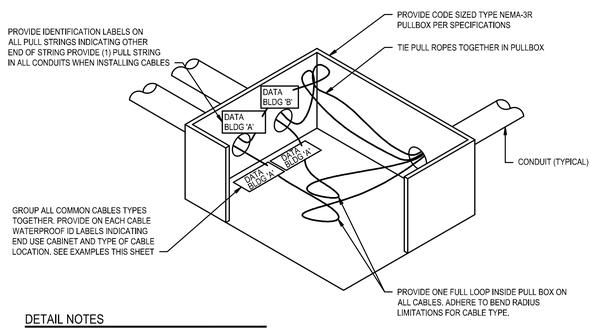

DETAIL NOTES

1. THIS DETAIL APPLIES TO ALL COMMUNICATION PULLBOXES.
2. HAND WRITTEN LABELS ARE NOT PERMITTED.

COMMUNICATIONS PULL BOX LABELING DETAIL

NO SCALE

3 / ET-5.4

IDENTIFICATION STAMP
DIV. OF THE STATE ARCHITECT
APP: 04-122772 INC:
REVIEWED FOR
SS ☑ FLS ☑ ACS ☑
DATE: 03/26/2024

SPROTTE | WATSON
ARCHITECTURE | PLANNING

CONSULTANT

REGISTERED PROFESSIONAL ENGINEER
DALE M. FRANZAK
No.11533
EXP. 06/30/24
ELECTRICAL
STATE OF CALIFORNIA
01/25/24

TURPIN & RATTAN ENGINEERING, INC.
CONSULTING ENGINEERS
4719 PALM AVENUE
LA MESA, CA 91941-5321
619 / 466 / 6224 FAX 466 / 6233
E-MAIL: ENGINEER@TREC60.COM
TREI PROJECT # 22277.501
H:\DEAN\ 01/25/24 - 1:40PM

DEHESA ELEMENTARY SCHOOL
CONSTRUCTION DOCUMENTS
DEHESA SCHOOL DISTRICT
4612 DEHESA ROAD
EL CAJON, CA 92019

REVISIONS

DESCRIPTION
TECHNOLOGY DETAILS - LABELING

DATE
01.25.24

JOB #
22-0400

SHEET #
ET-5.4

7/12/2018 1:34:44 PM

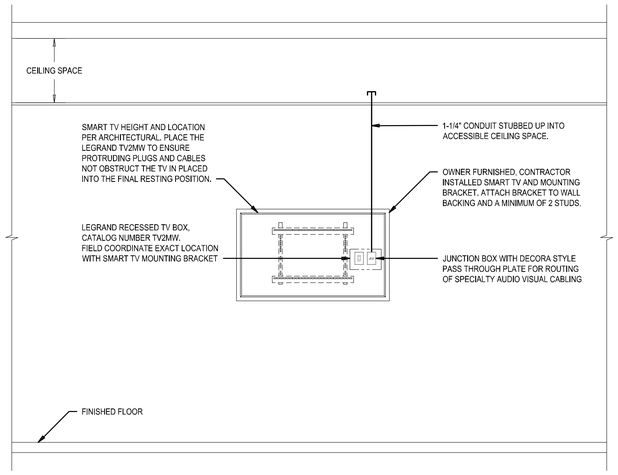

SMART TELEVISION INFRASTRUCTURE DETAIL
NO SCALE
1
ET-5.5

IDENTIFICATION STAMP
DIV. OF THE STATE ARCHITECT
APP: 04-122772 INC:
REVIEWED FOR
SS ☑ FLS ☑ ACS ☑
DATE: 03/26/2024

SPROTTE WATSON
ARCHITECTURE + PLANNING

REGISTERED PROFESSIONAL ENGINEER
C12359
ELECTRICAL
STATE OF CALIFORNIA

CONSULTANT

REGISTERED PROFESSIONAL ENGINEER
DALE M. FRANCHAK
No.11533
exp 06/24
ELECTRICAL
STATE OF CALIFORNIA
01/25/24

TURPIN & RATTAN
ENGINEERING, INC.
CONSULTING ENGINEERS
4719 PALM AVENUE
LA MESA, CA 91941-5231
619 / 466 / 6224 FAX 466 / 6233
E-MAIL: ENGINEER@TREC60.COM
TRE: PROJECT # 22277.501
PLOTTED 01/25/24 1:40PM

DEHESA ELEMENTARY SCHOOL
CONSTRUCTION DOCUMENTS
DEHESA SCHOOL DISTRICT
4612 DEHESA ROAD
EL CAJON, CA 92019

REVISIONS

DESCRIPTION
TECHNOLOGY DETAILS - AUDIO/VISUAL

DATE
01.25.24

JOB #
22-0400

SHEET #
ET-5.5

7/12/2018 1:34:44 PM