# STATE OF MAINE
# DEPARTMENT OF TRANSPORTATION

# SCARBOROUGH AND SOUTH PORTLAND
# CUMBERLAND COUNTY

## FEDERAL AID PROJECT NO. AC-STP-1942(600)X & CMAQ-1942(610)

## MaineDOT WIN's 19426.00 & 19426.10

## EASTERN TRAIL:
## MULTI-USE RECREATIONAL
## TRAIL DEVELOPMENT

## PROJECT LENGTH : 1.6 mi.

## A GRADING, BASE, SURFACE, TRAIL AND BRIDGE PROJECT

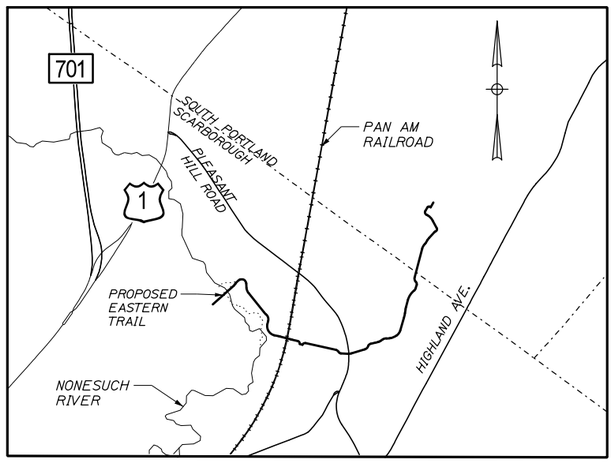


LOCATION MAP
N.T.S.

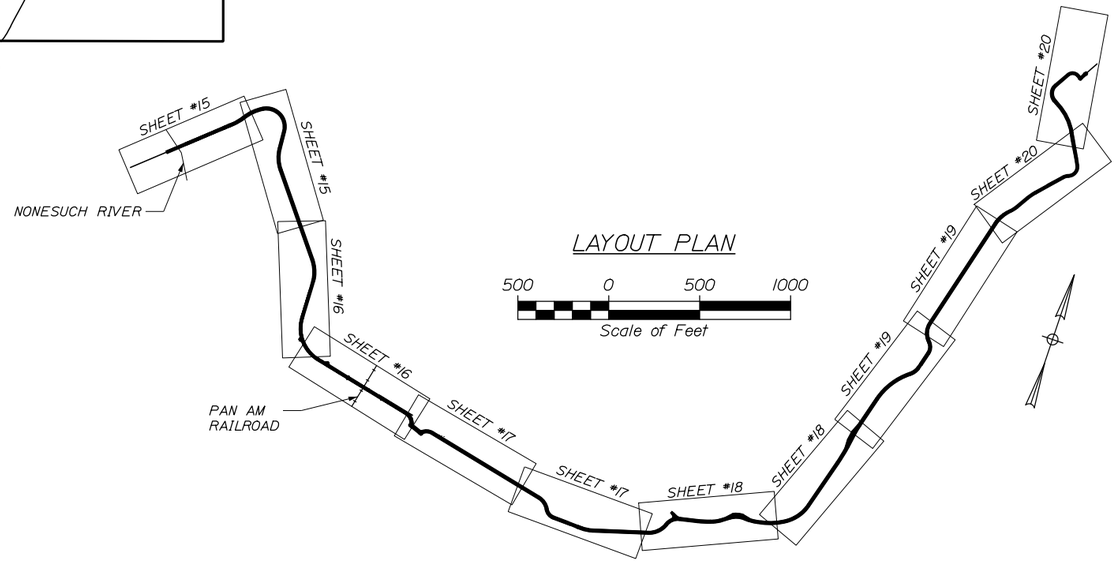


LAYOUT PLAN

500 0 500 1000

Scale of Feet

INDEX OF SHEETS


Title Sheet ..... 1
General Notes and Quantities ..... 2
Trail Typical Sections ..... 3
Boring Logs ..... 4-11
Trail Details ..... 12-13
Sign Details and Summary ..... 14
Trail Plans ..... 15-20
Nonesuch River Crossing Details ..... 21-28
Pan Am Railroad Crossing Details ..... 29-50
Pleasant Hill Road Crossing Plan ..... 51
Portland Water District Access Road Crossing Plan ..... 52
Wainwright Complex Crossing Plan ..... 53
Timber Trail Bridge Details ..... 54
Right of Way Maps ..... 55-66


PROGRESS PLANS
April 4, 2023

STATE OF MAINE
DEPARTMENT OF TRANSPORTATION

APPROVED — DATE

COMMISSIONER:

CHIEF ENGINEER:

PROJECT INFORMATION

| | |
|---|---|
| PROGRAM | MULTIMODAL |
| PROJECT MANAGER | BILL REDDY |
| DESIGNER | TIM COTE, PE |
| CONSULTANT | HNTB |
| PROJECT RESIDENT | |
| CONTRACTOR | |
| PROJECT COMPLETION DATE | |

SIGNATURE — P.E. NUMBER — DATE

TOWN OF SCARBOROUGH
EASTERN TRAIL CONNECTOR
SCARBOROUGH TO SOUTH PORTLAND, MAINE

TITLE SHEET

SHEET NUMBER
1
OF 66

Username:
Date:4/4/2023
Division:
Filename: 001_Title.dgn

Date:4/4/2023
Username:
Division:
Filename: 002_GeneralNotes.dgn

## GENERAL NOTES

1. ALL WORK TO BE DONE UNDER THIS CONTRACT SHALL BE GOVERNED BY THE "STATE OF MAINE DEPARTMENT OF TRANSPORTATION STANDARD SPECIFICATIONS, NOVEMBER 2014 EDITION" AND "STATE OF MAINE DEPARTMENT OF TRANSPORTATION STANDARD DETAILS, NOVEMBER 2014 EDITION". EXCEPT AS MODIFIED BY THE CONTRACT DOCUMENTS.

2. ALL TREES, BRUSH, VEGETATION, STUMPS, AND OTHER ITEMS SHALL BE REMOVED FROM THE AREA. ALL DEBRIS SHALL BE REMOVED AND DISPOSED OF IN ACCORDANCE WITH STATE AND LOCAL REGULATIONS AND CODES.

3. INFORMATION REGARDING THE LOCATION OF EXISTING UTILITIES IS BASED UPON AVAILABLE INFORMATION. MAY BE INCOMPLETE, AND WHERE SHOWN ON THE PLANS SHOULD BE CONSIDERED APPROXIMATE. THE LOCATION OF ALL EXISTING UTILITIES SHOULD BE CONFIRMED PRIOR TO BEGINNING CONSTRUCTION. PRIOR TO ANY DIGGING, THE CONTRACTOR SHALL CONTACT "DIG SAFE" AT 1-800-344-7233 TO DETERMINE LOCATIONS OF EXISTING UNDERGROUND UTILITIES.

4. THE UTILITIES PRESENT WITHIN PROJECT LIMITS ARE AS FOLLOWS:
   - AT&T
   - CENTRAL MAINE POWER
   - BOSTON & MAINE CORPORATION (PAN AM) RAILROAD
   - CHARTER COMMUNICATIONS
   - FAIRPOINT COMMUNICATIONS
   - OXFORD NETWORKS
   - TOWN OF SCARBOROUGH
   - CITY OF SOUTH PORTLAND
   - SCARBOROUGH FIRE DEPARTMENT

5. UNLESS DIRECTED BY THE RESIDENT, ALL DISTURBED AREAS SHALL RECEIVE A MINIMUM OF 4" OF EROSION CONTROL MIX AND BE SEEDED WITH METHOD #2. MULCH SHALL BE APPLIED IN AREAS SEEDED.

6. THE CONTRACTOR SHALL BE RESPONSIBLE FOR ALL CONSTRUCTION LAYOUT AND STAGING.

7. PLACE A 2 FT. WIDE STRIP OF TEMPORARY EROSION CONTROL BLANKET ALONG THE TOP OF ALL RIPRAP SLOPES.

8. DO NOT EXCAVATE FOR AGGREGATE SUBBASE COURSE WHERE EXISTING MATERIAL IS SUITABLE AS DETERMINED BY THE RESIDENT.

9. CLEARING SHALL BE 5' FROM TOE OF SLOPES OR AS SHOWN ON THE PLANS UNLESS OTHERWISE DIRECTED BY THE RESIDENT.

10. THE LOCATION AND EXTENT OF CEDAR RAIL FENCE IS SHOWN FOR ESTIMATING PURPOSES. THE FINAL LOCATION AND QUANTITY SHALL BE DETERMINED BY THE RESIDENT.

11. CEDAR RAIL FENCE AND TIMBER GUARDRAIL SHALL BE INSTALLED AT LEAST 10' FROM THE EDGE OF TRAVELWAY AT ROADWAY CROSSINGS AND BOLLARDS SHALL BE INSTALLED AT LEAST 30' FROM THE EDGE OF THE TRAVELWAY AT ROADWAY CROSSINGS. EXACT LOCATIONS WILL BE DETERMINED BY THE RESIDENT.

12. EXISTING CULVERTS TO REMAIN SHALL BE CLEANED AS DIRECTED BY THE RESIDENT. PAYMENT WILL BE MADE UNDER ITEM 631.32 CULVERT CLEANER (INCLUDING OPERATOR)

13. ALL WASTE MATERIAL NOT USED ON THE PROJECT SHALL BE DISPOSED OF OFF THE PROJECT IN WASTE AREAS APPROVED BY THE RESIDENT.

14. INLETS AND OUTLETS OF ALL PROPOSED CULVERTS SHALL BE RIPRAPPED IN ACCORDANCE WITH THE MAINE STANDARD DETAILS UNLESS OTHERWISE NOTED ON THE PLANS OR AS DIRECTED BY THE RESIDENT.

15. ANY DAMAGE TO THE SLOPES CAUSED BY THE CONTRACTOR'S EQUIPMENT, PERSONNEL, OR OPERATION SHALL BE REPAIRED AT THE CONTRACTORS EXPENSE TO THE SATISFACTION OF THE RESIDENT.

16. NO SEPARATE PAYMENT FOR SUPERINTENDENT OR FOREMAN WILL BE MADE FOR THE SUPERVISION OF EQUIPMENT BEING PAID FOR UNDER THE EQUIPMENT RENTAL ITEMS.

17. UNDETERMINED LOCATIONS SHALL BE DETERMINED BY THE RESIDENT.

18. ALL WORK SHALL BE DONE IN ACCORDANCE WITH THE MAINE DEPARTMENT OF TRANSPORTATION'S BEST MANAGEMENT PRACTICES FOR EROSION AND SEDIMENTATION CONTROL, FEBRUARY, 2008. PAYMENT WILL BE MADE UNDER ITEM 656.75 TEMPORARY SOIL EROSION AND WATER POLLUTION CONTROL, LUMP SUM.

19. WHERE TYPICAL SECTION CALL-OUTS ARE DESIGNATED ON THE TRAIL PLANS, THE LIMITS SHALL BE CONSIDERED APPROXIMATE. THE LIMIT AND TYPE OF TYPICAL SECTION TO BE USED MAY BE CHANGED BASED ON EXISTING CONDITIONS AS DIRECTED BY THE RESIDENT.

20. QUANTITIES INCLUDED FOR PAY ITEMS MEASURED AND PAID FOR BY LUMP SUM ARE ESTIMATED QUANTITIES AND ARE PROVIDED BY THE TOWN OF SCARBOROUGH FOR INFORMATIONAL PURPOSES ONLY. LUMP SUM PAY ITEMS WILL BE PAID FOR AT THE CONTRACT BID AMOUNT, WITH NO ADDITION OR REDUCTION IN PAYMENT TO THE CONTRACTOR IF THE ACTUAL FINAL QUANTITIES ARE DIFFERENT FROM THE PROVIDED ESTIMATED QUANTITIES, EXCEPT AS FOLLOWS:

   A. IF A LUMP SUM PAY ITEM IS ELIMINATED, THE REQUIREMENTS OF STANDARD SPECIFICATIONS SECTION 109.2, ELIMINATION OF ITEMS WILL TAKE PRECEDENCE.

   B. IF OTHER CONTRACT DOCUMENTS SPECIFICALLY ALLOW A CHANGE IN PAYMENT FOR LUMP SUM PAY ITEM, THOSE REQUIREMENTS WILL BE FOLLOWED.

   C. IF A DESIGN CHANGE RESULTS IN CHANGES TO ESTIMATED QUANTITIES FOR LUMP SUM PAY ITEMS, PRICE AND ADJUSTMENTS WILL BE MADE IN ACCORDANCE WITH STANDARD SPECIFICATIONS SECTION 109.7, EQUITABLE ADJUSTMENTS TO COMPENSATION AND TIME.

21. FOR EASEMENTS, CONSTRUCTION LIMITS AND RIGHT-OF-WAY LINES, REFER TO THE RIGHT OF WAY MAPS.

22. PROTECTIVE COATING FOR CONCRETE SURFACES SHALL BE APPLIED TO THE FOLLOWING AREAS:
   - -ALL EXPOSED SURFACES OF CONCRETE PIERS
   - -TOP OF ABUTMENT BACKWALLS AND TO ONE FOOT BELOW THE TOP OF BACKWALLS ON THE BACK SIDE
   - -EXPOSED SURFACES OF ABUTMENTS AND WINGWALLS

23. THE PROPOSED EMBANKMENTS AT THE PAN AM RAILROAD BRIDGE SHALL BE CONSTRUCTED USING A COMBINATION OF COMMON BORROW, CRUSHED STONE, AND LIGHTWEIGHT FILL - REFER TO THE PAN AM CROSSING DETAILS SHEETS FOR ADDITIONAL INFORMATION.

24. PROJECT INFORMATION REFERRED TO BELOW MAY ALSO BE ACCESSED AT THE FOLLOWING TOWN OF SCARBOROUGH WEB ADDRESS: HTTP://WWW.SCARBOROUGHMAINE.ORG/DEPARTMENTS/FINANCE/PURCHASING

25. THE PROJECT GEOTECHNICAL REPORT TITLED: REPORT OF GEOTECHNICAL EVALUATION FOR SCARBOROUGH EASTERN TRAIL, WIN 19426.00 & 19426.10, DATED NOVEMBER 30, 2018 BY R.W. GILLESPIE MAY BE ACCESSED AT THE TOWN OF SCARBOROUGH WEBSITE.

26. GEOTECHNICAL INFORMATION FURNISHED OR REFERRED TO IN THIS PLAN SET IS FOR THE USE OF BIDDERS AND THE CONTRACTOR. NO ASSURANCE IS GIVEN THAT THE INFORMATION OR INTERPRETATIONS WILL BE REPRESENTATIVE OF ACTUAL SUBSURFACE CONDITIONS AT THE CONSTRUCTION SITE. THE TOWN OF SCARBOROUGH WILL NOT BE RESPONSIBLE FOR THE BIDDER'S OR CONTRACTOR'S INTERPRETATIONS OF, OR CONCLUSIONS DRAWN FROM THE GEOTECHNICAL INFORMATION. THE BORING LOGS CONTAINED IN THE PLAN SET PRESENT FACTUAL AND INTERPRETIVE SUBSURFACE INFORMATION COLLECTED AT DISCRETE LOCATIONS. DATA PROVIDED MAY NOT BE REPRESENTATIVE OF THE SUBSURFACE CONDITIONS BETWEEN THE BORING LOCATIONS.

## ESTIMATED QUANTITIES

| ITEM NO. | DESCRIPTION | UNIT | 19426.10 QUANTITY | 19426.00 QUANTITY | TOTAL QUANTITY |
|---|---|---|---|---|---|
| 201.11 | CLEARING | AC | 2.4 | 1.3 | 3.7 |
| 201.12 | SELECTIVE CLEARING & THINNING | AC | 0.5 | 0.5 | 1 |
| 203.20 | COMMON EXCAVATION | CY | 100 | 900 | 1000 |
| 203.24 | COMMON BORROW | CY | 11,000 | 1600 | 12,600 |
| 203.247 | EXPANDED SHALE LIGHTWEIGHT AGGREGATE | CY | 970 | 0 | 970 |
| 203.25 | GRANULAR BORROW | CY | 81 | 0 | 81 |
| 203.35 | CRUSHED STONE FILL | CY | 1300 | 0 | 1300 |
| 206.10 | STRUCTURAL EARTH EXCAVATION - PIERS | CY | 110 | 0 | 110 |
| 304.10 | AGGREGATE SUBBASE COURSE - GRAVEL (MODIFIED) | CY | 1750 | 2750 | 4500 |
| 403.210 | HOT MIX ASPHALT, 9.5 mm NOMINAL MAXIMUM SIZE | TON | 360 | 340 | 700 |
| 411.13 | STONE DUST SURFACE COURSE | TON | 17 | 820 | 837 |
| 501.231 | DYNAMIC LOAD TESTING | EA | 3 | 0 | 3 |
| 501.48 | STEEL H-BEAM PILES 74 LB/FT, DELIVERED | LF | 2200 | 0 | 2200 |
| 501.481 | STEEL H-BEAM PILES 74 LB/FT, IN PLACE | LF | 2200 | 0 | 2200 |
| 501.90 | PILE TIPS | EA | 20 | 0 | 20 |
| 501.91 | PILE SPLICES | EA | 20 | 0 | 20 |
| 501.92 | PILE DRIVING EQUIPMENT MOBILIZATION | LS | 1 | 0 | 1 |
| 502.21 | STRUCTURAL CONCRETE, ABUTMENTS AND RETAINING WALLS | CY | 3 | 0 | 3 |
| 502.219 | STRUCTURAL CONCRETE, ABUTMENTS AND RETAINING WALLS (48 CY) | LS | 1 | 0 | 1 |
| 502.239 | STRUCTURAL CONCRETE, PIERS (56 CY) | LS | 1 | 0 | 1 |
| 503.12 | REINFORCING STEEL, FABRICATED AND DELIVERED | LB | 12,000 | 0 | 12,000 |
| 503.13 | REINFORCING STEEL, PLACING | LB | 12,000 | 0 | 12,000 |
| 512.081 | FRENCH DRAINS (67 LF) | LS | 1 | 0 | 1 |
| 514.06 | CURING BOX FOR CONCRETE CYLINDERS | EA | 1 | 0 | 1 |
| 515.21 | PROTECTIVE COATING FOR CONCRETE SURFACES (270 SY) | LS | 1 | 0 | 1 |
| 525.26 | REPOINTING GRANITE MASONRY | SF | 200 | 0 | 200 |
| 528.20 | TIMBER STREAM CROSSING BRIDGE - STA. 162+90 | LS | 0 | 1 | 1 |
| 528.20 | TIMBER STREAM CROSSING BRIDGE - STA. 174+25 | LS | 0 | 1 | 1 |
| 528.20 | TIMBER STREAM CROSSING BRIDGE - STA. 175+90 | LS | 0 | 1 | 1 |
| 528.20 | TIMBER STREAM CROSSING BRIDGE - STA. 176+25 | LS | 0 | 1 | 1 |
| 530.01 | PREFABRICATED STEEL TRUSS - NONESUCH RIVER | LS | 1 | 0 | 1 |
| 530.02 | PREFABRICATED STEEL TRUSS - PAN AM RAILROAD | LS | 1 | 0 | 1 |
| 603.159 | 12 INCH CULVERT PIPE OPTION III | LF | 0 | 24 | 24 |
| 603.179 | 18 INCH CULVERT PIPE OPTION III | LF | 56 | 190 | 246 |
| 603.219 | 36 INCH CULVERT PIPE OPTION III | LF | 320 | 32 | 352 |
| 606.611 | TIMBER GUARDRAIL | LF | 140 | 180 | 320 |
| 607.16 | CHAIN LINK FENCE - 4' | LF | 0 | 670 | 670 |
| 607.173 | CHAIN LINK FENCE - 6' - PVC COATED | LF | 950 | 1800 | 1990 |
| 607.22 | CEDAR RAIL FENCE | LF | 1550 | 1150 | 3200 |
| 607.23 | CHAIN LINK FENCE GATE | EA | 0 | 5 | 5 |
| 607.2325 | PIPE ENTRY GATE | EA | 1 | 0 | 1 |
| 607.2341 | CHAIN LINK FENCE SLIDING GATE - 4' X 12' | EA | 0 | 3 | 3 |
| 607.34 | BRACING ASSEMBLY CHAIN LINK FENCE | EA | 0 | 8 | 8 |
| 607.35 | BRACING ASSEMBLY CHAIN LINK FENCE - PVC COATED | EA | 2 | 10 | 12 |
| 608.26 | CURB RAMP DETECTABLE WARNING FIELD | SF | 64 | 150 | 214 |
| 609.11 | VERTICAL CURB TYPE 1 | LF | 0 | 110 | 110 |
| 609.12 | VERTICAL CURB TYPE 1 - CIRCULAR | LF | 0 | 70 | 70 |
| 609.238 | TERMINAL CURB TYPE 1 - 8 FOOT | EA | 0 | 2 | 2 |
| 610.08 | PLAIN RIPRAP | CY | 306 | 46 | 352 |
| 610.18 | STONE DITCH PROTECTION | CY | 0 | 68 | 68 |
| 613.319 | EROSION CONTROL BLANKET | SY | 0 | 180 | 180 |
| 615.07 | LOAM | CY | 64 | 170 | 234 |
| 618.14 | SEEDING METHOD NUMBER 2 | UNIT | 90 | 75 | 165 |
| 619.1201 | MULCH - PLAN QUANTITY | UNIT | 90 | 75 | 165 |
| 619.14 | EROSION CONTROL MIX | CY | 990 | 600 | 1590 |
| 620.58 | EROSION CONTROL GEOTEXTILE | SY | 740 | 400 | 1140 |
| 620.60 | SEPARATION GEOTEXTILE | SY | 1550 | 450 | 2000 |
| 621.XX | PROPOSED TREE | EA | 5 | 0 | 5 |
| 627.75 | WHITE OR YELLOW PAVEMENT AND CURB MARKING | SF | 220 | 450 | 670 |
| 629.05 | HAND LABOR, STRAIGHT TIME | HR | 20 | 20 | 40 |
| 631.12 | ALL PURPOSE EXCAVATOR (INCLUDING OPERATOR) | HR | 15 | 15 | 30 |
| 631.133 | SKID STEER (INCLUDING OPERATOR) | HR | 5 | 5 | 10 |
| 631.14 | GRADER (INCLUDING OPERATOR) | HR | 5 | 5 | 10 |
| 631.171 | TRUCK - SMALL (INCLUDING OPERATOR) | HR | 5 | 5 | 10 |
| 631.32 | CULVERT CLEANER (INCLUDING OPERATOR) | HR | 5 | 5 | 10 |
| 631.36 | FOREMAN | HR | 5 | 5 | 10 |
| 639.18 | FIELD OFFICE, TYPE A | EA | 0.5 | 0.5 | 1 |
| 643.62 | RECTANGULAR RAPID FLASHING BEACON | EA | 0 | 2 | 2 |
| 645.271 | REGULATORY, WARNING, CONFIRMATION, AND ROUTE ASSEMBLY SIGN, TYPE 1 | SF | 43 | 99 | 142 |
| 652.33 | DRUM | EA | 10 | 10 | 20 |
| 652.34 | CONE | EA | 10 | 10 | 20 |
| 652.35 | CONSTRUCTION SIGNS | SF | 45 | 45 | 90 |
| 652.38 | FLAGGERS | HR | 150 | 150 | 300 |
| 652.361 | MAINTENANCE OF TRAFFIC CONTROL DEVICES | LS | 0.5 | 0.5 | 1 |
| 656.75 | TEMPORARY SOIL EROSION AND WATER POLLUTION CONTROL | LS | 0.5 | 0.5 | 1 |
| 659.10 | MOBILIZATION | LS | 0.5 | 0.5 | 1 |
| 677.20 | MECHANICALLY STABILIZED EARTH RETAINING WALL | SF | 2850 | 0 | 2850 |
| 841.49 | BOLLARDS - COLLAPSIBLE | EA | 5 | 15 | 20 |

PROGRESS PLANS
April 4, 2023

STATE OF MAINE
DEPARTMENT OF TRANSPORTATION

AC-STP-1942(600)X & CMAQ-1942(610)

WIN
19426.00 & 019426.10 HIGHWAY PLANS

| | BY | DATE |
|---|---|---|
| PROJ. MANAGER | BILL REICHL | |
| DESIGN-DETAILED | P. Bishop | 12-22 |
| CHECKED-REVIEWED | J. Olund | 12-22 |
| DESIGN2-DETAILED2 | - | - |
| DESIGN3-DETAILED3 | - | - |
| REVISIONS 1 | - | - |
| REVISIONS 2 | - | - |
| REVISIONS 3 | - | - |
| REVISIONS 4 | - | - |
| FIELD CHANGES | - | - |

SIGNATURE

P.E. NUMBER

DATE

TOWN OF SCARBOROUGH
EASTERN TRAIL CONNECTOR
SCARBOROUGH TO SOUTH PORTLAND, MAINE

GENERAL NOTES AND QUANTITIES

SHEET NUMBER
2
OF 66

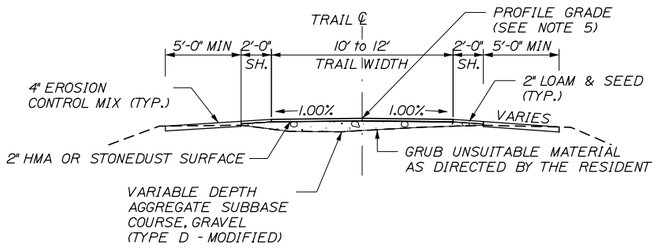


## TYPICAL SECTION A

N.T.S

STA. 99+25 TO STA. 100+00
STA. 128+50 TO STA. 137+50
STA. 138+50 TO STA. 142+50
STA. 162+00 TO STA. 173+00
STA. 178+00 TO STA. 181+00

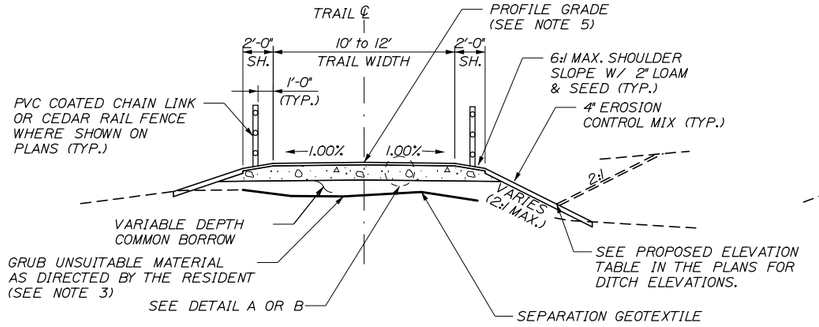


## TYPICAL SECTION B

N.T.S

STA. 103+00 TO STA. 116+50
STA. 142+50 TO STA. 145+00
STA. 173+00 TO STA. 178+00

TRAIL SURFACE MATERIAL TABLE

| SURFACE MATERIAL | STATION BEGIN | | STATION END |
|---|---|---|---|
| STONEDUST | 99+25 | TO | 100+00 |
| PAVEMENT | 100+36 | TO | 122+42 |
| PAVEMENT | 124+62 | TO | 126+50 |
| STONEDUST | 128+50 | TO | 137+50 |
| STONEDUST | 138+50 | TO | 142+00 |
| PAVEMENT | 142+00 | TO | 146+00 |
| STONEDUST | 146+00 | TO | 161+10 |
| STONEDUST | 162+00 | TO | 165+50 |
| PAVEMENT | 165+50 | TO | 182+75 |

NOTE: ROADWAY CROSSING APPROACHES SHALL BE PAVED AS SHOWN ON THE CROSSING PLANS.

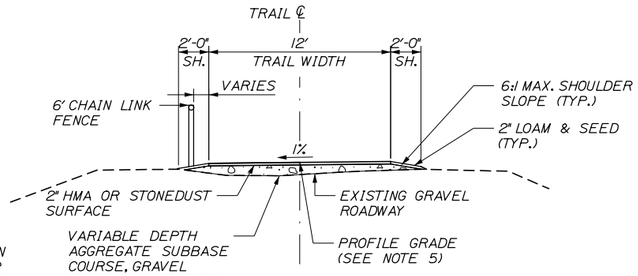


## TYPICAL SECTION C - PROUT'S POND

N.T.S

STA. 145+00 TO STA. 161+10

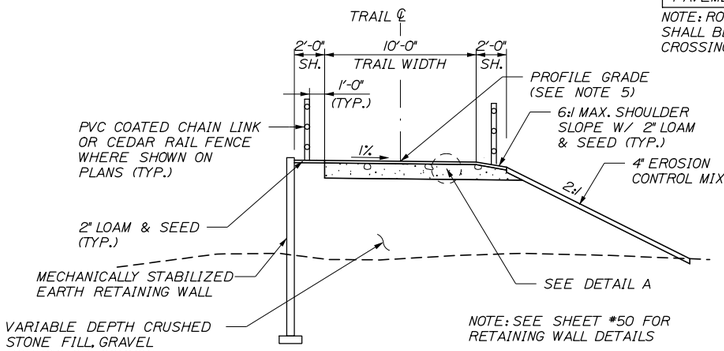


## TYPICAL SECTION D EMBANKMENT SECTION WITH RETAINING WALL

STA. 124+62 TO STA. 126+50
N.T.S

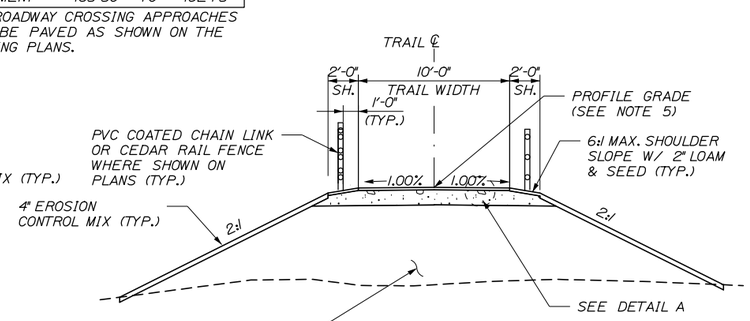


## TYPICAL SECTION E EMBANKMENT SECTION

N.T.S

STA. 100+36 TO 103+00
STA. 116+50 TO 122+42

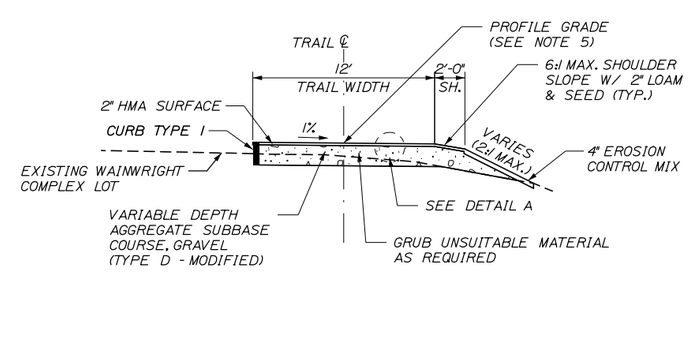


## TYPICAL SECTION F WAINWRIGHT FACILITY

N.T.S

STA. 181+00 TO STA. 182+75

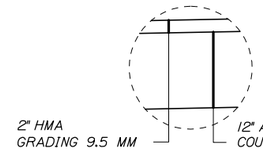


## DETAIL A

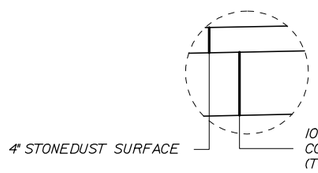


## DETAIL B

## TYPICAL SECTION NOTES:

1. SHOULDERS SHALL BE LOAMED AND SEEDED AFTER PLACEMENT OF THE TRAIL SURFACE.

2. FOR SWALE INVERT ELEVATIONS, SEE PROFILE DRAWINGS AND ELEVATION TABLES SHOWN ON THE PLANS.

3. FOR TYPICAL SECTION B, SEPARATION GEOTEXTILE FABRIC SHALL BE USED IN AREAS WHERE THE TRAIL PASSES THROUGH WET AREAS TO AVOID THE NEED FOR MUCK EXCAVATION. FINAL DETERMINATION OF PLACEMENT LOCATIONS WILL BE DETERMINED BY THE RESIDENT.

4. SEE PAN AM RAILROAD CROSSING SHEETS FOR ADDITIONAL INFORMATION AND FILL MATERIAL LIMITS.

5. THE PROFILE GRADE SHALL NOT EXCEED 5% IN PAVED SECTIONS OR 3% IN STONE DUST SECTIONS UNLESS NOTED IN THE PAN AM OR NONESUCH RIVER PROFILES, OR THE PROPOSED ELEVATION TABLES PROVIDED IN THE PLANS.

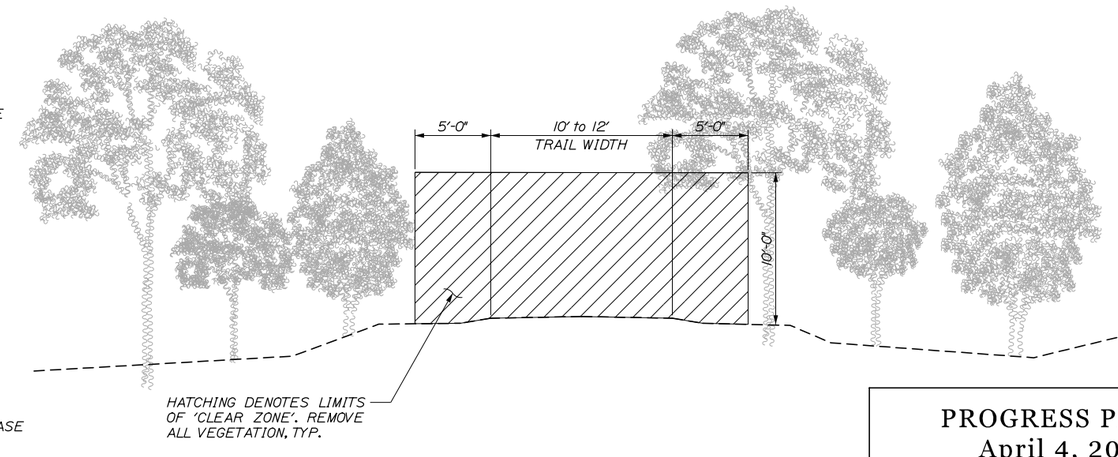


## TYPICAL CLEARING LIMITS DETAIL

N.T.S

NOTE:

1. CONTRACTOR IS RESPONSIBLE FOR LIMBING OVERHANGING VEGETATION TO THE HEIGHT INDICATED ON THE DETAIL. PAYMENT WILL BE UNDER ITEM 201.12, SELECTIVE CLEARING AND THINNING.

PROGRESS PLANS
April 4, 2023

STATE OF MAINE
DEPARTMENT OF TRANSPORTATION

AC-STP-1942(600)X & CMAQ-1942(610)

WIN
19426.00 & 019426.10 HIGHWAY PLANS

| | BILL REICH | BY | DATE |
|---|---|---|---|
| PROJ. MANAGER | | | |
| DESIGN-DETAILED | C.Helmick | P. Bishop | 12.'22 |
| CHECKED-REVIEWED | L. DRISCOLL | J. Olund | 12.'22 |
| DESIGN2-DETAILED2 | - | - | - |
| DESIGN3-DETAILED3 | - | - | - |
| REVISIONS 1 | - | - | - |
| REVISIONS 2 | - | - | - |
| REVISIONS 3 | - | - | - |
| REVISIONS 4 | - | - | - |
| FIELD CHANGES | - | - | - |

SIGNATURE

P.E. NUMBER

DATE

TOWN OF SCARBOROUGH
EASTERN TRAIL CONNECTOR
SCARBOROUGH TO SOUTH PORTLAND, MAINE

TRAIL TYPICAL SECTIONS

SHEET NUMBER
3
OF 66

Date:4/4/2023
Username:
Division:
Filename: 003_Typical Sections.dgn

Username:

Division:

Filename: 004_Boring Logs.dgn

Date:4/4/2023

## Boring Log: BB-SPC-101

Total Depth (ft):91.2

Sheet 1 of 4

Project Name:Scarborough Eastern Trail Project
RW&A Project No. 0600-092
Location: Scarborough, Maine
Client:HNTB Corporation
Boring Location:See Exploration Location Plan
Boring Abandonment Method: Backfilled with cuttings
Observed Water Depth:5.0'

Drilling Co.:Great Works Test Boring
Drill Rig:CME 850
Driller Rep.:J. Lee
Date Started: 06/13/2013
Date Completed: 06/13/2013
Surface Elevation: 33.5 FEET
Drilling Method: Rotary Wash
Casing Type: 4" Steel

| DEPTH, FT. | SYMBOL | SAMPLES | SAMPLE NUMBER | DESCRIPTION OF MATERIAL | SAMPLE RECOVERY, IN. | BLOWS PER 6" | SPT-N BLOWS PER FT. | MOISTURE CONTENT % | LAB TESTS |
|---|---|---|---|---|---|---|---|---|---|
| 0 | | S | S-1 | FILL: Silty sand, moist, fine sand, some silt, trace gravel, gray and black. FILL: Silty sand, moist, fine to medium sand, little silt, dark red-brown. | 15 | 3 5 7 7 | 12 | 14.0 | MC |
| 5 | | S | S-2 | SILTY SAND (SP/SM): Loose, wet, fine to medium sand, little silt, light brown. | 18 | 4 4 4 6 | 8 | 27.4 | MC GS |
| 10 | | S | S-3 | SILTY SAND (SM): Loose to medium dense, wet, fine sand, some silt, gray. Silty sand becomes brown around 10 ft. | 20 | 1 5 6 8 | 11 | 25.1 | MC |
| 15 | | S | S-4 | SILTY CLAY (CL): Very soft to medium stiff, wet, silty clay, trace fine sand, gray. | 1 | WOH/ 24" | WOH | 42.1 | MC |
| 20 | FV | | | Field Vane Raw Data: T=74ft-lb, Residual T=5ft-lb<br>Undrained Shear Strength: Su=0.81 ksf, Residual Su=0.05 ksf<br>Field Vane Raw Data: T=45ft-lb, Residual T=4ft-lb<br>Undrained Shear Strength: Su=0.49 ksf, Residual Su=0.04 ksf | | | | | |
| 25 | | U | U-1 | Thin-walled tube sample from 25' - 27'. | 24 | | | | |
| 30 | FV | | | Field Vane Raw Data: T=45ft-lb, Residual T=5ft-lb<br>Undrained Shear Strength: Su=0.49 ksf, Residual Su=0.05 ksf<br>Field Vane Raw Data: T=45ft-lb, Residual T=5ft-lb<br>Undrained Shear Strength: Su=0.49 ksf, Residual Su=0.05 ksf | | | | | |

Notes: 1. MaineDOT Project No. 019386.00
2. SPT N-values are uncorrected.
3. Shear Strength data collected using an Acker 3-5/8" x 9" Field vane and torque wrench.
4. Hydraulically pushed casing from 15' to 60' to continue drilling below 60', no hammer used to drive casing.

## Boring Log: BB-SPC-101

Total Depth:91.2

Sheet 2 of 4

Project Name:Scarborough Eastern Trail Project
Location: Scarborough Maine
Client: HNTB Corporation
Observed Water Depth:5.0'

RW&A Project No. 0600-092
Surface Elevation: 33.5 FEET
Casing Type: 4" Steel

| DEPTH, FT. | SYMBOL | SAMPLES | SAMPLE NUMBER | DESCRIPTION OF MATERIAL | SAMPLE RECOVERY, IN. | BLOWS PER 6" | SPT-N BLOWS PER FT. | MOISTURE CONTENT % | LAB TESTS |
|---|---|---|---|---|---|---|---|---|---|
| 30 | FV | | | Field Vane Raw Data: T=39ft-lb, Residual T=5ft-lb<br>Undrained Shear Strength: Su=0.43 ksf, Residual Su=0.05 ksf<br>Field Vane Raw Data: T=40ft-lb, Residual T=5ft-lb<br>Undrained Shear Strength: Su=0.44 ksf, Residual Su=0.05 ksf | | | | | |
| 35 | | U | U-2 | Thin-walled tube sample from 35' - 37'. | 22 | | | | |
| 40 | FV | | | Field Vane Raw Data: T=65ft-lb, Residual T=4ft-lb<br>Undrained Shear Strength: Su=0.71 ksf, Residual Su=0.04 ksf<br>Field Vane Raw Data: T=61ft-lb, Residual T=5ft-lb<br>Undrained Shear Strength: Su=0.66 ksf, Residual Su=0.05 ksf<br>Field Vane Raw Data: T=50ft-lb, Residual T=3ft-lb.<br>Undrained Shear Strength: Su=0.55 ksf, Residual Su=0.03 ksf<br>Field Vane Raw Data: T=54ft-lb, Residual T=3ft-lb<br>Undrained Shear Strength: Su=0.59 ksf, Residual Su=0.03 ksf | | | | | |
| 45 | | U | U-3 | Thin-walled tube sample from 45' - 47'. | 23 | | | | |
| 50 | FV | | | Field Vane Raw Data: T=72fft-lb, Residual T=9ft-lb<br>Undrained Shear Strength: Su=0.78 ksf, Residual Su=0.10 ksf<br>Field Vane Raw Data: T=74ft-lb, Residual T=11ft-lb<br>Undrained Shear Strength: Su=0.81 ksf, Residual Su=0.12 ksf | | | | | |
| | | S | S-5 | Unable to push field vane at 50'. Occasional fine sand seams from 50' - 51'. | 21 | 3 1 1 1 | 2 | 33.5 | MC |
| 55 | FV | | | Field Vane Raw Data: T=79ft-lb, Residual T=0ft-lb<br>Undrained Shear Strength: Su=0.86 ksf, Residual Su=0.00 ksf<br>Unable to push field vane below 55.9'. | | | | | |
| 60 | | S | S-6 | SILTY SAND (SM): Medium dense, wet, fine to medium sand, little silt, trace coarse sand, gray with occasional red-brown oxidized layers. | 16 | 9 13 13 | 26 | 20.7 | MC |

Notes: 1. MaineDOT Project No. 019386.00
2. SPT N-values are uncorrected.
3. Shear Strength data collected using an Acker 3-5/8" x 9" Field vane and torque wrench.
4. Hydraulically pushed casing from 15' to 60' to continue drilling below 60', no hammer used to drive casing.

## Boring Log: BB-SPC-101

Total Depth:91.2

Sheet 3 of 4

Project Name:Scarborough Eastern Trail Project
Location: Scarborough Maine
Client: HNTB Corporation
Observed Water Depth:5.0'

RW&A Project No. 0600-092
Surface Elevation: 33.5 FEET
Casing Type: 4" Steel

| DEPTH, FT. | SYMBOL | SAMPLES | SAMPLE NUMBER | DESCRIPTION OF MATERIAL | SAMPLE RECOVERY, IN. | BLOWS PER 6" | SPT-N BLOWS PER FT. | MOISTURE CONTENT % | LAB TESTS |
|---|---|---|---|---|---|---|---|---|---|
| 60 | | | | | | 14 | | | |
| 70 | | S | S-7 | SILTY SAND WITH GRAVEL (SM): Medium dense to very dense, wet, fine to medium sand, some silt, few fine gravel, gray. [Glacial Till] | 20 | 6 9 10 10 | 19 | 9.6 | MC |
| 80 | | S | S-8 | Increased drilling resistance, possible cobbles from 78' - 79'. | 8 | 30 50 30/0" | 80+ | 8.3 | MC |
| 90 | | | | | | | | | |

Notes: 1. MaineDOT Project No. 019386.00
2. SPT N-values are uncorrected.
3. Shear Strength data collected using an Acker 3-5/8" x 9" Field vane and torque wrench.
4. Hydraulically pushed casing from 15' to 60' to continue drilling below 60', no hammer used to drive casing.

## Boring Log: BB-SPC-101

Total Depth:91.2

Sheet 4 of 4

Project Name:Scarborough Eastern Trail Project
Location: Scarborough Maine
Client: HNTB Corporation
Observed Water Depth:5.0'

RW&A Project No. 0600-092
Surface Elevation: 33.5 FEET
Casing Type: 4" Steel

| DEPTH, FT. | SYMBOL | SAMPLES | SAMPLE NUMBER | DESCRIPTION OF MATERIAL | SAMPLE RECOVERY, IN. | BLOWS PER 6" | SPT-N BLOWS PER FT. | MOISTURE CONTENT % | LAB TESTS |
|---|---|---|---|---|---|---|---|---|---|
| 90 | | | | Possible bedrock at 91', able to drill 2 - 3" into rock until tri-cone bit continually plugged. Bottom of Exploration at 91.2'; tri-cone bit refusal, possible boulder or bedrock. | | | | | |
| 100 | | | | | | | | | |
| 110 | | | | | | | | | |
| 120 | | | | | | | | | |

Notes: 1. MaineDOT Project No. 019386.00
2. SPT N-values are uncorrected.
3. Shear Strength data collected using an Acker 3-5/8" x 9" Field vane and torque wrench.
4. Hydraulically pushed casing from 15' to 60' to continue drilling below 60', no hammer used to drive casing.

## Boring Log:BB-SPC-102

Total Depth (ft): 101.5

Sheet 1 of 4

Project Name:Scarborough Eastern Trail Project
RW&A Project No. 0600-092
Location: Scarborough, Maine
Client: HNTB Corporation
Boring Location: See Exploration Location Plan
Boring Abandonment Method: Backfilled with cuttings
Observed Water Depth:5.0'

Drill Rig:CME 850
Driller Rep.:J. Lee
Date Started: 06/12/2013
Date Completed: 06/12/2013
Surface Elevation: 31.5 FEET
Drilling Method: Rotary Wash
Casing Type: 4" Steel

| DEPTH, FT. | SYMBOL | SAMPLES | SAMPLE NUMBER | DESCRIPTION OF MATERIAL | SAMPLE RECOVERY, IN. | BLOWS PER 6" | SPT-N BLOWS PER FT. | MOISTURE CONTENT % | LAB TESTS |
|---|---|---|---|---|---|---|---|---|---|
| 0 | | S | S-1 | TOPSOIL AND ORGANIC MATERIAL (4 inches). SILTY SAND (SP/SM): Very loose to medium dense, moist, fine sand, little silt, orange-brown. | 14 | 1 1 2 2 | 3 | 21.0 | MC |
| 5 | | S | S-2 | SILTY SAND (SP/SM): Medium dense, wet, fine to medium sand, little silt, orange-brown. Becomes gray-brown around 6ft. | 24 | 4 7 7 10 | 14 | 22.6 | MC |
| 10 | | S | S-3 | SILTY SAND (SM): Loose, wet, fine sand, some silt, gray. | 13 | 4 6 4 5 | 10 | 26.1 | MC |
| 15 | | S | S-4 | SILTY CLAY WITH SAND (CL-ML): Very soft to medium stiff, wet, silty clay, occasional fine sand seams, gray. | 22 | WOH/ 18" WOH/ 6" | WOH | 41.8 | MC |
| 20 | | S | S-5 | | 24 | WOH/ 24" | WOH | 46.0 | MC |
| 25 | FV | | | Field Vane Raw Data: T=50ft-lb, Residual T=4ft-lb<br>Undrained Shear Strength: Su=0.55 ksf, Residual Su=0.04 ksf<br>Field Vane Raw Data: T=39ft-lb, Residual T=2ft-lb<br>Undrained Shear Strength: Su=0.43 ksf, Residual Su=0.02 ksf | | | | | |

Notes: 1. MaineDOT Project No. 019386.00
2. SPT N-values are uncorrected.
3. Shear Strength data collected using an Acker 3-5/8" x 9" Field vane and torque wrench.
4. Hydraulically pushed casing from 15' to 60' to continue drilling below 60', no hammer used to drive casing.

## Boring Log:BB-SPC-102

Total Depth:101.5

Sheet 2 of 4

Project Name:Scarborough Eastern Trail Project
Location: Scarborough Maine
Client: HNTB Corporation
Observed Water Depth:5.0'

RW&A Project No. 0600-092
Surface Elevation: 31.5 FEET
Casing Type: 4" Steel

| DEPTH, FT. | SYMBOL | SAMPLES | SAMPLE NUMBER | DESCRIPTION OF MATERIAL | SAMPLE RECOVERY, IN. | BLOWS PER 6" | SPT-N BLOWS PER FT. | MOISTURE CONTENT % | LAB TESTS |
|---|---|---|---|---|---|---|---|---|---|
| 30 | | U | U-1 | Thin-walled tube sample from 30' - 32'. | 20 | | | 50.2 | C AL GV MC |
| 35 | FV | | | Field Vane Raw Data: T=39ft-lb, Residual T=1ft-lb<br>Undrained Shear Strength: Su=0.40 ksf, Residual Su=0.01 ksf<br>Field Vane Raw Data: T=42ft-lb, Residual T=1ft-lb<br>Undrained Shear Strength: Su=0.46 ksf, Residual Su=0.01 ksf | | | | | |
| 40 | | U | U-2 | Thin-walled tube sample from 40' - 42'. | 12 | | | | |
| 45 | FV | | | Field Vane Raw Data: T=66ft-lb, Residual T=1ft-lb<br>Undrained Shear Strength: Su=0.72 ksf, Residual Su=0.01 ksf<br>Field Vane Raw Data: T=75ft-lb, Residual T=0ft-lb<br>Undrained Shear Strength: Su=0.82 ksf, Residual Su=0.00 ksf | | | | | |
| 50 | | U | U-3 | Thin-walled tube sample from 50' - 52'. | 24 | | | 40.9 | C GV MC |
| 55 | FV | | | Field Vane Raw Data: T=66ft-lb, Residual T=0ft-lb<br>Undrained Shear Strength: Su=0.72 ksf, Residual Su=0.00 ksf<br>Field Vane Raw Data: T=90ft-lb, Residual T=0ft-lb<br>Undrained Shear Strength: Su=0.98 ksf, Residual Su=0.00 ksf | | | | | |

Notes: 1. MaineDOT Project No. 019386.00
2. SPT N-values are uncorrected.
3. Shear Strength data collected using an Acker 3-5/8" x 9" Field vane and torque wrench.
4. Hydraulically pushed casing from 15' to 60' to continue drilling below 60', no hammer used to drive casing.

## Boring Log:BB-SPC-102

Total Depth:101.5

Sheet 3 of 4

Project Name:Scarborough Eastern Trail Project
Location: Scarborough Maine
Client: HNTB Corporation
Observed Water Depth:5.0'

RW&A Project No. 0600-092
Surface Elevation: 31.5 FEET
Casing Type: 4" Steel

| DEPTH, FT. | SYMBOL | SAMPLES | SAMPLE NUMBER | DESCRIPTION OF MATERIAL | SAMPLE RECOVERY, IN. | BLOWS PER 6" | SPT-N BLOWS PER FT. | MOISTURE CONTENT % | LAB TESTS |
|---|---|---|---|---|---|---|---|---|---|
| 60 | FV | | | Field Vane Raw Data: T=50ft-lb, Residual T=0ft-lb<br>Undrained Shear Strength: Su=0.55 ksf, Residual Su=0.00 ksf<br>Field Vane Raw Data: T=79ft-lb, Residual T=0ft-lb<br>Undrained Shear Strength: Su=0.86 ksf, Residual Su=0.00 ksf | | | | | |
| 65 | FV | | | Field Vane Raw Data: T=88ft-lb, Residual T=12ft-lb<br>Undrained Shear Strength: Su=0.96 ksf, Residual Su=0.13 ksf<br>Field Vane Raw Data: T=87ft-lb, Residual T=13ft-lb<br>Undrained Shear Strength: Su=0.95 ksf, Residual Su=0.14 ksf | | | | | |
| 70 | | S | S-6 | SILTY SAND (SM): Medium dense to dense, wet, fine sand, some silt, trace medium sand, gray-brown. | 14 | 10 11 18 18 | 29 | 24.1 | MC |
| 75 | | S | S-7 | | 12 | 12 17 18 22 | 35 | 20.0 | MC |
| 80 | | S | S-8 | | 14 | 12 15 20 21 | 35 | 21.3 | MC |
| 85 | | S | S-9 | Occasional medium to coarse sand from 85' - 86'. | 20 | 15 13 19 26 | 32 | 22.2 | MC |

Notes: 1. MaineDOT Project No. 019386.00
2. SPT N-values are uncorrected.
3. Shear Strength data collected using an Acker 3-5/8" x 9" Field vane and torque wrench.
4. Hydraulically pushed casing from 15' to 60' to continue drilling below 60', no hammer used to drive casing.

## Boring Log:BB-SPC-102

Total Depth:101.5

Sheet 4 of 4

Project Name:Scarborough Eastern Trail Project
Location: Scarborough Maine
Client: HNTB Corporation
Observed Water Depth:5.0'

RW&A Project No. 0600-092
Surface Elevation: 31.5 FEET
Casing Type: 4" Steel

| DEPTH, FT. | SYMBOL | SAMPLES | SAMPLE NUMBER | DESCRIPTION OF MATERIAL | SAMPLE RECOVERY, IN. | BLOWS PER 6" | SPT-N BLOWS PER FT. | MOISTURE CONTENT % | LAB TESTS |
|---|---|---|---|---|---|---|---|---|---|
| 90 | | S | S-10 | | 15 | 10 14 17 24 | 31 | 26.2 | MC |
| 95 | | S | S-11 | SILTY SAND WITH GRAVEL (SM): Dense, wet, fine to medium sand, little silt, few fine gravel, orange-brown. SILTY SAND WITH GRAVEL (SM): Dense to very dense, wet, fine sand, some silt, little gravel, gray. [Glacial Till] | 12 | 13 20 30 31 | 50 | 13.5 | MC |
| 100 | | S | S-12 | Bottom of Exploration at 101.5'; Terminated boring in Glacial Till. | 14 | 17 32 50/5" | 82 | 10.3 | MC |
| 105 | | | | | | | | | |
| 110 | | | | | | | | | |
| 115 | | | | | | | | | |
| 120 | | | | | | | | | |

PROGRESS PLANS
April 4, 2023

Notes: 1. MaineDOT Project No. 019386.00
2. SPT N-values are uncorrected.
3. Shear Strength data collected using an Acker 3-5/8" x 9" Field vane and torque wrench.
4. Hydraulically pushed casing from 15' to 60' to continue drilling below 60', no hammer used to drive casing.

STATE OF MAINE
DEPARTMENT OF TRANSPORTATION

AC-STP-1942(600)X & CMAQ-1942(610)

WIN
19426.00 & 019426.10 HIGHWAY PLANS

| | BY | DATE |
|---|---|---|
| PROJ. MANAGER | BILL RECHL | |
| DESIGN-DETAILED | C.Helmick | P. Bishop 12\22 |
| CHECKED-REVIEWED | L. DRISCOLL | J. Olund 12\22 |
| DESIGN2-DETAILED2 | - | - |
| DESIGN3-DETAILED3 | - | - |
| REVISIONS 1 | - | - |
| REVISIONS 2 | - | - |
| REVISIONS 3 | - | - |
| REVISIONS 4 | - | - |
| FIELD CHANGES | - | - |

SIGNATURE

P.E. NUMBER

DATE

TOWN OF SCARBOROUGH
EASTERN TRAIL CONNECTOR
SCARBOROUGH TO SOUTH PORTLAND, MAINE

BORING LOGS

SHEET NUMBER

4

OF 66

Maine Department of Transportation

Soil/Rock Exploration Log

US UNITS

Project: Scarborough Eastern Trail Project
Location: Scarborough, Maine

Boring No.: BB-SPC-201
WIN: 019426.10

Driller: M.W. Griffith & Associates, Inc.
Operator: M. Nadeau
Logged By: D. Walker
Date Start/Finish: 10/07/2016 / 10/07/2016
Boring Location: See Exploration Location Plan

Elevation (ft.): N/A
Datum:
Rig Type: DTearTan D50
Drilling Method: HSA, 3" roller bit, drive + wash
Casing ID/OD: 4" ID

Auger ID/OD: 4.25" ID / 7.5" OD
Sampler: SPT Split-Barrel
Hammer Wt./Fall: 140 lbs. 30"
Core Barrel: N02
Water Level*: 6.5'

Soil/Rock Types:
D = Split Spoon Sample
WO = Unsuccessful Split Spoon Sample attempt
U = Thin Wall Tube Sample
R = Rock Core Sample
V = Insitu Vane Shear Test
SSA = Solid Stem Auger

Soil/Rock Types:
$S_u$ = Insitu Field Vane Shear Strength (psf)
$T_v$ = Pocket Torvane Shear Strength (psf)
$q_p$ = Unconfined Compressive Strength (ksf)
$S_{u(LAB)}$ = Lab Vane Shear Strength (psf)
WOH = weight of 140lb. hammer
WOR = weight of rods

Soil/Rock Types:
WC = water content, percent
LL = Liquid Limit
PL = Plastic Limit
PI = Plasticity Index
G = Grain Size Analysis
C = Consolidation Test

Sample Information

| Depth (ft.) | Sample No. | Rec./Rec. (in.) | Sample Depth (ft.) | Blows /6 in. Shear Strength (psf) or RQD (%) | N-value | Casing Blows | Elevation (ft.) | Graphic Log |
|---|---|---|---|---|---|---|---|---|
| 0 | S-1 | 24/10 | 0.0 - 2.0 | | 22 | | | |
| 5 | S-2 | 24/14 | 5.0 - 7.0 | | 2 | | | |
| 10 | S-3 | 24/14 | 10.0 - 12.0 | | 3 | | | |
| 15 | FV-1 | | 16.0 - 16.8 | Su=659 psf Residual Su=51 psf | | | | |
| | FV-2 | | 17.0 - 17.8 | Su=637 psf Residual Su=82 psf | | | | |
| | U | 24/0 | 20.0 - 22.0 | | | | | |
| | U-1 | 24/24 | 22.0 - 24.0 | | | | | |
| 25 | FV-3 | | 26.0 - 26.8 | Su=519 psf Residual Su=56 psf | | | | |
| | FV-4 | | 27.0 - 27.8 | Su=483 psf Residual Su=69 psf | | | | |
| 30 | | | | | | | | |

Visual Description and Remarks

- 0.0: SAND WITH SILT (SP-SM): Brown dry, medium dense, fine sand, some silt, little gravel, reddish band at 2'.
- 5.0: SAND (SP): Brown, moist to wet, very loose, medium to coarse sand.
- 6.5: SILTY SAND (SM): Gray, wet, very loose, fine sand, some silt, 1" silty clay lense at 6.5'.
- Grades to include trace clay.
- 11.0: SAND WITH SILT (SP-SM): Tan, wet, very loose, fine sand, little silt.
- 14.0: SILTY CLAY (CL): Gray, wet, very soft to medium, clay with silt.
- 65x130 mm raw torque readings: FV-1: 24.0/3.3 ft-lbs; FV-2: 23.2/3.0 ft-lbs
- Attempted Shelby Tube, no recovery.
- 65x130 mm raw torque readings: FV-3: 18.9/3.5 ft-lbs; FV-4: 17.6/2.5 ft-lbs

Laboratory Testing Results/ AASHTO and Unified Class

Remarks:
1. RWG&A Project No. 0600-102.
2. In-situ vane shear tests conducted using MaineDOT provided Geonor 65x130mm rectangular vane.
3. Hammer Serial No. 283.
4. SPT N-Values are uncorrected.

Stratification lines represent approximate boundaries between soil types; transitions may be gradual.

* Water level readings have been made at times and under conditions stated. Groundwater fluctuations may occur due to conditions other than those present at the time measurements were made.

Page 1 of 2
Boring No.: BB-SPC-201

---

Maine Department of Transportation

Soil/Rock Exploration Log

US UNITS

Project: Scarborough Eastern Trail Project
Location: Scarborough, Maine

Boring No.: BB-SPC-201
WIN: 019426.10

Driller: M.W. Griffith & Associates, Inc.
Operator: M. Nadeau
Logged By: D. Walker
Date Start/Finish: 10/07/2016 / 10/07/2016
Boring Location: See Exploration Location Plan

Elevation (ft.): N/A
Datum:
Rig Type: DTearTan D50
Drilling Method: HSA, 3" roller bit, drive + wash
Casing ID/OD: 4" ID

Auger ID/OD: 4.25" ID / 7.5" OD
Sampler: SPT Split-Barrel
Hammer Wt./Fall: 140 lbs. 30"
Core Barrel: N02
Water Level*: 6.5'

Soil/Rock Types:
D = Split Spoon Sample
WO = Unsuccessful Split Spoon Sample attempt
U = Thin Wall Tube Sample
R = Rock Core Sample
V = Insitu Vane Shear Test
SSA = Solid Stem Auger

Soil/Rock Types:
$S_u$ = Insitu Field Vane Shear Strength (psf)
$T_v$ = Pocket Torvane Shear Strength (psf)
$q_p$ = Unconfined Compressive Strength (ksf)
$S_{u(LAB)}$ = Lab Vane Shear Strength (psf)
WOH = weight of 140lb. hammer
WOR = weight of rods

Soil/Rock Types:
WC = water content, percent
LL = Liquid Limit
PL = Plastic Limit
PI = Plasticity Index
G = Grain Size Analysis
C = Consolidation Test

Sample Information

| Depth (ft.) | Sample No. | Rec./Rec. (in.) | Sample Depth (ft.) | Blows /6 in. Shear Strength (psf) or RQD (%) | N-value | Casing Blows | Elevation (ft.) | Graphic Log |
|---|---|---|---|---|---|---|---|---|
| 30 | U-2 | 24/24 | 30.0 - 32.0 | | | | | |
| 35 | FV-5 | | 36.0 - 36.8 | Su=475 psf Residual Su=33 psf | | | | |
| | FV-6 | | 37.0 - 37.8 | Su=511 psf Residual Su=13 psf | | | | |
| 40 | S-4 | 24/24 | 40.0 - 42.0 | | | WOR | | |
| 45 | U-3 | 24/24 | 45.0 - 47.0 | | | | | |
| 50 | S-5 | 24/24 | 50.0 - 52.0 | | | 2 | | |
| 55 | | | | | | | | |

Visual Description and Remarks

- 65x130 mm raw torque readings: FV-5: 17.3/1.2 ft-lbs; FV-6: 18.6/1.2 ft-lbs
- Could not advance field vane. Silty sand lense at 51'.
- Becomes soft, dark gray.
- 52.0: Bottom of Exploration at 52.0 feet below ground surface. Not refusal.

Laboratory Testing Results/ AASHTO and Unified Class: T4430 C

Remarks:
1. RWG&A Project No. 0600-102.
2. In-situ vane shear tests conducted using MaineDOT provided Geonor 65x130mm rectangular vane.
3. Hammer Serial No. 283.
4. SPT N-Values are uncorrected.

Stratification lines represent approximate boundaries between soil types; transitions may be gradual.

* Water level readings have been made at times and under conditions stated. Groundwater fluctuations may occur due to conditions other than those present at the time measurements were made.

Page 2 of 2
Boring No.: BB-SPC-201

---

PROGRESS PLANS
April 4, 2023

---

Maine Department of Transportation

Soil/Rock Exploration Log

US UNITS

Project: Scarborough Eastern Trail Project
Location: Scarborough, Maine

Boring No.: BB-SPC-201A
WIN: 019426.10

Driller: Northern Test Boring
Operator: Mike Nadeau
Logged By: Serena Pape
Date Start/Finish: 06-15-2018 / 06-18-2018
Boring Location: East of Tracks

Elevation (ft.):
Datum:
Rig Type: DTearTan D-50 Turbo
Drilling Method: 3" Tri cone Bit+ Rotary Wash
Casing ID/OD: 4" Steel Casing

Auger ID/OD:
Sampler: SPT Split-Barrel
Hammer Wt./Fall: 140 lb/30in.
Core Barrel:
Water Level*: 6'

Soil/Rock Types:
D = Split Spoon Sample
WO = Unsuccessful Split Spoon Sample attempt
U = Thin Wall Tube Sample
R = Rock Core Sample
V = Insitu Vane Shear Test
SSA = Solid Stem Auger

Soil/Rock Types:
$S_u$ = Insitu Field Vane Shear Strength (psf)
$T_v$ = Pocket Torvane Shear Strength (psf)
$q_p$ = Unconfined Compressive Strength (ksf)
$S_{u(LAB)}$ = Lab Vane Shear Strength (psf)
WOH = weight of 140lb. hammer
WOR = weight of rods

Soil/Rock Types:
WC = water content, percent
LL = Liquid Limit
PL = Plastic Limit
PI = Plasticity Index
G = Grain Size Analysis
C = Consolidation Test

Sample Information

| Depth (ft.) | Sample No. | Rec./Rec. (in.) | Sample Depth (ft.) | Blows /6 in. Shear Strength (psf) or RQD (%) | N-value | Casing Blows | Elevation (ft.) | Graphic Log |
|---|---|---|---|---|---|---|---|---|
| 0 | | | | | | | | |
| 5 | | | | | | | | |
| 10 | | | | | | | | |
| 15 | | | | | | | | |
| 20 | | | | | | | | |
| 25 | | | | | | | | |
| 30 | | | | | | | | |

Visual Description and Remarks

- Casing hydraulically pushed to 60 feet below ground surface.

Laboratory Testing Results/ AASHTO and Unified Class

Remarks:
1. RWG&A Project No. 0600-102
2. Drive and wash to 55 feet without sampling. Refer to log BB-SPC-201 for subsurface materials from 0 to 55 feet below ground surface.
3. Hammer Serial No. 377.
4. SPT N-Values uncorrected.

Stratification lines represent approximate boundaries between soil types; transitions may be gradual.

* Water level readings have been made at times and under conditions stated. Groundwater fluctuations may occur due to conditions other than those present at the time measurements were made.

Page 1 of 5
Boring No.: BB-SPC-201A

---

Maine Department of Transportation

Soil/Rock Exploration Log

US UNITS

Project: Scarborough Eastern Trail Project
Location: Scarborough, Maine

Boring No.: BB-SPC-201A
WIN: 019426.10

Driller: Northern Test Boring
Operator: Mike Nadeau
Logged By: Serena Pape
Date Start/Finish: 06-15-2018 / 06-18-2018
Boring Location: East of Tracks

Elevation (ft.):
Datum:
Rig Type: DTearTan D-50 Turbo
Drilling Method: 3" Tri cone Bit+ Rotary Wash
Casing ID/OD: 4" Steel Casing

Auger ID/OD:
Sampler: SPT Split-Barrel
Hammer Wt./Fall: 140 lb/30in.
Core Barrel:
Water Level*: 6'

Soil/Rock Types:
D = Split Spoon Sample
WO = Unsuccessful Split Spoon Sample attempt
U = Thin Wall Tube Sample
R = Rock Core Sample
V = Insitu Vane Shear Test
SSA = Solid Stem Auger

Soil/Rock Types:
$S_u$ = Insitu Field Vane Shear Strength (psf)
$T_v$ = Pocket Torvane Shear Strength (psf)
$q_p$ = Unconfined Compressive Strength (ksf)
$S_{u(LAB)}$ = Lab Vane Shear Strength (psf)
WOH = weight of 140lb. hammer
WOR = weight of rods

Soil/Rock Types:
WC = water content, percent
LL = Liquid Limit
PL = Plastic Limit
PI = Plasticity Index
G = Grain Size Analysis
C = Consolidation Test

Sample Information

| Depth (ft.) | Sample No. | Rec./Rec. (in.) | Sample Depth (ft.) | Blows /6 in. Shear Strength (psf) or RQD (%) | N-value | Casing Blows | Elevation (ft.) | Graphic Log |
|---|---|---|---|---|---|---|---|---|
| 60 | S-2 | 24/14 | 60.0 - 62.0 | 5 / 5 / 7 / 8 | 12 | | | |
| 65 | S-3 | 24/8 | 65.0 - 67.0 | 4 / 5 / 7 / 9 | 12 | | -65.0 | |
| 70 | S-4 | 24/24 | 70.0 - 72.0 | 3 / 2 / 3 / 5 | 5 | | | |
| 75 | S-5 | 24/9 | 75.0 - 77.0 | 16 / 16 / 35 / 23 | 51 | | -76.0 | |
| 80 | S-6 | 24/18 | 80.0 - 82.0 | 26 / 26 / 34 / 27 | 60 | | | |
| 85 | S-7 | 24/15 | 85.0 - 87.0 | 17 / 18 / 25 / 38 | 43 | | | |
| 90 | | | | | | | | |

Visual Description and Remarks

- Becomes medium dense, medium to fine sand, little silt, slightly darker.
- 65.0: SAND WITH SILT (SP-SM): Medium dense, wet, coarse to fine sand, few silt, gray-brown.
- SAND WITH SILT AND CLAY (SP-SM): Loose/soft, wet, coarse to fine sand, varying amounts of clay/silt, gray.
- 76.0: SANDY GRAVEL WITH SILT (GW-GM): Dense to very dense, wet, gravel, some sand, some silt, occasional cobbles. Chatter in auger.
- Probable till: angular aggregate.
- Chatter in auger at 83'.

Laboratory Testing Results/ AASHTO and Unified Class

| | |
|---|---|
| | WC=11.8% |
| 15112F | WC=21.6% G |
| | WC=13.3% |
| | WC=7.8% |
| | WC=7.7% |
| | WC=7.1% |

Remarks:
1. RWG&A Project No. 0600-102
2. Drive and wash to 55 feet without sampling. Refer to log BB-SPC-201 for subsurface materials from 0 to 55 feet below ground surface.
3. Hammer Serial No. 377.
4. SPT N-Values uncorrected.

Stratification lines represent approximate boundaries between soil types; transitions may be gradual.

* Water level readings have been made at times and under conditions stated. Groundwater fluctuations may occur due to conditions other than those present at the time measurements were made.

Page 3 of 5
Boring No.: BB-SPC-201A

---

Maine Department of Transportation

Soil/Rock Exploration Log

US UNITS

Project: Scarborough Eastern Trail Project
Location: Scarborough, Maine

Boring No.: BB-SPC-201A
WIN: 019426.10

Driller: Northern Test Boring
Operator: Mike Nadeau
Logged By: Serena Pape
Date Start/Finish: 06-15-2018 / 06-18-2018
Boring Location: East of Tracks

Elevation (ft.):
Datum:
Rig Type: DTearTan D-50 Turbo
Drilling Method: 3" Tri cone Bit+ Rotary Wash
Casing ID/OD: 4" Steel Casing

Auger ID/OD:
Sampler: SPT Split-Barrel
Hammer Wt./Fall: 140 lb/30in.
Core Barrel:
Water Level*: 6'

Soil/Rock Types:
D = Split Spoon Sample
WO = Unsuccessful Split Spoon Sample attempt
U = Thin Wall Tube Sample
R = Rock Core Sample
V = Insitu Vane Shear Test
SSA = Solid Stem Auger

Soil/Rock Types:
$S_u$ = Insitu Field Vane Shear Strength (psf)
$T_v$ = Pocket Torvane Shear Strength (psf)
$q_p$ = Unconfined Compressive Strength (ksf)
$S_{u(LAB)}$ = Lab Vane Shear Strength (psf)
WOH = weight of 140lb. hammer
WOR = weight of rods

Soil/Rock Types:
WC = water content, percent
LL = Liquid Limit
PL = Plastic Limit
PI = Plasticity Index
G = Grain Size Analysis
C = Consolidation Test

Sample Information

| Depth (ft.) | Sample No. | Rec./Rec. (in.) | Sample Depth (ft.) | Blows /6 in. Shear Strength (psf) or RQD (%) | N-value | Casing Blows | Elevation (ft.) | Graphic Log |
|---|---|---|---|---|---|---|---|---|
| 90 | S-8 | 23/16 | 90.0 - 91.9 | 23 / 19 / 21 / 50/ 5" | 40 | 109 | | |
| 95 | S-9 | 24/15 | 95.0 - 97.0 | 40 / 50 / 50/3" | 100+ | | | |
| 100 | S-10 | 24/17 | 100.0 - 102.0 | 39 / 45 / 50/5" | 95+ | | | |
| 105 | S-11 | 24/21 | 105.0 - 107.0 | 32 / 37 / 45 / 50/ 5" | 82 | | | |
| 110 | S-12 | 24/8 | 110.0 - 112.0 | 21 / 50/5" | 100+ | | | |
| 115 | S-13 | 24/19 | 115.0 - 117.0 | 33 / 46 / 50/5" | 86+ | | | |
| 120 | | | | | | | | |

Visual Description and Remarks

- Switch to 3" casing at 90'.
- Chatter in auger at 91'.

Laboratory Testing Results/ AASHTO and Unified Class

| |
|---|
| WC=7.5% |
| WC=8.4% |
| WC=9.8% |
| WC=9.0% |

Remarks:
1. RWG&A Project No. 0600-102
2. Drive and wash to 55 feet without sampling. Refer to log BB-SPC-201 for subsurface materials from 0 to 55 feet below ground surface.
3. Hammer Serial No. 377.
4. SPT N-Values uncorrected.

Stratification lines represent approximate boundaries between soil types; transitions may be gradual.

* Water level readings have been made at times and under conditions stated. Groundwater fluctuations may occur due to conditions other than those present at the time measurements were made.

Page 4 of 5
Boring No.: BB-SPC-201A

---

Maine Department of Transportation

Soil/Rock Exploration Log

US UNITS

Project: Scarborough Eastern Trail Project
Location: Scarborough, Maine

Boring No.: BB-SPC-201A
WIN: 019426.10

Driller: Northern Test Boring
Operator: Mike Nadeau
Logged By: Serena Pape
Date Start/Finish: 06-15-2018 / 06-18-2018
Boring Location: East of Tracks

Elevation (ft.):
Datum:
Rig Type: DTearTan D-50 Turbo
Drilling Method: 3" Tri cone Bit+ Rotary Wash
Casing ID/OD: 4" Steel Casing

Auger ID/OD:
Sampler: SPT Split-Barrel
Hammer Wt./Fall: 140 lb/30in.
Core Barrel:
Water Level*: 6'

Soil/Rock Types:
D = Split Spoon Sample
WO = Unsuccessful Split Spoon Sample attempt
U = Thin Wall Tube Sample
R = Rock Core Sample
V = Insitu Vane Shear Test
SSA = Solid Stem Auger

Soil/Rock Types:
$S_u$ = Insitu Field Vane Shear Strength (psf)
$T_v$ = Pocket Torvane Shear Strength (psf)
$q_p$ = Unconfined Compressive Strength (ksf)
$S_{u(LAB)}$ = Lab Vane Shear Strength (psf)
WOH = weight of 140lb. hammer
WOR = weight of rods

Soil/Rock Types:
WC = water content, percent
LL = Liquid Limit
PL = Plastic Limit
PI = Plasticity Index
G = Grain Size Analysis
C = Consolidation Test

Sample Information

| Depth (ft.) | Sample No. | Rec./Rec. (in.) | Sample Depth (ft.) | Blows /6 in. Shear Strength (psf) or RQD (%) | N-value | Casing Blows | Elevation (ft.) | Graphic Log |
|---|---|---|---|---|---|---|---|---|
| 120 | S-14 | 24/4 | 120.0 - 122.0 | 16 / 25 / 50/4" | 75+ | | 123.8 | |
| 125 | R-1 | 24/23 | 123.8 - 125.8 | RQD = 0% | | | | |
| | R-2 | 24/23 | 125.8 - 127.8 | RQD = 0% | | | | |
| 130 | R-3 | 60/48 | 128.8 - 133.8 | RQD = 22% | | | 133.8 | |
| 135 | | | | | | | | |
| 140 | | | | | | | | |
| 145 | | | | | | | | |
| 150 | | | | | | | | |

Visual Description and Remarks

- Bedrock encountered about 123.8' below ground surface. Begin NQ2 rock core.

Run 1 & Run 2
Dark-gray, highly micaceous, aphanitic to fine-grained PELITE. Rock is hard and fresh to slightly weathered. Fractures are moderately spaced and tight to open, with vertical to moderate dipping angles. Surfaces are smooth and slightly undulating. Occasional quartzite inclusions and calcite intrusions. Characteristics similar to interbedded pelite and sandstone of the Cape Elizabeth Formation. 1' rock core lost due to drilling method. Adjustments made for R-3.

| Depth (ft.) | Time(min.) |
|---|---|
| 124.8 | 2 |
| 125.8 | 2.5 |
| 126.8 | 5+ |
| 127.8 | 3 |

Plugged

Run 3
Dark-gray, highly micaceous, aphanitic to fine-grained PELITE. Rock is hard and fresh to slightly weathered. Highly fractured with moderate to extreme fracture spacing. High to shallow dipping angles. Stepped and undulating fractures. Tight to open, with smooth and polished faces. Occasional quartzite inclusions and calcite intrusions. Characteristics similar to those of interbedded pelite and sandstone of the Cape Elizabeth formation.

| Depth (ft.) | Time(min.) |
|---|---|
| 129.8 | 3 |
| 130.8 | 1.25 |
| 131.8 | 2.25 |
| 132.8 | 2 |
| 133.8 | 1.75 |

123.8
133.8

- Bottom of Exploration at 133.8 feet below ground surface.

Laboratory Testing Results/ AASHTO and Unified Class

Remarks:
1. RWG&A Project No. 0600-102
2. Drive and wash to 55 feet without sampling. Refer to log BB-SPC-201 for subsurface materials from 0 to 55 feet below ground surface.
3. Hammer Serial No. 377.
4. SPT N-Values uncorrected.

Stratification lines represent approximate boundaries between soil types; transitions may be gradual.

* Water level readings have been made at times and under conditions stated. Groundwater fluctuations may occur due to conditions other than those present at the time measurements were made.

Page 5 of 5
Boring No.: BB-SPC-201A

---

STATE OF MAINE
DEPARTMENT OF TRANSPORTATION

AC-STP-1942(600)X & CMAQ-1942(610)

WIN
19426.00 & 019426.10 HIGHWAY PLANS

| | BY | DATE |
|---|---|---|
| BILL REICH | P. Bishop | 12\22 |
| C.Helmick | J. Olund | 12\22 |
| L. DRISCOLL | - | - |
| - | - | - |
| - | - | - |
| - | - | - |
| - | - | - |

SIGNATURE

P.E. NUMBER

DATE

| | |
|---|---|
| PROJ. MANAGER | |
| DESIGN-DETAILED | |
| CHECKED-REVIEWED | |
| DESIGN2-DETAILED2 | |
| DESIGN3-DETAILED3 | |

| | |
|---|---|
| REVISIONS 1 | - - |
| REVISIONS 2 | - - |
| REVISIONS 3 | - - |
| REVISIONS 4 | - - |
| FIELD CHANGES | - - |

TOWN OF SCARBOROUGH
EASTERN TRAIL CONNECTOR
SCARBOROUGH TO SOUTH PORTLAND, MAINE

BORING LOGS

SHEET NUMBER
5
OF 66

Date:4/4/2023
Username:
Division:
Filename: 005_Boring Logs.dgn

Username:

Division:

Filename: 006_Boring Logs.dgn

Date:4/4/2023

## Maine Department of Transportation — Soil/Rock Exploration Log (US UNITS)

Project: Scarborough Eastern Trail Project
Location: Scarborough, Maine
Boring No.: BB-SPC-202
WIN: 019426.10

Driller: H.W. Gillespie & Associates-Inc.
Elevation (ft.): N/A
Auger ID/OD: 4.25" ID / 7.5" OD
Operator: M. Nadeau
Datum:
Sampler: SPT Split-Barrel
Logged By: D. Walker
Rig Type: DTeartan D50
Hammer Wt./Fall: 140lbs. 30"
Date Start/Finish: 10/04/2016 / 10/06/2016
Drilling Method: HSA. 3" roller bit. drive + wash
Core Barrels: NQ2
Boring Location: See Exploration Location Plan
Casing ID/OD: 3" and 4" ID
Water Level*: ?'

Soil Tests: D = Split Spoon Sample; MD = Unsuccessful Split Spoon Sample attempt; U = Thin Wall Tube Sample; R = Rock Core Sample; V = Insitu Vane Shear Test; SSA = Solid Stem Auger; $S_u$ = Insitu Field Vane Shear Strength (psf); $S_{ur}$ = Peaked Remolded Vane Shear Strength (psf); $q_u$ = Unconfined Compressive Strength (ksf); $S_{u(lab)}$ = Lab Vane Shear Strength (psf); WOH = weight of 140lb. hammer; WOR = weight of rods; WC = water content, percent; LL = Liquid Limit; PL = Plastic Limit; PI = Plasticity Index; G = Grain Size Analysis; C = Consolidation Test

Sample Information: Depth (ft.) | Sample No. | Rec./Rec. (in.) | Sample Depth (ft.) | Blows / 6 in. / Shear Strength (psf) or RQD (%) | N-value | Casing Blows | Elevation (ft.) | Graphic Log | Visual Description and Remarks | Laboratory Testing Results/ AASHTO and Unified Class

### Page 1 of 5 — Boring No.: BB-SPC-202

| Depth (ft.) | Sample No. | Rec./Rec. (in.) | Sample Depth (ft.) | Blows / 6 in. / Shear Strength (psf) or RQD (%) | N-value | Casing Blows | Visual Description and Remarks | Laboratory Testing Results/ AASHTO and Unified Class |
|---|---|---|---|---|---|---|---|---|
| 0 | S-1 | 24/15 | 0.0 - 2.0 | | 13 | | SANDY SILT (ML); Brown to dark brown, dry, medium dense, silty, little fine to medium sand, little gravel. | |
| 5 | S-2 | 24/23 | 5.0 - 7.0 | | 15 | | SAND (SP); tan to reddish brown, moist, medium dense, fine sand, trace silt, grading to fine to coarse sand. — 5.0 | |
| | S-3 | 24/20 | 7.0 - 9.0 | | 13 | | SANDY SILT (ML); Gray, wet, stiff, silt with some fine sand. — 7.0 | |
| 10 | S-4 | 24/18 | 10.0 - 12.0 | | 9 | P | SILTY SAND (SM); Gray, wet, medium dense, fine sand, some silt. — 10.0 | |
| | S-5 | 24/24 | 12.0 - 14.0 | | 7 | | SAND (SP); Gray, wet, loose, fine sand, little silt. Occasional silt lenses. — 14.0 | |
| 15 | S-7 | 24/24 | 15.0 - 17.0 | | WOH | | SILTY CLAY (CL); Gray, wet, very soft to medium, clay, some silt. Occasional silt lenses. | |
| 20 | U-1 | 24/24 | 20.0 - 22.0 | | | | | |
| 25 | FV-1 | | 25.0 - 25.8 | Su=445 psf Residual=52 psf | | | 65x130 mm raw torque readings: FV-1: 16.2/1.9 ft-lbs FV-2: 21.5/2.3 ft-lbs | |
| | FV-2 | | 26.0 - 26.8 | Su=590 psf Residual=63 psf | | | | |

Remarks:
1. RWG&A Project No. 0600-102.
2. In-situ vane shear tests conducted using MaineDOT provided Geonor 65x130mm rectangular vane.
3. Hammer Serial No. 283.
4. SPT N-Values are uncorrected.

Stratification lines represent approximate boundaries between soil types; transitions may be gradual.

* Water level readings have been made at times and under conditions stated. Groundwater fluctuations may occur due to conditions other than those present at the time measurements were made.

Page 1 of 5 — Boring No.: BB-SPC-202

### Page 2 of 5 — Boring No.: BB-SPC-202

| Depth (ft.) | Sample No. | Rec./Rec. (in.) | Sample Depth (ft.) | Blows / 6 in. / Shear Strength (psf) or RQD (%) | N-value | Casing Blows | Visual Description and Remarks | Laboratory Testing Results/ AASHTO and Unified Class |
|---|---|---|---|---|---|---|---|---|
| 30 | U-2 | 24/24 | 30.0 - 32.0 | | | | | |
| 35 | FV-3 | | 36.0 - 36.8 | Su=663 psf Residual=52 psf | | | 65x130 mm raw torque readings: FV-3: 20.5/1.9 ft-lbs FV-4: 18.5/1.2 ft-lbs | |
| | FV-4 | | 37.0 - 37.8 | Su=808 psf Residual=53 psf | | | | |
| 40 | U-3 | 24/24 | 40.0 - 42.0 | | | | | |
| 45 | FV-5 | | 46.0 - 46.8 | Su=784 psf Residual Su=107 psf | | | 65x130 mm raw torque readings: FV-5: 28.9/3.9 ft-lbs FV-6: 31.3/3.5 ft-lbs | |
| | FV-6 | | 47.0 - 47.8 | Su=860 psf Residual Su=96 psf | | | | |
| 50 | U-4 | 12/12 | 50.0 - 51.0 | | | | SANDY SILT (ML); Dark gray, wet, loose, silt, with fine sand. — 49.0 | |
| 55 | S-9 | 24/12 | 55.0 - 57.0 | | 9 | | SILTY SAND (SM); Gray, wet, loose to medium dense, fine sand, little silt, little clay, few fine to medium gravel. — 55.0 | 143804 WC=13.2% G |

Remarks:
1. RWG&A Project No. 0600-102.
2. In-situ vane shear tests conducted using MaineDOT provided Geonor 65x130mm rectangular vane.
3. Hammer Serial No. 283.
4. SPT N-Values are uncorrected.

Stratification lines represent approximate boundaries between soil types; transitions may be gradual.

* Water level readings have been made at times and under conditions stated. Groundwater fluctuations may occur due to conditions other than those present at the time measurements were made.

Page 2 of 5 — Boring No.: BB-SPC-202

### Page 3 of 5 — Boring No.: BB-SPC-202

| Depth (ft.) | Sample No. | Rec./Rec. (in.) | Sample Depth (ft.) | Blows / 6 in. / Shear Strength (psf) or RQD (%) | N-value | Casing Blows | Elevation (ft.) | Graphic Log | Visual Description and Remarks | Laboratory Testing Results/ AASHTO and Unified Class |
|---|---|---|---|---|---|---|---|---|---|---|
| 60 | S-10 | 24/24 | 60.0 - 62.0 | | 5 | | | | | 143808 WC=11.2% G |
| 65 | S-11 | 24/7 | 65.0 - 67.0 | | 13 | 39 | | | Becomes medium dense. | |
| 70 | S-12 | 24/14 | 70.0 - 72.0 | | 26 | 15 | | | SAND WITH CLAY (SP-SC); Brownish gray, wet, medium dense, fine to medium sand, little coarse sand, few clay, few fine gravel, trace silt. — 68.0 | 123800 WC=14.4% G |
| 75 | S-13 | 24/12 | 75.0 - 77.0 | | 18 | 81 | | | SILTY SAND (SM); Gray, wet, medium dense, fine to medium sand, some silt, few clay, few fine gravel. — 73.0 | |
| 80 | S-14 | 24/13 | 80.0 - 82.0 | | 47 | 25 | | | Becomes dense. | 123800 WC=9.6% G |
| 85 | S-15 | 5/6 | 85.0 - 85.4 | | 50/5" | | | | GRAVEL WITH SILT AND SAND (GM); Gray, wet, very dense, medium to coarse gravel, some silt, little fine to coarse sand. — 85.0 | |
| | | | | | | | | | Drilling resistance at 88'. | |

Remarks:
1. RWG&A Project No. 0600-102.
2. In-situ vane shear tests conducted using MaineDOT provided Geonor 65x130mm rectangular vane.
3. Hammer Serial No. 283.
4. SPT N-Values are uncorrected.

Stratification lines represent approximate boundaries between soil types; transitions may be gradual.

* Water level readings have been made at times and under conditions stated. Groundwater fluctuations may occur due to conditions other than those present at the time measurements were made.

Page 3 of 5 — Boring No.: BB-SPC-202

### Page 4 of 5 — Boring No.: BB-SPC-202

| Depth (ft.) | Sample No. | Rec./Rec. (in.) | Sample Depth (ft.) | Blows / 6 in. / Shear Strength (psf) or RQD (%) | N-value | Casing Blows | Elevation (ft.) | Graphic Log | Visual Description and Remarks | Laboratory Testing Results/ AASHTO and Unified Class |
|---|---|---|---|---|---|---|---|---|---|---|
| 90 | S-16 | 2/1 | 90.0 - 90.2 | | 50/2" | | | | Black, wet, very dense, broken rock, fine to medium gravel. | |
| 95 | S-17 | 3/0 | 95.0 - 95.3 | | 50/3" | | | | No sample recovery. | |
| 100 | S-18 | 3/3 | 100.0 - 100.3 | | 50/3" | | | | | |
| 105 | | | | | | | | | | |
| 110 | S-19 | 10/4 | 110.0 - 110.8 | | 86/10" | | | | | |
| 115 | | | | | | | | | | |
| 120 | | | | | | | | | | |

Remarks:
1. RWG&A Project No. 0600-102.
2. In-situ vane shear tests conducted using MaineDOT provided Geonor 65x130mm rectangular vane.
3. Hammer Serial No. 283.
4. SPT N-Values are uncorrected.

Stratification lines represent approximate boundaries between soil types; transitions may be gradual.

* Water level readings have been made at times and under conditions stated. Groundwater fluctuations may occur due to conditions other than those present at the time measurements were made.

Page 4 of 5 — Boring No.: BB-SPC-202

## Maine Department of Transportation — Soil/Rock Exploration Log (US UNITS)

Project: Scarborough Eastern Trail Project
Location: Scarborough, Maine
Boring No.: EB-SPC-202
WIN: 019426.10

Driller: H.W. Gillespie & Associates-Inc.
Elevation (ft.): N/A
Auger ID/OD: 4.25" ID / 7.5" OD
Operator: M. Nadeau
Datum:
Sampler: SPT Split-Barrel
Logged By: D. Walker
Rig Type: DTeartan D50
Hammer Wt./Fall: 140 lbs. 30"
Date Start/Finish: 10/07/2016 / 10/07/2016
Drilling Method: HSA
Core Barrels: N/A
Boring Location: See Exploration Location Plan
Casing ID/OD: N/A
Water Level*: 5.5'

Soil Tests: D = Split Spoon Sample; MD = Unsuccessful Split Spoon Sample attempt; U = Thin Wall Tube Sample; R = Rock Core Sample; V = Insitu Vane Shear Test; SSA = Solid Stem Auger; $S_u$ = Insitu Field Vane Shear Strength (psf); $S_{ur}$ = Peaked Remolded Vane Shear Strength (psf); $q_u$ = Unconfined Compressive Strength (ksf); $S_{u(lab)}$ = Lab Vane Shear Strength (psf); WOH = weight of 140lb. hammer; WOR = weight of rods; WC = water content, percent; LL = Liquid Limit; PL = Plastic Limit; PI = Plasticity Index; G = Grain Size Analysis; C = Consolidation Test

Sample Information: Depth (ft.) | Sample No. | Rec./Rec. (in.) | Sample Depth (ft.) | Blows / 6 in. / Shear Strength (psf) or RQD (%) | N-value | Casing Blows | Elevation (ft.) | Graphic Log | Visual Description and Remarks | Laboratory Testing Results/ AASHTO and Unified Class

### Page 5 of 5 — Boring No.: BB-SPC-202

| Depth (ft.) | Sample No. | Rec./Rec. (in.) | Sample Depth (ft.) | Blows / 6 in. / Shear Strength (psf) or RQD (%) | N-value | Casing Blows | Visual Description and Remarks | Laboratory Testing Results/ AASHTO and Unified Class |
|---|---|---|---|---|---|---|---|---|
| 120 | S-20 | 11/7 | 120.0 - 120.9 | | 92/11" | | SILT (ML); Gray, wet, very dense, silt with little fine to medium gravel, trace fine sand. — 120.9 | |
| 125 | | | | | | | Increased drilling resistance, possible weathered rock. — 126.0 | |
| | | | | | | | Top of Bedrock. — 127.0 | |
| | R-1 | | 128.0 - 128.5 | RQD=25% | | | Gray to black, aphanitic to fine grained PHYLLITE. Rock is very soft to hard, slightly to highly weathered, thinly bedded, moderate to extremely fractured with low to vertical jointing. Cleavage planes are slightly rough to rough with tight to very wide joint wall separations and slight to moderately weathered joints. Some clay infilling in fractures. Characteristics similar to rock types of the Scarboro formation. | |
| 130 | R-2 | | 129.0 - 133.5 | RQD=25% | | | | |
| | R-3 | | 133.0 - 136.0 | RQD=25% | | | R-1: Recovery=6'/6" R-2: Recovery=5'/5'4" R-3: Recovery=4'9"/36" | |
| 135 | | | | | | | | |
| 140 | | | | | | | | |
| 145 | | | | | | | | |
| 150 | | | | | | | Bottom of Exploration at 136.0 feet below ground surface. — 136.0 | |

Remarks:
1. RWG&A Project No. 0600-102.
2. In-situ vane shear tests conducted using MaineDOT provided Geonor 65x130mm rectangular vane.
3. Hammer Serial No. 283.
4. SPT N-Values are uncorrected.

Stratification lines represent approximate boundaries between soil types; transitions may be gradual.

* Water level readings have been made at times and under conditions stated. Groundwater fluctuations may occur due to conditions other than those present at the time measurements were made.

Page 5 of 5 — Boring No.: BB-SPC-202

### Page 1 of 3 — Boring No.: EB-SPC-202

| Depth (ft.) | Sample No. | Rec./Rec. (in.) | Sample Depth (ft.) | Blows / 6 in. / Shear Strength (psf) or RQD (%) | N-value | Casing Blows | Elevation (ft.) | Graphic Log | Visual Description and Remarks | Laboratory Testing Results/ AASHTO and Unified Class |
|---|---|---|---|---|---|---|---|---|---|---|
| 0 | S-1 | 24/13 | 0.0 - 2.0 | | 10 | | | | SAND (SP); Tan to orange, dry, medium dense, fine to medium sand, trace silt. | |
| 5 | S-2 | 24/14 | 5.0 - 7.0 | | 10 | | | | Becomes wet. | |
| 10 | S-3 | 24/24 | 10.0 - 12.0 | | 6 | | | | SILTY CLAY (CL); Gray, wet, medium, clay, some silt, medium sand above clay. — 11.0 | |
| | S-4 | 24/24 | 12.0 - 14.0 | | 5 | | | | SILTY SAND (SM); Gray, wet, loose, fine sand some silt. — 11.5 | |
| 15 | | | | | | | | | SILTY CLAY (CL); Gray, wet, medium, clay, some silt, silty sand lenses. — 13.0 | |
| 20 | FV-1 | | 16.0 - 16.8 | Su=607 psf Residual Su=60 psf | | | | | 65x130 mm raw torque readings: FV-1: 22.1/2.2 ft-lbs FV-2: 18.4/1.2 ft-lbs | |
| | FV-2 | | 17.0 - 17.8 | Su=505 psf Residual Su=53 psf | | | | | | |
| 25 | FV-3 | | 21.0 - 21.8 | Su=592 psf Residual Su=102 psf | | | | | 65x130 mm raw torque readings: FV-3: 25.2/3.7 ft-lbs FV-4: 20.0/2.5 ft-lbs | |
| | FV-4 | | 22.0 - 22.8 | Su=649 psf Residual Su=69 psf | | | | | | |
| 30 | FV-5 | | 26.0 - 26.8 | Su=390 psf Residual Su=27 psf | | | | | 65x130 mm raw torque readings: FV-5: 14.2/1.0 ft-lbs FV-6: 15.0/1.2 ft-lbs | |
| | FV-6 | | 27.0 - 27.8 | Su=412 psf Residual Su=33 psf | | | | | | |

Remarks:
1. RWG&A Project No. 0600-102.
2. In-situ vane shear tests conducted using MaineDOT provided Geonor 65x130mm rectangular vane.
3. Hammer Serial No. 283.
4. SPT N-Values are uncorrected.

Stratification lines represent approximate boundaries between soil types; transitions may be gradual.

* Water level readings have been made at times and under conditions stated. Groundwater fluctuations may occur due to conditions other than those present at the time measurements were made.

Page 1 of 3 — Boring No.: EB-SPC-202

### Page 2 of 3 — Boring No.: EB-SPC-202

| Depth (ft.) | Sample No. | Rec./Rec. (in.) | Sample Depth (ft.) | Blows / 6 in. / Shear Strength (psf) or RQD (%) | N-value | Casing Blows | Elevation (ft.) | Graphic Log | Visual Description and Remarks | Laboratory Testing Results/ AASHTO and Unified Class |
|---|---|---|---|---|---|---|---|---|---|---|
| 30 | FV-7 | | 31.0 - 31.8 | Su=398 psf Residual Su=33 psf | | | | | 65x130 mm raw torque readings: FV-7: 14.5/1.2 ft-lbs FV-8: 14.8/1.4 ft-lbs | |
| | FV-8 | | 32.0 - 32.8 | Su=401 psf Residual Su=38 psf | | | | | | |
| 35 | | | | | | | | | Hydraulic push rod probe to 40.8'. | |
| 40 | | | | | | | | | | |
| 45 | | | | | | | | | | |
| 50 | | | | | | | | | Stiff seams encountered approximately 50'. | |
| 55 | | | | | | | | | | |
| 60 | | | | | | | | | | |

Remarks:
1. RWG&A Project No. 0600-102.
2. In-situ vane shear tests conducted using MaineDOT provided Geonor 65x130mm rectangular vane.
3. Hammer Serial No. 283.
4. SPT N-Values are uncorrected.

Stratification lines represent approximate boundaries between soil types; transitions may be gradual.

* Water level readings have been made at times and under conditions stated. Groundwater fluctuations may occur due to conditions other than those present at the time measurements were made.

Page 2 of 3 — Boring No.: EB-SPC-202

### Page 3 of 3 — Boring No.: EB-SPC-202

| Depth (ft.) | Sample No. | Rec./Rec. (in.) | Sample Depth (ft.) | Blows / 6 in. / Shear Strength (psf) or RQD (%) | N-value | Casing Blows | Elevation (ft.) | Graphic Log | Visual Description and Remarks | Laboratory Testing Results/ AASHTO and Unified Class |
|---|---|---|---|---|---|---|---|---|---|---|
| 60 | | | | | | | | | Increased resistance to probe penetration at 60.8'. | |
| 65 | | | | | | | | | Bottom of Exploration at 60.8 feet below ground surface. Not refusal. | |
| 70 | | | | | | | | | | |
| 75 | | | | | | | | | | |
| 80 | | | | | | | | | | |
| 85 | | | | | | | | | | |
| 90 | | | | | | | | | | |

Remarks:
1. RWG&A Project No. 0600-102.
2. In-situ vane shear tests conducted using MaineDOT provided Geonor 65x130mm rectangular vane.
3. Hammer Serial No. 283.
4. SPT N-Values are uncorrected.

Stratification lines represent approximate boundaries between soil types; transitions may be gradual.

* Water level readings have been made at times and under conditions stated. Groundwater fluctuations may occur due to conditions other than those present at the time measurements were made.

Page 3 of 3 — Boring No.: EB-SPC-202

STATE OF MAINE
DEPARTMENT OF TRANSPORTATION

**AC-STP-1942(600)X & CMAQ-1942(610)**

**WIN 19426.00 & 019426.10** HIGHWAY PLANS

| | BY | DATE |
|---|---|---|
| BILL REICH: | P. Bishop | 12/22 |
| C.Helmick | J. Olund | 12/22 |
| L. DRISCOLL | - | - |
| - | - | - |
| - | - | - |
| - | - | - |
| - | - | - |
| - | - | - |

SIGNATURE

P.E. NUMBER

DATE

PROJ. MANAGER
DESIGN-DETAILED
CHECKED-REVIEWED
DESIGN2-DETAILED2
DESIGN3-DETAILED3

| REVISIONS | - | - |
|---|---|---|
| REVISIONS 1 | - | - |
| REVISIONS 2 | - | - |
| REVISIONS 3 | - | - |
| REVISIONS 4 | - | - |
| FIELD CHANGES | - | - |

TOWN OF SCARBOROUGH
EASTERN TRAIL CONNECTOR
SCARBOROUGH TO SOUTH PORTLAND, MAINE

# BORING LOGS

PROGRESS PLANS
April 4, 2023

SHEET NUMBER
6
OF 66

Maine Department of Transportation — Soil/Rock Exploration Log — US UNITS

Project: Scarborough Eastern Trail Project
Location: Scarborough, Maine
Boring No.: BB-SPC-203
WIN: 019426.10

| | | | |
|---|---|---|---|
| Driller: | H.W. Gillespie & Associates, Inc. | Elevation (ft.): N/A | Auger ID/OD: 4.25" ID / 7.5" OD |
| Operator: | M. Nadeau | Datum: | Sampler: SPT Split-Barrel |
| Logged By: | D. Walker | Rig Type: DTeaTah D50 | Hammer Wt./Fall: 140 lbs / 30 In. |
| Date Start/Finish: | 09/27/2016 / 09/30/2016 | Drilling Method: HSA, 3" roller bit, drive + wash | Core Barrel: N02 |
| Boring Location: | See Exploration Location Plan | Casing ID/OD: 3- and 4-Inch ID | Water Level*: 8' |

Definitions:
D = Split Spoon Sample
WD = Unsuccessful Split Spoon Sample attempt
U = Thin Wall Tube Sample
R = Rock Core Sample
V = In-situ Vane Shear Test
SSA = Solid Stem Auger
$S_u$ = In-situ Field Vane Shear Strength (psf)
$S_r$ = Pocket Torvane Shear Strength (psf)
$q_p$ = Unconfined Compressive Strength (ksf)
$S_{u(lab)}$ = Lab Vane Shear Strength (psf)
WOH = weight of 140lb. hammer
WOR = weight of rods
WC = water content, percent
LL = Liquid Limit
PL = Plastic Limit
PI = Plasticity Index
G = Grain Size Analysis
C = Consolidation Test

Sample Information

| Depth (ft.) | Sample No. | Pen./Rec. (in.) | Sample Depth (ft.) | Blows (#) /in. Sheer Strength (psf) or RQD (%) | N-value | Casing Blows | Elevation (ft.) | Graphic Log | Visual Description and Remarks | Laboratory Testing Results/ AASHTO and Unified Class |
|---|---|---|---|---|---|---|---|---|---|---|
| 0 | S-1 | 24/15 | 0.0 - 2.0 | | 4 | | | | TOPSOIL AND ORGANIC MATERIAL (2 Inches+). | |
| | | | | | | | | | SAND WITH SILT (SP-SM): Reddish brown, dry, loose, fine to medium sand, little silt. | 0.2 |
| | S-2 | 24/15 | 2.0 - 4.0 | | 26 | | | | SAND (SP): Tan, dry, medium dense, fine to coarse sand, trace silt. | 2.0 |
| 5 | S-3 | 24/15 | 5.0 - 7.0 | | 15 | | | | Becomes reddish brown, moist. | |
| | S-4 | 24/20 | 7.0 - 9.0 | | 13 | | | | 2" lense of gray, wet, stiff, silty clay. | 8.5 |
| 10 | S-5 | 24/12 | 10.0 - 12.0 | | 5 | | | | SILT (ML): Gray, wet, stiff, silt, trace fine sand. | 10.0 |
| | S-6 | 24/24 | 12.0 - 14.0 | | 7 | | | | SILTY SAND (SM): Tan to gray, wet, loose, fine sand, some silt. | |
| 15 | S-7 | 24/24 | 15.0 - 17.0 | | WOH/24 | | | | SILTY CLAY (CL-ML): Gray, wet, very soft to medium, clay, with some silt, occasional silt lenses. | 15.0 |
| 20 | FV-1 | | 21.0 - 21.8 | Su=714 psf, residual: Sun1 psf | | | | | 65x130 mm raw torque readings: FV-1: 26.0/1.5 ft-lbs FV-2: 33.5/9.0 ft-lbs | |
| | FV-2 | | 22.0 - 22.8 | Su=920 psf, residual=247 psf | | | | | | |
| 25 | U-1 | 24/24 | 25.0 - 27.0 | | | | | | | 14328A & 14429 WC=47.4% G & C |
| | FV-3 | | 28.0 - 28.8 | Su=434 psf, residual=33 psf | | | | | 65x130 mm raw torque readings: FV-3: 15.8/1.2 ft-lbs FV-4: 20.5/1.1 ft-lbs | |
| 30 | FV-4 | | 29.0 - 29.8 | Su=563 psf, residual=30 psf | | | | | | |

Remarks:
1. RWG&A Project No. 0600-102.
2. In situ vane shear tests conducted using MaineDOT provided Geonor 65x130mm rectangular vane.
3. Hammer Serial No. 283.
4. SPT N-Values are uncorrected.

Stratification lines represent approximate boundaries between soil types; transitions may be gradual.

* Water level readings have been made at times and under conditions stated. Groundwater fluctuations may occur due to conditions other than those present at the time measurements were made.

Page 1 of 6
Boring No.: BB-SPC-203

---

Maine Department of Transportation — Soil/Rock Exploration Log — US UNITS

Project: Scarborough Eastern Trail Project
Location: Scarborough, Maine
Boring No.: BB-SPC-203
WIN: 019426.10

| | | | |
|---|---|---|---|
| Driller: | H.W. Gillespie & Associates, Inc. | Elevation (ft.): N/A | Auger ID/OD: 4.25" ID / 7.5" OD |
| Operator: | M. Nadeau | Datum: | Sampler: SPT Split-Barrel |
| Logged By: | D. Walker | Rig Type: DTeaTah D50 | Hammer Wt./Fall: 140 lbs / 30 In. |
| Date Start/Finish: | 09/27/2016 / 09/30/2016 | Drilling Method: HSA, 3" roller bit, drive + wash | Core Barrel: N02 |
| Boring Location: | See Exploration Location Plan | Casing ID/OD: 3- and 4-Inch ID | Water Level*: 8' |

Definitions:
D = Split Spoon Sample
WD = Unsuccessful Split Spoon Sample attempt
U = Thin Wall Tube Sample
R = Rock Core Sample
V = In-situ Vane Shear Test
SSA = Solid Stem Auger
$S_u$ = In-situ Field Vane Shear Strength (psf)
$S_r$ = Pocket Torvane Shear Strength (psf)
$q_p$ = Unconfined Compressive Strength (ksf)
$S_{u(lab)}$ = Lab Vane Shear Strength (psf)
WOH = weight of 140lb. hammer
WOR = weight of rods
WC = water content, percent
LL = Liquid Limit
PL = Plastic Limit
PI = Plasticity Index
G = Grain Size Analysis
C = Consolidation Test

Sample Information

| Depth (ft.) | Sample No. | Pen./Rec. (in.) | Sample Depth (ft.) | Blows (#) /in. Sheer Strength (psf) or RQD (%) | N-value | Casing Blows | Elevation (ft.) | Graphic Log | Visual Description and Remarks | Laboratory Testing Results/ AASHTO and Unified Class |
|---|---|---|---|---|---|---|---|---|---|---|
| 30 | | | | | | | | | | |
| 35 | FV-5 | | 35.0 - 35.8 | Su=409 psf, residual=25 psf | | | | | 65x130 mm raw torque readings: FV-5: 14.9/0.9 ft-lbs FV-6: 15.3/0.5 ft-lbs | |
| | FV-6 | | 36.0 - 36.8 | Su=420 psf, residual=44 psf | | | | | | |
| 40 | U-2 | 24/24 | 40.0 - 42.0 | | | | | | | 14328B & 14416 WC=40.9% G & C |
| | FV-7 | | 43.0 - 43.8 | Su=574 psf, residual=41 psf | | | | | 65x130 mm raw torque readings: FV-7: 20.9/1.5 ft-lbs FV-8: 18.2/1.1 ft-lbs | |
| 45 | FV-8 | | 44.0 - 44.8 | Su=500 psf, residual=30 psf | | | | | | |
| 50 | S-8 | 24/24 | 50.0 - 52.0 | | WOR/24 | | | | | |
| | FV-9 | | 51.0 - 51.8 | Su=623 psf, residual=63 psf | | | | | 65x130 mm raw torque readings: FV-9: 22.7/2.5 ft-lbs FV-10: 19.5/0.5 ft-lbs | |
| | FV-10 | | 52.0 - 52.8 | Su=536 psf, residual=49 psf | | | | | | |
| 55 | S-9 | 24/16 | 55.0 - 57.0 | | WOR/24 | | | | Occasional silt lenses. | |
| 60 | | | | | | | | | | |

Remarks:
1. RWG&A Project No. 0600-102.
2. In situ vane shear tests conducted using MaineDOT provided Geonor 65x130mm rectangular vane.
3. Hammer Serial No. 283.
4. SPT N-Values are uncorrected.

Stratification lines represent approximate boundaries between soil types; transitions may be gradual.

* Water level readings have been made at times and under conditions stated. Groundwater fluctuations may occur due to conditions other than those present at the time measurements were made.

Page 2 of 6
Boring No.: BB-SPC-203

---

Maine Department of Transportation — Soil/Rock Exploration Log — US UNITS

Project: Scarborough Eastern Trail Project
Location: Scarborough, Maine
Boring No.: BB-SPC-203
WIN: 019426.10

| | | | |
|---|---|---|---|
| Driller: | H.W. Gillespie & Associates, Inc. | Elevation (ft.): N/A | Auger ID/OD: 4.25" ID / 7.5" OD |
| Operator: | M. Nadeau | Datum: | Sampler: SPT Split-Barrel |
| Logged By: | D. Walker | Rig Type: DTeaTah D50 | Hammer Wt./Fall: 140 lbs / 30 In. |
| Date Start/Finish: | 09/27/2016 / 09/30/2016 | Drilling Method: HSA, 3" roller bit, drive + wash | Core Barrel: N02 |
| Boring Location: | See Exploration Location Plan | Casing ID/OD: 3- and 4-Inch ID | Water Level*: 8' |

Definitions:
D = Split Spoon Sample
WD = Unsuccessful Split Spoon Sample attempt
U = Thin Wall Tube Sample
R = Rock Core Sample
V = In-situ Vane Shear Test
SSA = Solid Stem Auger
$S_u$ = In-situ Field Vane Shear Strength (psf)
$S_r$ = Pocket Torvane Shear Strength (psf)
$q_p$ = Unconfined Compressive Strength (ksf)
$S_{u(lab)}$ = Lab Vane Shear Strength (psf)
WOH = weight of 140lb. hammer
WOR = weight of rods
WC = water content, percent
LL = Liquid Limit
PL = Plastic Limit
PI = Plasticity Index
G = Grain Size Analysis
C = Consolidation Test

Sample Information

| Depth (ft.) | Sample No. | Pen./Rec. (in.) | Sample Depth (ft.) | Blows (#) /in. Sheer Strength (psf) or RQD (%) | N-value | Casing Blows | Elevation (ft.) | Graphic Log | Visual Description and Remarks | Laboratory Testing Results/ AASHTO and Unified Class |
|---|---|---|---|---|---|---|---|---|---|---|
| 60 | U-3 | 24/18 | 60.0 - 62.0 | | | | | | | |
| | FV-11 | | 63.0 - 63.8 | Su=1217 psf | | | | | | |
| 65 | S-10 | 24/24 | 65.0 - 67.0 | | 10 | | | | SILTY SAND (SM): Gray, wet, loose to medium dense, fine sand, some silt. | 65.0 |
| 70 | S-11 | 24/16 | 70.0 - 72.0 | | 24 | | | | Becomes brown, medium dense. | |
| 75 | S-12 | 24/12 | 75.0 - 77.0 | | 28 | | | | Becomes gray to orange brown. | |
| 80 | S-13 | 24/13 | 80.0 - 82.0 | | 33 | 30 | | | Becomes brown to tan, dense. | |
| | | | | | | 30 | | | | |
| | | | | | | 30 | | | | |
| 85 | S-14 | 24/14 | 85.0 - 87.0 | | 26 | 60 | | | Becomes medium dense. | |
| | | | | | | 65 | | | | |
| | | | | | | 65 | | | | |
| 90 | | | | | | 65 | | | | |

Remarks:
1. RWG&A Project No. 0600-102.
2. In situ vane shear tests conducted using MaineDOT provided Geonor 65x130mm rectangular vane.
3. Hammer Serial No. 283.
4. SPT N-Values are uncorrected.

Stratification lines represent approximate boundaries between soil types; transitions may be gradual.

* Water level readings have been made at times and under conditions stated. Groundwater fluctuations may occur due to conditions other than those present at the time measurements were made.

Page 3 of 6
Boring No.: BB-SPC-203

---

Maine Department of Transportation — Soil/Rock Exploration Log — US UNITS

Project: Scarborough Eastern Trail Project
Location: Scarborough, Maine
Boring No.: BB-SPC-203
WIN: 019426.10

| | | | |
|---|---|---|---|
| Driller: | H.W. Gillespie & Associates, Inc. | Elevation (ft.): N/A | Auger ID/OD: 4.25" ID / 7.5" OD |
| Operator: | M. Nadeau | Datum: | Sampler: SPT Split-Barrel |
| Logged By: | D. Walker | Rig Type: DTeaTah D50 | Hammer Wt./Fall: 140 lbs / 30 In. |
| Date Start/Finish: | 09/27/2016 / 09/30/2016 | Drilling Method: HSA, 3" roller bit, drive + wash | Core Barrel: N02 |
| Boring Location: | See Exploration Location Plan | Casing ID/OD: 3- and 4-Inch ID | Water Level*: 8' |

Definitions:
D = Split Spoon Sample
WD = Unsuccessful Split Spoon Sample attempt
U = Thin Wall Tube Sample
R = Rock Core Sample
V = In-situ Vane Shear Test
SSA = Solid Stem Auger
$S_u$ = In-situ Field Vane Shear Strength (psf)
$S_r$ = Pocket Torvane Shear Strength (psf)
$q_p$ = Unconfined Compressive Strength (ksf)
$S_{u(lab)}$ = Lab Vane Shear Strength (psf)
WOH = weight of 140lb. hammer
WOR = weight of rods
WC = water content, percent
LL = Liquid Limit
PL = Plastic Limit
PI = Plasticity Index
G = Grain Size Analysis
C = Consolidation Test

Sample Information

| Depth (ft.) | Sample No. | Pen./Rec. (in.) | Sample Depth (ft.) | Blows (#) /in. Sheer Strength (psf) or RQD (%) | N-value | Casing Blows | Elevation (ft.) | Graphic Log | Visual Description and Remarks | Laboratory Testing Results/ AASHTO and Unified Class |
|---|---|---|---|---|---|---|---|---|---|---|
| 90 | S-15 | 24/10 | 90.0 - 92.0 | | | 20 | | | | |
| | | | | | | 65 | | | | |
| | | | | | | 65 | | | | |
| | | | | | | 65 | | | | |
| 95 | S-16 | 24/11 | 95.0 - 97.0 | | | 24 | | | SAND (SP): Gray, wet, medium dense to dense, fine to coarse sand, trace silt. | 93.0 |
| | | | | | | 120 | | | | |
| | | | | | | 120 | | | Becomes gray to brown, and grades to include some fine to coarse gravel. | |
| | | | | | | 120 | | | | |
| | | | | | | 120 | | | | |
| 100 | S-17 | 24/4 | 100.0 - 102.0 | | | 47 | | | | |
| | | | | | | 125 | | | | |
| | | | | | | 190 | | | | |
| | | | | | | 190 | | | | 103.0 |
| | | | | | | 190 | | | SILTY GRAVEL (GM): Olive gray, wet, very dense, fine to coarse gravel, some silt, little fine to coarse sand. | |
| 105 | S-18 | 5/5 | 105.0 - 105.4 | | | 50/5" | | | | |
| | | | | | | 60 | | | | |
| | | | | | | 35 | | | | |
| | | | | | | 27 | | | | |
| | | | | | | 27 | | | | |
| 110 | S-19 | 16/12 | 110.0 - 111.3 | | | 85/10" | | | | |
| | | | | | | 90 | | | SILTY SAND WITH GRAVEL (SM): Olive gray, wet, very dense, fine sand, some medium to coarse gravel, little silt and coarse sand. | 110.0 |
| | | | | | | 90 | | | | |
| | | | | | | 125 | | | | |
| 115 | | | | | | 125 | | | | |
| | | | | | | 125 | | | | |
| | | | | | | 125 | | | | |
| 120 | | | | | | 125 | | | | |

Remarks:
1. RWG&A Project No. 0600-102.
2. In situ vane shear tests conducted using MaineDOT provided Geonor 65x130mm rectangular vane.
3. Hammer Serial No. 283.
4. SPT N-Values are uncorrected.

Stratification lines represent approximate boundaries between soil types; transitions may be gradual.

* Water level readings have been made at times and under conditions stated. Groundwater fluctuations may occur due to conditions other than those present at the time measurements were made.

Page 4 of 6
Boring No.: BB-SPC-203

---

Maine Department of Transportation — Soil/Rock Exploration Log — US UNITS

Project: Scarborough Eastern Trail Project
Location: Scarborough, Maine
Boring No.: BB-SPC-203
WIN: 019426.10

| | | | |
|---|---|---|---|
| Driller: | H.W. Gillespie & Associates, Inc. | Elevation (ft.): N/A | Auger ID/OD: 4.25" ID / 7.5" OD |
| Operator: | M. Nadeau | Datum: | Sampler: SPT Split-Barrel |
| Logged By: | D. Walker | Rig Type: DTeaTah D50 | Hammer Wt./Fall: 140 lbs / 30 In. |
| Date Start/Finish: | 09/27/2016 / 09/30/2016 | Drilling Method: HSA, 3" roller bit, drive + wash | Core Barrel: N02 |
| Boring Location: | See Exploration Location Plan | Casing ID/OD: 3- and 4-Inch ID | Water Level*: 8' |

Definitions:
D = Split Spoon Sample
WD = Unsuccessful Split Spoon Sample attempt
U = Thin Wall Tube Sample
R = Rock Core Sample
V = In-situ Vane Shear Test
SSA = Solid Stem Auger
$S_u$ = In-situ Field Vane Shear Strength (psf)
$S_r$ = Pocket Torvane Shear Strength (psf)
$q_p$ = Unconfined Compressive Strength (ksf)
$S_{u(lab)}$ = Lab Vane Shear Strength (psf)
WOH = weight of 140lb. hammer
WOR = weight of rods
WC = water content, percent
LL = Liquid Limit
PL = Plastic Limit
PI = Plasticity Index
G = Grain Size Analysis
C = Consolidation Test

Sample Information

| Depth (ft.) | Sample No. | Pen./Rec. (in.) | Sample Depth (ft.) | Blows (#) /in. Sheer Strength (psf) or RQD (%) | N-value | Casing Blows | Elevation (ft.) | Graphic Log | Visual Description and Remarks | Laboratory Testing Results/ AASHTO and Unified Class |
|---|---|---|---|---|---|---|---|---|---|---|
| 120 | S-20 | 17/20 | 120.0 - 121.4 | | WOR/11" | 120 | | | Grades to little fine gravel, trace coarse gravel and clay. | |
| | | | | | | 120 | | | | |
| | | | | | | 120 | | | Drilling resistance increase. | |
| | | | | | | 120 | | | | |
| 125 | S-21 | 24/8 | 125.0 - 127.0 | | 59 | 175 | | | | |
| | | | | | | 175 | | | | |
| | | | | | | 225 | | | | |
| | | | | | | 225 | | | | |
| 130 | | | | | | 225 | | | | |
| 135 | S-22 | 24/24 | 135.0 - 137.0 | | 69 | | | | | |
| 140 | S-23 | 16/0 | 140.0 - 141.3 | | WOR/10" | | | | Wash materials and large cobble in spoon. | |
| | | | | | | | | | | 141.2 |
| | R-1 | 18/14 | 141.2 - 142.7 | RQD=25% | | | | | Roller bit refusal at 141.2', top of bedrock. Gray to black, aphanitic to medium grained biotite PHYLLITE. Rock is very soft to hard, slightly to highly weathered with low to vertical discontinuities and jointing. Cleavage planes have very close to close spacing. Highly fractured zones throughout, along with quartz felsopathic veins with pyritic mineralogy. Some gneissic banding the rock type is similar to the Scarboro formation. | |
| | R-2 | 42/15 | 142.0 - 145.5 | RQD=25% | | | | | | |
| 145 | | | | | | | | | | |
| | R-3 | 60/24 | 146.0 - 151.0 | RQD=25% | | | | | Grades to little fine gravel, trace coarse gravel and clay. R-1 Recovery=78% R-2 Recovery=36% R-3 Recovery=40% | |
| 150 | | | | | | | | | | |

Remarks:
1. RWG&A Project No. 0600-102.
2. In situ vane shear tests conducted using MaineDOT provided Geonor 65x130mm rectangular vane.
3. Hammer Serial No. 283.
4. SPT N-Values are uncorrected.

Stratification lines represent approximate boundaries between soil types; transitions may be gradual.

* Water level readings have been made at times and under conditions stated. Groundwater fluctuations may occur due to conditions other than those present at the time measurements were made.

Page 5 of 5
Boring No.: BB-SPC-203

---

Maine Department of Transportation — Soil/Rock Exploration Log — US UNITS

Project: Scarborough Eastern Trail Project
Location: Scarborough, Maine
Boring No.: BB-SPC-203
WIN: 019426.10

| | | | |
|---|---|---|---|
| Driller: | H.W. Gillespie & Associates, Inc. | Elevation (ft.): N/A | Auger ID/OD: 4.25" ID / 7.5" OD |
| Operator: | M. Nadeau | Datum: | Sampler: SPT Split-Barrel |
| Logged By: | D. Walker | Rig Type: DTeaTah D50 | Hammer Wt./Fall: 140 lbs / 30 In. |
| Date Start/Finish: | 09/27/2016 / 09/30/2016 | Drilling Method: HSA, 3" roller bit, drive + wash | Core Barrel: N02 |
| Boring Location: | See Exploration Location Plan | Casing ID/OD: 3- and 4-Inch ID | Water Level*: 8' |

Definitions:
D = Split Spoon Sample
WD = Unsuccessful Split Spoon Sample attempt
U = Thin Wall Tube Sample
R = Rock Core Sample
V = In-situ Vane Shear Test
SSA = Solid Stem Auger
$S_u$ = In-situ Field Vane Shear Strength (psf)
$S_r$ = Pocket Torvane Shear Strength (psf)
$q_p$ = Unconfined Compressive Strength (ksf)
$S_{u(lab)}$ = Lab Vane Shear Strength (psf)
WOH = weight of 140lb. hammer
WOR = weight of rods
WC = water content, percent
LL = Liquid Limit
PL = Plastic Limit
PI = Plasticity Index
G = Grain Size Analysis
C = Consolidation Test

Sample Information

| Depth (ft.) | Sample No. | Pen./Rec. (in.) | Sample Depth (ft.) | Blows (#) /in. Sheer Strength (psf) or RQD (%) | N-value | Casing Blows | Elevation (ft.) | Graphic Log | Visual Description and Remarks | Laboratory Testing Results/ AASHTO and Unified Class |
|---|---|---|---|---|---|---|---|---|---|---|
| 150 | | | | | | | | | | |
| | | | | | | | | | | 151.2 |
| | | | | | | | | | Bottom of Exploration at 151.2 feet below ground surface. | |
| 155 | | | | | | | | | | |
| 160 | | | | | | | | | | |
| 165 | | | | | | | | | | |
| 170 | | | | | | | | | | |
| 175 | | | | | | | | | | |
| 180 | | | | | | | | | | |

Remarks:
1. RWG&A Project No. 0600-102.
2. In situ vane shear tests conducted using MaineDOT provided Geonor 65x130mm rectangular vane.
3. Hammer Serial No. 283.
4. SPT N-Values are uncorrected.

Stratification lines represent approximate boundaries between soil types; transitions may be gradual.

* Water level readings have been made at times and under conditions stated. Groundwater fluctuations may occur due to conditions other than those present at the time measurements were made.

Page 6 of 6
Boring No.: BB-SPC-203

PROGRESS PLANS
April 4, 2023

STATE OF MAINE
DEPARTMENT OF TRANSPORTATION
AC-STP-1942(600)X & CMAQ-1942(610)
WIN 19426.00 & 019426.10 HIGHWAY PLANS

| | | | |
|---|---|---|---|
| PROJ. MANAGER | BILL REICH | BY | DATE |
| DESIGN-DETAILED | C.Helmick | P. Bishop | 12\22 |
| CHECKED-REVIEWED | L. DRISCOLL | J. Olund | 12\22 |
| DESIGN2-DETAILED2 | - | - | - |
| DESIGN3-DETAILED3 | - | - | - |
| REVISIONS 1 | - | - | - |
| REVISIONS 2 | - | - | - |
| REVISIONS 3 | - | - | - |
| REVISIONS 4 | - | - | - |
| FIELD CHANGES | - | - | - |

SIGNATURE

P.E. NUMBER

DATE

TOWN OF SCARBOROUGH
EASTERN TRAIL CONNECTOR
SCARBOROUGH TO SOUTH PORTLAND, MAINE

BORING LOGS

SHEET NUMBER
7
OF 66

Username:
Division:
Date:4/4/2023
Filename: 007_Boring Logs.dgn

Username:

Division:

Filename: 008_Boring Logs.dgn

Date:4/4/2023

## Maine Department of Transportation — Soil/Rock Exploration Log (US UNITS)

Project: Scarborough Eastern Trail Project
Location: Scarborough, Maine
Boring No.: BB-SPC-203A
WIN: 019426.10

| | | | |
|---|---|---|---|
| Driller: | Northern Test Boring | Elevation (ft.): | Auger ID/OD: |
| Operator: | Mike Nadeau | Datum: | Sampler: Thin-Walled Tube |
| Logged By: | Serena Pape | Rig Type: DTearTan D-50 Turbo | Hammer Wt./Fall: |
| Date Start/Finish: | 06-19-2018 / 06-19-2018 | Drilling Methods: 3" Tri cone Bit, Rotary Wash | Core Barrels: |
| Boring Location: | East of Tracks | Casing ID/OD: 4" Steel Casing | Water Level*: ?' |

Definitions:
D = Split Spoon Sample
ND = Unsuccessful Split Spoon Sample attempt
U = Thin Wall Tube Sample
R = Rock Core Sample
V = Inertia Vane Shear Test
SSA = Solid Stem Auger

Definitions:
$S_u$ = Inertia Field Vane Shear Strength (psf)
$T_v$ = Pocket Torvane Shear Strength (psf)
$q_p$ = Unconfined Compressive Strength (ksf)
$S_{u(LAB)}$ = Lab Vane Shear Strength (psf)
WOH = weight of 140lb. hammer
WOR = weight of rods

Definitions:
WC = water content, percent
LL = Liquid Limit
PL = Plastic Limit
PI = Plasticity Index
G = Grain Size Analysis
C = Consolidation Test

Sample Information

| Depth (ft.) | Sample No. | Rec. (in.) | Sample Depth (ft.) | Blows / 6 in. Shear Strength (psf) or RQD (%) | N-value | Casing Blows | Elevation (ft.) | Graphic Log | Visual Description and Remarks | Laboratory Testing Results/ AASHTO and Unified Class |
|---|---|---|---|---|---|---|---|---|---|---|
| 0 | | | | | | | -0.2 | | TOPSOIL AND ORGANIC MATERIAL 12 Inches±. | |
| | | | | | | | -0.2 | | SILTY SAND (SM): Loose, dry, medium to fine sand, some silt, brown. | |
| 5 | | | | | | | | | Becomes wet. | |
| 10 | | | | | | | -15.0 | | | |
| 15 | FV | | 15.0 – 15.4 | Sur=880 psf Residual Sur=110 psf | | | -15.0 | | SILTY CLAY (CL): Very stiff, wet, clay gray. | |
| | FV | | 16.0 – 16.4 | Sur=1210 psf Residual Sur=160 psf | | | | | 65x130 mm raw torque readings: FV-1: 17.0/4.0 ft-lbs FV-2: 42.0/6.0 ft-lbs | |
| 20 | U-1 | 24/21 | 20.0 – 22.0 | | | | | | | 15111A WC=45.6% A & C LL=40.9 PL=21.7 PI=12.2 |
| 25 | FV | | 25.0 – 25.4 | Sur=630 psf Residual Sur=60 psf | | | | | 65x130 mm raw torque readings: FV-3: 23.0/2.0 ft-lbs FV-4: 19.0/2.0 ft-lbs | |
| | FV | | 26.0 – 26.4 | Sur=520 psf Residual Sur=50 psf | | | | | | |
| 30 | | | | | | | | | | |

Remarks:
1. RWG&A Project No. 0600-102
2. Hammer Serial No. 377.
3. SPT N-values uncorrected.
4. Casing hydraulically pushed.
5. MaineDOT field vanes

Stratification lines represent approximate boundaries between soil types; transitions may be gradual.

* Water level readings have been made at times and under conditions stated. Groundwater fluctuations may occur due to conditions other than those present at the time measurements were made.

Page 1 of 3
Boring No.: BB-SPC-203A

## Maine Department of Transportation — Soil/Rock Exploration Log (US UNITS)

Project: Scarborough Eastern Trail Project
Location: Scarborough, Maine
Boring No.: BB-SPC-203A
WIN: 019426.10

| | | | |
|---|---|---|---|
| Driller: | Northern Test Boring | Elevation (ft.): | Auger ID/OD: |
| Operator: | Mike Nadeau | Datum: | Sampler: Thin-Walled Tube |
| Logged By: | Serena Pape | Rig Type: DTearTan D-50 Turbo | Hammer Wt./Fall: |
| Date Start/Finish: | 06-19-2018 / 06-19-2018 | Drilling Methods: 3" Tri cone Bit, Rotary Wash | Core Barrels: |
| Boring Location: | East of Tracks | Casing ID/OD: 4" Steel Casing | Water Level*: ?' |

Definitions: D = Split Spoon Sample; ND = Unsuccessful Split Spoon Sample attempt; U = Thin Wall Tube Sample; R = Rock Core Sample; V = Inertia Vane Shear Test; SSA = Solid Stem Auger

Definitions: $S_u$ = Inertia Field Vane Shear Strength (psf); $T_v$ = Pocket Torvane Shear Strength (psf); $q_p$ = Unconfined Compressive Strength (ksf); $S_{u(LAB)}$ = Lab Vane Shear Strength (psf); WOH = weight of 140lb. hammer; WOR = weight of rods

Definitions: WC = water content, percent; LL = Liquid Limit; PL = Plastic Limit; PI = Plasticity Index; G = Grain Size Analysis; C = Consolidation Test

Sample Information

| Depth (ft.) | Sample No. | Rec. (in.) | Sample Depth (ft.) | Blows / 6 in. Shear Strength (psf) or RQD (%) | N-value | Casing Blows | Elevation (ft.) | Graphic Log | Visual Description and Remarks | Laboratory Testing Results/ AASHTO and Unified Class |
|---|---|---|---|---|---|---|---|---|---|---|
| 30 | U-2 | 24/22 | 30.0 – 32.0 | | | | | | | 15111B WC=39.0% C |
| 35 | FV | | 35.0 – 35.4 | Sur=470 psf Residual Sur=30 psf | | | | | 65x130 mm raw torque readings: FV-5: 17.0/1.0 ft-lbs FV-6: 18.0/0.0 ft-lbs | |
| | FV | | 36.0 – 36.4 | Sur=890 psf Residual Sur=0 psf | | | | | | |
| 40 | U-3 | | 40.0 – 42.0 | | | | | | Significant water loss, possible sand seam allowing water to fill BB-SPC-203. | 15111C WC=42.3% A & C LL=40.0 PL=22.5 PI=17.5 |
| 45 | FV | | 45.0 – 45.4 | Sur=550 psf Residual Sur=30 psf | | | | | 65x130 mm raw torque readings: FV-7: 20.0/1.0 ft-lbs FV-8: 23.0/0.0 ft-lbs | |
| | FV | | 46.0 – 46.4 | Sur=650 psf Residual Sur=0 psf | | | | | | |
| 50 | U-4 | 24/20 | 50.0 – 52.0 | | | | | | | |
| 55 | FV | | 55.0 – 55.4 | Sur=770 psf Residual Sur=0 psf | | | | | 65x130 mm raw torque readings: FV-9: 28.0/0.0 ft-lbs FV-10: 27.0/0.0 ft-lbs | |
| | FV | | 56.0 – 56.4 | Sur=670 psf Residual Sur=0 psf | | | | | | |
| 60 | | | | | | | | | | |

Remarks:
1. RWG&A Project No. 0600-102
2. Hammer Serial No. 377.
3. SPT N-values uncorrected.
4. Casing hydraulically pushed.
5. MaineDOT field vanes

Stratification lines represent approximate boundaries between soil types; transitions may be gradual.

* Water level readings have been made at times and under conditions stated. Groundwater fluctuations may occur due to conditions other than those present at the time measurements were made.

Page 2 of 3
Boring No.: BB-SPC-203A

## Maine Department of Transportation — Soil/Rock Exploration Log (US UNITS)

Project: Scarborough Eastern Trail Project
Location: Scarborough, Maine
Boring No.: BB-SPC-203A
WIN: 019426.10

| | | | |
|---|---|---|---|
| Driller: | Northern Test Boring | Elevation (ft.): | Auger ID/OD: |
| Operator: | Mike Nadeau | Datum: | Sampler: Thin-Walled Tube |
| Logged By: | Serena Pape | Rig Type: DTearTan D-50 Turbo | Hammer Wt./Fall: |
| Date Start/Finish: | 06-19-2018 / 06-19-2018 | Drilling Methods: 3" Tri cone Bit, Rotary Wash | Core Barrels: |
| Boring Location: | East of Tracks | Casing ID/OD: 4" Steel Casing | Water Level*: ?' |

Definitions: D = Split Spoon Sample; ND = Unsuccessful Split Spoon Sample attempt; U = Thin Wall Tube Sample; R = Rock Core Sample; V = Inertia Vane Shear Test; SSA = Solid Stem Auger

Definitions: $S_u$ = Inertia Field Vane Shear Strength (psf); $T_v$ = Pocket Torvane Shear Strength (psf); $q_p$ = Unconfined Compressive Strength (ksf); $S_{u(LAB)}$ = Lab Vane Shear Strength (psf); WOH = weight of 140lb. hammer; WOR = weight of rods

Definitions: WC = water content, percent; LL = Liquid Limit; PL = Plastic Limit; PI = Plasticity Index; G = Grain Size Analysis; C = Consolidation Test

Sample Information

| Depth (ft.) | Sample No. | Rec. (in.) | Sample Depth (ft.) | Blows / 6 in. Shear Strength (psf) or RQD (%) | N-value | Casing Blows | Elevation (ft.) | Graphic Log | Visual Description and Remarks | Laboratory Testing Results/ AASHTO and Unified Class |
|---|---|---|---|---|---|---|---|---|---|---|
| 60 | U-5 | 24/21 | 60.0 – 62.0 | | | | -62.0 | | Bottom of Exploration at 62.0 feet below ground surface. Not refusal. | 15111D WC=37.4% A & C LL=29.9 PL=19.2 PI=10.7 |
| 65 | | | | | | | | | | |
| 70 | | | | | | | | | | |
| 75 | | | | | | | | | | |
| 80 | | | | | | | | | | |
| 85 | | | | | | | | | | |
| 90 | | | | | | | | | | |

Remarks:
1. RWG&A Project No. 0600-102
2. Hammer Serial No. 377.
3. SPT N-values uncorrected.
4. Casing hydraulically pushed.
5. MaineDOT field vanes

Stratification lines represent approximate boundaries between soil types; transitions may be gradual.

* Water level readings have been made at times and under conditions stated. Groundwater fluctuations may occur due to conditions other than those present at the time measurements were made.

Page 3 of 3
Boring No.: BB-SPC-203A

## Maine Department of Transportation — Soil/Rock Exploration Log (US UNITS)

Project: Scarborough Eastern Trail Project
Location: Scarborough, Maine
Boring No.: EB-SPC-203
WIN: 019426.10

| | | | |
|---|---|---|---|
| Driller: | H.W. Gittespie & Associates, Inc. | Elevation (ft.): N/A | Auger ID/OD: 4.25" ID / 7.5 OD |
| Operator: | M. Nadeau | Datum: | Sampler: SPT Split-Barrel |
| Logged By: | D. Walker | Rig Type: DTearTan D50 | Hammer Wt./Fall: 140 lbs. 30" |
| Date Start/Finish: | 09/27/2016 / 09/27/2016 | Drilling Methods: HSA | Core Barrels: N/A |
| Boring Location: | See Exploration Location Plan | Casing ID/OD: N/A | Water Level*: 5.5' |

Definitions: D = Split Spoon Sample; ND = Unsuccessful Split Spoon Sample attempt; U = Thin Wall Tube Sample; R = Rock Core Sample; V = Inertia Vane Shear Test; SSA = Solid Stem Auger

Definitions: $S_u$ = Inertia Field Vane Shear Strength (psf); $T_v$ = Pocket Torvane Shear Strength (psf); $q_p$ = Unconfined Compressive Strength (ksf); $S_{u(LAB)}$ = Lab Vane Shear Strength (psf); WOH = weight of 140lb. hammer; WOR = weight of rods

Definitions: WC = water content, percent; LL = Liquid Limit; PL = Plastic Limit; PI = Plasticity Index; G = Grain Size Analysis; C = Consolidation Test

Sample Information

| Depth (ft.) | Sample No. | Rec. (in.) | Sample Depth (ft.) | Blows / 6 in. Shear Strength (psf) or RQD (%) | N-value | Casing Blows | Elevation (ft.) | Graphic Log | Visual Description and Remarks | Laboratory Testing Results/ AASHTO and Unified Class |
|---|---|---|---|---|---|---|---|---|---|---|
| 0 | S-1 | 24/15 | 0.0 – 2.0 | 3 | | | -0.2 | | TOPSOIL AND ORGANIC MATERIAL 12 Inches±. | |
| | S-2 | 24/13 | 2.0 – 4.0 | 8 | | | -0.2 | | SAND (SP): Reddish brown, dry to wet, very loose to medium dense, fine to medium sand, little coarse sand. | |
| 5 | S-3 | 24/16 | 4.0 – 6.0 | 20 | | | | | Becomes tan, loose, fine to coarse sand, little silt. | |
| | S-4 | 24/24 | 6.0 – 8.0 | 11 | | | | | Becomes moist, medium dense. | |
| | S-5 | 24/15 | 8.0 – 10.0 | 2 | | | | | Becomes reddish brown, wet, fine to medium sand. | |
| 10 | S-6 | 24/15 | 10.0 – 12.0 | 5 | | | -9.0 | | 2" Clay layer at 3', then 2" medium to coarse sand layer. Grades to fine sand. Becomes very soft. | |
| | S-7 | 24/24 | 12.0 – 14.0 | 2 | | | -9.0 | | SILTY CLAY (CL): Gray, wet, soft to medium clay, some silt, Alternating clay and silt lenses. | |
| | S-8 | 24/16 | 14.0 – 16.0 | WOH | | | -11.5 | | SILTY SAND (SM): Gray, wet, very loose, fine sand, some silt, Alternating seams of fine sand and silt. | |
| 15 | | | | | | | -13.5 | | SILTY CLAY (CL): Gray, wet, very soft, silty clay, Alternating lenses of silty clay and silty sand. | |
| | | | | | | | -16.0 | | Bottom of Exploration at 16.0 feet below ground surface. Not refusal. | |
| 20 | | | | | | | | | | |
| 25 | | | | | | | | | | |
| 30 | | | | | | | | | | |

Remarks:
1. RWG&A Project No. 0600-102.
2. Hammer Serial No. 283.
3. SPT N-values uncorrected.

Stratification lines represent approximate boundaries between soil types; transitions may be gradual.

* Water level readings have been made at times and under conditions stated. Groundwater fluctuations may occur due to conditions other than those present at the time measurements were made.

Page 1 of 1
Boring No.: EB-SPC-203

## Maine Department of Transportation — Soil/Rock Exploration Log (US UNITS)

Project: Scarborough Eastern Trail Project
Location: Scarborough, Maine
Boring No.: EB-SPC-203A
WIN: 019426.10

| | | | |
|---|---|---|---|
| Driller: | Northern Test Boring | Elevation (ft.): | Auger ID/OD: |
| Operator: | Mike Nadeau | Datum: | Sampler: SPT Split-Barrel |
| Logged By: | Serena Pape | Rig Type: DTearTan D-50 Turbo | Hammer Wt./Fall: 140lb/30in |
| Date Start/Finish: | 06-19-2018 / 06-19-2018 | Drilling Methods: 3" Tri cone Bit, Rotary Wash | Core Barrels: |
| Boring Location: | East of Tracks | Casing ID/OD: 4" Steel Casing | Water Level*: 6.5' |

Definitions: D = Split Spoon Sample; ND = Unsuccessful Split Spoon Sample attempt; U = Thin Wall Tube Sample; R = Rock Core Sample; V = Inertia Vane Shear Test; SSA = Solid Stem Auger

Definitions: $S_u$ = Inertia Field Vane Shear Strength (psf); $T_v$ = Pocket Torvane Shear Strength (psf); $q_p$ = Unconfined Compressive Strength (ksf); $S_{u(LAB)}$ = Lab Vane Shear Strength (psf); WOH = weight of 140lb. hammer; WOR = weight of rods

Definitions: WC = water content, percent; LL = Liquid Limit; PL = Plastic Limit; PI = Plasticity Index; G = Grain Size Analysis; C = Consolidation Test

Sample Information

| Depth (ft.) | Sample No. | Rec. (in.) | Sample Depth (ft.) | Blows / 6 in. Shear Strength (psf) or RQD (%) | N-value | Casing Blows | Elevation (ft.) | Graphic Log | Visual Description and Remarks | Laboratory Testing Results/ AASHTO and Unified Class |
|---|---|---|---|---|---|---|---|---|---|---|
| 0 | S-1 | 24/23 | 0.0 – 2.0 | 3 / 4 / 4 / 7 | 8 | | -0.2 | | TOPSOIL AND ORGANIC MATERIAL 13 Inches±. | |
| | | | | | | | -0.2 | | SILTY SAND (SM): Loose, moist, medium to fine sand, little silt, fan, Becomes brown at 0.5'. | |
| 5 | S-2 | 24/17 | 5.0 – 7.0 | 5 / 6 / 3 / 4 | 9 | | -6.0 | | SANDY SILT (ML): Very loose, wet, silt, some fine sand, gray. | |
| | | | | | | | | | Becomes some clay at 9'. | |
| 10 | S-3 | 24/24 | 10.0 – 12.0 | WOH | | | -15.0 | | SILTY CLAY WITH SAND (CL): Soft, wet, clay, little silt, few fine sand, gray. | |
| | FV-1 S-4 | 24/24 | 15.0 – 15.4 | Sur=1020 psf Residual Sur=110 psf | | | | | 65x130 mm raw torque readings: FV-1: 37.0/4.0 ft-lbs | |
| | | | 15.5 – 17.0 | WOH | | | | | | |
| 15 | S-5 FV-2 | 24/24 | 20.0 – 22.0 | WOH Sur=440 psf | | | | | Becomes trace fine sand. 65x130 mm raw torque readings: FV-2: 16.0/1.0 ft-lbs FV-3: 20.0/1.0 ft-lbs FV-3: 20.0/1.0 ft-lbs | |
| | FV-3 | | 20.0 – 20.4 | Residual Sur=30 psf Sur=550 psf | | | | | | |
| | | | 21.0 – 21.4 | Residual Sur=30 psf | | | | | | |
| 20 | S-6 FV-4 | 24/24 | 25.0 – 25.4 | WOH Sur=880 psf | | | | | 65x130 mm raw torque readings: FV-4: 18.0/2.0 ft-lbs | |
| | | | 25.0 – 25.4 | Residual Sur=50 psf | | | | | | |
| 25 | | | | | | | | | | |
| 30 | | | | | | | | | | |

Remarks:
1. RWG&A Project No. 0600-102
2. SPT N-Values are uncorrected
3. Hammer Serial No. 377
4. MaineDOT field vanes
5. Field vanes conducted then samples with SPT Split-Barrel

Stratification lines represent approximate boundaries between soil types; transitions may be gradual.

* Water level readings have been made at times and under conditions stated. Groundwater fluctuations may occur due to conditions other than those present at the time measurements were made.

Page 1 of 3
Boring No.: EB-SPC-203A

## Maine Department of Transportation — Soil/Rock Exploration Log (US UNITS)

Project: Scarborough Eastern Trail Project
Location: Scarborough, Maine
Boring No.: EB-SPC-203A
WIN: 019426.10

| | | | |
|---|---|---|---|
| Driller: | Northern Test Boring | Elevation (ft.): | Auger ID/OD: |
| Operator: | Mike Nadeau | Datum: | Sampler: SPT Split-Barrel |
| Logged By: | Serena Pape | Rig Type: DTearTan D-50 Turbo | Hammer Wt./Fall: 140lb/30in |
| Date Start/Finish: | 06-19-2018 / 06-19-2018 | Drilling Methods: 3" Tri cone Bit, Rotary Wash | Core Barrels: |
| Boring Location: | East of Tracks | Casing ID/OD: 4" Steel Casing | Water Level*: 6.5' |

Definitions: D = Split Spoon Sample; ND = Unsuccessful Split Spoon Sample attempt; U = Thin Wall Tube Sample; R = Rock Core Sample; V = Inertia Vane Shear Test; SSA = Solid Stem Auger

Definitions: $S_u$ = Inertia Field Vane Shear Strength (psf); $T_v$ = Pocket Torvane Shear Strength (psf); $q_p$ = Unconfined Compressive Strength (ksf); $S_{u(LAB)}$ = Lab Vane Shear Strength (psf); WOH = weight of 140lb. hammer; WOR = weight of rods

Definitions: WC = water content, percent; LL = Liquid Limit; PL = Plastic Limit; PI = Plasticity Index; G = Grain Size Analysis; C = Consolidation Test

Sample Information

| Depth (ft.) | Sample No. | Rec. (in.) | Sample Depth (ft.) | Blows / 6 in. Shear Strength (psf) or RQD (%) | N-value | Casing Blows | Elevation (ft.) | Graphic Log | Visual Description and Remarks | Laboratory Testing Results/ AASHTO and Unified Class |
|---|---|---|---|---|---|---|---|---|---|---|
| 20 | FV-5 S-7 | 24/24 | 30.0 – 30.4 | Sur=440 psf Residual Sur=0 psf | | | | | 65x130 mm raw torque readings: FV-5: 16.0/0.0 ft-lbs FV-6: 12.0/0.0 ft-lbs | |
| | FV-6 | | 32.0 – 32.4 | Sur=330 psf Residual Sur=0 psf | | | | | Hydraulically push probe rod without sampling from 32 to 65 feet. | |
| 25 | | | 31.0 – 31.4 | | | | | | | |
| 30 | | | | | | | | | | |
| 35 | | | | | | | | | | |
| 40 | | | | | | | | | | |
| 45 | | | | | | | | | | |
| 50 | | | | | | | | | | |
| 55 | | | | | | | | | | |
| 60 | | | | | | | | | | |

Remarks:
1. RWG&A Project No. 0600-102
2. SPT N-Values are uncorrected
3. Hammer Serial No. 377
4. MaineDOT field vanes
5. Field vanes conducted then samples with SPT Split-Barrel

Stratification lines represent approximate boundaries between soil types; transitions may be gradual.

* Water level readings have been made at times and under conditions stated. Groundwater fluctuations may occur due to conditions other than those present at the time measurements were made.

Page 2 of 3
Boring No.: EB-SPC-203A

## Maine Department of Transportation — Soil/Rock Exploration Log (US UNITS)

Project: Scarborough Eastern Trail Project
Location: Scarborough, Maine
Boring No.: EB-SPC-203A
WIN: 019426.10

| | | | |
|---|---|---|---|
| Driller: | Northern Test Boring | Elevation (ft.): | Auger ID/OD: |
| Operator: | Mike Nadeau | Datum: | Sampler: SPT Split-Barrel |
| Logged By: | Serena Pape | Rig Type: DTearTan D-50 Turbo | Hammer Wt./Fall: 140lb/30in |
| Date Start/Finish: | 06-19-2018 / 06-19-2018 | Drilling Methods: 3" Tri cone Bit, Rotary Wash | Core Barrels: |
| Boring Location: | East of Tracks | Casing ID/OD: 4" Steel Casing | Water Level*: 6.5' |

Definitions: D = Split Spoon Sample; ND = Unsuccessful Split Spoon Sample attempt; U = Thin Wall Tube Sample; R = Rock Core Sample; V = Inertia Vane Shear Test; SSA = Solid Stem Auger

Definitions: $S_u$ = Inertia Field Vane Shear Strength (psf); $T_v$ = Pocket Torvane Shear Strength (psf); $q_p$ = Unconfined Compressive Strength (ksf); $S_{u(LAB)}$ = Lab Vane Shear Strength (psf); WOH = weight of 140lb. hammer; WOR = weight of rods

Definitions: WC = water content, percent; LL = Liquid Limit; PL = Plastic Limit; PI = Plasticity Index; G = Grain Size Analysis; C = Consolidation Test

Sample Information

| Depth (ft.) | Sample No. | Rec. (in.) | Sample Depth (ft.) | Blows / 6 in. Shear Strength (psf) or RQD (%) | N-value | Casing Blows | Elevation (ft.) | Graphic Log | Visual Description and Remarks | Laboratory Testing Results/ AASHTO and Unified Class |
|---|---|---|---|---|---|---|---|---|---|---|
| 60 | | | | | | | | | Becomes more stiff at 62'. | |
| 65 | | | | | | | -65.0 | | Bottom of Exploration at 65.0 feet below ground surface. Hydraulic push probe refusal. | |
| 70 | | | | | | | | | | |
| 75 | | | | | | | | | | |
| 80 | | | | | | | | | | |
| 85 | | | | | | | | | | |
| 90 | | | | | | | | | | |

Remarks:
1. RWG&A Project No. 0600-102
2. SPT N-Values are uncorrected
3. Hammer Serial No. 377
4. MaineDOT field vanes
5. Field vanes conducted then samples with SPT Split-Barrel

Stratification lines represent approximate boundaries between soil types; transitions may be gradual.

* Water level readings have been made at times and under conditions stated. Groundwater fluctuations may occur due to conditions other than those present at the time measurements were made.

Page 3 of 3
Boring No.: EB-SPC-203A

PROGRESS PLANS
April 4, 2023

STATE OF MAINE
DEPARTMENT OF TRANSPORTATION

AC-STP-1942(600)X & CMAQ-1942(610)

WIN
19426.00 & 019426.10 HIGHWAY PLANS

| | BY | DATE |
|---|---|---|
| BILL REICH | | |
| C.Helmick | P. Bishop | 12\22 |
| L. DRISCOLL | J. Olund | 12\22 |
| - | - | - |
| - | - | - |
| - | - | - |
| - | - | - |
| - | - | - |
| - | - | - |

SIGNATURE

P.E. NUMBER

DATE

PROJ. MANAGER
DESIGN-DETAILED
CHECKED-REVIEWED
DESIGN2-DETAILED2
DESIGN3-DETAILED3

| | | |
|---|---|---|
| REVISIONS 1 | - | - |
| REVISIONS 2 | - | - |
| REVISIONS 3 | - | - |
| REVISIONS 4 | - | - |
| FIELD CHANGES | - | - |

TOWN OF SCARBOROUGH
EASTERN TRAIL CONNECTOR
SCARBOROUGH TO SOUTH PORTLAND, MAINE

BORING LOGS

SHEET NUMBER
8
OF 66

Maine Department of Transportation

Soil/Rock Exploration Log
US UNITS

Project: Scarborough Eastern Trail Project
Location: Scarborough, Maine

Boring No.: EB-SPC-204
WIN: 019426.10

| | | | |
|---|---|---|---|
| Driller: | Northern Test Boring | Elevation (ft.): | Auger ID/OD: |
| Operator: | Mike Nadeau | Datum: | Sampler: SPT Split-Barrel |
| Logged By: | Serena Pape | Rig Type: DTearTan D-50 Turbo | Hammer Wt./Fall: 140lbs/30in |
| Date Start/Finish: | 06-20-2018 / 06-20-2018 | Drilling Method: 3" Tri cone Bit, Rotary Wash | Core Barrel: |
| Boring Location: | East of Tracks | Casing ID/OD: 4" Steel Casing | Water Level*: 5' |

Definitions:
D = Split Spoon Sample
WO = Unsuccessful Split Spoon Sample attempt
U = Thin Wall Tube Sample
R = Rock Core Sample
V = Inelhu Vane Shear Test
SSA = Solid Stem Auger

Definitions:
$S_u$ = Inelhu Field Vane Shear Strength (psf)
$T_v$ = Pocket Torvane Shear Strength (psf)
$q_p$ = Unconfined Compressive Strength (ksf)
$S_{u(lab)}$ = Lab Vane Shear Strength (psf)
MOH = weight of 140lb. hammer
WOR = weight of rods

Definitions:
WC = water content, percent
LL = Liquid Limit
PL = Plastic Limit
PI = Plasticity Index
G = Grain Size Analysis
C = Consolidation Test

Sample Information

| Depth (ft.) | Sample No. | Pen./Rec. (in.) | Sample Depth (ft.) | Blows /6 in. Sheer Strength (psf) or RQD (%) | N-value | Casing Blows | Elevation (ft.) | Graphic Log | Visual Description and Remarks | Laboratory Testing Results/ AASHTO and Unified Class |
|---|---|---|---|---|---|---|---|---|---|---|
| 0 | S-1 | 24/24 | 0.0 - 2.0 | 2 / 2 / 5 / 7 | 7 | | -0.2 | | TOPSOIL AND ORGANIC MATERIAL 13 Inches±. | |
| | | | | | | | -0.2 | | SILTY SAND (SM) 1: Loose, moist, medium to fine sand, few silt, orange. | |
| | S-2 | 24/21 | 2.0 - 4.0 | 5 / 6 / 8 / 10 | 14 | | -2.0 | | SILTY CLAY (CL) 1: Stiff, moist, clay, few silt, gray. | |
| | | | | | | | -3.0 | | SILTY SAND (SM) 1: Loose, moist, medium to fine sand, few silt, tan. | |
| | S-3 | 24/14 | 4.0 - 6.0 | 5 / 4 / 2 / 4 | 6 | | -4.0 | | SANDY SILT (SM-ML) 1: Loose, wet, silt, some fine sand, orange. Becomes gray, runny at 5'. | |
| 5 | S-4 | 24/21 | 6.0 - 8.0 | 4 / 3 / 5 / 2 | 5 | | -6.7 | | SILTY CLAY (CL) 1: Very soft, wet, clay, some silt, frequent silty sand seams, gray. | |
| | S-5 | 24/24 | 8.0 - 10.0 | WOH | 1 | | | | | |
| | S-6 | 24/24 | 10.0 - 12.0 | WOH / 4 / 5 | 4 | | -11.5 | | SILTY SAND (SM) 1: Very loose, wet, fine sand, some silt, few clay. | 15112B WC=31.2% G |
| | S-7 | 24/24 | 12.0 - 14.0 | 3 / 2 / 1 / 2 | 3 | | -13.5 | | SILTY CLAY (CL) 1: Very soft to medium, wet, clay, some silt, frequent silty sand seams, gray. Occasional silty sand seams. | |
| 15 | S-8 | 24/24 | 15.0 - 17.0 | 1 / 1 / WOR | 1 | | | | | |
| | S-9 FV-1 | 24/24 | 20.0 - 20.4 | WOH Su=450 psf | | | | | 65x130 mm raw torque readings: FV-1: 25.0/0.0 ft-lbs FV-2: 18.0/0.0 ft-lbs | |
| | FV-2 | | 20.0 - 20.4 | Residual Su=0 psf Su=450 psf | | | | | | |
| | | | 21.0 - 21.4 | Residual Su=0 psf | | | | | | |
| 25 | S-10 | 24/24 | 25.0 - 27.0 | WOH | | | | | | 15112A WC=4.5% A LL=33.5 PL=21.1 PI=12.4 |
| 30 | | | | | | | | | | |

Remarks:
1. RWG&A Project No. 0600-102
2. SPT N-Values are uncorrected.
3. Hammer Serial No. 377
4. MaineDOT field vanes.
5. Field vane test conducted then sampled with SPT Split-Barrel.

Stratification lines represent approximate boundaries between soil types; transitions may be gradual.

* Water level readings have been made at times and under conditions stated. Groundwater fluctuations may occur due to conditions other than those present at the time measurements were made.

Page 1 of 3
Boring No.: EB-SPC-204

Maine Department of Transportation

Soil/Rock Exploration Log
US UNITS

Project: Scarborough Eastern Trail Project
Location: Scarborough, Maine

Boring No.: EB-SPC-204
WIN: 019426.10

| | | | |
|---|---|---|---|
| Driller: | Northern Test Boring | Elevation (ft.): | Auger ID/OD: |
| Operator: | Mike Nadeau | Datum: | Sampler: SPT Split-Barrel |
| Logged By: | Serena Pape | Rig Type: DTearTan D-50 Turbo | Hammer Wt./Fall: 140lbs/30in |
| Date Start/Finish: | 06-20-2018 / 06-20-2018 | Drilling Method: 3" Tri cone Bit, Rotary Wash | Core Barrel: |
| Boring Location: | East of Tracks | Casing ID/OD: 4" Steel Casing | Water Level*: 5' |

Definitions:
D = Split Spoon Sample
WO = Unsuccessful Split Spoon Sample attempt
U = Thin Wall Tube Sample
R = Rock Core Sample
V = Inelhu Vane Shear Test
SSA = Solid Stem Auger

Definitions:
$S_u$ = Inelhu Field Vane Shear Strength (psf)
$T_v$ = Pocket Torvane Shear Strength (psf)
$q_p$ = Unconfined Compressive Strength (ksf)
$S_{u(lab)}$ = Lab Vane Shear Strength (psf)
MOH = weight of 140lb. hammer
WOR = weight of rods

Definitions:
WC = water content, percent
LL = Liquid Limit
PL = Plastic Limit
PI = Plasticity Index
G = Grain Size Analysis
C = Consolidation Test

Sample Information

| Depth (ft.) | Sample No. | Pen./Rec. (in.) | Sample Depth (ft.) | Blows /6 in. Sheer Strength (psf) or RQD (%) | N-value | Casing Blows | Elevation (ft.) | Graphic Log | Visual Description and Remarks | Laboratory Testing Results/ AASHTO and Unified Class |
|---|---|---|---|---|---|---|---|---|---|---|
| 30 | S-11 | 24/24 | 30.0 - 32.0 | WOH | | | | | Hydraulically push probe from 32 to 60 feet. | |
| 35 | | | | | | | | | | |
| 40 | | | | | | | | | | |
| 45 | | | | | | | | | | |
| 50 | | | | | | | | | Becomes firmer at 55'. | |
| 55 | | | | | | | | | | |
| 60 | | | | | | | | | | |

Remarks:
1. RWG&A Project No. 0600-102
2. SPT N-Values are uncorrected.
3. Hammer Serial No. 377
4. MaineDOT field vanes.
5. Field vane test conducted then sampled with SPT Split-Barrel.

Stratification lines represent approximate boundaries between soil types; transitions may be gradual.

* Water level readings have been made at times and under conditions stated. Groundwater fluctuations may occur due to conditions other than those present at the time measurements were made.

Page 2 of 3
Boring No.: EB-SPC-204

Maine Department of Transportation

Soil/Rock Exploration Log
US UNITS

Project: Scarborough Eastern Trail Project
Location: Scarborough, Maine

Boring No.: EB-SPC-204
WIN: 019426.10

| | | | |
|---|---|---|---|
| Driller: | Northern Test Boring | Elevation (ft.): | Auger ID/OD: |
| Operator: | Mike Nadeau | Datum: | Sampler: SPT Split-Barrel |
| Logged By: | Serena Pape | Rig Type: DTearTan D-50 Turbo | Hammer Wt./Fall: 140lbs/30in |
| Date Start/Finish: | 06-20-2018 / 06-20-2018 | Drilling Method: 3" Tri cone Bit, Rotary Wash | Core Barrel: |
| Boring Location: | East of Tracks | Casing ID/OD: 4" Steel Casing | Water Level*: 5' |

Definitions:
D = Split Spoon Sample
WO = Unsuccessful Split Spoon Sample attempt
U = Thin Wall Tube Sample
R = Rock Core Sample
V = Inelhu Vane Shear Test
SSA = Solid Stem Auger

Definitions:
$S_u$ = Inelhu Field Vane Shear Strength (psf)
$T_v$ = Pocket Torvane Shear Strength (psf)
$q_p$ = Unconfined Compressive Strength (ksf)
$S_{u(lab)}$ = Lab Vane Shear Strength (psf)
MOH = weight of 140lb. hammer
WOR = weight of rods

Definitions:
WC = water content, percent
LL = Liquid Limit
PL = Plastic Limit
PI = Plasticity Index
G = Grain Size Analysis
C = Consolidation Test

Sample Information

| Depth (ft.) | Sample No. | Pen./Rec. (in.) | Sample Depth (ft.) | Blows /6 in. Sheer Strength (psf) or RQD (%) | N-value | Casing Blows | Elevation (ft.) | Graphic Log | Visual Description and Remarks | Laboratory Testing Results/ AASHTO and Unified Class |
|---|---|---|---|---|---|---|---|---|---|---|
| 50 | | | | | | | | | Bottom of Exploration at 60.0 feet below ground surface. Borehole backfilled with soil-cement grout to surface. Hydraulic probe refusal. | |
| 65 | | | | | | | | | | |
| 70 | | | | | | | | | | |
| 75 | | | | | | | | | | |
| 80 | | | | | | | | | | |
| 85 | | | | | | | | | | |
| 90 | | | | | | | | | | |

Remarks:
1. RWG&A Project No. 0600-102
2. SPT N-Values are uncorrected.
3. Hammer Serial No. 377
4. MaineDOT field vanes.
5. Field vane test conducted then sampled with SPT Split-Barrel.

Stratification lines represent approximate boundaries between soil types; transitions may be gradual.

* Water level readings have been made at times and under conditions stated. Groundwater fluctuations may occur due to conditions other than those present at the time measurements were made.

Page 3 of 3
Boring No.: EB-SPC-204

Maine Department of Transportation

Soil/Rock Exploration Log
US UNITS

Project: Scarborough Eastern Trail Project
Location: Scarborough, Maine

Boring No.: EB-SPC-205
WIN: 019426.10

| | | | |
|---|---|---|---|
| Driller: | Northern Test Boring | Elevation (ft.): N/A | Auger ID/OD: |
| Operator: | Mike Nadeau | Datum: | Sampler: SPT Split-Barrel |
| Logged By: | Serena Pape | Rig Type: DTearTan D-50 Turbo | Hammer Wt./Fall: 140lbs/30in |
| Date Start/Finish: | 06-20-2018 / 06-20-2018 | Drilling Method: 3" Tri cone Bit, Rotary Wash | Core Barrel: |
| Boring Location: | East of Tracks | Casing ID/OD: 4" Steel Casing | Water Level*: 2' |

Definitions:
D = Split Spoon Sample
WO = Unsuccessful Split Spoon Sample attempt
U = Thin Wall Tube Sample
R = Rock Core Sample
V = Inelhu Vane Shear Test
SSA = Solid Stem Auger

Definitions:
$S_u$ = Inelhu Field Vane Shear Strength (psf)
$T_v$ = Pocket Torvane Shear Strength (psf)
$q_p$ = Unconfined Compressive Strength (ksf)
$S_{u(lab)}$ = Lab Vane Shear Strength (psf)
MOH = weight of 140lb. hammer
WOR = weight of rods

Definitions:
WC = water content, percent
LL = Liquid Limit
PL = Plastic Limit
PI = Plasticity Index
G = Grain Size Analysis
C = Consolidation Test

Sample Information

| Depth (ft.) | Sample No. | Pen./Rec. (in.) | Sample Depth (ft.) | Blows /6 in. Sheer Strength (psf) or RQD (%) | N-value | Casing Blows | Elevation (ft.) | Graphic Log | Visual Description and Remarks | Laboratory Testing Results/ AASHTO and Unified Class |
|---|---|---|---|---|---|---|---|---|---|---|
| 0 | S-1 | 24/17 | 0.0 - 2.0 | 1 / 2 / 3 / 8 | 5 | | -0.2 | | TOPSOIL AND ORGANIC MATERIAL 12 Inches±. | |
| | | | | | | | -0.2 | | SAND WITH SILT (SP-SM) 1: Loose to medium dense, moist, medium to fine sand, few silt, orangy brown. Becomes medium dense, tan at 2'. | |
| | S-2 | 24/16 | 2.0 - 4.0 | 8 / 10 / 8 / 11 | 18 | | | | | |
| | S-3 | 24/19 | 4.0 - 6.0 | 5 / 5 / 5 / 5 | 10 | | | | Becomes wet, possibly due to roto- wash at 4'. | |
| 5 | S-4 | 24/22 | 6.0 - 8.0 | 4 / 4 / 5 / 4 | 9 | | | | Rust colored stripe at 5.2'. Becomes loose at 6'. Becomes gray at 7.2'. | 15112C WC=21.6% G |
| | S-5 | 24/24 | 8.0 - 10.0 | 1 / 1 / 1 / 1 | 2 | | -8.2 | | SILTY CLAY (CL) 1: Very soft to medium, wet, clay, some silt, gray. | |
| | S-6 | 24/24 | 10.0 - 12.0 | WOR | | | | | | |
| 15 | FV-1 S-7 | 24/24 | 15.0 - 15.4 | Su=360 psf Residual Su=0 psf | | | | | 65x130 mm raw torque readings: FV-1: 13.0/0.0 ft-lbs FV-2: 15.0/0.0 ft-lbs | |
| | FV-2 | | 15.0 - 17.0 | WOR Su=490 psf | | | | | | |
| | | | 16.0 - 16.4 | Residual Su=0 psf | | | | | | |
| | FV-3 S-8 | 24/24 | 20.0 - 20.4 | Su=360 psf Residual Su=60 psf | | | | | 65x130 mm raw torque readings: FV-3: 14.0/2.0 ft-lbs FV-4: 23.0/1.0 ft-lbs | |
| | FV-4 | | 20.0 - 22.0 | WOR Su=630 psf | | | | | | |
| | | | 21.0 - 21.4 | Residual Su=30 psf | | | | | | |
| 25 | S-9 FV-5 | 24/24 | 25.0 - 27.0 | WOR Su=630 psf | | | | | 65x130 mm raw torque readings: FV-5: 18.0/2.0 ft-lbs FV-6: 23.0/3.0 ft-lbs | |
| | FV-6 | | 25.4 - 26.4 | Residual Su=60 psf Su=630 psf Residual Su=60 psf | | | | | | |
| 30 | | | | | | | | | | |

Remarks:
1. RWG&A Project No. 0600-102
2. SPT N-Values are uncorrected
3. Hammer Serial No. 377.
4. MaineDOT field vanes
5. Field vane test conducted then sampled with SPT Split-Barrel.

Stratification lines represent approximate boundaries between soil types; transitions may be gradual.

* Water level readings have been made at times and under conditions stated. Groundwater fluctuations may occur due to conditions other than those present at the time measurements were made.

Page 1 of 2
Boring No.: EB-SPC-205

Maine Department of Transportation

Soil/Rock Exploration Log
US UNITS

Project: Scarborough Eastern Trail Project
Location: Scarborough, Maine

Boring No.: EB-SPC-205
WIN: 019426.10

| | | | |
|---|---|---|---|
| Driller: | Northern Test Boring | Elevation (ft.): N/A | Auger ID/OD: |
| Operator: | Mike Nadeau | Datum: | Sampler: SPT Split-Barrel |
| Logged By: | Serena Pape | Rig Type: DTearTan D-50 Turbo | Hammer Wt./Fall: 140lbs/30in |
| Date Start/Finish: | 06-20-2018 / 06-20-2018 | Drilling Method: 3" Tri cone Bit, Rotary Wash | Core Barrel: |
| Boring Location: | East of Tracks | Casing ID/OD: 4" Steel Casing | Water Level*: 2' |

Definitions:
D = Split Spoon Sample
WO = Unsuccessful Split Spoon Sample attempt
U = Thin Wall Tube Sample
R = Rock Core Sample
V = Inelhu Vane Shear Test
SSA = Solid Stem Auger

Definitions:
$S_u$ = Inelhu Field Vane Shear Strength (psf)
$T_v$ = Pocket Torvane Shear Strength (psf)
$q_p$ = Unconfined Compressive Strength (ksf)
$S_{u(lab)}$ = Lab Vane Shear Strength (psf)
MOH = weight of 140lb. hammer
WOR = weight of rods

Definitions:
WC = water content, percent
LL = Liquid Limit
PL = Plastic Limit
PI = Plasticity Index
G = Grain Size Analysis
C = Consolidation Test

Sample Information

| Depth (ft.) | Sample No. | Pen./Rec. (in.) | Sample Depth (ft.) | Blows /6 in. Sheer Strength (psf) or RQD (%) | N-value | Casing Blows | Elevation (ft.) | Graphic Log | Visual Description and Remarks | Laboratory Testing Results/ AASHTO and Unified Class |
|---|---|---|---|---|---|---|---|---|---|---|
| 30 | S-10 | 24/24 | 30.0 - 32.0 | WOR | | | | | | |
| 35 | S-11 | 24/24 | 34.0 - 36.0 | WOR | | | | | | |
| 40 | S-12 | 24/24 | 40.0 - 42.0 | 5 / 5 / 4 / 4 | 9 | | -40.0 | | SANDY SILT (SM-ML) 1: Loose, wet, silt, some fine sand, gray. | 15112D WC=21.6% G |
| | | | | | | | -41.5 | | SILTY CLAY (CL) 1: Stiff, wet, clay, little silt, gray. | |
| 45 | S-13 | 24/24 | 45.0 - 47.0 | 2 / 3 / 5 / 4 | 8 | | -45.0 | | SAND WITH SILT (SP-SM) 1: Loose to medium dense, wet, fine sand, little silt, occasional clay seams, gray. | 15112E WC=24.0% G |
| 50 | S-14 | 24/24 | 50.0 - 52.0 | 3 / 1 / 1 / 1 | 2 | | | | Becomes very loose at 50'. | |
| 55 | S-15 | 24/19 | 55.0 - 57.0 | 7 / 7 / 9 / 14 | 16 | | | | Becomes medium dense at 54'. | |
| 60 | | | | | | | -57.0 | | Bottom of Exploration at 57.0 feet below ground surface. | |

Remarks:
1. RWG&A Project No. 0600-102
2. SPT N-Values are uncorrected
3. Hammer Serial No. 377.
4. MaineDOT field vanes
5. Field vane test conducted then sampled with SPT Split-Barrel.

Stratification lines represent approximate boundaries between soil types; transitions may be gradual.

* Water level readings have been made at times and under conditions stated. Groundwater fluctuations may occur due to conditions other than those present at the time measurements were made.

Page 2 of 2
Boring No.: EB-SPC-205

PROGRESS PLANS
April 4, 2023

STATE OF MAINE
DEPARTMENT OF TRANSPORTATION

AC-STP-1942(600)X & CMAQ-1942(610)

WIN
19426.00 & 019426.10 HIGHWAY PLANS

| | BILL REICH | DATE |
|---|---|---|
| PROJ. MANAGER | | |
| DESIGN-DETAILED | C.Helmick | P. Bishop 12\22 |
| CHECKED-REVIEWED | L. DRISCOLL | J. Olund 12\22 |
| DESIGN2-DETAILED2 | - | - |
| DESIGN3-DETAILED3 | - | - |
| REVISIONS 1 | - | - |
| REVISIONS 2 | - | - |
| REVISIONS 3 | - | - |
| REVISIONS 4 | - | - |
| FIELD CHANGES | - | - |

SIGNATURE

P.E. NUMBER

DATE

TOWN OF SCARBOROUGH
EASTERN TRAIL CONNECTOR
SCARBOROUGH TO SOUTH PORTLAND, MAINE

BORING LOGS

SHEET NUMBER
9
OF 66

Username:
Date:4/4/2023
Division:
Filename: 009_Boring Logs.dgn

Maine Department of Transportation

Soil/Rock Exploration Log

US UNITS

Project: Scarborough Eastern Trail Project
Location: Scarborough, Maine

Boring No.: EB-SNR-101
WIN: 019426.10

| | | | | | |
|---|---|---|---|---|---|
| Driller: | Great Works Test Boring | Elevation (ft.): | | Auger ID/OD: | - |
| Operator: | Jeff Lee | Datum: | | Sampler: | SPT Split-Barrel |
| Logged By: | D. Walker | Rig Type: | CME 75 Track Rig | Hammer Wt./Fall: | 140lbs / 30 Inches |
| Date Start/Finish: | 07/12/2016 | Drilling Method: | Drive + Wash | Core Barrel: | - |
| Boring Location: | See Expl. Location Plan | Casing ID/OD: | 4-Inch | Water Level*: | 7' |

Definitions:
D = Split Spoon Sample
WO = Unsuccessful Split Spoon Sample attempt
U = Thin Wall Tube Sample
R = Rock Core Sample
V = Inelta Vane Shear Test
SSA = Solid Stem Auger

Definitions:
$S_u$ = Inelta Field Vane Shear Strength (psf)
$T_v$ = Pocket Torvane Shear Strength (psf)
$q_p$ = Unconfined Compressive Strength (ksf)
$S_{u(LAB)}$ = Lab Vane Shear Strength (psf)
WOH = weight of 140lb. hammer
WOR = weight of rods

Definitions:
WC = water content, percent
LL = Liquid Limit
PL = Plastic Limit
PI = Plasticity Index
G = Grain Size Analysis
C = Consolidation Test

Sample Information

| Depth (ft.) | Sample No. | Pen./Rec. (in.) | Sample Depth (ft.) | Blows /6 in. Shear Strength (psf) or RQD (%) | N-value | Casing Blows | Elevation (ft.) | Graphic Log | Visual Description and Remarks | Laboratory Testing Results/ AASHTO and Unified Class |
|---|---|---|---|---|---|---|---|---|---|---|
| 0 | S-1 | 24/12 | 0.0 - 2.0 | | 4 | | | | FILL: fine to medium sand, little fine gravel and silt. | |
| | S-2 | 24/8 | 2.0 - 4.0 | | 4 | | | | | |
| 5 | S-3 | 24/18 | 5.0 - 7.0 | | 5 | | -5.0 | | SILT WITH SAND (SM): Very loose, moist, silt, little fine sand, gray. | |
| | S-4 | 24/14 | 7.0 - 9.0 | | 4 | | -7.0 | | SILTY SAND (SM): Very loose, wet, fine to medium sand, some silt, tan-brown. | |
| 10 | S-5 | 24/14 | 9.0 - 11.0 | | 3 | | -9.5 | | Becomes very loose.<br>SILTY CLAY (CL): Soft, moist, clay, some silt, gray. | |
| 15 | S-6 | 24/12 | 15.0 - 17.0 | | 3 | | -15.5 | | SAND WITH GRAVEL (SP): Very loose, wet, fine to medium sand, little fine gravel, trace silt, gray. | |
| 20 | S-7 | 24/24 | 20.0 - 22.0 | | WOH | | -20.0 | | SILTY CLAY (CL): Very soft to medium, wet, clay, some silt, dark gray. | |
| 25 | FV-1<br>FV-2 | | 25.0 - 25.8<br>25.9 - 26.7 | Su=660 psf<br>Residual Su=50 psf<br>Su=840 psf<br>Residual Su=50 psf | | | | | 65x130 mm raw torque readings:<br>FV-1: 61.0/5.0 ft-lbs<br>FV-2: 59.0/5.0 ft-lbs | |
| 30 | | | | | | | | | | |

Remarks:
1. RWGSA Project No. 0600-102
2. SPT N-Values are uncorrected.
3. Shear vane data collected using 3-5/8"x9" field vane and torque wrench.
4. Hydraulically pushed 4-Inch diameter steel casing, no hammer used to drive casing.

Stratification lines represent approximate boundaries between soil types: transitions may be gradual.

* Water level readings have been made at times and under conditions stated. Groundwater fluctuations may occur due to conditions other than those present at the time measurements were made.

Page 1 of 3
Boring No.: EB-SNR-101

Maine Department of Transportation

Soil/Rock Exploration Log

US UNITS

Project: Scarborough Eastern Trail Project
Location: Scarborough, Maine

Boring No.: EB-SNR-101
WIN: 019426.10

| | | | | | |
|---|---|---|---|---|---|
| Driller: | Great Works Test Boring | Elevation (ft.): | | Auger ID/OD: | - |
| Operator: | Jeff Lee | Datum: | | Sampler: | SPT Split-Barrel |
| Logged By: | D. Walker | Rig Type: | CME 75 Track Rig | Hammer Wt./Fall: | 140lbs / 30 Inches |
| Date Start/Finish: | 07/12/2016 | Drilling Method: | Drive + Wash | Core Barrel: | - |
| Boring Location: | See Expl. Location Plan | Casing ID/OD: | 4-Inch | Water Level*: | 7' |

Definitions:
D = Split Spoon Sample
WO = Unsuccessful Split Spoon Sample attempt
U = Thin Wall Tube Sample
R = Rock Core Sample
V = Inelta Vane Shear Test
SSA = Solid Stem Auger

Definitions:
$S_u$ = Inelta Field Vane Shear Strength (psf)
$T_v$ = Pocket Torvane Shear Strength (psf)
$q_p$ = Unconfined Compressive Strength (ksf)
$S_{u(LAB)}$ = Lab Vane Shear Strength (psf)
WOH = weight of 140lb. hammer
WOR = weight of rods

Definitions:
WC = water content, percent
LL = Liquid Limit
PL = Plastic Limit
PI = Plasticity Index
G = Grain Size Analysis
C = Consolidation Test

Sample Information

| Depth (ft.) | Sample No. | Pen./Rec. (in.) | Sample Depth (ft.) | Blows /6 in. Shear Strength (psf) or RQD (%) | N-value | Casing Blows | Elevation (ft.) | Graphic Log | Visual Description and Remarks | Laboratory Testing Results/ AASHTO and Unified Class |
|---|---|---|---|---|---|---|---|---|---|---|
| 30 | FV-3<br>FV-4 | | 30.0 - 30.8<br>30.9 - 31.7 | Su=780 psf<br>Residual Su=110 psf<br>Su=740 psf<br>Residual Su=110 psf | | | | | 65x130 mm raw torque readings:<br>FV-3: 72.0/10.0 ft-lbs<br>FV-4: 68.0/10.0 ft-lbs | |
| 35 | FV-5 | | 35.0 - 35.8 | Su=1090 psf | | | | | Could not advance field vane. Possible sand seam. | |
| 40 | S-8 | 24/24 | 40.0 - 41.0 | | WOH | | | | Occasional silt lenses.<br>Pocket penetrometers Undrained Shear Strengths Su=>0.25 ksf. | |
| 45 | S-9 | 24/24 | 45.0 - 41.0 | | 1 | | -45.0<br>-46.0 | | SANDY SILT (ML): Very loose, wet, silt with little fine sand, gray.<br>CLAYEY SILT (ML): Very loose, wet, silt, some clay, gray. | |
| 50 | S-10 | 24/24 | 50.0 - 52.0 | | 1 | | -50.0 | | SANDY SILT (ML): Very loose, wet, silt, little fine sand. | |
| 55 | S-11 | 24/24 | 55.0 - 57.0 | | 6 | | -55.0 | | SAND (SP): Loose, wet, fine sand, trace silt, gray. | |
| 60 | | | | | | | | | | |

Remarks:
1. RWGSA Project No. 0600-102
2. SPT N-Values are uncorrected.
3. Shear vane data collected using 3-5/8"x9" field vane and torque wrench.
4. Hydraulically pushed 4-Inch diameter steel casing, no hammer used to drive casing.

Stratification lines represent approximate boundaries between soil types: transitions may be gradual.

* Water level readings have been made at times and under conditions stated. Groundwater fluctuations may occur due to conditions other than those present at the time measurements were made.

Page 2 of 3
Boring No.: EB-SNR-101

Maine Department of Transportation

Soil/Rock Exploration Log

US UNITS

Project: Scarborough Eastern Trail Project
Location: Scarborough, Maine

Boring No.: EB-SNR-101
WIN: 019426.10

| | | | | | |
|---|---|---|---|---|---|
| Driller: | Great Works Test Boring | Elevation (ft.): | | Auger ID/OD: | - |
| Operator: | Jeff Lee | Datum: | | Sampler: | SPT Split-Barrel |
| Logged By: | D. Walker | Rig Type: | CME 75 Track Rig | Hammer Wt./Fall: | 140lbs / 30 Inches |
| Date Start/Finish: | 07/13/2016 | Drilling Method: | Drive + Wash | Core Barrel: | - |
| Boring Location: | See Expl. Location Plan | Casing ID/OD: | 4-Inch | Water Level*: | 7' |

Definitions:
D = Split Spoon Sample
WO = Unsuccessful Split Spoon Sample attempt
U = Thin Wall Tube Sample
R = Rock Core Sample
V = Inelta Vane Shear Test
SSA = Solid Stem Auger

Definitions:
$S_u$ = Inelta Field Vane Shear Strength (psf)
$T_v$ = Pocket Torvane Shear Strength (psf)
$q_p$ = Unconfined Compressive Strength (ksf)
$S_{u(LAB)}$ = Lab Vane Shear Strength (psf)
WOH = weight of 140lb. hammer
WOR = weight of rods

Definitions:
WC = water content, percent
LL = Liquid Limit
PL = Plastic Limit
PI = Plasticity Index
G = Grain Size Analysis
C = Consolidation Test

Sample Information

| Depth (ft.) | Sample No. | Pen./Rec. (in.) | Sample Depth (ft.) | Blows /6 in. Shear Strength (psf) or RQD (%) | N-value | Casing Blows | Elevation (ft.) | Graphic Log | Visual Description and Remarks | Laboratory Testing Results/ AASHTO and Unified Class |
|---|---|---|---|---|---|---|---|---|---|---|
| 60 | S-12 | 24/24 | 60.0 - 62.0 | | 9 | | -62.0 | | Bottom of Exploration at 62.0 feet below ground surface.<br>Not refusal. | |
| 65 | | | | | | | | | | |
| 70 | | | | | | | | | | |
| 75 | | | | | | | | | | |
| 80 | | | | | | | | | | |
| 85 | | | | | | | | | | |
| 90 | | | | | | | | | | |

Remarks:
1. RWGSA Project No. 0600-102
2. SPT N-Values are uncorrected.
3. Shear vane data collected using 3-5/8"x9" field vane and torque wrench.
4. Hydraulically pushed 4-Inch diameter steel casing, no hammer used to drive casing.

Stratification lines represent approximate boundaries between soil types: transitions may be gradual.

* Water level readings have been made at times and under conditions stated. Groundwater fluctuations may occur due to conditions other than those present at the time measurements were made.

Page 3 of 3
Boring No.: EB-SNR-101

Maine Department of Transportation

Soil/Rock Exploration Log

US UNITS

Project: Scarborough Eastern Trail Project
Location: Scarborough, Maine

Boring No.: EB-SNR-102
WIN: 019426.10

| | | | | | |
|---|---|---|---|---|---|
| Driller: | Great Works Test Boring | Elevation (ft.): | | Auger ID/OD: | - |
| Operator: | Jeff Lee | Datum: | | Sampler: | SPT Split-Barrel |
| Logged By: | D. Walker | Rig Type: | CME 75 | Hammer Wt./Fall: | 140lbs / 30 Inches |
| Date Start/Finish: | 07/13/2016 | Drilling Method: | Drive + Wash | Core Barrel: | - |
| Boring Location: | See Expl. Location Plan | Casing ID/OD: | 4-Inch | Water Level*: | 6' |

Definitions:
D = Split Spoon Sample
WO = Unsuccessful Split Spoon Sample attempt
U = Thin Wall Tube Sample
R = Rock Core Sample
V = Inelta Vane Shear Test
SSA = Solid Stem Auger

Definitions:
$S_u$ = Inelta Field Vane Shear Strength (psf)
$T_v$ = Pocket Torvane Shear Strength (psf)
$q_p$ = Unconfined Compressive Strength (ksf)
$S_{u(LAB)}$ = Lab Vane Shear Strength (psf)
WOH = weight of 140lb. hammer
WOR = weight of rods

Definitions:
WC = water content, percent
LL = Liquid Limit
PL = Plastic Limit
PI = Plasticity Index
G = Grain Size Analysis
C = Consolidation Test

Sample Information

| Depth (ft.) | Sample No. | Pen./Rec. (in.) | Sample Depth (ft.) | Blows /6 in. Shear Strength (psf) or RQD (%) | N-value | Casing Blows | Elevation (ft.) | Graphic Log | Visual Description and Remarks | Laboratory Testing Results/ AASHTO and Unified Class |
|---|---|---|---|---|---|---|---|---|---|---|
| 0 | S-1 | 24/18 | 0.0 - 2.0 | | 4 | | -0.3 | | TOPSOIL AND ORGANIC MATERIAL (2 Inches): dark brown silt, fine sand.<br>FILL: Moist, fine sand, trace fine gravel, tan. | |
| | S-2 | 24/18 | 2.0 - 4.0 | | 3 | | -3.5 | | SILT (ML): Very loose, moist, silt, tan. | |
| 5 | S-3 | 24/18 | 5.0 - 7.0 | | 1 | | -6.0 | | Becomes moist to wet, organic, brown.<br>SILTY CLAY (CL): Very soft, wet, clay, some silt, gray. | |
| 10 | S-4 | 24/18 | 10.0 - 12.0 | | 2 | | -10.0 | | CLAYEY SILT (ML): Very loose, wet, silt with some clay, interbedded silt lenses, gray. | |
| 15 | S-5 | 24/14 | 15.0 - 17.0 | | 1 | | -15.0<br>-17.0 | | SILTY SAND (SM): Very loose, wet, fine sand, some silt, occasional coarse sand and fine gravel lenses 1/4" to 1/2".<br>SILTY CLAY (CL): Medium, wet, clay, some silt. | |
| 20 | FV-1<br>FV-2 | | 20.0 - 20.8<br>20.9 - 21.7 | Su=770 psf<br>Residual Su=90 psf<br>Su=800 psf<br>Residual Su=70 psf | | | | | 65x130 mm raw torque readings:<br>FV-1: 71.0/8.0 ft-lbs<br>FV-2: 55.0/6.0 ft-lbs | |
| 25 | U-1 | | 25.0 - 27.0 | | | | | | | 14285A<br>MC=39.2%<br>G & C |
| 30 | | | | | | | | | | |

Remarks:
1. RWGSA Project No. 0600-102
2. SPT N-Values are uncorrected.
3. Shear vane data collected using 3-5/8"x9" field vane and torque wrench.
4. Hydraulically pushed 4-Inch diameter steel casing, no hammer used to drive casing.

Stratification lines represent approximate boundaries between soil types: transitions may be gradual.

* Water level readings have been made at times and under conditions stated. Groundwater fluctuations may occur due to conditions other than those present at the time measurements were made.

Page 1 of 3
Boring No.: EB-SNR-102

Maine Department of Transportation

Soil/Rock Exploration Log

US UNITS

Project: Scarborough Eastern Trail Project
Location: Scarborough, Maine

Boring No.: EB-SNR-102
WIN: 019426.10

| | | | | | |
|---|---|---|---|---|---|
| Driller: | Great Works Test Boring | Elevation (ft.): | | Auger ID/OD: | - |
| Operator: | Jeff Lee | Datum: | | Sampler: | SPT Split-Barrel |
| Logged By: | D. Walker | Rig Type: | CME 75 | Hammer Wt./Fall: | 140lbs / 30 Inches |
| Date Start/Finish: | 07/13/2016 | Drilling Method: | Drive + Wash | Core Barrel: | - |
| Boring Location: | See Expl. Location Plan | Casing ID/OD: | 4-Inch | Water Level*: | 6' |

Definitions:
D = Split Spoon Sample
WO = Unsuccessful Split Spoon Sample attempt
U = Thin Wall Tube Sample
R = Rock Core Sample
V = Inelta Vane Shear Test
SSA = Solid Stem Auger

Definitions:
$S_u$ = Inelta Field Vane Shear Strength (psf)
$T_v$ = Pocket Torvane Shear Strength (psf)
$q_p$ = Unconfined Compressive Strength (ksf)
$S_{u(LAB)}$ = Lab Vane Shear Strength (psf)
WOH = weight of 140lb. hammer
WOR = weight of rods

Definitions:
WC = water content, percent
LL = Liquid Limit
PL = Plastic Limit
PI = Plasticity Index
G = Grain Size Analysis
C = Consolidation Test

Sample Information

| Depth (ft.) | Sample No. | Pen./Rec. (in.) | Sample Depth (ft.) | Blows /6 in. Shear Strength (psf) or RQD (%) | N-value | Casing Blows | Elevation (ft.) | Graphic Log | Visual Description and Remarks | Laboratory Testing Results/ AASHTO and Unified Class |
|---|---|---|---|---|---|---|---|---|---|---|
| 30 | FV-3<br>FV-4 | | 30.0 - 30.8<br>30.9 - 31.7 | Su=780 psf<br>Residual Su=100 psf<br>Su=820 psf<br>Residual Su=110 psf | | | | | 65x130 mm raw torque readings:<br>FV-3: 72.0/9.0 ft-lbs<br>FV-4: 75.0/10.0 ft-lbs | |
| 35 | U-2 | | 35.0 - 37.0 | | | | | | | 14285B<br>MC=29.9%<br>G & C |
| 40 | U-3 | | 40.0 - 42.0 | | | | | | | |
| 45 | S-6 | 24/24 | 45.0 - 47.0 | | WOH | | | | Becomes very soft. | |
| 50 | S-7 | 24/24 | 50.0 - 52.0 | | WOH | | | | Some frequent silt and/or sand layers. | |
| 55 | S-8 | 24/24 | 55.0 - 57.0 | | 4 | | -55.0 | | SAND (SP): Very loose to loose, wet, fine sand, trace silt, gray. | |
| 60 | | | | | | | | | | |

Remarks:
1. RWGSA Project No. 0600-102
2. SPT N-Values are uncorrected.
3. Shear vane data collected using 3-5/8"x9" field vane and torque wrench.
4. Hydraulically pushed 4-Inch diameter steel casing, no hammer used to drive casing.

Stratification lines represent approximate boundaries between soil types: transitions may be gradual.

* Water level readings have been made at times and under conditions stated. Groundwater fluctuations may occur due to conditions other than those present at the time measurements were made.

Page 2 of 3
Boring No.: EB-SNR-102

Maine Department of Transportation

Soil/Rock Exploration Log

US UNITS

Project: Scarborough Eastern Trail Project
Location: Scarborough, Maine

Boring No.: EB-SNR-102
WIN: 019426.10

| | | | | | |
|---|---|---|---|---|---|
| Driller: | Great Works Test Boring | Elevation (ft.): | | Auger ID/OD: | - |
| Operator: | Jeff Lee | Datum: | | Sampler: | SPT Split-Barrel |
| Logged By: | D. Walker | Rig Type: | CME 75 | Hammer Wt./Fall: | 140lbs / 30 Inches |
| Date Start/Finish: | 07/13/2016 | Drilling Method: | Drive + Wash | Core Barrel: | - |
| Boring Location: | See Expl. Location Plan | Casing ID/OD: | 4-Inch | Water Level*: | 6' |

Definitions:
D = Split Spoon Sample
WO = Unsuccessful Split Spoon Sample attempt
U = Thin Wall Tube Sample
R = Rock Core Sample
V = Inelta Vane Shear Test
SSA = Solid Stem Auger

Definitions:
$S_u$ = Inelta Field Vane Shear Strength (psf)
$T_v$ = Pocket Torvane Shear Strength (psf)
$q_p$ = Unconfined Compressive Strength (ksf)
$S_{u(LAB)}$ = Lab Vane Shear Strength (psf)
WOH = weight of 140lb. hammer
WOR = weight of rods

Definitions:
WC = water content, percent
LL = Liquid Limit
PL = Plastic Limit
PI = Plasticity Index
G = Grain Size Analysis
C = Consolidation Test

Sample Information

| Depth (ft.) | Sample No. | Pen./Rec. (in.) | Sample Depth (ft.) | Blows /6 in. Shear Strength (psf) or RQD (%) | N-value | Casing Blows | Elevation (ft.) | Graphic Log | Visual Description and Remarks | Laboratory Testing Results/ AASHTO and Unified Class |
|---|---|---|---|---|---|---|---|---|---|---|
| 60 | S-9 | 24/24 | 60.0 - 62.0 | | 10 | | -62.0 | | Becomes medium dense.<br>Bottom of Exploration at 62.0 feet below ground surface.<br>Not refusal. | |
| 65 | | | | | | | | | | |
| 70 | | | | | | | | | | |
| 75 | | | | | | | | | | |
| 80 | | | | | | | | | | |
| 85 | | | | | | | | | | |
| 90 | | | | | | | | | | |

Remarks:
1. RWGSA Project No. 0600-102
2. SPT N-Values are uncorrected.
3. Shear vane data collected using 3-5/8"x9" field vane and torque wrench.
4. Hydraulically pushed 4-Inch diameter steel casing, no hammer used to drive casing.

Stratification lines represent approximate boundaries between soil types: transitions may be gradual.

* Water level readings have been made at times and under conditions stated. Groundwater fluctuations may occur due to conditions other than those present at the time measurements were made.

Page 3 of 3
Boring No.: EB-SNR-102

PROGRESS PLANS
April 4, 2023

STATE OF MAINE
DEPARTMENT OF TRANSPORTATION

AC-STP-1942(600)X & CMAQ-1942(610)

WIN
19426.00 & 019426.10 HIGHWAY PLANS

| | | BY | DATE |
|---|---|---|---|
| PROJ. MANAGER | BILL REICH | | |
| DESIGN-DETAILED | C.Helmick | P. Bishop | 12\22 |
| CHECKED-REVIEWED | L. DRISCOLL | J. Olund | 12\22 |
| DESIGN2-DETAILED2 | - | - | - |
| DESIGN3-DETAILED3 | - | - | - |
| REVISIONS 1 | - | - | - |
| REVISIONS 2 | - | - | - |
| REVISIONS 3 | - | - | - |
| REVISIONS 4 | - | - | - |
| FIELD CHANGES | - | - | - |

SIGNATURE

P.E. NUMBER

DATE

TOWN OF SCARBOROUGH
EASTERN TRAIL CONNECTOR
SCARBOROUGH TO SOUTH PORTLAND, MAINE

BORING LOGS

SHEET NUMBER
10
OF 66

Username:
Division:
Filename: 010_Boring Logs.dgn
Date:4/4/2023

Maine Department of Transportation

Soil/Rock Exploration Log

US UNITS

Project: Scarborough Eastern Trail Project

Location: Scarborough, Maine

Boring No.: EB-SNR-103

WIN: 019426.10

| | | | | | |
|---|---|---|---|---|---|
| Driller: | Great Works Test Boring | Elevation (ft.): | | Auger ID/OD: | - |
| Operator: | Jeff Lee | Datum: | | Sampler: | SPT Split-Barrel |
| Logged By: | D. Walker | Rig Type: | CME 75 | Hammer Wt./Fall: | 140lbs / 30 Inches |
| Date Start/Finish: | 07/12/2016 | Drilling Method: | Drive + Wash | Core Barrel: | - |
| Boring Location: | See Expl Location Plan | Casing ID/OD: | 4-Inch | Water Level*: | 3' |

Definitions:
D = Split Spoon Sample
WO = Unsuccessful Split Spoon Sample attempt
U = Thin Wall Tube Sample
R = Rock Core Sample
V = Inситu Vane Shear Test
SSA = Solid Stem Auger

Definitions:
$S_u$ = Inситu Field Vane Shear Strength (psf)
$T_v$ = Pocket Torvane Shear Strength (psf)
$q_u$ = Unconfined Compressive Strength (ksf)
$S_{u\ (lab)}$ = Lab Vane Shear Strength (psf)
WOH = weight of 140lb. hammer
WOR = weight of rods

Definitions:
WC = water content, percent
LL = Liquid Limit
PL = Plastic Limit
PI = Plasticity Index
G = Grain Size Analysis
C = Consolidation Test

| Depth (ft.) | Sample No. | Rec./Rec. (in.) | Sample Depth (ft.) | Blows /6 in. Shear Strength (psf) Qu (ksf) St | N-value | Casing Blows | Elevation (ft.) | Graphic Log | Visual Description and Remarks | Laboratory Testing Results/ AASHTO and Unified Class |
|---|---|---|---|---|---|---|---|---|---|---|
| 0 | S-1 | 24/14 | 0.0 - 2.0 | | WOH | | -0.3 | | TOPSOIL AND ORGANIC MATERIAL 12 Inches±. | |
| | | | | | | | | | SANDY SILT (ML) Very loose, moist, brn, some fine sand, little clay, mottled near top. | 0.3 |
| 5 | S-2 | 24/24 | 5.0 - 7.0 | | WOH | | -5.0 | | SILTY CLAY (CL) Very soft , wet, clay with some silt, gray. | 5.0 |
| 10 | S-3 | 24/12 | 10.0 - 12.0 | | 3 | | -10.0 | | Attempted vane, too firm to advance, proceed with split-barrel sample. SILTY SAND (SM) Very loose, wet, coarse to fine sand, little silt, with fine gravel, organic odor, gray to dark gray. | 10.0 |
| 15 | S-4 | 24/16 | 15.0 - 17.0 | | 2 | | -15.0 | | SILTY CLAY (CL) Soft to medium, wet, clay, some silt. | 15.0 |
| 20 | FV-1<br>FV-2 | | 20.0 - 20.8<br>20.9 - 21.7 | Su=720 psf<br>Residual Su=70 psf<br>Su=980 psf<br>Residual Su=40 psf | | | | | 65x130 mm raw torque readings<br>FV-1: 66.0/6.0 ft-lbs<br>FV-2: 53.0/4.0 ft-lbs | |
| 25 | S-5 | 24/24 | 25.0 - 27.0 | | WOH | | | | | |
| 30 | | | | | | | | | | |

Remarks:
1. RWG&A Project No. 0600-102
2. SPT N-Values are uncorrected.
3. Shear vane data collected using 3-5/8"x9" field vane and torque wrench.
4. Hydraulically pushed 4-inch diameter steel casing, no hammer used to drive casing.

Stratification lines represent approximate boundaries between soil types; transitions may be gradual.

* Water level readings have been made at times and under conditions stated. Groundwater fluctuations may occur due to conditions other than those present at the time measurements were made.



Boring No.: EB-SNR-103

Maine Department of Transportation

Soil/Rock Exploration Log

US UNITS

Project: Scarborough Eastern Trail Project

Location: Scarborough, Maine

Boring No.: EB-SNR-103

WIN: 019426.10

| | | | | | |
|---|---|---|---|---|---|
| Driller: | Great Works Test Boring | Elevation (ft.): | | Auger ID/OD: | - |
| Operator: | Jeff Lee | Datum: | | Sampler: | SPT Split-Barrel |
| Logged By: | D. Walker | Rig Type: | CME 75 | Hammer Wt./Fall: | 140lbs / 30 Inches |
| Date Start/Finish: | 07/12/2016 | Drilling Method: | Drive + Wash | Core Barrel: | - |
| Boring Location: | See Expl Location Plan | Casing ID/OD: | 4-Inch | Water Level*: | 3' |

Definitions:
D = Split Spoon Sample
WO = Unsuccessful Split Spoon Sample attempt
U = Thin Wall Tube Sample
R = Rock Core Sample
V = Inситu Vane Shear Test
SSA = Solid Stem Auger

Definitions:
$S_u$ = Inситu Field Vane Shear Strength (psf)
$T_v$ = Pocket Torvane Shear Strength (psf)
$q_u$ = Unconfined Compressive Strength (ksf)
$S_{u\ (lab)}$ = Lab Vane Shear Strength (psf)
WOH = weight of 140lb. hammer
WOR = weight of rods

Definitions:
WC = water content, percent
LL = Liquid Limit
PL = Plastic Limit
PI = Plasticity Index
G = Grain Size Analysis
C = Consolidation Test

| Depth (ft.) | Sample No. | Rec./Rec. (in.) | Sample Depth (ft.) | Blows /6 in. Shear Strength (psf) Qu (ksf) St | N-value | Casing Blows | Elevation (ft.) | Graphic Log | Visual Description and Remarks | Laboratory Testing Results/ AASHTO and Unified Class |
|---|---|---|---|---|---|---|---|---|---|---|
| 30 | FV-3<br>FX-3 | | 30.0 - 30.8<br>30.9 - 31.7 | Su=980 psf<br>Residual Su=110 psf<br>Su=820 psf<br>Residual=Su=100 psf | | | | | 65x130 mm raw torque readings<br>FV-3: 77.0/10.0 ft-lbs<br>FV-4: 75.0/10.0 ft-lbs | |
| 35 | S-6 | 24/24 | 35.0 - 37.0 | | WOH | | | | | |
| 40 | S-7 | 24/24 | 40.0 - 42.0 | | 4 | | -41.0 | | Too stiff for attempted vane test. Proceed with split-spoon sampling. | 41.0 |
| | | | | | | | -41.5 | | SILT (ML) Soft, wet, silt, few fine sand, trace clay, gray. | 41.5 |
| 45 | S-8 | 24/6 | 45.0 - 47.0 | | WOH | | -46.0 | | SILTY CLAY (CL) Very soft, silty clay, trace fine sand. | |
| 50 | S-9 | 24/20 | 50.0 - 52.0 | | WOH | | -50.0 | | Too stiff for attempted vane test. Proceed with split-spoon sample. Sand and silt layers. | 46.0 |
| 55 | S-10 | 24/24 | 55.0 - 57.0 | | 10 | | | | SAND (SP) Very loose to medium dense, wet, fine sand, few silt, gray. | 60.0 |
| 60 | | | | | | | | | | |

Remarks:
1. RWG&A Project No. 0600-102
2. SPT N-Values are uncorrected.
3. Shear vane data collected using 3-5/8"x9" field vane and torque wrench.
4. Hydraulically pushed 4-inch diameter steel casing, no hammer used to drive casing.

Stratification lines represent approximate boundaries between soil types; transitions may be gradual.

* Water level readings have been made at times and under conditions stated. Groundwater fluctuations may occur due to conditions other than those present at the time measurements were made.



Boring No.: EB-SNR-103

Maine Department of Transportation

Soil/Rock Exploration Log

US UNITS

Project: Scarborough Eastern Trail Project

Location: Scarborough, Maine

Boring No.: EB-SNR-103

WIN: 019426.10

| | | | | | |
|---|---|---|---|---|---|
| Driller: | Great Works Test Boring | Elevation (ft.): | | Auger ID/OD: | - |
| Operator: | Jeff Lee | Datum: | | Sampler: | SPT Split-Barrel |
| Logged By: | D. Walker | Rig Type: | CME 75 | Hammer Wt./Fall: | 140lbs / 30 Inches |
| Date Start/Finish: | 07/12/2016 | Drilling Method: | Drive + Wash | Core Barrel: | - |
| Boring Location: | See Expl Location Plan | Casing ID/OD: | 4-Inch | Water Level*: | 3' |

Definitions:
D = Split Spoon Sample
WO = Unsuccessful Split Spoon Sample attempt
U = Thin Wall Tube Sample
R = Rock Core Sample
V = Inситu Vane Shear Test
SSA = Solid Stem Auger

Definitions:
$S_u$ = Inситu Field Vane Shear Strength (psf)
$T_v$ = Pocket Torvane Shear Strength (psf)
$q_u$ = Unconfined Compressive Strength (ksf)
$S_{u\ (lab)}$ = Lab Vane Shear Strength (psf)
WOH = weight of 140lb. hammer
WOR = weight of rods

Definitions:
WC = water content, percent
LL = Liquid Limit
PL = Plastic Limit
PI = Plasticity Index
G = Grain Size Analysis
C = Consolidation Test

| Depth (ft.) | Sample No. | Rec./Rec. (in.) | Sample Depth (ft.) | Blows /6 in. Shear Strength (psf) Qu (ksf) St | N-value | Casing Blows | Elevation (ft.) | Graphic Log | Visual Description and Remarks | Laboratory Testing Results/ AASHTO and Unified Class |
|---|---|---|---|---|---|---|---|---|---|---|
| 60 | S-11 | 18/18 | 60.0 - 61.5 | | 12 | | -62.0 | | Becomes medium dense, gray to brown. | |
| 65 | | | | | | | | | Bottom of Exploration at 62.0 feet below ground surface. Not refusal. | 62.0 |
| 70 | | | | | | | | | | |
| 75 | | | | | | | | | | |
| 80 | | | | | | | | | | |
| 85 | | | | | | | | | | |
| 90 | | | | | | | | | | |

Remarks:
1. RWG&A Project No. 0600-102
2. SPT N-Values are uncorrected.
3. Shear vane data collected using 3-5/8"x9" field vane and torque wrench.
4. Hydraulically pushed 4-inch diameter steel casing, no hammer used to drive casing.

Stratification lines represent approximate boundaries between soil types; transitions may be gradual.

* Water level readings have been made at times and under conditions stated. Groundwater fluctuations may occur due to conditions other than those present at the time measurements were made.



Boring No.: EB-SNR-103

Maine Department of Transportation

Soil/Rock Exploration Log

US UNITS

Project: Scarborough Eastern Trail Project

Location: Scarborough, Maine

Boring No.: FV-SNR-103

WIN: 019426.10

| | | | | | |
|---|---|---|---|---|---|
| Driller: | R.W. Gillespie & Associates, Inc. | Elevation (ft.): | N/A | Auger ID/OD: | - |
| Operator: | N/A | Datum: | | Sampler: | - |
| Logged By: | D. Walker | Rig Type: | N/A | Hammer Wt./Fall: | - |
| Date Start/Finish: | 07/19/2016 | Drilling Method: | N/A | Core Barrel: | - |
| Boring Location: | See Notes | Casing ID/OD: | - | Water Level*: | Not Obs. |

Definitions:
D = Split Spoon Sample
WO = Unsuccessful Split Spoon Sample attempt
U = Thin Wall Tube Sample
R = Rock Core Sample
V = Inситu Vane Shear Test
SSA = Solid Stem Auger

Definitions:
$S_u$ = Inситu Field Vane Shear Strength (psf)
$T_v$ = Pocket Torvane Shear Strength (psf)
$q_u$ = Unconfined Compressive Strength (ksf)
$S_{u\ (lab)}$ = Lab Vane Shear Strength (psf)
WOH = weight of 140lb. hammer
WOR = weight of rods

Definitions:
WC = water content, percent
LL = Liquid Limit
PL = Plastic Limit
PI = Plasticity Index
G = Grain Size Analysis
C = Consolidation Test

| Depth (ft.) | Sample No. | Rec./Rec. (in.) | Sample Depth (ft.) | Blows /6 in. Shear Strength (psf) Qu (ksf) St | N-value | Casing Blows | Elevation (ft.) | Graphic Log | Visual Description and Remarks | Laboratory Testing Results/ AASHTO and Unified Class |
|---|---|---|---|---|---|---|---|---|---|---|
| 0 | FV-1 | | 0.5 - 1.3 | Su=800 psf | | | | | TOPSOIL AND ORGANIC MATERIAL 12 Inches±. | |
| | FV-2 | | 1.3 - 2.1 | Su=800 psf<br>Su=1000 psf | | | | | SILTY CLAY (CL) Medium, wet, silty clay. Large Geonor vane raw readings: | 0.2 |
| | FV-3 | | 2.2 - 3.0 | Residual Su=100 psf | | | | | FV-1: 72 kPa<br>FV-2: 72 kPa<br>FV-3: 114/12 kPa | |
| | FV-4<br>FV-5 | | 3.0 - 3.8<br>3.8 - 4.6 | Su=800 psf<br>Residual Su=100 psf | | | | | FV-4: 88/10 kPa<br>FV-5: 54/8 kPa | |
| | FV-6 | | 4.6 - 5.4 | Su=800 psf<br>Residual Su=100 psf | | | | | FV-6: 94/12 kPa | |
| | FV-7 | | 5.5 - 6.3 | Residual Su=100 psf<br>Su=1000 psf | | | | | FV-7: 160/26 kPa | |
| | FV-8 | | 6.3 - 7.1 | Residual Su=100 psf | | | | | FV-8: 68/22 kPa | |
| | FV-9 | | 7.2 - 8.0 | Su=1700 psf | | | | | FV-9: 112/28 kPa | |
| | FV-10<br>FX-11 | | 8.0 - 8.8<br>8.8 - 9.6 | Residual=Su=300 psf<br>Su=1100 psf | | | | | FV-10: 100/22 kPa | |
| | | | | Residual Su=200 psf<br>Su=1200 psf | | | | | FV-11: 94/24 kPa | 8.8 |
| | | | | Residual Su=300 psf<br>Su=1000 psf | | | | | Bottom of Exploration at 8.8 feet below ground surface. Not refusal. | |
| | | | | Residual=Su=200 psf<br>Su=1000 psf | | | | | | |
| | | | | Residual Su=300 psf | | | | | | |
| 30 | | | | | | | | | | |

Remarks:
1. RWG&A Project No. 0600-102
2. FV-SNR-103 is located approximately 5 feet west of EB-SNR-103.
3. Exploration conducted as probe with in-situ vane shear tests conducted with Geonor mini-vane shear tester.

Stratification lines represent approximate boundaries between soil types; transitions may be gradual.

* Water level readings have been made at times and under conditions stated. Groundwater fluctuations may occur due to conditions other than those present at the time measurements were made.



Boring No.: FV-SNR-103

PROGRESS PLANS
April 4, 2023

STATE OF MAINE
DEPARTMENT OF TRANSPORTATION

**AC-STP-1942(600)X & CMAQ-1942(610)**

**WIN 19426.00 & 019426.10** HIGHWAY PLANS

| | BILL REICH | BY | DATE |
|---|---|---|---|
| PROJ. MANAGER | | | |
| DESIGN-DETAILED | C.Helmick | P. Bishop | 12\22 |
| CHECKED-REVIEWED | L. DRISCOLL | J. Olund | 12\22 |
| DESIGN2-DETAILED2 | - | - | - |
| DESIGN3-DETAILED3 | - | - | - |
| REVISIONS 1 | - | - | - |
| REVISIONS 2 | - | - | - |
| REVISIONS 3 | - | - | - |
| REVISIONS 4 | - | - | - |
| FIELD CHANGES | - | - | - |

SIGNATURE

P.E. NUMBER

DATE

TOWN OF SCARBOROUGH
EASTERN TRAIL CONNECTOR
SCARBOROUGH TO SOUTH PORTLAND, MAINE

BORING LOGS

SHEET NUMBER

11

OF 66

Username:

Division:

Filename: 011_Boring Logs.dgn

Date:4/4/2023

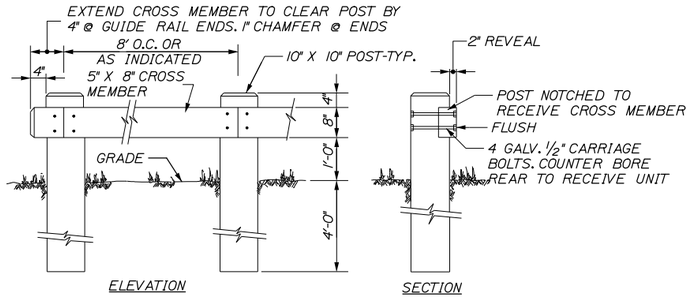


NOTES:
1. ALL WOOD IS TO BE PRESSURE TREATED ACQ TIMBERS.

## TIMBER GUARDRAIL
N.T.S.

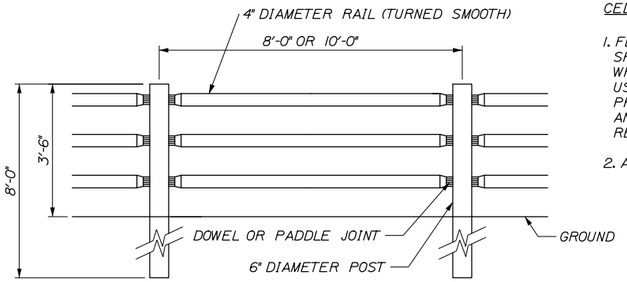


## CEDAR RAIL FENCE
N.T.S.

CEDAR RAIL FENCE NOTES:

1. FENCE SHALL BE INSTALLED IN THE SHOULDER WHERE NOTED ON PLANS OR WHERE DIRECTED BY THE RESIDENT. USE OF FENCE IS INTENDED FOR PROTECTION OF SLOPES 2:1 OR GREATER AND HIGHER THAN 5' IN HEIGHT AND TO RESTRICT ACCESS WHERE NECESSARY.

2. ALL WOOD IS TO BE WHITE CEDAR.

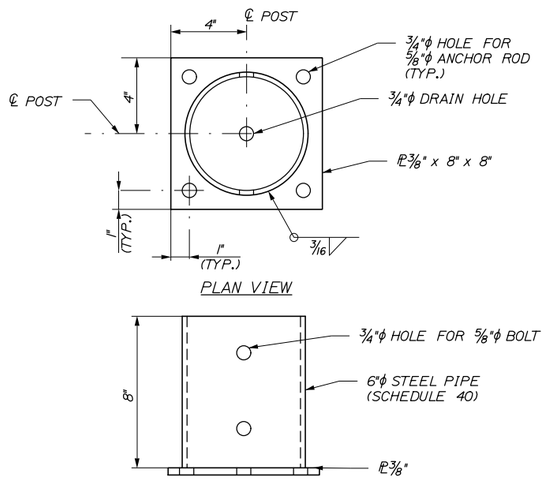


## CEDAR RAIL FENCE POST ANCHORAGE DETAIL
N.T.S.

CEDAR RAIL FENCE POST ANCHORAGE NOTES:

1. ANCHORAGES FOR CEDAR RAIL FENCE SHALL BE USED WHERE EXISTING CONCRETE LIMIT RAIL POST EMBEDMENT TO THREE FEET OR LESS.

2. STEEL PLATE SHALL CONFORM TO ASTM A36. STEEL PIPE SHALL CONFORM TO ASTM A500, CLASS B.

3. BOLTS FOR SECURING RAILING POSTS TO ANCHORAGE SHALL BE 5/8" DIAMETER CONFORMING TO ASTM A307 OR ASME B18.2.1, GRADE 5. ANCHOR RODS SHALL CONFORM TO ASTM F1554, GRADE 55.

4. ALL ASSEMBLIES AND HARDWARE SHALL BE HOT DIP GALVANIZED IN ACCORDANCE WITH ASTM A153 AND ASTM A123 AS APPLICABLE.

5. ANCHOR RODS SHALL BE DRILLED AND GROUTED INTO THE EXISTING CONCRETE USING A MATERIAL LISTED ON THE MAINEDOT QUALIFIED PRODUCTS LIST OF EPOXY ANCHORING MATERIALS. THE DEPTH OF EMBEDMENT SHALL BE SUFFICIENT TO DEVELOP THE FULL YIELD STRENGTH OF THE ROD.

6. ANCHORAGES SHALL BE SHIMMED AS NEEDED TO ALLOW THE RAILING POST TO BE INSTALLED PLUMB.

7. THE FABRICATION AND INSTALLATION OF ANCHORAGES, DRILLING AND GROUTING ANCHOR RODS, SHIMMING, AND INSTALLING FENCE POSTS SHALL BE INCIDENTAL TO THE CEDAR RAIL FENCE PAY ITEM.

PROGRESS PLANS
April 4, 2023

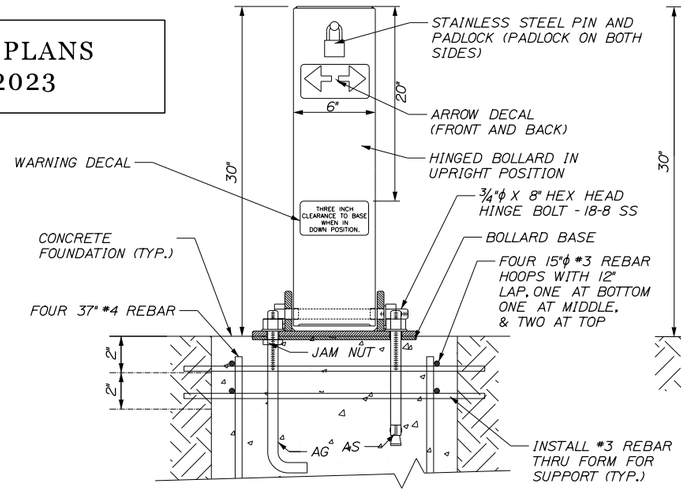


## FRONT ELEVATION
N.T.S.

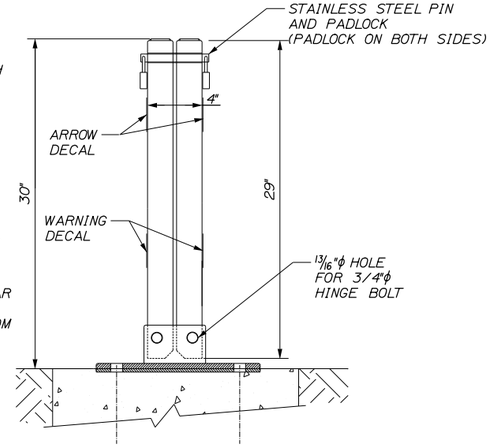


## SIDE ELEVATION
N.T.S.

COLLAPSIBLE BOLLARD NOTE:
DOUBLE HINGED COLLAPSIBLE BOLLARDS AS MANUFACTURED BY:

TRAFFIC GUARD LLC MODEL #DHB

CHOICE OF ANCHORAGE SYSTEMS:

"AS" - 3/4"ϕ X 10" EXPANSION ANCHOR ASTM SS316 HILTI KWIK BOLT II CATALOG #00045490 WITH HEX HEAD NUT AND TYPE "A" FLAT WASHER. INSTALL PER SPECIFICATION AND AS NOTED.

"AG" - 3/4"ϕ X 12" ASTM A36 L-HOOK ANCHOR BOLT WITH HEX HEAD NUT AND TYPE "A" FLAT WASHER. ALL H.D. GALVANIZED. INSTALL PER SPECIFICATION AND AS NOTED.

OR APPROVED EQUAL

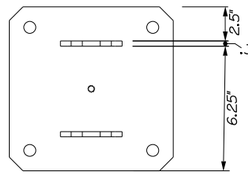


PLAN VIEW

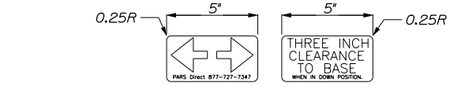


## ARROW AND WARNING DECALS
N.T.S.

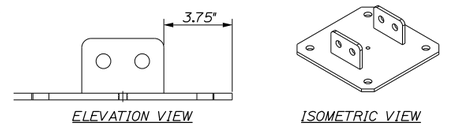


ELEVATION VIEW

ISOMETRIC VIEW

## COLLAPSIBLE BOLLARD DETAIL
N.T.S.

## BASE
N.T.S.

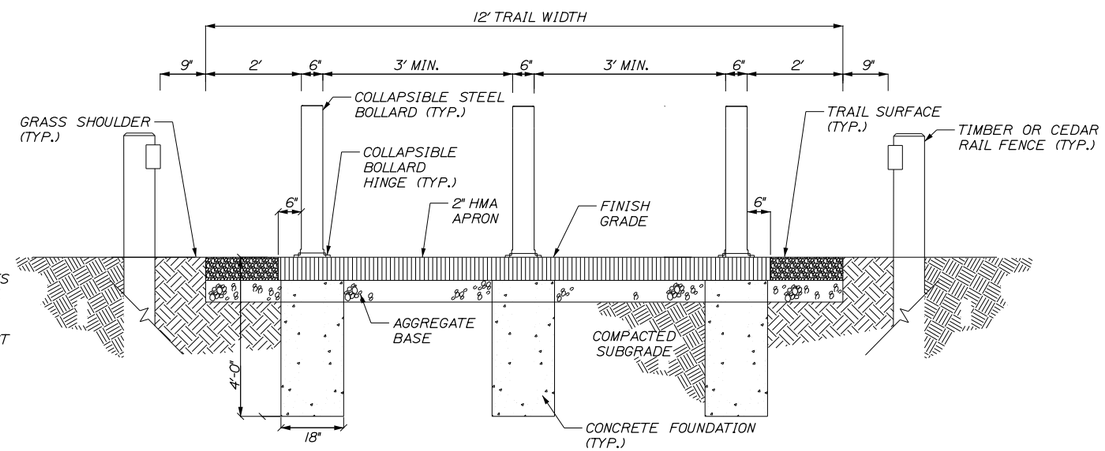


## COLLAPSIBLE BOLLARDS
N.T.S.

NOTE: AT LOCATIONS WITH A SINGLE BOLLARD, THE BOLLARD SHALL BE PLACED IN THE CENTER OF THE TRAIL.

STATE OF MAINE
DEPARTMENT OF TRANSPORTATION
AC-STP-1942(600)X & CMAQ-1942(610)
WIN
19426.00 & 019426.10 HIGHWAY PLANS

| | BY | DATE |
|---|---|---|
| PROJ. MANAGER | BILL REICH | |
| DESIGN-DETAILED | C.Helmick | 12\22 |
| CHECKED-REVIEWED | L. DRISCOLL | 12\22 |
| DESIGN2-DETAILED2 | - | - |
| DESIGN3-DETAILED3 | - | - |
| REVISIONS 1 | - | - |
| REVISIONS 2 | - | - |
| REVISIONS 3 | - | - |
| REVISIONS 4 | - | - |
| FIELD CHANGES | - | - |

SIGNATURE
P.E. NUMBER
DATE

TOWN OF SCARBOROUGH
EASTERN TRAIL CONNECTOR
SCARBOROUGH TO SOUTH PORTLAND, MAINE

TRAIL DETAILS I

SHEET NUMBER
12
OF 66

Username:
Division:
Filename: 012_TrailDetails I.dgn
Date:4/4/2023

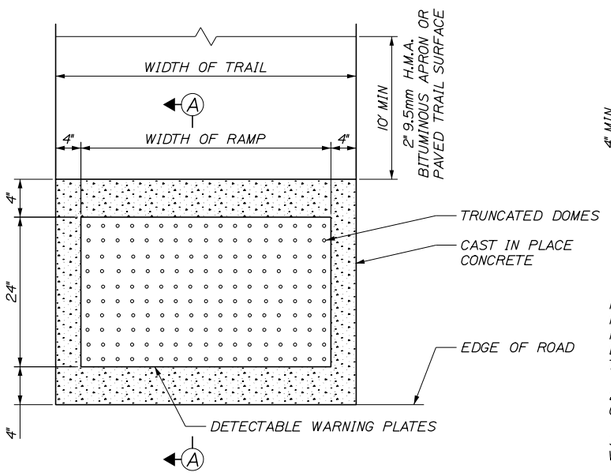


PLAN VIEW OF
DETECTABLE WARNING AND WELL

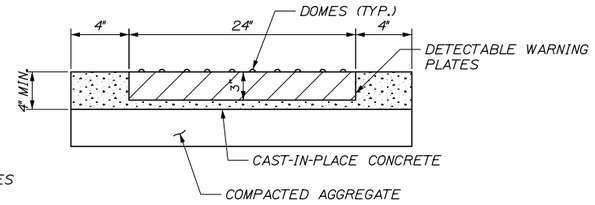


SECTION A-A

NOTE:
1. ALL DETECTABLE WARNING AREAS SHALL START 4" FROM THE FLOW LINE OF THE CURB AND BE 24" IN DEPTH AND COVER THE COMPLETE WIDTH OF THE TRAIL.

2. DETECTABLE WARNINGS REQUIRED AT STREET CROSSINGS.

3. SEE SPECIAL PROVISION 608, CURB RAMP DETECTABLE WARNING FIELD FOR CONSTRUCTION REQUIREMENTS.

4. DOMES SHALL BE EQUALLY SPACED IN BOTH DIRECTIONS 1.6" TO 2.4".

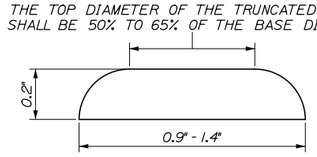


ELEVATION VIEW OF
TRUNCATED DOME

PROGRESS PLANS
April 4, 2023

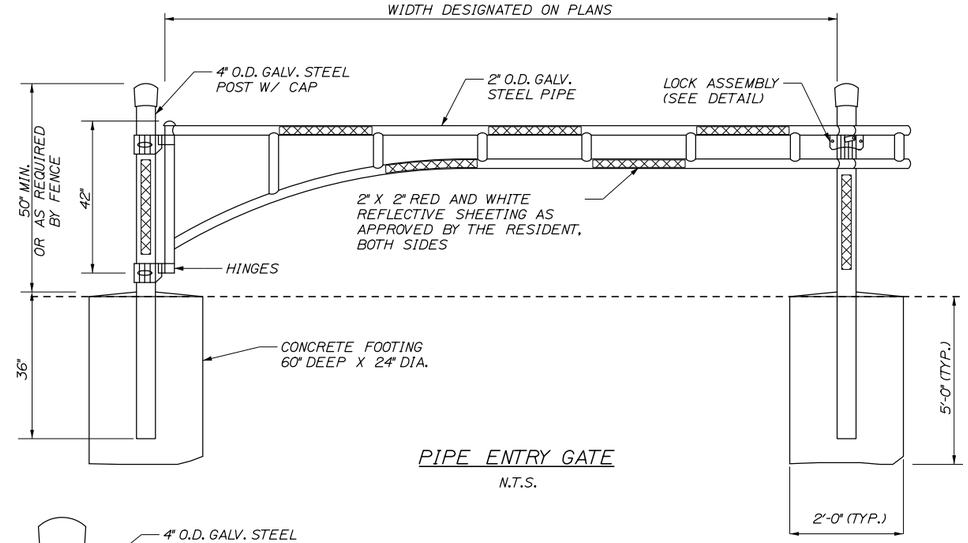


PIPE ENTRY GATE
N.T.S.

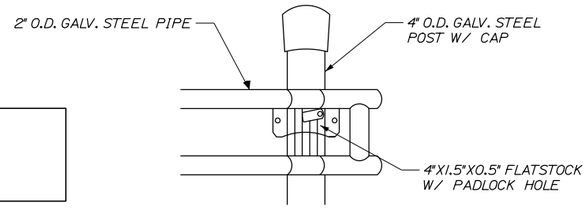


LOCK ASSEMBLY
N.T.S.

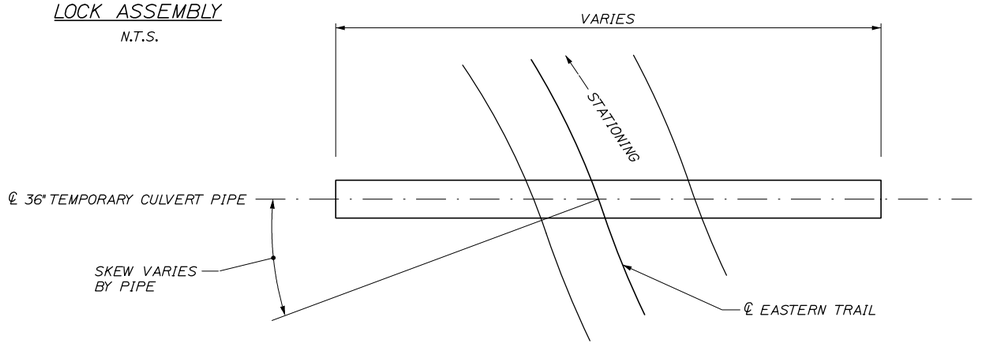


PLAN VIEW

DETECTABLE WARNING FIELD DETAILS
N.T.S.

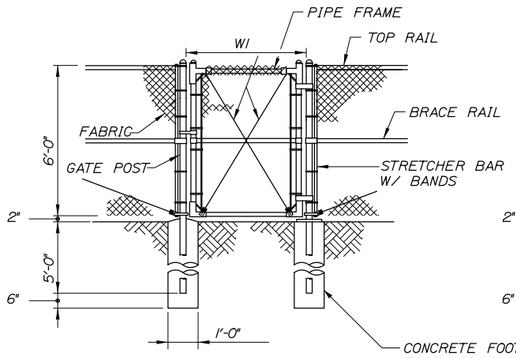


SINGLE GATE

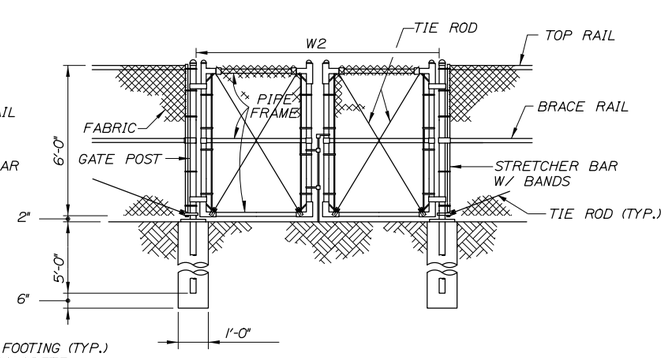


DOUBLE GATE

| GATE WIDTH | | GATE POST O.D. |
|---|---|---|
| W1 | W2 | |
| TO 6' | TO 12' | 3" |
| 6' TO 12' | 12' TO 24' | 4" |
| 12' TO 18' | 24' TO 36' | 6" |

## TEMPORARY STREAM CROSSING NOTES:

1. DUE TO THE LIMITED STRUCTURAL CAPACITY OF THE PROPOSED TIMBER STREAM CROSSINGS, TEMPORARY CROSSINGS, SUCH AS THOSE SHOWN CONCEPTUALLY HEREIN OR OTHER CONTRACTOR-PROPOSED AT-GRADE STRUCTURES, SHALL BE USED TO ACCESS TRAIL SECTIONS LOCATED BETWEEN STREAMS FOR THE PURPOSE OF CLEARING, GRUBBING, TRAIL CONSTRUCTION, AND OTHER ACTIVITIES NECESSITATING CROSSING THE STREAMS WITH HEAVY EQUIPMENT.

2. TEMPORARY STREAM CROSSING DETAILS PROVIDED ARE CONCEPTUAL ONLY; THE CONTRACTOR SHALL SUBMIT ACTUAL TEMPORARY CROSSING DETAILS FOR APPROVAL.

3. PAYMENT FOR INSTALLATION AND REMOVAL OF TEMPORARY STREAM CROSSINGS WILL NOT BE MADE SEPARATELY AND WILL BE CONSIDERED INCIDENTAL TO RELATED CONTRACT ITEMS, INCLUDING, BUT NOT LIMITED TO, TEMPORARY CULVERTS, CRUSHED STONE FILL, SEPARATION GEOTEXTILE, AND OTHER APPROVED MATERIALS AS WELL AS ALL LABOR AND EQUIPMENT NECESSARY TO COMPLETE THE WORK.

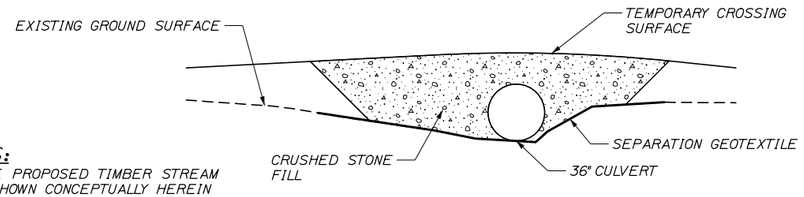


ELEVATION
(NORMAL TO STREAM; SKEW NOT SHOWN)

CONCEPTUAL TEMPORARY
CROSSING DETAIL

TEMPORARY STREAM CROSSINGS ARE LOCATED AT THE FOLLOWING APPROXIMATE STATIONS:

STATION 162+92
STATION 174+25
STATION 175+58
STATION 176+26

STATE OF MAINE
DEPARTMENT OF TRANSPORTATION

AC-STP-1942(600)X & CMAQ-1942(610)

WIN
19426.00 & 019426.10 HIGHWAY PLANS

| | | | |
|---|---|---|---|
| PROJ. MANAGER | BILL REICHL | BY | DATE |
| DESIGN-DETAILED | C.Helmick | P. Bishop | 12\22 |
| CHECKED-REVIEWED | L. DRISCOLL | J. Olund | 12\22 |
| DESIGN2-DETAILED2 | - | - | - |
| DESIGN3-DETAILED3 | - | - | - |
| REVISIONS 1 | - | - | - |
| REVISIONS 2 | - | - | - |
| REVISIONS 3 | - | - | - |
| REVISIONS 4 | - | - | - |
| FIELD CHANGES | - | - | - |

SIGNATURE

P.E. NUMBER

DATE

TOWN OF SCARBOROUGH
EASTERN TRAIL CONNECTOR
SCARBOROUGH TO SOUTH PORTLAND, MAINE

TRAIL DETAILS II

SHEET NUMBER
13
OF 66

Username:
Division:
Filename: 013_Trail Details II.dgn
Date:4/4/2023

## REGULATORY SIGNS

| SIGN DESIGNATION | | (A) | (B) |
|---|---|---|---|
| SIGN NUMBER | | R1-1 | R5-3 |
| LEGEND | | | |
| COLOR | BACKGROUND | RED | WHITE |
| | COPY | WHITE | BLACK |
| SIGN DIMENSION | WIDTH, INCHES | 18 | 24 |
| | HEIGHT, INCHES | 18 | 24 |
| AREA PER SIGN (SF) | | 2.25 | 4 |
| NUMBER OF SIGNS | | 8 | 8 |
| TOTAL AREA (SF) | | 18 | 32 |

## GUIDE SIGNS

| SIGN DESIGNATION | | (C) | (D) |
|---|---|---|---|
| SIGN NUMBER | | D11-1 | M7-5 |
| LEGEND | | | 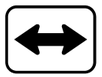 |
| COLOR | BACKGROUND | TO BE SUPPLIED BY ETMD | GREEN |
| | COPY | | WHITE |
| SIGN DIMENSION | WIDTH, INCHES | | 12 |
| | HEIGHT, INCHES | | 9 |
| AREA PER SIGN (SF) | | | 0.75 |
| NUMBER OF SIGNS | | 9 | 3 |
| TOTAL AREA (SF) | | | 2.25 |

## WARNING SIGNS

| SIGN DESIGNATION | | (E) | (F) | (G) | (H) | (I) | (J) | (K) | (L) |
|---|---|---|---|---|---|---|---|---|---|
| SIGN NUMBER | | W11-15 | W16-7pL | W7-5 | W3-1 | W1-2R | W1-2L | W1-3R | W1-3L |
| LEGEND | | | | | | | | | |
| COLOR | BACKGROUND | YELLOW | YELLOW | YELLOW | YELLOW | YELLOW | YELLOW | YELLOW | YELLOW |
| | COPY | BLACK | BLACK | BLACK | BLACK | BLACK | BLACK | BLACK | BLACK |
| SIGN DIMENSION | WIDTH, INCHES | 30 | 24 | 18 | 18 | 18 | 18 | 18 | 18 |
| | HEIGHT, INCHES | 30 | 12 | 18 | 18 | 18 | 18 | 18 | 18 |
| AREA PER SIGN (SF) | | 6.25 | 2 | 2.25 | 2.25 | 2.25 | 2.25 | 2.25 | 2.25 |
| NUMBER OF SIGNS | | 8 | 8 | 3 | 1 | 3 | 2 | 4 | 2 |
| TOTAL AREA (SF) | | 50 | 16 | 6.75 | 2.25 | 6.75 | 5 | 10 | 5 |

*NOTES:*
*1. ALL SIGNS SHALL BE TYPE I. REFER TO SECTION 645 FOR NUMBER AND TYPE.*

*2. THE ORDER SHALL BE AS NOTED ON THE PLANS.*

*3. SIGN POSTS WITHIN 10' OF A LOCAL ROAD SHALL BE COMPLIANT WITH BREAKAWAY STANDARDS.*

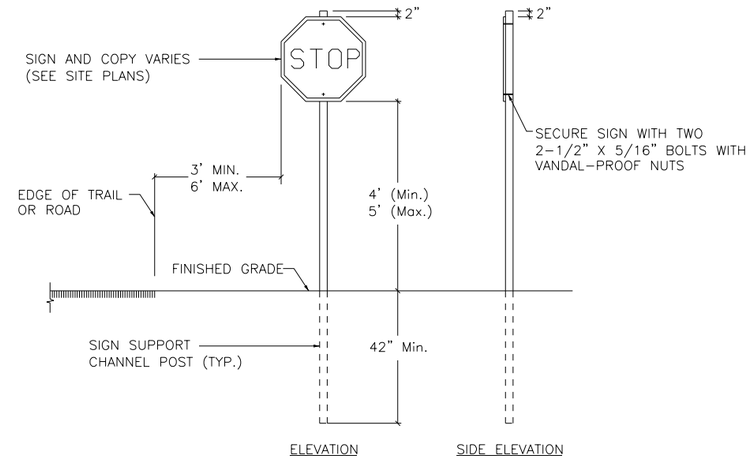


TRAIL SIGN
N.T.S.

PROGRESS PLANS
April 4, 2023

STATE OF MAINE
DEPARTMENT OF TRANSPORTATION
AC-STP-1942(600)X & CMAQ-1942(610)
WIN
19426.00 & 019426.10 HIGHWAY PLANS

| | | BY | DATE |
|---|---|---|---|
| PROJ. MANAGER | BILL RECHL | | |
| DESIGN-DETAILED | C.Helmick | P. Bishop | 12\22 |
| CHECKED-REVIEWED | L. DRISCOLL | J. Olund | 12\22 |
| DESIGN2-DETAILED2 | - | - | - |
| DESIGN3-DETAILED3 | - | - | - |
| REVISIONS 1 | - | | - |
| REVISIONS 2 | - | | - |
| REVISIONS 3 | - | | - |
| REVISIONS 4 | - | | - |
| FIELD CHANGES | - | | - |

SIGNATURE

P.E. NUMBER

DATE

TOWN OF SCARBOROUGH
EASTERN TRAIL CONNECTOR
SCARBOROUGH TO SOUTH PORTLAND, MAINE

SIGN DETAILS AND SUMMARY

SHEET NUMBER
14
OF 66

Filename: 014_Sign Summary.dgn Username: Division: Date:4/4/2023

Username:
Division:
Filename: 015_Trail Plan01.dgn
Date:4/4/2023

NONESUCH RIVER BRIDGE CROSSING

TYPICAL SECTION A (SEE NONESUCH RIVER CROSSING SHEETS)

STA. 99+25.00 LIMIT OF WORK

N 48°23'42.23" E

CEDAR RAIL FENCE

EXISTING GRANITE BLOCK TO BE REMOVED AND BECOME THE PROPERTY OF THE CONTRACTOR. PAYMENT WILL BE MADE UNDER APPROPRIATE RENTAL ITEMS.

COLLAPSIBLE BOLLARD (TYP.)

NONESUCH RIVER Flow

FEMA FLOOD ZONE A

TYPICAL SECTION E (SEE NONESUCH RIVER CROSSING SHEETS)

PC = STA. 103+20.63

PRC = STA. 103+88.25

TYPICAL SECTION B

10.00'

12.00'

CEDAR RAIL FENCE

CURVE DATA #1
PI = 103+54.65
D = 22°55'05.9"
Δ = 15°29'43.3" Lt.
R = 250.00'
L = 67.61'
T = 34.01'
E = 2.30'

| ITEM 607.22 CEDAR RAIL FENCE | LF |
|---|---|
| STA. 99+25, RT. TO STA. 100+00 RT. | 75 |
| STA. 99+25 LT. TO STA. 100+00 LT. | 75 |
| STA. 100+36 RT. TO STA. 102+75 RT. | 239 |
| STA. 100+36 LT. TO STA. 102+75 LT. | 239 |

CURVE DATA #3
PI = 106+66.48
D = 57°17'44.8"
Δ = 115°25'55.5" Rt.
R = 100.00'
L = 201.47'
T = 158.28'
E = 87.23'

18"X28' OPTION III W/ RIPRAP SLOPE PROTECTION

PCC = STA. 105+08.20

CURVE DATA #2
PI = 104+49.40
D = 22°55'05.9"
Δ = 27°29'26.0" Rt.
R = 250.00'
L = 119.95'
T = 61.15'
E = 7.37'

PT = STA. 107+09.66

CURVE DATA #4
PI = 108+70.27
D = 28°38'52.4"
Δ = 34°28'41.1" Lt.
R = 200.00'
L = 120.35'
T = 62.06'
E = 9.41'

PC = STA. 108+08.21

PT = STA. 109+28.56

S 4°10'39.59" E

S 38°39'20.66" E

(2) 36"X32' OPTION III W/ RIPRAP SLOPE PROTECTION

(2) 36"X36' OPTION III W/ RIPRAP SLOPE PROTECTION

PROGRESS PLANS
April 4, 2023

25 0 25 50

STATE OF MAINE
DEPARTMENT OF TRANSPORTATION

AC-STP-1942(600)X & CMAQ-1942(610)

WIN
19426.00 & 019426.10 HIGHWAY PLANS

| | BY | DATE |
|---|---|---|
| PROJ. MANAGER | BILL REICHL | |
| DESIGN-DETAILED | C.Helmick | 12\22 |
| CHECKED-REVIEWED | P. Bishop | 12\22 |
| DESIGN2-DETAILED2 | L. DRISCOLL | J. Olund |
| DESIGN3-DETAILED3 | - | - |
| REVISIONS 1 | - | - |
| REVISIONS 2 | - | - |
| REVISIONS 3 | - | - |
| REVISIONS 4 | - | - |
| FIELD CHANGES | - | - |

SIGNATURE

P.E. NUMBER

DATE

TOWN OF SCARBOROUGH
EASTERN TRAIL CONNECTOR
SCARBOROUGH TO SOUTH PORTLAND, MAINE

TRAIL PLAN 1

SHEET NUMBER
15
OF 66

| ITEM 607.22 CEDAR RAIL FENCE | LF |
|---|---|
| STA. 116+00 RT. TO STA. 122+42 RT. | 648 |

| ITEM 607.173 CHAIN LINK FENCE - 6' PVC COATED | LF |
|---|---|
| STA. 117+75 LT. TO STA. 122+42 LT. | 476 |

TYPICAL SECTION B

TYPICAL SECTION E

(2) 36"X36' OPTION III W/ RIPRAP SLOPE PROTECTION

18"X28' OPTION III W/ RIPRAP SLOPE PROTECTION

36"X40' OPTION III W/ RIRRAP SLOPE PROTECTION

PRC = STA. 115+32.00

PT = STA. 114+70.44

CURVE DATA #5
PI = 115+01.33
D = 19°05'54.9"
Δ = 11°45'24.2" Lt.
R = 300.00'
L = 61.56'
T = 30.89'
E = 1.59'

CURVE DATA #6
PI = 118+25.02
D = 38°11'49.9"
Δ = 63°36'35.4" Rt.
R = 150.00'
L = 166.53'
T = 93.02'
E = 26.50'

PT = STA. 116+98.53

PC = STA. 117+73.17

S 13°11'50.50" W

6' PVC COATED CHAIN LINK FENCE (TYP.)

CURVE DATA #7
PI = 119+74.54
D = 28°38'52.4"
Δ = 90°23'29.3" Lt.
R = 200.00'
L = 315.53'
T = 201.37'
E = 83.81'

PT = STA. 120+88.69

CEDAR RAIL FENCE (TYP.)

36"X68' OPTION III W/ RIPRAP SLOPE PROTECTION

APPROXIMATE EMERGENT WETLAND BOUNDARY

AREA TO BE GRUBBED, LEVELED AND BACKFILLED WITH 12" AGGREGATE SUBBASE COURSE-GRAVEL (TYPE D-MODIFIED) AND 2" LOAM AND SEED

PROPOSED SITE ACCESS FROM ABCO RENTAL AND STORAGE

TYPICAL SECTION E (SEE PAN AM CROSSING SHEETS)

PAN AM RAILROAD BRIDGE

TYPICAL SECTION D (SEE PAN AM CROSSING SHEETS)

RELOCATE STOCKPILED BRUSH AND DEBRIS (APPROX. 150 CY) AS DIRECTED BY THE RESIDENT. PAID UNDER EQUIPMENT RENTAL ITEMS

PROPOSED TREE (TYP.)

6' PVC COATED CHAIN LINK FENCE (TYP.)

STA. 122+42.00
℄ BRIDGE ABUTMENT

CEDAR RAIL FENCE (TYP.)

COLLAPSIBLE BOLLARD (LOCATION AND INSTALLATION SHALL BE COORDINATED BY THE CONTRACTOR WITH THE RETAINING WALL MANUFACTURER)

STA. 123+74.00
℄ BRIDGE PIER

PC = STA. 124+61.92

PT = STA. 124+94.51

CHAIN LINK FENCE 6' PVC COATED

MECHANICALLY STABILIZED EARTH RETAINING WALL

6' PVC COATED CHAIN LINK FENCE ALONG RETAINING WALL

PC = STA. 126+18.77

CURVE DATA #10
PI = 126+71.75
D = 95°29'34.7"
Δ = 82°53'22.9" Rt.
R = 60.00'
L = 86.80'
T = 52.98'
E = 20.04'

S 77°11'38.78" E

S 75°20'16.88" E

S 77°12'18.89" E

PLAIN RIPRAP (TYP.)

STA. 124+62.00
℄ BRIDGE ABUTMENT

PT = STA. 127+05.57

CEDAR RAIL FENCE

CURVE DATA #8
PI = 122+04.16
D = 5°43'46.5"
Δ = 1°51'21.9" Rt.
R = 1000.00'
L = 32.39'
T = 16.20'
E = 0.13'

PC = STA. 121+87.97

PT = STA. 122+20.36

| ITEM 607.173 CHAIN LINK FENCE - 6' PVC COATED | LF |
|---|---|
| STA. 123+75 12.68' LT. TO STA. 126+42 24.20' LT. | 279 |
| STA. 124+62 LT. TO STA. 126+45 LT. | 186 |

| ITEM 607.22 CEDAR RAIL FENCE | LF |
|---|---|
| STA. 124+62 RT. TO STA. 127+15 RT. | 258 |

| ITEM 607.2325 PIPE ENTRY GATE | EA |
|---|---|
| LOCATION TO BE DETERMINED BY THE RESIDENT | 1 |

CURVE DATA #9
PI = 124+78.22
D = 5°43'46.5"
Δ = 1°52'02.0" Lt.
R = 1000.00'
L = 32.59'
T = 16.30'
E = 0.13'

25 0 25 50

PROGRESS PLANS
April 4, 2023

STATE OF MAINE
DEPARTMENT OF TRANSPORTATION

AC-STP-1942(600)X & CMAQ-1942(610)

WIN
19426.00 & 019426.10 HIGHWAY PLANS

| | BILL REICHL | BY | DATE |
|---|---|---|---|
| PROJ. MANAGER | | | |
| DESIGN-DETAILED | C.Helmick | P. Bishop | 12'22 |
| CHECKED-REVIEWED | L. DRISCOLL | J. Olund | 12'22 |
| DESIGN2-DETAILED2 | - | - | - |
| DESIGN3-DETAILED3 | - | - | - |
| REVISIONS 1 | - | - | - |
| REVISIONS 2 | - | - | - |
| REVISIONS 3 | - | - | - |
| REVISIONS 4 | - | - | - |
| FIELD CHANGES | - | - | - |

SIGNATURE

P.E. NUMBER

DATE

TOWN OF SCARBOROUGH
EASTERN TRAIL CONNECTOR
SCARBOROUGH TO SOUTH PORTLAND, MAINE

TRAIL PLAN 2

SHEET NUMBER
16
OF 66

Date:4/4/2023
Username:
Division:
Filename: 016_TrailPlan02.dgn

Username:
Division:
Filename: 017_TrailPlan03.dgn
Date:4/4/2023

PARKWAY DR. CROSSING AT GRADE, SEE PAN AM CROSSING PLAN II (SHEET 32) FOR MORE DETAIL

TYPICAL SECTION A

CURVE DATA #10
PI = 126+71.75
D = 95°29'34.7"
Δ = 82°53'22.9" Rt.
R = 60.00'
L = 86.80'
T = 52.98'
E = 20.04'

PARKWAY DRIVE

COLLAPSIBLE BOLLARDS

PT = STA. 128+54.06

CLO

12.00'

127+00

S 69°59'24.68" E

128+00

12.00'

CURVE DATA #11
PI = 128+20.33
D = 95°29'34.7"
Δ = 82°10'12.0" Rt.
R = 60.00'
L = 86.05'
T = 52.31'
E = 19.60'

PC = STA. 127+68.01

12' WIDE PIPE ENTRY GATE, LOCATION DETERMINED BY THE RESIDENT

129+00

130+00

131+00

132+00

S 77°23'46.67" E

133+00

134+00

36"X32' OPTION III W/ RIPRAP SLOPE PROTECTION AND APRON

# 160-52

PROGRESS PLANS
April 4, 2023

134+00

135+00

18"X24' OPTION III W/ RIPRAP SLOPE PROTECTION

PC = STA. 135+38.29

136+00

PRC = STA. 136+16.25

18"X24' OPTION III W/ RIPRAP SLOPE PROTECTION AND APRON

PT = STA. 136+79.15

TYPICAL SECTION A

137+00

CURVE DATA #12
PI = 135+79.90
D = 63°39'43.1"
Δ = 49°37'44.5" Rt.
R = 90.00'
L = 77.96'
T = 41.61'
E = 9.15'

CURVE DATA #13
PI = 136+50.93
D = 95°29'34.7"
Δ = 60°03'54.9" Lt.
R = 60.00'
L = 62.90'
T = 34.69'
E = 9.30'

PLEASANT HILL RD. CROSSING AT GRADE, SEE PLEASANT HILL ROAD CROSSING PLAN (SHEET 51) FOR MORE DETAIL

COLLAPSABLE BOLLARDS (TYP.)

PLEASANT HILL ROAD

POLE 46

POLE 46S W/GUY

POLE 46.1 W/GUYS

POLE 71 SECTION 234

138+00

S 87°49'57.02" E

18"X32' OPTION III W/ RIPRAP SLOPE PROTECTION AND APRON

PC = STA. 138+41.78

PT = STA. 139+06.16

TYPICAL SECTION A

CURVE DATA #14
PI = 138+74.25
D = 28°38'52.4"
Δ = 18°26'38.0" Lt.
R = 200.00'
L = 64.38'
T = 32.47'
E = 2.62'

CHAINLINK FENCE

EXISTING DOG KENNEL

SHED

139+00

140+00

N 73°43'25.01" E

141+00

25 0 25 50

STATE OF MAINE
DEPARTMENT OF TRANSPORTATION

AC-STP-1942(600)X & CMAQ-1942(610)

WIN
19426.00 & 019426.10 HIGHWAY PLANS

| | BY | DATE |
|---|---|---|
| PROJ. MANAGER | BILL REICHL | |
| DESIGN- DETAILED | C.Helmick | 12\22 |
| CHECKED-REVIEWED | L. DRISCOLL | 12\22 |
| DESIGN2-DETAILED2 | - | - |
| DESIGN3-DETAILED3 | - | - |
| REVISIONS 1 | - | - |
| REVISIONS 2 | - | - |
| REVISIONS 3 | - | - |
| REVISIONS 4 | - | - |
| FIELD CHANGES | - | - |

SIGNATURE

P.E. NUMBER

DATE

TOWN OF SCARBOROUGH
EASTERN TRAIL CONNECTOR
SCARBOROUGH TO SOUTH PORTLAND, MAINE

TRAIL PLAN 3

SHEET NUMBER
17
OF 66

| ITEM 607.173 CHAIN LINK FENCE - 6' PVC COATED | LF |
|---|---|
| STA. 143+40 LT. TO STA. 143+77 LT. | 51 |
| STA. 143+85 LT. TO STA. 147+25 LT. | 356 |
| STA. 147+29 LT. TO STA. 152+30 LT. | 496 |

| ITEM 607.23 CHAIN LINK FENCE GATE | EA |
|---|---|
| STA. 143+90 LT. | 1 |
| STA. 147+27 LT. | 1 |

CONSTRUCT PAVED ENTRANCE

12' WIDE DOUBLE GATE

18"X44' OPTION III W/ RIPRAP SLOPE PROTECTION AND APRON

6' PVC COATED CHAIN LINK FENCE (TYP.)

PT = STA. 144+08.72

PC = STA. 145+08.45

PT = STA. 145+79.45

TYPICAL SECTION B — TYPICAL SECTION C

CURVE DATA #17
PI = 145+44.01
D = 11°27'33.0"
Δ = 8°08'12.3" Lt.
R = 500.00'
L = 71.01'
T = 35.56'
E = 1.26'

N 78°11'44.77" E

CURVE DATA #16
PI = 143+71.65
D = 71°37'11.0"
Δ = 58°52'59.3" Rt.
R = 80.00'
L = 82.22'
T = 45.15'
E = 11.86'

18"X32' OPTION III W/ RIPRAP SLOPE PROTECTION AND APRON

PRC = STA. 143+26.50

4' WIDE GATE

CURVE DATA #21
PI = 149+41.23
D = 16°22'12.8"
Δ = 22°15'30.1" Lt.
R = 350.00'
L = 135.97'
T = 68.85'
E = 6.71'

N 78°40'03.90" E

TYPICAL SECTION A — TYPICAL SECTION B

PC = STA. 142+12.54

CURVE DATA #15
PI = 142+74.23
D = 47°44'47.3"
Δ = 54°24'39.6" Lt.
R = 120.00'
L = 113.96'
T = 61.69'
E = 14.93'

| PROPOSED ELEVATION TABLE | | | |
|---|---|---|---|
| STATION | ℄ OF TRAIL ELEVATION | BOTTOM OF DRAINAGE SWALE | |
| | | LEFT | RIGHT |
| 142+50 | 47.80' | | 46.03' |
| 143+00 | 45.98' | 44.31' | 44.61' |
| 143+50 | 43.41' | 39.31' | 39.61' |
| 144+00 | 40.08' | 35.31' | 34.61' |
| 144+50 | 36.05' | | 29.61' |

PC = STA. 145+94.33

CURVE DATA #18
PI = 146+14.44
D = 38°11'49.9"
Δ = 15°16'22.0" Lt.
R = 150.00'
L = 39.98'
T = 20.11'
E = 1.34'

PT = STA. 146+34.31

N 70°03'32.50" E

PC = STA. 146+90.32

CURVE DATA #19
PI = 147+34.26
D = 47°44'47.3"
Δ = 40°13'23.3" Rt.
R = 120.00'
L = 84.24'
T = 43.94'
E = 7.79'

PRC = STA. 147+74.56

N 54°47'10.54" E

CURVE DATA #20
PI = 148+10.46
D = 22°55'05.9"
Δ = 16°20'29.9" Lt.
R = 250.00'
L = 71.30'
T = 35.90'
E = 2.56'

PT = STA. 148+45.87

PC = STA. 148+72.38

OHU — POLE 72 SECTION 234

| ITEM 607.173 CHAIN LINK FENCE - 6' PVC COATED | LF |
|---|---|
| STA. 152+34 LT. TO STA. 155+97 LT. | 364 |
| STA. 156+07 LT. TO STA. 161+29 LT. | 527 |

| ITEM 607.23 CHAIN LINK FENCE GATE | EA |
|---|---|
| STA. 152+30 LT. | 1 |
| STA. 156+00 LT. | 1 |

APPARENT DRY HYDRANT

CURVE DATA #22
PI = 150+86.19
D = 27°17'01.3"
Δ = 40°40'38.2" Lt.
R = 210.00'
L = 149.09'
T = 77.84'
E = 13.96'

PCC = STA. 150+08.35

PROUT'S POND

4' WIDE GATE

PT = STA. 151+57.44

CURVE DATA #23
PI = 154+93.64
D = 5°43'46.5"
Δ = 6°12'26.6" Lt.
R = 1000.00'
L = 108.34'
T = 54.22'
E = 1.47'

PC = STA. 154+39.42

PT = STA. 155+47.76

10' WIDE DOUBLE GATE

13'

N 15°43'55.54" E

N 9°31'28.92" E

PC = STA. 156+32.60

PT = STA. 156+82.05

POLE 6 SECTION 152

POLE 7 SECTION 153

WETLAND

CURVE DATA #24
PI = 156+57.35
D = 11°27'33.0"
Δ = 5°39'56.7" Rt.
R = 500.00'
L = 49.44'
T = 24.74'
E = 0.61'

PROGRESS PLANS
April 4, 2023

25 0 25 50

STATE OF MAINE
DEPARTMENT OF TRANSPORTATION

AC-STP-1942(600)X & CMAQ-1942(610)

WIN
19426.00 & 019426.10 HIGHWAY PLANS

| | BY | DATE |
|---|---|---|
| PROJ. MANAGER | BILL REICHL | |
| DESIGN-DETAILED | C.Helmick | 12'22 |
| CHECKED-REVIEWED | L. DRISCOLL | 12'22 |
| DESIGN2-DETAILED2 | - | - |
| DESIGN3-DETAILED3 | - | - |
| REVISIONS 1 | - | - |
| REVISIONS 2 | - | - |
| REVISIONS 3 | - | - |
| REVISIONS 4 | - | - |
| FIELD CHANGES | - | - |

SIGNATURE

P.E. NUMBER

DATE

TOWN OF SCARBOROUGH
EASTERN TRAIL CONNECTOR
SCARBOROUGH TO SOUTH PORTLAND, MAINE

TRAIL PLAN 4

SHEET NUMBER
18
OF 66

Filename: 018_TrailPlan04.dgn Division: Username: Date:4/4/2023

| ITEM 607.22 CEDAR RAIL FENCE | LF |
|---|---|
| STA. 162+00 LT. TO 162+68 LT | 65 |
| STA. 162+00 RT. TO 162+80 RT. | 84 |
| STA. 163+03 LT. TO 164+00 LT. | 108 |
| STA. 163+08 RT. TO 163+50 RT. | 41 |

6' PVC COATED CHAIN LINK FENCE (TYP.)

TYPICAL SECTION C

TYPICAL SECTION A

CURVE DATA #24
PI = 156+57.35
D = 11°27'33.0"
Δ = 5°39'56.7" Rt.
R = 500.00'
L = 49.44'
T = 24.74'
E = 0.61'

PC = STA. 156+32.60

PT = STA. 156+82.05

PC = STA. 158+46.12

CURVE DATA #25
PI = 159+77.94
D = 14°19'26.2"
Δ = 36°28'47.0" Rt.
R = 400.00'
L = 254.68'
T = 131.82'
E = 21.16'

CURVE DATA #26
PI = 161+25.19
D = 71°37'11.0"
Δ = 33°54'58.0" Lt.
R = 80.00'
L = 47.36'
T = 24.39'
E = 3.64'

PRC = STA. 161+00.80

PT = STA. 161+48.15

COLLAPSIBLE BOLLARDS (TYP.)

CURVE DATA #27
PI = 162+70.70
D = 95°29'34.7"
Δ = 58°23'34.6" Lt.
R = 60.00'
L = 61.15'
T = 33.53'
E = 8.73'

CURVE DATA #28
PI = 163+71.58
D = 57°17'44.8"
Δ = 55°15'31.2" Rt.
R = 100.00'
L = 96.44'
T = 52.34'
E = 12.87'

28' SPAN TIMBER BRIDGE (TYP.)

STREAM A Flow

PC = STA. 162+37.18

PORTLAND WATER DISTRICT ACCESS ROAD CROSSING AT GRADE, SEE PWD CROSSING PLAN (SHEET 52) FOR MORE DETAIL

PT = STA. 164+15.68

PC = STA. 163+19.23

PT = STA. 162+98.32

POLE 7 SECTION 152

POLE 8

POLE 9 SECTION 152

| PROPOSED ELEVATION TABLE | | |
|---|---|---|
| STATION | ℄ OF TRAIL ELEVATION | BOTTOM OF DRAINAGE SWALE |
| 165+50 | 29.62' | 27.20' |
| 166+00 | 29.61' | 27.95' |
| 166+50 | 29.73' | 28.70' |
| 167+00 | 29.86' | 29.13' |
| 167+50 | 29.98' | 29.49' |
| 168+00 | 30.11' | 29.27' |
| 168+50 | 30.23' | 28.78' |
| 169+00 | 30.36' | 38.30' |

| ITEM 607.16 CHAIN LINK FENCE - 4' | LF |
|---|---|
| STA. 164+00 LT. TO STA. 164+38 LT. | 42 |
| STA. 164+50 LT. TO STA. 167+00 LT. | 250 |
| STA. 167+12 LT. TO STA. 170+00 LT. | 288 |
| STA. 170+12 LT. TO STA. 171+00 LT. | 90 |

| ITEM 607.2341 CHAIN LINK FENCE SLIDING GATE - 4' X 12' | EA |
|---|---|
| STA. 164+44 LT. | 1 |
| STA. 167+06 LT. | 1 |
| STA. 170+06 LT. | 1 |

CURVE DATA #28
PI = 163+71.58
D = 57°17'44.8"
Δ = 55°15'31.2" Rt.
R = 100.00'
L = 96.44'
T = 52.34'
E = 12.87'

12' WIDE SLIDING GATE

18'X28' OPTION III W/ RIPRAP SLOPE PROTECTION

12' WIDE SLIDING GATE

12'X24' OPTION III W/ RIPRAP SLOPE PROTECTION AND APRON

12' WIDE SLIDING GATE

PT = STA. 164+15.68

PC = STA. 163+19.23

PT = STA. 162+98.32

PC = STA. 170+70.95

POLE 10 SECTION 152

POLE 11 SECTION 152

STREAM A Flow

PROGRESS PLANS
April 4, 2023

25 0 25 50

STATE OF MAINE
DEPARTMENT OF TRANSPORTATION

AC-STP-1942(600)X & CMAQ-1942(610)

WIN
19426.00 & 019426.10 HIGHWAY PLANS

| PROJ. MANAGER | BILL REICH | BY | DATE |
|---|---|---|---|
| DESIGN-DETAILED | C.Helmick | P. Bishop | 12\22 |
| CHECKED-REVIEWED | L. DRISCOLL | J. Olund | 12\22 |
| DESIGN2-DETAILED2 | - | - | - |
| DESIGN3-DETAILED3 | - | - | - |
| REVISIONS 1 | - | - | - |
| REVISIONS 2 | - | - | - |
| REVISIONS 3 | - | - | - |
| REVISIONS 4 | - | - | - |
| FIELD CHANGES | - | - | - |

SIGNATURE

P.E. NUMBER

DATE

TOWN OF SCARBOROUGH
EASTERN TRAIL CONNECTOR
SCARBOROUGH TO SOUTH PORTLAND, MAINE

TRAIL PLAN 5

SHEET NUMBER
19
OF 66

Username:
Division:
Filename: 019_TrailPlan05.dgn
Date:4/4/2023

| ITEM 607.22 CEDAR RAIL FENCE | LF |
|---|---|
| STA. 171+00 LT. TO 174+19 LT | 323 |
| STA. 173+50 RT. TO 174+19 RT. | 69 |
| STA. 174+34 LT. TO 175+38 LT. | 115 |
| STA. 174+34 RT. TO 175+44 RT. | 108 |
| STA. 175+69 RT. TO 176+18 RT. | 56 |
| STA. 175+74 LT. TO 176+12 LT. | 34 |
| STA. 176+35 LT. TO 177+00 LT. | 65 |
| STA. 176+36 RT. TO 177+00 RT. | 65 |

CURVE DATA #29
PI = 171+28.23
D = 28°38'52.4"
Δ = 31°57'45.1" Rt.
R = 200.00'
L = 111.57'
T = 57.28'
E = 8.04'

CURVE DATA #30
PI = 172+02.25
D = 38°11'49.9"
Δ = 14°58'56.9" Lt.
R = 150.00'
L = 39.22'
T = 19.72'
E = 1.29'

CURVE DATA #31
PI = 173+25.39
D = 19°05'54.9"
Δ = 10°52'30.3" Rt.
R = 300.00'
L = 56.94'
T = 28.56'
E = 1.36'

CURVE DATA #32
PI = 175+42.90
D = 95°29'34.7"
Δ = 27°55'59.1" Rt.
R = 60.00'
L = 29.25'
T = 14.92'
E = 1.83'

CURVE DATA #33
PI = 176+15.50
D =114°35'29.6"
Δ = 98°44'19.3" Lt.
R = 50.00'
L = 86.17'
T = 58.27'
E = 26.78'

CURVE DATA #34
PI = 179+13.03
D = 19°05'54.9"
Δ = 31°47'52.9" Lt.
R = 300.00'
L = 166.49'
T = 85.45'
E = 11.93'

CURVE DATA #35
PI = 180+87.74
D = 95°29'34.7"
Δ = 90°53'09.0" Rt.
R = 60.00'
L = 95.18'
T = 60.93'
E = 25.52'

CURVE DATA #36
PI = 182+49.11
D =146°54'44.1"
Δ = 88°33'23.9" Rt.
R = 39.00'
L = 60.28'
T = 38.03'
E = 15.47'

| ITEM 609.11 VERTICAL CURB TYPE 1 | LF |
|---|---|
| STA. 181+17 LT. TO 182+11 LT. | 96 |
| STA. 182+71 LT. TO 182+79 LT. | 8 |

| ITEM 609.12 VERTICAL CURB TYPE 1 - CIRCULAR | LF |
|---|---|
| STA. 182+11 LT. TO 182+71 LT. | 70 |

| ITEM 609.238 TERMINAL CURB TYPE 1 - 8 FOOT | EA |
|---|---|
| STA. 181+17 LT. | 1 |
| STA. 182+79 LT. | 1 |

STA. 171+85.00 TO STA. 173+25.00 RT.
INSTALL 18" RIPRAP ON 1.5:1 SIDE SLOPE

GARY L. MAIETTA WAY ROADWAY CROSSING AT GRADE. SEE WAINWRIGHT COMPLEX CROSSING PLAN (SHEET 53) FOR MORE DETAIL

STA. 183+20.00
LIMIT OF WORK

PROGRESS PLANS
April 4, 2023

25 0 25 50

STATE OF MAINE
DEPARTMENT OF TRANSPORTATION

AC-STP-1942(600)X & CMAQ-1942(610)

WIN
19426.00 & 019426.10 HIGHWAY PLANS

| | BY | DATE |
|---|---|---|
| PROJ. MANAGER | BILL REICHL | |
| DESIGN-DETAILED | C.Helmick | 12-'22 |
| CHECKED-REVIEWED | L. DRISCOLL | 12-'22 |
| DESIGN2-DETAILED2 | - | - |
| DESIGN3-DETAILED3 | - | - |
| REVISIONS 1 | - | - |
| REVISIONS 2 | - | - |
| REVISIONS 3 | - | - |
| REVISIONS 4 | - | - |
| FIELD CHANGES | - | - |

SIGNATURE

P.E. NUMBER

DATE

TOWN OF SCARBOROUGH
EASTERN TRAIL CONNECTOR
SCARBOROUGH TO SOUTH PORTLAND, MAINE

TRAIL PLAN 6

SHEET NUMBER
20
OF 66

Date:4/4/2023
Username:
Division:
Filename: 020_TrailPlan06.dgn

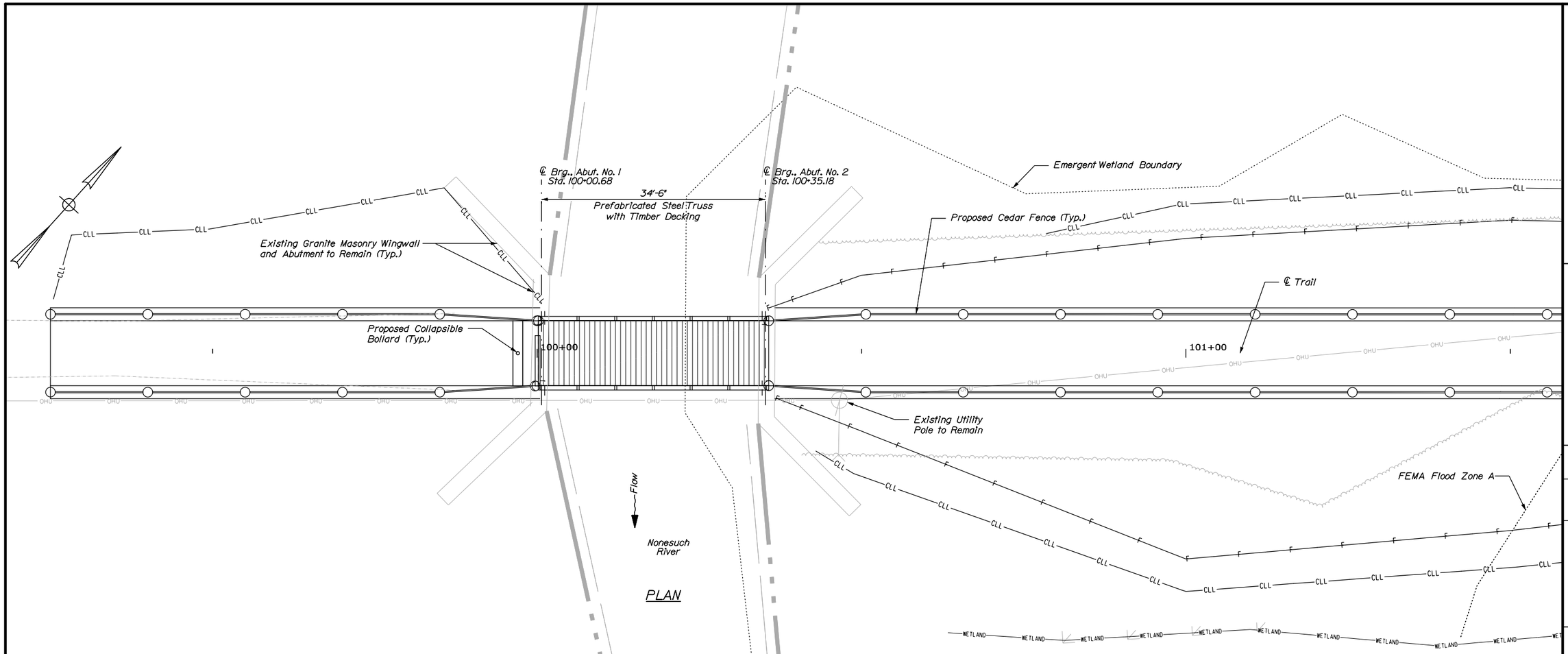


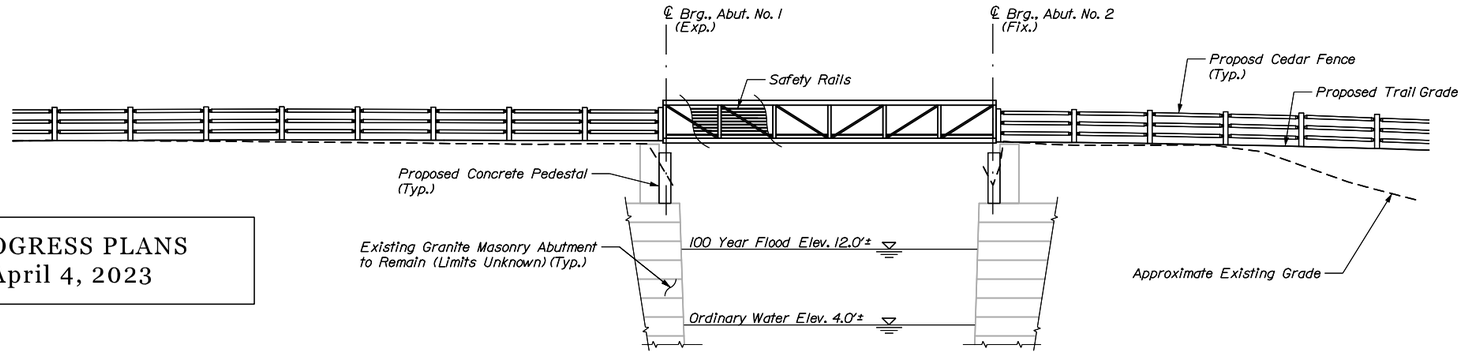


PROGRESS PLANS
April 4, 2023

## SPECIFICATIONS

DESIGN: AASHTO LRFD Bridge Design Specifications, Eighth Edition 2017.

AASHTO LRFD Guide Specification for Design of Pedestrian Bridges and Interim Specifications through 2015.

## DESIGN LOADING

Live Load: 90 p.s.f. (Pedestrian only) or H10 vehicle

## MATERIALS

Concrete (Unless noted otherwise) ..... Class "A"
Reinforcing Steel ..... ASTM A615, Grade 60
Structural Steel ..... ASTM A709, Grade 50W (Unpainted)
Timber ..... Southern Yellow Pine, No. 1

## BASIC DESIGN STRESSES

Concrete, Class "A" ..... f'c = 4,000 psi
Reinforcing Steel, ASTM A615, Grade 60 ..... fy = 60,000 psi
Structural Steel:
ASTM A709, Grade 50W ..... Fy = 50,000 psi
ASTM F3125, Grade A325, Type 3 ..... Fu = 120,000 psi

## UTILITIES

Central Maine Power

STATE OF MAINE
DEPARTMENT OF TRANSPORTATION

**AC-STP-1942(600)X & CMAQ-1942(610)**

**WIN**
**19426.00 & 019426.10** BRIDGE PLANS

| | BILL REICHL | BY | DATE |
|---|---|---|---|
| PROJ. MANAGER | | | |
| DESIGN-DETAILED | J. Olund | P. Bishop | 12\22 |
| CHECKED-REVIEWED | G. Standley | A. Stephens | 12\22 |
| DESIGN2-DETAILED2 | - | - | - |
| DESIGN3-DETAILED3 | - | - | - |
| REVISIONS 1 | - | - | - |
| REVISIONS 2 | - | - | - |
| REVISIONS 3 | - | - | - |
| REVISIONS 4 | - | - | - |
| FIELD CHANGES | - | - | - |

SIGNATURE

P.E. NUMBER

DATE

TOWN OF SCARBOROUGH
EASTERN TRAIL CONNECTOR
SCARBOROUGH TO SOUTH PORTLAND, MAINE

NONESUCH RIVER
PLAN & ELEVATION

SHEET NUMBER
21
OF 66

Filename: 021_Nonesuch River Bridge GP&E.dgn Division: Username: Date:4/4/2023

## PREFABRICATED STEEL TRUSS NOTES:

1. All construction, handling, assembly, and installation of the Prefabricated Steel Truss shall be in accordance with Special Provisions 104 and 530, and in accordance with the manufacturers recommendations, as applicable.

2. No reductions in live load intensity shall be taken in the design of the Prefabricated Steel Truss.

3. Design and detailing of bridge superstructure, bearings, anchorages, and sliding plate expansion joints shall be completed by the bridge fabricator. Payment shall be considered incidental to Item 530.01, Prefabricated Steel Truss Bridge, In Place - Nonesuch River.

4. Erection of the bridge will require close coordination between the Contractor and Central Maine Power in accordance with Special Provision 104. The Contractor should anticipate erecting the bridge during an overnight period during the mid-Spring or mid-Fall season. The Contractor is responsible to provide, for approval, a site lighting plan in accordance with Section 652.

5. The Prefabricated Steel Truss shall be electrically grounded in accordance with Special Provision 530.

## GENERAL CONSTRUCTION NOTES:

1. Plans for the existing bridge abutments are not available.

2. Adjustments shall be made by the Contractor to the bearing seat elevations to accommodate the actual superstructure dimensions. Adjustments outside the limits on the Plans require approval by the Engineer.

3. Existing abutment dimensions and locations provided on the Plans are approximate and shall be field verified and submitted by the Contractor prior to the start of construction and bridge fabrication.

4. All dimensions marked "±" are approximate or subject to change based on the fabricators bridge design. The Contractor shall plan and coordinate their work accordingly.

5. The proposed cedar fence rails shall extend over the backwall as needed to ensure a gap no larger than 4" exists between the approach fence and bridge safety rail. At the Contractors option, alternate means of achieving this result may be submitted for approval.

6. Warp trail surface to match proposed bridge surface.

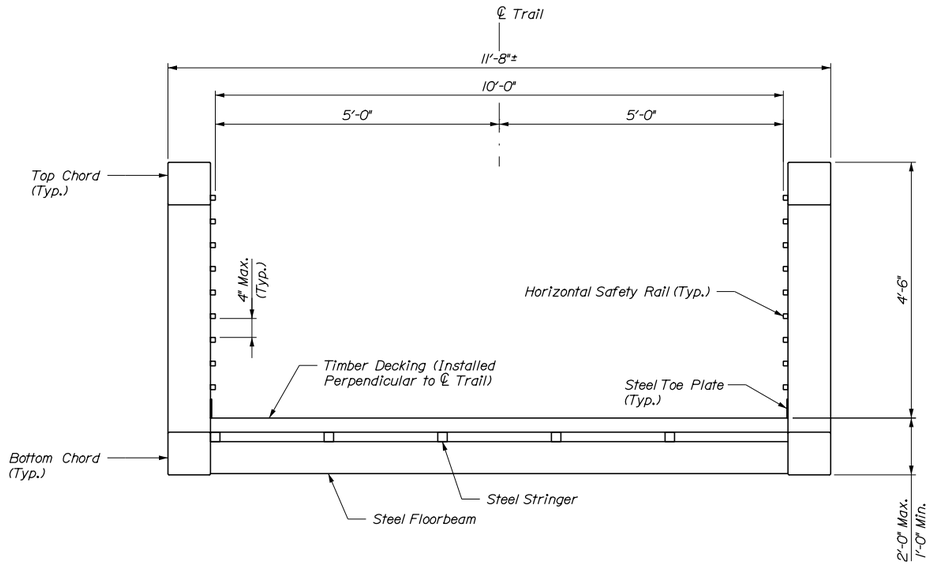


PREFABRICATED STEEL TRUSS SECTION

PROGRESS PLANS
April 4, 2023

STATE OF MAINE
DEPARTMENT OF TRANSPORTATION

AC-STP-1942(600)X & CMAQ-1942(610)

WIN
19426.00 & 019426.10

BRIDGE PLANS

| | BILL REICHL | BY | DATE |
|---|---|---|---|
| PROJ. MANAGER | | | |
| DESIGN-DETAILED | J. Ölund | P. Bishop | 12\22 |
| CHECKED-REVIEWED | G. Standley | A. Stephens | 12\22 |
| DESIGN2-DETAILED2 | - | - | - |
| DESIGN3-DETAILED3 | - | - | - |
| REVISIONS 1 | - | - | - |
| REVISIONS 2 | - | - | - |
| REVISIONS 3 | - | - | - |
| REVISIONS 4 | - | - | - |
| FIELD CHANGES | - | - | - |

SIGNATURE

P.E. NUMBER

DATE

TOWN OF SCARBOROUGH
EASTERN TRAIL CONNECTOR
SCARBOROUGH TO SOUTH PORTLAND, MAINE

NONESUCH RIVER
GENERAL NOTES & DETAILS

SHEET NUMBER
22
OF 66

Filename: 022_Nonesuch River Gen Notes And Typical Section.dgn Username: Date:4/4/2023

Filename: 023_Nonesuch_Profile.dgn Division: Username: Date:4/4/2023

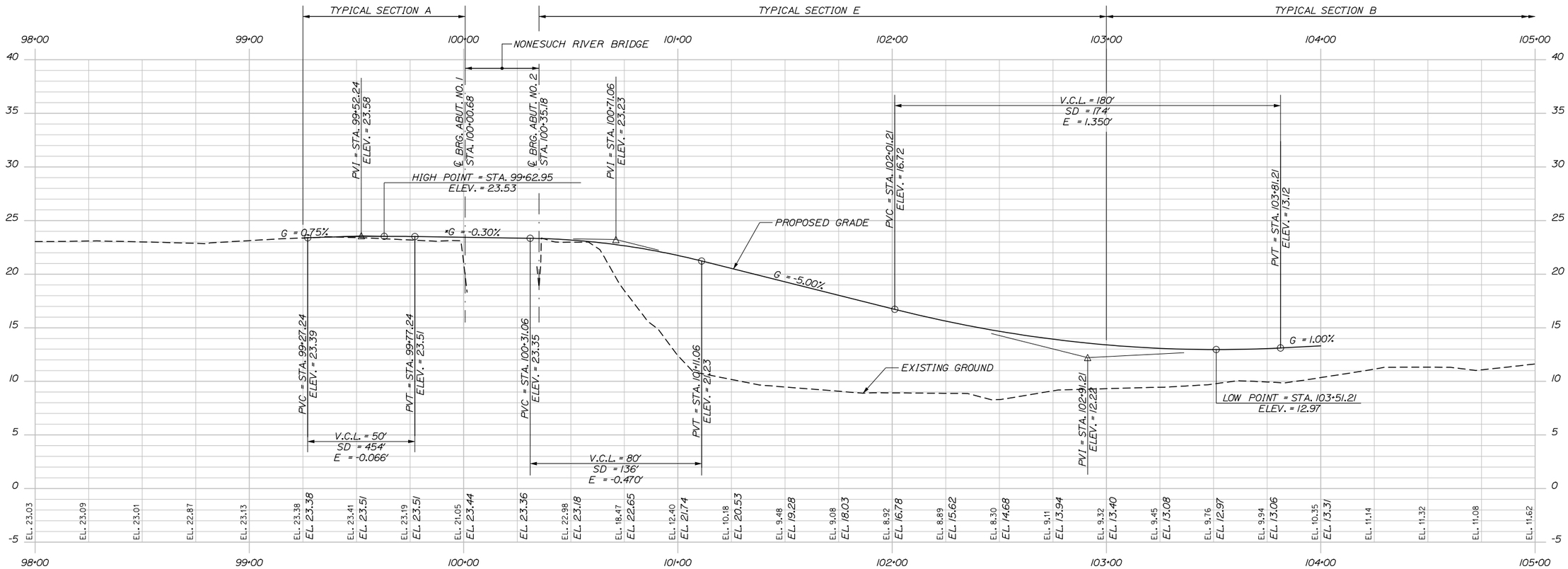


*NOTE: PROPOSED GRADE ACROSS NONESUCH RIVER BRIDGE IS APPROXIMATE AND IS SUBJECT TO MINOR DEVIATIONS BASED ON EXISTING BACKWALL ELEVATIONS.

PROFILE

Horiz. 25 0 25 50

Vert. 5 0 5 10

Scale of Feet

PROGRESS PLANS
April 4, 2023

STATE OF MAINE
DEPARTMENT OF TRANSPORTATION

**AC-STP-1942(600)X & CMAQ-1942(610)**

**WIN**
**19426.00 & 019426.10** HIGHWAY PLANS

| | | | |
|---|---|---|---|
| PROJ. MANAGER | BILL REICHL | | |
| DESIGN-DETAILED | C.Helmick | P. Bishop | 12\22 |
| CHECKED-REVIEWED | L. DRISCOLL | J. Olund | 12\22 |
| DESIGN2-DETAILED2 | - | - | - |
| DESIGN3-DETAILED3 | - | - | - |
| REVISIONS 1 | - | - | - |
| REVISIONS 2 | - | - | - |
| REVISIONS 3 | - | - | - |
| REVISIONS 4 | - | - | - |
| FIELD CHANGES | - | - | - |

SIGNATURE

P.E. NUMBER

DATE

TOWN OF SCARBOROUGH
EASTERN TRAIL CONNECTOR
SCARBOROUGH TO SOUTH PORTLAND, MAINE

NONESUCH RIVER CROSSING
PROFILE

SHEET NUMBER
23
OF 66

Username:

Date:4/4/2023

Division:

Filename: Xsect_Nonesuch.dgn

PROGRESS PLANS
April 4, 2023

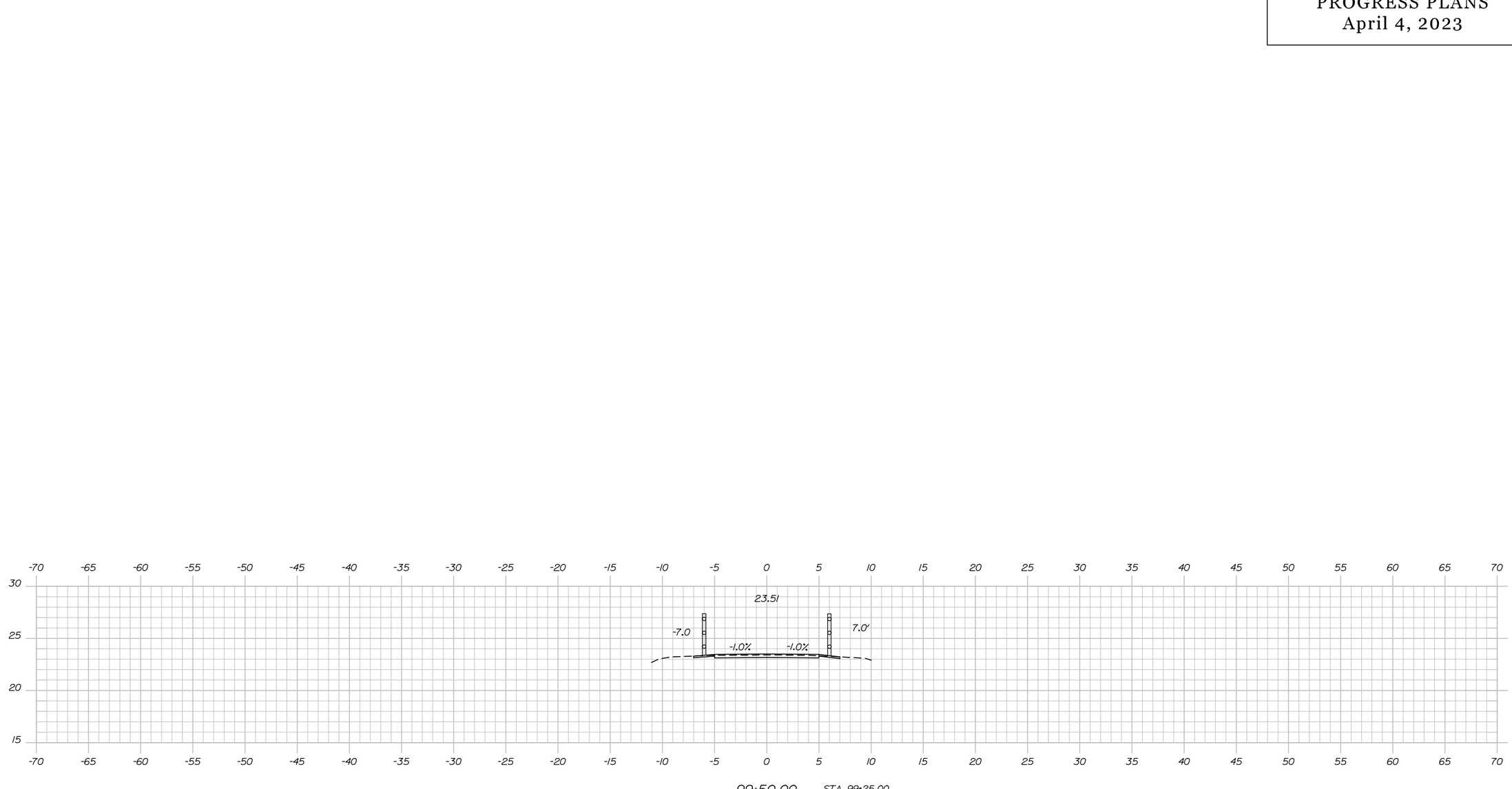


| PROJ. MANAGER | BILL REICHL | BY | DATE |
|---|---|---|---|
| DESIGN-DETAILED | C.Helmick | P. Bishop | 12\22 |
| CHECKED-REVIEWED | L. DRISCOLL | J. Olund | 12\22 |
| DESIGN2-DETAILED2 | - | - | - |
| DESIGN3-DETAILED3 | - | - | - |
| REVISIONS 1 | - | - | - |
| REVISIONS 2 | - | - | - |
| REVISIONS 3 | - | - | - |
| REVISIONS 4 | - | - | - |
| FIELD CHANGES | - | - | - |

SIGNATURE

P.E. NUMBER

DATE

STATE OF MAINE
DEPARTMENT OF TRANSPORTATION

**AC-STP-1942(600)X & CMAQ-1942(610)**

**WIN**
**19426.00 & 019426.10** HIGHWAY PLANS

TOWN OF SCARBOROUGH
EASTERN TRAIL CONNECTOR
SCARBOROUGH TO SOUTH PORTLAND, MAINE

# NONESUCH RIVER CROSSING
# CROSS SECTIONS

SHEET NUMBER

24

OF 66

Sta. 99+00.00 to Sta. 99+50.00

PROGRESS PLANS
April 4, 2023

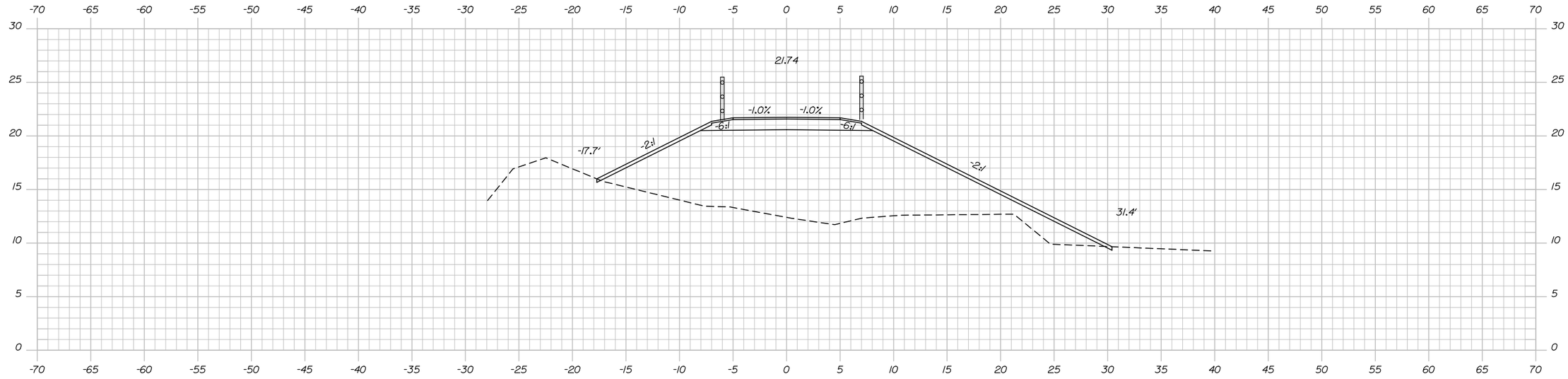


101+00.00

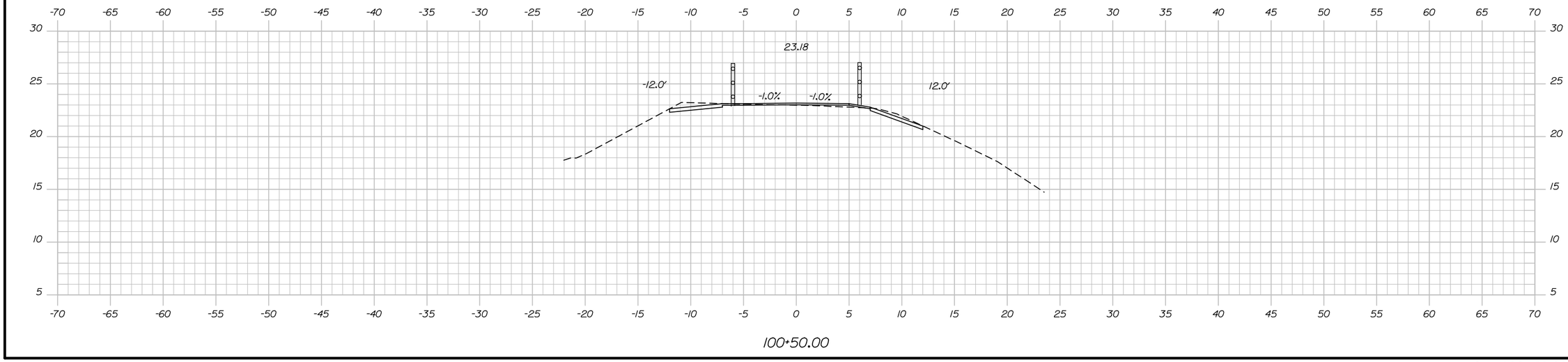


100+50.00

Sta. 100+50.00 to Sta. 101+00.00

STATE OF MAINE
DEPARTMENT OF TRANSPORTATION

AC-STP-1942(600)X & CMAQ-1942(610)

WIN
19426.00 & 019426.10 HIGHWAY PLANS

| | BILL REICHL | BY | DATE |
|---|---|---|---|
| PROJ. MANAGER | | | |
| DESIGN-DETAILED | C.Helmick | P. Bishop | 12\22 |
| CHECKED-REVIEWED | L. DRISCOLL | J. Olund | 12\22 |
| DESIGN2-DETAILED2 | - | - | - |
| DESIGN3-DETAILED3 | - | - | - |
| REVISIONS 1 | - | - | - |
| REVISIONS 2 | - | - | - |
| REVISIONS 3 | - | - | - |
| REVISIONS 4 | - | - | - |
| FIELD CHANGES | - | - | - |

SIGNATURE

P.E. NUMBER

DATE

TOWN OF SCARBOROUGH
EASTERN TRAIL CONNECTOR
SCARBOROUGH TO SOUTH PORTLAND, MAINE

NONESUCH RIVER CROSSING
CROSS SECTIONS

SHEET NUMBER
25
OF 66

Username:
Division:
Date:4/4/2023
Filename: Xsect_Nonesuch.dgn

PROGRESS PLANS
April 4, 2023

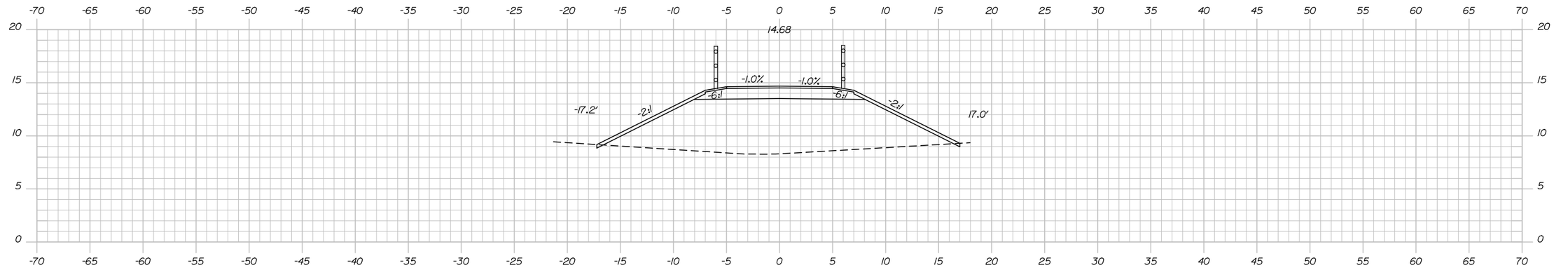


102+50.00

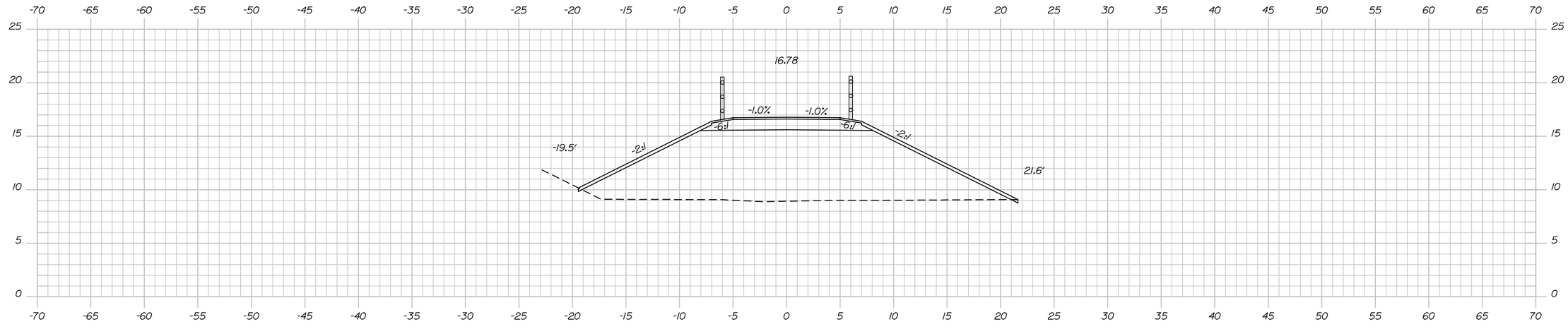


102+00.00

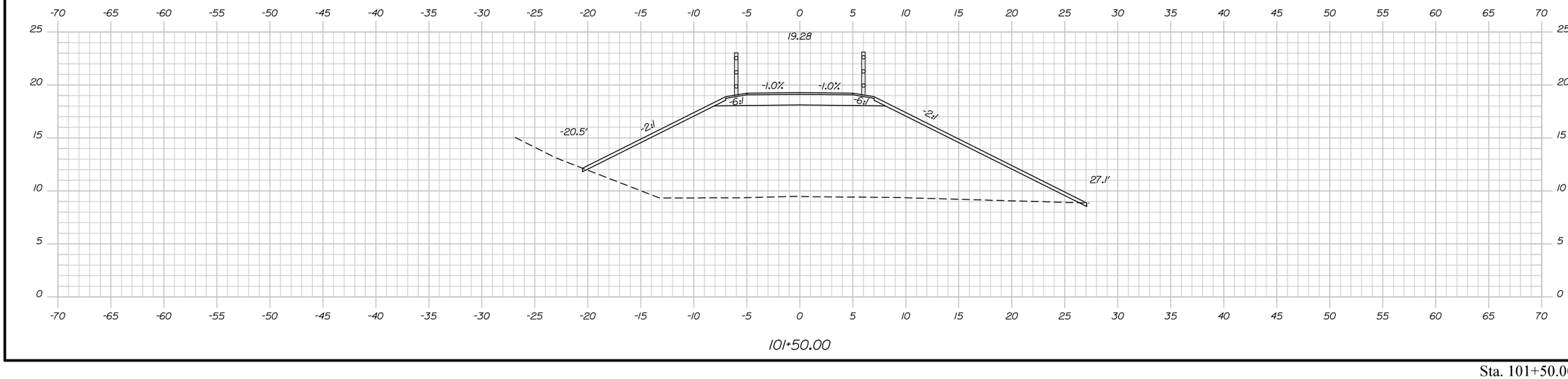


101+50.00

Sta. 101+50.00 to Sta. 102+50.00

STATE OF MAINE
DEPARTMENT OF TRANSPORTATION

AC-STP-1942(600)X & CMAQ-1942(610)

WIN
19426.00 & 019426.10 HIGHWAY PLANS

| | | | |
|---|---|---|---|
| PROJ. MANAGER | BILL REICHL | BY | DATE |
| DESIGN-DETAILED | C.Helmick | P. Bishop | 12\22 |
| CHECKED-REVIEWED | L. DRISCOLL | J. Olund | 12\22 |
| DESIGN2-DETAILED2 | - | - | - |
| DESIGN3-DETAILED3 | - | - | - |
| REVISIONS 1 | _ | _ | _ |
| REVISIONS 2 | _ | _ | _ |
| REVISIONS 3 | _ | _ | _ |
| REVISIONS 4 | _ | _ | _ |
| FIELD CHANGES | _ | _ | _ |

SIGNATURE

P.E. NUMBER

DATE

TOWN OF SCARBOROUGH
EASTERN TRAIL CONNECTOR
SCARBOROUGH TO SOUTH PORTLAND, MAINE

NONESUCH RIVER CROSSING
CROSS SECTIONS

SHEET NUMBER
26
OF 66

Username:
Division:
Date:4/4/2023
Filename: Xsect_Nonesuch.dgn

PROGRESS PLANS
April 4, 2023

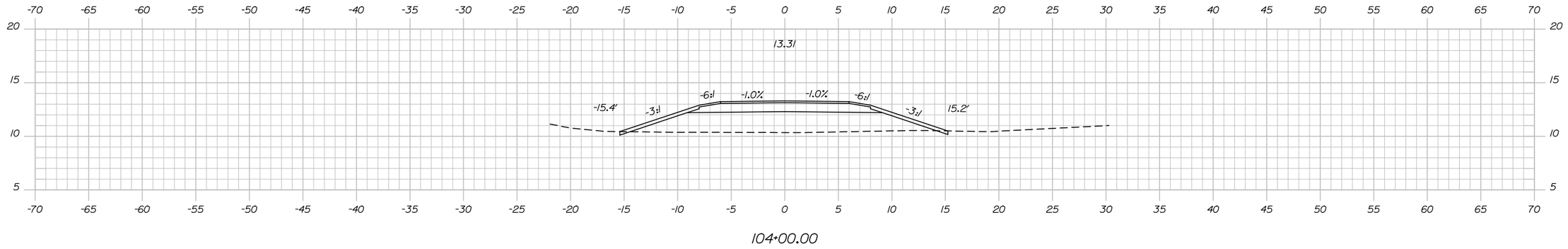


104+00.00

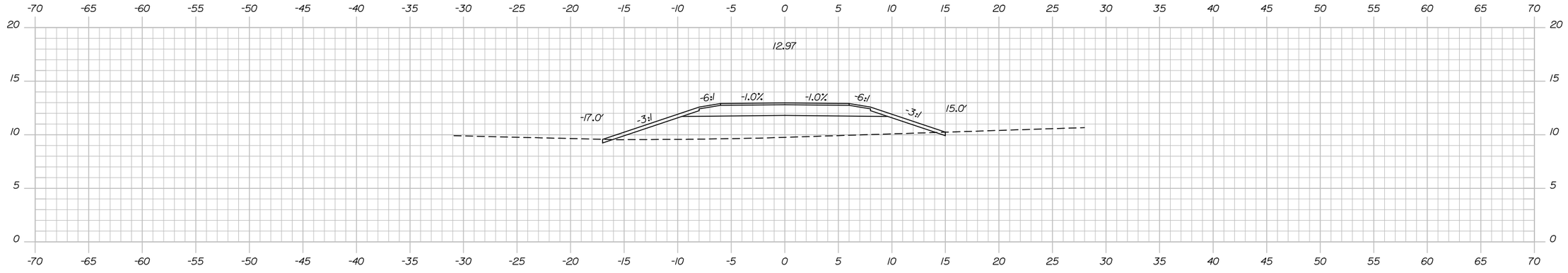


103+50.00

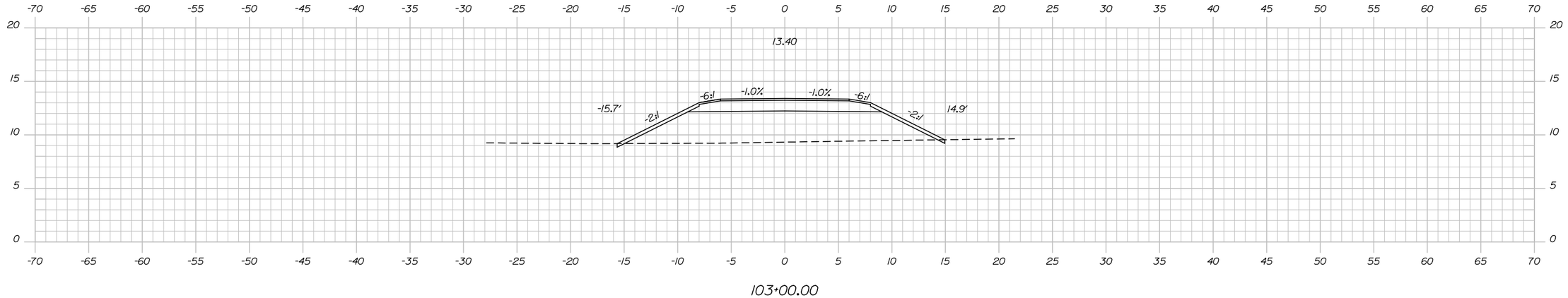


103+00.00

Sta. 103+00.00 to Sta. 104+00.00

STATE OF MAINE
DEPARTMENT OF TRANSPORTATION

AC-STP-1942(600)X & CMAQ-1942(610)

WIN
19426.00 & 019426.10 HIGHWAY PLANS

| | | BY | DATE |
|---|---|---|---|
| PROJ. MANAGER | BILL REICHL | | |
| DESIGN-DETAILED | C.Helmick | P. Bishop | 12\22 |
| CHECKED-REVIEWED | L. DRISCOLL | J. Olund | 12\22 |
| DESIGN2-DETAILED2 | - | - | - |
| DESIGN3-DETAILED3 | - | - | - |
| REVISIONS 1 | - | - | - |
| REVISIONS 2 | - | - | - |
| REVISIONS 3 | - | - | - |
| REVISIONS 4 | - | - | - |
| FIELD CHANGES | - | - | - |

SIGNATURE

P.E. NUMBER

DATE

TOWN OF SCARBOROUGH
EASTERN TRAIL CONNECTOR
SCARBOROUGH TO SOUTH PORTLAND, MAINE

NONESUCH RIVER CROSSING
CROSS SECTIONS

SHEET NUMBER
27
OF 66

Date:4/4/2023
Username:
Division:
Filename: Xsect_Nonesuch.dgn

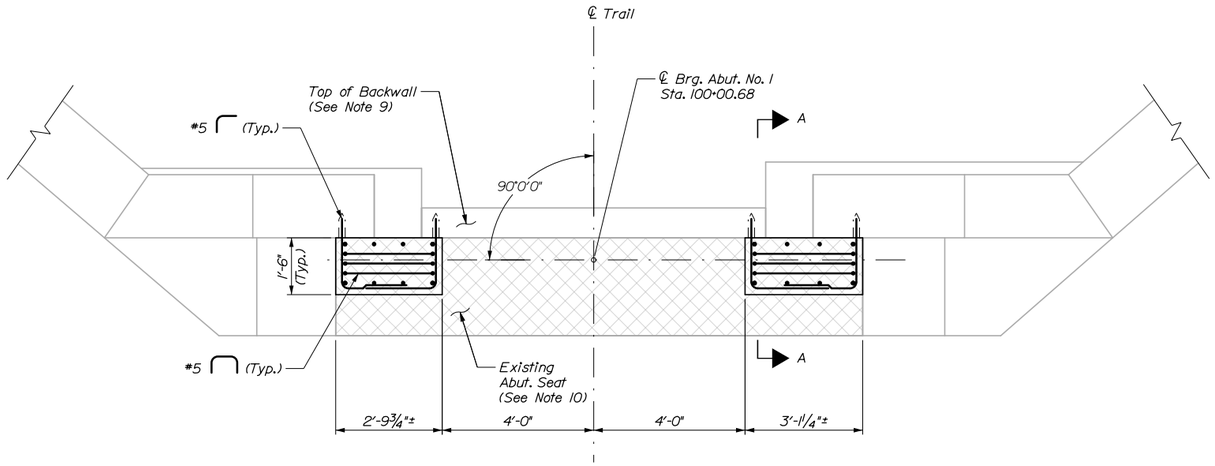


ABUTMENT NO. 1 - PLAN

(Abut. No. 2 Similar)

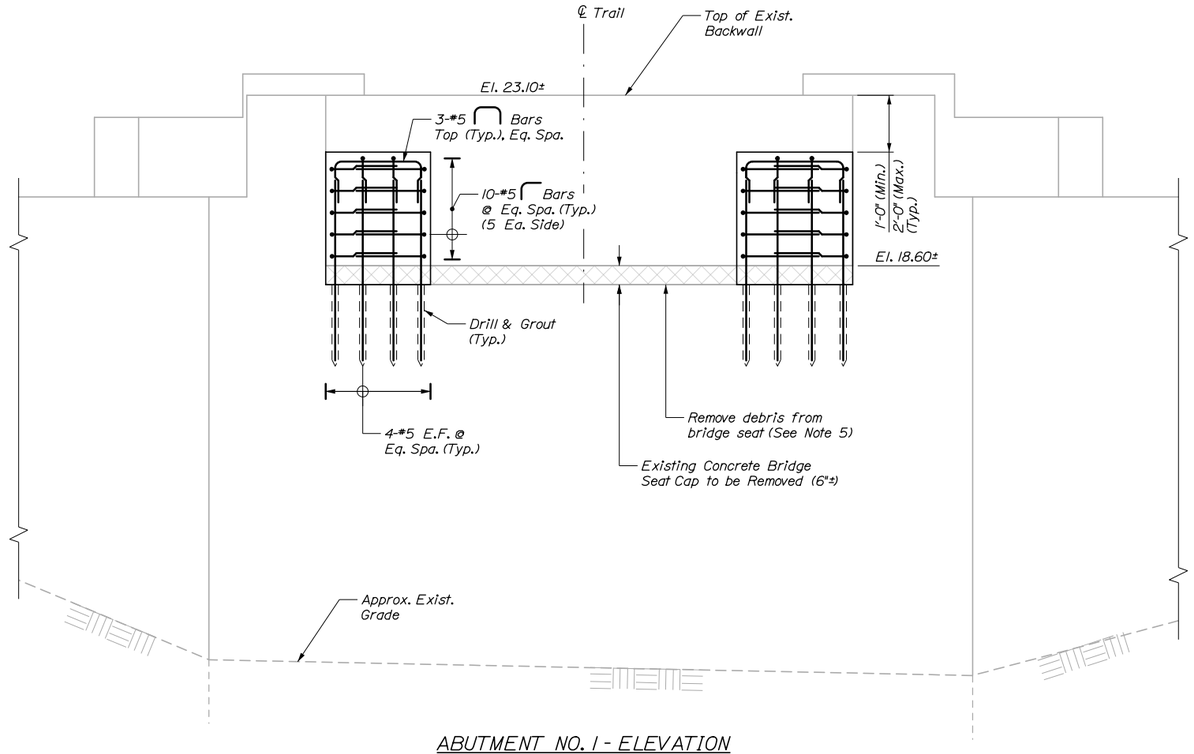


ABUTMENT NO. 1 - ELEVATION

(Abut. No. 2 Similar)

## NOTES:

1. Abutment geometry shown is approximate and is based on limited field measurements and survey. Prior to commencing the design of the Prefabricated Steel Truss, or preparation of any shop drawings associated with construction of this bridge, the Contractor shall verify and adjust, as appropriate, all abutment elevations, dimensions, and abutment geometry with respect to the Centerline of Trail and Profile. Payment for efforts associated with this survey will not be made separately and will be considered Incidental to related Contract Items.

2. All concrete shall be Class A, and shall be paid under Item 502.21, Structural Concrete, Abutments and Retaining Walls.

3. All exposed edges of concrete shall be chamfered ¾".

4. Where drilling and grouting of reinforcing steel is specified, the anchoring material shall be one of the products listed on the Maine Department of Transportation Qualified Products List of Chemical Anchoring Materials. Installation shall be in accordance with the manufacturer's recommendations. Embedment depth shall be the greater of 1'-0" horizontally, 2'-0" vertically or manufacturer recommendations to fully develop the bars to full yield strength. Drilled and grouted bars shall have a minimum of 4" cover to existing faces.

5. Prior to the start of abutment modifications, the existing granite masonry surfaces shall be thoroughly cleaned of all dirt, debris, and foreign material by pressure washing or other method deemed suitable by the Resident. This work shall be considered incidental to Item 502.21, Structural Concrete, Abutments and Retaining Walls.

6. All existing masonry surfaces to receive new concrete shall be coated with an epoxy bonding agent listed on the Maine Department of Transportation Qualified Products List.

7. Areas of the mortar in the existing granite abutment shall be repaired as directed by the Resident. This work shall be completed in accordance with Item 525.26, "Repointing Granite Masonry." An estimate of 100-sf of repair per abutment is included in the Estimated Quantities table; the actual amount will vary and will be determined by the Resident in the field.

8. All reinforcing steel shall be uncoated and have a minimum cover of 2" unless otherwise noted. Fabrication, delivery, drilling and grouting, and placement of reinforcing steel shall be incidental to Item 502.21 Structural Concrete Abutments and Retaining Walls.

9. The Contractor shall provide a smooth surface at the top of backwall with no more than ¼" in variation. This shall be completed by grinding, cutting or other approved method. Payment will be considered incidental to related Contract Items.

10. Payment for all existing concrete removal shall be incidental to Item 502.21, Structural Concrete, Abutments and Retaining Walls.

11. Anchor rods locations, sizes, and installation requirements shall be coordinated by the Contractor with the Prefabricated Steel Truss Manufacturer.

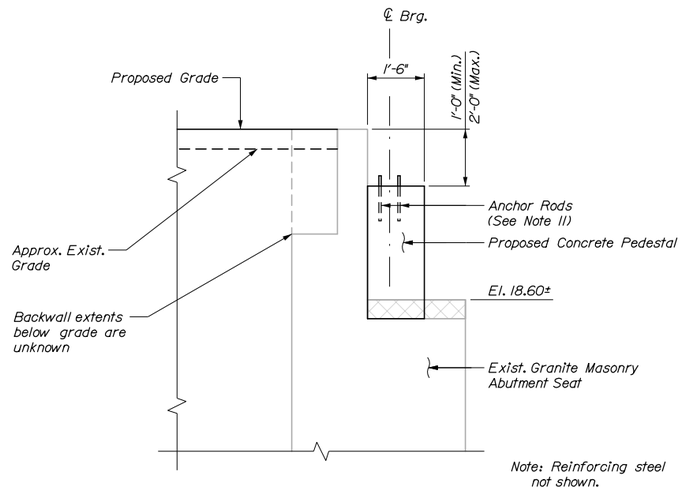


SECTION A-A

STATE OF MAINE
DEPARTMENT OF TRANSPORTATION

AC-STP-1942(600)X & CMAQ-1942(610)

WIN
19426.00 & 019426.10

BRIDGE PLANS

| | | | |
|---|---|---|---|
| PROJ. MANAGER | BILL REICHL | | |
| DESIGN-DETAILED | P. Bishop | 12\22 | |
| CHECKED-REVIEWED | J. Ouland | 12\22 | |
| DESIGN2-DETAILED2 | A. Stephens | - | |
| DESIGN3-DETAILED3 | G. Standley | - | |
| REVISIONS 1 | - | - | |
| REVISIONS 2 | - | - | |
| REVISIONS 3 | - | - | |
| REVISIONS 4 | - | - | |
| FIELD CHANGES | - | - | |

BY | DATE | SIGNATURE

P.E. NUMBER

DATE

TOWN OF SCARBOROUGH
EASTERN TRAIL CONNECTOR
SCARBOROUGH TO SOUTH PORTLAND, MAINE

NONESUCH RIVER
ABUTMENT NO. 1

SHEET NUMBER

28

OF 66

Filename: 028_Nonesuch River Abut Mod.dgn Division: Username: Date:4/4/2023

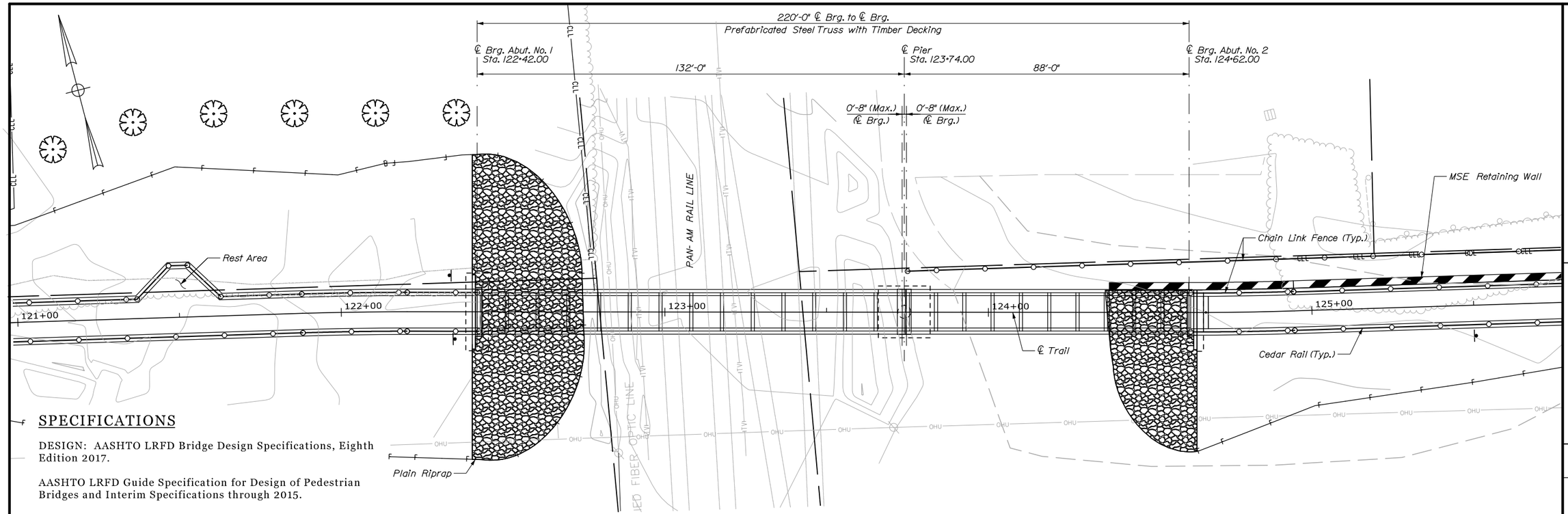


PLAN

## SPECIFICATIONS

DESIGN: AASHTO LRFD Bridge Design Specifications, Eighth Edition 2017.

AASHTO LRFD Guide Specification for Design of Pedestrian Bridges and Interim Specifications through 2015.

## DESIGN LOADING

Live Load: 90 p.s.f. (Pedestrian only) or H10 vehicle

## MATERIALS

| | |
|---|---|
| Concrete (Unless noted otherwise) | Class "A" |
| Reinforcing Steel | ASTM A615, Grade 60 |
| Structural Steel | ASTM A709, Grade 50W (Unpainted) |
| Timber | Southern Yellow Pine, No. 1 |

## BASIC DESIGN STRESSES

| | |
|---|---|
| Concrete, Class "A" | f'c = 4,000 psi |
| Reinforcing Steel, ASTM A615, Grade 60 | fy = 60,000 psi |
| Structural Steel: | |
| ASTM A709, Grade 50W | Fy = 50,000 psi |
| ASTM F3125, Grade A325, Type 3 | Fu = 120,000 psi |

## UTILITIES

Central Maine Power
AT&T
Sprint
Pan Am Rail

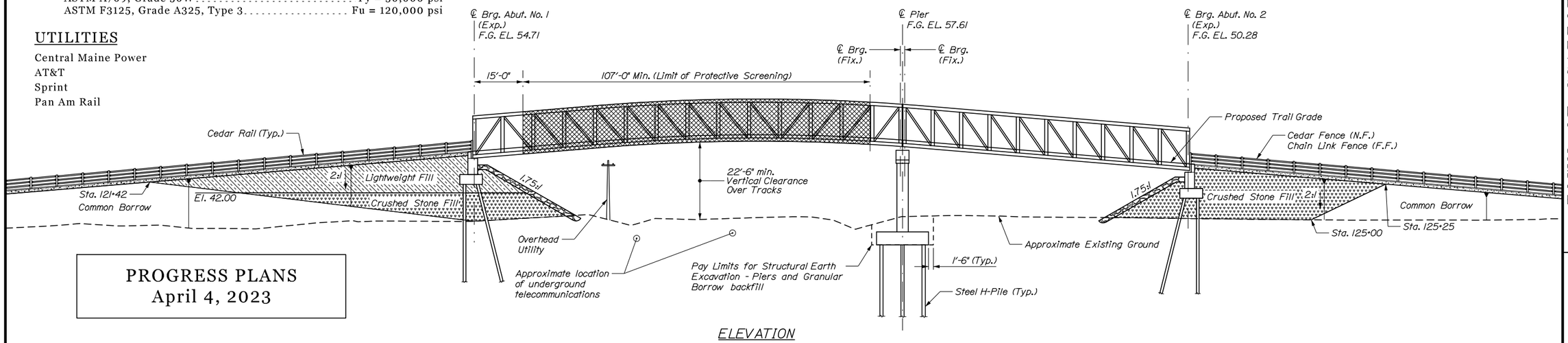


ELEVATION

PROGRESS PLANS
April 4, 2023

STATE OF MAINE
DEPARTMENT OF TRANSPORTATION

AC-STP-1942(600)X & CMAQ-1942(610)

WIN
19426.00 & 019426.10

BRIDGE PLANS

| | BILL REICHL | BY | DATE |
|---|---|---|---|
| PROJ. MANAGER | | | |
| DESIGN-DETAILED | J. Olund | P. Bishop | 12\22 |
| CHECKED-REVIEWED | G. Standley | A. Stephens | 12\22 |
| DESIGN2-DETAILED2 | - | - | - |
| DESIGN3-DETAILED3 | - | - | - |
| REVISIONS 1 | - | - | - |
| REVISIONS 2 | - | - | - |
| REVISIONS 3 | - | - | - |
| REVISIONS 4 | - | - | - |
| FIELD CHANGES | - | - | - |

SIGNATURE

P.E. NUMBER

DATE

TOWN OF SCARBOROUGH
EASTERN TRAIL CONNECTOR
SCARBOROUGH TO SOUTH PORTLAND, MAINE

PAN AM RAILROAD
PLAN & ELEVATION

SHEET NUMBER
29
OF 66

Date:4/4/2023
Username:
Division:
Filename: 029_PanAm GP&E.dgn

## PREFABRICATED STEEL TRUSS NOTES:

1. All construction, handling, assembly, and installation of the Prefabricated Steel Truss shall be in accordance with Special Provisions 104 and 530, and in accordance with the manufacturers recommendations, as applicable.

2. No reductions in live load intensity shall be taken in the design of the Prefabricated Steel Truss.

3. Design and detailing of bridge superstructure, bearings, anchorages, and sliding plate expansion joints shall be completed by the bridge fabricator. Payment shall be considered incidental to Item 530.01, Prefabricated Steel Truss Bridge, In Place - Pan Am Bridge.

4. Erection of the bridge will require close coordination between the Contractor, Pan Am Railways, and Central Maine Power in accordance with Special Provision 104. The Contractor should anticipate erecting the bridge during an overnight period during the mid-Spring or mid-Fall season. The Contractor is responsible to provide, for approval, a site lighting plan in accordance with Section 652.

5. The Prefabricated Steel Truss shall be electrically grounded in accordance with Special Provision 530.

## GENERAL CONSTRUCTION NOTES:

1. Proposed concrete bridge seat elevations are detailed based on a 24-inch depth from the top of deck to bottom of bottom chord, and a 6-inch bearing height. Adjustments shall be made by the Contractor to the bearing seat elevations to accommodate the actual superstructure and bearing dimensions within the limits shown.

2. All dimensions marked "±" are approximate or subject to change based on the fabricators bridge design. The Contractor shall plan and coordinate their work accordingly.

3. The proposed cedar fence rails and chain link fence panel shall extend over the backwall as needed to ensure a gap no larger than 4" exists between the approach fence and bridge safety rail. At the Contractors option, alternate means of achieving this result may be submitted for approval.

4. Warp trail surface to match proposed bridge surface.

5. Joint opening setting table and location of backwall shall be determined by the fabricator based on the thermal movements and superstructure extension beyond the ℄ bearing. Joint opening shall be no greater than 4" and no less than ½".

6. Lightweight Fill shall conform to the requirements of Special Provision 203 and be paid under Item 203.247, Expanded Shale Lightweight Aggregate. At the Contractor's option, alternate lightweight materials may be proposed for use in place of the expanded shale aggregate, such as cellular concrete fill, foamed glass aggregate, or geofoam (expanded polystyrene). The in-place density of the alternate material shall be equal to, or less than that noted in Special Provision 203. Such proposals are subject to approval by the Engineer and shall include appropriate construction specifications, separation geotextiles, protective membranes, or other ancillary components as appropriate to the fill material. No change in payment will be made for Contractor-proposed substitutions.

7. The chain-link fence parallel to the top of the MSE Wall shall be electrically grounded in accordance with the details provided in Special Provision 530. Payment for materials, installation, and labor associated with this effort shall not be made separately and will be incidental to Item 607.173, Chain Link Fence - 6' - PVC Coated.

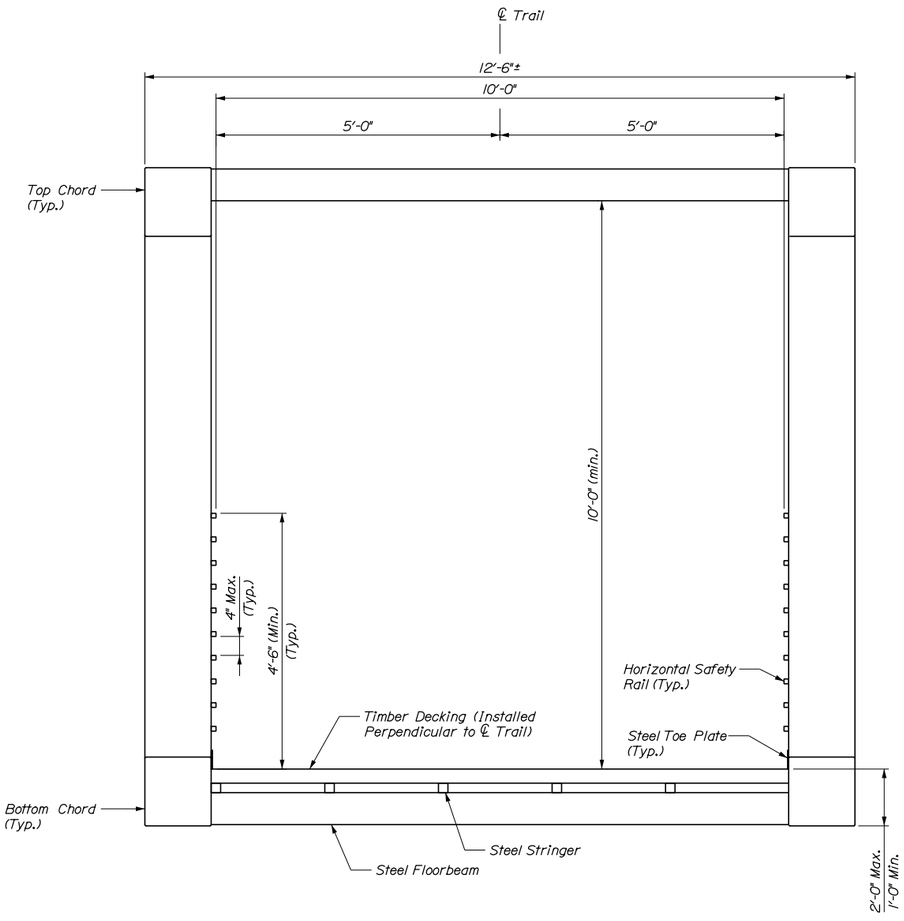


PREFABRICATED STEEL TRUSS SECTION

PROGRESS PLANS
April 4, 2023

STATE OF MAINE
DEPARTMENT OF TRANSPORTATION
AC-STP-1942(600)X & CMAQ-1942(610)
WIN
19426.00 & 019426.10
BRIDGE PLANS

| | BILL REICH | BY | DATE |
|---|---|---|---|
| PROJ. MANAGER | | | |
| DESIGN-DETAILED | J. Olund | P. Bishop | 12\22 |
| CHECKED-REVIEWED | G. Standley | A. Stephens | 12\22 |
| DESIGN2-DETAILED2 | - | - | - |
| DESIGN3-DETAILED3 | - | - | - |
| REVISIONS 1 | - | - | - |
| REVISIONS 2 | - | - | - |
| REVISIONS 3 | - | - | - |
| REVISIONS 4 | - | - | - |
| FIELD CHANGES | - | - | - |

SIGNATURE

P.E. NUMBER

DATE

TOWN OF SCARBOROUGH
EASTERN TRAIL CONNECTOR
SCARBOROUGH TO SOUTH PORTLAND, MAINE

PAN AM RAILROAD
GENERAL NOTES & DETAILS

SHEET NUMBER
30
OF 66

Filename: 030_PanAm Gen Notes And Typical Section.dgn Username: Date:4/4/2023

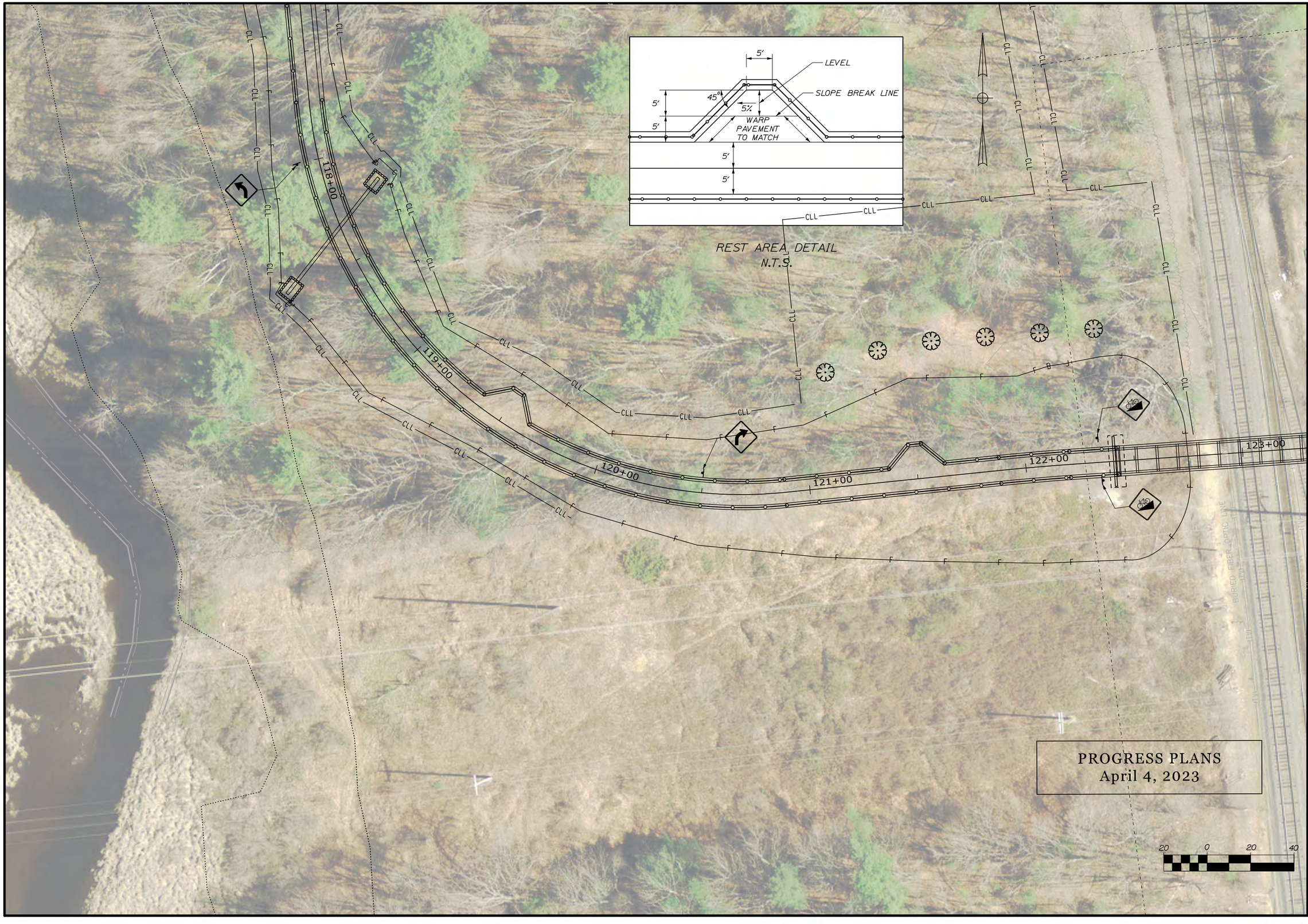


STATE OF MAINE
DEPARTMENT OF TRANSPORTATION

**AC-STP-1942(600)X & CMAQ-1942(610)**

**WIN**
**19426.00 & 019426.10** HIGHWAY PLANS

| | | | |
|---|---|---|---|
| PROJ. MANAGER | BILL REICHL | | |
| DESIGN-DETAILED | C.Helmick | P. Bishop | 12'22 |
| CHECKED-REVIEWED | L. DRISCOLL | J. Olund | 12'22 |
| DESIGN2-DETAILED2 | - | - | - |
| DESIGN3-DETAILED3 | - | - | - |
| REVISIONS 1 | - | - | - |
| REVISIONS 2 | - | - | - |
| REVISIONS 3 | - | - | - |
| REVISIONS 4 | - | - | - |
| FIELD CHANGES | - | - | - |

P.E. NUMBER

DATE

TOWN OF SCARBOROUGH
EASTERN TRAIL CONNECTOR
SCARBOROUGH TO SOUTH PORTLAND, MAINE

# PAN AM RAILROAD CROSSING PLAN I

SHEET NUMBER
31
OF 66

Filename: 031_Pan Am Railroad Crossing Plan I.dgn Division: Username: Date:4/4/2023

PROGRESS PLANS
April 4, 2023

TOWN OF SCARBOROUGH
EASTERN TRAIL CONNECTOR
SCARBOROUGH TO SOUTH PORTLAND, MAINE

# PAN AM RAILROAD CROSSING PLAN II

| PROJ. MANAGER | BILL REICHL | BY | DATE |
|---|---|---|---|
| DESIGN-DETAILED | C.Helmick | P. Bishop | 12\22 |
| CHECKED-REVIEWED | L. DRISCOLL | J. Olund | 12\22 |
| DESIGN2-DETAILED2 | - | - | - |
| DESIGN3-DETAILED3 | - | - | - |
| REVISIONS 1 | _ | | _ |
| REVISIONS 2 | _ | | _ |
| REVISIONS 3 | _ | | _ |
| REVISIONS 4 | _ | | _ |
| FIELD CHANGES | _ | | _ |

SIGNATURE

P.E. NUMBER

DATE

STATE OF MAINE
DEPARTMENT OF TRANSPORTATION

AC-STP-1942(600)X & CMAQ-1942(610)

WIN
19426.00 & 019426.10 HIGHWAY PLANS

SHEET NUMBER 32 OF 66

Username:
Division:
Date:4/4/2023
Filename: 033_PanAm_Profile01.dgn

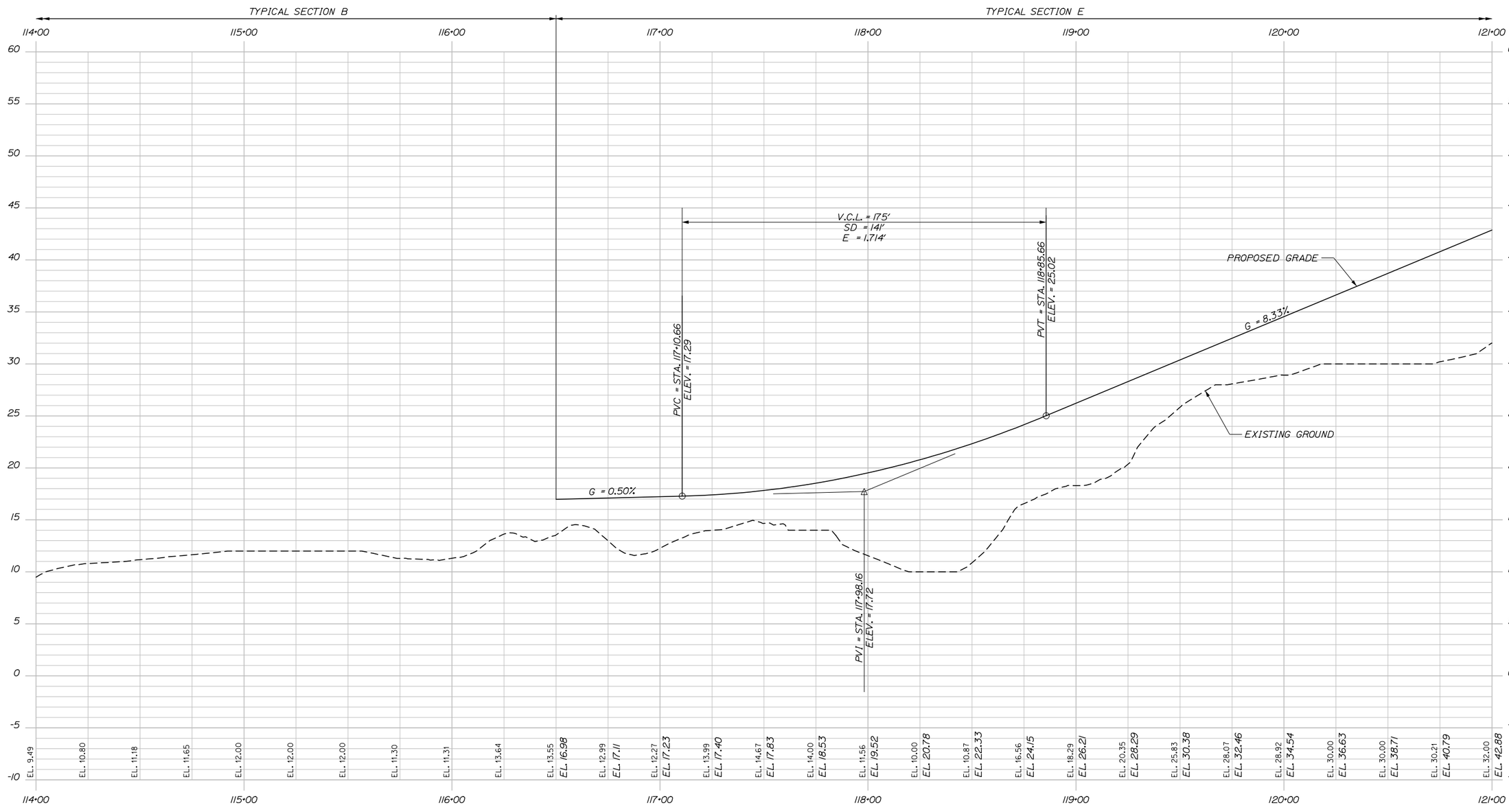


PROFILE

Horiz. 25 0 25 50
Vert. 5 0 5 10
Scale of Feet

PROGRESS PLANS
April 4, 2023

STATE OF MAINE
DEPARTMENT OF TRANSPORTATION

**AC-STP-1942(600)X & CMAQ-1942(610)**

**WIN**
**19426.00 & 019426.10** HIGHWAY PLANS

| | | | |
|---|---|---|---|
| PROJ. MANAGER | BILL REICHL | BY | DATE |
| DESIGN-DETAILED | C.Helmick | P. Bishop | 12\22 |
| CHECKED-REVIEWED | L. DRISCOLL | J. Olund | 12\22 |
| DESIGN2-DETAILED2 | - | - | - |
| DESIGN3-DETAILED3 | - | - | - |
| REVISIONS 1 | - | - | - |
| REVISIONS 2 | - | - | - |
| REVISIONS 3 | - | - | - |
| REVISIONS 4 | - | - | - |
| FIELD CHANGES | - | - | - |

SIGNATURE

P.E. NUMBER

DATE

TOWN OF SCARBOROUGH
EASTERN TRAIL CONNECTOR
SCARBOROUGH TO SOUTH PORTLAND, MAINE

PAN AM RAILROAD
PROFILE I

SHEET NUMBER
33
OF 66

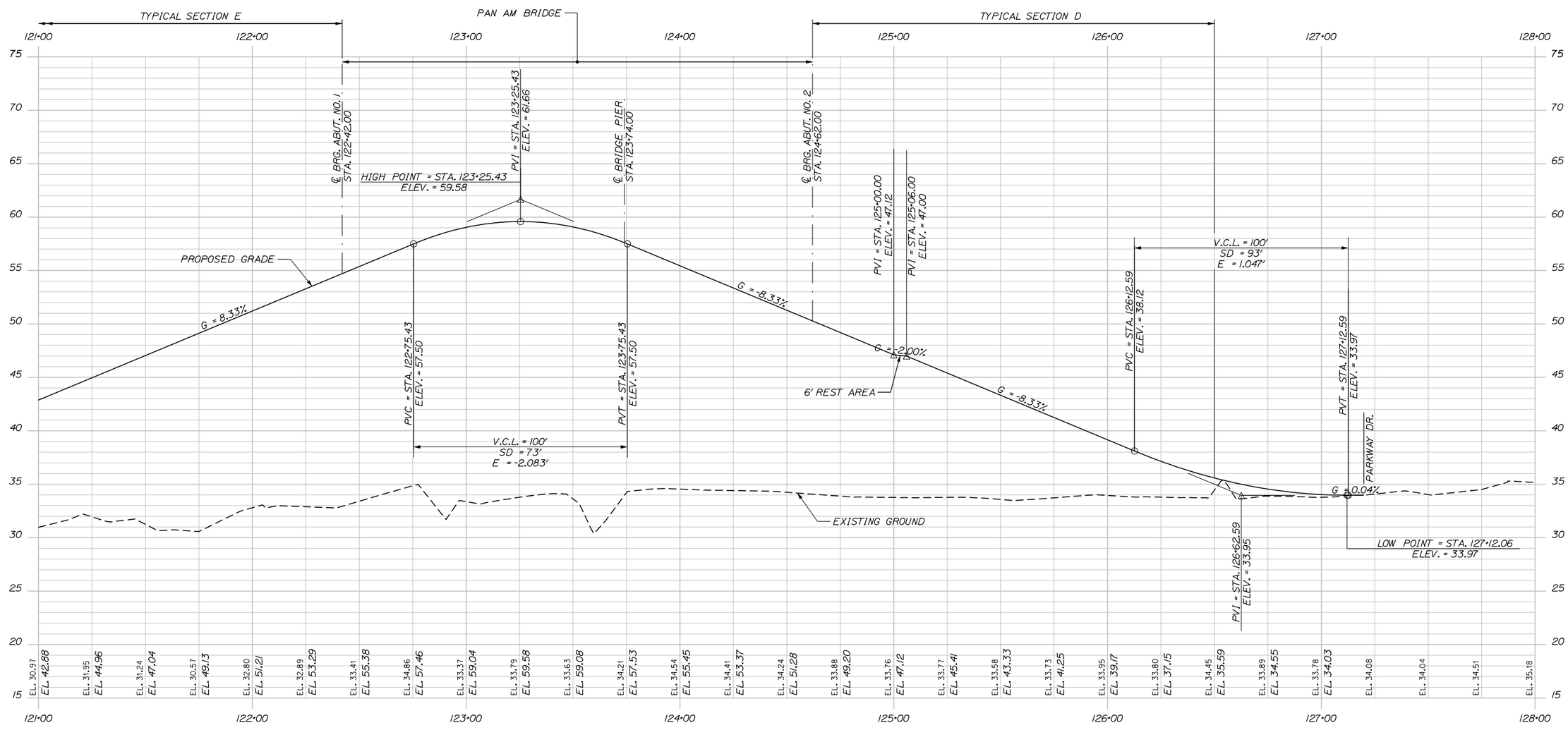


PROFILE

Horiz. 25 0 25 50

Vert. 5 0 5 10

Scale of Feet

PROGRESS PLANS
April 4, 2023

STATE OF MAINE
DEPARTMENT OF TRANSPORTATION

**AC-STP-1942(600)X & CMAQ-1942(610)**

**WIN**
**19426.00 & 019426.10** HIGHWAY PLANS

| | BY | DATE |
|---|---|---|
| PROJ. MANAGER | BILL REICHL | |
| DESIGN-DETAILED | C.Helmick | P. Bishop 12\22 |
| CHECKED-REVIEWED | L. DRISCOLL | J. Olund 12\22 |
| DESIGN2-DETAILED2 | - | - - |
| DESIGN3-DETAILED3 | - | - - |
| REVISIONS 1 | - | - - |
| REVISIONS 2 | - | - - |
| REVISIONS 3 | - | - - |
| REVISIONS 4 | - | - - |
| FIELD CHANGES | - | - - |

SIGNATURE

P.E. NUMBER

DATE

TOWN OF SCARBOROUGH
EASTERN TRAIL CONNECTOR
SCARBOROUGH TO SOUTH PORTLAND, MAINE

PAN AM RAILROAD
PROFILE II

SHEET NUMBER
34
OF 66

Filename: 034_PanAm_Profile02.dgn Division: Username: Date:4/4/2023

PROGRESS PLANS
April 4, 2023




STATE OF MAINE
DEPARTMENT OF TRANSPORTATION

AC-STP-1942(600)X & CMAQ-1942(610)

WIN
19426.00 & 019426.10

| | | | |
|---|---|---|---|
| PROJ. MANAGER | BILL REICHL | | |
| DESIGN-DETAILED | C.Helmick | P. Bishop | 12\22 |
| CHECKED-REVIEWED | L. DRISCOLL | J. Olund | 12\22 |
| DESIGN2-DETAILED2 | - | - | - |
| DESIGN3-DETAILED3 | - | - | - |
| REVISIONS 1 | - | - | - |
| REVISIONS 2 | - | - | - |
| REVISIONS 3 | - | - | - |
| REVISIONS 4 | - | - | - |
| FIELD CHANGES | - | - | - |

SIGNATURE

P.E. NUMBER

DATE

TOWN OF SCARBOROUGH
EASTERN TRAIL CONNECTOR
SCARBOROUGH TO SOUTH PORTLAND, MAINE

PAN AM RAILROAD
CROSS SECTIONS

SHEET NUMBER
35
OF 66

Sta. 116+50.00 to Sta. 117+50.00

Date:4/4/2023
Username:
Division:
Filename: Xsect_PanAm.dgn

PROGRESS PLANS
April 4, 2023

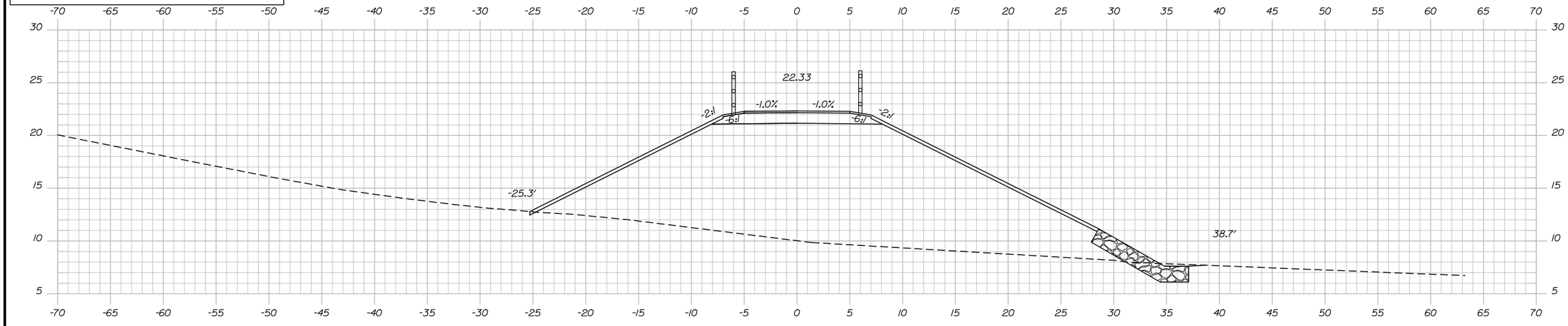


118+50.00

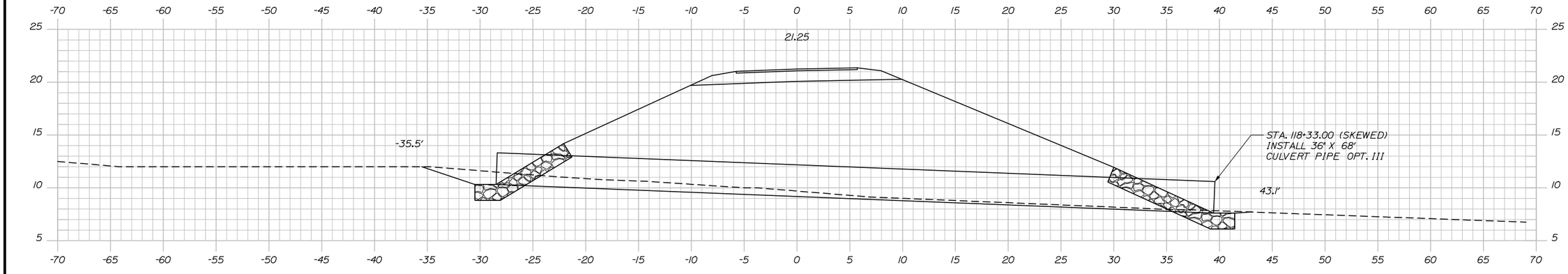


118+33.00 (SKEWED)

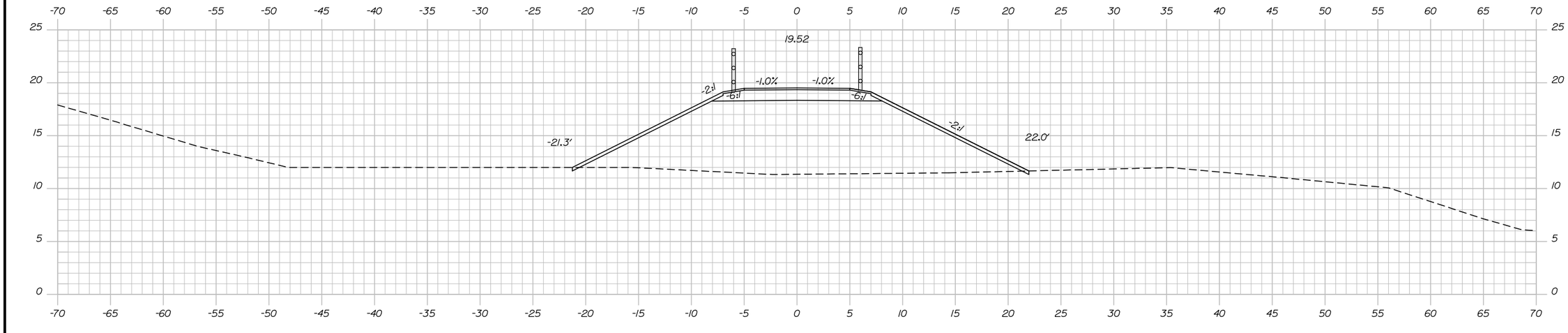


118+00.00

STATE OF MAINE
DEPARTMENT OF TRANSPORTATION

AC-STP-1942(600)X & CMAQ-1942(610)

WIN
19426.00 & 019426.10

| PROJ. MANAGER | BILL REICH | BY | DATE |
|---|---|---|---|
| DESIGN-DETAILED | C.Helmick | P. Bishop | 12\22 |
| CHECKED-REVIEWED | L. DRISCOLL | J. Olund | 12\22 |
| DESIGN2-DETAILED2 | - | - | - |
| DESIGN3-DETAILED3 | - | - | - |
| REVISIONS 1 | - | | - |
| REVISIONS 2 | - | | - |
| REVISIONS 3 | - | | - |
| REVISIONS 4 | - | | - |
| FIELD CHANGES | - | | - |

SIGNATURE

P.E. NUMBER

DATE

TOWN OF SCARBOROUGH
EASTERN TRAIL CONNECTOR
SCARBOROUGH TO SOUTH PORTLAND, MAINE

PAN AM RAILROAD
CROSS SECTIONS

SHEET NUMBER
36
OF 66

Sta. 118+00.00 to Sta. 118+50.00

Date:4/4/2023
Username:
Division:
Filename: Xsect_PanAm.dgn

PROGRESS PLANS
April 4, 2023

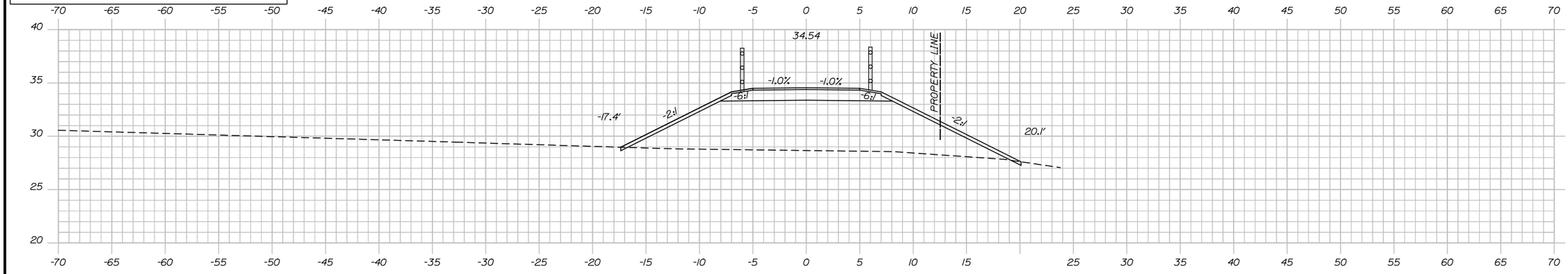


120+00.00

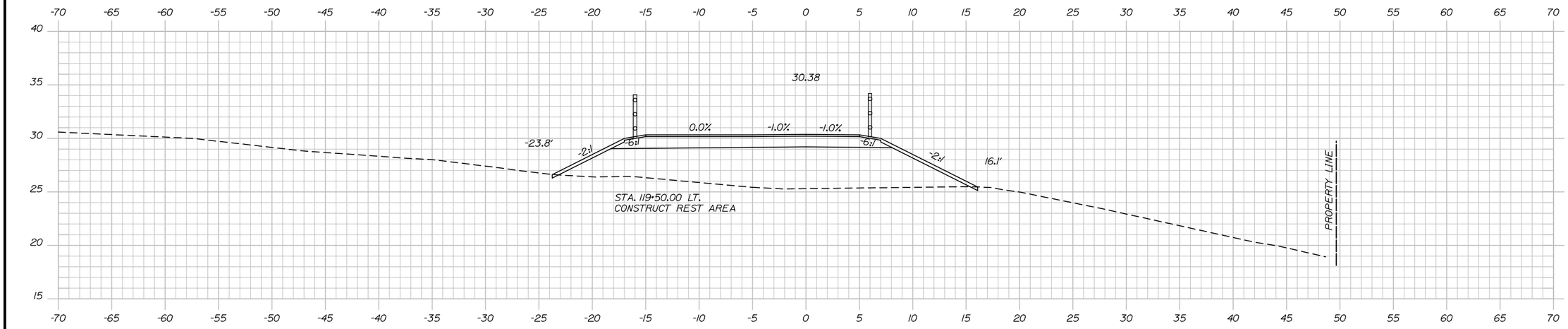


119+50.00

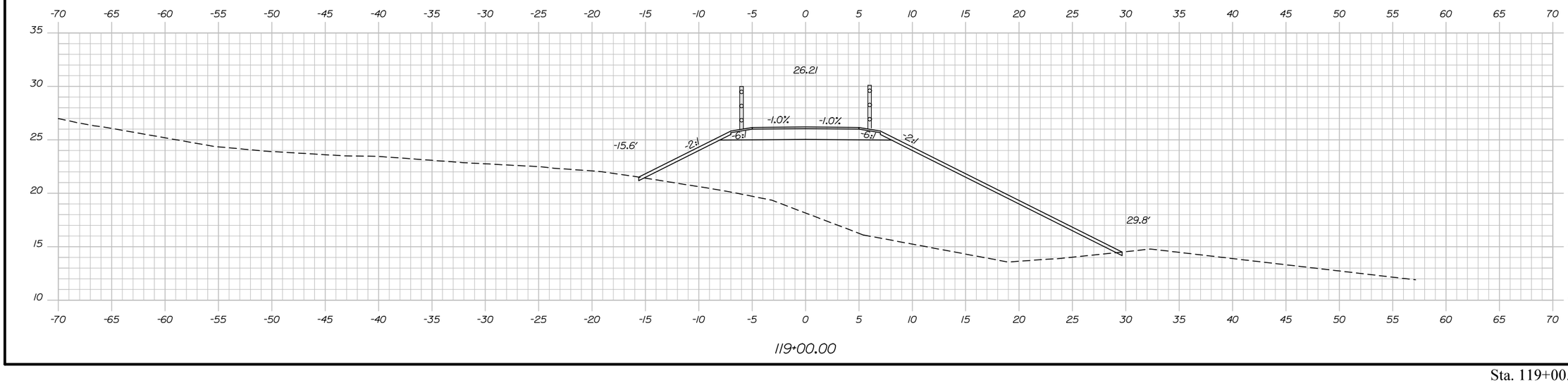


119+00.00

Sta. 119+00.00 to Sta. 120+00.00

STATE OF MAINE
DEPARTMENT OF TRANSPORTATION

AC-STP-1942(600)X & CMAQ-1942(610)

WIN
19426.00 & 019426.10

| | | | |
|---|---|---|---|
| PROJ. MANAGER | BILL REICHL | BY | DATE |
| DESIGN-DETAILED | C.Helmick | P. Bishop | 12\22 |
| CHECKED-REVIEWED | L. DRISCOLL | J. Olund | 12\22 |
| DESIGN2-DETAILED2 | - | - | - |
| DESIGN3-DETAILED3 | - | - | - |
| REVISIONS 1 | - | - | - |
| REVISIONS 2 | - | - | - |
| REVISIONS 3 | - | - | - |
| REVISIONS 4 | - | - | - |
| FIELD CHANGES | - | - | - |

SIGNATURE

P.E. NUMBER

DATE

TOWN OF SCARBOROUGH
EASTERN TRAIL CONNECTOR
SCARBOROUGH TO SOUTH PORTLAND, MAINE

# PAN AM RAILROAD
# CROSS SECTIONS

SHEET NUMBER
37
OF 66

Username:
Division:
Date:4/4/2023
Filename: Xsect_PanAm.dgn

PROGRESS PLANS
April 4, 2023

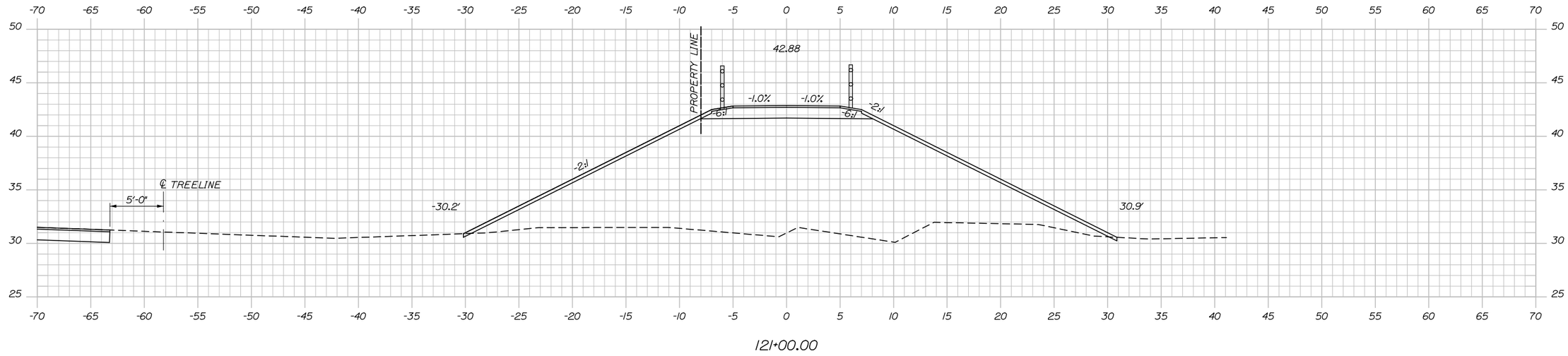


121+00.00

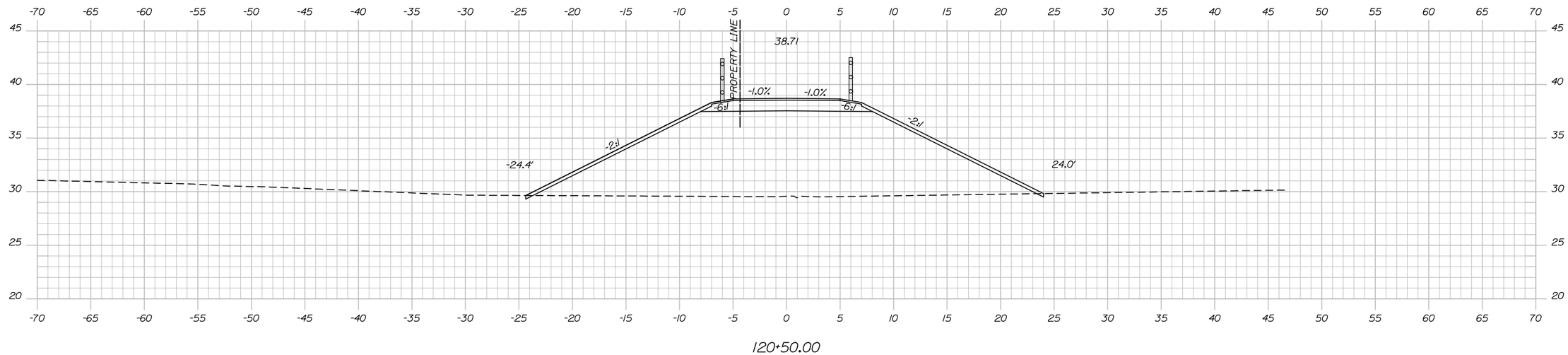


120+50.00

Sta. 120+50.00 to Sta. 121+00.00

STATE OF MAINE
DEPARTMENT OF TRANSPORTATION

AC-STP-1942(600)X & CMAQ-1942(610)

WIN
19426.00 & 019426.10

| | | | |
|---|---|---|---|
| PROJ. MANAGER | BILL RECHL | | |
| DESIGN-DETAILED | C.Helmick | BY | DATE |
| CHECKED-REVIEWED | L. DiRSCOLL | P. Bishop | 12\22 |
| DESIGN2-DETAILED2 | - | J. Olund | 12\22 |
| DESIGN3-DETAILED3 | - | - | - |
| REVISIONS 1 | - | - | - |
| REVISIONS 2 | - | | |
| REVISIONS 3 | - | | |
| REVISIONS 4 | - | | |
| FIELD CHANGES | - | | |

SIGNATURE

P.E. NUMBER

DATE

TOWN OF SCARBOROUGH
EASTERN TRAIL CONNECTOR
SCARBOROUGH TO SOUTH PORTLAND, MAINE

PAN AM RAILROAD
CROSS SECTIONS

SHEET NUMBER
38
OF 66

Date:4/4/2023
Username:
Division:
Filename: Xsect_PanAm.dgn

PROGRESS PLANS
April 4, 2023

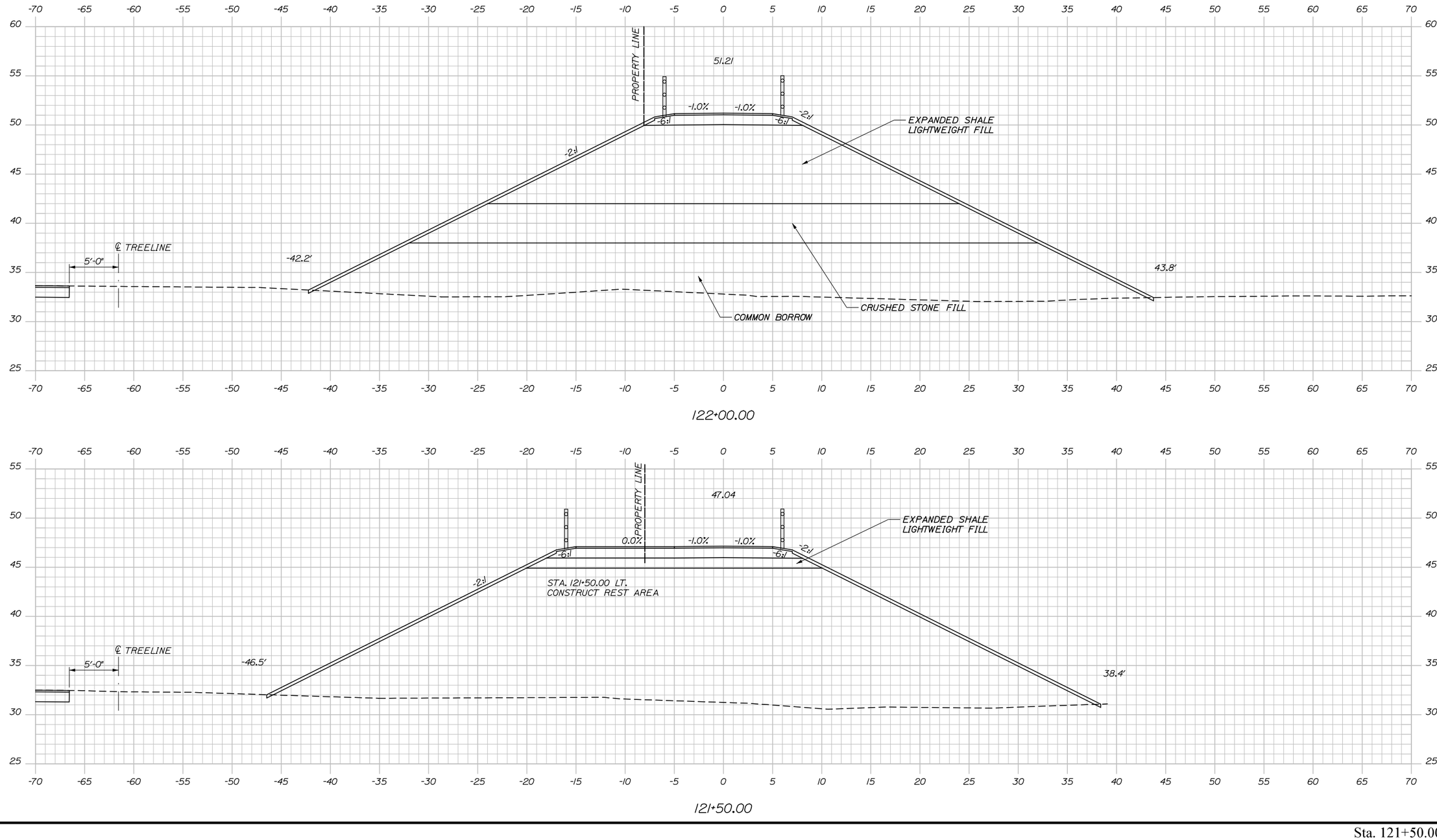


122+00.00




121+50.00

Sta. 121+50.00 to Sta. 122+00.00

STATE OF MAINE
DEPARTMENT OF TRANSPORTATION

AC-STP-1942(600)X & CMAQ-1942(610)

WIN
19426.00 & 019426.10

| | | | |
|---|---|---|---|
| PROJ. MANAGER | BILL REICHL | BY | DATE |
| DESIGN-DETAILED | C.Helmick | P. Bishop | 12\22 |
| CHECKED-REVIEWED | L. DRISCOLL | J. Olund | 12\22 |
| DESIGN2-DETAILED2 | - | - | - |
| DESIGN3-DETAILED3 | - | - | - |
| REVISIONS 1 | - | | - |
| REVISIONS 2 | - | | - |
| REVISIONS 3 | - | | - |
| REVISIONS 4 | - | | - |
| FIELD CHANGES | - | | - |

SIGNATURE

P.E. NUMBER

DATE

TOWN OF SCARBOROUGH
EASTERN TRAIL CONNECTOR
SCARBOROUGH TO SOUTH PORTLAND, MAINE

PAN AM RAILROAD
CROSS SECTIONS

SHEET NUMBER
39
OF 66

Date:4/4/2023
Username:
Division:
Filename: Xsect_PanAm.dgn

PROGRESS PLANS
April 4, 2023

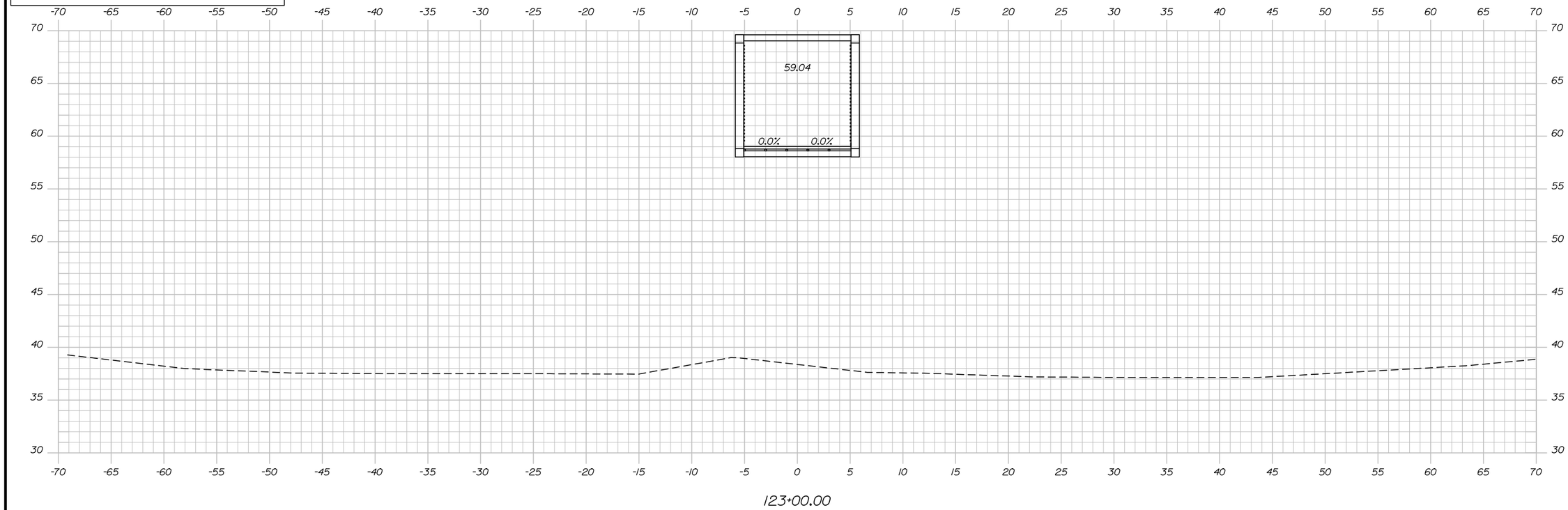


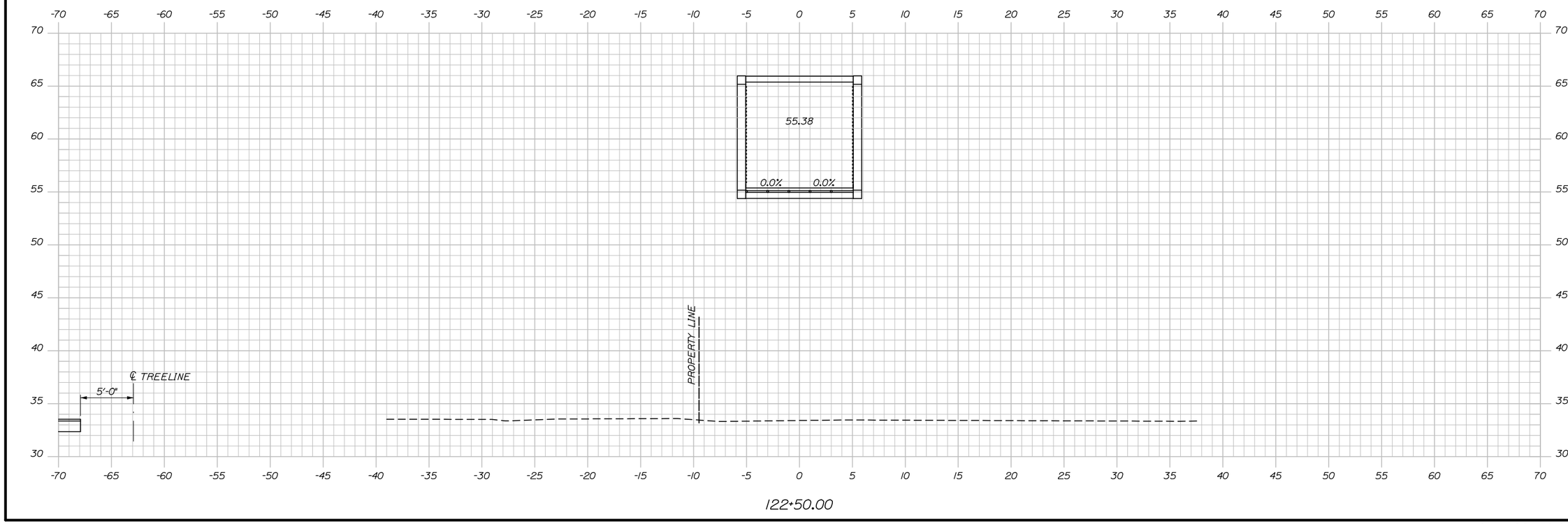


Sta. 122+50.00 to Sta. 123+00.00

STATE OF MAINE
DEPARTMENT OF TRANSPORTATION

AC-STP-1942(600)X & CMAQ-1942(610)

WIN
19426.00 & 019426.10

| | | BY | DATE |
|---|---|---|---|
| PROJ. MANAGER | BILL REICHL | | |
| DESIGN-DETAILED | C.Helmick | P. Bishop | 12\22 |
| CHECKED-REVIEWED | L. DRISCOLL | J. Olund | 12\22 |
| DESIGN2-DETAILED2 | - | - | - |
| DESIGN3-DETAILED3 | - | - | - |
| REVISIONS 1 | - | - | - |
| REVISIONS 2 | - | - | - |
| REVISIONS 3 | - | - | - |
| REVISIONS 4 | - | - | - |
| FIELD CHANGES | - | - | - |

SIGNATURE

P.E. NUMBER

DATE

TOWN OF SCARBOROUGH
EASTERN TRAIL CONNECTOR
SCARBOROUGH TO SOUTH PORTLAND, MAINE

PAN AM RAILROAD
CROSS SECTIONS

SHEET NUMBER
40
OF 66

Date:4/4/2023
Username:
Division:
Filename: Xsect_PanAm.dgn

PROGRESS PLANS
April 4, 2023

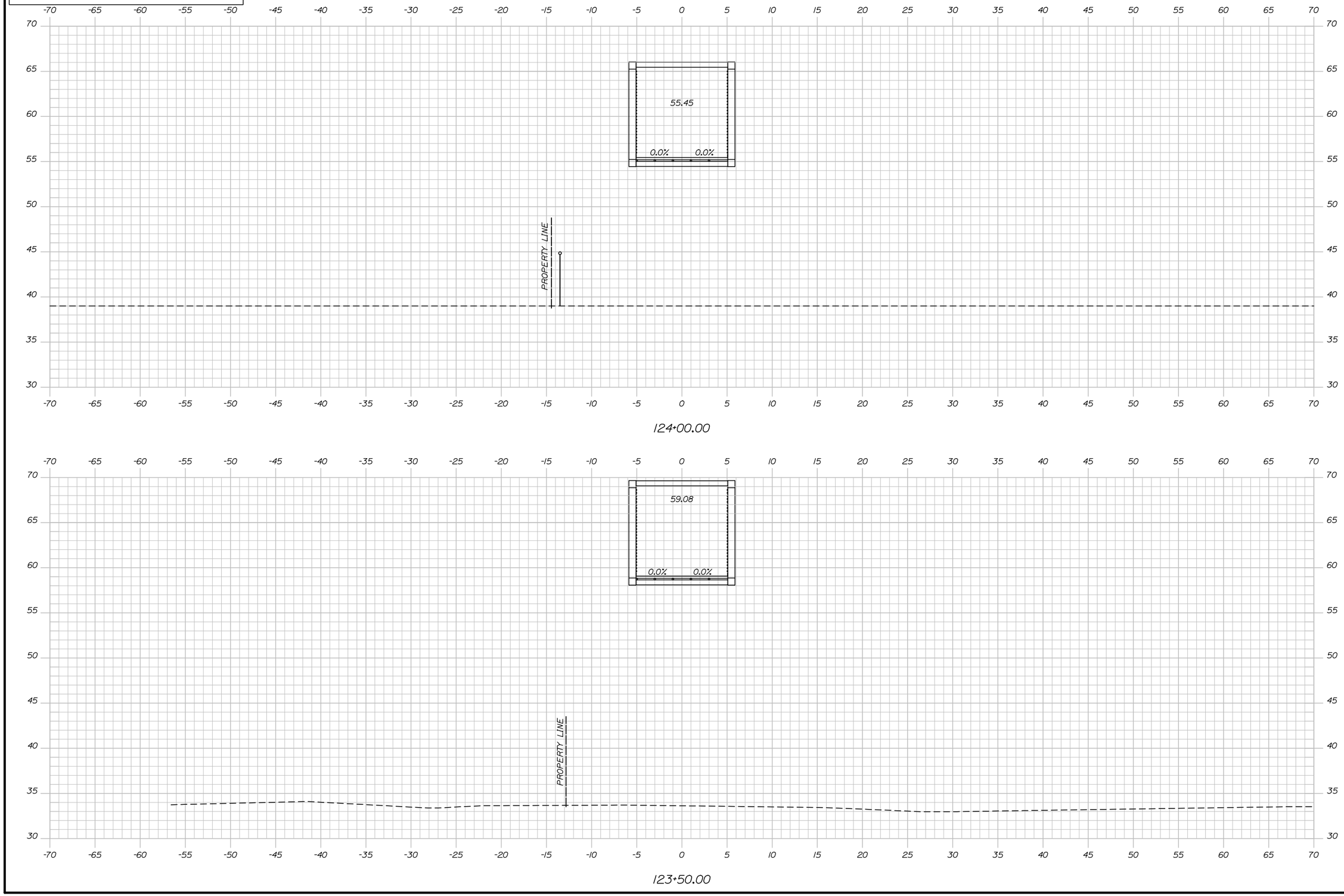


STATE OF MAINE
DEPARTMENT OF TRANSPORTATION

AC-STP-1942(600)X & CMAQ-1942(610)

WIN
19426.00 & 019426.10

| | | | |
|---|---|---|---|
| PROJ. MANAGER | BILL REICHL | BY | DATE |
| DESIGN-DETAILED | C.Helmick | P. Bishop | 12\22 |
| CHECKED-REVIEWED | L. DRISCOLL | J. Olund | 12\22 |
| DESIGN2-DETAILED2 | - | - | - |
| DESIGN3-DETAILED3 | - | - | - |
| REVISIONS 1 | - | - | - |
| REVISIONS 2 | - | - | - |
| REVISIONS 3 | - | - | - |
| REVISIONS 4 | - | - | - |
| FIELD CHANGES | - | - | - |

SIGNATURE

P.E. NUMBER

DATE

TOWN OF SCARBOROUGH
EASTERN TRAIL CONNECTOR
SCARBOROUGH TO SOUTH PORTLAND, MAINE

PAN AM RAILROAD
CROSS SECTIONS

SHEET NUMBER
41
OF 66

Sta. 123+50.00 to Sta. 124+00.00

Date:4/4/2023
Username:
Division:
Filename: Xsect_PanAm.dgn

PROGRESS PLANS
April 4, 2023

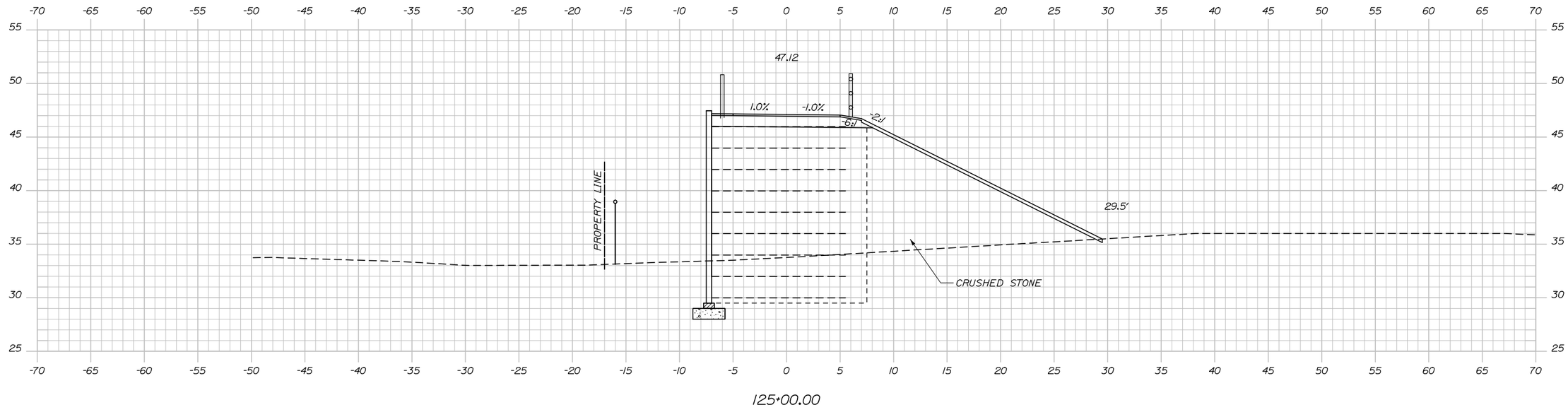


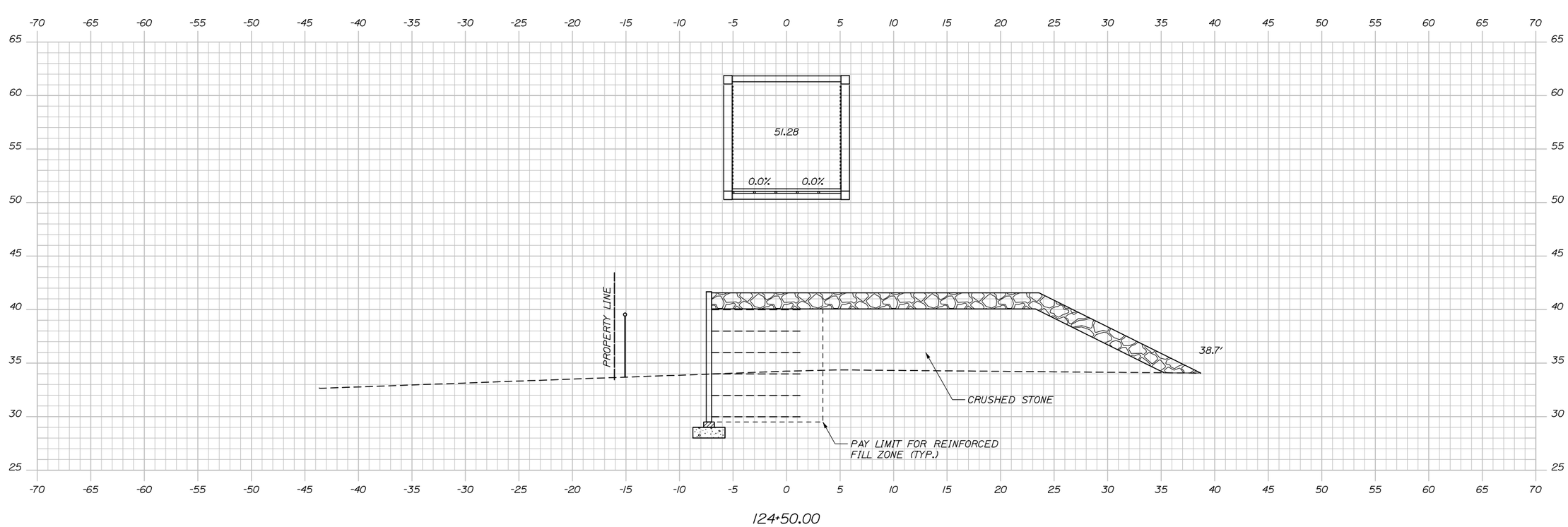


Sta. 124+50.00 to Sta. 125+00.00

STATE OF MAINE
DEPARTMENT OF TRANSPORTATION

AC-STP-1942(600)X & CMAQ-1942(610)

WIN
19426.00 & 019426.10

| | | | |
|---|---|---|---|
| PROJ. MANAGER | BILL REICHL | BY | DATE |
| DESIGN-DETAILED | C.Helmick | P. Bishop | 12\22 |
| CHECKED-REVIEWED | L. DRISCOLL | J. Olund | 12\22 |
| DESIGN2-DETAILED2 | - | - | - |
| DESIGN3-DETAILED3 | - | - | - |
| REVISIONS 1 | - | - | - |
| REVISIONS 2 | - | - | - |
| REVISIONS 3 | - | - | - |
| REVISIONS 4 | - | - | - |
| FIELD CHANGES | - | - | - |

SIGNATURE

P.E. NUMBER

DATE

TOWN OF SCARBOROUGH
EASTERN TRAIL CONNECTOR
SCARBOROUGH TO SOUTH PORTLAND, MAINE

PAN AM RAILROAD
CROSS SECTIONS

SHEET NUMBER
42
OF 66

Date:4/4/2023
Username:
Division:
Filename: Xsect_PanAm.dgn

PROGRESS PLANS
April 4, 2023

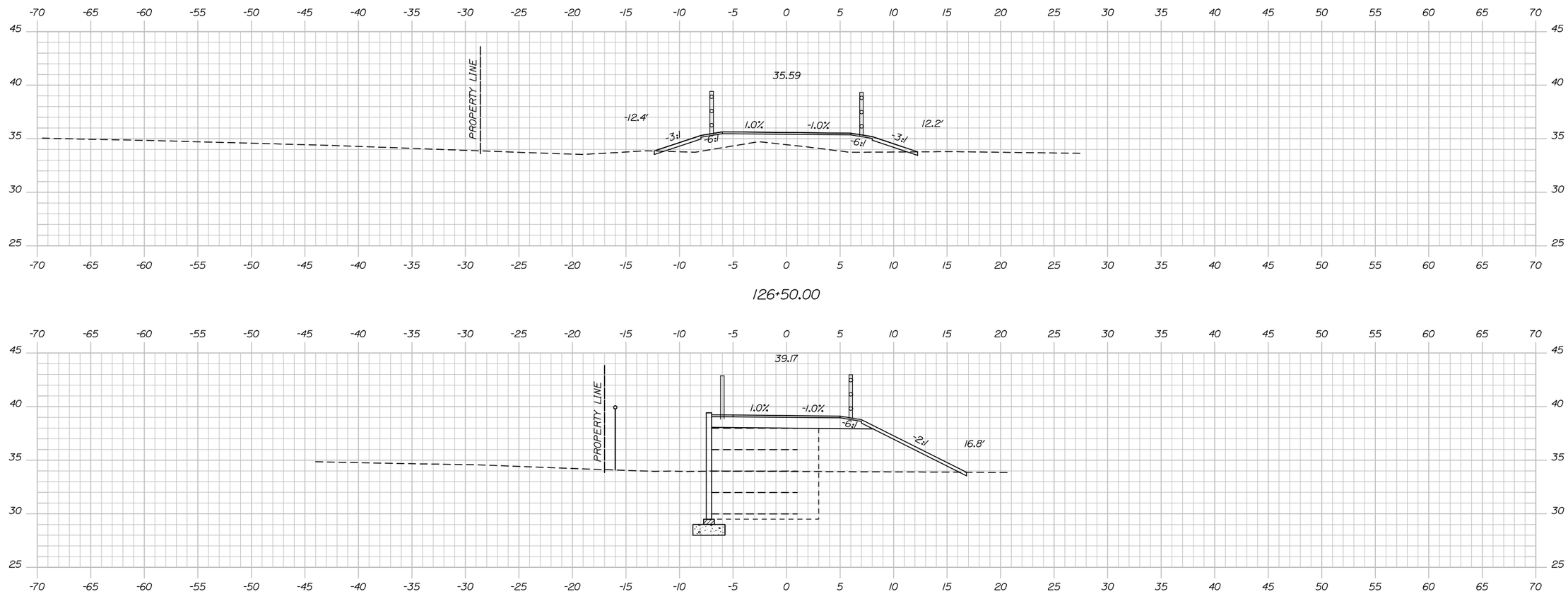


126+50.00




126+00.00

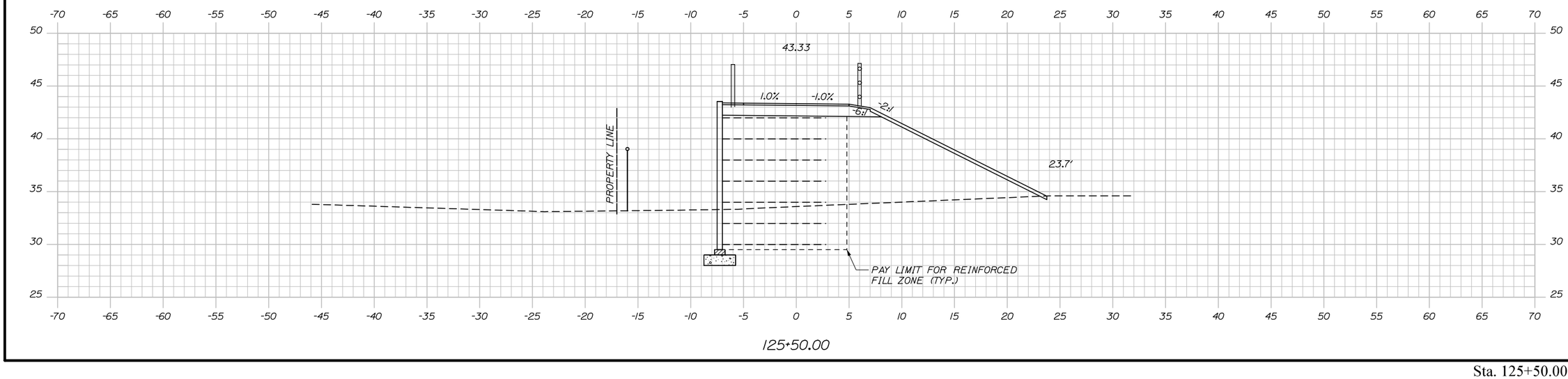


125+50.00

Sta. 125+50.00 to Sta. 126+50.00

STATE OF MAINE
DEPARTMENT OF TRANSPORTATION

AC-STP-1942(600)X & CMAQ-1942(610)

WIN
19426.00 & 019426.10

| | BY | DATE |
|---|---|---|
| PROJ. MANAGER | BILL REICHL | |
| DESIGN-DETAILED | C.Helmick | 12\22 |
| CHECKED-REVIEWED | L. DRISCOLL | 12\22 |
| DESIGN2-DETAILED2 | - | - |
| DESIGN3-DETAILED3 | - | - |
| REVISIONS 1 | - | - |
| REVISIONS 2 | - | - |
| REVISIONS 3 | - | - |
| REVISIONS 4 | - | - |
| FIELD CHANGES | - | - |

SIGNATURE

P.E. NUMBER

DATE

TOWN OF SCARBOROUGH
EASTERN TRAIL CONNECTOR
SCARBOROUGH TO SOUTH PORTLAND, MAINE

PAN AM RAILROAD
CROSS SECTIONS

SHEET NUMBER
43
OF 66

Filename: Xsect_PanAm.dgn Division: Username: Date:4/4/2023

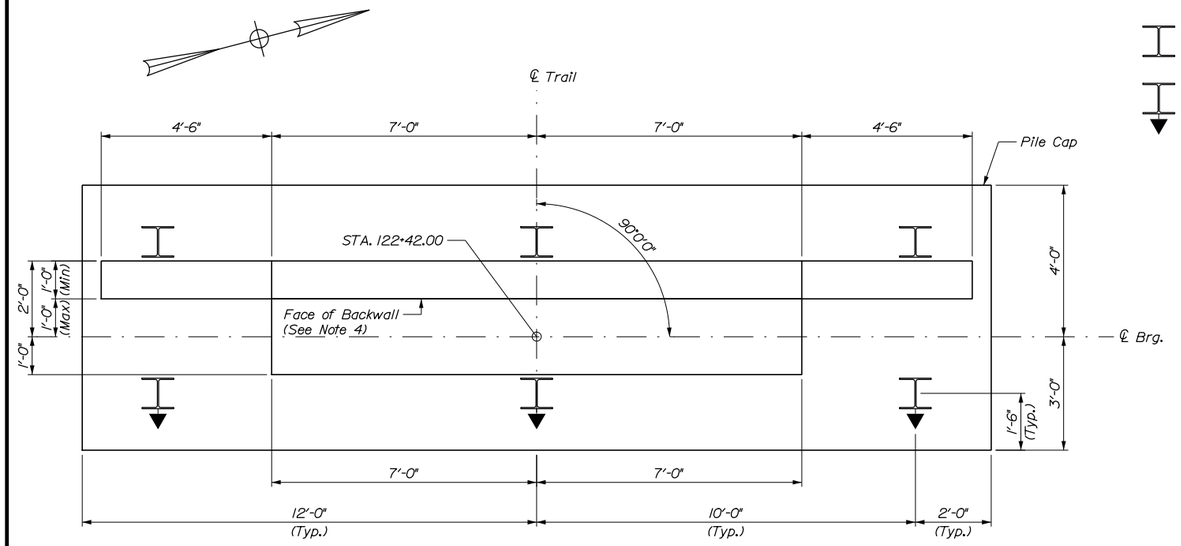


ABUTMENT NO. 1 PLAN

LEGEND

= Plumb Pile

= Battered Pile (1H:4V)

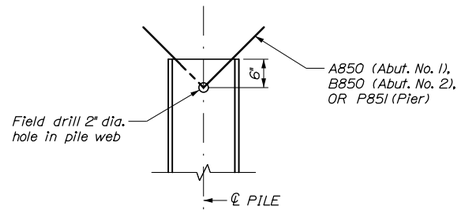


PILE ANCHORAGE DETAIL

## ABUTMENT NOTES:

1. Reinforcing steel shall have a minimum concrete cover of 2 inches in the walls and 3 inches in the footings unless otherwise noted.

2. Place 4-in. diameter drains in the breastwall and wingwalls at 10-ft maximum spacing. The exact location will be determined by the Resident.

3. Cover joints where waterstops are not required in accordance with Standard Details Section 502.

4. The face of backwall shall be shifted to accomodate the Prefabricated Steel Truss dimensions and joint opening, as determined by the manufacturer. Location of piles, footing, ℄ bearing, face of seat, and back of backwall shall not be adjusted.

5. All concrete shall be Class A, and shall be paid under Item 502.219, Structural Concrete, Abutments and Retaining Walls.

## PILE NOTES:

1. The maximum factored pile load is:

   Abutment No. 1 & 2: 365 kips (including 190 kips allowed for downdrag)
   Pier: 145 kips

2. Piles Shall be driven to the following nominal driving resistances:

   Abutment No. 1 & 2: 560 kips
   Pier: 225 kips

3. H-pile material shall be ASTM A572, Grade 50.

4. Estimate of piles required:

   Abutment No. 1: 6 ~ HP 12x74 @ 130 feet
   Abutment No. 2: 6 ~ HP 12x74 @ 110 feet
   Pier: 8 ~ HP 12x74 @ 95 feet

5. All piles shall be equipped with a pile tip in accordance with Standard Specifications Section 501.048, Prefabricated Pile Tips.

6. The Contractor shall perform and submit a wave equation analysis for review and acceptance by the Resident. The maximum allowable driving stress is 0.90 times Fy. The submittal analyses shall include the proposed stopping criteria based on the wave equation analysis and the proposed driving system. The stopping criteria shall include the blows per inch and the number of 1-in. intervals at which pile installation may be terminated. The cost of performing the wave equation analysis will be considered incidental to Item No. 501.92, Pile Driving Equipment Mobilization.

7. The Contractor shall perform 3 dynamic load tests, one at each substructure location, to confirm the nominal driving resistances have been met. The dynamic tests shall be performed on the first production pile driven at each substructure. Minimum 48 hour pile restrikes shall be conducted on all test piles in order to ensure the required nominal resistance has been achieved and verify pile relaxation has not occurred. The Contractor may drive production piles to the preliminary driving criteria, however pile cut-off will not be permitted until completion of restrike testing and establishment of final driving criteria.

8. All pile heads to be constructed with an anchorage dowel in accordance with the Pile Anchorage Detail, this sheet. Payment for drilling through the pile webs will not be made separately and will be considered incidental to Item 501.481, Steel H-Beam Piles, 74 lbs/ft, in place.

9. Abutment No. 2 piles may be driven before or after partial construction of the MSE Retaining Wall. If the piles are to be driven after partial construction of the MSE Retaining Wall, blockouts for pile installation shall be provided through the use of 2-ft diameter corrugated PVC sleeves and the annulus between the pile and sleeve shall be backfilled with material meeting the requirements of 703.02, Coarse Aggregate for Concrete, Class Latex. Payment for sleeves and sleeve backfill will not be made separately and will be considered incidental to Item 501.481, Steel H-Beam Piles, 74 lbs/ft, in place.

PROGRESS PLANS
April 4, 2023

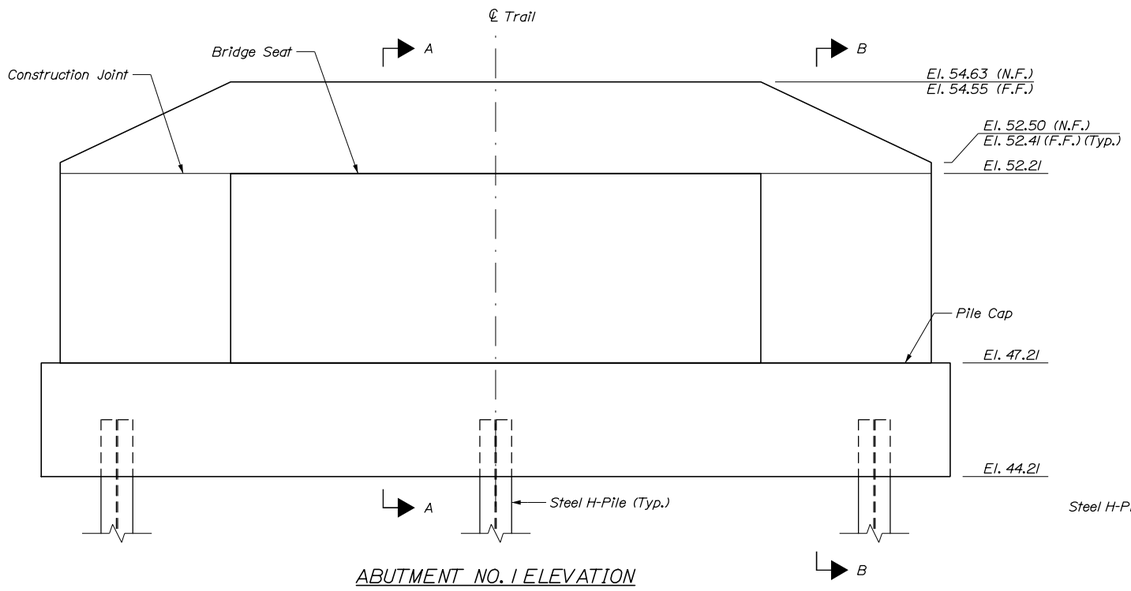


ABUTMENT NO. 1 ELEVATION

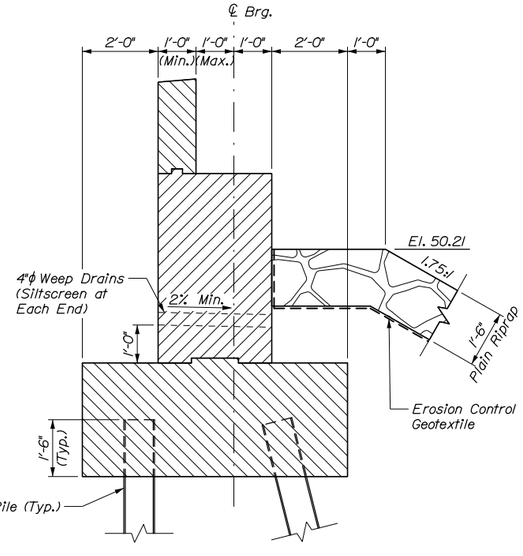


SECTION A-A

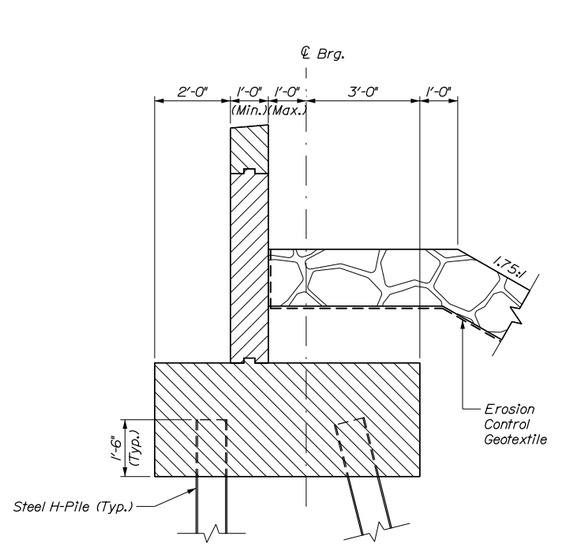


SECTION B-B

HNTB

STATE OF MAINE
DEPARTMENT OF TRANSPORTATION

AC-STP-1942(600)X & CMAQ-1942(610)

WIN
19426.00 & 019426.10 BRIDGE PLANS

| | BILL REICHL | BY | DATE |
|---|---|---|---|
| PROJ. MANAGER | | | |
| DESIGN-DETAILED | J. Olund | P. Bishop | 12\22 |
| CHECKED-REVIEWED | G. Standley | A. Stephens | 12\22 |
| DESIGN2-DETAILED2 | - | - | - |
| DESIGN3-DETAILED3 | - | - | - |
| REVISIONS 1 | - | - | - |
| REVISIONS 2 | - | - | - |
| REVISIONS 3 | - | - | - |
| REVISIONS 4 | - | - | - |
| FIELD CHANGES | - | - | - |

SIGNATURE

P.E. NUMBER

DATE

TOWN OF SCARBOROUGH
EASTERN TRAIL CONNECTOR
SCARBOROUGH TO SOUTH PORTLAND, MAINE

PAN AM RAILROAD
ABUT. NO. 1 PLAN & ELEV.

SHEET NUMBER
44
OF 66

Date:4/4/2023
Username:
Division:
Filename: 044_PanAm Abutment 1.dgn

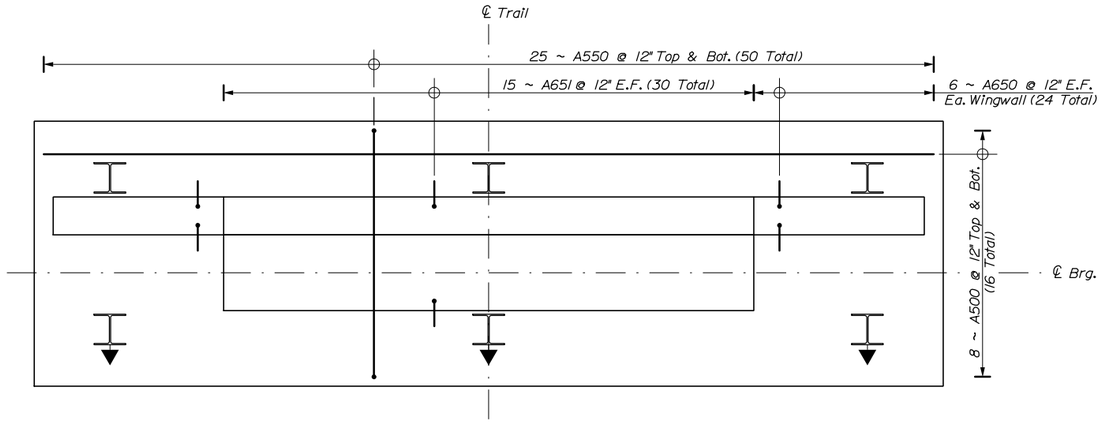


ABUTMENT NO. 1 PILE CAP REINFORCEMENT PLAN

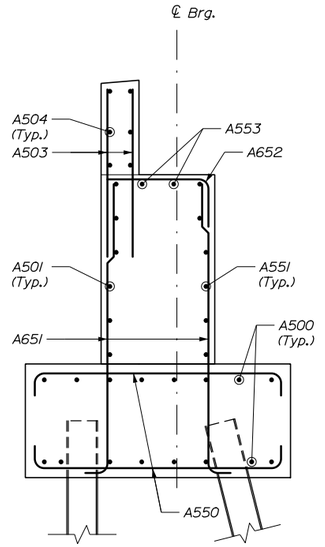


SECTION A-A

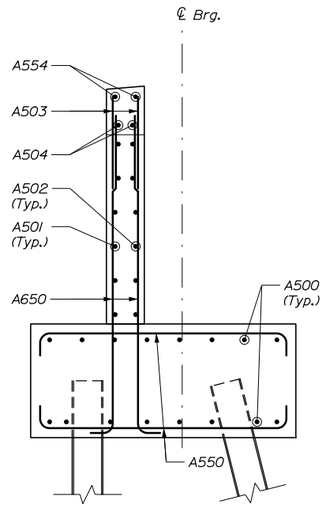


SECTION B-B

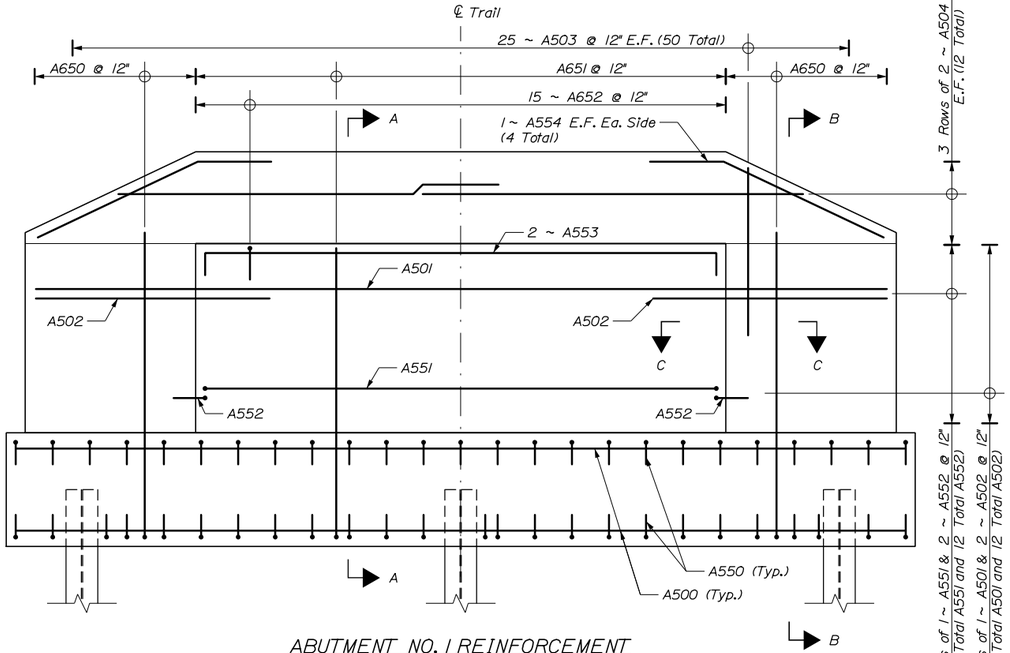


ABUTMENT NO. 1 REINFORCEMENT

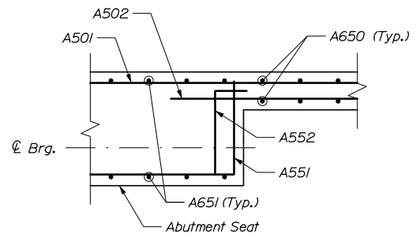


SECTION C-C

NOTES:

1. Minimum laps shall be:
   #5 = 1'-11" (vertical)
   #5 = 2'-7" (horizontal)
2. Reinforcement shall be shifted to avoid piles.
3. Reinforcement shall be shifted to avoid anchor rod placement.

PROGRESS PLANS
April 4, 2023

HNTB

STATE OF MAINE
DEPARTMENT OF TRANSPORTATION

AC-STP-1942(600)X & CMAQ-1942(610)

WIN
19426.00 & 019426.10 BRIDGE PLANS

| | BY | DATE |
|---|---|---|
| PROJ. MANAGER | BILL REICHL | |
| DESIGN-DETAILED | P. Bishop | 12\22 |
| CHECKED-REVIEWED | J. Ölund | 12\22 |
| DESIGN2-DETAILED2 | A. Stephens | - |
| DESIGN3-DETAILED3 | G. Standley | - |
| REVISIONS 1 | - | - |
| REVISIONS 2 | - | - |
| REVISIONS 3 | - | - |
| REVISIONS 4 | - | - |
| FIELD CHANGES | - | - |

SIGNATURE

P.E. NUMBER

DATE

TOWN OF SCARBOROUGH
EASTERN TRAIL CONNECTOR
SCARBOROUGH TO SOUTH PORTLAND, MAINE

PAN AM RAILROAD
ABUT. NO. 1 REINFORCEMENT

SHEET NUMBER
45
OF 66

Filename: 045_PanAm Abutment 1 - Reinf.dgn Division: Username: Date:4/4/2023

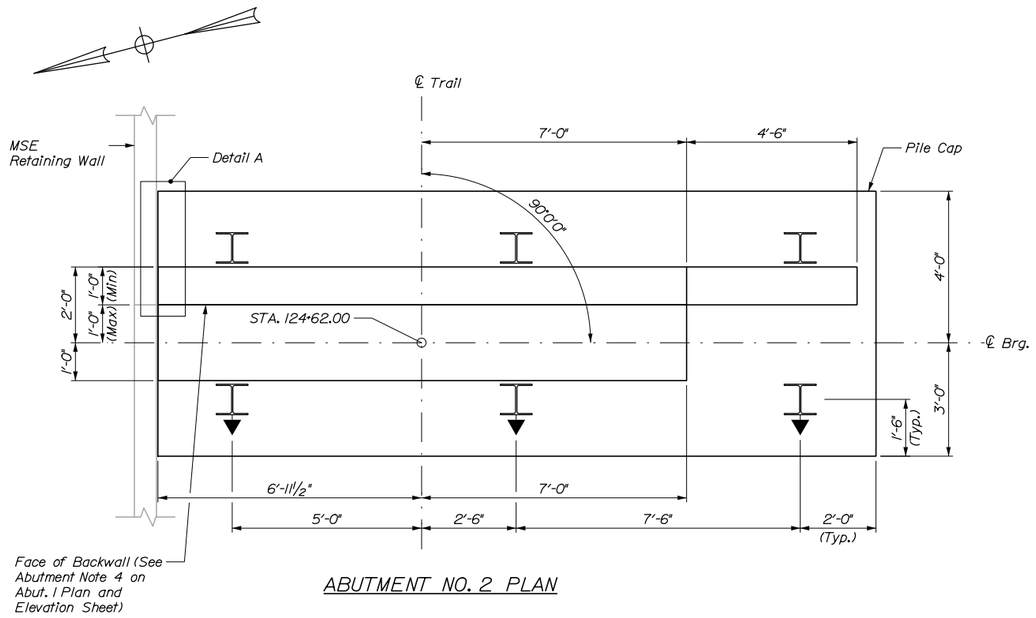


ABUTMENT NO. 2 PLAN

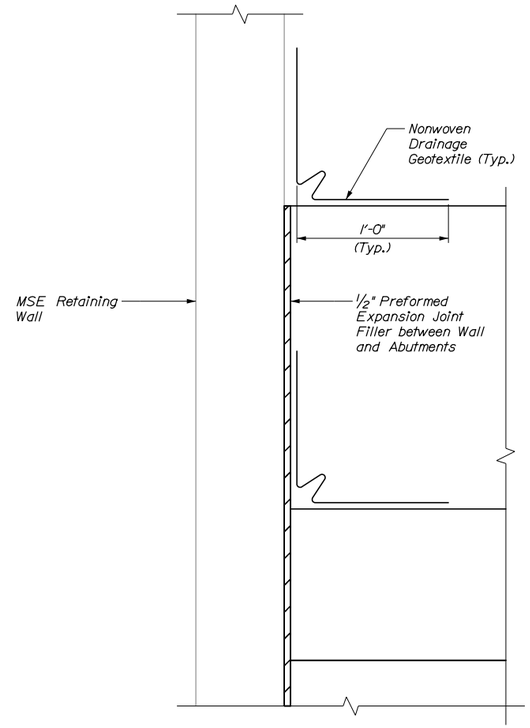


DETAIL A

NOTE:

Payment for the Nonwoven Drainage Geotextile and Preformed Expansion Joint Filler shall be considered incidental to Item 677.20, Mechanically Stabilized Earth Retaining Wall

PROGRESS PLANS
April 4, 2023

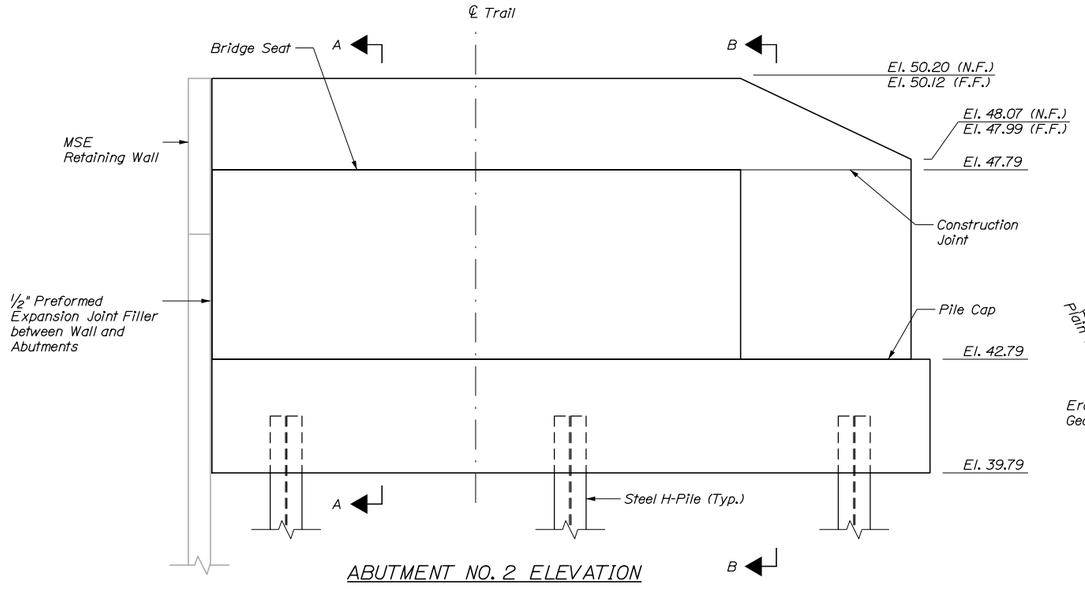


ABUTMENT NO. 2 ELEVATION

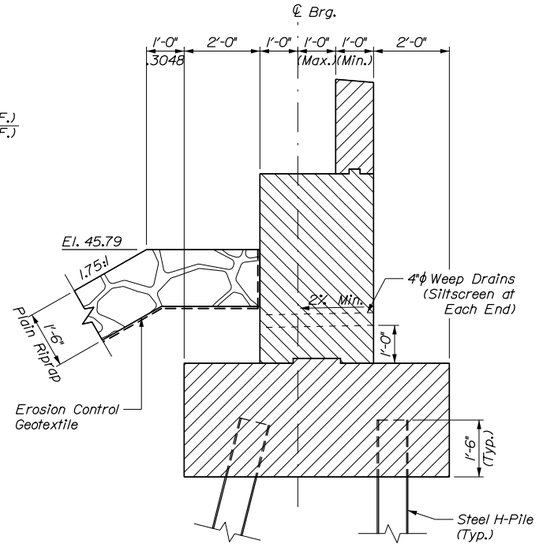


SECTION A-A

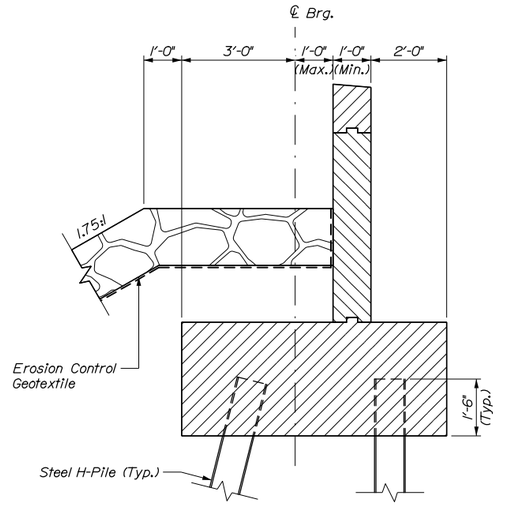


SECTION B-B

HNTB

STATE OF MAINE
DEPARTMENT OF TRANSPORTATION

AC-STP-1942(600)X & CMAQ-1942(610)

WIN
19426.00 & 019426.10 BRIDGE PLANS

| | | BY | DATE |
|---|---|---|---|
| PROJ. MANAGER | BILL REICH | | |
| DESIGN-DETAILED | J. Olund | P. Bishop | 12\22 |
| CHECKED-REVIEWED | G. Standley | A. Stephens | 12\22 |
| DESIGN2-DETAILED2 | - | - | - |
| DESIGN3-DETAILED3 | - | - | - |
| REVISIONS 1 | - | - | - |
| REVISIONS 2 | - | - | - |
| REVISIONS 3 | - | - | - |
| REVISIONS 4 | - | - | - |
| FIELD CHANGES | - | - | - |

SIGNATURE

P.E. NUMBER

DATE

TOWN OF SCARBOROUGH
EASTERN TRAIL CONNECTOR
SCARBOROUGH TO SOUTH PORTLAND, MAINE

PAN AM RAILROAD
ABUT. NO. 2 PLAN & ELEV.

SHEET NUMBER
46
OF 66

Filename: 046_PanAm Abutment 2.dgn Division: Username: Date:4/4/2023

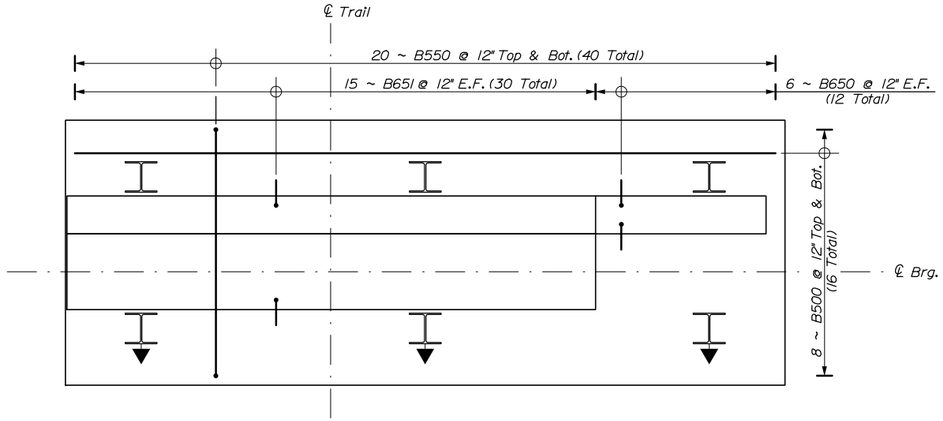


ABUTMENT NO. 2 PILE CAP REINFORCEMENT PLAN

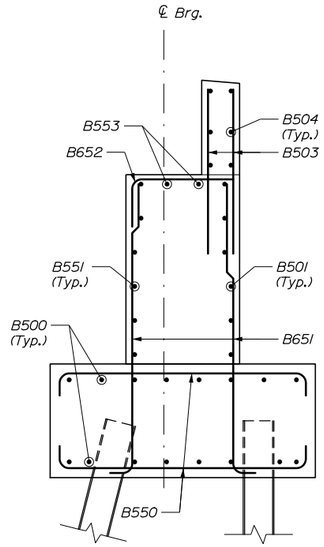


SECTION A-A

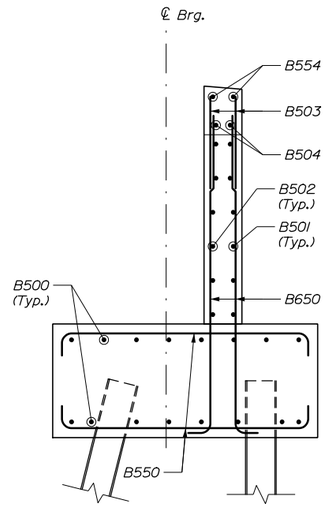


SECTION B-B

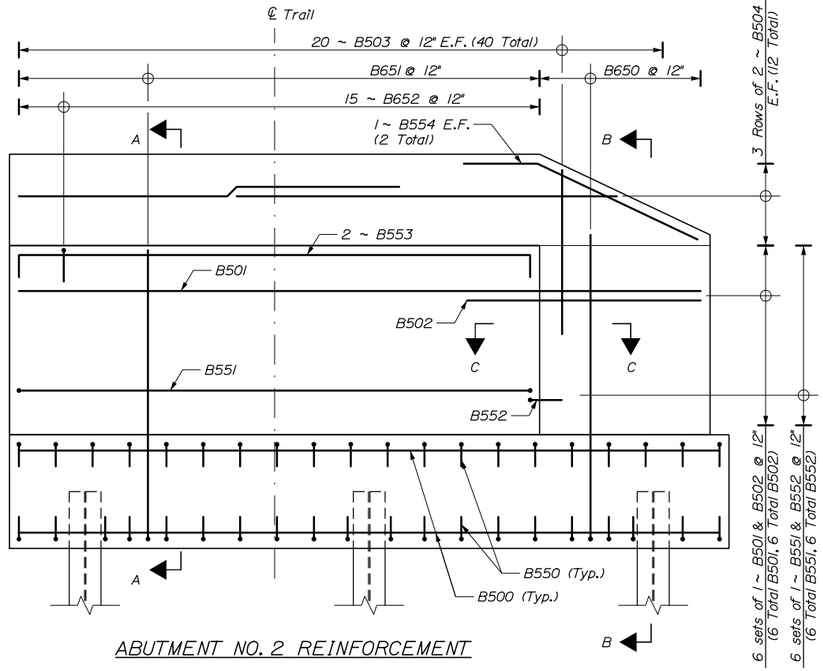


ABUTMENT NO. 2 REINFORCEMENT

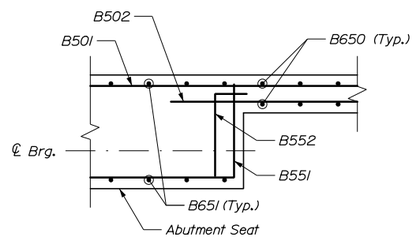


SECTION C-C

NOTES:

1. Minimum laps shall be:
   #5 = 1'-1" (vertical)
   #5 = 2'-7" (horizontal)
2. Reinforcement shall be shifted to avoid piles.
3. Reinforcement shall be shifted to avoid anchor rod placement.

PROGRESS PLANS
April 4, 2023

HNTB

STATE OF MAINE
DEPARTMENT OF TRANSPORTATION

AC-STP-1942(600)X & CMAQ-1942(610)

WIN
19426.00 & 019426.10 BRIDGE PLANS

| | | BY | DATE |
|---|---|---|---|
| PROJ. MANAGER | BILL REICHL | | |
| DESIGN-DETAILED | J. Ölund | P. Bishop | 12\22 |
| CHECKED-REVIEWED | G. Standley | A. Stephens | 12\22 |
| DESIGN2-DETAILED2 | - | - | - |
| DESIGN3-DETAILED3 | - | - | - |
| REVISIONS 1 | - | - | - |
| REVISIONS 2 | - | - | - |
| REVISIONS 3 | - | - | - |
| REVISIONS 4 | - | - | - |
| FIELD CHANGES | - | - | - |

SIGNATURE

P.E. NUMBER

DATE

TOWN OF SCARBOROUGH
EASTERN TRAIL CONNECTOR
SCARBOROUGH TO SOUTH PORTLAND, MAINE

PAN AM RAILROAD
ABUT. NO. 2 REINFORCEMENT

SHEET NUMBER
47
OF 66

Filename: 047_PanAm Abutment 2 - Reinf.dgn Division: Username: Date:4/4/2023

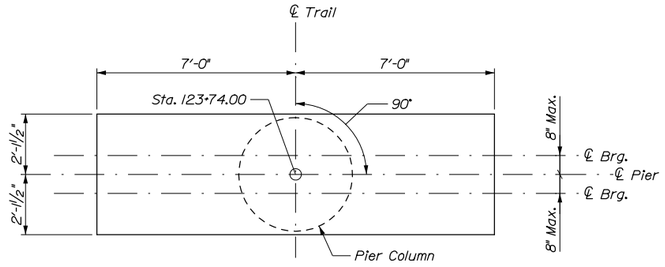


PLAN

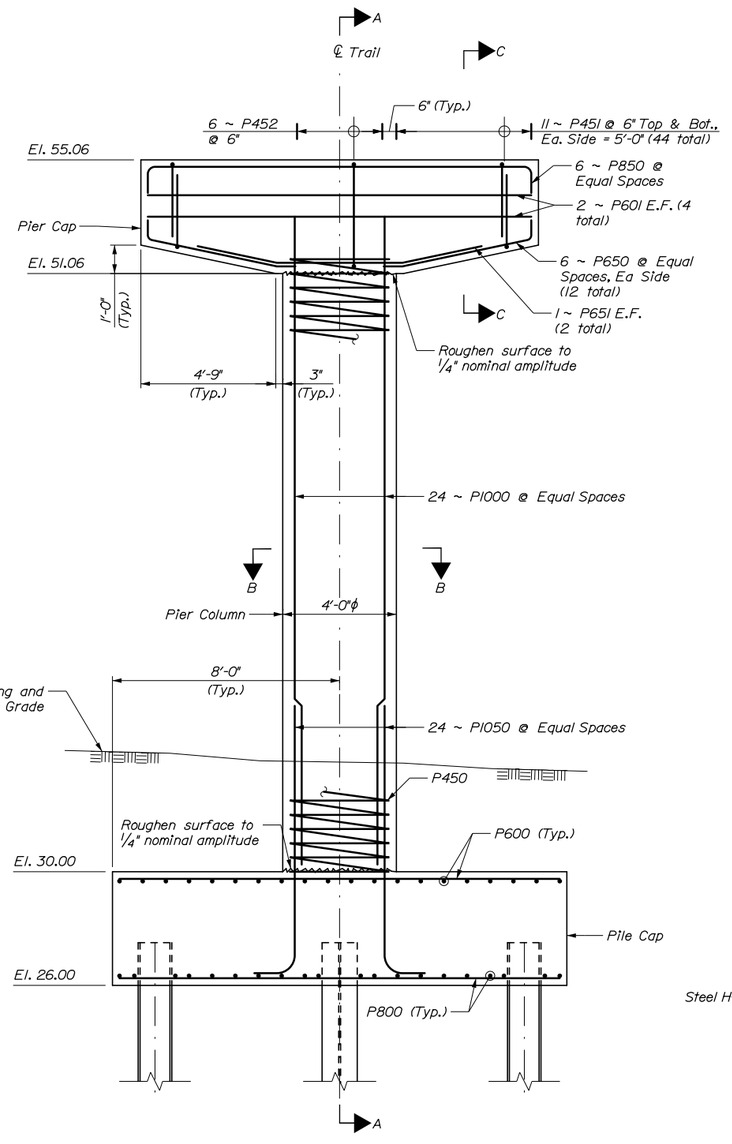


ELEVATION

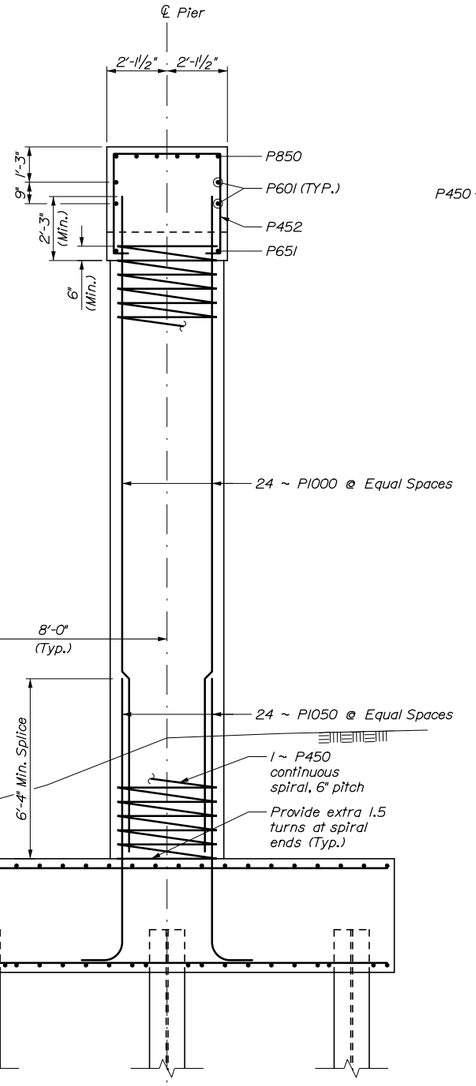


SECTION A-A

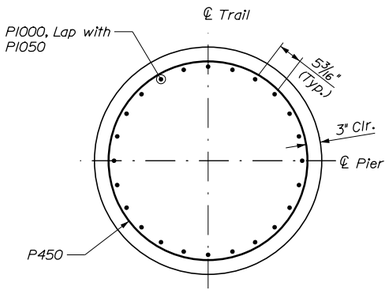


SECTION B-B

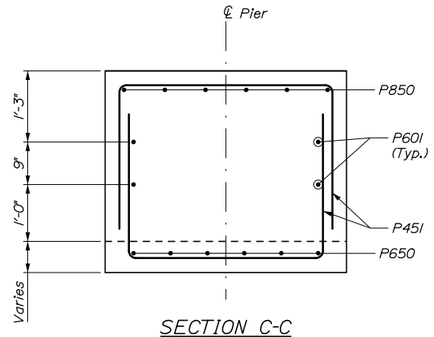


SECTION C-C

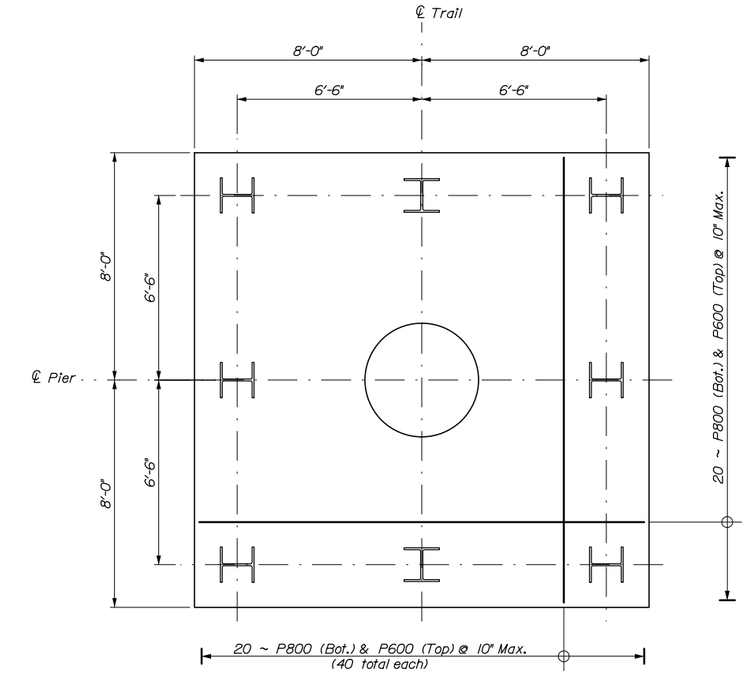


PILE CAP PLAN

## PIER NOTES:

1. Reinforcing steel shall have a minimum concrete cover of 3 inches unless otherwise noted.
2. Spiral reinforcement shall be continuous through the entire column. If a splice is used it shall be a minumum of 2'-1". No additional payment will be made for splices.
3. Reinforcing shall be shifted to avoid piles.
4. Reinforcing shall be shifted to avoid anchor rod replacement.

PROGRESS PLANS
April 4, 2023

HNTB

STATE OF MAINE
DEPARTMENT OF TRANSPORTATION

AC-STP-1942(600)X & CMAQ-1942(610)

WIN
19426.00 & 019426.10

BRIDGE PLANS

| | | | |
|---|---|---|---|
| PROJ. MANAGER | BILL REICHL | | |
| DESIGN-DETAILED | J. Olund | P. Bishop | 12\22 |
| CHECKED-REVIEWED | G. Standley | A. Stephens | 12\22 |
| DESIGN2-DETAILED2 | - | - | - |
| DESIGN3-DETAILED3 | - | - | - |
| REVISIONS 1 | - | - | - |
| REVISIONS 2 | - | - | - |
| REVISIONS 3 | - | - | - |
| REVISIONS 4 | - | - | - |
| FIELD CHANGES | - | - | - |

SIGNATURE

P.E. NUMBER

DATE

TOWN OF SCARBOROUGH
EASTERN TRAIL CONNECTOR
SCARBOROUGH TO SOUTH PORTLAND, MAINE

PAN AM RAILROAD
PIER PLAN & ELEVATION

SHEET NUMBER
48
OF 66

Username:
Division:
Filename: 048_PanAm Pier.dgn
Date:4/4/2023

## STRAIGHT BARS

| MARK | QTY. | LENGTH | LOCATION | MARK | QTY. | LENGTH | LOCATION |
|---|---|---|---|---|---|---|---|
| *Abutment No. 1 (Plain Steel)* | | | | | | | |
| A500 | 16 | 23'-6" | Transverse Footing | | | | |
| A501 | 6 | 22'-8" | Transverse Back of Stem | | | | |
| A502 | 12 | 6'-5" | Transverse Wingwall | | | | |
| A503 | 50 | 4'-5" | Vertical Backwall | | | | |
| A504 | 12 | 12'-8" | Transverse Backwall | | | | |
| *Abutment No. 2 (Plain Steel)* | | | | | | | |
| B500 | 16 | 18'-6" | Transverse Footing | | | | |
| B501 | 6 | 18'-2" | Transverse Back of Stem | | | | |
| B502 | 6 | 6'-5" | Transverse Wingwall | | | | |
| B503 | 40 | 4'-4" | Vertical Backwall | | | | |
| B504 | 12 | 10'-2" | Transverse Backwall | | | | |
| *Pier (Plain Steel)* | | | | | | | |
| P600 | 40 | 15'-6" | Top of Footing | | | | |
| P601 | 4 | 13'-6" | Pier Cap Side | | | | |
| P800 | 40 | 15'-6" | Bottom of Footing | | | | |
| P1000 | 24 | 23'-7" | Column Vertical | | | | |

## BENT BARS

| MARK | QTY. | LENGTH | TYPE | A | B | C | D | E | F | G | H | O | R | LOCATION |
|---|---|---|---|---|---|---|---|---|---|---|---|---|---|---|
| *Abutment No. 1 (Plain Steel)* | | | | | | | | | | | | | | |
| A550 | 50 | 8'-2" | S | 0" | 10" | 6'-6" | 10" | | | 0" | | | | Longitudinal Footing |
| A551 | 6 | 19'-0" | S | 0" | 2'-8" | 13'-8" | 2'-8" | | | 0" | | | | Transverse Front of Stem |
| A552 | 12 | 3'-6" | L | 2'-8" | 10" | | | | | | | | | Stem to Wingwall |
| A553 | 2 | 15'-4" | S | 0" | 10" | 13'-8" | 10" | | | 0" | | | | Transverse Top of Seat |
| A554 | 4 | 7'-6" | V | | | | 2'-7" | 4'-11" | | | 2'-1" | | | Top of Wingwall, Sloped |
| A650 | 24 | 8'-10" | L | 7'-10" | 1'-0" | | | | | | | | | Footing to Wingwall Dowel |
| A651 | 30 | 8'-7" | L | 7'-7" | 1'-0" | | | | | | | | | Footing to Stem Dowel |
| A652 | 15 | 4'-1" | L | 1'-3" | 2'-8" | | | | | | | | | Longitudinal Top of Seat |
| A850 | 6 | 3'-0" | L | 1'-6" | 1'-6" | | | | | | | | | Pile Anchorage |
| *Abutment No. 2 (Plain Steel)* | | | | | | | | | | | | | | |
| B550 | 40 | 8'-2" | S | 0" | 10" | 6'-6" | 10" | | | 0" | | | | Longitudinal Footing |
| B551 | 6 | 19'-0" | S | 0" | 2'-8" | 13'-8" | 2'-8" | | | 0" | | | | Transverse Front of Stem |
| B552 | 6 | 3'-6" | L | 2'-8" | 10" | | | | | | | | | Stem to Wingwall |
| B553 | 2 | 15'-4" | S | 0" | 10" | 13'-8" | 10" | | | 0" | | | | Transverse Top of Seat |
| B554 | 2 | 7'-6" | V | | | | 2'-7" | 4'-11" | | | 2'-1" | | | Top of Wingwall, Sloped |
| B650 | 12 | 8'-10" | L | 7'-10" | 1'-0" | | | | | | | | | Footing to Wingwall Dowel |
| B651 | 30 | 8'-7" | L | 7'-7" | 1'-0" | | | | | | | | | Footing to Stem Dowel |
| B652 | 15 | 4'-1" | L | 1'-3" | 2'-8" | | | | | | | | | Longitudinal Top of Seat |
| B850 | 6 | 3'-0" | L | 1'-6" | 1'-6" | | | | | | | | | Pile Anchorage |
| *Pier (Plain Steel)* | | | | | | | | | | | | | | |
| P450 | 1 | 518'-8" | SPIRAL | 3'-6" | 6" | 22'-1" | | | | | | | | Column Spiral |
| P451 | 44 | 8'-9" | S | 0" | 2'-6" | 3'-9" | 2'-6" | | | 0" | | | | Pier Cap Stirrup |
| P452 | 7 | 12'-1" | HB | 0" | 8" | 3'-6" | 3'-9" | 3'-6" | | 8" | | | | Pier Cap Stirrup |
| P650 | 12 | 7'-4" | P4 | 1'-6" | 4'-10" | 1'-0" | | | | | 1'-0" | | | Bottom of Pier Cap |
| P651 | 2 | 6'-6" | M | | 0" | 1'-0" | 4'-6" | 1'-0" | 0" | | 3" | | | Bottom of Pier Cap |
| P850 | 6 | 16'-2" | S | 0" | 1'-4" | 13'-6" | 1'-4" | | | 0" | | | | Top of Pier Cap |
| P851 | 8 | 3'-0" | L | 1'-6" | 1'-6" | | | | | | | | | Pile Anchorage |
| P1050 | 24 | 12'-1" | L | 10'-3" | 1'-10" | | | | | | | | | Column to Footing Dowel |

## TYPE - BENDING DIAGRAMS

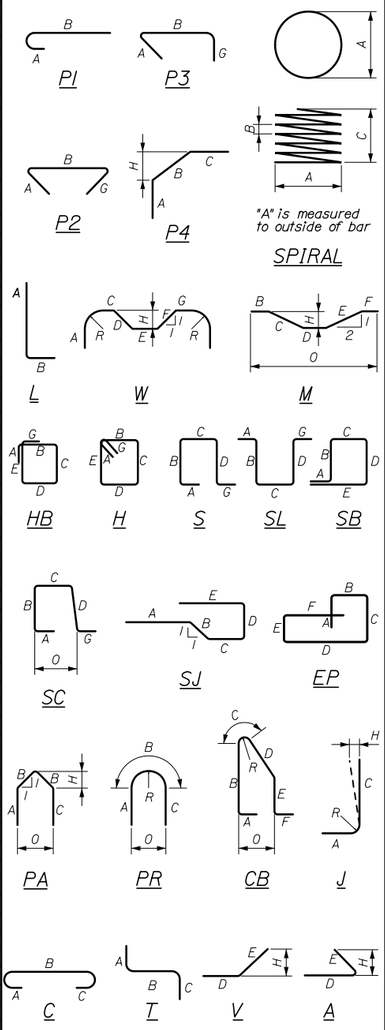


All dimensions are out-to-out of bar.

Bending details and hooks shall conform to the recommendations of the current revision of ACI Standard 315 and ACI Standard 318.

Reinforcing Bar: ASTM A615/A615M, Grade 60
ASTM A955, GRADE 75
CSA S807-10, ACI 440.1r-15

## GENERAL NOTES

1. The first two digits following the letter(s) of the mark indicate the size ofthe bar:

   Mark "A502" = bar size #5
   Mark "P805" = bar size #8
   Mark "S650" = bar size #6
   Mark "S650ss" = bar size #6 Stainless Steel
   Mark "S600G" = bar size #6 GFRP

2. Each crank bar, Type B, may be replaced by two (2) straight bars (one top and one bottom) of the same bar size as the crank bar. Payment in either case shall be based on crank bars as schedule on the plans.

3. Bar marks ending with 'G' indicate GFRP. Bar marks ending with 'ss' indicate stainless steel. All other bars are plain (uncoated).

HNTB

STATE OF MAINE
DEPARTMENT OF TRANSPORTATION
**AC-STP-1942(600)X & CMAQ-1942(610)**
**WIN 19426.00 & 019426.10** BRIDGE PLANS

| | BY | DATE |
|---|---|---|
| PROJ. MANAGER | BILL REICHL | |
| DESIGN-DETAILED | P. Bishop | 12\22 |
| CHECKED-REVIEWED | A. Stephens | 12\22 |
| DESIGN2-DETAILED2 | J. Olund | - |
| DESIGN3-DETAILED3 | G. Standley | - |
| REVISIONS 1 | | - |
| REVISIONS 2 | | - |
| REVISIONS 3 | | - |
| REVISIONS 4 | | - |
| FIELD CHANGES | | - |

SIGNATURE

P.E. NUMBER

DATE

TOWN OF SCARBOROUGH
EASTERN TRAIL CONNECTOR
SCARBOROUGH TO SOUTH PORTLAND, MAINE

# REINFORCING SCHEDULE

SHEET NUMBER
49
OF 66

Filename: 049_Reinforcement Schedule.dgn Division: Username: Date:4/4/2023

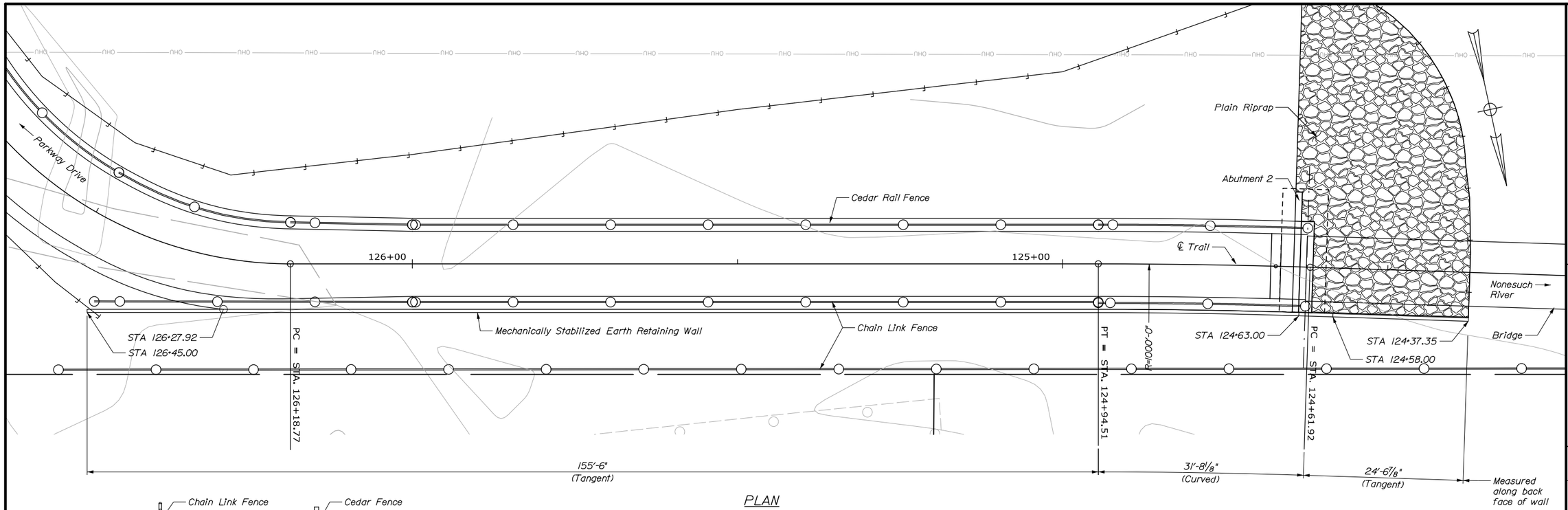


PLAN

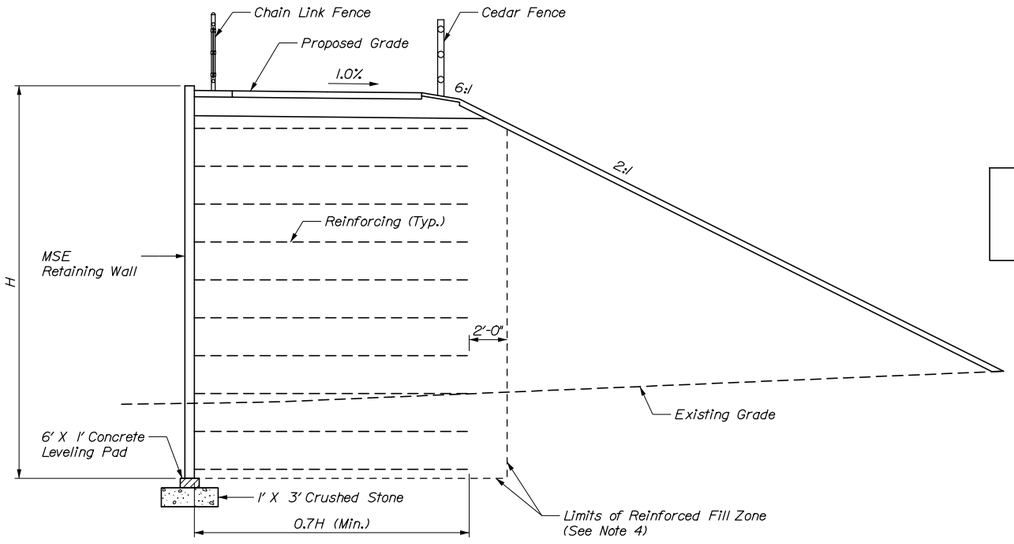


TYPICAL WALL SECTION
(Looking Upstation)

PROGRESS PLANS
April 4, 2023

## MECHANICALLY STABILIZED EARTH (MSE) WALL NOTES:

1. The Contractor shall provide a Mechanically Stabilized Earth (MSE) Retaining Wall in accordance with Section 677. The MSE Retaining Wall shall be designed and stamped by a Registered Professional Engineer in the State of Maine and the design shall be submitted to the Resident for review. Plan details are shown for estimating purposes only.

2. The MSE Retaining Wall shall be designed in accordance with Section 677, along with an additional 90 psf Pedestrian Surcharge load.

3. The factored bearing pressure for MSE Retaining Walls shall not exceed the factored bearing resistance of 3.3 ksf for wall heights greater than 10 ft tall walls and 2.7 ksf otherwise for the strength limit state. The factored bearing pressure for the service limit state shall not exceed the factored bearing resistance of 3.7 ksf.

4. The MSE Retaining Wall Reinforced Fill Zone between STA 124+35.92 and STA 125+25.00 shall consist of Crushed Stone Fill meeting the requirements of subsection 703.22. Gravel Borrow or Crushed Stone Fill shall be used for the remaining wall length. Payment for Crushed Stone Fill and Gravel Borrow within the identified Reinforced Fill Zone shall be incidental to Item 677.20, Mechanically Stabilized Earth Retaining Wall.

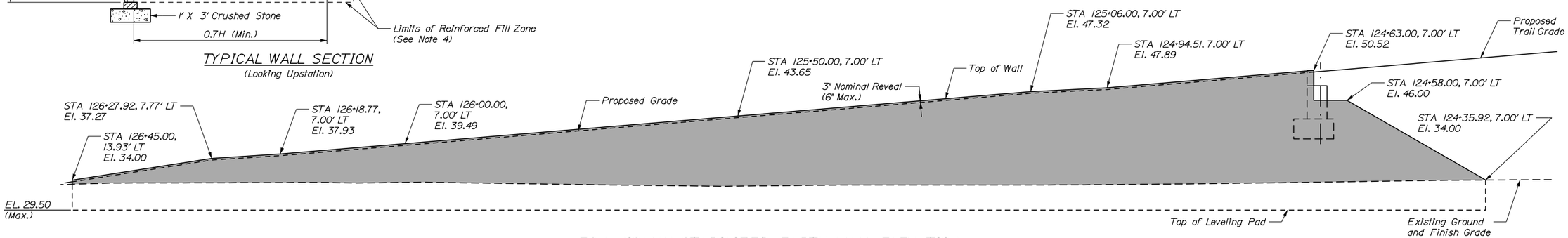


MECHANICALLY STABILIZED EARTH WALL ELEVATION

HNTB

STATE OF MAINE
DEPARTMENT OF TRANSPORTATION

AC-STP-1942(600)X & CMAQ-1942(610)

WIN
19426.00 & 019426.10

BRIDGE PLANS

| | BY | DATE |
|---|---|---|
| PROJ. MANAGER | BILL REICHL | |
| DESIGN-DETAILED | P. Bishop | 12\22 |
| CHECKED-REVIEWED | J. Ouland | 12\22 |
| DESIGN2-DETAILED2 | G. Standley | - |
| DESIGN3-DETAILED3 | A. Stephens | - |
| REVISIONS 1 | - | - |
| REVISIONS 2 | - | - |
| REVISIONS 3 | - | - |
| REVISIONS 4 | - | - |
| FIELD CHANGES | - | - |

SIGNATURE

P.E. NUMBER

DATE

TOWN OF SCARBOROUGH
EASTERN TRAIL CONNECTOR
SCARBOROUGH TO SOUTH PORTLAND, MAINE

PAN AM RAILROAD
RETAINING WALL

SHEET NUMBER
50
OF 66

Filename: 050_PanAm Retaining Wall.dgn Division: Username: Date:4/4/2023

Filename: 051_PleasantHillRd Crossing Plan.dgn Division: Username: Date:4/4/2023

135+00
136+00
137+00
138+00
139+00
140+00

COLLAPSABLE BOLLARDS (TYP.)

PAVED APPROACH

BEGIN TYPICAL SECTION A

STOP

TIMBER GUARDRAIL (TYP.)

PROPOSED CROSSWALK (18" LINES SPACED 18" APART) FIELD ADJUST IF NECESSARY

DETECTABLE WARNING FIELD (TYP.)

INSTALL W/ RECTANGULAR RAPID FLASHING BEACONS

INSTALL W/ RECTANGULAR RAPID FLASHING BEACONS

NO MOTOR VEHICLES

PLEASANT HILL RD.

XING

8'
32'
8'
100'

NOTE:
1. COLLAPSIBLE BOLLARDS SHALL BE PLACED A MINIMUM OF 30' FROM THE ROADWAY CROSSING.

2. TIMBER GUARDRAIL SHALL BE INSTALLED AS SHOWN ON THE PLANS OR AS DIRECTED BY THE RESIDENT. EXACT LOCATION AND LENGTH OF GUARDRAIL WILL BE DETERMINED BY THE RESIDENT

PROGRESS PLANS
April 4, 2023

20 0 20 40

STATE OF MAINE
DEPARTMENT OF TRANSPORTATION

AC-STP-1942(600)X & CMAQ-1942(610)

WIN
19426.00 & 019426.10 HIGHWAY PLANS

| | | BY | DATE |
|---|---|---|---|
| PROJ. MANAGER | BILL REICHL | | |
| DESIGN-DETAILED | C.Helmick | P. Bishop | 12-22 |
| CHECKED-REVIEWED | L. DRISCOLL | J. Olund | 12-22 |
| DESIGN2-DETAILED2 | - | - | - |
| DESIGN3-DETAILED3 | - | - | - |
| REVISIONS 1 | - | - | - |
| REVISIONS 2 | - | - | - |
| REVISIONS 3 | - | - | - |
| REVISIONS 4 | - | - | - |
| FIELD CHANGES | - | - | - |

SIGNATURE

P.E. NUMBER

DATE

TOWN OF SCARBOROUGH
EASTERN TRAIL CONNECTOR
SCARBOROUGH TO SOUTH PORTLAND, MAINE

PLEASANT HILL ROAD
CROSSING PLAN

SHEET NUMBER
51
OF 66

NOTE:
1. COLLAPSIBLE BOLLARDS SHALL BE PLACED A MINIMUM OF 30' FROM THE ROADWAY CROSSING.
2. TIMBER GUARDRAIL SHALL BE INSTALLED AS SHOWN ON THE PLANS OR AS DIRECTED BY THE RESIDENT. EXACT LOCATION AND LENGTH OF GUARDRAIL WILL BE DETERMINED BY THE RESIDENT.
3. CONTRACTOR SHALL ENSURE A SMOOTH, POTHOLE FREE SURFACE BEFORE PAVING THE PWD ACCESS ROAD. PAYMENT SHALL BE INCIDENTAL TO THE PAVING ITEMS.

PROGRESS PLANS
April 4, 2023

TOWN OF SCARBOROUGH
EASTERN TRAIL CONNECTOR
SCARBOROUGH TO SOUTH PORTLAND, MAINE

# PWD ACCESS ROAD CROSSING PLAN

| PROJ. MANAGER | BILL REICHL | BY | DATE |
|---|---|---|---|
| DESIGN-DETAILED | C.Helmick | P. Bishop | 12\22 |
| CHECKED-REVIEWED | L. DRISCOLL | J. Olund | 12\22 |
| DESIGN2-DETAILED2 | - | - | - |
| DESIGN3-DETAILED3 | - | - | - |
| REVISIONS 1 | _ | | _ |
| REVISIONS 2 | _ | | _ |
| REVISIONS 3 | _ | | _ |
| REVISIONS 4 | _ | | _ |
| FIELD CHANGES | _ | | _ |

SIGNATURE

P.E. NUMBER

DATE

STATE OF MAINE
DEPARTMENT OF TRANSPORTATION

AC-STP-1942(600)X & CMAQ-1942(610)

WIN
19426.00 & 019426.10 HIGHWAY PLANS

SHEET NUMBER
52
OF 66

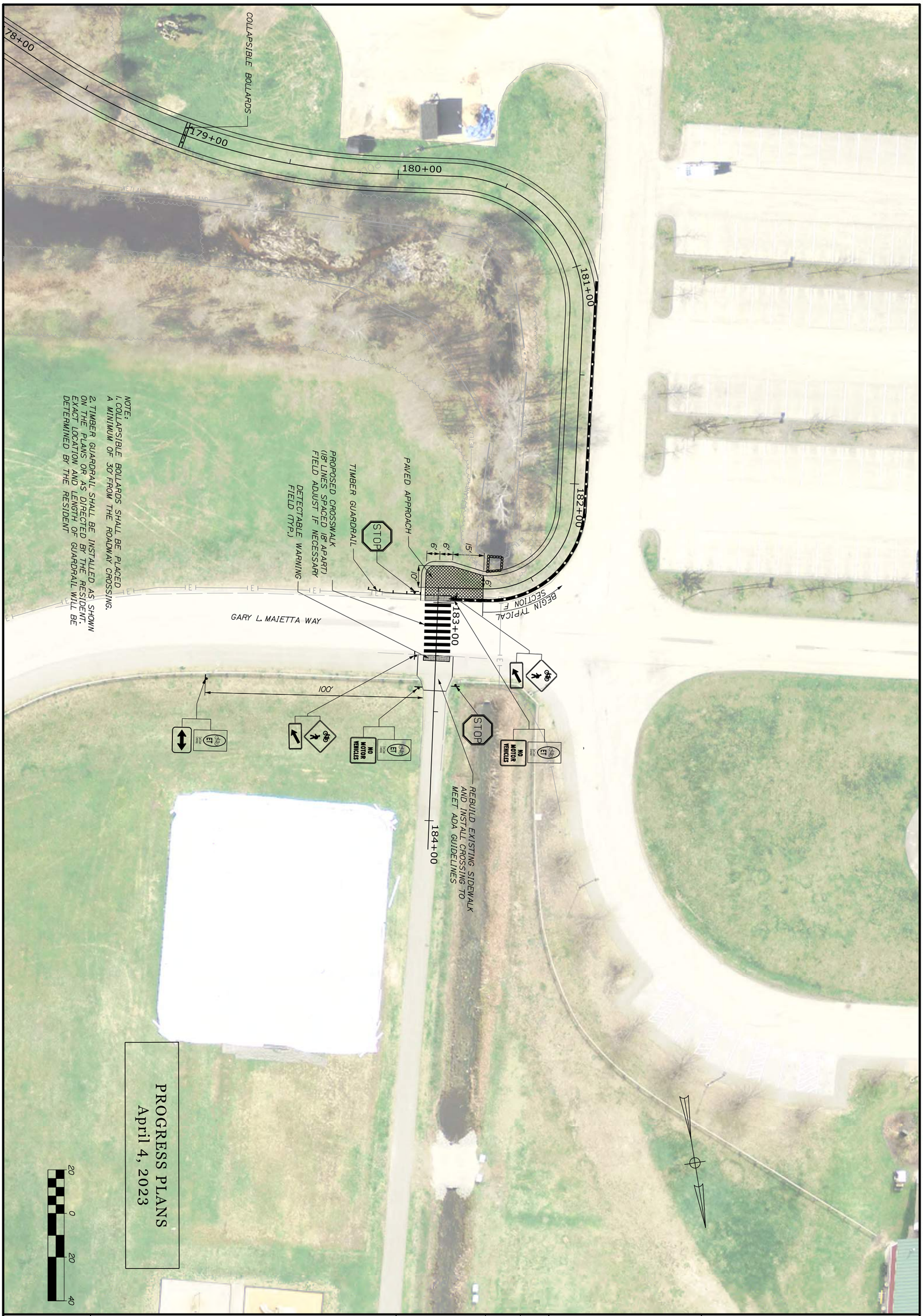


SHEET NUMBER 53 OF 66

TOWN OF SCARBOROUGH
EASTERN TRAIL CONNECTOR
SCARBOROUGH TO SOUTH PORTLAND, MAINE

# WAINWRIGHT COMPLEX CROSSING PLAN

| | | | |
|---|---|---|---|
| PROJ. MANAGER | BILL REICHL | BY | DATE |
| DESIGN-DETAILED | C.Helmick | P. Bishop | 12\22 |
| CHECKED-REVIEWED | L. DRISCOLL | J. Olund | 12\22 |
| DESIGN2-DETAILED2 | - | - | - |
| DESIGN3-DETAILED3 | - | - | - |
| REVISIONS 1 | _ | | _ |
| REVISIONS 2 | _ | | _ |
| REVISIONS 3 | _ | | _ |
| REVISIONS 4 | _ | | _ |
| FIELD CHANGES | _ | | _ |

SIGNATURE

P.E. NUMBER

DATE

STATE OF MAINE
DEPARTMENT OF TRANSPORTATION

AC-STP-1942(600)X & CMAQ-1942(610)

WIN
19426.00 & 019426.10 HIGHWAY PLANS

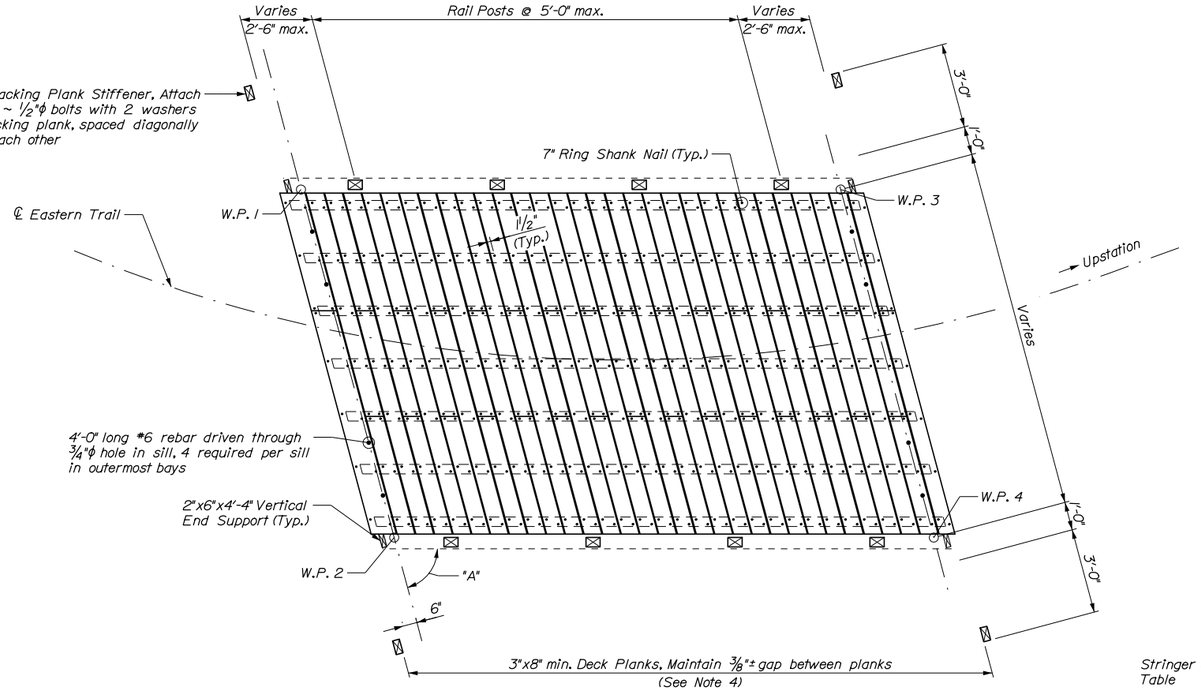


PLAN

(Trail bridge at station 176+25 shown, others similar)

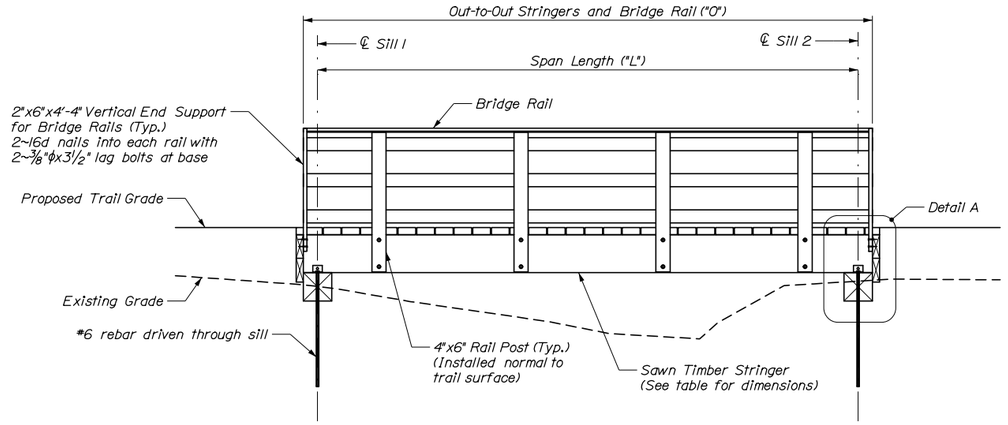


ELEVATION

(Skew not shown)

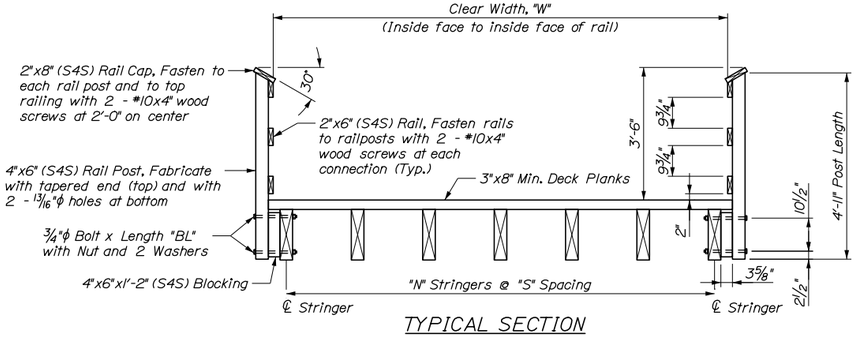


TYPICAL SECTION

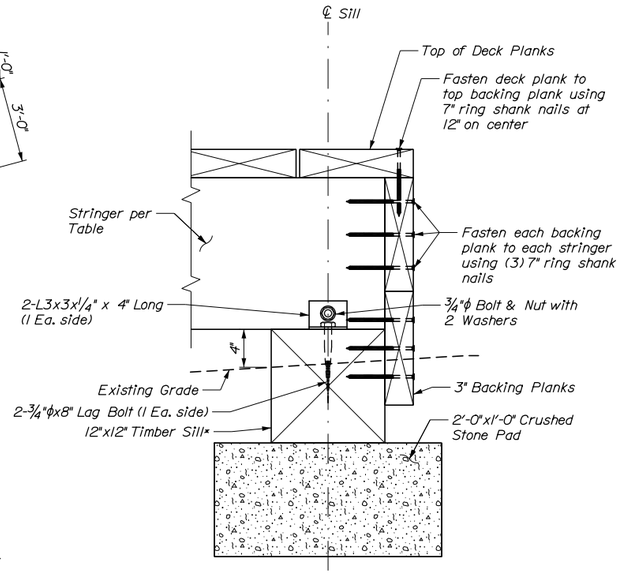


DETAIL A

TIMBER SILL CONNECTION DETAIL

(Rebar drift pin not shown for clarity)
*Timber sill can be either 12"x12" full sawn or built-up 2"x12", 3"x12", 4"x12", and 6"x12" treated members.

## NOTES:

1. Proposed timber crossings shown are designed for 90 psf pedestrian loading only. Temporary crossings, or strengthened timber crossings, shall be used to access trail sections located between streams for the purpose of clearing, grubbing, trail construction, and other activities necessitating crossing the streams with heavy equipment. See sheet 13 for additional details.

2. Timber Stream Crossing Bridge's shall be fabricated and constructed in accordance with Special Provision 528.

3. All timber shall be Southern Yellow Pine, Grade No. 1, graded by a national grading agency and in accordance with AASHTO M168. Individual boards shall not be stamped with a grade stamp and a materials certification letter shall be provided for all timber.

4. Incising boards for preservative treatment will not be allowed.

5. All fasteners and associated hardware shall be hot dipped galvanized.

6. With the exception of carriage bolt heads, and unless noted otherwise, washers shall be provided under all bolt heads and nuts.

7. Fasten deck planks to stringers with two rows of 5/16 "ϕx7" ring shank nails per plank at each stringer. If deck planks are spliced, splice planks at stringers in an alternating pattern as shown.

8. Splice rails at posts. Rails shall be continuous for two post spaces. Do not locate more than one rail splice at any one bridge rail post.

9. Prebore lag bolt holes using two diameters, one for the shank and one for the threads. The lead hole for the shank is to be 1/16" larger than the shank diameter and is to be bored to the depth of penetration of the shank. The lead hole for the threaded portion is to be 70% of the bolt diameter as shown on the Plans and is to be bored at least to the length of the threads. Do not drive lag bolts with a hammer.

| Bridge | WP1 (Sta. & Offset) | WP2 (Sta. & Offset) | WP3 (Sta. & Offset) | WP4 (Sta. & Offset) | L (Span Length) | O (Out-to-Out) | W (Clear Width) | A (Skew Angle) | N (# of Stringers) | S (Stringer Spacing) | Stringer Size* | BL (Bolt Length) |
|---|---|---|---|---|---|---|---|---|---|---|---|---|
| Sta. 162+90.00 | Sta. 162+69.57 6.06' Left | Sta. 162+80.89 5.83' Right | Sta. 163+01.15 8.04' Left | Sta. 163+07.16 7.17' Right | 28'-0" | 29'-1¾" | 14'-0" | 60° | 8 | 1'-10⅞" | 6"x16" | 15" |
| Sta. 174+25.00 | Sta. 174+19.44 5.13' Left | Sta. 174+19.44 7.13' Right | Sta. 174+33.44 5.13' Left | 174+33.44 7.13' Right | 14'-0" | 15'-0" | 12'-0" | 90° | 7 | 1'-10⅞" | 4"x12" | 13" |
| Sta. 175+60.00 | Sta. 175+48.67 4.95' Left | Sta. 175+44.63 7.10' Right | Sta. 175+73.65 4.75' Left | Sta. 175+68.59 6.85' Right | 24'-0" | 25'-0½" | 12'-0" | 105° | 7 | 1'-10⅜" | 6"x14" | 15" |
| Sta. 176+25.00 | Sta. 176+13.34 4.58' Left | Sta. 176+18.82 6.81' Right | 176+34.57 5.32' Left | 176+35.54 7.32' Right | 19'-0" | 20'-0½" | 12'-0" | 75° | 7 | 1'-10⅞" | 4"x16" | 13" |

* Dimensions provided are nominal (Rough Sawn)

HNTB

STATE OF MAINE
DEPARTMENT OF TRANSPORTATION

AC-STP-1942(600)X & CMAQ-1942(610)

WIN
19426.00 & 019426.10

BRIDGE PLANS

| | BY | DATE |
|---|---|---|
| PROJ. MANAGER | BILL REICHL | |
| DESIGN-DETAILED | C.Helmick | 12'22 |
| CHECKED-REVIEWED | L. DRISCOLL | 12'22 |
| DESIGN2-DETAILED2 | - | - |
| DESIGN3-DETAILED3 | - | - |
| REVISIONS 1 | - | - |
| REVISIONS 2 | - | - |
| REVISIONS 3 | - | - |
| REVISIONS 4 | - | - |
| FIELD CHANGES | - | - |

SIGNATURE

P.E. NUMBER

DATE

EASTERN TRAIL CONNECTOR
SCARBOROUGH CUMBERLAND

TIMBER TRAIL BRIDGE DETAILS

SHEET NUMBER
54
OF 66

Filename: 054_Timber TrailBridge Details.dgn Division: Username: Date:4/4/2023

PLAN LEGEND

| | | | | | |
|---|---|---|---|---|---|
| Town, County, State | | New R/W Along Existing R/W | | | |
| Approx. Property Lines | P.L. | Building | | Clearing Limit Line | CLL |
| Existing Right of Way | | Trees | Conifer | Deciduous | |
| Limits of Wrought Portion | L.O.W.P. | Tree Line | | Bush Line | |
| Control Of Access | C.O.A. | Water Edge | | | |
| New Right of Way | | Ledge | | Rock/Boulder | Flag Pole |
| New Easement | | Fence | CHAIN LINK | BARB WIRE | STOCKADE |
| New Temporary Rights | | Sign | | Well | Mailbox |
| New R/W Within Existing R/W | | | | | |

| | Existing | Proposed |
|---|---|---|
| Sanitary Sewer | | |
| Telephone Line | T | T |
| Electric Line | E | E |
| Water Line | W | W |
| Underdrain Line | | |
| Gas Line | G | G |
| Guardrail | | |
| Culvert | | |

| | Existing | Proposed |
|---|---|---|
| Traveled Way | | |
| Ditch | | |
| Catch Basin | | |
| Manhole | | |
| Sewer Manhole | | |
| Utility Pole | | |
| Fire Hydrant | | |
| Curbing | | |

| | |
|---|---|
| Cut Line | Fill Line |
| Stonewall | Retaining Wall |
| Baseline 10+00 | 11+00 12+00 |
| Monument | Traverse Point |
| Iron Rod Found IRF | Pipe Found IPF |
| Replacement Pin Set | |

STATE OF MAINE
REGISTRY OF DEEDS

COUNTY _____
RECEIVED _____, _____
at ____h____m____M and recorded in
Plan Book _____, Page _____
Attest: _____
REGISTER

THIS PLAN WAS PREPARED IN CONNECTION WITH THE DEPARTMENT'S ACQUISITION OF REAL PROPERTY FOR TRANSPORTATION PURPOSES. IT CANNOT BE USED TO ESTABLISH LEGAL BOUNDARIES BETWEEN ABUTTING PROPERTY OWNERS.

25 0 25 50 75 100
Scale of Feet

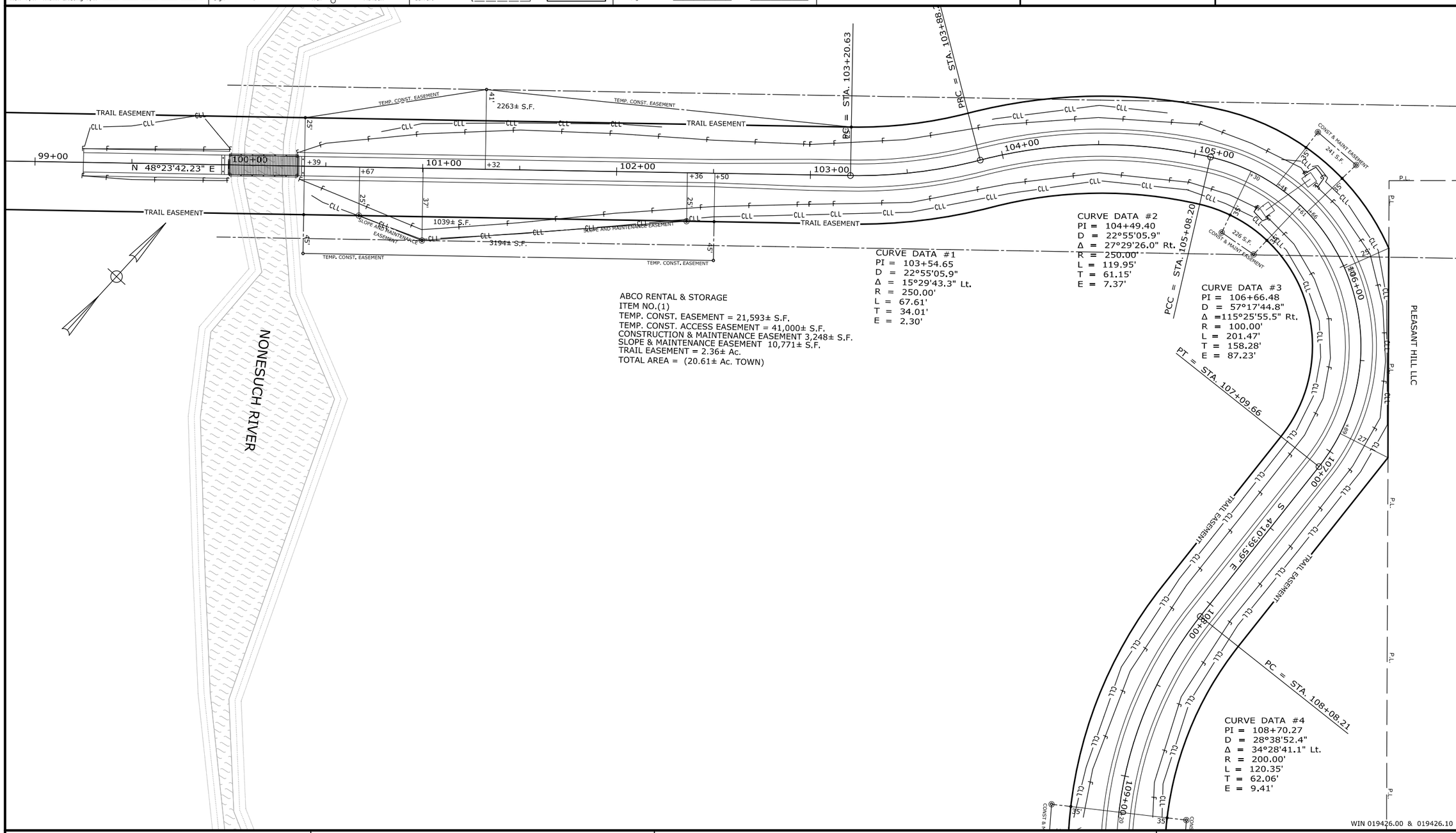


ABCO RENTAL & STORAGE
ITEM NO.(1)
TEMP. CONST. EASEMENT = 21,593± S.F.
TEMP. CONST. ACCESS EASEMENT = 41,000± S.F.
CONSTRUCTION & MAINTENANCE EASEMENT 3,248± S.F.
SLOPE & MAINTENANCE EASEMENT 10,771± S.F.
TRAIL EASEMENT = 2.36± Ac.
TOTAL AREA = (20.61± Ac. TOWN)

CURVE DATA #1
PI = 103+54.65
D = 22°55'05.9"
Δ = 15°29'43.3" Lt.
R = 250.00'
L = 67.61'
T = 34.01'
E = 2.30'

CURVE DATA #2
PI = 104+49.40
D = 22°55'05.9"
Δ = 27°29'26.0" Rt.
R = 250.00'
L = 119.95'
T = 61.15'
E = 7.37'

CURVE DATA #3
PI = 106+66.48
D = 57°17'44.8"
Δ =115°25'55.5" Rt.
R = 100.00'
L = 201.47'
T = 158.28'
E = 87.23'

CURVE DATA #4
PI = 108+70.27
D = 28°38'52.4"
Δ = 34°28'41.1" Lt.
R = 200.00'
L = 120.35'
T = 62.06'
E = 9.41'

WIN 019426.00 & 019426.10

| ITEM | TECH | CHECKED |
|---|---|---|
| EXISTING CONDITION PLAN | RWH | |
| FINAL RIGHT OF WAY | RWH | |
| AREAS | | |

TOWN OF SCARBOROUGH
259 U.S. ROUTE 1
SCARBOROUGH, ME. 04074
RIGHT OF WAY MAP

| REVISIONS | | | |
|---|---|---|---|
| NO. | DATE | DESCRIPTION | BY |

PLAN FILED IN PLAN BOOK PAGE COUNTY RECORD

| NO. | GRANTOR | INSTRUMENT | DATE | BOOK | PAGE |
|---|---|---|---|---|---|

EASTERN TRAIL CONNECTOR
SCARBOROUGH TO SOUTH PORTLAND
SCARBOROUGH CUMBERLAND COUNTY
FED. AID PROJ. NO. AC-STP-1942(600)X & CMAQ-1942(610)

JANRUARY 2019 | RIGHT-OF-WAY MAP
SCALE 1" = 25' | SHEET 1 OF 12

SHEET NUMBER
55
OF 66

Date:4/4/2023
Username:
Division:
Filename: 055_Row 1.dgn

## PLAN LEGEND

| | | | | | | | |
|---|---|---|---|---|---|---|---|
| Town, County, State | New R/W Along Existing R/W | | Existing | Proposed | | Existing | Proposed |
| Approx. Property Lines P.L. | Building | Clearing Limit Line CLL | Sanitary Sewer | | Traveled Way | | |
| Existing Right of Way | Trees Conifer | Deciduous | Telephone Line | T | Ditch | | |
| Limits of Wrought Portion L.O.W.P. | Tree Line | Bush Line | Electric Line | E | Catch Basin | | |
| Control Of Access C.O.A. | Water Edge | | Water Line | W | Manhole | | |
| New Right of Way | Ledge | Rock/Boulder Flag Pole | Underdrain Line | | Sewer Manhole | | |
| New Easement | Fence CHAIN LINK | BARB WIRE STOCKADE | Gas Line | G | Utility Pole | | |
| New Temporary Rights | Sign | Well WELL Mailbox | Guardrail | | Fire Hydrant | | |
| New R/W Within Existing R/W | | | Culvert | | Curbing | | |

Cut Line C—C—C Fill Line F—F—F
Stonewall Retaining Wall
Baseline 10+00 11+00 12+00
Monument Traverse Point
Iron Rod Found ● IRF Pipe Found ● IPF
Replacement Pin Set ⊙

STATE OF MAINE
REGISTRY OF DEEDS
COUNTY _____
RECEIVED _____, _____
at _____h _____m _____M and recorded In
Plan Book _____, Page _____
Attest: _____
REGISTER

THIS PLAN WAS PREPARED IN CONNECTION WITH THE DEPARTMENT'S ACQUISITION OF REAL PROPERTY FOR TRANSPORTATION PURPOSES. IT CANNOT BE USED TO ESTABLISH LEGAL BOUNDARIES BETWEEN ABUTTING PROPERTY OWNERS.

25 0 25 50 75 100
Scale of Feet

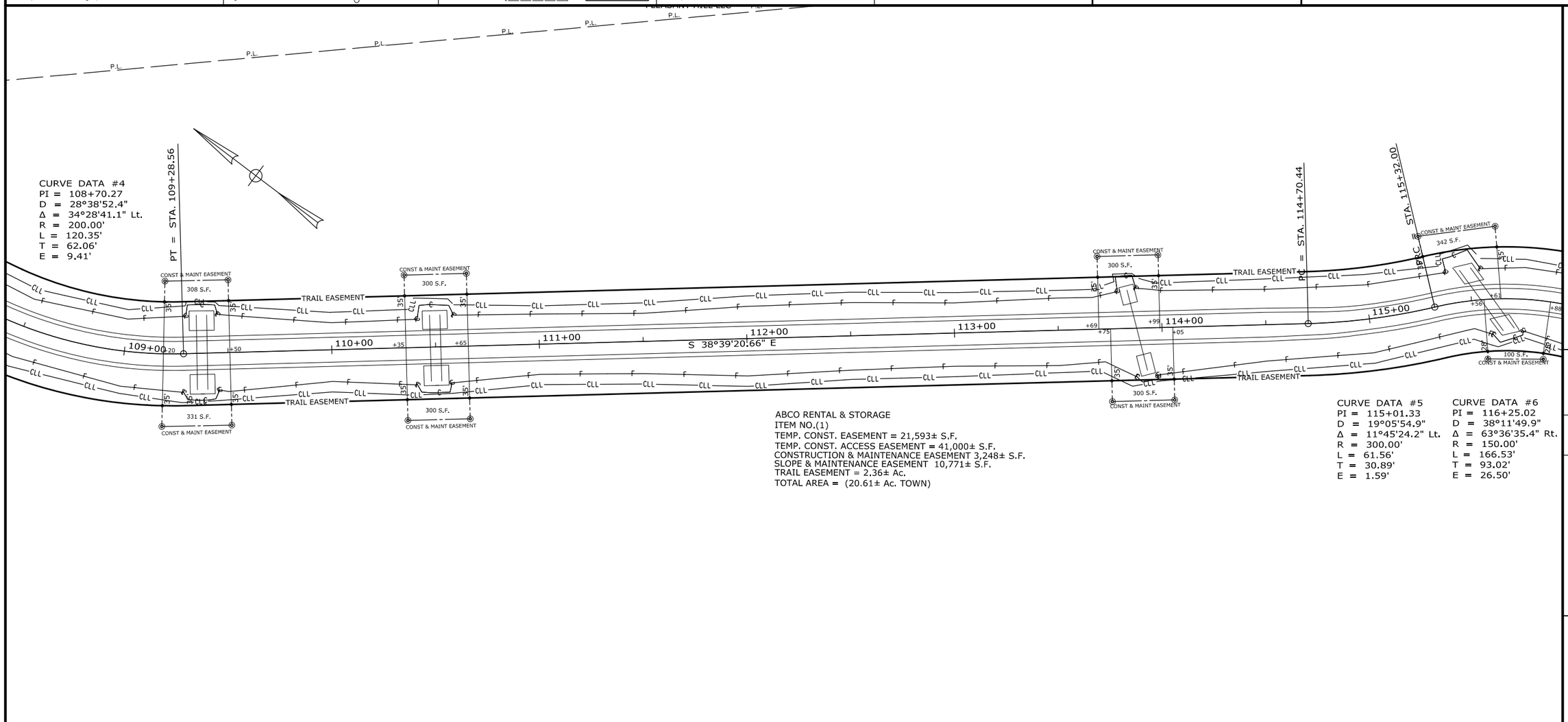


ABCO RENTAL & STORAGE
ITEM NO.(1)
TEMP. CONST. EASEMENT = 21,593± S.F.
TEMP. CONST. ACCESS EASEMENT = 41,000± S.F.
CONSTRUCTION & MAINTENANCE EASEMENT 3,248± S.F.
SLOPE & MAINTENANCE EASEMENT 10,771± S.F.
TRAIL EASEMENT = 2,36± Ac.
TOTAL AREA = (20.61± Ac. TOWN)

CURVE DATA #5
PI = 115+01.33
D = 19°05'54.9"
Δ = 11°45'24.2" Lt.
R = 300.00'
L = 61.56'
T = 30.89'
E = 1.59'

CURVE DATA #6
PI = 116+25.02
D = 38°11'49.9"
Δ = 63°36'35.4" Rt.
R = 150.00'
L = 166.53'
T = 93.02'
E = 26.50'

WIN 019426.00 & 019426.10

| ITEM | CHECKED |
|---|---|
| EXISTING CONDITION PLAN | RWH |
| FINAL RIGHT OF WAY | RWH |
| AREAS | |

TOWN OF
SCARBOROUGH
259 U.S. ROUTE 1
SCARBOROUGH, ME. 04074
RIGHT OF WAY MAP

| REVISIONS | | | |
|---|---|---|---|
| NO. | DATE | DESCRIPTION | BY |
| | | | |

| PLAN FILED IN PLAN BOOK PAGE COUNTY RECORD | | | | | |
|---|---|---|---|---|---|
| NO. | GRANTOR | INSTRUMENT | DATE | BOOK | PAGE |
| | | | | | |

EASTERN TRAIL CONNECTOR
SCARBOROUGH TO SOUTH PORTLAND
SCARBOROUGH CUMBERLAND COUNTY
FED. AID PROJ. NO. AC-STP-1942(600)X & CMAQ-1942(610)

| JANRUARY 2019 | RIGHT-OF-WAY MAP | |
|---|---|---|
| SCALE 1" = 25' | SHEET 2 OF 12 | |

SHEET NUMBER
56
OF 66

Date:4/4/2023
Username:
Division:
Filename: 056_Row 2.dgn

## PLAN LEGEND

| | | | | | | | |
|---|---|---|---|---|---|---|---|
| Town, County, State | New R/W Along Existing R/W | | Existing | Proposed | | Existing | Proposed |
| Approx. Property Lines P.L. | Building | Clearing Limit Line CLL | Sanitary Sewer | | Traveled Way | | |
| Existing Right of Way | Trees Conifer | Deciduous | Telephone Line | T | Ditch | | |
| Limits of Wrought Portion L.O.W.P. | Tree Line | Bush Line | Electric Line | E | Catch Basin | | |
| Control Of Access C.O.A. | Water Edge | | Water Line | W | Manhole | | |
| New Right of Way | Ledge | Rock/Boulder Flag Pole | Underdrain Line | | Sewer Manhole | | |
| New Easement | Fence CHAIN LINK | BARB WIRE STOCKADE | Gas Line | G | Utility Pole | | |
| New Temporary Rights | Sign | Well WELL Mailbox | Guardrail | | Fire Hydrant | | |
| New R/W Within Existing R/W | | | Culvert | | Curbing | | |

Cut Line C—C—C Fill Line F—F—F
Stonewall Retaining Wall
Baseline 10+00 11+00 12+00
Monument Traverse Point
Iron Rod Found IRF Pipe Found IPF
Replacement Pin Set

STATE OF MAINE
REGISTRY OF DEEDS
COUNTY _____
RECEIVED _____, _____
at _____h _____m _____M and recorded In
Plan Book _____, Page _____
Attest: _____
REGISTER

THIS PLAN WAS PREPARED IN CONNECTION WITH THE DEPARTMENT'S ACQUISITION OF REAL PROPERTY FOR TRANSPORTATION PURPOSES. IT CANNOT BE USED TO ESTABLISH LEGAL BOUNDARIES BETWEEN ABUTTING PROPERTY OWNERS.

25 0 25 50 75 100
Scale of Feet

R78/85

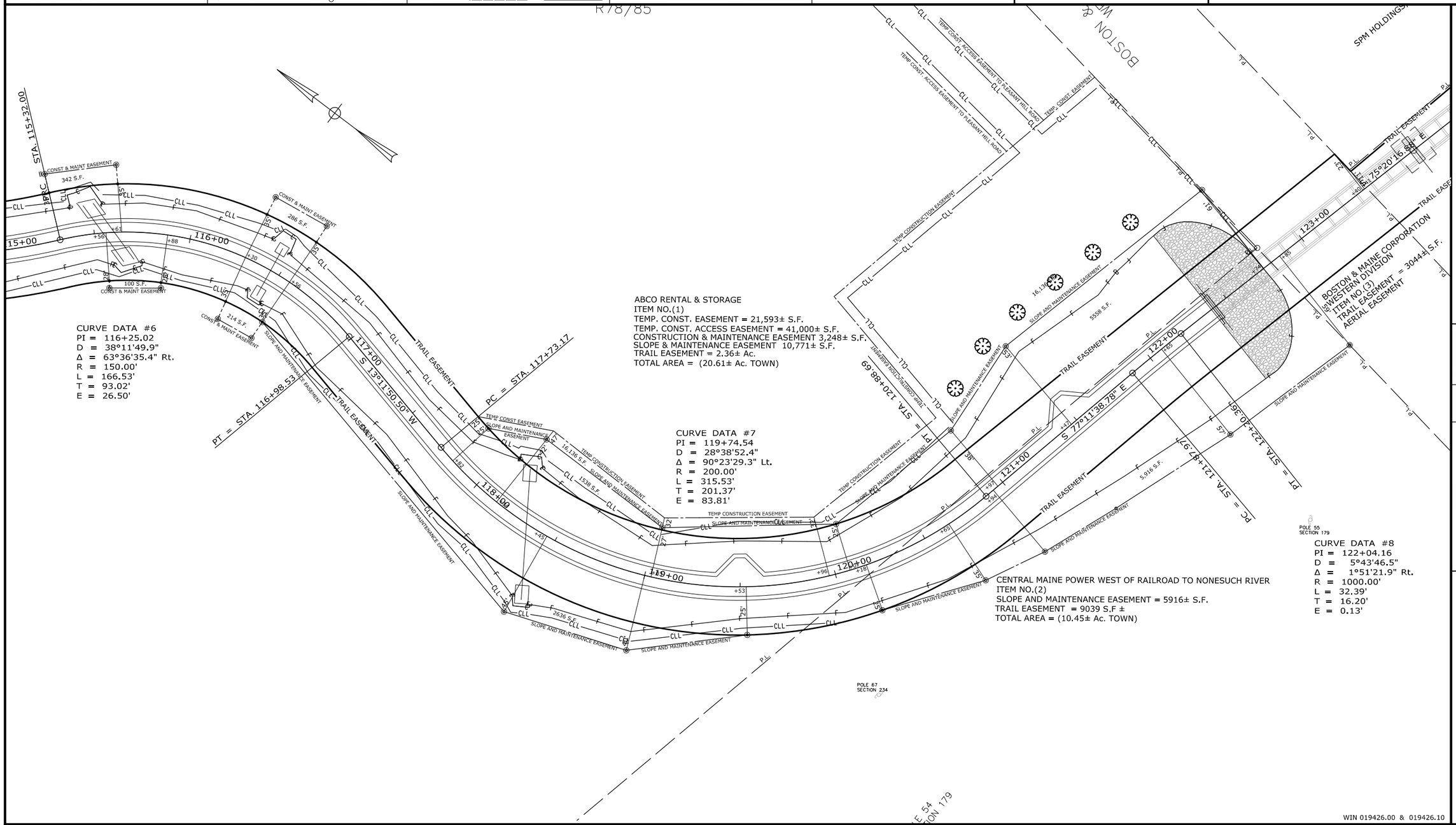


CURVE DATA #6
PI = 116+25.02
D = 38°11'49.9"
Δ = 63°36'35.4" Rt.
R = 150.00'
L = 166.53'
T = 93.02'
E = 26.50'

CURVE DATA #7
PI = 119+74.54
D = 28°38'52.4"
Δ = 90°23'29.3" Lt.
R = 200.00'
L = 315.53'
T = 201.37'
E = 83.81'

CURVE DATA #8
PI = 122+04.16
D = 5°43'46.5"
Δ = 1°51'21.9" Rt.
R = 1000.00'
L = 32.39'
T = 16.20'
E = 0.13'

ABCO RENTAL & STORAGE
ITEM NO.(1)
TEMP. CONST. EASEMENT = 21,593± S.F.
TEMP. CONST. ACCESS EASEMENT = 41,000± S.F.
CONSTRUCTION & MAINTENANCE EASEMENT 3,248± S.F.
SLOPE & MAINTENANCE EASEMENT 10,771± S.F.
TRAIL EASEMENT = 2.36± Ac.
TOTAL AREA = (20.61± Ac. TOWN)

CENTRAL MAINE POWER WEST OF RAILROAD TO NONESUCH RIVER
ITEM NO.(2)
SLOPE AND MAINTENANCE EASEMENT = 5916± S.F.
TRAIL EASEMENT = 9039 S.F ±
TOTAL AREA = (10.45± Ac. TOWN)

| ITEM | CHECKED | | | | | |
|---|---|---|---|---|---|---|
| EXISTING CONDITION PLAN | RWH | RWH | | | | |
| FINAL RIGHT OF WAY | RWH | RWH | | | | |
| AREAS | | | | | | |

TOWN OF SCARBOROUGH
259 U.S. ROUTE 1
SCARBOROUGH, ME. 04074
RIGHT OF WAY MAP

WIN 019426.00 & 019426.10

**REVISIONS**

| NO. | DATE | DESCRIPTION | BY |
|---|---|---|---|
| | | | |

PLAN FILED IN PLAN BOOK PAGE COUNTY RECORD

| NO. | GRANTOR | INSTRUMENT | DATE | BOOK | PAGE |
|---|---|---|---|---|---|
| | | | | | |

EASTERN TRAIL CONNECTOR
SCARBOROUGH TO SOUTH PORTLAND
SCARBOROUGH CUMBERLAND COUNTY
FED. AID PROJ. NO. AC-STP-1942(600)X & CMAQ-1942(610)

| JANRUARY 2019 | RIGHT-OF-WAY MAP | |
|---|---|---|
| SCALE 1" = 25' | SHEET 3 OF 12 | |

SHEET NUMBER
57
OF 66

Date:4/4/2023
Username:
Division:
Filename: 057_Row 3.dgn

## PLAN LEGEND

| | | | | | | | |
|---|---|---|---|---|---|---|---|
| Town, County, State | New R/W Along Existing R/W | | Existing | Proposed | | Existing | Proposed |
| Approx. Property Lines P.L. | Building | Clearing Limit Line CLL | Sanitary Sewer | | Traveled Way | | |
| Existing Right of Way | Trees Conifer | Deciduous | Telephone Line | | Ditch | | |
| Limits of Wrought Portion L.O.W.P. | Tree Line | Bush Line | Electric Line | | Catch Basin | | |
| Control Of Access C.O.A. | Water Edge | | Water Line | | Manhole | | |
| New Right of Way | Ledge | Rock/Boulder Flag Pole | Underdrain Line | | Sewer Manhole | | |
| New Easement | Fence CHAIN LINK | BARB WIRE STOCKADE | Gas Line | | Utility Pole | | |
| New Temporary Rights | Sign | Well WELL Mailbox | Guardrail | | Fire Hydrant | | |
| New R/W Within Existing R/W | | | Culvert | | Curbing | | |

Cut Line Fill Line
Stonewall Retaining Wall
Baseline 10+00 11+00 12+00
Monument Traverse Point
Iron Rod Found IRF Pipe Found IPF
Replacement Pin Set

STATE OF MAINE
REGISTRY OF DEEDS
COUNTY _____
RECEIVED _____, _____
at _____h _____m _____M and recorded In
Plan Book _____, Page _____
Attest: _____
REGISTER

THIS PLAN WAS PREPARED IN CONNECTION WITH THE DEPARTMENT'S ACQUISITION OF REAL PROPERTY FOR TRANSPORTATION PURPOSES. IT CANNOT BE USED TO ESTABLISH LEGAL BOUNDARIES BETWEEN ABUTTING PROPERTY OWNERS.

25 0 25 50 75 100
Scale of Feet

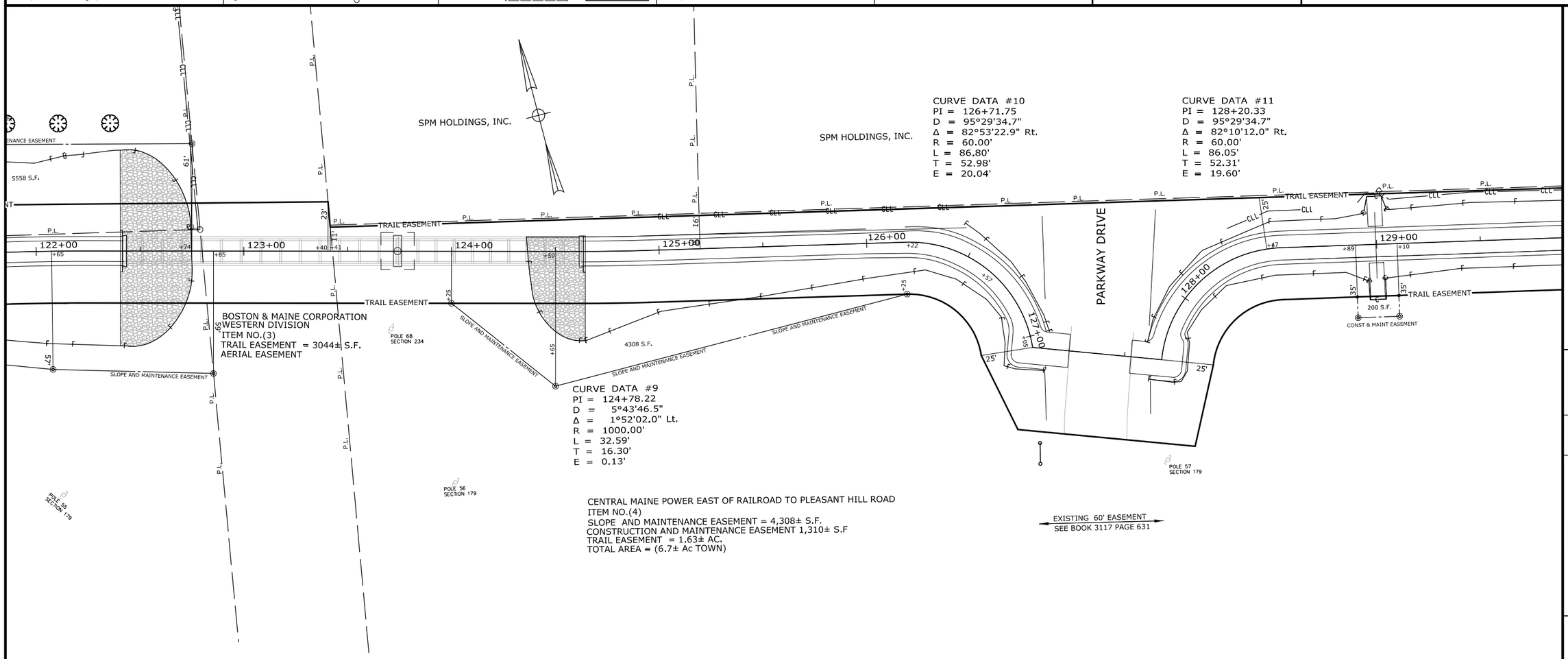


| TECH | CHECKED |
|---|---|
| RWH | RWH |

| ITEM | PLAN |
|---|---|
| EXISTING CONDITION PLAN | |
| FINAL RIGHT OF WAY | |
| AREAS | |

TOWN OF
SCARBOROUGH
259 U.S. ROUTE 1
SCARBOROUGH, ME. 04074
RIGHT OF WAY MAP

WIN 019426.00 & 019426.10

**REVISIONS**

| NO. | DATE | DESCRIPTION | BY |
|---|---|---|---|
| | | | |

PLAN FILED IN PLAN BOOK PAGE COUNTY RECORD

| NO. | GRANTOR | INSTRUMENT | DATE | BOOK | PAGE |
|---|---|---|---|---|---|
| | | | | | |

EASTERN TRAIL CONNECTOR
SCARBOROUGH TO SOUTH PORTLAND
SCARBOROUGH CUMBERLAND COUNTY
FED. AID PROJ. NO. AC-STP-1942(600)X & CMAQ-1942(610)

| JANRUARY 2019 | RIGHT-OF-WAY MAP | |
|---|---|---|
| SCALE 1" = 25' | SHEET 4 OF 12 | |

SHEET NUMBER
58
OF 66

Date:4/4/2023
Username:
Division:
Filename: 058_Row 4.dgn

## PLAN LEGEND

| | | | | | | | |
|---|---|---|---|---|---|---|---|
| Town, County, State | | New R/W Along Existing R/W | | Sanitary Sewer | | Traveled Way | |
| Approx. Property Lines | P.L. | Building | Clearing Limit Line CLL | Telephone Line | | Ditch | |
| Existing Right of Way | | Trees Conifer | Deciduous | Electric Line | | Catch Basin | |
| Limits of Wrought Portion | L.O.W.P. | Tree Line | Bush Line | Water Line | | Manhole | |
| Control Of Access | C.O.A. | Water Edge | | Gas Line | | Sewer Manhole | |
| New Right of Way | | Ledge Rock/Boulder | Flag Pole | Underdrain Line | | Utility Pole | |
| New Easement | | Fence CHAIN LINK | BARB WIRE STOCKADE | Guardrail | | Fire Hydrant | |
| New Temporary Rights | | Sign | Well WELL Mailbox | Culvert | | Curbing | |

| Existing | Proposed |
|---|---|
| | |
| T | T |
| E | E |
| W | W |
| G | G |

| Existing | Proposed |
|---|---|
| | |
| | |
| | |
| | |
| | |
| | |

Cut Line C—C—C Fill Line F—F—F
Stonewall Retaining Wall
Baseline 10+00 11+00 12+00
Monument Traverse Point
Iron Rod Found ● IRF Pipe Found ● IPF
Replacement Pin Set ⊙

STATE OF MAINE
REGISTRY OF DEEDS
COUNTY _____
RECEIVED _____, _____
at _____h _____m _____M and recorded In
Plan Book _____, Page _____
Attest: _____
REGISTER

THIS PLAN WAS PREPARED IN CONNECTION WITH THE DEPARTMENT'S ACQUISITION OF REAL PROPERTY FOR TRANSPORTATION PURPOSES. IT CANNOT BE USED TO ESTABLISH LEGAL BOUNDARIES BETWEEN ABUTTING PROPERTY OWNERS.

25 0 25 50 75 100
Scale of Feet

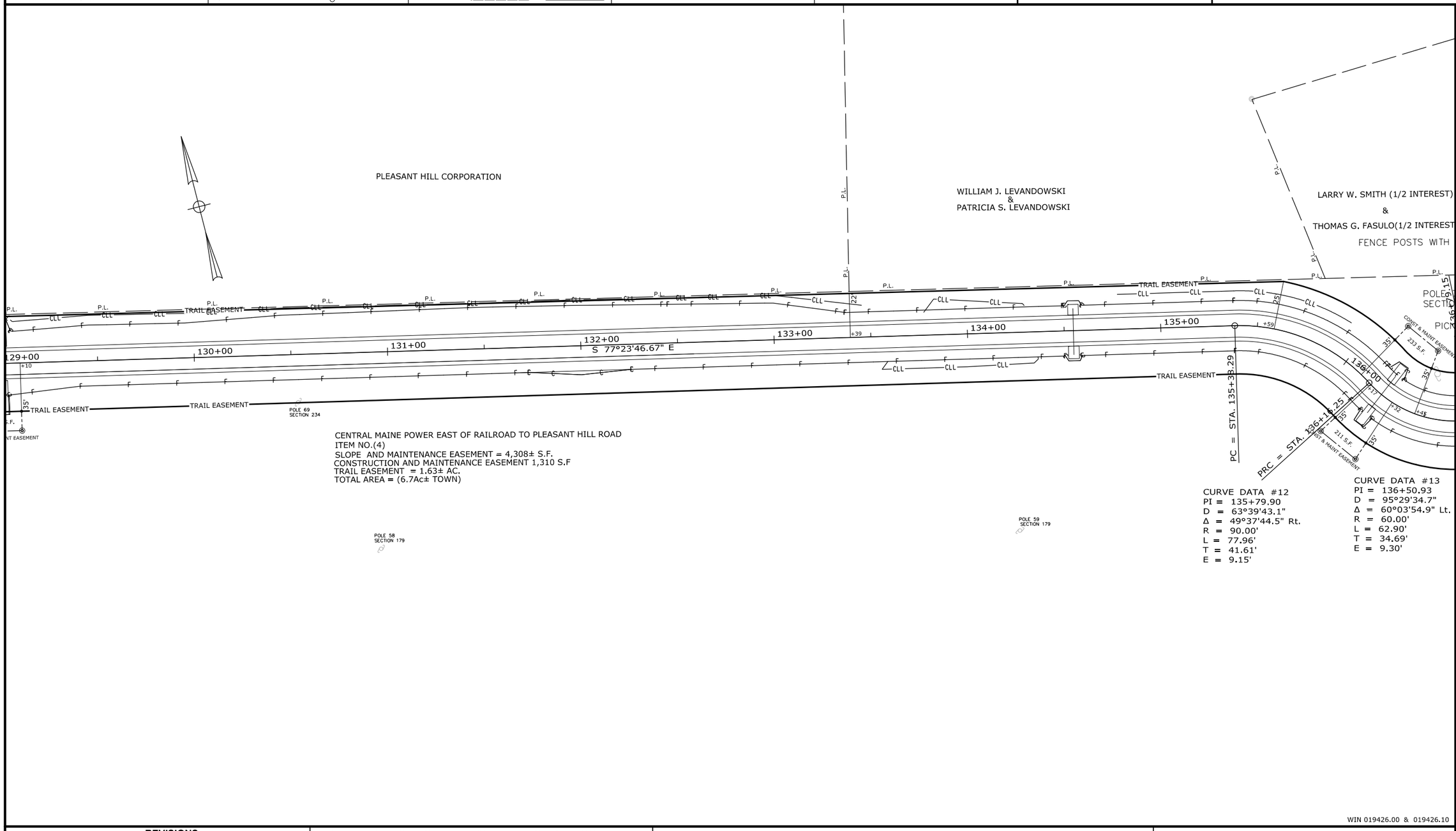


CENTRAL MAINE POWER EAST OF RAILROAD TO PLEASANT HILL ROAD
ITEM NO.(4)
SLOPE AND MAINTENANCE EASEMENT = 4,308± S.F.
CONSTRUCTION AND MAINTENANCE EASEMENT 1,310 S.F
TRAIL EASEMENT = 1.63± AC.
TOTAL AREA = (6.7Ac± TOWN)

CURVE DATA #12
PI = 135+79.90
D = 63°39'43.1"
Δ = 49°37'44.5" Rt.
R = 90.00'
L = 77.96'
T = 41.61'
E = 9.15'

CURVE DATA #13
PI = 136+50.93
D = 95°29'34.7"
Δ = 60°03'54.9" Lt.
R = 60.00'
L = 62.90'
T = 34.69'
E = 9.30'

| ITEM | CHECKED | |
|---|---|---|
| EXISTING CONDITION PLAN | TECH | RWH |
| FINAL RIGHT OF WAY | | RWH |
| AREAS | | |

TOWN OF
SCARBOROUGH
259 U.S. ROUTE 1
SCARBOROUGH, ME. 04074
RIGHT OF WAY MAP

WIN 019426.00 & 019426.10

| REVISIONS | | | |
|---|---|---|---|
| NO. | DATE | DESCRIPTION | BY |
| | | | |

| PLAN FILED IN PLAN BOOK PAGE COUNTY RECORD | | | | | |
|---|---|---|---|---|---|
| NO. | GRANTOR | INSTRUMENT | DATE | BOOK | PAGE |
| | | | | | |

EASTERN TRAIL CONNECTOR
SCARBOROUGH TO SOUTH PORTLAND
SCARBOROUGH CUMBERLAND COUNTY
FED. AID PROJ. NO. AC-STP-1942(600)X & CMAQ-1942(610)

| JANRUARY 2019 | RIGHT-OF-WAY MAP | |
|---|---|---|
| SCALE 1" = 25' | SHEET 5 OF 12 | |

SHEET NUMBER
59
OF 66

Date:4/4/2023
Username:
Division:
Filename: 059_Row 5.dgn

Date:4/4/2023

Username:

Division:

Filename: 060_Row 6.dgn

## PLAN LEGEND

| | | | | | | | |
|---|---|---|---|---|---|---|---|
| Town, County, State | | New R/W Along Existing R/W | | Existing | Proposed | Existing | Proposed |
| Approx. Property Lines | P.L. | Building | Clearing Limit Line CLL | Sanitary Sewer | | Traveled Way | |
| Existing Right of Way | | Trees Conifer | Deciduous | Telephone Line | T | Ditch | |
| Limits of Wrought Portion | L.O.W.P. | Tree Line | Bush Line | Electric Line | E | Catch Basin | |
| Control Of Access | C.O.A. | Water Edge | | Water Line | W | Manhole | |
| New Right of Way | | Ledge | Rock/Boulder Flag Pole | Underdrain Line | | Sewer Manhole | |
| New Easement | | Fence CHAIN LINK | BARB WIRE STOCKADE | Gas Line | G | Utility Pole | |
| New Temporary Rights | | Sign | Well WELL Mailbox | Guardrail | | Fire Hydrant | |
| New R/W Within Existing R/W | | | | Culvert | | Curbing | |

Cut Line C—C—C Fill Line F—F—F
Stonewall Retaining Wall
Baseline 10+00 11+00 12+00
Monument Traverse Point
Iron Rod Found ● IRF Pipe Found ● IPF
Replacement Pin Set ⊙

STATE OF MAINE
REGISTRY OF DEEDS
COUNTY _____
RECEIVED _____, _____
at _____h _____m _____M and recorded In
Plan Book _____, Page _____
Attest: _____
REGISTER

THIS PLAN WAS PREPARED IN CONNECTION WITH THE DEPARTMENT'S ACQUISITION OF REAL PROPERTY FOR TRANSPORTATION PURPOSES. IT CANNOT BE USED TO ESTABLISH LEGAL BOUNDARIES BETWEEN ABUTTING PROPERTY OWNERS.

25 0 25 50 75 100
Scale of Feet

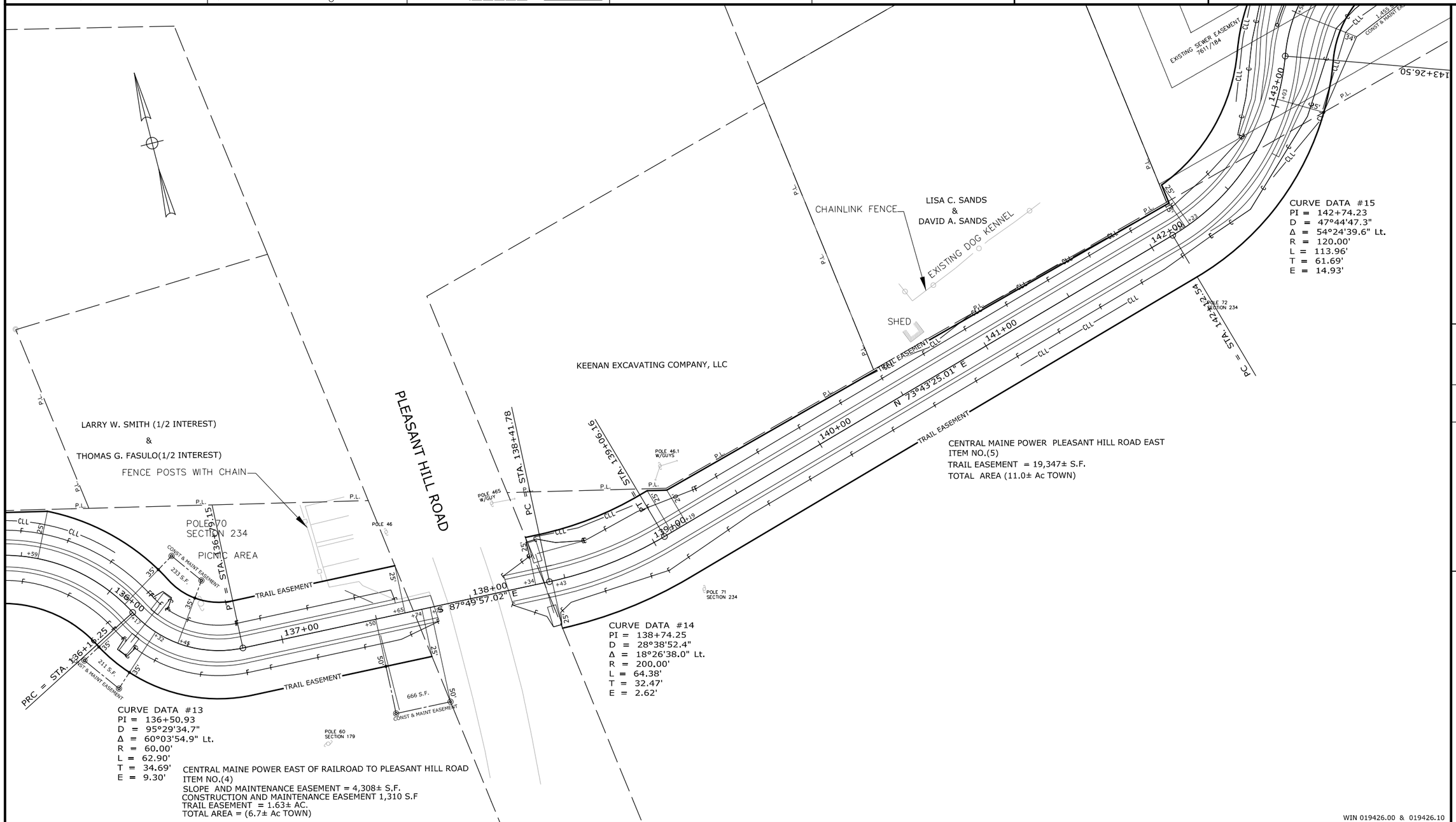


CURVE DATA #15
PI = 142+74.23
D = 47°44'47.3"
Δ = 54°24'39.6" Lt.
R = 120.00'
L = 113.96'
T = 61.69'
E = 14.93'

CENTRAL MAINE POWER PLEASANT HILL ROAD EAST
ITEM NO.(5)
TRAIL EASEMENT = 19,347± S.F.
TOTAL AREA (11.0± Ac TOWN)

CURVE DATA #14
PI = 138+74.25
D = 28°38'52.4"
Δ = 18°26'38.0" Lt.
R = 200.00'
L = 64.38'
T = 32.47'
E = 2.62'

CURVE DATA #13
PI = 136+50.93
D = 95°29'34.7"
Δ = 60°03'54.9" Lt.
R = 60.00'
L = 62.90'
T = 34.69'
E = 9.30'

CENTRAL MAINE POWER EAST OF RAILROAD TO PLEASANT HILL ROAD
ITEM NO.(4)
SLOPE AND MAINTENANCE EASEMENT = 4,308± S.F.
CONSTRUCTION AND MAINTENANCE EASEMENT 1,310 S.F
TRAIL EASEMENT = 1.63± AC.
TOTAL AREA = (6.7± Ac TOWN)

| ITEM | TECH | CHECKED |
|---|---|---|
| EXISTING CONDITION PLAN | RWH | |
| FINAL RIGHT OF WAY | RWH | |
| AREAS | | |

TOWN OF SCARBOROUGH
259 U.S. ROUTE 1
SCARBOROUGH, ME. 04074
RIGHT OF WAY MAP

WIN 019426.00 & 019426.10

**REVISIONS**

| NO. | DATE | DESCRIPTION | BY |
|---|---|---|---|
| | | | |

| PLAN FILED IN PLAN BOOK PAGE COUNTY RECORD | | | | | |
|---|---|---|---|---|---|
| NO. | GRANTOR | INSTRUMENT | DATE | BOOK | PAGE |
| | | | | | |

EASTERN TRAIL CONNECTOR
SCARBOROUGH TO SOUTH PORTLAND
SCARBOROUGH CUMBERLAND COUNTY
FED. AID PROJ. NO. AC-STP-1942(600)X & CMAQ-1942(610)

| JANRUARY 2019 | RIGHT-OF-WAY MAP | |
|---|---|---|
| SCALE 1" = 25' | SHEET 6 OF 12 | |

SHEET NUMBER
60
OF 66

PLAN LEGEND

| | | | | | |
|---|---|---|---|---|---|
| Town, County, State | New R/W Along Existing R/W | Existing / Proposed | Existing / Proposed | Cut Line | Fill Line |
| Approx. Property Lines P.L. | Building | Sanitary Sewer | Traveled Way | Stonewall | Retaining Wall |
| Existing Right of Way | Trees Conifer | Telephone Line | Ditch | Baseline 10+00 | 11+00 12+00 |
| Limits of Wrought Portion L.O.W.P. | Tree Line | Electric Line | Catch Basin | Monument | Traverse Point |
| Control Of Access C.O.A. | Water Edge | Water Line | Manhole | Iron Rod Found IRF | Pipe Found IPF |
| New Right of Way | Ledge | Underdrain Line | Sewer Manhole | Replacement Pin Set | |
| New Easement | Fence | Gas Line | Utility Pole | | |
| New Temporary Rights | Sign | Guardrail | Fire Hydrant | | |
| New R/W Within Existing R/W | | Culvert | Curbing | | |

STATE OF MAINE
REGISTRY OF DEEDS

COUNTY _____
RECEIVED _____, _____
at ____h____m____M and recorded in
Plan Book _____, Page _____
Attest: _____
REGISTER

THIS PLAN WAS PREPARED IN CONNECTION WITH THE DEPARTMENT'S ACQUISITION OF REAL PROPERTY FOR TRANSPORTATION PURPOSES. IT CANNOT BE USED TO ESTABLISH LEGAL BOUNDARIES BETWEEN ABUTTING PROPERTY OWNERS.

25 0 25 50 75 100
Scale of Feet

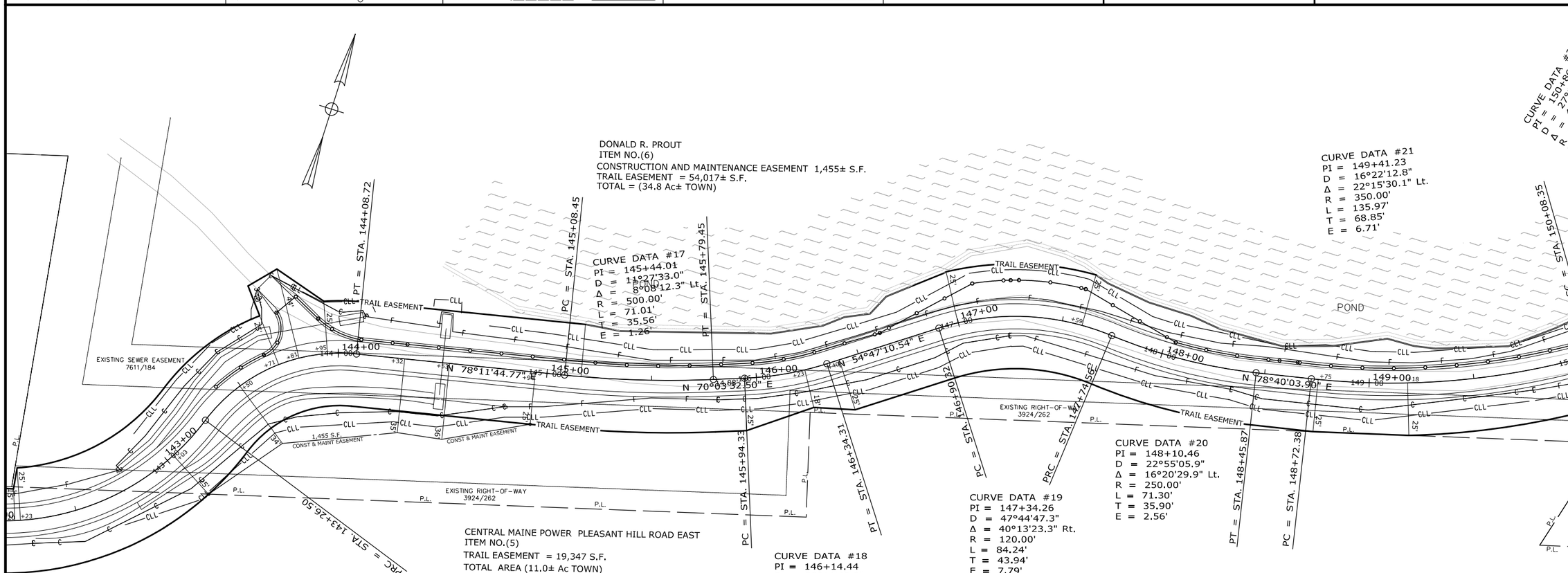


| ITEM | TECH | CHECKED |
|---|---|---|
| EXISTING CONDITION PLAN | RWH | |
| FINAL RIGHT OF WAY | RWH | |
| AREAS | | |

TOWN OF SCARBOROUGH
259 U.S. ROUTE 1
SCARBOROUGH, ME. 04074
RIGHT OF WAY MAP

WIN 019426.00 & 019426.10

Date:4/4/2023
Username:
Division:
Filename: 061_Row 7.dgn

| REVISIONS | | | |
|---|---|---|---|
| NO. | DATE | DESCRIPTION | BY |

PLAN FILED IN PLAN BOOK PAGE COUNTY RECORD

| NO. | GRANTOR | INSTRUMENT | DATE | BOOK | PAGE |
|---|---|---|---|---|---|

EASTERN TRAIL CONNECTOR
SCARBOROUGH TO SOUTH PORTLAND
SCARBOROUGH CUMBERLAND COUNTY
FED. AID PROJ. NO. AC-STP-1942(600)X & CMAQ-1942(610)

JANRUARY 2019 | RIGHT-OF-WAY MAP
SCALE 1" = 25' | SHEET 7 OF 12

SHEET NUMBER
61
OF 66

## PLAN LEGEND

| | | | | | | | |
|---|---|---|---|---|---|---|---|
| Town, County, State | New R/W Along Existing R/W | | Existing | Proposed | | Existing | Proposed |
| Approx. Property Lines P.L. | Building | Clearing Limit Line CLL | Sanitary Sewer | | Traveled Way | | |
| Existing Right of Way | Trees Conifer | Deciduous | Telephone Line T | T | Ditch | | |
| Limits of Wrought Portion L.O.W.P. | Tree Line | Bush Line | Electric Line E | E | Catch Basin | | |
| Control Of Access C.O.A. | Water Edge | | Water Line W | W | Manhole | | |
| New Right of Way | Ledge | Rock/Boulder Flag Pole | Underdrain Line | | Sewer Manhole | | |
| New Easement | Fence CHAIN LINK | BARB WIRE STOCKADE | Gas Line G | G | Utility Pole | | |
| New Temporary Rights | Sign | Well WELL Mailbox | Guardrail | | Fire Hydrant | | |
| New R/W Within Existing R/W | | | Culvert | | Curbing | | |

| | | | |
|---|---|---|---|
| Cut Line C—C—C | Fill Line F—F—F | | |
| Stonewall | Retaining Wall | | |
| Baseline 10+00 11+00 12+00 | | | |
| Monument | Traverse Point | | |
| Iron Rod Found ● IRF | Pipe Found ● IPF | | |
| Replacement Pin Set ⊙ | | | |

STATE OF MAINE
REGISTRY OF DEEDS

COUNTY _____
RECEIVED _____, _____
at _____h_____m_____M and recorded In
Plan Book _____, Page _____
Attest: _____
REGISTER

THIS PLAN WAS PREPARED IN CONNECTION WITH THE DEPARTMENT'S ACQUISITION OF REAL PROPERTY FOR TRANSPORTATION PURPOSES. IT CANNOT BE USED TO ESTABLISH LEGAL BOUNDARIES BETWEEN ABUTTING PROPERTY OWNERS.

25 0 25 50 75 100
Scale of Feet

CURVE DATA #21
PI = 149+41.23
D = 16°22'12.8"
Δ = 22°15'30.1" Lt.
R = 350.00'
L = 135.97'
T = 68.85'
E = 6.71'

CURVE DATA #22
PI = 150+86.19
D = 27°17'01.3"
Δ = 40°40'38.2" Lt.
R = 210.00'
L = 149.09'
T = 77.84'
E = 13.96'

DONALD R. PROUT
ITEM NO.(6)
CONSTRUCTION AND MAINTENANCE EASEMENT 1,455± S.F.
TRAIL EASEMENT = 54,017± S.F.
TOTAL = (34.8± Ac TOWN)

INHABITANTS OF THE TOWN OF SCARBOROUGH
ITEM NO.(7)
TRAIL EASEMENT = 46,280± S.F.
TOTAL AREA = (20.6± Ac. TOWN)

CURVE DATA #23
PI = 154+93.64
D = 5°43'46.5"
Δ = 6°12'26.6" Lt.
R = 1000.00'
L = 108.34'
T = 54.22'
E = 1.47'

CURVE DATA #24
PI = 156+57.35
D = 11°27'33.0"
Δ = 5°39'56.7" Rt.
R = 500.00'
L = 49.44'
T = 24.74'
E = 0.61'

POND
APPARENT DRY HYDRANT
PCC = STA. 150+08.35
PT = STA. 151+57.44
PC = STA. 154+39.42
PT = STA. 155+47.76
PC = STA. 156+32.60
PT = STA. 156+82.05
TRAIL EASEMENT
CENTRAL MAINE POWER EASEMENT 2210/424 & 2954/72
135'
EXISTING SEWER EASEMENT 7611/184
POLE 6 SECTION 152
POLE 7 SECTION 152
N 15°43'55.54" E
N 9°31'28.92" E
149+00.18
150+00
151+00
152+00
153+00
154+00
155+00
156+00

| ITEM | TECH | CHECKED |
|---|---|---|
| EXISTING CONDITION PLAN | RWH | |
| FINAL RIGHT OF WAY | RWH | |
| AREAS | | |

TOWN OF SCARBOROUGH
259 U.S. ROUTE 1
SCARBOROUGH, ME. 04074
RIGHT OF WAY MAP

WIN 019426.00 & 019426.10

| REVISIONS | | | |
|---|---|---|---|
| NO. | DATE | DESCRIPTION | BY |
| | | | |

| PLAN FILED IN PLAN BOOK PAGE COUNTY RECORD | | | | | |
|---|---|---|---|---|---|
| NO. | GRANTOR | INSTRUMENT | DATE | BOOK | PAGE |
| | | | | | |

EASTERN TRAIL CONNECTOR
SCARBOROUGH TO SOUTH PORTLAND
SCARBOROUGH CUMBERLAND COUNTY
FED. AID PROJ. NO. AC-STP-1942(600)X & CMAQ-1942(610)

| JANRUARY 2019 | RIGHT-OF-WAY MAP | |
|---|---|---|
| SCALE 1" = 25' | SHEET 8 OF 12 | |

SHEET NUMBER
62
OF 66

Date:4/4/2023
Username:
Division:
Filename: 062_Row 8.dgn

PLAN LEGEND

| | | | | | |
|---|---|---|---|---|---|
| Town, County, State | New R/W Along Existing R/W | Sanitary Sewer | Traveled Way | Cut Line | Fill Line |
| Approx. Property Lines P.L. | Building | Telephone Line | Ditch | Stonewall | Retaining Wall |
| Existing Right of Way | Trees Conifer | Electric Line | Catch Basin | Baseline 10+00 | 11+00 12+00 |
| Limits of Wrought Portion L.O.W.P. | Tree Line | Water Line | Manhole | Monument | Traverse Point |
| Control Of Access C.O.A. | Water Edge | Underdrain Line | Sewer Manhole | Iron Rod Found IRF | Pipe Found IPF |
| New Right of Way | Ledge | Gas Line | Utility Pole | Replacement Pin Set | |
| New Easement | Fence CHAIN LINK | Guardrail | Fire Hydrant | | |
| New Temporary Rights | Sign | Culvert | Curbing | | |
| New R/W Within Existing R/W | Well WELL | Mailbox | | | |

Existing / Proposed

STATE OF MAINE
REGISTRY OF DEEDS

COUNTY _____
RECEIVED _____, _____
at ____h____m____M and recorded in
Plan Book _____, Page _____
Attest: _____
REGISTER

THIS PLAN WAS PREPARED IN CONNECTION WITH THE DEPARTMENT'S ACQUISITION OF REAL PROPERTY FOR TRANSPORTATION PURPOSES. IT CANNOT BE USED TO ESTABLISH LEGAL BOUNDARIES BETWEEN ABUTTING PROPERTY OWNERS.

25 0 25 50 75 100
Scale of Feet

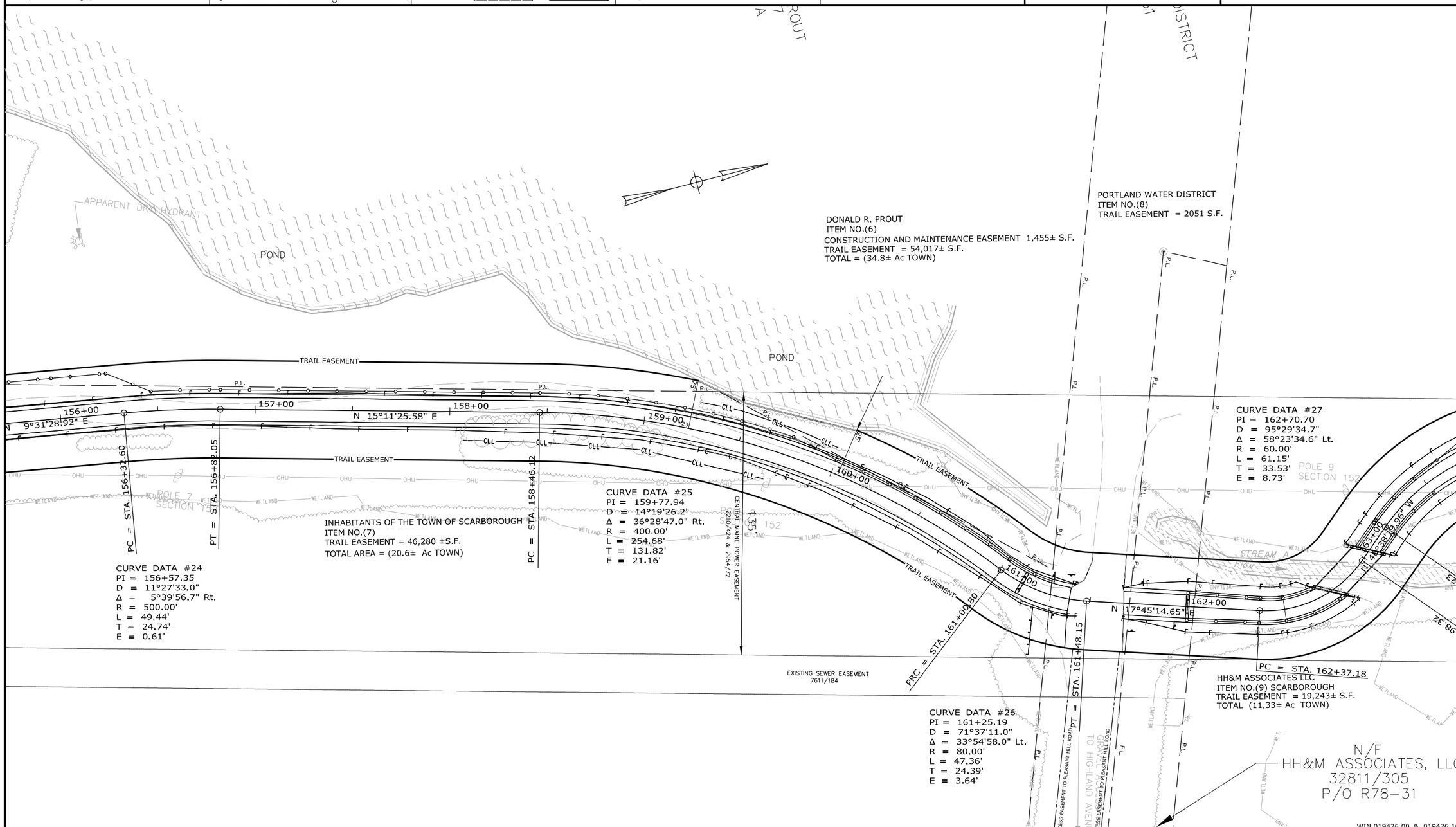


| ITEM | TECH | CHECKED |
|---|---|---|
| EXISTING CONDITION PLAN | RWH | |
| FINAL RIGHT OF WAY | RWH | |
| AREAS | | |

TOWN OF SCARBOROUGH
259 U.S. ROUTE 1
SCARBOROUGH, ME. 04074
RIGHT OF WAY MAP

Date:4/4/2023
Username:
Division:
Filename: 063_Row 9.dgn

REVISIONS

| NO. | DATE | DESCRIPTION | BY |
|---|---|---|---|
| | | | |

PLAN FILED IN PLAN BOOK PAGE COUNTY RECORD

| NO. | GRANTOR | INSTRUMENT | DATE | BOOK | PAGE |
|---|---|---|---|---|---|
| | | | | | |

EASTERN TRAIL CONNECTOR
SCARBOROUGH TO SOUTH PORTLAND
SCARBOROUGH CUMBERLAND COUNTY
FED. AID PROJ. NO. AC-STP-1942(600)X & CMAQ-1942(610)

JANRUARY 2019 | RIGHT-OF-WAY MAP
SCALE 1" = 25' | SHEET 9 OF 12

SHEET NUMBER
63
OF 66

## PLAN LEGEND

| | | | | | | | |
|---|---|---|---|---|---|---|---|
| Town, County, State | New R/W Along Existing R/W | | Existing | Proposed | | Existing | Proposed |
| Approx. Property Lines P.L. | Building | Clearing Limit Line CLL | Sanitary Sewer | | Traveled Way | | |
| Existing Right of Way | Trees Conifer | Deciduous | Telephone Line | | Ditch | | |
| Limits of Wrought Portion L.O.W.P. | Tree Line | Bush Line | Electric Line | | Catch Basin | | |
| Control Of Access C.O.A. | Water Edge | | Water Line | | Manhole | | |
| New Right of Way | Ledge | Rock/Boulder Flag Pole | Underdrain Line | | Sewer Manhole | | |
| New Easement | Fence CHAIN LINK | BARB WIRE STOCKADE | Gas Line | | Utility Pole | | |
| New Temporary Rights | Sign | Well WELL Mailbox | Guardrail | | Fire Hydrant | | |
| New R/W Within Existing R/W | | | Culvert | | Curbing | | |

Cut Line C C C — Fill Line F F F
Stonewall — Retaining Wall
Baseline 10+00 11+00 12+00
Monument — Traverse Point
Iron Rod Found ● IRF — Pipe Found ● IPF
Replacement Pin Set

STATE OF MAINE
REGISTRY OF DEEDS
COUNTY _____
RECEIVED _____, _____
at _____h _____m _____M and recorded In
Plan Book _____, Page _____
Attest: _____
REGISTER

THIS PLAN WAS PREPARED IN CONNECTION WITH THE DEPARTMENT'S ACQUISITION OF REAL PROPERTY FOR TRANSPORTATION PURPOSES. IT CANNOT BE USED TO ESTABLISH LEGAL BOUNDARIES BETWEEN ABUTTING PROPERTY OWNERS.

25 0 25 50 75 100
Scale of Feet

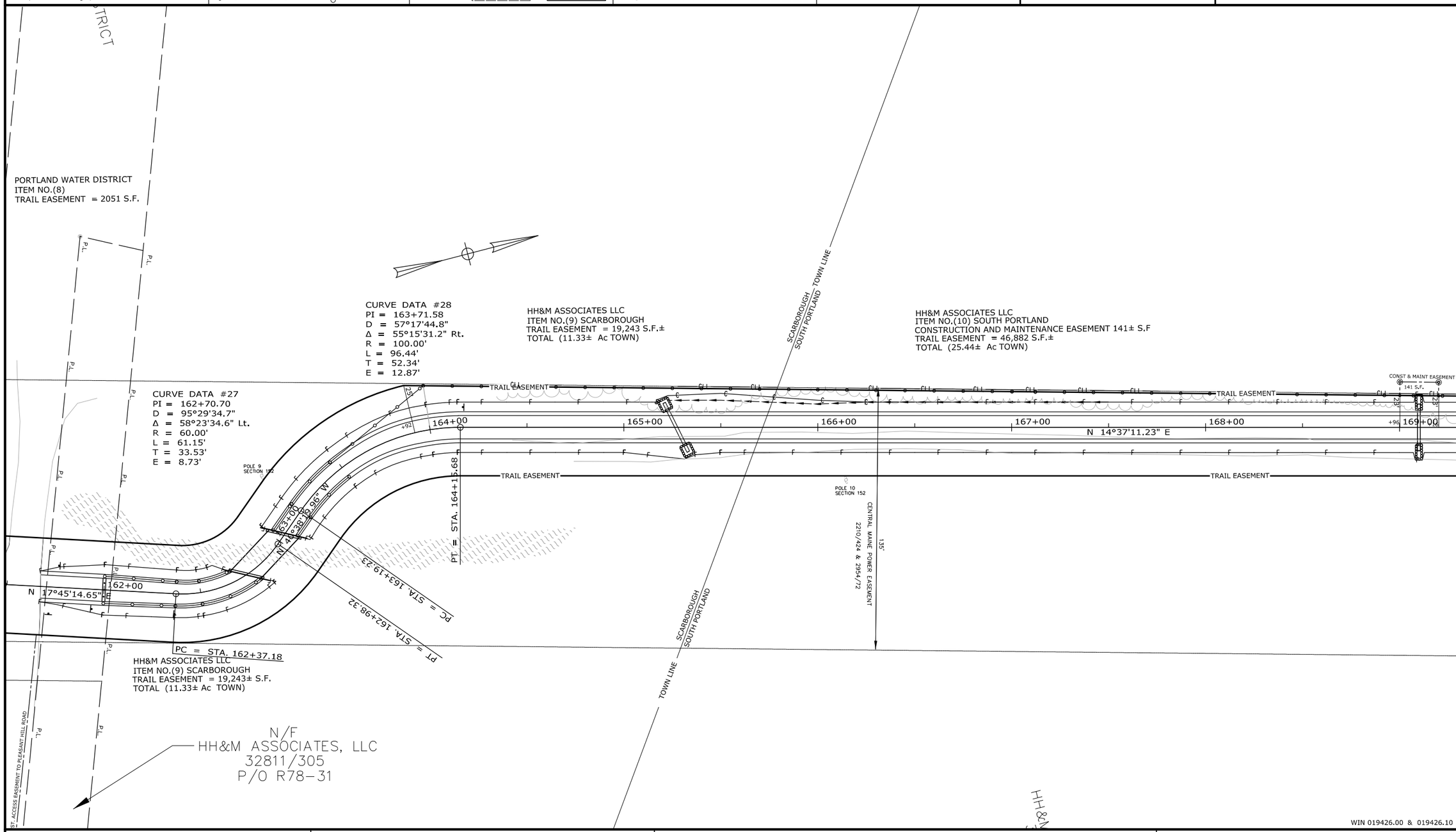


WIN 019426.00 & 019426.10

| ITEM | CHECKED | TECH |
|---|---|---|
| EXISTING CONDITION PLAN | | RWH |
| FINAL RIGHT OF WAY | | RWH |
| AREAS | | |

TOWN OF
SCARBOROUGH
259 U.S. ROUTE 1
SCARBOROUGH, ME. 04074
RIGHT OF WAY MAP

| REVISIONS | | | |
|---|---|---|---|
| NO. | DATE | DESCRIPTION | BY |
| | | | |

| PLAN FILED IN PLAN BOOK PAGE COUNTY RECORD | | | | | |
|---|---|---|---|---|---|
| NO. | GRANTOR | INSTRUMENT | DATE | BOOK | PAGE |
| | | | | | |

EASTERN TRAIL CONNECTOR
SCARBOROUGH TO SOUTH PORTLAND
SCARBOROUGH CUMBERLAND COUNTY
FED. AID PROJ. NO. AC-STP-1942(600)X & CMAQ-1942(610)

| JANRUARY 2019 | RIGHT-OF-WAY MAP | |
|---|---|---|
| SCALE 1" = 25' | SHEET 10 OF 12 | |

SHEET NUMBER
64
OF 66

Date:4/4/2023
Username:
Division:
Filename: 064_Row 10.dgn

PLAN LEGEND

| | | | | | |
|---|---|---|---|---|---|
| Town, County, State | New R/W Along Existing R/W | Existing / Proposed | Existing / Proposed | Cut Line | Fill Line |
| Approx. Property Lines P.L. | Building | Sanitary Sewer | Traveled Way | Stonewall | Retaining Wall |
| Existing Right of Way | Trees Conifer | Telephone Line | Ditch | Baseline 10+00 | 11+00 12+00 |
| Limits of Wrought Portion L.O.W.P. | Tree Line | Electric Line | Catch Basin | Monument | Traverse Point |
| Control Of Access C.O.A. | Water Edge | Water Line | Manhole | Iron Rod Found IRF | Pipe Found IPF |
| New Right of Way | Ledge | Underdrain Line | Sewer Manhole | Replacement Pin Set | |
| New Easement | Fence CHAIN LINK | Gas Line | Utility Pole | | |
| New Temporary Rights | Sign | Guardrail | Fire Hydrant | | |
| New R/W Within Existing R/W | Well WELL | Culvert | Curbing | | |

STATE OF MAINE
REGISTRY OF DEEDS

COUNTY _____
RECEIVED _____, _____
at ____h____m____M and recorded in
Plan Book _____, Page _____
Attest: _____
REGISTER

THIS PLAN WAS PREPARED IN CONNECTION WITH THE DEPARTMENT'S ACQUISITION OF REAL PROPERTY FOR TRANSPORTATION PURPOSES. IT CANNOT BE USED TO ESTABLISH LEGAL BOUNDARIES BETWEEN ABUTTING PROPERTY OWNERS.

25 0 25 50 75 100
Scale of Feet

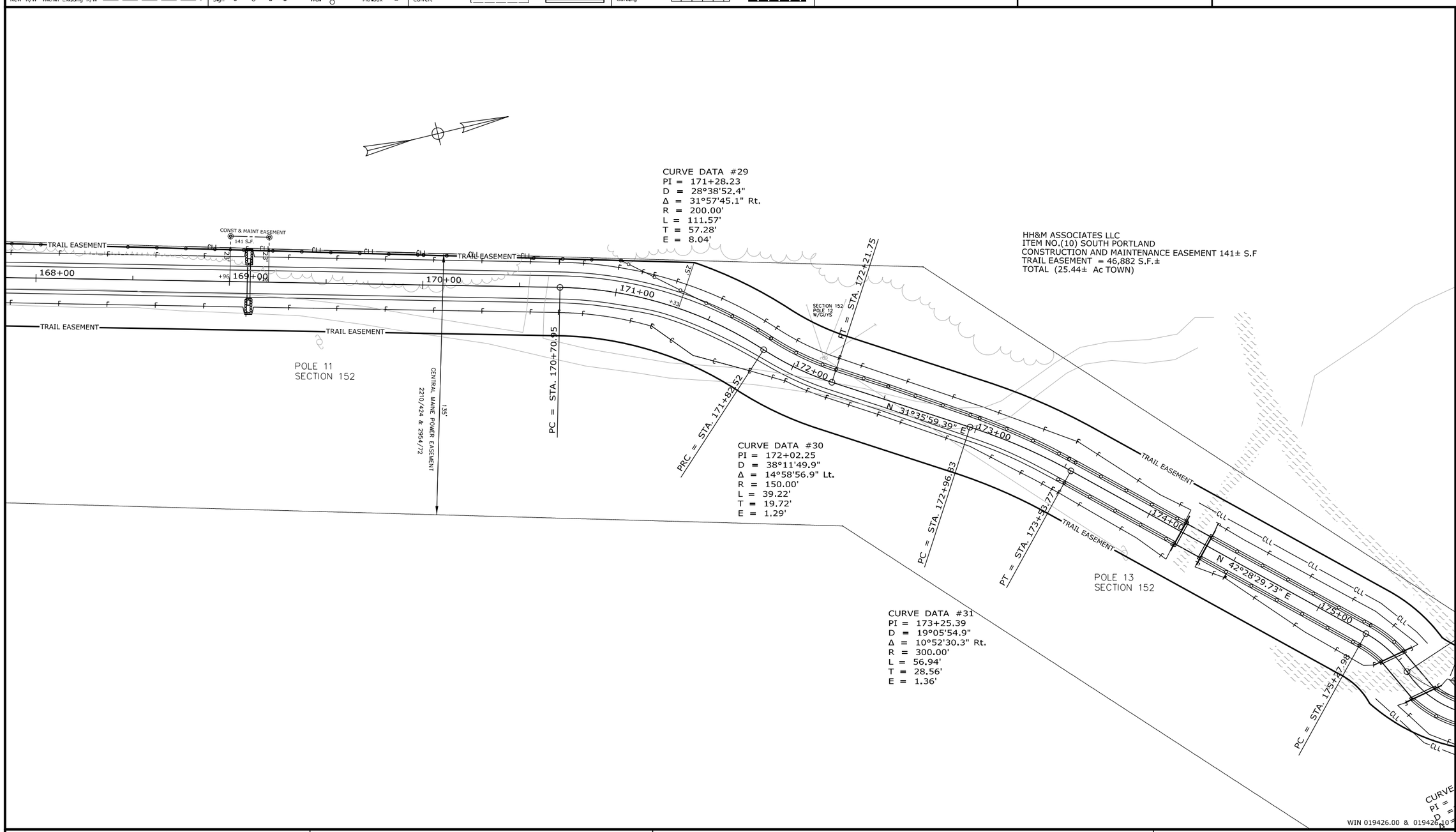


| ITEM | TECH | CHECKED |
|---|---|---|
| EXISTING CONDITION PLAN | RWH | |
| FINAL RIGHT OF WAY | RWH | |
| AREAS | | |

TOWN OF SCARBOROUGH
259 U.S. ROUTE 1
SCARBOROUGH, ME. 04074
RIGHT OF WAY MAP

Date:4/4/2023
Username:
Division:
Filename: 065_Row 11.dgn

REVISIONS

| NO. | DATE | DESCRIPTION | BY |
|---|---|---|---|
| | | | |

PLAN FILED IN PLAN BOOK PAGE COUNTY RECORD

| NO. | GRANTOR | INSTRUMENT | DATE | BOOK | PAGE |
|---|---|---|---|---|---|
| | | | | | |

EASTERN TRAIL CONNECTOR
SCARBOROUGH TO SOUTH PORTLAND
SCARBOROUGH CUMBERLAND COUNTY
FED. AID PROJ. NO. AC-STP-1942(600)X & CMAQ-1942(610)

JANRUARY 2019 | RIGHT-OF-WAY MAP
SCALE 1" = 25' | SHEET 11 OF 12

SHEET NUMBER
65
OF 66

PLAN LEGEND

| | | | | | |
|---|---|---|---|---|---|
| Town, County, State | New R/W Along Existing R/W | Sanitary Sewer | Traveled Way | Cut Line | Fill Line |
| Approx. Property Lines P.L. | Building | Telephone Line | Ditch | Stonewall | Retaining Wall |
| Existing Right of Way | Trees Conifer | Electric Line | Catch Basin | Baseline 10+00 | 11+00 12+00 |
| Limits of Wrought Portion L.O.W.P. | Tree Line | Water Line | Manhole | Monument | Traverse Point |
| Control Of Access C.O.A. | Water Edge | Underdrain Line | Sewer Manhole | Iron Rod Found IRF | Pipe Found IPF |
| New Right of Way | Ledge | Gas Line | Utility Pole | Replacement Pin Set | |
| New Easement | Fence | Guardrail | Fire Hydrant | | |
| New Temporary Rights | Sign | Culvert | Curbing | | |
| New R/W Within Existing R/W | | | | | |

STATE OF MAINE
REGISTRY OF DEEDS

COUNTY _____
RECEIVED _____, _____
at ____h____m____M and recorded in
Plan Book _____, Page _____
Attest: _____
REGISTER

THIS PLAN WAS PREPARED IN CONNECTION WITH THE DEPARTMENT'S ACQUISITION OF REAL PROPERTY FOR TRANSPORTATION PURPOSES. IT CANNOT BE USED TO ESTABLISH LEGAL BOUNDARIES BETWEEN ABUTTING PROPERTY OWNERS.

25 0 25 50 75 100
Scale of Feet

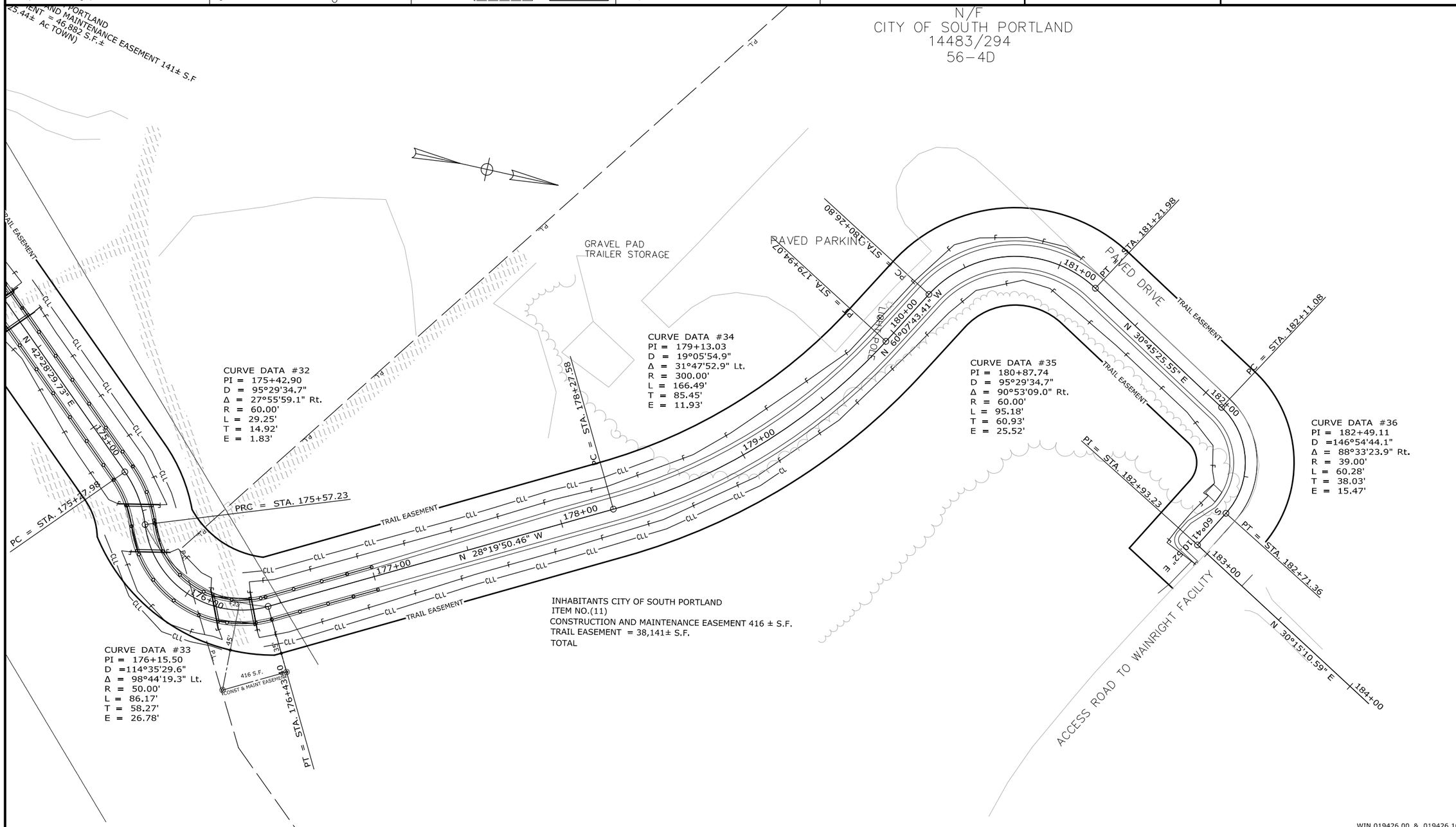


WIN 019426.00 & 019426.10

| ITEM | TECH | CHECKED |
|---|---|---|
| EXISTING CONDITION PLAN | RWH | |
| FINAL RIGHT OF WAY | RWH | |
| AREAS | | |

TOWN OF SCARBOROUGH
259 U.S. ROUTE 1
SCARBOROUGH, ME. 04074
RIGHT OF WAY MAP

| REVISIONS | | | |
|---|---|---|---|
| NO. | DATE | DESCRIPTION | BY |

PLAN FILED IN PLAN BOOK PAGE COUNTY RECORD

| NO. | GRANTOR | INSTRUMENT | DATE | BOOK | PAGE |
|---|---|---|---|---|---|

EASTERN TRAIL CONNECTOR
SCARBOROUGH TO SOUTH PORTLAND
SCARBOROUGH CUMBERLAND COUNTY
FED. AID PROJ. NO. AC-STP-1942(600)X & CMAQ-1942(610)

JANRUARY 2019 | RIGHT-OF-WAY MAP
SCALE 1" = 25' | SHEET 12 OF 12

SHEET NUMBER
66
OF 66

Date:4/4/2023
Username:
Division:
Filename: 066_Row 12.dgn