LODI UNIFIED SCHOOL DISTRICT

LODI UNIFIED SCHOOL DISTRICT LUNCH SHELTERS -BID SET

ANSEL ADAMS ELEMENTARY SCHOOL
BORCHARDT ELEMENTARY SCHOOL
CLAIRMONT ELEMENTARY SCHOOL
ELLERTH E. LARSON ELEMENTARY SCHOOL
CHRISTA MCAULIFFE MIDDLE SCHOOL
MILLSWOOD MIDDLE SCHOOL
MANLIO SILVA ELEMENTARY SCHOOL
SUTHERLAND ELEMENTARY SCHOOL

LODI USD

HMC Architects

R221551X00

2101 CAPITOL AVENUE, SUITE 100,
SACRAMENTO, CA, 95816
916 368 7990 / www.hmcarchitects.com

PROJECT TEAM

CIVIL ENGINEER
WARREN GREEN ENGINEERING
3114 BRENNANS RD. LOOMIS, CA 95650
916.663.2323

FACILITY:

PROJECT:
LODI UNIFIED SCHOOL DISTRICT LUNCH SHELTERS -

SHEET NAME:
COVER SHEET

CONSTRUCTION DOCUMENTS

DATE: **10/18/2023** | CLIENT PROJ NO:

SHEET:

G0.10

Autodesk Docs://R221551X00 Lodi USD Lunch Shelters/R221551X00-A-ADAMS-ES-LUNCH-SHELTER.rvt
10/10/2023 4:26:12 PM

PLEASE RECYCLE

LODI UNIFIED SCHOOL DISTRICT

LODI UNIFIED SCHOOL DISTRICT LUNCH SHELTERS - ANSEL ADAMS ELEMENTARY SCHOOL

9275 GLACIER POINT DRIVE STOCKTON, CA 95212

THE LINE SHOWN ABOVE IS EXACTLY ONE INCH LONG AT THIS SHEETS ORIGINAL PAGE SIZE

GENERAL NOTES

1. CONSTRUCTION DOCUMENTS DESCRIBE THE PRODUCTS, SYSTEMS, QUANTITIES, CONFIGURATION, AND PERFORMANCE SPECIFICATIONS THAT DELIVER THE OVERALL DESIGN INTENT OF THE PROJECT.
2. THE CONSTRUCTION DOCUMENT DRAWINGS AND SPECIFICATIONS ARE COMPLEMENTARY, AND WHAT IS REQUIRED BY ONE SHALL BE AS BINDING AS IF REQUIRED BY BOTH.
3. PERFORMANCE BY THE CONSTRUCTION TEAM SHALL BE CONSISTENT WITH THE CONSTRUCTION DRAWINGS AND SPECIFICATIONS AS NECESSARY TO DELIVER THE INDICATED RESULTS OF THE DESIGN INTENT.
4. VERIFY ALL DIMENSIONS, LOCATIONS OF EXISTING UTILITIES, AND CONDITIONS ON THE JOB SITE PRIOR TO THE START OF WORK OR PORTIONS OF THE WORK. NOTIFY THE ARCHITECT IMMEDIATELY OF ANY DISCREPANCIES BETWEEN THE ACTUAL FIELD CONDITIONS AND THE CONSTRUCTION DOCUMENTS. EXISTING CONDITIONS ARE INDICATED AS A RESULT OF FIELD OBSERVATIONS, INFORMATION SHOWN ON AVAILABLE DOCUMENTS AND FIELD CONDITIONS AT THE TIME OF PREPARATION.
5. ALL MATERIALS AND WORKMANSHIP SHALL COMPLY WITH ALL GOVERNING CODES, ORDINANCES, REGULATIONS AND LAWS.
6. THE DESIGN ADEQUACY AND SAFETY OF ERECTION BRACING, SHORING, TEMPORARY SUPPORTS AND SCAFFOLDING IS THE SOLE RESPONSIBILITY OF THE CONTRACTOR.
7. WHERE ANY CONFLICT OCCURS BETWEEN THE REQUIREMENTS OF LAWS, CODES, ORDINANCES, RULES AND REGULATIONS, THE MOST STRINGENT SHALL GOVERN.
8. IN NO CASE SHALL WORKING DIMENSIONS BE SCALED FROM PLANS, SECTIONS OR DETAILS ON THE DRAWINGS.
9. DETAILS MARKED 'TYPICAL' SHALL APPLY IN ALL CASES UNLESS SPECIFICALLY NOTED OTHERWISE.
10. ENACT ALL MEASURES TO PROTECT AND SAFEGUARD ALL EXISTING ELEMENTS TO REMAIN FROM BEING DAMAGED. REPLACE OR REPAIR EXISTING ELEMENTS DAMAGED BY THE EXECUTION OF THIS CONTRACT TO EQUAL OR BETTER CONDITION.
11. PRIOR TO THE START OF WORK THE CONTRACTOR SHALL COORDINATE BETWEEN THE REQUIREMENTS OF ALL DISCIPLINES HEREIN AND BETWEEN THE REQUIREMENTS OF ALL DRAWINGS AND SPECIFICATIONS IN ORDER THAT ALL ITEMS SATISFACTORILY RELATE TO ONE ANOTHER. NOTIFY ARCHITECT IMMEDIATELY REGARDING ANY ITEMS THAT CANNOT BE COORDINATED.
12. CONTRACTOR SHALL EXCERCISE EXTREME CAUTION IN EXCAVATING AND TRENCHING ON THIS SITE TO AVOID EXISTING DUCTS, PIPING, CONDUIT, ETC. AND TO PREVENT HAZARD TO PERSONNEL AND/OR TO EXISTING UNDERGROUND UTILITIES OR STRUCTURES. THE CONTRACTOR SHALL IMMEDIATELY NOTIFY THE ARCHITECT SHOULD SUCH UNIDENTIFIED CONDITIONS BE DISCOVERED. THESE DRAWINGS AND SPECIFICATIONS DO NOT INCLUDE THE NECESSARY COMPONENTS FOR CONSTRUCTION SAFETY.
13. PROVIDE SAFE MEANS OF EGRESS THROUGH THE BUILDING AND ON SITE AT ALL TIMES.
14. PROVIDE FIRE EXTINGUISHERS PER CFC AT ALL TIMES THROUGHOUT CONSTRUCTION AREA.
15. PROVIDE CONSTRUCTION BARRIERS BETWEEN CONSTRUCTION AREAS AND OCCUPIED AREAS AT ALL TIMES.
16. CUTTING, BORING, SAWCUTTING OR DRILLING THROUGH THE EXISTING OR NEW STRUCTURAL ELEMENTS SHALL NOT TO BE STARTED UNTIL THE DETAILS HAVE BEEN REVIEWED AND APPROVED BY THE ARCHITECT, AND STRUCTURAL ENGINEER OF RECORD.
17. AVOID DISRUPTION TO ADJACENT AREAS. KEEP NOISE TO A LEVEL ACCEPTABLE TO THE OWNER BY SCHEDULING EXCESSIVE NOISE TASKS WITH OWNER REPRESENTATIVE. THIS MAY REQUIRE AFTER HOURS WORK.
18. **STATEMENT OF HAZARDOUS MATERIAL DISCOVERY** IF THE CONTRACTOR ENCOUNTERS A HAZARDOUS MATERIAL OR SUBSTANCE NOT ADDRESSED IN THE HAZARDOUS MATERIAL REPORT OR IN A CONCEALED CONDITION, THE CONTRACTOR SHALL, UPON RECOGNIZING THE CONDITION, IMMEDIATELY STOP WORK IN THE AFFECTED AREA AND REPORT THE CONDITION TO THE OWNER AND ARCHITECT IN WRITING.
UPON RECEIPT OF THE CONTRACTOR'S WRITTEN NOTICE, THE OWNER SHALL OBTAIN THE SERVICES OF A LICENSED LABORATORY TO VERIFY THE PRESENCE OR ABSENCE OF THE MATERIAL OR SUBSTANCE REPORTED BY THE CONTRACTOR AND, IN THE EVENT SUCH MATERIAL OR SUBSTANCE IS FOUND TO BE PRESENT, TO PROVIDE RECOMMENDATIONS TO CAUSE IT TO BE ABATED AND RENDERED HARMLESS.
WHEN THE MATERIAL OR SUBSTANCE HAS BEEN ABATED AND RENDERED HARMLESS, WORK IN THE AFFECTED AREA SHALL RESUME UPON WRITTEN AGREEMENT OF THE OWNER AND CONTRACTOR.
19. PENETRATIONS TO FIRE RATED MATERIALS OR ASSEMBLIES SHALL BE RESTORED TO EQUAL RATING. SPECIAL INSPECTOR DSA 103 REQ'D.
21. COMPLY WITH TITLE 24, PART 9, CALIFORNIA FIRE CODE, CHAPTER 33 FIRE SAFETY DURING CONSTRUCTION AND DEMOLITION, DURING ALL PHASES OF PROJECT.
22. ALL WORK SHALL CONFORM TO 2019 TITLE 24, CALIFORNIA CODE OF REGULATIONS (CCR).
23. CHANGES TO THE APPROVED DRAWINGS AND SPECIFICATIONS SHALL BE MADE BY AN ADDENDUM OR A CONSTRUCTION CHANGED DOCUMENT (CCD) APPROVED BY THE DIVISION OF THE STATE ARCHITECT, AS REQUIRED BY SECTION 4-338, PART 1, TITLE 24, CCR.
24. A "DSA CERTIFIED" CLASS 2 PROJECT INSPECTOR EMPLOYED BY THE DISTRICT (OWNER) AND APPROVED BY THE DSA SHALL PROVIDE CONTINUOUS INSPECTION OF THE WORK. THE DUTIES OF THE INSPECTOR ARE DEFINED IN SECTION 4-342, PART 1, TITLE 24, CCR.
25. A DSA ACCEPTED TESTING LABORATORY DIRECTLY EMPLOYED BY THE DISTRICT (OWNER) SHALL CONDUCT ALL THE REQUIRED TESTS AND INSPECTIONS FOR THE PROJECT.
26. THE INTENT OF THESE DRAWINGS AND SPECIFICATIONS IS THAT THE WORK OF THE ALTERATION, REHABILITATION OR RECONSTRUCTION IS TO BE IN ACCORDANCE WITH TITLE 24, CCR. SHOULD ANY EXISTING CONDITIONS SUCH AS DETERIORATION OR NON-COMPLYING CONSTRUCTION BE DISCOVERED WHICH IS NOT COVERED BY THE CONTRACT DOCUMENTS WHEREIN THE FINISHED WORK WILL NOT COMPLY WITH TITLE 24, CCR, A CONSTRUCTION CHANGE DOCUMENT (CCD), OR A SEPARATE SET OF PLANS AND SPECIFICATIONS, DETAILING AND SPECIFYING THE REQUIRED WORK SHALL BE SUBMITTED TO AND APPROVED BY DSA BEFORE PROCEEDING WITH THE WORK. (SECTION 4-317(c), PART 1, TITLE 24, CCR)
27. GRADING PLANS, DRAINAGE IMPROVEMENTS, ROAD AND ACCESS REQUIREMENTS AND ENVIRONMENTAL HEALTH CONSIDERATIONS SHALL COMPLY WITH ALL LOCAL ORDINANCES.
28. SUBSTITUTIONS AFFECTING DSA REGULATED ITEMS SHALL BE CONSIDERED AS A CONSTRUCTION CHANGE DOCUMENT, AND SHALL BE APPROVED BY DSA PRIOR TO FABRICATION AND INSTALLATION PER DSA IR A-6 AND SECTION 338(c) PART 1, TITLE 24, CCR.

CODES

PARTIAL LIST OF APPLICABLE CODES

2022	CALIFORNIA ADMINISTRATIVE CODE, PART 1, TITLE 24 C.C.R.
2022	CALIFORNIA BUILDING CODE (CBC), PART 2, TITLE 24 C.C.R. (2021 INTERNATIONAL BUILDING CODE VOLUMES 1 & 2 AND 2022 CALIFORNIA AMENDMENTS)
2022	CALIFORNIA ELECTRICAL CODE (CEC), PART 3, TITLE 24 C.C.R. (2020 NATIONAL ELECTRICAL CODE AND 2022 CALIFORNIA AMENDMENTS)
2022	CALIFORNIA MECHANICAL CODE (CMC) PART 4, TITLE 24 C.C.R. (2021 UNIFORM MECHANICAL CODE AND 2022 CALIFORNIA AMENDMENTS)
2022	CALIFORNIA PLUMBING CODE (CPC), PART 5, TITLE 24 C.C.R. (2021 UNIFORM PLUMBING CODE AND 2022 CALIFORNIA AMENDMENTS)
2022	CALIFORNIA ENERGY CODE (CEC), PART 6, TITLE 24 C.C.R.
2022	CALIFORNIA HISTORICAL BUILDING CODE (CHBC), PART 8, TITLE 24 C.C.R.
2022	CALIFORNIA FIRE CODE, PART 9, TITLE 24 C.C.R. (2021 INTERNATIONAL FIRE CODE AND 2022 CALIFORNIA AMENDMENTS)
2022	CALIFORNIA EXISTING BUILDING CODE (CEBC), PART 10, TITLE 24 C.C.R. (2021 INTERNATIONAL EXISTING CODE AND 2022 CALIFORNIA AMENDMENTS)
2022	CALIFORNIA GREEN BUILDING STANDARDS CODE (CALGREEN), PART 11, TITLE 24 C.C.R.
2022	CALIFORNIA REFERENCED STANDARDS, PART 12,TITLE 24 C.C.R.
TITLE 19	C.C.R., PUBLIC SAFETY, STATE FIRE MARSHAL REGULATIONS.
2019	ASME A17.1/B44-19 SAFETY CODE FOR ELEVATORS AND ESCALATORS
2020	ASME 18.1 - SAFETY STANDARD FOR PLATFORM LIFTS AND STAIRWAY CHAIR LIFTS

NOTE TO CONTRACTOR:
THE CALIFORNIA ENERGY CODE SECTION 10-103 REQUIRES ACCEPTANCE TESTING ON ALL NEWLY INSTALLED LIGHTING CONTROLS, MECHANICAL SYSTEMS, ENVELOPES, AND PROCESS EQUIPMENT AFTER INSTALLATION AND BEFORE PROJECT COMPLETION. AN ACCEPTANCE TEST IS A FUNCTIONAL PERFORMANCE TEST TO HELP ENSURE THAT NEWLY INSTALLED EQUIPMENT IS OPERATING AND IN COMPLIANCE WITH ENERGY CODE.

LIGHTING CONTROLS ACCEPTANCE TESTS MUST BE PERFORMED BY A CERTIFIED LIGHTING CONTROLS ACCEPTANCE TEST TECHNICIAN (ATT).

MECHANICAL SYSTEM ACCEPATANCE TEST MUST BE PERFORMED BY A CERTIFIED MECHANICAL ATT FOR PROJECTS SUBMITTED ON OR AFTER OCTOBER 1, 2021.

A LISTING OF CERTIFIED ATTs CAN BE FOUND AT: HTTPS://WWW.ENERGY.CA.GOV/PROGRAMS-AND-TOPICS/PROGRAMS/ACCEPTANCE-TEST-TECHNICIAN-CERTIFICATION-PROVIDER-PROGAM/ACCEPTANCE

THE ACCEPTANCE TESTING PROCEDURES MUST BE REPEATED, AND DEFICIENCIES MUST BE CORRECTED BY THE BUILDER OR INSTALLING CONTRACTOR UNITL THE CONSTUCTION/INSTALLATION OF THE SPECIFIED SYSTEMS CONFORM AND PASS THE REQUIRED ACCEPTANCE CRITERIA.

PROJECT INSPECTORS WILL BE COLLECTING THE FORMS TO CONFIRM THAT THE REQUIRED ACCEPTANCE TESTS HAVE BEEN COMPLETED.

PARTIAL LIST OF APPLICABLE STANDARDS

NFPA 13	STANDARD FOR AUTOMATIC FIRE SPRINKLER SYSTEMS (CA AMENDED)	2022 ED.
NFPA 14	STANDARD FOR STANDPIPE AND HOSE SYSTEMS (CA AMENDED)	2019 ED.
NFPA 17	STANDARD FOR DRY CHEMICAL EXTINGUISHING SYSTEMS	2021 ED.
NFPA 17A	STANDARD FOR WET CHEMICAL EXTINGUISHING SYSTEMS	2021 ED.
NFPA 20	STANDARD FOR STATIONARY PUMPS FOR FIRE PROTECTION	2019 ED.
NFPA 22	STANDARD FOR WATER TANKS FOR PRIVATE FIRE PROTECTION	2013 ED.
NFPA 24	STANDARD FOR THE INSTALLATION OF PRIVATE FIRE MAINS AND THEIR APPURTENANCES (CA AMENDED)	2019 ED.
NFPA 72	NATIONAL FIRE ALARM & SIGNALING CODE (CA AMENDED)	2022 ED.
NFPA 80	STANDARD FOR FIRE DOORS AND OTHER OPENING PROTECTIVES	2019 ED.
NFPA 2001	STANDARD ON CLEAN AGENT FIRE EXTINGUISHING SYSTEMS (CA AMENDED)	2018 ED.
UL 300	STANDARD FOR FIRE TESTING OF FIRE EXTINGUISHING SYSTEMS FOR PROTECTION OF COMMERCIAL COOKING EQUIPMENT	2005 (R2014)
UL 464	AUDIBLE SIGNAL APPLIANCES FOR FIRE ALARM AND SIGNALING SYSTEMS, INCLUDING ACCESSORIES	2003 ED.
UL 521	STANDARD FOR HEAT DETECTORS FOR FIRE PROTECTIVE SIGNALING SYSTEMS	1999 ED. (R2005)
UL 1971	STANDARD FOR SIGNALING DEVICES FOR THE HEARING IMPAIRED	2002 ED. (R2018)
ICC 300	STANDARD FOR BLEACHERS, FOLDING AND TELESCOPING SEATING AND GRANDSTANDS	2017 ED.

FOR A COMPLETE LIST OF APPLICABLE NFPA STANDARDS REFER TO 2022 CBC (SFM) CHAPTER 35 AND CALIFORNIA FIRE CODE CHAPTER 80.
SEE CALIFORNIA BUILDING CODE, CHAPTER 35 FOR STATE OF CALIFORNIA AMENDMENTS TO NFPA STANDARDS.

PROJECT DESCRIPTION

SCOPE OF WORK:

30' X 64' PC LUNCH SHELTER

SITE WORK INCLUDING ACCESSIBILITY UPGRADES AND TOILET ROOM UPGRADES

PROJECT DATA

PROJECT ADDRESS:
9275 GLACIER POINT DRIVE,
STOCKTON, CA 95212

OWNER:
LODI UNIFIED SCHOOL DISRICT
PHONE #: 209-331-7225

STATEMENT OF GENERAL CONFORMANCE

(X) THE DRAWINGS OR SHEETS LISTED ON THE INDEX SHEET
(X) THIS DRAWING PAGE OF SPECIFICATIONS/CALCULATIONS

HAVE BEEN PREPARED BY OTHER DESIGN PROFESSIONALS OR CONSULTANTS WHO ARE LICENSED AND/OR AUTHORIZED TO PREPARE SUCH DRAWINGS IN THIS STATE. IT HAS BEEN EXAMINED BY ME FOR:

1) DESIGN INTENT AND APPEARS TO MEET THE APPROPRIATE REQUIREMENTS OF TITLE 24, CALIFORNIA CODE OF REGULATIONS AND THE PROJECT SPECIFICATIONS PREPARED BY ME, AND
2) COORDINATION WITH MY PLANS AND SPECIFICATIONS AND IS ACCEPTABLE FOR INCORPORATION INTO THE CONSTRUCTION OF THIS PROJECT.

THE STATEMENT OF GENERAL CONFORMANCE "SHALL NOT BE CONSTRUED AS RELIEVING ME OF MY RIGHTS, DUTIES, AND RESPONSIBILITIES UNDER SECTIONS 17302 AND 81138 OF THE EDUCATION CODE AND SECTIONS 4-336, 4-341 AND 4-344" OF TITLE 24, PART 1. (TITLE 24, PART 1, SECTION 4-317 (B))

I CERTIFY THAT:

THE PC APPROVED MANUFACTURER DRAWINGS LISTED ON THE INDEX SHEET ARE IN GENERAL CONFORMANCE WITH THE PROJECT DESIGN INTENT, AND THEY HAVE BEEN COORDINATED WITH THE PROJECT PLANS AND SPECIFICATIONS.

SIGNATURE
ARCHITECT OR ENGINEER DESIGNATED TO BE IN GENERAL RESPONSIBLE CHARGE

DATE 10/11/23

Jeffrey Grau
PRINT NAME

C-14648
LICENSE NUMBER

05-31-25
EXPIRATION DATE

SHEET INDEX

NUMBER	NAME
GENERAL SHEET	
G0.10	COVER SHEET
1	
CIVIL	
C1.1	TITLE SHEET AND DETAIL SHEET
C2.1	DEMOLITION PLAN
C3.1	GRADING, DRAINAGE AND PAVING PLAN
3	
ARCHITECTURE	
A1.21	CODE INFORMATION SITE PLAN
A1.22	LOCAL FIRE AUTHORITY SITE ACCESS PLAN
A1.23	ENLARGED SITE PLAN AND SECTION
A1.24	ENLARGED PARKING LOT A SITE PLAN
A2.11	1ST FLOOR - TOILET ROOM IMPROVEMENT PLANS
A8.11	INTERIOR ELEVATIONS
A10.1	SITE DETAILS
A10.2	TYPICAL MOUNTING HEIGHTS AND DETAILS
8	
PC DRAWINGS	
RAM1.0	ORDER FORM
RAM1.1	NOTES AND SPECIAL INSPECTIONS
RAM2.3	FOUNDATION PLAN DRILLED PIER
RAM3.1	FRAMING PLAN
RAM4.2	FRAME CONNECTION DETAILS
RAM4.3	SECTION DETAILS
RAM5.1	ARCHITECTURAL VIEWS
RAM6.1	ROOF CONNECTION DETAILS
RAM7.0	MISC DESIGN OPTIONS
RAM7.1	ELECTRICAL CUTOUTS
10	
Grand total: 22	

ABBREVIATIONS

(E)	EXISTING
AB	ANCHOR BOLT
AC PAVING	ASPHALTIC CONCRETE PAVING
ACC	ACCESS/ACCESSIBLE
ACP	ACOUSTICAL CEILING PANEL
ACT	ACOUSTICAL CEILING TILE
ADJ	ADJACENT/ADJUSTABLE
AFF	ABOVE FINISH FLOOR
AGG	AGGREGATE
AHU	AIR HANDLING UNIT
ARCH	ARCHITECTURAL
ATT	ATTENUATION
AUTO	AUTOMATIC
BD	BOARD
BLCG	BLOCKING
BUR	BUILT UP ROOFING
CABT	CABINET
CF	CUBIC FEET
CFCI	CONTRACTOR FURNISHED, CONTRACTOR INSTALLED
CFOI	CONTRACTOR FURNISHED, OWNER INSTALLED
CG	CORNER GUARD
CJ	CONTROL JOINT
CL	CENTER LINE
CLF	CHAIN LINK FENCE
CLR	CLEAR
CMU	CONCRETE MASONRY UNIT
CO	CLEANOUT
COL	COLUMN
COMP	COMPRESSION / COMPOSITE
CF	CUBIC FEET
COORD	COORDINATE
CORR	CORRUGATED
CT	CERAMIC TILE
CTSK	COUNTER SKUNK
CW	CURTAINWALL
DEPR	DEPRESSED / DEPRESSION
DF	DRINKING FOUNTAIN
DIM	DIMENSION
DISP	DISPENSER
DS	DOWNSPOUT
DTL	DETAIL
DW	DISHWASHER
E/W	EACH WAY
EIFS SYSTEM	EXTERIOR INSULATION FINISH
EJ	EXPANSION JOINT
ELEC	ELECTRICAL
ELEV	ELEVATION / ELEVATOR
ENCL	ENCLOSE / ENCLOSURE
EOS	EDGE OF SLAB
EP	ELECTRICAL PANEL
EQ	EQUAL
ESC	EXCUTCHEON
EWC	ELECTRIC WATER COOLER
EXP	EXPOSED
FA	FIRE ALARM
FD	FLOOR DRAIN
FDC	FIRE DEPARTMENT CONNECTION
FE	FIRE EXTINGUISHER
FEC	FIRE EXTINGUISHER W/ CABINET
FF	FINISH FLOOR
FG	FINISH GRADE
FH	FIRE HYDRANT
FHC	FIRE HOSE CABINET
FSH	FLAT HEAD SCREW
FIN	FINISH
FLR	FLOOR
FOC	FACE OF CONCRETE
FOF	FACE OF FINISH
FOM	FACE OF MASONRY
FOS	FACE OF STUD
FP	FIREPROOFING
FR	FIRE RATED
FRG	FIRE RATED GLASS
FRP	FIBERGLASS REINFORCED PLASTIC
FRT	FIRE RETARDANT TREATED
FS	FINISH SURFACE
FTG	FOOTING
GB	GRAB BAR
GFRC	GLASS FIBER REINFORCED CONCRETE
GL	GLASS TYPE
GLB	GLUE LAMINATED BEAM
GYP BD	GYPSUM BOARD
GYP PLAS	GYPSUM PLASTIC
HB	HOSE BIBB
HD	HEAVY DUTY
HDR	HEADER
HDWR	HARDWARE
HGT	HEIGHT
HM	HOLLOW METAL
HP	HIGH POINT
HSS	HOLLOW STEEL SECTION
ID	INSIDE DIAMTER
INT	INTERIOR
INV	INVERT
LANDS	LANDSCAPE
LAV	LAVATORY
LLH	LONG LEG HORIZONTAL
LLV	LONG LEG VERTICAL
LP	LOW POINT
LT WT	LIGHT WEIGHT
LVR	LOUVER
MACH	MACHINE
MB	MACHINE BOLT
MDF	MEDIUM DENSITY FIBERBOARD
MDO	MEDIUM DENSITY OVERLAY
MECH	MECHANICAL
MED	MEDIUM
MEMB	MEMBRANE
MFR	MANUFACTURER
MH	MANHOLE
MO	MASONRY OPENING
MTD	MOUNTED
MTL	METAL
NIC	NOT IN CONTRACT
NR	NON RATED
NRC	NOISE REDUCTION COEFFICIENT
NTS	NOT TO SCALE
O/	OVER
O/A	OVERALL
OC	ON CENTER
OD	OUTSIDE DIAMTER
OFCI	OWNER FURNISHED, CONTRACTOR INSTALLED
OFOI	OWNER FURNISHED, OWNER INSTALLED
OFVI	OWNER FURNISHED, VENDOR INSTALLED
OH	OPPOSITE HAND
OPER	OPERABLE
OPNG	OPENING
ORD	OVERFLOW ROOF DRAIN
P/L	PROPERTY LINE
PA	PUBLIC ADDRESS
PAF	POWDER ACTUATED FASTENER PAVING
PCC	PORTLAND CEMENT CONCRETE PAVING
PED	PEDESTRIAN
PERF	PERFORATED
PERIM	PERIMETER
PERP	PERPENDICULAR
PH	PANIC HARDWARE
PIV	POST INDICATOR VALVE
PL	PLATE
PLAM	PLASTIC LAMINATE
PLAS	PLASTER
PLUMB	PLUMBING
PNL	PANEL
PNT	PAINT / PAINTED
POC	POINT OF CONNECTION
POLY ISO	POLYISOCYANURATE
PREFIN	PREFINISHED
PREP	PREP / PREPARATION
PTC	POST TENSIONED CONCRETE
PTD	PAPER TOWEL DISPENSER
PTN	PARTITION
PTS	PNEUMATIC TUBE STATION / SYSTEM
PVC	POLYVINYL CHLORIDE
PVMT	PAVEMENT
QT	QUARRY TILE
R	RADIUS, RISER
RB	RESILIENT BASE
RD	ROOF DRAIN
RECEPT	ECEPTACLE
REF	REFERENCE
REFL	REFLECT(ED), (IVE)
REFL	REFLECT(ED), (IVE)
REFR	REFRIGERATOR
REINF	REINFORCE/REINFORCED/ REINFORCEMENT
REM	REMOVE
RH	ROUND HEAD
RHS	ROUND HEAD SCREW
RO	ROUGH OPENING
ROW	RIGHT OF WAY
SCH	SCHEDULE (FOR PIPE)
SCHED	SCHEDULE / SCHEDULING
SD	STORM DRAIN / SOAP DISPENSER
SECT	SECTION
SG	SAFETY GLASS
SHT	SHEET
SHTG	SHEATHING
SMS	SHEET METAL SCREW
SND	SANITARY NAPKIN DISPOSAL
SOV	SHUT OFF VALVE
SPEC	SPECIFICATIONS
SS	STAINLESS STEEL
STC	SOUND TRAMISSION CLASS
STL	STEEL
STSMS SCREW	SELF TAPPING SHEET METAL
SUSP	SUSPENDED
SV	SHEET VINYL
SYM	SYMMETRICAL
T	TREAD
T&B	TOP AND BOTTOM
TO	TOP OF
TOC	TOP OF CURB / CONCRETE
TOP	TOP OF PARAPET
TOS	TOP OF STEEL
TOW	TOP OF WALL
TPD	TOILET PAPER DISPENSER
TS	TACKABLE SURFACE
U/C	UNDER CABINET (OR COUNTER
UNO	UNLESS NOTED OTHERWISE
UR	URINAL
VAC	VACUUM
VB	VAPOR BARRIER
VCT	VINYL COMPOSITION TILE
VIF	VERIFY IN FIELD
VTR	VENT THROUGH ROOF
VWC	VINYL WALL COVERING
W/	WITH
W/O	WITHOUT
WB	WOOD BASE
WC	WATER CLOSET
WD	WOOD
WDW	WINDOW
WGT	WEIGHT
WH	WATER HEATER
WP	WATERPROOFING/WALL PROTECTION
WR	WATER RESISTANT
WRGB	WATER RESISTANT GYPSUM BOARD
WS	WOOD SCREW
WSCT	WAINSCOT
WWF	WELDED WIRE FABRIC

NOTE:
OTHER ABBREVIATIONS USED ON THESE DRAWINGS ARE CONSIDERED STANDARDS IN THE BUILDING INDUSTRY. CONTACT ARCHITECT FOR NECESSARY CLARIFICATION.

SYMBOL LEGEND

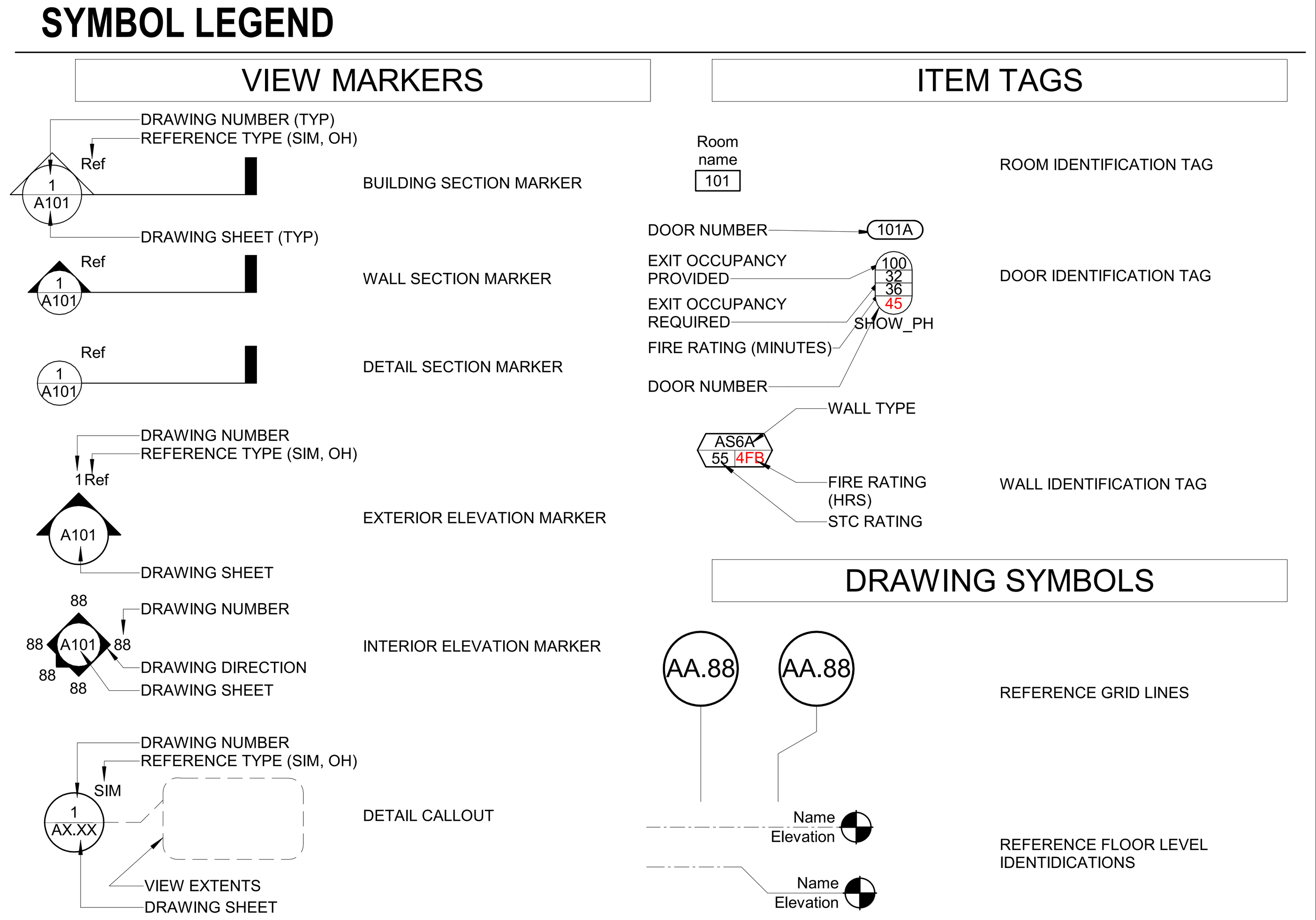

STATE MAP

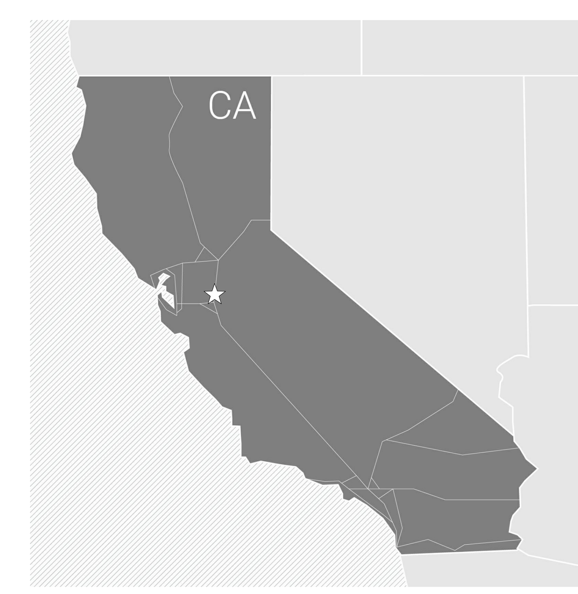

VICINITY MAP

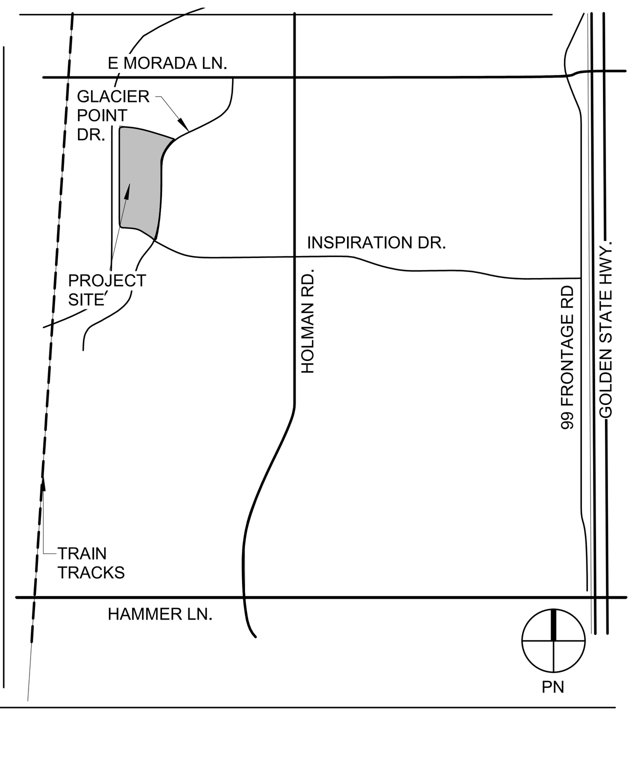

AGENCY APPROVAL:

IDENTIFICATION STAMP
DIV. OF THE STATE ARCHITECT
APP: 02-121824 INC:
REVIEWED FOR
SS ☑ FLS ☑ ACS ☑
DATE: 10/18/2023

LODI USD

HMC Architects
R221551X00

2101 CAPITOL AVENUE, SUITE 100,
SACRAMENTO, CA, 95816
916 368 7990 / www.hmcarchitects.com

LICENSED ARCHITECT
JEFFREY ALAN GRAU
C-14648
5/31/25
RENEWAL DATE
STATE OF CALIFORNIA

PROJECT TEAM

CIVIL ENGINEER
WARREN GREEN ENGINEERING
3114 BRENNANS RD. LOOMIS, CA 95650
916.663.2323

FACILITY:
ANSEL ADAMS ELEMENTARY SCHOOL
9275 GLACIER POINT DRIVE STOCKTON, CA 95212

PROJECT:
LODI UNIFIED SCHOOL DISTRICT LUNCH SHELTERS - ANSEL ADAMS ELEMENTARY SCHOOL

SHEET NAME:
COVER SHEET

CONSTRUCTION DOCUMENTS

DATE: **10/18/2023**
CLIENT PROJ NO:

SHEET:
G0.10

Autodesk Docs://R221551X00 Lodi USD Lunch Shelters/R221551X00-A-ADAMS-ES-LUNCH-SHELTER.rvt
10/10/2023 4:26:12 PM

PLEASE RECYCLE

THE LINE SHOWN ABOVE IS EXACTLY 1" WHEN PLOTTED ON ANSI SHEETS ORIGINAL SCALE SIZE

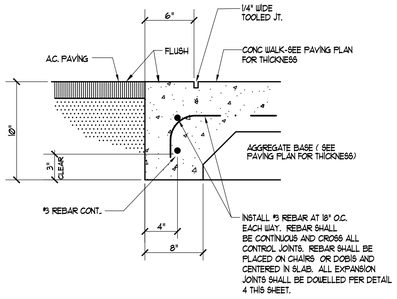

1 / C1.1 FLUSH CONC. WALK • AC

N.T.S.

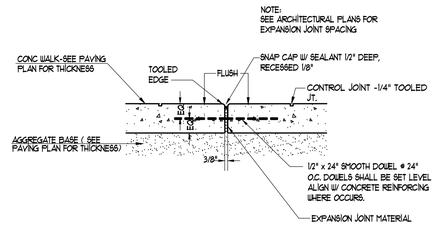

4 / C1.1 EXPANSION JOINT

N.T.S.

NOTE:
TRANSITION FROM NEW CONCRETE WALKWAYS TO EXISTING LANDSCAPE GRADE TO BE AT A MAXIMUM OF 5 : 1 SLOPE UNLESS OTHERWISE NOTED ON PLANS.

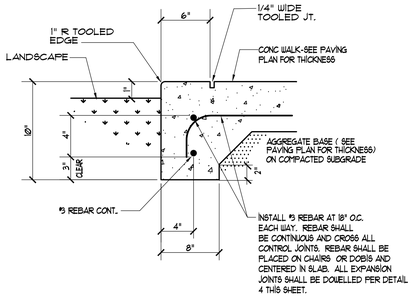

2 / C1.1 FLUSH CONC. WALK • LANDSCAPE

N.T.S.

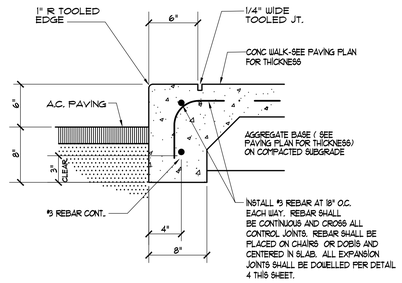

5 / C1.1 THICKENED EDGE CONC. WALK

N.T.S.

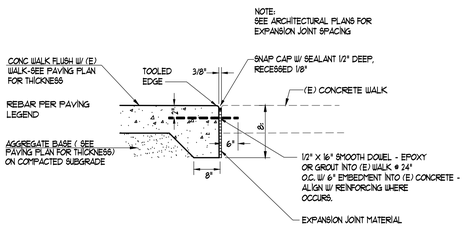

3 / C1.1 CONC. WALK AT EXISTING CONDITIONS

N.T.S.

LEGEND

× 43.15	EXISTING ELEVATION
8"SD	EXISTING STORM DRAIN
6"SS	EXISTING SANITARY SEWER
8"W	EXISTING WATER MAIN
	EXISTING WATER VALVE
	EXIST. FIRE HYDRANT
C	EXISTING COMMUNICATION LINE
IR	EXISTING IRRIGATION CONTROL LINE
E	EXISTING ELECTRICAL LINE
T	EXISTING TELEPHONE LINE
31.90	NEW ELEVATION

ABBREVIATIONS

AC	ASPHALT CONCRETE	LD	LANDSCAPE DRAIN
AB	AGGREGATE BASE	LF	LINEAR FEET
ADD. ALT.	ADDITIVE ALTERNATE	MH	MANHOLE
BLDG	BUILDING	MIN	MINIMUM
BO	BLOW OFF	MS	MOW STRIP
BOW	BACK OF WALK	(N)	NEW
BW	BOTTOM OF WALL	N.I.C.	NOT IN CONTRACT
CC	CONCRETE (TOP OF CONCRETE WALK)	OG	ORIGINAL GRADE
CL	CENTER LINE	P	PROPOSED
CONC	CONCRETE	PD	PLANTER DRAIN
CONST.	CONSTRUCT	PIV	POST INDICATOR VALVE
COTG	CLEANOUT TO GRADE	POC	POINT OF CONNECTION
DI	DRAIN INLET	PP	POWER POLE
DIP	DUCTILE IRON PIPE	PUE	PUBLIC UTILITY EASEMENT
DS	DOWNSPOUT	RCP	REINFORCED CONCRETE PIPE
DWY	DRIVEWAY	RD	ROOF DRAIN
(E)	EXISTING	REWD	REDWOOD
E. BOX	ELECTRICAL BOX	RET	RETAINING
E. COND.	ELECTRICAL CONDUIT	RP	REDUCED PRESSURE
ELEC	ELECTRIC	R/W	RIGHT OF WAY
EP	EDGE OF PAVEMENT	RWL	RAIN WATER LEADER
EXIST.	EXISTING	S	SLOPE
FDC	FIRE DEPARTMENT CONNECTION	SD	STORM DRAIN
FF	FINISH FLOOR	SS	SANITARY SEWER
FG	FINISH GRADE	ST. LT.	STREET LIGHT
FH	FIRE HYDRANT	TBM	TEMPORARY BENCH MARK
FL	FLOW LINE	T	TRANSFORMER
FM	FIRE MAIN	TEL	TELEPHONE
FS	FIRE SERVICE	TC	TOP OF CURB
G	GAS	TW	TOP OF WALL
GB	GRADE BREAK	TYP	TYPICAL
GR	GRATE	VCP	VITRIFIED CLAY PIPE
GV	GATE VALVE	W	WATER
HDR	HEADER	WV	WATER VALVE
HP	HIGH POINT	VB	VALVE BOX
INV	INVERT ELEVATION	YD	YARD DRAIN
JP	JOINT POLE		

INDEX OF CIVIL DRAWINGS

C1.1 TITLE SHEET AND DETAIL SHEET
C2.1 DEMOLITION PLAN
C3.1 GRADING, DRAINAGE AND PAVING PLAN

AGENCY APPROVAL:

IDENTIFICATION STAMP
DIV. OF THE STATE ARCHITECT
APP: 02-121824 INC:
REVIEWED FOR
SS ☑ FLS ☑ ACS ☑
DATE: 10/18/2023

LODI USD

HMC Architects
R2211551
2101 CAPITOL AVENUE, SUITE 100,
SACRAMENTO, CA. 95816
916 368 7990 / www.hmcarchitects.com

Δ DESCRIPTION DATE

CONSULTANT:

REGISTERED PROFESSIONAL ENGINEER LORI A. GREEN NO. 36500 Exp. 6-30-24 STATE OF CALIFORNIA

Warren-Green ENGINEERING
3114 Brennans Road
Loomis, CA 95690

FACILITY:

ANSEL ADAMS ELEMENTARY SCHOOL
9275 GLACIER POINT DRIVE STOCKTON, CA 95212

PROJECT:

LODI UNIFIED SCHOOL DISTRICT LUNCH SHELTERS-ANSEL ADAMS ELEMENTARY SCHOOL

SHEET NAME:

TITLE SHEET AND DETAILS

CONSTRUCTION DOCUMENTS

FILE NO.: AAES-CD | **A NO.:** R2211551

DATE: **OCT. 18, 2023** | CLIENT PROJ NO:

SHEET:

C1.1

PLEASE RECYCLE

DEMOLITION NOTES:

1. CONTRACTOR SHALL REMOVE / DEMOLISH ALL (E) IMPROVEMENTS AS NECESSARY FOR CONSTRUCTION OF NEW IMPROVEMENTS UNDER THIS CONTRACT. CONTRACTOR SHALL FIELD WALK SITE TO REVIEW AND CONFIRM THE EXTENT OF ALL CLEARING WORK PRIOR TO BID.
2. ALL MATERIAL REMOVED BY CONTRACTOR SHALL BE PROPERLY AND LEGALLY DISPOSED OFFSITE (UNLESS SPECIFICALLY IDENTIFIED TO BE DELIVERED TO OWNER.)
3. NUMEROUS UNDERGROUND UTILITIES EXIST WITHIN THE AREAS OF EXISTING CONCRETE REMOVAL. CONTRACTOR SHALL USE CAUTION DURING DEMOLITION AND SUBGRADE SCARIFICATION AND COMPACTION TO PROTECT SAID UTILITIES.

DEMOLITION LEGEND:

- SAWCUT LINE
- REMOVE (E) AC PAVING
- REMOVE (E) CONCRETE

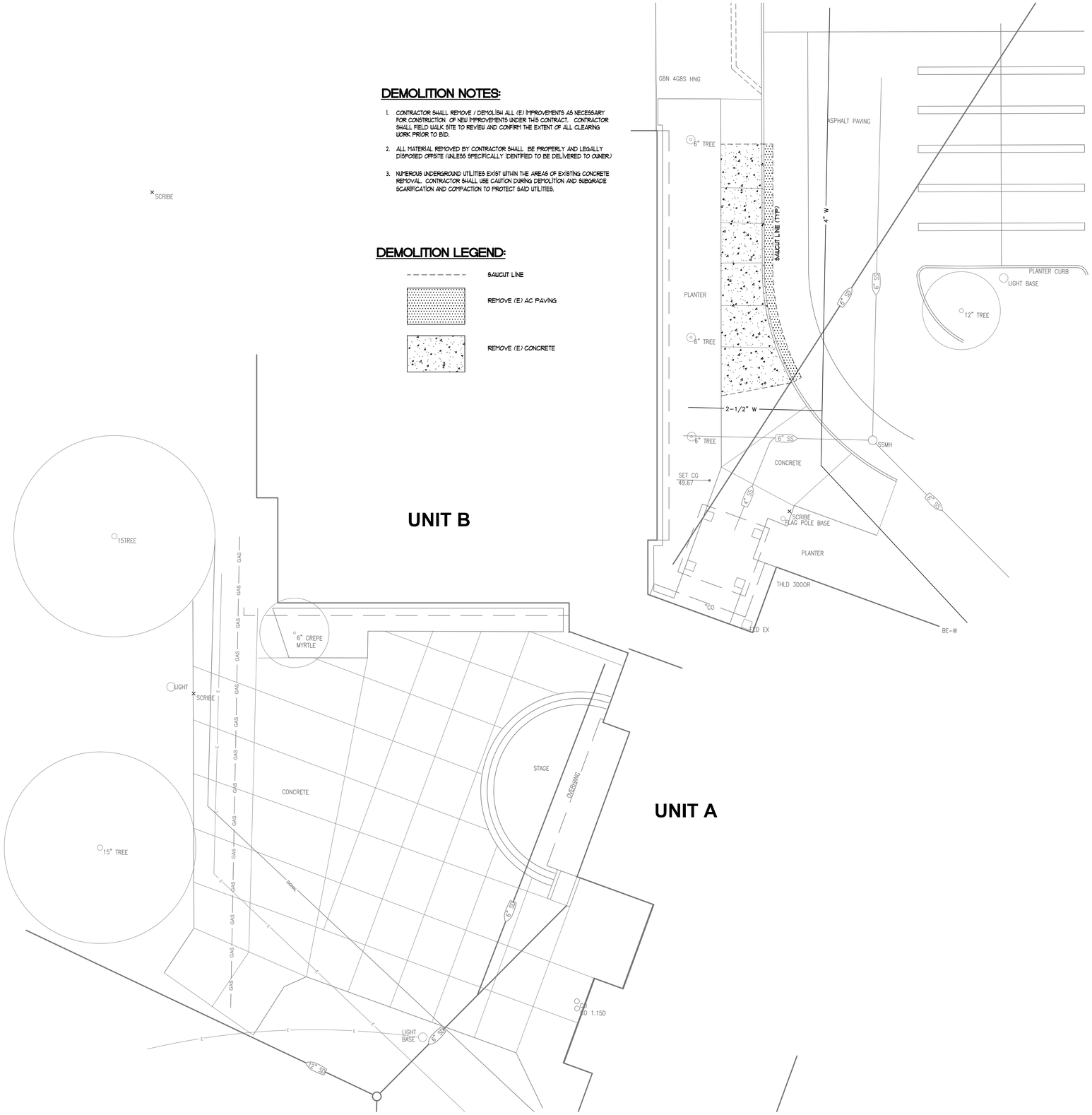

1 DEMOLITION PLAN
C2.1
SCALE: 1"=10'

AGENCY APPROVAL:

IDENTIFICATION STAMP
DIV. OF THE STATE ARCHITECT
APP: 02-121824 INC:
REVIEWED FOR
SS ☑ FLS ☑ ACS ☑
DATE: 10/18/2023

LODI USD

HMC Architects

R2211551

2101 CAPITOL AVENUE, SUITE 100,
SACRAMENTO, CA, 95816
916 368 7990 / www.hmcarchitects.com

Δ	DESCRIPTION	DATE

CONSULTANT:

REGISTERED PROFESSIONAL ENGINEER
LORI A. GREEN
NO. 36500
Exp. 6-30-24
STATE OF CALIFORNIA

Warren-Green ENGINEERING
3114 Brennans Road
Loomis, CA 95690

FACILITY:

ANSEL ADAMS ELEMENTARY SCHOOL
9275 GLACIER POINT DRIVE STOCKTON, CA 95212

PROJECT:

LODI UNIFIED SCHOOL DISTRICT LUNCH SHELTERS-
ANSEL ADAMS ELEMENTARY SCHOOL

SHEET NAME:

DEMOLITION PLAN

CONSTRUCTION DOCUMENTS

FILE NO.: AAES-CD | A NO.: R2211551

DATE: OCT. 18, 2023 | CLIENT PROJ NO:

SHEET:

C2.1

PLEASE RECYCLE

THE LINE SHOWN ABOVE IS EXTENDED FROM SHEET C3.1 SHEETS ORIGINAL PAGE SIZE

KEY NOTES

1. 1.8% MAX. SLOPE IN ANY DIRECTION.
2. RAMP - 8% MAX. SLOPE IN DIRECTION OF TRAVEL, 1.8% MAX. CROSS SLOPE
3. 1.8% MAX. CROSS SLOPE 4.75% MAX. SLOPE IN DIRECTION OF TRAVEL.
4. MATCH (E) AC GRADE AT SAWCUT LINE.
5. MATCH (E) CONC. GRADE AT SAWCUT LINE.
6. SHADE STRUCTURE FOOTING - TYPICAL
7. SHADE STRUCTURE ROOF LINE
8. CONTRACTOR SHALL LOCATE EXISTING UTILITIES PRIOR TO START OF CONSTRUCTION. NOTIFY ARCHITECT IF CONFLICT WITH ANY NEW FOOTINGS EXISTS.

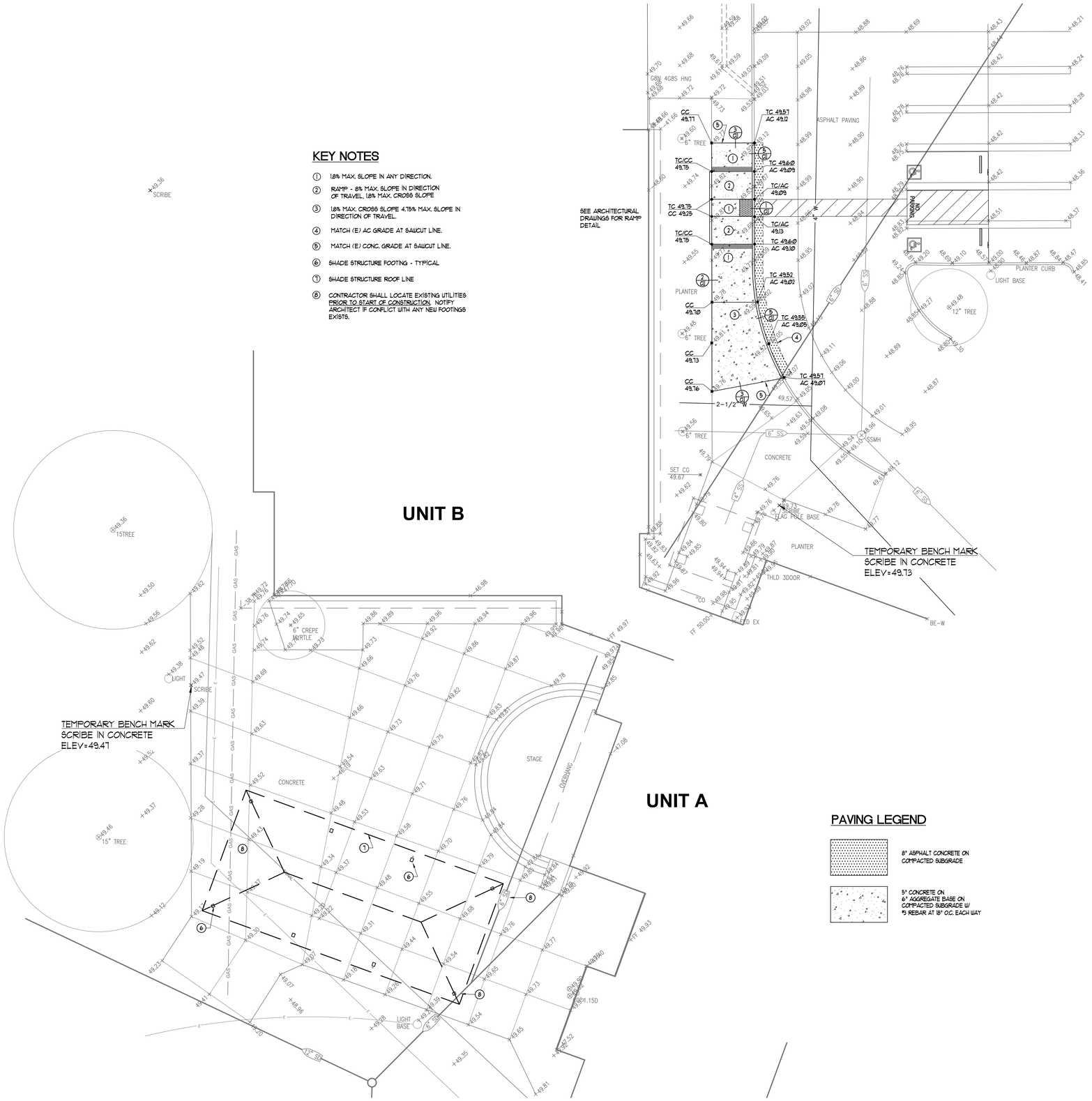

PAVING LEGEND

- 8" ASPHALT CONCRETE ON COMPACTED SUBGRADE
- 5" CONCRETE ON 6" AGGREGATE BASE ON COMPACTED SUBGRADE W/ #3 REBAR AT 18" O.C. EACH WAY

1 GRADING, DRAINAGE AND PAVING PLAN
C3.1

SCALE: 1"=10'

AGENCY APPROVAL:

IDENTIFICATION STAMP
DIV. OF THE STATE ARCHITECT
APP: 02-121824 INC:
REVIEWED FOR
SS ☑ FLS ☑ ACS ☑
DATE: 10/18/2023

LODI USD

HMC Architects

R2211551

2101 CAPITOL AVENUE, SUITE 100,
SACRAMENTO, CA. 95816
916 368 7990 / www.hmcarchitects.com

Δ	DESCRIPTION	DATE

L CONCRETE SLAB IS NOT PART OF STRUCTURAL SUPPORT FOR SHADE STRUCTURE

CONSULTANT:

REGISTERED PROFESSIONAL ENGINEER LORI A. GREEN NO. 36500 Exp. 6-30-24 STATE OF CALIFORNIA

Warren•Green ENGINEERING
3114 Brennans Road
Loomis, CA 95690

FACILITY:

ANSEL ADAMS ELEMENTARY SCHOOL
9275 GLACIER POINT DRIVE STOCKTON, CA 95212

PROJECT:

LODI UNIFIED SCHOOL DISTRICT LUNCH SHELTERS-ANSEL ADAMS ELEMENTARY SCHOOL

SHEET NAME:

GRADING, DRAINAGE AND PAVING PLAN

CONSTRUCTION DOCUMENTS

FILE NO.: AAES-CD | A NO.: R2211551

DATE: OCT. 18, 2023 | CLIENT PROJ NO:

SHEET:

C3.1

PLEASE RECYCLE

THE LINE SHOWN ABOVE IS EXACTLY 1" WHEN PLOTTED ON THE SHEET'S ORIGINAL PAGE SIZE

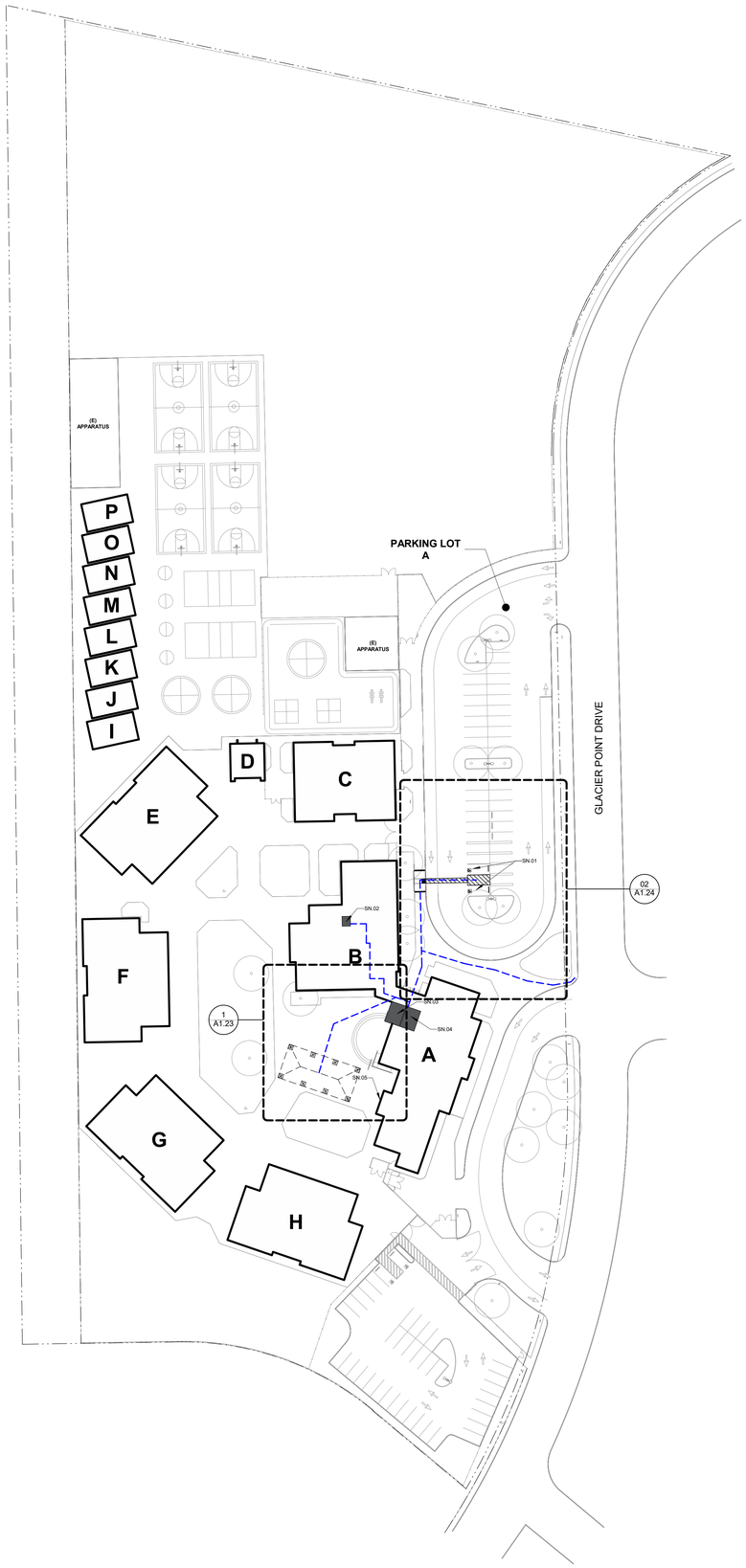

BUILDING DATA AND ALLOWABLE AREA ANALYSIS

BUILDING	OCCUPANCY	CONSTRUCTION TYPE	ALLOWABLE AREA (TABLE 506.2)	ACTUAL BLDG. AREA	OCCUPANY CALCULATION
LS	A-2	II-B NON-SPRINKLERED	9,500 S.F.	1,920 S.F.	1,920 S.F. / 15 NET =128 OCC.

EXISTING PATH OF TRAVEL (POT): ARCHITECT STATEMENT

DESIGN PROFESSIONAL IN GENERAL RESPONSIBLE IN CHARGE STATEMENT: THE POT IDENTIFIED IN THESE CONSTRUCTION DOCUMENTS IS COMPLIANT WITH THE CURRENT APPLICABLE CALIFORNIA BUILDING CODE ACCESSIBILITY PROVISIONS FOR **PATH OF TRAVEL REQUIREMENTS FOR ALTERATIONS, ADDITIONS AND STRUCTURAL REPAIRS**. AS PART OF THE DESIGN OF THIS PROJECT, THE POT WAS EXAMINED AND ANY ELEMENTS, COMPONENTS OR PORTIONS OF THE POT THAT WERE DETERMINED TO BE NON-COMPLIANT

1) HAVE BEEN IDENTIFIED AND
2) THE CORRECTIVE WORK NECESSARY TO BRING THEM INTO COMPLIANCE HAS BEEN INCLUDED WITHIN THE SCOPE OF THIS PROJECT'S WORK THROUGH DETAILS, DRAWINGS, AND SPECIFICATIONS INCORPORATED INTO THESE CONSTRUCTION DOCUMENTS.

ANY NONCOMPLIANT ELEMENTS, COMPONENTS OR PORTIONS OF THE POT THAT WILL NOT BE CORRECTED BY THIS PROJECT BASED ON VALUATION THRESHOLD LIMITATIONS OR A FINDING OF UNREASONABLE HARDSHIP ARE SO INDICATED IN THESE CONSTRUCTION DOCUMENTS.

DURING CONSTRUCTION, IF POT ITEMS WITHIN THE SCOPE OF THE PROJECT REPRESENTED AS CODE COMPLIANT ARE FOUND TO BE NON-CONFORMING BEYOND REASONABLE CONSTRUCTION TOLERANCES, THEY SHALL BE BROUGHT TO COMPLIANCE WITH THE CBC AS PART OF THIS PROJECT BY MEANS OF A CONSTRUCTION CHANGE DOCUMENT.

NOTE: LUNCH SHELTER COMPLIES WITH DSA IR 31-1

LEGEND

- PROPERTY LINE
- ACCESSIBLE PATH OF TRAVEL
- CHAIN LINK FENCE
- X — EXISTING BUILDING
- EXISTING FIRE HYDRANT

SHEET NOTES

SN.01 ACCESSIBLE PARKING STALL, PER THIS APPLICATION
SN.02 (E) STAFF TOILET ROOM PER DSA #02-101131 UPGRADED PER THIS APPLICATION
SN.03 (E) BOYS TOILET ROOM PER DSA #02-101131 UPGRADED PER THIS APPLICATION
SN.04 (E) GIRLS TOILET ROOM PER DSA #02-101131 UPGRADED PER THIS APPLICATION
SN.05 (E) FIRE ALARM HORN
SN.06 (E) ACCESSIBLE STALL PER #02-101131

ACCESSIBLE PARKING LOT A STALL CALCULATION

TOTAL PARKING STALL COUNT:	43 STALLS
ACCESSIBLE PARKING STALLS:	(TABLE 11B-6)
REQUIRED ACCESSIBLE STALLS:	2 (26-50 TOTAL STALLS)
REQUIRED VAN ACCESSIBLE STALLS:	1 (1-8 ACCESSIBLE STALLS)
ACCESSIBLE STALLS PROVIDED	1 STANDARD & 1 VAN

BUILDING DESIGNATIONS

DSA #02-101131

UNIT A - (E) MULTIPURPOSE
UNIT B - (E) ADMINISTRATION
UNIT C - (E) CLASSROOM BUILDING
UNIT D - (E) TOILET ROOM BUILDING
UNIT E - (E) CLASSROOM BUILDING
UNIT F - (E) CLASSROOM BUILDING
UNIT G - (E) CLASSROOM BUILDING
UNIT H - (E) CLASSROOM BUILDING
UNIT I - (E) PORTABLE CLASSROOM
UNIT H - (E) PORTABLE CLASSROOM
UNIT J - (E) PORTABLE CLASSROOM
UNIT K - (E) PORTABLE CLASSROOM
UNIT L - (E) PORTABLE CLASSROOM
UNIT M - (E) PORTABLE CLASSROOM
UNIT N - (E) PORTABLE CLASSROOM
UNIT O - (E) PORTABLE CLASSROOM
UNIT P - (E) PORTABLE CLASSROOM

THIS APPLICATION

UNIT LS - 30 X 64 LUNCH SHELTER

AGENCY APPROVAL:

IDENTIFICATION STAMP
DIV. OF THE STATE ARCHITECT
APP: 02-121824 INC:
REVIEWED FOR
SS ☑ FLS ☑ ACS ☑
DATE: 10/18/2023

LODI USD

HMC Architects

R221551X00

2101 CAPITOL AVENUE, SUITE 100,
SACRAMENTO, CA, 95816
916 368 7990 / www.hmcarchitects.com

LICENSED ARCHITECT JEFFREY ALAN FRAND C-14648 5/31/25 RENEWAL DATE STATE OF CALIFORNIA

ISSUE

Δ	DESCRIPTION	DATE

ACCESSIBLE PATH OF TRAVEL

1. ACCESSIBLE PATH OF TRAVEL (P.O.T.):
   SITE WALKWAYS SHALL PROVIDE A BARRIER-FREE P.O.T. ABRUPT CHANGES IN LEVEL ALONG ANY P.O.T. ARE ALLOWED UP TO 1/2". ONLY ABRUPT CHANGES IN ELEVATION UP TO 1/4" ARE ALLOWED TO HAVE A VERTICAL TRANSITION. ABRUPT CHANGES IN ELEVATION BETWEEN 1/4" AND 1/2" SHALL BE BEVELED WITH A SLOPE NO GREATER THAN 1-UNIT VERTICAL TO 2-UNITS HORIZONTAL. GATES IN THE P.O.T. SHALL HAVE A SIGN ADJACENT TO THE GATE, IN ALL CAPITALIZED LETTERS, WHICH READS: "THIS GATE TO REMAIN LOCKED IN OPEN POSITION DURING SCHOOL HOURS OR ANY PUBLIC EVENT".
2. THE CONTRACTOR SHALL PROVIDE A P.O.T. FROM THE DISABLED ACCESSIBLE PARKING STALLS TO ALL BUILDINGS AND SITE FUNCTIONS. CONTRACTOR SHALL VERIFY THAT THE P.O.T. IS BARRIER-FREE AS DESCRIBED IN THESE NOTES.
3. WALKWAYS SHALL BE FREE OF GRATINGS WHEREVER POSSIBLE. GRATING WHICH OCCUR WITHIN THE P.O.T. SHALL HAVE OPENINGS WHICH DO NOT EXCEED 1/2" IN THE DIRECTION OF TRAVEL PER CBC SECTION 1133B.7.2.
4. AN ABRUPT DROP-OFF CHANGE IN ELEVATION AT THE EDGE OF ANY WALK INTO AN ADJACENT PLANTER SHALL NOT EXCEED 4".
5. SLOPES IN THE DIRECTION OF THE P.O.T. GREATER THAN 1-UNIT VERTICAL TO 20-UNITS HORIZONTAL SHALL BE CONSIDERED A RAMP AND WILL REQUIRE HANDRAILS ON BOTH SIDES PER CBC SECTION 1133B.5.5 SLOPES IN THE DIRECTION OF THE P.O.T. ALONG WALKWAYS SHALL NOT EXCEED 5%. CROSS SLOPES IN THE P.O.T. ALONG WALKWAYS SHALL NOT EXCEED 2%.
6. ALL WALKWAYS WITHIN THE P.O.T. SHALL BE A MINIMUM OF 48" IN WIDTH. SURFACES WITH A SLOPE OF LESS THAN 6% SHALL BE AT LEAST AS SLIP-RESISTANT AS THAT PROVIDED BY A MEDIUM BROOM FINISH. SURFACES WITH A SLOPE OF MORE THAN 6% SHALL BE SLIP-RESISTANT.
7. OBJECTS PROTRUDING INTO THE P.O.T. SHALL NOT REDUCE THE CLEAR WIDTH OR MANEUVERING SPACE WITHIN THE P.O.T. PER CBC SECTION 1133B.8.6.
8. ARCHITECT HAS SURVEYED/ INSPECTED THE PATH OF TRAVEL (P.O.T.) AS INDICATED ON THE PLANS AND HAS FOUND IT TO BE, OR HAS INDICATED ON THE PLANS REMEDIAL WORK WHICH WOULD CAUSE IT TO BE, A BARRIER-FREE ACCESSIBLE ROUTE:
   a. AT LEAST 48" IN. WIDTH; OR AS APPROVED BY CODE;
   b. WITHOUT ABRUPT LEVEL CHANGES EXCEEDING 1/2" IF BELVELED AT 1:2 MAXIMUM SLOPE, OR VERTICAL LEVEL CHANGES EXCEEDING 1/4";
   c. WITH A FIRM, STABLE, AND SLIP RESISTANT WALKING SURFACE;
   d. WITH A RUNNING SLOPE OF 1:20 OR LESS, UNLESS OTHERWISE INDICATED, AND A CROSS SLOPE OF 1:50 OR LESS;
   e. IS FREE OF OVERHEAD OBSTRUCTIONS WITHIN 80" ABOVE THE WALKING SURFACE; AND
   f. IS FREE OF OBJECTS WHICH PROTRUDE MORE THAN 4" BETWEEN THE HEIGHTS OF 27" AND 80" ABOVE THE WALKING SURFACE.

KEYNOTES

NOTES

FACILITY:
ANSEL ADAMS ELEMENTARY SCHOOL
9275 GLACIER POINT DRIVE STOCKTON, CA 95212

PROJECT:
LODI UNIFIED SCHOOL DISTRICT LUNCH SHELTERS - ANSEL ADAMS ELEMENTARY SCHOOL

SHEET NAME:
CODE INFORMATION SITE PLAN

CONSTRUCTION DOCUMENTS

DATE: **10/18/2023** CLIENT PROJ NO:

SHEET:

A1.21

CODE INFORMATION SITE PLAN 1 1" = 50'-0"

Autodesk Docs://R221551X00 Lodi USD Lunch Shelters/R221551X00-A-ADAMS-ES-LUNCH-SHELTER.rvt
10/10/2023 4:25:43 PM

PLEASE RECYCLE

THE LINE SHOWN ABOVE IS EXACTLY ONE INCH ON THIS SHEET ORIGINAL PAGE SIZE

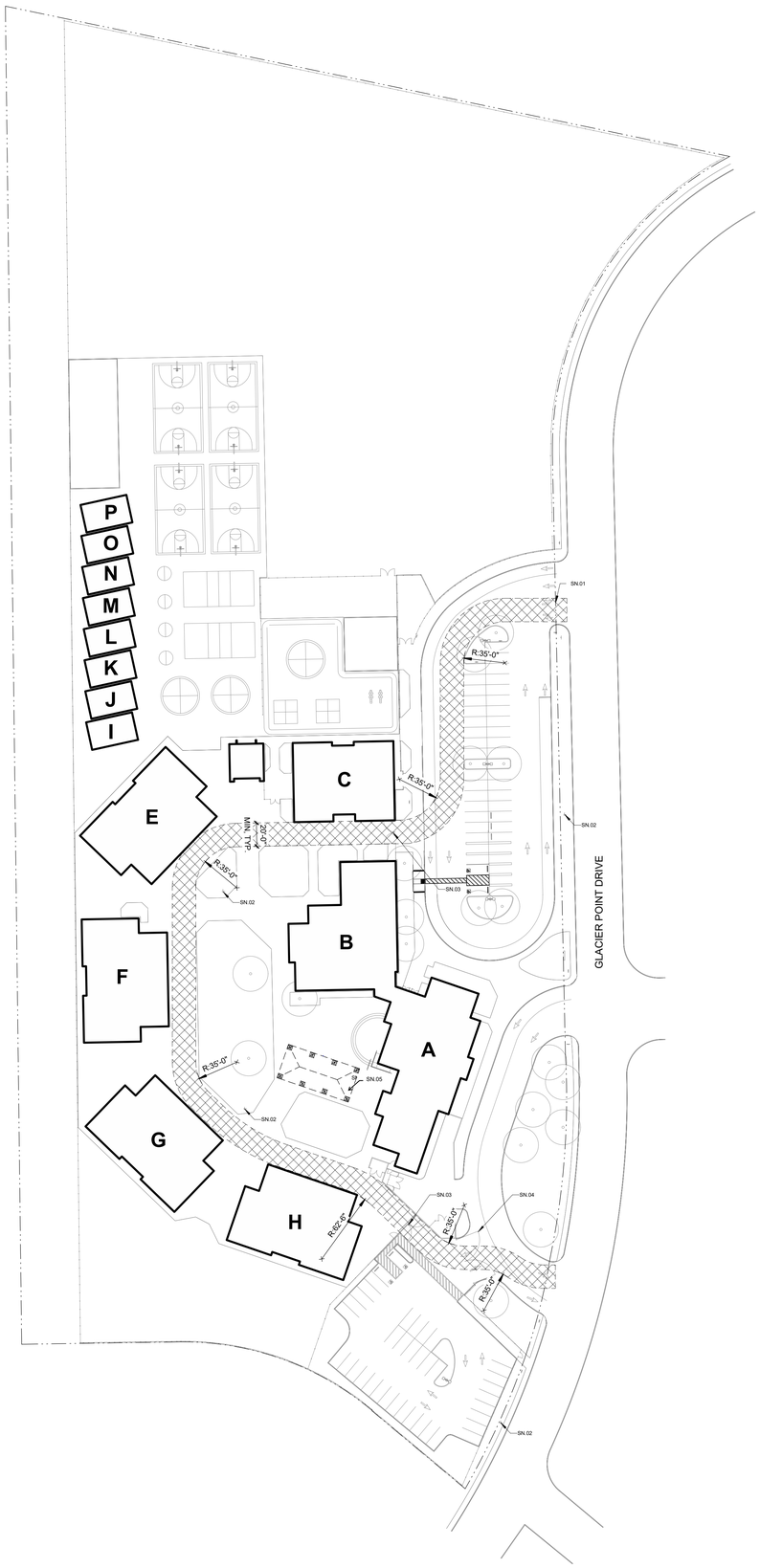

PN

DSA-810 FIRE & LIFE SAFETY SITE CONDITIONS SUBMITTAL

PROJECT INFORMATION		
School District:	LODI UNIFIED SCHOOL DISTRICT	
Project name / school:	ANSEL ADAMS ELEMENTARY SCHOOL	
Project address:	9275 GLACIER POINT DRIVE STOCKTON, CA 95212	

FIRE & LIFE SAFTEY INFORMATION		ALTERNATE ACCEPTED	
1.	Has a fire hydrant flow test been performed within the past 12 months? ***(If yes, provide a copy of the test data)***	Yes ☐	No ☒
2.	Was the fire hydrant water flow test performed as part of this LFA review?	Yes ☐	No ☒
3.	Is the project located within a designated fire hazard serverity zone as established by Cal-Fire? ***(If yes, indicate fire hazard zone classification below)***	Yes ☐	No ☒
	Refer to the following for fire hazard zone locations: ***www. fire.ca.gov/fire_prevention/fire_prevention_wildland_zones_maps***	Moderate ☐ / High ☐	Very High ☐
	Wildland Interface Area (WIFA) ***(If any designations are checked, project design must meet the requirements of CBC Chapter 7A)***		WIFA ☐

CONDITION MEANS AND METHODS RESOLUTION		ALTERNATE ACCEPTED			
		Yes	No	N/A	N/R
4.	Emergency vehicle access roadways do not meet CFC requirements			X	
4a.	**Acceptable Alternative:** Emergency vehicle and personel access as proposed by the architect is acceptable for providing fire suppression and protection of life and property				
5.	**Fire Hydrants:** Number and spacing does not meet CFC requirements			X	
5a.	**Acceptable Alternative:** Number of fire hydrants and spacing as proposed by the architect is acceptable for fire suppression and protection of life and property.				
6.	**Fire Hydrants:** Water flow and pressure are less than CFC minimum.			X	
6a.	**Acceptable Alternative:** The available flow and pressure is acceptable for providing fire suppression and protection of life and property.				
7.	Location of fire department connection(s) serving fire sprinkler system or standpipe system does not meet CFC requirements.			X	
7a.	**Acceptable Alternative:** The location of fire department connection serving the fire sprinkler system and/or standpipe system is acceptable for providing fire suppression and protection of life and property.				

School District Acceptance of Acceptable Design Alternates
By signing this form, the school district acknowledges and accepts the proposed design as an alternative to California Building Code (CBC) and California Fire Code (CFC) minimum requirements as indicated by one of more of the conditions indicated at items 4a, 5a, 6a, or 7a, for providing fire and life safety protection of life and property.

Accepted by: _____ Title: _____

Signature: _____ Date: _____

LOCAL FIRE AUTHORITY (LFA) INFORMATION	
LFA Agency Name:	
LFA Review Official:	
Title:	Work Phone:
Work Email:	

LFA Reviewer's Signature: _____ Date: _____

LEGEND

- PROPERTY LINE
- CHAIN LINK FENCE
- X — EXISTING BUILDING
- EXISTING FIRE LANE
- EXISTING FIRE HYDRANT

SHEET NOTES

SN.01 (E) FIRE LANE
SN.02 (E) FIRE HYDRANT
SN.03 (E) PR 10'-0" SWING GATES WITH KNOX LOCK
SN.04 (E) PR 20'-0" SWING GATES WITH KNOX LOCK
SN.05 LUNCH SHELTER

AGENCY APPROVAL:

IDENTIFICATION STAMP
DIV. OF THE STATE ARCHITECT
APP: 02-121824 INC:
REVIEWED FOR
SS ☑ FLS ☑ ACS ☑
DATE: 10/18/2023

LODI USD

HMC Architects

R221551X00

LICENSED ARCHITECT JEFFREY ALAN FRAND C-14648 5/31/25 RENEWAL DATE STATE OF CALIFORNIA

2101 CAPITOL AVENUE, SUITE 100,
SACRAMENTO, CA, 95816
916 368 7990 / www.hmcarchitects.com

ISSUE

Δ	DESCRIPTION	DATE

KEYNOTES

NOTES

FACILITY:
ANSEL ADAMS ELEMENTARY SCHOOL
9275 GLACIER POINT DRIVE STOCKTON, CA 95212

PROJECT:
LODI UNIFIED SCHOOL DISTRICT LUNCH SHELTERS - ANSEL ADAMS ELEMENTARY SCHOOL

SHEET NAME:
LOCAL FIRE AUTHORITY SITE ACCESS PLAN

CONSTRUCTION DOCUMENTS

DATE: **10/18/2023** CLIENT PROJ NO:

SHEET:

A1.22

LOCAL FIRE AUTHORITY SITE ACCESS PLAN **1** 1" = 50'-0"

Autodesk Docs://R221551X00 Lodi USD Lunch Shelters/R221551X00-A-ADAMS-ES-LUNCH-SHELTER.rvt
10/10/2023 4:25:53 PM

PLEASE RECYCLE

THE LINE SHOWN ABOVE IS EXACTLY 1" WHEN PLOTTED ON THE SHEET'S ORIGINAL PAGE SIZE

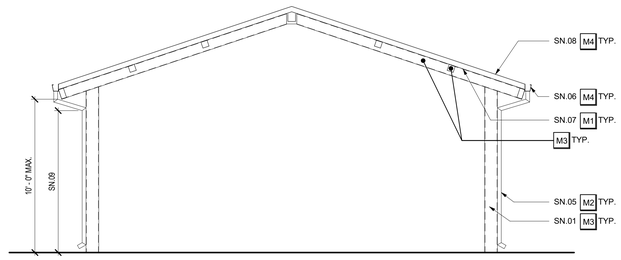

LUNCH SHELTER SECTION 2

1/4" = 1'-0"

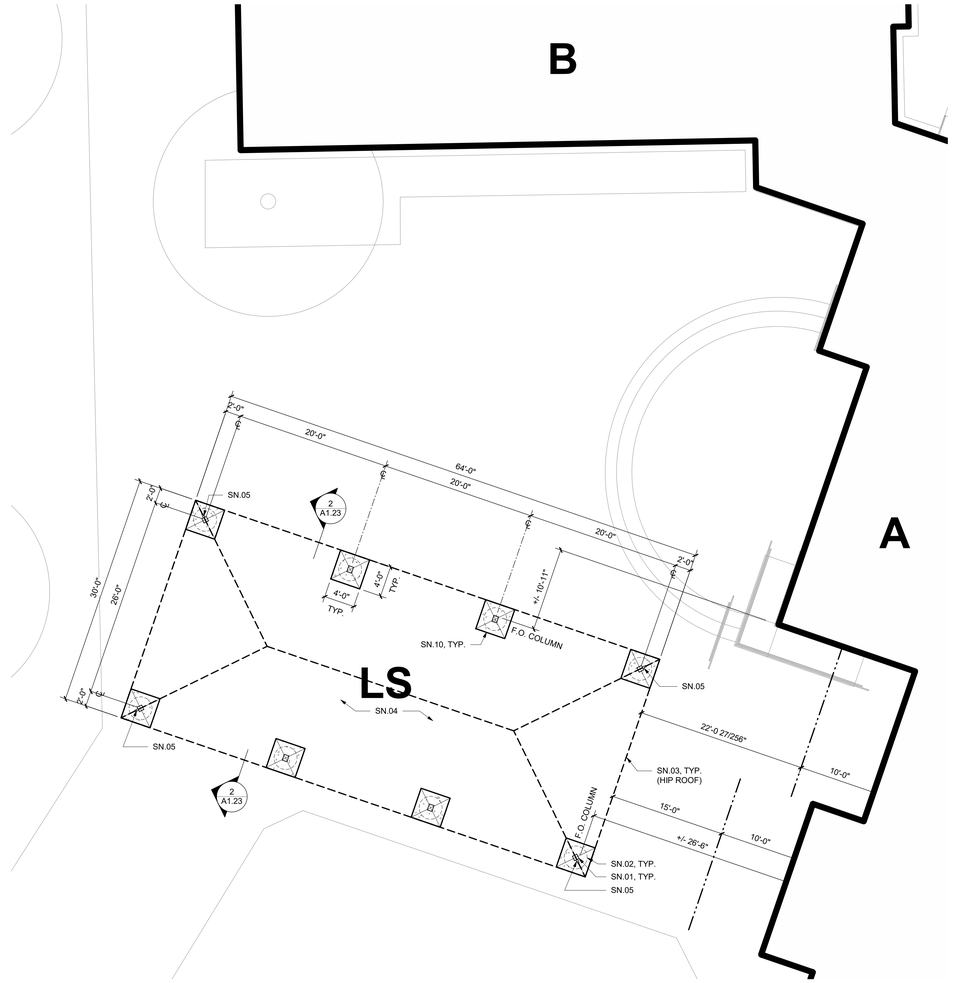

NOTE: LUNCH SHELTER COMPLIES WITH DSA IR 31-1

ENLARGE PLAN - LUNCH SHELTER 1

1/8" = 1'-0"

LEGEND

- PROPERTY LINE
- ASSUMED PROPERTY LINE
- X — EXISTING BUILDINGS
- X — PC LUNCH SHELTER
- EXPANSION JOINT
- CONCRETE WALK / PAVING
- CONTROL JOINT
- ASPHALT CONCRETE PAVING
- (E) FENCING

EXTERIOR COLOR SCHEDULE

	MATERIAL	COLOR
M1	METAL	METAL FINISH COLOR 1 (1)
M2	METAL	METAL FINISH COLOR 2 (1)
M3	METAL	METAL PREFINISH COLOR (1) (3)
M4	METAL	METAL PREFINISH COLOR (1) (4)

(1) CUSTOM COLORS TO BE SUBMITTED PER SPECIFICATIONS.

(2) CLEAN, PREP AND PAINT ALL SURFACES NOT PREFINISHED.

(3) MATCH METAL PAINT "COLOR 1" WITH COLOR DESIRED IN PREFINISHED "COLOR 1"

(4) MATCH METAL PAINT "COLOR 2" WITH COLOR DESIRED IN PREFINISHED "COLOR 2"

SHEET NOTES

SN.01 HSS COLUMN
SN.02 DRILLED PIER FOOTING, SHOWN DASHED
SN.03 ROOF OVERHANG ABOVE
SN.04 (E) CONCRETE TO REMAIN
SN.05 3" DIAMETER SCHEDULE 40 STEEL DOWNSPOUT, PAINTED
SN.06 PREFINISEHD GUTTER AND FLASHING
SN.07 PAINT DECK UNDERSIDE
SN.08 PREFINISHED STANDING SEAM ROOF
SN.09 HOLD TIGHT TO UNDERSIDE OF FRAMING: MAINTAIN 9'-0" CLEARANCE MIN.
SN.10 PROVIDE EXPANSION JOINT AT ALL INTERSECTIONS OF EXISTING AND NEW CONCRETE

AGENCY APPROVAL:

IDENTIFICATION STAMP
DIV. OF THE STATE ARCHITECT
APP: 02-121824 INC:
REVIEWED FOR
SS ☑ FLS ☑ ACS ☑
DATE: 10/18/2023

LODI USD

HMC Architects

R221551X00

2101 CAPITOL AVENUE, SUITE 100,
SACRAMENTO, CA, 95816
916 368 7990 / www.hmcarchitects.com

LICENSED ARCHITECT
JEFFREY ALAN FRAND
C-14648
5/31/25
RENEW AL DATE
STATE OF CALIFORNIA

ISSUE

Δ	DESCRIPTION	DATE

KEYNOTES

NOTES

FACILITY:
ANSEL ADAMS ELEMENTARY SCHOOL
9275 GLACIER POINT DRIVE STOCKTON, CA 95212

PROJECT:
LODI UNIFIED SCHOOL DISTRICT LUNCH SHELTERS - ANSEL ADAMS ELEMENTARY SCHOOL

SHEET NAME:
ENLARGED SITE PLAN AND SECTION

CONSTRUCTION DOCUMENTS

DATE: **10/18/2023** | CLIENT PROJ NO:

SHEET:

A1.23

Autodesk Docs://R221551X00 Lodi USD Lunch Shelters/R221551X00-A-ADAMS-ES-LUNCH-SHELTER.rvt
10/10/2023 4:25:56 PM

PLEASE RECYCLE

THE LINE SHOWN ABOVE IS EXACTLY 1" WHEN PLOTTED ON THIS SHEET ORIGINAL PAGE SIZE

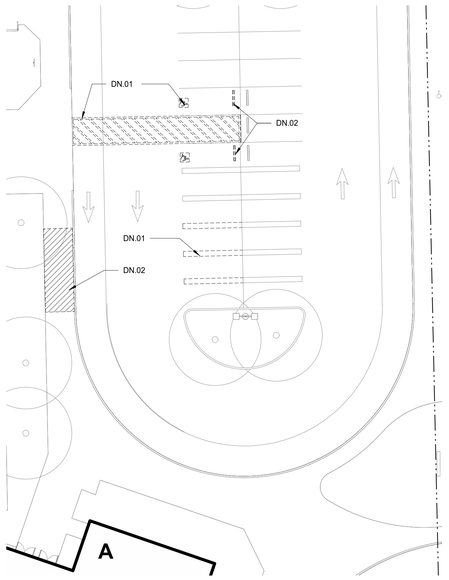

PARKING LOT A - DEMOLITION PLAN **02**
1" = 20'-0"

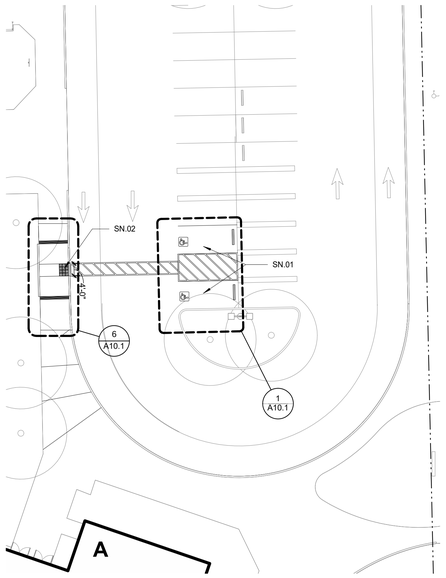

PARKING LOT A - IMPROVEMENT PLAN **01**
1" = 20'-0"

LEGEND

CHAIN LINK FENCE

X — EXISTING BUILDING

EXISTING FIRE HYDRANT

DEMOLITION NOTES

DN.01 BLACKOUT (E) CROSSWALK, PARKING STALL STRIPING, AND SYMBOL OF ACCESSIBILITY
DN.02 DEMOLISH CONCRETE PAVEMENT FOR NEW CURB RAMP, SEE CIVIL FOR MORE INFORMATION
DN.03 DEMOLISH (E) CONCRETE BUMPER

SHEET NOTES

SN.01 ACCESSIBLE PARKING STALLS
SN.02 NEW CURB RAMP

AGENCY APPROVAL:

IDENTIFICATION STAMP
DIV. OF THE STATE ARCHITECT
APP: 02-121824 INC:
REVIEWED FOR
SS ☑ FLS ☑ ACS ☑
DATE: 10/18/2023

LODI USD

HMC Architects

R221551X00

2101 CAPITOL AVENUE, SUITE 100,
SACRAMENTO, CA, 95816
916 368 7990 / www.hmcarchitects.com

LICENSED ARCHITECT
JEFFREY ALAN PARD
C-14648
5/31/25
RENEWAL DATE
STATE OF CALIFORNIA

ISSUE

Δ	DESCRIPTION	DATE

KEYNOTES

NOTES

FACILITY:
ANSEL ADAMS ELEMENTARY SCHOOL
9275 GLACIER POINT DRIVE STOCKTON, CA 95212

PROJECT:
LODI UNIFIED SCHOOL DISTRICT LUNCH SHELTERS - ANSEL ADAMS ELEMENTARY SCHOOL

SHEET NAME:
ENLARGED PARKING LOT A SITE PLAN

CONSTRUCTION DOCUMENTS

DATE: **10/18/2023** CLIENT PROJ NO:

SHEET:

A1.24

Autodesk Docs://R221551X00 Lodi USD Lunch Shelters/R221551X00-A-ADAMS-ES-LUNCH-SHELTER.rvt
10/10/2023 4:25:57 PM

PLEASE RECYCLE

THE LINE SHOWN ABOVE IS EXACTLY 1" WHEN PLOTTED AT THIS SHEET'S ORIGINAL PAGE SIZE

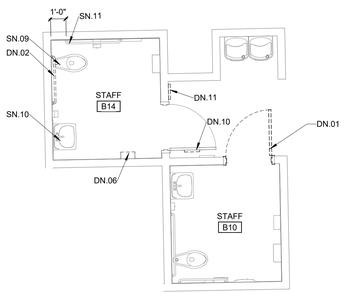

PN

B10/14 - STAFF TOILET ROOMS DEMOLITION PLAN **06** 1/4" = 1'-0"

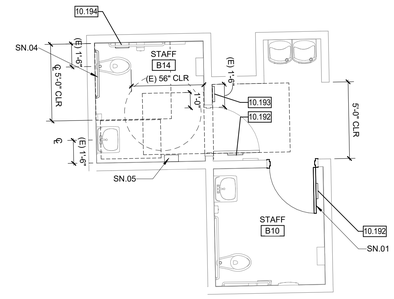

PN

B10/14 - STAFF TOILET ROOMS IMPROVEMENT PLAN **03** 1/4" = 1'-0"

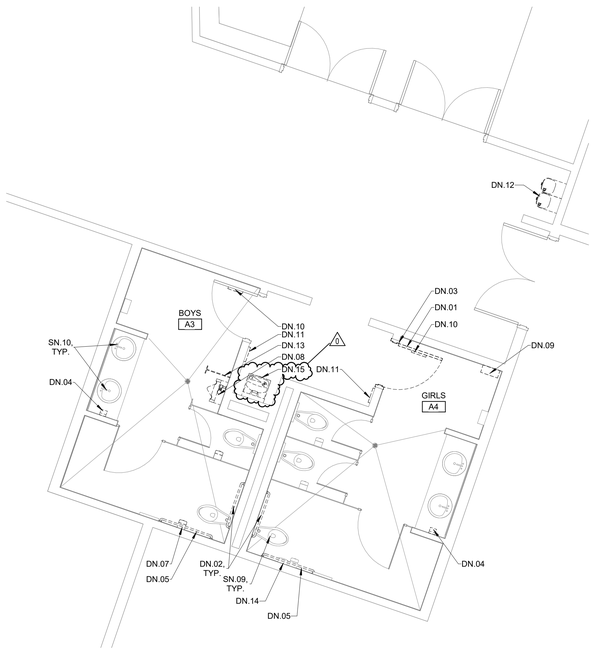

PN

A3/4 - TOLET ROOMS DEMOLITION PLAN **05** 1/4" = 1'-0"

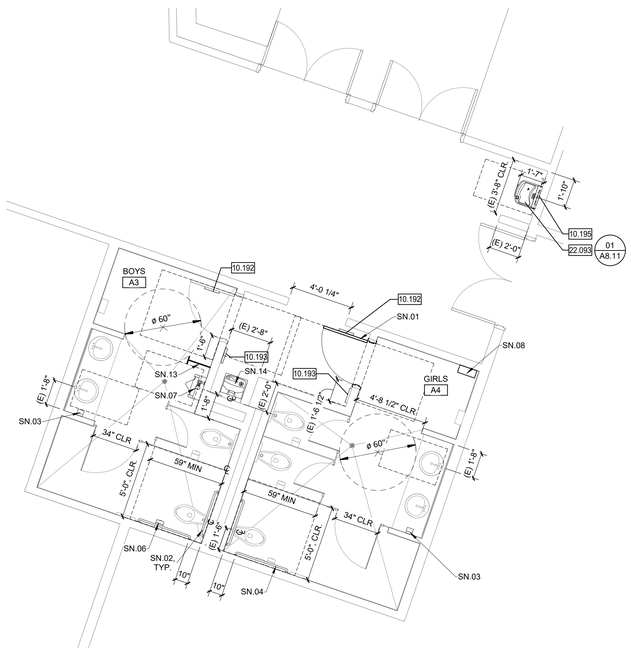

PN

A3/4 - TOILET ROOMS IMPROVEMENT PLAN **02** 1/4" = 1'-0"

LEGEND

DENOTES EXISTING WALLS & CURBS (WHERE OCCURS) TO BE REMOVED, SEE STRUCTURAL DRAWINGS FOR ADDITIONAL INFORMATION

EXISTING WALL TO REMAIN

CONSECUTIVE NUMBERING CONVENTION FOR INTERIOR ELEVATIONS AND ROOM FINISHES.

REMOVE (E) DOOR, HARDWARE AND FRAME U.O.N.

30" x 48" CLEAR FLOOR SPACE

60" CLEAR FLOOR SPACE

DEMOLITION NOTES

DN.01 REMOVE (E) DOOR AND SALVAGE FOR REINSTALLATION
DN.02 REMOVE (E) 36" GRAB BAR AND SALVAGE FOR REINSTILLATION
DN.03 REMOVE (E) CLOSER AND RETURN TO DISTRICT
DN.04 REMOVE (E) SOAP DISPENSER AND SALVAGE FOR REINSTILLATION
DN.05 REMOVE (E) 42" GRAB BAR AND SALVAGE FOR REINSTILLATION
DN.06 REMOVE (E) PAPER TOWEL DISPENSER AND SALVAGE FOR REINSTILLATION
DN.07 REMOVE (E) TOILET PAPER DISPENSER AND SALVAGE FOR REINSTILLATION
DN.08 REMOVE (E) URINAL AND SALVAGE FOR REINSTILLATION
DN.09 REMOVE (E) SANITARY NAPKIN DISPENSER AND SALVAGE FOR REINSTILLATION
DN.10 REMOVE (E) TOILET ROOM DOOR SIGN
DN.11 REMOVE (E) TOILET ROOM I.D. SIGN
DN.12 REMOVE (E) DRINKING FOUNTAIN
DN.13 REMOVE (E) URINIAL SCREEN PARTITION AND SALVAGE FOR REINSTALLATION
DN.14 REMOVE (E) SANITARY NAPKIN DISPOSAL AND SALVAGE FOR REINSTALLATION
DN.15 REMOVE (E) DRINKING FOUNTAIN AND SALVAGE FOR REINSTALLATION 0

SHEET NOTES

SN.01 REINSTALL (E) DOOR IN (E) FRAME PER NEW CONFIGURATION ADJUST ALL HARDWARE AS REQUIRED. PATCH HOLES AND PAINT DOORS. CONTRACTORS OPTION, REPLACE EXISTING DOOR AND HARDWARE IN KIND.
SN.02 REINSTALL SALVAGED 36" GRAB BAR TO COMPLY WITH A10.2
SN.03 REINSTALL SOAP DISPENSER TO COMPLY WITH A10.2
SN.04 REINSTALL SALVAGED 42" GRAB BAR TO COMPLY WITH A10.2
SN.05 REINSTALL PAPER TOWEL DISPENSER TO COMPLY WITH A10.2
SN.06 REINSTALL TOILET PAPER DISPENSER TO COMPLY WITH A10.2
SN.07 REINSTALL URINAL TO COMPLY WITH A10.2
SN.08 REINSTALL SANITARY NAPKIN DISPENSER TO COMPLY WITH A10.2
SN.09 (E) WATER CLOSET TO REMAIN
SN.10 (E) LAVATORY TO REMAIN.WRAP EXPOSED PIPE W/INSULATION
SN.11 (E) GRAB 42" GRAB BAR TO REMAIN
SN.12 PATCH WALL AT AREA AS NEEDED FOR NEW DF. PAINT TO MATCH EXISTING FINISH.
SN.13 REINSTALL URINAL PARTITION TO COMPLY WITH A10.2
SN.14 REINSTALL DRINKING FOUNTAIN PER 2/A8.11 0

KEY NOTES

10.192	TOILET ROOM DOOR SIGNAGE
10.193	TOILET ROOM I.D. SIGN
10.194	SANITARY NAPKIN DISPOSAL UNIT
10.195	I.S.A. SIGN
22.093	ACCESSIBLE DRINKING FOUNTAIN

AGENCY APPROVAL:

LODI USD

HMC Architects

R221551X00

LICENSED ARCHITECT JEFFREY ALAN HEAD C-14648 5/31/25 RENEWAL DATE STATE OF CALIFORNIA

2101 CAPITOL AVENUE, SUITE 100,
SACRAMENTO, CA, 95816
916 368 7990 / www.hmcarchitects.com

ISSUE

Δ	DESCRIPTION	DATE
0	Revision 1	2/24/24

NOTES

1. FOR MOUNTING HEIGHTS, LOCATIONS, AND DETAILS, INCLUDING THOSE FOR DISABLED ACCESSIBILITY, REFER TO SHEET A10.1 ADDITIONALLY, NEW AND RELOCATED EXISTING TOILET ACCESSORIES AND SIGNAGE SHALL BE INSTALLED PER A10.1.
2. PROTECT ALL ADJACENT SURFACES, ITEMS AND FINISHES NOT NOTED TO BE DEMOLISHED.
3. EQUIPMENT/FIXTURES NOTED AS "SALVAGED FOR REINSTALLATION" WILL BE REMOVED AND STORED BY THE CONTRACTOR PRIOR TO START OF DEMOLITION. THESE EQUIPMENT/FIXTURES SHALL BE REINSTALLED BY THE CONTRACTOR UNDER THIS CONTRACT.
4. REMOVE ALL ITEMS SCHEDULED TO BE REMOVED, INCLUDING MOUNTING HARDWARE.
5. DEMO AND REPAIR WALL FINISH AS NECESSARY TO PERFORM FIXTURE AND EQUIPMENT WORK AS NOTED. ADJACENT FINISHES TO BE VERIFIED BY CONTRACTOR.
6. CAP ALL ABANDONED UTILITIES BEHIND FINISHES. WHERE EXISTING FINISHES ARE TO REMAIN, INSTALL BLANK COVER PLATES AND PATCH EXISTING SURFACE TO MATCH AND PAINT ADJACENT.
7. D.A. INDICATES DISABLED ACCESSIBLE

KEY PLAN

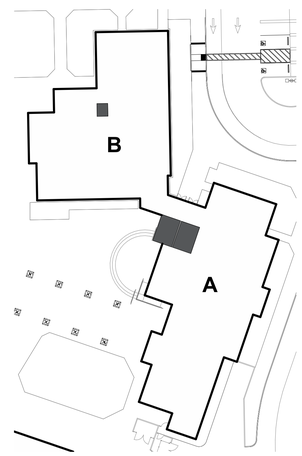

FACILITY:
ANSEL ADAMS ELEMENTARY SCHOOL
9275 GLACIER POINT DRIVE STOCKTON, CA 95212

PROJECT:
LODI UNIFIED SCHOOL DISTRICT LUNCH SHELTERS - ANSEL ADAMS ELEMENTARY SCHOOL

SHEET NAME:
1ST FLOOR - TOILET ROOM IMPROVEMENT PLANS

CONSTRUCTION DOCUMENTS

DATE: **09/18/2023** CLIENT PROJ NO:

SHEET:

A2.11

Autodesk Docs://R221551X00 Lodi USD Lunch Shelters/R221551X00-A-ADAMS-ES-LUNCH-SHELTER.rvt
2/14/2024 5:21:16 PM

PLEASE RECYCLE

THE LINE SHOWN ABOVE IS EXACTLY 1" WHEN PLOTTED AT THIS SHEET'S ORIGINAL PAGE SIZE

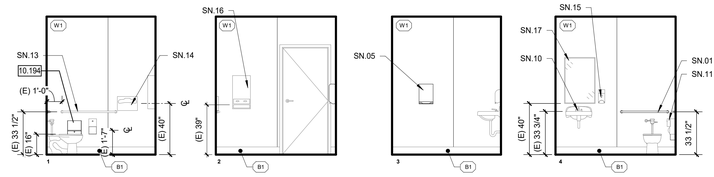

B14 - STAFF TOILET ROOM ELEVATIONS 05

1/4" = 1'-0"

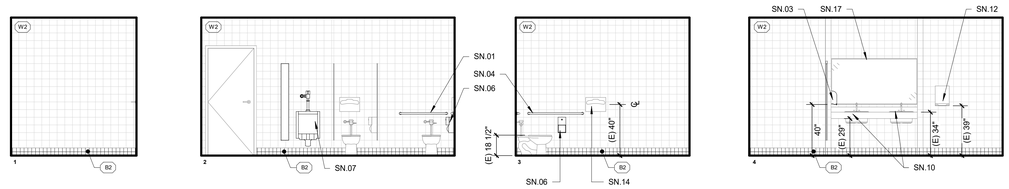

A3 - BOYS TOILET ROOM ELEVATIONS 04

1/4" = 1'-0"

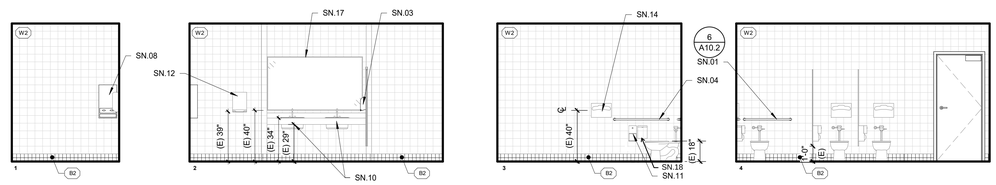

A4 - GIRLS TOILET ROOM ELEVATIONS 03

1/4" = 1'-0"

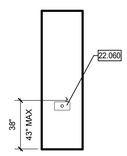

DRINKING FOUNTAIN ELEVATION 02

1/4" = 1'-0"

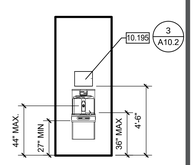

DRINKING FOUNTAIN W/ BOTTLE FILLER ELEVATION 01

1/4" = 1'-0"

LEGEND

APPROX. EXTENT OF WALL FINISH AND BASE (AS APPLICABLE) PATCH. MATCH ADJACENT.

CONSECUTIVE NUMBERING CONVENTION FOR INTERIOR ELEVATIONS AND ROOM FINISHES.

SHEET NOTES

SN.01 REINSTALL SALVAGED 36" GRAB BAR TO COMPLY WITH A10.2
SN.02 NOT USED
SN.03 REINSTALL SOAP DISPENSER TO COMPLY WITH A10.2
SN.04 REINSTALL SALVAGED 42" GRAB BAR TO COMPLY WITH A10.2
SN.05 REINSTALL PAPER TOWEL DISPENSER TO COMPLY WITH A10.2
SN.06 REINSTALL TOILET PAPER DISPENSER TO COMPLY WITH A10.2
SN.07 REINSTALL URINAL TO COMPLY WITH A10.2
SN.08 REINSTALL SANITARY NAPKIN DISPENSER TO COMPLY WITH A10.2
SN.09 NOT USED
SN.10 (E) LAVATORY TO REMAIN. WRAP EXPOSED PIPE W/INSULATION
SN.11 (E) TOILET PAPER DISPENSER TO REMAIN
SN.12 (E) PAPER TOWEL DISPENSER TO REMAIN
SN.13 (E) GRAB 42" GRAB BAR TO REMAIN
SN.14 (E) TOILET SEAT COVER DISPENSER TO REMAIN
SN.15 (E) SOAP DISPENSER TO REMAIN
SN.16 (E) SANITARY NAPKIN DISPENSER TO REMAIN
SN.17 (E) MIRROR TO REMAIN
SN.18 REINSTALL SALVAGED SANITARY NAPKIN DISPOSAL TO COMPLY WITH A10.2

FINISHES

WALL

W1 (E) FIBER REINFORCED LAMINATE PANELS
W2 (E) 2 X 2 X 1/4" CERAMIC TILE

BASE

B1 (E) INTEGRAL COVED BASE
B2 (E) TILE BASE

KEY NOTES

10.194 SANITARY NAPKIN DISPOSAL UNIT
10.195 I.S.A. SIGN
22.060 DRINKING FOUNTAIN

AGENCY APPROVAL:

IDENTIFICATION STAMP
DIV. OF THE STATE ARCHITECT
APP: 02-121824 INC:
REVIEWED FOR
SS ☑ FLS ☑ ACS ☑
DATE: 10/18/2023

LODI USD

HMC Architects
R221551X00
2101 CAPITOL AVENUE, SUITE 100,
SACRAMENTO, CA, 95816
916 368 7990 / www.hmcarchitects.com

LICENSED ARCHITECT JEFFREY ALAN FRAND C-14648 5/31/25 RENEWAL DATE STATE OF CALIFORNIA

ISSUE

Δ	DESCRIPTION	DATE

KEYNOTES

NOTES

1. D.A. INDICATES DISABLED ACCESSIBLE
2. FOR MOUNTING HEIGHTS, LOCATIONS, AND DETAILS, INCLUDING THOSE FOR DISABLED ACCESSIBITY, REFER TO SHEET A0.2A REQUIREMENTS FOR COMPLIANCE.
3. FOR TYPICAL ANCHORAGE DETAILS, SEE A0 SERIES DRAWINGS
4. TYPICAL WALL FINISH AND WALL BASE NOTES ON ONE ELEVATION APPLY TO ALL ELEVATIONS
5. REMOVE FINISHES AS REQUIRED TO ALIGN/RECONNECT TO (E) WATER CARRIERS, WATER LINES AND VENTS. PATCH ANDPAINT WALL TO MATCH ADJACENT FINISH.

FACILITY:
ANSEL ADAMS ELEMENTARY SCHOOL
9275 GLACIER POINT DRIVE STOCKTON, CA 95212

PROJECT:
LODI UNIFIED SCHOOL DISTRICT LUNCH SHELTERS - ANSEL ADAMS ELEMENTARY SCHOOL

SHEET NAME:
INTERIOR ELEVATIONS

CONSTRUCTION DOCUMENTS

DATE: **10/18/2023** CLIENT PROJ NO:

SHEET:

A8.11

Autodesk Docs://R221551X00 Lodi USD Lunch Shelters/R221551X00-A-ADAMS-ES-LUNCH-SHELTER.rvt
10/18/2023 4:26:03 PM

PLEASE RECYCLE

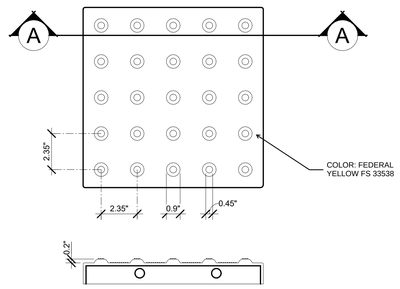

TYPICAL SECTION A-A

8 TRUNCATED DOMES
3" = 1'-0"

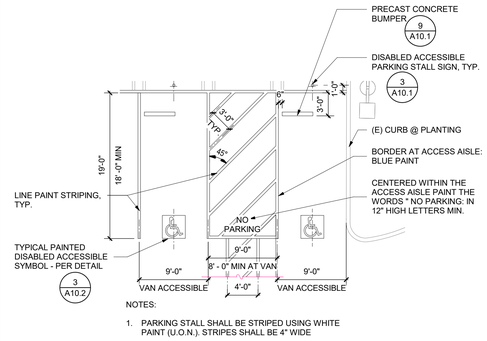

NOTES:

1. PARKING STALL SHALL BE STRIPED USING WHITE PAINT (U.O.N.). STRIPES SHALL BE 4" WIDE

4 ACCESSIBLE PARKING
1/8" = 1'-0"

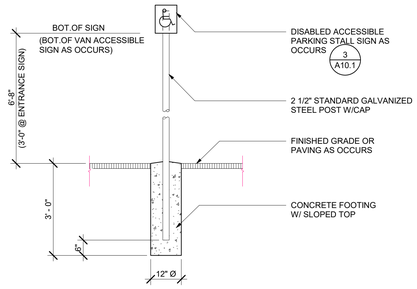

3 METAL SIGNS
1/2" = 1'-0"

10100

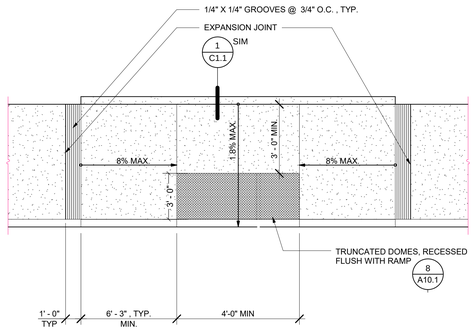

6 CURB RAMP
1/4" = 1'-0"

32204

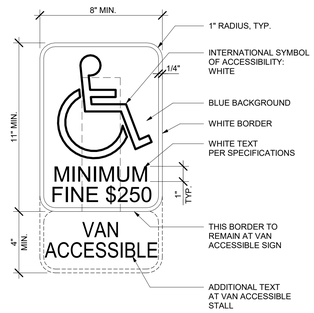

DISABLED ACCESSIBLE PARKING STALL

2 PARKING SIGNAGE
3" = 1'-0"

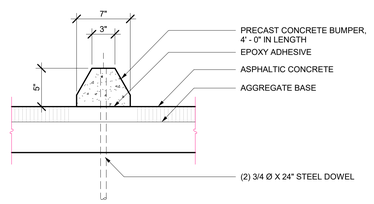

5 PRECAST CONCRETE BUMPER
1 1/2" = 1'-0"

32100

AGENCY APPROVAL:

IDENTIFICATION STAMP
DIV. OF THE STATE ARCHITECT
APP: 02-121824 INC:
REVIEWED FOR
SS ☑ FLS ☑ ACS ☑
DATE: 10/18/2023

LODI USD

HMC Architects

R221551X00

2101 CAPITOL AVENUE, SUITE 100,
SACRAMENTO, CA, 95816
916 368 7990 / www.hmcarchitects.com

LICENSED ARCHITECT
JEFFREY ALAN GIRAU
C-14648
5/31/25
RENEWAL DATE
STATE OF CALIFORNIA

ISSUE

Δ	DESCRIPTION	DATE

KEYNOTES

NOTES

FACILITY:
ANSEL ADAMS ELEMENTARY SCHOOL
9275 GLACIER POINT DRIVE STOCKTON, CA 95212

PROJECT:
LODI UNIFIED SCHOOL DISTRICT LUNCH SHELTERS - ANSEL ADAMS ELEMENTARY SCHOOL

SHEET NAME:
SITE DETAILS

CONSTRUCTION DOCUMENTS

DATE: 10/18/2023 | CLIENT PROJ NO:

SHEET:

A10.1

PLEASE RECYCLE

THE LINE SHOWN ABOVE IS EXACTLY ONE INCH LONG AT THIS SHEETS ORIGINAL PAGE SIZE

Autodesk Docs://R221551X00 Lodi USD Lunch Shelters/R221551X00-A-ADAMS-ES-LUNCH-SHELTER.rvt
10/10/2023 4:26:09 PM

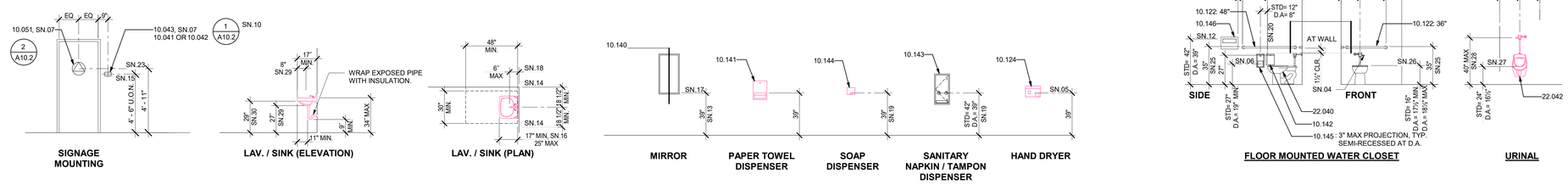

5 TYPICAL MOUNTING HEIGHTS AND DETAILS
1/4" = 1'-0"

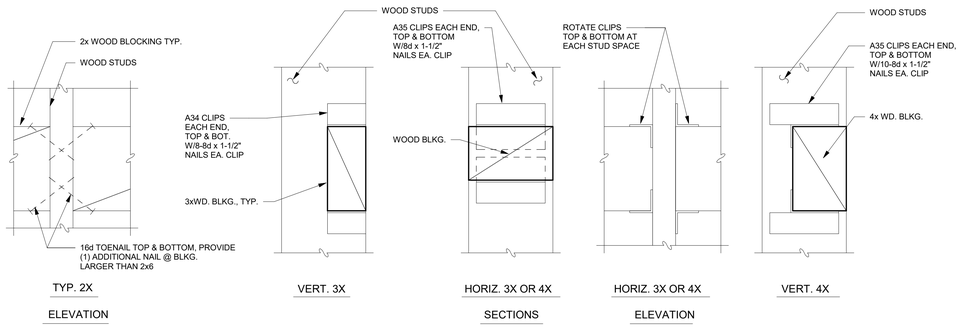

4 TYPICAL WOOD BLOCKING
3" = 1'-0"

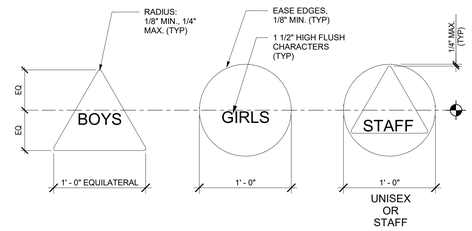

NOTE:

1. TEXT ON DOOR SYMBOL TO BE AS INDICATED ON DRAWINGS

2 TOILET ROOM DOOR SYMBOLS
1 1/2" = 1'-0"

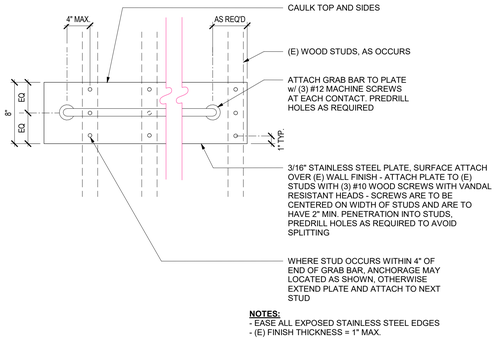

NOTES:
- EASE ALL EXPOSED STAINLESS STEEL EDGES
- (E) FINISH THICKNESS = 1" MAX.

6 GRAB BAR - STAINLESS STEEL PLATE
1 1/2" = 1'-0"

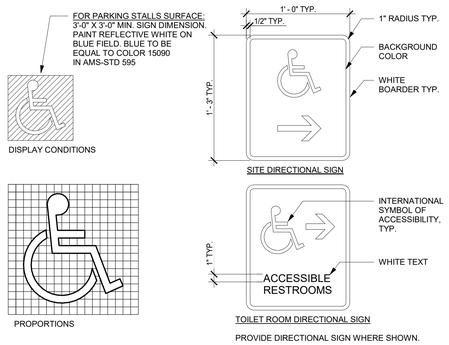

PROVIDE DIRECTIONAL SIGN WHERE SHOWN.

3 SYMBOL OF ACCESSIBILITY
NOT TO SCALE

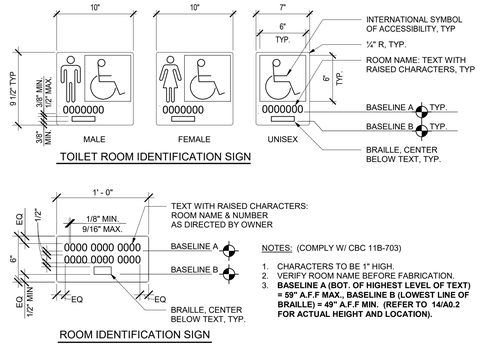

NOTES: (COMPLY W/ CBC 11B-703)

1. CHARACTERS TO BE 1" HIGH.
2. VERIFY ROOM NAME BEFORE FABRICATION.
3. **BASELINE A (BOT. OF HIGHEST LEVEL OF TEXT) = 59" A.F.F MAX., BASELINE B (LOWEST LINE OF BRAILLE) = 49" A.F.F MIN. (REFER TO 14/A0.2 FOR ACTUAL HEIGHT AND LOCATION).**

1 IDENTIFICATION SIGNS
1 1/2" = 1'-0"

LEGEND

A ADULT / STAFF
E.S. ELEMENTARY SCHOOL
K KINDERGARTEN

GENERAL NOTES

1. TYPICAL MOUNTING HEIGHTS AND DETAILS APPLY TO ENTIRE PROJECT, WHETHER REFERENCED OR NOT, UNLESS OTHERWISE NOTED.
2. ALL DISABLED ACCESSIBLE DIMENSIONS, ARE MAXIMUM DIMENSIONS UNLESS OTHERWISE NOTED.
3. HEIGHTS ARE MEASURED FROM FINISH FLOOR, UNLESS OTHERWISE NOTED.

SHEET NOTES

SN.01	TOP OF SHELF
SN.02	MIDDLE SHELF FIXED
SN.03	PROVIDE 2X BLOCKING PER DETAIL
SN.04	AT ACCESSIBLE WATER CLOSETS, FLUSH CONTROL HANDLE SHALL BE MOUNTED ON THE WIDE SIDE OF THE TOILET ENCLOSURE
SN.05	TO OPERATOR OR PUSH BUTTON
SN.06	DIMENSION TO CENTERLINE OF TOILET PAPER ROLL POSITION
SN.07	PROVIDE AT ALL TOILET ROOM DOORS
SN.08	AT DISABLED ACCESSIBLE CASEWORK
SN.09	TO FACE OF FINISH
SN.10	FOR SIGNS MOUNTED BACK-TO-BACK ON WINDOW GLAZING, SEE SPECIFICATIONS FOR REQUIREMENTS.
SN.11	62" CLR MIN. TO FINISH WALL/ PARTITION/ FIXTURE
SN.12	TOP OF OPENING
SN.13	34" MAX. IF MIRROR IS NOT MOUNTED OVER A LAV. OR COUNTER; TOP OF MIRROR 74" MIN. FOR HIGH SCHOOL & ADULTS.
SN.14	FACE OF OBJECTS OR WALLS
SN.15	CENTERLINE OF SIGN.
SN.16	19" MINIMUM AT SINK
SN.17	BOTTOM EDGE OF REFLECTIVE SURFACE
SN.18	FROM FARTHEST DEPTH OF THE CLEAR FLOOR SPACE TO FACE OF PLUMBING AND OTHER OBSTACLES
SN.19	TO CENTERLINE CONTROL.
SN.20	FRONT EDGE OF WATER CLOSET.
SN.21	AT CHILDREN'S DRINKING FOUNTAIN
SN.22	WHEELCHAIR, CLEAR FLOOR SPACE: 30"X48"
SN.23	CENTERLINE OF SYMBOL.
SN.24	WHERE SPECIFIED (ELEMENTARY / KINDERGARTEN)
SN.25	TOP OF GRAB BAR
SN.26	TOP OF SEAT
SN.27	LIP HEIGHT
SN.28	FLUSH HANDLE HEIGHT
SN.29	MINIMUM KNEE CLEARANCE
SN.30	MINIMUM APRON CLEARANCE
SN.31	BUBBLER HEIGHT
SN.32	NO TOILET MOUNTED FLUSH VALVE AT CHILDREN'S ACCESSIBLE WATER CLOSET
SN.33	MAXIMUM HEIGHT
SN.34	FOR BOTTLE FILL STATION AT DRINKING FOUNTAIN
SN.35	TO TOP OF SINK RIM; WHERE OCCURS.
SN.36	ACTIVATION SENSOR.

KEYNOTES

10.041	SIGNAGE: ROOM IDENTIFICATION
10.042	SIGNAGE: TACTILE EXIT
10.043	SIGNAGE: TOILET ROOM IDENTIFICATION
10.051	SIGNAGE: TOILET ROOM DOOR SYMBOL
10.122	TOILET ACCESSORY: GRAB BAR
10.124	TOILET ACCESSORY: HAND DRYER
10.140	TOILET ACCESSORY: MIRROR
10.141	TOILET ACCESSORY: PAPER TOWEL DISPENSER
10.142	TOILET ACCESSORY: SANITARY NAPKIN DISPOSAL
10.143	TOILET ACCESSORY: SANITARY NAPKIN/TAMPON DISPENSER
10.144	TOILET ACCESSORY: SOAP DISPENSER
10.145	TOILET ACCESSORY: TOILET PAPER DISPENSER
10.146	TOILET ACCESSORY: TOILET SEAT COVER DISPENSER
22.040	WATER CLOSET
22.042	URINAL

AGENCY APPROVAL:

IDENTIFICATION STAMP
DIV. OF THE STATE ARCHITECT
APP: 02-121824 INC:
REVIEWED FOR
SS ☑ FLS ☑ ACS ☑
DATE: 10/18/2023

LODI USD

HMC Architects
R221551X00
2101 CAPITOL AVENUE, SUITE 100,
SACRAMENTO, CA, 95816
916 368 7990 / www.hmcarchitects.com

LICENSED ARCHITECT JEFFREY ALAN HARD C-14648 5/31/25 RENEWAL DATE STATE OF CALIFORNIA

ISSUE

Δ	DESCRIPTION	DATE

NOTES

FACILITY:
ANSEL ADAMS ELEMENTARY SCHOOL
9275 GLACIER POINT DRIVE STOCKTON, CA 95212

PROJECT:
LODI UNIFIED SCHOOL DISTRICT LUNCH SHELTERS - ANSEL ADAMS ELEMENTARY SCHOOL

SHEET NAME:
TYPICAL MOUNTING HEIGHTS AND DETAILS

CONSTRUCTION DOCUMENTS

DATE: **10/18/2023** CLIENT PROJ NO:

SHEET:

A10.2

THE LINE SHOWN ABOVE IS EXACTLY 1" WHEN PLOTTED ON ANSI E SHEETS (ORIGINAL PAGE SIZE)
Autodesk Docs://R221551X00 Lodi USD Lunch Shelters/R221551X00-A-ADAMS-ES-LUNCH-SHELTER.rvt
10/10/2023 4:26:11 PM
PLEASE RECYCLE

DESIGN VALUES

DESCRIPTION	DESIGN VALUES [1]
DEAD AND LIVE LOADS	
ROOF LIVE LOAD	20 PSF
ROOF DEAD LOAD (SUPERIMPOSED ON FRAME) [2]	LOAD SCENARIO= {1,2} DL = {3.5 PSF, 2.0 PSF}
ALLOWABLE SOIL PRESSURE [3, 5]	
SPREAD PAD	
VERTICAL BEARING: DL + Lr + SEISMIC (CONCRETE FOOTING)	1500 PSF
LATERAL COHESION: DL + Lr + SEISMIC (CONCRETE FOOTING)	130 PSF
DRILLED PIER	
SKIN FRICTION DOWN : DL + Lr + SEISMIC (CONCRETE FOOTING) PER 1810A.3.3.1.4	167 PSF
SKIN FRICTION (UPLIFT): DL + LR SEISMIC (CONCRETE FOOTING) PER 1810A.3.31.5	83 PSF
LATERAL BEARING: DL + Lr + SEISMIC (CONCRETE FOOTING) PER 1810A.3.3.2	100 PSF/FT
ROOF SNOW LOAD [6]	
GROUND SNOW LOAD, Pg	10 PSF
RISK CATEGORY	II
ROOF SNOW LOAD: [ ] FLAT, Pf OR [ ] LOW SLOPE, Pm OR [X] SLOPED, Ps	10 PSF
SNOW ROOF SLOPE FACTOR, Cs	1
SNOW EXPOSURE FACTOR, Ce	1.2
SNOW LOAD IMPORTANCE FACTOR, Is	1.0
THERMAL FACTOR, Ct	1.2
DRIFT SURCHARGE LOAD, Pd	0 PSF
DISTANCE FROM ADJACENT STRUCTURE, Pg = 0 PSF	4 IN
DISTANCE FROM ADJACENT STRUCTURE, Pg > 0 PSF	20 FT
ICE LOAD	0 PSF
FLOOD DESIGN	
FLOOD HAZARD AREA	NO
WIND DESIGN [4]	
BASIC WIND SPEED (3 SECOND GUST), Vult	110 MPH
EXPOSURE CATEGORY	C
TOPOGRAPHIC FACTOR, Kzt (1 MINIMUM)	1
INTERNAL PRESSURE COEFFICIENT, GCpi (IF APPLICABLE)	0.0
CLEAR WIND FLOW	YES
OBSTRUCTED WIND FLOW	YES
SEISMIC DESIGN [4]	
LATERAL FORCE-RESISTING SYSTEM	STEEL ORDINARY CANTILEVER COLUMN SYSTEM
ANALYSIS PROCEDURE	EQUIVALENT LATERAL FORCE PROCEDURE
SEISMIC DESIGN CATEGORY (SDC)	E
SEISMIC IMPORTANCE FACTOR, Ie	1.0
DESIGN BASE SHEAR, V	Cs x W
SEISMIC RESPONSE COEFFICIENT, Cs	LOAD SCENARIO = {1,2} Cs = {0.90,1.32}
RESPONSE MODIFICATION FACTOR, R	1.25
SITE CLASS [7]	E
REDUNDANCY FACTOR, p	1.3
MAPPED SPECTRAL RESPONSE ACCELERATION AT SHORT PERIOD, Ss - USED TO DETERMINE Cs	LOAD SCENARIO = {1,2} Ss = {1.406, 2.063}
SHORT-PERIOD SITE COEFFICIENT, Fa	1.2
DESIGN SPECTRAL RESPONSE ACCELERATION AT SHORT PERIOD, Sds - USED TO DETERMINE Cs	LOAD SCENARIO = {1,2} Sds (MAX) = {1.125, 1.650}
MAPPED SPECTRAL RESPONSE ACCELERATION AT 1 SECOND PERIOD, S1	LOAD SCENARIO = {1,2} S1 = {0.844, 1.07}
LONG-PERIOD SITE COEFFICIENT, Fv	2.0
DESIGN SPECTRAL RESPONSE ACCELERATION AT 1 SECOND PERIOD, Sd1	LOAD SCENARIO = {1,2} Sd1 = {1.125, 1.427}
HORIZONTAL OR VERTICAL IRREGULARITIES TYPE(S)	NONE

1. IF SITE-SPECIFICDESIGN CRITERIA ARE OUTSIDE THE LIMITS OF THESE PC DRAWINGS, CONTACT POLIGON ENGINEERING TO SEE IF AN ENGINEERING LETTER, SUPPLEMENTAL DRAWINGS, AND/OR CALCULATIONS COULD BE SUBMITTED FOR A SITE-SPECIFIC SOLUTION. ANY SITE- SPECIFIC DEVIATION FROM THIS PC MAY NOT BE SUBMITTING TO DSA AS AN OVER-THE-COUNTER.
2. STRUCTURE IS NOT DESIGNED TO SUPPORT SOLAR PANELS. STRUCTURE IS NOT DESIGNED TO SUPPORT SPRINKLER SYSTEMS IN LOAD SCENARIO 2 REGIONS.
3. GEOHAZARD REPORTS ARE REQUIRED IF THE AREA COVERED UNDER THE ROOF EXCEEDS 4000 SQ FT OR IS LOCATED WITHIN STATE OR LOCAL GEOLOGIC HAZARD ZONE. VERIFY SUBMITTAL AND APPROVAL OF A GEOHAZARD REPORT BY CGS PRIOR TO DSA SITE APPLICATION.
4. STRUCTURAL SEPARATION BETWEEN ADJACENT STRUCTURES: RAM 20= 5.0", RAM 30= 3.0"
   STRUCTURAL SEPARATION BETWEEN EXISTING STRUCTURES: RAM 20= 5.5", RAM 30= 4.0"
5. WHEN PLACING MULTIPLE CANOPIES WITH PIER FOOTINGS ADJACENT TO ONE ANOTHER, THE DESIGN MAY REQUIRE AN ANALYSIS OF GROUP EFFECTS ON THE FOUNDATIONS. THE MINIMUM CLEARANCE BETWEEN CENTER OF PIERS IS EIGHT TIMES PIER DIAMETER WITHOUT AN ACCOMPANYING ENGINEERING LETTER
6. SITE APPLICATION DESIGN PROFESSIONAL AND DSA REVIEWER SHALL VERIFY THE STRUCTURE TO BE LOCATED AT LEAST 20 FEET FROM ANY HIGHER ADJACENT STRUCTURE IF GROUND SNOW IS GREATER THAN ZERO.
7. DESIGN COMPLIES WITH THE CONDITIONS OF EXCEPTION 1 OF ASCE 7-16 SECTION 11.4.8, ITEM 2.
8. APPROVED FIRE APPARATUS ACCESS ROADS SHALL EXTEND TO WITHIN 150 FEET OF ALL PORTIONS OF THE PERIMETER OF THE STRUCTURE PER CFC 503.1.1.

ARCHITECTURAL REQUIREMENTS:

DESCRIPTION	DESIGN VALUES
TYPE OF CONSTRUCTION	II B
NUMBER OF STORIES	1
FIRE SPRINKLER SYSTEM	NOT BY POLIGON

RELATED BUILDING CODES AND STANDARDS:

TITLE 24 CODES:

2022 California Administrative Code (CAC)..........................(Part 1, Title 24, CCR)
2022 California Building Code (CBC), Volumes 1 and 2 (Part 2, Title 24, CCR)
(2021 International Building Code with 2022 California amendments)
2022 California Electrical Code ....(Part 3, Title 24, CCR)
(2020 National Electrical Code with 2022 California amendments)
2022 California Mechanical Code (CMC) ....(Part 4, Title 24, CCR)
(2021 Uniform Mechanical Code with 2022 California amendments)
2022 California Plumbing Code (CPC) ....(Part 5, Title 24, CCR)
(2021 Uniform Plumbing Code with 2022 California amendments)
2022 California Energy Code ....(Part 6, Title 24, CCR)
2022 California Fire Code (CFC) ....(Part 9, Title 24, CCR)
(2021 International Fire Code with 2022 California Amendments)
2022 California Existing Building Code (CEBC).......................(Part 10, Title 24, CCR)
2022 California Green Building Standards Code...................(Part 11, Title 24, CCR)
2022 California Referenced Standards Code .... (Part 12, Title 24, CCR)
Title 19 CCR, Public Safety, State Marshal Regulations

NFPA 13 - 2016
NFPA 72 - 2016

REFERENCE CODE SECTIONS FOR APPLICABLE STANDARDS:

2022 CBC, CHAPTER **35**
2022 CFC, CHAPTER **80**

SCOPE OF WORK NARRATIVE:

THESE DRAWINGS ILLUSTRATE THE FABRICATION AND INSTALLATION REQUIREMENTS FOR A FREE-STANDING PREFABRICATED STEEL SHADE STRUCTURE. THE ENTIRE STRUCTURAL SYSTEM IS COMPRISED OF TUBULAR STEEL MEMBERS SUPPORTED ON CONCRETE FOUNDATIONS. THE FLEXIBILITY INCLUDED HEREIN ALLOWS THIS STRUCTURE TO COMPLY WITH A WIDE VARIETY OF PROJECT SITES AND LOADING REQUIREMENTS.

INSTRUCTIONS FOR ARCHITECTS PLANNING TO SUBMIT THESE PRE-CHECKED DRAWINGS TO DSA:

STEP 1 PROJECT INFORMATION

PROJECT NAME	LODI UNIFIED SCHOOL DISTRICT LUNCH SHELTERS - ANSEL ADAMS ELEMENTARY SCHOOL	
SCHOOL DISTRICT	LODI UNIFIED SCHOOL DISTRICT	
USE AND OCCUPANCY CLASSIFICATION	A-3	**(PROPOSED OCCUPANCY: A1, A2, A3, A4, A5, B, E)**
OCCUPANT LOAD FACTOR	15	**(15 SQFT/PERSON MAX; 5 SQFT/PERSON MIN FOR ANY A OCCUPANCY 20 SQFT/PERSON MAX FOR B OR E OCCUPANCY)**
TOTAL ROOF AREA	1,920	**(MAXIMUM 4500 SQFT FOR ANY A OCCUPANCY, 10,000 SQFT FOR B OCCUPANCY, AND 5000 SQFT FOR E OCCUPANCY)**
NUMBER OF OCCUPANTS	128	**(MAXIMUM 300 FOR ANY A OCCUPANCY, 500 FOR B OCCUPANCY, AND 250 FOR E OCCUPANCY)**

STEP 2 DESIGN OPTIONS

ROOF DECK	[ ] MULTI-RIB (MR)	**DEFAULT**, WEIGHT 1.2 PSF
	[X] STANDING SEAM (SS)	WEIGHT 1.8 PSF
GUTTERS	[ ] NO	**DEFAULT**
	[X] YES	SEE RAM7.0 FOR DETAILS
ELECTRICAL ACCESS	[ ] NO	**DEFAULT**
	[X] YES	SEE RAM7.1 FOR DETAILS
CLEAR HEIGHT	[ ] 8'	**DEFAULT**
	[X] 10' OTHER	10' MAX

STEP 3 SEISMIC ACCELERATION

Ss 0 . 7 8 0 **(g)**
S1 0 . 2 6 0 **(g)**

STEP 4 SEISMIC REGIONS

0.000 < Ss <= 1.406 S1 <= 0.844	[X] WHITE	3.5 PSF MAX DEA LOAD
1.406 < Ss <= 2.063 S1 <= 1.070	[ ] GREEN	2.0 PSF MAX DEAD LOAD

STEP 5 TOTAL ROOF DEAD LOAD

ROOF DECK	1 . 8 PSF	SEE STEP 2' 'ROOF DECK FOR WEIGHTS
COLLATERAL	0 . 0 PSF	LIGHTING , FIRE SUPPRESSION, ETC.
TOTAL	1 . 8 PSF	ADD 'ROOF DECK' AND 'COLLATERAL'

STEP 6 LOAD SCENARIO

WHITE	TOTAL ROOF DEAD LAOD <= 3.5 PSF	[X] **LOAD SCENARIO 1**
GREEN	TOTAL ROOF DEAD LOAD < 2.0 PSF	[ ] **LOAD SCENARIO 2**

STEP 7 PC STRUCTURE

ROOF WIDTH <= 20	[ ] **RAM 20**
20 < ROOF WIDTH <= 30	[X] **RAM 30**

STEP 8 STRUCTURE SIZE

	RAM 20		**RAM 30**	
ROOF WIDTH	[ ] 20'	**DEFAULT**	[X] 30'	**DEFAULT**
	[ ] ________ OTHER 9' MIN; 20' MAX		[ ] ________ OTHER	20'-6" MIN; 30' MAX
ROOF LENGTH	[ ] 44'	2 BAYS	[ ] 44'	2 BAYS
	[ ] 64'	3 BAYS	[X] 64'	3 BAYS
	[ ] 84'	4 BAYS	[ ] 84'	4 BAYS
	[ ] ________ OTHER		[ ] ________ OTHER	

STEP 9 FOUNDATION TYPE

	RAM 20		**RAM 30**	
FOUNATION TYPE	[ ] SPREAD PAD	[ ] DRILLED PIER	[ ] SPREAD PAD	[X] DRILLED PIER

STEP 10 FOUNDATION SUMMARY

RAM 20		RAM 30	
[ ] LOAD SCENARIO 1 SPREAD PAD	[ ] LOAD SCENARIO 1 DRILLED PIER	[ ] LOAD SCENARIO 1 SPREAD PAD	[X] LOAD SCENARIO 1 DRILLED PIER
[ ] LOAD SCENARIO 2 SPREAD PAD	[ ] LOAD SCENARIO 2 DRILLED PIER	[ ] LOAD SCENARIO 2 SPREAD PAD	[ ] LOAD SCENARIO 2 DRILLED PIER

STEP 11 SHEET INDEX

BASE FRAME	RAM 20 SHEET INDEX				RAM 30 SHEET INDEX			
ROOF DECK	MR		SS		MR		SS	
FOUNDATION TYPE	SPREAD PAD	DRILLED PIER	SPREAD PAD	DRILLED PIER	SPREAD PAD	DRILLED PIER	SPREAD PAD	DRILLED PIER
SELECT ONE	[ ]	[ ]	[ ]	[ ]	[ ]	[ ]	[ ]	[X]
ORDER FORM	RAM1.0	RAM1.0	RAM1.0	RAM1.0	RAM1.0	RAM1.0	RAM1.0	RAM1.0
NOTES AND SPECIAL INSPECTIONS	RAM1.1	RAM1.1	RAM1.1	RAM1.1	RAM1.1	RAM1.1	RAM1.1	RAM1.1
FOUNDATION PLAN	RAM2.0	RAM2.1	RAM2.0	RAM2.1	RAM2.2	RAM2.3	RAM2.2	RAM2.3
FRAMING PLAN	RAM3.0	RAM3.0	RAM3.0	RAM3.0	RAM3.1	RAM3.1	RAM3.1	RAM3.1
FRAME CONNECTION DETAILS	RAM4.0	RAM4.0	RAM4.0	RAM4.0	RAM4.2	RAM4.2	RAM4.2	RAM4.2
SECTION DETAILS	RAM4.1	RAM4.1	RAM4.1	RAM4.1	RAM4.3	RAM4.3	RAM4.3	RAM4.3
ARCHITECTURAL VIEWS	RAM5.0	RAM5.0	RAM5.0	RAM5.0	RAM5.1	RAM5.1	RAM5.1	RAM5.1
ROOF CONNECTION DETAILS	RAM6.0	RAM6.0	RAM6.1	RAM6.1	RAM6.0	RAM6.0	RAM6.1	RAM6.1
MISC DESIGN OPTIONS	RAM7.0	RAM7.0	RAM7.0	RAM7.0	RAM7.0	RAM7.0	RAM7.0	RAM7.0
ELETRICAL CUTOUTS	RAM7.1	RAM7.1	RAM7.1	RAM7.1	RAM7.1	RAM7.1	RAM7.1	RAM7.1

STEP 12 MULTIPLE STRUCTURES

	ROOF WIDTH X LENGTH	QTY
MULTIPLE STRUCTURES		

STEP 1: GENERAL PROJECT INFORMATION

- IDENTIFY PROJECT NAME AND SCHOOL DISTRICT
- IDENTIFY USE AND OCCUPANCY CLASSIFICATION
  - THE USE AND OCCUPANCY DETERMINE THE MAXIMUM SQUARE FOOTAGE OF THE STRUCTURE
  - THE MAXIMUM SQUARE FOOTAGE IS ALSO LIMITED BY THE NUMBER OF OCCUPANTS
- IDENTIFY THE OCCUPANT LOAD PER TABLE 1004.5 IN THE CBC
- IDENTIFY TOTAL ROOF AREA WHICH SHALL NOT EXCEED ALLOWABLE AREA PER TABLE 506.2 IN THE CBC.
- IDENTIFY EXPECTED NUMBER OF OCCUPANTS BASED ON THE ESTIMATED OCCUPANT LOAD
  - TOTAL ROOF AREA DIVIDED BY OCCUPANT LOAD CAN DETERMINE NUMBER OF OCCUPANTS

STEP 2: DESIGN OPTIONS

- SELECT ROOF DECK FOR YOUR PROJECT
  - "MR" REPRESENTS MCELROY METAL "MULTI-RIB" ROOF DECK
  - "SS" REPRESENTS MCELROY METAL "MEDALLION-LOK" 16" STANDING SEAM ROOF DECK
- SELECT WHETHER GUTTERS AND DOWNSPOUTS FROM POLIGON IS NEEDED FOR YOUR PROJECT
  - IF "YES", THEN INCLUDE SHEET RAM7.0 IN THE DRAWING SET
- SELECT WHETHER ELECTRICAL CUTOUTS ARE NEEDED FOR YOUR PROJECT
  - SHEET RAM7.0 SHOWS ELECTRICAL CUTOUT SIZE AND LOCATION CUTOUTS IN COLUMNS
  - SHEET RAM7.1 HAS INSTRUCTIONS AND SHEET TO IDENTIFY WHICH COLUMNS
  - SHEET RAM7.1 MUST BE FILLED OUT IN THE SUBMITTAL SET APPROVED BY DSA
  - IF NOTHING IS FILLED IN ON RAM7.1, POLIGON WILL ASSUME CUTOTUS ARE ONLY IN COLUMN A1 (SEE 'FRAMING PLAN' FOR REFERENCE)
- SELECT CLEAR HEIGHT (SEE 'ARCHITECTURAL VIEWS' SHEET FOR REFERENCE)
  - MIN 7'-1"; MAX 10'-0"
- **IF NOTHING IS SELECTED, POLIGON WILL ASSUME THE DEFAULT FOR EACH DESIGN OPTION**

STEP 3: IDENTIFY THE Ss & S1 ACCELERATION (g) FOR YOUR PROJECT AND GEOTECHNICAL INFORMATION

- Ss & S1 VALUE DETERMINES THE REQUIRED SEISMIC DESIGN FORCES
- Ss & S1 VALUE DEPENDS ON PROJECT'S GEOGRAPHICAL LOCATION
  - FIND Ss & S1 VALUES FOR YOUR PROJECT IN THE SITE SPECIFIC GEOTECHNICAL REPORT
  - FIND Ss & S1 VALUES FOR YOUR PROJECT USING (https://asce7hazardtool.online/)
- THIS PC IS NOT APPROVED FOR Ss VALUES GREATER THAN 2.063 (CONTACT POLIGON FOR ADDITIONAL OPTIONS)

STEP 4: IDENTIFY THE SEISMIC REGION FOR YOUR PROJECT

- THE REGIONS ARE DEPENDANT ON THE Ss & S1 VALUE DETERMINED IN STEP 3
- THE SEISMIC REGION DICTATES THE MAXIMUM DEAD LOAD PERMITTED (SEE TABLE TO THE LEFT)

STEP 5: IDENTIFY THE ROOF DEAD LOAD FOR YOUR PROJECT

- THE ROOF DECK DEAD LOAD WILL ALWAYS BE INCLUDED
- THE COLLATERAL LOAD REPRESENTS ADDITIONAL LOAD THAT CAN BE SUPPORTED BY THE FRAME
- TOTAL ROOF DEAD LOAD MUST BE LESS THAN OR EQUAL TO THE MAX DEAD LOAD SHOWN IN STEP 4
- CUT SHEETS OF ANY BOARDS, BOXES AND EQUIPMENT TO BE MOUNTED ON THE STRUCTURE, INCLUDING WEIGHTS AND DIMENSIONS ARE REQUIRED

STEP 6: IDENTIFY THE LOAD SCENARIO

- REFERENCE THE STEP 4 COLOR AND SELECT THE APPLICABLE LOAD SCENARIO
- LOAD SCENARIOS HAVE NO IMPACT ON FRAME DESIGN OR COST, BUT DO AFFECT FOUNDATION SIZE

STEP 7: IDENTIFY PC STRUCTURE

- ROOF WIDTHS UP TO 20' WIDE USE THE "RAM 20"
- ROOF WIDTHS UP TO 30' WIDE USE THE "RAM 30"
- THE 20' AND 30' WIDTHS ARE SUGGESTED BECAUSE THEY ARE THE MOST ECONOMICAL
- MAXIMUM WIDTH IS 30'; (SEE 'ARCHITECTURAL VIEWS' SHEET FOR REFERENCE)

STEP 8: IDENTIFY SITE SPECIFIC ROOF WIDTH AND LENGTH

- DO NOT EXCEED THE TOTAL ROOF AREA FROM STEP 1 (ROOF WIDTH MULTIPLIED BY ROOF LENGTH)

STEP 9: FOUNDATION TYPE

- SELECT A FOUNDATION BASED THE DESIRED FOUNDATION TYPE
- SELECT EITHER SPREAD PAD OR DRILLED PIER FOUNDATION PRIOR TO APPROVAL
- FOUNDATION TYPE IMPACTS CONSTRUCTION (TIMING, SEQUENCE, COST, ETC.)
- FOUNDATION TYPE IMPACTS ANCHOR BOLT LENGTH (NOT PROVIDED BY POLIGON)
- REVIEW OF SITE-SPECIFIC SOILS REPORT TO EVALUATE APPLICABILITY OF FOUNDATION OPTIONS AVAILABLE

STEP 10: FOUNDATION SUMMARY

- USE THE SELECTIONS FROM STEP 6 AND STEP 9 TO SELECT THE APPROPRIATE FOUNDATION

STEP 11: SELECT APPLICABLE SHEET INDEX FOR YOUR PROJECT

- IDENTIFY THE APPLICABLE SHEET INDEX
- INCLUDE APPLICABLE SHEETS WITH YOUR DSA SUBMITTAL
- EXCLUDE 'MISC DESIGN OPTIONS' SHEET FOR PROJECTS WITHOUT ELECTRICAL CUTOUTS OR GUTTERS
- EXCLUDE 'ELECTRICAL CUTOUTS' SHEET FOR PROJECTS WITHOUT ELECTRICAL CUTOUTS

STEP 12: MULTIPLE STRUCTURES WITH THE SAME PC#

- FILL IN ROOF LENGTH AND WIDTH OF STRUCTURES AS WELL AS QUANTITY
- UNO ON THE POLIGON DRAWINGS, POLIGON WILL ASSUME ALL DESIGN CRITERIA FOR EACH STRUCTURE IS THE SAME
- CONTACT POLIGON FOR FURTHER INFORMATION

SHEET INDEX

1	RAM1.0	ORDER FORM	11	RAM4.2	FRAME CONNECTION DETAILS - RAM 30
2	RAM1.1	NOTES AND SPECIAL INSPECTIONS	12	RAM4.3	SECTION DETAILS - RAM 30
3	RAM2.0	FOUNDATION PLAN SPREAD PAD - RAM 20	13	RAM5.0	ARCHITECTURAL VIEWS - RAM 20
4	RAM2.1	FOUNDATION PLAN DRILLED PIER - RAM 20	14	RAM5.1	ARCHITECTURAL VIEWS - RAM 30
5	RAM2.2	FOUNDATION PLAN SPREAD PAD - RAM 30	15	RAM6.0	ROOF CONNECTION DETAILS
6	RAM2.3	FOUNDATION PLAN DRILLED PIER - RAM 30	16	RAM6.1	ROOF CONNECTION DETAILS
7	RAM3.0	FRAMING PLAN - RAM 20	17	RAM7.0	MISC DESIGN OPTIONS
8	RAM3.1	FRAMING PLAN - RAM 30	18	RAM7.1	ELECTRICAL CUTOUTS
9	RAM4.0	FRAME CONNECTION DETAILS - RAM 20			
10	RAM4.1	SECTION DETAILS - RAM 20			

TOTAL SHEETS = 18

ABBREVIATIONS:

ACI	AMERICAN CONCRETE INSTITUTE	MR	MULTI-RIB ROOF PANEL (MCELROY)
AISC	AMERICAN INSTITUTE OF STEEL CONSTRUCTION	NTS	NOT TO SCALE
ASM	ASSEMBLY (INTERNAL REFERENCE)	NO	NUMBER
ASTM	AMERICAN SOCIETY FOR TESTING AND MAT'LS	OC	ON CENTER
AWS	AMERICAN WELDING SOCIETY	OSHA	OCCUPATIONAL HEALTH AND SAFETY ADM.
CBC	CALIFORNIA BUILDING CODE	PCF	POUNDS PER CUBIC FOOT
CJP	COMPLETE JOINT PENETRATION	PD	POLIGON DRAWING
CLR	CLEAR	PJ	PRETENSIONED JOINT
DEG	DEGREE	PLCS	PLACES
DIA	DIAMETER	PLT	PLATE
DIM	DIMENSION	PSF	POUNDS PER SQUARE FOOT
DSA	DIVISION OF THE STATE ARCHITECT	PSI	POUNDS PER SQUARE INCH
EQ	EQUAL	QTY	QUANTITY
FT	FEET	REF	REFERENCE
GA	GAGE	SQ	SQUARE
IN	INCHES	SS	STANDING SEAM ROOF PANEL (MCELROY)
KSI	KIPS PER SQUARE INCH	TYP	TYPICAL
MAX	MAXIMUM	UNO	UNLESS NOTED OTHERWISE
MIN	MINIMUM	USGS	U.S. GEOLOGICAL SURVEY
MISC	MISCELLANEOUS	W/	WITH
MPH	MILES PER HOUR		

SPECIFICATIONS

PART 1 - GENERAL

1.1 STRUCTURE DESCRIPTION
A. STRUCTURE(S) BASED ON THE FOLLOWING PC DESIGN(S):
1. HIP ROOF (RAM)

1.2 DESIGN REQUIREMENTS
A. MEET THE DESIGN INTENT SHOWN ON THE PC DRAWINGS APPROVED FOR THIS PROJECT.
1. DESIGN CRITERIA
2. MEMBERS SIZES
3. HIDDEN BOLTED CONNECTIONS BETWEEN STRUCTURAL MEMBERS
4. COLUMN ANCHORAGE SHALL INCLUDE FOUR (4) BOLTS IN COMPLIANCE WITH OSHA 1926.755(A)(1).
5. NO FIELD WELDING PERMITTED
6. NO FIELD PAINTING PERMITTED
7. ROOF DIMENSIONS AND SLOPES
8. EXPOSED STEEL ROOF FASTENERS (IF APPLICABLE) POWDER COATED BY MANUFACTURER
9. ROOF DECK SPANS FROM PEAK TO EAVE AND PERMITS PROPER DRAINAGE WITHOUT DEBRIS BUILD-UP.

1.3 SUBMITTALS
A. DRAWINGS AND CALCULATIONS SEALED BY A PROFESSIONAL ENGINEER LICENSED IN THE APPROPRIATE STATE.
B. ONLY MANUFACTURERS THAT SUBMIT DRAWINGS AND CALCULATIONS PRIOR TO BID SHALL BE CONSIDERED.
C. MANUFACTURER MUST BE ABLE TO SUBMIT APPROPRIATE LABORATORY TESTS FOR THE FOLLOWING:
1. FRAME FINISH REQUIREMENTS LISTED IN PART 2 OF THIS SPECIFICATION.
2. CERTIFIED MILL TEST REPORTS FOR STRUCTURAL STEEL (DESCRIBING THE CHEMICAL AND PHYSICAL PROPERTIES).
3. CERTIFIED MILL TEST REPORTS FOR STRUCTURAL BOLTS.

1.4 TECHNICAL SUPPORT
A. MANUFACTURER MUST HAVE IN-HOUSE ENGINEERING DEPARTMENT AND A PROFESSIONAL ENGINEER LICENSED IN THE APPROPRIATE STATE TO ANSWER TECHNICAL QUESTIONS.

1.5 QUALITY ASSURANCE
A. GENERAL
1. FABRICATION PROCEDURES SHALL COMPLY WITH APPLICABLE CODES AND LOCAL REGULATIONS.
2. REQUIRED STRUCTURAL TESTS AND SPECIAL INSPECTIONS INCLUDED ON THE PROJECT DSA-103 FORM.
B. MANUFACTURER QUALIFICATIONS
1. MINIMUM (10) YEARS ENGINEERING AND FABRICATING PRE-ENGINEERED STRUCTURES
2. MANUFACTURER OWNED AND OPERATED POWDER COAT PAINT FINISH SYSTEM
3. ALL AWS CERTIFIED WELDERS
4. FULL-TIME PROFESSIONAL ENGINEER ON STAFF LICENSED IN THE APPROPRIATE STATE
5. FULL-TIME AWS CERTIFIED ASSOCIATE WELDING INSPECTOR ON STAFF
6. FULL-TIME QUALITY ASSURANCE MANAGER ON STAFF
7. FULL-TIME LEED AP ON STAFF
C. MANUFACTURER CERTIFICATIONS
1. PCI 4000 CERTIFICATION THROUGH POWDER COATING INSTITUTE (PCI)
2. AISC CERTIFIED FABRICATOR

1.6 MANUFACTURER WARRANTY
A. STRUCTURE MUST HAVE (10) YEAR LIMITED WARRANTY ON STEEL FRAME MEMBERS.
B. STRUCTURE MUST HAVE (10) YEAR LIMITED WARRANTY ON PAINT SYSTEM.
C. PASS THROUGH WARRANTY OF ROOFING MANUFACTURER SHALL BE PROVIDED UPON REQUEST.

PART 2 - PRODUCTS

2.1 MANUFACTURER
A. ACCEPTABLE MANUFACTURERS
1. POLIGON, A DIVISION OF PORTERCORP.
A. 4240 N 136TH AVE., HOLLAND, MI 49424; (616) 399-1963; WWW.POLIGON.COM .
I. FOR POLIGON STRUCTURES IN *NORTHERN CALIFORNIA*, THE LOCAL REPRESENTATIVE IS ALL ABOUT PLAY (WWW.PLAYGROUNDPROS.COM). EMAIL AAP@PLAYGROUNDPROS .COM OR CALL (916) 923-2180
II. FOR POLIGON STRUCTURES IN *SOUTHERN CALIFORNIA*, THE LOCAL REPRESENTATIVE IS MIRACLE PLAYGROUND SALES (MIRACLEPLAYGROUNDSALES.COM EMAIL SALES@MIRACLEPLAYGROUND.COM OR CALL (951) 695-4515
B. SUBSTITUTION LIMITATIONS
1. THE ENGINEERING FOR THIS STRUCTURE IS ONLY APPLICABLE IF POLIGON SUPPLIES THE MATERIAL.
2. IF THE CONTRACTOR ELECTS TO SUBSTITUTE A DIFFERENT STRUCTURE, THEY ARE RESPONSIBLE TO OBTAIN THE NECESSARY DSA APPROVAL WITH:
A. NO COST TO THE DISTRICT OR ARCHITECT
B. NO CHANGE TO THE CONSTRUCTION SCHEDULE
3. SUBSTITUTIONS MUST BE APPROVED A MINIMUM OF (10) DAYS BEFORE BID.
4. ALL APPROVED MANUFACTURERS SHALL BE NOTIFIED IN WRITING BEFORE THE BID DATE.
5. SUBSTITUTE MANUFACTURERS SHALL NOT BE ALLOWED TO BID WITHOUT WRITTEN NOTIFICATION.
6. SUBSTITUTE MANUFACTURERS MUST MEET "MANUFACTURER QUALIFICATIONS" LISTED IN PART 1 OF THIS SPECIFICATION.
7. SUBSTITUTE MANUFACTURERS MUST PROVIDE PROOF OF "MANUFACTURER CERTIFICATIONS" ABOVE.
8. SUBSTITUTE MANUFACTURERS MUST PROVIDE PAINT FINISH DESCRIBED IN "FRAME FINISH" BELOW.

2.2 FRAME
A. MATERIALS
1. ANCHOR BOLTS: SEE DRAWINGS FOR REQUIREMENTS. ANCHOR BOLTS NOT PROVIDED BY MANUFACTURER
2. STRUCTURAL STEEL: SEE DRAWINGS FOR REQUIREMENTS.
3. STRUCTURAL BOLTS: SEE DRAWINGS FOR REQUIREMENTS.
B. FINISH
1. FRAME FINISH: POLI-5000 POWDER COAT. NO FIELD PAINTING PERMITTED.
A. COMPONENTS SHALL BE CLEANED, PRE-TREATED, AND FINISHED AT A FACILITY OWNED AND DIRECTLY SUPERVISED BY THE MANUFACTURER.
B. COMPONENTS SHALL BE SHOT BLASTED TO SSPC-SP10 NEAR-WHITE BLAST CLEANING. SSPC-SP2 HAND TOOL CLEANING WILL NOT BE AN ACCEPTABLE ALTERNATIVE.
C. COMPONENTS SHALL BE PRETREATED IN A (3) STAGE IRON PHOSPHATE OR EQUAL WASHER.
D. COMPONENTS SHALL RECEIVE EPOXY PRIMER COAT FOR SUPERIOR CORROSION PROTECTION.
E. COMPONENTS SHALL RECEIVE TOP COAT OF SUPER DURABLE TGIC POWDER COAT.
F. FINISH SHALL NOT HAVE ANY VOC EMISSIONS.
G. MANUFACTURER SHALL BE ABLE TO PRODUCE DOCUMENTATION STATING SAMPLE PRODUCTION COMPONENTS HAVE BEEN TESTED TO MEET THE FOLLOWING:
I. SALT SPRAY RESISTANCE PER ASTM B 117/ ASTM D 1654 TO 10,000 HOURS WITH NO CREEP FROM SCRIBE LINE AND RATING OF 10.
II. HUMIDITY RESISTANCE PER ASTM D2247-02 TO 5,000 HOURS WITH NO LOSS OF ADHESION OR BLISTERING.
III. COLOR/UV RESISTANCE PER ASTM G154-04 TO 2,000 HOURS EXPOSURE, ALTERNATE CYCLES WITH RESULTS OF NO CHALKING, 75% COLOR RETENTION, COLOR VARIATION MAXIMUM 3.0 E VARIATION CIE FORMULA (BEFORE AND AFTER 2,000 HOURS EXPOSURE).
2. FRAME COLOR: DETERMINED BY DISTRICT.
C. FABRICATION
1. FABRICATE COMPONENTS TO PERMIT BOLTED CONNECTIONS ON SITE. NO FIELD WELDING PERMITTED.
2. LABEL EACH MEMBER WITH UNIQUE PART NUMBER TO STREAMLINE ERECTION.
3. WELDING REQUIREMENTS: SEE DRAWINGS FOR REQUIREMENTS.

2.3 ROOF
A. MATERIALS
1. ROOF MATERIAL: SEE DRAWINGS FOR REQUIREMENTS.
2. ROOF HARDWARE: SEE DRAWINGS FOR REQUIREMENTS.
B. FINISH
1. ROOF FINISH: KYNAR 500 HIGH-PERFORMANCE RESIN-BASED PAINT.
2. ROOF COLOR: DETERMINED BY OWNER.

2.4 MISCELLANEOUS
A. MATERIALS
1. CONCRETE MATERIAL: SEE DRAWINGS FOR REQUIREMENTS. CONCRETE NOT PROVIDED BY MANUFACTURER.

PART 3 - EXECUTION

3.1 STORAGE AND HANDLING
A. PROTECT MATERIAL AFTER DELIVERY FROM WEATHER, SUNLIGHT, AND DAMAGE.
B. ELEVATE MATERIAL TO ALLOW CIRCULATION AND REDUCE MOLD, FUNGI DECAY, AND INSECT INFESTATION.
C. HANDLE MATERIAL WITH PROTECTIVE STRAPS OR PADDED FORKLIFT. HANDLING MATERIAL WITH CHAIN OR CABLE WILL NOT BE ACCEPTED AND MAY VOID MANUFACTURER'S WARRANTY.
D. TO PREVENT MOISTURE DAMAGE TO ANY WOOD MATERIAL (IF APPLICABLE), KEEP WOOD PACKAGED BEFORE INSTALLATION AND COVER IMMEDIATELY WITH ANY SECONDARY ROOF MATERIAL.

3.2 ERECTION
A. INSTALL COMPONENTS ACCORDING TO MANUFACTURER'S INSTALLATION DRAWINGS AND THESE SPECIFICATIONS.
B. ANCHOR BOLT AND COLUMN LAYOUT IS CRITICAL.
C. COMPLY WITH SPECIFIC BOLTING INSTALLATION REQUIREMENTS PROVIDED ON DRAWINGS REQUIRING THE CONTRACTOR TO COORDINATE THIS PHASE OF CONSTRUCTION WITH THE SPECIAL BOLTING INSPECTOR AND THE INSPECTOR OF RECORD *PRIOR TO THE ERECTION OF THE FRAME.*
D. NO FIELD SLOTTING OR OPENING OF HOLES WILL BE ALLOWED. TOLERANCES ON STEEL STRUCTURAL MEMBERS ARE SET ACCORDING TO AISC CONSTRUCTION PRACTICES, FOLLOWED DURING FABRICATION, AND CANNOT BE INCREASED.
E. AFTER INSTALLATION, RESTORE DAMAGED SURFACES TO THE ORIGINAL CONDITION USING TOUCH-UP PAINT PROVIDED BY MANUFACTURER. IF THE ARCHITECT DOES NOT ACCEPT THAT, REPLACE DAMAGED MATERIAL AT NO COST TO THE DISTRICT.
F. COORDINATE AS REQUIRED WITH OTHER DISCIPLINES (ELECTRICAL, PLUMBING, ETC.)
G. COMPLY WITH ALL APPLICABLE OHSA REQUIREMENTS

3.3 REPAIR
A. DO NOT ATTEMPT ANY FIELD CHANGES TO THE STRUCTURE WITHOUT FIRST CONTACTING THE MANUFACTURER.

3.4 QUALITY CONTROL
A. TESTS AND INSPECTIONS DURING ERECTION ARE NOT REQUIRED BY THE MANUFACTURER, BUT MAY BE REQUIRED BY OTHERS.
B. THE PROJECT INSPECTOR, AND ENTIRE CONSTRUCTION OVERSIGHT PROCESS, SHALL COMPLY WITH DSA PR 13-01. DO NOT PROCEED UNTIL UNSATISFACTORY CONDITIONS HAVE BEEN CORRECTED.

STATE APPROVALS-SITE

IDENTIFICATION STAMP
DIV. OF THE STATE ARCHITECT
APP: 02-121824 INC:
REVIEWED FOR
SS ☑ FLS ☑ ACS ☑
DATE: 10/18/2023

4080 PLAZA GOLDORADO CIRCLE
SUITE B,
CAMERON PARK, CA 95682
530.677.5515
GHD

poligon
PORTER

REGISTERED PROFESSIONAL ENGINEER
JESSICA E. NAPIER
No. S5476
STRUCTURAL
STATE OF CALIFORNIA

STATE APPROVALS-PC

IDENTIFICATION STAMP
DIV. OF THE STATE ARCHITECT
APP: 02-121213 PC
REVIEWED FOR
SS ☑ FLS ☑ ACS ☑ CG ☐
DATE: 7/18/2023

PRE-CHECK (PC) DOCUMENT
CODE: 2022 CBC
A SEPARATE PROJECT APPLICATION FOR CONSTRUCTION IS REQUIRED.

ORDER FORM

HIP ROOF - RAM

RAM1.0

GENERAL:

1. GENERAL NOTES AND TYPICAL DETAILS SHALL APPLY TO ALL PARTS OF THE JOB EXCEPT WHERE THEY MAY CONFLICT WITH DETAILS AND NOTES ON OTHER SHEETS. WHERE CONDITIONS ARE NOT SPECIFICALLY INDICATED BUT ARE OF SIMILAR CHARACTER TO DETAILS SHOWN, SIMILAR DETAILS OF CONSTRUCTION SHALL BE USED SUBJECT TO REVIEW BY THE STRUCTURAL ENGINEER FOR THIS PROJECT.
2. WORK SHALL CONFORM TO THE REQUIREMENTS, AS AMENDED TO DATE, OF THE LATEST ADOPTED EDITION OF THE CBC, C.A.C. TITLE 24, AND ALL OTHER LOCAL, STATE AND FEDERAL REGULATIONS.
3. OMISSIONS OR CONFLICTS BETWEEN THE VARIOUS ELEMENTS OF THE WORKING DRAWINGS AND/OR SPECIFICATIONS SHALL BE BROUGHT TO THE ATTENTION OF THE STRUCTURAL ENGINEER FOR THIS PROJECT PRIOR TO PROCEEDING WITH ANY WORK INVOLVED.
4. THE CONTRACTOR SHALL BE RESPONSIBLE FOR COORDINATING THE WORK OF ALL TRADES AND SHALL CHECK ALL DIMENSIONS. ALL DISCREPANCIES SHALL BE CALLED TO THE ATTENTION OF THE STRUCTURAL ENGINEER FOR THIS PROJECT AND BE RESOLVED BEFORE PROCEEDING WITH THE WORK.
5. THESE CONSTRUCTION DRAWINGS AND SPECIFICATIONS REPRESENT THE FINISHED STRUCTURE AND DO NOT INDICATE THE METHOD OF CONSTRUCTION. THE CONTRACTOR SHALL SUPERVISE AND DIRECT THE WORK AND SHALL BE SOLELY RESPONSIBLE FOR CONSTRUCTION MEANS, METHODS, TECHNIQUES, SEQUENCES AND PROCEDURES, INCLUDING, BUT NOT LIMITED TO, BRACING, TEMPORARY SUPPORTS, AND SHORING. OBSERVATION VISITS TO THE SITE BY FIELD REPRESENTATIVES OF THE ARCHITECT/ENGINEER SHALL NOT INCLUDE INSPECTIONS OF THE PROTECTIVE MEASURES OR THE CONSTRUCTION PROCEDURES. ANY SUPPORT SERVICES PERFORMED BY THE ARCHITECT/ENGINEER DURING THE CONSTRUCTION SHALL BE DISTINGUISHED FROM CONSTRUCTION AND DETAILED INSPECTION SERVICES WHICH ARE FURNISHED BY OTHERS. THESE SUPPORT SERVICES PERFORMED BY THE ARCHITECT/ENGINEER, WHETHER OF MATERIAL OR WORK, ARE FOR THE PURPOSE OF ASSISTING IN QUALITY CONTROL AND IN ACHIEVING CONFORMANCE WITH CONTRACT DOCUMENTS, BUT DO NOT GUARANTEE CONSTRUCTION.
6. ASTM DESIGNATIONS AND ALL STANDARDS REFER TO THE LATEST AMENDMENTS.
7. CONFORM TO APPLICABLE CAL/OSHA CONSTRUCTION SAFETY REGULATIONS FOR ALL WORK PERFORMED DURING CONSTRUCTION. JOB SITE SAFETY IS STRICTLY THE RESPONSIBILITY OF THE CONTRACTOR AND NOT THE ARCHITECT/ENGINEER OR OWNER.
8. THE ENGINEER AND THEIR CONSULTANTS SHALL HAVE NO RESPONSIBILITY FOR THE DISCOVERY, HANDLING, REMOVAL OR DISPOSAL OF HAZARDOUS MATERIALS AT THE PROJECT SITE, INCLUDING BUT NOT LIMITED, TO ASBESTOS, ASBESTOS PRODUCTS, POLYCHLORINATED BIPHENYL (PCB) OR OTHER TOXIC SUBSTANCES.
9. SHOULD ANY CONDITIONS DEVELOP NOT COVERED BY THE CONTRACT DOCUMENTS, OR IF A CHANGE IN THE SCOPE OF WORK IS PROPOSED, A CONSTRUCTION CHANGE DOCUMENT DETAILING AND SPECIFYING THE REQUIRED CHANGE(S) SHALL BE SUBMITTED TO AND APPROVED BY DSA BEFORE PROCEEDING WITH THE WORK.
10. THE SCHOOL DISTRICT'S INSPECTOR OF RECORD SHALL INSPECT AND APPROVE THE ERECTED FRAME PRIOR TO ROOF INSTALLATION.
11. SEE REQUIREMENTS FOR LOCATION IN ANY FIRE HAZARD SEVERITY ZONE FOR WILDLAND URBAN INTERFACE AREAS (WUI) AS SPECIFIED IN THE APPLICABLE VERSION OF THE CALIFORNIA BUILDING CODE. PROVIDE PROTECTION AND DETAILS OF ALL AREAS COMPLYING WITH THE WUI REQUIRMENTS.
12. LOCATING THIS STRUCTURE CLOSER THAN 20 FEET TO OTHER STRUCTURES MAY AFFECT THE ALLOWABLE AREA FOR THE EXISTING CONSTRUCTION PER THE APPLICABLE VERSION OF THE CALIFORNIA BUILDING CODE.
13. VIEWS AND DETAILS ARE NOT DRAWN TO SCALE (UNLESS NOTED OTHERWISE). DO NOT SCALE THESE DRAWINGS.
14. OTHER SITE SPECIFIC ITEMS MAY BE REQUIRED.
15. WHEN A SITE-SPECIFIC PROJECT IS LOCATED IN A FLOOD ZONE OTHER THAN ZONE X, A LETTER STAMPED AND SIGNED FROM A SOILS ENGINEEER IS NEEDED TO VALIDATE THE ALLOWABLE SOIL VALUES SPECIFIED IN THE PC ARE STILL APPLICABLE.

STRUCTURAL AND MISCELLANEOUS STEEL:

1. ALL STRUCTURAL STEEL SHALL BE DETAILED, FABRICATED AND ERECTED IN ACCORDANCE WITH THE AMERICAN INSTITUTE OF STEEL CONSTRUCTION (AISC) 360 - 16 AND 303-16 MANUAL REFERENCED BY THE 2022 EDITION OF THE CALIFORNIA BUILDING CODE.
2. PIPE SECTIONS SHALL CONFORM TO ASTM A53, Fy = 35 ksi, GRADE B UNLESS NOTED OTHERWISE.
3. STRUCTURAL TUBING (HSS SHAPES) SHALL CONFORM TO ASTM A500, GRADE B (OR HIGHER), Fy = 46 KSI.
4. IF MATERIAL AVAILABILITY IS LIMITED, MEMBER THICKNESSES CAN BE INCREASED BEYOND WHAT IS SHOWN IN THESE DRAWINGS (MAXIMUM INCREASE OF 1/8").
5. ALL CHANNELS, ANGLES, PLATES AND MISC. STEEL SHALL CONFORM TO ASTM A36, Fy = 36 KSI.
6. ALL COLD FORM STEEL SHALL CONFORM TO ASTM A653, CS = TYPE B, Fy = 50 KSI.
7. STRUCTURAL STEEL AND DECK SHALL BE IDENTIFIED FOR CONFORMITY PER CBC 2202A.1.
8. ROOF DECK SHALL HAVE KYNAR 5000 METAL COATING.
9. ROOF DECK SHALL CONFORM TO ATSM A792, Fy = 50 KSI.
10. MR ROOF SCREWS MEET ASTM A510 WITH A HEAD DIMENSION OF 0.31" (FLAT-TO-FLAT) AND INTEGRAL WASHER DIMENSION OF 0.58" (OUTSIDE DIAMETER).
11. SS ROOF SCREWS MEET ASTM A510 WITH A HEAD DIMENSION OF 0.437" (OUTSIDE DIAMETER).

WELDING:

1. ALL WELDING SHALL COMPLY WITH AWS D1.1 SPECIFICATIONS AND SHALL BE DONE BY AWS QUALIFIED WELDERS CERTIFIED FOR THE TYPE OF WELDING TO BE PERFORMED.
2. ALL WELDING SHALL BE DONE BY GAS METAL ARC PROCESS WITH E70XX ELECTRODES. FLUX CORE ARC WELD SHALL CONFORM TO CHARPY NOTCH TOUGHNESS RATING OF 20 ft-lb @ (O° F).
3. ALL WELDING SHALL BE DONE IN THE SHOP WITH REQUIRED INSPECTION, PRE-APPROVED BY DSA, TO ENSURE PROPER MATERIAL ID AND WELDING.
4. WELD FILLER METAL MANUFACTURER SHALL PROVIDE WRITTEN CERTIFICATION OF COMPLIANCE WITH CODE AND SPECIFICATIONS.

BOLTING:

1. ALL BOLTS SHOWN ON THESE DRAWINGS ARE ASTM F3125 (A325 TYPE 1) HIGH STRENGTH BOLTS (UNO) AND SHALL BE HOT DIPPED GALVANIZED PER ASTM F2329.
2. HIGH STRENGTH BOLTS SHALL BE SAMPLED AND TESTED IN COMPLANCE WITH CBC 2213A.1.
3. BEFORE ERECTING THE FRAME, VERIFY ALL BOLTS AND NUTS ARE CLEAN OF DEBRIS AND BURRS - INCLUDING THE HARDWARE ALREADY FASTENED INSIDE THE MEMBERS. CHASING SOME OF THE BOLTS AND NUTS MAY BE REQUIRED.
4. ANCHOR BOLTS (HEAVY HEX HEAD, ASTM F1554, GRADE 55) SHALL BE HOT DIPPED GALVANIZED PER ASTM F2329. ANCHOR BOLTS MAY BE HEADED OR THREADED WITH A NUT THAT IS PREVENTED FROM ROTATING.
5. HIGH STRENGTH NUTS SHALL CONFORM TO ASTM A563 AND SHALL BE GALVANIZED PER ASTM F2329.
6. HIGH STRENGTH WASHERS SHALL CONFORM TO ASTM F436 AND SHALL BE GALVANIZED PER ASTM F2329.
7. THE BOLTING INSTALLATION REQUIREMENTS OUTLINED BELOW ARE CRITICAL TO THE STRUCTURE'S DESIGN AND PERFORMANCE. **THE INSTALLER IS REQUIRED TO COORDINATE THIS PHASE OF CONSTRUCTION WITH THE SPECIAL BOLTING INSPECTOR AND THE INSPECTOR OF RECORD PRIOR TO THE ERECTION OF THE FRAME**. ALL BOLTS SHALL BE INSTALLED AND INSPECTED PER THE APPLICABLE VERSION OF AISC'S "SPECIFICATION FOR STRUCTURAL JOINTS USING HIGH-STRENGTH BOLTS", CBC 1705A.2.1; AISC 341-16 J7; AISC 360-16 N5.6.

   A. PRETENSIONED JOINTS (IDENTIFIED ON THE FRAME CONNECTION DETAILS WITH A "PJ REQUIRED") MUST BE INSTALLED AND INSPECTED TO MEET ONE OF FOLLOWING REQUIREMENTS:

   1. TURN-OF-NUT PRETENSIONING
   2. CALIBRATED WRENCH PRENTENSIONING
   3. DIRECT-TENSION-INDICATOR PRETENSIONING (CONTRACTOR RESPONSIBLE FOR PURCHASE OF REQUIRED WASHERS)

   B. ALL OTHER JOINTS MUST BE INSTALLED AND INSPECTED TO MEET THE REQUIREMENTS OF SNUG-TIGHTENED JOINTS. **NOTE TO INSTALLER AND INSPECTOR(S): THE SNUG-TIGHT CONDITION EXISTS, IN PART, WHEN ALL THE BOLTS IN THE JOINT HAVE BEEN TIGHTENED SUFFICIENTLY TO PREVENT THE REMOVAL OF THE NUTS WITHOUT THE USE OF A WRENCH.**

THE CONTRACTOR, SPECIAL BOLTING INSPECTOR AND THE INSPECTOR OF RECORD MUST ALL AGREE ON WHICH APPROACH WILL BE USED TO PRETENSION THE BOLTS. THE CONTRACTOR IS RESPONSIBLE FOR DOCUMENTING THE APPROACH AGREED TO BY ALL PARTIES LISTED ABOVE.

FOUNDATIONS:

1. ALLOWABLE SOIL PRESSURES ASSUME CLASS 5 SOIL CLASSIFICATION PER 2022 CBC TABLE 1806A. 2.
2. FILL AND BACKFILL SHALL BE COMPACTED TO 95% OF MAX. DENSITY IN ACCORDANCE WITH ASTM TEST METHOD D1557. FLOODING NOT PERMITTED.
3. THE CONTRACTOR SHALL BE RESPONSIBLE FOR ALL SHORING, ETC. NECCESSARY TO SUPPORT CUT AND/OR FILL BANKS DURING EXCAVATION, AND FORMING AND PLACEMENT OF CONCRETE.
4. STRUCTURES SHALL BE SETBACK FROM ADAJCENT SLOPES TO PROVIDE FIRM MATERIAL FOR EMBEDMENT AND FOR PROTECTION FROM SLOPE DRAINAGE, EROSION, AND SHALLOW FAILURES.

   A. BOTTOM OF ASCENDING SLOPE: THE SMALLER OF HALF THE HEIGHT OF THE SLOPE AND 15FT MEASURED FROM THE FACE OF THE STRUCTURE TO THE TOE OF THE SLOPE
   B. TOP OF DECENDING SLOPE: THE SMALLER OF A THIRD OF THE HEIGHT OF THE SLOPE AND 40 FT MEASURED FROM THE FACE OF THE FOOTING TO THE TOP OF THE SLOPE

   ALTERNATE SETBACKS ARE PERMITTED, SUBJECT FOR APPROVAL. A GEOTECHNICAL INVESTIGATION MAY BE REQUIRED.
5. STRUCTURES PLACED ON LIQUIFIABLE SOILS OR SITE CLASS F MAY NOT BE SUBMITTED FOR AN OVER THE COUNTER REVIEW.

CONCRETE:

1. MIX DESIGN REQUIREMENTS: (NORMAL WEIGHT CONCRETE)

MINIMUM STRENGTH f'c (28 DAYS)	EXPOSURE CATEGORY	W/C RATIO MAXIMUM)	SLUMP (± 1")	UNIT WEIGHT (NORMAL WEIGHT)
5000 PSI	F3, S3, W2, C2	0.4	4"	150 PCF

2. CHANGES TO THE MIX DESIGN MUST BE APPROVED BY THE ENGINEER OR ARCHITECT OF RECORD AND DSA
3. AGGREGATES SHALL CONFORM TO ASTM C33. MAX AGGREGATE SIZE = 1".
4. CEMENT SHALL CONFORM TO ASTM C150 (TYPE V) WITH A MAXIMUM EXPANSION OF 0.040%, FOR SULFATE RESISTANCE.
5. ADMIXTURES CONTAINING CALCIUM CHLORIDE ARE PROHIBITED.
6. CONCRETE EXPOSED TO FREEZING-AND-THAWING CYCLES SHALL BE AIR ENTRAINED PER ACI 318-19 SECTION 19.3.3.
7. CONCRETE SHALL BE MAINTAINED IN A MOIST CONDITION FOR A MINIMUM OF FIVE DAYS AFTER PLACEMENT. ALTERNATE METHODS WILL BE APPROVED IF SATISFACTORY PERFORMANCE CAN BE ASSURED.
8. CONCRETE SHALL NOT FREE FALL MORE THAN FIVE FEET.
9. CONCRETE SHALL BE PROPORTIONED PER ACI 318-19 26.4.
10. CONCRETE SHALL BE TESTED PER CBC 1910A.1, 1705A.3, AND ACI 318-19 26.13. BATCH PLANT INSPECTION NOT REQUIRED. CONTRACTOR SHALL IMPLEMENT WEIGHTMASTER AND BATCH TICKET REQUIREMENTS OF CBC 1705A.3.3.1.

REINFORCING STEEL:

1. REINFORCING STEEL SHALL BE DEFORMED STEEL CONFORMING TO THE REQUIREMENTS OF ASTM A615, (DEFORMATIONS SHALL BE IN ACCORDANCE WITH ASTM A305) AS FOLLOWS:
   GR 60: (#4 BARS AND LARGER)
   GR 40: (#3 BARS)
2. DETAILING, FABRICATION, AND ERECTION OF REINFORCING BARS SHALL CONFORM TO THE ACI "MANUAL OF STANDARD PRACTICE FOR DETAILING REINFORCING CONCRETE STRUCTURES."
3. MIN. COVER FOR CAST-IN-PLACE CONCRETE SHALL BE AS FOLLOWS:

   A. CAST AGAINST EARTH... 3"
   B. CAST AGAINST FORM BELOW GRADE..................... 2"
   C. FORMED SLABS (#11 BAR & SMALLER).................... 3/4"
   D. SLABS ON GRADE (FROM TOP OF SLAB).................. 1"
   E. COLUMNS AND BEAMS (MAIN BARS)...................... 2"
   F. WALLS EXPOSED TO WEATHER (#6-#18 BARS)......... 2"
   (#5 & SMALLER)......... 11/2"
   G. NOT EXPOSED TO WEATHER (#11 & SMALLER)........ 3/4"
4. BARS SHALL BE CLEAN OF RUST, GREASE OR OTHER MATERIAL LIKELY TO IMPAIR BOND. BENDS SHALL BE MADE COLD.
5. FOR #6 BARS AND SMALLER, REINFORCING SHALL BE LAP SPLICED 45 BAR DIA MINIMUM IN CONCRETE. FOR #7 BARS AND LARGER, REINFORCING SHALL BE LAP SPLICED 55 BAR DIAMETERS MINIMUM IN CONCRETE. ALL LAP SPLICES MUST COMPLY WITH ACI 318-19.
6. PRIOR TO PLACING OF CONCRETE, REINFORCING STEEL AND EMBEDDED ITEMS SHALL BE WELL SECURED IN POSITION.
7. WELDING OF REINFORCING IS NOT ALLOWED
8. REINFORCING STEEL SHALL BE SAMPLED AND TESTED PER CBC 1910A.2.

POWDER COATED AND EPOXY PRIMED FINISH:

1. ENTIRE POWDER COATING PROCESS COMPLETED IN SAME FACILITY AS STEEL FABRICATION.
2. ALL CARBON STEEL MEMBERS (COLUMNS, BEAMS, PLATES, ETC.) PAINTED WITH PRIME COAT PER THE "AISC CODE OF STANDARD PRACTICE" AND THE "AISC SPECIFICATION SECTION M3" (UNLESS NOTED OTHERWISE).
3. PARTS PRETREATED IN A 3 STAGE IRON PHOSPHATE WASHER (OR EQUAL).
4. EPOXY PRIMER POWDER COAT APPLIED TO PARTS FOR SUPERIOR CORROSION PROTECTION.
5. TOP POWDER COAT OF SUPER DURABLE TGIC (COLOR SELECTED FROM MANUFACTURER'S STANDARD OPTIONS OR CUSTOM COLOR).
6. SAMPLE PRODUCTION PARTS TESTED TO MEET THE FOLLOWING CRITERIA:
   A. SALT SPRAY RESISTANCE PER ASTM B 117/ ASTM D 1654
      1. 10000 HOURS WITH NO CREEP FROM SCRIBE LINE AND RATING OF 10
   B. HUMIDITY RESISTANCE PER ASTM D2247-02
      1. 5000 HOURS WITH NO LOSS OF ADHESION OR BLISTERING
   C. COLOR/UV RESISTANCE PER ASTM G154-04
      1. 2000 HOURS EXPOSURE ALTERNATE CYCLES WITH NO CHALKING, 75% COLOR RETENTION, AND COLOR VARIATION MAXIMUM 3.0 E VARIATION CIE FORMULA (BEFORE AND AFTER 2000 HOURS EXPOSURE

CONSTRUCTION NOTES

1. A DSA-CERTIFIED CLASS 2 INSPECTOR IS REQUIRED FOR THIS PROJECT.
2. CHANGES TO THE APPROVED DRAWINGS AND SPECIFICATIONS SHALL BE MADE BY ADDENDA OR CONSTRUCTION CHANGE DOCUMENT (CCD) APPROVED BY DSA, AS REQURIED BY SECTION 4-338, PART 1, TITLE 24 CCR AND DSA IR A-6.
3. A "DSA-CERTIFIED" PROJECT INSPECTOR EMPLOYED BY THE OWNER (E.G. DISTRICT, ETC.) AND APPROVED BY DSA SHALL PROVIDE CONTINUOUS INSPECTION OF WORK. THE DUTIES OF THE INSPECTOR ARE DEFINED IN SECTION 4-342, PART 1, TITLE 24, CCR.
4. A DSA ACCEPTED TESTING LABORATORY DIRECTLY EMPLOYED BY THE OWNER (E.G. DISTRICT, ETC.) SHALL CONDUCT ALL THE REQUIRED TEST AND INSPECTIONS FOR THE PROJECT.

NOTICE OF DISCLAIMER FOR STRUCTURAL ENGINEER RESPONIBILITY

1. FOR THE SITE-SPECIFIC PROJECT, NEITHER POLIGON OR GHD ARE THE DESIGN PROFESSIONAL IN GENERAL RESPONSIBLE CHARGE.
2. FOR THE SITE-SPECIFIC PROJECT, GHD AND POLIGON'S RESPONSIBILITY IS LIMITED TO THE PREPARATION OF THE PLANS AND SPECIFICATIONS FOR THE STRUCTURES OF THIS PC ONLY.
3. STRUCTURAL OBSERVATION OF CONSTRUCTION IS SPECIFICALLY EXCLUDED FROM GHD AND POLIGON'S RESPONSIBILITY FOR THE SITE-SPECIFIC PROJECT.
4. ALL CONSTRUCTION ACTIVITIES RELATED TO STRUCTURAL ENGINEERING MAY BE DELEGATED TO A QUALIFIED ENGINEER BY THE DESIGN PROFESSIONAL IN GENERAL RESPONSIBLE CHARGE. THESE ACTIVITIES INCLUDE, BUT ARE NOT LIMITED TO, APPROVAL OF INSPECTOR QUALIFICATIONS, STRUCTURAL OBSERVATIONS OF CONSTRUCTION, REVIEW OF INSPECTIONS REPORTS, AND SIGNING OFF ON THE VERIFIED REPORT FOR COMPLETED WORK.
5. POLIGON WILL BE RESPONSIBLE FOR RESPONDING TO QUESTIONS PERTAINING TO THE PLANS AND SPECIFICATIONS FOR THE STRUCTURES OF THIS PC WHICH ARISE DURING PLAN REVIEW AND CONSTRUCTION.

SPECIAL INSPECTION NOTES:

1. THE PROJECT INSPECTOR AND TESTING AGENCY SHALL BE SELECTED BY THE SCHOOL DISTRICT AND APPROVED BY DSA AND THE ARCHITECT OF RECORD.
2. COSTS OF THE PROJECT INSPECTOR AND THE TESTING AGENCY SHALL BE BORN BY THE SCHOOL DISTRICT.
3. THE PROJECT INSPECTOR, AND ENTIRE CONSTRUCTION OVERSIGHT PROCESS, SHALL COMPLY WITH DSA PR 13-01.
4. ON APPROVED PC DRAWINGS, THE STATEMENT OF STRUCTURAL TESTS AND SPECIAL INSPECTIONS (FORM DSA-103) BELOW IS ONLY AN EXAMPLE. ON APPROVED PC DRAWINGS, THE EXAMPLE FORM DSA-103 MUST BE CROSSED OUT BEFORE THE PC DRAWINGS CAN BE APPROVED AS PART OF A SITE-SPECIFIC (OR STOCKPILE) PROJECT SO THEY WILL NOT CONFLICT WITH THE OFFICIAL FORM DSA-103 FOR THE PROJECT.

DSA 103-22: LISTING OF STRUCTURAL TESTS & SPECIAL INSPECTIONS, 2022 CBC

Application Number:	**School Name:**	**School District:**
DSA File Number:	**Increment Number:**	**Date Submitted:**

2022 CBC

IMPORTANT: This form is only a summary list of structural tests and some of the special inspections required for the project. Generally, the structural tests and special inspections noted on this form are those that will be performed by the Geotechnical Engineer of Record, Laboratory of Record, or Special Inspector. The actual complete test and inspection program must be performed as detailed on the DSA approved documents. The appendix at the bottom of this form identifies work NOT subject to DSA requirements for special inspection or structural testing. The project inspector is responsible for providing inspection of all facets of construction, including but not limited to, special inspections not listed on this form such as structural wood framing, high-load wood diaphragms, cold-formed steel framing, anchorage of non-structural components, etc., per Title 24, Part 2, Chapter 17A (2022 CBC).

***NOTE:** Undefined section and table references found in this document are from the CBC, or California Building Code.

KEY TO COLUMNS

1. TYPE	2. PERFORMED BY
Continuous – Indicates that a continuous special inspection is required **Periodic –** Indicates that a periodic special inspection is required **Test –** Indicates that a test is required	**GE –** Indicates that the special inspection shall be performed by a registered geotechnical engineer or his or her authorized representative. **LOR –** Indicates that the test or special inspection shall be performed by a testing laboratory accepted in the DSA Laboratory Evaluation and Acceptance (LEA) Program. See CAC Section 4-335. **PI –** Indicates that the special inspection may be performed by a project inspector when specifically approved by DSA. **SI –** Indicates that the special inspection shall be performed by an appropriately qualified/approved special inspector.

	S1. GENERAL:			
	Test or Special Inspection	**Type**	**Performed By**	**Code References and Notes**
☑	**a.** Verify that: • Site has been prepared properly prior to placement of controlled fill and/or excavations for foundations. • Foundation excavations are extended to proper depth and have reached proper material. • Materials below footings are adequate to achieve the design bearing capacity.	**See Notes**	**PI**	Refer to specific items identified in the Appendix listing exemptions for limitations. Placement of controlled fill exceeding 12" depth under foundations is not permitted without a geotechnical report.

	S2. SOIL COMPACTION AND FILL:			
	Test or Special Inspection	**Type**	**Performed By**	**Code References and Notes**
☑	**a.** Verify use of proper materials, densities and inspect lift thicknesses, placement and compaction during placement of fill.	**Continuous**	**LOR***	* Under the supervision of a geotechnical engineer or LOR's engineering manager. Refer to specific items identified in the Appendix listing exemptions for limitations.
☑	**b.** Compaction testing.	**Test**	**LOR***	* Under the supervision of a geotechnical engineer or LOR's engineering manager. Refer to specific items identified in the Appendix listing exemptions for limitations.

	S4. CAST-IN-PLACE DEEP FOUNDATIONS (PIERS):			
	Test or Special Inspection	**Type**	**Performed By**	**Code References and Notes**
☑	**a.** Inspect drilling operations and maintain complete and accurate records for each pier.	**Continuous**	**PI**	Continuous inspection to be provided by project inspector. Refer to specific items identified in the Appendix listing exemptions for limitations.
☑	**b.** Verify pier locations, diameters, plumbness, and lengths. Record concrete or grout volumes.	**Continuous**	**PI**	Continuous inspection to be provided by project inspector. Refer to specific items identified in the Appendix listing exemptions for limitations.
☑	**c.** Concrete piers.	Provide tests and inspections per CONCRETE section below.		

	C1. CAST-IN-PLACE CONCRETE			
	Test or Special Inspection	**Type**	**Performed By**	**Code References and Notes**
☑	**a.** Verify use of required design mix.	**Periodic**	**SI**	**Table 1705A.3 Item 5, 1910A.1.**
☑	**b.** Identifiy, sample, and test reinforcing steel.	**Test**	**LOR**	**1910A.2;** ACI 318-19 Ch. 20 and Section 26.6.1.2; DSA IR 17-10. (See Appendix (end of this form) for exemptions.)
☑	**c.** During concrete placement, fabricate specimens for strength tests, perform slump and air content tests, and determine the temperature of the concrete.	**Test**	**LOR**	**Table 1705A.3 Item 6**; ACI 318-19 Sections 26.5 & 26.12.
☑	**d.** Test concrete (f'_c).	**Test**	**LOR**	**1905A.1.17;** ACI 318-19 Section 26.12.
☑	**e.** Batch plan inspection:	**See Notes**	**SI**	Default of **'Continuous'** per **1705A.3.3**. If approved by DSA, batch plant inspection may be reduced to **'Periodic'** subject to requirements in Section **1705.A.3.3.1**, or eliminated per **1705A.3.3.2**. See IR 17-13. (See Appendix (end of this form) for exemptions.)

	S/A1. STRUCTURAL STEEL, COLD-FORMED STEEL AND ALUMINUM USED FOR STRUCTURAL PURPOSES			
	Test or Special Inspection	**Type**	**Performed By**	**Code References and Notes**
☑	**a.** Verify identification of all materials and: • Mill certificates indicate material properties that comply with requirements. • Material sizes, types and grades comply with requirements.	**Periodic**	*	**Table 1705A.2.1 Item 3a–3c.** 2202A.1**;** AISI S100-20 Section A3.1 & A3.2, AISI S240-20 Section A3 & A5, AISI S220-20 Sections A4 & A6. * By special inspector or qualified technician when performed off-site.
☑	**b.** Test unidentified materials	**Test**	**LOR**	**2202A.1.**
☑	**c.** Examine seam welds of HSS shapes	**Periodic**	**SI**	DSA IR 17-3.
☑	**d.** Verify and document steel fabrication per DSA-approved construction documents.	**Periodic**	**SI**	Not applicable to cold-formed steel light-frame construction, except for trusses (**1705A.2.4**).

	S/A2. HIGH-STRENGTH BOLTS:			
	Test or Special Inspection	**Type**	**Performed By**	**Code References and Notes**
☑	**a.** Verify identification markings and manufacturer's certificates of compliance conform to ASTM standards specified in the DSA-approved documents.	**Periodic**	**SI**	**Table 1705A.2.1 Items 1a & 1b, 2202A.1;** AISC 360-16 Section A3.3, J3.1, and N3.2; RCSC 2014 Section 1.5 & 2.1; DSA IR 17-8 & DSA IR 17-9.
☑	**b.** Test high-strength bolts, nuts and washers.	**Test**	**LOR**	**Table 1705A.2.1 Item 1c, 2213A.1**; RCSC 2014 Section 7.2; DSA IR 17-8.
☑	**c.** Bearing-type ("snug tight") connections.	**Periodic**	**SI**	**Table 1705A.2.1 Item 2a, 1705A.2.6, 2204A.2;** AISC 360-16 J3.1, J3.2, M2.5 & N5.6; RCSC 2014 Section 9.1; DSA IR 17-9.
☑	**d.** Pretensioned and slip-critical connections.	*	**SI**	**Table 1705A.2.1 Items 2b & 2c, 1705A.2.6, 2204A.2;** AISC 360-16 J3.1, J3.2, M2.5 & N5.6; RCSC 2014 Sections 9.2 & 9.3; DSA IR 17-9. * "Continuous" or "Periodic" depends on the tightening method used.

	S/A3. WELDING:			
	Test or Special Inspection	**Type**	**Performed By**	**Code References and Notes**
☑	**a.** Verify weld filler material identification markings per AWS designation listed on the DSA- approved documents and the WPS.	**Periodic**	**SI**	**1705A.2.5, Table 1705A.2.1 Items 4 & 5**; AWS D1.1 and AWS D1.8 for structural steel; AWS D1.2 for Aluminum; AWS D1.3 for cold-formed steel; AWS D1.4 for reinforcing steel; DSA IR 17- 3.
☑	**b.** Verify weld filler material manufacturer's certificate of compliance.	**Periodic**	**SI**	DSA IR 17-3.
☑	**c.** Verify WPS, welder qualifications and equipment.	**Periodic**	**SI**	DSA IR 17-3.

	S/A4. SHOP WELDING (IN ADDITION TO SECTION S/A3):			
	Test or Special Inspection	**Type**	**Performed By**	**Code References and Notes**
☑	**a.** Inspect groove welds, multi-pass fillet welds, single pass fillet welds > 5/16", plug and slot welds.	**Continuous**	**SI**	**Table 1705A.2.1 Items 5a.1–4;** AISC 360-16 (and AISC 341-16 as applicable); DSA IR 17-3.
☑	**b.** Inspect single-pass fillet welds ≤ 5/16", floor and roof deck welds.	**Periodic**	**SI**	**1705A.2.2, Table 1705A.2.1 Items 5a.5 & 5a.6;** AISC 360-16 (and AISC 341-16 as applicable); DSA IR 17-3.

	S/A9. ANCHOR BOLTS AND ANCHOR RODS:			
	Test or Special Inspection	**Type**	**Performed By**	**Code References and Notes**
☑	**a.** Anchor Bolts and Anchor Rods	**Test**	**LOR**	Sample and test anchor bolts and anchor rods not readily identifiable per procedures noted in DSA IR 17-11.

Name of Architect or Engineer in general responsible charge:

Name of Structural Engineer (When structural design has been delegated):

Signature of Architect or Structural Engineer: Date:

Note: To facilitate DSA electronic mark-ups and identification stamp application, DSA recommends against using secured electronic or digital signatures.

DSA STAMP

DSA 103-22: LIST OF REQUIRED VERIFIED REPORTS, CBC 2022

1. Soils Testing and Inspection: Geotechnical Verified Report Form DSA 293
2. Structural Testing and Inspection: Laboratory Verified Report Form DSA 291
3. Shop Welding Inspection: Laboratory Verified Report Form DSA 291, or, for independently contracting SI, Special Inspection Verified Report Form DSA 292
4. High-Strength Bolt Installation Inspection: Laboratory Verified Report Form DSA 291, or, for independently contracting SI, Special Inspection Verified Report Form DSA 292

STATE APPROVALS-SITE

IDENTIFICATION STAMP
DIV. OF THE STATE ARCHITECT
APP: 02-121824 INC:
REVIEWED FOR
SS ☑ FLS ☑ ACS ☑
DATE: 10/18/2023

4080 PLAZA GOLDORADO CIRCLE
SUITE B,
CAMERON PARK, CA 95682
530.677.5515

REGISTERED PROFESSIONAL ENGINEER
JESSICA E. NAPIER
No. S5476
STRUCTURAL
STATE OF CALIFORNIA

STATE APPROVALS-PC

IDENTIFICATION STAMP
DIV. OF THE STATE ARCHITECT
APP: 02-121213 PC
REVIEWED FOR
SS ☑ FLS ☑ ACS ☑ CG ☐
DATE: 7/18/2023

PRE-CHECK (PC) DOCUMENT
CODE: 2022 CBC
A SEPARATE PROJECT APPLICATION FOR CONSTRUCTION IS REQUIRED.

NOTES AND SPECIAL INSPECTIONS

HIP ROOF - RAM

RAM1.1

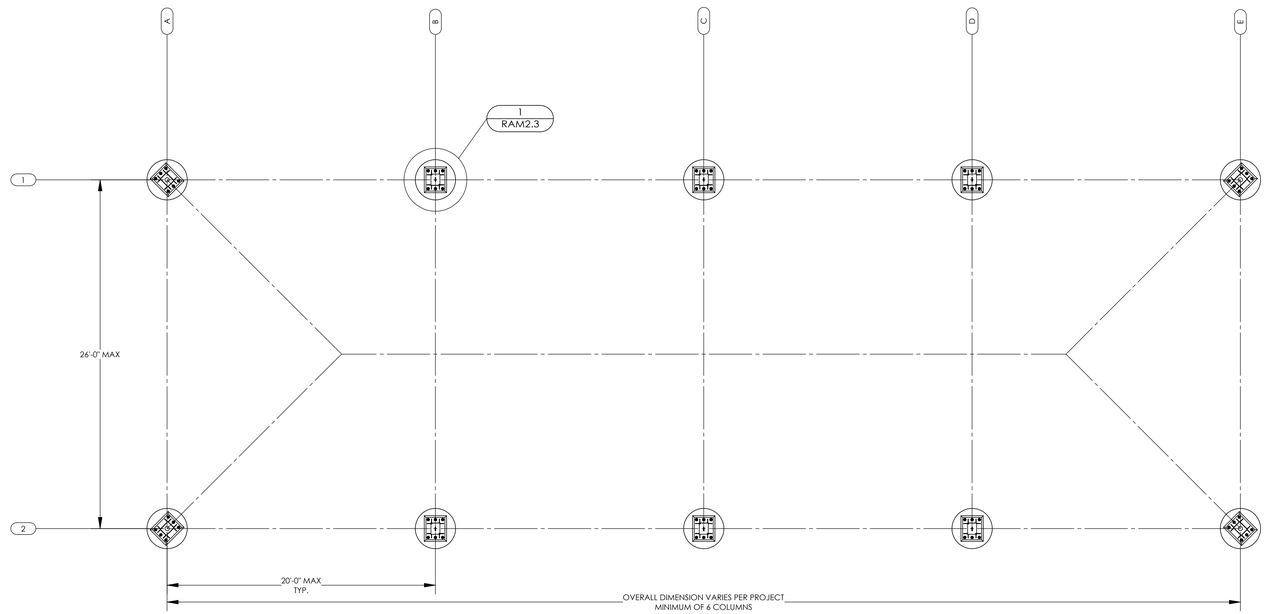

FOUNDATION PLAN (DRILLED PIER)

SCALE: 3/16" = 1'-0"

FOUNDATION PLAN NOTES:

1. TOP OF ALL FOUNDATIONS MUST BE CONSTRUCTED AT ONE COMMON ELEVATION (COORDINATE WITH SITE PLANS - NOT BY POLIGON)
2. ALL FOUNDATIONS MUST BE CENTERED UNDER COLUMNS (UNO).
3. SEE SHEET RAM1.1 FOR CONCRETE REQUIREMENTS.
4. PRIOR TO FORMING AND CASTING FOUNDATIONS, REVIEW FOUNDATION PLAN FOR REQUIRED ORIENTATION.
5. FOUNDATION MATERIAL AND INSTALLATION NOT BY POLIGON.
6. VIBRATE CONCRETE FULL DEPTH OF FOUNDATION.
7. FOR DRILLED PIER FOUNDATIONS, PREVENT SOIL FROM ENTERING EXCAVATED HOLE (FORM, ETC).

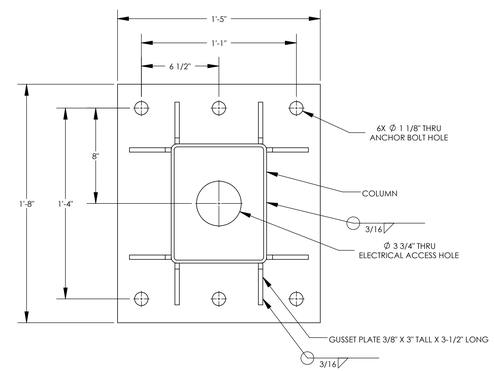

DETAIL 3

SCALE: 1-1/2" = 1'-0"

COLUMN BASEPLATE

3

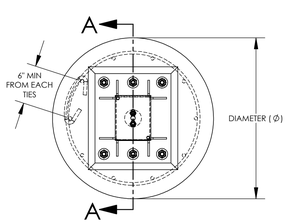

DETAIL 1

SCALE: 3/4" = 1'-0"

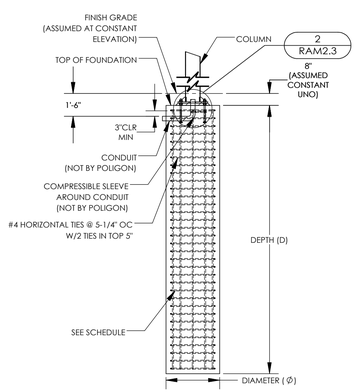

SECTION A-A

SCALE: 1/4" = 1'-0"

FOUNDATION REQUIREMENTS VARY PER PROJECT

SEE SHEET RAM1.0 FOR REQUIRED LOAD SCENARIO AND FOUNDATION TYPE (STEP 9 OF 'INSTRUCTIONS')

ONLY REFERENCE COPY OF PC DRAWINGS SUBMITTED FOR THIS PROJECT

DRILLED PIER

SIZE AND REINFORCING REQUIREMENTS

LOAD SCENARIO	DIAMETER (Ø)	DEPTH (D)	VERTICAL REINFORCING[1]	
			QTY	SIZE
1	3'-0"	13'-0"	10	#7
~~2~~	~~3'-0"~~	~~15'-0"~~	~~10~~	~~#7~~

[1] EQUALLY SPACED AROUND DRILLED PIER

DRILLED PIER FOUNDATION

1

NOTES:

1. GROUT SHALL BE NON-METALLIC, NON-SHRINK GROUT WITH MINIMUM F'c=6500 PSI.
2. COLUMNS FABICATED ASSUMING 1-1/2" GROUT PAD.
3. COLUMN BASES BELOW FINISH GRADE SHOULD BE PROTECTED FROM CORROSION, SELECT ONE OF THE FOLLOWING OPTIONS BELOW.

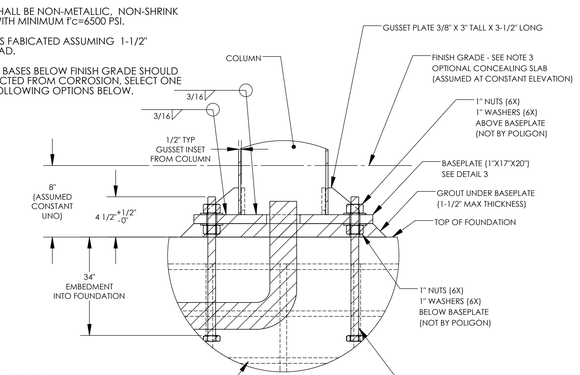

COLUMN BASE PROTECTION

BELOW SURFACE COLUMN INSTALLATION

[ ] CONCRETE SLAB - 3" MIN ANCHOR BOLT COVER

[ ] MASTIC COATING - 1/4" THICK MIN COATING ON ALL STEEL SURFACES BELOW GRADE

DETAIL 2

SCALE: 1-1/2" = 1'-0"

COLUMN BASEPLATE AND ANCHOR BOLTS

2

STATE APPROVALS-SITE

IDENTIFICATION STAMP
DIV. OF THE STATE ARCHITECT
APP: 02-121824 INC:
REVIEWED FOR
SS ☑ FLS ☑ ACS ☑
DATE: 10/18/2023

4600 PLAZA GOLDCREEK DR, STE 110
SUITE B
CHANHASSEN, MN 55317
530.677.1516

STATE APPROVALS-PC

IDENTIFICATION STAMP
DIV. OF THE STATE ARCHITECT
APP: 02-121213 PC
REVIEWED FOR
SS ☑ FLS ☑ ACS ☑ CG ☐
DATE: 7/18/2023

REGISTERED PROFESSIONAL ENGINEER
JESSICA E. NAPIER
No. S5476
STRUCTURAL
STATE OF CALIFORNIA

PRE-CHECK (PC) DOCUMENT
CODE: 2022 CBC
A SEPARATE PROJECT APPLICATION FOR CONSTRUCTION IS REQUIRED.

FOUNDATION PLAN DRILLED PIER

HIP ROOF - RAM 30

RAM2.3

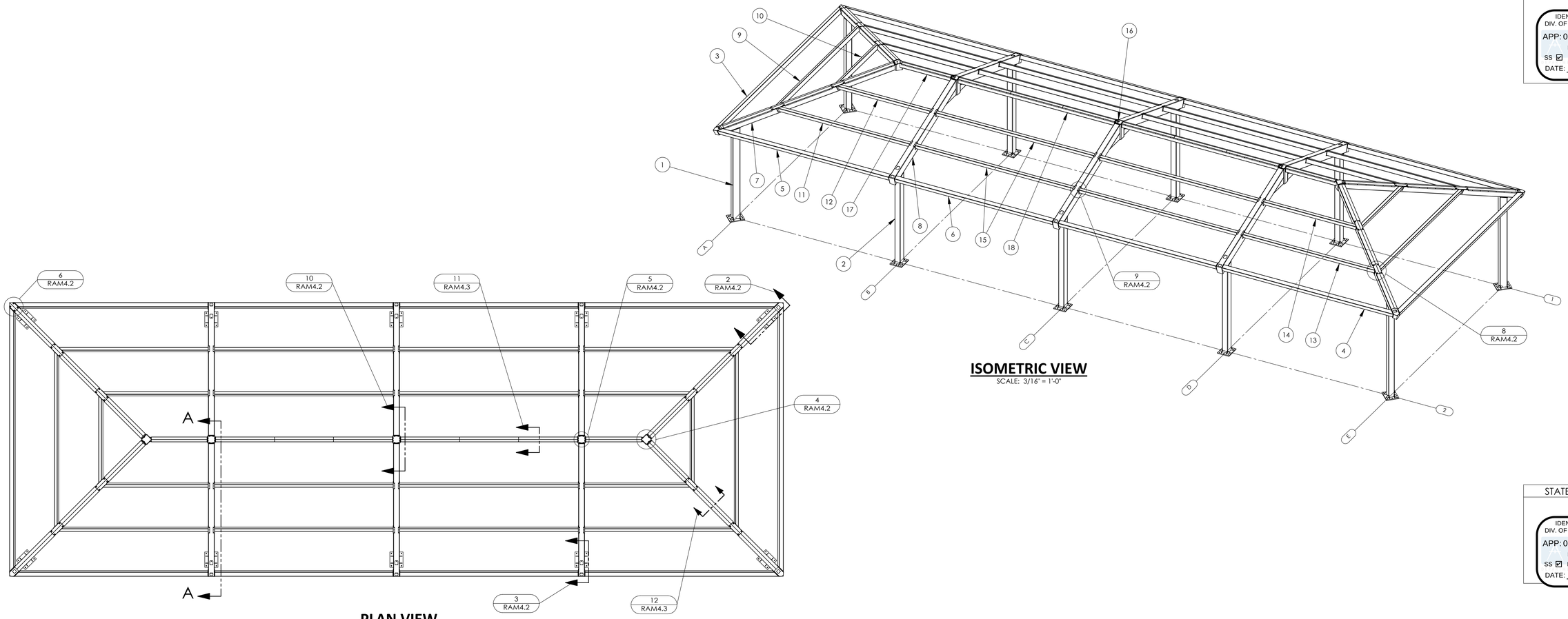

ISOMETRIC VIEW
SCALE: 3/16" = 1'-0"

PLAN VIEW
SCALE: 3/16" = 1'-0"

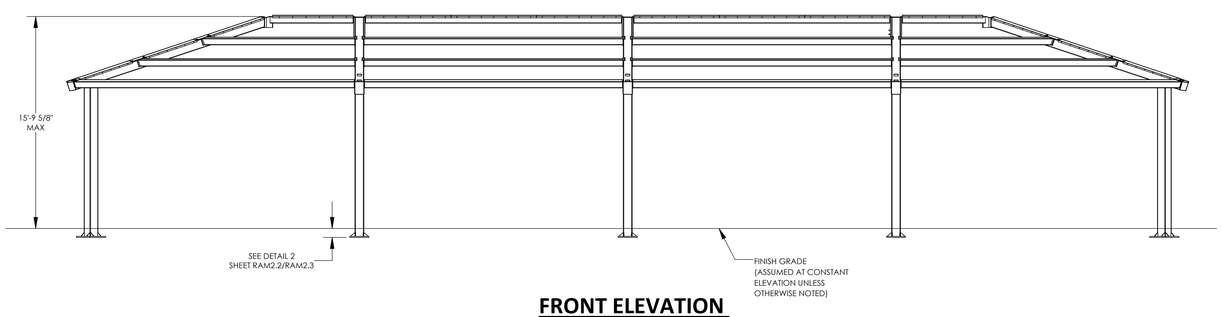

FRONT ELEVATION
SCALE: 3/16" = 1'-0"

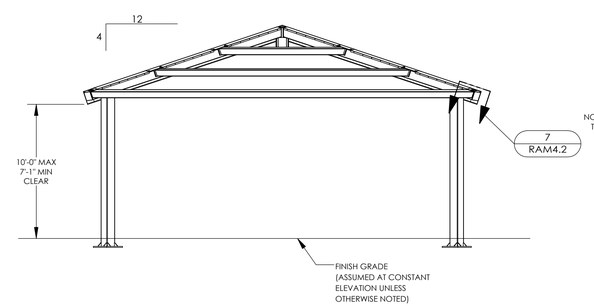

SIDE ELEVATION
SCALE: 3/16" = 1'-0"

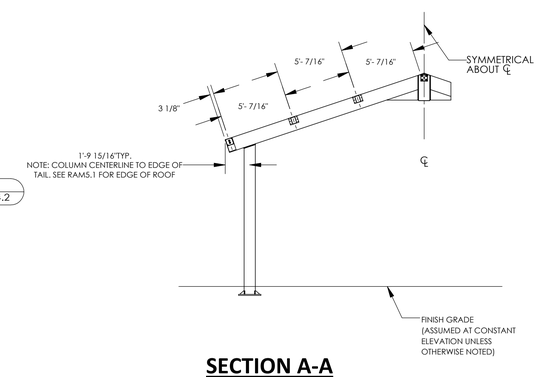

SECTION A-A
SCALE: 3/16" = 1'-0"

ITEM	QTY.	PART NO.	DESCRIPTION	MATERIAL	WEIGHT
18	2	-	R-BEAM ASM	HSS6X6X3/16	287.26
17	2	-	END R-BEAM ASM	HSS6X6X3/16	154.14
16	6	-	C-TUBE ASM	HSS10X10X5/8	143.92
15	8	-	SIDE PURLIN ASM	HSS6X4x3/16	234.29
14	2	-	CORNER PURLIN ASM	HSS6X4x3/16	136.79
13	2	-	CORNER PURLIN ASM	HSS6X4x3/16	193.62
12	2	-	CORNER PURLIN ASM	HSS6X4x3/16	136.94
11	2	-	CORNER PURLIN ASM	HSS6X4x3/16	193.78
10	2	-	END PURLIN ASM	HSS6X4x3/16	110.56
9	2	-	END PURLIN ASM	HSS6X4x3/16	224.23
8	6	-	GABLE BEAM ASM	HSS12X8X1/4	559.76
7	4	-	HIP BEAM ASM	HSS8X8X3/16	431.12
6	4	-	SIDE EAVE BEAM ASM	HSS6X6X3/16	284.96
5	2	-	CORNER EAVE BEAM ASM	HSS6X6X3/16	306.07
4	2	-	CORNER EAVE BEAM ASM	HSS6X6X3/16	306.00
3	2	-	END EAVE BEAM ASM	HSS6X6X3/16	413.48
2	6	-	SIDE COLUMN ASM	HSS10X8X1/4	425.36
1	4	-	CORNER COLUMN ASM	HSS10X8X1/4	433.63

STATE APPROVALS-SITE

IDENTIFICATION STAMP
DIV. OF THE STATE ARCHITECT
APP: 02-121824 INC:
REVIEWED FOR
SS ☑ FLS ☑ ACS ☑
DATE: 10/18/2023

4080 PLAZA GOLDORADO CIRCLE
SUITE B
CAMERON PARK, CA 95682
530.677.5016

poligon PORTER

REGISTERED PROFESSIONAL ENGINEER
JESSICA E. NAPIER
No. S5476
STRUCTURAL
STATE OF CALIFORNIA

STATE APPROVALS-PC

IDENTIFICATION STAMP
DIV. OF THE STATE ARCHITECT
APP: 02-121213 PC
REVIEWED FOR
SS ☑ FLS ☑ ACS ☑ CG ☐
DATE: 7/18/2023

PRE-CHECK (PC) DOCUMENT
CODE: 2022 CBC
A SEPARATE PROJECT APPLICATION FOR CONSTRUCTION IS REQUIRED.

FRAMING PLAN

HIP ROOF - RAM 30

RAM3.1

ALL HIDDEN NUTS AND BOLTS (INSTALLED IN SHOP DURING FABRICATION) ARE SECURED WITH THIS NUT AND BOLT RESTAINING SYSTEM.

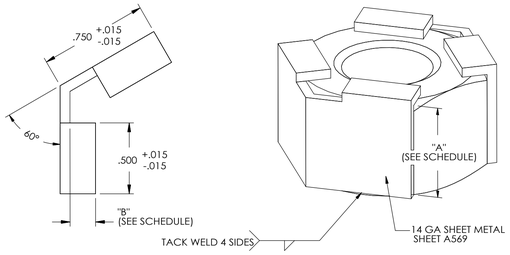

DIMENSION SCHEDULE				
FASTENER	DIM A		DIM B	
5/8" NUT	.631	+.000 -.015	.180	+.015 -.015
5/8" BOLT	.403	+.000 -.015	.250	+.015 -.015
3/4" NUT	.758	+.000 -.015	.180	+.015 -.015
3/4" BOLT	.483	+.000 -.015	.375	+.015 -.015
1" NUT	1.012	+.000 -.015	.180	+.015 -.015
1" BOLT	.643	+.000 -.015	.375	+.015 -.015

NUT & BOLT RESTRAINING SYSTEM 1

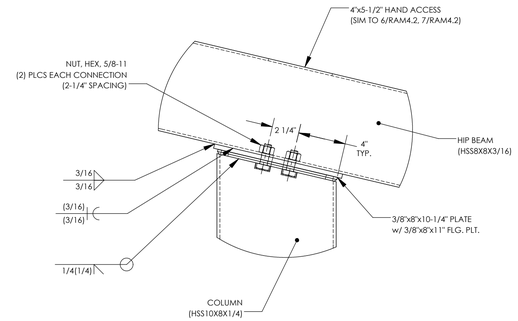

HIP BEAM CONNECTION @ COLUMN 2

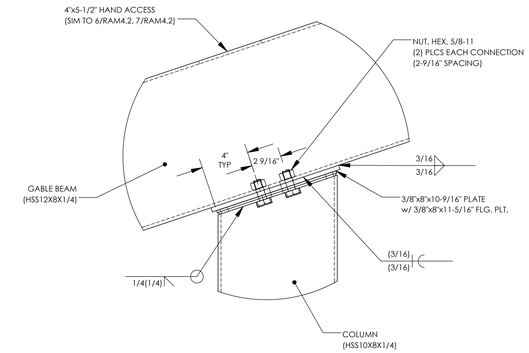

GABLE BEAM CONNECTION @ COLUMN 3

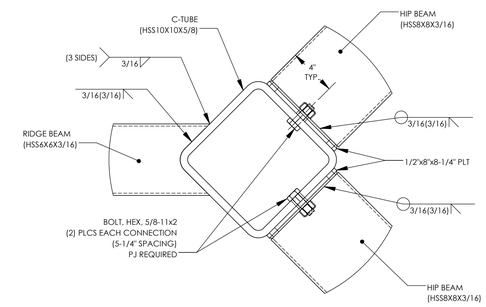

HIP BEAM CONNECTION @ COMPRESSION TUBE 4

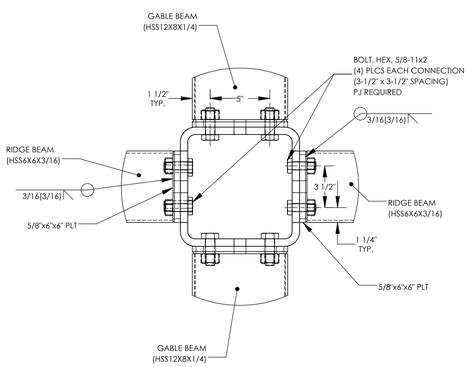

RIDGE BEAM CONNECTION @ COMPRESSION TUBE 5

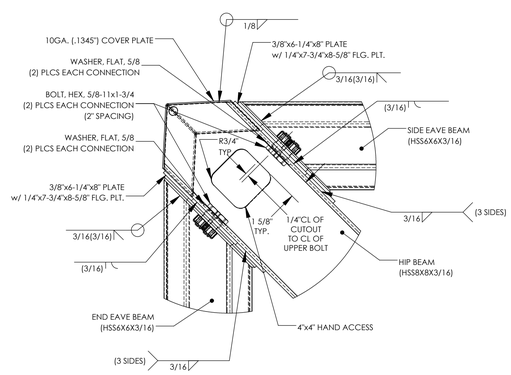

EAVE BEAM CONNECTION @ HIP BEAM 6

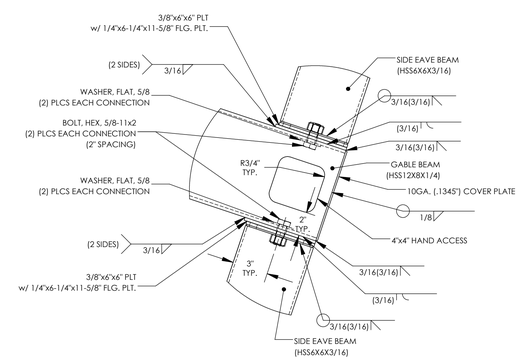

EAVE BEAM CONNECTION @ GABLE BEAM 7

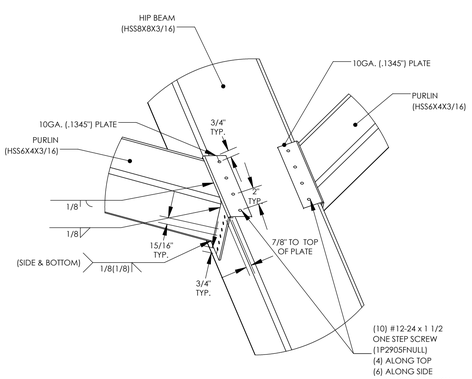

PURLIN CONNECTION @ HIP BEAM 8

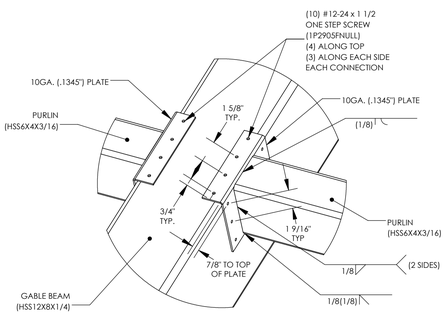

PURLIN CONNECTION @ GABLE BEAM 9

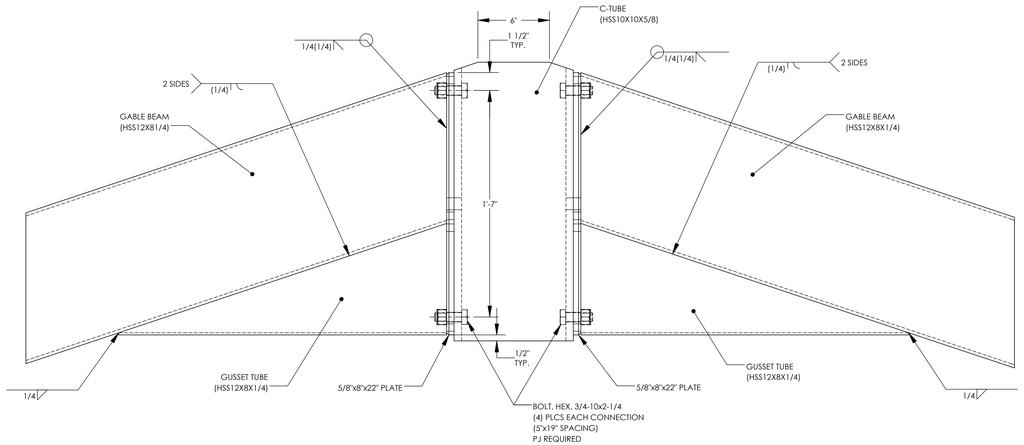

GABLE BEAM CONNECTION @ COMPRESSION TUBE 10

STATE APPROVALS-SITE

IDENTIFICATION STAMP
DIV. OF THE STATE ARCHITECT
APP: 02-121824 INC:
REVIEWED FOR
SS ☑ FLS ☑ ACS ☑
DATE: 10/18/2023

4000 PLAZA GOLDSCRADDC 12PCLLE
SUITE B
CAMERON PK, CA 95682
530.677.1516
GHD
poligon
PORTER

REGISTERED PROFESSIONAL ENGINEER JESSICA E. NAPPER No. S5476 STRUCTURAL STATE OF CALIFORNIA

STATE APPROVALS-PC

IDENTIFICATION STAMP
DIV. OF THE STATE ARCHITECT
APP: 02-121213 PC
REVIEWED FOR
SS ☑ FLS ☑ ACS ☑ CG ☐
DATE: 7/18/2023

PRE-CHECK (PC) DOCUMENT
CODE: 2022 CBC
A SEPARATE PROJECT APPLICATION FOR CONSTRUCTION IS REQUIRED.

FRAME CONNECTION DETAILS

HIP ROOF - RAM 30

RAM4.2

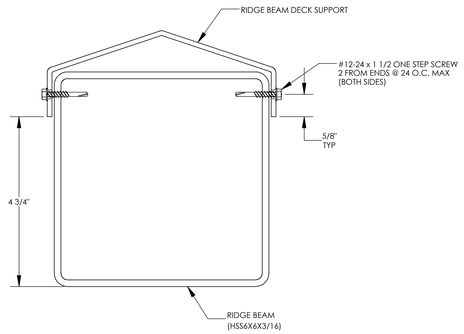

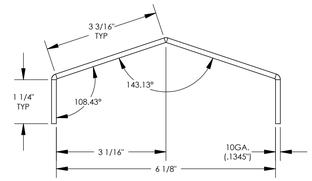

RAM 30 - RIDGE
Fy = 36 KSI
A = 1.231 IN^2
Ix = 1.149 IN^4
Iy = 6.272 IN^4
Sx = 0.771 IN^3
Sy = 1.962 IN^3

RIDGE BEAM DECK SUPPORT DETAIL

11

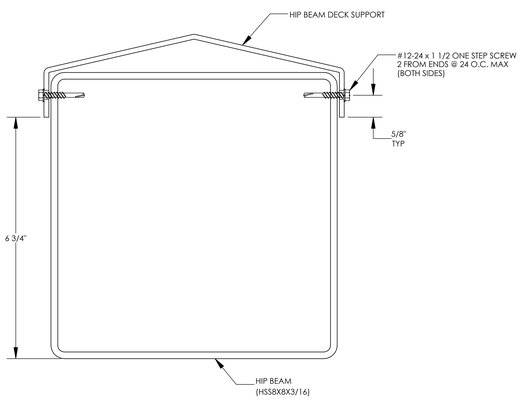

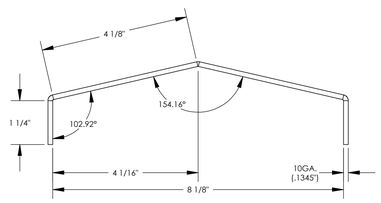

RAM 30 - HIP
Fy = 36 KSI
A = 1.484 IN^2
Ix = 1.341 IN^4
Iy = 12.353 IN^4
Sx = 0.886 IN^3
Sy = 2.943 IN^3

HIP BEAM DECK SUPPORT DETAIL

12

STATE APPROVALS-SITE

IDENTIFICATION STAMP
DIV. OF THE STATE ARCHITECT
APP: 02-121824 INC:
REVIEWED FOR
SS ☑ FLS ☑ ACS ☑
DATE: 10/18/2023

4600 PLAZA GOLDORADO CIRCLE
SUITE B
CAMERON PARK, CA 95682
530.677.0516

STATE APPROVALS-PC

IDENTIFICATION STAMP
DIV. OF THE STATE ARCHITECT
APP: 02-121213 PC
REVIEWED FOR
SS ☑ FLS ☑ ACS ☑ CG ☐
DATE: 7/18/2023

PRE-CHECK (PC) DOCUMENT
CODE: 2022 CBC
A SEPARATE PROJECT APPLICATION FOR CONSTRUCTION IS REQUIRED.

SECTION DETAILS

HIP ROOF - RAM 30

RAM4.3

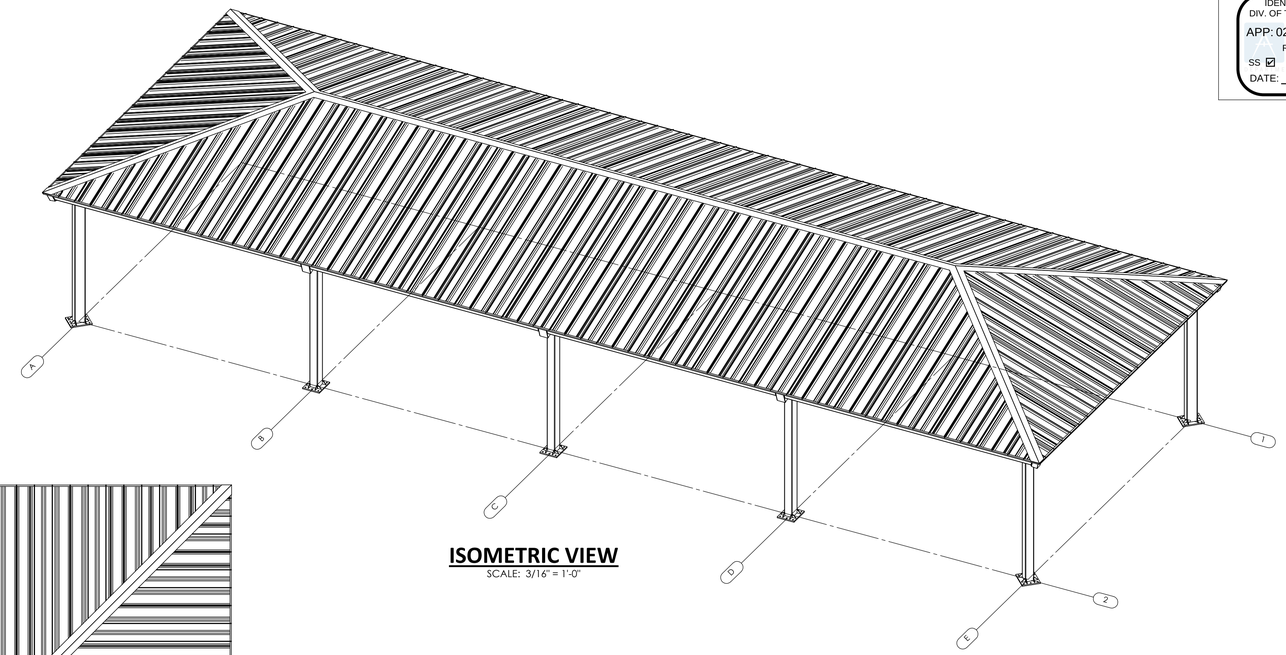

ISOMETRIC VIEW

SCALE: 3/16" = 1'-0"

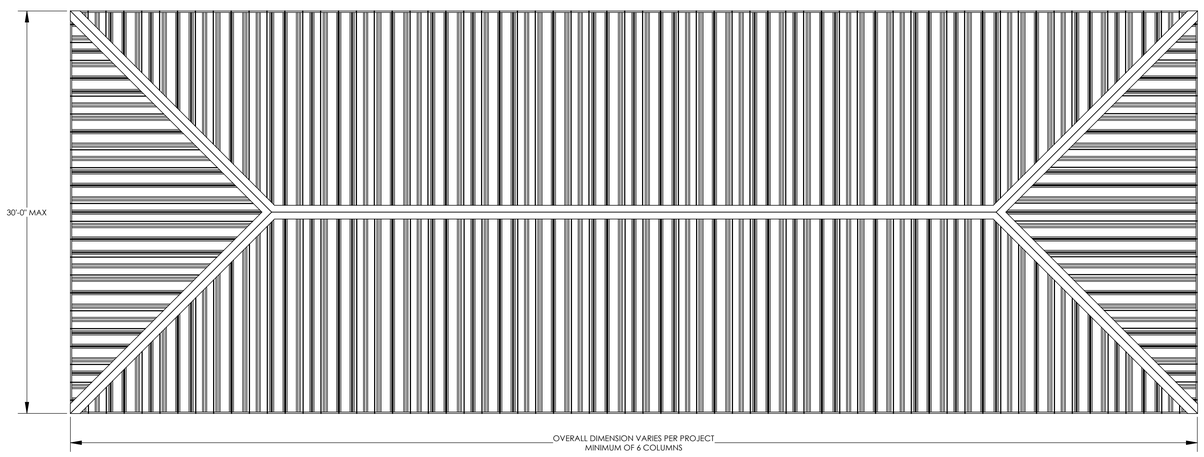

PLAN VIEW

SCALE: 3/16" = 1'-0"

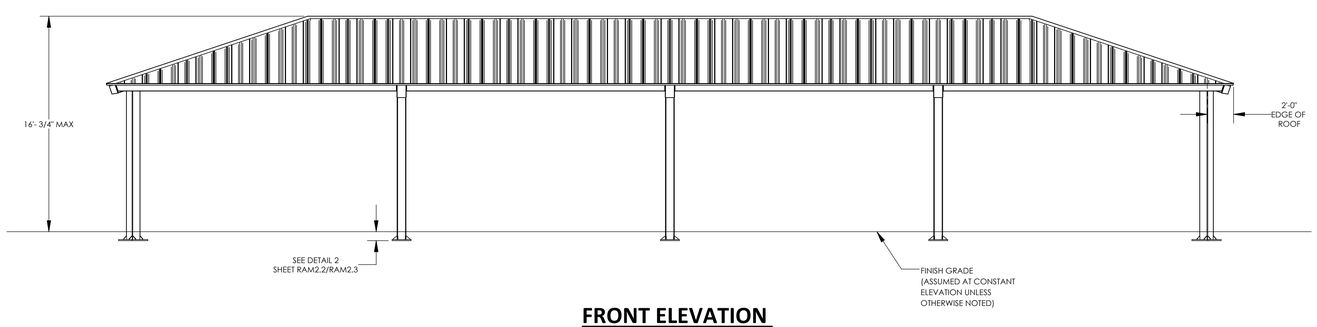

FRONT ELEVATION

SCALE: 3/16" = 1'-0"

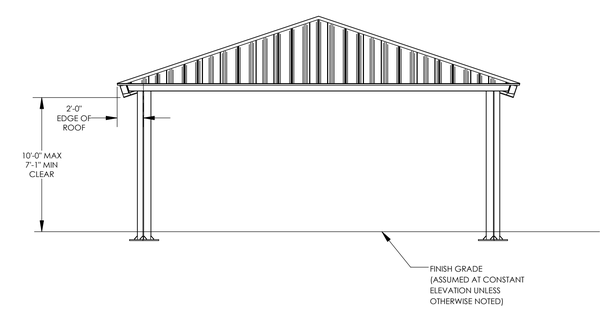

SIDE ELEVATION

SCALE: 3/16" = 1'-0"

STATE APPROVALS-SITE

IDENTIFICATION STAMP
DIV. OF THE STATE ARCHITECT
APP: 02-121824 INC:
REVIEWED FOR
SS ☑ FLS ☑ ACS ☑
DATE: 10/18/2023

GHD
4080 PLAZA GOLDORADO CIRCLE
SUITE B
CAMERON PARK, CA 95682
530.677.0016

poligon
PORTER

REGISTERED PROFESSIONAL ENGINEER
JESSICA E. NAPIER
No. S5476
STRUCTURAL
STATE OF CALIFORNIA

STATE APPROVALS-PC

IDENTIFICATION STAMP
DIV. OF THE STATE ARCHITECT
APP: 02-121213 PC
REVIEWED FOR
SS ☑ FLS ☑ ACS ☑ CG ☐
DATE: 7/18/2023

PRE-CHECK (PC) DOCUMENT
CODE: 2022 CBC
A SEPARATE PROJECT APPLICATION FOR CONSTRUCTION IS REQUIRED.

ARCHITECTURAL VIEWS

HIP ROOF - RAM 30

RAM5.1

STANDING SEAM INSTALLATION NOTES:

THE DETAILS SHOWN ARE SUGGESTIONS OR GUIDELINES ON HOW TO ERECT THE SYSTEMS. THE INFORMATION SHOWN IS ACCURATE, BUT IT IS NOT INTENDED TO COVER ALL INSTANCES, BUILDING REQUIREMENTS, DESIGNS OR CODES. THE DETAILS MAY REQUIRE CHANGES OR REVISIONS DUE TO FIELD CONDITIONS.

IT SHALL BE THE RESPONSIBILITY OF THE ERECTOR TO ENSURE THAT THE DETAILS MEET PARTICULAR BUILDING REQUIREMENTS AND TO ASSURE ADEQUATE WATER TIGHTNESS.

THE ERECTOR SHOULD THOROUGHLY FAMILIARIZE HIMSELF/HERSELF WITH ALL ERECTION INSTRUCTIONS BEFORE STARTING WORK.

THE PANELS SHOULD BE INSTALLED PLUMB, STRAIGHT, AND ACCURATELY TO THE ADJACENT WORK.

FLASHING AND TRIM SHALL BE INSTALLED TRUE, AND IN PROPER ALIGNMENT, WITH ANY EXPOSED FASTENERS EQUALLY SPACED FOR THE BEST APPEARANCE.

SEALANT SHALL BE FIELD APPLIED ON DRY, CLEAN SURFACES. SOME FIELD CUTTING AND FITTING OF PANELS AND FLASHING IS TO BE EXPECTED BY THE ERECTOR AND MINOR FIELD CORRECTIONS ARE A PART OF NORMAL ERECTION WORK.

WORKMANSHIP SHALL BE OF THE BEST INDUSTRY STANDARDS AND INSTALLATION SHALL BE PERFORMED BY EXPERIENCED METAL CRAFTSMEN.

METAL SHAVINGS FROM DRILLING OR INSTALLATION OF ROOF FASTENERS MUST BE CAREFULLY REMOVED FROM THE ROOF BY BRUSHING OR SWEEPING AT THE END OF EACH DAY DURING INSTALLATION. SHAVINGS LEFT ON THE ROOF WILL QUICKLY RUST AND STAIN THE ROOF FINISH.

COVER ACCESS HOLES WITH GRACE ICE AND WATER SHIELD BEFORE ATTACHING ROOF DECKING

METAL ROOFING PRODUCT AND INSTALLATION SHALL MEET ALL REQUIREMENTS OF ICC-ES REPORT ESL-1082.

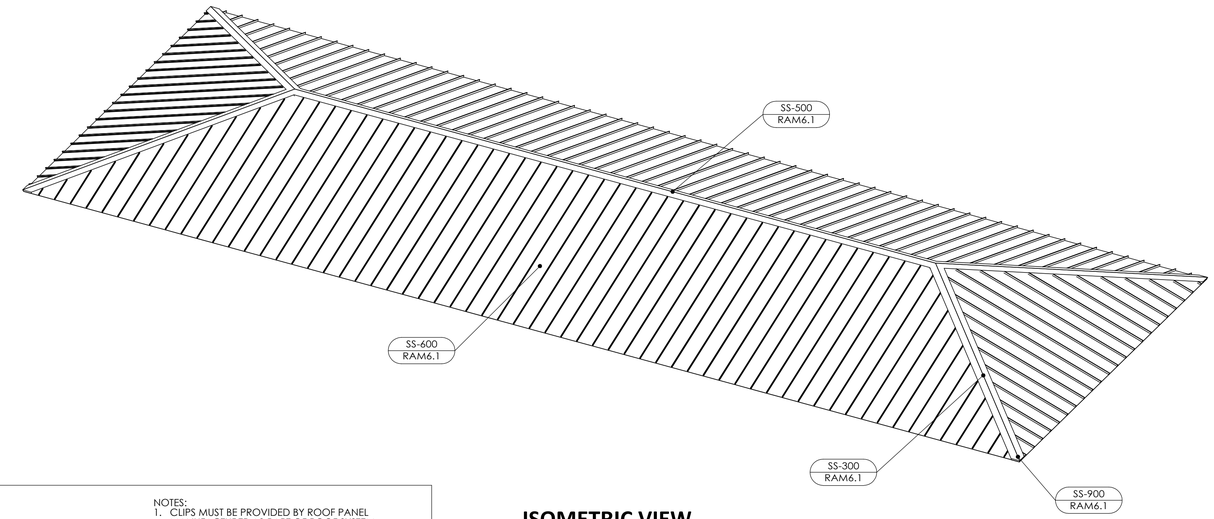

ISOMETRIC VIEW

SCALE: 3/16" = 1'-0"

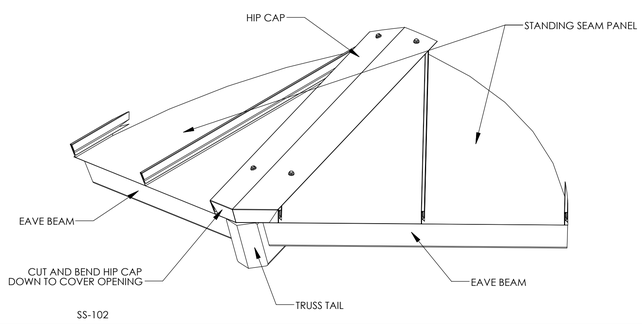

CORNER DETAIL — SS-900

NOTES:
1. CLIPS MUST BE PROVIDED BY ROOF PANEL MANUFACTURER AS PART OF ROOF SYSTEM,
2. MATERIAL THICKNESS MUST BE 18 GAGE (0.048"-0.053")

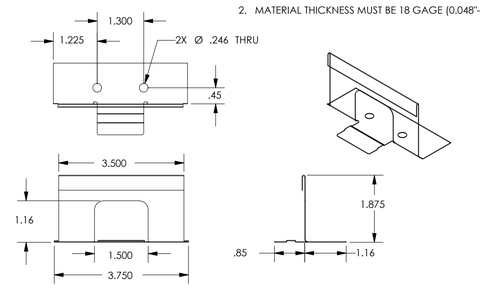

CLIP DETAIL — SS-CLP

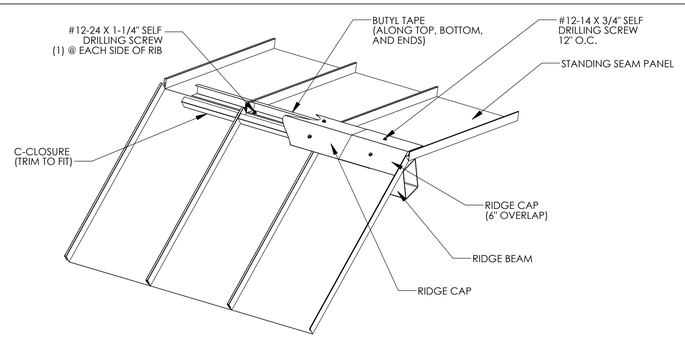

RIDGE DETAIL — SS-500

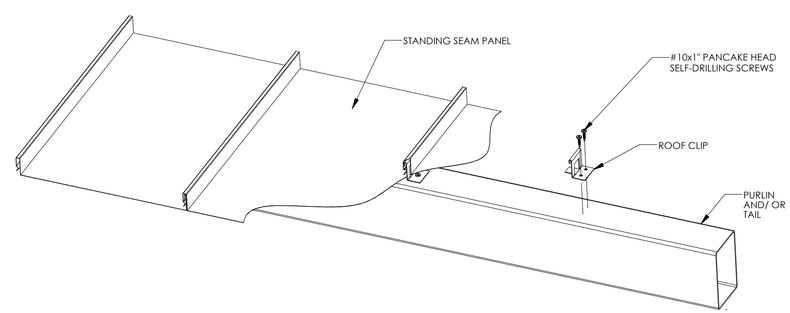

PURLIN DETAIL — SS-600

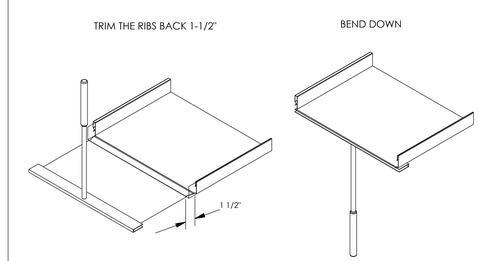

HEMMING DETAIL — SS-HEM

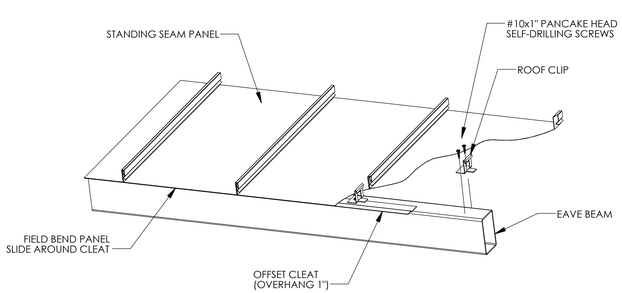

EAVE DETAIL — SS-200

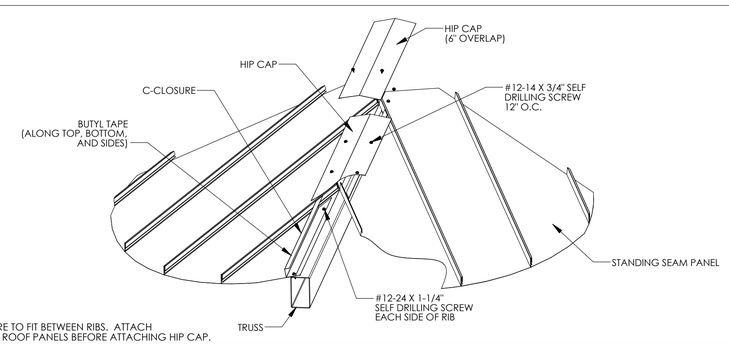

NOTE:
TRIM C-CLOSURE TO FIT BETWEEN RIBS. ATTACH C-CLOSURE TO ROOF PANELS BEFORE ATTACHING HIP CAP.

TRUSS DETAIL — SS-300

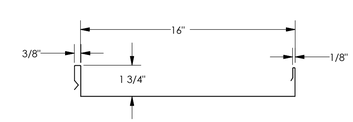

GENERAL
GAGE = 22
FY = 50 KSI

TOP IN COMPRESSION
Ix = 0.1200 IN^4
Se = 0.0803 IN^3
Ma = 2.4056 IN-KIPS

BOTTOM IN COMPRESSION
Ix = 0.0570 IN^4
Se = 0.0729 IN^3
Ma = 1.7220 IN-KIPS

ROOF DECK SECTION PROPERTIES — SS-950

STATE APPROVALS-SITE

IDENTIFICATION STAMP
DIV. OF THE STATE ARCHITECT
APP: 02-121824 INC:
REVIEWED FOR
SS ☑ FLS ☑ ACS ☑
DATE: 10/18/2023

4600 PLAZA GOLDCREEK DR, CIRCLE SUITE B
CHANHASSEN, MN, 55368
530.677.1516

STATE APPROVALS-PC

IDENTIFICATION STAMP
DIV. OF THE STATE ARCHITECT
APP: 02-121213 PC
REVIEWED FOR
SS ☑ FLS ☑ ACS ☑ CG ☐
DATE: 7/18/2023

PRE-CHECK (PC) DOCUMENT
CODE: 2022 CBC
A SEPARATE PROJECT APPLICATION FOR CONSTRUCTION IS REQUIRED.

ROOF CONNECTION DETAILS

HIP ROOF - RAM

RAM6.1

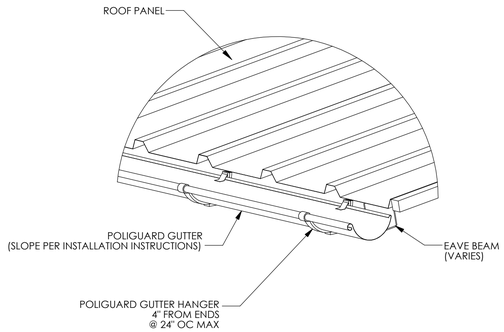

GUTTER DETAIL

GS-100

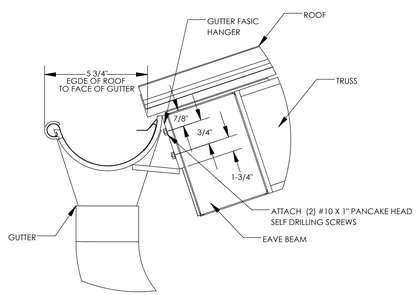

GUTTER DETAIL

GS-200

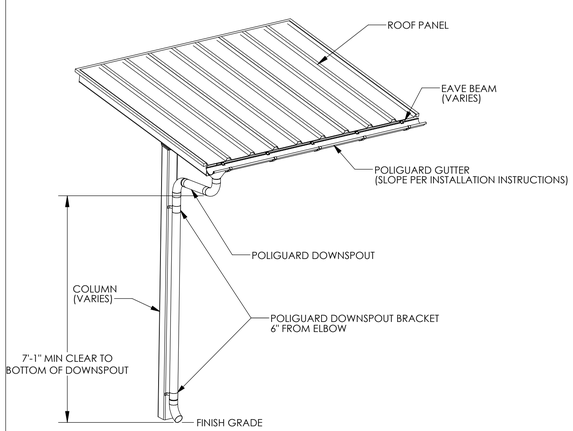

DOWNSPOUT DETAIL

GS-300

POLIGUARD GUTTER SYSTEM NOTES:

1. PREFABRICATED GUTTER SYSTEM IS ATTACHED TO THE STRUCTURE AFTER ROOF IS INSTALLED.
2. DETAILED INSTALLATION INSTRUCTIONS ARE SHIPPED WITH THE STRUCTURE.
3. ~~DOWNSPOUTS REQUIRED AT EACH COLUMN.~~

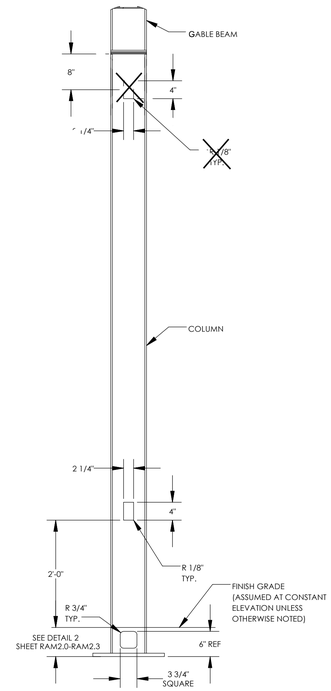

ELECTRICAL CUTOUT IN COLUMNS

EC-100

ELECTRICAL CUTOUT NOTES:

1. MAXIMUM ONE CUTOUT PERMITTED IN EACH MEMBER.
2. CUTOUTS CAN BE PLACED ON ANY SIDE OF A MEMBER.
3. CUTOUTS CAN BE PLACED ALONG MEMBERS AS INDICATED IN THE DETAILS.
4. ARCHITECTS REQUESTING CUTOUTS MUST MARKUP APPROVED PC DRAWINGS TO LOCATE CUTOUTS FOR APPROVAL AND FABRICATION.

STATE APPROVALS-SITE

IDENTIFICATION STAMP
DIV. OF THE STATE ARCHITECT
APP: 02-121824 INC:
REVIEWED FOR
SS ☑ FLS ☑ ACS ☑
DATE: 10/18/2023

4080 PLAZA GOLDORADO CIRCLE
SUITE B
CAMERON PARK, CA 95682
530.677.8515

poligon PORTER

REGISTERED PROFESSIONAL ENGINEER
JESSICA E. NAPIER
No. S5476
STRUCTURAL
STATE OF CALIFORNIA

STATE APPROVALS-PC

IDENTIFICATION STAMP
DIV. OF THE STATE ARCHITECT
APP: 02-121213 PC
REVIEWED FOR
SS ☑ FLS ☑ ACS ☑ CG ☐
DATE: 7/18/2023

PRE-CHECK (PC) DOCUMENT
CODE: 2022 CBC
A SEPARATE PROJECT APPLICATION FOR CONSTRUCTION IS REQUIRED.

MISC DESIGN OPTIONS

HIP ROOF - RAM

RAM7.0

ELECTRICAL CUTOUT AND ACCESS INSTRUCTIONS

- IF 'YES' IS NOT SELECTED IN STEP 2 ON ORDER FORM, THEN THIS SHEET NEED NOT BE INCLUDED IN SITE-SPECIFIC DRAWINGS
- ONLY COLUMNS ARE PERMITTED TO HAVE ELECTRICAL ACCESS
- THE COLUMN CUTOUTS ARE STATIC AND SHOWN IN THE 'MISC DESIGN OPTIONS SHEET'
- IDENTIFY THE COLUMNS WITH ELECTRICAL CUTOUTS BELOW (REFERENCE GRID LINES IN ISOMETRIC FRAME VIEW TO THE RIGHT)
- STRUCTURES MAY BE LONGER OR SHORTER THAN THE ISOMETRIC FRAME VIEW SHOWN
- IF SITE-SPECIFIC STRUCTURE HAS A DIFFERENT NUMBER OF COLUMNS THAN ISOMETRIC SHOWN, REFERENCE COLUMN A1 IN THE ISOMETRIC VIEW AND CONTINUE PATTERN TO FIT SITE-SPECIFIC LAYOUT
- IF NO COLUMNS ARE IDENTIFIED, POLIGON WILL ASSUME CUTOUTS ONLY IN COLUMN A1
- CONTACT POLIGON ENGINEERING FOR SPECIAL PROJECT SPECIFIC REQUIREMENTS

ELECTRICAL CUTOUT IDENTIFICATION IN COLUMNS
SPECIFIC MEMBERS A1, E2

~~EXAMPLE:~~

~~ELECTRICAL CUTOUT IDENTIFICATION IN COLUMNS~~
~~SPECIFIC MEMBERS: A1 , B1, F1~~

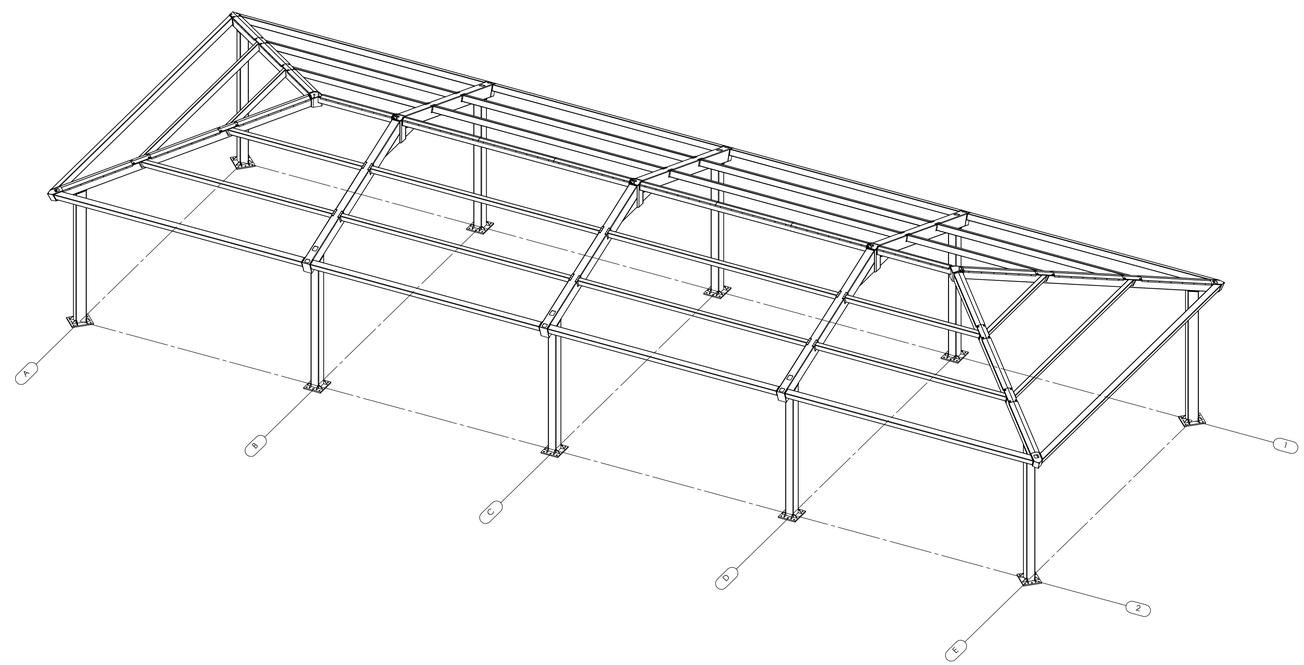

STATE APPROVALS-SITE

IDENTIFICATION STAMP
DIV. OF THE STATE ARCHITECT
APP: 02-121824 INC:
REVIEWED FOR
SS ☑ FLS ☑ ACS ☑
DATE: 10/18/2023

4600 PLAZA GOLDCREEK DR, SUITE B
CAMERON PARK, CA 95682
530.677.0316

STATE APPROVALS-PC

IDENTIFICATION STAMP
DIV. OF THE STATE ARCHITECT
APP: 02-121213 PC
REVIEWED FOR
SS ☑ FLS ☑ ACS ☑ CG ☐
DATE: 7/18/2023

PRE-CHECK (PC) DOCUMENT
CODE: 2022 CBC
A SEPARATE PROJECT APPLICATION FOR CONSTRUCTION IS REQUIRED.

ELECTRICAL CUTOUTS

HIP ROOF - RAM

RAM7.1

THE LINE SHOWN ABOVE IS 1" WHEN PRINTED ON THE SHEET'S ORIGINAL PAGE SIZE

LODI UNIFIED SCHOOL DISTRICT

LODI UNIFIED SCHOOL DISTRICT LUNCH SHELTERS - LOIS E. BORCHARDT ELEMENTARY SCHOOL

375 CULBERTSON DRIVE LODI, CA 95242

GENERAL NOTES

1. CONSTRUCTION DOCUMENTS DESCRIBE THE PRODUCTS, SYSTEMS, QUANTITIES, CONFIGURATION, AND PERFORMANCE SPECIFICATIONS THAT DELIVER THE OVERALL DESIGN INTENT OF THE PROJECT.
2. THE CONSTRUCTION DOCUMENT DRAWINGS AND SPECIFICATIONS ARE COMPLEMENTARY, AND WHAT IS REQUIRED BY ONE SHALL BE AS BINDING AS IF REQUIRED BY BOTH.
3. PERFORMANCE BY THE CONSTRUCTION TEAM SHALL BE CONSISTENT WITH THE CONSTRUCTION DRAWINGS AND SPECIFICATIONS AS NECESSARY TO DELIVER THE INDICATED RESULTS OF THE DESIGN INTENT.
4. VERIFY ALL DIMENSIONS, LOCATIONS OF EXISTING UTILITIES, AND CONDITIONS ON THE JOB SITE PRIOR TO THE START OF WORK OR PORTIONS OF THE WORK. NOTIFY THE ARCHITECT IMMEDIATELY OF ANY DISCREPANCIES BETWEEN THE ACTUAL FIELD CONDITIONS AND THE CONSTRUCTION DOCUMENTS. EXISTING CONDITIONS ARE INDICATED AS A RESULT OF FIELD OBSERVATIONS, INFORMATION SHOWN ON AVAILABLE DOCUMENTS AND FIELD CONDITIONS AT THE TIME OF PREPARATION.
5. ALL MATERIALS AND WORKMANSHIP SHALL COMPLY WITH ALL GOVERNING CODES, ORDINANCES, REGULATIONS AND LAWS.
6. THE DESIGN ADEQUACY AND SAFETY OF ERECTION BRACING, SHORING, TEMPORARY SUPPORTS AND SCAFFOLDING IS THE SOLE RESPONSIBILITY OF THE CONTRACTOR.
7. WHERE ANY CONFLICT OCCURS BETWEEN THE REQUIREMENTS OF LAWS, CODES, ORDINANCES, RULES AND REGULATIONS, THE MOST STRINGENT SHALL GOVERN.
8. IN NO CASE SHALL WORKING DIMENSIONS BE SCALED FROM PLANS, SECTIONS OR DETAILS ON THE DRAWINGS.
9. DETAILS MARKED 'TYPICAL' SHALL APPLY IN ALL CASES UNLESS SPECIFICALLY NOTED OTHERWISE.
10. ENACT ALL MEASURES TO PROTECT AND SAFEGUARD ALL EXISTING ELEMENTS TO REMAIN FROM BEING DAMAGED. REPLACE OR REPAIR EXISTING ELEMENTS DAMAGED BY THE EXECUTION OF THIS CONTRACT TO EQUAL OR BETTER CONDITION.
11. PRIOR TO THE START OF WORK THE CONTRACTOR SHALL COORDINATE BETWEEN THE REQUIREMENTS OF ALL DISCIPLINES HEREIN AND BETWEEN THE REQUIREMENTS OF ALL DRAWINGS AND SPECIFICATIONS IN ORDER THAT ALL ITEMS SATISFACTORILY RELATE TO ONE ANOTHER. NOTIFY ARCHITECT IMMEDIATELY REGARDING ANY ITEMS THAT CANNOT BE COORDINATED.
12. CONTRACTOR SHALL EXCERCISE EXTREME CAUTION IN EXCAVATING AND TRENCHING ON THIS SITE TO AVOID EXISTING DUCTS, PIPING, CONDUIT, ETC. AND TO PREVENT HAZARD TO PERSONNEL AND/OR TO EXISTING UNDERGROUND UTILITIES OR STRUCTURES. THE CONTRACTOR SHALL IMMEDIATELY NOTIFY THE ARCHITECT SHOULD SUCH UNIDENTIFIED CONDITIONS BE DISCOVERED. THESE DRAWINGS AND SPECIFICATIONS DO NOT INCLUDE THE NECESSARY COMPONENTS FOR CONSTRUCTION SAFETY.
13. PROVIDE SAFE MEANS OF EGRESS THROUGH THE BUILDING AND ON SITE AT ALL TIMES.
14. PROVIDE FIRE EXTINGUISHERS PER CFC AT ALL TIMES THROUGHOUT CONSTRUCTION AREA.
15. PROVIDE CONSTRUCTION BARRIERS BETWEEN CONSTRUCTION AREAS AND OCCUPIED AREAS AT ALL TIMES.
16. CUTTING, BORING, SAWCUTTING OR DRILLING THROUGH THE EXISTING OR NEW STRUCTURAL ELEMENTS SHALL NOT TO BE STARTED UNTIL THE DETAILS HAVE BEEN REVIEWED AND APPROVED BY THE ARCHITECT, AND STRUCTURAL ENGINEER OF RECORD.
17. AVOID DISRUPTION TO ADJACENT AREAS. KEEP NOISE TO A LEVEL ACCEPTABLE TO THE OWNER BY SCHEDULING EXCESSIVE NOISE TASKS WITH OWNER REPRESENTATIVE. THIS MAY REQUIRE AFTER HOURS WORK.
18. **STATEMENT OF HAZARDOUS MATERIAL DISCOVERY**
    IF THE CONTRACTOR ENCOUNTERS A HAZARDOUS MATERIAL OR SUBSTANCE NOT ADDRESSED IN THE HAZARDOUS MATERIAL REPORT OR IN A CONCEALED CONDITION, THE CONTRACTOR SHALL, UPON RECOGNIZING THE CONDITION, IMMEDIATELY STOP WORK IN THE AFFECTED AREA AND REPORT THE CONDITION TO THE OWNER AND ARCHITECT IN WRITING.
    UPON RECEIPT OF THE CONTRACTOR'S WRITTEN NOTICE, THE OWNER SHALL OBTAIN THE SERVICES OF A LICENSED LABORATORY TO VERIFY THE PRESENCE OR ABSENCE OF THE MATERIAL OR SUBSTANCE REPORTED BY THE CONTRACTOR AND, IN THE EVENT SUCH MATERIAL OR SUBSTANCE IS FOUND TO BE PRESENT, TO PROVIDE RECOMMENDATIONS TO CAUSE IT TO BE ABATED AND RENDERED HARMLESS.
    WHEN THE MATERIAL OR SUBSTANCE HAS BEEN ABATED AND RENDERED HARMLESS, WORK IN THE AFFECTED AREA SHALL RESUME UPON WRITTEN AGREEMENT OF THE OWNER AND CONTRACTOR.
19. PENETRATIONS TO FIRE RATED MATERIALS OR ASSEMBLIES SHALL BE RESTORED TO EQUAL RATING. SPECIAL INSPECTOR DSA 103 REQ'D.
21. COMPLY WITH TITLE 24, PART 9, CALIFORNIA FIRE CODE, CHAPTER 33 FIRE SAFETY DURING CONSTRUCTION AND DEMOLITION, DURING ALL PHASES OF PROJECT.
22. ALL WORK SHALL CONFORM TO 2019 TITLE 24, CALIFORNIA CODE OF REGULATIONS (CCR).
23. CHANGES TO THE APPROVED DRAWINGS AND SPECIFICATIONS SHALL BE MADE BY AN ADDENDUM OR A CONSTRUCTION CHANGED DOCUMENT (CCD) APPROVED BY THE DIVISION OF THE STATE ARCHITECT, AS REQUIRED BY SECTION 4-338, PART 1, TITLE 24, CCR.
24. A "DSA CERTIFIED" CLASS 2 PROJECT INSPECTOR EMPLOYED BY THE DISTRICT (OWNER) AND APPROVED BY THE DSA SHALL PROVIDE CONTINUOUS INSPECTION OF THE WORK. THE DUTIES OF THE INSPECTOR ARE DEFINED IN SECTION 4-342, PART 1, TITLE 24, CCR.
25. A DSA ACCEPTED TESTING LABORATORY DIRECTLY EMPLOYED BY THE DISTRICT (OWNER) SHALL CONDUCT ALL THE REQUIRED TESTS AND INSPECTIONS FOR THE PROJECT.
26. THE INTENT OF THESE DRAWINGS AND SPECIFICATIONS IS THAT THE WORK OF THE ALTERATION, REHABILITATION OR RECONSTRUCTION IS TO BE IN ACCORDANCE WITH TITLE 24, CCR. SHOULD ANY EXISTING CONDITIONS SUCH AS DETERIORATION OR NON-COMPLYING CONSTRUCTION BE DISCOVERED WHICH IS NOT COVERED BY THE CONTRACT DOCUMENTS WHEREIN THE FINISHED WORK WILL NOT COMPLY WITH TITLE 24, CCR, A CONSTRUCTION CHANGE DOCUMENT (CCD), OR A SEPARATE SET OF PLANS AND SPECIFICATIONS, DETAILING AND SPECIFYING THE REQUIRED WORK SHALL BE SUBMITTED TO AND APPROVED BY DSA BEFORE PROCEEDING WITH THE WORK. (SECTION 4-317(c), PART 1, TITLE 24, CCR).
27. GRADING PLANS, DRAINAGE IMPROVEMENTS, ROAD AND ACCESS REQUIREMENTS AND ENVIRONMENTAL HEALTH CONSIDERATIONS SHALL COMPLY WITH ALL LOCAL ORDINANCES.
28. SUBSTITUTIONS AFFECTING DSA REGULATED ITEMS SHALL BE CONSIDERED AS A CONSTRUCTION CHANGE DOCUMENT, AND SHALL BE APPROVED BY DSA PRIOR TO FABRICATION AND INSTALLATION PER DSA IR A-6 AND SECTION 338(c) PART 1, TITLE 24, CCR.

CODES

PARTIAL LIST OF APPLICABLE CODES

2022	CALIFORNIA ADMINISTRATIVE CODE, PART 1, TITLE 24 C.C.R.
2019	CALIFORNIA BUILDING CODE (CBC), PART 2, TITLE 24 C.C.R. (2018 INTERNATIONAL BUILDING CODE VOLUMES 1 & 2 AND 2016 CALIFORNIA AMENDMENTS)
2019	CALIFORNIA ELECTRICAL CODE (CEC), PART 3, TITLE 24 C.C.R. (2017 NATIONAL ELECTRICAL CODE AND 2019 CALIFORNIA AMENDMENTS)
2019	CALIFORNIA MECHANICAL CODE (CMC) PART 4, TITLE 24 C.C.R. (2018 UNIFORM MECHANICAL CODE AND 2019 CALIFORNIA AMENDMENTS)
2019	CALIFORNIA PLUMBING CODE (CPC), PART 5, TITLE 24 C.C.R. (2018 UNIFORM PLUMBING CODE AND 2019 CALIFORNIA AMENDMENTS)
2019	CALIFORNIA ENERGY CODE (CEC), PART 6, TITLE 24 C.C.R.
2019	CALIFORNIA FIRE CODE, PART 9, TITLE 24 C.C.R. (2018 INTERNATIONAL FIRE CODE AND 2019 CALIFORNIA AMENDMENTS)
2019	CALIFORNIA EXISTING BUILDING CODE (CEBC), PART 10, TITLE 24 CCR (2018 INTERNATIONAL EXISTING CODE AND 2019 CALIFORNIA AMENDMENTS)
2019	CALIFORNIA GREEN BUILDING STANDARDS CODE (CALGREEN), PART 11, TITLE 24 C.C.R.
2019	CALIFORNIA REFERENCED STANDARDS, PART 12,TITLE 24 C.C.R. TITLE 19 C.C.R., PUBLIC SAFETY, STATE FIRE MARSHAL REGULATIONS.
2019	ASME A17.1/B44-13 SAFETY CODE FOR ELEVATORS AND ESCALATORS

NOTE TO CONTRACTOR:-
THE CALIFORNIA ENERGY CODE SECTION 10-103 REQUIRES ACCEPTANCE TESTING ON ALL NEWLY INSTALLED LIGHTING CONTROLS, MECHANICAL SYSTEMS, ENVELOPES, AND PROCESS EQUIPMENT AFTER INSTALLATION AND BEFORE PROJECT COMPLETION. AN ACCEPTANCE TEST IS A FUNCTIONAL PERFORMANCE TEST TO HELP ENSURE THAT NEWLY INSTALLED EQUIPMENT IS OPERATING AND IN COMPLIANCE WITH ENERGY CODE.

LIGHTING CONTROLS ACCEPTANCE TESTS MUST BE PERFORMED BY A CERTIFIED LIGHTING CONTROLS ACCEPTANCE TEST TECHNICIAN (ATT).

MECHANICAL SYSTEM ACCEPATANCE TEST MUST BE PERFORMED BY A CERTIFIED MECHANICAL ATT FOR PROJECTS SUBMITTED ON OR AFTER OCTOBER 1, 2021.

A LISTING OF CERTIFIED ATTs CAN BE FOUND AT: HTTPS://WWW.ENERGY.CA.GOV/PROGRAMS-AND-TOPICS/PROGRAMS/ACCEPTANCE-TEST-TECHNICIAN-CERTIFICATION-PROVIDER-PROGAM/ACCEPTANCE

THE ACCEPTANCE TESTING PROCEDURES MUST BE REPEATED, AND DEFICIENCIES MUST BE CORRECTED BY THE BUILDER OR INSTALLING CONTRACTOR UNITL THE CONSTUCTION/INSTALLATION OF THE SPECIFIED SYSTEMS CONFORM AND PASS THE REQUIRED ACCEPTANCE CRITERIA.

PROJECT INSPECTORS WILL BE COLLECTING THE FORMS TO CONFIRM THAT THE REQUIRED ACCEPTANCE TESTS HAVE BEEN COMPLETED.

PARTIAL LIST OF APPLICABLE STANDARDS

NFPA 13	STANDARD FOR AUTOMATIC FIRE SPRINKLER SYSTEMS (CA AMENDED)	2016 ED.
NFPA 14	STANDARD FOR STANDPIPE AND HOSE SYSTEMS	2016 ED.
NFPA 17	STANDARD FOR DRY CHEMICAL EXTINGUISHING SYSTEMS	2017 ED.
NFPA 17A	STANDARD FOR WET CHEMICAL EXTINGUISHING SYSTEMS	2017 ED.
NFPA 20	STANDARD FOR STATIONARY PUMPS FOR FIRE PROTECTION	2017 ED.
NFPA 22	STANDARD FOR WATER TANKS FOR PRIVATE FIRE PROTECTION	2013 ED.
NFPA 24	STANDARD FOR THE INSTALLATION OF PRIVATE FIRE MAINS AND THEIR APPURTENANCES	2016 ED.
NFPA 72	NATIONAL FIRE ALARM & SIGNALING CODE (CA AMENDED)	2016 ED.
NFPA 80	STANDARD FOR FIRE DOORS AND OTHER OPENING PROTECTIVES	2016 ED.
NFPA 2001	STANDARD ON CLEAN AGENT FIRE EXTINGUISHING SYSTEMS	2016 ED.
UL 300	STANDARD FOR FIRE TESTING OF FIRE EXTINGUISHING SYSTEMS FOR PROTECTION OF COMMERCIAL COOKING EQUIPMENT	2005 (R2010)
UL 464	AUDIBLE SIGNAL APPLIANCES FOR FIRE ALARM AND SIGNALING SYSTEMS, INCLUDING ACCESSORIES	2003 ED.
UL 521	STANDARD FOR HEAT DETECTORS FOR FIRE PROTECTIVE SIGNALING SYSTEMS	1999 ED.
UL 1971	STANDARD FOR SIGNALING DEVICES FOR THE HEARING IMPAIRED	2002 ED.
ICC 300	STANDARD FOR BLEACHERS, FOLDING AND TELESCOPING SEATING AND GRANDSTANDS	2017 ED.

FOR A COMPLETE LIST OF APPLICABLE NFPA STANDARDS REFER TO 2019 CBC (SFM) CHAPTER 35 AND CALIFORNIA FIRE CODE CHAPTER 80.
SEE CALIFORNIA BUILDING CODE, CHAPTER 35 FOR STATE OF CALIFORNIA AMENDMENTS TO NFPA STANDARDS.

PROJECT DESCRIPTION

30' X 64' PC LUNCH SHELTER

SITE WORK INCLUDING ACCESSIBILITY UPGRADES AND TOILET ROOM UPGRADES

PROJECT DATA

PROJECT ADDRESS:
375 CULBERTSON DRIVE
LODI, CA 95242

OWNER:
LODI UNIFIED SCHOOL DISTRICT
PHONE #: 209-331-7225

STATEMENT OF GENERAL CONFORMANCE

(X) THE DRAWINGS OR SHEETS LISTED ON THE INDEX SHEET
(X) THIS DRAWING PAGE OF SPECIFICATIONS/CALCULATIONS

HAVE BEEN PREPARED BY OTHER DESIGN PROFESSIONALS OR CONSULTANTS WHO ARE LICENSED AND/OR AUTHORIZED TO PREPARE SUCH DRAWINGS IN THIS STATE. IT HAS BEEN EXAMINED BY ME FOR:

1) DESIGN INTENT AND APPEARS TO MEET THE APPROPRIATE REQUIREMENTS OF TITLE 24, CALIFORNIA CODE OF REGULATIONS AND THE PROJECT SPECIFICATIONS PREPARED BY ME, AND
2) COORDINATION WITH MY PLANS AND SPECIFICATIONS AND IS ACCEPTABLE FOR INCORPORATION INTO THE CONSTRUCTION OF THIS PROJECT.

THE STATEMENT OF GENERAL CONFORMANCE "SHALL NOT BE CONSTRUED AS RELIEVING ME OF MY RIGHTS, DUTIES, AND RESPONSIBILITIES UNDER SECTIONS 17302 AND 81138 OF THE EDUCATION CODE AND SECTIONS 4-336, 4-341 AND 4-344" OF TITLE 24, PART 1. (TITLE 24, PART 1, SECTION 4-317 (B))

I CERTIFY THAT:

THE PC APPROVED MANUFACTURER DRAWINGS LISTED ON THE INDEX SHEET ARE IN GENERAL CONFORMANCE WITH THE PROJECT DESIGN INTENT, AND THEY HAVE BEEN COORDINATED WITH THE PROJECT PLANS AND SPECIFICATIONS.

SIGNATURE
ARCHITECT OR ENGINEER DESIGNATED TO BE IN GENERAL RESPONSIBLE CHARGE — DATE 10/11/23

PRINT NAME Jeffrey Grau

C-25193 — 07-31-23
LICENSE NUMBER — EXPIRATION DATE

SHEET INDEX

NUMBER	NAME
GENERAL SHEET	
G0.10	COVER SHEET
1	
CIVIL	
C1.1	TITLE SHEET AND DETAIL SHEET
C2.1	DEMOLITION PLAN
C3.1	GRADING, DRAINAGE, AND PAVING PLAN
3	
ARCHITECTURE	
A1.21	CODE INFORMATION SITE PLAN
A1.22	LOCAL FIRE AUTHORITY SITE ACCESS PLAN
A1.23	ENLARGED SITE PLAN AND SECTION
A1.24	ENLARGED PARKING LOT A SITE PLAN
A2.11	1ST FLOOR - TOILET ROOM IMPROVEMENT PLANS
A8.11	INTERIOR ELEVATIONS
A10.1	SITE DETAILS
A10.2	TYPICAL MOUNTING HEIGHTS AND DETAILS
8	
PC DRAWINGS	
RAM1.0	ORDER FORM
RAM1.1	NOTES AND SPECIAL INSPECTIONS
RAM2.3	FOUNDATION PLAN DRILLED PIER
RAM3.1	FRAMING PLAN
RAM4.2	FRAME CONNECTION DETAILS
RAM4.3	SECTION DETAILS
RAM5.1	ARCHITECTURAL VIEWS
RAM6.1	ROOF CONNECTION DETAILS
RAM7.0	MISC DESIGN OPTIONS
RAM7.1	ELECTRICAL CUTOUTS
10	
Grand total: 22	

SYMBOL LEGEND

VIEW MARKERS

DRAWING NUMBER (TYP) / REFERENCE TYPE (SIM, OH) / Ref / 1 / A101	BUILDING SECTION MARKER
DRAWING SHEET (TYP) / Ref / A101	WALL SECTION MARKER
Ref / 1 / A101	DETAIL SECTION MARKER
DRAWING NUMBER / REFERENCE TYPE (SIM, OH) / 1Ref / A101 / DRAWING SHEET	EXTERIOR ELEVATION MARKER
88 / DRAWING NUMBER / 88 A101 88 / DRAWING DIRECTION / 88 / DRAWING SHEET	INTERIOR ELEVATION MARKER
DRAWING NUMBER / REFERENCE TYPE (SIM, OH) / SIM / AX.XX / VIEW EXTENTS / DRAWING SHEET	DETAIL CALLOUT

ITEM TAGS

Room name 101	ROOM IDENTIFICATION TAG
DOOR NUMBER 101A	DOOR IDENTIFICATION TAG
EXIT OCCUPANCY PROVIDED 100; EXIT OCCUPANCY REQUIRED 32; FIRE RATING (MINUTES) 36; DOOR NUMBER 45; SHOW_PH	
ASI6A 55 HPB: WALL TYPE; FIRE RATING (HRS); STC RATING	WALL IDENTIFICATION TAG

DRAWING SYMBOLS

AA.88 AA.88	REFERENCE GRID LINES
Name Elevation / Name Elevation	REFERENCE FLOOR LEVEL IDENTIDICATIONS

ABBREVIATIONS

(E)	EXISTING
AB	ANCHOR BOLT
AC PAVING	ASPHALTIC CONCRETE PAVING
ACC	ACCESS/ACCESSIBLE
ACP	ACOUSTICAL CEILING PANEL
ACT	ACOUSTICAL CEILING TILE
ADJ	ADJACENT/ADJUSTABLE
AFF	ABOVE FINISH FLOOR
AGG	AGGREGATE
AHU	AIR HANDLING UNIT
ARCH	ARCHITECTURAL
ATT	ATTENUATION
AUTO	AUTOMATIC
BD	BOARD
BLCG	BLOCKING
BUR	BUILT UP ROOFING
CABT	CABINET
CF	CUBIC FEET
CFCI	CONTRACTOR FURNISHED, CONTRACTOR INSTALLED
CFOI	CONTRACTOR FURNISHED, OWNER INSTALLED
CG	CORNER GUARD
CJ	CONTROL JOINT
CL	CENTER LINE
CLF	CHAIN LINK FENCE
CLR	CLEAR
CMU	CONCRETE MASONRY UNIT
CO	CLEANOUT
COL	COLUMN
COMP	COMPRESSION / COMPOSITE
CF	CUBIC FEET
COORD	COORDINATE
CORR	CORRUGATED
CT	CERAMIC TILE
CTSK	COUNTER SKUNK
CW	CURTAINWALL
DEPR	DEPRESSED / DEPRESSION
DF	DRINKING FOUNTAIN
DIM	DIMENSION
DISP	DISPENSER
DS	DOWNSPOUT
DTL	DETAIL
DW	DISHWASHER
E/W	EACH WAY
EIFS	EXTERIOR INSULATION FINISH SYSTEM
EJ	EXPANSION JOINT
ELEC	ELECTRICAL
ELEV	ELEVATION / ELEVATOR
ENCL	ENCLOSE / ENCLOSURE
EOS	EDGE OF SLAB
EP	ELECTRICAL PANEL
EQ	EQUAL
ESC	EXCUTCHEON
EWC	ELECTRIC WATER COOLER
EXP	EXPOSED
FA	FIRE ALARM
FD	FLOOR DRAIN
FDC	FIRE DEPARTMENT CONNECTION
FE	FIRE EXTINGUISHER
FEC	FIRE EXTINGUISHER W/ CABINET
FF	FINISH FLOOR
FG	FINISH GRADE
FH	FIRE HYDRANT
FHC	FIRE HOSE CABINET
FSH	FLAT HEAD SCREW
FIN	FINISH
FLR	FLOOR
FOC	FACE OF CONCRETE
FOF	FACE OF FINISH
FOM	FACE OF MASONRY
FOS	FACE OF STUD
FP	FIREPROOFING
FR	FIRE RATED
FRG	FIRE RATED GLASS
FRP	FIBERGLASS REINFORCED PLASTIC
FRT	FIRE RETARDANT TREATED
FS	FINISH SURFACE
FTG	FOOTING
GB	GRAB BAR
GFRC	GLASS FIBER REINFORCED CONCRETE
GL	GLASS TYPE
GLB	GLUE LAMINATED BEAM
GYP BD	GYPSUM BOARD
GYP PLAS	GYPSUM PLASTIC
HB	HOSE BIBB
HD	HEAVY DUTY
HDR	HEADER
HDWR	HARDWARE
HGT	HEIGHT
HM	HOLLOW METAL
HP	HIGH POINT
HSS	HOLLOW STEEL SECTION
ID	INSIDE DIAMTER
INT	INTERIOR
INV	INVERT
LANDS	LANDSCAPE
LAV	LAVATORY
LLH	LONG LEG HORIZONTAL
LLV	LONG LEG VERTICAL
LP	LOW POINT
LT WT	LIGHT WEIGHT
LVR	LOUVER
MACH	MACHINE
MB	MACHINE BOLT
MDF	MEDIUM DENSITY FIBERBOARD
MDO	MEDIUM DENSITY OVERLAY
MECH	MECHANICAL
MED	MEDIUM
MEMB	MEMBRANE
MFR	MANUFACTURER
MH	MANHOLE
MO	MASONRY OPENING
MTD	MOUNTED
MTL	METAL
NIC	NOT IN CONTRACT
NR	NON RATED
NRC	NOISE REDUCTION COEFFICIENT
NTS	NOT TO SCALE
O/	OVER
O/A	OVERALL
OC	ON CENTER
OD	OUTSIDE DIAMTER
OFCI	OWNER FURNISHED, CONTRACTOR INSTALLED
OFOI	OWNER FURNISHED, OWNER INSTALLED
OFVI	OWNER FURNISHED, VENDOR INSTALLED
OH	OPPOSITE HAND
OPER	OPERABLE
OPNG	OPENING
ORD	OVERFLOW ROOF DRAIN
P/L	PROPERTY LINE
PA	PUBLIC ADDRESS
PAF	POWDER ACTUATED FASTENER
PCC	PAVING PORTLAND CEMENT CONCRETE PAVING
PED	PEDESTRIAN
PERF	PERFORATED
PERIM	PERIMETER
PERP	PERPENDICULAR
PH	PANIC HARDWARE
P/V	POST INDICATOR VALVE
PL	PLATE
PLAM	PLASTIC LAMINATE
PLAS	PLASTER
PLUMB	PLUMBING
PNL	PANEL
PNT	PAINT / PAINTED
POC	POINT OF CONNECTION
POLY ISO	POLYISOCYANURATE
PREFIN	PREFINISHED
PREP	PREP / PREPARATION
PTC	POST TENSIONED CONCRETE
PTD	PAPER TOWEL DISPENSER
PTN	PARTITION
PTS	PNEUMATIC TUBE STATION / SYSTEM
PVC	POLYVINYL CHLORIDE
PVMT	PAVEMENT
QT	QUARRY TILE
R	RADIUS, RISER
RB	RESILIENT BASE
RD	ROOF DRAIN
RECEPT	ECEPTACLE
REF	REFERENCE
REFL	REFLECT(ED), (IVE)
REFL	REFLECT(ED), (IVE)
REFR	REFRIGERATOR
REINF	REINFORCE/REINFORCED/ REINFORCEMENT
REM	REMOVE
RH	ROUND HEAD
RHS	ROUND HEAD SCREW
RO	ROUGH OPENING
ROW	RIGHT OF WAY
SCH	SCHEDULE (FOR PIPE)
SCHED	SCHEDULE / SCHEDULING
SD	STORM DRAIN / SOAP DISPENSER
SECT	SECTION
SG	SAFETY GLASS
SHT	SHEET
SHTG	SHEATHING
SMS	SHEET METAL SCREW
SND	SANITARY NAPKIN DISPOSAL
SOV	SHUT OFF VALVE
SPEC	SPECIFICATIONS
SS	STAINLESS STEEL
STC	SOUND TRAMISSION CLASS
STL	STEEL
STSMS	SELF TAPPING SHEET METAL SCREW
SUSP	SUSPENDED
SV	SHEET VINYL
SYM	SYMMETRICAL
T	TREAD
T&B	TOP AND BOTTOM
TO	TOP OF
TOC	TOP OF CURB / CONCRETE
TOP	TOP OF PARAPET
TOS	TOP OF STEEL
TOW	TOP OF WALL
TPD	TOILET PAPER DISPENSER
TS	TACKABLE SURFACE
U/C	UNDER CABINET (OR COUNTER
UNO	UNLESS NOTED OTHERWISE
UR	URINAL
VAC	VACUUM
VB	VAPOR BARRIER
VCT	VINYL COMPOSITION TILE
VIF	VERIFY IN FIELD
VTR	VENT THROUGH ROOF
VWC	VINYL WALL COVERING
W/	WITH
W/O	WITHOUT
WB	WOOD BASE
WC	WATER CLOSET
WD	WOOD
WDW	WINDOW
WGT	WEIGHT
WH	WATER HEATER
WP	WATERPROOFING/WALL PROTECTION
WR	WATER RESISTANT
WRGB	WATER RESISTANT GYPSUM BOARD
WS	WOOD SCREW
WSCT	WAINSCOT
WWF	WELDED WIRE FABRIC

NOTE:
OTHER ABBREVIATIONS USED ON THESE DRAWINGS ARE CONSIDERED STANDARDS IN THE BUILDING INDUSTRY. CONTACT ARCHITECT FOR NECESSARY CLARIFICATION.

STATE MAP

VICINITY MAP

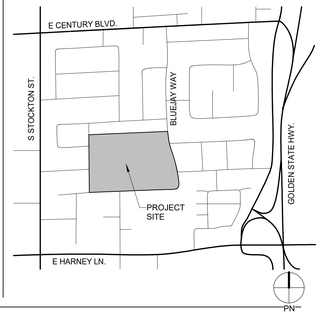

AGENCY APPROVAL:

IDENTIFICATION STAMP
DIV. OF THE STATE ARCHITECT
APP: 02-121835 INC:
REVIEWED FOR
SS ☑ FLS ☑ ACS ☑
DATE: 11/02/2023

LODI USD

HMC Architects
R221551X00
2101 CAPITOL AVENUE, SUITE 100,
SACRAMENTO, CA, 95816
916 368 7990 / www.hmcarchitects.com

LICENSED ARCHITECT JEFFREY ALAN GRAU C-14648 5/31/25 RENEWAL DATE STATE OF CALIFORNIA

PROJECT TEAM

CIVIL ENGINEER
WARREN GREEN ENGINEERING
3114 BRENNANS RD. LOOMIS, CA 95650
916.663.2323

FACILITY:
LOIS E. BORCHARDT ELEMENTARY SCHOOL
375 CULBERTSON DRIVE LODI, CA 95242

PROJECT:
LODI UNIFIED SCHOOL DISTRICT LUNCH SHELTERS - LOIS E. BORCHARDT ELEMENTARY SCHOOL

SHEET NAME:
COVER SHEET

CONSTRUCTION DOCUMENTS

DATE: **10.18.2023** — CLIENT PROJ NO:

SHEET:

G0.10

Autodesk Docs://R221551X00 Lodi USD Lunch Shelters/R221551X00-A-BORCHARDT-ES-LUNCH-SHELTER.rvt
10/11/2023 9:47:57 AM

PLEASE RECYCLE

THE LINE SHOWN ABOVE IS EXACTLY 1" ON ORIGINAL PLANS SHEET 1 ORIGINAL IMAGE SIZE

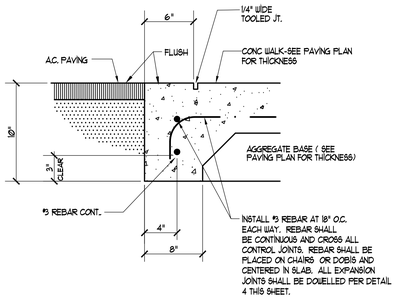

1 / C1.1 FLUSH CONC. WALK @ AC

N.T.S.

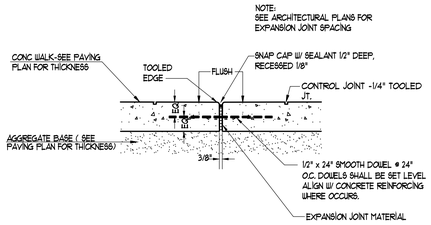

4 / C1.1 EXPANSION JOINT

N.T.S.

NOTE:
TRANSITION FROM NEW CONCRETE WALKWAYS TO EXISTING LANDSCAPE GRADE TO BE AT A MAXIMUM OF 5 : 1 SLOPE UNLESS OTHERWISE NOTED ON PLANS.

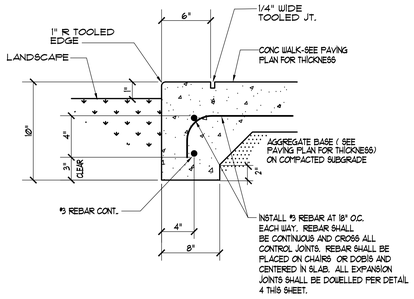

2 / C1.1 FLUSH CONC. WALK @ LANDSCAPE

N.T.S.

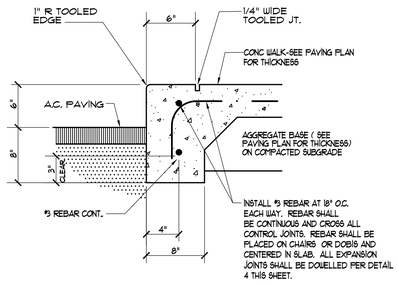

5 / C1.1 THICKENED EDGE CONC. WALK

N.T.S.

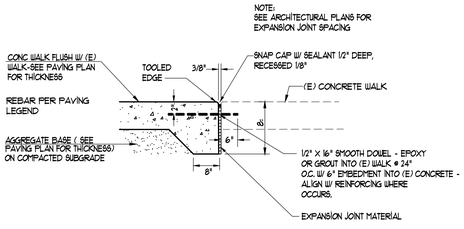

3 / C1.1 CONC. WALK AT EXISTING CONDITIONS

N.T.S.

LEGEND

× 43.15	EXISTING ELEVATION
8"SD	EXISTING STORM DRAIN
6"SS	EXISTING SANITARY SEWER
8"W	EXISTING WATER MAIN
	EXISTING WATER VALVE
	EXIST. FIRE HYDRANT
C	EXISTING COMMUNICATION LINE
IR	EXISTING IRRIGATION CONTROL LINE
E	EXISTING ELECTRICAL LINE
T	EXISTING TELEPHONE LINE
31.92	NEW ELEVATION

ABBREVIATIONS

AC	ASPHALT CONCRETE	LD	LANDSCAPE DRAIN
AB	AGGREGATE BASE	LF	LINEAR FEET
ADD. ALT.	ADDITIVE ALTERNATE	MH	MANHOLE
BLDG	BUILDING	MIN	MINIMUM
BO	BLOW OFF	MS	MOW STRIP
BOW	BACK OF WALK	(N)	NEW
BW	BOTTOM OF WALL	N.I.C.	NOT IN CONTRACT
CC	CONCRETE (TOP OF CONCRETE WALK)	OG	ORIGINAL GRADE
CL	CENTER LINE	P	PROPOSED
CONC	CONCRETE	PD	PLANTER DRAIN
CONST.	CONSTRUCT	PIV	POST INDICATOR VALVE
COTG	CLEANOUT TO GRADE	POC	POINT OF CONNECTION
DI	DRAIN INLET	PP	POWER POLE
DIP	DUCTILE IRON PIPE	PUE	PUBLIC UTILITY EASEMENT
DS	DOWNSPOUT	RCP	REINFORCED CONCRETE PIPE
DWY	DRIVEWAY	RD	ROOF DRAIN
(E)	EXISTING	RDWD	REDWOOD
E. BOX	ELECTRICAL BOX	RET	RETAINING
E. COND.	ELECTRICAL CONDUIT	RP	REDUCED PRESSURE
ELEC	ELECTRIC	R/W	RIGHT OF WAY
EP	EDGE OF PAVEMENT	RWL	RAIN WATER LEADER
EXIST.	EXISTING	S	SLOPE
FDC	FIRE DEPARTMENT CONNECTION	SD	STORM DRAIN
FF	FINISH FLOOR	SS	SANITARY SEWER
FG	FINISH GRADE	ST. LT.	STREET LIGHT
FH	FIRE HYDRANT	TBM	TEMPORARY BENCH MARK
FL	FLOW LINE	T	TRANSFORMER
FM	FIRE MAIN	TEL	TELEPHONE
FS	FIRE SERVICE	TC	TOP OF CURB
G	GAS	TW	TOP OF WALL
GB	GRADE BREAK	TYP	TYPICAL
GR	GRATE	VCP	VITRIFIED CLAY PIPE
GV	GATE VALVE	W	WATER
HDR	HEADER	WV	WATER VALVE
HP	HIGH POINT	VB	VALVE BOX
INV	INVERT ELEVATION	YD	YARD DRAIN
JP	JOINT POLE		

INDEX OF CIVIL DRAWINGS

C1.1 TITLE SHEET AND DETAIL SHEET

C2.1 DEMOLITION PLAN

C3.1 GRADING, DRAINAGE AND PAVING PLAN

AGENCY APPROVAL:

IDENTIFICATION STAMP
DIV. OF THE STATE ARCHITECT
APP: 02-121835 INC:
REVIEWED FOR
SS ☑ FLS ☑ ACS ☑
DATE: 11/02/2023

LODI USD

HMC Architects

R2211551

2101 CAPITOL AVENUE, SUITE 100,
SACRAMENTO, CA. 95816
916 368 7990 / www.hmcarchitects.com

Δ DESCRIPTION DATE

CONSULTANT:

REGISTERED PROFESSIONAL ENGINEER
JOHN A. GREEN
NO. 36500
Exp. 6-30-24
STATE OF CALIFORNIA

Warren-Green ENGINEERING
3114 Brennans Road
Loomis, CA 95690

FACILITY:

LOIS E. BORCHARDT ELEMENTARY SCHOOL
375 CULBERTSON DRIVE STOCKTON, CA 95240

PROJECT:

LODI UNIFIED SCHOOL DISTRICT LUNCH SHELTERS-
LOIS E. BORCHARDT ELEMENTARY SCHOOL

SHEET NAME:

CONSTRUCTION DOCUMENTS

FILE NO.: BES-CD **A NO.:** R2211551

DATE: **OCT. 18, 2023** CLIENT PROJ NO:

SHEET:

C1.1

PLEASE RECYCLE

THE LINE SHOWN ABOVE IS EXTRA WIDE TO ASSIST ON SHEETS ORIGINAL PAGE SIZE

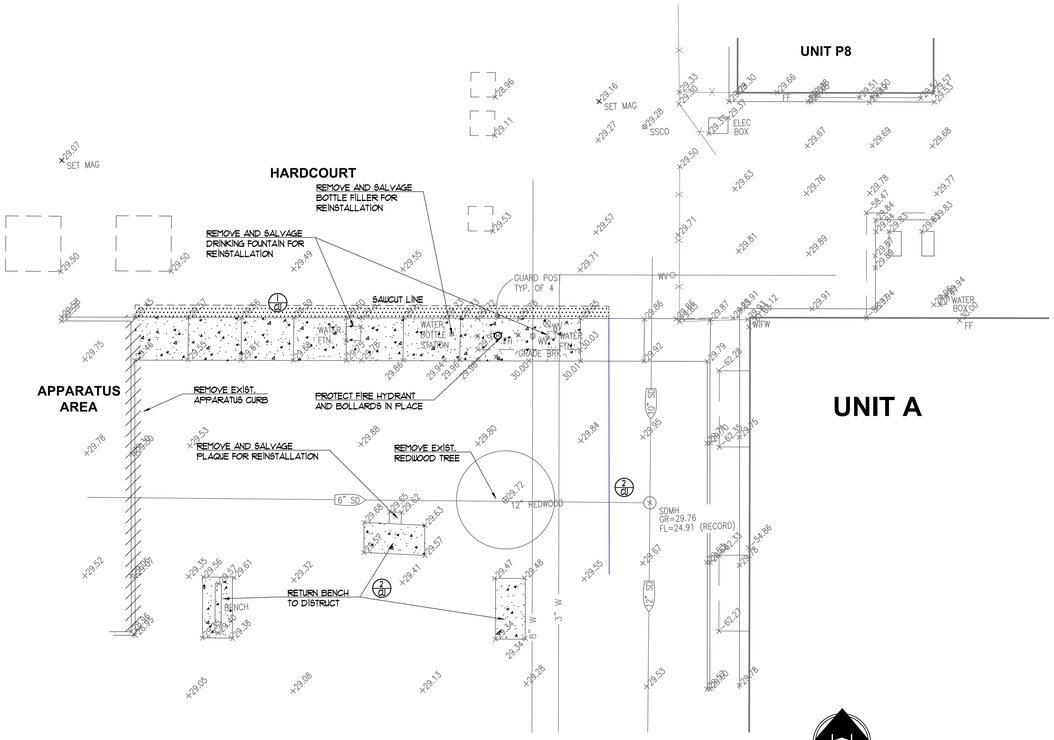

2 C2.1 DEMOLITION PLAN

SCALE: 1"=10'

DEMOLITION LEGEND

- SAWCUT LINE
- REMOVE (E) AC PAVING
- REMOVE (E) CONCRETE
- REMOVE (E) APPARATUS CURB

DEMOLITION NOTES:

1. CONTRACTOR SHALL REMOVE / DEMOLISH ALL (E) IMPROVEMENTS AS NECESSARY FOR CONSTRUCTION OF NEW IMPROVEMENTS UNDER THIS CONTRACT. CONTRACTOR SHALL FIELD WALK SITE TO REVIEW AND CONFIRM THE EXTENT OF ALL CLEARING WORK PRIOR TO BID.
2. ALL MATERIAL REMOVED BY CONTRACTOR SHALL BE PROPERLY AND LEGALLY DISPOSED OFFSITE (UNLESS SPECIFICALLY IDENTIFIED TO BE DELIVERED TO OWNER)
3. NUMEROUS UNDERGROUND UTILITIES EXIST WITHIN THE AREAS OF EXISTING CONCRETE REMOVAL. CONTRACTOR SHALL USE CAUTION DURING DEMOLITION AND SUBGRADE SCARIFICATION AND COMPACTION TO PROTECT SAID UTILITIES.

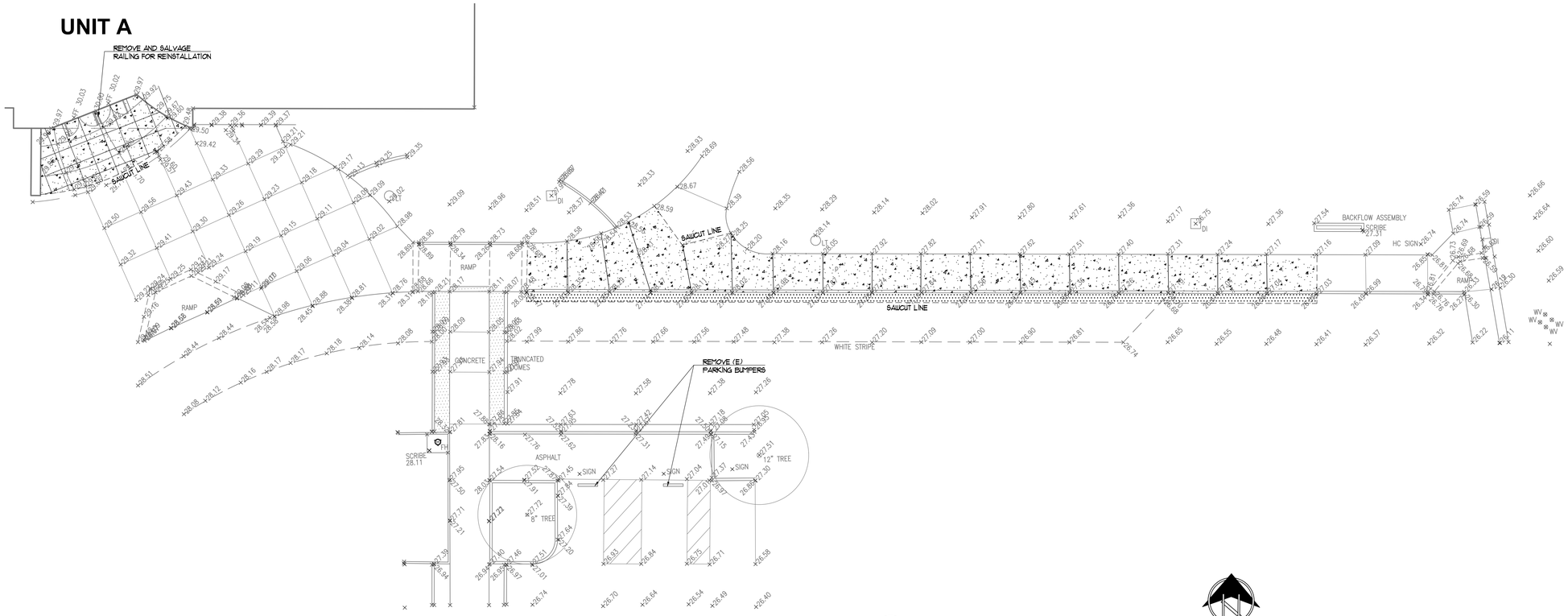

1 C2.1 DEMOLITION PLAN

SCALE: 1"=10'

AGENCY APPROVAL:

IDENTIFICATION STAMP
DIV. OF THE STATE ARCHITECT
APP: 02-121835 INC:
REVIEWED FOR
SS ☑ FLS ☑ ACS ☑
DATE: 11/02/2023

LODI USD

HMC Architects

R2211551

2101 CAPITOL AVENUE, SUITE 100,
SACRAMENTO, CA. 95816
916 368 7990 / www.hmcarchitects.com

Δ DESCRIPTION DATE

CONSULTANT:

REGISTERED PROFESSIONAL ENGINEER LORI A. GREENE NO. 36500 Exp. 6-30-24 CIVIL STATE OF CALIFORNIA

Warren-Green ENGINEERING
3114 Brennans Road
Loomis, CA 95690

FACILITY:

LOIS E. BORCHARDT ELEMENTARY SCHOOL
375 CULBERTSON DRIVE STOCKTON, CA 95240

PROJECT:

LODI UNIFIED SCHOOL DISTRICT LUNCH SHELTERS-
LOIS E. BORCHARDT ELEMENTARY SCHOOL

SHEET NAME:

CONSTRUCTION DOCUMENTS

FILE NO.: BES-CD | **A NO.:** R2211551

DATE: **OCT. 18, 2023** | CLIENT PROJ NO:

SHEET:

C2.1

PLEASE RECYCLE

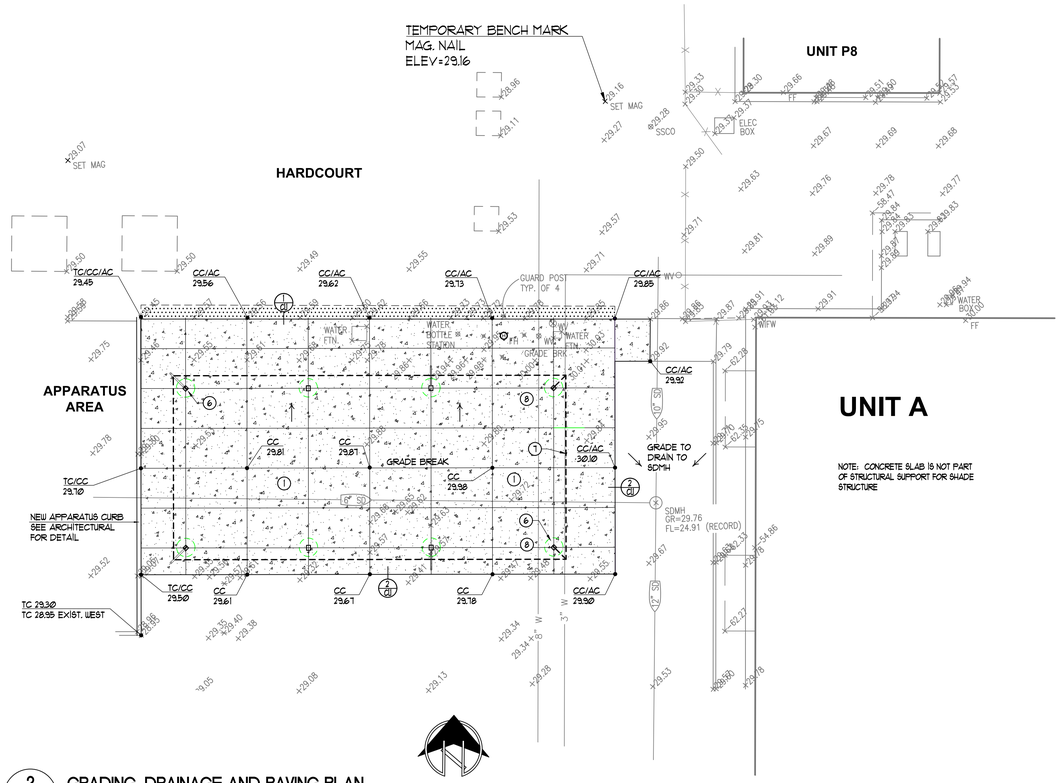

2 C3.1 GRADING, DRAINAGE AND PAVING PLAN

SCALE: 1"=10'

NOTES:

1. CONCRETE SLAB IS NOT PART OF STRUCTURAL SUPPORT FOR SHADE STRUCTURE
2. CONTRACTOR SHALL LOCATE ALL UTILITIES IN AREA OF WORK PRIOR TO START OF CONSTRUCTION. NOTIFY ARCHITECT IF ANY CONFLICTS WITH NEW FOOTINGS OCCUR.
3. ALL UTILITIES (VALVE BOX COVERS, VAULTS, CLEANOUTS, ETC. SHALL BE ADJUSTED TO NEW FINISH GRADES.
4. DRINKING FOUNTAINS SHALL BE RESET AS NECESSARY TO MEET HEIGHT STANDARDS FOR ACCESSIBILITY (SEE ARCHITECTURAL)

KEY NOTE LEGEND

1. 1.8% MAX. SLOPE IN ANY DIRECTION.
2. RAMP - 8% MAX. SLOPE IN DIRECTION OF TRAVEL, 1.8% MAX. CROSS SLOPE
3. 1.8% MAX. CROSS SLOPE 4.75% MAX. SLOPE IN DIRECTION OF TRAVEL.
4. MATCH (E) AC GRADE AT SAWCUT LINE.
5. MATCH (E) CONC. GRADE AT SAWCUT LINE.
6. SHADE STRUCTURE FOOTING - TYPICAL
7. SHADE STRUCTURE ROOF LINE
8. CONTRACTOR SHALL LOCATE EXISTING UTILITIES PRIOR TO START OF CONSTRUCTION. NOTIFY ARCHITECT IF CONFLICT WITH NEW FOOTINGS EXISTS.

PAVING LEGEND

- VARIABLE THICKNESS AC OVERLAY
- 3.5" ASPHALT CONCRETE ON 4.5" AGGREGATE BASE ON COMPACTED SUBGRADE
- 5" CONCRETE ON 6" AGGREGATE BASE ON COMPACTED SUBGRADE W/ #3 REBAR AT 18" O.C. EACH WAY

UNIT A

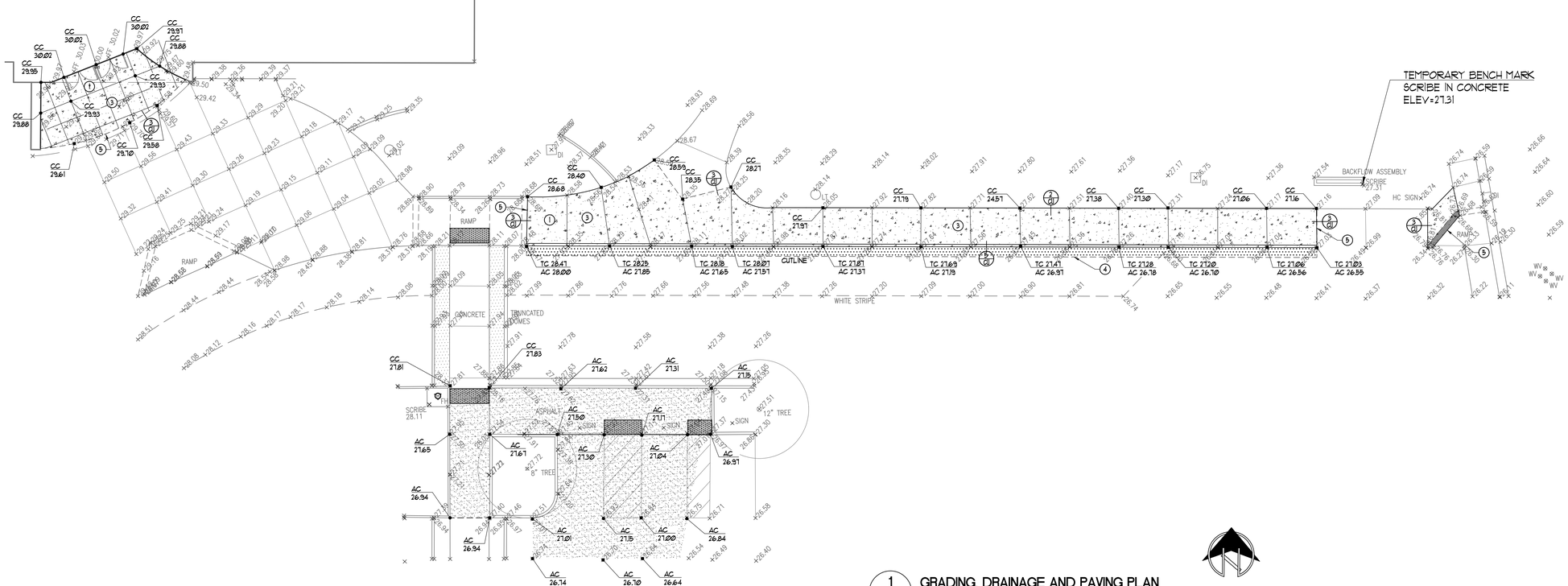

1 C3.1 GRADING, DRAINAGE AND PAVING PLAN

SCALE: 1"=10'

AGENCY APPROVAL:

IDENTIFICATION STAMP
DIV. OF THE STATE ARCHITECT
APP: 02-121835 INC:
REVIEWED FOR
SS ☑ FLS ☑ ACS ☑
DATE: 11/02/2023

LODI USD

HMC Architects

R2211551

2101 CAPITOL AVENUE, SUITE 100,
SACRAMENTO, CA, 95816
916 368 7990 / www.hmcarchitects.com

Δ	DESCRIPTION	DATE

CONSULTANT:

REGISTERED PROFESSIONAL ENGINEER
LORI A. GREEN
NO. 36500
Exp. 6-30-24
STATE OF CALIFORNIA

Warren-Green ENGINEERING
3114 Brennans Road
Loomis, CA 95690

FACILITY:

LOIS E. BORCHARDT ELEMENTARY SCHOOL
375 CULBERTSON DRIVE STOCKTON, CA 95240

PROJECT:

LODI UNIFIED SCHOOL DISTRICT LUNCH SHELTERS-
LOIS E. BORCHARDT ELEMENTARY SCHOOL

SHEET NAME:

CONSTRUCTION DOCUMENTS

FILE NO.: BES-CD | A NO.: R2211551

DATE: OCT. 18, 2023 | CLIENT PROJ NO:

SHEET:

C3.1

PLEASE RECYCLE

THE LINE SHOWN ABOVE IS 1" WHEN PLOTTED ON A THIS SHEET'S ORIGINAL PAGE SIZE

BUILDING DATA AND ALLOWABLE AREA ANALYSIS

BUILDING	OCCUPANCY	CONSTRUCTION TYPE	ALLOWABLE AREA (TABLE 506.2)	ACTUAL BLDG. AREA	OCCUPANY CALCULATION
LS	A-2	II-B NON-SPRINKLERED	9,500 S.F.	1,920 S.F.	1,920 S.F. / 15 NET =128 OCC.

EXISTING PATH OF TRAVEL (POT): ARCHITECT STATEMENT

DESIGN PROFESSIONAL IN GENERAL RESPONSIBLE IN CHARGE STATEMENT: THE POT IDENTIFIED IN THESE CONSTRUCTION DOCUMENTS IS COMPLIANT WITH THE CURRENT APPLICABLE CALIFORNIA BUILDING CODE ACCESSIBILITY PROVISIONS FOR **PATH OF TRAVEL REQUIREMENTS FOR ALTERATIONS, ADDITIONS AND STRUCTURAL REPAIRS**. AS PART OF THE DESIGN OF THIS PROJECT, THE POT WAS EXAMINED AND ANY ELEMENTS, COMPONENTS OR PORTIONS OF THE POT THAT WERE DETERMINED TO BE NON-COMPLIANT

1) HAVE BEEN IDENTIFIED AND
2) THE CORRECTIVE WORK NECESSARY TO BRING THEM INTO COMPLIANCE HAS BEEN INCLUDED WITHIN THE SCOPE OF THIS PROJECT'S WORK THROUGH DETAILS, DRAWINGS, AND SPECIFICATIONS INCORPORATED INTO THESE CONSTRUCTION DOCUMENTS.

ANY NONCOMPLIANT ELEMENTS, COMPONENTS OR PORTIONS OF THE POT THAT WILL NOT BE CORRECTED BY THIS PROJECT BASED ON VALUATION THRESHOLD LIMITATIONS OR A FINDING OF UNREASONABLE HARDSHIP ARE SO INDICATED IN THESE CONSTRUCTION DOCUMENTS.

DURING CONSTRUCTION, IF POT ITEMS WITHIN THE SCOPE OF THE PROJECT REPRESENTED AS CODE COMPLIANT ARE FOUND TO BE NON-CONFORMING BEYOND REASONABLE CONSTRUCTION TOLERANCES, THEY SHALL BE BROUGHT TO COMPLIANCE WITH THE CBC AS PART OF THIS PROJECT BY MEANS OF A CONSTRUCTION CHANGE DOCUMENT.

NOTE: LUNCH SHELTER COMPLIES WITH DSA IR 31-1.

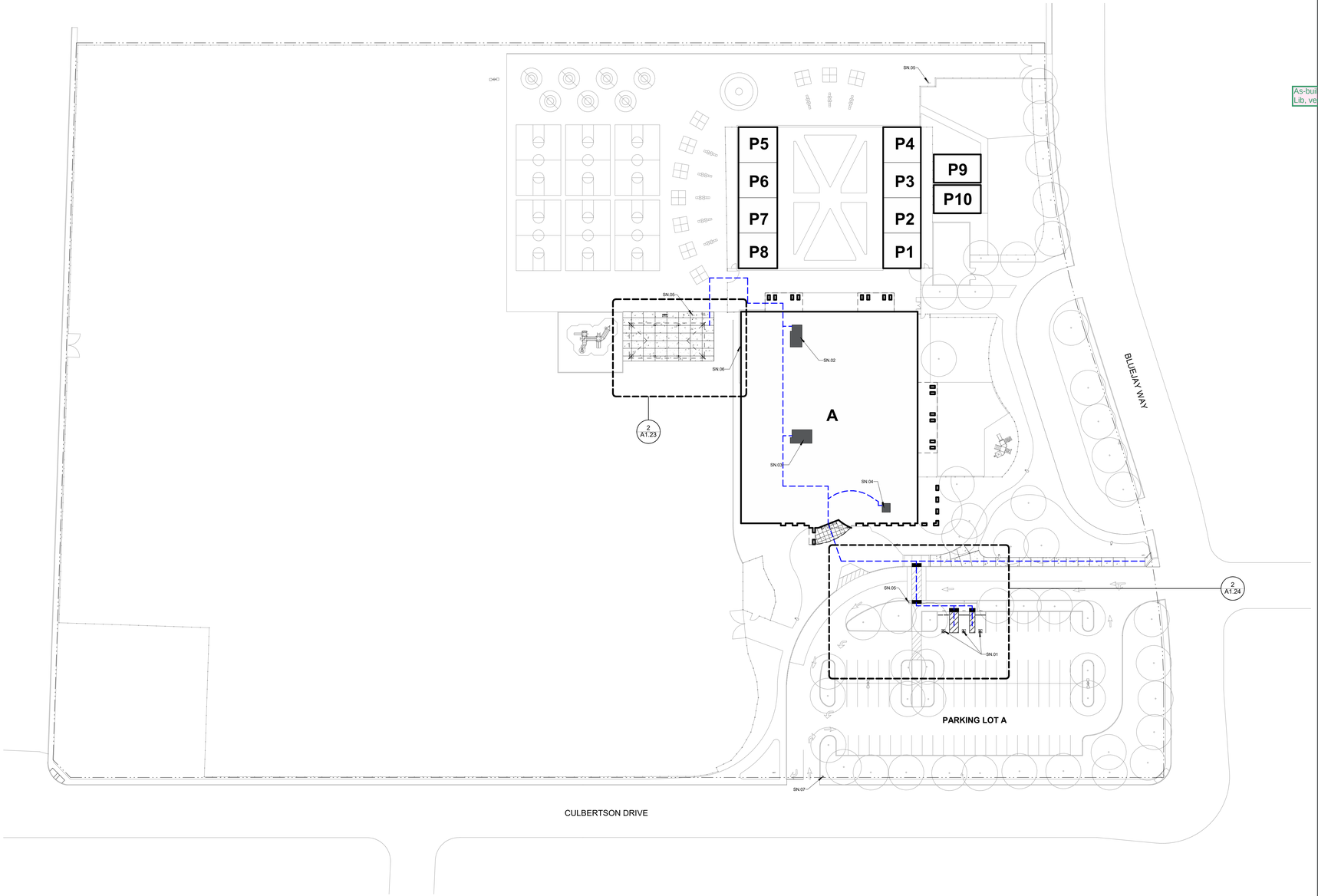

LEGEND

- PROPERTY LINE
- ACCESSIBLE PATH OF TRAVEL LINE
- EXISTING CHAIN LINK FENCE
- EXISTING ORNAMENTAL FENCE
- ROOF LINE ABOVE
- X — EXISTING BUILDINGS
- EXISTING FIRE HYDRANT

SHEET NOTES

SN.01 ACCESSIBLE PARKING STALL PER THIS APPLICATION
SN.02 (E) BOY'S TOILET ROOM PER DSA #02-103740 UPGRADED PER THIS APPLICATION
SN.03 (E) GIRL'S TOILET ROOM PER DSA #02-103740 UPGRADED PER THIS APPLICATION
SN.04 (E) STAFF TOILET ROOM PER DSA #02-103740 UPGRADED PER THIS APPLICATION
SN.05 (E) FIRE HYDRANT TO REMAIN. PROTECT IN PLACE
SN.06 (E) FIRE ALARM HORN
SN.07 (E) PARKING LOT ENTRANCE SIGN REVIEWED AND VERIFIED PER THIS APPLICATION

ACCESSIBLE PARKING LOT A STALL CALCULATION

TOTAL PARKING STALL COUNT:	75 STALLS
ACCESSIBLE PARKING STALLS:	(TABLE 11B-6)
REQUIRED ACCESSIBLE STALLS:	3 (51-75 TOTAL STALLS)
REQUIRED VAN ACCESSIBLE STALLS:	1 (1-6 ACCESSIBLE STALLS)
ACCESSIBLE STALLS PROVIDED	2 ACCESSIBLE 1 VAN

As-builts did not show. Lib. verify

BUILDING DESIGNATIONS

DSA #02-103740

UNIT A - ADMIN/ MULTI USE/ LIBRARY/ CLASSROOMS
UNIT P1 - PORTABLE CLASSROOM BUILDING
UNIT P2 - PORTABLE CLASSROOM BUILDING
UNIT P3 - PORTABLE CLASSROOM BUILDING
UNIT P4 - PORTABLE CLASSROOM BUILDING
UNIT P5 - PORTABLE CLASSROOM BUILDING
UNIT P6 - PORTABLE CLASSROOM BUILDING
UNIT P7 - PORTABLE CLASSROOM BUILDING
UNIT P8 - PORTABLE CLASSROOM BUILDING

DSA #02-109852

UNIT P9 - PORTABLE CLASSROOM BUILDING
UNIT P10 - PORTABLE CLASSROOM BUILDING

THIS APPLICATION

UNIT LS - 30 X 64 LUNCH SHELTER

AGENCY APPROVAL:

IDENTIFICATION STAMP
DIV. OF THE STATE ARCHITECT
APP: 02-121835 INC:
REVIEWED FOR
SS ☑ FLS ☑ ACS ☑
DATE: 11/02/2023

LODI USD

HMC Architects

R221551X00

2101 CAPITOL AVENUE, SUITE 100,
SACRAMENTO, CA, 95816
916 368 7990 / www.hmcarchitects.com

LICENSED ARCHITECT JEFFREY ALAN BRAND C-14648 5/31/25 RENEWAL DATE STATE OF CALIFORNIA

ISSUE

Δ	DESCRIPTION	DATE

ACCESSIBLE PATH OF TRAVEL

1. ACCESSIBLE PATH OF TRAVEL (P.O.T.): SITE WALKWAYS SHALL PROVIDE A BARRIER-FREE P.O.T. ABRUPT CHANGES IN LEVEL ALONG ANY P.O.T. ARE ALLOWED UP TO 1/2". ONLY ABRUPT CHANGES IN ELEVATION UP TO 1/4" ARE ALLOWED TO HAVE A VERTICAL TRANSITION. ABRUPT CHANGES IN ELEVATION BETWEEN 1/4" AND 1/2" SHALL BE BEVELED WITH A SLOPE NO GREATER THAN 1-UNIT VERTICAL TO 2-UNITS HORIZONTAL. GATES IN THE P.O.T. SHALL HAVE A SIGN ADJACENT TO THE GATE, IN ALL CAPITALIZED LETTERS, WHICH READS: "THIS GATE TO REMAIN LOCKED IN OPEN POSITION DURING SCHOOL HOURS OR ANY PUBLIC EVENT".
2. THE CONTRACTOR SHALL PROVIDE A P.O.T. FROM THE DISABLED ACCESSIBLE PARKING STALLS TO ALL BUILDINGS AND SITE FUNCTIONS. CONTRACTOR SHALL VERIFY THAT THE P.O.T. IS BARRIER-FREE AS DESCRIBED IN THESE NOTES.
3. WALKWAYS SHALL BE FREE OF GRATINGS WHEREVER POSSIBLE. GRATING WHICH OCCUR WITHIN THE P.O.T. SHALL HAVE OPENINGS WHICH DO NOT EXCEED 1/2" IN THE DIRECTION OF TRAVEL PER CBC SECTION 1133B.7.2.
4. AN ABRUPT DROP-OFF CHANGE IN ELEVATION AT THE EDGE OF ANY WALK INTO AN ADJACENT PLANTER SHALL NOT EXCEED 4".
5. SLOPES IN THE DIRECTION OF THE P.O.T. GREATER THAN 1-UNIT VERTICAL TO 20-UNITS HORIZONTAL SHALL BE CONSIDERED A RAMP AND WILL REQUIRE HANDRAILS ON BOTH SIDES PER CBC SECTION 1133B.5.5 SLOPES IN THE DIRECTION OF THE P.O.T. ALONG WALKWAYS SHALL NOT EXCEED 5%. CROSS SLOPES IN THE P.O.T. ALONG WALKWAYS SHALL NOT EXCEED 2%.
6. ALL WALKWAYS WITHIN THE P.O.T. SHALL BE A MINIMUM OF 48" IN WIDTH. SURFACES WITH A SLOPE OF LESS THAN 6% SHALL BE AT LEAST AS SLIP-RESISTANT AS THAT PROVIDED BY A MEDIUM BROOM FINISH. SURFACES WITH A SLOPE OF MORE THAN 6% SHALL BE SLIP-RESISTANT.
7. OBJECTS PROTRUDING INTO THE P.O.T. SHALL NOT REDUCE THE CLEAR WIDTH OR MANEUVERING SPACE WITHIN THE P.O.T. PER CBC SECTION 1133B.8.6.
8. ARCHITECT HAS SURVEYED/ INSPECTED THE PATH OF TRAVEL (P.O.T.) AS INDICATED ON THE PLANS AND HAS FOUND IT TO BE, OR HAS INDICATED ON THE PLANS REMEDIAL WORK WHICH WOULD CAUSE IT TO BE, A BARRIER- FREE ACCESSIBLE ROUTE:
   a. AT LEAST 48" IN. WIDTH; OR AS APPROVED BY CODE;
   b. WITHOUT ABRUPT LEVEL CHANGES EXCEEDING 1/2" IF BELVELED AT 1:2 MAXIMUM SLOPE, OR VERTICAL LEVEL CHANGES EXCEEDING 1/4";
   c. WITH A FIRM, STABLE, AND SLIP RESISTANT WALKING SURFACE;
   d. WITH A RUNNING SLOPE OF 1:20 OR LESS, UNLESS OTHERWISE INDICATED; AND A CROSS SLOPE OF 1:50 OR LESS;
   e. IS FREE OF OVERHEAD OBSTRUCTIONS WITHIN 80" ABOVE THE WALKING SURFACE; AND
   f. IS FREE OF OBJECTS WHICH PROTRUDE MORE THAN 4" BETWEEN THE HEIGHTS OF 27" AND 80" ABOVE THE WALKING SURFACE.

KEYNOTES

NOTES

FACILITY:
LOIS E. BORCHARDT ELEMENTARY SCHOOL
375 CULBERTSON DRIVE LODI, CA 95242

PROJECT:
LODI UNIFIED SCHOOL DISTRICT LUNCH SHELTERS - LOIS E. BORCHARDT ELEMENTARY SCHOOL

SHEET NAME:
CODE INFORMATION SITE PLAN

CONSTRUCTION DOCUMENTS

DATE: **10/18/2023** CLIENT PROJ NO:

SHEET:

A1.21

CODE INFORMATION SITE PLAN 1 1" = 40'-0"

Autodesk Docs://R221551X00 Lodi USD Lunch Shelters/R221551X00-A-BORCHARDT-ES-LUNCH-SHELTER.rvt
10/11/2023 2:13:46 PM

PLEASE RECYCLE

THE LINE SHOWN ABOVE IS EXACTLY ONE INCH ON THIS SHEET'S ORIGINAL PAGE SIZE

DSA-810 FIRE & LIFE SAFETY SITE CONDITIONS SUBMITTAL

PROJECT INFORMATION

School District:	LODI UNIFIED SCHOOL DISTRICT
Project name / school:	LOIS E. BORCHARDT ELEMENTARY SCHOOL
Project address:	375 CULBERTSON DRIVE LODI, CA 95242

FIRE & LIFE SAFTEY INFORMATION — ALTERNATE ACCEPTED

1.	Has a fire hydrant flow test been performed within the past 12 months? ***(If yes, provide a copy of the test data)***	Yes ☐	No ☒
2.	Was the fire hydrant water flow test performed as part of this LFA review?	Yes ☐	No ☒
3.	Is the project located within a designated fire hazard serverity zone as established by Cal-Fire? ***(If yes, indicate fire hazard zone classification below)***	Yes ☐	No ☒

	Moderate	High	Very High
Refer to the following for fire hazard zone locations: ***www. fire.ca.gov/fire_prevention/fire_prevention_wildland_zones_maps***	☐	☐	☐
Wildland Interface Area (WIFA) ***(If any designations are checked, project design must meet the requirements of CBC Chapter 7A)***			WIFA ☐

CONDITION MEANS AND METHODS RESOLUTION — ALTERNATE ACCEPTED

		Yes	No	N/A	N/R
4.	Emergency vehicle access roadways do not meet CFC requirements			X	
4a.	**Acceptable Alternative:** Emergency vehicle and personel access as proposed by the architect is acceptable for providing fire suppression and protection of life and property				
5.	**Fire Hydrants:** Number and spacing does not meet CFC requirements				
5a.	**Acceptable Alternative:** Number of fire hydrants and spacing as proposed by the architect is acceptable for fire suppression and protection of life and property.	X			
6.	**Fire Hydrants:** Water flow and pressure are less than CFC minimum.			X	
6a.	**Acceptable Alternative:** The available flow and pressure is acceptable for providing fire suppression and protection of life and property.				
7.	Location of fire department connection(s) serving fire sprinkler system or standpipe system does not meet CFC requirements.			X	
7a.	**Acceptable Alternative:** The location of fire department connection serving the fire sprinkler system and/or standpipe system is acceptable for providing fire suppression and protection of life and property.				

School District Acceptance of Acceptable Design Alternates
By signing this form, the school district acknowledges and accepts the proposed design as an alternative to California Building Code (CBC) and California Fire Code (CFC) minimum requirements as indicated by one of more of the conditions indicated at items 4a, 5a, 6a, or 7a, for providing fire and life safety protection of life and property.

Accepted by: Leonard Kahn — Title: CBO
Signature: — Date: 10/31/2023

LOCAL FIRE AUTHORITY (LFA) INFORMATION

LFA Agency Name: Lodi Fire Dept.
LFA Review Official: Brad Doell
Title: Battalion Chief / Fire Marshall — Work Phone: 209-333-6739
Work Email: BDOELL@Lodi.gov
LFA Reviewer's Signature: — Date: 10/31/23

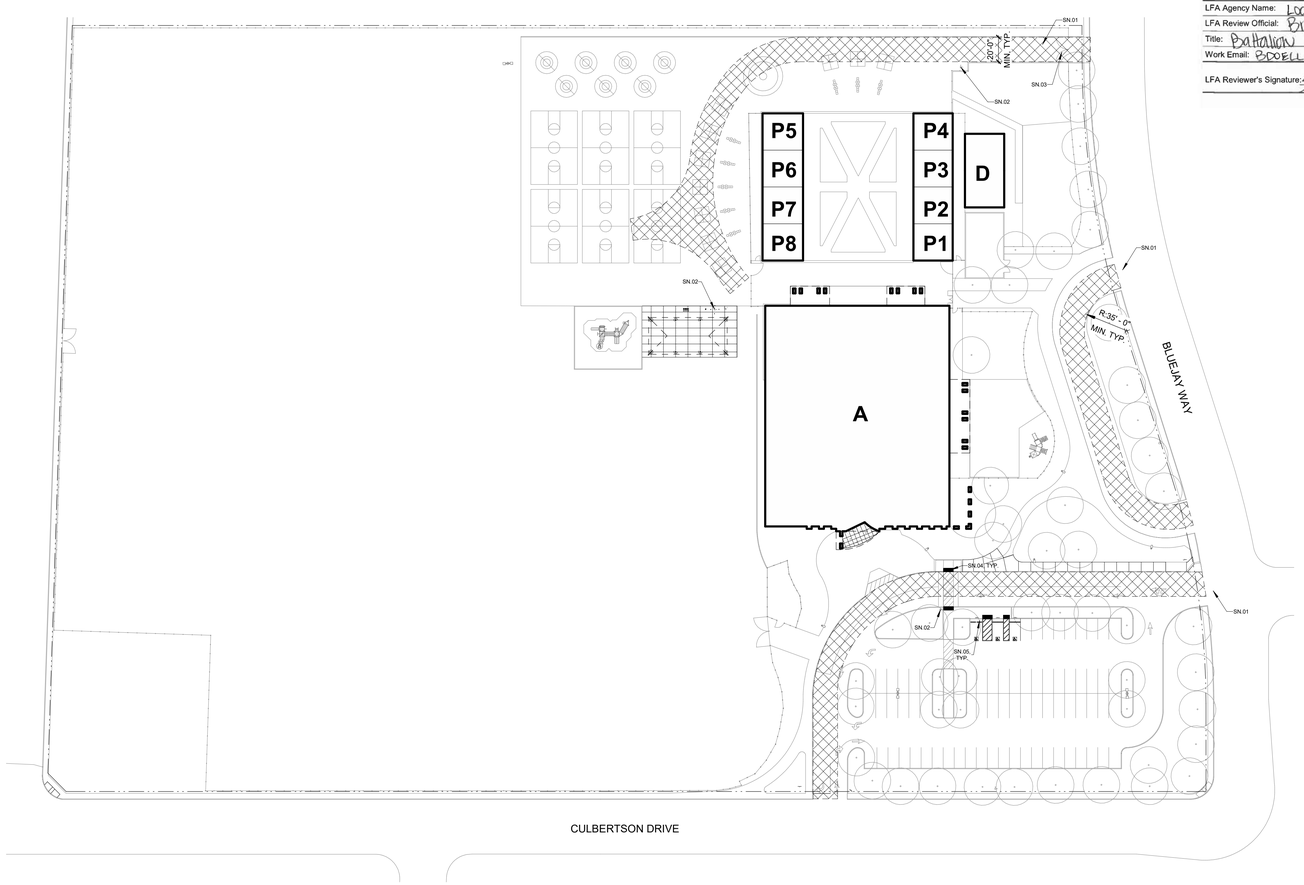

LEGEND

- EXISTING CHAIN LINK FENCE
- EXISTING ORNAMENTAL FENCE
- PROPERTY LINE
- ROOF LINE ABOVE
- EXISTING FIRE LANE
- X — EXISTING BUILDINGS
- EXISTING FIRE HYDRANT

SHEET NOTES

SN.01 (E) FIRE LANE
SN.02 (E) FIRE HYDRANT
SN.03 (E) PR 10' - 0" WIDE CHAINLINK GATE
SN.04 (N) TRUNCATED DOME
SN.05 (N) CONCRETE BUMPER

AGENCY APPROVAL:

IDENTIFICATION STAMP
DIV. OF THE STATE ARCHITECT
APP: 02-121835 INC:
REVIEWED FOR
SS ☑ FLS ☑ ACS ☑
DATE: 11/02/2023

LODI USD

HMC Architects

R221551X00

LICENSED ARCHITECT JEFFREY ALAN BRAND C-14648 5/31/25 RENEWAL DATE STATE OF CALIFORNIA

2101 CAPITOL AVENUE, SUITE 100,
SACRAMENTO, CA, 95816
916 368 7990 / www.hmcarchitects.com

ISSUE

Δ	DESCRIPTION	DATE

KEYNOTES

NOTES

FACILITY:
LOIS E. BORCHARDT ELEMENTARY SCHOOL
375 CULBERTSON DRIVE LODI, CA 95242

PROJECT:
LODI UNIFIED SCHOOL DISTRICT LUNCH SHELTERS - LOIS E. BORCHARDT ELEMENTARY SCHOOL

SHEET NAME:
LOCAL FIRE AUTHORITY SITE ACCESS PLAN

CONSTRUCTION DOCUMENTS

DATE: **10/18/2023** — CLIENT PROJ NO:

SHEET:

A1.22

LOCAL FIRE AUTHORITY SITE ACCESS PLAN — **1** 1" = 50'-0"

Autodesk Docs://R221551X00 Lodi USD Lunch Shelters/R221551X00-A-BORCHARDT-ES-LUNCH-SHELTER.rvt
10/11/2023 12:57:32 PM

PLEASE RECYCLE

THE LINE SHOWN ABOVE IS 1" WHEN PRINTED ON THE ENTIRE ORIGINAL PAGE SIZE

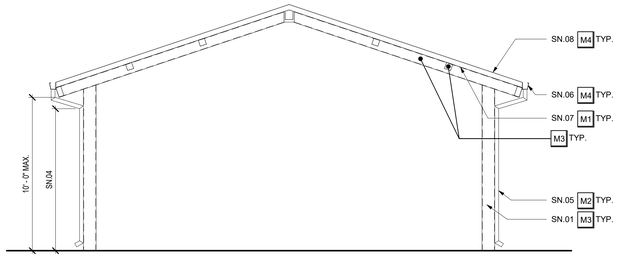

LUNCH SHELTER - SECTION 4
1/4" = 1'-0"

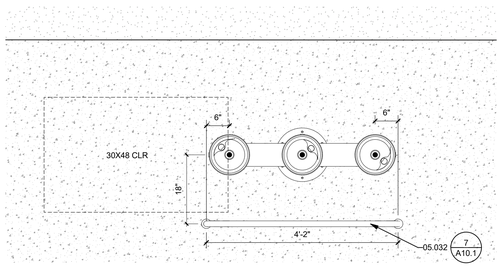

ENLARGED DRINKING FOUNTAIN 3
3/4" = 1'-0"

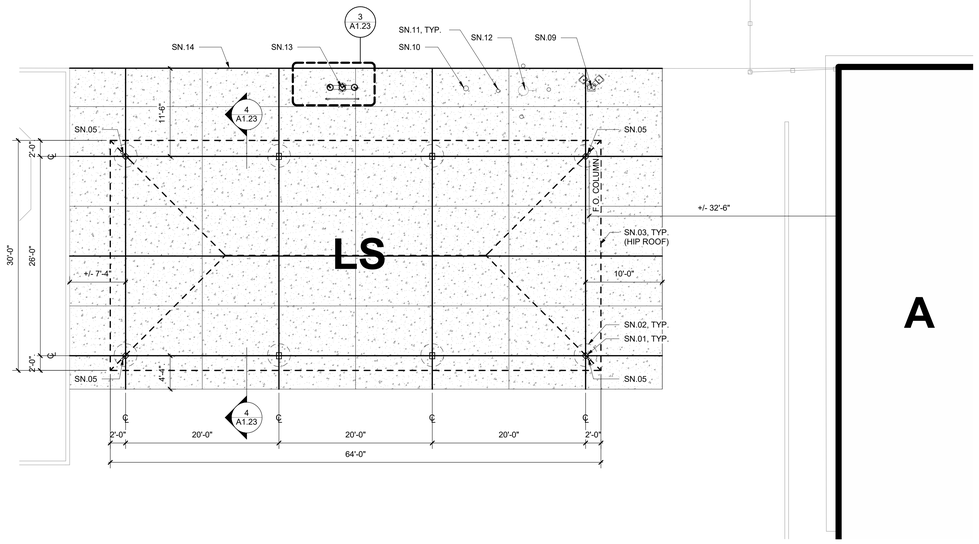

NOTE: LUNCH SHELTER COMPLIES WITH DSA IR 31-1.

ENLARGED PLAN - LUNCH SHELTER 2
1/8" = 1'-0"

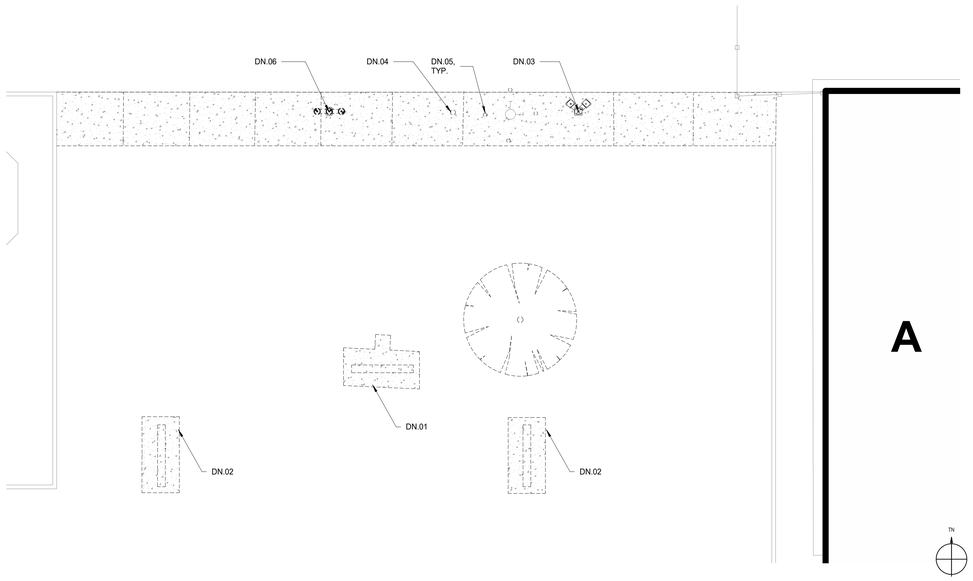

DEMOLITION SITE PLAN 1
1/8" = 1'-0"

LEGEND

- PROPERTY LINE
- ASSUMED PROPERTY LINE
- X — EXISTING BUILDINGS
- X — PC LUNCH SHELTER
- EXPANSION JOINT
- CONCRETE WALK / PAVING
- CONTROL JOINT
- ASPHALT CONCRETE PAVING
- (E) FENCING

EXTERIOR COLOR SCHEDULE

	MATERIAL	COLOR
M1	METAL	METAL FINISH COLOR 1 (1)
M2	METAL	METAL FINISH COLOR 2 (1)
M3	METAL	METAL PREFINISH COLOR (1) (3)
M4	METAL	METAL PREFINISH COLOR (1) (4)

(1) CUSTOM COLORS TO BE SUBMITTED PER SPECIFICATIONS.

(2) CLEAN, PREP AND PAINT ALL SURFACES NOT PREFINISHED.

(3) MATCH METAL PAINT "COLOR 1" WITH COLOR DESIRED IN PREFINISHED "COLOR 1"

(4) MATCH METAL PAINT "COLOR 2" WITH COLOR DESIRED IN PREFINISHED "COLOR 2"

DEMOLITION NOTES

DN.01 REMOVE (E) BENCH AND DEMOLISH CONCRETE PAD. RETURN TO BENCH THE DISTRICT.
DN.02 REMOVE (E) BENCH AND DEMOLISH CONCRETE PAD. PATCH LANDSCAPE TO MATCH EXISTING. RETURN BENCH TO THE DISTRICT.
DN.03 REMOVE (E) DRINKING FOUNTAIN AND SALVAGE FOR REINSTALLATION
DN.04 REMOVE (E) BOTTLE FILLER STATION AND SALVAGE FOR REINSTALLATION
DN.05 REMOVE (E) BOLLARD AND SALVAGE FOR REINSTALLATION.
DN.06 REMOVE (E) ACCESSIBLE DRINKING FOUNTAIN AND SALVAGE FOR REINSTALLATION.

SHEET NOTES

SN.01 HSS COLUMN
SN.02 DRILLED PIER FOOTING, SHOWN DASHED
SN.03 ROOF OVERHANG ABOVE
SN.04 HOLD TIGHT TO UNDERSIDE OF FRAMING: MAINTAIN 9'-0" CLEARANCE MIN.
SN.05 3" DIAMETER SCHEDULE 40 STEEL DOWNSPOUT, PAINTED
SN.06 PREFINISHED GUTTER AND FLASHING
SN.07 PAINT DECK UNDERSIDE
SN.08 PREFINISHED STANDING SEAM ROOF
SN.09 REINSTALL SALVAGED DRINKING FOUNTAIN
SN.10 REINSTALL SALVAGED WATER BOTTLE FILL-UP STATION
SN.11 REINSTALL SALVAGED BOLLARDS
SN.12 PROTECT (E) FIRE HYDRANT IN PLACE
SN.13 REINSTALL SALVAGED ACCESSIBLE DRINKING FOUNTAIN PER A10.2
SN.14 PROVIDE EXPANSION JOINT AT ALL INTERSECTIONS OF EXISTING AND NEW CONCRETE

KEY NOTES

05.032 METAL GUARDRAIL

AGENCY APPROVAL:

IDENTIFICATION STAMP
DIV. OF THE STATE ARCHITECT
APP: 02-121835 INC:
REVIEWED FOR
SS ☑ FLS ☑ ACS ☑
DATE: 11/02/2023

LODI USD

HMC Architects
R221551X00
2101 CAPITOL AVENUE, SUITE 100,
SACRAMENTO, CA, 95816
916 368 7990 / www.hmcarchitects.com

LICENSED ARCHITECT JEFFREY ALAN HEAD C-14648 5/31/25 RENEWAL DATE STATE OF CALIFORNIA

ISSUE

Δ	DESCRIPTION	DATE

KEYNOTES

NOTES

FACILITY:
LOIS E. BORCHARDT ELEMENTARY SCHOOL
375 CULBERTSON DRIVE LODI, CA 95242

PROJECT:
LODI UNIFIED SCHOOL DISTRICT LUNCH SHELTERS - LOIS E. BORCHARDT ELEMENTARY SCHOOL

SHEET NAME:
ENLARGED PLAN AND SECTION

CONSTRUCTION DOCUMENTS

DATE: 10/18/2023
CLIENT PROJ NO:
SHEET:

A1.23

Autodesk Docs://R221551X00 Lodi USD Lunch Shelters/R221551X00-A-BORCHARDT-ES-LUNCH-SHELTER.rvt
10/11/2023 12:57:34 PM

PLEASE RECYCLE

THE LINE SHOWN ABOVE IS EXACTLY ONE INCH ON THIS SHEET'S ORIGINAL PAGE SIZE

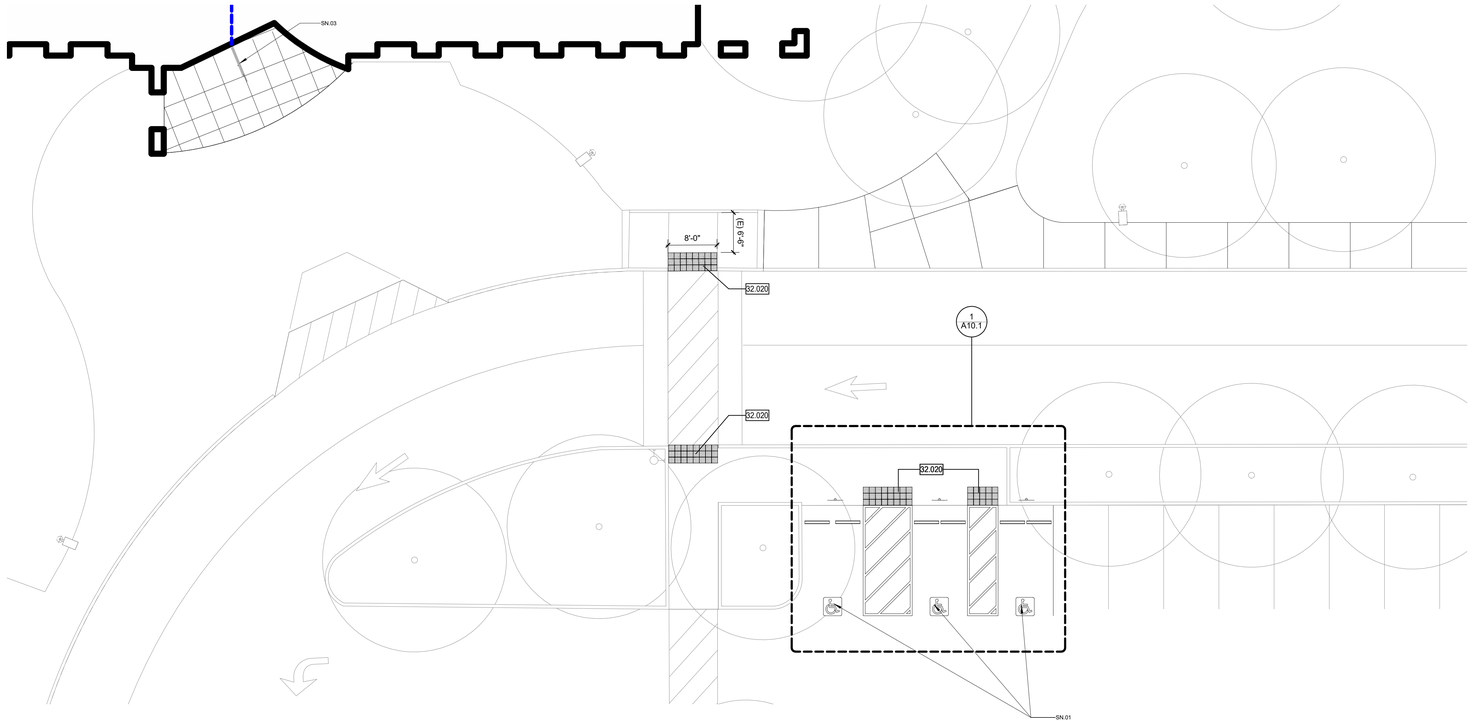

PARKING LOT A - ENLARGED IMPROVEMENT PLAN 2

1" = 10'-0"

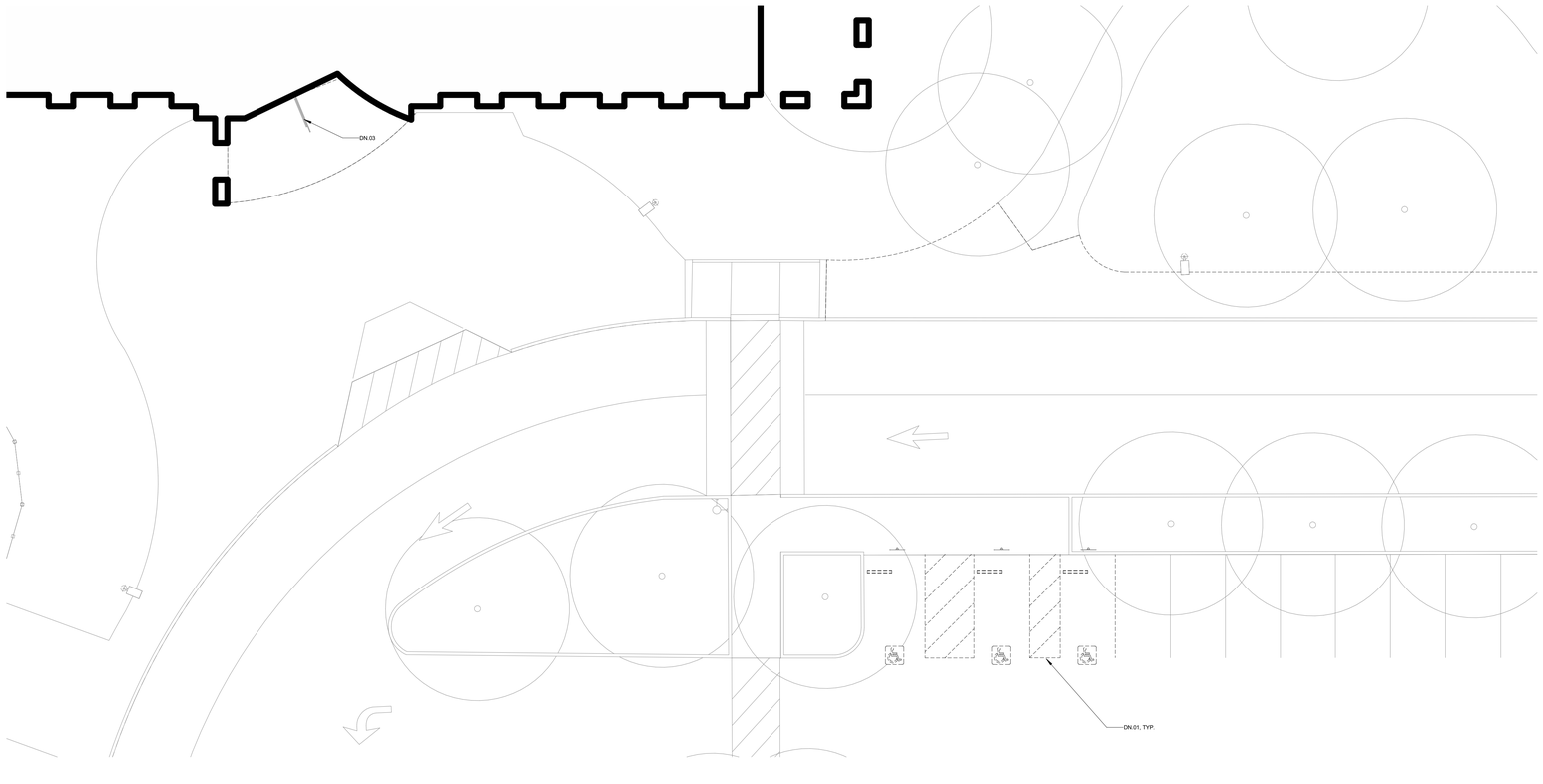

PARKING LOT A - ENLARGED DEMOLITION PLAN 1

1" = 10'-0"

LEGEND

PROPERTY LINE

ROOF LINE ABOVE

X — EXISTING BUILDINGS

DEMOLITION NOTES

DN.01 BLACKOUT (E) PARKING STALL STRIPING AND SYMBOL OF ACCESSIBILITY
DN.02 DEMOLISH (E) CONCRETE BUMPERS
DN.03 REMOVE (E) RAILING AND SALVAGE FOR REINSTALLATION

SHEET NOTES

SN.01 ACCESSIBLE PARKING STALLS
SN.02 NOT USED
SN.03 REINSTALL (E) RAILING; CLEAN, PREP, AND PAINT

KEY NOTES

32.020 TRUNCATED DOMES (5 / A10.1)

AGENCY APPROVAL:

IDENTIFICATION STAMP
DIV. OF THE STATE ARCHITECT
APP: 02-121835 INC:
REVIEWED FOR
SS ☑ FLS ☑ ACS ☑
DATE: 11/02/2023

LODI USD

HMC Architects

R221551X00

LICENSED ARCHITECT JEFFREY ALAN GRAD C-14648 5/31/25 RENEWAL DATE STATE OF CALIFORNIA

2101 CAPITOL AVENUE, SUITE 100,
SACRAMENTO, CA, 95816
916 368 7990 / www.hmcarchitects.com

ISSUE

Δ	DESCRIPTION	DATE

KEYNOTES

NOTES

FACILITY:
LOIS E. BORCHARDT ELEMENTARY SCHOOL
375 CULBERTSON DRIVE LODI, CA 95242

PROJECT:
LODI UNIFIED SCHOOL DISTRICT LUNCH SHELTERS - LOIS E. BORCHARDT ELEMENTARY SCHOOL

SHEET NAME:
PARKING LOT A - ENLARGED PLANS

CONSTRUCTION DOCUMENTS

DATE: **10/18/2023** CLIENT PROJ NO:

SHEET:

A1.24

Autodesk Docs://R221551X00 Lodi USD Lunch Shelters/R221551X00-A-BORCHARDT-ES-LUNCH-SHELTER.rvt
10/11/2023 2:13:48 PM

PLEASE RECYCLE

THE LINE SHOWN ABOVE IS EXACTLY 1" WHEN PLOTTED AT FULL SHEET ORIGINAL PAGE SIZE

PLUMBING FIXTURE SCHEDULE

SYMBOL	FIXTURE	FIXTURE MFR AND MODEL	VALVE OR FAUCET	TRIM	NOTES
WC-1	WATER CLOSET FLUSH VALVE FLOOR MTD ADA	KOHLER HIGHCLIFF ULTRA MODEL K-6607, VITREOUS CHINA, ELONGATED, SIPHON JET ACTION, 1-1/2" TOP SPUD	"SLOAN" ROYAL MODEL 111-1.28 FLUSH VALVE 1.28 GPF W/HIGH BACK PRESSURE VACUUM BREAKER	SEAT: "CHURCH" MODEL 2955SCT ELONGATED SEAT, SELF SUSTAINING CONCEALED CHECK HINGES, ONE PIECE SS POST HINGES, WHITE.	MOUNT FLUSH HANDLE ON WIDE SIDE OF WATER CLOSET ENCLOSURE. RECONNECT TO EXISTING WASTE, WATER LINE AND VENT.

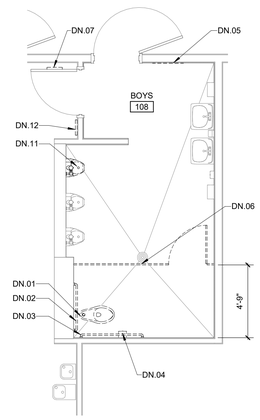

A108 - BOYS DEMOLITION 06
1/4" = 1'-0"

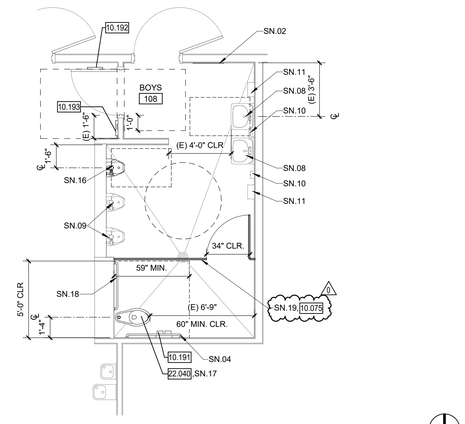

A108 - BOYS IMPROVEMENT 03
1/4" = 1'-0"

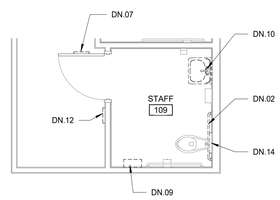

A135 - STAFF DEMOLITION 05
1/4" = 1'-0"

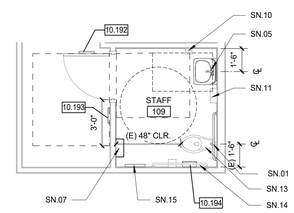

A135 - STAFF IMPROVEMENT 02
1/4" = 1'-0"

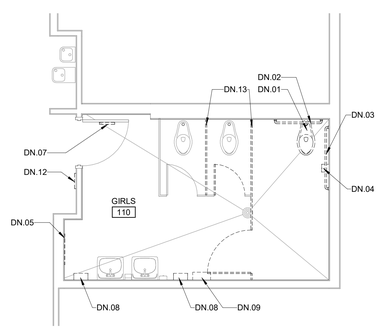

A123 - GIRLS DEMOLITION 04
1/4" = 1'-0"

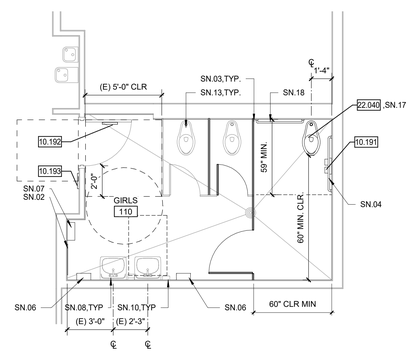

A123 - GIRLS IMPROVEMENT 01
1/4" = 1'-0"

LEGEND

- DENOTES EXISTING WALLS & CURBS (WHERE OCCURS) TO BE REMOVED, SEE STRUCTURAL DRAWINGS FOR ADDITIONAL INFORMATION
- EXISTING WALL TO REMAIN
- EXISTING WALL TO REMAIN, REMOVE FINISH TO STRUCTURE, UNLESS OTHERWISE NOTED
- CONSECUTIVE NUMBERING CONVENTION FOR INTERIOR ELEVATIONS AND ROOM FINISHES.
- REMOVE (E) DOOR, HARDWARE AND FRAME U.O.N.
- 30" x 48" CLEAR FLOOR SPACE
- 60" CLEAR FLOOR SPACE

GENERAL NOTES

1. TYPICAL MOUNTING HEIGHTS AND DETAILS APPLY TO ENTIRE PROJECT, WHETHER REFERENCED OR NOT, UNLESS OTHERWISE NOTED.
2. ALL DISABLED ACCESSIBLE DIMENSIONS, ARE MAXIMUM DIMENSIONS UNLESS OTHERWISE NOTED.
3. REMOVE OR MODIFY ALL ITEMS AS REQUIRED TO INSTALL NEW WORK, WHETHER OR NOT SPECIFICALLY SHOWN TO BE REMOVED OR MODIFIED.
4. WHERE DRAINS, PIPING AND OTHER MATERIALS AND EQUIPMENT ARE REMOVED FROM THE SLAB, IT SHALL BE BACKFILLED, FINISHED FLUSHED WITH ADJACENT SURFACES AND PREPARED TO RECEIVE THE NEW FINISH.
5. CUT AND PATCH EXISTING SLAB AS REQUIRED FOR NEW PLUMBING WORK.
6. DEMO AND REPAIR WALL FINISH AS NECESSARY TO PERFORM FIXTURE AND EQUIPMENT WORK AS NOTED. ADJACENT FINISHES TO BE VERIFIED BY CONTRACTOR
7. EQUIPMENT/FIXTURES NOTED AS "SALVAGED FOR REINSTALLATION" WILL BE REMOVED AND STORED BY THE CONTRACTOR PRIOR TO START OF DEMOLITION. THESE EQUIPMENT/FIXTURES SHALL BE REINSTALLED BY THE CONTRACTOR UNDER THIS CONTRACT.

DEMOLITION NOTES

DN.01 REMOVE (E) WATER CLOSET
DN.02 REMOVE (E) 36" GRAB BAR AND SALVAGE FOR REINSTILLATION
DN.03 REMOVE (E) 42" GRAB BAR AND SLAVAGE FOR REINSTILLATION
DN.04 REMOVE (E) TOILET PAPER DISPENSER
DN.05 REMOVE (E) MIRROR AND SALVAGE FOR REINSTILLATION
DN.06 REMOVE (E) TOILET PARTITION WALL
DN.07 REMOVE (E) TOILET ROOM DOOR SIGNAGE
DN.08 REMOVE (E) PAPER TOWEL DISPENSER AND SALVAGE FOR REINSTILLATION
DN.09 REMOVE (E) SANITARY NAPKIN DISPENSER AND SALVAGE FOR REINSTILLATION
DN.10 REMOVE (E) LAVATORY AND SALVAGE FOR REINSTILLATION
DN.11 REMOVE (E) URINAL AND SALVAGE FOR REINSTILLATION
DN.12 REMOVE (E) TOILET ROOM ID SIGN
DN.13 REMOVE (E) TOILET PARTITION AND SALVAGE FOR REINSTALLATION
DN.14 REMOVE (E) TOILET SEAT COVER DISPENSER AND SALVAGE FOR REINSTALLATION

SHEET NOTES

SN.01 REINSTALL SALVAGED 36" GRAB BAR TO COMPLY WITH A10.2
SN.02 REINSTALL SALVAGED MIRROR TO COMPLY WITH A10.2 Δ0
SN.03 REINSTALL SALVAGED AND ADJUST TOILET PARTITION AS NECESSARY FOR REQUIRED GRAB BAR CLEARANCE. PROVIDE NEW OVERHEAD BRACE AND ACCESSORIES AS REQUIRED FOR ADJUSTMENT.
SN.04 REINSTALL SALVAGED 42" GRAB BAR TO COMPLY WITH A10.2 (ELEMENTARY)
SN.05 REINSTALL SALVAGED LAVATORY TO COMPLY WITH A10.2
SN.06 REINSTALL SALVAGED PAPER TOWEL DISPENSER TO COMPLY WITH A10.2
SN.07 REINSTALL SALVAGED SANITARY NAPKIN DISPENSER TO COMPLY WITH A10.2
SN.08 (E) LAVATORY TO REMAIN. WRAP EXPOSED PIPE W/INSULATION
SN.09 (E) URINAL TO REMAIN
SN.10 (E) SOAP DISPENSER TO REMAIN
SN.11 (E) PAPER TOWEL DISPENSER TO REMAIN
SN.12 (E) TOILET PARTITION TO REMAIN
SN.13 (E) WATER CLOSET TO REMAIN
SN.14 (E) 42" GRAB BAR TO REMAIN
SN.15 REINSTALL SALVAGED TOILET SEAT COVER DISPENSER TO COMPLY WITH A10.2
SN.16 REINSTALL SALVAGED URINAL TO COMPLY WITH A10.2 HEIGHT AND OFFSET. RECONNECT TO (E) WATER LINE, WASTE LINE AND VENT. Δ0
SN.17 INSTALL NEW WATER CLOSET TO COMPLY WITH A10.2 (ELEMENTARY). SEE PLUMBING FIXTURE SCHEDULE FOR WATER CLOSET TYPE
SN.18 INSTALL 36" GRAB BAR TO COMPLY WITH A10.2 ELEMENTARY. MAINTAIN 1 1/2" CLEARANCE ALL AROUND GRAB BAR.
PROVIDE BLOCKING PER DETAIL 4/A10.2
CONTRACTORS OPTION, STAINLESS STEEL PLATE GRAB BAR PER DETAIL 6/A10.2
REMOVE AND REPLACE FRP FINISH IN FULL SHEET AS REQUIRED Δ0
SN.19 INSTALL NEW TOILET PARTITION AS NECESSARY FOR REQUIRED GRAB BAR CLEARANCE. PROVIDE NEW OVERHEAD BRACE AND ACCESSORIES AS REQUIRED

KEY NOTES

10.075	PLASTIC TOILET COMPARTMENT
10.191	TOILET PAPER DISPENSER
10.192	TOILET ROOM DOOR SIGNAGE
10.193	TOILET ROOM I.D. SIGN
10.194	SANITARY NAPKIN DISPOSAL UNIT
22.040	WATER CLOSET

AGENCY APPROVAL:

LODI USD

HMC Architects
R221551X00
2101 CAPITOL AVENUE, SUITE 100,
SACRAMENTO, CA, 95816
916 368 7990 / www.hmcarchitects.com

LICENSED ARCHITECT JEFFREY ALAN BRAND C-14648 5/31/25 RENEWAL DATE STATE OF CALIFORNIA

ISSUE

Δ	DESCRIPTION	DATE
0	Revision 1	2/24/24

NOTES

KEY PLAN

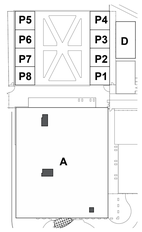

FACILITY:
LOIS E. BORCHARDT ELEMENTARY SCHOOL
375 CULBERTSON DRIVE LODI, CA 95242

PROJECT:
LODI UNIFIED SCHOOL DISTRICT LUNCH SHELTERS - LOIS E. BORCHARDT ELEMENTARY SCHOOL

SHEET NAME:
UNIT A ENLARGED TOILET ROOM PLANS

CONSTRUCTION DOCUMENTS

DATE: **08/08/2023** CLIENT PROJ NO:

SHEET:

A2.11

Autodesk Docs://R221551X00 Lodi USD Lunch Shelters/R221551X00-A-BORCHARDT-ES-LUNCH-SHELTER.rvt
2/14/2024 5:13:04 PM

PLEASE RECYCLE

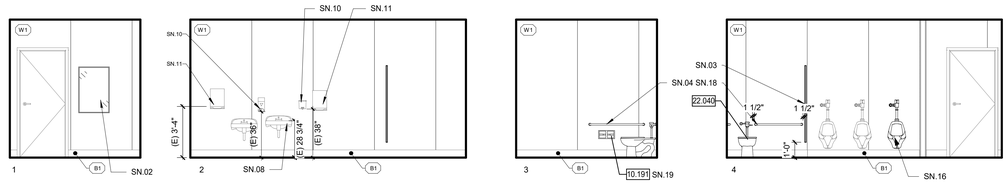

A108 BOY'S ELEVATIONS 04

1/4" = 1'-0"

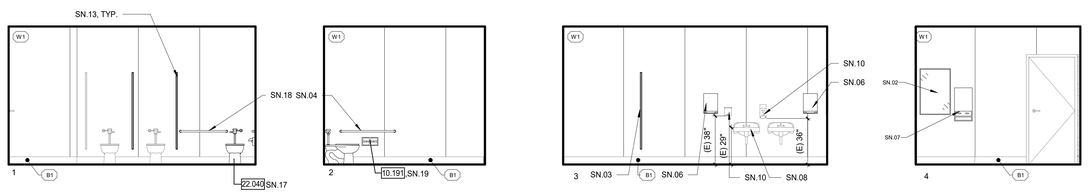

A123 GIRL'S ELEVATIONS 03

1/4" = 1'-0"

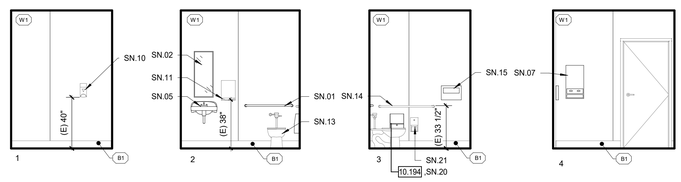

A134 STAFF ELEVATIONS 01

1/4" = 1'-0"

LEGEND

APPROX. EXTENT OF WALL FINISH AND BASE (AS APPLICABLE) PATCH. MATCH ADJACENT.

INTERIOR ELEV. — 1, 1.5, 2, 2.5, 3, 3.5, 4, 4.5

CONSECUTIVE NUMBERING CONVENTION FOR INTERIOR ELEVATIONS AND ROOM FINISHES.

GENERAL NOTES

1. TYPICAL MOUNTING HEIGHTS AND DETAILS APPLY TO ENTIRE PROJECT, WHETHER REFERENCED OR NOT, UNLESS OTHERWISE NOTED.
2. ALL DISABLED ACCESSIBLE DIMENSIONS, ARE MAXIMUM DIMENSIONS UNLESS OTHERWISE NOTED.
3. REMOVE OR MODIFY ALL ITEMS AS REQUIRED TO INSTALL NEW WORK, WHETHER OR NOT SPECIFICALLY SHOWN TO BE REMOVED OR MODIFIED.
4. WHERE DRAINS, PIPING AND OTHER MATERIALS AND EQUIPMENT ARE REMOVED FROM THE SLAB, IT SHALL BE BACKFILLED, FINISHED FLUSHED WITH ADJACENT SURFACES AND PREPARED TO RECEIVE THE NEW FINISH.
5. CUT AND PATCH EXISTING SLAB AS REQUIRED FOR NEW PLUMBING WORK.
6. DEMO AND REPAIR WALL FINISH AS NECESSARY TO PERFORM FIXTURE AND EQUIPMENT WORK AS NOTED. ADJACENT FINISHES TO BE VERIFIED BY CONTRACTOR
7. EQUIPMENT/FIXTURES NOTED AS "SALVAGED FOR REINSTALLATION" WILL BE REMOVED AND STORED BY THE CONTRACTOR PRIOR TO START OF DEMOLITION. THESE EQUIPMENT/FIXTURES SHALL BE REINSTALLED BY THE CONTRACTOR UNDER THIS CONTRACT.

SHEET NOTES

SN.01 REINSTALL SALVAGED 36" GRAB BAR TO COMPLY WITH A10.2
SN.02 REINSTALL SALVAGED MIRROR TO COMPLY WITH A10.2
SN.03 ADJUST TOILET PARTITION AS NECESSARY FOR REQUIRED GRAB BAR CLEARANCE. PROVIDE NEW OVERHEAD BRACE AND ACCESSORIES AS REQUIRED FOR ADJUSTMENT
SN.04 REINSTALL SALVAGED 42" GRAB BAR TO COMPLY WITH A10.2 (ELEMENTARY)
SN.05 REINSTALL SALVAGED LAVATORY TO COMPLY WITH A10.2
SN.06 REINSTALL SALVAGED PAPER TOWEL DISPENSER TO COMPLY WITH A10.2
SN.07 REINSTALL SALVAGED SANITARY NAPKIN DISPENSER TO COMPLY WITH A10.2
SN.08 (E) LAVATORY TO REMAIN. WRAP EXPOSED PIPE W/INSULATION
SN.09 (E) URINAL TO REMAIN
SN.10 (E) SOAP DISPENSER TO REMAIN
SN.11 (E) PAPER TOWEL DISPENSER TO REMAIN
SN.12 (E) TOILET PARTITION TO REMAIN
SN.13 (E) WATER CLOSET TO REMAIN
SN.14 (E) 42" GRAB BAR TO REMAIN
SN.15 REINSTALL SALVAGED TOILET SEAT COVER DISPENSER TO COMPLY WITH A10.2
SN.16 REINSTALL SALVAGED URINAL TO COMPLY WITH A10.2 HEIGHT AND OFFSET. RECONNECT TO (E) WATER LINE, WASTE LINE AND VENT.
SN.17 INSTALL NEW WATER CLOSET TO COMPLY WITH A10.2 (ELEMENTARY).
SN.18 INSTALL 36" GRAB BAR TO COMPLY WITH A10.2 ELEMENTARY. MAINTAIN 1 1/2" CLEARANCE ALL AROUND GRAB BAR.
PROVIDE BLOCKING PER DETAIL 4/A10.2
CONTRACTORS OPTION, STAINLESS STEEL PLATE GRAB BAR PER DETAIL 6/A10.2
REMOVE AND REPLACE FRP FINISH IN FULL SHEET AS REQUIRED
SN.19 INSTALL TOILET PAPER DISPENSER TO COMPLY WITH A10.2 ELEMENTARY
SN.20 INSTALL SANITARY NAPKIN DISPOSAL TO COMPLY WITH A10.2
SN.21 (E) TOILET PAPER DISPENSER TO REMAIN

KEY NOTES

10.191	TOILET PAPER DISPENSER
10.194	SANITARY NAPKIN DISPOSAL UNIT
22.040	WATER CLOSET

FINISHES

WALL

W1 (E) FIBER REINFORCED LAMINATE PANELS

BASE

B1 (E) INTEGRAL COVED BASE

AGENCY APPROVAL:

IDENTIFICATION STAMP
DIV. OF THE STATE ARCHITECT
APP: 02-121835 INC:
REVIEWED FOR
SS ☑ FLS ☑ ACS ☑
DATE: 11/02/2023

LODI USD

HMC Architects

R221551X00

LICENSED ARCHITECT JEFFREY ALAN HEAD C-14648 5/31/25 RENEWAL DATE STATE OF CALIFORNIA

2101 CAPITOL AVENUE, SUITE 100,
SACRAMENTO, CA, 95816
916 368 7990 / www.hmcarchitects.com

ISSUE

Δ	DESCRIPTION	DATE

NOTES

FACILITY:
LOIS E. BORCHARDT ELEMENTARY SCHOOL
375 CULBERTSON DRIVE LODI, CA 95242

PROJECT:
LODI UNIFIED SCHOOL DISTRICT LUNCH SHELTERS - LOIS E. BORCHARDT ELEMENTARY SCHOOL

SHEET NAME:
INTERIOR ELEVATIONS

CONSTRUCTION DOCUMENTS

DATE: **10/18/2023** CLIENT PROJ NO:

SHEET:

A8.11

THE LINE SHOWN ABOVE IS EXACTLY ONE INCH ON THIS SHEETS ORIGINAL PAGE SIZE

Autodesk Docs://R221551X00 Lodi USD Lunch Shelters/R221551X00-A-BORCHARDT-ES-LUNCH-SHELTER.rvt
10/17/2023 12:57:38 PM

PLEASE RECYCLE

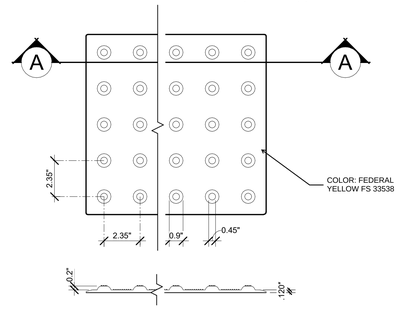

TYPICAL SECTION A-A

8 SELF-ADHESIVE TRUNCATED DOMES

3" = 1'-0"

32220

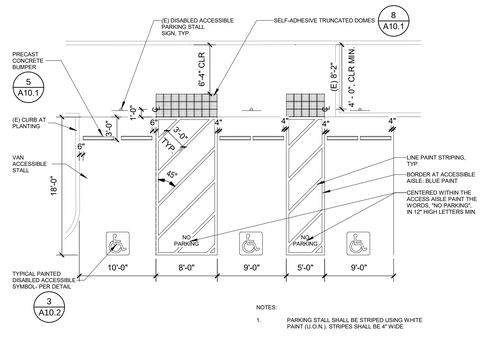

NOTES:

1. PARKING STALL SHALL BE STRIPED USING WHITE PAINT (U.O.N.). STRIPES SHALL BE 4" WIDE

4 ACCESSIBLE PARKING

NOT TO SCALE

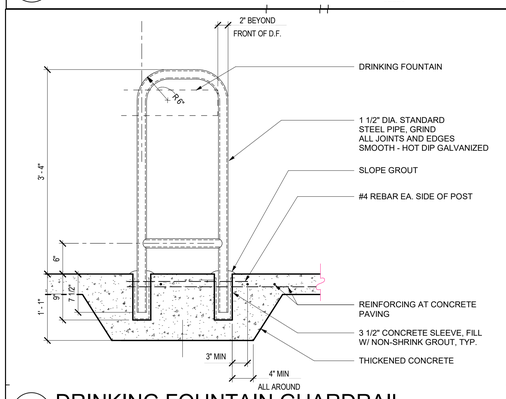

7 DRINKING FOUNTAIN GUARDRAIL

1" = 1'-0"

05051

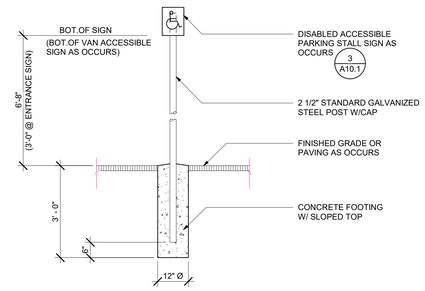

3 METAL SIGNS

1/2" = 1'-0"

10100

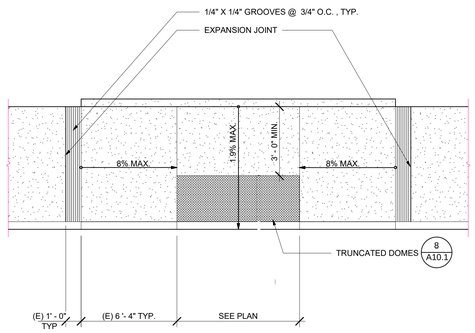

6 EXISTING CURB RAMP

1/4" = 1'-0"

32204

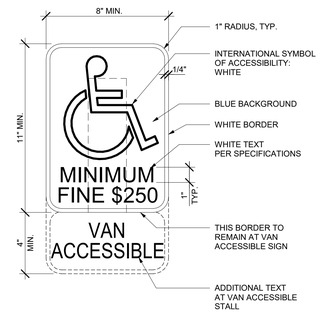

DISABLED ACCESSIBLE PARKING STALL

2 PARKING SIGNAGE

3" = 1'-0"

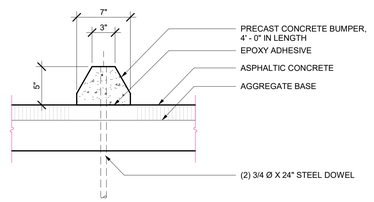

5 PRECAST CONCRETE BUMPER

1 1/2" = 1'-0"

32100

AGENCY APPROVAL:

IDENTIFICATION STAMP
DIV. OF THE STATE ARCHITECT
APP: 02-121835 INC:
REVIEWED FOR
SS ☑ FLS ☑ ACS ☑
DATE: 11/02/2023

LODI USD

HMC Architects

R221551X00

2101 CAPITOL AVENUE, SUITE 100,
SACRAMENTO, CA, 95816
916 388 7990 / www.hmcarchitects.com

LICENSED ARCHITECT
JEFFREY ALAN HEID
C-14648
5/31/25
RENEWAL DATE
STATE OF CALIFORNIA

ISSUE

Δ	DESCRIPTION	DATE

KEYNOTES

NOTES

FACILITY:

LOIS E. BORCHARDT ELEMENTARY SCHOOL
375 CULBERTSON DRIVE LODI, CA 95242

PROJECT:

LODI UNIFIED SCHOOL DISTRICT LUNCH SHELTERS - LOIS E. BORCHARDT ELEMENTARY SCHOOL

SHEET NAME:

SITE DETAILS

CONSTRUCTION DOCUMENTS

DATE: **10/18/2023**

CLIENT PROJ NO:

SHEET:

A10.1

THE LINE SHOWN ABOVE IS EXACTLY 1" LONG WHEN PLOTTED ON ANSI D SHEETS ORIGINAL PAGE SIZE

Autodesk Docs://R221551X00 Lodi USD Lunch Shelters/R221551X00-A-BORCHARDT-ES-LUNCH-SHELTER.rvt
10/17/2023 9:47:50 AM

PLEASE RECYCLE

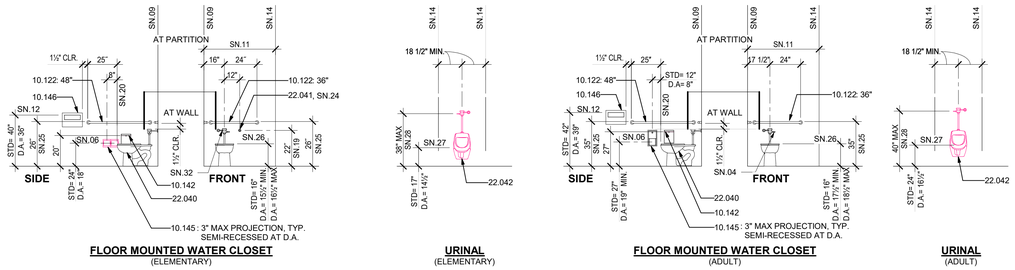

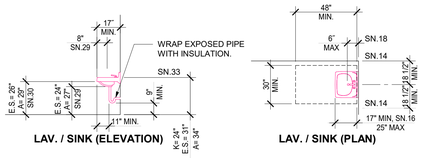

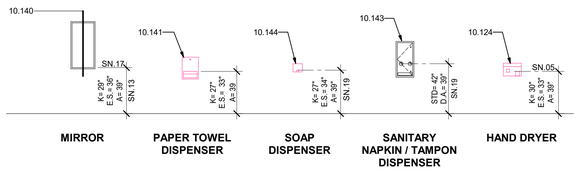

FIXTURE AND ACCESSORY HEIGHTS

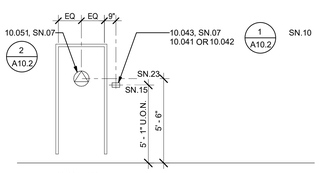

SIGNAGE MOUNTING

8 TYPICAL MOUNTING HEIGHTS AND DETAILS

1/4" = 1'-0"

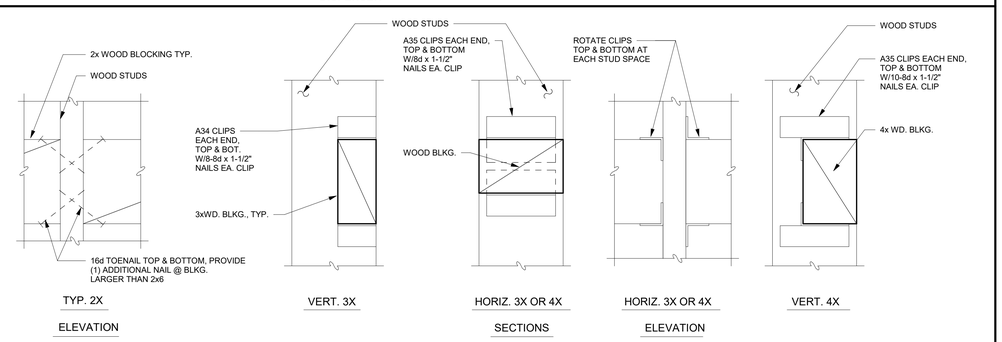

5 TYPICAL WOOD BLOCKING

3" = 1'-0"

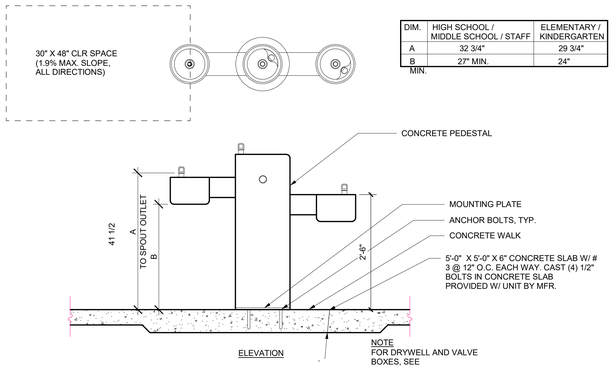

DIM.	HIGH SCHOOL / MIDDLE SCHOOL / STAFF	ELEMENTARY / KINDERGARTEN
A	32 3/4"	29 3/4"
B	27" MIN.	24"

MIN.

7 HI-LO DRINKING FOUNTAIN

3/4" = 1'-0"

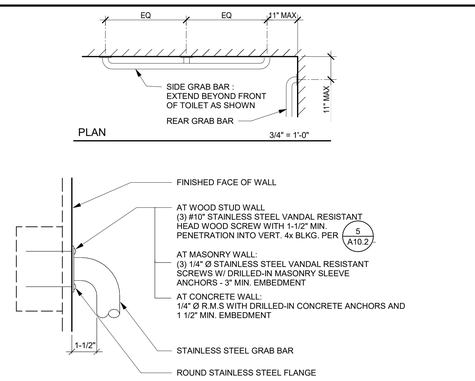

4 TYPICAL GRAB BAR AT WALL

3" = 1'-0"

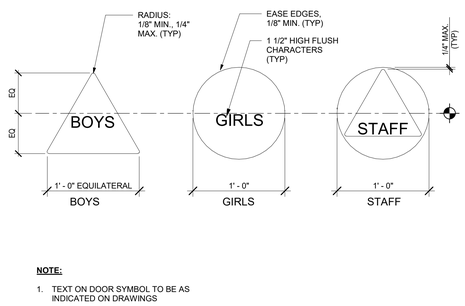

2 TOILET ROOM DOOR SYMBOLS

1 1/2" = 1'-0"

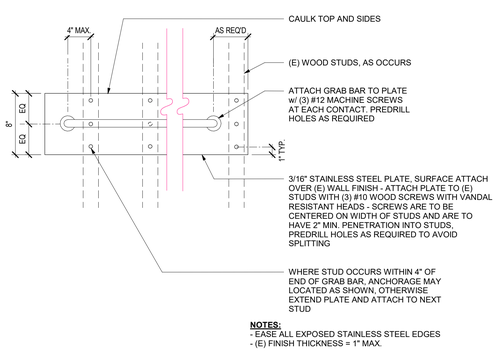

6 GRAB BAR - STAINLESS STEEL PLATE

1 1/2" = 1'-0"

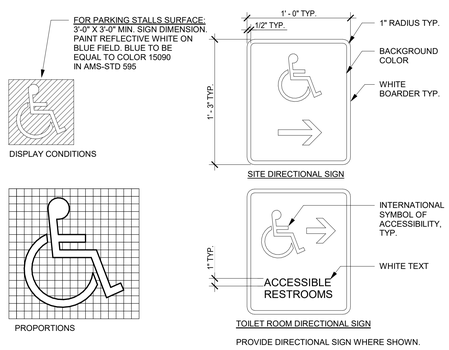

3 SYMBOL OF ACCESSIBILITY

NOT TO SCALE

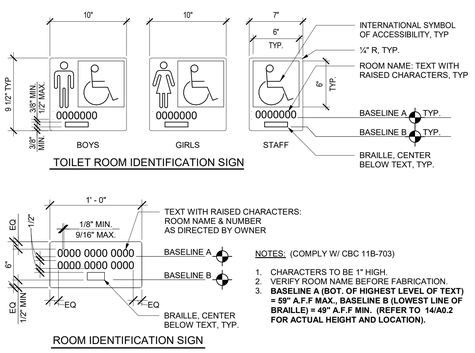

1 IDENTIFICATION SIGNS

1 1/2" = 1'-0"

LEGEND

A ADULT / STAFF
E.S. ELEMENTARY SCHOOL
K KINDERGARTEN

GENERAL NOTES

1. TYPICAL MOUNTING HEIGHTS AND DETAILS APPLY TO ENTIRE PROJECT, WHETHER REFERENCED OR NOT, UNLESS OTHERWISE NOTED.
2. ALL DISABLED ACCESSIBLE DIMENSIONS, ARE MAXIMUM DIMENSIONS UNLESS OTHERWISE NOTED.
3. HEIGHTS ARE MEASURED FROM FINISH FLOOR, UNLESS OTHERWISE NOTED.

SHEET NOTES

SN.01 TOP OF SHELF
SN.02 MIDDLE SHELF FIXED
SN.03 PROVIDE 2X BLOCKING PER DETAIL
SN.04 AT ACCESSIBLE WATER CLOSETS, FLUSH CONTROL HANDLE SHALL BE MOUNTED ON THE WIDE SIDE OF THE TOILET ENCLOSURE
SN.05 TO OPERATOR OR PUSH BUTTON
SN.06 DIMENSION TO CENTERLINE OF TOILET PAPER ROLL POSITION
SN.07 PROVIDE AT ALL TOILET ROOM DOORS
SN.08 AT DISABLED ACCESSIBLE CASEWORK
SN.09 TO FACE OF FINISH
SN.10 FOR SIGNS MOUNTED BACK-TO-BACK ON WINDOW GLAZING, SEE SPECIFICATIONS FOR REQUIREMENTS.
SN.11 62" CLR MIN. TO FINISH WALL/ PARTITION/ FIXTURE
SN.12 TOP OF OPENING
SN.13 34" MAX. IF MIRROR IS NOT MOUNTED OVER A LAV. OR COUNTER; TOP OF MIRROR 74" MIN. FOR HIGH SCHOOL & ADULTS.
SN.14 FACE OF OBJECTS OR WALLS
SN.15 CENTERLINE OF SIGN.
SN.16 19" MINIMUM AT SINK
SN.17 BOTTOM EDGE OF REFLECTIVE SURFACE
SN.18 FROM FARTHEST DEPTH OF THE CLEAR FLOOR SPACE TO FACE OF PLUMBING AND OTHER OBSTACLES
SN.19 TO CENTERLINE CONTROL.
SN.20 FRONT EDGE OF WATER CLOSET.
SN.21 AT CHILDREN'S DRINKING FOUNTAIN
SN.22 WHEELCHAIR, CLEAR FLOOR SPACE: 30"X48"
SN.23 CENTERLINE OF SYMBOL.
SN.24 WHERE SPECIFIED (ELEMENTARY / KINDERGARTEN)
SN.25 TOP OF GRAB BAR
SN.26 TOP OF SEAT
SN.27 LIP HEIGHT
SN.28 FLUSH HANDLE HEIGHT
SN.29 MINIMUM KNEE CLEARANCE
SN.30 MINIMUM APRON CLEARANCE
SN.31 BUBBLER HEIGHT
SN.32 NO TOILET MOUNTED FLUSH VALVE AT CHILDREN'S ACCESSIBLE WATER CLOSET
SN.33 MAXIMUM HEIGHT
SN.34 FOR BOTTLE FILL STATION AT DRINKING FOUNTAIN
SN.35 TO TOP OF SINK RIM; WHERE OCCURS.
SN.36 ACTIVATION SENSOR.

KEYNOTES

10.041 SIGNAGE: ROOM IDENTIFICATION
10.042 SIGNAGE: TACTILE EXIT
10.043 SIGNAGE: TOILET ROOM IDENTIFICATION
10.051 SIGNAGE: TOILET ROOM DOOR SYMBOL
10.122 TOILET ACCESSORY: GRAB BAR
10.124 TOILET ACCESSORY: HAND DRYER
10.140 TOILET ACCESSORY: MIRROR
10.141 TOILET ACCESSORY: PAPER TOWEL DISPENSER
10.142 TOILET ACCESSORY: SANITARY NAPKIN DISPOSAL
10.143 TOILET ACCESSORY: SANITARY NAPKIN/TAMPON DISPENSER
10.144 TOILET ACCESSORY: SOAP DISPENSER
10.145 TOILET ACCESSORY: TOILET PAPER DISPENSER
10.146 TOILET ACCESSORY: TOILET SEAT COVER DISPENSER
22.040 WATER CLOSET
22.041 MANUALLY OPERATED CONCEALED FLUSH VALVE
22.042 URINAL

AGENCY APPROVAL:

IDENTIFICATION STAMP
DIV. OF THE STATE ARCHITECT
APP: 02-121835 INC:
REVIEWED FOR
SS ☑ FLS ☑ ACS ☑
DATE: 11/02/2023

LODI USD

HMC Architects
R221551X00
2101 CAPITOL AVENUE, SUITE 100,
SACRAMENTO, CA, 95816
916 388 7990 / www.hmcarchitects.com

LICENSED ARCHITECT JEFFREY ALAN KIDD C-14648 5/31/25 RENEWAL DATE STATE OF CALIFORNIA

ISSUE

Δ	DESCRIPTION	DATE

KEYNOTES

NOTES

FACILITY:
LOIS E. BORCHARDT ELEMENTARY SCHOOL
375 CULBERTSON DRIVE LODI, CA 95242

PROJECT:
LODI UNIFIED SCHOOL DISTRICT LUNCH SHELTERS - LOIS E. BORCHARDT ELEMENTARY SCHOOL

SHEET NAME:
TYPICAL MOUNTING HEIGHTS AND DETAILS

CONSTRUCTION DOCUMENTS

DATE: 10/18/2023
CLIENT PROJ NO:
SHEET:

A10.2

PLEASE RECYCLE

THE LINE SHOWN ABOVE IS 1" WHEN PLOTTED ON ANSI D SHEETS ORIGINAL PAGE SIZE
Autodesk Docs://R221551X00 Lodi USD Lunch Shelters/R221551X00-A-BORCHARDT-ES-LUNCH-SHELTER.rvt
10/11/2023 9:47:53 AM

DESIGN VALUES

DESCRIPTION	DESIGN VALUES [1]
DEAD AND LIVE LOADS	
ROOF LIVE LOAD	20 PSF
ROOF DEAD LOAD (SUPERIMPOSED ON FRAME) [2]	LOAD SCENARIO= {1,2} DL = {3.5 PSF, 2.0 PSF}
ALLOWABLE SOIL PRESSURE [3, 5]	
SPREAD PAD	
VERTICAL BEARING: DL + Lr + SEISMIC (CONCRETE FOOTING)	1500 PSF
LATERAL COHESION: DL + Lr + SEISMIC (CONCRETE FOOTING)	130 PSF
DRILLED PIER	
SKIN FRICTION DOWN : DL + Lr + SEISMIC (CONCRETE FOOTING) PER 1810A.3.3.1.4	167 PSF
SKIN FRICTION (UPLIFT): DL + LR SEISMIC (CONCRETE FOOTING) PER 1810A.3.31.5	83 PSF
LATERAL BEARING: DL + Lr + SEISMIC (CONCRETE FOOTING) PER 1810A.3.3.2	100 PSF/FT
ROOF SNOW LOAD [6]	
GROUND SNOW LOAD, Pg	10 PSF
RISK CATEGORY	II
ROOF SNOW LOAD: [ ] FLAT, Pf OR [ ] LOW SLOPE, Pm OR [X] SLOPED, Ps	10 PSF
SNOW ROOF SLOPE FACTOR, Cs	1
SNOW EXPOSURE FACTOR, Ce	1.2
SNOW LOAD IMPORTANCE FACTOR, Is	1.0
THERMAL FACTOR, Ct	1.2
DRIFT SURCHARGE LOAD, Pd	0 PSF
DISTANCE FROM ADJACENT STRUCTURE, Pg = 0 PSF	4 IN
DISTANCE FROM ADJACENT STRUCTURE, Pg > 0 PSF	20 FT
ICE LOAD	0 PSF
FLOOD DESIGN	
FLOOD HAZARD AREA	NO
WIND DESIGN [4]	
BASIC WIND SPEED (3 SECOND GUST), Vult	110 MPH
EXPOSURE CATEGORY	C
TOPOGRAPHIC FACTOR, Kzt (1 MINIMUM)	1
INTERNAL PRESSURE COEFFICIENT, GCpi (IF APPLICABLE)	0.0
CLEAR WIND FLOW	YES
OBSTRUCTED WIND FLOW	YES
SEISMIC DESIGN [4]	
LATERAL FORCE-RESISTING SYSTEM	STEEL ORDINARY CANTILEVER COLUMN SYSTEM
ANALYSIS PROCEDURE	EQUIVALENT LATERAL FORCE PROCEDURE
SEISMIC DESIGN CATEGORY (SDC)	E
SEISMIC IMPORTANCE FACTOR, Ie	1.0
DESIGN BASE SHEAR, V	Cs x W
SEISMIC RESPONSE COEFFICIENT, Cs	LOAD SCENARIO = {1,2} Cs = {0.90,1.32}
RESPONSE MODIFICATION FACTOR, R	1.25
SITE CLASS [7]	E
REDUNDANCY FACTOR, p	1.3
MAPPED SPECTRAL RESPONSE ACCELERATION AT SHORT PERIOD, Ss - USED TO DETERMINE Cs	LOAD SCENARIO = {1,2} Ss = {1.406, 2.063}
SHORT-PERIOD SITE COEFFICIENT, Fa	1.2
DESIGN SPECTRAL RESPONSE ACCELERATION AT SHORT PERIOD, Sds - USED TO DETERMINE Cs	LOAD SCENARIO = {1,2} Sds (MAX) = {1.125, 1.650}
MAPPED SPECTRAL RESPONSE ACCELERATION AT 1 SECOND PERIOD, S1	LOAD SCENARIO = {1,2} S1 = {0.844, 1.07}
LONG-PERIOD SITE COEFFICIENT, Fv	2.0
DESIGN SPECTRAL RESPONSE ACCELERATION AT 1 SECOND PERIOD, Sd1	LOAD SCENARIO = {1,2} Sd1 = {1.125, 1.427}
HORIZONTAL OR VERTICAL IRREGULARITIES TYPE(S)	NONE

1. IF SITE-SPECIFICDESIGN CRITERIA ARE OUTSIDE THE LIMITS OF THESE PC DRAWINGS, CONTACT POLIGON ENGINEERING TO SEE IF AN ENGINEERING LETTER, SUPPLEMENTAL DRAWINGS, AND/OR CALCULATIONS COULD BE SUBMITTED FOR A SITE-SPECIFIC SOLUTION. ANY SITE- SPECIFIC DEVIATION FROM THIS PC MAY NOT BE SUBMITTING TO DSA AS AN OVER-THE-COUNTER.
2. STRUCTURE IS NOT DESIGNED TO SUPPORT SOLAR PANELS. STRUCTURE IS NOT DESIGNED TO SUPPORT SPRINKLER SYSTEMS IN LOAD SCENARIO 2 REGIONS.
3. GEOHAZARD REPORTS ARE REQUIRED IF THE AREA COVERED UNDER THE ROOF EXCEEDS 4000 SQ FT OR IS LOCATED WITHIN STATE OR LOCAL GEOLOGIC HAZARD ZONE. VERIFY SUBMITTAL AND APPROVAL OF A GEOHAZARD REPORT BY CGS PRIOR TO DSA SITE APPLICATION.
4. STRUCTURAL SEPARATION BETWEEN ADJACENT STRUCTURES: RAM 20= 5.0", RAM 30= 3.0" STRUCTURAL SEPARATION BETWEEN EXISTING STRUCTURES: RAM 20= 5.5", RAM 30= 4.0"
5. WHEN PLACING MULTIPLE CANOPIES WITH PIER FOOTINGS ADJACENT TO ONE ANOTHER, THE DESIGN MAY REQUIRE AN ANALYSIS OF GROUP EFFECTS ON THE FOUNDATIONS. THE MINIMUM CLEARANCE BETWEEN CENTER OF PIERS IS EIGHT TIMES PIER DIAMETER WITHOUT AN ACCOMPANYING ENGINEERING LETTER
6. SITE APPLICATION DESIGN PROFESSIONAL AND DSA REVIEWER SHALL VERIFY THE STRUCTURE TO BE LOCATED AT LEAST 20 FEET FROM ANY HIGHER ADJACENT STRUCTURE IF GROUND SNOW IS GREATER THAN ZERO.
7. DESIGN COMPLIES WITH THE CONDITIONS OF EXCEPTION 1 OF ASCE 7-16 SECTION 11.4.8, ITEM 2.
8. APPROVED FIRE APPARATUS ACCESS ROADS SHALL EXTEND TO WITHIN 150 FEET OF ALL PORTIONS OF THE PERIMETER OF THE STRUCTURE PER CFC 503.1.1.

ARCHITECTURAL REQUIREMENTS:

DESCRIPTION	DESIGN VALUES
TYPE OF CONSTRUCTION	II B
NUMBER OF STORIES	1
FIRE SPRINKLER SYSTEM	NOT BY POLIGON

RELATED BUILDING CODES AND STANDARDS:

TITLE 24 CODES:

2022 California Administrative Code (CAC)..........................(Part 1, Title 24, CCR)
2022 California Building Code (CBC), Volumes 1 and 2 (Part 2, Title 24, CCR)
(2021 International Building Code with 2022 California amendments)
2022 California Electrical Code ....(Part 3, Title 24, CCR)
(2020 National Electrical Code with 2022 California amendments)
2022 California Mechanical Code (CMC) ....(Part 4, Title 24, CCR)
(2021 Uniform Mechanical Code with 2022 California amendments)
2022 California Plumbing Code (CPC) ....(Part 5, Title 24, CCR)
(2021 Uniform Plumbing Code with 2022 California amendments)
2022 California Energy Code ....(Part 6, Title 24, CCR)
2022 California Fire Code (CFC) ....(Part 9, Title 24, CCR)
(2021 International Fire Code with 2022 California Amendments)
2022 California Existing Building Code (CEBC)......................(Part 10, Title 24, CCR)
2022 California Green Building Standards Code...................(Part 11, Title 24, CCR)
2022 California Referenced Standards Code .... (Part 12, Title 24, CCR)
Title 19 CCR, Public Safety, State Marshal Regulations

NFPA 13 - 2016
NFPA 72 - 2016

REFERENCE CODE SECTIONS FOR APPLICABLE STANDARDS:

2022 CBC, CHAPTER **35**
2022 CFC, CHAPTER **80**

SCOPE OF WORK NARRATIVE:

THESE DRAWINGS ILLUSTRATE THE FABRICATION AND INSTALLATION REQUIREMENTS FOR A FREE-STANDING PREFABRICATED STEEL SHADE STRUCTURE. THE ENTIRE STRUCTURAL SYSTEM IS COMPRISED OF TUBULAR STEEL MEMBERS SUPPORTED ON CONCRETE FOUNDATIONS. THE FLEXIBILITY INCLUDED HEREIN ALLOWS THIS STRUCTURE TO COMPLY WITH A WIDE VARIETY OF PROJECT SITES AND LOADING REQUIREMENTS.

INSTRUCTIONS FOR ARCHITECTS PLANNING TO SUBMIT THESE PRE-CHECKED DRAWINGS TO DSA:

STEP 1 PROJECT INFORMATION

PROJECT NAME	LODI UNIFIED SCHOOL DISTRICT LUNCH SHELTERS - ANSEL ADAMS ELEMENTARY SCHOOL	
SCHOOL DISTRICT	LODI UNIFIED SCHOOL DISTRICT	
USE AND OCCUPANCY CLASSIFICATION	A-3	**(PROPOSED OCCUPANCY: A1, A2, A3, A4, A5, B, E)**
OCCUPANT LOAD FACTOR	15	**(15 SQFT/PERSON MAX; 5 SQFT/PERSON MIN FOR ANY A OCCUPANCY 20 SQFT/PERSON MAX FOR B OR E OCCUPANCY)**
TOTAL ROOF AREA	1,920	**(MAXIMUM 4500 SQFT FOR ANY A OCCUPANCY, 10,000 SQFT FOR B OCCUPANCY, AND 5000 SQFT FOR E OCCUPANCY)**
NUMBER OF OCCUPANTS	128	**(MAXIMUM 300 FOR ANY A OCCUPANCY, 500 FOR B OCCUPANCY, AND 250 FOR E OCCUPANCY)**

STEP 2 DESIGN OPTIONS

ROOF DECK	[ ] MULTI-RIB (MR)	**DEFAULT**, WEIGHT 1.2 PSF
	[X] STANDING SEAM (SS)	WEIGHT 1.8 PSF
GUTTERS	[ ] NO	**DEFAULT**
	[X] YES	SEE RAM7.0 FOR DETAILS
ELECTRICAL ACCESS	[ ] NO	**DEFAULT**
	[X] YES	SEE RAM7.1 FOR DETAILS
CLEAR HEIGHT	[ ] 8'	**DEFAULT**
	[X] 10' OTHER	10' MAX

STEP 3 SEISMIC ACCELERATION

Ss 0 . 7 8 0 **(g)**
S1 0 . 2 6 0 **(g)**

STEP 4 SEISMIC REGIONS

0.000 < Ss <= 1.406 S1 <= 0.844	[X] WHITE	3.5 PSF MAX DEA LOAD
1.406 < Ss <= 2.063 S1 <= 1.070	[ ] GREEN	2.0 PSF MAX DEAD LOAD

STEP 5 TOTAL ROOF DEAD LOAD

ROOF DECK	1 . 8 PSF	SEE STEP 2' 'ROOF DECK FOR WEIGHTS
COLLATERAL	0 . 0 PSF	LIGHTING , FIRE SUPPRESSION, ETC.
TOTAL	1 . 8 PSF	ADD 'ROOF DECK' AND 'COLLATERAL'

STEP 6 LOAD SCENARIO

WHITE	TOTAL ROOF DEAD LAOD <= 3.5 PSF	[X] **LOAD SCENARIO 1**
GREEN	TOTAL ROOF DEAD LOAD < 2.0 PSF	[ ] **LOAD SCENARIO 2**

STEP 7 PC STRUCTURE

ROOF WIDTH <= 20	[ ] **RAM 20**
20 < ROOF WIDTH <= 30	[X] **RAM 30**

STEP 8 STRUCTURE SIZE

	RAM 20		RAM 30	
ROOF WIDTH	[ ] 20'	**DEFAULT**	[X] 30'	**DEFAULT**
	[ ] ________ OTHER 9' MIN; 20' MAX		[ ] ________ OTHER	20'-6" MIN; 30' MAX
ROOF LENGTH	[ ] 44'	2 BAYS	[ ] 44'	2 BAYS
	[ ] 64'	3 BAYS	[X] 64'	3 BAYS
	[ ] 84'	4 BAYS	[ ] 84'	4 BAYS
	[ ] ________ OTHER		[ ] ________ OTHER	

STEP 9 FOUNDATION TYPE

	RAM 20		RAM 30	
FOUNATION TYPE	[ ] SPREAD PAD	[ ] DRILLED PIER	[ ] SPREAD PAD	[X] DRILLED PIER

STEP 10 FOUNDATION SUMMARY

RAM 20		RAM 30	
[ ] LOAD SCENARIO 1 SPREAD PAD	[ ] LOAD SCENARIO 1 DRILLED PIER	[ ] LOAD SCENARIO 1 SPREAD PAD	[X] LOAD SCENARIO 1 DRILLED PIER
[ ] LOAD SCENARIO 2 SPREAD PAD	[ ] LOAD SCENARIO 2 DRILLED PIER	[ ] LOAD SCENARIO 2 SPREAD PAD	[ ] LOAD SCENARIO 2 DRILLED PIER

STEP 11 SHEET INDEX

BASE FRAME	RAM 20 SHEET INDEX				RAM 30 SHEET INDEX			
ROOF DECK	MR		SS		MR		SS	
FOUNDATION TYPE	SPREAD PAD	DRILLED PIER	SPREAD PAD	DRILLED PIER	SPREAD PAD	DRILLED PIER	SPREAD PAD	DRILLED PIER
SELECT ONE	[ ]	[ ]	[ ]	[ ]	[ ]	[ ]	[ ]	[X]
ORDER FORM	RAM1.0	RAM1.0	RAM1.0	RAM1.0	RAM1.0	RAM1.0	RAM1.0	RAM1.0
NOTES AND SPECIAL INSPECTIONS	RAM1.1	RAM1.1	RAM1.1	RAM1.1	RAM1.1	RAM1.1	RAM1.1	RAM1.1
FOUNDATION PLAN	RAM2.0	RAM2.1	RAM2.0	RAM2.1	RAM2.2	RAM2.3	RAM2.2	RAM2.3
FRAMING PLAN	RAM3.0	RAM3.0	RAM3.0	RAM3.0	RAM3.1	RAM3.1	RAM3.1	RAM3.1
FRAME CONNECTION DETAILS	RAM4.0	RAM4.0	RAM4.0	RAM4.0	RAM4.2	RAM4.2	RAM4.2	RAM4.2
SECTION DETAILS	RAM4.1	RAM4.1	RAM4.1	RAM4.1	RAM4.3	RAM4.3	RAM4.3	RAM4.3
ARCHITECTURAL VIEWS	RAM5.0	RAM5.0	RAM5.0	RAM5.0	RAM5.1	RAM5.1	RAM5.1	RAM5.1
ROOF CONNECTION DETAILS	RAM6.0	RAM6.0	RAM6.1	RAM6.1	RAM6.0	RAM6.0	RAM6.1	RAM6.1
MISC DESIGN OPTIONS	RAM7.0	RAM7.0	RAM7.0	RAM7.0	RAM7.0	RAM7.0	RAM7.0	RAM7.0
ELETRICAL CUTOUTS	RAM7.1	RAM7.1	RAM7.1	RAM7.1	RAM7.1	RAM7.1	RAM7.1	RAM7.1

STEP 12 MULTIPLE STRUCTURES

	ROOF WIDTH X LENGTH	QTY
MULTIPLE STRUCTURES		

STEP 1: GENERAL PROJECT INFORMATION

- IDENTIFY PROJECT NAME AND SCHOOL DISTRICT
- IDENTIFY USE AND OCCUPANCY CLASSIFICATION
  - THE USE AND OCCUPANCY DETERMINE THE MAXIMUM SQUARE FOOTAGE OF THE STRUCTURE
  - THE MAXIMUM SQUARE FOOTAGE IS ALSO LIMITED BY THE NUMBER OF OCCUPANTS
- IDENTIFY THE OCCUPANT LOAD PER TABLE 1004.5 IN THE CBC
- IDENTIFY TOTAL ROOF AREA WHICH SHALL NOT EXCEED ALLOWABLE AREA PER TABLE 506.2 IN THE CBC.
- IDENTIFY EXPECTED NUMBER OF OCCUPANTS BASED ON THE ESTIMATED OCCUPANT LOAD
  - TOTAL ROOF AREA DIVIDED BY OCCUPANT LOAD CAN DETERMINE NUMBER OF OCCUPANTS

STEP 2: DESIGN OPTIONS

- SELECT ROOF DECK FOR YOUR PROJECT
  - "MR" REPRESENTS MCELROY METAL "MULTI-RIB" ROOF DECK
  - "SS" REPRESENTS MCELROY METAL "MEDALLION-LOK" 16" STANDING SEAM ROOF DECK
- SELECT WHETHER GUTTERS AND DOWNSPOUTS FROM POLIGON IS NEEDED FOR YOUR PROJECT
  - IF "YES", THEN INCLUDE SHEET RAM7.0 IN THE DRAWING SET
-SELECT WHETHER ELECTRICAL CUTOUTS ARE NEEDED FOR YOUR PROJECT
  - SHEET RAM7.0 SHOWS ELECTRICAL CUTOUT SIZE AND LOCATION CUTOUTS IN COLUMNS
  - SHEET RAM7.1 HAS INSTRUCTIONS AND SHEET TO IDENTIFY WHICH COLUMNS
  - SHEET RAM7.1 MUST BE FILLED OUT IN THE SUBMITTAL SET APPROVED BY DSA
  - IF NOTHING IS FILLED IN ON RAM7.1, POLIGON WILL ASSUME CUTOTUS ARE ONLY IN COLUMN A1 (SEE 'FRAMING PLAN' FOR REFERENCE)
- SELECT CLEAR HEIGHT (SEE 'ARCHITECTURAL VIEWS' SHEET FOR REFERENCE)
  - MIN 7'-1"; MAX 10'-0"
- **IF NOTHING IS SELECTED, POLIGON WILL ASSUME THE DEFAULT FOR EACH DESIGN OPTION**

STEP 3: IDENTIFY THE Ss & S1 ACCELERATION (g) FOR YOUR PROJECT AND GEOTECHNICAL INFORMATION

- Ss & S1 VALUE DETERMINES THE REQUIRED SEISMIC DESIGN FORCES
- Ss & S1 VALUE DEPENDS ON PROJECT'S GEOGRAPHICAL LOCATION
  - FIND Ss & S1 VALUES FOR YOUR PROJECT IN THE SITE SPECIFIC GEOTECHNICAL REPORT
  - FIND Ss & S1 VALUES FOR YOUR PROJECT USING (https://asce7hazardtool.online/)
- THIS PC IS NOT APPROVED FOR Ss VALUES GREATER THAN 2.063 (CONTACT POLIGON FOR ADDITIONAL OPTIONS)

STEP 4: IDENTIFY THE SEISMIC REGION FOR YOUR PROJECT

- THE REGIONS ARE DEPENDANT ON THE Ss & S1 VALUE DETERMINED IN STEP 3
- THE SEISMIC REGION DICTATES THE MAXIMUM DEAD LOAD PERMITTED (SEE TABLE TO THE LEFT)

STEP 5: IDENTIFY THE ROOF DEAD LOAD FOR YOUR PROJECT

- THE ROOF DECK DEAD LOAD WILL ALWAYS BE INCLUDED
- THE COLLATERAL LOAD REPRESENTS ADDITIONAL LOAD THAT CAN BE SUPPORTED BY THE FRAME
- TOTAL ROOF DEAD LOAD MUST BE LESS THAN OR EQUAL TO THE MAX DEAD LOAD SHOWN IN STEP 4
- CUT SHEETS OF ANY BOARDS, BOXES AND EQUIPMENT TO BE MOUNTED ON THE STRUCTURE, INCLUDING WEIGHTS AND DIMENSIONS ARE REQUIRED

STEP 6: IDENTIFY THE LOAD SCENARIO

- REFERENCE THE STEP 4 COLOR AND SELECT THE APPLICABLE LOAD SCENARIO
- LOAD SCENARIOS HAVE NO IMPACT ON FRAME DESIGN OR COST, BUT DO AFFECT FOUNDATION SIZE

STEP 7: IDENTIFY PC STRUCTURE

- ROOF WIDTHS UP TO 20' WIDE USE THE "RAM 20"
- ROOF WIDTHS UP TO 30' WIDE USE THE "RAM 30"
- THE 20' AND 30' WIDTHS ARE SUGGESTED BECAUSE THEY ARE THE MOST ECONOMICAL
- MAXIMUM WIDTH IS 30'; (SEE 'ARCHITECTURAL VIEWS' SHEET FOR REFERENCE)

STEP 8: IDENTIFY SITE SPECIFIC ROOF WIDTH AND LENGTH

- DO NOT EXCEED THE TOTAL ROOF AREA FROM STEP 1 (ROOF WIDTH MULTIPLIED BY ROOF LENGTH)

STEP 9: FOUNDATION TYPE

- SELECT A FOUNDATION BASED THE DESIRED FOUNDATION TYPE
- SELECT EITHER SPREAD PAD OR DRILLED PIER FOUNDATION PRIOR TO APPROVAL
- FOUNDATION TYPE IMPACTS CONSTRUCTION (TIMING, SEQUENCE, COST, ETC.)
- FOUNDATION TYPE IMPACTS ANCHOR BOLT LENGTH (NOT PROVIDED BY POLIGON)
- REVIEW OF SITE-SPECIFIC SOILS REPORT TO EVALUATE APPLICABILITY OF FOUNDATION OPTIONS AVAILABLE

STEP 10: FOUNDATION SUMMARY

- USE THE SELECTIONS FROM STEP 6 AND STEP 9 TO SELECT THE APPROPRIATE FOUNDATION

STEP 11: SELECT APPLICABLE SHEET INDEX FOR YOUR PROJECT

- IDENTIFY THE APPLICABLE SHEET INDEX
- INCLUDE APPLICABLE SHEETS WITH YOUR DSA SUBMITTAL
- EXCLUDE 'MISC DESIGN OPTIONS' SHEET FOR PROJECTS WITHOUT ELECTRICAL CUTOUTS OR GUTTERS
- EXCLUDE 'ELECTRICAL CUTOUTS' SHEET FOR PROJECTS WITHOUT ELECTRICAL CUTOUTS

STEP 12: MULTIPLE STRUCTURES WITH THE SAME PC#

- FILL IN ROOF LENGTH AND WIDTH OF STRUCTURES AS WELL AS QUANTITY
- UNO ON THE POLIGON DRAWINGS, POLIGON WILL ASSUME ALL DESIGN CRITERIA FOR EACH STRUCTURE IS THE SAME
- CONTACT POLIGON FOR FURTHER INFORMATION

SHEET INDEX					
1	RAM1.0	ORDER FORM	11	RAM4.2	FRAME CONNECTION DETAILS - RAM 30
2	RAM1.1	NOTES AND SPECIAL INSPECTIONS	12	RAM4.3	SECTION DETAILS - RAM 30
3	RAM2.0	FOUNDATION PLAN SPREAD PAD - RAM 20	13	RAM5.0	ARCHITECTURAL VIEWS - RAM 20
4	RAM2.1	FOUNDATION PLAN DRILLED PIER - RAM 20	14	RAM5.1	ARCHITECTURAL VIEWS - RAM 30
5	RAM2.2	FOUNDATION PLAN SPREAD PAD - RAM 30	15	RAM6.0	ROOF CONNECTION DETAILS
6	RAM2.3	FOUNDATION PLAN DRILLED PIER - RAM 30	16	RAM6.1	ROOF CONNECTION DETAILS
7	RAM3.0	FRAMING PLAN - RAM 20	17	RAM7.0	MISC DESIGN OPTIONS
8	RAM3.1	FRAMING PLAN - RAM 30	18	RAM7.1	ELECTRICAL CUTOUTS
9	RAM4.0	FRAME CONNECTION DETAILS - RAM 20			
10	RAM4.1	SECTION DETAILS - RAM 20			
TOTAL SHEETS = 18					

ABBREVIATIONS:

ACI	AMERICAN CONCRETE INSTITUTE	MR	MULTI-RIB ROOF PANEL (MCELROY)
AISC	AMERICAN INSTITUTE OF STEEL CONSTRUCTION	NTS	NOT TO SCALE
ASM	ASSEMBLY (INTERNAL REFERENCE)	NO	NUMBER
ASTM	AMERICAN SOCIETY FOR TESTING AND MAT'LS	OC	ON CENTER
AWS	AMERICAN WELDING SOCIETY	OSHA	OCCUPATIONAL HEALTH AND SAFETY ADM.
CBC	CALIFORNIA BUILDING CODE	PCF	POUNDS PER CUBIC FOOT
CJP	COMPLETE JOINT PENETRATION	PD	POLIGON DRAWING
CLR	CLEAR	PJ	PRETENSIONED JOINT
DEG	DEGREE	PLCS	PLACES
DIA	DIAMETER	PLT	PLATE
DIM	DIMENSION	PSF	POUNDS PER SQUARE FOOT
DSA	DIVISION OF THE STATE ARCHITECT	PSI	POUNDS PER SQUARE INCH
EQ	EQUAL	QTY	QUANTITY
FT	FEET	REF	REFERENCE
GA	GAGE	SQ	SQUARE
IN	INCHES	SS	STANDING SEAM ROOF PANEL (MCELROY)
KSI	KIPS PER SQUARE INCH	TYP	TYPICAL
MAX	MAXIMUM	UNO	UNLESS NOTED OTHERWISE
MIN	MINIMUM	USGS	U.S. GEOLOGICAL SURVEY
MISC	MISCELLANEOUS	W/	WITH
MPH	MILES PER HOUR		

SPECIFICATIONS

PART 1 - GENERAL

1.1 STRUCTURE DESCRIPTION
A. STRUCTURE(S) BASED ON THE FOLLOWING PC DESIGN(S):
1. HIP ROOF (RAM)

1.2 DESIGN REQUIREMENTS
A. MEET THE DESIGN INTENT SHOWN ON THE PC DRAWINGS APPROVED FOR THIS PROJECT.
1. DESIGN CRITERIA
2. MEMBERS SIZES
3. HIDDEN BOLTED CONNECTIONS BETWEEN STRUCTURAL MEMBERS
4. COLUMN ANCHORAGE SHALL INCLUDE FOUR (4) BOLTS IN COMPLIANCE WITH OSHA 1926.755(A)(1).
5. NO FIELD WELDING PERMITTED
6. NO FIELD PAINTING PERMITTED
7. ROOF DIMENSIONS AND SLOPES
8. EXPOSED STEEL ROOF FASTENERS (IF APPLICABLE) POWDER COATED BY MANUFACTURER
9. ROOF DECK SPANS FROM PEAK TO EAVE AND PERMITS PROPER DRAINAGE WITHOUT DEBRIS BUILD-UP.

1.3 SUBMITTALS
A. DRAWINGS AND CALCULATIONS SEALED BY A PROFESSIONAL ENGINEER LICENSED IN THE APPROPRIATE STATE.
B. ONLY MANUFACTURERS THAT SUBMIT DRAWINGS AND CALCULATIONS PRIOR TO BID SHALL BE CONSIDERED.
C. MANUFACTURER MUST BE ABLE TO SUBMIT APPROPRIATE LABORATORY TESTS FOR THE FOLLOWING:
1. FRAME FINISH REQUIREMENTS LISTED IN PART 2 OF THIS SPECIFICATION.
2. CERTIFIED MILL TEST REPORTS FOR STRUCTURAL STEEL (DESCRIBING THE CHEMICAL AND PHYSICAL PROPERTIES).
3. CERTIFIED MILL TEST REPORTS FOR STRUCTURAL BOLTS.

1.4 TECHNICAL SUPPORT
A. MANUFACTURER MUST HAVE IN-HOUSE ENGINEERING DEPARTMENT AND A PROFESSIONAL ENGINEER LICENSED IN THE APPROPRIATE STATE TO ANSWER TECHNICAL QUESTIONS.

1.5 QUALITY ASSURANCE
A. GENERAL
1. FABRICATION PROCEDURES SHALL COMPLY WITH APPLICABLE CODES AND LOCAL REGULATIONS.
2. REQUIRED STRUCTURAL TESTS AND SPECIAL INSPECTIONS INCLUDED ON THE PROJECT DSA-103 FORM.
B. MANUFACTURER QUALIFICATIONS
1. MINIMUM (10) YEARS ENGINEERING AND FABRICATING PRE-ENGINEERED STRUCTURES
2. MANUFACTURER OWNED AND OPERATED POWDER COAT PAINT FINISH SYSTEM
3. ALL AWS CERTIFIED WELDERS
4. FULL-TIME PROFESSIONAL ENGINEER ON STAFF LICENSED IN THE APPROPRIATE STATE
5. FULL-TIME AWS CERTIFIED ASSOCIATE WELDING INSPECTOR ON STAFF
6. FULL-TIME QUALITY ASSURANCE MANAGER ON STAFF
7. FULL-TIME LEED AP ON STAFF
C. MANUFACTURER CERTIFICATIONS
1. PCI 4000 CERTIFICATION THROUGH POWDER COATING INSTITUTE (PCI)
2. AISC CERTIFIED FABRICATOR

1.6 MANUFACTURER WARRANTY
A. STRUCTURE MUST HAVE (10) YEAR LIMITED WARRANTY ON STEEL FRAME MEMBERS.
B. STRUCTURE MUST HAVE (10) YEAR LIMITED WARRANTY ON PAINT SYSTEM.
C. PASS THROUGH WARRANTY OF ROOFING MANUFACTURER SHALL BE PROVIDED UPON REQUEST.

PART 2 - PRODUCTS

2.1 MANUFACTURER
A. ACCEPTABLE MANUFACTURERS
1. POLIGON, A DIVISION OF PORTERCORP.
A. 4240 N 136TH AVE., HOLLAND, MI 49424; (616) 399-1963; WWW.POLIGON.COM .
I. FOR POLIGON STRUCTURES IN *NORTHERN CALIFORNIA*, THE LOCAL REPRESENTATIVE IS ALL ABOUT PLAY (WWW.PLAYGROUNDPROS.COM). EMAIL AAP@PLAYGROUNDPROS.COM OR CALL (916) 923-2180
II. FOR POLIGON STRUCTURES IN *SOUTHERN CALIFORNIA*, THE LOCAL REPRESENTATIVE IS MIRACLE PLAYGROUND SALES (MIRACLEPLAYGROUNDSALES.COM EMAIL SALES@MIRACLEPLAYGROUND.COM OR CALL (951) 695-4515
B. SUBSTITUTION LIMITATIONS
1. THE ENGINEERING FOR THIS STRUCTURE IS ONLY APPLICABLE IF POLIGON SUPPLIES THE MATERIAL.
2. IF THE CONTRACTOR ELECTS TO SUBSTITUTE A DIFFERENT STRUCTURE, THEY ARE RESPONSIBLE TO OBTAIN THE NECESSARY DSA APPROVAL WITH:
A. NO COST TO THE DISTRICT OR ARCHITECT
B. NO CHANGE TO THE CONSTRUCTION SCHEDULE
3. SUBSTITUTIONS MUST BE APPROVED A MINIMUM OF (10) DAYS BEFORE BID.
4. ALL APPROVED MANUFACTURERS SHALL BE NOTIFIED IN WRITING BEFORE THE BID DATE.
5. SUBSTITUTE MANUFACTURERS SHALL NOT BE ALLOWED TO BID WITHOUT WRITTEN NOTIFICATION.
6. SUBSTITUTE MANUFACTURERS MUST MEET "MANUFACTURER QUALIFICATIONS" LISTED IN PART 1 OF THIS SPECIFICATION.
7. SUBSTITUTE MANUFACTURERS MUST PROVIDE PROOF OF "MANUFACTURER CERTIFICATIONS" ABOVE.
8. SUBSTITUTE MANUFACTURERS MUST PROVIDE PAINT FINISH DESCRIBED IN "FRAME FINISH" BELOW.

2.2 FRAME
A. MATERIALS
1. ANCHOR BOLTS: SEE DRAWINGS FOR REQUIREMENTS. ANCHOR BOLTS NOT PROVIDED BY MANUFACTURER
2. STRUCTURAL STEEL: SEE DRAWINGS FOR REQUIREMENTS.
3. STRUCTURAL BOLTS: SEE DRAWINGS FOR REQUIREMENTS.
B. FINISH
1. FRAME FINISH: POLI-5000 POWDER COAT. NO FIELD PAINTING PERMITTED.
A. COMPONENTS SHALL BE CLEANED, PRE-TREATED, AND FINISHED AT A FACILITY OWNED AND DIRECTLY SUPERVISED BY THE MANUFACTURER.
B. COMPONENTS SHALL BE SHOT BLASTED TO SSPC-SP10 NEAR-WHITE BLAST CLEANING. SSPC-SP2 HAND TOOL CLEANING WILL NOT BE AN ACCEPTABLE ALTERNATIVE.
C. COMPONENTS SHALL BE PRETREATED IN A (3) STAGE IRON PHOSPHATE OR EQUAL WASHER.
D. COMPONENTS SHALL RECEIVE EPOXY PRIMER COAT FOR SUPERIOR CORROSION PROTECTION.
E. COMPONENTS SHALL RECEIVE TOP COAT OF SUPER DURABLE TGIC POWDER COAT.
F. FINISH SHALL NOT HAVE ANY VOC EMISSIONS.
G. MANUFACTURER SHALL BE ABLE TO PRODUCE DOCUMENTATION STATING SAMPLE PRODUCTION COMPONENTS HAVE BEEN TESTED TO MEET THE FOLLOWING:
I. SALT SPRAY RESISTANCE PER ASTM B 117/ ASTM D 1654 TO 10,000 HOURS WITH NO CREEP FROM SCRIBE LINE AND RATING OF 10.
II. HUMIDITY RESISTANCE PER ASTM D2247-02 TO 5,000 HOURS WITH NO LOSS OF ADHESION OR BLISTERING.
III. COLOR/UV RESISTANCE PER ASTM G154-04 TO 2,000 HOURS EXPOSURE, ALTERNATE CYCLES WITH RESULTS OF NO CHALKING, 75% COLOR RETENTION, COLOR VARIATION MAXIMUM 3.0 E VARIATION CIE FORMULA (BEFORE AND AFTER 2,000 HOURS EXPOSURE).
2. FRAME COLOR: DETERMINED BY DISTRICT.
C. FABRICATION
1. FABRICATE COMPONENTS TO PERMIT BOLTED CONNECTIONS ON SITE. NO FIELD WELDING PERMITTED.
2. LABEL EACH MEMBER WITH UNIQUE PART NUMBER TO STREAMLINE ERECTION.
3. WELDING REQUIREMENTS: SEE DRAWINGS FOR REQUIREMENTS.

2.3 ROOF
A. MATERIALS
1. ROOF MATERIAL: SEE DRAWINGS FOR REQUIREMENTS.
2. ROOF HARDWARE: SEE DRAWINGS FOR REQUIREMENTS.
B. FINISH
1. ROOF FINISH: KYNAR 500 HIGH-PERFORMANCE RESIN-BASED PAINT.
2. ROOF COLOR: DETERMINED BY OWNER.

2.4 MISCELLANEOUS
A. MATERIALS
1. CONCRETE MATERIAL: SEE DRAWINGS FOR REQUIREMENTS. CONCRETE NOT PROVIDED BY MANUFACTURER.

PART 3 - EXECUTION

3.1 STORAGE AND HANDLING
A. PROTECT MATERIAL AFTER DELIVERY FROM WEATHER, SUNLIGHT, AND DAMAGE.
B. ELEVATE MATERIAL TO ALLOW CIRCULATION AND REDUCE MOLD, FUNGI DECAY, AND INSECT INFESTATION.
C. HANDLE MATERIAL WITH PROTECTIVE STRAPS OR PADDED FORKLIFT. HANDLING MATERIAL WITH CHAIN OR CABLE WILL NOT BE ACCEPTED AND MAY VOID MANUFACTURER'S WARRANTY.
D. TO PREVENT MOISTURE DAMAGE TO ANY WOOD MATERIAL (IF APPLICABLE), KEEP WOOD PACKAGED BEFORE INSTALLATION AND COVER IMMEDIATELY WITH ANY SECONDARY ROOF MATERIAL.

3.2 ERECTION
A. INSTALL COMPONENTS ACCORDING TO MANUFACTURER'S INSTALLATION DRAWINGS AND THESE SPECIFICATIONS.
B. ANCHOR BOLT AND COLUMN LAYOUT IS CRITICAL.
C. COMPLY WITH SPECIFIC BOLTING INSTALLATION REQUIREMENTS PROVIDED ON DRAWINGS REQUIRING THE CONTRACTOR TO COORDINATE THIS PHASE OF CONSTRUCTION WITH THE SPECIAL BOLTING INSPECTOR AND THE INSPECTOR OF RECORD *PRIOR TO THE ERECTION OF THE FRAME.*
D. NO FIELD SLOTTING OR OPENING OF HOLES WILL BE ALLOWED. TOLERANCES ON STEEL STRUCTURAL MEMBERS ARE SET ACCORDING TO AISC CONSTRUCTION PRACTICES, FOLLOWED DURING FABRICATION, AND CANNOT BE INCREASED.
E. AFTER INSTALLATION, RESTORE DAMAGED SURFACES TO THE ORIGINAL CONDITION USING TOUCH-UP PAINT PROVIDED BY MANUFACTURER. IF THE ARCHITECT DOES NOT ACCEPT THAT, REPLACE DAMAGED MATERIAL AT NO COST TO THE DISTRICT.
F. COORDINATE AS REQUIRED WITH OTHER DISCIPLINES (ELECTRICAL, PLUMBING, ETC.)
G. COMPLY WITH ALL APPLICABLE OHSA REQUIREMENTS

3.3 REPAIR
A. DO NOT ATTEMPT ANY FIELD CHANGES TO THE STRUCTURE WITHOUT FIRST CONTACTING THE MANUFACTURER.

3.4 QUALITY CONTROL
A. TESTS AND INSPECTIONS DURING ERECTION ARE NOT REQUIRED BY THE MANUFACTURER, BUT MAY BE REQUIRED BY OTHERS.
B. THE PROJECT INSPECTOR, AND ENTIRE CONSTRUCTION OVERSIGHT PROCESS, SHALL COMPLY WITH DSA PR 13-01. DO NOT PROCEED UNTIL UNSATISFACTORY CONDITIONS HAVE BEEN CORRECTED.

STATE APPROVALS-SITE

IDENTIFICATION STAMP
DIV. OF THE STATE ARCHITECT
APP: 02-121835 INC:
REVIEWED FOR
SS ☑ FLS ☑ ACS ☑
DATE: 11/02/2023

4080 PLAZA GOLDORADO CIRCLE
SUITE B,
CAMERON PARK, CA 95682
530.677.5515

GHD

poligon
PORTER

REGISTERED PROFESSIONAL ENGINEER
JESSICA E. NAPIER
No. S5476
STRUCTURAL
STATE OF CALIFORNIA

STATE APPROVALS-PC

IDENTIFICATION STAMP
DIV. OF THE STATE ARCHITECT
APP: 02-121213 PC
REVIEWED FOR
SS ☑ FLS ☑ ACS ☑ CG ☐
DATE: 7/18/2023

PRE-CHECK (PC) DOCUMENT
CODE: 2022 CBC
A SEPARATE PROJECT APPLICATION FOR CONSTRUCTION IS REQUIRED.

ORDER FORM

HIP ROOF - RAM

RAM1.0

GENERAL:

1. GENERAL NOTES AND TYPICAL DETAILS SHALL APPLY TO ALL PARTS OF THE JOB EXCEPT WHERE THEY MAY CONFLICT WITH DETAILS AND NOTES ON OTHER SHEETS. WHERE CONDITIONS ARE NOT SPECIFICALLY INDICATED BUT ARE OF SIMILAR CHARACTER TO DETAILS SHOWN, SIMILAR DETAILS OF CONSTRUCTION SHALL BE USED SUBJECT TO REVIEW BY THE STRUCTURAL ENGINEER FOR THIS PROJECT.
2. WORK SHALL CONFORM TO THE REQUIREMENTS, AS AMENDED TO DATE, OF THE LATEST ADOPTED EDITION OF THE CBC, C.A.C. TITLE 24, AND ALL OTHER LOCAL, STATE AND FEDERAL REGULATIONS.
3. OMISSIONS OR CONFLICTS BETWEEN THE VARIOUS ELEMENTS OF THE WORKING DRAWINGS AND/OR SPECIFICATIONS SHALL BE BROUGHT TO THE ATTENTION OF THE STRUCTURAL ENGINEER FOR THIS PROJECT PRIOR TO PROCEEDING WITH ANY WORK INVOLVED.
4. THE CONTRACTOR SHALL BE RESPONSIBLE FOR COORDINATING THE WORK OF ALL TRADES AND SHALL CHECK ALL DIMENSIONS. ALL DISCREPANCIES SHALL BE CALLED TO THE ATTENTION OF THE STRUCTURAL ENGINEER FOR THIS PROJECT AND BE RESOLVED BEFORE PROCEEDING WITH THE WORK.
5. THESE CONSTRUCTION DRAWINGS AND SPECIFICATIONS REPRESENT THE FINISHED STRUCTURE AND DO NOT INDICATE THE METHOD OF CONSTRUCTION. THE CONTRACTOR SHALL SUPERVISE AND DIRECT THE WORK AND SHALL BE SOLELY RESPONSIBLE FOR CONSTRUCTION MEANS, METHODS, TECHNIQUES, SEQUENCES AND PROCEDURES, INCLUDING, BUT NOT LIMITED TO, BRACING, TEMPORARY SUPPORTS, AND SHORING. OBSERVATION VISITS TO THE SITE BY FIELD REPRESENTATIVES OF THE ARCHITECT/ENGINEER SHALL NOT INCLUDE INSPECTIONS OF THE PROTECTIVE MEASURES OR THE CONSTRUCTION PROCEDURES. ANY SUPPORT SERVICES PERFORMED BY THE ARCHITECT/ENGINEER DURING THE CONSTRUCTION SHALL BE DISTINGUISHED FROM CONSTRUCTION AND DETAILED INSPECTION SERVICES WHICH ARE FURNISHED BY OTHERS. THESE SUPPORT SERVICES PERFORMED BY THE ARCHITECT/ENGINEER, WHETHER OF MATERIAL OR WORK, ARE FOR THE PURPOSE OF ASSISTING IN QUALITY CONTROL AND IN ACHIEVING CONFORMANCE WITH CONTRACT DOCUMENTS, BUT DO NOT GUARANTEE CONSTRUCTION.
6. ASTM DESIGNATIONS AND ALL STANDARDS REFER TO THE LATEST AMENDMENTS.
7. CONFORM TO APPLICABLE CAL/OSHA CONSTRUCTION SAFETY REGULATIONS FOR ALL WORK PERFORMED DURING CONSTRUCTION. JOB SITE SAFETY IS STRICTLY THE RESPONSIBILITY OF THE CONTRACTOR AND NOT THE ARCHITECT/ENGINEER OR OWNER.
8. THE ENGINEER AND THEIR CONSULTANTS SHALL HAVE NO RESPONSIBILITY FOR THE DISCOVERY, HANDLING, REMOVAL OR DISPOSAL OF HAZARDOUS MATERIALS AT THE PROJECT SITE, INCLUDING BUT NOT LIMITED, TO ASBESTOS, ASBESTOS PRODUCTS, POLYCHLORINATED BIPHENYL (PCB) OR OTHER TOXIC SUBSTANCES.
9. SHOULD ANY CONDITIONS DEVELOP NOT COVERED BY THE CONTRACT DOCUMENTS, OR IF A CHANGE IN THE SCOPE OF WORK IS PROPOSED, A CONSTRUCTION CHANGE DOCUMENT DETAILING AND SPECIFYING THE REQUIRED CHANGE(S) SHALL BE SUBMITTED TO AND APPROVED BY DSA BEFORE PROCEEDING WITH THE WORK.
10. THE SCHOOL DISTRICT'S INSPECTOR OF RECORD SHALL INSPECT AND APPROVE THE ERECTED FRAME PRIOR TO ROOF INSTALLATION.
11. SEE REQUIREMENTS FOR LOCATION IN ANY FIRE HAZARD SEVERITY ZONE FOR WILDLAND URBAN INTERFACE AREAS (WUI) AS SPECIFIED IN THE APPLICABLE VERSION OF THE CALIFORNIA BUILDING CODE. PROVIDE PROTECTION AND DETAILS OF ALL AREAS COMPLYING WITH THE WUI REQUIRMENTS.
12. LOCATING THIS STRUCTURE CLOSER THAN 20 FEET TO OTHER STRUCTURES MAY AFFECT THE ALLOWABLE AREA FOR THE EXISTING CONSTRUCTION PER THE APPLICABLE VERSION OF THE CALIFORNIA BUILDING CODE.
13. VIEWS AND DETAILS ARE NOT DRAWN TO SCALE (UNLESS NOTED OTHERWISE). DO NOT SCALE THESE DRAWINGS.
14. OTHER SITE SPECIFIC ITEMS MAY BE REQUIRED.
15. WHEN A SITE-SPECIFIC PROJECT IS LOCATED IN A FLOOD ZONE OTHER THAN ZONE X, A LETTER STAMPED AND SIGNED FROM A SOILS ENGINEEER IS NEEDED TO VALIDATE THE ALLOWABLE SOIL VALUES SPECIFIED IN THE PC ARE STILL APPLICABLE.

STRUCTURAL AND MISCELLANEOUS STEEL:

1. ALL STRUCTURAL STEEL SHALL BE DETAILED, FABRICATED AND ERECTED IN ACCORDANCE WITH THE AMERICAN INSTITUTE OF STEEL CONSTRUCTION (AISC) 360 - 16 AND 303-16 MANUAL REFERENCED BY THE 2022 EDITION OF THE CALIFORNIA BUILDING CODE.
2. PIPE SECTIONS SHALL CONFORM TO ASTM A53, Fy = 35 ksi, GRADE B UNLESS NOTED OTHERWISE.
3. STRUCTURAL TUBING (HSS SHAPES) SHALL CONFORM TO ASTM A500, GRADE B (OR HIGHER), Fy = 46 KSI.
4. IF MATERIAL AVAILABILITY IS LIMITED, MEMBER THICKNESSES CAN BE INCREASED BEYOND WHAT IS SHOWN IN THESE DRAWINGS (MAXIMUM INCREASE OF 1/8").
5. ALL CHANNELS, ANGLES, PLATES AND MISC. STEEL SHALL CONFORM TO ASTM A36, Fy = 36 KSI.
6. ALL COLD FORM STEEL SHALL CONFORM TO ASTM A653, CS = TYPE B, Fy = 50 KSI.
7. STRUCTURAL STEEL AND DECK SHALL BE IDENTIFIED FOR CONFORMITY PER CBC 2202A.1.
8. ROOF DECK SHALL HAVE KYNAR 5000 METAL COATING.
9. ROOF DECK SHALL CONFORM TO ATSM A792, Fy = 50 KSI.
10. MR ROOF SCREWS MEET ASTM A510 WITH A HEAD DIMENSION OF 0.31" (FLAT-TO-FLAT) AND INTEGRAL WASHER DIMENSION OF 0.58" (OUTSIDE DIAMETER).
11. SS ROOF SCREWS MEET ASTM A510 WITH A HEAD DIMENSION OF 0.437" (OUTSIDE DIAMETER).

WELDING:

1. ALL WELDING SHALL COMPLY WITH AWS D1.1 SPECIFICATIONS AND SHALL BE DONE BY AWS QUALIFIED WELDERS CERTIFIED FOR THE TYPE OF WELDING TO BE PERFORMED.
2. ALL WELDING SHALL BE DONE BY GAS METAL ARC PROCESS WITH E70XX ELECTRODES. FLUX CORE ARC WELD SHALL CONFORM TO CHARPY NOTCH TOUGHNESS RATING OF 20 ft-lb @ (O° F).
3. ALL WELDING SHALL BE DONE IN THE SHOP WITH REQUIRED INSPECTION, PRE-APPROVED BY DSA, TO ENSURE PROPER MATERIAL ID AND WELDING.
4. WELD FILLER METAL MANUFACTURER SHALL PROVIDE WRITTEN CERTIFICATION OF COMPLIANCE WITH CODE AND SPECIFICATIONS.

BOLTING:

1. ALL BOLTS SHOWN ON THESE DRAWINGS ARE ASTM F3125 (A325 TYPE 1) HIGH STRENGTH BOLTS (UNO) AND SHALL BE HOT DIPPED GALVANIZED PER ASTM F2329.
2. HIGH STRENGTH BOLTS SHALL BE SAMPLED AND TESTED IN COMPLANCE WITH CBC 2213A.1.
3. BEFORE ERECTING THE FRAME, VERIFY ALL BOLTS AND NUTS ARE CLEAN OF DEBRIS AND BURRS - INCLUDING THE HARDWARE ALREADY FASTENED INSIDE THE MEMBERS. CHASING SOME OF THE BOLTS AND NUTS MAY BE REQUIRED.
4. ANCHOR BOLTS (HEAVY HEX HEAD, ASTM F1554, GRADE 55) SHALL BE HOT DIPPED GALVANIZED PER ASTM F2329. ANCHOR BOLTS MAY BE HEADED OR THREADED WITH A NUT THAT IS PREVENTED FROM ROTATING.
5. HIGH STRENGTH NUTS SHALL CONFORM TO ASTM A563 AND SHALL BE GALVANIZED PER ASTM F2329.
6. HIGH STRENGTH WASHERS SHALL CONFORM TO ASTM F436 AND SHALL BE GALVANIZED PER ASTM F2329.
7. THE BOLTING INSTALLATION REQUIREMENTS OUTLINED BELOW ARE CRITICAL TO THE STRUCTURE'S DESIGN AND PERFORMANCE. **THE INSTALLER IS REQUIRED TO COORDINATE THIS PHASE OF CONSTRUCTION WITH THE SPECIAL BOLTING INSPECTOR AND THE INSPECTOR OF RECORD PRIOR TO THE ERECTION OF THE FRAME**. ALL BOLTS SHALL BE INSTALLED AND INSPECTED PER THE APPLICABLE VERSION OF AISC'S "SPECIFICATION FOR STRUCTURAL JOINTS USING HIGH-STRENGTH BOLTS", CBC 1705A.2.1; AISC 341-16 J7; AISC 360-16 N5.6.
   - A. PRETENSIONED JOINTS (IDENTIFIED ON THE FRAME CONNECTION DETAILS WITH A "PJ REQUIRED") MUST BE INSTALLED AND INSPECTED TO MEET ONE OF FOLLOWING REQUIREMENTS:
     1. TURN-OF-NUT PRETENSIONING
     2. CALIBRATED WRENCH PRENTENSIONING
     3. DIRECT-TENSION-INDICATOR PRETENSIONING (CONTRACTOR RESPONSIBLE FOR PURCHASE OF REQUIRED WASHERS)
   - B. ALL OTHER JOINTS MUST BE INSTALLED AND INSPECTED TO MEET THE REQUIREMENTS OF SNUG-TIGHTENED JOINTS. **NOTE TO INSTALLER AND INSPECTOR(S): THE SNUG-TIGHT CONDITION EXISTS, IN PART, WHEN ALL THE BOLTS IN THE JOINT HAVE BEEN TIGHTENED SUFFICIENTLY TO PREVENT THE REMOVAL OF THE NUTS WITHOUT THE USE OF A WRENCH.**

THE CONTRACTOR, SPECIAL BOLTING INSPECTOR AND THE INSPECTOR OF RECORD MUST ALL AGREE ON WHICH APPROACH WILL BE USED TO PRETENSION THE BOLTS. THE CONTRACTOR IS RESPONSIBLE FOR DOCUMENTING THE APPROACH AGREED TO BY ALL PARTIES LISTED ABOVE.

FOUNDATIONS:

1. ALLOWABLE SOIL PRESSURES ASSUME CLASS 5 SOIL CLASSIFICATION PER 2022 CBC TABLE 1806A. 2.
2. FILL AND BACKFILL SHALL BE COMPACTED TO 95% OF MAX. DENSITY IN ACCORDANCE WITH ASTM TEST METHOD D1557. FLOODING NOT PERMITTED.
3. THE CONTRACTOR SHALL BE RESPONSIBLE FOR ALL SHORING, ETC. NECCESSARY TO SUPPORT CUT AND/OR FILL BANKS DURING EXCAVATION, AND FORMING AND PLACEMENT OF CONCRETE.
4. STRUCTURES SHALL BE SETBACK FROM ADAJCENT SLOPES TO PROVIDE FIRM MATERIAL FOR EMBEDMENT AND FOR PROTECTION FROM SLOPE DRAINAGE, EROSION, AND SHALLOW FAILURES.
   - A. BOTTOM OF ASCENDING SLOPE: THE SMALLER OF HALF THE HEIGHT OF THE SLOPE AND 15FT MEASURED FROM THE FACE OF THE STRUCTURE TO THE TOE OF THE SLOPE
   - B. TOP OF DECENDING SLOPE: THE SMALLER OF A THIRD OF THE HEIGHT OF THE SLOPE AND 40 FT MEASURED FROM THE FACE OF THE FOOTING TO THE TOP OF THE SLOPE

   ALTERNATE SETBACKS ARE PERMITTED, SUBJECT FOR APPROVAL. A GEOTECHNICAL INVESTIGATION MAY BE REQUIRED.
5. STRUCTURES PLACED ON LIQUIFIABLE SOILS OR SITE CLASS F MAY NOT BE SUBMITTED FOR AN OVER THE COUNTER REVIEW.

CONCRETE:

1. MIX DESIGN REQUIREMENTS: (NORMAL WEIGHT CONCRETE)

MINIMUM STRENGTH f'c (28 DAYS)	EXPOSURE CATEGORY	W/C RATIO MAXIMUM)	SLUMP (± 1")	UNIT WEIGHT (NORMAL WEIGHT)
5000 PSI	F3, S3, W2, C2	0.4	4"	150 PCF

2. CHANGES TO THE MIX DESIGN MUST BE APPROVED BY THE ENGINEER OR ARCHITECT OF RECORD AND DSA
3. AGGREGATES SHALL CONFORM TO ASTM C33. MAX AGGREGATE SIZE = 1".
4. CEMENT SHALL CONFORM TO ASTM C150 (TYPE V) WITH A MAXIMUM EXPANSION OF 0.040%, FOR SULFATE RESISTANCE.
5. ADMIXTURES CONTAINING CALCIUM CHLORIDE ARE PROHIBITED.
6. CONCRETE EXPOSED TO FREEZING-AND-THAWING CYCLES SHALL BE AIR ENTRAINED PER ACI 318-19 SECTION 19.3.3.
7. CONCRETE SHALL BE MAINTAINED IN A MOIST CONDITION FOR A MINIMUM OF FIVE DAYS AFTER PLACEMENT. ALTERNATE METHODS WILL BE APPROVED IF SATISFACTORY PERFORMANCE CAN BE ASSURED.
8. CONCRETE SHALL NOT FREE FALL MORE THAN FIVE FEET.
9. CONCRETE SHALL BE PROPORTIONED PER ACI 318-19 26.4.
10. CONCRETE SHALL BE TESTED PER CBC 1910A.1, 1705A.3, AND ACI 318-19 26.13. BATCH PLANT INSPECTION NOT REQUIRED. CONTRACTOR SHALL IMPLEMENT WEIGHTMASTER AND BATCH TICKET REQUIREMENTS OF CBC 1705A.3.3.1.

REINFORCING STEEL:

1. REINFORCING STEEL SHALL BE DEFORMED STEEL CONFORMING TO THE REQUIREMENTS OF ASTM A615, (DEFORMATIONS SHALL BE IN ACCORDANCE WITH ASTM A305) AS FOLLOWS:
   GR 60: (#4 BARS AND LARGER)
   GR 40: (#3 BARS)
2. DETAILING, FABRICATION, AND ERECTION OF REINFORCING BARS SHALL CONFORM TO THE ACI "MANUAL OF STANDARD PRACTICE FOR DETAILING REINFORCING CONCRETE STRUCTURES."
3. MIN. COVER FOR CAST-IN-PLACE CONCRETE SHALL BE AS FOLLOWS:
   - A. CAST AGAINST EARTH.. 3"
   - B. CAST AGAINST FORM BELOW GRADE..................... 2"
   - C. FORMED SLABS (#11 BAR & SMALLER).................... 3/4"
   - D. SLABS ON GRADE (FROM TOP OF SLAB).................. 1"
   - E. COLUMNS AND BEAMS (MAIN BARS)...................... 2"
   - F. WALLS EXPOSED TO WEATHER (#6-#18 BARS)......... 2"
     (#5 & SMALLER)......... 11/2"
   - G. NOT EXPOSED TO WEATHER (#11 & SMALLER)........ 3/4"
4. BARS SHALL BE CLEAN OF RUST, GREASE OR OTHER MATERIAL LIKELY TO IMPAIR BOND. BENDS SHALL BE MADE COLD.
5. FOR #6 BARS AND SMALLER, REINFORCING SHALL BE LAP SPLICED 45 BAR DIA MINIMUM IN CONCRETE. FOR #7 BARS AND LARGER, REINFORCING SHALL BE LAP SPLICED 55 BAR DIAMETERS MINIMUM IN CONCRETE. ALL LAP SPLICES MUST COMPLY WITH ACI 318-19.
6. PRIOR TO PLACING OF CONCRETE, REINFORCING STEEL AND EMBEDDED ITEMS SHALL BE WELL SECURED IN POSITION.
7. WELDING OF REINFORCING IS NOT ALLOWED
8. REINFORCING STEEL SHALL BE SAMPLED AND TESTED PER CBC 1910A.2.

POWDER COATED AND EPOXY PRIMED FINISH:

1. ENTIRE POWDER COATING PROCESS COMPLETED IN SAME FACILITY AS STEEL FABRICATION.
2. ALL CARBON STEEL MEMBERS (COLUMNS, BEAMS, PLATES, ETC.) PAINTED WITH PRIME COAT PER THE "AISC CODE OF STANDARD PRACTICE" AND THE "AISC SPECIFICATION SECTION M3" (UNLESS NOTED OTHERWISE).
3. PARTS PRETREATED IN A 3 STAGE IRON PHOSPHATE WASHER (OR EQUAL).
4. EPOXY PRIMER POWDER COAT APPLIED TO PARTS FOR SUPERIOR CORROSION PROTECTION.
5. TOP POWDER COAT OF SUPER DURABLE TGIC (COLOR SELECTED FROM MANUFACTURER'S STANDARD OPTIONS OR CUSTOM COLOR).
6. SAMPLE PRODUCTION PARTS TESTED TO MEET THE FOLLOWING CRITERIA:
   - A. SALT SPRAY RESISTANCE PER ASTM B 117/ ASTM D 1654
     1. 10000 HOURS WITH NO CREEP FROM SCRIBE LINE AND RATING OF 10
   - B. HUMIDITY RESISTANCE PER ASTM D2247-02
     1. 5000 HOURS WITH NO LOSS OF ADHESION OR BLISTERING
   - C. COLOR/UV RESISTANCE PER ASTM G154-04
     1. 2000 HOURS EXPOSURE ALTERNATE CYCLES WITH NO CHALKING, 75% COLOR RETENTION, AND COLOR VARIATION MAXIMUM 3.0 E VARIATION CIE FORMULA (BEFORE AND AFTER 2000 HOURS EXPOSURE

CONSTRUCTION NOTES

1. A DSA-CERTIFIED CLASS 2 INSPECTOR IS REQUIRED FOR THIS PROJECT.
2. CHANGES TO THE APPROVED DRAWINGS AND SPECIFICATIONS SHALL BE MADE BY ADDENDA OR CONSTRUCTION CHANGE DOCUMENT (CCD) APPROVED BY DSA, AS REQURIED BY SECTION 4-338, PART 1, TITLE 24 CCR AND DSA IR A-6.
3. A "DSA-CERTIFIED" PROJECT INSPECTOR EMPLOYED BY THE OWNER (E.G. DISTRICT, ETC.) AND APPROVED BY DSA SHALL PROVIDE CONTINUOUS INSPECTION OF WORK. THE DUTIES OF THE INSPECTOR ARE DEFINED IN SECTION 4-342, PART 1, TITLE 24, CCR.
4. A DSA ACCEPTED TESTING LABORATORY DIRECTLY EMPLOYED BY THE OWNER (E.G. DISTRICT, ETC.) SHALL CONDUCT ALL THE REQUIRED TEST AND INSPECTIONS FOR THE PROJECT.

NOTICE OF DISCLAIMER FOR STRUCTURAL ENGINEER RESPONIBILITY

1. FOR THE SITE-SPECIFIC PROJECT, NEITHER POLIGON OR GHD ARE THE DESIGN PROFESSIONAL IN GENERAL RESPONSIBLE CHARGE.
2. FOR THE SITE-SPECIFIC PROJECT, GHD AND POLIGON'S RESPONSIBILITY IS LIMITED TO THE PREPARATION OF THE PLANS AND SPECIFICATIONS FOR THE STRUCTURES OF THIS PC ONLY.
3. STRUCTURAL OBSERVATION OF CONSTRUCTION IS SPECIFICALLY EXCLUDED FROM GHD AND POLIGON'S RESPONSIBILITY FOR THE SITE-SPECIFIC PROJECT.
4. ALL CONSTRUCTION ACTIVITIES RELATED TO STRUCTURAL ENGINEERING MAY BE DELEGATED TO A QUALIFIED ENGINEER BY THE DESIGN PROFESSIONAL IN GENERAL RESPONSIBLE CHARGE. THESE ACTIVITIES INCLUDE, BUT ARE NOT LIMITED TO, APPROVAL OF INSPECTOR QUALIFICATIONS, STRUCTURAL OBSERVATIONS OF CONSTRUCTION, REVIEW OF INSPECTIONS REPORTS, AND SIGNING OFF ON THE VERIFIED REPORT FOR COMPLETED WORK.
5. POLIGON WILL BE RESPONSIBLE FOR RESPONDING TO QUESTIONS PERTAINING TO THE PLANS AND SPECIFICATIONS FOR THE STRUCTURES OF THIS PC WHICH ARISE DURING PLAN REVIEW AND CONSTRUCTION.

SPECIAL INSPECTION NOTES:

1. THE PROJECT INSPECTOR AND TESTING AGENCY SHALL BE SELECTED BY THE SCHOOL DISTRICT AND APPROVED BY DSA AND THE ARCHITECT OF RECORD.
2. COSTS OF THE PROJECT INSPECTOR AND THE TESTING AGENCY SHALL BE BORN BY THE SCHOOL DISTRICT.
3. THE PROJECT INSPECTOR, AND ENTIRE CONSTRUCTION OVERSIGHT PROCESS, SHALL COMPLY WITH DSA PR 13-01.
4. ON APPROVED PC DRAWINGS, THE STATEMENT OF STRUCTURAL TESTS AND SPECIAL INSPECTIONS (FORM DSA-103) BELOW IS ONLY AN EXAMPLE. ON APPROVED PC DRAWINGS, THE EXAMPLE FORM DSA-103 MUST BE CROSSED OUT BEFORE THE PC DRAWINGS CAN BE APPROVED AS PART OF A SITE-SPECIFIC (OR STOCKPILE) PROJECT SO THEY WILL NOT CONFLICT WITH THE OFFICIAL FORM DSA-103 FOR THE PROJECT.

DSA 103-22: LISTING OF STRUCTURAL TESTS & SPECIAL INSPECTIONS, 2022 CBC

Application Number:	**School Name:**	**School District:**
DSA File Number:	**Increment Number:**	**Date Submitted:**

2022 CBC

IMPORTANT: This form is only a summary list of structural tests and some of the special inspections required for the project. Generally, the structural tests and special inspections noted on this form are those that will be performed by the Geotechnical Engineer of Record, Laboratory of Record, or Special Inspector. The actual complete test and inspection program must be performed as detailed on the DSA approved documents. The appendix at the bottom of this form identifies work NOT subject to DSA requirements for special inspection or structural testing. The project inspector is responsible for providing inspection of all facets of construction, including but not limited to, special inspections not listed on this form such as structural wood framing, high-load wood diaphragms, cold-formed steel framing, anchorage of non-structural components, etc., per Title 24, Part 2, Chapter 17A (2022 CBC).

***NOTE:** Undefined section and table references found in this document are from the CBC, or California Building Code.

KEY TO COLUMNS

1. TYPE	2. PERFORMED BY
Continuous – Indicates that a continuous special inspection is required **Periodic –** Indicates that a periodic special inspection is required **Test –** Indicates that a test is required	**GE –** Indicates that the special inspection shall be performed by a registered geotechnical engineer or his or her authorized representative. **LOR –** Indicates that the test or special inspection shall be performed by a testing laboratory accepted in the DSA Laboratory Evaluation and Acceptance (LEA) Program. See CAC Section 4-335. **PI –** Indicates that the special inspection may be performed by a project inspector when specifically approved by DSA. **SI –** Indicates that the special inspection shall be performed by an appropriately qualified/approved special inspector.

	S1. GENERAL:			
	Test or Special Inspection	**Type**	**Performed By**	**Code References and Notes**
☑	**a.** Verify that: • Site has been prepared properly prior to placement of controlled fill and/or excavations for foundations. • Foundation excavations are extended to proper depth and have reached proper material. • Materials below footings are adequate to achieve the design bearing capacity.	See Notes	PI	Refer to specific items identified in the Appendix listing exemptions for limitations. Placement of controlled fill exceeding 12" depth under foundations is not permitted without a geotechnical report.

	S2. SOIL COMPACTION AND FILL:			
	Test or Special Inspection	**Type**	**Performed By**	**Code References and Notes**
☑	**a.** Verify use of proper materials, densities and inspect lift thicknesses, placement and compaction during placement of fill.	Continuous	LOR*	* Under the supervision of a geotechnical engineer or LOR's engineering manager. Refer to specific items identified in the Appendix listing exemptions for limitations.
☑	**b.** Compaction testing.	Test	LOR*	* Under the supervision of a geotechnical engineer or LOR's engineering manager. Refer to specific items identified in the Appendix listing exemptions for limitations.

	S4. CAST-IN-PLACE DEEP FOUNDATIONS (PIERS):			
	Test or Special Inspection	**Type**	**Performed By**	**Code References and Notes**
☑	**a.** Inspect drilling operations and maintain complete and accurate records for each pier.	Continuous	PI	Continuous inspection to be provided by project inspector. Refer to specific items identified in the Appendix listing exemptions for limitations.
☑	**b.** Verify pier locations, diameters, plumbness, and lengths. Record concrete or grout volumes.	Continuous	PI	Continuous inspection to be provided by project inspector. Refer to specific items identified in the Appendix listing exemptions for limitations.
☑	**c.** Concrete piers.	Provide tests and inspections per CONCRETE section below.		

	C1. CAST-IN-PLACE CONCRETE			
	Test or Special Inspection	**Type**	**Performed By**	**Code References and Notes**
☑	**a.** Verify use of required design mix.	Periodic	SI	**Table 1705A.3 Item 5, 1910A.1.**
☑	**b.** Identifiy, sample, and test reinforcing steel.	Test	LOR	**1910A.2;** ACI 318-19 Ch. 20 and Section 26.6.1.2; DSA IR 17-10. (See Appendix (end of this form) for exemptions.)
☑	**c.** During concrete placement, fabricate specimens for strength tests, perform slump and air content tests, and determine the temperature of the concrete.	Test	LOR	**Table 1705A.3 Item 6**; ACI 318-19 Sections 26.5 & 26.12.
☑	**d.** Test concrete (f'_c).	Test	LOR	**1905A.1.17;** ACI 318-19 Section 26.12.
☑	**e.** Batch plan inspection:	See Notes	SI	Default of **'Continuous'** per **1705A.3.3**. If approved by DSA, batch plant inspection may be reduced to **'Periodic'** subject to requirements in Section **1705.A.3.3.1**, or eliminated per **1705A.3.3.2**. See IR 17-13. (See Appendix (end of this form) for exemptions.)

	S/A1. STRUCTURAL STEEL, COLD-FORMED STEEL AND ALUMINUM USED FOR STRUCTURAL PURPOSES			
	Test or Special Inspection	**Type**	**Performed By**	**Code References and Notes**
☑	**a.** Verify identification of all materials and: • Mill certificates indicate material properties that comply with requirements. • Material sizes, types and grades comply with requirements.	Periodic	*	**Table 1705A.2.1 Item 3a–3c.** 2202A.1**;** AISI S100-20 Section A3.1 & A3.2, AISI S240-20 Section A3 & A5, AISI S220-20 Sections A4 & A6. * By special inspector or qualified technician when performed off-site.
☑	**b.** Test unidentified materials	Test	LOR	**2202A.1.**
☑	**c.** Examine seam welds of HSS shapes	Periodic	SI	DSA IR 17-3.
☑	**d.** Verify and document steel fabrication per DSA-approved construction documents.	Periodic	SI	Not applicable to cold-formed steel light-frame construction, except for trusses (**1705A.2.4**).

	S/A2. HIGH-STRENGTH BOLTS:			
	Test or Special Inspection	**Type**	**Performed By**	**Code References and Notes**
☑	**a.** Verify identification markings and manufacturer's certificates of compliance conform to ASTM standards specified in the DSA-approved documents.	Periodic	SI	**Table 1705A.2.1 Items 1a & 1b, 2202A.1;** AISC 360-16 Section A3.3, J3.1, and N3.2; RCSC 2014 Section 1.5 & 2.1; DSA IR 17-8 & DSA IR 17-9.
☑	**b.** Test high-strength bolts, nuts and washers.	Test	LOR	**Table 1705A.2.1 Item 1c, 2213A.1**; RCSC 2014 Section 7.2; DSA IR 17-8.
☑	**c.** Bearing-type ("snug tight") connections.	Periodic	SI	**Table 1705A.2.1 Item 2a, 1705A.2.6, 2204A.2;** AISC 360-16 J3.1, J3.2, M2.5 & N5.6; RCSC 2014 Section 9.1; DSA IR 17-9.
☑	**d.** Pretensioned and slip-critical connections.	*	SI	**Table 1705A.2.1 Items 2b & 2c, 1705A.2.6, 2204A.2;** AISC 360-16 J3.1, J3.2, M2.5 & N5.6; RCSC 2014 Sections 9.2 & 9.3; DSA IR 17-9. * "Continuous" or "Periodic" depends on the tightening method used.

	S/A3. WELDING:			
	Test or Special Inspection	**Type**	**Performed By**	**Code References and Notes**
☑	**a.** Verify weld filler material identification markings per AWS designation listed on the DSA- approved documents and the WPS.	Periodic	SI	**1705A.2.5, Table 1705A.2.1 Items 4 & 5**; AWS D1.1 and AWS D1.8 for structural steel; AWS D1.2 for Aluminum; AWS D1.3 for cold-formed steel; AWS D1.4 for reinforcing steel; DSA IR 17- 3.
☑	**b.** Verify weld filler material manufacturer's certificate of compliance.	Periodic	SI	DSA IR 17-3.
☑	**c.** Verify WPS, welder qualifications and equipment.	Periodic	SI	DSA IR 17-3.

	S/A4. SHOP WELDING (IN ADDITION TO SECTION S/A3):			
	Test or Special Inspection	**Type**	**Performed By**	**Code References and Notes**
☑	**a.** Inspect groove welds, multi-pass fillet welds, single pass fillet welds > 5/16", plug and slot welds.	Continuous	SI	**Table 1705A.2.1 Items 5a.1–4;** AISC 360-16 (and AISC 341-16 as applicable); DSA IR 17-3.
☑	**b.** Inspect single-pass fillet welds ≤ 5/16", floor and roof deck welds.	Periodic	SI	**1705A.2.2, Table 1705A.2.1 Items 5a.5 & 5a.6;** AISC 360-16 (and AISC 341-16 as applicable); DSA IR 17-3.

	S/A9. ANCHOR BOLTS AND ANCHOR RODS:			
	Test or Special Inspection	**Type**	**Performed By**	**Code References and Notes**
☑	**a.** Anchor Bolts and Anchor Rods	Test	LOR	Sample and test anchor bolts and anchor rods not readily identifiable per procedures noted in DSA IR 17-11.

Name of Architect or Engineer in general responsible charge:

Name of Structural Engineer (When structural design has been delegated):

Signature of Architect or Structural Engineer: Date:

Note: To facilitate DSA electronic mark-ups and identification stamp application, DSA recommends against using secured electronic or digital signatures.

DSA STAMP

DSA 103-22: LIST OF REQUIRED VERIFIED REPORTS, CBC 2022

1. Soils Testing and Inspection: Geotechnical Verified Report Form DSA 293
2. Structural Testing and Inspection: Laboratory Verified Report Form DSA 291
3. Shop Welding Inspection: Laboratory Verified Report Form DSA 291, or, for independently contracting SI, Special Inspection Verified Report Form DSA 292
4. High-Strength Bolt Installation Inspection: Laboratory Verified Report Form DSA 291, or, for independently contracting SI, Special Inspection Verified Report Form DSA 292

STATE APPROVALS-SITE

IDENTIFICATION STAMP
DIV. OF THE STATE ARCHITECT
APP: 02-121835 INC:
REVIEWED FOR
SS ☑ FLS ☑ ACS ☑
DATE: 11/02/2023

4080 PLAZA GOLDORADO CIRCLE
SUITE B,
CAMERON PARK, CA 95682
530.677.5515

GHD

poligon
PORTER

REGISTERED PROFESSIONAL ENGINEER
JESSICA E. NAPIER
No. S5476
STRUCTURAL
STATE OF CALIFORNIA

STATE APPROVALS-PC

IDENTIFICATION STAMP
DIV. OF THE STATE ARCHITECT
APP: 02-121213 PC
REVIEWED FOR
SS ☑ FLS ☑ ACS ☑ CG ☐
DATE: 7/18/2023

PRE-CHECK (PC) DOCUMENT
CODE: 2022 CBC
A SEPARATE PROJECT APPLICATION FOR CONSTRUCTION IS REQUIRED.

NOTES AND SPECIAL INSPECTIONS

HIP ROOF - RAM

RAM1.1

FOUNDATION PLAN NOTES:

1. TOP OF ALL FOUNDATIONS MUST BE CONSTRUCTED AT ONE COMMON ELEVATION (COORDINATE WITH SITE PLANS - NOT BY POLIGON)
2. ALL FOUNDATIONS MUST BE CENTERED UNDER COLUMNS (UNO).
3. SEE SHEET RAM1.1 FOR CONCRETE REQUIREMENTS.
4. PRIOR TO FORMING AND CASTING FOUNDATIONS, REVIEW FOUNDATION PLAN FOR REQUIRED ORIENTATION.
5. FOUNDATION MATERIAL AND INSTALLATION NOT BY POLIGON.
6. VIBRATE CONCRETE FULL DEPTH OF FOUNDATION.
7. FOR DRILLED PIER FOUNDATIONS, PREVENT SOIL FROM ENTERING EXCAVATED HOLE (FORM, ETC).

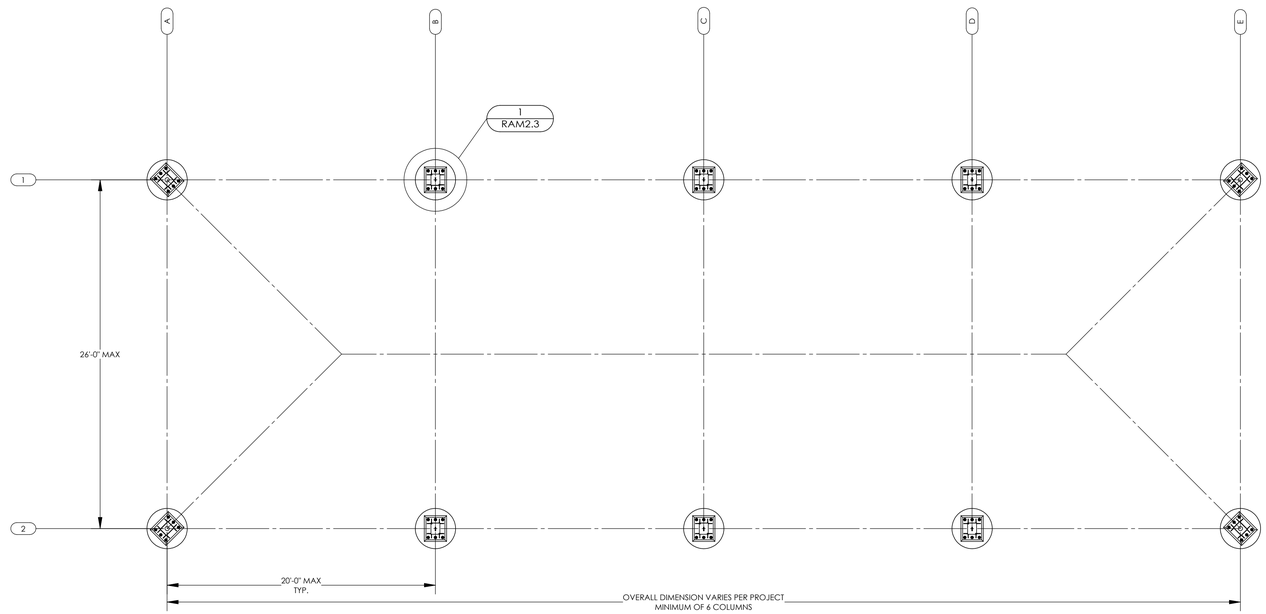

FOUNDATION PLAN (DRILLED PIER)

SCALE: 3/16" = 1'-0"

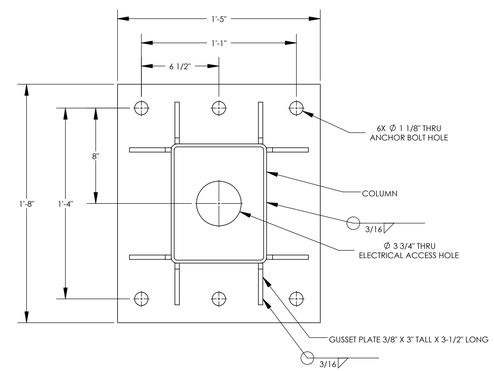

DETAIL 3

SCALE: 1-1/2" = 1'-0"

COLUMN BASEPLATE

3

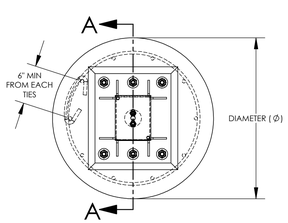

DETAIL 1

SCALE: 3/4" = 1'-0"

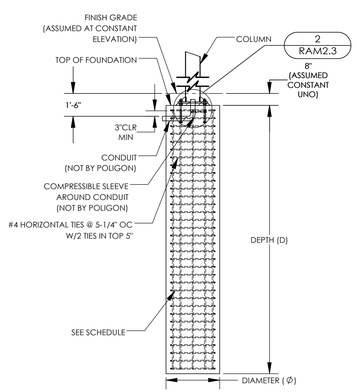

SECTION A-A

SCALE: 1/4" = 1'-0"

FOUNDATION REQUIREMENTS VARY PER PROJECT

SEE SHEET RAM1.0 FOR REQUIRED LOAD SCENARIO AND FOUNDATION TYPE (STEP 9 OF 'INSTRUCTIONS')

ONLY REFERENCE COPY OF PC DRAWINGS SUBMITTED FOR THIS PROJECT

DRILLED PIER

SIZE AND REINFORCING REQUIREMENTS

LOAD SCENARIO	DIAMETER (Ø)	DEPTH (D)	VERTICAL REINFORCING[1]	
			QTY	SIZE
1	3'-0"	13'-0"	10	#7
~~2~~	~~3'-0"~~	~~15'-0"~~	~~10~~	~~#7~~

[1] EQUALLY SPACED AROUND DRILLED PIER

DRILLED PIER FOUNDATION

1

NOTES:

1. GROUT SHALL BE NON-METALLIC, NON-SHRINK GROUT WITH MINIMUM F'c=6500 PSI.
2. COLUMNS FABICATED ASSUMING 1-1/2" GROUT PAD.
3. COLUMN BASES BELOW FINISH GRADE SHOULD BE PROTECTED FROM CORROSION, SELECT ONE OF THE FOLLOWING OPTIONS BELOW.

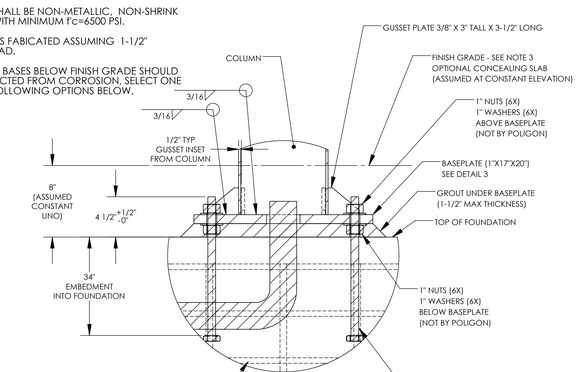

COLUMN BASE PROTECTION

BELOW SURFACE COLUMN INSTALLATION

[ ] CONCRETE SLAB - 3" MIN ANCHOR BOLT COVER

[ ] MASTIC COATING - 1/4" THICK MIN COATING ON ALL STEEL SURFACES BELOW GRADE

DETAIL 2

SCALE: 1-1/2" = 1'-0"

COLUMN BASEPLATE AND ANCHOR BOLTS

2

STATE APPROVALS-SITE

IDENTIFICATION STAMP
DIV. OF THE STATE ARCHITECT
APP: 02-121835 INC:
REVIEWED FOR
SS ☑ FLS ☑ ACS ☑
DATE: 11/02/2023

4600 PLAZA GOLDCREEK DR, STE 110
SUITE B
CHANHASSEN, MN 55317
530.677.1516

STATE APPROVALS-PC

IDENTIFICATION STAMP
DIV. OF THE STATE ARCHITECT
APP: 02-121213 PC
REVIEWED FOR
SS ☑ FLS ☑ ACS ☑ CG ☐
DATE: 7/18/2023

REGISTERED PROFESSIONAL ENGINEER
JESSICA E. NAPIER
No. S5476
STRUCTURAL
STATE OF CALIFORNIA

PRE-CHECK (PC) DOCUMENT
CODE: 2022 CBC
A SEPARATE PROJECT APPLICATION FOR CONSTRUCTION IS REQUIRED.

FOUNDATION PLAN DRILLED PIER

HIP ROOF - RAM 30

RAM2.3

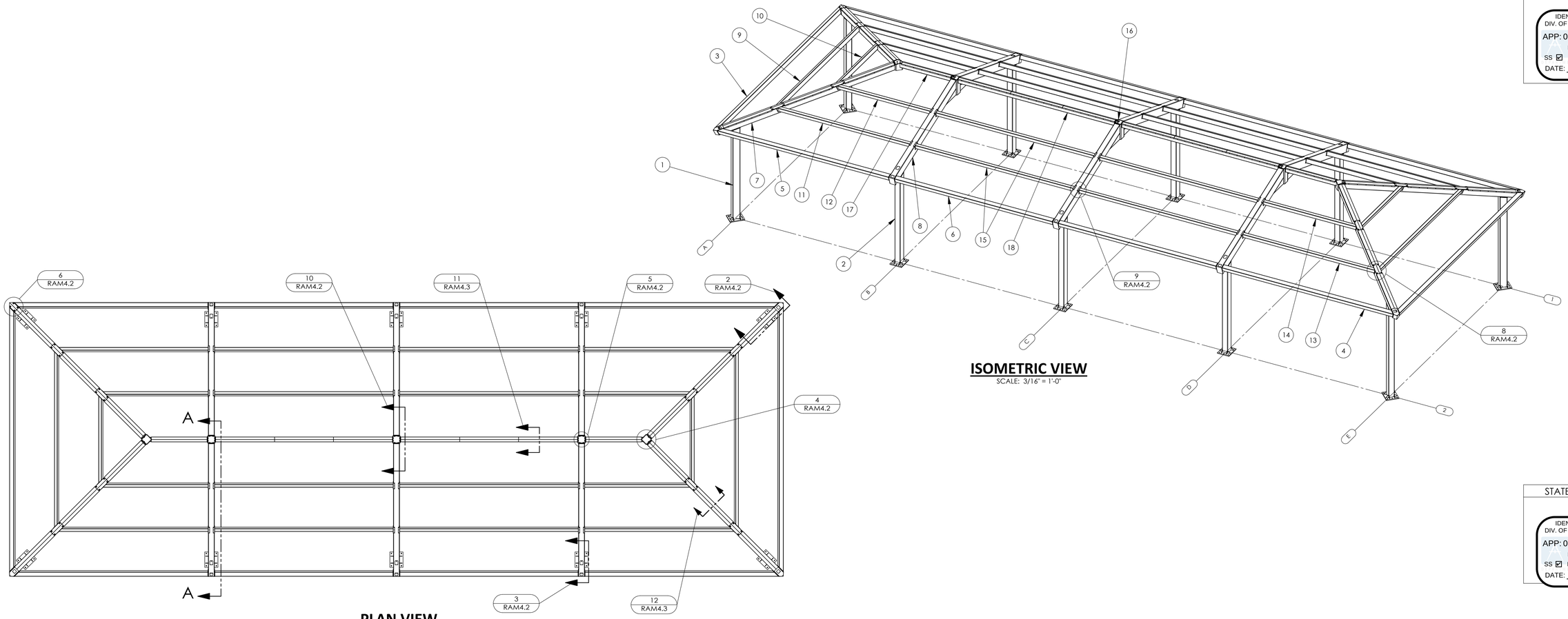

ISOMETRIC VIEW
SCALE: 3/16" = 1'-0"

PLAN VIEW
SCALE: 3/16" = 1'-0"

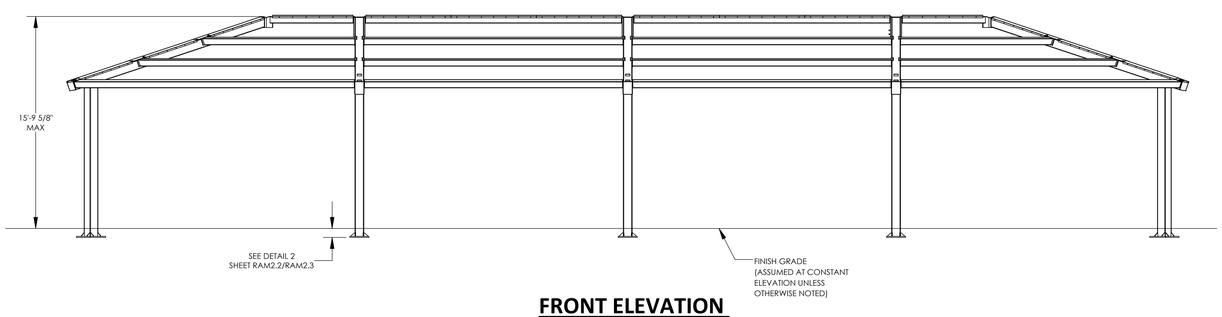

FRONT ELEVATION
SCALE: 3/16" = 1'-0"

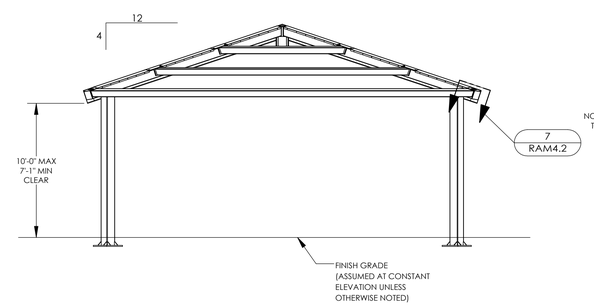

SIDE ELEVATION
SCALE: 3/16" = 1'-0"

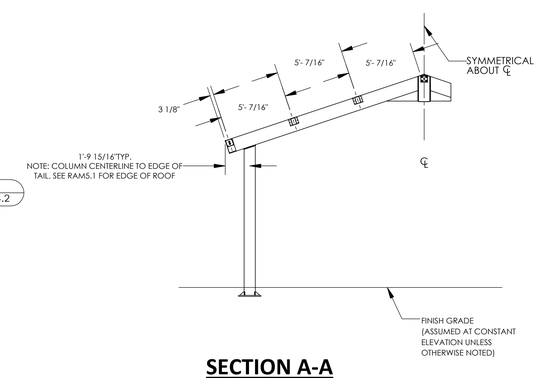

SECTION A-A
SCALE: 3/16" = 1'-0"

ITEM	QTY.	PART NO.	DESCRIPTION	MATERIAL	WEIGHT
18	2	-	R-BEAM ASM	HSS6X6X3/16	287.26
17	2	-	END R-BEAM ASM	HSS6X6X3/16	154.14
16	6	-	C-TUBE ASM	HSS10X10X5/8	143.92
15	8	-	SIDE PURLIN ASM	HSS6X4x3/16	234.29
14	2	-	CORNER PURLIN ASM	HSS6X4x3/16	136.79
13	2	-	CORNER PURLIN ASM	HSS6X4x3/16	193.62
12	2	-	CORNER PURLIN ASM	HSS6X4x3/16	136.94
11	2	-	CORNER PURLIN ASM	HSS6X4x3/16	193.78
10	2	-	END PURLIN ASM	HSS6X4x3/16	110.56
9	2	-	END PURLIN ASM	HSS6X4x3/16	224.23
8	6	-	GABLE BEAM ASM	HSS12X8X1/4	559.76
7	4	-	HIP BEAM ASM	HSS8X8X3/16	431.12
6	4	-	SIDE EAVE BEAM ASM	HSS6X6X3/16	284.96
5	2	-	CORNER EAVE BEAM ASM	HSS6X6X3/16	306.07
4	2	-	CORNER EAVE BEAM ASM	HSS6X6X3/16	306.00
3	2	-	END EAVE BEAM ASM	HSS6X6X3/16	413.48
2	6	-	SIDE COLUMN ASM	HSS10X8X1/4	425.36
1	4	-	CORNER COLUMN ASM	HSS10X8X1/4	433.63

STATE APPROVALS-SITE

IDENTIFICATION STAMP
DIV. OF THE STATE ARCHITECT
APP: 02-121835 INC:
REVIEWED FOR
SS ☑ FLS ☑ ACS ☑
DATE: 11/02/2023

4080 PLAZA GOLDORADO CIRCLE
SUITE B
CAMERON PARK, CA 95682
530.677.5016

poligon PORTER

REGISTERED PROFESSIONAL ENGINEER
JESSICA E. NAPIER
No. S5476
STRUCTURAL
STATE OF CALIFORNIA

STATE APPROVALS-PC

IDENTIFICATION STAMP
DIV. OF THE STATE ARCHITECT
APP: 02-121213 PC
REVIEWED FOR
SS ☑ FLS ☑ ACS ☑ CG ☐
DATE: 7/18/2023

PRE-CHECK (PC) DOCUMENT
CODE: 2022 CBC
A SEPARATE PROJECT APPLICATION FOR CONSTRUCTION IS REQUIRED.

FRAMING PLAN

HIP ROOF - RAM 30

RAM3.1

ALL HIDDEN NUTS AND BOLTS (INSTALLED IN SHOP DURING FABRICATION) ARE SECURED WITH THIS NUT AND BOLT RESTAINING SYSTEM.

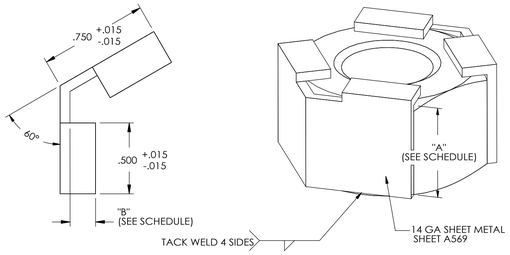

DIMENSION SCHEDULE				
FASTENER	DIM A		DIM B	
5/8" NUT	.631	+.000 -.015	.180	+.015 -.015
5/8" BOLT	.403	+.000 -.015	.250	+.015 -.015
3/4" NUT	.758	+.000 -.015	.180	+.015 -.015
3/4" BOLT	.483	+.000 -.015	.375	+.015 -.015
1" NUT	1.012	+.000 -.015	.180	+.015 -.015
1" BOLT	.643	+.000 -.015	.375	+.015 -.015

NUT & BOLT RESTRAINING SYSTEM 1

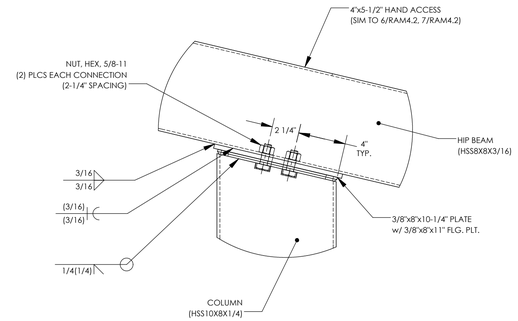

HIP BEAM CONNECTION @ COLUMN 2

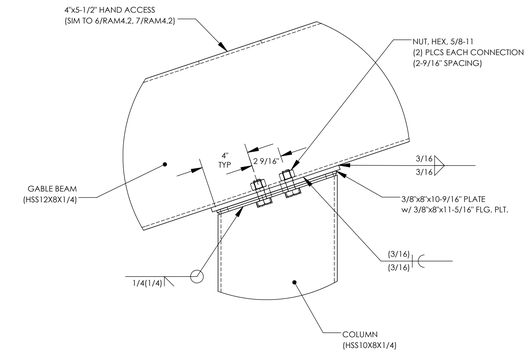

GABLE BEAM CONNECTION @ COLUMN 3

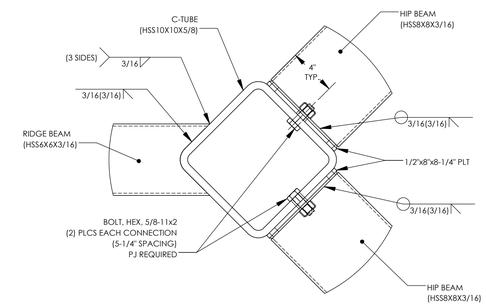

HIP BEAM CONNECTION @ COMPRESSION TUBE 4

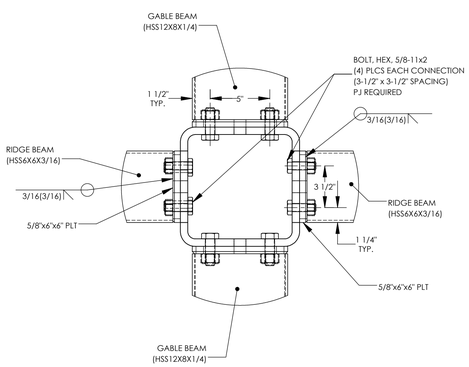

RIDGE BEAM CONNECTION @ COMPRESSION TUBE 5

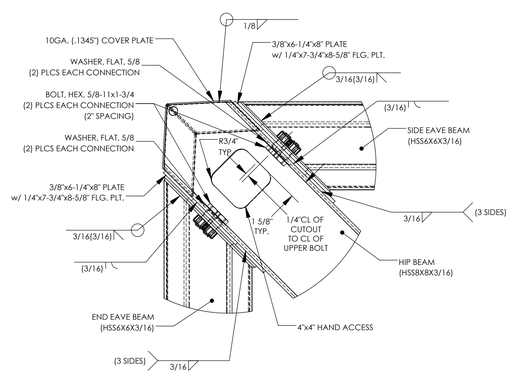

EAVE BEAM CONNECTION @ HIP BEAM 6

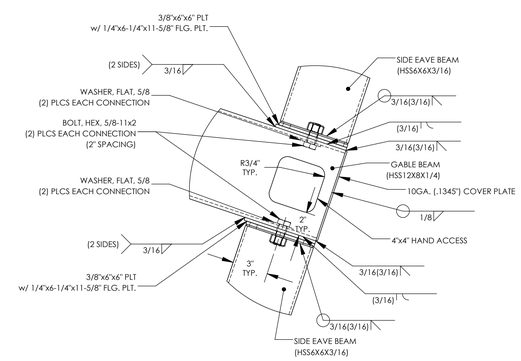

EAVE BEAM CONNECTION @ GABLE BEAM 7

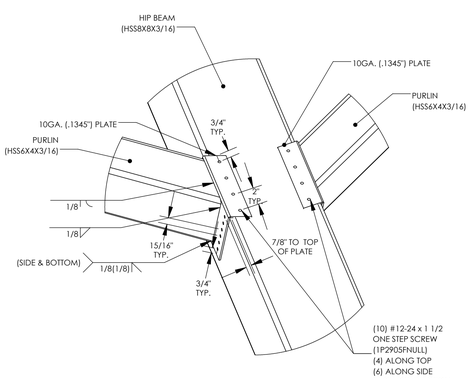

PURLIN CONNECTION @ HIP BEAM 8

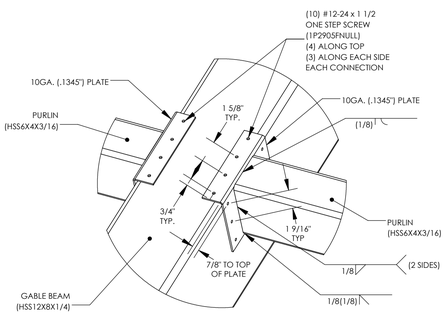

PURLIN CONNECTION @ GABLE BEAM 9

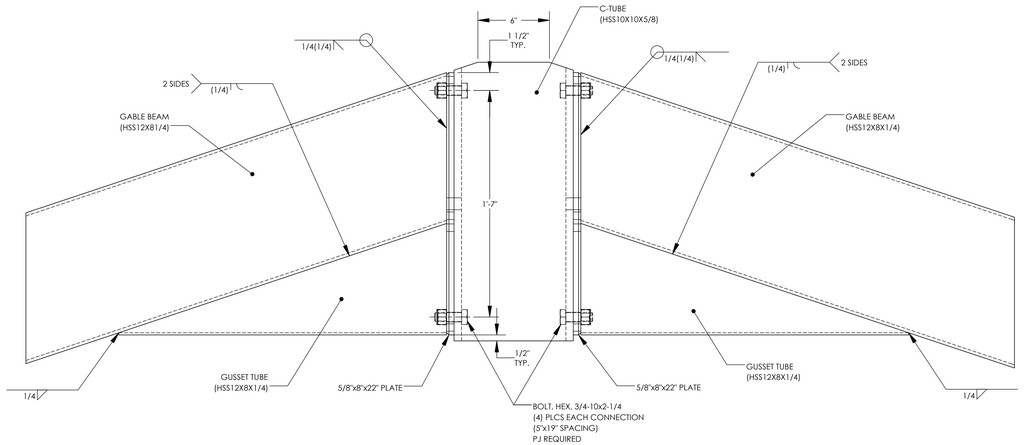

GABLE BEAM CONNECTION @ COMPRESSION TUBE 10

STATE APPROVALS-SITE

IDENTIFICATION STAMP
DIV. OF THE STATE ARCHITECT
APP: 02-121835 INC:
REVIEWED FOR
SS ☑ FLS ☑ ACS ☑
DATE: 11/02/2023

4000 PLAZA GOLDSCRADDC 12PCLE
SUITE B
CAMERON PARK, CA 95682
530.677.1016
GHD
poligon
PORTER

REGISTERED PROFESSIONAL ENGINEER JESSICA E. NAPPER No. S5476 STRUCTURAL STATE OF CALIFORNIA

STATE APPROVALS-PC

IDENTIFICATION STAMP
DIV. OF THE STATE ARCHITECT
APP: 02-121213 PC
REVIEWED FOR
SS ☑ FLS ☑ ACS ☑ CG ☐
DATE: 7/18/2023

PRE-CHECK (PC) DOCUMENT
CODE: 2022 CBC
A SEPARATE PROJECT APPLICATION FOR CONSTRUCTION IS REQUIRED.

FRAME CONNECTION DETAILS

HIP ROOF - RAM 30

RAM4.2

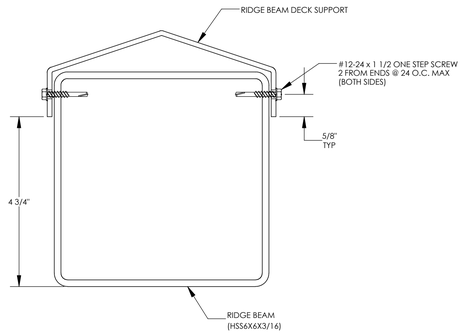

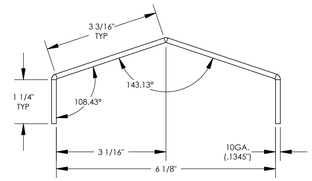

RAM 30 - RIDGE
Fy = 36 KSI
A = 1.231 IN^2
Ix = 1.149 IN^4
Iy = 6.272 IN^4
Sx = 0.771 IN^3
Sy = 1.962 IN^3

RIDGE BEAM DECK SUPPORT DETAIL

11

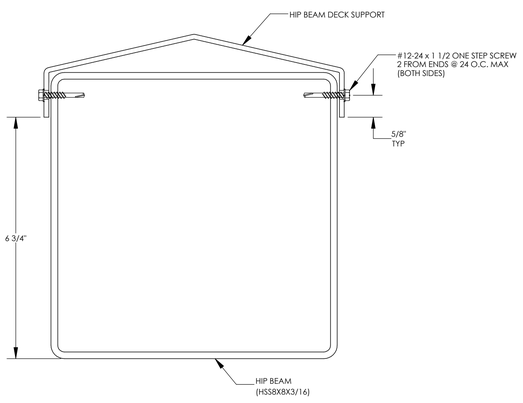

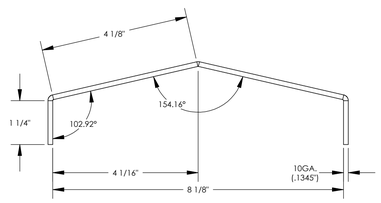

RAM 30 - HIP
Fy = 36 KSI
A = 1.484 IN^2
Ix = 1.341 IN^4
Iy = 12.353 IN^4
Sx = 0.886 IN^3
Sy = 2.943 IN^3

HIP BEAM DECK SUPPORT DETAIL

12

STATE APPROVALS-SITE

IDENTIFICATION STAMP
DIV. OF THE STATE ARCHITECT
APP: 02-121835 INC:
REVIEWED FOR
SS ☑ FLS ☑ ACS ☑
DATE: 11/02/2023

4080 PLAZA GOLDORADO CIRCLE
SUITE B
CAMERON PARK, CA 95682
530.677.0016

poligon PORTER

REGISTERED PROFESSIONAL ENGINEER
JESSICA E. NAPIER
No. S5476
STRUCTURAL
STATE OF CALIFORNIA

STATE APPROVALS-PC

IDENTIFICATION STAMP
DIV. OF THE STATE ARCHITECT
APP: 02-121213 PC
REVIEWED FOR
SS ☑ FLS ☑ ACS ☑ CG ☐
DATE: 7/18/2023

PRE-CHECK (PC) DOCUMENT
CODE: 2022 CBC
A SEPARATE PROJECT APPLICATION FOR CONSTRUCTION IS REQUIRED.

SECTION DETAILS

HIP ROOF - RAM 30

RAM4.3

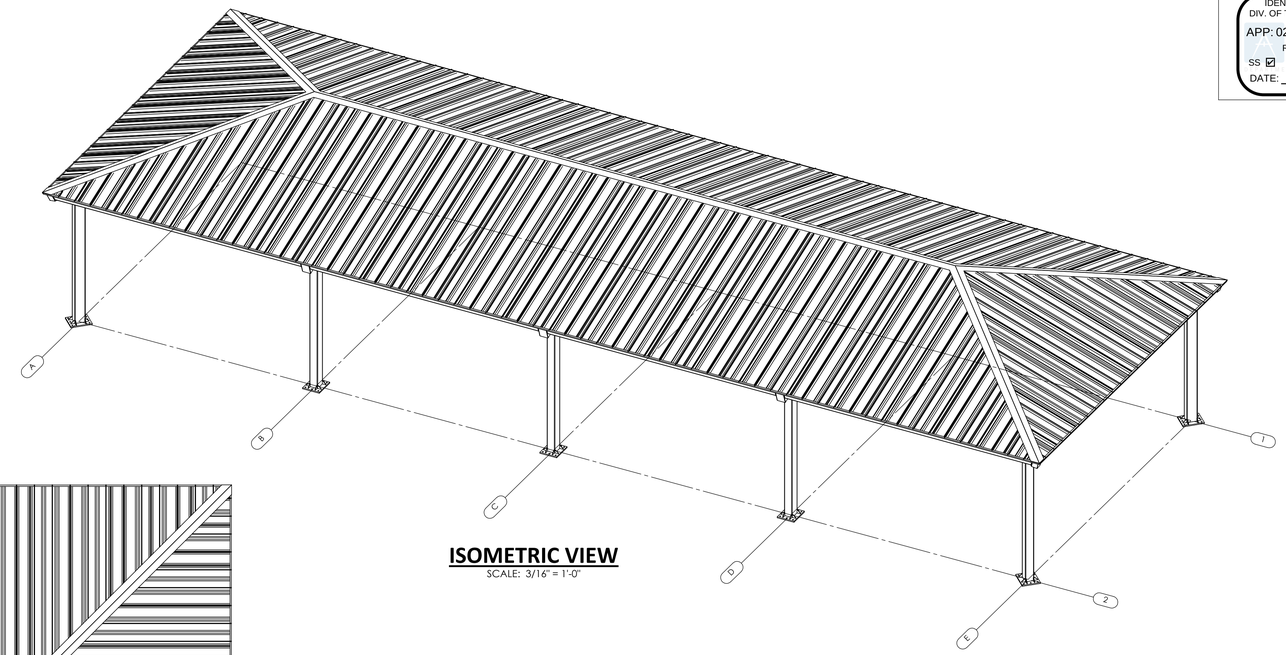

ISOMETRIC VIEW

SCALE: 3/16" = 1'-0"

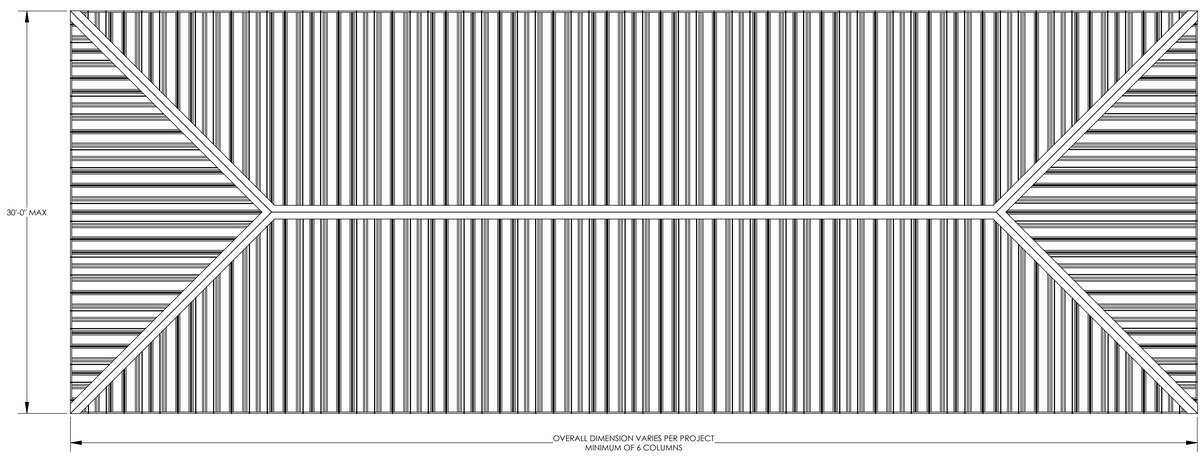

PLAN VIEW

SCALE: 3/16" = 1'-0"

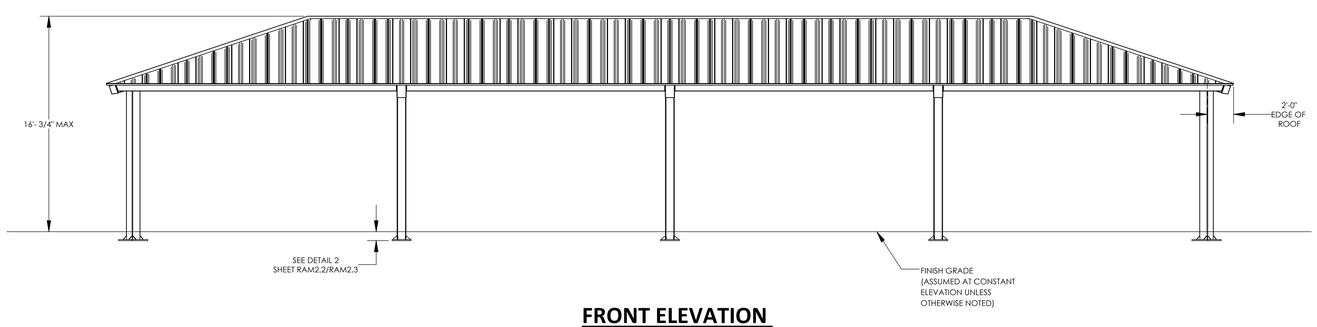

FRONT ELEVATION

SCALE: 3/16" = 1'-0"

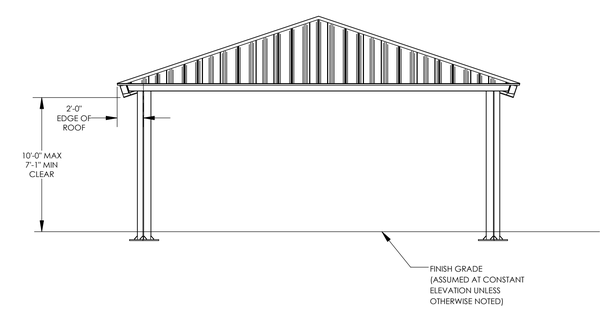

SIDE ELEVATION

SCALE: 3/16" = 1'-0"

STATE APPROVALS-SITE

IDENTIFICATION STAMP
DIV. OF THE STATE ARCHITECT
APP: 02-121835 INC:
REVIEWED FOR
SS ☑ FLS ☑ ACS ☑
DATE: 11/02/2023

GHD
4080 PLAZA GOLDORADO CIRCLE
SUITE B
CAMERON PARK, CA 95682
530.677.0016

poligon
PORTER

REGISTERED PROFESSIONAL ENGINEER
JESSICA E. NAPIER
No. S5476
STRUCTURAL
STATE OF CALIFORNIA

STATE APPROVALS-PC

IDENTIFICATION STAMP
DIV. OF THE STATE ARCHITECT
APP: 02-121213 PC
REVIEWED FOR
SS ☑ FLS ☑ ACS ☑ CG ☐
DATE: 7/18/2023

PRE-CHECK (PC) DOCUMENT
CODE: 2022 CBC
A SEPARATE PROJECT APPLICATION FOR CONSTRUCTION IS REQUIRED.

ARCHITECTURAL VIEWS

HIP ROOF - RAM 30

RAM5.1

STANDING SEAM INSTALLATION NOTES:

THE DETAILS SHOWN ARE SUGGESTIONS OR GUIDELINES ON HOW TO ERECT THE SYSTEMS. THE INFORMATION SHOWN IS ACCURATE, BUT IT IS NOT INTENDED TO COVER ALL INSTANCES, BUILDING REQUIREMENTS, DESIGNS OR CODES. THE DETAILS MAY REQUIRE CHANGES OR REVISIONS DUE TO FIELD CONDITIONS.

IT SHALL BE THE RESPONSIBILITY OF THE ERECTOR TO ENSURE THAT THE DETAILS MEET PARTICULAR BUILDING REQUIREMENTS AND TO ASSURE ADEQUATE WATER TIGHTNESS.

THE ERECTOR SHOULD THOROUGHLY FAMILIARIZE HIMSELF/HERSELF WITH ALL ERECTION INSTRUCTIONS BEFORE STARTING WORK.

THE PANELS SHOULD BE INSTALLED PLUMB, STRAIGHT, AND ACCURATELY TO THE ADJACENT WORK.

FLASHING AND TRIM SHALL BE INSTALLED TRUE, AND IN PROPER ALIGNMENT, WITH ANY EXPOSED FASTENERS EQUALLY SPACED FOR THE BEST APPEARANCE.

SEALANT SHALL BE FIELD APPLIED ON DRY, CLEAN SURFACES. SOME FIELD CUTTING AND FITTING OF PANELS AND FLASHING IS TO BE EXPECTED BY THE ERECTOR AND MINOR FIELD CORRECTIONS ARE A PART OF NORMAL ERECTION WORK.

WORKMANSHIP SHALL BE OF THE BEST INDUSTRY STANDARDS AND INSTALLATION SHALL BE PERFORMED BY EXPERIENCED METAL CRAFTSMEN.

METAL SHAVINGS FROM DRILLING OR INSTALLATION OF ROOF FASTENERS MUST BE CAREFULLY REMOVED FROM THE ROOF BY BRUSHING OR SWEEPING AT THE END OF EACH DAY DURING INSTALLATION. SHAVINGS LEFT ON THE ROOF WILL QUICKLY RUST AND STAIN THE ROOF FINISH.

COVER ACCESS HOLES WITH GRACE ICE AND WATER SHIELD BEFORE ATTACHING ROOF DECKING

METAL ROOFING PRODUCT AND INSTALLATION SHALL MEET ALL REQUIREMENTS OF ICC-ES REPORT ESL-1082.

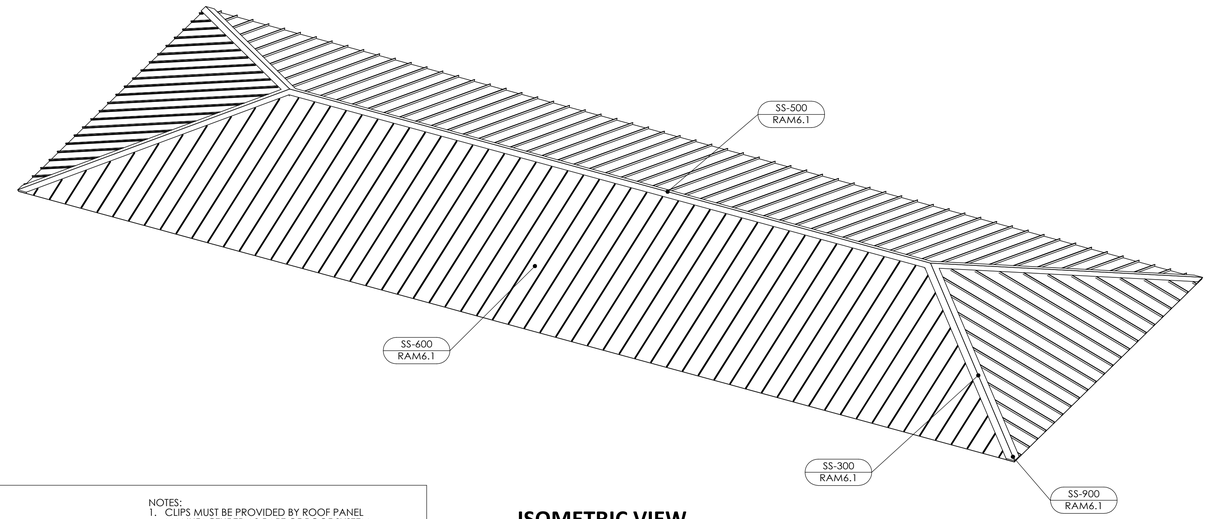

ISOMETRIC VIEW

SCALE: 3/16" = 1'-0"

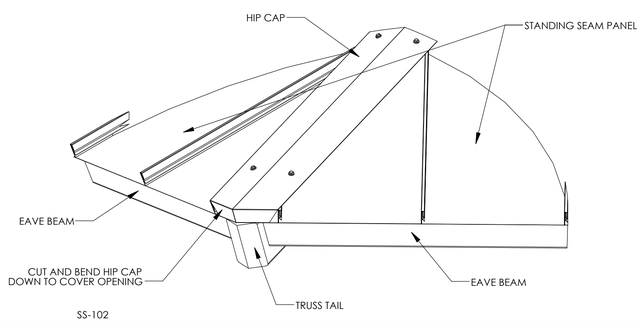

CORNER DETAIL — SS-900

NOTES:
1. CLIPS MUST BE PROVIDED BY ROOF PANEL MANUFACTURER AS PART OF ROOF SYSTEM.
2. MATERIAL THICKNESS MUST BE 18 GAGE (0.048"-0.053")

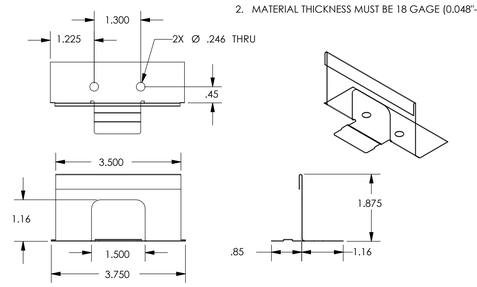

CLIP DETAIL — SS-CLP

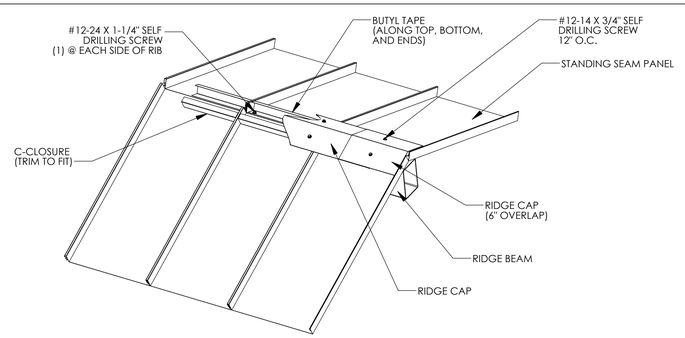

RIDGE DETAIL — SS-500

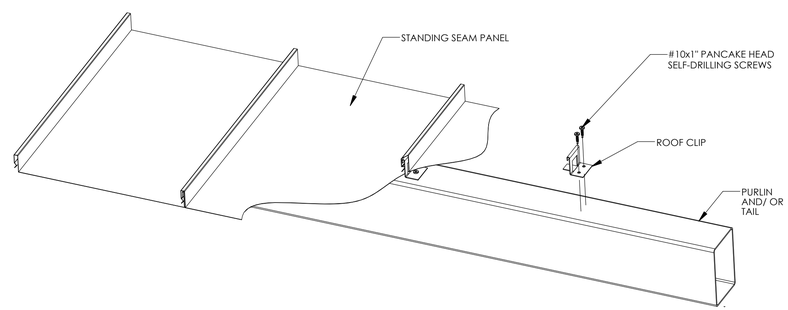

PURLIN DETAIL — SS-600

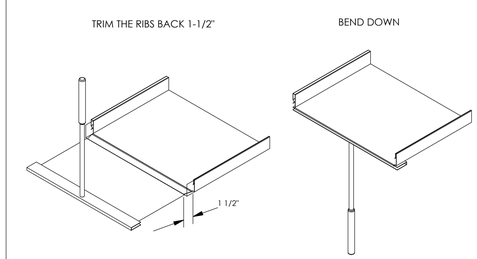

HEMMING DETAIL — SS-HEM

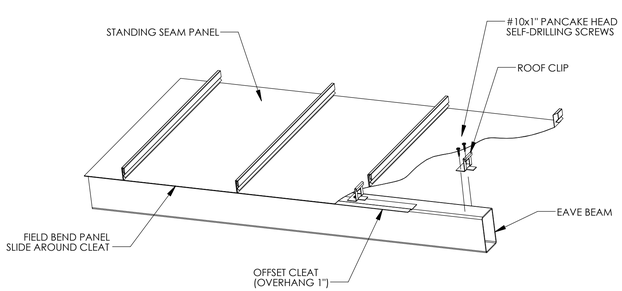

EAVE DETAIL — SS-200

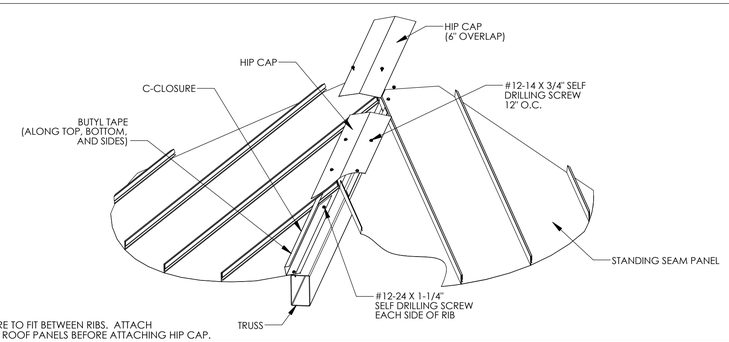

NOTE:
TRIM C-CLOSURE TO FIT BETWEEN RIBS. ATTACH C-CLOSURE TO ROOF PANELS BEFORE ATTACHING HIP CAP.

TRUSS DETAIL — SS-300

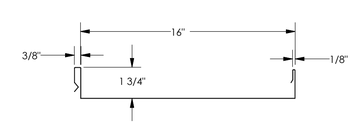

GENERAL
GAGE = 22
FY = 50 KSI

TOP IN COMPRESSION
Ix = 0.1200 IN^4
Se = 0.0803 IN^3
Ma = 2.4056 IN-KIPS

BOTTOM IN COMPRESSION
Ix = 0.0570 IN^4
Se = 0.0729 IN^3
Ma = 1.7220 IN-KIPS

ROOF DECK SECTION PROPERTIES — SS-950

STATE APPROVALS-SITE

IDENTIFICATION STAMP
DIV. OF THE STATE ARCHITECT
APP: 02-121835 INC:
REVIEWED FOR
SS ☑ FLS ☑ ACS ☑
DATE: 11/02/2023

GHD
4600 PLAZA GOLDORADO CIRCLE
SUITE B
CAMERON PK, CA 95682
530.677.0316

poligon
PORTER

REGISTERED PROFESSIONAL ENGINEER
JESSICA E. NAPIER
No. S5476
STRUCTURAL
STATE OF CALIFORNIA

STATE APPROVALS-PC

IDENTIFICATION STAMP
DIV. OF THE STATE ARCHITECT
APP: 02-121213 PC
REVIEWED FOR
SS ☑ FLS ☑ ACS ☑ CG ☐
DATE: 7/18/2023

PRE-CHECK (PC) DOCUMENT
CODE: 2022 CBC
A SEPARATE PROJECT APPLICATION FOR CONSTRUCTION IS REQUIRED.

ROOF CONNECTION DETAILS

HIP ROOF - RAM

RAM6.1

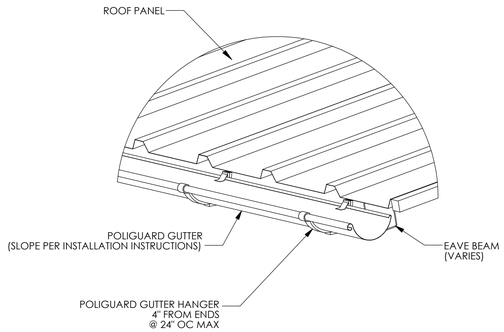

GUTTER DETAIL

GS-100

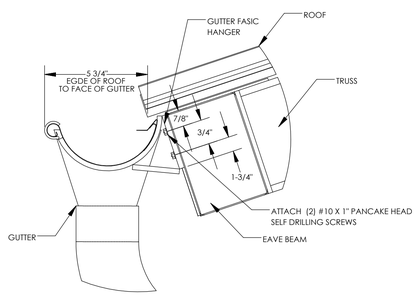

GUTTER DETAIL

GS-200

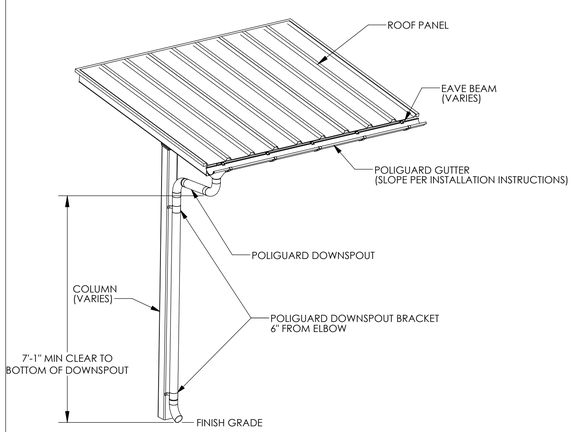

DOWNSPOUT DETAIL

GS-300

POLIGUARD GUTTER SYSTEM NOTES:

1. PREFABRICATED GUTTER SYSTEM IS ATTACHED TO THE STRUCTURE AFTER ROOF IS INSTALLED.
2. DETAILED INSTALLATION INSTRUCTIONS ARE SHIPPED WITH THE STRUCTURE.
3. ~~DOWNSPOUTS REQUIRED AT EACH COLUMN.~~

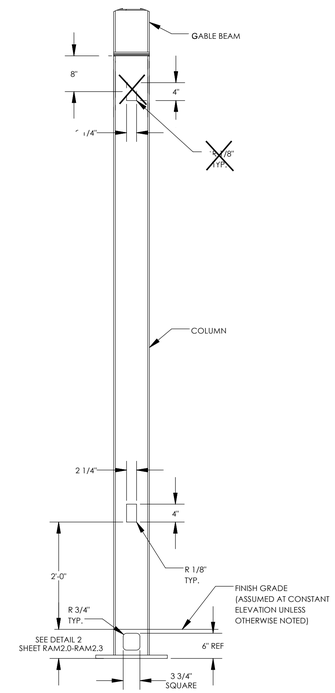

ELECTRICAL CUTOUT IN COLUMNS

EC-100

ELECTRICAL CUTOUT NOTES:

1. MAXIMUM ONE CUTOUT PERMITTED IN EACH MEMBER.
2. CUTOUTS CAN BE PLACED ON ANY SIDE OF A MEMBER.
3. CUTOUTS CAN BE PLACED ALONG MEMBERS AS INDICATED IN THE DETAILS.
4. ARCHITECTS REQUESTING CUTOUTS MUST MARKUP APPROVED PC DRAWINGS TO LOCATE CUTOUTS FOR APPROVAL AND FABRICATION.

STATE APPROVALS-SITE

IDENTIFICATION STAMP
DIV. OF THE STATE ARCHITECT
APP: 02-121835 INC:
REVIEWED FOR
SS ☑ FLS ☑ ACS ☑
DATE: 11/02/2023

4080 PLAZA GOLDORADO CIRCLE
SUITE B
CAMERON PARK, CA 95682
530.677.5515

poligon PORTER

REGISTERED PROFESSIONAL ENGINEER
JESSICA E. NAPIER
No. S5476
STRUCTURAL
STATE OF CALIFORNIA

STATE APPROVALS-PC

IDENTIFICATION STAMP
DIV. OF THE STATE ARCHITECT
APP: 02-121213 PC
REVIEWED FOR
SS ☑ FLS ☑ ACS ☑ CG ☐
DATE: 7/18/2023

PRE-CHECK (PC) DOCUMENT
CODE: 2022 CBC
A SEPARATE PROJECT APPLICATION FOR CONSTRUCTION IS REQUIRED.

MISC DESIGN OPTIONS

HIP ROOF - RAM

RAM7.0

ELECTRICAL CUTOUT AND ACCESS INSTRUCTIONS

- IF 'YES' IS NOT SELECTED IN STEP 2 ON ORDER FORM, THEN THIS SHEET NEED NOT BE INCLUDED IN SITE-SPECIFIC DRAWINGS
- ONLY COLUMNS ARE PERMITTED TO HAVE ELECTRICAL ACCESS
- THE COLUMN CUTOUTS ARE STATIC AND SHOWN IN THE 'MISC DESIGN OPTIONS SHEET'
- IDENTIFY THE COLUMNS WITH ELECTRICAL CUTOUTS BELOW (REFERENCE GRID LINES IN ISOMETRIC FRAME VIEW TO THE RIGHT)
- STRUCTURES MAY BE LONGER OR SHORTER THAN THE ISOMETRIC FRAME VIEW SHOWN
- IF SITE-SPECIFIC STRUCTURE HAS A DIFFERENT NUMBER OF COLUMNS THAN ISOMETRIC SHOWN, REFERENCE COLUMN A1 IN THE ISOMETRIC VIEW AND CONTINUE PATTERN TO FIT SITE-SPECIFIC LAYOUT
- IF NO COLUMNS ARE IDENTIFIED, POLIGON WILL ASSUME CUTOUTS ONLY IN COLUMN A1
- CONTACT POLIGON ENGINEERING FOR SPECIAL PROJECT SPECIFIC REQUIREMENTS

ELECTRICAL CUTOUT IDENTIFICATION IN COLUMNS

SPECIFIC MEMBERS A1, E2

~~**EXAMPLE:**~~

~~**ELECTRICAL CUTOUT IDENTIFICATION IN COLUMNS**~~

~~SPECIFIC MEMBERS: A1 , B1, F1~~

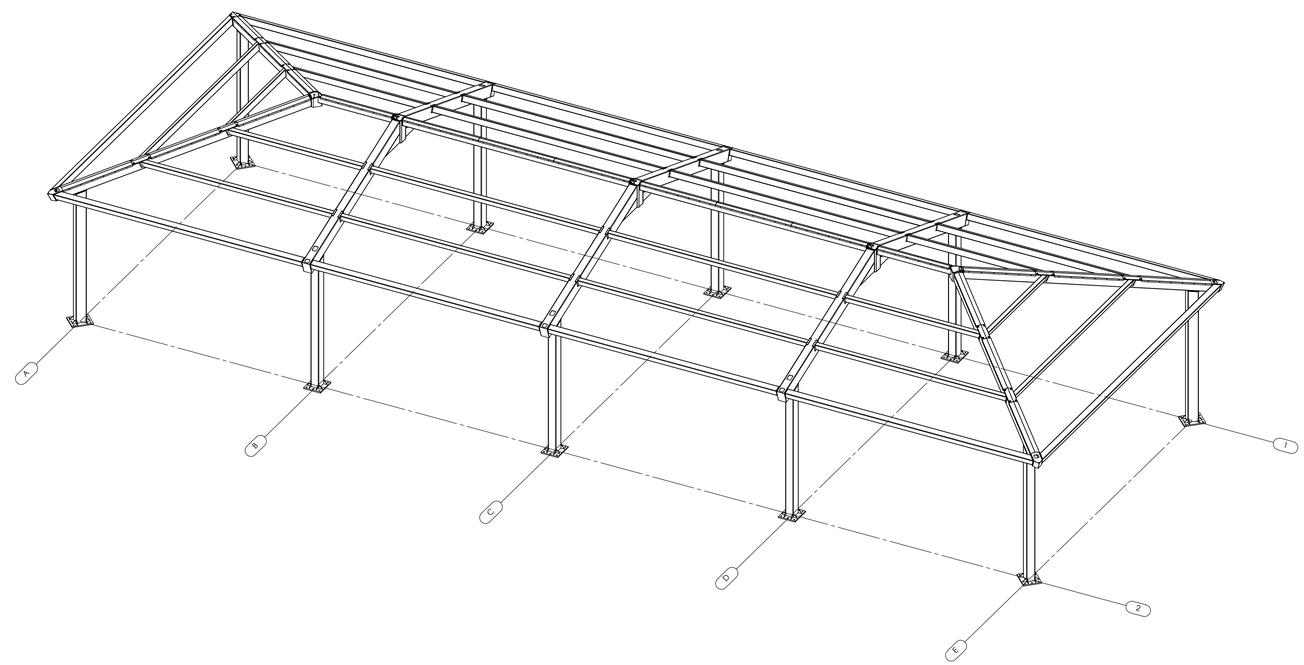

STATE APPROVALS-SITE

IDENTIFICATION STAMP
DIV. OF THE STATE ARCHITECT
APP: 02-121835 INC:
REVIEWED FOR
SS ☑ FLS ☑ ACS ☑
DATE: 11/02/2023

4600 PLAZA GOLDCREEK DR. SUITE B
CHANHASSEN, MN, 55317
630.677.1516

poligon

PORTER

REGISTERED PROFESSIONAL ENGINEER
JESSICA E. NAPIER
No. S5476
STRUCTURAL
STATE OF CALIFORNIA

STATE APPROVALS-PC

IDENTIFICATION STAMP
DIV. OF THE STATE ARCHITECT
APP: 02-121213 PC
REVIEWED FOR
SS ☑ FLS ☑ ACS ☑ CG ☐
DATE: 7/18/2023

PRE-CHECK (PC) DOCUMENT
CODE: 2022 CBC
A SEPARATE PROJECT APPLICATION FOR CONSTRUCTION IS REQUIRED.

ELECTRICAL CUTOUTS

HIP ROOF - RAM

RAM7.1

LODI UNIFIED SCHOOL DISTRICT

LODI UNIFIED SCHOOL DISTRICT LUNCH SHELTERS - CLAIRMONT ELEMENTARY SCHOOL

8282 LE MANS AVENUE
STOCKTON, CA 95210

THE LINE SHOWN ABOVE IS EXACTLY ONE INCH LONG AT THIS SHEETS ORIGINAL PAGE SIZE

AGENCY APPROVAL:

IDENTIFICATION STAMP
DIV. OF THE STATE ARCHITECT
APP: 02-121999 INC:
REVIEWED FOR
SS ☑ FLS ☑ ACS ☑
DATE: 11/30/2023

GENERAL NOTES

1. CONSTRUCTION DOCUMENTS DESCRIBE THE PRODUCTS, SYSTEMS, QUANTITIES, CONFIGURATION, AND PERFORMANCE SPECIFICATIONS THAT DELIVER THE OVERALL DESIGN INTENT OF THE PROJECT.
2. THE CONSTRUCTION DOCUMENT DRAWINGS AND SPECIFICATIONS ARE COMPLEMENTARY, AND WHAT IS REQUIRED BY ONE SHALL BE AS BINDING AS IF REQUIRED BY BOTH.
3. PERFORMANCE BY THE CONSTRUCTION TEAM SHALL BE CONSISTENT WITH THE CONSTRUCTION DRAWINGS AND SPECIFICATIONS AS NECESSARY TO DELIVER THE INDICATED RESULTS OF THE DESIGN INTENT.
4. VERIFY ALL DIMENSIONS, LOCATIONS OF EXISTING UTILITIES, AND CONDITIONS ON THE JOB SITE PRIOR TO THE START OF WORK OR PORTIONS OF THE WORK. NOTIFY THE ARCHITECT IMMEDIATELY OF ANY DISCREPANCIES BETWEEN THE ACTUAL FIELD CONDITIONS AND THE CONSTRUCTION DOCUMENTS. EXISTING CONDITIONS ARE INDICATED AS A RESULT OF FIELD OBSERVATIONS, INFORMATION SHOWN ON AVAILABLE DOCUMENTS AND FIELD CONDITIONS AT THE TIME OF PREPARATION.
5. ALL MATERIALS AND WORKMANSHIP SHALL COMPLY WITH ALL GOVERNING CODES, ORDINANCES, REGULATIONS AND LAWS.
6. THE DESIGN ADEQUACY AND SAFETY OF ERECTION BRACING, SHORING, TEMPORARY SUPPORTS AND SCAFFOLDING IS THE SOLE RESPONSIBILITY OF THE CONTRACTOR.
7. WHERE ANY CONFLICT OCCURS BETWEEN THE REQUIREMENTS OF LAWS, CODES, ORDINANCES, RULES AND REGULATIONS, THE MOST STRINGENT SHALL GOVERN.
8. IN NO CASE SHALL WORKING DIMENSIONS BE SCALED FROM PLANS, SECTIONS OR DETAILS ON THE DRAWINGS.
9. DETAILS MARKED 'TYPICAL' SHALL APPLY IN ALL CASES UNLESS SPECIFICALLY NOTED OTHERWISE.
10. ENACT ALL MEASURES TO PROTECT AND SAFEGUARD ALL EXISTING ELEMENTS TO REMAIN FROM BEING DAMAGED. REPLACE OR REPAIR EXISTING ELEMENTS DAMAGED BY THE EXECUTION OF THIS CONTRACT TO EQUAL OR BETTER CONDITION.
11. PRIOR TO THE START OF WORK THE CONTRACTOR SHALL COORDINATE BETWEEN THE REQUIREMENTS OF ALL DISCIPLINES HEREIN AND BETWEEN THE REQUIREMENTS OF ALL DRAWINGS AND SPECIFICATIONS IN ORDER THAT ALL ITEMS SATISFACTORILY RELATE TO ONE ANOTHER. NOTIFY ARCHITECT IMMEDIATELY REGARDING ANY ITEMS THAT CANNOT BE COORDINATED.
12. CONTRACTOR SHALL EXCERCISE EXTREME CAUTION IN EXCAVATING AND TRENCHING ON THIS SITE TO AVOID EXISTING DUCTS, PIPING, CONDUIT, ETC. AND TO PREVENT HAZARD TO PERSONNEL AND/OR TO EXISTING UNDERGROUND UTILITIES OR STRUCTURES. THE CONTRACTOR SHALL IMMEDIATELY NOTIFY THE ARCHITECT SHOULD SUCH UNIDENTIFIED CONDITIONS BE DISCOVERED. THESE DRAWINGS AND SPECIFICATIONS DO NOT INCLUDE THE NECESSARY COMPONENTS FOR CONSTRUCTION SAFETY.
13. PROVIDE SAFE MEANS OF EGRESS THROUGH THE BUILDING AND ON SITE AT ALL TIMES.
14. PROVIDE FIRE EXTINGUISHERS PER CFC AT ALL TIMES THROUGHOUT CONSTRUCTION AREA.
15. PROVIDE CONSTRUCTION BARRIERS BETWEEN CONSTRUCTION AREAS AND OCCUPIED AREAS AT ALL TIMES.
16. CUTTING, BORING, SAWCUTTING OR DRILLING THROUGH THE EXISTING OR NEW STRUCTURAL ELEMENTS SHALL NOT TO BE STARTED UNTIL THE DETAILS HAVE BEEN REVIEWED AND APPROVED BY THE ARCHITECT, AND STRUCTURAL ENGINEER OF RECORD.
17. AVOID DISRUPTION TO ADJACENT AREAS. KEEP NOISE TO A LEVEL ACCEPTABLE TO THE OWNER BY SCHEDULING EXCESSIVE NOISE TASKS WITH OWNER REPRESENTATIVE. THIS MAY REQUIRE AFTER HOURS WORK.
18. **STATEMENT OF HAZARDOUS MATERIAL DISCOVERY** IF THE CONTRACTOR ENCOUNTERS A HAZARDOUS MATERIAL OR SUBSTANCE NOT ADDRESSED IN THE HAZARDOUS MATERIAL REPORT OR IN A CONCEALED CONDITION, THE CONTRACTOR SHALL, UPON RECOGNIZING THE CONDITION, IMMEDIATELY STOP WORK IN THE AFFECTED AREA AND REPORT THE CONDITION TO THE OWNER AND ARCHITECT IN WRITING.
 UPON RECEIPT OF THE CONTRACTOR'S WRITTEN NOTICE, THE OWNER SHALL OBTAIN THE SERVICES OF A LICENSED LABORATORY TO VERIFY THE PRESENCE OR ABSENCE OF THE MATERIAL OR SUBSTANCE REPORTED BY THE CONTRACTOR AND, IN THE EVENT SUCH MATERIAL OR SUBSTANCE IS FOUND TO BE PRESENT, TO PROVIDE RECOMMENDATIONS TO CAUSE IT TO BE ABATED AND RENDERED HARMLESS.
 WHEN THE MATERIAL OR SUBSTANCE HAS BEEN ABATED AND RENDERED HARMLESS, WORK IN THE AFFECTED AREA SHALL RESUME UPON WRITTEN AGREEMENT OF THE OWNER AND CONTRACTOR.
19. PENETRATIONS TO FIRE RATED MATERIALS OR ASSEMBLIES SHALL BE RESTORED TO EQUAL RATING. SPECIAL INSPECTOR DSA 103 REQ'D.
21. COMPLY WITH TITLE 24, PART 9, CALIFORNIA FIRE CODE, CHAPTER 33 FIRE SAFETY DURING CONSTRUCTION AND DEMOLITION, DURING ALL PHASES OF PROJECT.
22. ALL WORK SHALL CONFORM TO 2019 TITLE 24, CALIFORNIA CODE OF REGULATIONS (CCR).
23. CHANGES TO THE APPROVED DRAWINGS AND SPECIFICATIONS SHALL BE MADE BY AN ADDENDUM OR A CONSTRUCTION CHANGED DOCUMENT (CCD) APPROVED BY THE DIVISION OF THE STATE ARCHITECT, AS REQUIRED BY SECTION 4-338, PART 1, TITLE 24, CCR.
24. A "DSA CERTIFIED" CLASS 2 PROJECT INSPECTOR EMPLOYED BY THE DISTRICT (OWNER) AND APPROVED BY THE DSA SHALL PROVIDE CONTINUOUS INSPECTION OF THE WORK. THE DUTIES OF THE INSPECTOR ARE DEFINED IN SECTION 4-342, PART 1, TITLE 24, CCR.
25. A DSA ACCEPTED TESTING LABORATORY DIRECTLY EMPLOYED BY THE DISTRICT (OWNER) SHALL CONDUCT ALL THE REQUIRED TESTS AND INSPECTIONS FOR THE PROJECT.
26. THE INTENT OF THESE DRAWINGS AND SPECIFICATIONS IS THAT THE WORK OF THE ALTERATION, REHABILITATION OR RECONSTRUCTION IS TO BE IN ACCORDANCE WITH TITLE 24, CCR. SHOULD ANY EXISTING CONDITIONS SUCH AS DETERIORATION OR NON-COMPLYING CONSTRUCTION BE DISCOVERED WHICH IS NOT COVERED BY THE CONTRACT DOCUMENTS WHEREIN THE FINISHED WORK WILL NOT COMPLY WITH TITLE 24, CCR, A CONSTRUCTION CHANGE DOCUMENT (CCD), OR A SEPARATE SET OF PLANS AND SPECIFICATIONS, DETAILING AND SPECIFYING THE REQUIRED WORK SHALL BE SUBMITTED TO AND APPROVED BY DSA BEFORE PROCEEDING WITH THE WORK. (SECTION 4-317(c), PART 1, TITLE 24, CCR)
27. GRADING PLANS, DRAINAGE IMPROVEMENTS, ROAD AND ACCESS REQUIREMENTS AND ENVIRONMENTAL HEALTH CONSIDERATIONS SHALL COMPLY WITH ALL LOCAL ORDINANCES.
28. SUBSTITUTIONS AFFECTING DSA REGULATED ITEMS SHALL BE CONSIDERED AS A CONSTRUCTION CHANGE DOCUMENT, AND SHALL BE APPROVED BY DSA PRIOR TO FABRICATION AND INSTALLATION PER DSA IR A-6 AND SECTION 338(c) PART 1, TITLE 24, CCR.

CODES

PARTIAL LIST OF APPLICABLE CODES

2022	CALIFORNIA ADMINISTRATIVE CODE, PART 1, TITLE 24 C.C.R.
2022	CALIFORNIA BUILDING CODE (CBC), PART 2, TITLE 24 C.C.R. (2021 INTERNATIONAL BUILDING CODE VOLUMES 1 & 2 AND 2022 CALIFORNIA AMENDMENTS)
2022	CALIFORNIA ELECTRICAL CODE (CEC), PART 3, TITLE 24 C.C.R. (2020 NATIONAL ELECTRICAL CODE AND 2022 CALIFORNIA AMENDMENTS)
2022	CALIFORNIA MECHANICAL CODE (CMC) PART 4, TITLE 24 C.C.R. (2021 UNIFORM MECHANICAL CODE AND 2022 CALIFORNIA AMENDMENTS)
2022	CALIFORNIA PLUMBING CODE (CPC), PART 5, TITLE 24 C.C.R. (2021 UNIFORM PLUMBING CODE AND 2022 CALIFORNIA AMENDMENTS)
2022	CALIFORNIA ENERGY CODE (CEC), PART 6, TITLE 24 C.C.R.
2022	CALIFORNIA HISTORICAL BUILDING CODE (CHBC), PART 8, TITLE 24 C.C.R.
2022	CALIFORNIA FIRE CODE, PART 9, TITLE 24 C.C.R. (2021 INTERNATIONAL FIRE CODE AND 2022 CALIFORNIA AMENDMENTS)
2022	CALIFORNIA EXISTING BUILDING CODE (CEBC), PART 10, TITLE 24 C.C.R. (2021 INTERNATIONAL EXISTING CODE AND 2022 CALIFORNIA AMENDMENTS)
2022	CALIFORNIA GREEN BUILDING STANDARDS CODE (CALGREEN), PART 11, TITLE 24 C.C.R.
2022	CALIFORNIA REFERENCED STANDARDS, PART 12,TITLE 24 C.C.R.
TITLE 19	C.C.R., PUBLIC SAFETY, STATE FIRE MARSHAL REGULATIONS.
2019	ASME A17.1/B44-19 SAFETY CODE FOR ELEVATORS AND ESCALATORS
2020	ASME 18.1 - SAFETY STANDARD FOR PLATFORM LIFTS AND STAIRWAY CHAIR LIFTS

NOTE TO CONTRACTOR:
THE CALIFORNIA ENERGY CODE SECTION 10-103 REQUIRES ACCEPTANCE TESTING ON ALL NEWLY INSTALLED LIGHTING CONTROLS, MECHANICAL SYSTEMS, ENVELOPES, AND PROCESS EQUIPMENT AFTER INSTALLATION AND BEFORE PROJECT COMPLETION. AN ACCEPTANCE TEST IS A FUNCTIONAL PERFORMANCE TEST TO HELP ENSURE THAT NEWLY INSTALLED EQUIPMENT IS OPERATING AND IN COMPLIANCE WITH ENERGY CODE.

LIGHTING CONTROLS ACCEPTANCE TESTS MUST BE PERFORMED BY A CERTIFIED LIGHTING CONTROLS ACCEPTANCE TEST TECHNICIAN (ATT).

MECHANICAL SYSTEM ACCEPATANCE TEST MUST BE PERFORMED BY A CERTIFIED MECHANICAL ATT FOR PROJECTS SUBMITTED ON OR AFTER OCTOBER 1, 2021.

A LISTING OF CERTIFIED ATTs CAN BE FOUND AT: HTTPS://WWW.ENERGY.CA.GOV/PROGRAMS-AND-TOPICS/PROGRAMS/ACCEPTANCE-TEST-TECHNICIAN-CERTIFICATION-PROVIDER-PROGAM/ACCEPTANCE

THE ACCEPTANCE TESTING PROCEDURES MUST BE REPEATED, AND DEFICIENCIES MUST BE CORRECTED BY THE BUILDER OR INSTALLING CONTRACTOR UNITL THE CONSTUCTION/INSTALLATION OF THE SPECIFIED SYSTEMS CONFORM AND PASS THE REQUIRED ACCEPTANCE CRITERIA.

PROJECT INSPECTORS WILL BE COLLECTING THE FORMS TO CONFIRM THAT THE REQUIRED ACCEPTANCE TESTS HAVE BEEN COMPLETED.

PARTIAL LIST OF APPLICABLE STANDARDS

NFPA 13	STANDARD FOR AUTOMATIC FIRE SPRINKLER SYSTEMS (CA AMENDED)	2022 ED.
NFPA 14	STANDARD FOR STANDPIPE AND HOSE SYSTEMS (CA AMENDED)	2019 ED.
NFPA 17	STANDARD FOR DRY CHEMICAL EXTINGUISHING SYSTEMS	2021 ED.
NFPA 17A	STANDARD FOR WET CHEMICAL EXTINGUISHING SYSTEMS	2021 ED.
NFPA 20	STANDARD FOR STATIONARY PUMPS FOR FIRE PROTECTION	2019 ED.
NFPA 22	STANDARD FOR WATER TANKS FOR PRIVATE FIRE PROTECTION	2013 ED.
NFPA 24	STANDARD FOR THE INSTALLATION OF PRIVATE FIRE MAINS AND THEIR APPURTENANCES (CA AMENDED)	2019 ED.
NFPA 72	NATIONAL FIRE ALARM & SIGNALING CODE (CA AMENDED)	2022 ED.
NFPA 80	STANDARD FOR FIRE DOORS AND OTHER OPENING PROTECTIVES	2019 ED.
NFPA 2001	STANDARD ON CLEAN AGENT FIRE EXTINGUISHING SYSTEMS (CA AMENDED)	2018 ED.
UL 300	STANDARD FOR FIRE TESTING OF FIRE EXTINGUISHING SYSTEMS FOR PROTECTION OF COMMERCIAL COOKING EQUIPMENT	2005 (R2014)
UL 464	AUDIBLE SIGNAL APPLIANCES FOR FIRE ALARM AND SIGNALING SYSTEMS, INCLUDING ACCESSORIES	2003 ED.
UL 521	STANDARD FOR HEAT DETECTORS FOR FIRE PROTECTIVE SIGNALING SYSTEMS	1999 ED. (R2005)
UL 1971	STANDARD FOR SIGNALING DEVICES FOR THE HEARING IMPAIRED	2002 ED. (R2018)
ICC 300	STANDARD FOR BLEACHERS, FOLDING AND TELESCOPING SEATING AND GRANDSTANDS	2017 ED.

FOR A COMPLETE LIST OF APPLICABLE NFPA STANDARDS REFER TO 2022 CBC (SFM) CHAPTER 35 AND CALIFORNIA FIRE CODE CHAPTER 80.
SEE CALIFORNIA BUILDING CODE, CHAPTER 35 FOR STATE OF CALIFORNIA AMENDMENTS TO NFPA STANDARDS.

PROJECT DESCRIPTION

SCOPE OF WORK

30' X 64' PC LUNCH SHELTER

SITE WORK INCLUDING ACCESSIBILITY UPGRADES AND TOILET ROOM UPGRADES

PROJECT DATA

PROJECT ADDRESS:
2375 GIANNONI WAY,
LODI, CA 95242

OWNER:
LODI UNIFIED SCHOOL DISTRICT
PHONE #: 209-331-7225

STATEMENT OF GENERAL CONFORMANCE

(X) THE DRAWINGS OR SHEETS LISTED ON THE INDEX SHEET
(X) THIS DRAWING PAGE OF SPECIFICATIONS/CALCULATIONS

HAVE BEEN PREPARED BY OTHER DESIGN PROFESSIONALS OR CONSULTANTS WHO ARE LICENSED AND/OR AUTHORIZED TO PREPARE SUCH DRAWINGS IN THIS STATE. IT HAS BEEN EXAMINED BY ME FOR:

1) DESIGN INTENT AND APPEARS TO MEET THE APPROPRIATE REQUIREMENTS OF TITLE 24, CALIFORNIA CODE OF REGULATIONS AND THE PROJECT SPECIFICATIONS PREPARED BY ME, AND
2) COORDINATION WITH MY PLANS AND SPECIFICATIONS AND IS ACCEPTABLE FOR INCORPORATION INTO THE CONSTRUCTION OF THIS PROJECT.

THE STATEMENT OF GENERAL CONFORMANCE "SHALL NOT BE CONSTRUED AS RELIEVING ME OF MY RIGHTS, DUTIES, AND RESPONSIBILITIES UNDER SECTIONS 17302 AND 81138 OF THE EDUCATION CODE AND SECTIONS 4-336, 4-341 AND 4-344" OF TITLE 24, PART 1. (TITLE 24, PART 1, SECTION 4-317 (B))

I CERTIFY THAT:

THE PC APPROVED MANUFACTURER DRAWINGS LISTED ON THE INDEX SHEET ARE IN GENERAL CONFORMANCE WITH THE PROJECT DESIGN INTENT, AND THEY HAVE BEEN COORDINATED WITH THE PROJECT PLANS AND SPECIFICATIONS.

SIGNATURE — DATE 11-21-2023
ARCHITECT OR ENGINEER DESIGNATED TO BE IN GENERAL RESPONSIBLE CHARGE

Michael Rath
PRINT NAME

C-25193 — 07/31/25
LICENSE NUMBER — EXPIRATION DATE

SHEET INDEX

NUMBER	NAME
GENERAL SHEET	
G0.10	COVER SHEET
1	
CIVIL	
C1.1	TITLE SHEET AND DETAIL SHEET
C2.1	DEMOLITION PLAN
C3.1	GRADING, DRAINAGE, AND PAVING PLAN
3	
ARCHITECTURE	
A1.21	CODE INFORMATION SITE PLAN
A1.22	LOCAL FIRE AUTHORITY SITE ACCESS PLAN
A1.23	ENLARGED PLANS AND SECTION
A2.11	ENLARGED TOILET ROOM PLANS
A8.11	INTERIOR ELEVATIONS
A10.1	SITE DETAILS
A10.2	TYPICAL MOUNTING HEIGHTS AND DETAILS
7	
RAM1.0	ORDER FORM
RAM1.1	NOTES AND SPECIAL INPECTIONS
RAM2.3	FOUNDATION PLAN DRILLED PIER
RAM3.1	FRAMING PLAN
RAM4.2	FRAME CONNECTION DETAILS
RAM4.3	SECTION DETAILS
RAM5.1	ARCHITECTURAL VIEWS
RAM6.1	ROOF CONNECTION DETAILS
RAM7.1	MISC DESIGN OPTIONS
RAM 7.0	ELECTRICAL CUTOUTS
10	
Grand total: 21	

ABBREVIATIONS

(E)	EXISTING
AB	ANCHOR BOLT
AC PAVING	ASPHALTIC CONCRETE PAVING
ACC	ACCESS/ACCESSIBLE
ACP	ACOUSTICAL CEILING PANEL
ACT	ACOUSTICAL CEILING TILE
ADJ	ADJACENT/ADJUSTABLE
AFF	ABOVE FINISH FLOOR
AGG	AGGREGATE
AHU	AIR HANDLING UNIT
ARCH	ARCHITECTURAL
ATT	ATTENUATION
AUTO	AUTOMATIC
BD	BOARD
BLCG	BLOCKING
BUR	BUILT UP ROOFING
CABT	CABINET
CF	CUBIC FEET
CFCI	CONTRACTOR FURNISHED, CONTRACTOR INSTALLED
CFOI	CONTRACTOR FURNISHED, OWNER INSTALLED
CG	CORNER GUARD
CJ	CONTROL JOINT
CL	CENTER LINE
CLF	CHAIN LINK FENCE
CLR	CLEAR
CMU	CONCRETE MASONRY UNIT
CO	CLEANOUT
COL	COLUMN
COMP	COMPRESSION / COMPOSITE
CF	CUBIC FEET
COORD	COORDINATE
CORR	CORRUGATED
CT	CERAMIC TILE
CTSK	COUNTER SKUNK
CW	CURTAINWALL
DEPR	DEPRESSED / DEPRESSION
DF	DRINKING FOUNTAIN
DIM	DIMENSION
DISP	DISPENSER
DS	DOWNSPOUT
DTL	DETAIL
DW	DISHWASHER
E/W	EACH WAY
EIFS SYSTEM	EXTERIOR INSULATION FINISH
EJ	EXPANSION JOINT
ELEC	ELECTRICAL
ELEV	ELEVATION / ELEVATOR
ENCL	ENCLOSE / ENCLOSURE
EOS	EDGE OF SLAB
EP	ELECTRICAL PANEL
EQ	EQUAL
ESC	EXCUTCHEON
EWC	ELECTRIC WATER COOLER
EXP	EXPOSED
FA	FIRE ALARM
FD	FLOOR DRAIN
FDC	FIRE DEPARTMENT CONNECTION
FE	FIRE EXTINGUISHER
FEC	FIRE EXTINGUISHER W/ CABINET
FF	FINISH FLOOR
FG	FINISH GRADE
FH	FIRE HYDRANT
FHC	FIRE HOSE CABINET
FSH	FLAT HEAD SCREW
FIN	FINISH
FLR	FLOOR
FOC	FACE OF CONCRETE
FOF	FACE OF FINISH
FOM	FACE OF MASONRY
FOS	FACE OF STUD
FP	FIREPROOFING
FR	FIRE RATED
FRG	FIRE RATED GLASS
FRP	FIBERGLASS REINFORCED PLASTIC
FRT	FIRE RETARDANT TREATED
FS	FINISH SURFACE
FTG	FOOTING
GB	GRAB BAR
GFRC	GLASS FIBER REINFORCED CONCRETE
GL	GLASS TYPE
GLB	GLUE LAMINATED BEAM
GYP BD	GYPSUM BOARD
GYP PLAS	GYPSUM PLASTIC
HB	HOSE BIBB
HD	HEAVY DUTY
HDR	HEADER
HDWR	HARDWARE
HGT	HEIGHT
HM	HOLLOW METAL
HP	HIGH POINT
HSS	HOLLOW STEEL SECTION
ID	INSIDE DIAMTER
INT	INTERIOR
INV	INVERT
LANDS	LANDSCAPE
LAV	LAVATORY
LLH	LONG LEG HORIZONTAL
LLV	LONG LEG VERTICAL
LP	LOW POINT
LT WT	LIGHT WEIGHT
LVR	LOUVER
MACH	MACHINE
MB	MACHINE BOLT
MDF	MEDIUM DENSITY FIBERBOARD
MDO	MEDIUM DENSITY OVERLAY
MECH	MECHANICAL
MED	MEDIUM
MEMB	MEMBRANE
MFR	MANUFACTURER
MH	MANHOLE
MO	MASONRY OPENING
MTD	MOUNTED
MTL	METAL
NIC	NOT IN CONTRACT
NR	NON RATED
NRC	NOISE REDUCTION COEFFICIENT
NTS	NOT TO SCALE
O/	OVER
O/A	OVERALL
OC	ON CENTER
OD	OUTSIDE DIAMTER
OFCI	OWNER FURNISHED, CONTRACTOR INSTALLED
OFOI	OWNER FURNISHED, OWNER INSTALLED
OFVI	OWNER FURNISHED, VENDOR INSTALLED
OH	OPPOSITE HAND
OPER	OPERABLE
OPNG	OPENING
ORD	OVERFLOW ROOF DRAIN
P/L	PROPERTY LINE
PA	PUBLIC ADDRESS
PAF	POWDER ACTUATED FASTENER PAVING
PCC	PORTLAND CEMENT CONCRETE PAVING
PED	PEDESTRIAN
PERF	PERFORATED
PERIM	PERIMETER
PERP	PERPENDICULAR
PH	PANIC HARDWARE
PIV	POST INDICATOR VALVE
PL	PLATE
PLAM	PLASTIC LAMINATE
PLAS	PLASTER
PLUMB	PLUMBING
PNL	PANEL
PNT	PAINT / PAINTED
POC	POINT OF CONNECTION
POLY ISO	POLYISOCYANURATE
PREFIN	PREFINISHED
PREP	PREP / PREPARATION
PTC	POST TENSIONED CONCRETE
PTD	PAPER TOWEL DISPENSER
PTN	PARTITION
PTS	PNEUMATIC TUBE STATION / SYSTEM
PVC	POLYVINYL CHLORIDE
PVMT	PAVEMENT
QT	QUARRY TILE
R	RADIUS, RISER
RB	RESILIENT BASE
RD	ROOF DRAIN
RECEPT	ECEPTACLE
REF	REFERENCE
REFL	REFLECT(ED), (IVE)
REFL	REFLECT(ED), (IVE)
REFR	REFRIGERATOR
REINF	REINFORCE/REINFORCED/ REINFORCEMENT
REM	REMOVE
RH	ROUND HEAD
RHS	ROUND HEAD SCREW
RO	ROUGH OPENING
ROW	RIGHT OF WAY
SCH	SCHEDULE (FOR PIPE)
SCHED	SCHEDULE / SCHEDULING
SD	STORM DRAIN / SOAP DISPENSER
SECT	SECTION
SG	SAFETY GLASS
SHT	SHEET
SHTG	SHEATHING
SMS	SHEET METAL SCREW
SND	SANITARY NAPKIN DISPOSAL
SOV	SHUT OFF VALVE
SPEC	SPECIFICATIONS
SS	STAINLESS STEEL
STC	SOUND TRAMISSION CLASS
STL	STEEL
STSMS SCREW	SELF TAPPING SHEET METAL
SUSP	SUSPENDED
SV	SHEET VINYL
SYM	SYMMETRICAL
T	TREAD
T&B	TOP AND BOTTOM
TO	TOP OF
TOC	TOP OF CURB / CONCRETE
TOP	TOP OF PARAPET
TOS	TOP OF STEEL
TOW	TOP OF WALL
TPD	TOILET PAPER DISPENSER
TS	TACKABLE SURFACE
U/C	UNDER CABINET (OR COUNTER
UNO	UNLESS NOTED OTHERWISE
UR	URINAL
VAC	VACUUM
VB	VAPOR BARRIER
VCT	VINYL COMPOSITION TILE
VIF	VERIFY IN FIELD
VTR	VENT THROUGH ROOF
VWC	VINYL WALL COVERING
W/	WITH
W/O	WITHOUT
WB	WOOD BASE
WC	WATER CLOSET
WD	WOOD
WDW	WINDOW
WGT	WEIGHT
WH	WATER HEATER
WP	WATERPROOFING/WALL PROTECTION
WR	WATER RESISTANT
WRGB	WATER RESISTANT GYPSUM BOARD
WS	WOOD SCREW
WSCT	WAINSCOT
WWF	WELDED WIRE FABRIC

NOTE:
OTHER ABBREVIATIONS USED ON THESE DRAWINGS ARE CONSIDERED STANDARDS IN THE BUILDING INDUSTRY. CONTACT ARCHITECT FOR NECESSARY CLARIFICATION.

SYMBOL LEGEND

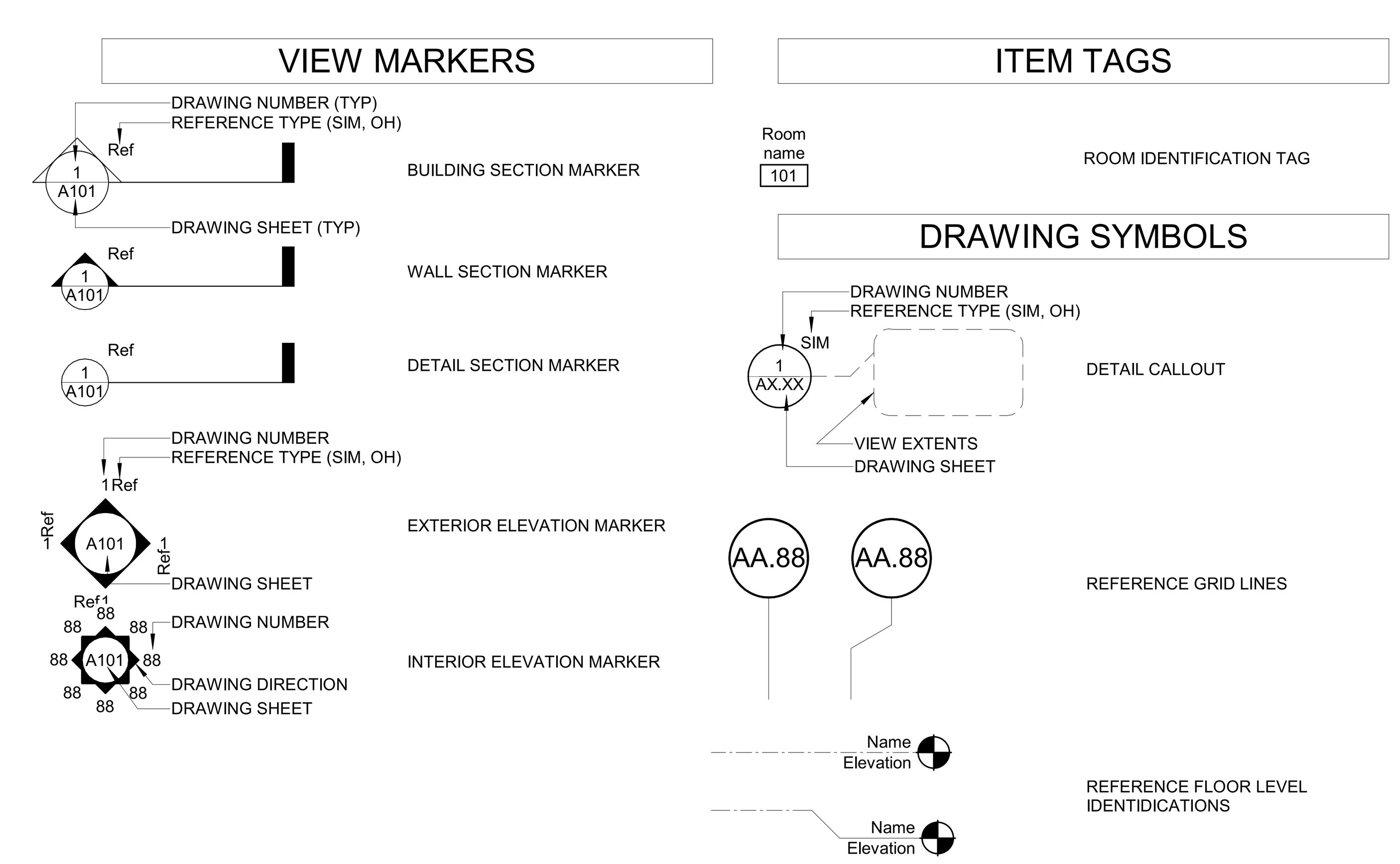

STATE MAP

VICINITY MAP

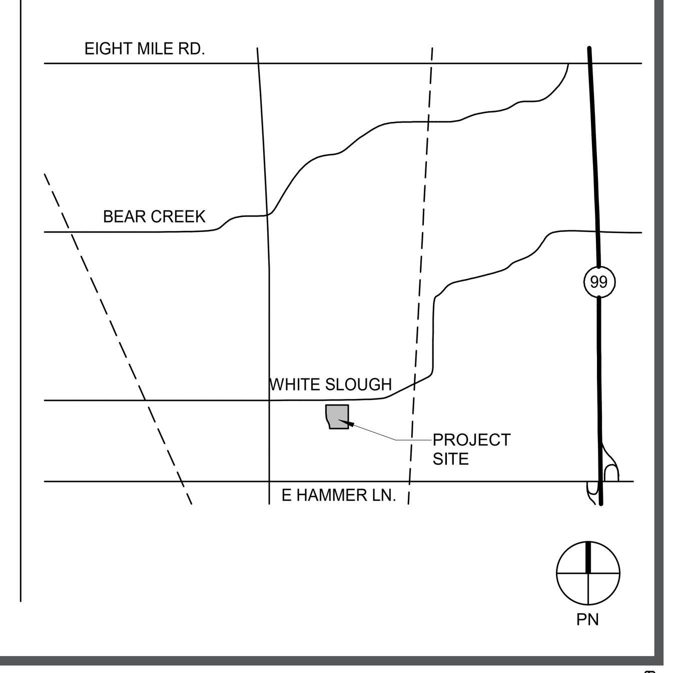

HMC Architects
R221551X00
2101 CAPITOL AVENUE, SUITE 100,
SACRAMENTO, CA, 95816
916 368 7990 / www.hmcarchitects.com

LICENSED ARCHITECT MICHAEL CHESTER RATH C-25193 REN.07/31/25 STATE OF CALIFORNIA

PROJECT TEAM

CIVIL ENGINEER
WARREN GREEN ENGINEERING
3114 BRENNANS RD. LOOMIS, CA 95650
916-663-2323

FACILITY:
CLAIRMONT ELEMENTARY SCHOOL
8282 LE MANS AVENUE
STOCKTON, CA 95210

PROJECT:
LODI UNIFIED SCHOOL DISTRICT LUNCH SHELTERS - CLAIRMONT ELEMENTARY SCHOOL

SHEET NAME:
COVER SHEET

CONSTRUCTION DOCUMENTS

DATE: xxxx.xx.xx
CLIENT PROJ NO:
SHEET:
G0.10

Autodesk Docs://R221551X00 Lodi USD Lunch Shelters/R221551X00-A-CLAIRMONT-ES-LUNCH-SHELTER.rvt
11/21/2023 1:30:17 PM
PLEASE RECYCLE

THE LINE SHOWN ABOVE IS EXACTLY 1" WHEN PLOTTED ON ANSI D SHEETS ORIGINAL IMAGE SIZE

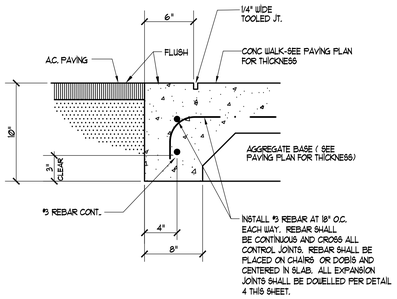

1 / C1.1 FLUSH CONC. WALK @ AC

N.T.S.

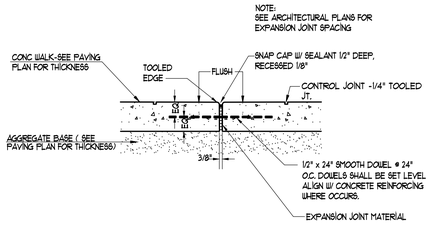

4 / C1.1 EXPANSION JOINT

N.T.S.

NOTE:
TRANSITION FROM NEW CONCRETE WALKWAYS TO EXISTING LANDSCAPE GRADE TO BE AT A MAXIMUM OF 5 : 1 SLOPE UNLESS OTHERWISE NOTED ON PLANS.

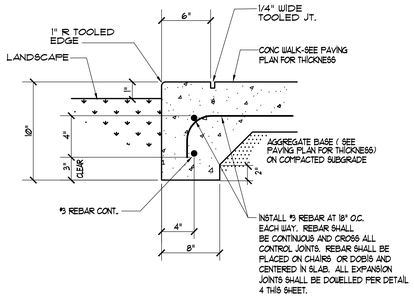

2 / C1.1 FLUSH CONC. WALK @ LANDSCAPE

N.T.S.

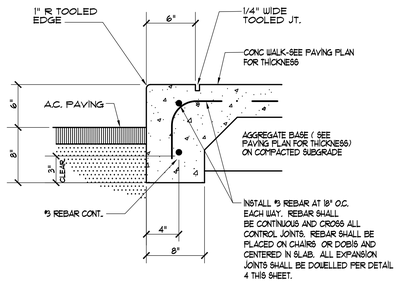

5 / C1.1 THICKENED EDGE CONC. WALK

N.T.S.

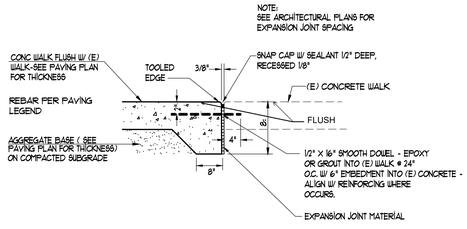

3 / C1.1 CONC. WALK AT EXISTING CONDITIONS

N.T.S.

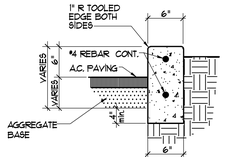

NOTES:
1. PROVIDE EXPANSION JOINTS @ 10'-0" O.C. OR AS INDICATED ON PLANS.
2. CURB SHALL EXTEND 4" BELOW SUBGRADE.

6 / C1.1 PLANTER CURB

LEGEND

× 43.15	EXISTING ELEVATION
8"SD	EXISTING STORM DRAIN
6"SS	EXISTING SANITARY SEWER
8"W	EXISTING WATER MAIN
	EXISTING WATER VALVE
	EXIST. FIRE HYDRANT
C	EXISTING COMMUNICATION LINE
IR	EXISTING IRRIGATION CONTROL LINE
E	EXISTING ELECTRICAL LINE
T	EXISTING TELEPHONE LINE
31.90	NEW ELEVATION

ABBREVIATIONS

AC	ASPHALT CONCRETE	LD	LANDSCAPE DRAIN
AB	AGGREGATE BASE	LF	LINEAR FEET
ADD. ALT.	ADDITIVE ALTERNATE	MH	MANHOLE
BLDG	BUILDING	MIN	MINIMUM
BO	BLOW OFF	MS	MOW STRIP
BOW	BACK OF WALK	(N)	NEW
BW	BOTTOM OF WALL	N.I.C.	NOT IN CONTRACT
CC	CONCRETE (TOP OF CONCRETE WALK)	OG	ORIGINAL GRADE
CL	CENTER LINE	P	PROPOSED
CONC	CONCRETE	PD	PLANTER DRAIN
CONST.	CONSTRUCT	PIV	POST INDICATOR VALVE
COTG	CLEANOUT TO GRADE	POC	POINT OF CONNECTION
DI	DRAIN INLET	PP	POWER POLE
DIP	DUCTILE IRON PIPE	PUE	PUBLIC UTILITY EASEMENT
DS	DOWNSPOUT	RCP	REINFORCED CONCRETE PIPE
DWY	DRIVEWAY	RD	ROOF DRAIN
(E)	EXISTING	RDWD	REDWOOD
E. BOX	ELECTRICAL BOX	RET	RETAINING
E. COND.	ELECTRICAL CONDUIT	RP	REDUCED PRESSURE
ELEC	ELECTRIC	R/W	RIGHT OF WAY
EP	EDGE OF PAVEMENT	RWL	RAIN WATER LEADER
EXIST.	EXISTING	S	SLOPE
FDC	FIRE DEPARTMENT CONNECTION	SD	STORM DRAIN
FF	FINISH FLOOR	SS	SANITARY SEWER
FG	FINISH GRADE	ST. LT.	STREET LIGHT
FH	FIRE HYDRANT	TBM	TEMPORARY BENCH MARK
FL	FLOW LINE	T	TRANSFORMER
FM	FIRE MAIN	TEL	TELEPHONE
FS	FIRE SERVICE	TC	TOP OF CURB
G	GAS	TW	TOP OF WALL
GB	GRADE BREAK	TYP	TYPICAL
GR	GRATE	VCP	VITRIFIED CLAY PIPE
GV	GATE VALVE	W	WATER
HDR	HEADER	WV	WATER VALVE
HP	HIGH POINT	VB	VALVE BOX
INV	INVERT ELEVATION	YD	YARD DRAIN
JP	JOINT POLE		

INDEX OF CIVIL DRAWINGS

C1.1 TITLE SHEET AND DETAIL SHEET

C2.1 DEMOLITION PLAN

C3.1 GRADING, DRAINAGE AND PAVING PLAN

AGENCY APPROVAL:

IDENTIFICATION STAMP
DIV. OF THE STATE ARCHITECT
APP: 02-121999 INC:
REVIEWED FOR
SS ☑ FLS ☑ ACS ☑
DATE: 11/30/2023

LODI USD

HMC Architects

R2211551

2101 CAPITOL AVENUE, SUITE 100,
SACRAMENTO, CA. 95816
916 368 7990 / www.hmcarchitects.com

Δ DESCRIPTION DATE

CONSULTANT:

REGISTERED PROFESSIONAL ENGINEER
JOHN A. GREEN
NO. 36500
Exp. 6-30-24
CIVIL
STATE OF CALIFORNIA

Warren-Green ENGINEERING
3114 Brennans Road
Loomis, CA 95690

FACILITY:

CLAIRMONT ELEMENTARY SCHOOL
8282 LE MANS AVENUE, STOCKTON, CA 95210

PROJECT:

LODI UNIFIED SCHOOL DISTRICT LUNCH SHELTERS-CLAIRMONT ELEMENTARY SCHOOL

SHEET NAME:

TITLE SHEET AND DETAILS

CONSTRUCTION DOCUMENTS

FILE NO.: CES-CD **A NO.:** R2211551

DATE: **NOV. 17, 2023** CLIENT PROJ NO:

SHEET:

C1.1

PLEASE RECYCLE

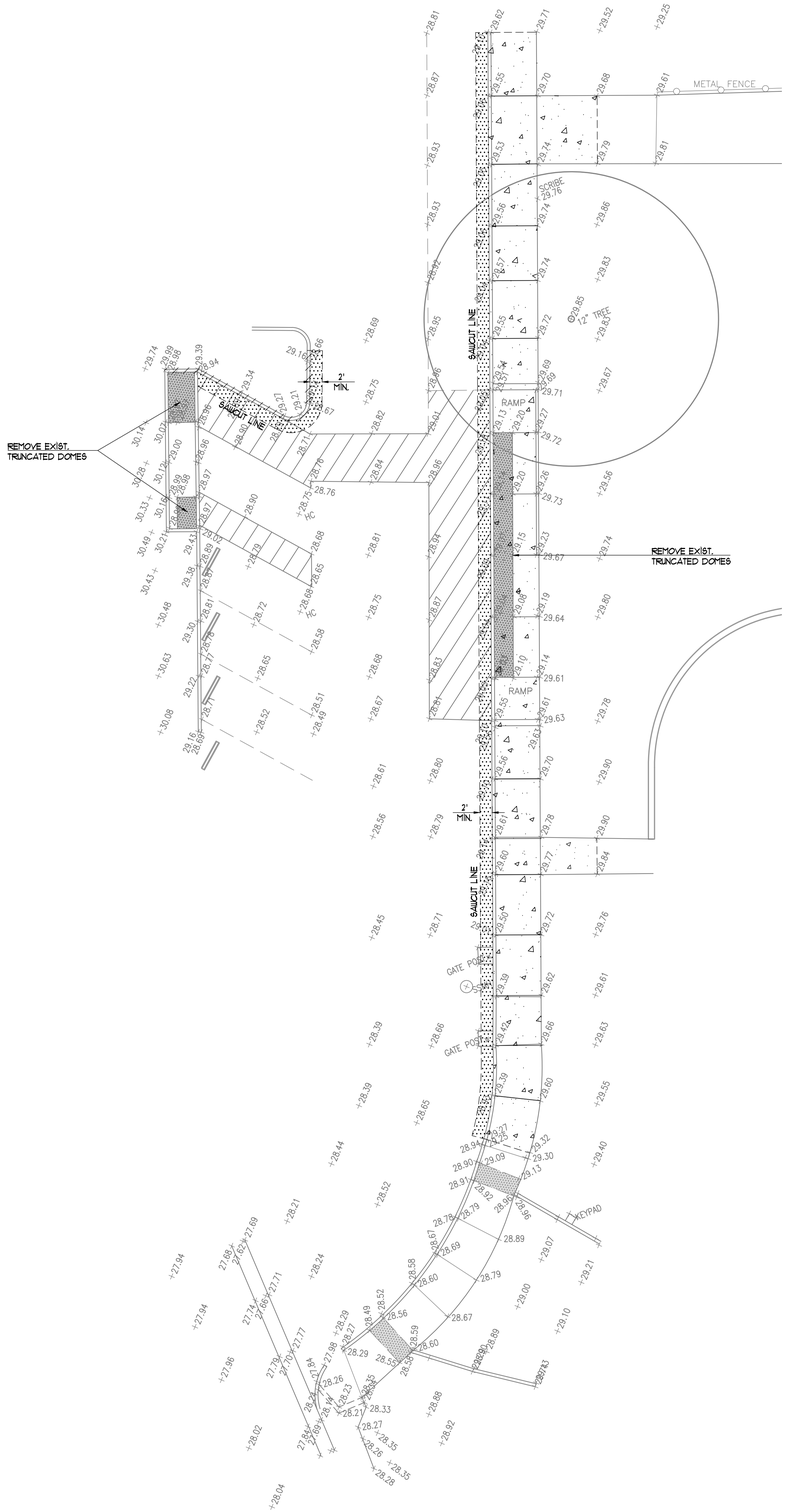

1 DEMOLITION PLAN
C2.1
SCALE: 1"=10'

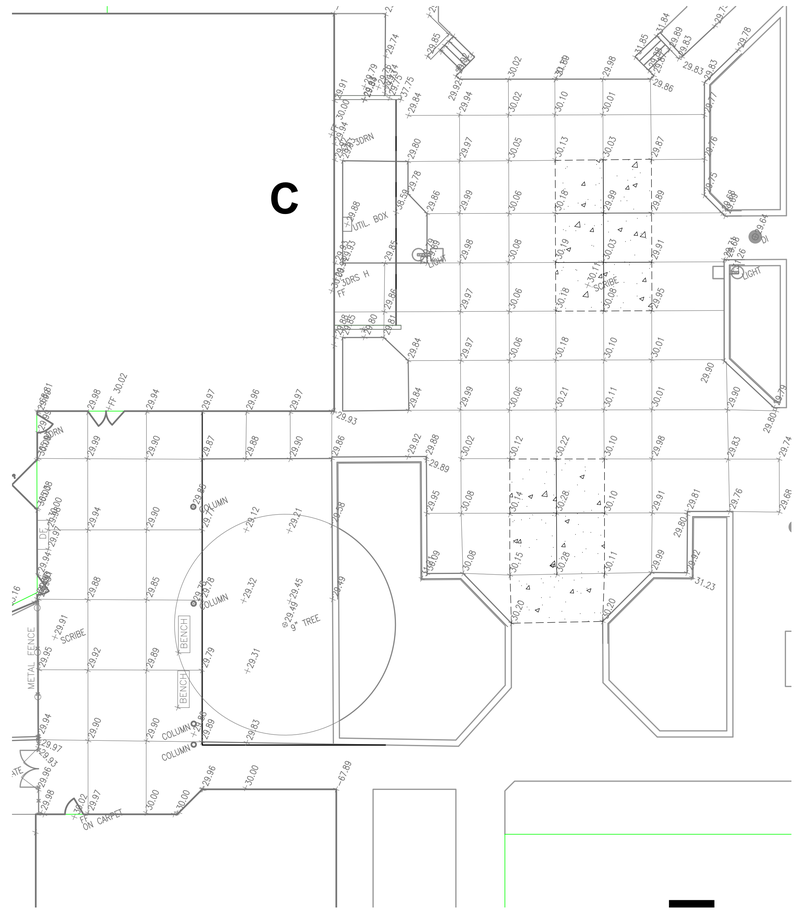

2 DEMOLITION PLAN
C2.1
SCALE: 1"=10'

DEMOLITION LEGEND

- REMOVE (E) AC PAVING
- REMOVE (E) CONCRETE
- SAWCUT LINE
- REMOVE (E) CURB

DEMOLITION NOTES:

1. CONTRACTOR SHALL REMOVE / DEMOLISH ALL (E) IMPROVEMENTS AS NECESSARY FOR CONSTRUCTION OF NEW IMPROVEMENTS UNDER THIS CONTRACT. CONTRACTOR SHALL FIELD WALK SITE TO REVIEW AND CONFIRM THE EXTENT OF ALL CLEARING WORK PRIOR TO BID.
2. ALL MATERIAL REMOVED BY CONTRACTOR SHALL BE PROPERLY AND LEGALLY DISPOSED OFFSITE (UNLESS SPECIFICALLY IDENTIFIED TO BE DELIVERED TO OWNER.)
3. NUMEROUS UNDERGROUND UTILITIES EXIST WITHIN THE AREAS OF EXISTING CONCRETE REMOVAL. CONTRACTOR SHALL USE CAUTION DURING DEMOLITION AND SUBGRADE SCARIFICATION AND COMPACTION TO PROTECT SAID UTILITIES.

AGENCY APPROVAL:

IDENTIFICATION STAMP
DIV. OF THE STATE ARCHITECT
APP: 02-121999 INC:
REVIEWED FOR
SS ☑ FLS ☑ ACS ☑
DATE: 11/30/2023

LODI USD

HMC Architects

R2211551

2101 CAPITOL AVENUE, SUITE 100,
SACRAMENTO, CA, 95816
916 368 7990 / www.hmcarchitects.com

Δ	DESCRIPTION	DATE

CONSULTANT:

REGISTERED PROFESSIONAL ENGINEER
LORI A. GREEN
NO. 36500
Exp. 6-30-24
STATE OF CALIFORNIA

Warren•Green ENGINEERING
3114 Brennans Road
Loomis, CA 95690

FACILITY:
CLAIRMONT ELEMENTARY SCHOOL
8282 LE MANS AVENUE, STOCKTON, CA 95210

PROJECT:
LODI UNIFIED SCHOOL DISTRICT LUNCH SHELTERS-
CLAIRMONT ELEMENTARY SCHOOL

SHEET NAME:
DEMOLITION PLAN

CONSTRUCTION DOCUMENTS

FILE NO.: CES-CD
A NO.: R2211551
DATE: NOV. 17, 2023
CLIENT PROJ NO:
SHEET:
C2.1

PLEASE RECYCLE

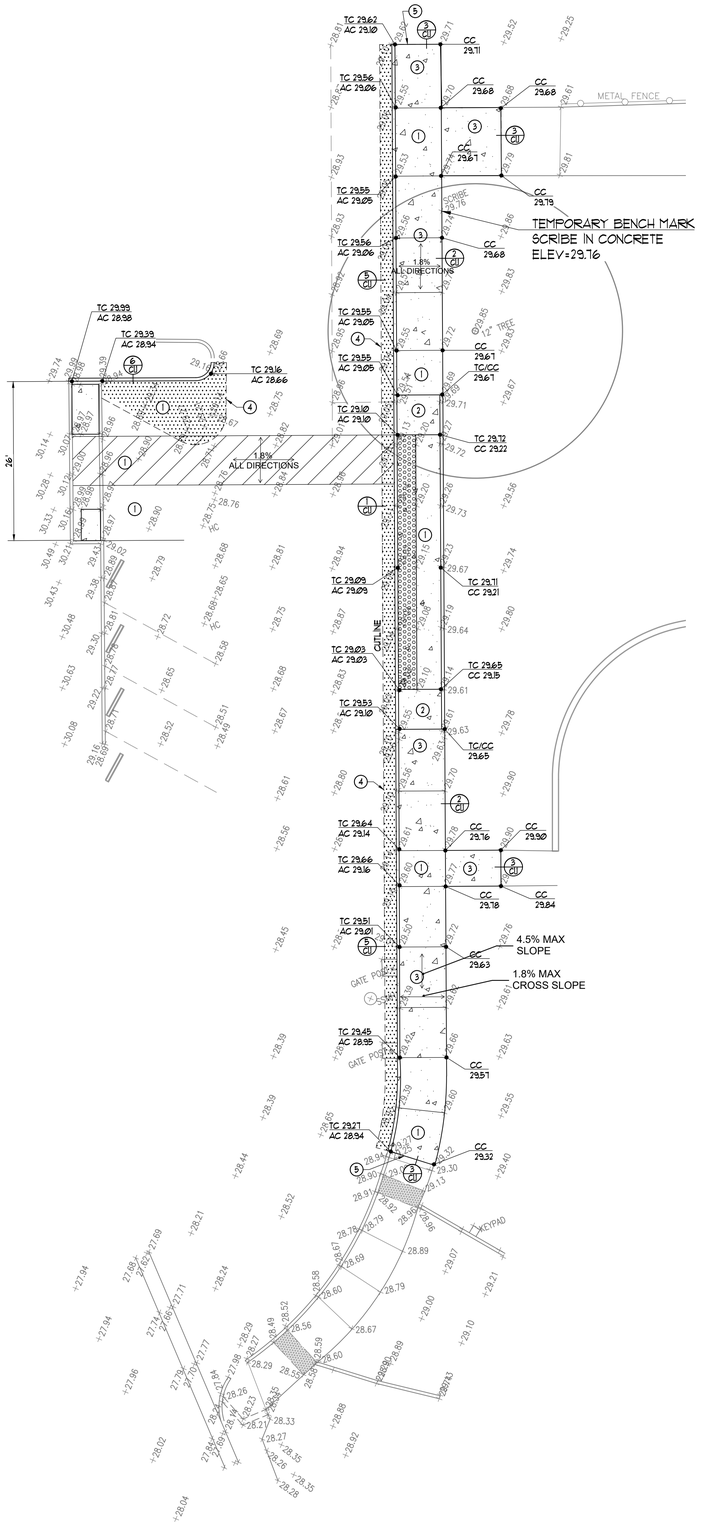

1 GRADING, DRAINAGE AND PAVING PLAN
C3.1
SCALE: 1"=10'

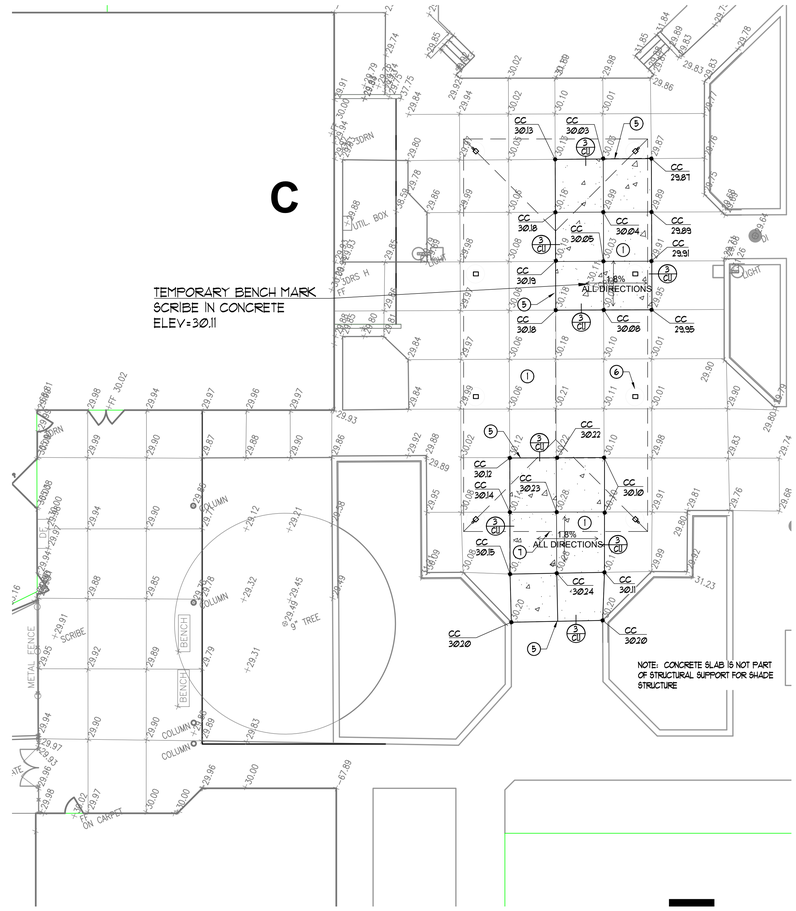

2 GRADING, DRAINAGE AND PAVING PLAN
C3.1
SCALE: 1"=10'

NOTES:

1. CONCRETE SLAB IS NOT PART OF STRUCTURAL SUPPORT FOR SHADE STRUCTURE
2. CONTRACTOR SHALL LOCATE ALL UTILITIES IN AREA OF WORK PRIOR TO START OF CONSTRUCTION. NOTIFY ARCHITECT IF ANY CONFLICTS WITH NEW FOOTINGS OCCUR.
3. ALL UTILITIES (VALVE BOX COVERS, VAULTS, CLEANOUTS, ETC. SHALL BE ADJUSTED TO NEW FINISH GRADES.
4. DRINKING FOUNTAINS SHALL BE RESET AS NECESSARY TO MEET HEIGHT STANDARDS FOR ACCESSIBILITY (SEE ARCHITECTURAL)

KEY NOTE LEGEND

1. 1.8% MAX. SLOPE IN ANY DIRECTION.
2. RAMP - 8% MAX. SLOPE IN DIRECTION OF TRAVEL, 1.8% MAX. CROSS SLOPE
3. 1.8% MAX. CROSS SLOPE 4.75% MAX. SLOPE IN DIRECTION OF TRAVEL.
4. MATCH (E) AC GRADE AT SAWCUT LINE.
5. MATCH (E) CONC. GRADE AT SAWCUT LINE.
6. SHADE STRUCTURE FOOTING - TYPICAL
7. SHADE STRUCTURE ROOF LINE
8. CONTRACTOR SHALL LOCATE EXISTING UTILITIES PRIOR TO START OF CONSTRUCTION. NOTIFY ARCHITECT IF CONFLICT WITH NEW FOOTINGS EXISTS.

PAVING LEGEND

- VARIABLE THICKNESS AC OVERLAY
- 3.5" ASPHALT CONCRETE ON 4.5" AGGREGATE BASE ON COMPACTED SUBGRADE
- 5" CONCRETE ON 6" AGGREGATE BASE ON COMPACTED SUBGRADE W/ #3 REBAR AT 18" O.C. EACH WAY

AGENCY APPROVAL:

IDENTIFICATION STAMP
DIV. OF THE STATE ARCHITECT
APP: 02-121999 INC:
REVIEWED FOR
SS ☑ FLS ☑ ACS ☑
DATE: 11/30/2023

LODI USD

HMC Architects

R2211551

2101 CAPITOL AVENUE, SUITE 100,
SACRAMENTO, CA, 95816
916 368 7990 / www.hmcarchitects.com

Δ	DESCRIPTION	DATE

CONSULTANT:

REGISTERED PROFESSIONAL ENGINEER
LORI A. GREEN
NO. 36500
Exp. 6-30-24
STATE of CALIFORNIA

Warren-Green ENGINEERING
3114 Brennans Road
Loomis, CA 95690

FACILITY:
CLAIRMONT ELEMENTARY SCHOOL
8282 LE MANS AVENUE, STOCKTON, CA 95210

PROJECT:
LODI UNIFIED SCHOOL DISTRICT LUNCH SHELTERS-CLAIRMONT ELEMENTARY SCHOOL

SHEET NAME:
GRADING, DRAINAGE AND PAVING PLAN

CONSTRUCTION DOCUMENTS

FILE NO.: CES-CD
A NO.: R2211551
DATE: NOV. 17, 2023
CLIENT PROJ NO:
SHEET:
C3.1

PLEASE RECYCLE

THE LINE SHOWN ABOVE IS EXACTLY 1" WHEN PLOTTED AT THIS SHEET'S ORIGINAL PAGE SIZE

BUILDING DATA AND ALLOWABLE AREA ANALYSIS

BUILDING	OCCUPANCY	CONSTRUCTION TYPE	ALLOWABLE AREA (TABLE 506.2)	ACTUAL BLDG. AREA	OCCUPANY CALCULATION
LS	A-2	II-B NON-SPRINKLERED	9,500 S.F.	1,920 S.F.	1,920 S.F. / 15 NET =128 OCC.

EXISTING PATH OF TRAVEL (POT): ARCHITECT STATEMENT

DESIGN PROFESSIONAL IN GENERAL RESPONSIBLE IN CHARGE STATEMENT: THE POT IDENTIFIED IN THESE CONSTRUCTION DOCUMENTS IS COMPLIANT WITH THE CURRENT APPLICABLE CALIFORNIA BUILDING CODE ACCESSIBILITY PROVISIONS FOR **PATH OF TRAVEL REQUIREMENTS FOR ALTERATIONS, ADDITIONS AND STRUCTURAL REPAIRS**. AS PART OF THE DESIGN OF THIS PROJECT, THE POT WAS EXAMINED AND ANY ELEMENTS, COMPONENTS OR PORTIONS OF THE POT THAT WERE DETERMINED TO BE NON-COMPLIANT

1) HAVE BEEN IDENTIFIED AND
2) THE CORRECTIVE WORK NECESSARY TO BRING THEM INTO COMPLIANCE HAS BEEN INCLUDED WITHIN THE SCOPE OF THIS PROJECT'S WORK THROUGH DETAILS, DRAWINGS, AND SPECIFICATIONS INCORPORATED INTO THESE CONSTRUCTION DOCUMENTS.

ANY NONCOMPLIANT ELEMENTS, COMPONENTS OR PORTIONS OF THE POT THAT WILL NOT BE CORRECTED BY THIS PROJECT BASED ON VALUATION THRESHOLD LIMITATIONS OR A FINDING OF UNREASONABLE HARDSHIP ARE SO INDICATED IN THESE CONSTRUCTION DOCUMENTS.

DURING CONSTRUCTION, IF POT ITEMS WITHIN THE SCOPE OF THE PROJECT REPRESENTED AS CODE COMPLIANT ARE FOUND TO BE NON-CONFORMING BEYOND REASONABLE CONSTRUCTION TOLERANCES, THEY SHALL BE BROUGHT TO COMPLIANCE WITH THE CBC AS PART OF THIS PROJECT BY MEANS OF A CONSTRUCTION CHANGE DOCUMENT.

ACCESSIBLE PARKING STALL CALCULATION

TOTAL PARKING STALL COUNT:	55 STALLS
ACCESSIBLE PARKING STALLS	(TABLE 11B-208.2)
REQUIRED ACCESSIBLE STALLS:	3 (51-75 TOTAL STALLS)
REQUIRED VAN ACCESSIBLE STALLS:	1 (1-6 ACCESSIBLE STALLS)
ACCESSIBLE STALLS PROVIDED:	2 STANDARD & 1 VAN

NOTE: LUNCH SHELTER COMPLIES WITH DSA IR 31-1.

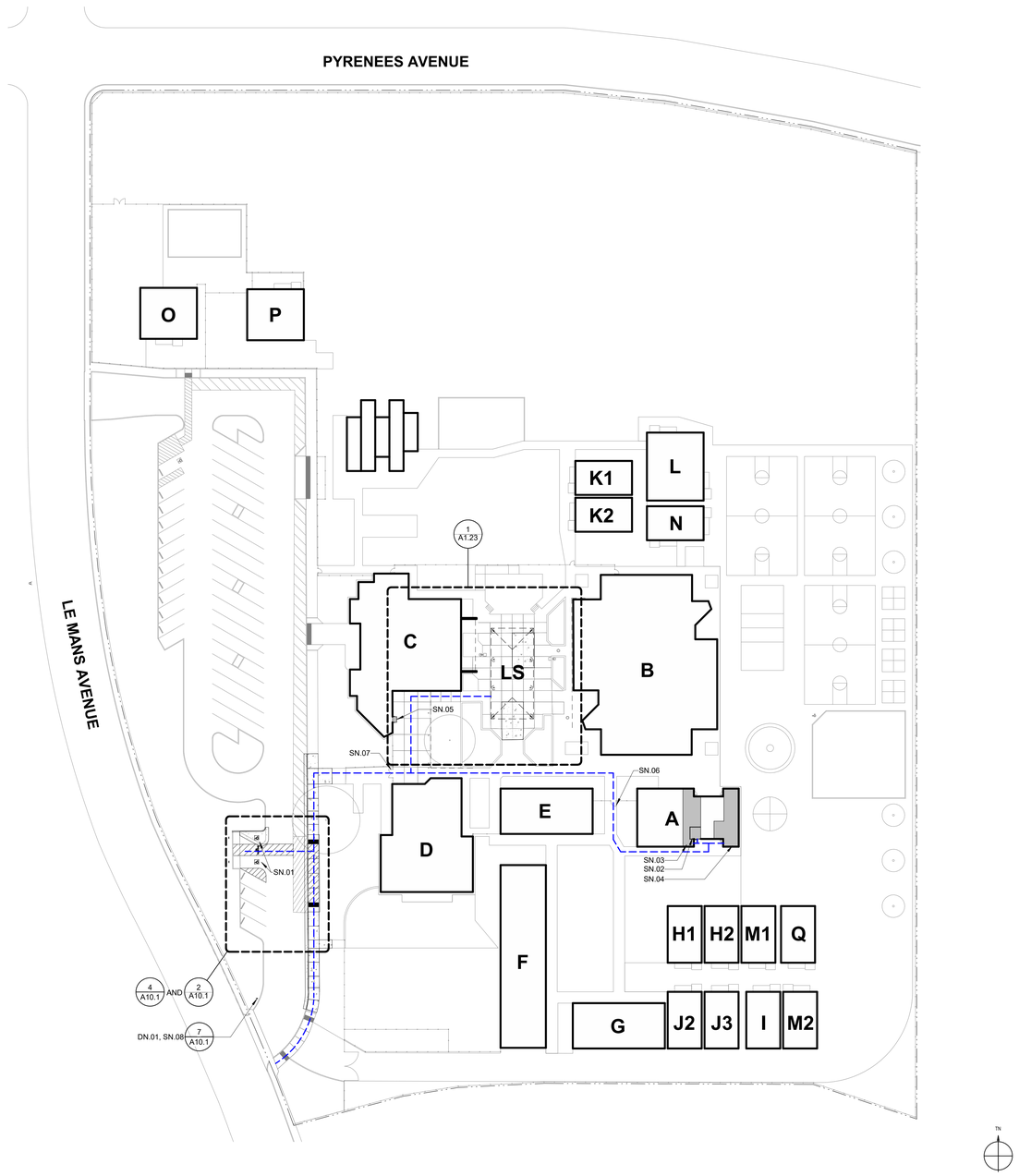

CODE INFORMATION SITE PLAN 1

1" = 40'-0"

LEGEND

- PROPERTY LINE
- ACCESSIBLE PATH OF TRAVEL
- (E) CHAIN LINK FENCE
- (E) ORNAMENTAL FENCE
- X — EXISTING BUILDINGS
- (E) FIRE HYDRANT

DEMOLITION NOTES

DN.01 REMOVE (E) PARKING LOT ENTRANCE SIGN ITS ENTIRETY

SHEET NOTES

SN.01 ACCESSIBLE PARKING STALL UPGRADED PER THIS APPLICATION
SN.02 (E) STAFF TOILET ROOM PER DSA #02-101131 UPGRADED PER THIS APPLICATION
SN.03 (E) BOYS TOILET ROOM PER DSA #02-101131 UPGRADED PER THIS APPLICATION
SN.04 (E) GIRLS TOILET ROOM PER DSA #02-101131 UPGRADED PER THIS APPLICATION
SN.05 (E) DRINKING FOUNTAIN PER DSA #02-101131 UPGRADED PER THIS APPLICATION
SN.06 (E) 4' WIDE GATE WITH ACCESSIBLE HARDWARE AND KICK PLATE PER DSA #02-101131
SN.07 (E) PR 4' WIDE GATES WITH EXIT DEVICES AND KICK PLATES PER DSA #02-101131
SN.08 ACCESSIBLE PARKING LOT ENTRANCE SIGN

BUILDING DESIGNATIONS

DSA #44819

UNIT A - (E) CLASSROOM BUILDING
UNIT B - (E) LIBRARY AND CLASSROOM BUILDING
UNIT C - (E) MULTIPURPOSE BUILDING
UNIT D - (E) ADMINISTRATION AND KINDERGARTEN BUILDING
UNIT E - (E) CLASSROOM BUILDING
UNIT F - (E) PORTABLE BUILDING
UNIT G - (E) PORTABLE BUILDING

DSA #67452

UNIT H1 - (E) PORTABLE BUILDING
UNIT H2 - (E) PORTABLE BUILDING

DSA #46123

UNIT I - (E) PORTABLE BUILDING

DSA #46992

UNIT J1 - (E) PORTABLE BUILDING
UNIT J2 - (E) PORTABLE BUILDING

DSA #51085

UNIT K1 - (E) PORTABLE BUILDING
UNI K2 - (E) PORTABLE BUILDING

DSA #62378

UNIT L - (E) PORTABLE BUILDING

DSA #101028

UNIT M1 - (E) PORTABLE BUILDING
UNIT M2 - (E) PORTABLE BUILDING

DSA #48768

UNIT N - (E) PORTABLE BUILDING

DSA #101960

UNIT O - (E) PORTABLE BUILDING

DSA #102874

UNIT P - (E) PORTABLE BUILDING

DSA #103917

UNIT Q - (E) PORTABLE BUILDING

THIS APPLICATION

UNIT LS - 30' X 64' PC LUNCH SHELTER

AGENCY APPROVAL:

IDENTIFICATION STAMP
DIV. OF THE STATE ARCHITECT
APP: 02-121999 INC:
REVIEWED FOR
SS ☑ FLS ☑ ACS ☑
DATE: 11/30/2023

LODI USD

HMC Architects

R221551X00

LICENSED ARCHITECT MICHAEL CHESTER FORD STATE OF CALIFORNIA REN. 07/31/25

2101 CAPITOL AVENUE, SUITE 100,
SACRAMENTO, CA, 95816
916 368 7990 / www.hmcarchitects.com

ISSUE

Δ	DESCRIPTION	DATE

ACCESSIBLE PATH OF TRAVEL

1. ACCESSIBLE PATH OF TRAVEL (P.O.T.):
   SITE WALKWAYS SHALL PROVIDE A BARRIER-FREE P.O.T. ABRUPT CHANGES IN LEVEL ALONG ANY P.O.T. ARE ALLOWED UP TO 1/2". ONLY ABRUPT CHANGES IN ELEVATION UP TO 1/4" ARE ALLOWED TO HAVE A VERTICAL TRANSITION. ABRUPT CHANGES IN ELEVATION BETWEEN 1/4" AND 1/2" SHALL BE BEVELED WITH A SLOPE NO GREATER THAN 1-UNIT VERTICAL TO 2-UNITS HORIZONTAL. GATES IN THE P.O.T. SHALL HAVE A SIGN ADJACENT TO THE GATE, IN ALL CAPITALIZED LETTERS, WHICH READS: "THIS GATE TO REMAIN LOCKED IN OPEN POSITION DURING SCHOOL HOURS OR ANY PUBLIC EVENT".
2. THE CONTRACTOR SHALL PROVIDE A P.O.T. FROM THE DISABLED ACCESSIBLE PARKING STALLS TO ALL BUILDINGS AND SITE FUNCTIONS. CONTRACTOR SHALL VERIFY THAT THE P.O.T. IS BARRIER-FREE AS DESCRIBED IN THESE NOTES.
3. WALKWAYS SHALL BE FREE OF GRATINGS WHEREVER POSSIBLE. GRATING WHICH OCCUR WITHIN THE P.O.T. SHALL HAVE OPENINGS WHICH DO NOT EXCEED 1/2" IN THE DIRECTION OF TRAVEL PER CBC SECTION 1133B.7.2.
4. AN ABRUPT DROP-OFF CHANGE IN ELEVATION AT THE EDGE OF ANY WALK INTO AN ADJACENT PLANTER SHALL NOT EXCEED 4".
5. SLOPES IN THE DIRECTION OF THE P.O.T. GREATER THAN 1-UNIT VERTICAL TO 20-UNITS HORIZONTAL SHALL BE CONSIDERED A RAMP AND WILL REQUIRE HANDRAILS ON BOTH SIDES PER CBC SECTION 1133B.5.5 SLOPES IN THE DIRECTION OF THE P.O.T. ALONG WALKWAYS SHALL NOT EXCEED 5%. CROSS SLOPES IN THE P.O.T. ALONG WALKWAYS SHALL NOT EXCEED 2%.
6. ALL WALKWAYS WITHIN THE P.O.T. SHALL BE A MINIMUM OF 48" IN WIDTH. SURFACES WITH A SLOPE OF LESS THAN 6% SHALL BE AT LEAST AS SLIP-RESISTANT AS THAT PROVIDED BY A MEDIUM BROOM FINISH. SURFACES WITH A SLOPE OF MORE THAN 6% SHALL BE SLIP-RESISTANT.
7. OBJECTS PROTRUDING INTO THE P.O.T. SHALL NOT REDUCE THE CLEAR WIDTH OR MANEUVERING SPACE WITHIN THE P.O.T. PER CBC SECTION 1133B.8.6.
8. ARCHITECT HAS SURVEYED/ INSPECTED THE PATH OF TRAVEL (P.O.T.) AS INDICATED ON THE PLANS AND HAS FOUND IT TO BE, OR HAS INDICATED ON THE PLANS REMEDIAL WORK WHICH WOULD CAUSE IT TO BE, A BARRIER-FREE ACCESSIBLE ROUTE:
   a. AT LEAST 48" IN. WIDTH; OR AS APPROVED BY CODE;
   b. WITHOUT ABRUPT LEVEL CHANGES EXCEEDING 1/2" IF BELVELED AT 1:2 MAXIMUM SLOPE, OR VERTICAL LEVEL CHANGES EXCEEDING 1/4";
   c. WITH A FIRM, STABLE, AND SLIP RESISTANT WALKING SURFACE;
   d. WITH A RUNNING SLOPE OF 1:20 OR LESS, UNLESS OTHERWISE INDICATED, AND A CROSS SLOPE OF 1:50 OR LESS;
   e. IS FREE OF OVERHEAD OBSTRUCTIONS WITHIN 80" ABOVE THE WALKING SURFACE; AND
   f. IS FREE OF OBJECTS WHICH PROTRUDE MORE THAN 4" BETWEEN THE HEIGHTS OF 27" AND 80" ABOVE THE WALKING SURFACE.

KEYNOTES

NOTES

FACILITY:
CLAIRMONT ELEMENTARY SCHOOL
8282 LE MANS AVENUE
STOCKTON, CA 95210

PROJECT:
LODI UNIFIED SCHOOL DISTRICT LUNCH SHELTERS - CLAIRMONT ELEMENTARY SCHOOL

SHEET NAME:
CODE INFORMATION SITE PLAN

CONSTRUCTION DOCUMENTS

DATE: **11/21/23** CLIENT PROJ NO:

SHEET:

A1.21

Autodesk Docs://R221551X00 Lodi USD Lunch Shelters/R221551X00-A-CLAIRMONT-ES-LUNCH-SHELTER.rvt
11/21/2023 1:29:53 PM

PLEASE RECYCLE

THE LINE SHOWN ABOVE IS 1" ON ORIGINAL DRAWING IF NOT THIS SHEET IS ORIGINAL PAGE SIZE

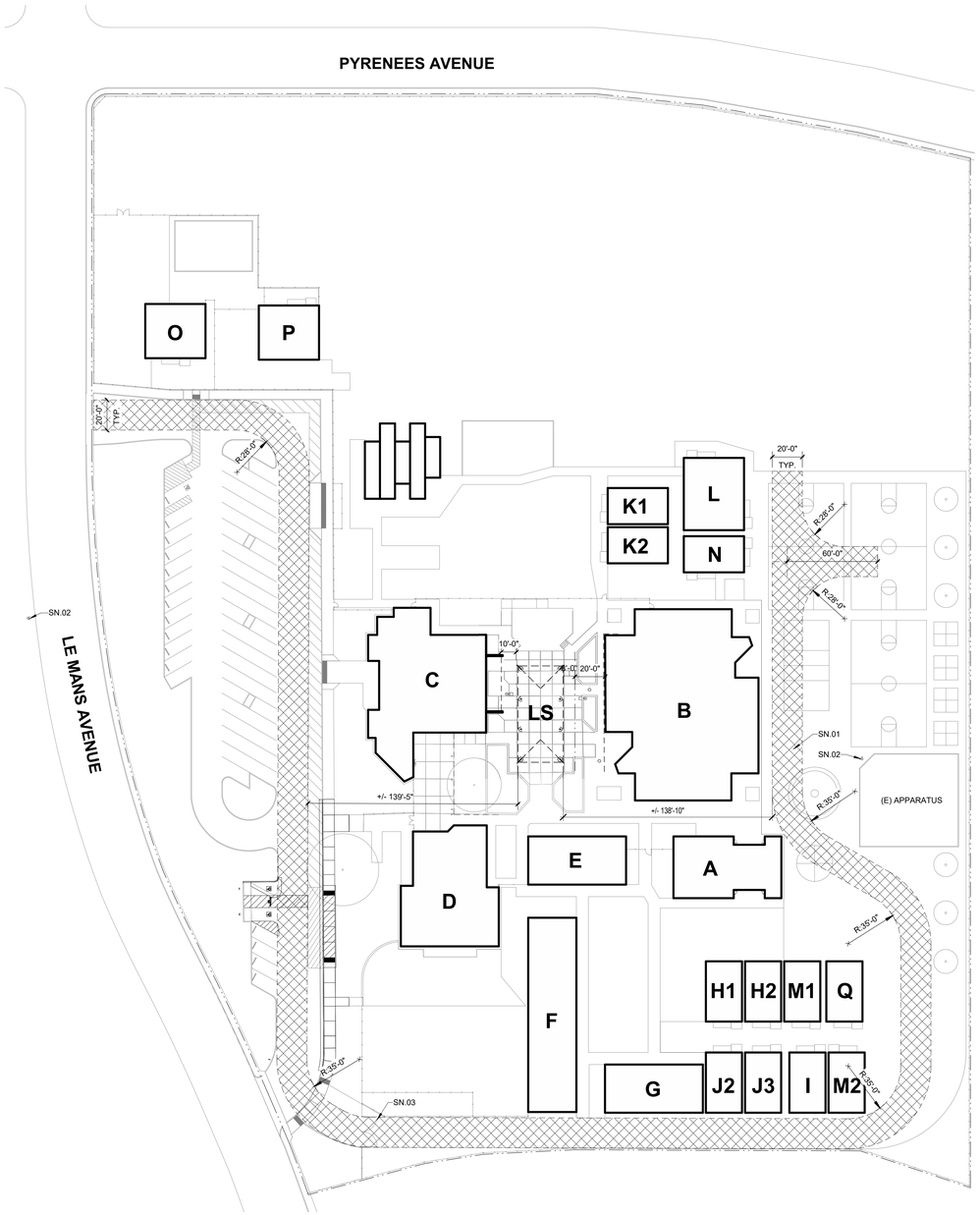

NOTE: LUNCH SHELTER COMPLIES WITH DSA IR 31-1

DSA-810 FIRE & LIFE SAFETY SITE CONDITIONS SUBMITTAL

PROJECT INFORMATION	
School District:	LODI UNIFIED SCHOOL DISTRICT
Project name / school:	CLAIRMONT ELEMENTARY SCHOOL
Project address:	8282 LE MANS AVENUE STOCKTON, CA 95210

FIRE & LIFE SAFTEY INFORMATION				ALTERNATE ACCEPTED
1.	Has a fire hydrant flow test been performed within the past 12 months? ***(If yes, provide a copy of the test data)***			Yes ☐ No ☒
2.	Was the fire hydrant water flow test performed as part of this LFA review?			Yes ☐ No ☒
3.	Is the project located within a designated fire hazard serverity zone as established by Cal-Fire? ***(If yes, indicate fire hazard zone classification below)***			Yes ☐ No ☒
	Refer to the following for fire hazard zone locations: ***www. fire.ca.gov/fire_prevention/fire_prevention_wildland_zones_maps***	Moderate ☐	High ☐	Very High ☐
	Wildland Interface Area (WIFA) ***(If any designations are checked, project design must meet the requirements of CBC Chapter 7A)***			WIFA ☐

CONDITION MEANS AND METHODS RESOLUTION		ALTERNATE ACCEPTED			
		Yes	No	N/A	N/R
4.	Emergency vehicle access roadways do not meet CFC requirements	■			
4a.	**Acceptable Alternative:** Emergency vehicle and personel access as proposed by the architect is acceptable for providing fire suppression and protection of life and property			■	■
5.	**Fire Hydrants:** Number and spacing does not meet CFC requirements	■			
5a.	**Acceptable Alternative:** Number of fire hydrants and spacing as proposed by the architect is acceptable for fire suppression and protection of life and property.			■	■
6.	**Fire Hydrants:** Water flow and pressure are less than CFC minimum.	■			
6a.	**Acceptable Alternative:** The available flow and pressure is acceptable for providing fire suppression and protection of life and property.			■	■
7.	Location of fire department connection(s) serving fire sprinkler system or standpipe system does not meet CFC requirements.	■			
7a.	**Acceptable Alternative:** The location of fire department connection serving the fire sprinkler system and/or standpipe system is acceptable for providing fire suppression and protection of life and property.			■	■

School District Acceptance of Acceptable Design Alternates
By signing this form, the school district acknowledges and accepts the proposed design as an alternative to California Building Code (CBC) and California Fire Code (CFC) minimum requirements as indicated by one of more of the conditions indicated at items 4a, 5a, 6a, or 7a, for providing fire and life safety protection of life and property.

Accepted by: _____ Title: _____

Signature: _____ Date: _____

LOCAL FIRE AUTHORITY (LFA) INFORMATION	
LFA Agency Name:	
LFA Review Official:	
Title:	Work Phone:
Work Email:	

LFA Reviewer's Signature: _____ Date: _____

LEGEND

- PROPERTY LINE
- (E) CHAIN LINK FENCE
- (E) ORNAMENTAL FENCE
- X — EXISTING BUILDINGS
- EXISTING FIRE ACCESS LANE
- (E) FIRE HYDRANT

SHEET NOTES

SN.01 (E) FIRE LANE
SN.02 (E) FIRE HYDRANT
SN.03 (E) 20'-0" WIDE CHAIN LINK GATE. PROVIDE KNOX LOCK BOX

LOCAL FIRE AUTHORITY SITE ACCESS PLAN 1 1" = 40'-0"

AGENCY APPROVAL:

IDENTIFICATION STAMP
DIV. OF THE STATE ARCHITECT
APP: 02-121999 INC:
REVIEWED FOR
SS ☑ FLS ☑ ACS ☑
DATE: 11/30/2023

LODI USD

HMC Architects

R221551X00

LICENSED ARCHITECT MICHAEL CHESTER FORD R-21164 REN. 07/31/25 STATE OF CALIFORNIA

2101 CAPITOL AVENUE, SUITE 100,
SACRAMENTO, CA, 95816
916 368 7990 / www.hmcarchitects.com

ISSUE

Δ	DESCRIPTION	DATE

KEYNOTES

NOTES

FACILITY:
CLAIRMONT ELEMENTARY SCHOOL
8282 LE MANS AVENUE
STOCKTON, CA 95210

PROJECT:
LODI UNIFIED SCHOOL DISTRICT LUNCH SHELTERS - CLAIRMONT ELEMENTARY SCHOOL

SHEET NAME:
LOCAL FIRE AUTHORITY SITE ACCESS PLAN

CONSTRUCTION DOCUMENTS

DATE: **11/21/23** CLIENT PROJ NO:

SHEET:

A1.22

Autodesk Docs://R221551X00 Lodi USD Lunch Shelters/R221551X00-A-CLAIRMONT-ES-LUNCH-SHELTER.rvt
11/21/2023 1:29:36 PM

PLEASE RECYCLE

THE LINE SHOWN ABOVE IS EXACTLY 1" WHEN PLOTTED ON THIS SHEETS ORIGINAL PAGE SIZE

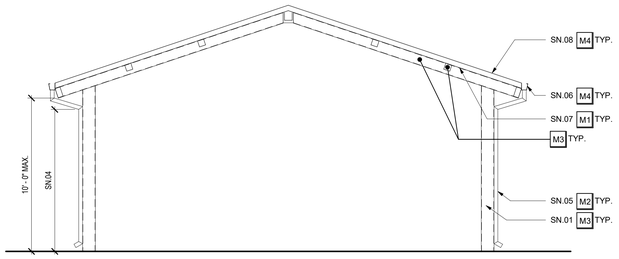

LUNCH SHELTER SECTION 2

1/4" = 1'-0"

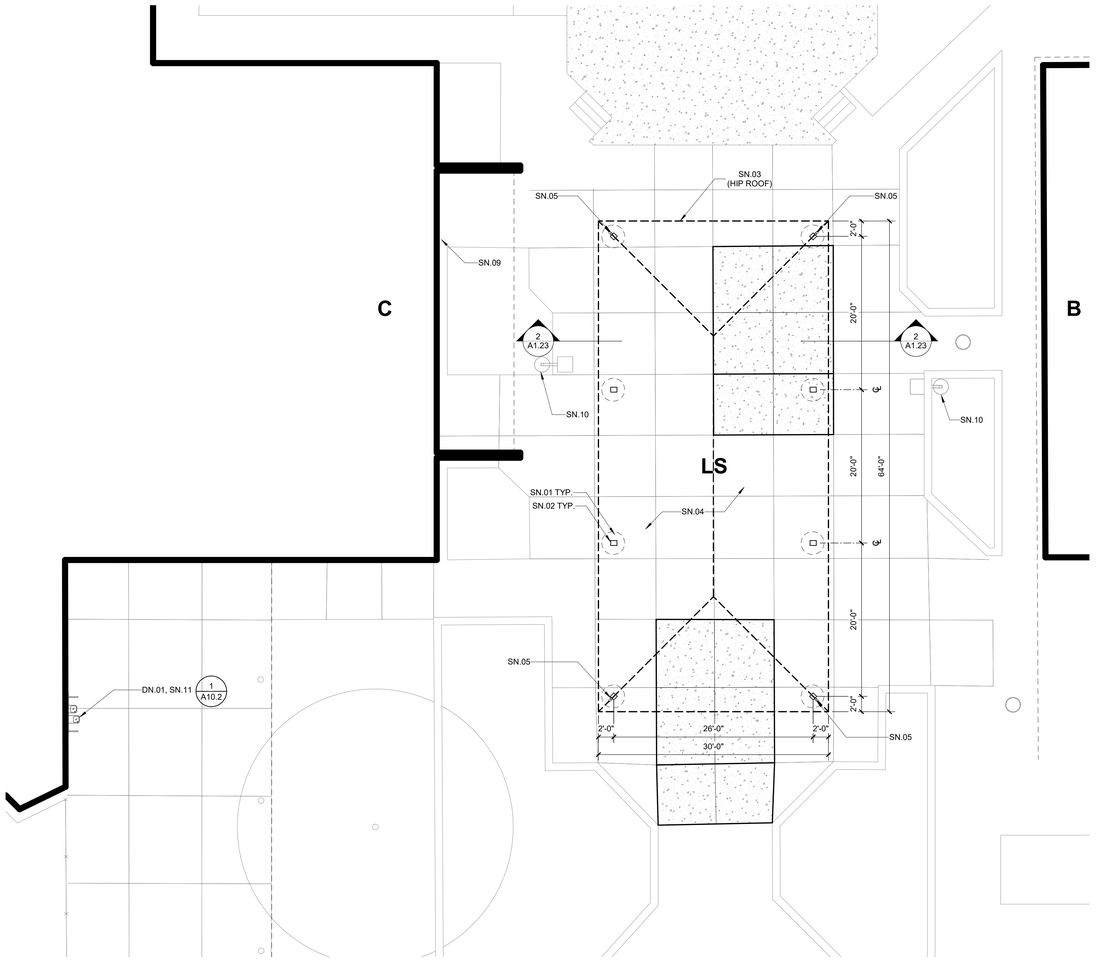

NOTE: LUNCH SHELTER COMPLIES WITH DSA IR 31-1.

ENLARGED PLAN - LUNCH SHELTER 1

1/8" = 1'-0"

LEGEND

- PROPERTY LINE
- ASSUMED PROPERTY LINE
- EXISTING BUILDINGS
- PC LUNCH SHELTER
- EXPANSION JOINT
- CONCRETE WALK / PAVING
- CONTROL JOINT
- ASPHALT CONCRETE PAVING
- (E) FENCING

EXTERIOR COLOR SCHEDULE

	MATERIAL	COLOR
M1	METAL	METAL FINISH COLOR 1 (1)
M2	METAL	METAL FINISH COLOR 2 (1)
M3	METAL	METAL PREFINISH COLOR (1) (3)
M4	METAL	METAL PREFINISH COLOR (1) (4)

(1) CUSTOM COLORS TO BE SUBMITTED PER SPECIFICATIONS.

(2) CLEAN, PREP AND PAINT ALL SURFACES NOT PREFINISHED.

(3) MATCH METAL PAINT "COLOR 1" WITH COLOR DESIRED IN PREFINISHED "COLOR 1"

(4) MATCH METAL PAINT "COLOR 2" WITH COLOR DESIRED IN PREFINISHED "COLOR 2"

DEMOLITION NOTES

DN.01 REMOVE AND SALVAGE (E) DRINKING FOUNTAIN FOR REINSTALLATION.

SHEET NOTES

SN.01 HSS COLUMN
SN.02 DRILLED PIER FOOTING, SHOWN DASHED
SN.03 ROOF OVERHANG ABOVE
SN.04 SITE WORK PER THIS APPLICATION
SN.05 3" DIAMETER SCHEDULE 40 STEEL DOWNSPOUT, PAINTED
SN.06 PREFINISHED GUTTER AND FLASHING
SN.07 PAINT DECK UNDERSIDE
SN.08 PREFINISHED STANDING SEAM ROOF
SN.09 (E) FIRE ALARM HORN RO REMAIN
SN.10 (E) LIGHT POLE TO REMAIN
SN.11 REINSTALL (E) DRINKING FOUNTAIN AT ACCESSIBLE HEIGHT; PROVIDE ALL REQUIRED ACCESSORIES. PATCH EXISTING WALL FINISH AS REQUIRED WITH STAINLESS STEEL COVER PLATE.

AGENCY APPROVAL:

IDENTIFICATION STAMP
DIV. OF THE STATE ARCHITECT
APP: 02-121999 INC:
REVIEWED FOR
SS ☑ FLS ☑ ACS ☑
DATE: 11/30/2023

LODI USD

HMC Architects

R221551X00

2101 CAPITOL AVENUE, SUITE 100,
SACRAMENTO, CA, 95816
916 368 7990 / www.hmcarchitects.com

LICENSED ARCHITECT MICHAEL CHESTER FORD REN. 07/31/25 STATE OF CALIFORNIA

ISSUE

Δ	DESCRIPTION	DATE

KEYNOTES

NOTES

FACILITY:
CLAIRMONT ELEMENTARY SCHOOL
8282 LE MANS AVENUE
STOCKTON, CA 95210

PROJECT:
LODI UNIFIED SCHOOL DISTRICT LUNCH SHELTERS - CLAIRMONT ELEMENTARY SCHOOL

SHEET NAME:
ENLARGED PLANS AND SECTION

CONSTRUCTION DOCUMENTS

DATE: **11/21/23** | CLIENT PROJ NO:

SHEET:

A1.23

Autodesk Docs://R221551X00 Lodi USD Lunch Shelters/R221551X00-A-CLAIRMONT-ES-LUNCH-SHELTER.rvt
11/21/2023 1:29:57 PM

PLEASE RECYCLE

THE LINE SHOWN ABOVE IS EXACTLY 1" WHEN PLOTTED AT FULL SHEET ORIGINAL PAGE SIZE

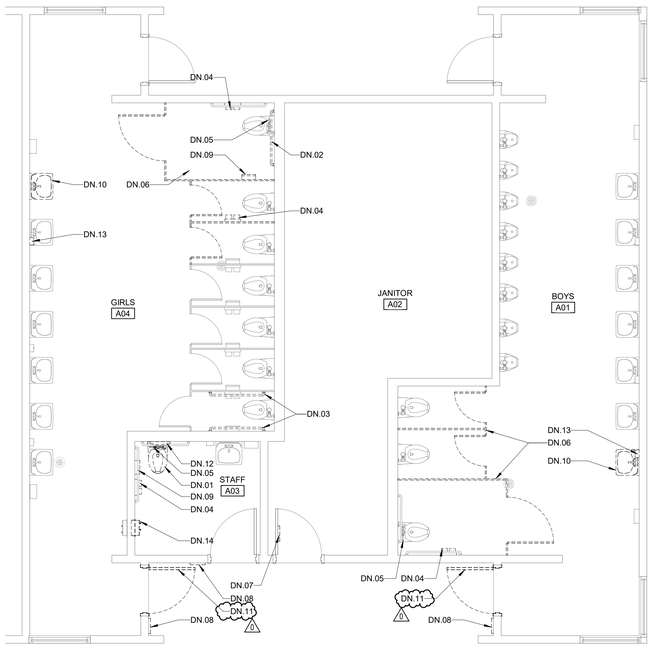

BOYS/GIRLS, STAFF TOILET ROOM DEMOLITION PLAN 02

1/4" = 1'-0"

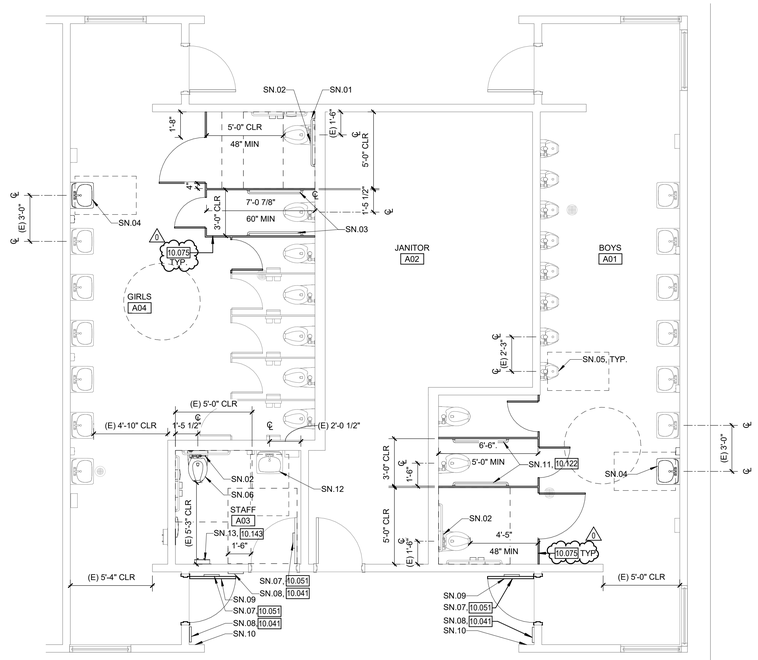

BOYS/GIRLS, STAFF TOILET ROOM IMPROVEMENT PLAN 01

1/4" = 1'-0"

DOOR HARDWARE

GROUP NO. 1 - MULTI OCCUPANCY RESTROOM

3	EA	HINGE	5BB1HW 4.5 X 4.5 NRP	630	IVE
1	EA	VANDL CLASSROOM LOCK	ND94P6D RHO	626	SCH
1	EA	LOCK GUARD	LG1	630	IVE
1	EA	SURFACE CLOSER	4040XP SHCUSH	689	LCN
1	EA	KICK PLATE	8400 10" X 2" LDW B-CS	630	IVE
1	EA	GASKETING	188SBK PSA	BK	ZER
1	EA	DOOR SWEEP	39A	A	ZER
1	EA	THRESHOLD	PER DETAIL 15/A10.2	A	ZER

LEGEND

DENOTES EXISTING WALLS & CURBS (WHERE OCCURS) TO BE REMOVED, SEE STRUCTURAL DRAWINGS FOR ADDITIONAL INFORMATION

EXISTING WALL TO REMAIN

CONSECUTIVE NUMBERING CONVENTION FOR INTERIOR ELEVATIONS AND ROOM FINISHES.

REMOVE (E) DOOR, HARDWARE AND FRAME U.O.N.

30" x 48" CLEAR FLOOR SPACE

60" CLEAR FLOOR SPACE

GENERAL NOTES

1. TYPICAL MOUNTING HEIGHTS AND DETAILS APPLY TO ENTIRE PROJECT, WHETHER REFERENCED OR NOT, UNLESS OTHERWISE NOTED.
2. ALL DISABLED ACCESSIBLE DIMENSIONS, ARE MAXIMUM DIMENSIONS UNLESS OTHERWISE NOTED.
3. REMOVE OR MODIFY ALL ITEMS AS REQUIRED TO INSTALL NEW WORK, WHETHER OR NOT SPECIFICALLY SHOWN TO BE REMOVED OR MODIFIED.
4. WHERE DRAINS, PIPING AND OTHER MATERIALS AND EQUIPMENT ARE REMOVED FROM THE SLAB, IT SHALL BE BACKFILLED, FINISHED FLUSHED WITH ADJACENT SURFACES AND PREPARED TO RECEIVE THE NEW FINISH.
5. CUT AND PATCH EXISTING SLAB AS REQUIRED FOR NEW PLUMBING WORK.
6. DEMO AND REPAIR WALL FINISH AS NECESSARY TO PERFORM FIXTURE AND EQUIPMENT WORK AS NOTED. ADJACENT FINISHES TO BE VERIFIED BY CONTRACTOR
7. EQUIPMENT/FIXTURES NOTED AS "SALVAGED FOR REINSTALLATION" WILL BE REMOVED AND STORED BY THE CONTRACTOR PRIOR TO START OF DEMOLITION. THESE EQUIPMENT/FIXTURES SHALL BE REINSTALLED BY THE CONTRACTOR UNDER THIS CONTRACT.

DEMOLITION NOTES

DN.01 REMOVE (E) WATER CLOSET AND SALVAGE FOR REINSTALLATION
DN.02 REMOVE (E) 36" GRAB BAR AND SALVAGE FOR REINSTILLATION
DN.03 REMOVE (E) 48" GRAB BAR AND SALVAGE FOR REINSTALLATION
DN.04 REMOVE (E) TOILET PAPER DISPENSER AND SALVAGE FOR REINSTALLATION
DN.05 REMOVE (E) FLUSH VALVE AND ADJUST SUPPLY PIPING AS NECESSARY FOR NEW FLUSH VALVE PLACEMENT
DN.06 REMOVE (E) TOILET PARTITION
DN.07 REMOVE (E) DOOR SIGNAGE
DN.08 REMOVE (E) ROOM I.D. SIGN
DN.09 REMOVE (E) SANITARY NAPKIN DISPOSAL AND SALVAGE FOR REINSTALLATION
DN.10 REMOVE (E) LAVATORY AND SALVAGE FOR REINSTALLATION
DN.11 REMOVE (E) DOOR AND HARDWARE. EXISTING FRAME TO REMAIN
DN.12 REMOVE (E) TOILET SEAT COVER DISPENSER AND SALVAGE FOR REINSTALLATION
DN.13 REMOVE (E) SOAP DISPENSER AND SALVAGE FOR REINSTALLATION
DN.14 REMOVE (E) SANITARY NAPKIN DISPENSER AND RETURN TO THE DISTRICT

SHEET NOTES

SN.01 REINSTALL SALVAGED 36" GRAB BAR TO COMPLY WITH A10.2 PROVIDE BLOCKING PER DETAIL 13/A10.2
CONTRACTORS OPTION, STAINLESS STEEL PLATE GRAB BAR PER DETAIL 14/A10.2
SN.02 NEW FLUSH VALVE SLOAN #WES-111-1.6/1 DUAL FLUSH MANUAL FLUSHOMETER, HANDLE INSTALLED ON OPEN SIDE OF STALL TO COMPLY WITH A10.2. ADJUST SUPPLY PIPING AS NECESSARY FOR NEW FLUSH VALVE
SN.03 REINSTALL SALVAGED 48" GRAB BARS TO COMPLY WITH A10.2
SN.04 REINSTALL SALVAGED LAVATORY TO COMPLY WITH A10.2 WRAP EXPOSED PIPE W/INSULATION. RECONNECT TO (E) WATER LINE, WASTE LINE AND VENT
SN.05 (E) URINAL TO REMAIN
SN.06 REINSTALL WATER CLOSET TO COMPLY WITH A10.2. RECONNECT TO (E) WATER LINE, WASTE LINE AND VENT.
SN.07 INSTALL DOOR SIGNAGE PER A10.2
SN.08 INSTALL TOILET ROOM ID SIGN PER A10.2
SN.09 NEW HOLLOW METAL DOOR WITH HEAVY DUTY LOUVER AT BOTTOM. PROVIDE NEW DOOR HARDWARE. LOUVER SIZE TO MATCH (E) LOUVER. PROVIDE COMMERCIAL INDUSTRIAL DOOR OPENER AT HEAD. LOCATE POWER FROM ADJACENT ROOM AND RUN WIRING IN CONDUIT, PAINT TO MATCH SURFACE.
SN.10 COMMERCIAL INDUSTRIAL DOOR OPENER WITH WIRELESS ACTIVATION BUTTON
SN.11 INSTALL 48" GRAB BARS TO COMPLY WITH A10.2
SN.12 (E) LAVATORY TO REMAIN. WRAP EXPOSED PIPE W/INSULATION
SN.13 INSTALL SANITARY NAPKIN DISPENSER TO COMPLY WITH A10.2

KEYNOTES

10.041 SIGNAGE: ROOM IDENTIFICATION
10.051 SIGNAGE: TOILET ROOM DOOR SYMBOL
10.075 PLASTIC TOILET COMPARTMENT
10.122 TOILET ACCESSORY: GRAB BAR
10.143 TOILET ACCESSORY: SANITARY NAPKIN/TAMPON DISPENSER

AGENCY APPROVAL:

LODI USD

HMC Architects

R221551X00

LICENSED ARCHITECT MICHAEL CHESTER KOPH C-25193 REN. 07/31/25 STATE OF CALIFORNIA

2101 CAPITOL AVENUE, SUITE 100,
SACRAMENTO, CA, 95816
916 368 7990 / www.hmcarchitects.com

ISSUE

Δ	DESCRIPTION	DATE
0	Revision 1	2/24/24

NOTES

KEY PLAN:

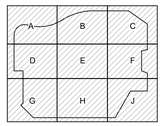

FACILITY:

CLAIRMONT ELEMENTARY SCHOOL
8282 LE MANS AVENUE
STOCKTON, CA 95210

PROJECT:

LODI UNIFIED SCHOOL DISTRICT LUNCH SHELTERS - CLAIRMONT ELEMENTARY SCHOOL

SHEET NAME:

ENLARGED TOILET ROOM PLANS

CONSTRUCTION DOCUMENTS

DATE: **11/21/23** | CLIENT PROJ NO:

SHEET:

A2.11

Autodesk Docs://R221551X00 Lodi USD Lunch Shelters/R221551X00-A-CLAIRMONT-ES-LUNCH-SHELTER.rvt
2/14/2024 5:16:54 PM

PLEASE RECYCLE

THE LINE SHOWN ABOVE IS 1" WHEN PRINTED ON A 24x36 SHEET'S ORIGINAL PAGE SIZE

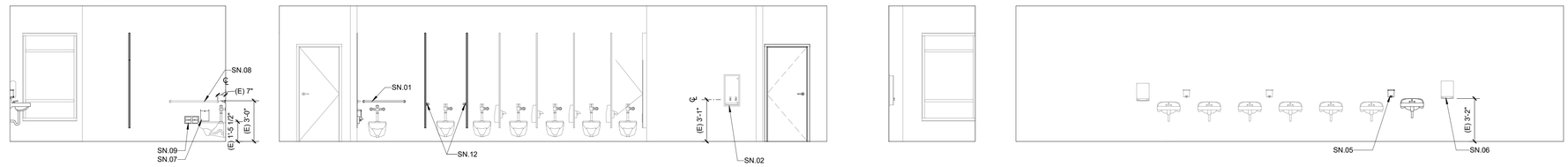

GIRLS TOILET ROOM INT. ELEVATIONS 03
1/4" = 1'-0"

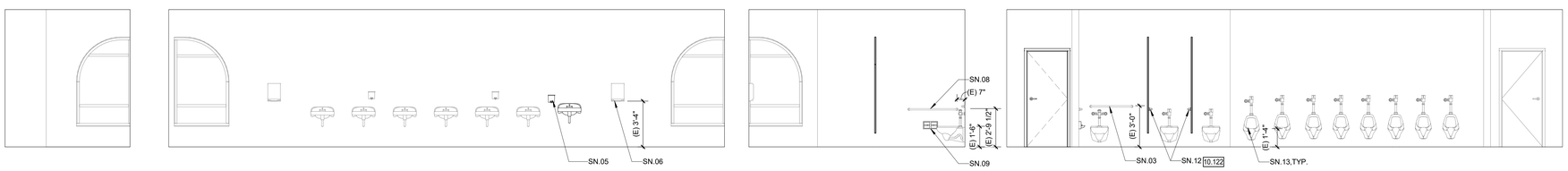

BOYS TOILET ROOM INT. ELEVATIONS 02
1/4" = 1'-0"

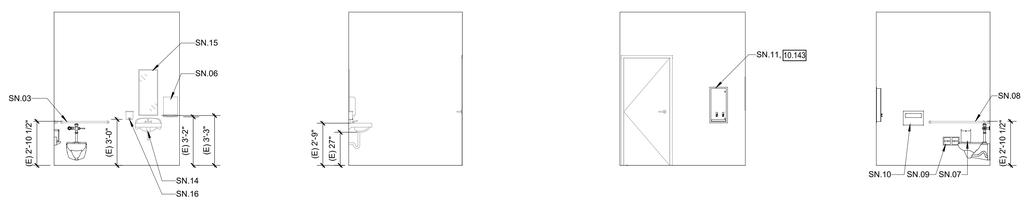

STAFF TOILET ROOM INT. ELEVATIONS 01
1/4" = 1'-0"

LEGEND

APPROX. EXTENT OF WALL FINISH AND BASE (AS APPLICABLE) PATCH. MATCH ADJACENT.

CONSECUTIVE NUMBERING CONVENTION FOR INTERIOR ELEVATIONS AND ROOM FINISHES.

GENERAL NOTES

1. TYPICAL MOUNTING HEIGHTS AND DETAILS APPLY TO ENTIRE PROJECT, WHETHER REFERENCED OR NOT, UNLESS OTHERWISE NOTED.
2. ALL DISABLED ACCESSIBLE DIMENSIONS, ARE MAXIMUM DIMENSIONS UNLESS OTHERWISE NOTED.
3. REMOVE OR MODIFY ALL ITEMS AS REQUIRED TO INSTALL NEW WORK, WHETHER OR NOT SPECIFICALLY SHOWN TO BE REMOVED OR MODIFIED.
4. WHERE DRAINS, PIPING AND OTHER MATERIALS AND EQUIPMENT ARE REMOVED FROM THE SLAB, IT SHALL BE BACKFILLED, FINISHED FLUSHED WITH ADJACENT SURFACES AND PREPARED TO RECEIVE THE NEW FINISH.
5. CUT AND PATCH EXISTING SLAB AS REQUIRED FOR NEW PLUMBING WORK.
6. DEMO AND REPAIR WALL FINISH AS NECESSARY TO PERFORM FIXTURE AND EQUIPMENT WORK AS NOTED. ADJACENT FINISHES TO BE VERIFIED BY CONTRACTOR
7. EQUIPMENT/FIXTURES NOTED AS "SALVAGED FOR REINSTALLATION" WILL BE REMOVED AND STORED BY THE CONTRACTOR PRIOR TO START OF DEMOLITION. THESE EQUIPMENT/FIXTURES SHALL BE REINSTALLED BY THE CONTRACTOR UNDER THIS CONTRACT.

SHEET NOTES

SN.01 REINSTALL SALVAGED 36" GRAB BAR TO COMPLY WITH A10.2 PROVIDE BLOCKING PER DETAIL 13/A10.2

CONTRACTORS OPTION. STAINLESS STEEL PLATE GRAB BAR PER DETAIL 14/A10.2

SN.02 (E) SANITARY NAPKIN DISPENSER TO REMAIN
SN.03 (E) 36" GRAB BAR TO REMAIN
SN.04 REINSTALL SALVAGED 48" GRAB BARS TO COMPLY WITH A10.2
SN.05 REINSTALL SALVAGED SOAP DISPENSER TO COMPLY WITH A10.2
SN.06 (E) PAPER TOWEL DISPENSER TO REMAIN
SN.07 REINSTALL SALVAGED SANITARY NAPKIN DISPOSAL TO COMPLY WITH A10.2
SN.08 (E) 42" GRAB BAR TO REMAIN
SN.09 REINSTALL SALVAGED TOILET PAPER DISPENSER TO COMPLY WITH A10.2
SN.10 REINSTALL SALVAGED TOILET SEAT COVER DISPENSER TO COMPLY WITH A10.2
SN.11 INSTALL SANITARY NAPKIN DISPENSER TO COMPLY WITH A10.2
SN.12 INSTALL 48" GRAB BARS TO COMPLY WITH A10.2
SN.13 (E) URINAL TO REMAIN
SN.14 (E) LAVATORY TO REMAIN. WRAP EXPOSED PIPE W/INSULATION
SN.15 (E) MIRROR TO REMAIN
SN.16 (E) SOAP DISPENSER TO REMAIN

KEY NOTES

10.122 TOILET ACCESSORY: GRAB BAR
10.143 TOILET ACCESSORY: SANITARY NAPKIN/TAMPON DISPENSER

AGENCY APPROVAL:

IDENTIFICATION STAMP
DIV. OF THE STATE ARCHITECT
APP: 02-121999 INC:
REVIEWED FOR
SS ☑ FLS ☑ ACS ☑
DATE: 11/30/2023

LODI USD

HMC Architects
R221551X00
2101 CAPITOL AVENUE, SUITE 100,
SACRAMENTO, CA, 95816
916 368 7990 / www.hmcarchitects.com

LICENSED ARCHITECT MICHEL CHESTER FORD REN. 07/31/25 STATE OF CALIFORNIA

ISSUE

Δ	DESCRIPTION	DATE

KEYNOTES

NOTES

FACILITY:
CLAIRMONT ELEMENTARY SCHOOL
8282 LE MANS AVENUE
STOCKTON, CA 95210

PROJECT:
LODI UNIFIED SCHOOL DISTRICT LUNCH SHELTERS - CLAIRMONT ELEMENTARY SCHOOL

SHEET NAME:
INTERIOR ELEVATIONS

CONSTRUCTION DOCUMENTS

DATE: **11/21/23** | CLIENT PROJ NO:

SHEET:

A8.11

Autodesk Docs://R221551X00 Lodi USD Lunch Shelters/R221551X00-A-CLAIRMONT-ES-LUNCH-SHELTER.rvt
11/21/2023 1:30:07 PM

PLEASE RECYCLE

THE LINE SHOWN ABOVE IS 1" WHEN PLOTTED ON ANSI E SHEETS ORIGINAL PAGE SIZE

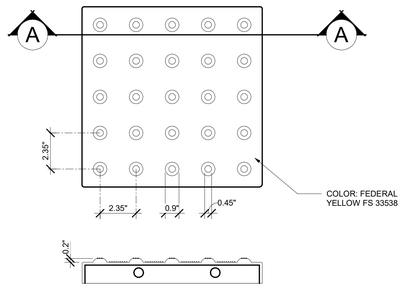

TYPICAL SECTION A-A

8 TRUNCATED DOMES
3" = 1'-0"

32220

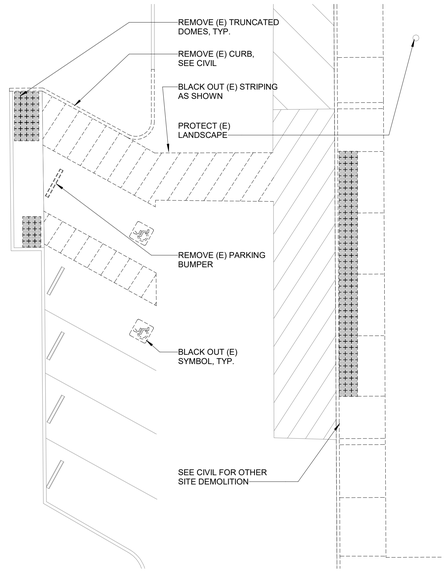

4 ENLARGED PARKING PLAN - DEMOLITION
1" = 10'-0"

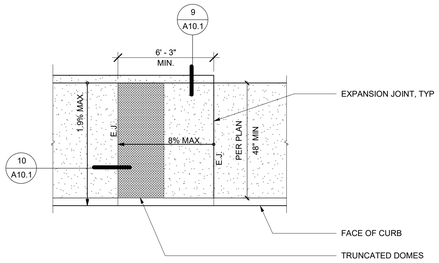

11 CURB RAMP
1/4" = 1'-0"

32203

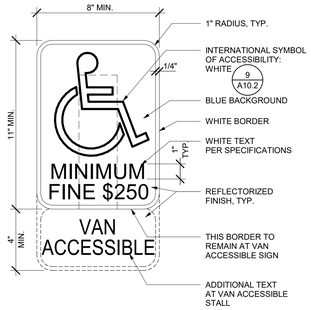

DISABLED ACCESSIBLE PARKING STALL

7 PARKING SIGNAGE
3" = 1'-0"

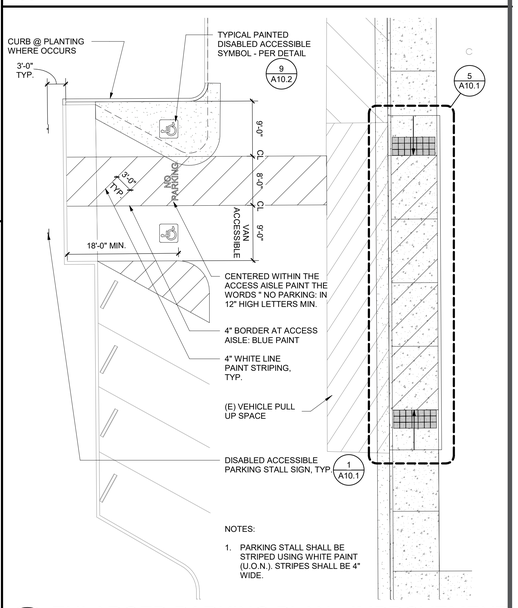

2 ENLARGED PARKING PLAN - IMPROVEMENT
1" = 10'-0"

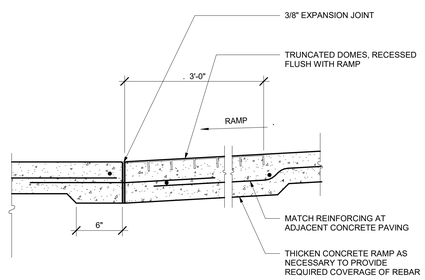

10 BLENDED TRANSITION
1 1/2" = 1'-0"

32212

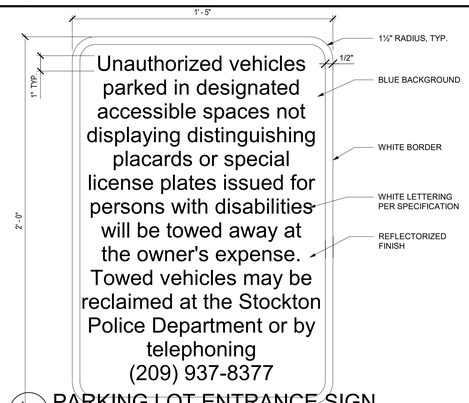

6 PARKING LOT ENTRANCE SIGN
3" = 1'-0"

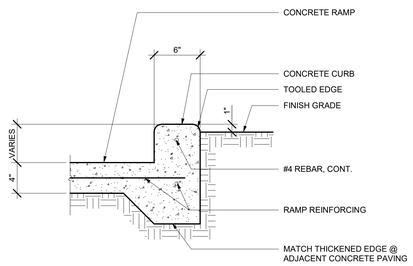

9 RETAINING CURB
1 1/2" = 1'-0"

32210

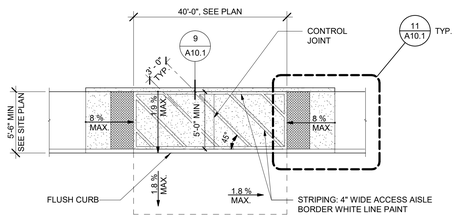

NOTES:
1. YELLOW PAINT TO MATCH TRUNCATED DOMES.

5 PASSENGER DROP-OFF RAMP
1/8" = 1'-0"

32206

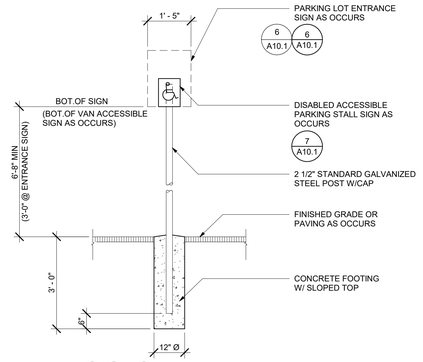

1 METAL SIGNS
1/2" = 1'-0"

10100

AGENCY APPROVAL:

IDENTIFICATION STAMP
DIV. OF THE STATE ARCHITECT
APP: 02-121999 INC:
REVIEWED FOR
SS ☑ FLS ☑ ACS ☑
DATE: 11/30/2023

LODI USD

HMC Architects

R221551X00

LICENSED ARCHITECT MICHAEL CHESTER FORD REN. 07/31/25 STATE OF CALIFORNIA

2101 CAPITOL AVENUE, SUITE 100,
SACRAMENTO, CA, 95816
916 368 7990 / www.hmcarchitects.com

ISSUE

Δ	DESCRIPTION	DATE

KEYNOTES

NOTES

FACILITY:
CLAIRMONT ELEMENTARY SCHOOL
8282 LE MANS AVENUE
STOCKTON, CA 95210

PROJECT:
LODI UNIFIED SCHOOL DISTRICT LUNCH SHELTERS - CLAIRMONT ELEMENTARY SCHOOL

SHEET NAME:
SITE DETAILS

CONSTRUCTION DOCUMENTS

DATE: **11/21/23** | CLIENT PROJ NO:

SHEET:

A10.1

Autodesk Docs://R221551X00 Lodi USD Lunch Shelters/R221551X00-A-CLAIRMONT-ES-LUNCH-SHELTER.rvt
11/21/2023 1:30:12 PM

PLEASE RECYCLE

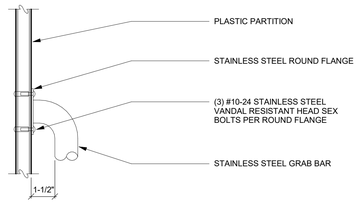

16 TYPICAL GRAB BAR AT PARTITIONS
3" = 1'-0"

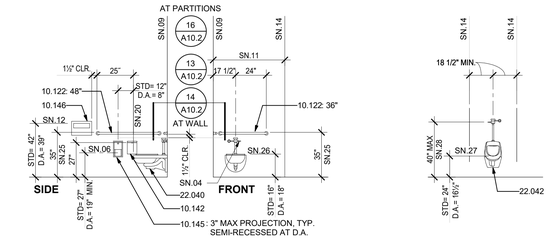

WALL MOUNTED WATER CLOSET

URINAL

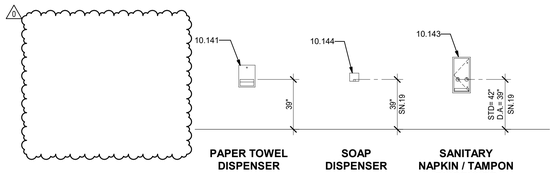

ACCESSORY HEIGHTS

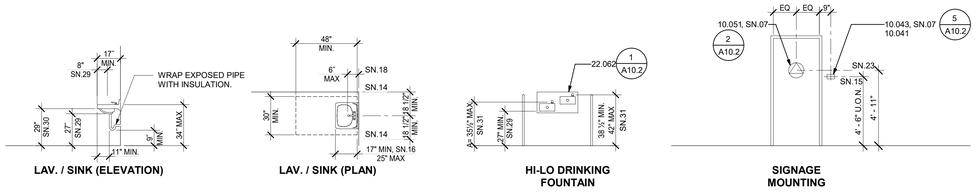

FIXTURE AND FURNITURE EQUIPMENT HEIGHTS

12 TYPICAL MOUNTING HEIGHTS AND DETAILS
1/4" = 1'-0"

LEGEND

M.S. MIDDLE SCHOOL
H.S. HIGH SCHOOL

GENERAL NOTES

1. TYPICAL MOUNTING HEIGHTS AND DETAILS APPLY TO ENTIRE PROJECT, WHETHER REFERENCED OR NOT, UNLESS OTHERWISE NOTED.
2. ALL DISABLED ACCESSIBLE DIMENSIONS, ARE MAXIMUM DIMENSIONS UNLESS OTHERWISE NOTED.
3. HEIGHTS ARE MEASURED FROM FINISH FLOOR, UNLESS OTHERWISE NOTED.

SHEET NOTES

SN.01 TOP OF SHELF
SN.02 MIDDLE SHELF FIXED
SN.03 PROVIDE 2X BLOCKING PER DETAIL 10 A10.2
SN.04 AT ACCESSIBLE WATER CLOSETS, FLUSH CONTROL HANDLE SHALL BE MOUNTED ON THE WIDE SIDE OF THE TOILET ENCLOSURE
SN.05 TO OPERATOR OR PUSH BUTTON
SN.06 DIMENSION TO CENTERLINE OF TOILET PAPER ROLL POSITION
SN.07 PROVIDE AT ALL TOILET ROOM DOORS
SN.08 AT DISABLED ACCESSIBLE CASEWORK
SN.09 TO FACE OF FINISH
SN.10 FOR SIGNS MOUNTED BACK-TO-BACK ON WINDOW GLAZING, SEE SPECIFICATIONS FOR REQUIREMENTS.
SN.11 62" CLR MIN. TO FINISH WALL/ PARTITION/ FIXTURE
SN.12 TO TOP OF OPENING
SN.13 34" MAX. IF MIRROR IS NOT MOUNTED OVER A LAV. OR COUNTER; TOP OF MIRROR 74" MIN. FOR HIGH SCHOOL & ADULTS.
SN.14 FACE OF OBJECTS OR WALLS
SN.15 CENTERLINE OF SIGN.
SN.16 19" MINIMUM AT SINK
SN.17 BOTTOM EDGE OF REFLECTIVE SURFACE
SN.18 FROM FARTHEST DEPTH OF THE CLEAR FLOOR SPACE TO FACE OF PLUMBING AND OTHER OBSTACLES
SN.19 TO CENTERLINE CONTROL.
SN.20 FRONT EDGE OF WATER CLOSET.
SN.21 NOT USED
SN.22 WHEELCHAIR, CLEAR FLOOR SPACE: 30"X48"
SN.23 CENTERLINE OF SYMBOL
SN.24 NOT USED.
SN.25 TOP OF GRAB BAR
SN.26 TOP OF SEAT
SN.27 LIP HEIGHT
SN.28 FLUSH HANDLE HEIGHT
SN.29 MINIMUM KNEE CLEARANCE
SN.30 MINIMUM APRON CLEARANCE
SN.31 BUBBLER HEIGHT
SN.32 FOR BOTTLE STATION AT DRINKING FOUNTAIN
SN.33 TO TOP OF SINK RIM; WHERE OCCURS
SN.34 ACTIVATION SENSOR.

KEYNOTES

10.041 SIGNAGE: ROOM IDENTIFICATION
10.043 SIGNAGE: TOILET ROOM IDENTIFICATION
10.051 SIGNAGE: TOILET ROOM DOOR SYMBOL
10.122 TOILET ACCESSORY: GRAB BAR
10.141 TOILET ACCESSORY: PAPER TOWEL DISPENSER
10.142 TOILET ACCESSORY: SANITARY NAPKIN DISPOSAL
10.143 TOILET ACCESSORY: SANITARY NAPKIN/TAMPON DISPENSER
10.144 TOILET ACCESSORY: SOAP DISPENSER
10.145 TOILET ACCESSORY: TOILET PAPER DISPENSER
10.146 TOILET ACCESSORY: TOILET SEAT COVER DISPENSER
22.040 WATER CLOSET
22.042 URINAL
22.062 BOTTLE FILL STATION

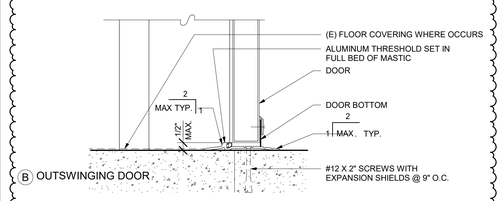

15 EXTERIOR DOOR THRESHOLD
3" = 1'-0"

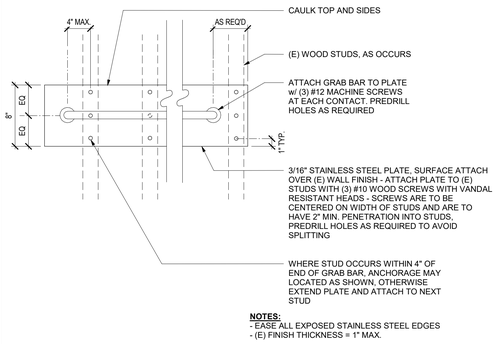

NOTES:
- EASE ALL EXPOSED STAINLESS STEEL EDGES
- (E) FINISH THICKNESS = 1" MAX.

14 GRAB BAR - STAINLESS STEEL PLATE
1 1/2" = 1'-0"

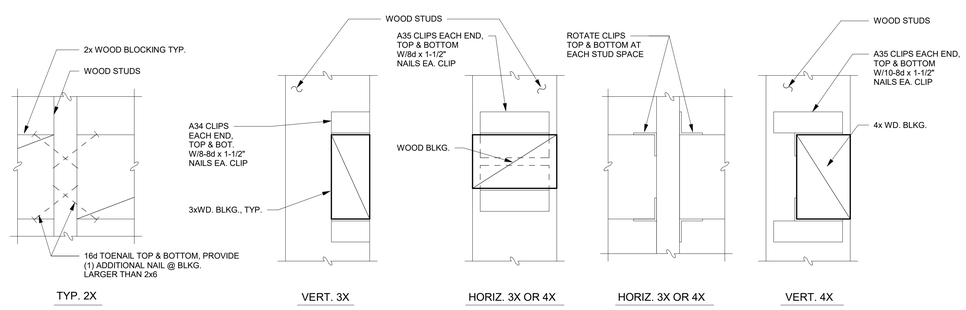

10 TYPICAL WOOD BLOCKING
3" = 1'-0"

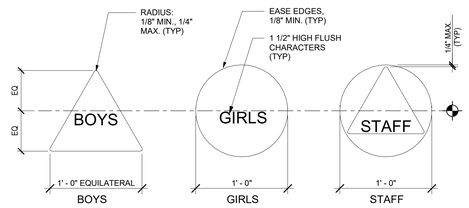

NOTE:

1. TEXT ON DOOR SYMBOL TO BE AS INDICATED ON DRAWINGS

2 TOILET ROOM DOOR SYMBOLS
1 1/2" = 1'-0"

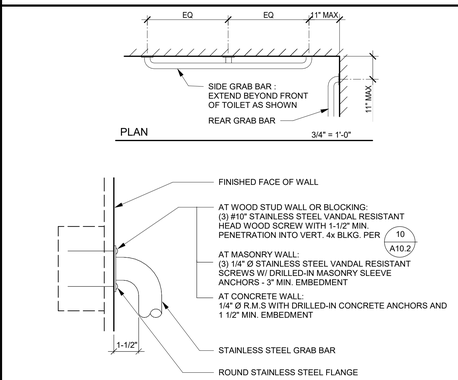

13 TYPICAL GRAB BAR AT WALL
3" = 1'-0"

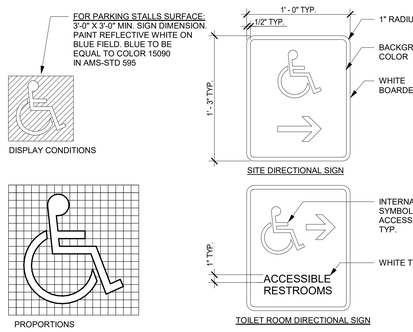

PROVIDE DIRECTIONAL SIGN WHERE SHOWN.

9 SYMBOL OF ACCESSIBILITY
NOT TO SCALE

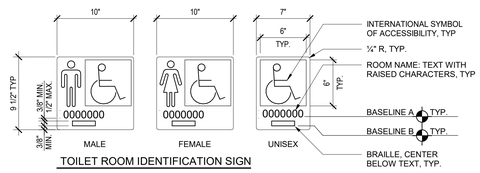

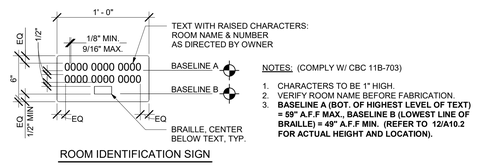

NOTES: (COMPLY W/ CBC 11B-703)

1. CHARACTERS TO BE 1" HIGH.
2. VERIFY ROOM NAME BEFORE FABRICATION.
3. **BASELINE A (BOT. OF HIGHEST LEVEL OF TEXT) = 59" A.F.F MAX., BASELINE B (LOWEST LINE OF BRAILLE) = 49" A.F.F MIN. (REFER TO 12/A10.2 FOR ACTUAL HEIGHT AND LOCATION).**

5 IDENTIFICATION SIGNS
1 1/2" = 1'-0"

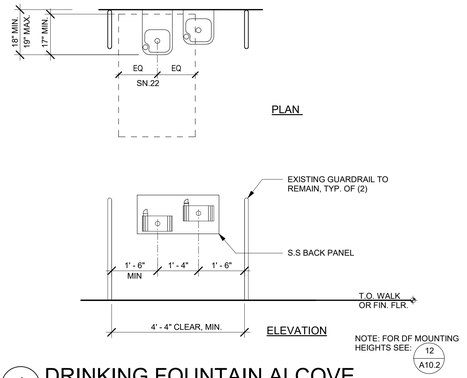

NOTE: FOR DF MOUNTING HEIGHTS SEE: 12 A10.2

1 DRINKING FOUNTAIN ALCOVE
1/2" = 1'-0"

AGENCY APPROVAL:

LODI USD

HMC Architects

R221551X00

2101 CAPITOL AVENUE, SUITE 100,
SACRAMENTO, CA, 95816
916 368 7990 / www.hmcarchitects.com

LICENSED ARCHITECT MICHAEL CHESTER FORTH C-25193 REN. 07/31/25 STATE OF CALIFORNIA

ISSUE

Δ	DESCRIPTION	DATE
0	Revision 1	2/24/24

KEYNOTES

NOTES

FACILITY:
CLAIRMONT ELEMENTARY SCHOOL
8282 LE MANS AVENUE
STOCKTON, CA 95210

PROJECT:
LODI UNIFIED SCHOOL DISTRICT LUNCH SHELTERS - CLAIRMONT ELEMENTARY SCHOOL

SHEET NAME:
TYPICAL MOUNTING HEIGHTS AND DETAILS

CONSTRUCTION DOCUMENTS

DATE: **11/21/23** CLIENT PROJ NO:

SHEET:

A10.2

THE LINE SHOWN ABOVE IS EXACTLY 1" WHEN PLOTTED AT ANSI SHEETS ORIGINAL PAGE SIZE
Autodesk Docs://R221551X00 Lodi USD Lunch Shelters/R221551X00-A-CLAIRMONT-ES-LUNCH-SHELTER.rvt
2/14/2024 5:17:02 PM
PLEASE RECYCLE

DESIGN VALUES

DESCRIPTION	DESIGN VALUES [1]
DEAD AND LIVE LOADS	
ROOF LIVE LOAD	20 PSF
ROOF DEAD LOAD (SUPERIMPOSED ON FRAME) [2]	LOAD SCENARIO= {1,2} DL = {3.5 PSF, 2.0 PSF}
ALLOWABLE SOIL PRESSURE [3, 5]	
SPREAD PAD	
VERTICAL BEARING: DL + Lr + SEISMIC (CONCRETE FOOTING)	1500 PSF
LATERAL COHESION: DL + Lr + SEISMIC (CONCRETE FOOTING)	130 PSF
DRILLED PIER	
SKIN FRICTION DOWN : DL + Lr + SEISMIC (CONCRETE FOOTING) PER 1810A.3.3.1.4	167 PSF
SKIN FRICTION (UPLIFT): DL + LR SEISMIC (CONCRETE FOOTING) PER 1810A.3.31.5	83 PSF
LATERAL BEARING: DL + Lr + SEISMIC (CONCRETE FOOTING) PER 1810A.3.3.2	100 PSF/FT
ROOF SNOW LOAD [6]	
GROUND SNOW LOAD, Pg	10 PSF
RISK CATEGORY	II
ROOF SNOW LOAD: [ ] FLAT, Pf OR [ ] LOW SLOPE, Pm OR [X] SLOPED, Ps	10 PSF
SNOW ROOF SLOPE FACTOR, Cs	1
SNOW EXPOSURE FACTOR, Ce	1.2
SNOW LOAD IMPORTANCE FACTOR, Is	1.0
THERMAL FACTOR, Ct	1.2
DRIFT SURCHARGE LOAD, Pd	0 PSF
DISTANCE FROM ADJACENT STRUCTURE, Pg = 0 PSF	4 IN
DISTANCE FROM ADJACENT STRUCTURE, Pg > 0 PSF	20 FT
ICE LOAD	0 PSF
FLOOD DESIGN	
FLOOD HAZARD AREA	NO
WIND DESIGN [4]	
BASIC WIND SPEED (3 SECOND GUST), Vult	110 MPH
EXPOSURE CATEGORY	C
TOPOGRAPHIC FACTOR, Kzt (1 MINIMUM)	1
INTERNAL PRESSURE COEFFICIENT, GCpi (IF APPLICABLE)	0.0
CLEAR WIND FLOW	YES
OBSTRUCTED WIND FLOW	YES
SEISMIC DESIGN [4]	
LATERAL FORCE-RESISTING SYSTEM	STEEL ORDINARY CANTILEVER COLUMN SYSTEM
ANALYSIS PROCEDURE	EQUIVALENT LATERAL FORCE PROCEDURE
SEISMIC DESIGN CATEGORY (SDC)	E
SEISMIC IMPORTANCE FACTOR, Ie	1.0
DESIGN BASE SHEAR, V	Cs x W
SEISMIC RESPONSE COEFFICIENT, Cs	LOAD SCENARIO = {1,2} Cs = {0.90,1.32}
RESPONSE MODIFICATION FACTOR, R	1.25
SITE CLASS [7]	E
REDUNDANCY FACTOR, p	1.3
MAPPED SPECTRAL RESPONSE ACCELERATION AT SHORT PERIOD, Ss - USED TO DETERMINE Cs	LOAD SCENARIO = {1,2} Ss = {1.406, 2.063}
SHORT-PERIOD SITE COEFFICIENT, Fa	1.2
DESIGN SPECTRAL RESPONSE ACCELERATION AT SHORT PERIOD, Sds - USED TO DETERMINE Cs	LOAD SCENARIO = {1,2} Sds (MAX) = {1.125, 1.650}
MAPPED SPECTRAL RESPONSE ACCELERATION AT 1 SECOND PERIOD, S1	LOAD SCENARIO = {1,2} S1 = {0.844, 1.07}
LONG-PERIOD SITE COEFFICIENT, Fv	2.0
DESIGN SPECTRAL RESPONSE ACCELERATION AT 1 SECOND PERIOD, Sd1	LOAD SCENARIO = {1,2} Sd1 = {1.125, 1.427}
HORIZONTAL OR VERTICAL IRREGULARITIES TYPE(S)	NONE

1. IF SITE-SPECIFICDESIGN CRITERIA ARE OUTSIDE THE LIMITS OF THESE PC DRAWINGS, CONTACT POLIGON ENGINEERING TO SEE IF AN ENGINEERING LETTER, SUPPLEMENTAL DRAWINGS, AND/OR CALCULATIONS COULD BE SUBMITTED FOR A SITE-SPECIFIC SOLUTION. ANY SITE- SPECIFIC DEVIATION FROM THIS PC MAY NOT BE SUBMITTING TO DSA AS AN OVER-THE-COUNTER.
2. STRUCTURE IS NOT DESIGNED TO SUPPORT SOLAR PANELS. STRUCTURE IS NOT DESIGNED TO SUPPORT SPRINKLER SYSTEMS IN LOAD SCENARIO 2 REGIONS.
3. GEOHAZARD REPORTS ARE REQUIRED IF THE AREA COVERED UNDER THE ROOF EXCEEDS 4000 SQ FT OR IS LOCATED WITHIN STATE OR LOCAL GEOLOGIC HAZARD ZONE. VERIFY SUBMITTAL AND APPROVAL OF A GEOHAZARD REPORT BY CGS PRIOR TO DSA SITE APPLICATION.
4. STRUCTURAL SEPARATION BETWEEN ADJACENT STRUCTURES: RAM 20= 5.0", RAM 30= 3.0" STRUCTURAL SEPARATION BETWEEN EXISTING STRUCTURES: RAM 20= 5.5", RAM 30= 4.0"
5. WHEN PLACING MULTIPLE CANOPIES WITH PIER FOOTINGS ADJACENT TO ONE ANOTHER, THE DESIGN MAY REQUIRE AN ANALYSIS OF GROUP EFFECTS ON THE FOUNDATIONS. THE MINIMUM CLEARANCE BETWEEN CENTER OF PIERS IS EIGHT TIMES PIER DIAMETER WITHOUT AN ACCOMPANYING ENGINEERING LETTER
6. SITE APPLICATION DESIGN PROFESSIONAL AND DSA REVIEWER SHALL VERIFY THE STRUCTURE TO BE LOCATED AT LEAST 20 FEET FROM ANY HIGHER ADJACENT STRUCTURE IF GROUND SNOW IS GREATER THAN ZERO.
7. DESIGN COMPLIES WITH THE CONDITIONS OF EXCEPTION 1 OF ASCE 7-16 SECTION 11.4.8, ITEM 2.
8. APPROVED FIRE APPARATUS ACCESS ROADS SHALL EXTEND TO WITHIN 150 FEET OF ALL PORTIONS OF THE PERIMETER OF THE STRUCTURE PER CFC 503.1.1.

ARCHITECTURAL REQUIREMENTS:

DESCRIPTION	DESIGN VALUES
TYPE OF CONSTRUCTION	II B
NUMBER OF STORIES	1
FIRE SPRINKLER SYSTEM	NOT BY POLIGON

RELATED BUILDING CODES AND STANDARDS:

TITLE 24 CODES:

2022 California Administrative Code (CAC)..........................(Part 1, Title 24, CCR)
2022 California Building Code (CBC), Volumes 1 and 2 (Part 2, Title 24, CCR)
(2021 International Building Code with 2022 California amendments)
2022 California Electrical Code ....(Part 3, Title 24, CCR)
(2020 National Electrical Code with 2022 California amendments)
2022 California Mechanical Code (CMC) ....(Part 4, Title 24, CCR)
(2021 Uniform Mechanical Code with 2022 California amendments)
2022 California Plumbing Code (CPC) ....(Part 5, Title 24, CCR)
(2021 Uniform Plumbing Code with 2022 California amendments)
2022 California Energy Code ....(Part 6, Title 24, CCR)
2022 California Fire Code (CFC) ....(Part 9, Title 24, CCR)
(2021 International Fire Code with 2022 California Amendments)
2022 California Existing Building Code (CEBC)......................(Part 10, Title 24, CCR)
2022 California Green Building Standards Code...................(Part 11, Title 24, CCR)
2022 California Referenced Standards Code .... (Part 12, Title 24, CCR)
Title 19 CCR, Public Safety, State Marshal Regulations

NFPA 13 - 2016
NFPA 72 - 2016

REFERENCE CODE SECTIONS FOR APPLICABLE STANDARDS:

2022 CBC, CHAPTER **35**
2022 CFC, CHAPTER **80**

SCOPE OF WORK NARRATIVE:

THESE DRAWINGS ILLUSTRATE THE FABRICATION AND INSTALLATION REQUIREMENTS FOR A FREE-STANDING PREFABRICATED STEEL SHADE STRUCTURE. THE ENTIRE STRUCTURAL SYSTEM IS COMPRISED OF TUBULAR STEEL MEMBERS SUPPORTED ON CONCRETE FOUNDATIONS. THE FLEXIBILITY INCLUDED HEREIN ALLOWS THIS STRUCTURE TO COMPLY WITH A WIDE VARIETY OF PROJECT SITES AND LOADING REQUIREMENTS.

INSTRUCTIONS FOR ARCHITECTS PLANNING TO SUBMIT THESE PRE-CHECKED DRAWINGS TO DSA:

STEP 1 PROJECT INFORMATION

PROJECT NAME	LODI UNIFIED SCHOOL DISTRICT LUNCH SHELTERS - CLAIRMONT ELEMENTARY SCHOOL	
SCHOOL DISTRICT	LODI UNIFIED SCHOOL DISTRICT	
USE AND OCCUPANCY CLASSIFICATION	A-2	**(PROPOSED OCCUPANCY: A1, A2, A3, A4, A5, B, E)**
OCCUPANT LOAD FACTOR	15	**(15 SQFT/PERSON MAX; 5 SQFT/PERSON MIN FOR ANY A OCCUPANCY 20 SQFT/PERSON MAX FOR B OR E OCCUPANCY)**
TOTAL ROOF AREA	1,920	**(MAXIMUM 4500 SQFT FOR ANY A OCCUPANCY, 10,000 SQFT FOR B OCCUPANCY, AND 5000 SQFT FOR E OCCUPANCY)**
NUMBER OF OCCUPANTS	128	**(MAXIMUM 300 FOR ANY A OCCUPANCY, 500 FOR B OCCUPANCY, AND 250 FOR E OCCUPANCY)**

STEP 2 DESIGN OPTIONS

ROOF DECK	[ ] MULTI-RIB (MR)	**DEFAULT**, WEIGHT 1.2 PSF
	[X] STANDING SEAM (SS)	WEIGHT 1.8 PSF
GUTTERS	[ ] NO	**DEFAULT**
	[X] YES	SEE RAM7.0 FOR DETAILS
ELECTRICAL ACCESS	[ ] NO	**DEFAULT**
	[X] YES	SEE RAM7.1 FOR DETAILS
CLEAR HEIGHT	[ ] 8'	**DEFAULT**
	[X] 10' OTHER	10' MAX

STEP 3 SEISMIC ACCELERATION

Ss 0 . 6 8 2 **(g)**
S1 0 . 2 7 3 **(g)**

STEP 4 SEISMIC REGIONS

0.000 < Ss <= 1.406 S1 <= 0.844	[X] WHITE	3.5 PSF MAX DEA LOAD
1.406 < Ss <= 2.063 S1 <= 1.070	[ ] GREEN	2.0 PSF MAX DEAD LOAD

STEP 5 TOTAL ROOF DEAD LOAD

ROOF DECK	1 . 8 PSF	SEE STEP 2' 'ROOF DECK FOR WEIGHTS
COLLATERAL	0 . 0 PSF	LIGHTING , FIRE SUPPRESSION, ETC.
TOTAL	1 . 8 PSF	ADD 'ROOF DECK' AND 'COLLATERAL'

STEP 6 LOAD SCENARIO

WHITE	TOTAL ROOF DEAD LAOD <= 3.5 PSF	[X] **LOAD SCENARIO 1**
GREEN	TOTAL ROOF DEAD LOAD < 2.0 PSF	[ ] **LOAD SCENARIO 2**

STEP 7 PC STRUCTURE

ROOF WIDTH <= 20	[ ] **RAM 20**
20 < ROOF WIDTH <= 30	[X] **RAM 30**

STEP 8 STRUCTURE SIZE

	RAM 20		**RAM 30**	
ROOF WIDTH	[ ] 20'	**DEFAULT**	[X] 30'	**DEFAULT**
	[ ] ________ OTHER	9' MIN; 20' MAX	[ ] ________ OTHER	20'-6" MIN; 30' MAX
ROOF LENGTH	[ ] 44'	2 BAYS	[ ] 44'	2 BAYS
	[ ] 64'	3 BAYS	[X] 64'	3 BAYS
	[ ] 84'	4 BAYS	[ ] 84'	4 BAYS
	[ ] ________ OTHER		[ ] ________ OTHER	

STEP 9 FOUNDATION TYPE

	RAM 20		**RAM 30**	
FOUNATION TYPE	[ ] SPREAD PAD	[ ] DRILLED PIER	[ ] SPREAD PAD	[X] DRILLED PIER

STEP 10 FOUNDATION SUMMARY

RAM 20		RAM 30	
[ ] LOAD SCENARIO 1 SPREAD PAD	[ ] LOAD SCENARIO 1 DRILLED PIER	[ ] LOAD SCENARIO 1 SPREAD PAD	[X] LOAD SCENARIO 1 DRILLED PIER
[ ] LOAD SCENARIO 2 SPREAD PAD	[ ] LOAD SCENARIO 2 DRILLED PIER	[ ] LOAD SCENARIO 2 SPREAD PAD	[ ] LOAD SCENARIO 2 DRILLED PIER

STEP 11 SHEET INDEX

BASE FRAME	RAM 20 SHEET INDEX				RAM 30 SHEET INDEX			
ROOF DECK	MR		SS		MR		SS	
FOUNDATION TYPE	SPREAD PAD	DRILLED PIER	SPREAD PAD	DRILLED PIER	SPREAD PAD	DRILLED PIER	SPREAD PAD	DRILLED PIER
SELECT ONE	[ ]	[ ]	[ ]	[ ]	[ ]	[ ]	[ ]	[X]
ORDER FORM	RAM1.0	RAM1.0	RAM1.0	RAM1.0	RAM1.0	RAM1.0	RAM1.0	RAM1.0
NOTES AND SPECIAL INSPECTIONS	RAM1.1	RAM1.1	RAM1.1	RAM1.1	RAM1.1	RAM1.1	RAM1.1	RAM1.1
FOUNDATION PLAN	RAM2.0	RAM2.1	RAM2.0	RAM2.1	RAM2.2	RAM2.3	RAM2.2	RAM2.3
FRAMING PLAN	RAM3.0	RAM3.0	RAM3.0	RAM3.0	RAM3.1	RAM3.1	RAM3.1	RAM3.1
FRAME CONNECTION DETAILS	RAM4.0	RAM4.0	RAM4.0	RAM4.0	RAM4.2	RAM4.2	RAM4.2	RAM4.2
SECTION DETAILS	RAM4.1	RAM4.1	RAM4.1	RAM4.1	RAM4.3	RAM4.3	RAM4.3	RAM4.3
ARCHITECTURAL VIEWS	RAM5.0	RAM5.0	RAM5.0	RAM5.0	RAM5.1	RAM5.1	RAM5.1	RAM5.1
ROOF CONNECTION DETAILS	RAM6.0	RAM6.0	RAM6.1	RAM6.1	RAM6.0	RAM6.0	RAM6.1	RAM6.1
MISC DESIGN OPTIONS	RAM7.0	RAM7.0	RAM7.0	RAM7.0	RAM7.0	RAM7.0	RAM7.0	RAM7.0
ELETRICAL CUTOUTS	RAM7.1	RAM7.1	RAM7.1	RAM7.1	RAM7.1	RAM7.1	RAM7.1	RAM7.1

STEP 12 MULTIPLE STRUCTURES

	ROOF WIDTH X LENGTH	QTY
MULTIPLE STRUCTURES		

STEP 1: GENERAL PROJECT INFORMATION

- IDENTIFY PROJECT NAME AND SCHOOL DISTRICT
- IDENTIFY USE AND OCCUPANCY CLASSIFICATION
  - THE USE AND OCCUPANCY DETERMINE THE MAXIMUM SQUARE FOOTAGE OF THE STRUCTURE
  - THE MAXIMUM SQUARE FOOTAGE IS ALSO LIMITED BY THE NUMBER OF OCCUPANTS
- IDENTIFY THE OCCUPANT LOAD PER TABLE 1004.5 IN THE CBC
- IDENTIFY TOTAL ROOF AREA WHICH SHALL NOT EXCEED ALLOWABLE AREA PER TABLE 506.2 IN THE CBC.
- IDENTIFY EXPECTED NUMBER OF OCCUPANTS BASED ON THE ESTIMATED OCCUPANT LOAD
  - TOTAL ROOF AREA DIVIDED BY OCCUPANT LOAD CAN DETERMINE NUMBER OF OCCUPANTS

STEP 2: DESIGN OPTIONS

- SELECT ROOF DECK FOR YOUR PROJECT
  - "MR" REPRESENTS MCELROY METAL "MULTI-RIB" ROOF DECK
  - "SS" REPRESENTS MCELROY METAL "MEDALLION-LOK" 16" STANDING SEAM ROOF DECK
- SELECT WHETHER GUTTERS AND DOWNSPOUTS FROM POLIGON IS NEEDED FOR YOUR PROJECT
  - IF "YES", THEN INCLUDE SHEET RAM7.0 IN THE DRAWING SET
- SELECT WHETHER ELECTRICAL CUTOUTS ARE NEEDED FOR YOUR PROJECT
  - SHEET RAM7.0 SHOWS ELECTRICAL CUTOUT SIZE AND LOCATION CUTOUTS IN COLUMNS
  - SHEET RAM7.1 HAS INSTRUCTIONS AND SHEET TO IDENTIFY WHICH COLUMNS
  - SHEET RAM7.1 MUST BE FILLED OUT IN THE SUBMITTAL SET APPROVED BY DSA
  - IF NOTHING IS FILLED IN ON RAM7.1, POLIGON WILL ASSUME CUTOTUS ARE ONLY IN COLUMN A1 (SEE 'FRAMING PLAN' FOR REFERENCE)
- SELECT CLEAR HEIGHT (SEE 'ARCHITECTURAL VIEWS' SHEET FOR REFERENCE)
  - MIN 7'-1"; MAX 10'-0"
- **IF NOTHING IS SELECTED, POLIGON WILL ASSUME THE DEFAULT FOR EACH DESIGN OPTION**

STEP 3: IDENTIFY THE Ss & S1 ACCELERATION (g) FOR YOUR PROJECT AND GEOTECHNICAL INFORMATION

- Ss & S1 VALUE DETERMINES THE REQUIRED SEISMIC DESIGN FORCES
- Ss & S1 VALUE DEPENDS ON PROJECT'S GEOGRAPHICAL LOCATION
  - FIND Ss & S1 VALUES FOR YOUR PROJECT IN THE SITE SPECIFIC GEOTECHNICAL REPORT
  - FIND Ss & S1 VALUES FOR YOUR PROJECT USING (https://asce7hazardtool.online/)
- THIS PC IS NOT APPROVED FOR Ss VALUES GREATER THAN 2.063 (CONTACT POLIGON FOR ADDITIONAL OPTIONS)

STEP 4: IDENTIFY THE SEISMIC REGION FOR YOUR PROJECT

- THE REGIONS ARE DEPENDANT ON THE Ss & S1 VALUE DETERMINED IN STEP 3
- THE SEISMIC REGION DICTATES THE MAXIMUM DEAD LOAD PERMITTED (SEE TABLE TO THE LEFT)

STEP 5: IDENTIFY THE ROOF DEAD LOAD FOR YOUR PROJECT

- THE ROOF DECK DEAD LOAD WILL ALWAYS BE INCLUDED
- THE COLLATERAL LOAD REPRESENTS ADDITIONAL LOAD THAT CAN BE SUPPORTED BY THE FRAME
- TOTAL ROOF DEAD LOAD MUST BE LESS THAN OR EQUAL TO THE MAX DEAD LOAD SHOWN IN STEP 4
- CUT SHEETS OF ANY BOARDS, BOXES AND EQUIPMENT TO BE MOUNTED ON THE STRUCTURE, INCLUDING WEIGHTS AND DIMENSIONS ARE REQUIRED

STEP 6: IDENTIFY THE LOAD SCENARIO

- REFERENCE THE STEP 4 COLOR AND SELECT THE APPLICABLE LOAD SCENARIO
- LOAD SCENARIOS HAVE NO IMPACT ON FRAME DESIGN OR COST, BUT DO AFFECT FOUNDATION SIZE

STEP 7: IDENTIFY PC STRUCTURE

- ROOF WIDTHS UP TO 20' WIDE USE THE "RAM 20"
- ROOF WIDTHS UP TO 30' WIDE USE THE "RAM 30"
- THE 20' AND 30' WIDTHS ARE SUGGESTED BECAUSE THEY ARE THE MOST ECONOMICAL
- MAXIMUM WIDTH IS 30'; (SEE 'ARCHITECTURAL VIEWS' SHEET FOR REFERENCE)

STEP 8: IDENTIFY SITE SPECIFIC ROOF WIDTH AND LENGTH

- DO NOT EXCEED THE TOTAL ROOF AREA FROM STEP 1 (ROOF WIDTH MULTIPLIED BY ROOF LENGTH)

STEP 9: FOUNDATION TYPE

- SELECT A FOUNDATION BASED THE DESIRED FOUNDATION TYPE
- SELECT EITHER SPREAD PAD OR DRILLED PIER FOUNDATION PRIOR TO APPROVAL
- FOUNDATION TYPE IMPACTS CONSTRUCTION (TIMING, SEQUENCE, COST, ETC.)
- FOUNDATION TYPE IMPACTS ANCHOR BOLT LENGTH (NOT PROVIDED BY POLIGON)
- REVIEW OF SITE-SPECIFIC SOILS REPORT TO EVALUATE APPLICABILITY OF FOUNDATION OPTIONS AVAILABLE

STEP 10: FOUNDATION SUMMARY

- USE THE SELECTIONS FROM STEP 6 AND STEP 9 TO SELECT THE APPROPRIATE FOUNDATION

STEP 11: SELECT APPLICABLE SHEET INDEX FOR YOUR PROJECT

- IDENTIFY THE APPLICABLE SHEET INDEX
- INCLUDE APPLICABLE SHEETS WITH YOUR DSA SUBMITTAL
- EXCLUDE 'MISC DESIGN OPTIONS' SHEET FOR PROJECTS WITHOUT ELECTRICAL CUTOUTS OR GUTTERS
- EXCLUDE 'ELECTRICAL CUTOUTS' SHEET FOR PROJECTS WITHOUT ELECTRICAL CUTOUTS

STEP 12: MULTIPLE STRUCTURES WITH THE SAME PC#

- FILL IN ROOF LENGTH AND WIDTH OF STRUCTURES AS WELL AS QUANTITY
- UNO ON THE POLIGON DRAWINGS, POLIGON WILL ASSUME ALL DESIGN CRITERIA FOR EACH STRUCTURE IS THE SAME
- CONTACT POLIGON FOR FURTHER INFORMATION

SHEET INDEX

1	RAM1.0	ORDER FORM	11	RAM4.2	FRAME CONNECTION DETAILS - RAM 30
2	RAM1.1	NOTES AND SPECIAL INSPECTIONS	12	RAM4.3	SECTION DETAILS - RAM 30
~~3~~	~~RAM2.0~~	~~FOUNDATION PLAN SPREAD PAD - RAM 20~~	~~13~~	~~RAM5.0~~	~~ARCHITECTURAL VIEWS - RAM 20~~
~~4~~	~~RAM2.1~~	~~FOUNDATION PLAN DRILLED PIER - RAM 20~~	14	RAM5.1	ARCHITECTURAL VIEWS - RAM 30
~~5~~	~~RAM2.2~~	~~FOUNDATION PLAN SPREAD PAD - RAM 30~~	~~15~~	~~RAM6.0~~	~~ROOF CONNECTION DETAILS~~
6	RAM2.3	FOUNDATION PLAN DRILLED PIER - RAM 30	16	RAM6.1	ROOF CONNECTION DETAILS
~~7~~	~~RAM3.0~~	~~FRAMING PLAN - RAM 20~~	17	RAM7.0	MISC DESIGN OPTIONS
8	RAM3.1	FRAMING PLAN - RAM 30	18	RAM7.1	ELECTRICAL CUTOUTS
~~9~~	~~RAM4.0~~	~~FRAME CONNECTION DETAILS - RAM 20~~			
~~10~~	~~RAM4.1~~	~~SECTION DETAILS - RAM 20~~			
TOTAL SHEETS = 18					

ABBREVIATIONS:

ACI	AMERICAN CONCRETE INSTITUTE	MR	MULTI-RIB ROOF PANEL (MCELROY)
AISC	AMERICAN INSTITUTE OF STEEL CONSTRUCTION	NTS	NOT TO SCALE
ASM	ASSEMBLY (INTERNAL REFERENCE)	NO	NUMBER
ASTM	AMERICAN SOCIETY FOR TESTING AND MAT'LS	OC	ON CENTER
AWS	AMERICAN WELDING SOCIETY	OSHA	OCCUPATIONAL HEALTH AND SAFETY ADM.
CBC	CALIFORNIA BUILDING CODE	PCF	POUNDS PER CUBIC FOOT
CJP	COMPLETE JOINT PENETRATION	PD	POLIGON DRAWING
CLR	CLEAR	PJ	PRETENSIONED JOINT
DEG	DEGREE	PLCS	PLACES
DIA	DIAMETER	PLT	PLATE
DIM	DIMENSION	PSF	POUNDS PER SQUARE FOOT
DSA	DIVISION OF THE STATE ARCHITECT	PSI	POUNDS PER SQUARE INCH
EQ	EQUAL	QTY	QUANTITY
FT	FEET	REF	REFERENCE
GA	GAGE	SQ	SQUARE
IN	INCHES	SS	STANDING SEAM ROOF PANEL (MCELROY)
KSI	KIPS PER SQUARE INCH	TYP	TYPICAL
MAX	MAXIMUM	UNO	UNLESS NOTED OTHERWISE
MIN	MINIMUM	USGS	U.S. GEOLOGICAL SURVEY
MISC	MISCELLANEOUS	W/	WITH
MPH	MILES PER HOUR		

SPECIFICATIONS

PART 1 - GENERAL

1.1 STRUCTURE DESCRIPTION
A. STRUCTURE(S) BASED ON THE FOLLOWING PC DESIGN(S):
1. HIP ROOF (RAM)

1.2 DESIGN REQUIREMENTS
A. MEET THE DESIGN INTENT SHOWN ON THE PC DRAWINGS APPROVED FOR THIS PROJECT.
1. DESIGN CRITERIA
2. MEMBERS SIZES
3. HIDDEN BOLTED CONNECTIONS BETWEEN STRUCTURAL MEMBERS
4. COLUMN ANCHORAGE SHALL INCLUDE FOUR (4) BOLTS IN COMPLIANCE WITH OSHA 1926.755(A)(1).
5. NO FIELD WELDING PERMITTED
6. NO FIELD PAINTING PERMITTED
7. ROOF DIMENSIONS AND SLOPES
8. EXPOSED STEEL ROOF FASTENERS (IF APPLICABLE) POWDER COATED BY MANUFACTURER
9. ROOF DECK SPANS FROM PEAK TO EAVE AND PERMITS PROPER DRAINAGE WITHOUT DEBRIS BUILD-UP.

1.3 SUBMITTALS
A. DRAWINGS AND CALCULATIONS SEALED BY A PROFESSIONAL ENGINEER LICENSED IN THE APPROPRIATE STATE.
B. ONLY MANUFACTURERS THAT SUBMIT DRAWINGS AND CALCULATIONS PRIOR TO BID SHALL BE CONSIDERED.
C. MANUFACTURER MUST BE ABLE TO SUBMIT APPROPRIATE LABORATORY TESTS FOR THE FOLLOWING:
1. FRAME FINISH REQUIREMENTS LISTED IN PART 2 OF THIS SPECIFICATION.
2. CERTIFIED MILL TEST REPORTS FOR STRUCTURAL STEEL (DESCRIBING THE CHEMICAL AND PHYSICAL PROPERTIES).
3. CERTIFIED MILL TEST REPORTS FOR STRUCTURAL BOLTS.

1.4 TECHNICAL SUPPORT
A. MANUFACTURER MUST HAVE IN-HOUSE ENGINEERING DEPARTMENT AND A PROFESSIONAL ENGINEER LICENSED IN THE APPROPRIATE STATE TO ANSWER TECHNICAL QUESTIONS.

1.5 QUALITY ASSURANCE
A. GENERAL
1. FABRICATION PROCEDURES SHALL COMPLY WITH APPLICABLE CODES AND LOCAL REGULATIONS.
2. REQUIRED STRUCTURAL TESTS AND SPECIAL INSPECTIONS INCLUDED ON THE PROJECT DSA-103 FORM.
B. MANUFACTURER QUALIFICATIONS
1. MINIMUM (10) YEARS ENGINEERING AND FABRICATING PRE-ENGINEERED STRUCTURES
2. MANUFACTURER OWNED AND OPERATED POWDER COAT PAINT FINISH SYSTEM
3. ALL AWS CERTIFIED WELDERS
4. FULL-TIME PROFESSIONAL ENGINEER ON STAFF LICENSED IN THE APPROPRIATE STATE
5. FULL-TIME AWS CERTIFIED ASSOCIATE WELDING INSPECTOR ON STAFF
6. FULL-TIME QUALITY ASSURANCE MANAGER ON STAFF
7. FULL-TIME LEED AP ON STAFF
C. MANUFACTURER CERTIFICATIONS
1. PCI 4000 CERTIFICATION THROUGH POWDER COATING INSTITUTE (PCI)
2. AISC CERTIFIED FABRICATOR

1.6 MANUFACTURER WARRANTY
A. STRUCTURE MUST HAVE (10) YEAR LIMITED WARRANTY ON STEEL FRAME MEMBERS.
B. STRUCTURE MUST HAVE (10) YEAR LIMITED WARRANTY ON PAINT SYSTEM.
C. PASS THROUGH WARRANTY OF ROOFING MANUFACTURER SHALL BE PROVIDED UPON REQUEST.

PART 2 - PRODUCTS

2.1 MANUFACTURER
A. ACCEPTABLE MANUFACTURERS
1. POLIGON, A DIVISION OF PORTERCORP.
A. 4240 N 136TH AVE., HOLLAND, MI 49424; (616) 399-1963; WWW.POLIGON.COM .
I. FOR POLIGON STRUCTURES IN *NORTHERN CALIFORNIA*, THE LOCAL REPRESENTATIVE IS ALL ABOUT PLAY (WWW.PLAYGROUNDPROS.COM). EMAIL AAP@PLAYGROUNDPROS.COM OR CALL (916) 923-2180
II. FOR POLIGON STRUCTURES IN *SOUTHERN CALIFORNIA*, THE LOCAL REPRESENTATIVE IS MIRACLE PLAYGROUND SALES (MIRACLEPLAYGROUNDSALES.COM EMAIL SALES@MIRACLEPLAYGROUND.COM OR CALL (951) 695-4515
B. SUBSTITUTION LIMITATIONS
1. THE ENGINEERING FOR THIS STRUCTURE IS ONLY APPLICABLE IF POLIGON SUPPLIES THE MATERIAL.
2. IF THE CONTRACTOR ELECTS TO SUBSTITUTE A DIFFERENT STRUCTURE, THEY ARE RESPONSIBLE TO OBTAIN THE NECESSARY DSA APPROVAL WITH:
A. NO COST TO THE DISTRICT OR ARCHITECT
B. NO CHANGE TO THE CONSTRUCTION SCHEDULE
3. SUBSTITUTIONS MUST BE APPROVED A MINIMUM OF (10) DAYS BEFORE BID.
4. ALL APPROVED MANUFACTURERS SHALL BE NOTIFIED IN WRITING BEFORE THE BID DATE.
5. SUBSTITUTE MANUFACTURERS SHALL NOT BE ALLOWED TO BID WITHOUT WRITTEN NOTIFICATION.
6. SUBSTITUTE MANUFACTURERS MUST MEET "MANUFACTURER QUALIFICATIONS" LISTED IN PART 1 OF THIS SPECIFICATION.
7. SUBSTITUTE MANUFACTURERS MUST PROVIDE PROOF OF "MANUFACTURER CERTIFICATIONS" ABOVE.
8. SUBSTITUTE MANUFACTURERS MUST PROVIDE PAINT FINISH DESCRIBED IN "FRAME FINISH" BELOW.

2.2 FRAME
A. MATERIALS
1. ANCHOR BOLTS: SEE DRAWINGS FOR REQUIREMENTS. ANCHOR BOLTS NOT PROVIDED BY MANUFACTURER
2. STRUCTURAL STEEL: SEE DRAWINGS FOR REQUIREMENTS.
3. STRUCTURAL BOLTS: SEE DRAWINGS FOR REQUIREMENTS.
B. FINISH
1. FRAME FINISH: POLI-5000 POWDER COAT. NO FIELD PAINTING PERMITTED.
A. COMPONENTS SHALL BE CLEANED, PRE-TREATED, AND FINISHED AT A FACILITY OWNED AND DIRECTLY SUPERVISED BY THE MANUFACTURER.
B. COMPONENTS SHALL BE SHOT BLASTED TO SSPC-SP10 NEAR-WHITE BLAST CLEANING. SSPC-SP2 HAND TOOL CLEANING WILL NOT BE AN ACCEPTABLE ALTERNATIVE.
C. COMPONENTS SHALL BE PRETREATED IN A (3) STAGE IRON PHOSPHATE OR EQUAL WASHER.
D. COMPONENTS SHALL RECEIVE EPOXY PRIMER COAT FOR SUPERIOR CORROSION PROTECTION.
E. COMPONENTS SHALL RECEIVE TOP COAT OF SUPER DURABLE TGIC POWDER COAT.
F. FINISH SHALL NOT HAVE ANY VOC EMISSIONS.
G. MANUFACTURER SHALL BE ABLE TO PRODUCE DOCUMENTATION STATING SAMPLE PRODUCTION COMPONENTS HAVE BEEN TESTED TO MEET THE FOLLOWING:
I. SALT SPRAY RESISTANCE PER ASTM B 117/ ASTM D 1654 TO 10,000 HOURS WITH NO CREEP FROM SCRIBE LINE AND RATING OF 10.
II. HUMIDITY RESISTANCE PER ASTM D2247-02 TO 5,000 HOURS WITH NO LOSS OF ADHESION OR BLISTERING.
III. COLOR/UV RESISTANCE PER ASTM G154-04 TO 2,000 HOURS EXPOSURE, ALTERNATE CYCLES WITH RESULTS OF NO CHALKING, 75% COLOR RETENTION, COLOR VARIATION MAXIMUM 3.0 E VARIATION CIE FORMULA (BEFORE AND AFTER 2,000 HOURS EXPOSURE).
2. FRAME COLOR: DETERMINED BY DISTRICT.
C. FABRICATION
1. FABRICATE COMPONENTS TO PERMIT BOLTED CONNECTIONS ON SITE. NO FIELD WELDING PERMITTED.
2. LABEL EACH MEMBER WITH UNIQUE PART NUMBER TO STREAMLINE ERECTION.
3. WELDING REQUIREMENTS: SEE DRAWINGS FOR REQUIREMENTS.

2.3 ROOF
A. MATERIALS
1. ROOF MATERIAL: SEE DRAWINGS FOR REQUIREMENTS.
2. ROOF HARDWARE: SEE DRAWINGS FOR REQUIREMENTS.
B. FINISH
1. ROOF FINISH: KYNAR 500 HIGH-PERFORMANCE RESIN-BASED PAINT.
2. ROOF COLOR: DETERMINED BY OWNER.

2.4 MISCELLANEOUS
A. MATERIALS
1. CONCRETE MATERIAL: SEE DRAWINGS FOR REQUIREMENTS. CONCRETE NOT PROVIDED BY MANUFACTURER.

PART 3 - EXECUTION

3.1 STORAGE AND HANDLING
A. PROTECT MATERIAL AFTER DELIVERY FROM WEATHER, SUNLIGHT, AND DAMAGE.
B. ELEVATE MATERIAL TO ALLOW CIRCULATION AND REDUCE MOLD, FUNGI DECAY, AND INSECT INFESTATION.
C. HANDLE MATERIAL WITH PROTECTIVE STRAPS OR PADDED FORKLIFT. HANDLING MATERIAL WITH CHAIN OR CABLE WILL NOT BE ACCEPTED AND MAY VOID MANUFACTURER'S WARRANTY.
D. TO PREVENT MOISTURE DAMAGE TO ANY WOOD MATERIAL (IF APPLICABLE), KEEP WOOD PACKAGED BEFORE INSTALLATION AND COVER IMMEDIATELY WITH ANY SECONDARY ROOF MATERIAL.

3.2 ERECTION
A. INSTALL COMPONENTS ACCORDING TO MANUFACTURER'S INSTALLATION DRAWINGS AND THESE SPECIFICATIONS.
B. ANCHOR BOLT AND COLUMN LAYOUT IS CRITICAL.
C. COMPLY WITH SPECIFIC BOLTING INSTALLATION REQUIREMENTS PROVIDED ON DRAWINGS REQUIRING THE CONTRACTOR TO COORDINATE THIS PHASE OF CONSTRUCTION WITH THE SPECIAL BOLTING INSPECTOR AND THE INSPECTOR OF RECORD *PRIOR TO THE ERECTION OF THE FRAME.*
D. NO FIELD SLOTTING OR OPENING OF HOLES WILL BE ALLOWED. TOLERANCES ON STEEL STRUCTURAL MEMBERS ARE SET ACCORDING TO AISC CONSTRUCTION PRACTICES, FOLLOWED DURING FABRICATION, AND CANNOT BE INCREASED.
E. AFTER INSTALLATION, RESTORE DAMAGED SURFACES TO THE ORIGINAL CONDITION USING TOUCH-UP PAINT PROVIDED BY MANUFACTURER. IF THE ARCHITECT DOES NOT ACCEPT THAT, REPLACE DAMAGED MATERIAL AT NO COST TO THE DISTRICT.
F. COORDINATE AS REQUIRED WITH OTHER DISCIPLINES (ELECTRICAL, PLUMBING, ETC.)
G. COMPLY WITH ALL APPLICABLE OHSA REQUIREMENTS

3.3 REPAIR
A. DO NOT ATTEMPT ANY FIELD CHANGES TO THE STRUCTURE WITHOUT FIRST CONTACTING THE MANUFACTURER.

3.4 QUALITY CONTROL
A. TESTS AND INSPECTIONS DURING ERECTION ARE NOT REQUIRED BY THE MANUFACTURER, BUT MAY BE REQUIRED BY OTHERS.
B. THE PROJECT INSPECTOR, AND ENTIRE CONSTRUCTION OVERSIGHT PROCESS, SHALL COMPLY WITH DSA PR 13-01. DO NOT PROCEED UNTIL UNSATISFACTORY CONDITIONS HAVE BEEN CORRECTED.

STATE APPROVALS-SITE

IDENTIFICATION STAMP
DIV. OF THE STATE ARCHITECT
APP: 02-121999 INC:
REVIEWED FOR
SS ☑ FLS ☑ ACS ☑
DATE: 11/30/2023

4080 PLAZA GOLDORADO CIRCLE
SUITE B,
CAMERON PARK, CA 95682
530.677.5515

GHD

poligon
PORTER

REGISTERED PROFESSIONAL ENGINEER
JESSICA E. NAPIER
No. S5476
STRUCTURAL
STATE OF CALIFORNIA

STATE APPROVALS-PC

IDENTIFICATION STAMP
DIV. OF THE STATE ARCHITECT
APP: 02-121213 PC
REVIEWED FOR
SS ☑ FLS ☑ ACS ☑ CG ☐
DATE: 7/18/2023

PRE-CHECK (PC) DOCUMENT
CODE: 2022 CBC
A SEPARATE PROJECT APPLICATION FOR CONSTRUCTION IS REQUIRED.

ORDER FORM

HIP ROOF - RAM

RAM1.0

GENERAL:

1. GENERAL NOTES AND TYPICAL DETAILS SHALL APPLY TO ALL PARTS OF THE JOB EXCEPT WHERE THEY MAY CONFLICT WITH DETAILS AND NOTES ON OTHER SHEETS. WHERE CONDITIONS ARE NOT SPECIFICALLY INDICATED BUT ARE OF SIMILAR CHARACTER TO DETAILS SHOWN, SIMILAR DETAILS OF CONSTRUCTION SHALL BE USED SUBJECT TO REVIEW BY THE STRUCTURAL ENGINEER FOR THIS PROJECT.
2. WORK SHALL CONFORM TO THE REQUIREMENTS, AS AMENDED TO DATE, OF THE LATEST ADOPTED EDITION OF THE CBC, C.A.C. TITLE 24, AND ALL OTHER LOCAL, STATE AND FEDERAL REGULATIONS.
3. OMISSIONS OR CONFLICTS BETWEEN THE VARIOUS ELEMENTS OF THE WORKING DRAWINGS AND/OR SPECIFICATIONS SHALL BE BROUGHT TO THE ATTENTION OF THE STRUCTURAL ENGINEER FOR THIS PROJECT PRIOR TO PROCEEDING WITH ANY WORK INVOLVED.
4. THE CONTRACTOR SHALL BE RESPONSIBLE FOR COORDINATING THE WORK OF ALL TRADES AND SHALL CHECK ALL DIMENSIONS. ALL DISCREPANCIES SHALL BE CALLED TO THE ATTENTION OF THE STRUCTURAL ENGINEER FOR THIS PROJECT AND BE RESOLVED BEFORE PROCEEDING WITH THE WORK.
5. THESE CONSTRUCTION DRAWINGS AND SPECIFICATIONS REPRESENT THE FINISHED STRUCTURE AND DO NOT INDICATE THE METHOD OF CONSTRUCTION. THE CONTRACTOR SHALL SUPERVISE AND DIRECT THE WORK AND SHALL BE SOLELY RESPONSIBLE FOR CONSTRUCTION MEANS, METHODS, TECHNIQUES, SEQUENCES AND PROCEDURES, INCLUDING, BUT NOT LIMITED TO, BRACING, TEMPORARY SUPPORTS, AND SHORING. OBSERVATION VISITS TO THE SITE BY FIELD REPRESENTATIVES OF THE ARCHITECT/ENGINEER SHALL NOT INCLUDE INSPECTIONS OF THE PROTECTIVE MEASURES OR THE CONSTRUCTION PROCEDURES. ANY SUPPORT SERVICES PERFORMED BY THE ARCHITECT/ENGINEER DURING THE CONSTRUCTION SHALL BE DISTINGUISHED FROM CONSTRUCTION AND DETAILED INSPECTION SERVICES WHICH ARE FURNISHED BY OTHERS. THESE SUPPORT SERVICES PERFORMED BY THE ARCHITECT/ENGINEER, WHETHER OF MATERIAL OR WORK, ARE FOR THE PURPOSE OF ASSISTING IN QUALITY CONTROL AND IN ACHIEVING CONFORMANCE WITH CONTRACT DOCUMENTS, BUT DO NOT GUARANTEE CONSTRUCTION.
6. ASTM DESIGNATIONS AND ALL STANDARDS REFER TO THE LATEST AMENDMENTS.
7. CONFORM TO APPLICABLE CAL/OSHA CONSTRUCTION SAFETY REGULATIONS FOR ALL WORK PERFORMED DURING CONSTRUCTION. JOB SITE SAFETY IS STRICTLY THE RESPONSIBILITY OF THE CONTRACTOR AND NOT THE ARCHITECT/ENGINEER OR OWNER.
8. THE ENGINEER AND THEIR CONSULTANTS SHALL HAVE NO RESPONSIBILITY FOR THE DISCOVERY, HANDLING, REMOVAL OR DISPOSAL OF HAZARDOUS MATERIALS AT THE PROJECT SITE, INCLUDING BUT NOT LIMITED, TO ASBESTOS, ASBESTOS PRODUCTS, POLYCHLORINATED BIPHENYL (PCB) OR OTHER TOXIC SUBSTANCES.
9. SHOULD ANY CONDITIONS DEVELOP NOT COVERED BY THE CONTRACT DOCUMENTS, OR IF A CHANGE IN THE SCOPE OF WORK IS PROPOSED, A CONSTRUCTION CHANGE DOCUMENT DETAILING AND SPECIFYING THE REQUIRED CHANGE(S) SHALL BE SUBMITTED TO AND APPROVED BY DSA BEFORE PROCEEDING WITH THE WORK.
10. THE SCHOOL DISTRICT'S INSPECTOR OF RECORD SHALL INSPECT AND APPROVE THE ERECTED FRAME PRIOR TO ROOF INSTALLATION.
11. SEE REQUIREMENTS FOR LOCATION IN ANY FIRE HAZARD SEVERITY ZONE FOR WILDLAND URBAN INTERFACE AREAS (WUI) AS SPECIFIED IN THE APPLICABLE VERSION OF THE CALIFORNIA BUILDING CODE. PROVIDE PROTECTION AND DETAILS OF ALL AREAS COMPLYING WITH THE WUI REQUIRMENTS.
12. LOCATING THIS STRUCTURE CLOSER THAN 20 FEET TO OTHER STRUCTURES MAY AFFECT THE ALLOWABLE AREA FOR THE EXISTING CONSTRUCTION PER THE APPLICABLE VERSION OF THE CALIFORNIA BUILDING CODE.
13. VIEWS AND DETAILS ARE NOT DRAWN TO SCALE (UNLESS NOTED OTHERWISE). DO NOT SCALE THESE DRAWINGS.
14. OTHER SITE SPECIFIC ITEMS MAY BE REQUIRED.
15. WHEN A SITE-SPECIFIC PROJECT IS LOCATED IN A FLOOD ZONE OTHER THAN ZONE X, A LETTER STAMPED AND SIGNED FROM A SOILS ENGINEEER IS NEEDED TO VALIDATE THE ALLOWABLE SOIL VALUES SPECIFIED IN THE PC ARE STILL APPLICABLE.

STRUCTURAL AND MISCELLANEOUS STEEL:

1. ALL STRUCTURAL STEEL SHALL BE DETAILED, FABRICATED AND ERECTED IN ACCORDANCE WITH THE AMERICAN INSTITUTE OF STEEL CONSTRUCTION (AISC) 360 - 16 AND 303-16 MANUAL REFERENCED BY THE 2022 EDITION OF THE CALIFORNIA BUILDING CODE.
2. PIPE SECTIONS SHALL CONFORM TO ASTM A53, Fy = 35 ksi, GRADE B UNLESS NOTED OTHERWISE.
3. STRUCTURAL TUBING (HSS SHAPES) SHALL CONFORM TO ASTM A500, GRADE B (OR HIGHER), Fy = 46 KSI.
4. IF MATERIAL AVAILABILITY IS LIMITED, MEMBER THICKNESSES CAN BE INCREASED BEYOND WHAT IS SHOWN IN THESE DRAWINGS (MAXIMUM INCREASE OF 1/8").
5. ALL CHANNELS, ANGLES, PLATES AND MISC. STEEL SHALL CONFORM TO ASTM A36, Fy = 36 KSI.
6. ALL COLD FORM STEEL SHALL CONFORM TO ASTM A653, CS = TYPE B, Fy = 50 KSI.
7. STRUCTURAL STEEL AND DECK SHALL BE IDENTIFIED FOR CONFORMITY PER CBC 2202A.1.
8. ROOF DECK SHALL HAVE KYNAR 5000 METAL COATING.
9. ROOF DECK SHALL CONFORM TO ATSM A792, Fy = 50 KSI.
10. MR ROOF SCREWS MEET ASTM A510 WITH A HEAD DIMENSION OF 0.31" (FLAT-TO-FLAT) AND INTEGRAL WASHER DIMENSION OF 0.58" (OUTSIDE DIAMETER).
11. SS ROOF SCREWS MEET ASTM A510 WITH A HEAD DIMENSION OF 0.437" (OUTSIDE DIAMETER).

WELDING:

1. ALL WELDING SHALL COMPLY WITH AWS D1.1 SPECIFICATIONS AND SHALL BE DONE BY AWS QUALIFIED WELDERS CERTIFIED FOR THE TYPE OF WELDING TO BE PERFORMED.
2. ALL WELDING SHALL BE DONE BY GAS METAL ARC PROCESS WITH E70XX ELECTRODES. FLUX CORE ARC WELD SHALL CONFORM TO CHARPY NOTCH TOUGHNESS RATING OF 20 ft-lb @ (O° F).
3. ALL WELDING SHALL BE DONE IN THE SHOP WITH REQUIRED INSPECTION, PRE-APPROVED BY DSA, TO ENSURE PROPER MATERIAL ID AND WELDING.
4. WELD FILLER METAL MANUFACTURER SHALL PROVIDE WRITTEN CERTIFICATION OF COMPLIANCE WITH CODE AND SPECIFICATIONS.

BOLTING:

1. ALL BOLTS SHOWN ON THESE DRAWINGS ARE ASTM F3125 (A325 TYPE 1) HIGH STRENGTH BOLTS (UNO) AND SHALL BE HOT DIPPED GALVANIZED PER ASTM F2329.
2. HIGH STRENGTH BOLTS SHALL BE SAMPLED AND TESTED IN COMPLANCE WITH CBC 2213A.1.
3. BEFORE ERECTING THE FRAME, VERIFY ALL BOLTS AND NUTS ARE CLEAN OF DEBRIS AND BURRS - INCLUDING THE HARDWARE ALREADY FASTENED INSIDE THE MEMBERS. CHASING SOME OF THE BOLTS AND NUTS MAY BE REQUIRED.
4. ANCHOR BOLTS (HEAVY HEX HEAD, ASTM F1554, GRADE 55) SHALL BE HOT DIPPED GALVANIZED PER ASTM F2329. ANCHOR BOLTS MAY BE HEADED OR THREADED WITH A NUT THAT IS PREVENTED FROM ROTATING.
5. HIGH STRENGTH NUTS SHALL CONFORM TO ASTM A563 AND SHALL BE GALVANIZED PER ASTM F2329.
6. HIGH STRENGTH WASHERS SHALL CONFORM TO ASTM F436 AND SHALL BE GALVANIZED PER ASTM F2329.
7. THE BOLTING INSTALLATION REQUIREMENTS OUTLINED BELOW ARE CRITICAL TO THE STRUCTURE'S DESIGN AND PERFORMANCE. **THE INSTALLER IS REQUIRED TO COORDINATE THIS PHASE OF CONSTRUCTION WITH THE SPECIAL BOLTING INSPECTOR AND THE INSPECTOR OF RECORD PRIOR TO THE ERECTION OF THE FRAME**. ALL BOLTS SHALL BE INSTALLED AND INSPECTED PER THE APPLICABLE VERSION OF AISC'S "SPECIFICATION FOR STRUCTURAL JOINTS USING HIGH-STRENGTH BOLTS", CBC 1705A.2.1; AISC 341-16 J7; AISC 360-16 N5.6.

   A. PRETENSIONED JOINTS (IDENTIFIED ON THE FRAME CONNECTION DETAILS WITH A "PJ REQUIRED") MUST BE INSTALLED AND INSPECTED TO MEET ONE OF FOLLOWING REQUIREMENTS:

      1. TURN-OF-NUT PRETENSIONING
      2. CALIBRATED WRENCH PRENTENSIONING
      3. DIRECT-TENSION-INDICATOR PRETENSIONING (CONTRACTOR RESPONSIBLE FOR PURCHASE OF REQUIRED WASHERS)

   B. ALL OTHER JOINTS MUST BE INSTALLED AND INSPECTED TO MEET THE REQUIREMENTS OF SNUG-TIGHTENED JOINTS. **NOTE TO INSTALLER AND INSPECTOR(S): THE SNUG-TIGHT CONDITION EXISTS, IN PART, WHEN ALL THE BOLTS IN THE JOINT HAVE BEEN TIGHTENED SUFFICIENTLY TO PREVENT THE REMOVAL OF THE NUTS WITHOUT THE USE OF A WRENCH.**

   THE CONTRACTOR, SPECIAL BOLTING INSPECTOR AND THE INSPECTOR OF RECORD MUST ALL AGREE ON WHICH APPROACH WILL BE USED TO PRETENSION THE BOLTS. THE CONTRACTOR IS RESPONSIBLE FOR DOCUMENTING THE APPROACH AGREED TO BY ALL PARTIES LISTED ABOVE.

FOUNDATIONS:

1. ALLOWABLE SOIL PRESSURES ASSUME CLASS 5 SOIL CLASSIFICATION PER 2022 CBC TABLE 1806A. 2.
2. FILL AND BACKFILL SHALL BE COMPACTED TO 95% OF MAX. DENSITY IN ACCORDANCE WITH ASTM TEST METHOD D1557. FLOODING NOT PERMITTED.
3. THE CONTRACTOR SHALL BE RESPONSIBLE FOR ALL SHORING, ETC. NECCESSARY TO SUPPORT CUT AND/OR FILL BANKS DURING EXCAVATION, AND FORMING AND PLACEMENT OF CONCRETE.
4. STRUCTURES SHALL BE SETBACK FROM ADAJCENT SLOPES TO PROVIDE FIRM MATERIAL FOR EMBEDMENT AND FOR PROTECTION FROM SLOPE DRAINAGE, EROSION, AND SHALLOW FAILURES.

   A. BOTTOM OF ASCENDING SLOPE: THE SMALLER OF HALF THE HEIGHT OF THE SLOPE AND 15FT MEASURED FROM THE FACE OF THE STRUCTURE TO THE TOE OF THE SLOPE
   B. TOP OF DECENDING SLOPE: THE SMALLER OF A THIRD OF THE HEIGHT OF THE SLOPE AND 40 FT MEASURED FROM THE FACE OF THE FOOTING TO THE TOP OF THE SLOPE

   ALTERNATE SETBACKS ARE PERMITTED, SUBJECT FOR APPROVAL. A GEOTECHNICAL INVESTIGATION MAY BE REQUIRED.
5. STRUCTURES PLACED ON LIQUIFIABLE SOILS OR SITE CLASS F MAY NOT BE SUBMITTED FOR AN OVER THE COUNTER REVIEW.

CONCRETE:

1. MIX DESIGN REQUIREMENTS: (NORMAL WEIGHT CONCRETE)

MINIMUM STRENGTH f'c (28 DAYS)	EXPOSURE CATEGORY	W/C RATIO MAXIMUM)	SLUMP (± 1")	UNIT WEIGHT (NORMAL WEIGHT)
5000 PSI	F3, S3, W2, C2	0.4	4"	150 PCF

2. CHANGES TO THE MIX DESIGN MUST BE APPROVED BY THE ENGINEER OR ARCHITECT OF RECORD AND DSA
3. AGGREGATES SHALL CONFORM TO ASTM C33. MAX AGGREGATE SIZE = 1".
4. CEMENT SHALL CONFORM TO ASTM C150 (TYPE V) WITH A MAXIMUM EXPANSION OF 0.040%, FOR SULFATE RESISTANCE.
5. ADMIXTURES CONTAINING CALCIUM CHLORIDE ARE PROHIBITED.
6. CONCRETE EXPOSED TO FREEZING-AND-THAWING CYCLES SHALL BE AIR ENTRAINED PER ACI 318-19 SECTION 19.3.3.
7. CONCRETE SHALL BE MAINTAINED IN A MOIST CONDITION FOR A MINIMUM OF FIVE DAYS AFTER PLACEMENT. ALTERNATE METHODS WILL BE APPROVED IF SATISFACTORY PERFORMANCE CAN BE ASSURED.
8. CONCRETE SHALL NOT FREE FALL MORE THAN FIVE FEET.
9. CONCRETE SHALL BE PROPORTIONED PER ACI 318-19 26.4.
10. CONCRETE SHALL BE TESTED PER CBC 1910A.1, 1705A.3, AND ACI 318-19 26.13. BATCH PLANT INSPECTION NOT REQUIRED. CONTRACTOR SHALL IMPLEMENT WEIGHTMASTER AND BATCH TICKET REQUIREMENTS OF CBC 1705A.3.3.1.

REINFORCING STEEL:

1. REINFORCING STEEL SHALL BE DEFORMED STEEL CONFORMING TO THE REQUIREMENTS OF ASTM A615, (DEFORMATIONS SHALL BE IN ACCORDANCE WITH ASTM A305) AS FOLLOWS:
   GR 60: (#4 BARS AND LARGER)
   GR 40: (#3 BARS)
2. DETAILING, FABRICATION, AND ERECTION OF REINFORCING BARS SHALL CONFORM TO THE ACI "MANUAL OF STANDARD PRACTICE FOR DETAILING REINFORCING CONCRETE STRUCTURES."
3. MIN. COVER FOR CAST-IN-PLACE CONCRETE SHALL BE AS FOLLOWS:

   A. CAST AGAINST EARTH.. 3"
   B. CAST AGAINST FORM BELOW GRADE...................... 2"
   C. FORMED SLABS (#11 BAR & SMALLER).................... 3/4"
   D. SLABS ON GRADE (FROM TOP OF SLAB).................. 1"
   E. COLUMNS AND BEAMS (MAIN BARS)...................... 2"
   F. WALLS EXPOSED TO WEATHER (#6-#18 BARS)......... 2"
   (#5 & SMALLER)......... 11/2"
   G. NOT EXPOSED TO WEATHER (#11 & SMALLER)........ 3/4"
4. BARS SHALL BE CLEAN OF RUST, GREASE OR OTHER MATERIAL LIKELY TO IMPAIR BOND. BENDS SHALL BE MADE COLD.
5. FOR #6 BARS AND SMALLER, REINFORCING SHALL BE LAP SPLICED 45 BAR DIA MINIMUM IN CONCRETE. FOR #7 BARS AND LARGER, REINFORCING SHALL BE LAP SPLICED 55 BAR DIAMETERS MINIMUM IN CONCRETE. ALL LAP SPLICES MUST COMPLY WITH ACI 318-19.
6. PRIOR TO PLACING OF CONCRETE, REINFORCING STEEL AND EMBEDDED ITEMS SHALL BE WELL SECURED IN POSITION.
7. WELDING OF REINFORCING IS NOT ALLOWED
8. REINFORCING STEEL SHALL BE SAMPLED AND TESTED PER CBC 1910A.2.

POWDER COATED AND EPOXY PRIMED FINISH:

1. ENTIRE POWDER COATING PROCESS COMPLETED IN SAME FACILITY AS STEEL FABRICATION.
2. ALL CARBON STEEL MEMBERS (COLUMNS, BEAMS, PLATES, ETC.) PAINTED WITH PRIME COAT PER THE "AISC CODE OF STANDARD PRACTICE" AND THE "AISC SPECIFICATION SECTION M3" (UNLESS NOTED OTHERWISE).
3. PARTS PRETREATED IN A 3 STAGE IRON PHOSPHATE WASHER (OR EQUAL).
4. EPOXY PRIMER POWDER COAT APPLIED TO PARTS FOR SUPERIOR CORROSION PROTECTION.
5. TOP POWDER COAT OF SUPER DURABLE TGIC (COLOR SELECTED FROM MANUFACTURER'S STANDARD OPTIONS OR CUSTOM COLOR).
6. SAMPLE PRODUCTION PARTS TESTED TO MEET THE FOLLOWING CRITERIA:
   A. SALT SPRAY RESISTANCE PER ASTM B 117/ ASTM D 1654
      1. 10000 HOURS WITH NO CREEP FROM SCRIBE LINE AND RATING OF 10
   B. HUMIDITY RESISTANCE PER ASTM D2247-02
      1. 5000 HOURS WITH NO LOSS OF ADHESION OR BLISTERING
   C. COLOR/UV RESISTANCE PER ASTM G154-04
      1. 2000 HOURS EXPOSURE ALTERNATE CYCLES WITH NO CHALKING, 75% COLOR RETENTION, AND COLOR VARIATION MAXIMUM 3.0 E VARIATION CIE FORMULA (BEFORE AND AFTER 2000 HOURS EXPOSURE

CONSTRUCTION NOTES

1. A DSA-CERTIFIED CLASS 2 INSPECTOR IS REQUIRED FOR THIS PROJECT.
2. CHANGES TO THE APPROVED DRAWINGS AND SPECIFICATIONS SHALL BE MADE BY ADDENDA OR CONSTRUCTION CHANGE DOCUMENT (CCD) APPROVED BY DSA, AS REQURIED BY SECTION 4-338, PART 1, TITLE 24 CCR AND DSA IR A-6.
3. A "DSA-CERTIFIED" PROJECT INSPECTOR EMPLOYED BY THE OWNER (E.G. DISTRICT, ETC.) AND APPROVED BY DSA SHALL PROVIDE CONTINUOUS INSPECTION OF WORK. THE DUTIES OF THE INSPECTOR ARE DEFINED IN SECTION 4-342, PART 1, TITLE 24, CCR.
4. A DSA ACCEPTED TESTING LABORATORY DIRECTLY EMPLOYED BY THE OWNER (E.G. DISTRICT, ETC.) SHALL CONDUCT ALL THE REQUIRED TEST AND INSPECTIONS FOR THE PROJECT.

NOTICE OF DISCLAIMER FOR STRUCTURAL ENGINEER RESPONIBILITY

1. FOR THE SITE-SPECIFIC PROJECT, NEITHER POLIGON OR GHD ARE THE DESIGN PROFESSIONAL IN GENERAL RESPONSIBLE CHARGE.
2. FOR THE SITE-SPECIFIC PROJECT, GHD AND POLIGON'S RESPONSIBILITY IS LIMITED TO THE PREPARATION OF THE PLANS AND SPECIFICATIONS FOR THE STRUCTURES OF THIS PC ONLY.
3. STRUCTURAL OBSERVATION OF CONSTRUCTION IS SPECIFICALLY EXCLUDED FROM GHD AND POLIGON'S RESPONSIBILITY FOR THE SITE-SPECIFIC PROJECT.
4. ALL CONSTRUCTION ACTIVITIES RELATED TO STRUCTURAL ENGINEERING MAY BE DELEGATED TO A QUALIFIED ENGINEER BY THE DESIGN PROFESSIONAL IN GENERAL RESPONSIBLE CHARGE. THESE ACTIVITIES INCLUDE, BUT ARE NOT LIMITED TO, APPROVAL OF INSPECTOR QUALIFICATIONS, STRUCTURAL OBSERVATIONS OF CONSTRUCTION, REVIEW OF INSPECTIONS REPORTS, AND SIGNING OFF ON THE VERIFIED REPORT FOR COMPLETED WORK.
5. POLIGON WILL BE RESPONSIBLE FOR RESPONDING TO QUESTIONS PERTAINING TO THE PLANS AND SPECIFICATIONS FOR THE STRUCTURES OF THIS PC WHICH ARISE DURING PLAN REVIEW AND CONSTRUCTION.

SPECIAL INSPECTION NOTES:

1. THE PROJECT INSPECTOR AND TESTING AGENCY SHALL BE SELECTED BY THE SCHOOL DISTRICT AND APPROVED BY DSA AND THE ARCHITECT OF RECORD.
2. COSTS OF THE PROJECT INSPECTOR AND THE TESTING AGENCY SHALL BE BORN BY THE SCHOOL DISTRICT.
3. THE PROJECT INSPECTOR, AND ENTIRE CONSTRUCTION OVERSIGHT PROCESS, SHALL COMPLY WITH DSA PR 13-01.
4. ON APPROVED PC DRAWINGS, THE STATEMENT OF STRUCTURAL TESTS AND SPECIAL INSPECTIONS (FORM DSA-103) BELOW IS ONLY AN EXAMPLE. ON APPROVED PC DRAWINGS, THE EXAMPLE FORM DSA-103 MUST BE CROSSED OUT BEFORE THE PC DRAWINGS CAN BE APPROVED AS PART OF A SITE-SPECIFIC (OR STOCKPILE) PROJECT SO THEY WILL NOT CONFLICT WITH THE OFFICIAL FORM DSA-103 FOR THE PROJECT.

DSA 103-22: LISTING OF STRUCTURAL TESTS & SPECIAL INSPECTIONS, 2022 CBC

Application Number:	School Name:	School District:
DSA File Number:	Increment Number:	Date Submitted:

2022 CBC

IMPORTANT: This form is only a summary list of structural tests and some of the special inspections required for the project. Generally, the structural tests and special inspections noted on this form are those that will be performed by the Geotechnical Engineer of Record, Laboratory of Record, or Special Inspector. The actual complete test and inspection program must be performed as detailed on the DSA approved documents. The appendix at the bottom of this form identifies work NOT subject to DSA requirements for special inspection or structural testing. The project inspector is responsible for providing inspection of all facets of construction, including but not limited to, special inspections not listed on this form such as structural wood framing, high-load wood diaphragms, cold-formed steel framing, anchorage of non-structural components, etc., per Title 24, Part 2, Chapter 17A (2022 CBC).

***NOTE:** Undefined section and table references found in this document are from the CBC, or California Building Code.

KEY TO COLUMNS

1. TYPE	2. PERFORMED BY
Continuous – Indicates that a continuous special inspection is required **Periodic –** Indicates that a periodic special inspection is required **Test –** Indicates that a test is required	**GE –** Indicates that the special inspection shall be performed by a registered geotechnical engineer or his or her authorized representative. **LOR –** Indicates that the test or special inspection shall be performed by a testing laboratory accepted in the DSA Laboratory Evaluation and Acceptance (LEA) Program. See CAC Section 4-335. **PI –** Indicates that the special inspection may be performed by a project inspector when specifically approved by DSA. **SI –** Indicates that the special inspection shall be performed by an appropriately qualified/approved special inspector.

	Test or Special Inspection	Type	Performed By	Code References and Notes
	S1. GENERAL:			
☑	**a.** Verify that: • Site has been prepared properly prior to placement of controlled fill and/or excavations for foundations. • Foundation excavations are extended to proper depth and have reached proper material. • Materials below footings are adequate to achieve the design bearing capacity.	See Notes	PI	Refer to specific items identified in the Appendix listing exemptions for limitations. Placement of controlled fill exceeding 12" depth under foundations is not permitted without a geotechnical report.
	S2. SOIL COMPACTION AND FILL:			
☑	**a.** Verify use of proper materials, densities and inspect lift thicknesses, placement and compaction during placement of fill.	Continuous	LOR*	* Under the supervision of a geotechnical engineer or LOR's engineering manager. Refer to specific items identified in the Appendix listing exemptions for limitations.
☑	**b.** Compaction testing.	Test	LOR*	* Under the supervision of a geotechnical engineer or LOR's engineering manager. Refer to specific items identified in the Appendix listing exemptions for limitations.
	S4. CAST-IN-PLACE DEEP FOUNDATIONS (PIERS):			
☑	**a.** Inspect drilling operations and maintain complete and accurate records for each pier.	Continuous	PI	Continuous inspection to be provided by project inspector. Refer to specific items identified in the Appendix listing exemptions for limitations.
☑	**b.** Verify pier locations, diameters, plumbness, and lengths. Record concrete or grout volumes.	Continuous	PI	Continuous inspection to be provided by project inspector. Refer to specific items identified in the Appendix listing exemptions for limitations.
☑	**c.** Concrete piers.	Provide tests and inspections per CONCRETE section below.		
	C1. CAST-IN-PLACE CONCRETE			
☑	**a.** Verify use of required design mix.	Periodic	SI	**Table 1705A.3 Item 5, 1910A.1.**
☑	**b.** Identifiy, sample, and test reinforcing steel.	Test	LOR	**1910A.2;** ACI 318-19 Ch. 20 and Section 26.6.1.2; DSA IR 17-10. (See Appendix (end of this form) for exemptions.)
☑	**c.** During concrete placement, fabricate specimens for strength tests, perform slump and air content tests, and determine the temperature of the concrete.	Test	LOR	**Table 1705A.3 Item 6**; ACI 318-19 Sections 26.5 & 26.12.
☑	**d.** Test concrete (f_c).	Test	LOR	**1905A.1.17;** ACI 318-19 Section 26.12.
☑	**e.** Batch plan inspection:	See Notes	SI	Default of '**Continuous**' per **1705A.3.3**. If approved by DSA, batch plant inspection may be reduced to '**Periodic**' subject to requirements in Section **1705.A.3.3.1**, or eliminated per **1705A.3.3.2**. See IR 17-13. (See Appendix (end of this form) for exemptions.)
	S/A1. STRUCTURAL STEEL, COLD-FORMED STEEL AND ALUMINUM USED FOR STRUCTURAL PURPOSES			
☑	**a.** Verify identification of all materials and: • Mill certificates indicate material properties that comply with requirements. • Material sizes, types and grades comply with requirements.	Periodic	*	**Table 1705A.2.1 Item 3a–3c.** 2202A.1**;** AISI S100-20 Section A3.1 & A3.2, AISI S240-20 Section A3 & A5, AISI S220-20 Sections A4 & A6. * By special inspector or qualified technician when performed off-site.
☑	**b.** Test unidentified materials	Test	LOR	**2202A.1.**
☑	**c.** Examine seam welds of HSS shapes	Periodic	SI	DSA IR 17-3.
☑	**d.** Verify and document steel fabrication per DSA-approved construction documents.	Periodic	SI	Not applicable to cold-formed steel light-frame construction, except for trusses (**1705A.2.4**).
	S/A2. HIGH-STRENGTH BOLTS:			
☑	**a.** Verify identification markings and manufacturer's certificates of compliance conform to ASTM standards specified in the DSA-approved documents.	Periodic	SI	**Table 1705A.2.1 Items 1a & 1b, 2202A.1;** AISC 360-16 Section A3.3, J3.1, and N3.2; RCSC 2014 Section 1.5 & 2.1; DSA IR 17-8 & DSA IR 17-9.
☑	**b.** Test high-strength bolts, nuts and washers.	Test	LOR	**Table 1705A.2.1 Item 1c, 2213A.1**; RCSC 2014 Section 7.2; DSA IR 17-8.
☑	**c.** Bearing-type ("snug tight") connections.	Periodic	SI	**Table 1705A.2.1 Item 2a, 1705A.2.6, 2204A.2;** AISC 360-16 J3.1, J3.2, M2.5 & N5.6; RCSC 2014 Section 9.1; DSA IR 17-9.
☑	**d.** Pretensioned and slip-critical connections.	*	SI	**Table 1705A.2.1 Items 2b & 2c, 1705A.2.6, 2204A.2;** AISC 360-16 J3.1, J3.2, M2.5 & N5.6; RCSC 2014 Sections 9.2 & 9.3; DSA IR 17-9. * "Continuous" or "Periodic" depends on the tightening method used.
	S/A3. WELDING:			
☑	**a.** Verify weld filler material identification markings per AWS designation listed on the DSA- approved documents and the WPS.	Periodic	SI	**1705A.2.5, Table 1705A.2.1 Items 4 & 5**; AWS D1.1 and AWS D1.8 for structural steel; AWS D1.2 for Aluminum; AWS D1.3 for cold-formed steel; AWS D1.4 for reinforcing steel; DSA IR 17- 3.
☑	**b.** Verify weld filler material manufacturer's certificate of compliance.	Periodic	SI	DSA IR 17-3.
☑	**c.** Verify WPS, welder qualifications and equipment.	Periodic	SI	DSA IR 17-3.
	S/A4. SHOP WELDING (IN ADDITION TO SECTION S/A3):			
☑	**a.** Inspect groove welds, multi-pass fillet welds, single pass fillet welds > 5/16", plug and slot welds.	Continuous	SI	**Table 1705A.2.1 Items 5a.1–4;** AISC 360-16 (and AISC 341-16 as applicable); DSA IR 17-3.
☑	**b.** Inspect single-pass fillet welds ≤ 5/16", floor and roof deck welds.	Periodic	SI	**1705A.2.2, Table 1705A.2.1 Items 5a.5 & 5a.6;** AISC 360-16 (and AISC 341-16 as applicable); DSA IR 17-3.
	S/A9. ANCHOR BOLTS AND ANCHOR RODS:			
☑	**a.** Anchor Bolts and Anchor Rods	Test	LOR	Sample and test anchor bolts and anchor rods not readily identifiable per procedures noted in DSA IR 17-11.

Name of Architect or Engineer in general responsible charge:

Name of Structural Engineer (When structural design has been delegated):

Signature of Architect or Structural Engineer: Date:

Note: To facilitate DSA electronic mark-ups and identification stamp application, DSA recommends against using secured electronic or digital signatures.

DSA STAMP

DSA 103-22: LIST OF REQUIRED VERIFIED REPORTS, CBC 2022

1. Soils Testing and Inspection: Geotechnical Verified Report Form DSA 293
2. Structural Testing and Inspection: Laboratory Verified Report Form DSA 291
3. Shop Welding Inspection: Laboratory Verified Report Form DSA 291, or, for independently contracting SI, Special Inspection Verified Report Form DSA 292
4. High-Strength Bolt Installation Inspection: Laboratory Verified Report Form DSA 291, or, for independently contracting SI, Special Inspection Verified Report Form DSA 292

STATE APPROVALS-SITE

IDENTIFICATION STAMP
DIV. OF THE STATE ARCHITECT
APP: 02-121999 INC:
REVIEWED FOR
SS ☑ FLS ☑ ACS ☑
DATE: 11/30/2023

4080 PLAZA GOLDORADO CIRCLE
SUITE B,
CAMERON PARK, CA 95682
530.677.5515

GHD

poligon

PORTER

REGISTERED PROFESSIONAL ENGINEER
JESSICA E. NAPIER
No. S5476
STRUCTURAL
STATE OF CALIFORNIA

STATE APPROVALS-PC

IDENTIFICATION STAMP
DIV. OF THE STATE ARCHITECT
APP: 02-121213 PC
REVIEWED FOR
SS ☑ FLS ☑ ACS ☑ CG ☐
DATE: 7/18/2023

PRE-CHECK (PC) DOCUMENT
CODE: 2022 CBC
A SEPARATE PROJECT APPLICATION FOR CONSTRUCTION IS REQUIRED.

NOTES AND SPECIAL INSPECTIONS

HIP ROOF - RAM

RAM1.1

FOUNDATION PLAN NOTES:

1. TOP OF ALL FOUNDATIONS MUST BE CONSTRUCTED AT ONE COMMON ELEVATION (COORDINATE WITH SITE PLANS - NOT BY POLIGON)
2. ALL FOUNDATIONS MUST BE CENTERED UNDER COLUMNS (UNO).
3. SEE SHEET RAM1.1 FOR CONCRETE REQUIREMENTS.
4. PRIOR TO FORMING AND CASTING FOUNDATIONS, REVIEW FOUNDATION PLAN FOR REQUIRED ORIENTATION.
5. FOUNDATION MATERIAL AND INSTALLATION NOT BY POLIGON.
6. VIBRATE CONCRETE FULL DEPTH OF FOUNDATION.
7. FOR DRILLED PIER FOUNDATIONS, PREVENT SOIL FROM ENTERING EXCAVATED HOLE (FORM, ETC).

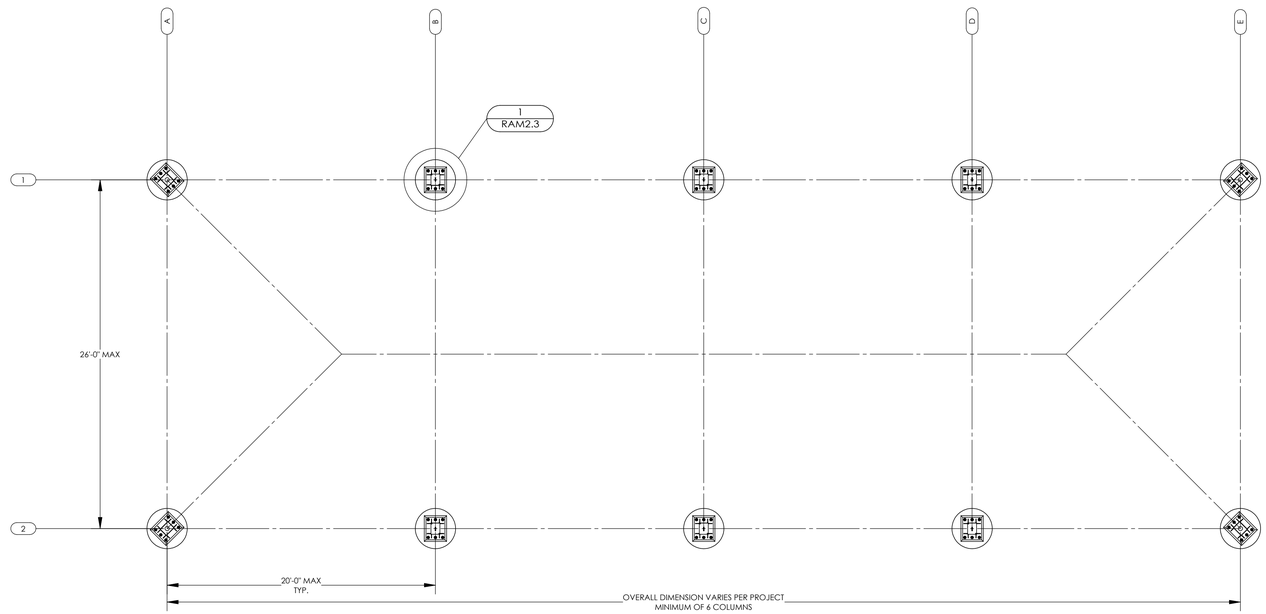

FOUNDATION PLAN (DRILLED PIER)

SCALE: 3/16" = 1'-0"

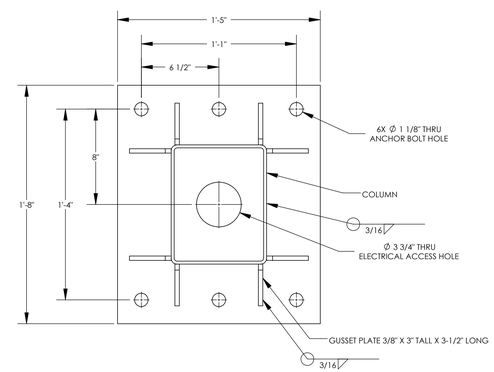

DETAIL 3

SCALE: 1-1/2" = 1'-0"

COLUMN BASEPLATE

3

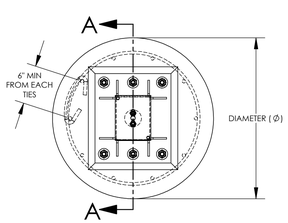

DETAIL 1

SCALE: 3/4" = 1'-0"

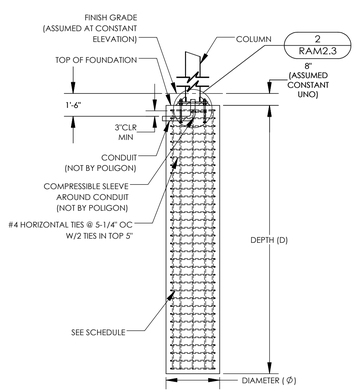

SECTION A-A

SCALE: 1/4" = 1'-0"

FOUNDATION REQUIREMENTS VARY PER PROJECT

SEE SHEET RAM1.0 FOR REQUIRED LOAD SCENARIO AND FOUNDATION TYPE (STEP 9 OF 'INSTRUCTIONS')

ONLY REFERENCE COPY OF PC DRAWINGS SUBMITTED FOR THIS PROJECT

DRILLED PIER

SIZE AND REINFORCING REQUIREMENTS

LOAD SCENARIO	DIAMETER (Ø)	DEPTH (D)	VERTICAL REINFORCING[1]	
			QTY	SIZE
1	3'-0"	13'-0"	10	#7
~~2~~	~~3'-0"~~	~~15'-0"~~	~~10~~	~~#7~~

[1] EQUALLY SPACED AROUND DRILLED PIER

DRILLED PIER FOUNDATION

1

NOTES:

1. GROUT SHALL BE NON-METALLIC, NON-SHRINK GROUT WITH MINIMUM F'c=6500 PSI.
2. COLUMNS FABICATED ASSUMING 1-1/2" GROUT PAD.
3. COLUMN BASES BELOW FINISH GRADE SHOULD BE PROTECTED FROM CORROSION, SELECT ONE OF THE FOLLOWING OPTIONS BELOW.

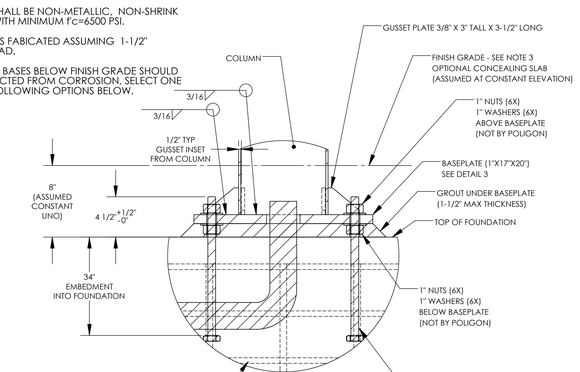

COLUMN BASE PROTECTION

BELOW SURFACE COLUMN INSTALLATION

[ ] CONCRETE SLAB - 3" MIN ANCHOR BOLT COVER

[ ] MASTIC COATING - 1/4" THICK MIN COATING ON ALL STEEL SURFACES BELOW GRADE

DETAIL 2

SCALE: 1-1/2" = 1'-0"

COLUMN BASEPLATE AND ANCHOR BOLTS

2

STATE APPROVALS-SITE

IDENTIFICATION STAMP
DIV. OF THE STATE ARCHITECT
APP: 02-121999 INC:
REVIEWED FOR
SS ☑ FLS ☑ ACS ☑
DATE: 11/30/2023

4600 PLAZA GOLDCREEK DR, STE 110
SUITE B
CHANHASSEN, MN 55317
530.677.1516

STATE APPROVALS-PC

IDENTIFICATION STAMP
DIV. OF THE STATE ARCHITECT
APP: 02-121213 PC
REVIEWED FOR
SS ☑ FLS ☑ ACS ☑ CG ☐
DATE: 7/18/2023

REGISTERED PROFESSIONAL ENGINEER
JESSICA E. NAPPER
No. S5476
STRUCTURAL
STATE OF CALIFORNIA

PRE-CHECK (PC) DOCUMENT
CODE: 2022 CBC
A SEPARATE PROJECT APPLICATION FOR CONSTRUCTION IS REQUIRED.

FOUNDATION PLAN DRILLED PIER

HIP ROOF - RAM 30

RAM2.3

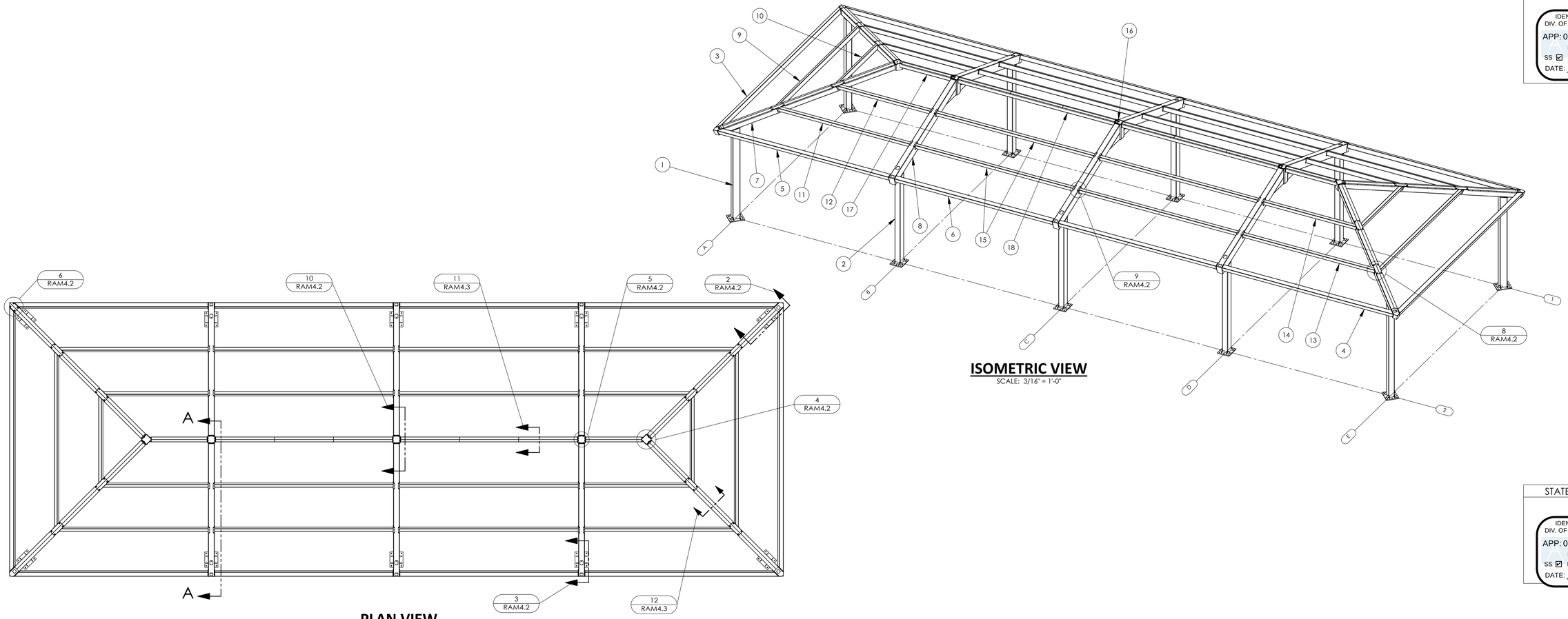

ISOMETRIC VIEW
SCALE: 3/16" = 1'-0"

PLAN VIEW
SCALE: 3/16" = 1'-0"

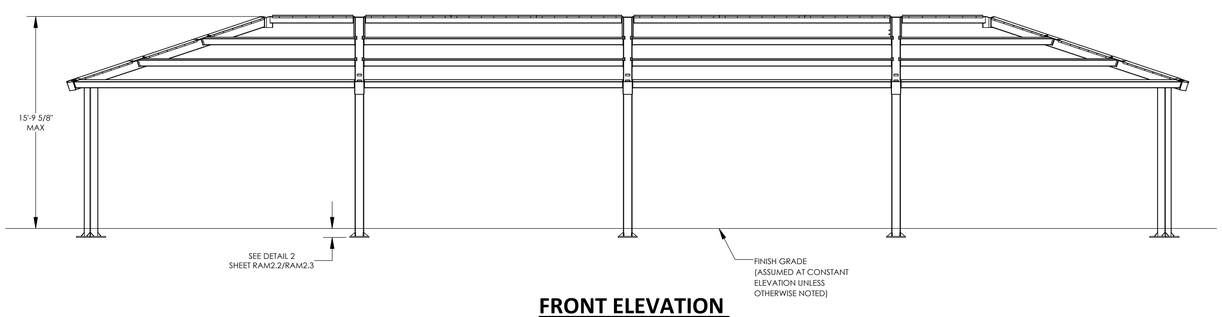

FRONT ELEVATION
SCALE: 3/16" = 1'-0"

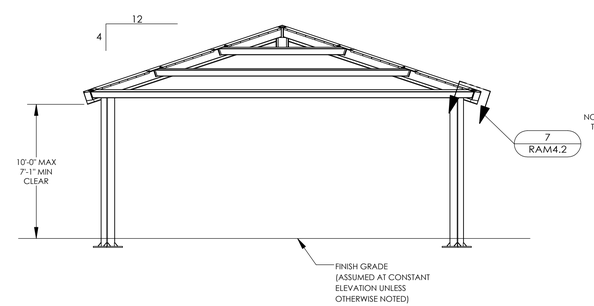

SIDE ELEVATION
SCALE: 3/16" = 1'-0"

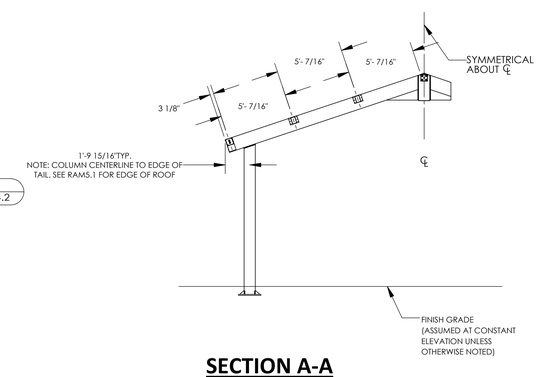

SECTION A-A
SCALE: 3/16" = 1'-0"

ITEM	QTY.	PART NO.	DESCRIPTION	MATERIAL	WEIGHT
18	2	-	R-BEAM ASM	HSS6X6X3/16	287.26
17	2	-	END R-BEAM ASM	HSS6X6X3/16	154.14
16	6	-	C-TUBE ASM	HSS10X10X5/8	143.92
15	8	-	SIDE PURLIN ASM	HSS6X4x3/16	234.29
14	2	-	CORNER PURLIN ASM	HSS6X4x3/16	136.79
13	2	-	CORNER PURLIN ASM	HSS6X4x3/16	193.62
12	2	-	CORNER PURLIN ASM	HSS6X4x3/16	136.94
11	2	-	CORNER PURLIN ASM	HSS6X4x3/16	193.78
10	2	-	END PURLIN ASM	HSS6X4x3/16	110.56
9	2	-	END PURLIN ASM	HSS6X4x3/16	224.23
8	6	-	GABLE BEAM ASM	HSS12X8X1/4	559.76
7	4	-	HIP BEAM ASM	HSS8X8X3/16	431.12
6	4	-	SIDE EAVE BEAM ASM	HSS6X6X3/16	284.96
5	2	-	CORNER EAVE BEAM ASM	HSS6X6X3/16	306.07
4	2	-	CORNER EAVE BEAM ASM	HSS6X6X3/16	306.00
3	2	-	END EAVE BEAM ASM	HSS6X6X3/16	413.48
2	6	-	SIDE COLUMN ASM	HSS10X8X1/4	425.36
1	4	-	CORNER COLUMN ASM	HSS10X8X1/4	433.63

STATE APPROVALS-SITE

IDENTIFICATION STAMP
DIV. OF THE STATE ARCHITECT
APP: 02-121999 INC:
REVIEWED FOR
SS ☑ FLS ☑ ACS ☑
DATE: 11/30/2023

4080 PLAZA GOLDORADO CIRCLE
SUITE B
CAMERON PARK, CA 95682
530.677.5016

poligon PORTER

REGISTERED PROFESSIONAL ENGINEER
JESSICA E. NAPIER
No. S5476
STRUCTURAL
STATE OF CALIFORNIA

STATE APPROVALS-PC

IDENTIFICATION STAMP
DIV. OF THE STATE ARCHITECT
APP: 02-121213 PC
REVIEWED FOR
SS ☑ FLS ☑ ACS ☑ CG ☐
DATE: 7/18/2023

PRE-CHECK (PC) DOCUMENT
CODE: 2022 CBC
A SEPARATE PROJECT APPLICATION FOR CONSTRUCTION IS REQUIRED.

FRAMING PLAN

HIP ROOF - RAM 30

RAM3.1

ALL HIDDEN NUTS AND BOLTS (INSTALLED IN SHOP DURING FABRICATION) ARE SECURED WITH THIS NUT AND BOLT RESTAINING SYSTEM.

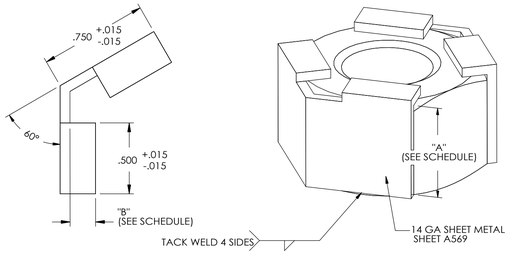

DIMENSION SCHEDULE				
FASTENER	DIM A		DIM B	
5/8" NUT	.631	+.000 -.015	.180	+.015 -.015
5/8" BOLT	.403	+.000 -.015	.250	+.015 -.015
3/4" NUT	.758	+.000 -.015	.180	+.015 -.015
3/4" BOLT	.483	+.000 -.015	.375	+.015 -.015
1" NUT	1.012	+.000 -.015	.180	+.015 -.015
1" BOLT	.643	+.000 -.015	.375	+.015 -.015

NUT & BOLT RESTRAINING SYSTEM 1

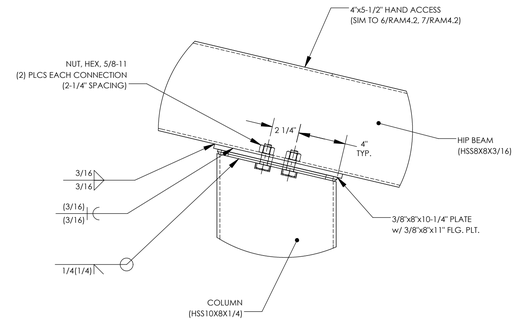

HIP BEAM CONNECTION @ COLUMN 2

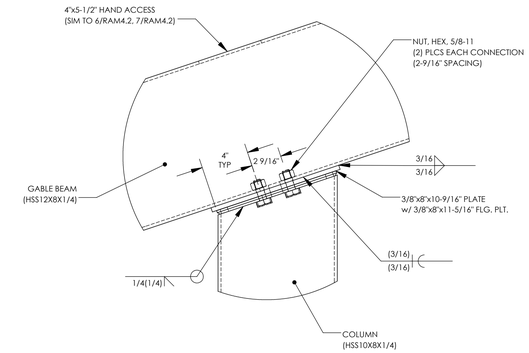

GABLE BEAM CONNECTION @ COLUMN 3

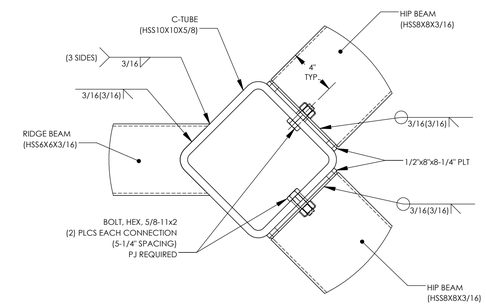

HIP BEAM CONNECTION @ COMPRESSION TUBE 4

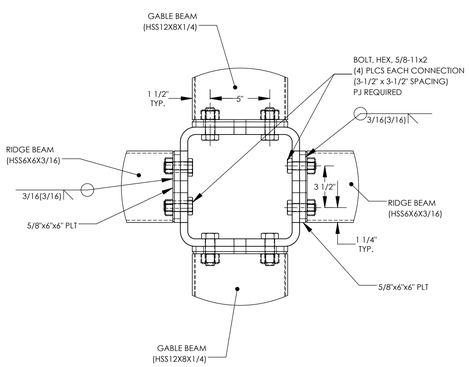

RIDGE BEAM CONNECTION @ COMPRESSION TUBE 5

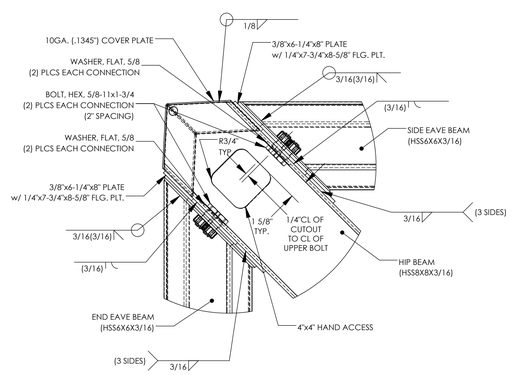

EAVE BEAM CONNECTION @ HIP BEAM 6

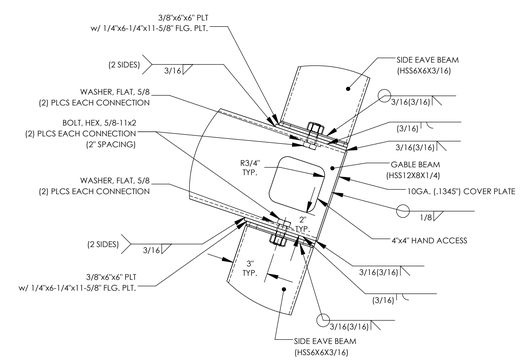

EAVE BEAM CONNECTION @ GABLE BEAM 7

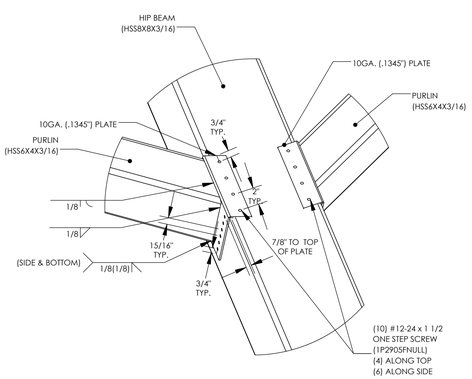

PURLIN CONNECTION @ HIP BEAM 8

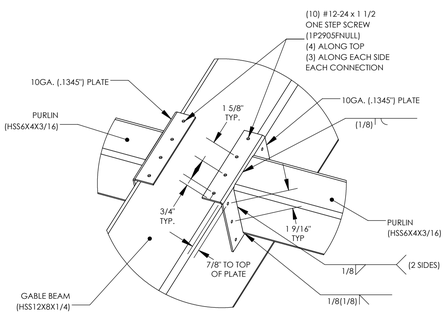

PURLIN CONNECTION @ GABLE BEAM 9

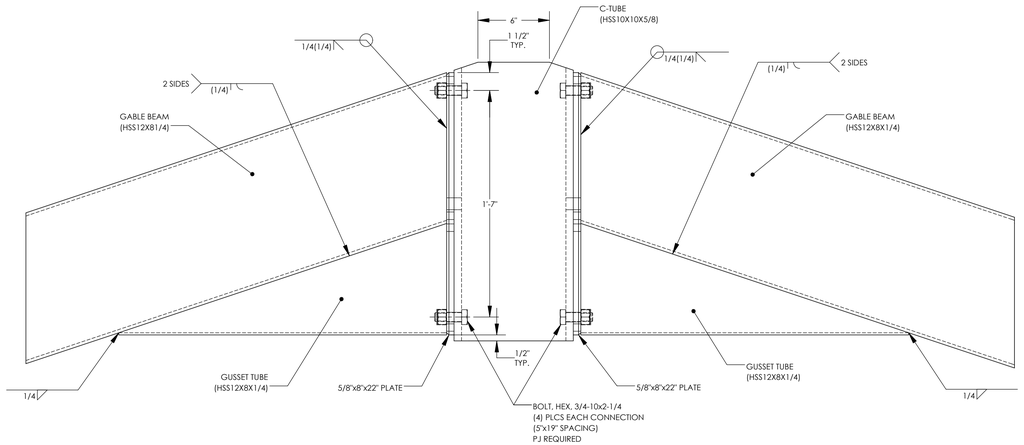

GABLE BEAM CONNECTION @ COMPRESSION TUBE 10

STATE APPROVALS-SITE

IDENTIFICATION STAMP
DIV. OF THE STATE ARCHITECT
APP: 02-121999 INC:
REVIEWED FOR
SS ☑ FLS ☑ ACS ☑
DATE: 11/30/2023

4005 PLAZA GOLDORADO CIRCLE
SUITE B
CAMERON PARK, CA 95682
530.677.1016
GHD
poligon
PORTER

REGISTERED PROFESSIONAL ENGINEER JESSICA E. NAPPER No. S5476 STRUCTURAL STATE OF CALIFORNIA

STATE APPROVALS-PC

IDENTIFICATION STAMP
DIV. OF THE STATE ARCHITECT
APP: 02-121213 PC
REVIEWED FOR
SS ☑ FLS ☑ ACS ☑ CG ☐
DATE: 7/18/2023

PRE-CHECK (PC) DOCUMENT
CODE: 2022 CBC
A SEPARATE PROJECT APPLICATION FOR CONSTRUCTION IS REQUIRED.

FRAME CONNECTION DETAILS

HIP ROOF - RAM 30

RAM4.2

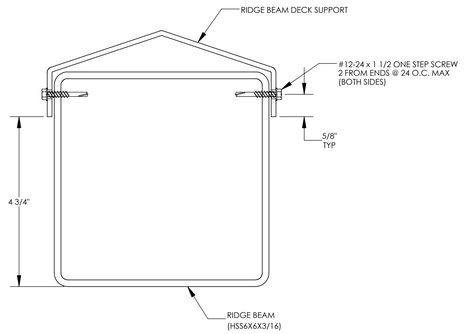

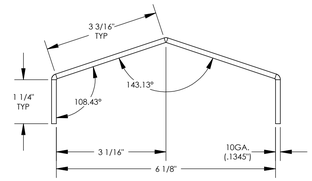

RAM 30 - RIDGE
Fy = 36 KSI
A = 1.231 IN^2
Ix = 1.149 IN^4
Iy = 6.272 IN^4
Sx = 0.771 IN^3
Sy = 1.962 IN^3

RIDGE BEAM DECK SUPPORT DETAIL

11

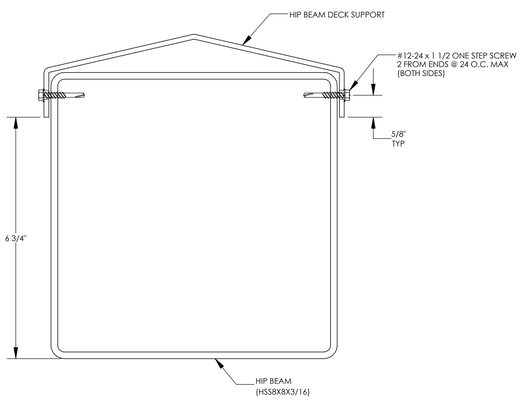

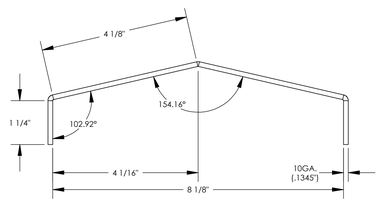

RAM 30 - HIP
Fy = 36 KSI
A = 1.484 IN^2
Ix = 1.341 IN^4
Iy = 12.353 IN^4
Sx = 0.886 IN^3
Sy = 2.943 IN^3

HIP BEAM DECK SUPPORT DETAIL

12

STATE APPROVALS-SITE

IDENTIFICATION STAMP
DIV. OF THE STATE ARCHITECT
APP: 02-121999 INC:
REVIEWED FOR
SS ☑ FLS ☑ ACS ☑
DATE: 11/30/2023

4000 PLAZA GOLDORADO CIRCLE
SUITE B
CAMERON PARK, CA 95682
530.677.0016

poligon PORTER

REGISTERED PROFESSIONAL ENGINEER
JESSICA E. NAPIER
No. S5476
STRUCTURAL
STATE OF CALIFORNIA

STATE APPROVALS-PC

IDENTIFICATION STAMP
DIV. OF THE STATE ARCHITECT
APP: 02-121213 PC
REVIEWED FOR
SS ☑ FLS ☑ ACS ☑ CG ☐
DATE: 7/18/2023

PRE-CHECK (PC) DOCUMENT
CODE: 2022 CBC
A SEPARATE PROJECT APPLICATION FOR CONSTRUCTION IS REQUIRED.

SECTION DETAILS

HIP ROOF - RAM 30

RAM4.3

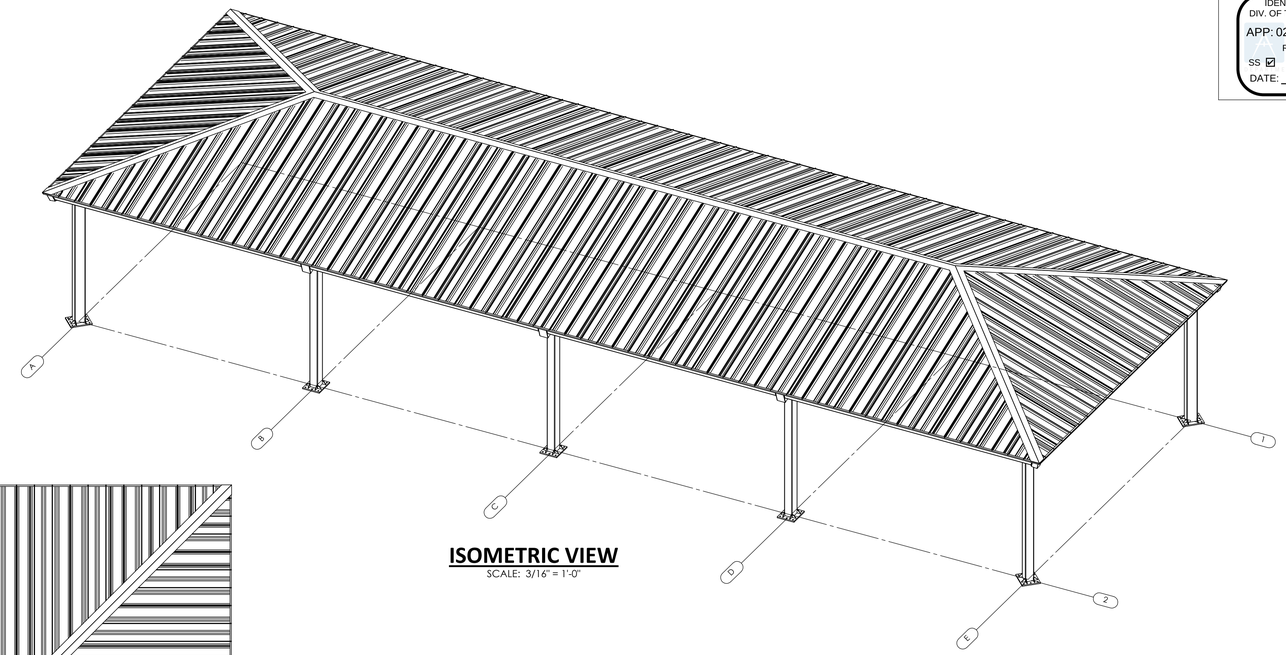

ISOMETRIC VIEW

SCALE: 3/16" = 1'-0"

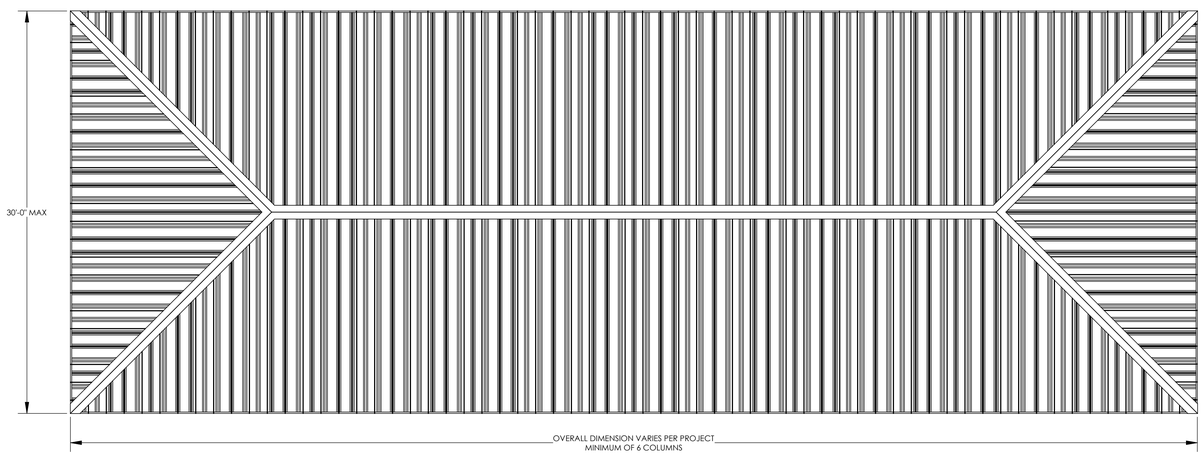

PLAN VIEW

SCALE: 3/16" = 1'-0"

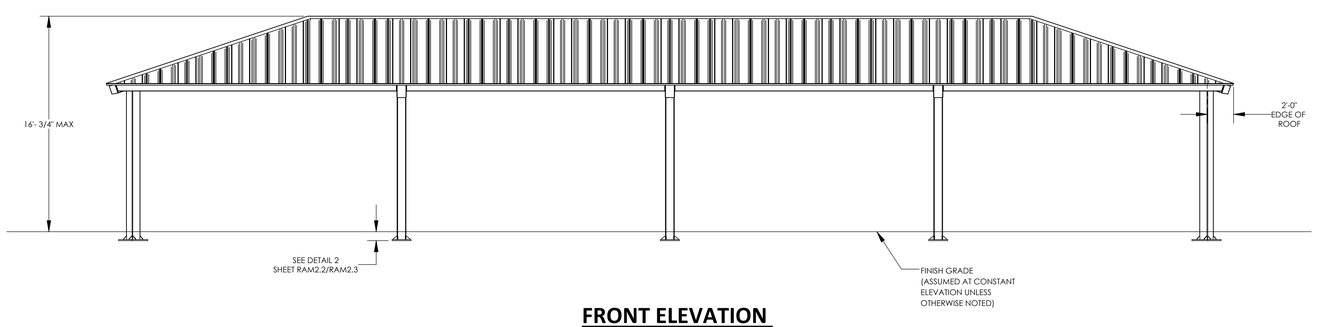

FRONT ELEVATION

SCALE: 3/16" = 1'-0"

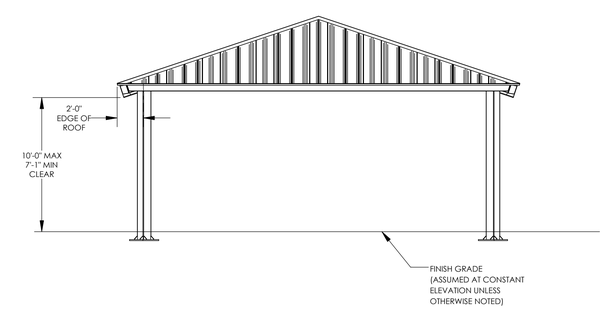

SIDE ELEVATION

SCALE: 3/16" = 1'-0"

STATE APPROVALS-SITE

IDENTIFICATION STAMP
DIV. OF THE STATE ARCHITECT
APP: 02-121999 INC:
REVIEWED FOR
SS ☑ FLS ☑ ACS ☑
DATE: 11/30/2023

4005 PLAZA GOLDORADO CIRCLE
SUITE B
CAMERON PARK, CA 95682
530.677.0316

STATE APPROVALS-PC

IDENTIFICATION STAMP
DIV. OF THE STATE ARCHITECT
APP: 02-121213 PC
REVIEWED FOR
SS ☑ FLS ☑ ACS ☑ CG ☐
DATE: 7/18/2023

PRE-CHECK (PC) DOCUMENT
CODE: 2022 CBC
A SEPARATE PROJECT APPLICATION FOR CONSTRUCTION IS REQUIRED.

ARCHITECTURAL VIEWS

HIP ROOF - RAM 30

RAM5.1

STANDING SEAM INSTALLATION NOTES:

THE DETAILS SHOWN ARE SUGGESTIONS OR GUIDELINES ON HOW TO ERECT THE SYSTEMS. THE INFORMATION SHOWN IS ACCURATE, BUT IT IS NOT INTENDED TO COVER ALL INSTANCES, BUILDING REQUIREMENTS, DESIGNS OR CODES. THE DETAILS MAY REQUIRE CHANGES OR REVISIONS DUE TO FIELD CONDITIONS.

IT SHALL BE THE RESPONSIBILITY OF THE ERECTOR TO ENSURE THAT THE DETAILS MEET PARTICULAR BUILDING REQUIREMENTS AND TO ASSURE ADEQUATE WATER TIGHTNESS.

THE ERECTOR SHOULD THOROUGHLY FAMILIARIZE HIMSELF/HERSELF WITH ALL ERECTION INSTRUCTIONS BEFORE STARTING WORK.

THE PANELS SHOULD BE INSTALLED PLUMB, STRAIGHT, AND ACCURATELY TO THE ADJACENT WORK.

FLASHING AND TRIM SHALL BE INSTALLED TRUE, AND IN PROPER ALIGNMENT, WITH ANY EXPOSED FASTENERS EQUALLY SPACED FOR THE BEST APPEARANCE.

SEALANT SHALL BE FIELD APPLIED ON DRY, CLEAN SURFACES. SOME FIELD CUTTING AND FITTING OF PANELS AND FLASHING IS TO BE EXPECTED BY THE ERECTOR AND MINOR FIELD CORRECTIONS ARE A PART OF NORMAL ERECTION WORK.

WORKMANSHIP SHALL BE OF THE BEST INDUSTRY STANDARDS AND INSTALLATION SHALL BE PERFORMED BY EXPERIENCED METAL CRAFTSMEN.

METAL SHAVINGS FROM DRILLING OR INSTALLATION OF ROOF FASTENERS MUST BE CAREFULLY REMOVED FROM THE ROOF BY BRUSHING OR SWEEPING AT THE END OF EACH DAY DURING INSTALLATION. SHAVINGS LEFT ON THE ROOF WILL QUICKLY RUST AND STAIN THE ROOF FINISH.

COVER ACCESS HOLES WITH GRACE ICE AND WATER SHIELD BEFORE ATTACHING ROOF DECKING

METAL ROOFING PRODUCT AND INSTALLATION SHALL MEET ALL REQUIREMENTS OF ICC-ES REPORT ESL-1082.

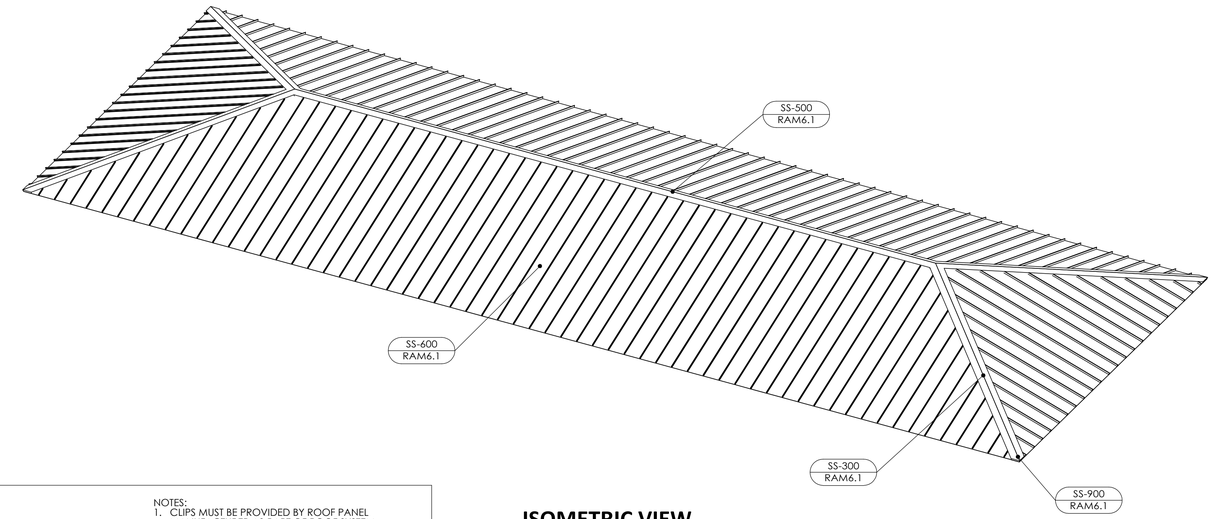

ISOMETRIC VIEW

SCALE: 3/16" = 1'-0"

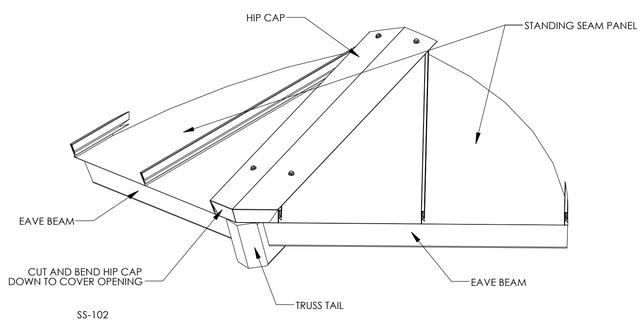

CORNER DETAIL — SS-900

NOTES:
1. CLIPS MUST BE PROVIDED BY ROOF PANEL MANUFACTURER AS PART OF ROOF SYSTEM,
2. MATERIAL THICKNESS MUST BE 18 GAGE (0.048"-0.053")

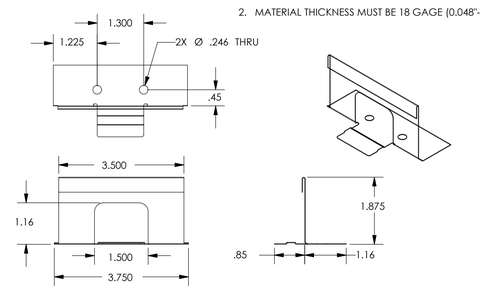

CLIP DETAIL — SS-CLP

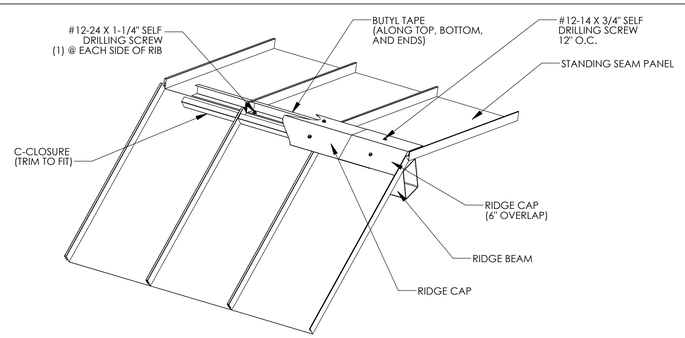

RIDGE DETAIL — SS-500

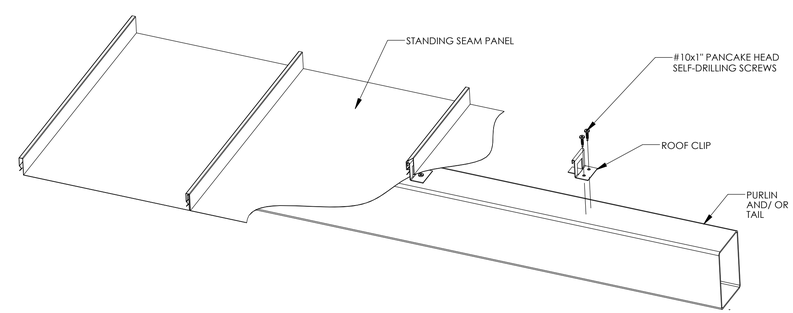

PURLIN DETAIL — SS-600

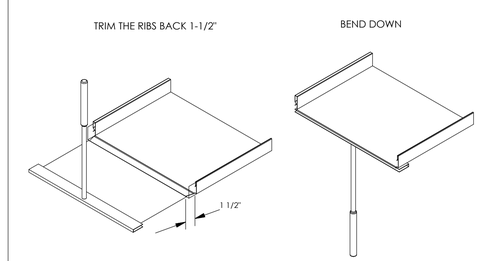

HEMMING DETAIL — SS-HEM

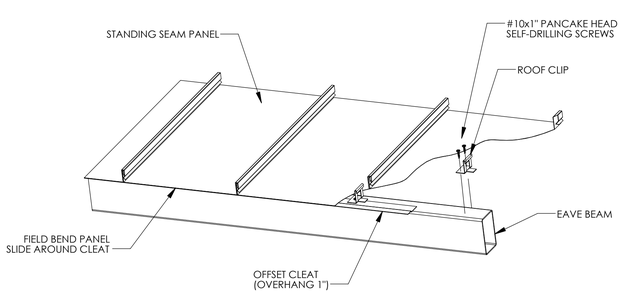

EAVE DETAIL — SS-200

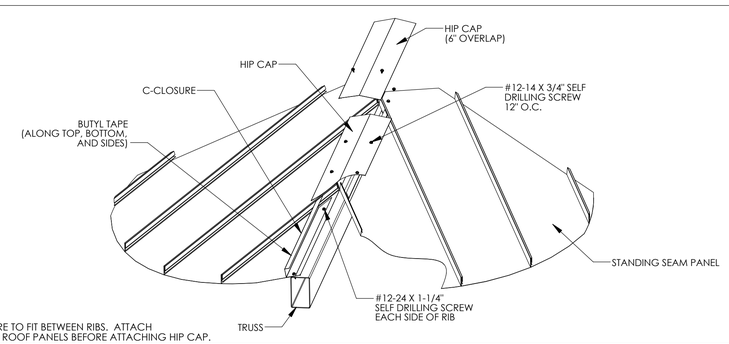

NOTE:
TRIM C-CLOSURE TO FIT BETWEEN RIBS. ATTACH C-CLOSURE TO ROOF PANELS BEFORE ATTACHING HIP CAP.

TRUSS DETAIL — SS-300

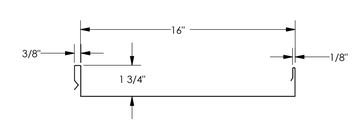

GENERAL
GAGE = 22
FY = 50 KSI

TOP IN COMPRESSION
Ix = 0.1200 IN^4
Se = 0.0803 IN^3
Ma = 2.4056 IN-KIPS

BOTTOM IN COMPRESSION
Ix = 0.0570 IN^4
Se = 0.0729 IN^3
Ma = 1.7220 IN-KIPS

ROOF DECK SECTION PROPERTIES — SS-950

STATE APPROVALS-SITE

IDENTIFICATION STAMP
DIV. OF THE STATE ARCHITECT
APP: 02-121999 INC:
REVIEWED FOR
SS ☑ FLS ☑ ACS ☑
DATE: 11/30/2023

GHD
4600 PLAZA GOLDLOOP/ADC CIRCLE
SUITE B
CAMERON PK, CA 95682
530.677.0316

poligon
PORTER LLC

REGISTERED PROFESSIONAL ENGINEER
JESSICA E. NAPIER
No. S5476
STRUCTURAL
STATE OF CALIFORNIA

STATE APPROVALS-PC

IDENTIFICATION STAMP
DIV. OF THE STATE ARCHITECT
APP: 02-121213 PC
REVIEWED FOR
SS ☑ FLS ☑ ACS ☑ CG ☐
DATE: 7/18/2023

PRE-CHECK (PC) DOCUMENT
CODE: 2022 CBC
A SEPARATE PROJECT APPLICATION FOR CONSTRUCTION IS REQUIRED.

ROOF CONNECTION DETAILS

HIP ROOF - RAM

RAM6.1

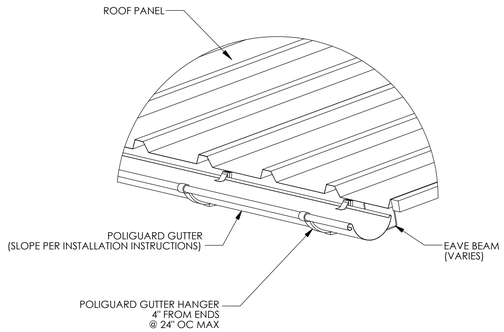

GUTTER DETAIL

GS-100

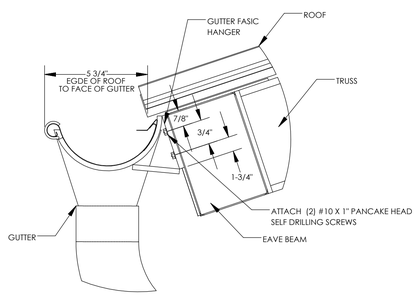

GUTTER DETAIL

GS-200

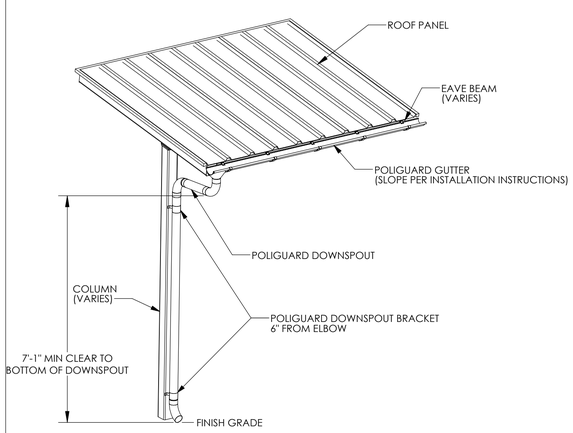

DOWNSPOUT DETAIL

GS-300

POLIGUARD GUTTER SYSTEM NOTES:

1. PREFABRICATED GUTTER SYSTEM IS ATTACHED TO THE STRUCTURE AFTER ROOF IS INSTALLED.
2. DETAILED INSTALLATION INSTRUCTIONS ARE SHIPPED WITH THE STRUCTURE.
3. ~~DOWNSPOUTS REQUIRED AT EACH COLUMN.~~

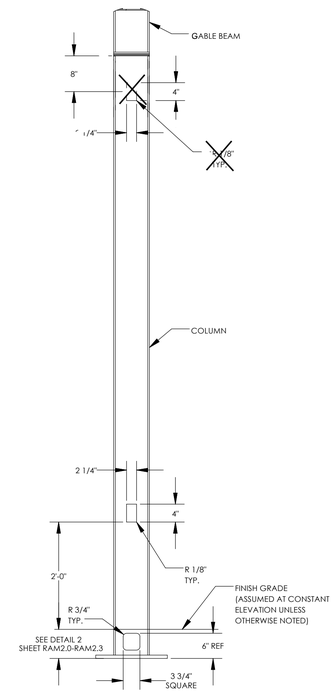

ELECTRICAL CUTOUT IN COLUMNS

EC-100

ELECTRICAL CUTOUT NOTES:

1. MAXIMUM ONE CUTOUT PERMITTED IN EACH MEMBER.
2. CUTOUTS CAN BE PLACED ON ANY SIDE OF A MEMBER.
3. CUTOUTS CAN BE PLACED ALONG MEMBERS AS INDICATED IN THE DETAILS.
4. ARCHITECTS REQUESTING CUTOUTS MUST MARKUP APPROVED PC DRAWINGS TO LOCATE CUTOUTS FOR APPROVAL AND FABRICATION.

STATE APPROVALS-SITE

IDENTIFICATION STAMP
DIV. OF THE STATE ARCHITECT
APP: 02-121999 INC:
REVIEWED FOR
SS ☑ FLS ☑ ACS ☑
DATE: 11/30/2023

4080 PLAZA GOLDORADO CIRCLE
SUITE B
CAMERON PARK, CA 95682
530.677.5515

poligon PORTER

REGISTERED PROFESSIONAL ENGINEER
JESSICA E. NAPIER
No. S5476
STRUCTURAL
STATE OF CALIFORNIA

STATE APPROVALS-PC

IDENTIFICATION STAMP
DIV. OF THE STATE ARCHITECT
APP: 02-121213 PC
REVIEWED FOR
SS ☑ FLS ☑ ACS ☑ CG ☐
DATE: 7/18/2023

PRE-CHECK (PC) DOCUMENT
CODE: 2022 CBC
A SEPARATE PROJECT APPLICATION FOR CONSTRUCTION IS REQUIRED.

MISC DESIGN OPTIONS

HIP ROOF - RAM

RAM7.0

ELECTRICAL CUTOUT AND ACCESS INSTRUCTIONS

- IF 'YES' IS NOT SELECTED IN STEP 2 ON ORDER FORM, THEN THIS SHEET NEED NOT BE INCLUDED IN SITE-SPECIFIC DRAWINGS
- ONLY COLUMNS ARE PERMITTED TO HAVE ELECTRICAL ACCESS
- THE COLUMN CUTOUTS ARE STATIC AND SHOWN IN THE 'MISC DESIGN OPTIONS SHEET'
- IDENTIFY THE COLUMNS WITH ELECTRICAL CUTOUTS BELOW (REFERENCE GRID LINES IN ISOMETRIC FRAME VIEW TO THE RIGHT)
- STRUCTURES MAY BE LONGER OR SHORTER THAN THE ISOMETRIC FRAME VIEW SHOWN
- IF SITE-SPECIFIC STRUCTURE HAS A DIFFERENT NUMBER OF COLUMNS THAN ISOMETRIC SHOWN, REFERENCE COLUMN A1 IN THE ISOMETRIC VIEW AND CONTINUE PATTERN TO FIT SITE-SPECIFIC LAYOUT
- IF NO COLUMNS ARE IDENTIFIED, POLIGON WILL ASSUME CUTOUTS ONLY IN COLUMN A1
- CONTACT POLIGON ENGINEERING FOR SPECIAL PROJECT SPECIFIC REQUIREMENTS

ELECTRICAL CUTOUT IDENTIFICATION IN COLUMNS
SPECIFIC MEMBERS A1, E2

~~EXAMPLE:~~

~~ELECTRICAL CUTOUT IDENTIFICATION IN COLUMNS~~
~~SPECIFIC MEMBERS A1 , B1, F1~~

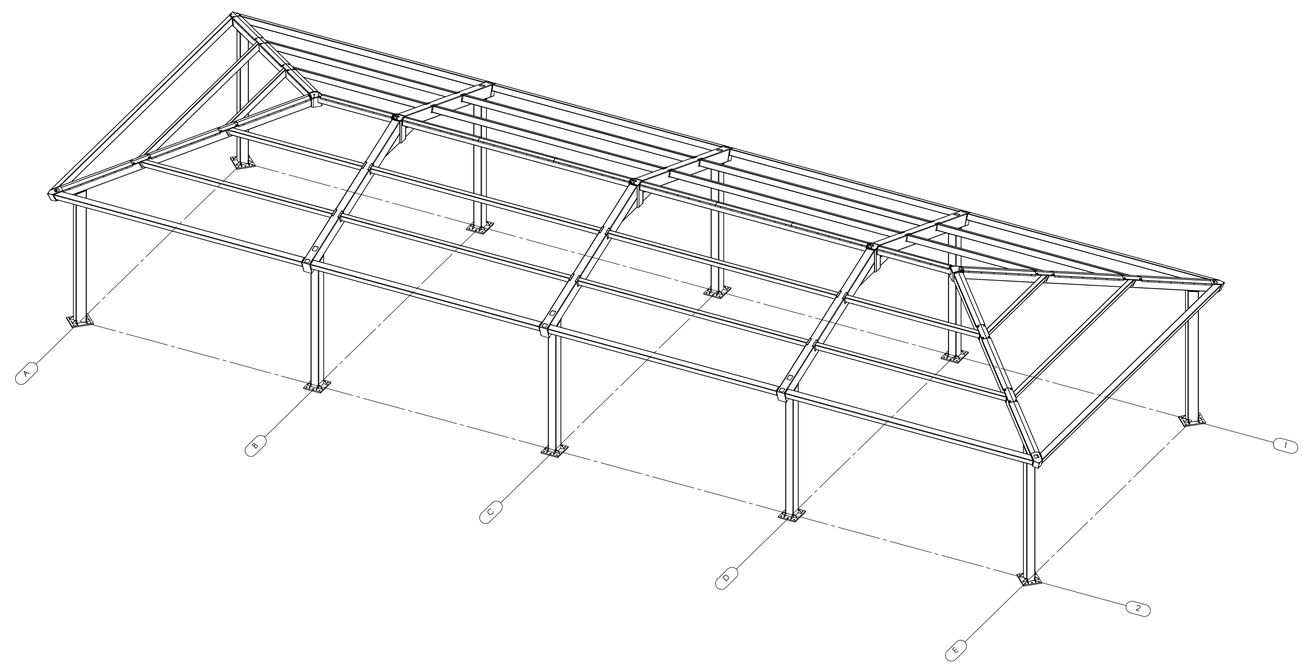

STATE APPROVALS-SITE

IDENTIFICATION STAMP
DIV. OF THE STATE ARCHITECT
APP: 02-121999 INC:
REVIEWED FOR
SS ☑ FLS ☑ ACS ☑
DATE: 11/30/2023

4080 PLAZA GOLDORADO CIRCLE
SUITE B
CAMERON PARK, CA 95682
530.677.0316

poligon
PORTER

REGISTERED PROFESSIONAL ENGINEER
JESSICA E. NAPIER
No. S5476
STRUCTURAL
STATE OF CALIFORNIA

STATE APPROVALS-PC

IDENTIFICATION STAMP
DIV. OF THE STATE ARCHITECT
APP: 02-121213 PC
REVIEWED FOR
SS ☑ FLS ☑ ACS ☑ CG ☐
DATE: 7/18/2023

PRE-CHECK (PC) DOCUMENT
CODE: 2022 CBC
A SEPARATE PROJECT APPLICATION FOR CONSTRUCTION IS REQUIRED.

ELECTRICAL CUTOUTS

HIP ROOF - RAM

RAM7.1

LODI UNIFIED SCHOOL DISTRICT

LODI UNIFIED SCHOOL DISTRICT LUNCH SHELTERS - ELLERTH LARSON ELEMENTARY SCHOOL

2375 GIANNONI WAY LODI, CA 95242

THE LINE SHOWN ABOVE IS EXACTLY ONE INCH LONG AT THIS SHEETS ORIGINAL PAGE SIZE

GENERAL NOTES

1. CONSTRUCTION DOCUMENTS DESCRIBE THE PRODUCTS, SYSTEMS, QUANTITIES, CONFIGURATION, AND PERFORMANCE SPECIFICATIONS THAT DELIVER THE OVERALL DESIGN INTENT OF THE PROJECT.
2. THE CONSTRUCTION DOCUMENT DRAWINGS AND SPECIFICATIONS ARE COMPLEMENTARY, AND WHAT IS REQUIRED BY ONE SHALL BE AS BINDING AS IF REQUIRED BY BOTH.
3. PERFORMANCE BY THE CONSTRUCTION TEAM SHALL BE CONSISTENT WITH THE CONSTRUCTION DRAWINGS AND SPECIFICATIONS AS NECESSARY TO DELIVER THE INDICATED RESULTS OF THE DESIGN INTENT.
4. VERIFY ALL DIMENSIONS, LOCATIONS OF EXISTING UTILITIES, AND CONDITIONS ON THE JOB SITE PRIOR TO THE START OF WORK OR PORTIONS OF THE WORK. NOTIFY THE ARCHITECT IMMEDIATELY OF ANY DISCREPANCIES BETWEEN THE ACTUAL FIELD CONDITIONS AND THE CONSTRUCTION DOCUMENTS. EXISTING CONDITIONS ARE INDICATED AS A RESULT OF FIELD OBSERVATIONS, INFORMATION SHOWN ON AVAILABLE DOCUMENTS AND FIELD CONDITIONS AT THE TIME OF PREPARATION.
5. ALL MATERIALS AND WORKMANSHIP SHALL COMPLY WITH ALL GOVERNING CODES, ORDINANCES, REGULATIONS AND LAWS.
6. THE DESIGN ADEQUACY AND SAFETY OF ERECTION BRACING, SHORING, TEMPORARY SUPPORTS AND SCAFFOLDING IS THE SOLE RESPONSIBILITY OF THE CONTRACTOR.
7. WHERE ANY CONFLICT OCCURS BETWEEN THE REQUIREMENTS OF LAWS, CODES, ORDINANCES, RULES AND REGULATIONS, THE MOST STRINGENT SHALL GOVERN.
8. IN NO CASE SHALL WORKING DIMENSIONS BE SCALED FROM PLANS, SECTIONS OR DETAILS ON THE DRAWINGS.
9. DETAILS MARKED 'TYPICAL' SHALL APPLY IN ALL CASES UNLESS SPECIFICALLY NOTED OTHERWISE.
10. ENACT ALL MEASURES TO PROTECT AND SAFEGUARD ALL EXISTING ELEMENTS TO REMAIN FROM BEING DAMAGED. REPLACE OR REPAIR EXISTING ELEMENTS DAMAGED BY THE EXECUTION OF THIS CONTRACT TO EQUAL OR BETTER CONDITION.
11. PRIOR TO THE START OF WORK THE CONTRACTOR SHALL COORDINATE BETWEEN THE REQUIREMENTS OF ALL DISCIPLINES HEREIN AND BETWEEN THE REQUIREMENTS OF ALL DRAWINGS AND SPECIFICATIONS IN ORDER THAT ALL ITEMS SATISFACTORILY RELATE TO ONE ANOTHER. NOTIFY ARCHITECT IMMEDIATELY REGARDING ANY ITEMS THAT CANNOT BE COORDINATED.
12. CONTRACTOR SHALL EXCERCISE EXTREME CAUTION IN EXCAVATING AND TRENCHING ON THIS SITE TO AVOID EXISTING DUCTS, PIPING, CONDUIT, ETC. AND TO PREVENT HAZARD TO PERSONNEL AND/OR TO EXISTING UNDERGROUND UTILITIES OR STRUCTURES. THE CONTRACTOR SHALL IMMEDIATELY NOTIFY THE ARCHITECT SHOULD SUCH UNIDENTIFIED CONDITIONS BE DISCOVERED. THESE DRAWINGS AND SPECIFICATIONS DO NOT INCLUDE THE NECESSARY COMPONENTS FOR CONSTRUCTION SAFETY.
13. PROVIDE SAFE MEANS OF EGRESS THROUGH THE BUILDING AND ON SITE AT ALL TIMES.
14. PROVIDE FIRE EXTINGUISHERS PER CFC AT ALL TIMES THROUGHOUT CONSTRUCTION AREA.
15. PROVIDE CONSTRUCTION BARRIERS BETWEEN CONSTRUCTION AREAS AND OCCUPIED AREAS AT ALL TIMES.
16. CUTTING, BORING, SAWCUTTING OR DRILLING THROUGH THE EXISTING OR NEW STRUCTURAL ELEMENTS SHALL NOT TO BE STARTED UNTIL THE DETAILS HAVE BEEN REVIEWED AND APPROVED BY THE ARCHITECT, AND STRUCTURAL ENGINEER OF RECORD.
17. AVOID DISRUPTION TO ADJACENT AREAS. KEEP NOISE TO A LEVEL ACCEPTABLE TO THE OWNER BY SCHEDULING EXCESSIVE NOISE TASKS WITH OWNER REPRESENTATIVE. THIS MAY REQUIRE AFTER HOURS WORK.
18. **STATEMENT OF HAZARDOUS MATERIAL DISCOVERY**
IF THE CONTRACTOR ENCOUNTERS A HAZARDOUS MATERIAL OR SUBSTANCE NOT ADDRESSED IN THE HAZARDOUS MATERIAL REPORT OR IN A CONCEALED CONDITION, THE CONTRACTOR SHALL, UPON RECOGNIZING THE CONDITION, IMMEDIATELY STOP WORK IN THE AFFECTED AREA AND REPORT THE CONDITION TO THE OWNER AND ARCHITECT IN WRITING.
UPON RECEIPT OF THE CONTRACTOR'S WRITTEN NOTICE, THE OWNER SHALL OBTAIN THE SERVICES OF A LICENSED LABORATORY TO VERIFY THE PRESENCE OR ABSENCE OF THE MATERIAL OR SUBSTANCE REPORTED BY THE CONTRACTOR AND, IN THE EVENT SUCH MATERIAL OR SUBSTANCE IS FOUND TO BE PRESENT, TO PROVIDE RECOMMENDATIONS TO CAUSE IT TO BE ABATED AND RENDERED HARMLESS.
WHEN THE MATERIAL OR SUBSTANCE HAS BEEN ABATED AND RENDERED HARMLESS, WORK IN THE AFFECTED AREA SHALL RESUME UPON WRITTEN AGREEMENT OF THE OWNER AND CONTRACTOR.
19. PENETRATIONS TO FIRE RATED MATERIALS OR ASSEMBLIES SHALL BE RESTORED TO EQUAL RATING. SPECIAL INSPECTOR DSA 103 REQ'D.
21. COMPLY WITH TITLE 24, PART 9, CALIFORNIA FIRE CODE, CHAPTER 33 FIRE SAFETY DURING CONSTRUCTION AND DEMOLITION, DURING ALL PHASES OF PROJECT.
22. ALL WORK SHALL CONFORM TO 2019 TITLE 24, CALIFORNIA CODE OF REGULATIONS (CCR).
23. CHANGES TO THE APPROVED DRAWINGS AND SPECIFICATIONS SHALL BE MADE BY AN ADDENDUM OR A CONSTRUCTION CHANGED DOCUMENT (CCD) APPROVED BY THE DIVISION OF THE STATE ARCHITECT, AS REQUIRED BY SECTION 4-338, PART 1, TITLE 24, CCR.
24. A "DSA CERTIFIED" CLASS 2 PROJECT INSPECTOR EMPLOYED BY THE DISTRICT (OWNER) AND APPROVED BY THE DSA SHALL PROVIDE CONTINUOUS INSPECTION OF THE WORK. THE DUTIES OF THE INSPECTOR ARE DEFINED IN SECTION 4-342, PART 1, TITLE 24, CCR.
25. A DSA ACCEPTED TESTING LABORATORY DIRECTLY EMPLOYED BY THE DISTRICT (OWNER) SHALL CONDUCT ALL THE REQUIRED TESTS AND INSPECTIONS FOR THE PROJECT.
26. THE INTENT OF THESE DRAWINGS AND SPECIFICATIONS IS THAT THE WORK OF THE ALTERATION, REHABILITATION OR RECONSTRUCTION IS TO BE IN ACCORDANCE WITH TITLE 24, CCR. SHOULD ANY EXISTING CONDITIONS SUCH AS DETERIORATION OR NON-COMPLYING CONSTRUCTION BE DISCOVERED WHICH IS NOT COVERED BY THE CONTRACT DOCUMENTS WHEREIN THE FINISHED WORK WILL NOT COMPLY WITH TITLE 24, CCR, A CONSTRUCTION CHANGE DOCUMENT (CCD), OR A SEPARATE SET OF PLANS AND SPECIFICATIONS, DETAILING AND SPECIFYING THE REQUIRED WORK SHALL BE SUBMITTED TO AND APPROVED BY DSA BEFORE PROCEEDING WITH THE WORK. (SECTION 4-317(c), PART 1, TITLE 24, CCR)
27. GRADING PLANS, DRAINAGE IMPROVEMENTS, ROAD AND ACCESS REQUIREMENTS AND ENVIRONMENTAL HEALTH CONSIDERATIONS SHALL COMPLY WITH ALL LOCAL ORDINANCES.
28. SUBSTITUTIONS AFFECTING DSA REGULATED ITEMS SHALL BE CONSIDERED AS A CONSTRUCTION CHANGE DOCUMENT, AND SHALL BE APPROVED BY DSA PRIOR TO FABRICATION AND INSTALLATION PER DSA IR A-6 AND SECTION 338(c) PART 1, TITLE 24, CCR.

CODES

PARTIAL LIST OF APPLICABLE CODES

2022	CALIFORNIA ADMINISTRATIVE CODE, PART 1, TITLE 24 C.C.R.
2022	CALIFORNIA BUILDING CODE (CBC), PART 2, TITLE 24 C.C.R. (2021 INTERNATIONAL BUILDING CODE VOLUMES 1 & 2 AND 2022 CALIFORNIA AMENDMENTS)
2022	CALIFORNIA ELECTRICAL CODE (CEC), PART 3, TITLE 24 C.C.R. (2020 NATIONAL ELECTRICAL CODE AND 2022 CALIFORNIA AMENDMENTS)
2022	CALIFORNIA MECHANICAL CODE (CMC) PART 4, TITLE 24 C.C.R. (2021 UNIFORM MECHANICAL CODE AND 2022 CALIFORNIA AMENDMENTS)
2022	CALIFORNIA PLUMBING CODE (CPC), PART 5, TITLE 24 C.C.R. (2021 UNIFORM PLUMBING CODE AND 2022 CALIFORNIA AMENDMENTS)
2022	CALIFORNIA ENERGY CODE (CEC), PART 6, TITLE 24 C.C.R.
2022	CALIFORNIA HISTORICAL BUILDING CODE (CHBC), PART 8, TITLE 24 C.C.R.
2022	CALIFORNIA FIRE CODE, PART 9, TITLE 24 C.C.R. (2021 INTERNATIONAL FIRE CODE AND 2022 CALIFORNIA AMENDMENTS)
2022	CALIFORNIA EXISTING BUILDING CODE (CEBC), PART 10, TITLE 24 C.C.R. (2021 INTERNATIONAL EXISTING CODE AND 2022 CALIFORNIA AMENDMENTS)
2022	CALIFORNIA GREEN BUILDING STANDARDS CODE (CALGREEN), PART 11, TITLE 24 C.C.R.
2022	CALIFORNIA REFERENCED STANDARDS, PART 12,TITLE 24 C.C.R.
TITLE 19	C.C.R., PUBLIC SAFETY, STATE FIRE MARSHAL REGULATIONS.
2019	ASME A17.1/B44-19 SAFETY CODE FOR ELEVATORS AND ESCALATORS
2020	ASME 18.1 - SAFETY STANDARD FOR PLATFORM LIFTS AND STAIRWAY CHAIR LIFTS

NOTE TO CONTRACTOR:
THE CALIFORNIA ENERGY CODE SECTION 10-103 REQUIRES ACCEPTANCE TESTING ON ALL NEWLY INSTALLED LIGHTING CONTROLS, MECHANICAL SYSTEMS, ENVELOPES, AND PROCESS EQUIPMENT AFTER INSTALLATION AND BEFORE PROJECT COMPLETION. AN ACCEPTANCE TEST IS A FUNCTIONAL PERFORMANCE TEST TO HELP ENSURE THAT NEWLY INSTALLED EQUIPMENT IS OPERATING AND IN COMPLIANCE WITH ENERGY CODE.

LIGHTING CONTROLS ACCEPTANCE TESTS MUST BE PERFORMED BY A CERTIFIED LIGHTING CONTROLS ACCEPTANCE TEST TECHNICIAN (ATT).

MECHANICAL SYSTEM ACCEPATANCE TEST MUST BE PERFORMED BY A CERTIFIED MECHANICAL ATT FOR PROJECTS SUBMITTED ON OR AFTER OCTOBER 1, 2021.

A LISTING OF CERTIFIED ATTs CAN BE FOUND AT: HTTPS://WWW.ENERGY.CA.GOV/PROGRAMS-AND-TOPICS/PROGRAMS/ACCEPTANCE-TEST-TECHNICIAN-CERTIFICATION-PROVIDER-PROGAM/ACCEPTANCE

THE ACCEPTANCE TESTING PROCEDURES MUST BE REPEATED, AND DEFICIENCIES MUST BE CORRECTED BY THE BUILDER OR INSTALLING CONTRACTOR UNITL THE CONSTUCTION/INSTALLATION OF THE SPECIFIED SYSTEMS CONFORM AND PASS THE REQUIRED ACCEPTANCE CRITERIA.

PROJECT INSPECTORS WILL BE COLLECTING THE FORMS TO CONFIRM THAT THE REQUIRED ACCEPTANCE TESTS HAVE BEEN COMPLETED.

PARTIAL LIST OF APPLICABLE STANDARDS

NFPA 13	STANDARD FOR AUTOMATIC FIRE SPRINKLER SYSTEMS (CA AMENDED)	2022 ED.
NFPA 14	STANDARD FOR STANDPIPE AND HOSE SYSTEMS (CA AMENDED)	2019 ED.
NFPA 17	STANDARD FOR DRY CHEMICAL EXTINGUISHING SYSTEMS	2021 ED.
NFPA 17A	STANDARD FOR WET CHEMICAL EXTINGUISHING SYSTEMS	2021 ED.
NFPA 20	STANDARD FOR STATIONARY PUMPS FOR FIRE PROTECTION	2019 ED.
NFPA 22	STANDARD FOR WATER TANKS FOR PRIVATE FIRE PROTECTION	2013 ED.
NFPA 24	STANDARD FOR THE INSTALLATION OF PRIVATE FIRE MAINS AND THEIR APPURTENANCES (CA AMENDED)	2019 ED.
NFPA 72	NATIONAL FIRE ALARM & SIGNALING CODE (CA AMENDED)	2022 ED.
NFPA 80	STANDARD FOR FIRE DOORS AND OTHER OPENING PROTECTIVES	2019 ED.
NFPA 2001	STANDARD ON CLEAN AGENT FIRE EXTINGUISHING SYSTEMS (CA AMENDED)	2018 ED.
UL 300	STANDARD FOR FIRE TESTING OF FIRE EXTINGUISHING SYSTEMS FOR PROTECTION OF COMMERCIAL COOKING EQUIPMENT	2005 (R2014)
UL 464	AUDIBLE SIGNAL APPLIANCES FOR FIRE ALARM AND SIGNALING SYSTEMS, INCLUDING ACCESSORIES	2003 ED.
UL 521	STANDARD FOR HEAT DETECTORS FOR FIRE PROTECTIVE SIGNALING SYSTEMS	1999 ED. (R2005)
UL 1971	STANDARD FOR SIGNALING DEVICES FOR THE HEARING IMPAIRED	2002 ED. (R2018)
ICC 300	STANDARD FOR BLEACHERS, FOLDING AND TELESCOPING SEATING AND GRANDSTANDS	2017 ED.

FOR A COMPLETE LIST OF APPLICABLE NFPA STANDARDS REFER TO 2022 CBC (SFM) CHAPTER 35 AND CALIFORNIA FIRE CODE CHAPTER 80.
SEE CALIFORNIA BUILDING CODE, CHAPTER 35 FOR STATE OF CALIFORNIA AMENDMENTS TO NFPA STANDARDS.

PROJECT DESCRIPTION

SCOPE OF WORK

30' X 64' PC LUNCH SHELTER

SITE WORK INCLUDING ACCESSIBILITY UPGRADES AND TOILET ROOM UPGRADES

PROJECT DATA

PROJECT ADDRESS:
2375 GIANNONI WAY,
LODI, CA 95242

OWNER:
LODI UNIFIED SCHOOL DISTRICT
PHONE #: 209-331-7225

STATEMENT OF GENERAL CONFORMANCE

(X) THE DRAWINGS OR SHEETS LISTED ON THE INDEX SHEET
(X) THIS DRAWING PAGE OF SPECIFICATIONS/CALCULATIONS

HAVE BEEN PREPARED BY OTHER DESIGN PROFESSIONALS OR CONSULTANTS WHO ARE LICENSED AND/OR AUTHORIZED TO PREPARE SUCH DRAWINGS IN THIS STATE. IT HAS BEEN EXAMINED BY ME FOR:

1) DESIGN INTENT AND APPEARS TO MEET THE APPROPRIATE REQUIREMENTS OF TITLE 24, CALIFORNIA CODE OF REGULATIONS AND THE PROJECT SPECIFICATIONS PREPARED BY ME, AND
2) COORDINATION WITH MY PLANS AND SPECIFICATIONS AND IS ACCEPTABLE FOR INCORPORATION INTO THE CONSTRUCTION OF THIS PROJECT.

THE STATEMENT OF GENERAL CONFORMANCE "SHALL NOT BE CONSTRUED AS RELIEVING ME OF MY RIGHTS, DUTIES, AND RESPONSIBILITIES UNDER SECTIONS 17302 AND 81138 OF THE EDUCATION CODE AND SECTIONS 4-336, 4-341 AND 4-344" OF TITLE 24, PART 1. (TITLE 24, PART 1, SECTION 4-317 (B))

I CERTIFY THAT:

THE PC APPROVED MANUFACTURER DRAWINGS LISTED ON THE INDEX SHEET ARE IN GENERAL CONFORMANCE WITH THE PROJECT DESIGN INTENT, AND THEY HAVE BEEN COORDINATED WITH THE PROJECT PLANS AND SPECIFICATIONS.

SIGNATURE
ARCHITECT OR ENGINEER DESIGNATED TO BE IN GENERAL RESPONSIBLE CHARGE

DATE 10/11/23

Jeffrey Grau
PRINT NAME

C-14648
LICENSE NUMBER

05-31-25
EXPIRATION DATE

SHEET INDEX

NUMBER	NAME
GENERAL SHEET	
G0.10	COVER SHEET
1	
CIVIL	
C1.1	TITLE SHEET AND DETAIL SHEET
C2.1	DEMOLITION PLAN
C3.1	GRADING, DRAINAGE, AND PAVING PLAN
3	
ARCHITECTURE	
A1.21	CODE INFORMATION SITE PLAN
A1.22	LOCAL FIRE AUTHORITY SITE ACCESS PLAN
A1.23	ENLARGED SITE PLAN AND SECTION
A1.24	ENLARGED PARKING LOT A SITE PLAN
A2.11	1ST FLOOR - TOILET ROOM IMPROVEMENT PLANS
A8.11	INTERIOR ELEVATIONS
A10.1	SITE DETAILS
A10.2	TYPICAL MOUNTING HEIGHTS AND DETAILS
8	
PC DRAWINGS	
RAM1.0	ORDER FORM
RAM1.1	NOTES AND SPECIAL INSPECTIONS
RAM2.3	FOUNDATION PLAN DRILLED PIER
RAM3.1	FRAMING PLAN
RAM4.2	FRAME CONNECTION DETAILS
RAM4.3	SECTION DETAILS
RAM5.1	ARCHITECTURAL VIEWS
RAM6.1	ROOF CONNECTION DETAILS
RAM7.0	MISC DESIGN OPTIONS
RAM7.1	ELECTRICAL CUTOUTS
10	
Grand total: 22	

ABBREVIATIONS

(E)	EXISTING
AB	ANCHOR BOLT
AC PAVING	ASPHALTIC CONCRETE PAVING
ACC	ACCESS/ACCESSIBLE
ACP	ACOUSTICAL CEILING PANEL
ACT	ACOUSTICAL CEILING TILE
ADJ	ADJACENT/ADJUSTABLE
AFF	ABOVE FINISH FLOOR
AGG	AGGREGATE
AHU	AIR HANDLING UNIT
ARCH	ARCHITECTURAL
ATT	ATTENUATION
AUTO	AUTOMATIC
BD	BOARD
BLCG	BLOCKING
BUR	BUILT UP ROOFING
CABT	CABINET
CF	CUBIC FEET
CFCI	CONTRACTOR FURNISHED, CONTRACTOR INSTALLED
CFOI	CONTRACTOR FURNISHED, OWNER INSTALLED
CG	CORNER GUARD
CJ	CONTROL JOINT
CL	CENTER LINE
CLF	CHAIN LINK FENCE
CLR	CLEAR
CMU	CONCRETE MASONRY UNIT
CO	CLEANOUT
COL	COLUMN
COMP	COMPRESSION / COMPOSITE
CF	CUBIC FEET
COORD	COORDINATE
CORR	CORRUGATED
CT	CERAMIC TILE
CTSK	COUNTER SKUNK
CW	CURTAINWALL
DEPR	DEPRESSED / DEPRESSION
DF	DRINKING FOUNTAIN
DIM	DIMENSION
DISP	DISPENSER
DS	DOWNSPOUT
DTL	DETAIL
DW	DISHWASHER
E/W	EACH WAY
EIFS SYSTEM	EXTERIOR INSULATION FINISH
EJ	EXPANSION JOINT
ELEC	ELECTRICAL
ELEV	ELEVATION / ELEVATOR
ENCL	ENCLOSE / ENCLOSURE
EOS	EDGE OF SLAB
EP	ELECTRICAL PANEL
EQ	EQUAL
ESC	EXCUTCHEON
EWC	ELECTRIC WATER COOLER
EXP	EXPOSED
FA	FIRE ALARM
FD	FLOOR DRAIN
FDC	FIRE DEPARTMENT CONNECTION
FE	FIRE EXTINGUISHER
FEC	FIRE EXTINGUISHER W/ CABINET
FF	FINISH FLOOR
FG	FINISH GRADE
FH	FIRE HYDRANT
FHC	FIRE HOSE CABINET
FSH	FLAT HEAD SCREW
FIN	FINISH
FLR	FLOOR
FOC	FACE OF CONCRETE
FOF	FACE OF FINISH
FOM	FACE OF MASONRY
FOS	FACE OF STUD
FP	FIREPROOFING
FR	FIRE RATED
FRG	FIRE RATED GLASS
FRP	FIBERGLASS REINFORCED PLASTIC
FRT	FIRE RETARDANT TREATED
FS	FINISH SURFACE
FTG	FOOTING
GB	GRAB BAR
GFRC	GLASS FIBER REINFORCED CONCRETE
GL	GLASS TYPE
GLB	GLUE LAMINATED BEAM
GYP BD	GYPSUM BOARD
GYP PLAS	GYPSUM PLASTIC
HB	HOSE BIBB
HD	HEAVY DUTY
HDR	HEADER
HDWR	HARDWARE
HGT	HEIGHT
HM	HOLLOW METAL
HP	HIGH POINT
HSS	HOLLOW STEEL SECTION
ID	INSIDE DIAMTER
INT	INTERIOR
INV	INVERT
LANDS	LANDSCAPE
LAV	LAVATORY
LLH	LONG LEG HORIZONTAL
LLV	LONG LEG VERTICAL
LP	LOW POINT
LT WT	LIGHT WEIGHT
LVR	LOUVER
MACH	MACHINE
MB	MACHINE BOLT
MDF	MEDIUM DENSITY FIBERBOARD
MDO	MEDIUM DENSITY OVERLAY
MECH	MECHANICAL
MED	MEDIUM
MEMB	MEMBRANE
MFR	MANUFACTURER
MH	MANHOLE
MO	MASONRY OPENING
MTD	MOUNTED
MTL	METAL
NIC	NOT IN CONTRACT
NR	NON RATED
NRC	NOISE REDUCTION COEFFICIENT
NTS	NOT TO SCALE
O/	OVER
O/A	OVERALL
OC	ON CENTER
OD	OUTSIDE DIAMTER
OFCI	OWNER FURNISHED, CONTRACTOR INSTALLED
OFOI	OWNER FURNISHED, OWNER INSTALLED
OFVI	OWNER FURNISHED, VENDOR INSTALLED
OH	OPPOSITE HAND
OPER	OPERABLE
OPNG	OPENING
ORD	OVERFLOW ROOF DRAIN
P/L	PROPERTY LINE
PA	PUBLIC ADDRESS
PAF	POWDER ACTUATED FASTENER PAVING
PCC	PORTLAND CEMENT CONCRETE PAVING
PED	PEDESTRIAN
PERF	PERFORATED
PERIM	PERIMETER
PERP	PERPENDICULAR
PH	PANIC HARDWARE
PIV	POST INDICATOR VALVE
PL	PLATE
PLAM	PLASTIC LAMINATE
PLAS	PLASTER
PLUMB	PLUMBING
PNL	PANEL
PNT	PAINT / PAINTED
POC	POINT OF CONNECTION
POLY ISO	POLYISOCYANURATE
PREFIN	PREFINISHED
PREP	PREP / PREPARATION
PTC	POST TENSIONED CONCRETE
PTD	PAPER TOWEL DISPENSER
PTN	PARTITION
PTS	PNEUMATIC TUBE STATION / SYSTEM
PVC	POLYVINYL CHLORIDE
PVMT	PAVEMENT
QT	QUARRY TILE
R	RADIUS, RISER
RB	RESILIENT BASE
RD	ROOF DRAIN
RECEPT	ECEPTACLE
REF	REFERENCE
REFL	REFLECT(ED), (IVE)
REFL	REFLECT(ED), (IVE)
REFR	REFRIGERATOR
REINF	REINFORCE/REINFORCED/ REINFORCEMENT
REM	REMOVE
RH	ROUND HEAD
RHS	ROUND HEAD SCREW
RO	ROUGH OPENING
ROW	RIGHT OF WAY
SCH	SCHEDULE (FOR PIPE)
SCHED	SCHEDULE / SCHEDULING
SD	STORM DRAIN / SOAP DISPENSER
SECT	SECTION
SG	SAFETY GLASS
SHT	SHEET
SHTG	SHEATHING
SMS	SHEET METAL SCREW
SND	SANITARY NAPKIN DISPOSAL
SOV	SHUT OFF VALVE
SPEC	SPECIFICATIONS
SS	STAINLESS STEEL
STC	SOUND TRAMISSION CLASS
STL	STEEL
STSMS SCREW	SELF TAPPING SHEET METAL
SUSP	SUSPENDED
SV	SHEET VINYL
SYM	SYMMETRICAL
T	TREAD
T&B	TOP AND BOTTOM
TO	TOP OF
TOC	TOP OF CURB / CONCRETE
TOP	TOP OF PARAPET
TOS	TOP OF STEEL
TOW	TOP OF WALL
TPD	TOILET PAPER DISPENSER
TS	TACKABLE SURFACE
U/C	UNDER CABINET (OR COUNTER
UNO	UNLESS NOTED OTHERWISE
UR	URINAL
VAC	VACUUM
VB	VAPOR BARRIER
VCT	VINYL COMPOSITION TILE
VIF	VERIFY IN FIELD
VTR	VENT THROUGH ROOF
VWC	VINYL WALL COVERING
W/	WITH
W/O	WITHOUT
WB	WOOD BASE
WC	WATER CLOSET
WD	WOOD
WDW	WINDOW
WGT	WEIGHT
WH	WATER HEATER
WP	WATERPROOFING/WALL PROTECTION
WR	WATER RESISTANT
WRGB	WATER RESISTANT GYPSUM BOARD
WS	WOOD SCREW
WSCT	WAINSCOT
WWF	WELDED WIRE FABRIC

NOTE:
OTHER ABBREVIATIONS USED ON THESE DRAWINGS ARE CONSIDERED STANDARDS IN THE BUILDING INDUSTRY. CONTACT ARCHITECT FOR NECESSARY CLARIFICATION.

SYMBOL LEGEND

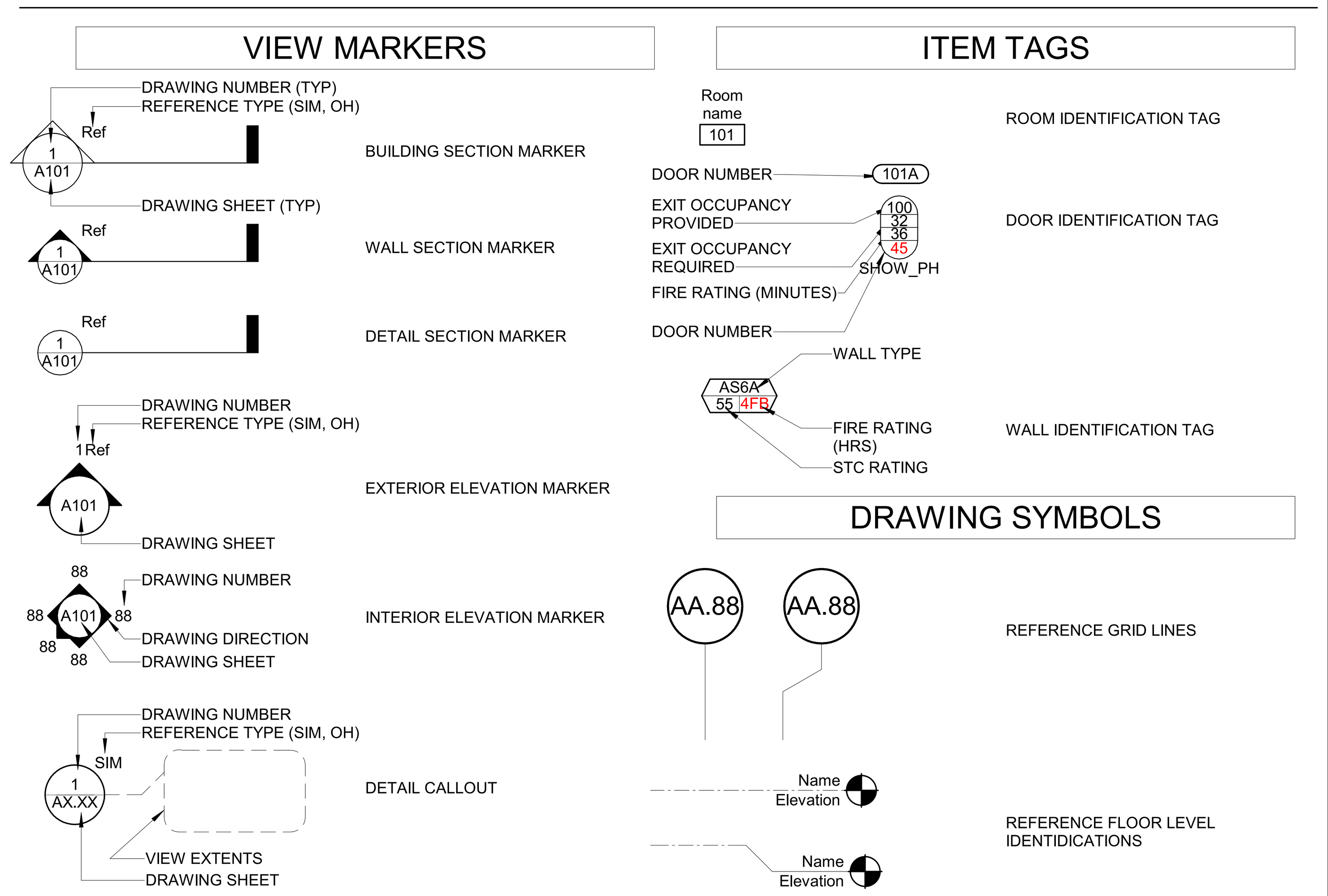

STATE MAP

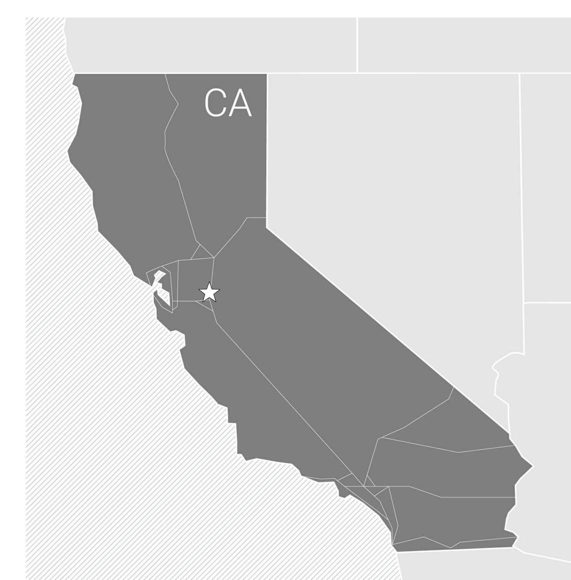

VICINITY MAP

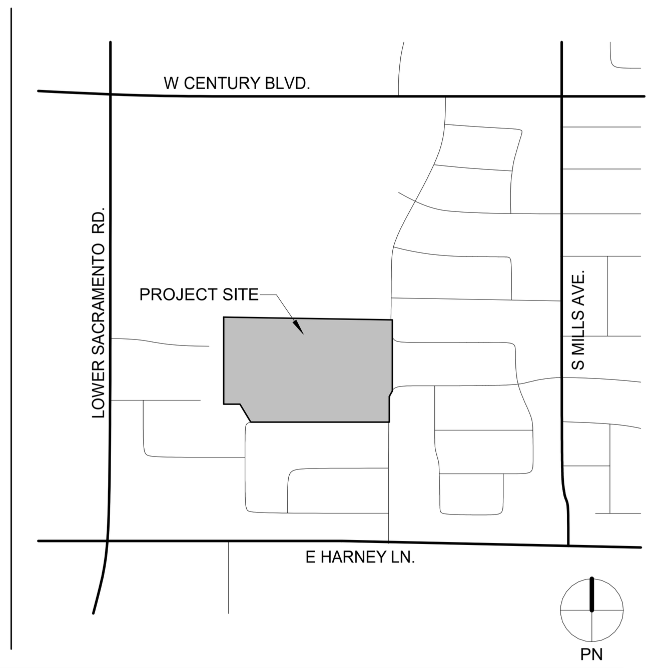

Autodesk Docs://R221551X00 Lodi USD Lunch Shelters/R221551X00-A-LARSON-ES-LUNCH-SHELTER.rvt
10/11/2023 9:42:36 AM

AGENCY APPROVAL:

IDENTIFICATION STAMP
DIV. OF THE STATE ARCHITECT
APP: 02-121836 INC:
REVIEWED FOR
SS ☑ FLS ☑ ACS ☑
DATE: 11/02/2023

LODI USD

HMC Architects

R221551X00

2101 CAPITOL AVENUE, SUITE 100,
SACRAMENTO, CA, 95816
916 368 7990 / www.hmcarchitects.com

LICENSED ARCHITECT
JEFFREY ALAN GRAU
C-14648
5/31/25
RENEWAL DATE
STATE OF CALIFORNIA

PROJECT TEAM

CIVIL ENGINEER
WARREN GREEN ENGINEERING
3114 BRENNANS RD. LOOMIS, CA 95650
916.663.2323

FACILITY:
ELLERTH LARSON ELEMENTARY SCHOOL
2375 GIANNONI WAY LODI, CA 95242

PROJECT:
LODI UNIFIED SCHOOL DISTRICT LUNCH SHELTERS - ELLERTH LARSON ELEMENTARY SCHOOL

SHEET NAME:
COVER SHEET

CONSTRUCTION DOCUMENTS

DATE: **10.18.2023** | CLIENT PROJ NO:

SHEET:
G0.10

PLEASE RECYCLE

THE LINE SHOWN ABOVE IS EXACTLY 1" WHEN PLOTTED ON ANSI D SHEETS ORIGINAL SCALE 22X36

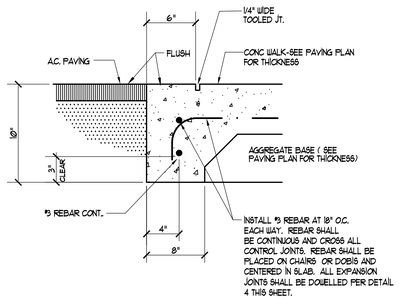

1 / C1.1 FLUSH CONC. WALK @ AC

N.T.S.

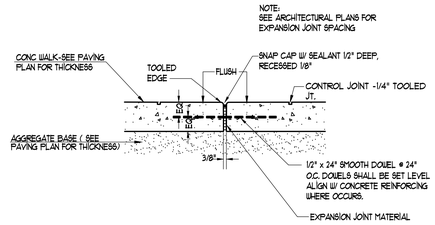

4 / C1.1 EXPANSION JOINT

N.T.S.

NOTE:
TRANSITION FROM NEW CONCRETE WALKWAYS TO EXISTING LANDSCAPE GRADE TO BE AT A MAXIMUM OF 5 : 1 SLOPE UNLESS OTHERWISE NOTED ON PLANS.

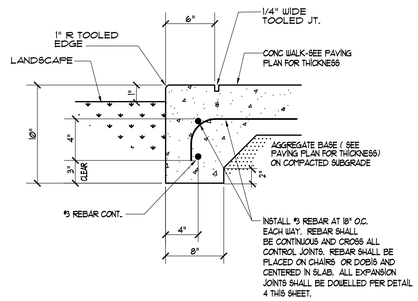

2 / C1.1 FLUSH CONC. WALK @ LANDSCAPE

N.T.S.

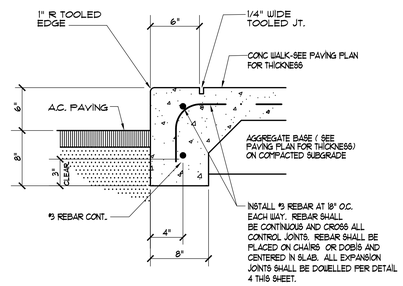

5 / C1.1 THICKENED EDGE CONC. WALK

N.T.S.

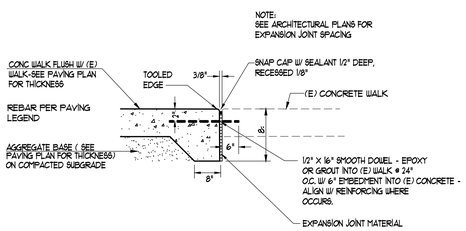

3 / C1.1 CONC. WALK AT EXISTING CONDITIONS

N.T.S.

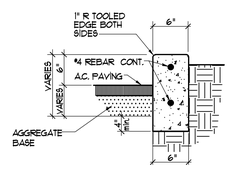

NOTES:
1. PROVIDE EXPANSION JOINTS @ 10'-0" O.C. OR AS INDICATED ON PLANS.
2. CURB SHALL EXTEND 4" BELOW SUBGRADE.

6 / C1.1 PLANTER CURB

LEGEND

× 43.15	EXISTING ELEVATION
8"SD	EXISTING STORM DRAIN
6"SS	EXISTING SANITARY SEWER
8"W	EXISTING WATER MAIN
	EXISTING WATER VALVE
	EXIST. FIRE HYDRANT
C	EXISTING COMMUNICATION LINE
IR	EXISTING IRRIGATION CONTROL LINE
E	EXISTING ELECTRICAL LINE
T	EXISTING TELEPHONE LINE
31.90	NEW ELEVATION

ABBREVIATIONS

AC	ASPHALT CONCRETE	LD	LANDSCAPE DRAIN
AB	AGGREGATE BASE	LF	LINEAR FEET
ADD. ALT.	ADDITIVE ALTERNATE	MH	MANHOLE
BLDG	BUILDING	MIN	MINIMUM
BO	BLOW OFF	MS	MOW STRIP
BOW	BACK OF WALK	(N)	NEW
BW	BOTTOM OF WALL	N.I.C.	NOT IN CONTRACT
CC	CONCRETE (TOP OF CONCRETE WALK)	OG	ORIGINAL GRADE
CL	CENTER LINE	P	PROPOSED
CONC	CONCRETE	PD	PLANTER DRAIN
CONST.	CONSTRUCT	PIV	POST INDICATOR VALVE
COTG	CLEANOUT TO GRADE	POC	POINT OF CONNECTION
DI	DRAIN INLET	PP	POWER POLE
DIP	DUCTILE IRON PIPE	PUE	PUBLIC UTILITY EASEMENT
DS	DOWNSPOUT	RCP	REINFORCED CONCRETE PIPE
DWY	DRIVEWAY	RD	ROOF DRAIN
(E)	EXISTING	REDWD	REDWOOD
E. BOX	ELECTRICAL BOX	RET	RETAINING
E. COND.	ELECTRICAL CONDUIT	RP	REDUCED PRESSURE
ELEC	ELECTRIC	R/W	RIGHT OF WAY
EP	EDGE OF PAVEMENT	RWL	RAIN WATER LEADER
EXIST.	EXISTING	S	SLOPE
FDC	FIRE DEPARTMENT CONNECTION	SD	STORM DRAIN
FF	FINISH FLOOR	SS	SANITARY SEWER
FG	FINISH GRADE	ST. LT.	STREET LIGHT
FH	FIRE HYDRANT	TBM	TEMPORARY BENCH MARK
FL	FLOW LINE	T	TRANSFORMER
FM	FIRE MAIN	TEL	TELEPHONE
FS	FIRE SERVICE	TC	TOP OF CURB
G	GAS	TW	TOP OF WALL
GB	GRADE BREAK	TYP	TYPICAL
GR	GRATE	VCP	VITRIFIED CLAY PIPE
GV	GATE VALVE	W	WATER
HDR	HEADER	WV	WATER VALVE
HP	HIGH POINT	VB	VALVE BOX
INV	INVERT ELEVATION	YD	YARD DRAIN
JP	JOINT POLE		

INDEX OF CIVIL DRAWINGS

C1.1 TITLE SHEET AND DETAIL SHEET
C2.1 DEMOLITION PLAN
C3.1 GRADING, DRAINAGE AND PAVING PLAN

AGENCY APPROVAL:

IDENTIFICATION STAMP
DIV. OF THE STATE ARCHITECT
APP: 02-121836 INC:
REVIEWED FOR
SS ☑ FLS ☑ ACS ☑
DATE: 11/02/2023

LODI USD

HMC Architects
R2211551
2101 CAPITOL AVENUE, SUITE 100,
SACRAMENTO, CA. 95816
916 368 7990 / www.hmcarchitects.com

Δ DESCRIPTION DATE

CONSULTANT:

REGISTERED PROFESSIONAL ENGINEER LORI A. GREEN NO. 36500 Exp. 6-30-24 CIVIL STATE OF CALIFORNIA

Warren•Green ENGINEERING
3114 Brennans Road
Loomis, CA 95690

FACILITY:

ELLERTH E. LARSON ELEMENTARY SCHOOL
2375 GIANNONI WAY LODI, CA 95242

PROJECT:

LODI UNIFIED SCHOOL DISTRICT LUNCH SHELTERS-
ELLERTH E. LARSON ELEMENTARY SCHOOL

SHEET NAME:

CONSTRUCTION DOCUMENTS

FILE NO.: LES-CD | A NO.: R2211551

DATE: OCT. 18, 2023 | CLIENT PROJ NO:

SHEET:

C1.1

PLEASE RECYCLE

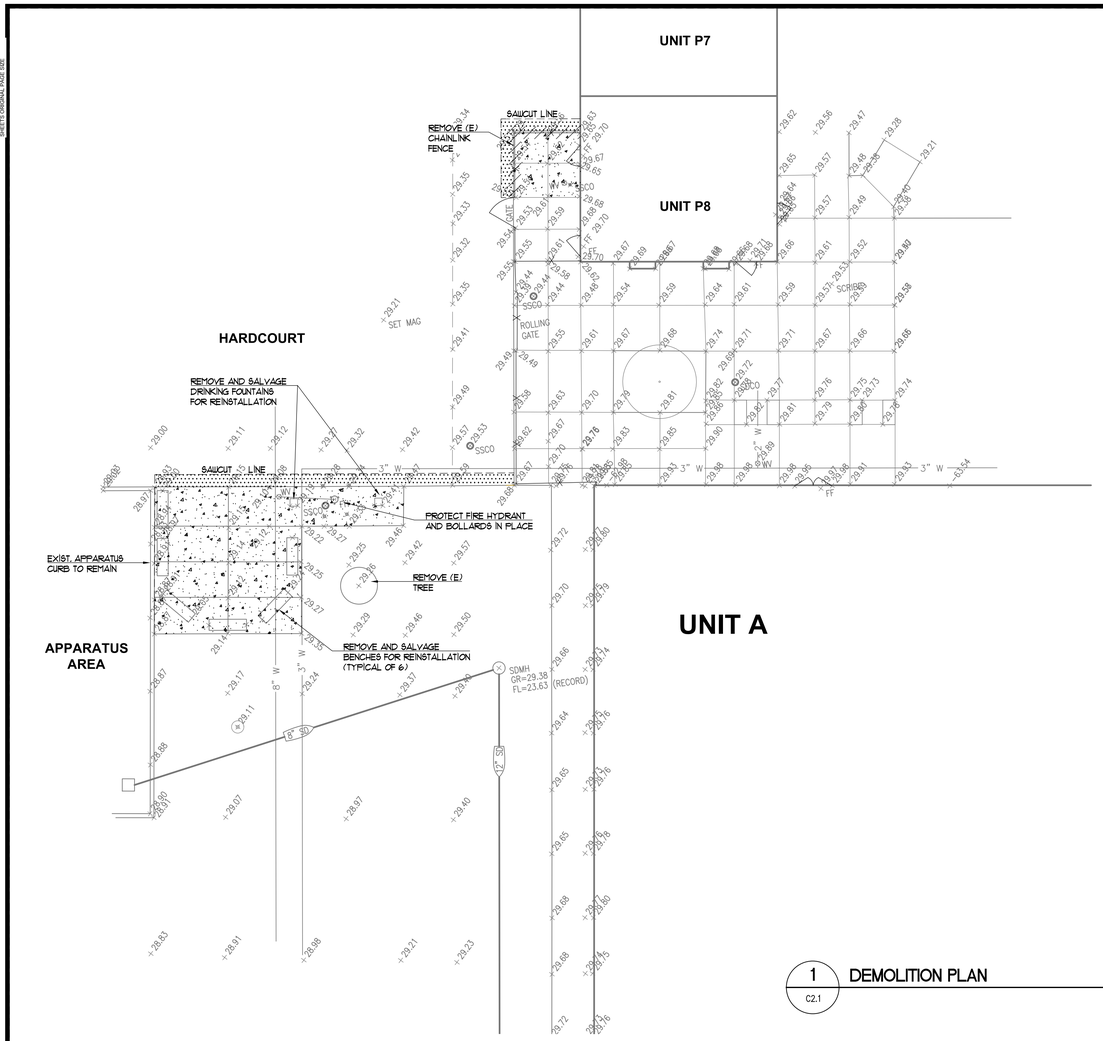

1 DEMOLITION PLAN
C2.1
SCALE: 1"=10'

DEMOLITION NOTES:

1. CONTRACTOR SHALL REMOVE / DEMOLISH ALL (E) IMPROVEMENTS AS NECESSARY FOR CONSTRUCTION OF NEW IMPROVEMENTS UNDER THIS CONTRACT. CONTRACTOR SHALL FIELD WALK SITE TO REVIEW AND CONFIRM THE EXTENT OF ALL CLEARING WORK PRIOR TO BID.
2. ALL MATERIAL REMOVED BY CONTRACTOR SHALL BE PROPERLY AND LEGALLY DISPOSED OFFSITE (UNLESS SPECIFICALLY IDENTIFIED TO BE DELIVERED TO OWNER)
3. NUMEROUS UNDERGROUND UTILITIES EXIST WITHIN THE AREAS OF EXISTING CONCRETE REMOVAL. CONTRACTOR SHALL USE CAUTION DURING DEMOLITION AND SUBGRADE SCARIFICATION AND COMPACTION TO PROTECT SAID UTILITIES.

DEMOLITION LEGEND

SAWCUT LINE

REMOVE (E) AC PAVING

REMOVE (E) CONCRETE

REMOVE (E) FENCE INCLUDING FOOTINGS

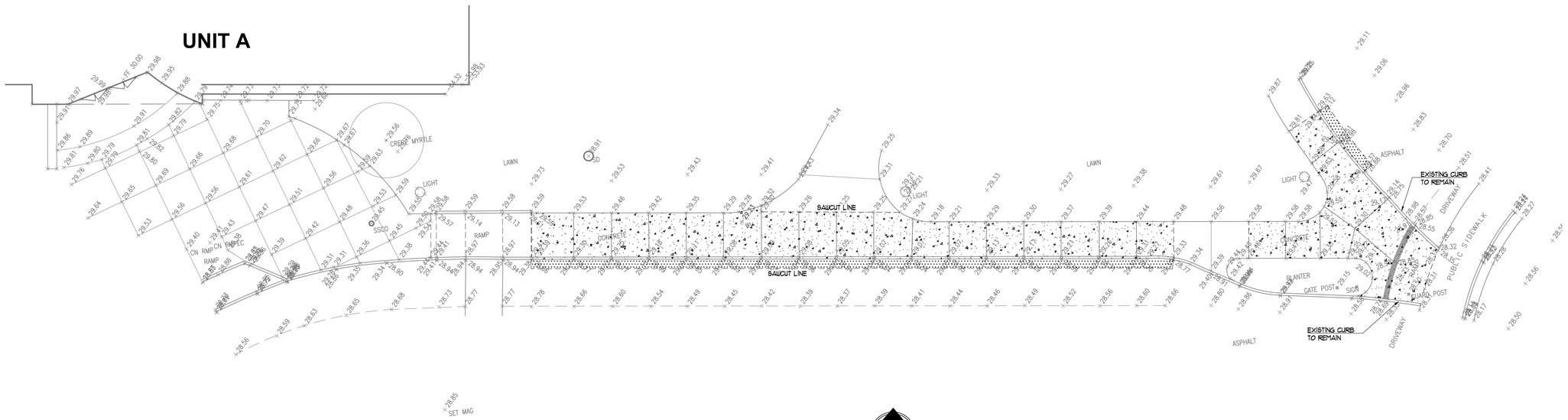

2 DEMOLITION PLAN
C2.1
SCALE: 1"=10'

AGENCY APPROVAL:

IDENTIFICATION STAMP
DIV. OF THE STATE ARCHITECT
APP: 02-121836 INC:
REVIEWED FOR
SS ☑ FLS ☑ ACS ☑
DATE: 11/02/2023

LODI USD

HMC Architects

R2211551

2101 CAPITOL AVENUE, SUITE 100,
SACRAMENTO, CA, 95816
916 368 7990 / www.hmcarchitects.com

Δ	DESCRIPTION	DATE

CONSULTANT:

REGISTERED PROFESSIONAL ENGINEER
LORI A. GREEN
NO. 36500
Exp. 6-30-24
CIVIL
STATE OF CALIFORNIA

Warren-Green ENGINEERING
3114 Brennans Road
Loomis, CA 95690

FACILITY:

ELLERTH E. LARSON ELEMENTARY SCHOOL
2375 GIANNONI WAY LODI, CA 95242

PROJECT:

LODI UNIFIED SCHOOL DISTRICT LUNCH SHELTERS-
ELLERTH E. LARSON ELEMENTARY SCHOOL

SHEET NAME:

CONSTRUCTION DOCUMENTS

FILE NO.: LES-CD
A NO.: R2211551
DATE: OCT. 18, 2023
CLIENT PROJ NO:
SHEET:

C2.1

PLEASE RECYCLE

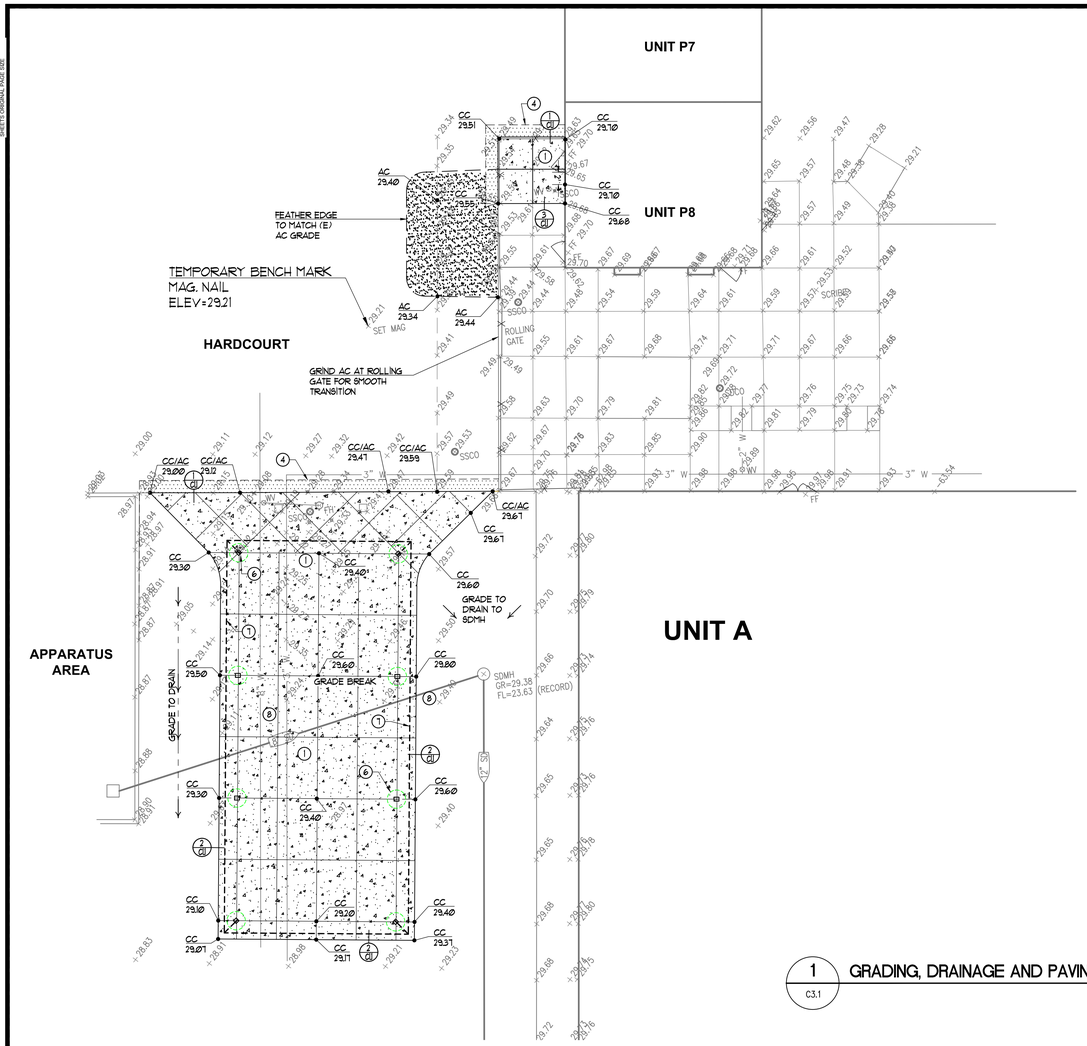

1 GRADING, DRAINAGE AND PAVING PLAN
C3.1
SCALE: 1"=10'

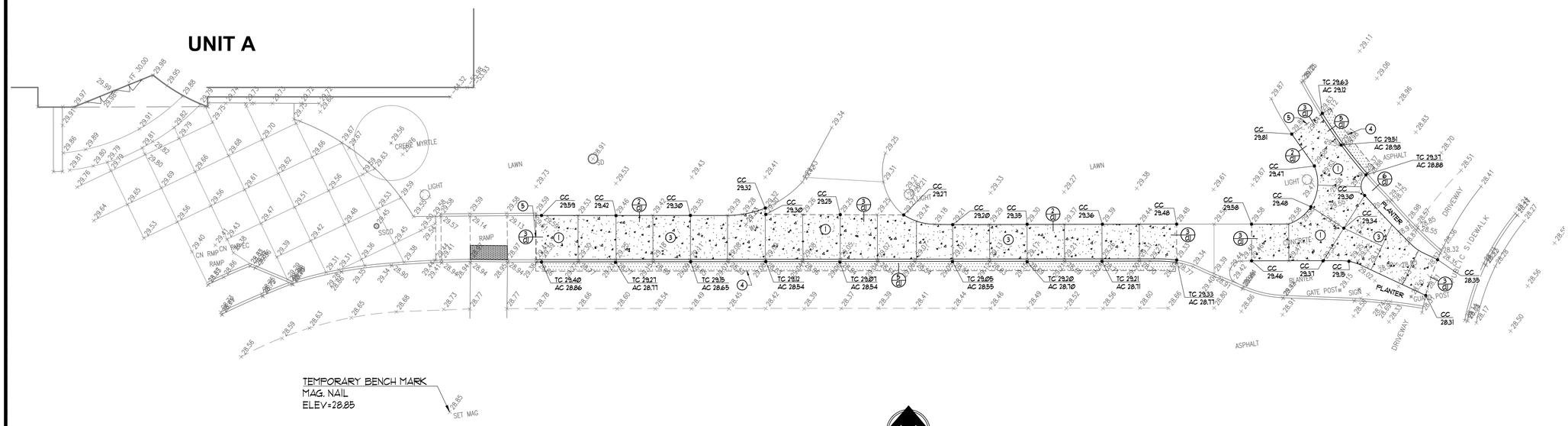

2 GRADING, DRAINAGE AND PAVING PLAN
C3.1
SCALE: 1"=10'

NOTES:

1. CONCRETE SLAB IS NOT PART OF STRUCTURAL SUPPORT FOR SHADE STRUCTURE
2. CONTRACTOR SHALL LOCATE ALL UTILITIES IN AREA OF WORK PRIOR TO START OF CONSTRUCTION. NOTIFY ARCHITECT IF ANY CONFLICTS WITH NEW FOOTINGS OCCUR.
3. ALL UTILITIES (VALVE BOX COVERS, VAULTS, CLEANOUTS, ETC. SHALL BE ADJUSTED TO NEW FINISH GRADES.
4. DRINKING FOUNTAINS SHALL BE RESET AS NECESSARY TO MEET HEIGHT STANDARDS FOR ACCESSIBILITY (SEE ARCHITECTURAL)

KEY NOTE LEGEND

1. 1.8% MAX. SLOPE IN ANY DIRECTION.
2. RAMP - 8% MAX. SLOPE IN DIRECTION OF TRAVEL, 1.8% MAX. CROSS SLOPE
3. 1.8% MAX. CROSS SLOPE 4.75% MAX. SLOPE IN DIRECTION OF TRAVEL.
4. MATCH (E) AC GRADE AT SAWCUT LINE.
5. MATCH (E) CONC. GRADE AT SAWCUT LINE.
6. SHADE STRUCTURE FOOTING - TYPICAL
7. SHADE STRUCTURE ROOF LINE
8. CONTRACTOR SHALL LOCATE EXISTING UTILITIES PRIOR TO START OF CONSTRUCTION. NOTIFY ARCHITECT IF CONFLICT WITH NEW FOOTINGS EXISTS.

PAVING LEGEND

- 3.5" ASPHALT CONCRETE ON 4.5" AGGREGATE BASE ON COMPACTED SUBGRADE
- 5" CONCRETE ON 6" AGGREGATE BASE ON COMPACTED SUBGRADE W/ #3 REBAR AT 18" O.C. EACH WAY
- VARIABLE THICKNESS AC OVERLAY

AGENCY APPROVAL:

IDENTIFICATION STAMP
DIV. OF THE STATE ARCHITECT
APP: 02-121836 INC:
REVIEWED FOR
SS ☑ FLS ☑ ACS ☑
DATE: 11/02/2023

LODI USD

HMC Architects

R2211551

2101 CAPITOL AVENUE, SUITE 100,
SACRAMENTO, CA, 95816
916.368.7990 / www.hmcarchitects.com

Δ	DESCRIPTION	DATE

CONSULTANT:

REGISTERED PROFESSIONAL ENGINEER
LORI A. GREEN
NO. 36500
Exp. 6-30-24
CIVIL
STATE OF CALIFORNIA

Warren•Green ENGINEERING
3114 Brennans Road
Loomis, CA 95690

FACILITY:

ELLERTH E. LARSON ELEMENTARY SCHOOL
2375 GIANNONI WAY LODI, CA 95242

PROJECT:

LODI UNIFIED SCHOOL DISTRICT LUNCH SHELTERS-
ELLERTH E. LARSON ELEMENTARY SCHOOL

SHEET NAME:

CONSTRUCTION DOCUMENTS

FILE NO.: LES-CD | A NO.: R2211551

DATE: OCT. 18, 2023 | CLIENT PROJ NO:

SHEET:

C3.1

PLEASE RECYCLE

THE LINE SHOWN ABOVE IS EXACTLY ONE INCH ON THIS SHEET'S ORIGINAL PAGE SIZE

BUILDING DATA AND ALLOWABLE AREA ANALYSIS

BUILDING	OCCUPANCY	CONSTRUCTION TYPE	ALLOWABLE AREA (TABLE 506.2)	ACTUAL BLDG. AREA	OCCUPANCY CALCULATION
LS	A-2	II-B NON-SPRINKLERED	9,500 S.F.	1,920 S.F.	1,920 S.F. / 15 NET = 128 OCC.

EXISTING PATH OF TRAVEL (POT): ARCHITECT STATEMENT

DESIGN PROFESSIONAL IN GENERAL RESPONSIBLE IN CHARGE STATEMENT: THE POT IDENTIFIED IN THESE CONSTRUCTION DOCUMENTS IS COMPLIANT WITH THE CURRENT APPLICABLE CALIFORNIA BUILDING CODE ACCESSIBILITY PROVISIONS FOR **PATH OF TRAVEL REQUIREMENTS FOR ALTERATIONS, ADDITIONS AND STRUCTURAL REPAIRS**. AS PART OF THE DESIGN OF THIS PROJECT, THE POT WAS EXAMINED AND ANY ELEMENTS, COMPONENTS OR PORTIONS OF THE POT THAT WERE DETERMINED TO BE NON-COMPLIANT

1) HAVE BEEN IDENTIFIED AND
2) THE CORRECTIVE WORK NECESSARY TO BRING THEM INTO COMPLIANCE HAS BEEN INCLUDED WITHIN THE SCOPE OF THIS PROJECTS WORK THROUGH DETAILS, DRAWINGS, AND SPECIFICATIONS INCORPORATED INTO THESE CONSTRUCTION DOCUMENTS.

ANY NONCOMPLIANT ELEMENTS, COMPONENTS OR PORTIONS OF THE POT THAT WILL NOT BE CORRECTED BY THIS PROJECT BASED ON VALUATION THRESHOLD LIMITATIONS OR A FINDING OF UNREASONABLE HARDSHIP ARE SO INDICATED IN THESE CONSTRUCTION DOCUMENTS.

DURING CONSTRUCTION, IF POT ITEMS WITHIN THE SCOPE OF THE PROJECT REPRESENTED AS CODE COMPLIANT ARE FOUND TO BE NON-CONFORMING BEYOND REASONABLE CONSTRUCTION TOLERANCES, THEY SHALL BE BROUGHT TO COMPLIANCE WITH THE CBC AS PART OF THIS PROJECT BY MEANS OF A CONSTRUCTION CHANGE DOCUMENT.

NOTE: LUNCH SHELTER COMPLIES WITH DSA IR 31-1.

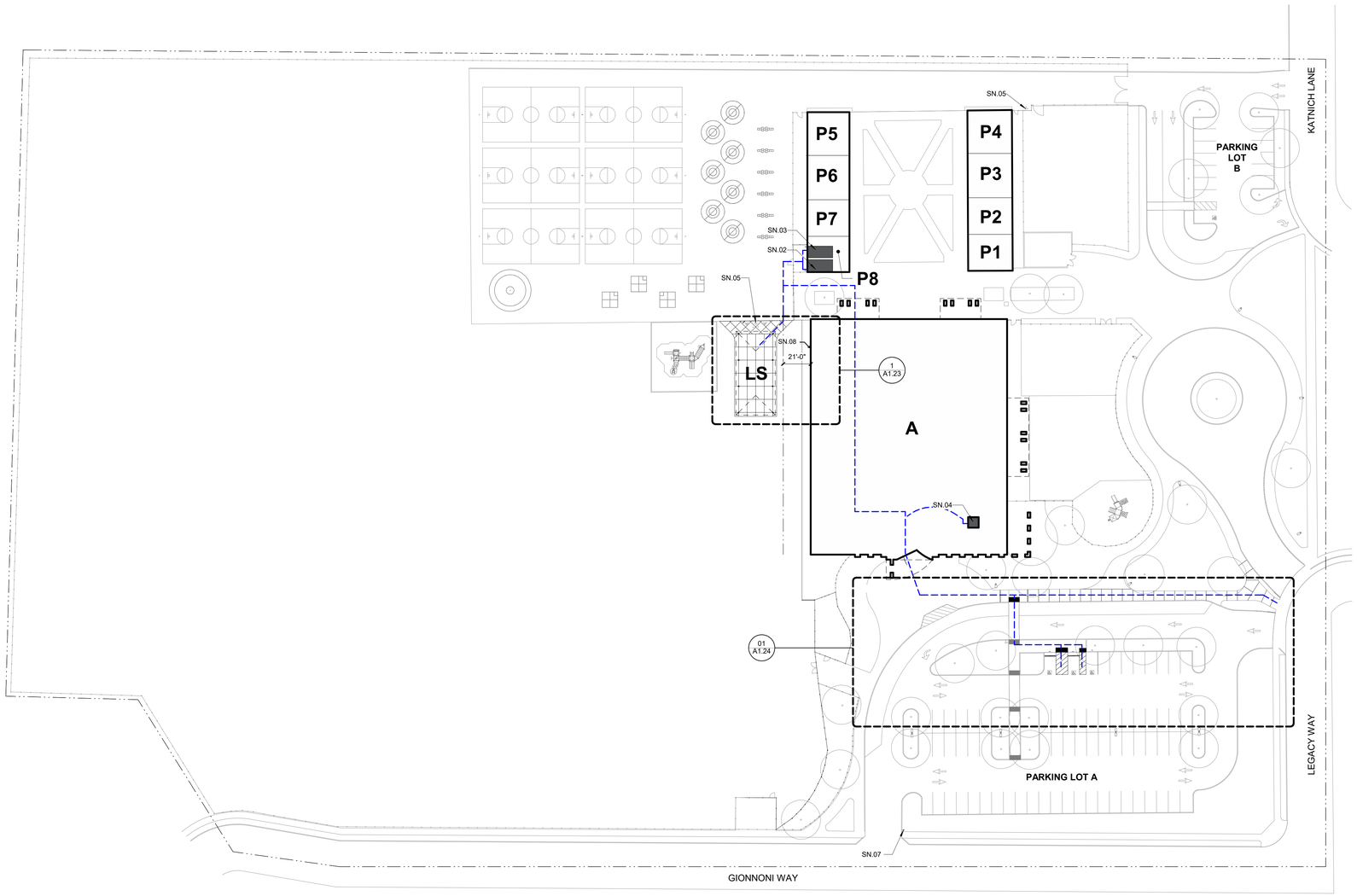

LEGEND

- PROPERTY LINE
- ACCESSIBLE PATH OF TRAVEL
- EXISTING CHAINLINK FENCE
- EXISTING ORNAMENTAL FENCE
- X — EXISTING BUILDINGS
- EXISTING FIRE HYDRANT

SHEET NOTES

SN.01 ACCESSIBLE PARKING STALL PER THIS APPLICATION
SN.02 (E) BOYS' TOILET ROOM PER DSA #02-105414, UPGRADED PER THIS APPLICATION
SN.03 (E) GIRLS' TOILET ROOM PER DSA #02-105414, UPGRADED PER THIS APPLICATION
SN.04 (E) STAFF TOILET ROOM PER DSA #02-105414, UPGRADED PER THIS APPLICATION
SN.05 (E) FIRE HYDRANT
SN.06 (E) ACCESSIBLE PARKING STALL
SN.07 (E) PARKING LOT ENTRANCE SIGN REVIEWED AND VERIFIED PER THIS APPLICATION
SN.08 (E) FIRE ALARM HORN

ACCESSIBLE PARKING LOT B STALL CALCULATION

TOTAL PARKING STALL COUNT:	72 STALLS
ACCESSIBLE PARKING STALLS:	(TABLE 11B-6)
REQUIRED ACCESSIBLE STALLS:	3 (51-75 TOTAL STALLS)
REQUIRED VAN ACCESSIBLE STALLS:	1 (1-6 ACCESSIBLE STALLS)
ACCESSIBLE STALLS PROVIDED	2 STANDARD & 1 VAN

ACCESSIBLE PARKING LOT B STALL CALCULATION

TOTAL PARKING STALL COUNT:	14 STALLS
ACCESSIBLE PARKING STALLS:	(TABLE 11B-6)
REQUIRED ACCESSIBLE STALLS:	1 (01-25 TOTAL STALLS)
REQUIRED VAN ACCESSIBLE STALLS:	1 (1-6 ACCESSIBLE STALLS)
ACCESSIBLE STALLS PROVIDED	1 VAN

BUILDING DESIGNATIONS

DSA #02-105414

UNIT A - ADMIN / MULTI-USE / LIBRARY / CLASSROOMS

UNIT P1 - PORTABLE CLASSROOM BUILDING
UNIT P2 - PORTABLE CLASSROOM BUILDING
UNIT P3 - PORTABLE CLASSROOM BUILDING
UNIT P4 - PORTABLE CLASSROOM BUILDING
UNIT P5 - PORTABLE CLASSROOM BUILDING
UNIT P6 - PORTABLE CLASSROOM BUILDING
UNIT P7 - PORTABLE CLASSROOM BUILDING
UNIT P8 - PORTABLE CLASSROOM BUILDING

THIS APPLICATION

UNIT LS - 30 X 64 LUNCH SHELTER

AGENCY APPROVAL:

IDENTIFICATION STAMP
DIV. OF THE STATE ARCHITECT
APP: 02-121836 INC:
REVIEWED FOR
SS ☑ FLS ☑ ACS ☑
DATE: 11/02/2023

LODI USD

HMC Architects
R221551X00
2101 CAPITOL AVENUE, SUITE 100,
SACRAMENTO, CA, 95816
916 368 7590 / www.hmcarchitects.com

LICENSED ARCHITECT JEFFREY ALAN GRAU C-14648 5/31/25 RENEWAL DATE STATE OF CALIFORNIA

PROJECT TEAM

Δ	DESCRIPTION	DATE

ACCESSIBLE PATH OF TRAVEL

1. ACCESSIBLE PATH OF TRAVEL (P.O.T.): SITE WALKWAYS SHALL PROVIDE A BARRIER-FREE P.O.T. ABRUPT CHANGES IN LEVEL ALONG ANY P.O.T. ARE ALLOWED UP TO 1/2". ONLY ABRUPT CHANGES IN ELEVATION UP TO 1/4" ARE ALLOWED TO HAVE A VERTICAL TRANSITION. ABRUPT CHANGES IN ELEVATION BETWEEN 1/4" AND 1/2" SHALL BE BEVELED WITH A SLOPE NO GREATER THAN 1-UNIT VERTICAL TO 2-UNITS HORIZONTAL. GATES IN THE P.O.T. SHALL HAVE A SIGN ADJACENT TO THE GATE, IN ALL CAPITALIZED LETTERS, WHICH READS: "THIS GATE TO REMAIN LOCKED IN OPEN POSITION DURING SCHOOL HOURS OR ANY PUBLIC EVENT".
2. THE CONTRACTOR SHALL PROVIDE A P.O.T. FROM THE DISABLED ACCESSIBLE PARKING STALLS TO ALL BUILDINGS AND SITE FUNCTIONS. CONTRACTOR SHALL VERIFY THAT THE P.O.T. IS BARRIER-FREE AS DESCRIBED IN THESE NOTES.
3. WALKWAYS SHALL BE FREE OF GRATINGS WHEREVER POSSIBLE. GRATING WHICH OCCUR WITHIN THE P.O.T. SHALL HAVE OPENINGS WHICH DO NOT EXCEED 1/2" IN THE DIRECTION OF TRAVEL PER CBC SECTION 1133B.7.2.
4. AN ABRUPT DROP-OFF CHANGE IN ELEVATION AT THE EDGE OF ANY WALK INTO AN ADJACENT PLANTER SHALL NOT EXCEED 4".
5. SLOPES IN THE DIRECTION OF THE P.O.T. GREATER THAN 1-UNIT VERTICAL TO 20-UNITS HORIZONTAL SHALL BE CONSIDERED A RAMP AND WILL REQUIRE HANDRAILS ON BOTH SIDES PER CBC SECTION 1133B.5.5 SLOPES IN THE DIRECTION OF THE P.O.T. ALONG WALKWAYS SHALL NOT EXCEED 5%. CROSS SLOPES IN THE P.O.T. ALONG WALKWAYS SHALL NOT EXCEED 2%.
6. ALL WALKWAYS WITHIN THE P.O.T. SHALL BE A MINIMUM OF 48" IN WIDTH. SURFACES WITH A SLOPE OF LESS THAN 6% SHALL BE AT LEAST AS SLIP-RESISTANT AS THAT PROVIDED BY A MEDIUM BROOM FINISH. SURFACES WITH A SLOPE OF MORE THAN 6% SHALL BE SLIP-RESISTANT.
7. OBJECTS PROTRUDING INTO THE P.O.T. SHALL NOT REDUCE THE C LEAR WIDTH OR MANEUVERING SPACE WITHIN THE P.O.T. PER CBC SECTION 1133B.8.6.
8. ARCHITECT HAS SURVEYED/ INSPECTED THE PATH OF TRAVEL (P.O.T.) AS INDICATED ON THE PLANS AND HAS FOUND IT TO BE, OR HAS INDICATED ON THE PLANS REMEDIAL WORK WHICH WOULD CAUSE IT TO BE, A BARRIER-FREE ACCESSIBLE ROUTE:
   a. AT LEAST 48" IN. WIDTH; OR AS APPROVED BY CODE;
   b. WITHOUT ABRUPT LEVEL CHANGES EXCEEDING 1/2" IF BELVELED AT 1:2. MAXIMUM SLOPE, OR VERTICAL LEVEL CHANGES EXCEEDING 1/4";
   c. WITH A FIRM, STABLE, AND SLIP RESISTANT WALKING SURFACE;
   d. WITH A RUNNING SLOPE OF 1:20 OR LESS, UNLESS OTHERWISE INDICATED, AND A CROSS SLOPE OF 1:50 OR LESS;
   e. IS FREE OF OVERHEAD OBSTRUCTIONS WITHIN 80" ABOVE THE WALKING SURFACE; AND
   f. IS FREE OF OBJECTS WHICH PROTRUDE MORE THAN 4" BETWEEN THE HEIGHTS OF 27" AND 80" ABOVE THE WALKING SURFACE.

KEYNOTES

NOTES

FACILITY:
ELLERTH LARSON ELEMENTARY SCHOOL
2375 GIANNONI WAY LODI, CA 95242

PROJECT:
LODI UNIFIED SCHOOL DISTRICT LUNCH SHELTERS - ELLERTH LARSON ELEMENTARY SCHOOL

SHEET NAME:
CODE INFORMATION SITE PLAN

CONSTRUCTION DOCUMENTS

DATE: **10/18/2023** CLIENT PROJ NO:

SHEET:

A1.21

CODE INFORMATION SITE PLAN 1 1" = 40'-0"

Autodesk Docs://R221551X00 Lodi USD Lunch Shelters/R221551X00-A-LARSON-ES-LUNCH-SHELTER.rvt
10/11/2023 3:25:03 PM

PLEASE RECYCLE

THE LINE SHOWN ABOVE IS EXACTLY ONE INCH AT THIS SHEET'S ORIGINAL PAGE SIZE

DSA-810 FIRE & LIFE SAFETY SITE CONDITIONS SUBMITTAL

PROJECT INFORMATION

School District:	LODI UNIFIED SCHOOL DISTRICT
Project name / school:	ELLERTH LARSON ELEMENTARY SCHOOL
Project address:	2375 GIANNONI WAY LODI, CA 95242

FIRE & LIFE SAFTEY INFORMATION — ALTERNATE ACCEPTED

1.	Has a fire hydrant flow test been performed within the past 12 months? ***(If yes, provide a copy of the test data)***	Yes ☐	No ☒
2.	Was the fire hydrant water flow test performed as part of this LFA review?	Yes ☐	No ☒
3.	Is the project located within a designated fire hazard serverity zone as established by Cal-Fire? ***(If yes, indicate fire hazard zone classification below)***	Yes ☐	No ☒

Refer to the following for fire hazard zone locations: ***www. fire.ca.gov/fire_prevention/fire_prevention_wildland_zones_maps*** — Moderate ☐ High ☐ Very High ☐

Wildland Interface Area (WIFA) ***(If any designations are checked, project design must meet the requirements of CBC Chapter 7A)*** — WIFA ☐

CONDITION MEANS AND METHODS RESOLUTION — ALTERNATE ACCEPTED

		Yes	No	N/A	N/R
4.	Emergency vehicle access roadways do not meet CFC requirements			X	
4a.	**Acceptable Alternative:** Emergency vehicle and personel access as proposed by the architect is acceptable for providing fire suppression and protection of life and property				
5.	**Fire Hydrants:** Number and spacing does not meet CFC requirements				
5a.	**Acceptable Alternative:** Number of fire hydrants and spacing as proposed by the architect is acceptable for fire suppression and protection of life and property.	X			
6.	**Fire Hydrants:** Water flow and pressure are less than CFC minimum.			X	
6a.	**Acceptable Alternative:** The available flow and pressure is acceptable for providing fire suppression and protection of life and property.				
7.	Location of fire department connection(s) serving fire sprinkler system or standpipe system does not meet CFC requirements.			X	
7a.	**Acceptable Alternative:** The location of fire department connection serving the fire sprinkler system and/or standpipe system is acceptable for providing fire suppression and protection of life and property.				

School District Acceptance of Acceptable Design Alternates
By signing this form, the school district acknowledges and accepts the proposed design as an alternative to California Building Code (CBC) and California Fire Code (CFC) minimum requirements as indicated by one of more of the conditions indicated at items 4a, 5a, 6a, or 7a, for providing fire and life safety protection of life and property.

Accepted by: Leonard Kahn — Title: CBO
Signature: [signature] — Date: 10/31/2023

LOCAL FIRE AUTHORITY (LFA) INFORMATION

LFA Agency Name: Lodi Fire Dept.
LFA Review Official: Brad Odell
Title: Battalion Chief / Fire Marshall — Work Phone: 209-333-6739
Work Email: BODELL@Lodi.gov
LFA Reviewer's Signature: [signature] — Date: 10/31/23

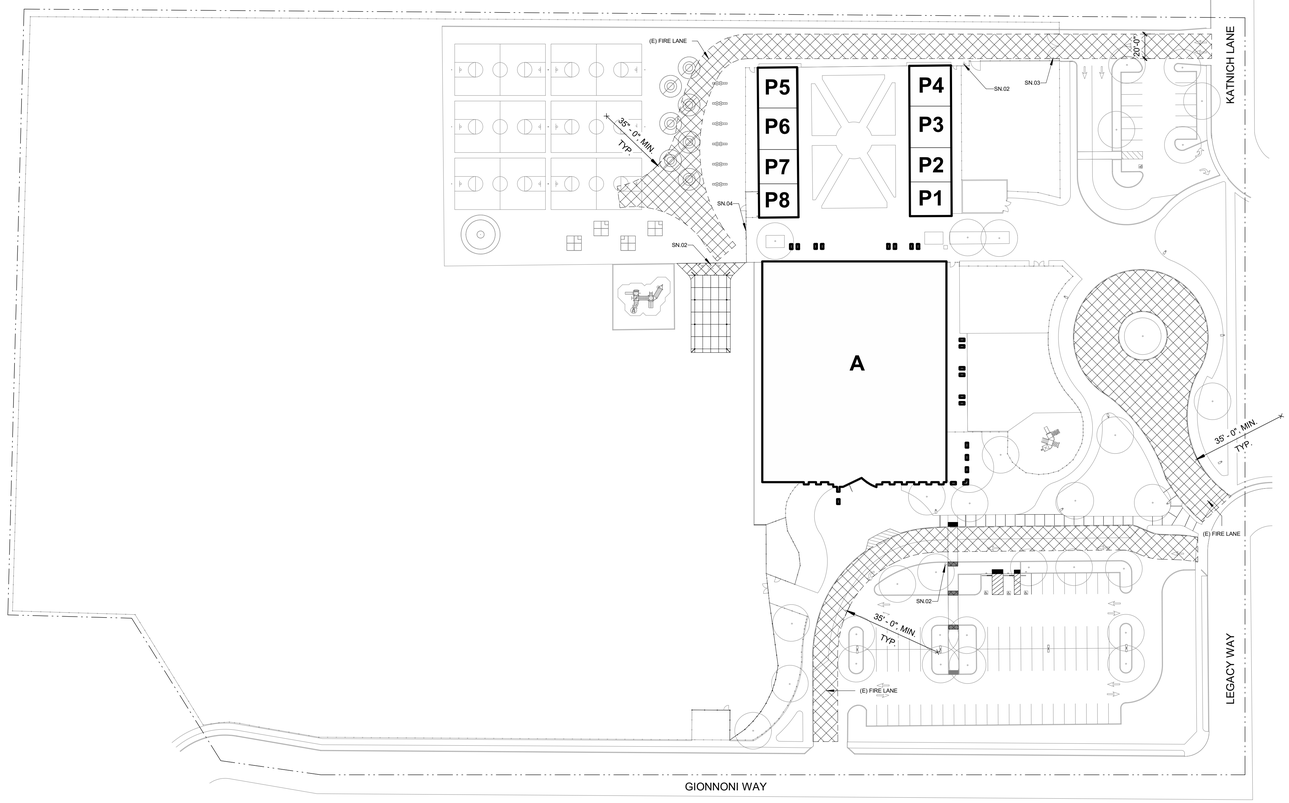

LEGEND

- PROPERTY LINE
- EXISTING CHAINLINK FENCE
- EXISTING ORNAMENTAL FENCE
- X — EXISTING BUILDINGS
- FIRE LANE
- EXISTING FIRE HYDRANT

SHEET NOTES

SN.01	EXISTING FIRE LANE
SN.02	EXISTING FIRE HYDRANT
SN.03	EXISTING 10' X 6' CHAIN LINK GATE
SN.04	EXISTING ORNAMENTAL ROLLING GATE

AGENCY APPROVAL:

IDENTIFICATION STAMP
DIV. OF THE STATE ARCHITECT
APP: 02-121836 INC:
REVIEWED FOR
SS ☑ FLS ☑ ACS ☑
DATE: 11/02/2023

LODI USD

HMC Architects
R221551X00

LICENSED ARCHITECT JEFFREY ALAN GRAU C-14648 6/31/25 RENEWAL DATE STATE OF CALIFORNIA

2101 CAPITOL AVENUE, SUITE 100,
SACRAMENTO, CA, 95816
916 368 7990 / www.hmcarchitects.com

PROJECT TEAM

Δ	DESCRIPTION	DATE

KEYNOTES

NOTES

FACILITY:
ELLERTH LARSON ELEMENTARY SCHOOL
2375 GIANNONI WAY LODI, CA 95242

PROJECT:
LODI UNIFIED SCHOOL DISTRICT LUNCH SHELTERS - ELLERTH LARSON ELEMENTARY SCHOOL

SHEET NAME:
LOCAL FIRE AUTHORITY SITE ACCESS PLAN

CONSTRUCTION DOCUMENTS

DATE: **10/18/2023** — CLIENT PROJ NO:

SHEET:

A1.22

LOCAL FIRE AUTHORITY SITE ACCESS PLAN — **1** — 1" = 50'-0"

PLEASE RECYCLE

Autodesk Docs://R221551X00 Lodi USD Lunch Shelters/R221551X00-A-LARSON-ES-LUNCH-SHELTER.rvt
10/11/2023 9:41:53 AM

THE LINE SHOWN ABOVE IS EXACTLY ONE INCH ON THIS SHEET ORIGINAL PAGE SIZE

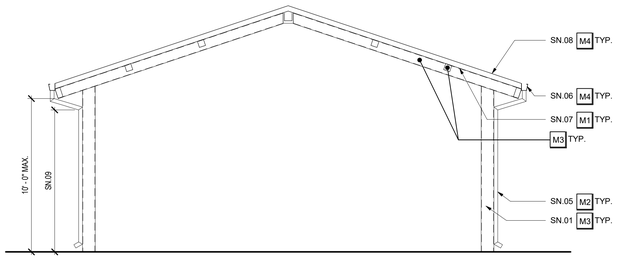

LUNCH SHELTER - SECTION 2

1/4" = 1'-0"

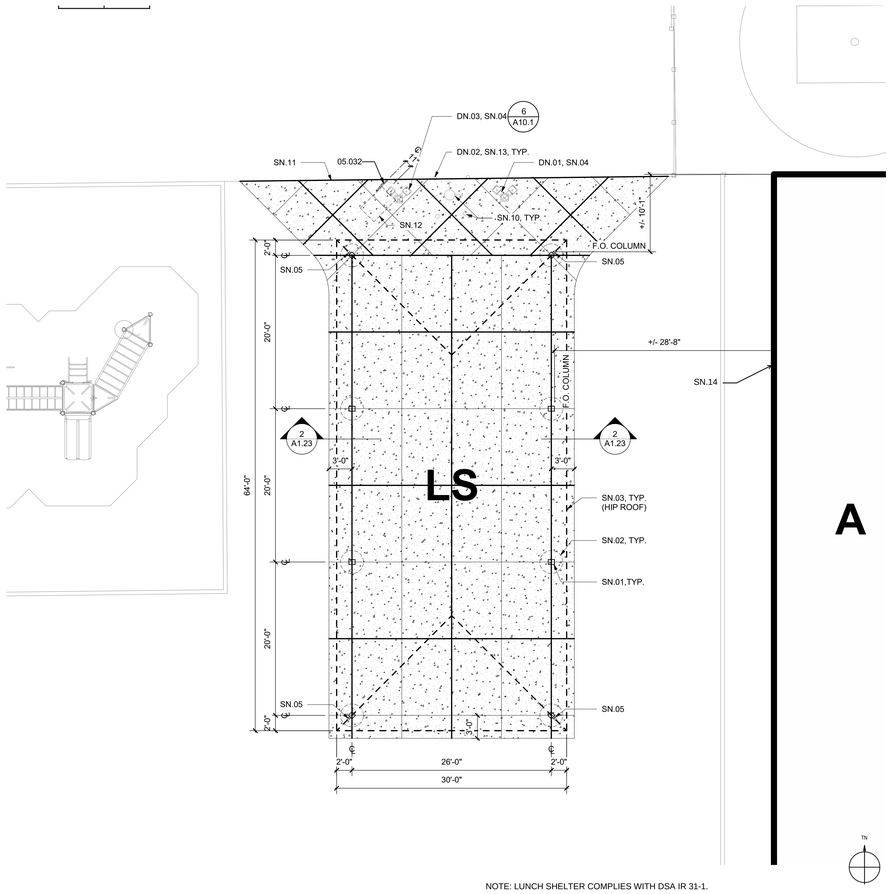

NOTE: LUNCH SHELTER COMPLIES WITH DSA IR 31-1.

ENLARGED PLAN - LUNCH SHELTER 1

1/8" = 1'-0"

LEGEND

- PROPERTY LINE
- ASSUMED PROPERTY LINE
- EXISTING BUILDINGS
- PC LUNCH SHELTER
- EXPANSION JOINT
- CONCRETE WALK / PAVING
- CONTROL JOINT
- ASPHALT CONCRETE PAVING
- (E) FENCING

EXTERIOR COLOR SCHEDULE

	MATERIAL	COLOR
M1	METAL	METAL FINISH COLOR 1 (1)
M2	METAL	METAL FINISH COLOR 2 (1)
M3	METAL	METAL PREFINISH COLOR 1 (1)(3)
M4	METAL	METAL PREFINISH COLOR 2 (1)(4)

(1) CUSTOM COLORS TO BE SUBMITTED PER SPECIFICATIONS.

(2) CLEAN, PREP AND PAINT ALL SURFACES NOT PREFINISHED.

(3) MATCH METAL PAINT "COLOR 1" WITH COLOR DESIRED IN PREFINISHED "COLOR 1"

(4) MATCH METAL PAINT "COLOR 2" WITH COLOR DESIRED IN PREFINISHED "COLOR 2"

DEMOLITION NOTES

DN.01 REMOVE (E) DRINKING FOUNTAIN AND SALVAGE FOR REINSTALLATION
DN.02 REMOVE (E) BOLLARD AND SALVAGE FOR REINSTALLATION.
DN.03 REMOVE (E) ACCESSIBLE DRINKING FOUNTAIN AND SALVAGE FOR REINSTALLATION.

SHEET NOTES

SN.01 HSS COLUMN
SN.02 DRILLED PIER FOOTING, SHOWN DASHED
SN.03 ROOF OVERHANG ABOVE
SN.04 REINSTALL SALVAGED DRINKING FOUNTAIN IN SAME PLACE
SN.05 3" DIAMETER SCHEDULE 40 STEEL DOWNSPOUT, PAINTED
SN.06 PREFINISEHD GUTTER AND FLASHING
SN.07 PAINT DECK UNDERSIDE
SN.08 PREFINISHED STANDING SEAM ROOF
SN.09 HOLD TIGHT TO UNDERSIDE OF FRAMING: MAINTAIN 9'-0" CLEARANCE MIN.
SN.10 (E) FIRE HYDRANT TO REMAIN. PROTECT IN PLACE
SN.11 PROVIDE EXPANSION JOINT AT ALL INTERSECTIONS OF EXISTING AND NEW CONCRETE
SN.12 30" X 48" CLEAR FLOOR SPACE
SN.13 REINSTALL SALVAGED BOLLARDS IN SAME PLACE
SN.14 (E) FIRE ALARM HORN

KEYNOTES

05.032 METAL GUARDRAIL

AGENCY APPROVAL:

IDENTIFICATION STAMP
DIV. OF THE STATE ARCHITECT
APP: 02-121836 INC:
REVIEWED FOR
SS ☑ FLS ☑ ACS ☑
DATE: 11/02/2023

LODI USD

HMC Architects

R221551X00

LICENSED ARCHITECT JEFFREY ALAN GRAU C-14648 5/31/25 RENEWAL DATE STATE OF CALIFORNIA

2101 CAPITOL AVENUE, SUITE 100,
SACRAMENTO, CA, 95816
916 368 7990 / www.hmcarchitects.com

PROJECT TEAM

Δ	DESCRIPTION	DATE

KEYNOTES

NOTES

FACILITY:
ELLERTH LARSON ELEMENTARY SCHOOL
2375 GIANNONI WAY LODI, CA 95242

PROJECT:
LODI UNIFIED SCHOOL DISTRICT LUNCH SHELTERS - ELLERTH LARSON ELEMENTARY SCHOOL

SHEET NAME:
ENLARGED SITE PLAN

CONSTRUCTION DOCUMENTS

DATE: **10/18/2023** CLIENT PROJ NO:

SHEET:

A1.23

Autodesk Docs://R221551X00 Lodi USD Lunch Shelters/R221551X00-A-LARSON-ES-LUNCH-SHELTER.rvt
10/11/2023 9:42:00 AM

PLEASE RECYCLE

THE LINE SHOWN ABOVE IS 1" WHEN PRINTED ON THIS SHEET'S ORIGINAL PAGE SIZE

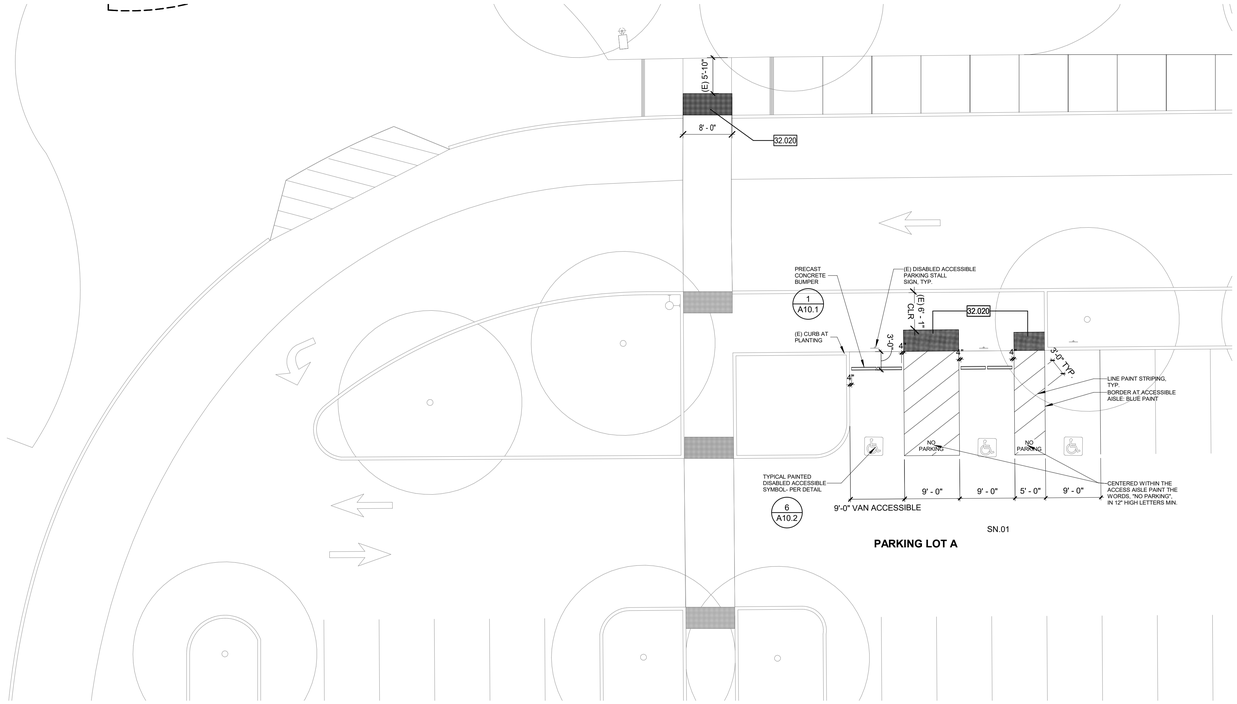

PARKING LOT A

TN

PARKING LOT A - ENLARGED IMPROVEMENT PLAN 02

1" = 10'-0"

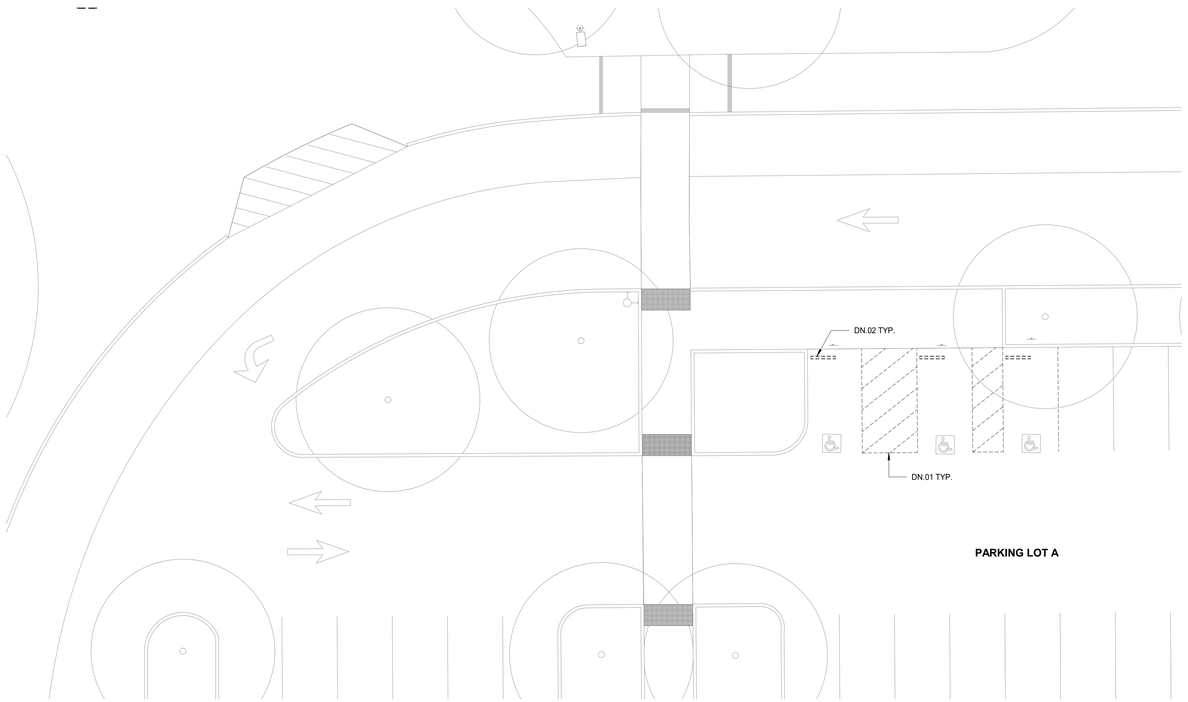

PARKING LOT A

TN

PARKING LOT A - ENLARGED DEMOLITION PLAN 01

1" = 10'-0"

LEGEND

- PROPERTY LINE
- EXISTING CHAINLINK FENCE
- EXISTING ORNAMENTAL FENCE
- X — EXISTING BUILDING
- FIRE LANE
- EXISTING FIRE HYDRANT

DEMOLITION NOTES

DN.01 BLACKOUT (E) PARKING STALL STRIPING AND SYMBOL OF ACCESSIBILITY
DN.02 DEMOLISH (E) CONCRETE BUMPERS

SHEET NOTES

SN.01 PARKING STALL SHALL BE STRIPED USING WHITE PAINT (U.O.N.). STRIPES SHALL BE 4" WIDE

KEY NOTES

32.020 TRUNCATED DOMES (4 / A10.1)

AGENCY APPROVAL:

IDENTIFICATION STAMP
DIV. OF THE STATE ARCHITECT
APP: 02-121836 INC:
REVIEWED FOR
SS ☑ FLS ☑ ACS ☑
DATE: 11/02/2023

LODI USD

HMC Architects

R221551X00

LICENSED ARCHITECT JEFFREY ADAM GRAU C-14648 5/31/25 RENEWAL DATE STATE OF CALIFORNIA

2101 CAPITOL AVENUE, SUITE 100,
SACRAMENTO, CA, 95818
916 368 7990 / www.hmcarchitects.com

PROJECT TEAM

Δ	DESCRIPTION	DATE

KEYNOTES

NOTES

FACILITY:
ELLERTH LARSON ELEMENTARY SCHOOL
2375 GIANNONI WAY LODI, CA 95242

PROJECT:
LODI UNIFIED SCHOOL DISTRICT LUNCH SHELTERS - ELLERTH LARSON ELEMENTARY SCHOOL

SHEET NAME:
PARKING LOT A - ENLARGED PLANS

CONSTRUCTION DOCUMENTS

DATE: **10/18/2023** | CLIENT PROJ NO:

SHEET:

A1.24

Autodesk Docs://R221551X00 Lodi USD Lunch Shelters/R221551X00-A-LARSON-ES-LUNCH-SHELTER.rvt
10/11/2023 3:25:06 PM

PLEASE RECYCLE

THE LINE SHOWN ABOVE IS EXACTLY ONE INCH ON THIS SHEETS ORIGINAL PAGE SIZE

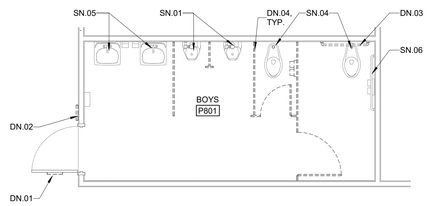

PN

P8 BOYS RESTROOM PLAN 05
1/4" = 1'-0"

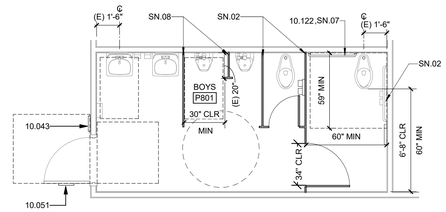

PN

P8 BOYS RESTROOM IMPROVEMENT PLAN 03
1/4" = 1'-0"

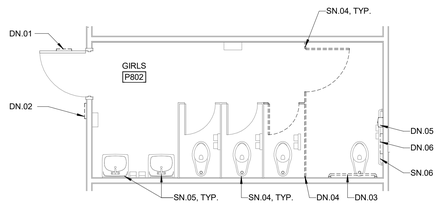

PN

P8 GIRLS RESTROOM PLAN 04
1/4" = 1'-0"

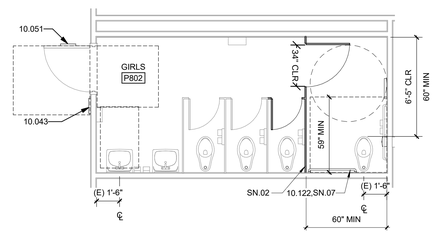

PN

P8 GIRLS RESTROOM IMPROVEMENT PLAN 02
1/4" = 1'-0"

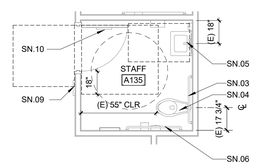

PN

A135 EXISTING RESTROOM PLAN 01
1/4" = 1'-0"

LEGEND

DENOTES EXISTING WALLS & CURBS (WHERE OCCURS) TO BE REMOVED, SEE STRUCTURAL DRAWINGS FOR ADDITIONAL INFORMATION

EXISTING WALL TO REMAIN

1 / 4.5 / 1.5 / 4 / INTERIOR ELEV / 2 / 3.5 / 2.5 / 3 — CONSECUTIVE NUMBERING CONVENTION FOR INTERIOR ELEVATIONS AND ROOM FINISHES.

REMOVE (E) DOOR, HARDWARE AND FRAME U.O.N.

30" x 48" CLEAR FLOOR SPACE

60" CLEAR FLOOR SPACE

GENERAL NOTES

1. TYPICAL MOUNTING HEIGHTS AND DETAILS APPLY TO ENTIRE PROJECT, WHETHER REFERENCED OR NOT, UNLESS OTHERWISE NOTED.
2. ALL DISABLED ACCESSIBLE DIMENSIONS, ARE MAXIMUM DIMENSIONS UNLESS OTHERWISE NOTED.
3. REMOVE OR MODIFY ALL ITEMS AS REQUIRED TO INSTALL NEW WORK, WHETHER OR NOT SPECIFICALLY SHOWN TO BE REMOVED OR MODIFIED.
4. WHERE DRAINS, PIPING AND OTHER MATERIALS AND EQUIPMENT ARE REMOVED FROM THE SLAB, IT SHALL BE BACKFILLED, FINISHED FLUSHED WITH ADJACENT SURFACES AND PREPARED TO RECEIVE THE NEW FINISH.
5. CUT AND PATCH EXISTING SLAB AS REQUIRED FOR NEW PLUMBING WORK.
6. DEMO AND REPAIR WALL FINISH AS NECESSARY TO PERFORM FIXTURE AND EQUIPMENT WORK AS NOTED. ADJACENT FINISHES TO BE VERIFIED BY CONTRACTOR
7. EQUIPMENT/FIXTURES NOTED AS "SALVAGED FOR REINSTALLATION" WILL BE REMOVED AND STORED BY THE CONTRACTOR PRIOR TO START OF DEMOLITION. THESE EQUIPMENT/FIXTURES SHALL BE REINSTALLED BY THE CONTRACTOR UNDER THIS CONTRACT.

DEMOLITION NOTES

DN.01 REMOVE (E) TOILET ROOM DOOR SIGN
DN.02 REMOVE (E) TOILET ROOM I.D. SIGN
DN.03 REMOVE (E) 36" GRAB BAR
DN.04 REMOVE (E) TOILET PARTITION AND SALVAGE FOR REINSTALLATION
DN.05 REMOVE (E) SANITARY NAPKIN DISPOSAL AND SALVAGE FOR REINSTALLATION
DN.06 REMOVE (E) TOILET SEAT COVER DISPENSER AND SALVAGE FOR REINSTALLATION

SHEET NOTES

SN.01 (E) URINAL TO REMAIN
SN.02 REINSTALL SALVAGED TOILET PARTITION AND ADJUST AS NECESSARY FOR REQUIRED GRAB BAR CLEARANCE. PROVIDE NEW OVERHEAD BRACE AND ACCESSORIES AS REQUIRED FOR ADJUSTMENT.
SN.03 (E) 36" GRAB BAR TO REMAIN
SN.04 (E) WATER CLOSET TO REMAIN
SN.05 (E) LAVATORY TO REMAIN. WRAP EXPOSED PIPE W/INSULATION
SN.06 (E) 42" GRAB BAR TO REMAIN
SN.07 INSTALL 36" GRAB BAR TO COMPLY WITH A10.2 ELEMENTARY. MAINTAIN 1 1/2" CLEARANCE ALL AROUND GRAB BAR. PROVIDE BLOCKING PER DETAIL 5/A10.2

CONTRACTORS OPTION, STAINLESS STEEL PLATE GRAB BAR PER DETAIL 4/A10.2

REMOVE AND REPLACE FRP FINISH AS REQUIRED IN FULL SHEET.
SN.08 REINSTALL SALVAGED TOILET PARTITION AND ADJUST AS NECESSARY FOR REQUIRED URINAL CLEARANCES
SN.09 (E) TOILET ROOM ID SIGNAGE TO REMAIN
SN.10 (E) TOILET ROOM DOOR SIGN TO REMAIN

KEY NOTES

10.043 SIGNAGE: TOILET ROOM IDENTIFICATION
10.051 SIGNAGE: TOILET ROOM DOOR SYMBOL
10.122 TOILET ACCESSORY: GRAB BAR

AGENCY APPROVAL:

IDENTIFICATION STAMP
DIV. OF THE STATE ARCHITECT
APP: 02-121836 INC:
REVIEWED FOR
SS ☑ FLS ☑ ACS ☑
DATE: 11/02/2023

LODI USD

HMC Architects

R221551X00

LICENSED ARCHITECT JEFFREY ALAN OHLSEN C-14648 5/31/25 RENEWAL DATE STATE OF CALIFORNIA

2101 CAPITOL AVENUE, SUITE 100,
SACRAMENTO, CA, 95818
916 368 7990 / www.hmcarchitects.com

PROJECT TEAM

Δ	DESCRIPTION	DATE

NOTES

KEY PLAN

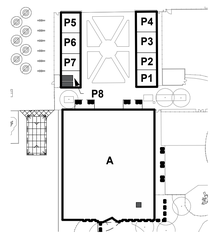

FACILITY:
ELLERTH LARSON ELEMENTARY SCHOOL
2375 GIANNONI WAY LODI, CA 95242

PROJECT:
LODI UNIFIED SCHOOL DISTRICT LUNCH SHELTERS - ELLERTH LARSON ELEMENTARY SCHOOL

SHEET NAME:
RESTROOM IMPROVEMENT PLANS

CONSTRUCTION DOCUMENTS

DATE: **10/18/2023** | CLIENT PROJ NO:

SHEET:

A2.11

Autodesk Docs://R221551X00 Lodi USD Lunch Shelters/R221551X00-A-LARSON-ES-LUNCH-SHELTER.rvt
10/11/2023 3:25:07 PM

PLEASE RECYCLE

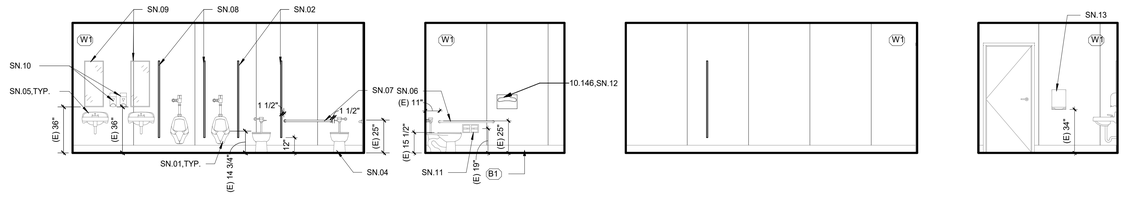

P8 BOYS TOILET ROOM 03

1/4" = 1'-0"

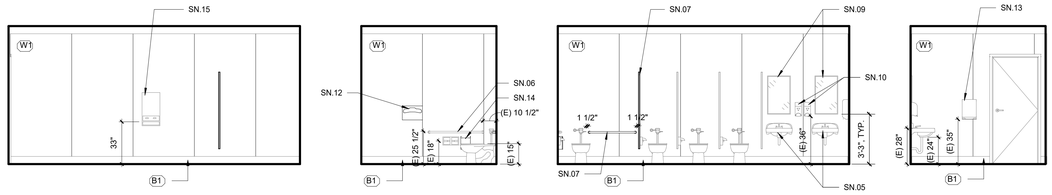

P8 GIRLS TOILET ROOM 02

1/4" = 1'-0"

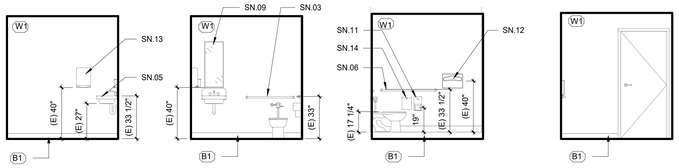

A 135 STAFF TOILET ROOM 01

1/4" = 1'-0"

LEGEND

APPROX. EXTENT OF WALL FINISH AND BASE (AS APPLICABLE) PATCH. MATCH ADJACENT.

1 / 2 / 3 / 4 / 4.5 / 1.5 / 2.5 / 3.5 — INTERIOR ELEV

CONSECUTIVE NUMBERING CONVENTION FOR INTERIOR ELEVATIONS AND ROOM FINISHES.

GENERAL NOTES

1. TYPICAL MOUNTING HEIGHTS AND DETAILS APPLY TO ENTIRE PROJECT, WHETHER REFERENCED OR NOT, UNLESS OTHERWISE NOTED.
2. ALL DISABLED ACCESSIBLE DIMENSIONS, ARE MAXIMUM DIMENSIONS UNLESS OTHERWISE NOTED.
3. REMOVE OR MODIFY ALL ITEMS AS REQUIRED TO INSTALL NEW WORK, WHETHER OR NOT SPECIFICALLY SHOWN TO BE REMOVED OR MODIFIED.
4. WHERE DRAINS, PIPING AND OTHER MATERIALS AND EQUIPMENT ARE REMOVED FROM THE SLAB, IT SHALL BE BACKFILLED, FINISHED FLUSHED WITH ADJACENT SURFACES AND PREPARED TO RECEIVE THE NEW FINISH.
5. CUT AND PATCH EXISTING SLAB AS REQUIRED FOR NEW PLUMBING WORK.
6. DEMO AND REPAIR WALL FINISH AS NECESSARY TO PERFORM FIXTURE AND EQUIPMENT WORK AS NOTED. ADJACENT FINISHES TO BE VERIFIED BY CONTRACTOR
7. EQUIPMENT/FIXTURES NOTED AS "SALVAGED FOR REINSTALLATION" WILL BE REMOVED AND STORED BY THE CONTRACTOR PRIOR TO START OF DEMOLITION. THESE EQUIPMENT/FIXTURES SHALL BE REINSTALLED BY THE CONTRACTOR UNDER THIS CONTRACT.

SHEET NOTES

SN.01 (E) URINAL TO REMAIN
SN.02 REINSTALL SALVAGED TOILET PARTITION AND ADJUST AS NECESSARY FOR REQUIRED GRAB BAR CLEARANCE. PROVIDE NEW OVERHEAD BRACE AND ACCESSORIES AS REQUIRED FOR ADJUSTMENT.
SN.03 (E) 36" GRAB BAR TO REMAIN
SN.04 (E) WATER CLOSET TO REMAIN
SN.05 (E) LAVATORY TO REMAIN. WRAP EXPOSED PIPE W/INSULATION
SN.06 (E) 42" GRAB BAR TO REMAIN
SN.07 INSTALL 36" GRAB BAR TO COMPLY WITH A10.2 ELEMENTARY. MAINTAIN 1 1/2" CLEARANCE ALL AROUND GRAB BAR. BLOCKING PER DETAIL 5/A10.2
CONTRACTORS OPTION, STAINLESS STEEL PLATE GRAB BAR PER DETAIL 4/A10.2
REMOVE AND REPLACE FRP FINISH IN FULL SHEET AS REQUIRED
SN.08 REINSTALL SALVAGED TOILET PARTITION AND ADJUST AS NECESSARY FOR REQUIRED URINAL CLEARANCES
SN.09 (E) MIRROR TO REMAIN
SN.10 (E) SOAP DISPENSER TO REMAIN
SN.11 (E) TOILET PAPER DISPENSER TO REMAIN
SN.12 INSTALL TOILET SEAT COVER DISPENSER PER A10.2 ELEMENTARY
SN.13 (E) PAPER TOWEL DISPENSER TO REMAIN
SN.14 REINSTALL SANITARY NAPKIN DISPOSAL PER A10.2 ELEMENTARY
SN.15 (E) SANITARY NAPKIN DISPENSER TO REMAIN

FINISHES

WALL

W1 (E) FIBER REINFORCED LAMINATE PANELS

BASE

B1 (E) INTEGRAL COVED BASE

KEY NOTES

10.146 TOILET ACCESSORY: TOILET SEAT COVER DISPENSER

AGENCY APPROVAL:

IDENTIFICATION STAMP
DIV. OF THE STATE ARCHITECT
APP: 02-121836 INC:
REVIEWED FOR
SS ☑ FLS ☑ ACS ☑
DATE: 11/02/2023

LODI USD

HMC Architects
R221551X00
2101 CAPITOL AVENUE, SUITE 100,
SACRAMENTO, CA, 95816
916 388 7990 / www.hmcarchitects.com

LICENSED ARCHITECT JEFFREY ALAN GILBO C-14648 5/31/25 RENEWAL DATE STATE OF CALIFORNIA

PROJECT TEAM

Δ	DESCRIPTION	DATE

KEYNOTES

NOTES

FACILITY:
ELLERTH LARSON ELEMENTARY SCHOOL
2375 GIANNONI WAY LODI, CA 95242

PROJECT:
LODI UNIFIED SCHOOL DISTRICT LUNCH SHELTERS - ELLERTH LARSON ELEMENTARY SCHOOL

SHEET NAME:
INTERIOR ELEVATIONS

CONSTRUCTION DOCUMENTS

DATE: **10/18/2023** CLIENT PROJ NO:

SHEET:

A8.11

THE LINE SHOWN ABOVE IS EXACTLY 1" WHEN PLOTTED ON THIS SHEET'S ORIGINAL PAGE SIZE
Autodesk Docs://R221551X00 Lodi USD Lunch Shelters/R221551X00-A-LARSON-ES-LUNCH-SHELTER.rvt
10/11/2023 3:25:09 PM
PLEASE RECYCLE

THE LINE SHOWN ABOVE IS EXACTLY 1" WHEN PLOTTED ON THIS SHEETS ORIGINAL PAGE SIZE

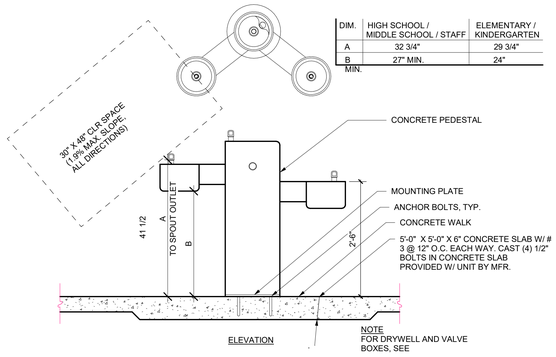

DIM.	HIGH SCHOOL / MIDDLE SCHOOL / STAFF	ELEMENTARY / KINDERGARTEN
A	32 3/4"	29 3/4"
B	27" MIN.	24" MIN.

6 ENLARGED DRINKING FOUNTAIN
3/4" = 1'-0"

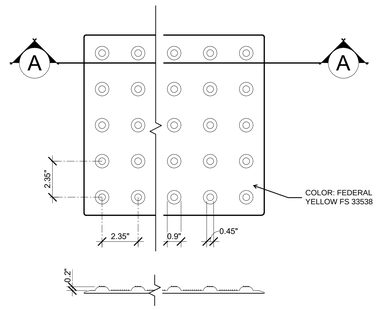

TYPICAL SECTION A-A

4 TRUNCATED DOMES
3" = 1'-0"

32220

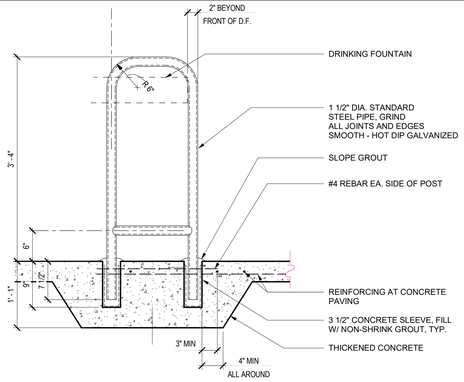

5 DRINKING FOUNTAIN GUARDRAIL
1" = 1'-0"

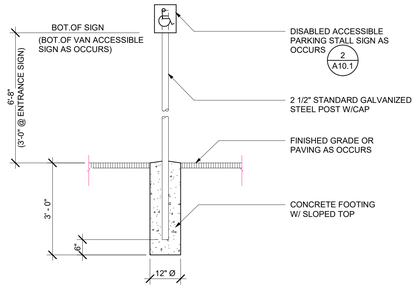

3 METAL SIGNS
1/2" = 1'-0"

10100

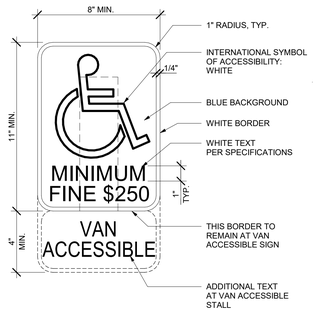

DISABLED ACCESSIBLE PARKING STALL

2 PARKING SIGNAGE
3" = 1'-0"

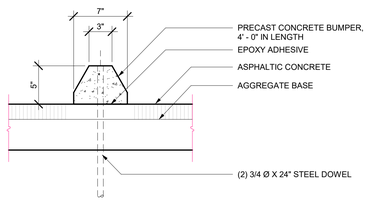

1 PRECAST CONCRETE BUMPER
1 1/2" = 1'-0"

32100

PLEASE RECYCLE

AGENCY APPROVAL:

IDENTIFICATION STAMP
DIV. OF THE STATE ARCHITECT
APP: 02-121836 INC:
REVIEWED FOR
SS ☑ FLS ☑ ACS ☑
DATE: 11/02/2023

LODI USD

HMC Architects

R221551X00

LICENSED ARCHITECT JEFFREY ALAN OLSO C-14648 5/31/25 RENEWAL DATE STATE OF CALIFORNIA

2101 CAPITOL AVENUE, SUITE 100,
SACRAMENTO, CA, 95816
916 368 7990 / www.hmcarchitects.com

PROJECT TEAM

Δ	DESCRIPTION	DATE

KEYNOTES

NOTES

FACILITY:
ELLERTH LARSON ELEMENTARY SCHOOL
2375 GIANNONI WAY LODI, CA 95242

PROJECT:
LODI UNIFIED SCHOOL DISTRICT LUNCH SHELTERS - ELLERTH LARSON ELEMENTARY SCHOOL

SHEET NAME:
SITE DETAILS

CONSTRUCTION DOCUMENTS

DATE: **10/18/2023** | CLIENT PROJ NO:

SHEET:

A10.1

Autodesk Docs://R221551X00 Lodi USD Lunch Shelters/R221551X00-A-LARSON-ES-LUNCH-SHELTER.rvt
10/11/2023 3:25:10 PM

THE LINE SHOWN ABOVE IS EXACTLY 1" WHEN PLOTTED ON THIS SHEET ORIGINAL PAGE SIZE

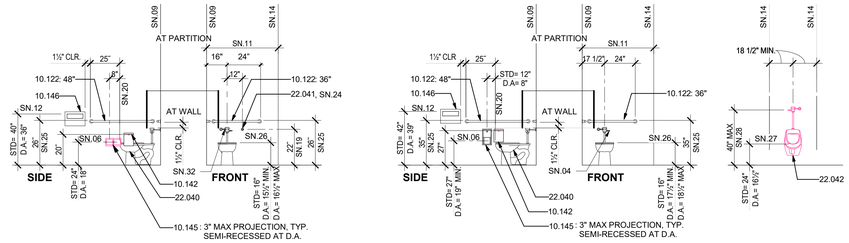

FLOOR MOUNTED WATER CLOSET (ELEMENTARY) — FLOOR MOUNTED WATER CLOSET — URINAL

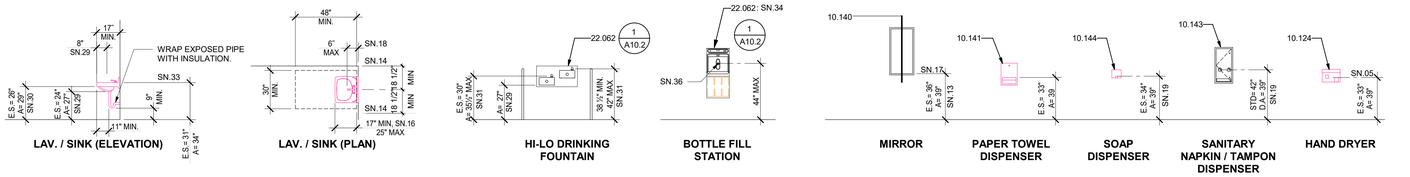

LAV. / SINK (ELEVATION) — LAV. / SINK (PLAN) — HI-LO DRINKING FOUNTAIN — BOTTLE FILL STATION — MIRROR — PAPER TOWEL DISPENSER — SOAP DISPENSER — SANITARY NAPKIN / TAMPON DISPENSER — HAND DRYER

FIXTURE AND ACCESSORY HEIGHTS

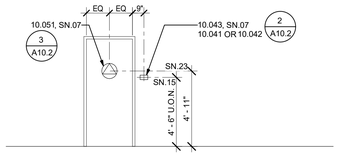

SIGNAGE MOUNTING

8 TYPICAL MOUNTING HEIGHTS AND DETAILS

1/4" = 1'-0"

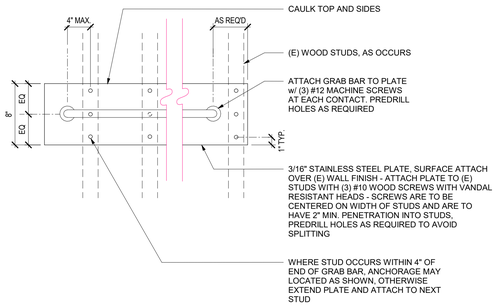

NOTES:
- EASE ALL EXPOSED STAINLESS STEEL EDGES
- (E) FINISH THICKNESS = 1" MAX.

4 GRAB BAR - STAINLESS STEEL PLATE

1 1/2" = 1'-0"

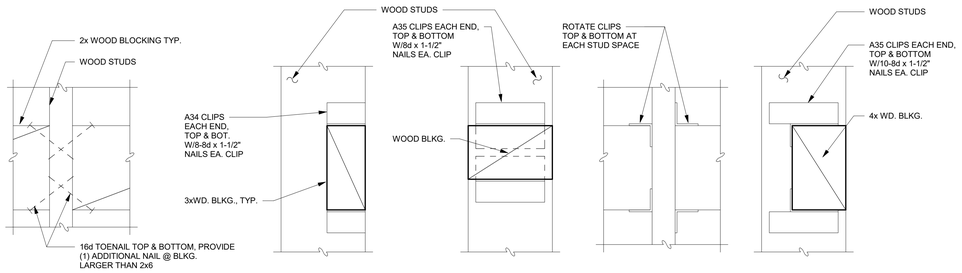

7 TYPICAL WOOD BLOCKING

3" = 1'-0"

NOTE:

1. TEXT ON DOOR SYMBOL TO BE AS INDICATED ON DRAWINGS

3 TOILET ROOM DOOR SYMBOLS

1 1/2" = 1'-0"

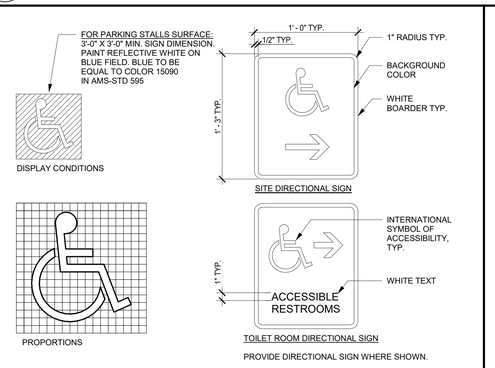

6 SYMBOL OF ACCESSIBILITY

NOT TO SCALE

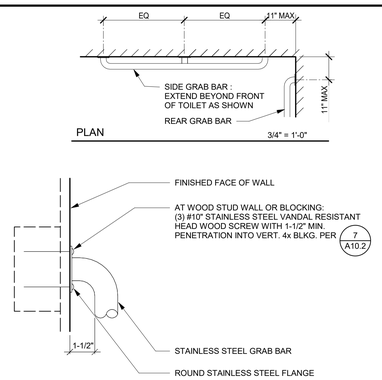

5 TYPICAL GRAB BAR AT WALL

3" = 1'-0"

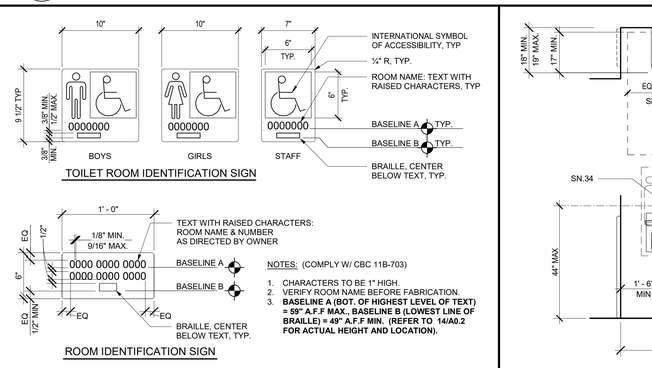

NOTES: (COMPLY W/ CBC 11B-703)

1. CHARACTERS TO BE 1" HIGH.
2. VERIFY ROOM NAME BEFORE FABRICATION.
3. **BASELINE A (BOT. OF HIGHEST LEVEL OF TEXT) = 59" A.F.F MAX., BASELINE B (LOWEST LINE OF BRAILLE) = 49" A.F.F MIN. (REFER TO 14/A0.2 FOR ACTUAL HEIGHT AND LOCATION).**

2 IDENTIFICATION SIGNS

1 1/2" = 1'-0"

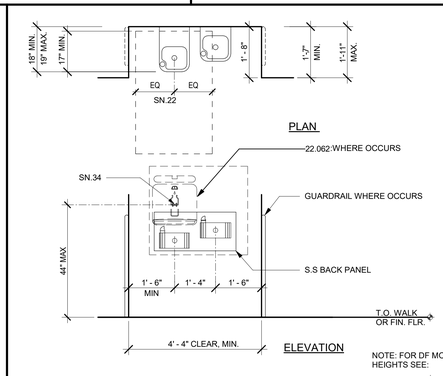

NOTE: FOR DF MOUNTING HEIGHTS SEE:

1 DRINKING FOUNTAIN ALCOVE

1/2" = 1'-0"

LEGEND

A ADULT / STAFF
E.S. ELEMENTARY SCHOOL

GENERAL NOTES

1. TYPICAL MOUNTING HEIGHTS AND DETAILS APPLY TO ENTIRE PROJECT, WHETHER REFERENCED OR NOT, UNLESS OTHERWISE NOTED.
2. ALL DISABLED ACCESSIBLE DIMENSIONS, ARE MAXIMUM DIMENSIONS UNLESS OTHERWISE NOTED.
3. HEIGHTS ARE MEASURED FROM FINISH FLOOR, UNLESS OTHERWISE NOTED.

SHEET NOTES

SN.01	TOP OF SHELF
SN.02	MIDDLE SHELF FIXED
SN.03	PROVIDE 2X BLOCKING PER DETAIL
SN.04	AT ACCESSIBLE WATER CLOSETS, FLUSH CONTROL HANDLE SHALL BE MOUNTED ON THE WIDE SIDE OF THE TOILET ENCLOSURE
SN.05	TO OPERATOR OR PUSH BUTTON
SN.06	DIMENSION TO CENTERLINE OF TOILET PAPER ROLL POSITION
SN.07	PROVIDE AT ALL TOILET ROOM DOORS
SN.08	AT DISABLED ACCESSIBLE CASEWORK
SN.09	TO FACE OF FINISH
SN.10	FOR SIGNS MOUNTED BACK-TO-BACK ON WINDOW GLAZING, SEE SPECIFICATIONS FOR REQUIREMENTS.
SN.11	62" CLR MIN. TO FINISH WALL/ PARTITION/ FIXTURE
SN.12	TOP OF OPENING
SN.13	34" MAX. IF MIRROR IS NOT MOUNTED OVER A LAV. OR COUNTER; TOP OF MIRROR 74" MIN. FOR HIGH SCHOOL & ADULTS.
SN.14	FACE OF OBJECTS OR WALLS
SN.15	CENTERLINE OF SIGN.
SN.16	19" MINIMUM AT SINK
SN.17	BOTTOM EDGE OF REFLECTIVE SURFACE
SN.18	FROM FARTHEST DEPTH OF THE CLEAR FLOOR SPACE TO FACE OF PLUMBING AND OTHER OBSTACLES
SN.19	TO CENTERLINE CONTROL.
SN.20	FRONT EDGE OF WATER CLOSET.
SN.21	AT CHILDREN'S DRINKING FOUNTAIN
SN.22	WHEELCHAIR, CLEAR FLOOR SPACE: 30"X48"
SN.23	CENTERLINE OF SYMBOL.
SN.24	WHERE SPECIFIED (ELEMENTARY / KINDERGARTEN)
SN.25	TOP OF GRAB BAR
SN.26	TOP OF SEAT
SN.27	LIP HEIGHT
SN.28	FLUSH HANDLE HEIGHT
SN.29	MINIMUM KNEE CLEARANCE
SN.30	MINIMUM APRON CLEARANCE
SN.31	BUBBLER HEIGHT
SN.32	NO TOILET MOUNTED FLUSH VALVE AT CHILDREN'S ACCESSIBLE WATER CLOSET
SN.33	MAXIMUM HEIGHT
SN.34	FOR BOTTLE FILL STATION AT DRINKING FOUNTAIN
SN.35	TO TOP OF SINK RIM; WHERE OCCURS.
SN.36	ACTIVATION SENSOR.

KEYNOTES

10.041	SIGNAGE: ROOM IDENTIFICATION
10.042	SIGNAGE: TACTILE EXIT
10.043	SIGNAGE: TOILET ROOM IDENTIFICATION
10.051	SIGNAGE: TOILET ROOM DOOR SYMBOL
10.122	TOILET ACCESSORY: GRAB BAR
10.124	TOILET ACCESSORY: HAND DRYER
10.140	TOILET ACCESSORY: MIRROR
10.141	TOILET ACCESSORY: PAPER TOWEL DISPENSER
10.142	TOILET ACCESSORY: SANITARY NAPKIN DISPOSAL
10.143	TOILET ACCESSORY: SANITARY NAPKIN/TAMPON DISPENSER
10.144	TOILET ACCESSORY: SOAP DISPENSER
10.145	TOILET ACCESSORY: TOILET PAPER DISPENSER
10.146	TOILET ACCESSORY: TOILET SEAT COVER DISPENSER
22.040	WATER CLOSET
22.041	MANUALLY OPERATED CONCEALED FLUSH VALVE
22.042	URINAL
22.062	BOTTLE FILL STATION

AGENCY APPROVAL:

IDENTIFICATION STAMP
DIV. OF THE STATE ARCHITECT
APP: 02-121836 INC:
REVIEWED FOR
SS ☑ FLS ☑ ACS ☑
DATE: 11/02/2023

LODI USD

HMC Architects
R221551X00
2101 CAPITOL AVENUE, SUITE 100,
SACRAMENTO, CA, 95816
916 368 7990 / www.hmcarchitects.com

LICENSED ARCHITECT JEFFREY ALAN GRAU C-14648 5/31/25 RENEWAL DATE STATE OF CALIFORNIA

PROJECT TEAM

Δ	DESCRIPTION	DATE

KEYNOTES

NOTES

FACILITY:
ELLERTH LARSON ELEMENTARY SCHOOL
2375 GIANNONI WAY LODI, CA 95242

PROJECT:
LODI UNIFIED SCHOOL DISTRICT LUNCH SHELTERS - ELLERTH LARSON ELEMENTARY SCHOOL

SHEET NAME:
TYPICAL MOUNTING HEIGHTS AND DETAILS

CONSTRUCTION DOCUMENTS

DATE: **10/18/2023** CLIENT PROJ NO:

SHEET:

A10.2

Autodesk Docs://R221551X00 Lodi USD Lunch Shelters/R221551X00-A-LARSON-ES-LUNCH-SHELTER.rvt
10/11/2023 9:42:31 AM

PLEASE RECYCLE

DESIGN VALUES

DESCRIPTION	DESIGN VALUES [1]
DEAD AND LIVE LOADS	
ROOF LIVE LOAD	20 PSF
ROOF DEAD LOAD (SUPERIMPOSED ON FRAME) [2]	LOAD SCENARIO= {1,2} DL = {3.5 PSF, 2.0 PSF}
ALLOWABLE SOIL PRESSURE [3, 5]	
SPREAD PAD	
VERTICAL BEARING: DL + Lr + SEISMIC (CONCRETE FOOTING)	1500 PSF
LATERAL COHESION: DL + Lr + SEISMIC (CONCRETE FOOTING)	130 PSF
DRILLED PIER	
SKIN FRICTION DOWN : DL + Lr + SEISMIC (CONCRETE FOOTING) PER 1810A.3.3.1.4	167 PSF
SKIN FRICTION (UPLIFT): DL + LR SEISMIC (CONCRETE FOOTING) PER 1810A.3.31.5	83 PSF
LATERAL BEARING: DL + Lr + SEISMIC (CONCRETE FOOTING) PER 1810A.3.3.2	100 PSF/FT
ROOF SNOW LOAD [6]	
GROUND SNOW LOAD, Pg	10 PSF
RISK CATEGORY	II
ROOF SNOW LOAD: [ ] FLAT, Pf OR [ ] LOW SLOPE, Pm OR [X] SLOPED, Ps	10 PSF
SNOW ROOF SLOPE FACTOR, Cs	1
SNOW EXPOSURE FACTOR, Ce	1.2
SNOW LOAD IMPORTANCE FACTOR, Is	1.0
THERMAL FACTOR, Ct	1.2
DRIFT SURCHARGE LOAD, Pd	0 PSF
DISTANCE FROM ADJACENT STRUCTURE, Pg = 0 PSF	4 IN
DISTANCE FROM ADJACENT STRUCTURE, Pg > 0 PSF	20 FT
ICE LOAD	0 PSF
FLOOD DESIGN	
FLOOD HAZARD AREA	NO
WIND DESIGN [4]	
BASIC WIND SPEED (3 SECOND GUST), Vult	110 MPH
EXPOSURE CATEGORY	C
TOPOGRAPHIC FACTOR, Kzt (1 MINIMUM)	1
INTERNAL PRESSURE COEFFICIENT, GCpi (IF APPLICABLE)	0.0
CLEAR WIND FLOW	YES
OBSTRUCTED WIND FLOW	YES
SEISMIC DESIGN [4]	
LATERAL FORCE-RESISTING SYSTEM	STEEL ORDINARY CANTILEVER COLUMN SYSTEM
ANALYSIS PROCEDURE	EQUIVALENT LATERAL FORCE PROCEDURE
SEISMIC DESIGN CATEGORY (SDC)	E
SEISMIC IMPORTANCE FACTOR, Ie	1.0
DESIGN BASE SHEAR, V	Cs x W
SEISMIC RESPONSE COEFFICIENT, Cs	LOAD SCENARIO = {1,2} Cs = {0.90,1.32}
RESPONSE MODIFICATION FACTOR, R	1.25
SITE CLASS [7]	E
REDUNDANCY FACTOR, p	1.3
MAPPED SPECTRAL RESPONSE ACCELERATION AT SHORT PERIOD, Ss - USED TO DETERMINE Cs	LOAD SCENARIO = {1,2} Ss = {1.406, 2.063}
SHORT-PERIOD SITE COEFFICIENT, Fa	1.2
DESIGN SPECTRAL RESPONSE ACCELERATION AT SHORT PERIOD, Sds - USED TO DETERMINE Cs	LOAD SCENARIO = {1,2} Sds (MAX) = {1.125, 1.650}
MAPPED SPECTRAL RESPONSE ACCELERATION AT 1 SECOND PERIOD, S1	LOAD SCENARIO = {1,2} S1 = {0.844, 1.07}
LONG-PERIOD SITE COEFFICIENT, Fv	2.0
DESIGN SPECTRAL RESPONSE ACCELERATION AT 1 SECOND PERIOD, Sd1	LOAD SCENARIO = {1,2} Sd1 = {1.125, 1.427}
HORIZONTAL OR VERTICAL IRREGULARITIES TYPE(S)	NONE

1. IF SITE-SPECIFICDESIGN CRITERIA ARE OUTSIDE THE LIMITS OF THESE PC DRAWINGS, CONTACT POLIGON ENGINEERING TO SEE IF AN ENGINEERING LETTER, SUPPLEMENTAL DRAWINGS, AND/OR CALCULATIONS COULD BE SUBMITTED FOR A SITE-SPECIFIC SOLUTION. ANY SITE- SPECIFIC DEVIATION FROM THIS PC MAY NOT BE SUBMITTING TO DSA AS AN OVER-THE-COUNTER.
2. STRUCTURE IS NOT DESIGNED TO SUPPORT SOLAR PANELS. STRUCTURE IS NOT DESIGNED TO SUPPORT SPRINKLER SYSTEMS IN LOAD SCENARIO 2 REGIONS.
3. GEOHAZARD REPORTS ARE REQUIRED IF THE AREA COVERED UNDER THE ROOF EXCEEDS 4000 SQ FT OR IS LOCATED WITHIN STATE OR LOCAL GEOLOGIC HAZARD ZONE. VERIFY SUBMITTAL AND APPROVAL OF A GEOHAZARD REPORT BY CGS PRIOR TO DSA SITE APPLICATION.
4. STRUCTURAL SEPARATION BETWEEN ADJACENT STRUCTURES: RAM 20= 5.0", RAM 30= 3.0" STRUCTURAL SEPARATION BETWEEN EXISTING STRUCTURES: RAM 20= 5.5", RAM 30= 4.0"
5. WHEN PLACING MULTIPLE CANOPIES WITH PIER FOOTINGS ADJACENT TO ONE ANOTHER, THE DESIGN MAY REQUIRE AN ANALYSIS OF GROUP EFFECTS ON THE FOUNDATIONS. THE MINIMUM CLEARANCE BETWEEN CENTER OF PIERS IS EIGHT TIMES PIER DIAMETER WITHOUT AN ACCOMPANYING ENGINEERING LETTER
6. SITE APPLICATION DESIGN PROFESSIONAL AND DSA REVIEWER SHALL VERIFY THE STRUCTURE TO BE LOCATED AT LEAST 20 FEET FROM ANY HIGHER ADJACENT STRUCTURE IF GROUND SNOW IS GREATER THAN ZERO.
7. DESIGN COMPLIES WITH THE CONDITIONS OF EXCEPTION 1 OF ASCE 7-16 SECTION 11.4.8, ITEM 2.
8. APPROVED FIRE APPARATUS ACCESS ROADS SHALL EXTEND TO WITHIN 150 FEET OF ALL PORTIONS OF THE PERIMETER OF THE STRUCTURE PER CFC 503.1.1.

ARCHITECTURAL REQUIREMENTS:

DESCRIPTION	DESIGN VALUES
TYPE OF CONSTRUCTION	II B
NUMBER OF STORIES	1
FIRE SPRINKLER SYSTEM	NOT BY POLIGON

RELATED BUILDING CODES AND STANDARDS:

TITLE 24 CODES:

2022 California Administrative Code (CAC)..........................(Part 1, Title 24, CCR)
2022 California Building Code (CBC), Volumes 1 and 2 (Part 2, Title 24, CCR)
(2021 International Building Code with 2022 California amendments)
2022 California Electrical Code ....(Part 3, Title 24, CCR)
(2020 National Electrical Code with 2022 California amendments)
2022 California Mechanical Code (CMC) ....(Part 4, Title 24, CCR)
(2021 Uniform Mechanical Code with 2022 California amendments)
2022 California Plumbing Code (CPC) ....(Part 5, Title 24, CCR)
(2021 Uniform Plumbing Code with 2022 California amendments)
2022 California Energy Code ....(Part 6, Title 24, CCR)
2022 California Fire Code (CFC) ....(Part 9, Title 24, CCR)
(2021 International Fire Code with 2022 California Amendments)
2022 California Existing Building Code (CEBC)......................(Part 10, Title 24, CCR)
2022 California Green Building Standards Code...................(Part 11, Title 24, CCR)
2022 California Referenced Standards Code .... (Part 12, Title 24, CCR)
Title 19 CCR, Public Safety, State Marshal Regulations

NFPA 13 - 2016
NFPA 72 - 2016

REFERENCE CODE SECTIONS FOR APPLICABLE STANDARDS:

2022 CBC, CHAPTER **35**
2022 CFC, CHAPTER **80**

SCOPE OF WORK NARRATIVE:

THESE DRAWINGS ILLUSTRATE THE FABRICATION AND INSTALLATION REQUIREMENTS FOR A FREE-STANDING PREFABRICATED STEEL SHADE STRUCTURE. THE ENTIRE STRUCTURAL SYSTEM IS COMPRISED OF TUBULAR STEEL MEMBERS SUPPORTED ON CONCRETE FOUNDATIONS. THE FLEXIBILITY INCLUDED HEREIN ALLOWS THIS STRUCTURE TO COMPLY WITH A WIDE VARIETY OF PROJECT SITES AND LOADING REQUIREMENTS.

INSTRUCTIONS FOR ARCHITECTS PLANNING TO SUBMIT THESE PRE-CHECKED DRAWINGS TO DSA:

STEP 1 PROJECT INFORMATION

PROJECT NAME	LODI UNIFIED SCHOOL DISTRICT LUNCH SHELTERS - ANSEL ADAMS ELEMENTARY SCHOOL	
SCHOOL DISTRICT	LODI UNIFIED SCHOOL DISTRICT	
USE AND OCCUPANCY CLASSIFICATION	A-3	**(PROPOSED OCCUPANCY: A1, A2, A3, A4, A5, B, E)**
OCCUPANT LOAD FACTOR	15	**(15 SQFT/PERSON MAX; 5 SQFT/PERSON MIN FOR ANY A OCCUPANCY 20 SQFT/PERSON MAX FOR B OR E OCCUPANCY)**
TOTAL ROOF AREA	1,920	**(MAXIMUM 4500 SQFT FOR ANY A OCCUPANCY, 10,000 SQFT FOR B OCCUPANCY, AND 5000 SQFT FOR E OCCUPANCY)**
NUMBER OF OCCUPANTS	128	**(MAXIMUM 300 FOR ANY A OCCUPANCY, 500 FOR B OCCUPANCY, AND 250 FOR E OCCUPANCY)**

STEP 2 DESIGN OPTIONS

ROOF DECK	[ ] MULTI-RIB (MR)	**DEFAULT**, WEIGHT 1.2 PSF
	[X] STANDING SEAM (SS)	WEIGHT 1.8 PSF
GUTTERS	[ ] NO	**DEFAULT**
	[X] YES	SEE RAM7.0 FOR DETAILS
ELECTRICAL ACCESS	[ ] NO	**DEFAULT**
	[X] YES	SEE RAM7.1 FOR DETAILS
CLEAR HEIGHT	[ ] 8'	**DEFAULT**
	[X] 10' OTHER	10' MAX

STEP 3 SEISMIC ACCELERATION

Ss 0 . 7 8 0 **(g)**
S1 0 . 2 6 0 **(g)**

STEP 4 SEISMIC REGIONS

0.000 < Ss <= 1.406 S1 <= 0.844	[X] WHITE	3.5 PSF MAX DEA LOAD
1.406 < Ss <= 2.063 S1 <= 1.070	[ ] GREEN	2.0 PSF MAX DEAD LOAD

STEP 5 TOTAL ROOF DEAD LOAD

ROOF DECK	1 . 8 PSF	SEE STEP 2' 'ROOF DECK FOR WEIGHTS
COLLATERAL	0 . 0 PSF	LIGHTING , FIRE SUPPRESSION, ETC.
TOTAL	1 . 8 PSF	ADD 'ROOF DECK' AND 'COLLATERAL'

STEP 6 LOAD SCENARIO

WHITE	TOTAL ROOF DEAD LAOD <= 3.5 PSF	[X] **LOAD SCENARIO 1**
GREEN	TOTAL ROOF DEAD LOAD < 2.0 PSF	[ ] **LOAD SCENARIO 2**

STEP 7 PC STRUCTURE

ROOF WIDTH <= 20	[ ] **RAM 20**
20 < ROOF WIDTH <= 30	[X] **RAM 30**

STEP 8 STRUCTURE SIZE

	RAM 20		RAM 30	
ROOF WIDTH	[ ] 20'	**DEFAULT**	[X] 30'	**DEFAULT**
	[ ] ________ OTHER	9' MIN; 20' MAX	[ ] ________ OTHER	20'-6" MIN; 30' MAX
ROOF LENGTH	[ ] 44'	2 BAYS	[ ] 44'	2 BAYS
	[ ] 64'	3 BAYS	[X] 64'	3 BAYS
	[ ] 84'	4 BAYS	[ ] 84'	4 BAYS
	[ ] ________ OTHER		[ ] ________ OTHER	

STEP 9 FOUNDATION TYPE

	RAM 20		RAM 30	
FOUNATION TYPE	[ ] SPREAD PAD	[ ] DRILLED PIER	[ ] SPREAD PAD	[X] DRILLED PIER

STEP 10 FOUNDATION SUMMARY

RAM 20		RAM 30	
[ ] LOAD SCENARIO 1 SPREAD PAD	[ ] LOAD SCENARIO 1 DRILLED PIER	[ ] LOAD SCENARIO 1 SPREAD PAD	[X] LOAD SCENARIO 1 DRILLED PIER
[ ] LOAD SCENARIO 2 SPREAD PAD	[ ] LOAD SCENARIO 2 DRILLED PIER	[ ] LOAD SCENARIO 2 SPREAD PAD	[ ] LOAD SCENARIO 2 DRILLED PIER

STEP 11 SHEET INDEX

BASE FRAME	RAM 20 SHEET INDEX				RAM 30 SHEET INDEX			
ROOF DECK	MR		SS		MR		SS	
FOUNDATION TYPE	SPREAD PAD	DRILLED PIER	SPREAD PAD	DRILLED PIER	SPREAD PAD	DRILLED PIER	SPREAD PAD	DRILLED PIER
SELECT ONE	[ ]	[ ]	[ ]	[ ]	[ ]	[ ]	[ ]	[X]
ORDER FORM	RAM1.0	RAM1.0	RAM1.0	RAM1.0	RAM1.0	RAM1.0	RAM1.0	RAM1.0
NOTES AND SPECIAL INSPECTIONS	RAM1.1	RAM1.1	RAM1.1	RAM1.1	RAM1.1	RAM1.1	RAM1.1	RAM1.1
FOUNDATION PLAN	RAM2.0	RAM2.1	RAM2.0	RAM2.1	RAM2.2	RAM2.3	RAM2.2	RAM2.3
FRAMING PLAN	RAM3.0	RAM3.0	RAM3.0	RAM3.0	RAM3.1	RAM3.1	RAM3.1	RAM3.1
FRAME CONNECTION DETAILS	RAM4.0	RAM4.0	RAM4.0	RAM4.0	RAM4.2	RAM4.2	RAM4.2	RAM4.2
SECTION DETAILS	RAM4.1	RAM4.1	RAM4.1	RAM4.1	RAM4.3	RAM4.3	RAM4.3	RAM4.3
ARCHITECTURAL VIEWS	RAM5.0	RAM5.0	RAM5.0	RAM5.0	RAM5.1	RAM5.1	RAM5.1	RAM5.1
ROOF CONNECTION DETAILS	RAM6.0	RAM6.0	RAM6.1	RAM6.1	RAM6.0	RAM6.0	RAM6.1	RAM6.1
MISC DESIGN OPTIONS	RAM7.0	RAM7.0	RAM7.0	RAM7.0	RAM7.0	RAM7.0	RAM7.0	RAM7.0
ELETRICAL CUTOUTS	RAM7.1	RAM7.1	RAM7.1	RAM7.1	RAM7.1	RAM7.1	RAM7.1	RAM7.1

STEP 12 MULTIPLE STRUCTURES

	ROOF WIDTH X LENGTH	QTY
MULTIPLE STRUCTURES		

STEP 1: GENERAL PROJECT INFORMATION

- IDENTIFY PROJECT NAME AND SCHOOL DISTRICT
- IDENTIFY USE AND OCCUPANCY CLASSIFICATION
  - THE USE AND OCCUPANCY DETERMINE THE MAXIMUM SQUARE FOOTAGE OF THE STRUCTURE
  - THE MAXIMUM SQUARE FOOTAGE IS ALSO LIMITED BY THE NUMBER OF OCCUPANTS
- IDENTIFY THE OCCUPANT LOAD PER TABLE 1004.5 IN THE CBC
- IDENTIFY TOTAL ROOF AREA WHICH SHALL NOT EXCEED ALLOWABLE AREA PER TABLE 506.2 IN THE CBC.
- IDENTIFY EXPECTED NUMBER OF OCCUPANTS BASED ON THE ESTIMATED OCCUPANT LOAD
  - TOTAL ROOF AREA DIVIDED BY OCCUPANT LOAD CAN DETERMINE NUMBER OF OCCUPANTS

STEP 2: DESIGN OPTIONS

- SELECT ROOF DECK FOR YOUR PROJECT
  - "MR" REPRESENTS MCELROY METAL "MULTI-RIB" ROOF DECK
  - "SS" REPRESENTS MCELROY METAL "MEDALLION-LOK" 16" STANDING SEAM ROOF DECK
- SELECT WHETHER GUTTERS AND DOWNSPOUTS FROM POLIGON IS NEEDED FOR YOUR PROJECT
  - IF "YES", THEN INCLUDE SHEET RAM7.0 IN THE DRAWING SET
- SELECT WHETHER ELECTRICAL CUTOUTS ARE NEEDED FOR YOUR PROJECT
  - SHEET RAM7.0 SHOWS ELECTRICAL CUTOUT SIZE AND LOCATION CUTOUTS IN COLUMNS
  - SHEET RAM7.1 HAS INSTRUCTIONS AND SHEET TO IDENTIFY WHICH COLUMNS
  - SHEET RAM7.1 MUST BE FILLED OUT IN THE SUBMITTAL SET APPROVED BY DSA
  - IF NOTHING IS FILLED IN ON RAM7.1, POLIGON WILL ASSUME CUTOTUS ARE ONLY IN COLUMN A1 (SEE 'FRAMING PLAN' FOR REFERENCE)
- SELECT CLEAR HEIGHT (SEE 'ARCHITECTURAL VIEWS' SHEET FOR REFERENCE)
  - MIN 7'-1"; MAX 10'-0"
- **IF NOTHING IS SELECTED, POLIGON WILL ASSUME THE DEFAULT FOR EACH DESIGN OPTION**

STEP 3: IDENTIFY THE Ss & S1 ACCELERATION (g) FOR YOUR PROJECT AND GEOTECHNICAL INFORMATION

- Ss & S1 VALUE DETERMINES THE REQUIRED SEISMIC DESIGN FORCES
- Ss & S1 VALUE DEPENDS ON PROJECT'S GEOGRAPHICAL LOCATION
  - FIND Ss & S1 VALUES FOR YOUR PROJECT IN THE SITE SPECIFIC GEOTECHNICAL REPORT
  - FIND Ss & S1 VALUES FOR YOUR PROJECT USING (https://asce7hazardtool.online/)
- THIS PC IS NOT APPROVED FOR Ss VALUES GREATER THAN 2.063 (CONTACT POLIGON FOR ADDITIONAL OPTIONS)

STEP 4: IDENTIFY THE SEISMIC REGION FOR YOUR PROJECT

- THE REGIONS ARE DEPENDANT ON THE Ss & S1 VALUE DETERMINED IN STEP 3
- THE SEISMIC REGION DICTATES THE MAXIMUM DEAD LOAD PERMITTED (SEE TABLE TO THE LEFT)

STEP 5: IDENTIFY THE ROOF DEAD LOAD FOR YOUR PROJECT

- THE ROOF DECK DEAD LOAD WILL ALWAYS BE INCLUDED
- THE COLLATERAL LOAD REPRESENTS ADDITIONAL LOAD THAT CAN BE SUPPORTED BY THE FRAME
- TOTAL ROOF DEAD LOAD MUST BE LESS THAN OR EQUAL TO THE MAX DEAD LOAD SHOWN IN STEP 4
- CUT SHEETS OF ANY BOARDS, BOXES AND EQUIPMENT TO BE MOUNTED ON THE STRUCTURE, INCLUDING WEIGHTS AND DIMENSIONS ARE REQUIRED

STEP 6: IDENTIFY THE LOAD SCENARIO

- REFERENCE THE STEP 4 COLOR AND SELECT THE APPLICABLE LOAD SCENARIO
- LOAD SCENARIOS HAVE NO IMPACT ON FRAME DESIGN OR COST, BUT DO AFFECT FOUNDATION SIZE

STEP 7: IDENTIFY PC STRUCTURE

- ROOF WIDTHS UP TO 20' WIDE USE THE "RAM 20"
- ROOF WIDTHS UP TO 30' WIDE USE THE "RAM 30"
- THE 20' AND 30' WIDTHS ARE SUGGESTED BECAUSE THEY ARE THE MOST ECONOMICAL
- MAXIMUM WIDTH IS 30'; (SEE 'ARCHITECTURAL VIEWS' SHEET FOR REFERENCE)

STEP 8: IDENTIFY SITE SPECIFIC ROOF WIDTH AND LENGTH

- DO NOT EXCEED THE TOTAL ROOF AREA FROM STEP 1 (ROOF WIDTH MULTIPLIED BY ROOF LENGTH)

STEP 9: FOUNDATION TYPE

- SELECT A FOUNDATION BASED THE DESIRED FOUNDATION TYPE
- SELECT EITHER SPREAD PAD OR DRILLED PIER FOUNDATION PRIOR TO APPROVAL
- FOUNDATION TYPE IMPACTS CONSTRUCTION (TIMING, SEQUENCE, COST, ETC.)
- FOUNDATION TYPE IMPACTS ANCHOR BOLT LENGTH (NOT PROVIDED BY POLIGON)
- REVIEW OF SITE-SPECIFIC SOILS REPORT TO EVALUATE APPLICABILITY OF FOUNDATION OPTIONS AVAILABLE

STEP 10: FOUNDATION SUMMARY

- USE THE SELECTIONS FROM STEP 6 AND STEP 9 TO SELECT THE APPROPRIATE FOUNDATION

STEP 11: SELECT APPLICABLE SHEET INDEX FOR YOUR PROJECT

- IDENTIFY THE APPLICABLE SHEET INDEX
- INCLUDE APPLICABLE SHEETS WITH YOUR DSA SUBMITTAL
- EXCLUDE 'MISC DESIGN OPTIONS' SHEET FOR PROJECTS WITHOUT ELECTRICAL CUTOUTS OR GUTTERS
- EXCLUDE 'ELECTRICAL CUTOUTS' SHEET FOR PROJECTS WITHOUT ELECTRICAL CUTOUTS

STEP 12: MULTIPLE STRUCTURES WITH THE SAME PC#

- FILL IN ROOF LENGTH AND WIDTH OF STRUCTURES AS WELL AS QUANTITY
- UNO ON THE POLIGON DRAWINGS, POLIGON WILL ASSUME ALL DESIGN CRITERIA FOR EACH STRUCTURE IS THE SAME
- CONTACT POLIGON FOR FURTHER INFORMATION

SHEET INDEX

1	RAM1.0	ORDER FORM	11	RAM4.2	FRAME CONNECTION DETAILS - RAM 30
2	RAM1.1	NOTES AND SPECIAL INSPECTIONS	12	RAM4.3	SECTION DETAILS - RAM 30
3	RAM2.0	FOUNDATION PLAN SPREAD PAD - RAM 20	13	RAM5.0	ARCHITECTURAL VIEWS - RAM 20
4	RAM2.1	FOUNDATION PLAN DRILLED PIER - RAM 20	14	RAM5.1	ARCHITECTURAL VIEWS - RAM 30
5	RAM2.2	FOUNDATION PLAN SPREAD PAD - RAM 30	15	RAM6.0	ROOF CONNECTION DETAILS
6	RAM2.3	FOUNDATION PLAN DRILLED PIER - RAM 30	16	RAM6.1	ROOF CONNECTION DETAILS
7	RAM3.0	FRAMING PLAN - RAM 20	17	RAM7.0	MISC DESIGN OPTIONS
8	RAM3.1	FRAMING PLAN - RAM 30	18	RAM7.1	ELECTRICAL CUTOUTS
9	RAM4.0	FRAME CONNECTION DETAILS - RAM 20			
10	RAM4.1	SECTION DETAILS - RAM 20			
TOTAL SHEETS = 18					

ABBREVIATIONS:

ACI	AMERICAN CONCRETE INSTITUTE	MR	MULTI-RIB ROOF PANEL (MCELROY)
AISC	AMERICAN INSTITUTE OF STEEL CONSTRUCTION	NTS	NOT TO SCALE
ASM	ASSEMBLY (INTERNAL REFERENCE)	NO	NUMBER
ASTM	AMERICAN SOCIETY FOR TESTING AND MAT'LS	OC	ON CENTER
AWS	AMERICAN WELDING SOCIETY	OSHA	OCCUPATIONAL HEALTH AND SAFETY ADM.
CBC	CALIFORNIA BUILDING CODE	PCF	POUNDS PER CUBIC FOOT
CJP	COMPLETE JOINT PENETRATION	PD	POLIGON DRAWING
CLR	CLEAR	PJ	PRETENSIONED JOINT
DEG	DEGREE	PLCS	PLACES
DIA	DIAMETER	PLT	PLATE
DIM	DIMENSION	PSF	POUNDS PER SQUARE FOOT
DSA	DIVISION OF THE STATE ARCHITECT	PSI	POUNDS PER SQUARE INCH
EQ	EQUAL	QTY	QUANTITY
FT	FEET	REF	REFERENCE
GA	GAGE	SQ	SQUARE
IN	INCHES	SS	STANDING SEAM ROOF PANEL (MCELROY)
KSI	KIPS PER SQUARE INCH	TYP	TYPICAL
MAX	MAXIMUM	UNO	UNLESS NOTED OTHERWISE
MIN	MINIMUM	USGS	U.S. GEOLOGICAL SURVEY
MISC	MISCELLANEOUS	W/	WITH
MPH	MILES PER HOUR		

SPECIFICATIONS

PART 1 - GENERAL

1.1 STRUCTURE DESCRIPTION
A. STRUCTURE(S) BASED ON THE FOLLOWING PC DESIGN(S):
1. HIP ROOF (RAM)

1.2 DESIGN REQUIREMENTS
A. MEET THE DESIGN INTENT SHOWN ON THE PC DRAWINGS APPROVED FOR THIS PROJECT.
1. DESIGN CRITERIA
2. MEMBERS SIZES
3. HIDDEN BOLTED CONNECTIONS BETWEEN STRUCTURAL MEMBERS
4. COLUMN ANCHORAGE SHALL INCLUDE FOUR (4) BOLTS IN COMPLIANCE WITH OSHA 1926.755(A)(1).
5. NO FIELD WELDING PERMITTED
6. NO FIELD PAINTING PERMITTED
7. ROOF DIMENSIONS AND SLOPES
8. EXPOSED STEEL ROOF FASTENERS (IF APPLICABLE) POWDER COATED BY MANUFACTURER
9. ROOF DECK SPANS FROM PEAK TO EAVE AND PERMITS PROPER DRAINAGE WITHOUT DEBRIS BUILD-UP.

1.3 SUBMITTALS
A. DRAWINGS AND CALCULATIONS SEALED BY A PROFESSIONAL ENGINEER LICENSED IN THE APPROPRIATE STATE.
B. ONLY MANUFACTURERS THAT SUBMIT DRAWINGS AND CALCULATIONS PRIOR TO BID SHALL BE CONSIDERED.
C. MANUFACTURER MUST BE ABLE TO SUBMIT APPROPRIATE LABORATORY TESTS FOR THE FOLLOWING:
1. FRAME FINISH REQUIREMENTS LISTED IN PART 2 OF THIS SPECIFICATION.
2. CERTIFIED MILL TEST REPORTS FOR STRUCTURAL STEEL (DESCRIBING THE CHEMICAL AND PHYSICAL PROPERTIES).
3. CERTIFIED MILL TEST REPORTS FOR STRUCTURAL BOLTS.

1.4 TECHNICAL SUPPORT
A. MANUFACTURER MUST HAVE IN-HOUSE ENGINEERING DEPARTMENT AND A PROFESSIONAL ENGINEER LICENSED IN THE APPROPRIATE STATE TO ANSWER TECHNICAL QUESTIONS.

1.5 QUALITY ASSURANCE
A. GENERAL
1. FABRICATION PROCEDURES SHALL COMPLY WITH APPLICABLE CODES AND LOCAL REGULATIONS.
2. REQUIRED STRUCTURAL TESTS AND SPECIAL INSPECTIONS INCLUDED ON THE PROJECT DSA-103 FORM.
B. MANUFACTURER QUALIFICATIONS
1. MINIMUM (10) YEARS ENGINEERING AND FABRICATING PRE-ENGINEERED STRUCTURES
2. MANUFACTURER OWNED AND OPERATED POWDER COAT PAINT FINISH SYSTEM
3. ALL AWS CERTIFIED WELDERS
4. FULL-TIME PROFESSIONAL ENGINEER ON STAFF LICENSED IN THE APPROPRIATE STATE
5. FULL-TIME AWS CERTIFIED ASSOCIATE WELDING INSPECTOR ON STAFF
6. FULL-TIME QUALITY ASSURANCE MANAGER ON STAFF
7. FULL-TIME LEED AP ON STAFF
C. MANUFACTURER CERTIFICATIONS
1. PCI 4000 CERTIFICATION THROUGH POWDER COATING INSTITUTE (PCI)
2. AISC CERTIFIED FABRICATOR

1.6 MANUFACTURER WARRANTY
A. STRUCTURE MUST HAVE (10) YEAR LIMITED WARRANTY ON STEEL FRAME MEMBERS.
B. STRUCTURE MUST HAVE (10) YEAR LIMITED WARRANTY ON PAINT SYSTEM.
C. PASS THROUGH WARRANTY OF ROOFING MANUFACTURER SHALL BE PROVIDED UPON REQUEST.

PART 2 - PRODUCTS

2.1 MANUFACTURER
A. ACCEPTABLE MANUFACTURERS
1. POLIGON, A DIVISION OF PORTERCORP.
A. 4240 N 136TH AVE., HOLLAND, MI 49424; (616) 399-1963; WWW.POLIGON.COM .
I. FOR POLIGON STRUCTURES IN *NORTHERN CALIFORNIA*, THE LOCAL REPRESENTATIVE IS ALL ABOUT PLAY (WWW.PLAYGROUNDPROS.COM). EMAIL AAP@PLAYGROUNDPROS.COM OR CALL (916) 923-2180
II. FOR POLIGON STRUCTURES IN *SOUTHERN CALIFORNIA*, THE LOCAL REPRESENTATIVE IS MIRACLE PLAYGROUND SALES (MIRACLEPLAYGROUNDSALES.COM EMAIL SALES@MIRACLEPLAYGROUND.COM OR CALL (951) 695-4515
B. SUBSTITUTION LIMITATIONS
1. THE ENGINEERING FOR THIS STRUCTURE IS ONLY APPLICABLE IF POLIGON SUPPLIES THE MATERIAL.
2. IF THE CONTRACTOR ELECTS TO SUBSTITUTE A DIFFERENT STRUCTURE, THEY ARE RESPONSIBLE TO OBTAIN THE NECESSARY DSA APPROVAL WITH:
A. NO COST TO THE DISTRICT OR ARCHITECT
B. NO CHANGE TO THE CONSTRUCTION SCHEDULE
3. SUBSTITUTIONS MUST BE APPROVED A MINIMUM OF (10) DAYS BEFORE BID.
4. ALL APPROVED MANUFACTURERS SHALL BE NOTIFIED IN WRITING BEFORE THE BID DATE.
5. SUBSTITUTE MANUFACTURERS SHALL NOT BE ALLOWED TO BID WITHOUT WRITTEN NOTIFICATION.
6. SUBSTITUTE MANUFACTURERS MUST MEET "MANUFACTURER QUALIFICATIONS" LISTED IN PART 1 OF THIS SPECIFICATION.
7. SUBSTITUTE MANUFACTURERS MUST PROVIDE PROOF OF "MANUFACTURER CERTIFICATIONS" ABOVE.
8. SUBSTITUTE MANUFACTURERS MUST PROVIDE PAINT FINISH DESCRIBED IN "FRAME FINISH" BELOW.

2.2 FRAME
A. MATERIALS
1. ANCHOR BOLTS: SEE DRAWINGS FOR REQUIREMENTS. ANCHOR BOLTS NOT PROVIDED BY MANUFACTURER
2. STRUCTURAL STEEL: SEE DRAWINGS FOR REQUIREMENTS.
3. STRUCTURAL BOLTS: SEE DRAWINGS FOR REQUIREMENTS.
B. FINISH
1. FRAME FINISH: POLI-5000 POWDER COAT. NO FIELD PAINTING PERMITTED.
A. COMPONENTS SHALL BE CLEANED, PRE-TREATED, AND FINISHED AT A FACILITY OWNED AND DIRECTLY SUPERVISED BY THE MANUFACTURER.
B. COMPONENTS SHALL BE SHOT BLASTED TO SSPC-SP10 NEAR-WHITE BLAST CLEANING. SSPC-SP2 HAND TOOL CLEANING WILL NOT BE AN ACCEPTABLE ALTERNATIVE.
C. COMPONENTS SHALL BE PRETREATED IN A (3) STAGE IRON PHOSPHATE OR EQUAL WASHER.
D. COMPONENTS SHALL RECEIVE EPOXY PRIMER COAT FOR SUPERIOR CORROSION PROTECTION.
E. COMPONENTS SHALL RECEIVE TOP COAT OF SUPER DURABLE TGIC POWDER COAT.
F. FINISH SHALL NOT HAVE ANY VOC EMISSIONS.
G. MANUFACTURER SHALL BE ABLE TO PRODUCE DOCUMENTATION STATING SAMPLE PRODUCTION COMPONENTS HAVE BEEN TESTED TO MEET THE FOLLOWING:
I. SALT SPRAY RESISTANCE PER ASTM B 117/ ASTM D 1654 TO 10,000 HOURS WITH NO CREEP FROM SCRIBE LINE AND RATING OF 10.
II. HUMIDITY RESISTANCE PER ASTM D2247-02 TO 5,000 HOURS WITH NO LOSS OF ADHESION OR BLISTERING.
III. COLOR/UV RESISTANCE PER ASTM G154-04 TO 2,000 HOURS EXPOSURE, ALTERNATE CYCLES WITH RESULTS OF NO CHALKING, 75% COLOR RETENTION, COLOR VARIATION MAXIMUM 3.0 E VARIATION CIE FORMULA (BEFORE AND AFTER 2,000 HOURS EXPOSURE).
2. FRAME COLOR: DETERMINED BY DISTRICT.
C. FABRICATION
1. FABRICATE COMPONENTS TO PERMIT BOLTED CONNECTIONS ON SITE. NO FIELD WELDING PERMITTED.
2. LABEL EACH MEMBER WITH UNIQUE PART NUMBER TO STREAMLINE ERECTION.
3. WELDING REQUIREMENTS: SEE DRAWINGS FOR REQUIREMENTS.

2.3 ROOF
A. MATERIALS
1. ROOF MATERIAL: SEE DRAWINGS FOR REQUIREMENTS.
2. ROOF HARDWARE: SEE DRAWINGS FOR REQUIREMENTS.
B. FINISH
1. ROOF FINISH: KYNAR 500 HIGH-PERFORMANCE RESIN-BASED PAINT.
2. ROOF COLOR: DETERMINED BY OWNER.

2.4 MISCELLANEOUS
A. MATERIALS
1. CONCRETE MATERIAL: SEE DRAWINGS FOR REQUIREMENTS. CONCRETE NOT PROVIDED BY MANUFACTURER.

PART 3 - EXECUTION

3.1 STORAGE AND HANDLING
A. PROTECT MATERIAL AFTER DELIVERY FROM WEATHER, SUNLIGHT, AND DAMAGE.
B. ELEVATE MATERIAL TO ALLOW CIRCULATION AND REDUCE MOLD, FUNGI DECAY, AND INSECT INFESTATION.
C. HANDLE MATERIAL WITH PROTECTIVE STRAPS OR PADDED FORKLIFT. HANDLING MATERIAL WITH CHAIN OR CABLE WILL NOT BE ACCEPTED AND MAY VOID MANUFACTURER'S WARRANTY.
D. TO PREVENT MOISTURE DAMAGE TO ANY WOOD MATERIAL (IF APPLICABLE), KEEP WOOD PACKAGED BEFORE INSTALLATION AND COVER IMMEDIATELY WITH ANY SECONDARY ROOF MATERIAL.

3.2 ERECTION
A. INSTALL COMPONENTS ACCORDING TO MANUFACTURER'S INSTALLATION DRAWINGS AND THESE SPECIFICATIONS.
B. ANCHOR BOLT AND COLUMN LAYOUT IS CRITICAL.
C. COMPLY WITH SPECIFIC BOLTING INSTALLATION REQUIREMENTS PROVIDED ON DRAWINGS REQUIRING THE CONTRACTOR TO COORDINATE THIS PHASE OF CONSTRUCTION WITH THE SPECIAL BOLTING INSPECTOR AND THE INSPECTOR OF RECORD *PRIOR TO THE ERECTION OF THE FRAME.*
D. NO FIELD SLOTTING OR OPENING OF HOLES WILL BE ALLOWED. TOLERANCES ON STEEL STRUCTURAL MEMBERS ARE SET ACCORDING TO AISC CONSTRUCTION PRACTICES, FOLLOWED DURING FABRICATION, AND CANNOT BE INCREASED.
E. AFTER INSTALLATION, RESTORE DAMAGED SURFACES TO THE ORIGINAL CONDITION USING TOUCH-UP PAINT PROVIDED BY MANUFACTURER. IF THE ARCHITECT DOES NOT ACCEPT THAT, REPLACE DAMAGED MATERIAL AT NO COST TO THE DISTRICT.
F. COORDINATE AS REQUIRED WITH OTHER DISCIPLINES (ELECTRICAL, PLUMBING, ETC.)
G. COMPLY WITH ALL APPLICABLE OHSA REQUIREMENTS

3.3 REPAIR
A. DO NOT ATTEMPT ANY FIELD CHANGES TO THE STRUCTURE WITHOUT FIRST CONTACTING THE MANUFACTURER.

3.4 QUALITY CONTROL
A. TESTS AND INSPECTIONS DURING ERECTION ARE NOT REQUIRED BY THE MANUFACTURER, BUT MAY BE REQUIRED BY OTHERS.
B. THE PROJECT INSPECTOR, AND ENTIRE CONSTRUCTION OVERSIGHT PROCESS, SHALL COMPLY WITH DSA PR 13-01. DO NOT PROCEED UNTIL UNSATISFACTORY CONDITIONS HAVE BEEN CORRECTED.

STATE APPROVALS-SITE

IDENTIFICATION STAMP
DIV. OF THE STATE ARCHITECT
APP: 02-121836 INC:
REVIEWED FOR
SS [X] FLS [X] ACS [X]
DATE: 11/02/2023

4080 PLAZA GOLDORADO CIRCLE
SUITE B,
CAMERON PARK, CA 95682
530.677.5515

GHD

poligon
PORTER

REGISTERED PROFESSIONAL ENGINEER
JESSICA E. NAPIER
No. S5476
STRUCTURAL
STATE OF CALIFORNIA

STATE APPROVALS-PC

IDENTIFICATION STAMP
DIV. OF THE STATE ARCHITECT
APP: 02-121213 PC
REVIEWED FOR
SS [X] FLS [X] ACS [X] CG [ ]
DATE: 7/18/2023

PRE-CHECK (PC) DOCUMENT
CODE: 2022 CBC
A SEPARATE PROJECT APPLICATION FOR CONSTRUCTION IS REQUIRED.

ORDER FORM

HIP ROOF - RAM

RAM1.0

GENERAL:

1. GENERAL NOTES AND TYPICAL DETAILS SHALL APPLY TO ALL PARTS OF THE JOB EXCEPT WHERE THEY MAY CONFLICT WITH DETAILS AND NOTES ON OTHER SHEETS. WHERE CONDITIONS ARE NOT SPECIFICALLY INDICATED BUT ARE OF SIMILAR CHARACTER TO DETAILS SHOWN, SIMILAR DETAILS OF CONSTRUCTION SHALL BE USED SUBJECT TO REVIEW BY THE STRUCTURAL ENGINEER FOR THIS PROJECT.
2. WORK SHALL CONFORM TO THE REQUIREMENTS, AS AMENDED TO DATE, OF THE LATEST ADOPTED EDITION OF THE CBC, C.A.C. TITLE 24, AND ALL OTHER LOCAL, STATE AND FEDERAL REGULATIONS.
3. OMISSIONS OR CONFLICTS BETWEEN THE VARIOUS ELEMENTS OF THE WORKING DRAWINGS AND/OR SPECIFICATIONS SHALL BE BROUGHT TO THE ATTENTION OF THE STRUCTURAL ENGINEER FOR THIS PROJECT PRIOR TO PROCEEDING WITH ANY WORK INVOLVED.
4. THE CONTRACTOR SHALL BE RESPONSIBLE FOR COORDINATING THE WORK OF ALL TRADES AND SHALL CHECK ALL DIMENSIONS. ALL DISCREPANCIES SHALL BE CALLED TO THE ATTENTION OF THE STRUCTURAL ENGINEER FOR THIS PROJECT AND BE RESOLVED BEFORE PROCEEDING WITH THE WORK.
5. THESE CONSTRUCTION DRAWINGS AND SPECIFICATIONS REPRESENT THE FINISHED STRUCTURE AND DO NOT INDICATE THE METHOD OF CONSTRUCTION. THE CONTRACTOR SHALL SUPERVISE AND DIRECT THE WORK AND SHALL BE SOLELY RESPONSIBLE FOR CONSTRUCTION MEANS, METHODS, TECHNIQUES, SEQUENCES AND PROCEDURES, INCLUDING, BUT NOT LIMITED TO, BRACING, TEMPORARY SUPPORTS, AND SHORING. OBSERVATION VISITS TO THE SITE BY FIELD REPRESENTATIVES OF THE ARCHITECT/ENGINEER SHALL NOT INCLUDE INSPECTIONS OF THE PROTECTIVE MEASURES OR THE CONSTRUCTION PROCEDURES. ANY SUPPORT SERVICES PERFORMED BY THE ARCHITECT/ENGINEER DURING THE CONSTRUCTION SHALL BE DISTINGUISHED FROM CONSTRUCTION AND DETAILED INSPECTION SERVICES WHICH ARE FURNISHED BY OTHERS. THESE SUPPORT SERVICES PERFORMED BY THE ARCHITECT/ENGINEER, WHETHER OF MATERIAL OR WORK, ARE FOR THE PURPOSE OF ASSISTING IN QUALITY CONTROL AND IN ACHIEVING CONFORMANCE WITH CONTRACT DOCUMENTS, BUT DO NOT GUARANTEE CONSTRUCTION.
6. ASTM DESIGNATIONS AND ALL STANDARDS REFER TO THE LATEST AMENDMENTS.
7. CONFORM TO APPLICABLE CAL/OSHA CONSTRUCTION SAFETY REGULATIONS FOR ALL WORK PERFORMED DURING CONSTRUCTION. JOB SITE SAFETY IS STRICTLY THE RESPONSIBILITY OF THE CONTRACTOR AND NOT THE ARCHITECT/ENGINEER OR OWNER.
8. THE ENGINEER AND THEIR CONSULTANTS SHALL HAVE NO RESPONSIBILITY FOR THE DISCOVERY, HANDLING, REMOVAL OR DISPOSAL OF HAZARDOUS MATERIALS AT THE PROJECT SITE, INCLUDING BUT NOT LIMITED, TO ASBESTOS, ASBESTOS PRODUCTS, POLYCHLORINATED BIPHENYL (PCB) OR OTHER TOXIC SUBSTANCES.
9. SHOULD ANY CONDITIONS DEVELOP NOT COVERED BY THE CONTRACT DOCUMENTS, OR IF A CHANGE IN THE SCOPE OF WORK IS PROPOSED, A CONSTRUCTION CHANGE DOCUMENT DETAILING AND SPECIFYING THE REQUIRED CHANGE(S) SHALL BE SUBMITTED TO AND APPROVED BY DSA BEFORE PROCEEDING WITH THE WORK.
10. THE SCHOOL DISTRICT'S INSPECTOR OF RECORD SHALL INSPECT AND APPROVE THE ERECTED FRAME PRIOR TO ROOF INSTALLATION.
11. SEE REQUIREMENTS FOR LOCATION IN ANY FIRE HAZARD SEVERITY ZONE FOR WILDLAND URBAN INTERFACE AREAS (WUI) AS SPECIFIED IN THE APPLICABLE VERSION OF THE CALIFORNIA BUILDING CODE. PROVIDE PROTECTION AND DETAILS OF ALL AREAS COMPLYING WITH THE WUI REQUIRMENTS.
12. LOCATING THIS STRUCTURE CLOSER THAN 20 FEET TO OTHER STRUCTURES MAY AFFECT THE ALLOWABLE AREA FOR THE EXISTING CONSTRUCTION PER THE APPLICABLE VERSION OF THE CALIFORNIA BUILDING CODE.
13. VIEWS AND DETAILS ARE NOT DRAWN TO SCALE (UNLESS NOTED OTHERWISE). DO NOT SCALE THESE DRAWINGS.
14. OTHER SITE SPECIFIC ITEMS MAY BE REQUIRED.
15. WHEN A SITE-SPECIFIC PROJECT IS LOCATED IN A FLOOD ZONE OTHER THAN ZONE X, A LETTER STAMPED AND SIGNED FROM A SOILS ENGINEEER IS NEEDED TO VALIDATE THE ALLOWABLE SOIL VALUES SPECIFIED IN THE PC ARE STILL APPLICABLE.

STRUCTURAL AND MISCELLANEOUS STEEL:

1. ALL STRUCTURAL STEEL SHALL BE DETAILED, FABRICATED AND ERECTED IN ACCORDANCE WITH THE AMERICAN INSTITUTE OF STEEL CONSTRUCTION (AISC) 360 - 16 AND 303-16 MANUAL REFERENCED BY THE 2022 EDITION OF THE CALIFORNIA BUILDING CODE.
2. PIPE SECTIONS SHALL CONFORM TO ASTM A53, Fy = 35 ksi, GRADE B UNLESS NOTED OTHERWISE.
3. STRUCTURAL TUBING (HSS SHAPES) SHALL CONFORM TO ASTM A500, GRADE B (OR HIGHER), Fy = 46 KSI.
4. IF MATERIAL AVAILABILITY IS LIMITED, MEMBER THICKNESSES CAN BE INCREASED BEYOND WHAT IS SHOWN IN THESE DRAWINGS (MAXIMUM INCREASE OF 1/8").
5. ALL CHANNELS, ANGLES, PLATES AND MISC. STEEL SHALL CONFORM TO ASTM A36, Fy = 36 KSI.
6. ALL COLD FORM STEEL SHALL CONFORM TO ASTM A653, CS = TYPE B, Fy = 50 KSI.
7. STRUCTURAL STEEL AND DECK SHALL BE IDENTIFIED FOR CONFORMITY PER CBC 2202A.1.
8. ROOF DECK SHALL HAVE KYNAR 5000 METAL COATING.
9. ROOF DECK SHALL CONFORM TO ATSM A792, Fy = 50 KSI.
10. MR ROOF SCREWS MEET ASTM A510 WITH A HEAD DIMENSION OF 0.31" (FLAT-TO-FLAT) AND INTEGRAL WASHER DIMENSION OF 0.58" (OUTSIDE DIAMETER).
11. SS ROOF SCREWS MEET ASTM A510 WITH A HEAD DIMENSION OF 0.437" (OUTSIDE DIAMETER).

WELDING:

1. ALL WELDING SHALL COMPLY WITH AWS D1.1 SPECIFICATIONS AND SHALL BE DONE BY AWS QUALIFIED WELDERS CERTIFIED FOR THE TYPE OF WELDING TO BE PERFORMED.
2. ALL WELDING SHALL BE DONE BY GAS METAL ARC PROCESS WITH E70XX ELECTRODES. FLUX CORE ARC WELD SHALL CONFORM TO CHARPY NOTCH TOUGHNESS RATING OF 20 ft-lb @ (O° F).
3. ALL WELDING SHALL BE DONE IN THE SHOP WITH REQUIRED INSPECTION, PRE-APPROVED BY DSA, TO ENSURE PROPER MATERIAL ID AND WELDING.
4. WELD FILLER METAL MANUFACTURER SHALL PROVIDE WRITTEN CERTIFICATION OF COMPLIANCE WITH CODE AND SPECIFICATIONS.

BOLTING:

1. ALL BOLTS SHOWN ON THESE DRAWINGS ARE ASTM F3125 (A325 TYPE 1) HIGH STRENGTH BOLTS (UNO) AND SHALL BE HOT DIPPED GALVANIZED PER ASTM F2329.
2. HIGH STRENGTH BOLTS SHALL BE SAMPLED AND TESTED IN COMPLANCE WITH CBC 2213A.1.
3. BEFORE ERECTING THE FRAME, VERIFY ALL BOLTS AND NUTS ARE CLEAN OF DEBRIS AND BURRS - INCLUDING THE HARDWARE ALREADY FASTENED INSIDE THE MEMBERS. CHASING SOME OF THE BOLTS AND NUTS MAY BE REQUIRED.
4. ANCHOR BOLTS (HEAVY HEX HEAD, ASTM F1554, GRADE 55) SHALL BE HOT DIPPED GALVANIZED PER ASTM F2329. ANCHOR BOLTS MAY BE HEADED OR THREADED WITH A NUT THAT IS PREVENTED FROM ROTATING.
5. HIGH STRENGTH NUTS SHALL CONFORM TO ASTM A563 AND SHALL BE GALVANIZED PER ASTM F2329.
6. HIGH STRENGTH WASHERS SHALL CONFORM TO ASTM F436 AND SHALL BE GALVANIZED PER ASTM F2329.
7. THE BOLTING INSTALLATION REQUIREMENTS OUTLINED BELOW ARE CRITICAL TO THE STRUCTURE'S DESIGN AND PERFORMANCE. **THE INSTALLER IS REQUIRED TO COORDINATE THIS PHASE OF CONSTRUCTION WITH THE SPECIAL BOLTING INSPECTOR AND THE INSPECTOR OF RECORD PRIOR TO THE ERECTION OF THE FRAME**. ALL BOLTS SHALL BE INSTALLED AND INSPECTED PER THE APPLICABLE VERSION OF AISC'S "SPECIFICATION FOR STRUCTURAL JOINTS USING HIGH-STRENGTH BOLTS", CBC 1705A.2.1; AISC 341-16 J7; AISC 360-16 N5.6.

   A. PRETENSIONED JOINTS (IDENTIFIED ON THE FRAME CONNECTION DETAILS WITH A "PJ REQUIRED") MUST BE INSTALLED AND INSPECTED TO MEET ONE OF FOLLOWING REQUIREMENTS:

      1. TURN-OF-NUT PRETENSIONING
      2. CALIBRATED WRENCH PRENTENSIONING
      3. DIRECT-TENSION-INDICATOR PRETENSIONING (CONTRACTOR RESPONSIBLE FOR PURCHASE OF REQUIRED WASHERS)

   B. ALL OTHER JOINTS MUST BE INSTALLED AND INSPECTED TO MEET THE REQUIREMENTS OF SNUG-TIGHTENED JOINTS. **NOTE TO INSTALLER AND INSPECTOR(S): THE SNUG-TIGHT CONDITION EXISTS, IN PART, WHEN ALL THE BOLTS IN THE JOINT HAVE BEEN TIGHTENED SUFFICIENTLY TO PREVENT THE REMOVAL OF THE NUTS WITHOUT THE USE OF A WRENCH.**

   THE CONTRACTOR, SPECIAL BOLTING INSPECTOR AND THE INSPECTOR OF RECORD MUST ALL AGREE ON WHICH APPROACH WILL BE USED TO PRETENSION THE BOLTS. THE CONTRACTOR IS RESPONSIBLE FOR DOCUMENTING THE APPROACH AGREED TO BY ALL PARTIES LISTED ABOVE.

FOUNDATIONS:

1. ALLOWABLE SOIL PRESSURES ASSUME CLASS 5 SOIL CLASSIFICATION PER 2022 CBC TABLE 1806A. 2.
2. FILL AND BACKFILL SHALL BE COMPACTED TO 95% OF MAX. DENSITY IN ACCORDANCE WITH ASTM TEST METHOD D1557. FLOODING NOT PERMITTED.
3. THE CONTRACTOR SHALL BE RESPONSIBLE FOR ALL SHORING, ETC. NECCESSARY TO SUPPORT CUT AND/OR FILL BANKS DURING EXCAVATION, AND FORMING AND PLACEMENT OF CONCRETE.
4. STRUCTURES SHALL BE SETBACK FROM ADAJCENT SLOPES TO PROVIDE FIRM MATERIAL FOR EMBEDMENT AND FOR PROTECTION FROM SLOPE DRAINAGE, EROSION, AND SHALLOW FAILURES.

   A. BOTTOM OF ASCENDING SLOPE: THE SMALLER OF HALF THE HEIGHT OF THE SLOPE AND 15FT MEASURED FROM THE FACE OF THE STRUCTURE TO THE TOE OF THE SLOPE
   B. TOP OF DECENDING SLOPE: THE SMALLER OF A THIRD OF THE HEIGHT OF THE SLOPE AND 40 FT MEASURED FROM THE FACE OF THE FOOTING TO THE TOP OF THE SLOPE

   ALTERNATE SETBACKS ARE PERMITTED, SUBJECT FOR APPROVAL. A GEOTECHNICAL INVESTIGATION MAY BE REQUIRED.
5. STRUCTURES PLACED ON LIQUIFIABLE SOILS OR SITE CLASS F MAY NOT BE SUBMITTED FOR AN OVER THE COUNTER REVIEW.

CONCRETE:

1. MIX DESIGN REQUIREMENTS: (NORMAL WEIGHT CONCRETE)

MINIMUM STRENGTH f'c (28 DAYS)	EXPOSURE CATEGORY	W/C RATIO MAXIMUM)	SLUMP (± 1")	UNIT WEIGHT (NORMAL WEIGHT)
5000 PSI	F3, S3, W2, C2	0.4	4"	150 PCF

2. CHANGES TO THE MIX DESIGN MUST BE APPROVED BY THE ENGINEER OR ARCHITECT OF RECORD AND DSA
3. AGGREGATES SHALL CONFORM TO ASTM C33. MAX AGGREGATE SIZE = 1".
4. CEMENT SHALL CONFORM TO ASTM C150 (TYPE V) WITH A MAXIMUM EXPANSION OF 0.040%, FOR SULFATE RESISTANCE.
5. ADMIXTURES CONTAINING CALCIUM CHLORIDE ARE PROHIBITED.
6. CONCRETE EXPOSED TO FREEZING-AND-THAWING CYCLES SHALL BE AIR ENTRAINED PER ACI 318-19 SECTION 19.3.3.
7. CONCRETE SHALL BE MAINTAINED IN A MOIST CONDITION FOR A MINIMUM OF FIVE DAYS AFTER PLACEMENT. ALTERNATE METHODS WILL BE APPROVED IF SATISFACTORY PERFORMANCE CAN BE ASSURED.
8. CONCRETE SHALL NOT FREE FALL MORE THAN FIVE FEET.
9. CONCRETE SHALL BE PROPORTIONED PER ACI 318-19 26.4.
10. CONCRETE SHALL BE TESTED PER CBC 1910A.1, 1705A.3, AND ACI 318-19 26.13. BATCH PLANT INSPECTION NOT REQUIRED. CONTRACTOR SHALL IMPLEMENT WEIGHTMASTER AND BATCH TICKET REQUIREMENTS OF CBC 1705A.3.3.1.

REINFORCING STEEL:

1. REINFORCING STEEL SHALL BE DEFORMED STEEL CONFORMING TO THE REQUIREMENTS OF ASTM A615, (DEFORMATIONS SHALL BE IN ACCORDANCE WITH ASTM A305) AS FOLLOWS:
   GR 60: (#4 BARS AND LARGER)
   GR 40: (#3 BARS)
2. DETAILING, FABRICATION, AND ERECTION OF REINFORCING BARS SHALL CONFORM TO THE ACI "MANUAL OF STANDARD PRACTICE FOR DETAILING REINFORCING CONCRETE STRUCTURES."
3. MIN. COVER FOR CAST-IN-PLACE CONCRETE SHALL BE AS FOLLOWS:

   A. CAST AGAINST EARTH.. 3"
   B. CAST AGAINST FORM BELOW GRADE..................... 2"
   C. FORMED SLABS (#11 BAR & SMALLER).................... 3/4"
   D. SLABS ON GRADE (FROM TOP OF SLAB).................. 1"
   E. COLUMNS AND BEAMS (MAIN BARS)...................... 2"
   F. WALLS EXPOSED TO WEATHER (#6-#18 BARS)......... 2"
      (#5 & SMALLER)......... 11/2"
   G. NOT EXPOSED TO WEATHER (#11 & SMALLER)........ 3/4"

4. BARS SHALL BE CLEAN OF RUST, GREASE OR OTHER MATERIAL LIKELY TO IMPAIR BOND. BENDS SHALL BE MADE COLD.
5. FOR #6 BARS AND SMALLER, REINFORCING SHALL BE LAP SPLICED 45 BAR DIA MINIMUM IN CONCRETE. FOR #7 BARS AND LARGER, REINFORCING SHALL BE LAP SPLICED 55 BAR DIAMETERS MINIMUM IN CONCRETE. ALL LAP SPLICES MUST COMPLY WITH ACI 318-19.
6. PRIOR TO PLACING OF CONCRETE, REINFORCING STEEL AND EMBEDDED ITEMS SHALL BE WELL SECURED IN POSITION.
7. WELDING OF REINFORCING IS NOT ALLOWED
8. REINFORCING STEEL SHALL BE SAMPLED AND TESTED PER CBC 1910A.2.

POWDER COATED AND EPOXY PRIMED FINISH:

1. ENTIRE POWDER COATING PROCESS COMPLETED IN SAME FACILITY AS STEEL FABRICATION.
2. ALL CARBON STEEL MEMBERS (COLUMNS, BEAMS, PLATES, ETC.) PAINTED WITH PRIME COAT PER THE "AISC CODE OF STANDARD PRACTICE" AND THE "AISC SPECIFICATION SECTION M3" (UNLESS NOTED OTHERWISE).
3. PARTS PRETREATED IN A 3 STAGE IRON PHOSPHATE WASHER (OR EQUAL).
4. EPOXY PRIMER POWDER COAT APPLIED TO PARTS FOR SUPERIOR CORROSION PROTECTION.
5. TOP POWDER COAT OF SUPER DURABLE TGIC (COLOR SELECTED FROM MANUFACTURER'S STANDARD OPTIONS OR CUSTOM COLOR).
6. SAMPLE PRODUCTION PARTS TESTED TO MEET THE FOLLOWING CRITERIA:
   A. SALT SPRAY RESISTANCE PER ASTM B 117/ ASTM D 1654
      1. 10000 HOURS WITH NO CREEP FROM SCRIBE LINE AND RATING OF 10
   B. HUMIDITY RESISTANCE PER ASTM D2247-02
      1. 5000 HOURS WITH NO LOSS OF ADHESION OR BLISTERING
   C. COLOR/UV RESISTANCE PER ASTM G154-04
      1. 2000 HOURS EXPOSURE ALTERNATE CYCLES WITH NO CHALKING, 75% COLOR RETENTION, AND COLOR VARIATION MAXIMUM 3.0 E VARIATION CIE FORMULA (BEFORE AND AFTER 2000 HOURS EXPOSURE

CONSTRUCTION NOTES

1. A DSA-CERTIFIED CLASS 2 INSPECTOR IS REQUIRED FOR THIS PROJECT.
2. CHANGES TO THE APPROVED DRAWINGS AND SPECIFICATIONS SHALL BE MADE BY ADDENDA OR CONSTRUCTION CHANGE DOCUMENT (CCD) APPROVED BY DSA, AS REQURIED BY SECTION 4-338, PART 1, TITLE 24 CCR AND DSA IR A-6.
3. A "DSA-CERTIFIED" PROJECT INSPECTOR EMPLOYED BY THE OWNER (E.G. DISTRICT, ETC.) AND APPROVED BY DSA SHALL PROVIDE CONTINUOUS INSPECTION OF WORK. THE DUTIES OF THE INSPECTOR ARE DEFINED IN SECTION 4-342, PART 1, TITLE 24, CCR.
4. A DSA ACCEPTED TESTING LABORATORY DIRECTLY EMPLOYED BY THE OWNER (E.G. DISTRICT, ETC.) SHALL CONDUCT ALL THE REQUIRED TEST AND INSPECTIONS FOR THE PROJECT.

NOTICE OF DISCLAIMER FOR STRUCTURAL ENGINEER RESPONIBILITY

1. FOR THE SITE-SPECIFIC PROJECT, NEITHER POLIGON OR GHD ARE THE DESIGN PROFESSIONAL IN GENERAL RESPONSIBLE CHARGE.
2. FOR THE SITE-SPECIFIC PROJECT, GHD AND POLIGON'S RESPONSIBILITY IS LIMITED TO THE PREPARATION OF THE PLANS AND SPECIFICATIONS FOR THE STRUCTURES OF THIS PC ONLY.
3. STRUCTURAL OBSERVATION OF CONSTRUCTION IS SPECIFICALLY EXCLUDED FROM GHD AND POLIGON'S RESPONSIBILITY FOR THE SITE-SPECIFIC PROJECT.
4. ALL CONSTRUCTION ACTIVITIES RELATED TO STRUCTURAL ENGINEERING MAY BE DELEGATED TO A QUALIFIED ENGINEER BY THE DESIGN PROFESSIONAL IN GENERAL RESPONSIBLE CHARGE. THESE ACTIVITIES INCLUDE, BUT ARE NOT LIMITED TO, APPROVAL OF INSPECTOR QUALIFICATIONS, STRUCTURAL OBSERVATIONS OF CONSTRUCTION, REVIEW OF INSPECTIONS REPORTS, AND SIGNING OFF ON THE VERIFIED REPORT FOR COMPLETED WORK.
5. POLIGON WILL BE RESPONSIBLE FOR RESPONDING TO QUESTIONS PERTAINING TO THE PLANS AND SPECIFICATIONS FOR THE STRUCTURES OF THIS PC WHICH ARISE DURING PLAN REVIEW AND CONSTRUCTION.

SPECIAL INSPECTION NOTES:

1. THE PROJECT INSPECTOR AND TESTING AGENCY SHALL BE SELECTED BY THE SCHOOL DISTRICT AND APPROVED BY DSA AND THE ARCHITECT OF RECORD.
2. COSTS OF THE PROJECT INSPECTOR AND THE TESTING AGENCY SHALL BE BORN BY THE SCHOOL DISTRICT.
3. THE PROJECT INSPECTOR, AND ENTIRE CONSTRUCTION OVERSIGHT PROCESS, SHALL COMPLY WITH DSA PR 13-01.
4. ON APPROVED PC DRAWINGS, THE STATEMENT OF STRUCTURAL TESTS AND SPECIAL INSPECTIONS (FORM DSA-103) BELOW IS ONLY AN EXAMPLE. ON APPROVED PC DRAWINGS, THE EXAMPLE FORM DSA-103 MUST BE CROSSED OUT BEFORE THE PC DRAWINGS CAN BE APPROVED AS PART OF A SITE-SPECIFIC (OR STOCKPILE) PROJECT SO THEY WILL NOT CONFLICT WITH THE OFFICIAL FORM DSA-103 FOR THE PROJECT.

DSA 103-22: LISTING OF STRUCTURAL TESTS & SPECIAL INSPECTIONS, 2022 CBC

Application Number:	**School Name:**	**School District:**
DSA File Number:	**Increment Number:**	**Date Submitted:**

2022 CBC

IMPORTANT: This form is only a summary list of structural tests and some of the special inspections required for the project. Generally, the structural tests and special inspections noted on this form are those that will be performed by the Geotechnical Engineer of Record, Laboratory of Record, or Special Inspector. The actual complete test and inspection program must be performed as detailed on the DSA approved documents. The appendix at the bottom of this form identifies work NOT subject to DSA requirements for special inspection or structural testing. The project inspector is responsible for providing inspection of all facets of construction, including but not limited to, special inspections not listed on this form such as structural wood framing, high-load wood diaphragms, cold-formed steel framing, anchorage of non-structural components, etc., per Title 24, Part 2, Chapter 17A (2022 CBC).

***NOTE:** Undefined section and table references found in this document are from the CBC, or California Building Code.

KEY TO COLUMNS

1. TYPE	2. PERFORMED BY
Continuous – Indicates that a continuous special inspection is required **Periodic** – Indicates that a periodic special inspection is required **Test** – Indicates that a test is required	**GE** – Indicates that the special inspection shall be performed by a registered geotechnical engineer or his or her authorized representative. **LOR** – Indicates that the test or special inspection shall be performed by a testing laboratory accepted in the DSA Laboratory Evaluation and Acceptance (LEA) Program. See CAC Section 4-335. **PI** – Indicates that the special inspection may be performed by a project inspector when specifically approved by DSA. **SI** – Indicates that the special inspection shall be performed by an appropriately qualified/approved special inspector.

S1. GENERAL:

	Test or Special Inspection	Type	Performed By	Code References and Notes
☑	**a.** Verify that: • Site has been prepared properly prior to placement of controlled fill and/or excavations for foundations. • Foundation excavations are extended to proper depth and have reached proper material. • Materials below footings are adequate to achieve the design bearing capacity.	See Notes	PI	Refer to specific items identified in the Appendix listing exemptions for limitations. Placement of controlled fill exceeding 12" depth under foundations is not permitted without a geotechnical report.

S2. SOIL COMPACTION AND FILL:

	Test or Special Inspection	Type	Performed By	Code References and Notes
☑	**a.** Verify use of proper materials, densities and inspect lift thicknesses, placement and compaction during placement of fill.	Continuous	LOR*	* Under the supervision of a geotechnical engineer or LOR's engineering manager. Refer to specific items identified in the Appendix listing exemptions for limitations.
☑	**b.** Compaction testing.	Test	LOR*	* Under the supervision of a geotechnical engineer or LOR's engineering manager. Refer to specific items identified in the Appendix listing exemptions for limitations.

S4. CAST-IN-PLACE DEEP FOUNDATIONS (PIERS):

	Test or Special Inspection	Type	Performed By	Code References and Notes
☑	**a.** Inspect drilling operations and maintain complete and accurate records for each pier.	Continuous	PI	Continuous inspection to be provided by project inspector. Refer to specific items identified in the Appendix listing exemptions for limitations.
☑	**b.** Verify pier locations, diameters, plumbness, and lengths. Record concrete or grout volumes.	Continuous	PI	Continuous inspection to be provided by project inspector. Refer to specific items identified in the Appendix listing exemptions for limitations.
☑	**c.** Concrete piers.	Provide tests and inspections per CONCRETE section below.		

C1. CAST-IN-PLACE CONCRETE

	Test or Special Inspection	Type	Performed By	Code References and Notes
☑	**a.** Verify use of required design mix.	Periodic	SI	**Table 1705A.3 Item 5, 1910A.1.**
☑	**b.** Identifiy, sample, and test reinforcing steel.	Test	LOR	**1910A.2;** ACI 318-19 Ch. 20 and Section 26.6.1.2; DSA IR 17-10. (See Appendix (end of this form) for exemptions.)
☑	**c.** During concrete placement, fabricate specimens for strength tests, perform slump and air content tests, and determine the temperature of the concrete.	Test	LOR	**Table 1705A.3 Item 6**; ACI 318-19 Sections 26.5 & 26.12.
☑	**d.** Test concrete (f'_c).	Test	LOR	**1905A.1.17;** ACI 318-19 Section 26.12.
☑	**e.** Batch plan inspection:	See Notes	SI	Default of **'Continuous'** per **1705A.3.3**. If approved by DSA, batch plant inspection may be reduced to **'Periodic'** subject to requirements in Section **1705.A.3.3.1**, or eliminated per **1705A.3.3.2**. See IR 17-13. (See Appendix (end of this form) for exemptions.)

S/A1. STRUCTURAL STEEL, COLD-FORMED STEEL AND ALUMINUM USED FOR STRUCTURAL PURPOSES

	Test or Special Inspection	Type	Performed By	Code References and Notes
☑	**a.** Verify identification of all materials and: • Mill certificates indicate material properties that comply with requirements. • Material sizes, types and grades comply with requirements.	Periodic	*	**Table 1705A.2.1 Item 3a–3c.** 2202A.1**;** AISI S100-20 Section A3.1 & A3.2, AISI S240-20 Section A3 & A5, AISI S220-20 Sections A4 & A6. * By special inspector or qualified technician when performed off-site.
☑	**b.** Test unidentified materials	Test	LOR	**2202A.1.**
☑	**c.** Examine seam welds of HSS shapes	Periodic	SI	DSA IR 17-3.
☑	**d.** Verify and document steel fabrication per DSA-approved construction documents.	Periodic	SI	Not applicable to cold-formed steel light-frame construction, except for trusses (**1705A.2.4**).

S/A2. HIGH-STRENGTH BOLTS:

	Test or Special Inspection	Type	Performed By	Code References and Notes
☑	**a.** Verify identification markings and manufacturer's certificates of compliance conform to ASTM standards specified in the DSA-approved documents.	Periodic	SI	**Table 1705A.2.1 Items 1a & 1b, 2202A.1;** AISC 360-16 Section A3.3, J3.1, and N3.2; RCSC 2014 Section 1.5 & 2.1; DSA IR 17-8 & DSA IR 17-9.
☑	**b.** Test high-strength bolts, nuts and washers.	Test	LOR	**Table 1705A.2.1 Item 1c, 2213A.1**; RCSC 2014 Section 7.2; DSA IR 17-8.
☑	**c.** Bearing-type ("snug tight") connections.	Periodic	SI	**Table 1705A.2.1 Item 2a, 1705A.2.6, 2204A.2;** AISC 360-16 J3.1, J3.2, M2.5 & N5.6; RCSC 2014 Section 9.1; DSA IR 17-9.
☑	**d.** Pretensioned and slip-critical connections.	*	SI	**Table 1705A.2.1 Items 2b & 2c, 1705A.2.6, 2204A.2;** AISC 360-16 J3.1, J3.2, M2.5 & N5.6; RCSC 2014 Sections 9.2 & 9.3; DSA IR 17-9. * "Continuous" or "Periodic" depends on the tightening method used.

S/A3. WELDING:

	Test or Special Inspection	Type	Performed By	Code References and Notes
☑	**a.** Verify weld filler material identification markings per AWS designation listed on the DSA- approved documents and the WPS.	Periodic	SI	**1705A.2.5, Table 1705A.2.1 Items 4 & 5**; AWS D1.1 and AWS D1.8 for structural steel; AWS D1.2 for Aluminum; AWS D1.3 for cold-formed steel; AWS D1.4 for reinforcing steel; DSA IR 17- 3.
☑	**b.** Verify weld filler material manufacturer's certificate of compliance.	Periodic	SI	DSA IR 17-3.
☑	**c.** Verify WPS, welder qualifications and equipment.	Periodic	SI	DSA IR 17-3.

S/A4. SHOP WELDING (IN ADDITION TO SECTION S/A3):

	Test or Special Inspection	Type	Performed By	Code References and Notes
☑	**a.** Inspect groove welds, multi-pass fillet welds, single pass fillet welds > 5/16", plug and slot welds.	Continuous	SI	**Table 1705A.2.1 Items 5a.1–4;** AISC 360-16 (and AISC 341-16 as applicable); DSA IR 17-3.
☑	**b.** Inspect single-pass fillet welds ≤ 5/16", floor and roof deck welds.	Periodic	SI	**1705A.2.2, Table 1705A.2.1 Items 5a.5 & 5a.6;** AISC 360-16 (and AISC 341-16 as applicable); DSA IR 17-3.

S/A9. ANCHOR BOLTS AND ANCHOR RODS:

	Test or Special Inspection	Type	Performed By	Code References and Notes
☑	**a.** Anchor Bolts and Anchor Rods	Test	LOR	Sample and test anchor bolts and anchor rods not readily identifiable per procedures noted in DSA IR 17-11.

Name of Architect or Engineer in general responsible charge:

Name of Structural Engineer (When structural design has been delegated):

Signature of Architect or Structural Engineer: Date:

Note: To facilitate DSA electronic mark-ups and identification stamp application, DSA recommends against using secured electronic or digital signatures.

DSA STAMP

DSA 103-22: LIST OF REQUIRED VERIFIED REPORTS, CBC 2022

1. Soils Testing and Inspection: Geotechnical Verified Report Form DSA 293
2. Structural Testing and Inspection: Laboratory Verified Report Form DSA 291
3. Shop Welding Inspection: Laboratory Verified Report Form DSA 291, or, for independently contracting SI, Special Inspection Verified Report Form DSA 292
4. High-Strength Bolt Installation Inspection: Laboratory Verified Report Form DSA 291, or, for independently contracting SI, Special Inspection Verified Report Form DSA 292

STATE APPROVALS-SITE

IDENTIFICATION STAMP
DIV. OF THE STATE ARCHITECT
APP: 02-121836 INC:
REVIEWED FOR
SS ☑ FLS ☑ ACS ☑
DATE: 11/02/2023

4080 PLAZA GOLDORADO CIRCLE
SUITE B,
CAMERON PARK, CA 95682
530.677.5515

GHD

poligon

PORTER

REGISTERED PROFESSIONAL ENGINEER
JESSICA E. NAPIER
No. S5476
STRUCTURAL
STATE OF CALIFORNIA

STATE APPROVALS-PC

IDENTIFICATION STAMP
DIV. OF THE STATE ARCHITECT
APP: 02-121213 PC
REVIEWED FOR
SS ☑ FLS ☑ ACS ☑ CG ☐
DATE: 7/18/2023

PRE-CHECK (PC) DOCUMENT
CODE: 2022 CBC
A SEPARATE PROJECT APPLICATION FOR CONSTRUCTION IS REQUIRED.

NOTES AND SPECIAL INSPECTIONS

HIP ROOF - RAM

RAM1.1

FOUNDATION PLAN NOTES:

1. TOP OF ALL FOUNDATIONS MUST BE CONSTRUCTED AT ONE COMMON ELEVATION (COORDINATE WITH SITE PLANS - NOT BY POLIGON)
2. ALL FOUNDATIONS MUST BE CENTERED UNDER COLUMNS (UNO).
3. SEE SHEET RAM1.1 FOR CONCRETE REQUIREMENTS.
4. PRIOR TO FORMING AND CASTING FOUNDATIONS, REVIEW FOUNDATION PLAN FOR REQUIRED ORIENTATION.
5. FOUNDATION MATERIAL AND INSTALLATION NOT BY POLIGON.
6. VIBRATE CONCRETE FULL DEPTH OF FOUNDATION.
7. FOR DRILLED PIER FOUNDATIONS, PREVENT SOIL FROM ENTERING EXCAVATED HOLE (FORM, ETC).

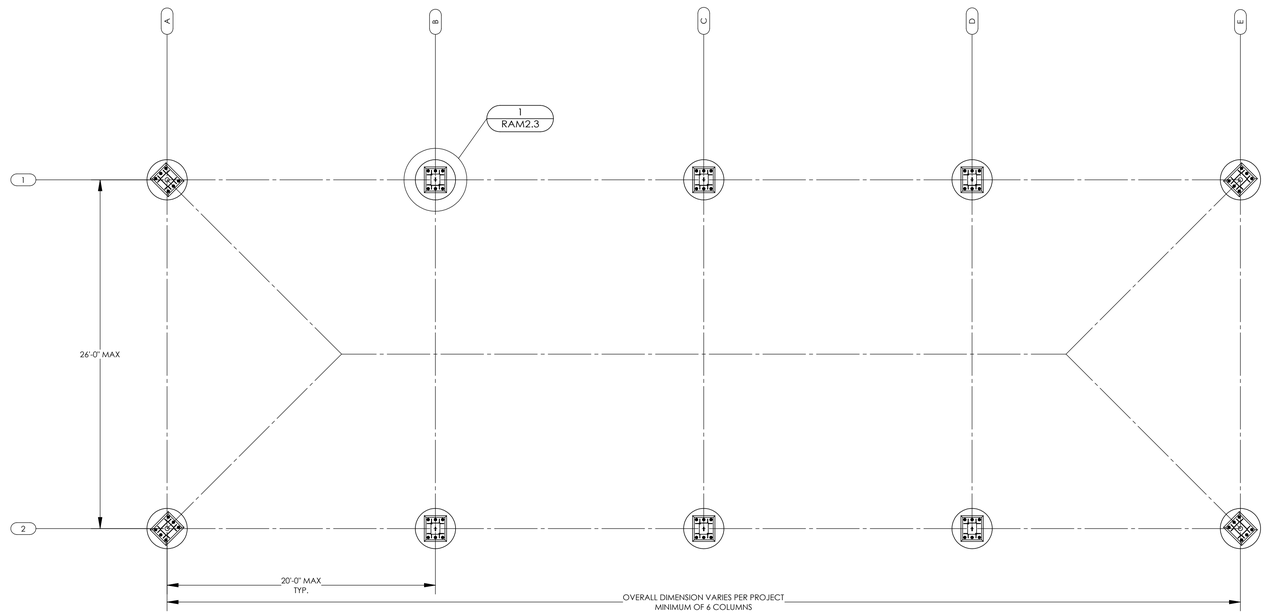

FOUNDATION PLAN (DRILLED PIER)

SCALE: 3/16" = 1'-0"

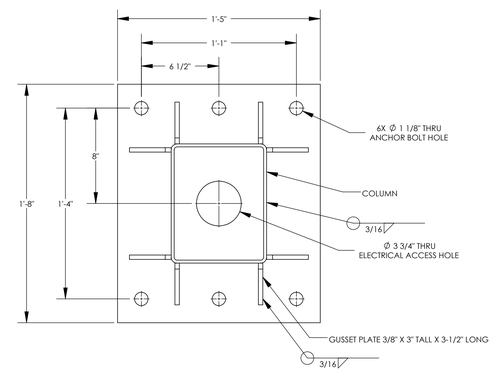

DETAIL 3

SCALE: 1-1/2" = 1'-0"

COLUMN BASEPLATE

3

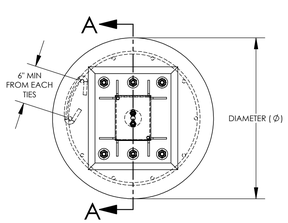

DETAIL 1

SCALE: 3/4" = 1'-0"

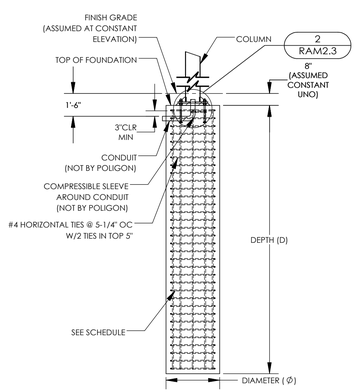

SECTION A-A

SCALE: 1/4" = 1'-0"

FOUNDATION REQUIREMENTS VARY PER PROJECT

SEE SHEET RAM1.0 FOR REQUIRED LOAD SCENARIO AND FOUNDATION TYPE (STEP 9 OF 'INSTRUCTIONS')

ONLY REFERENCE COPY OF PC DRAWINGS SUBMITTED FOR THIS PROJECT

DRILLED PIER

SIZE AND REINFORCING REQUIREMENTS

LOAD SCENARIO	DIAMETER (Ø)	DEPTH (D)	VERTICAL REINFORCING[1]	
			QTY	SIZE
1	3'-0"	13'-0"	10	#7
~~2~~	~~3'-0"~~	~~15'-0"~~	~~10~~	~~#7~~

[1] EQUALLY SPACED AROUND DRILLED PIER

DRILLED PIER FOUNDATION

1

NOTES:

1. GROUT SHALL BE NON-METALLIC, NON-SHRINK GROUT WITH MINIMUM F'c=6500 PSI.
2. COLUMNS FABICATED ASSUMING 1-1/2" GROUT PAD.
3. COLUMN BASES BELOW FINISH GRADE SHOULD BE PROTECTED FROM CORROSION, SELECT ONE OF THE FOLLOWING OPTIONS BELOW.

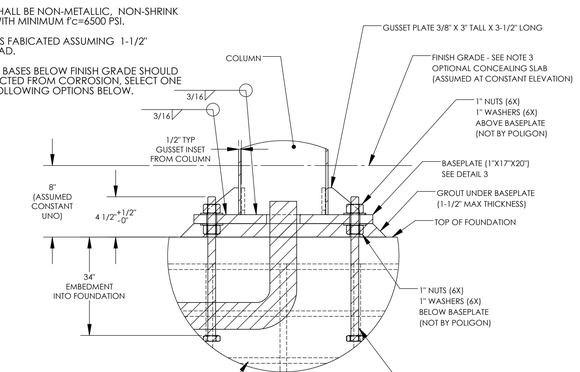

COLUMN BASE PROTECTION

BELOW SURFACE COLUMN INSTALLATION

[ ] CONCRETE SLAB - 3" MIN ANCHOR BOLT COVER

[ ] MASTIC COATING - 1/4" THICK MIN COATING ON ALL STEEL SURFACES BELOW GRADE

DETAIL 2

SCALE: 1-1/2" = 1'-0"

COLUMN BASEPLATE AND ANCHOR BOLTS

2

STATE APPROVALS-SITE

IDENTIFICATION STAMP
DIV. OF THE STATE ARCHITECT
APP: 02-121836 INC:
REVIEWED FOR
SS ☑ FLS ☑ ACS ☑
DATE: 11/02/2023

4600 PLAZA GOLDORADO CIRCLE
SUITE B
CAMERON PARK, CA 95682
530.677.0316

STATE APPROVALS-PC

IDENTIFICATION STAMP
DIV. OF THE STATE ARCHITECT
APP: 02-121213 PC
REVIEWED FOR
SS ☑ FLS ☑ ACS ☑ CG ☐
DATE: 7/18/2023

REGISTERED PROFESSIONAL ENGINEER
JESSICA E. NAPIER
No. S5476
STRUCTURAL
STATE OF CALIFORNIA

PRE-CHECK (PC) DOCUMENT
CODE: 2022 CBC
A SEPARATE PROJECT APPLICATION FOR CONSTRUCTION IS REQUIRED.

FOUNDATION PLAN DRILLED PIER

HIP ROOF - RAM 30

RAM2.3

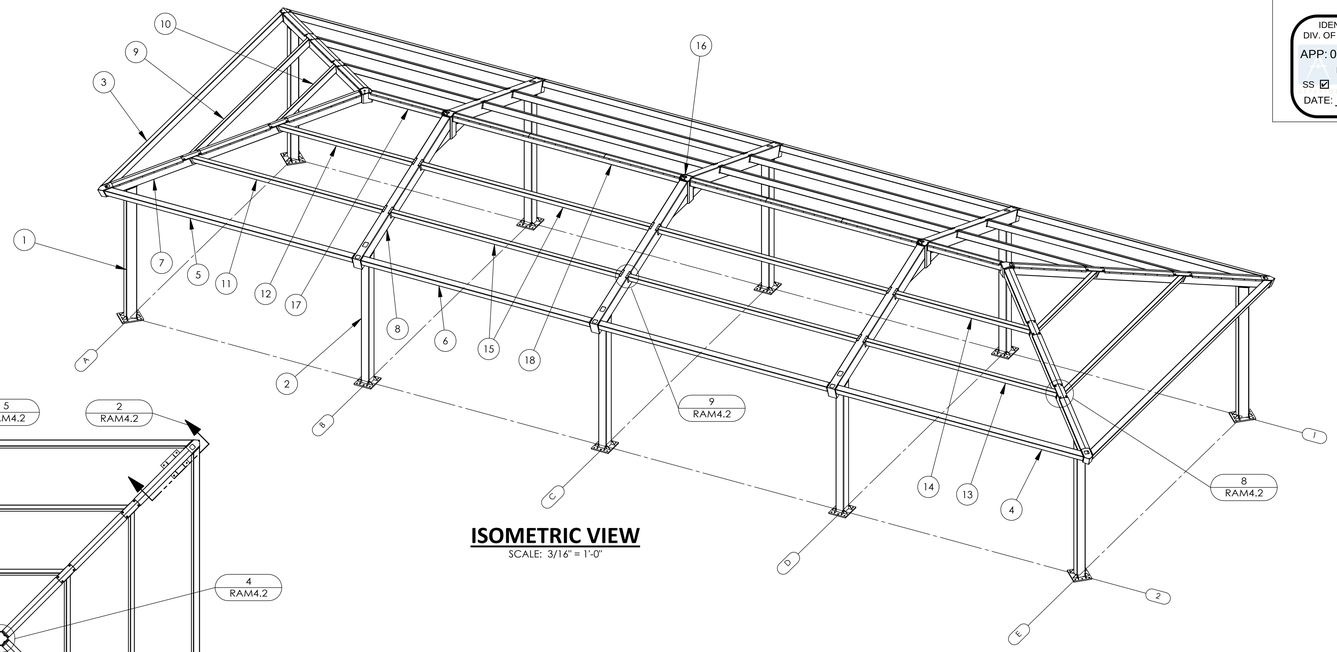

ISOMETRIC VIEW

SCALE: 3/16" = 1'-0"

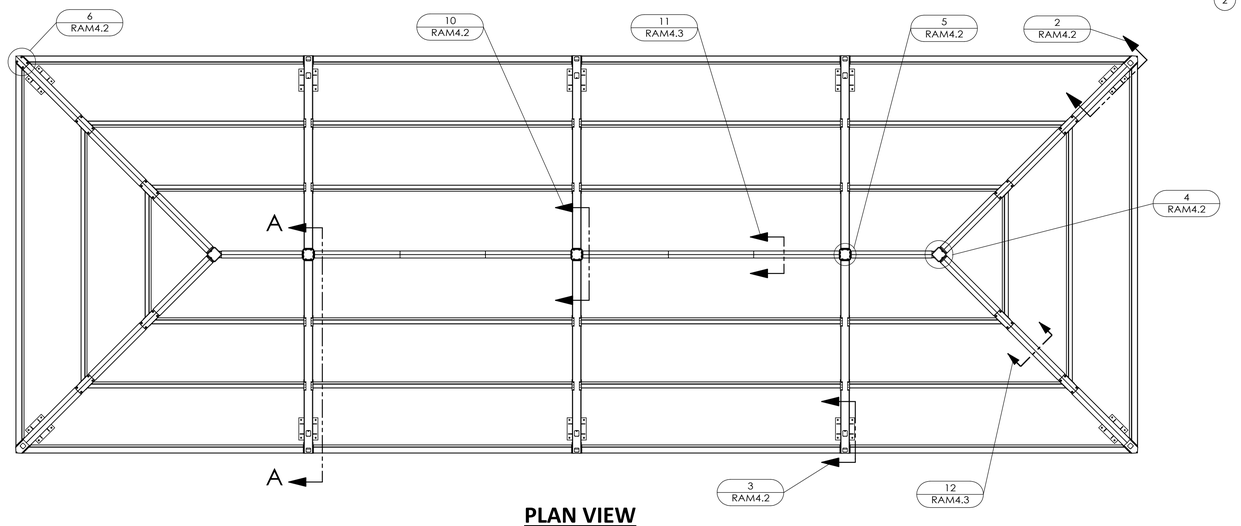

PLAN VIEW

SCALE: 3/16" = 1'-0"

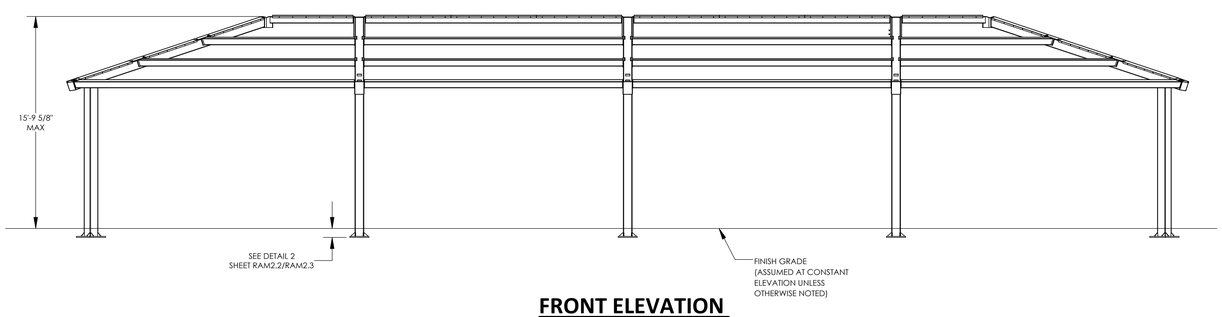

FRONT ELEVATION

SCALE: 3/16" = 1'-0"

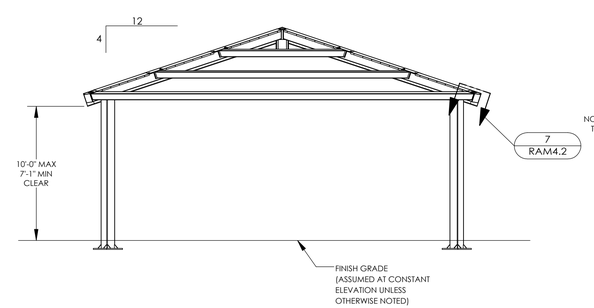

SIDE ELEVATION

SCALE: 3/16" = 1'-0"

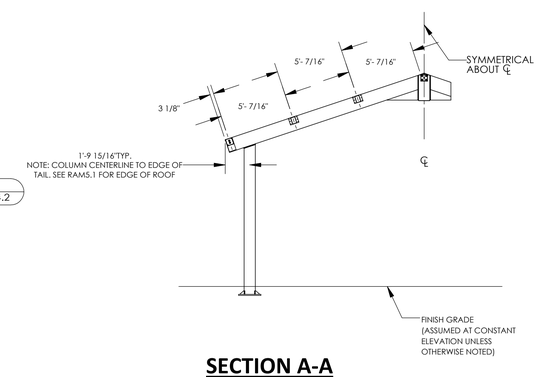

SECTION A-A

SCALE: 3/16" = 1'-0"

ITEM	QTY.	PART NO.	DESCRIPTION	MATERIAL	WEIGHT
18	2	-	R-BEAM ASM	HSS6X6X3/16	287.26
17	2	-	END R-BEAM ASM	HSS6X6X3/16	154.14
16	6	-	C-TUBE ASM	HSS10X10X5/8	143.92
15	8	-	SIDE PURLIN ASM	HSS6X4x3/16	234.29
14	2	-	CORNER PURLIN ASM	HSS6X4x3/16	136.79
13	2	-	CORNER PURLIN ASM	HSS6X4x3/16	193.62
12	2	-	CORNER PURLIN ASM	HSS6X4x3/16	136.94
11	2	-	CORNER PURLIN ASM	HSS6X4x3/16	193.78
10	2	-	END PURLIN ASM	HSS6X4x3/16	110.56
9	2	-	END PURLIN ASM	HSS6X4x3/16	224.23
8	6	-	GABLE BEAM ASM	HSS12X8X1/4	559.76
7	4	-	HIP BEAM ASM	HSS8X8X3/16	431.12
6	4	-	SIDE EAVE BEAM ASM	HSS6X6X3/16	284.96
5	2	-	CORNER EAVE BEAM ASM	HSS6X6X3/16	306.07
4	2	-	CORNER EAVE BEAM ASM	HSS6X6X3/16	306.00
3	2	-	END EAVE BEAM ASM	HSS6X6X3/16	413.48
2	6	-	SIDE COLUMN ASM	HSS10X8X1/4	425.36
1	4	-	CORNER COLUMN ASM	HSS10X8X1/4	433.63

STATE APPROVALS-SITE

IDENTIFICATION STAMP
DIV. OF THE STATE ARCHITECT
APP: 02-121836 INC:
REVIEWED FOR
SS ☑ FLS ☑ ACS ☑
DATE: 11/02/2023

4600 PLAZA GOLDCREEK DR. CIRCLE
SUITE B
CHARTERO 95765, CA 95682
530.677.5515

poligon

PORTER

REGISTERED PROFESSIONAL ENGINEER
JESSICA E. NAPIER
No. S5476
STRUCTURAL
STATE OF CALIFORNIA

STATE APPROVALS-PC

IDENTIFICATION STAMP
DIV. OF THE STATE ARCHITECT
APP: 02-121213 PC
REVIEWED FOR
SS ☑ FLS ☑ ACS ☑ CG ☐
DATE: 7/18/2023

PRE-CHECK (PC) DOCUMENT
CODE: 2022 CBC
A SEPARATE PROJECT APPLICATION FOR CONSTRUCTION IS REQUIRED.

FRAMING PLAN

HIP ROOF - RAM 30

RAM3.1

ALL HIDDEN NUTS AND BOLTS (INSTALLED IN SHOP DURING FABRICATION) ARE SECURED WITH THIS NUT AND BOLT RESTAINING SYSTEM.

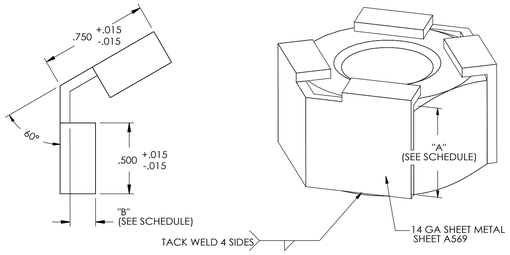

DIMENSION SCHEDULE				
FASTENER	DIM A		DIM B	
5/8" NUT	.631	+.000 -.015	.180	+.015 -.015
5/8" BOLT	.403	+.000 -.015	.250	+.015 -.015
3/4" NUT	.758	+.000 -.015	.180	+.015 -.015
3/4" BOLT	.483	+.000 -.015	.375	+.015 -.015
1" NUT	1.012	+.000 -.015	.180	+.015 -.015
1" BOLT	.643	+.000 -.015	.375	+.015 -.015

NUT & BOLT RESTRAINING SYSTEM 1

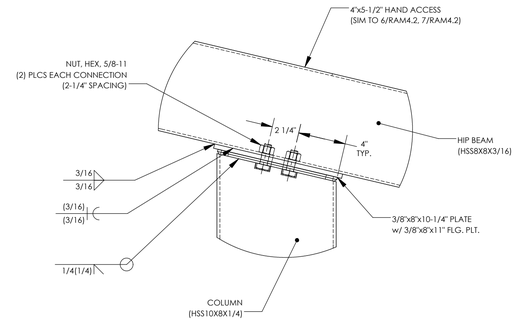

HIP BEAM CONNECTION @ COLUMN 2

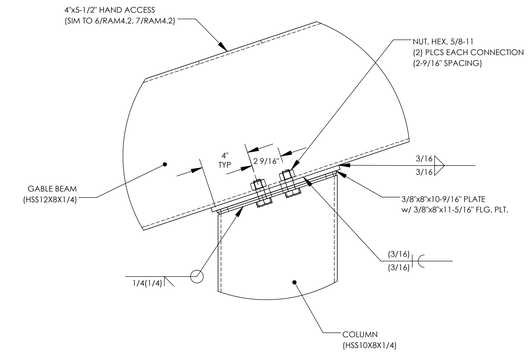

GABLE BEAM CONNECTION @ COLUMN 3

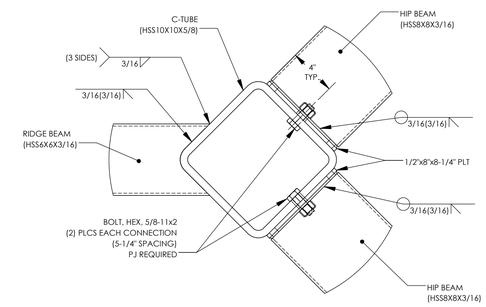

HIP BEAM CONNECTION @ COMPRESSION TUBE 4

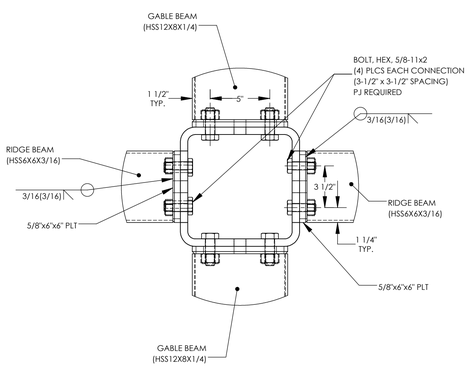

RIDGE BEAM CONNECTION @ COMPRESSION TUBE 5

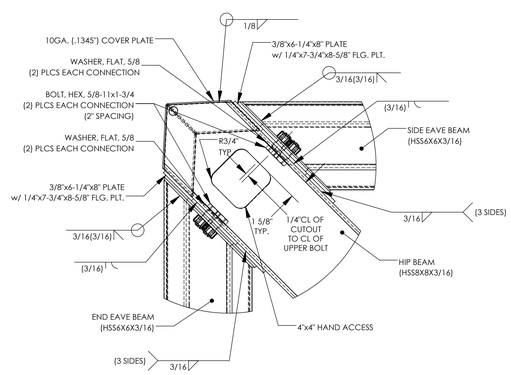

EAVE BEAM CONNECTION @ HIP BEAM 6

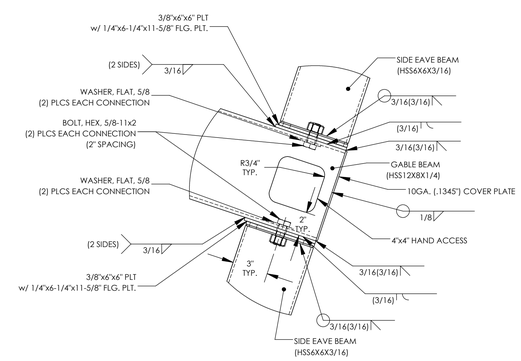

EAVE BEAM CONNECTION @ GABLE BEAM 7

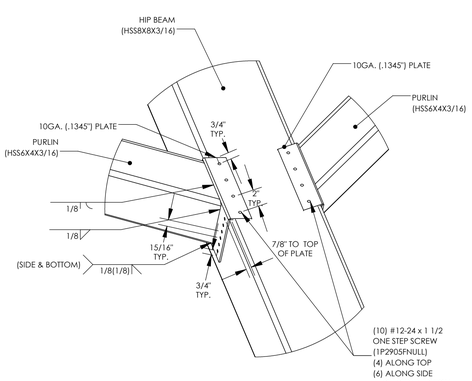

PURLIN CONNECTION @ HIP BEAM 8

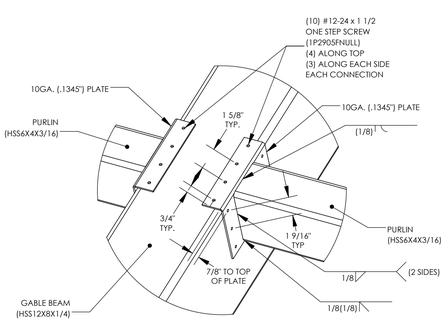

PURLIN CONNECTION @ GABLE BEAM 9

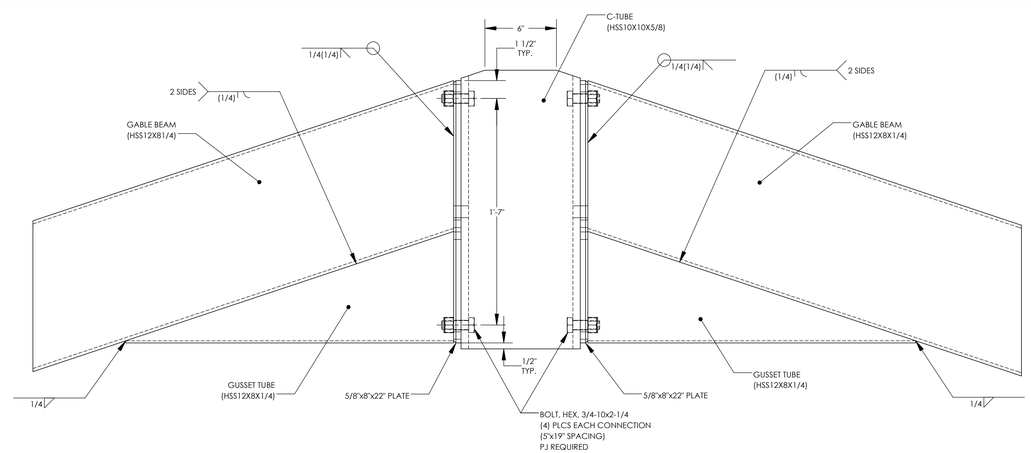

GABLE BEAM CONNECTION @ COMPRESSION TUBE 10

STATE APPROVALS-SITE

IDENTIFICATION STAMP
DIV. OF THE STATE ARCHITECT
APP: 02-121836 INC:
REVIEWED FOR
SS ☑ FLS ☑ ACS ☑
DATE: 11/02/2023

4000 PLAZA, GOLDSCR-ADOC 12PCLLE
SUITE B
CAMERON PK, CA 95682
530.677.1016
GHD
poligon
PORTER

REGISTERED PROFESSIONAL ENGINEER JESSICA E. NAPPI No. S5476 STRUCTURAL STATE OF CALIFORNIA

STATE APPROVALS-PC

IDENTIFICATION STAMP
DIV. OF THE STATE ARCHITECT
APP: 02-121213 PC
REVIEWED FOR
SS ☑ FLS ☑ ACS ☑ CG ☐
DATE: 7/18/2023

PRE-CHECK (PC) DOCUMENT
CODE: 2022 CBC
A SEPARATE PROJECT APPLICATION FOR CONSTRUCTION IS REQUIRED.

FRAME CONNECTION DETAILS

HIP ROOF - RAM 30

RAM4.2

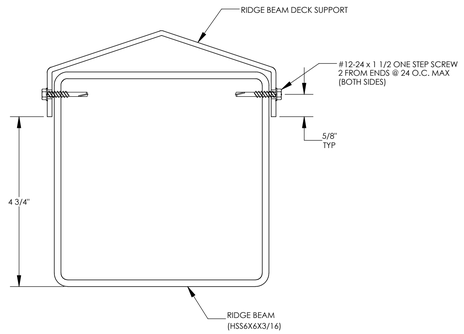

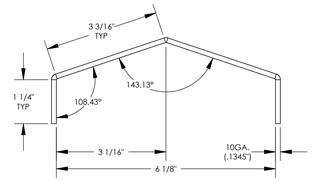

RAM 30 - RIDGE
Fy = 36 KSI
A = 1.231 IN^2
Ix = 1.149 IN^4
Iy = 6.272 IN^4
Sx = 0.771 IN^3
Sy = 1.962 IN^3

RIDGE BEAM DECK SUPPORT DETAIL

11

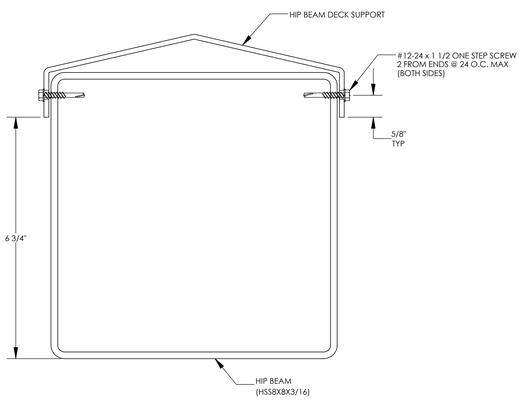

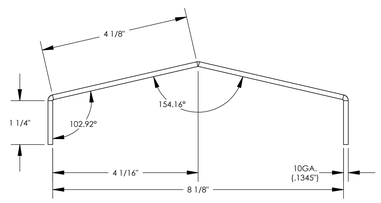

RAM 30 - HIP
Fy = 36 KSI
A = 1.484 IN^2
Ix = 1.341 IN^4
Iy = 12.353 IN^4
Sx = 0.886 IN^3
Sy = 2.943 IN^3

HIP BEAM DECK SUPPORT DETAIL

12

STATE APPROVALS-SITE

IDENTIFICATION STAMP
DIV. OF THE STATE ARCHITECT
APP: 02-121836 INC:
REVIEWED FOR
SS ☑ FLS ☑ ACS ☑
DATE: 11/02/2023

4080 PLAZA GOLDORADO CIRCLE
SUITE B
CAMERON PARK, CA 95682
530.677.0316

poligon PORTER

REGISTERED PROFESSIONAL ENGINEER
JESSICA E. NAPIER
No. S5476
STRUCTURAL
STATE OF CALIFORNIA

STATE APPROVALS-PC

IDENTIFICATION STAMP
DIV. OF THE STATE ARCHITECT
APP: 02-121213 PC
REVIEWED FOR
SS ☑ FLS ☑ ACS ☑ CG ☐
DATE: 7/18/2023

PRE-CHECK (PC) DOCUMENT
CODE: 2022 CBC
A SEPARATE PROJECT APPLICATION FOR CONSTRUCTION IS REQUIRED.

SECTION DETAILS

HIP ROOF - RAM 30

RAM4.3

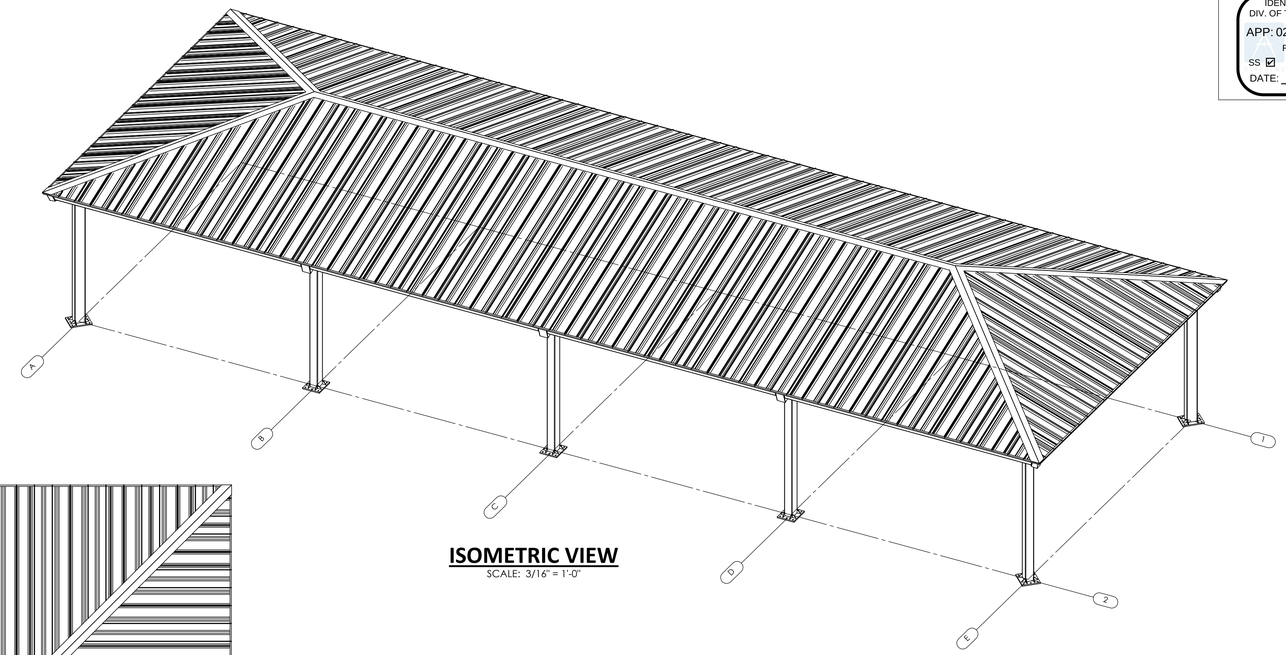

ISOMETRIC VIEW

SCALE: 3/16" = 1'-0"

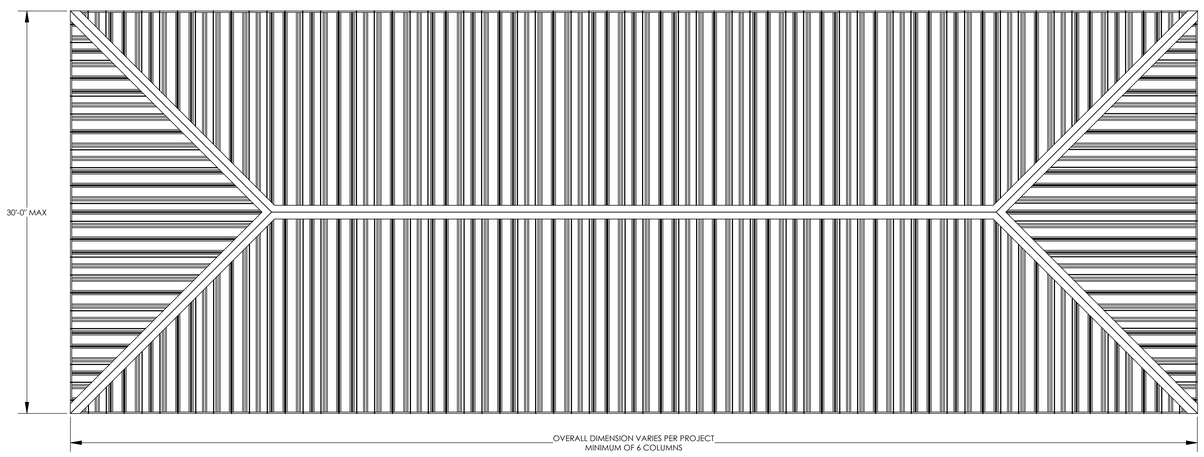

PLAN VIEW

SCALE: 3/16" = 1'-0"

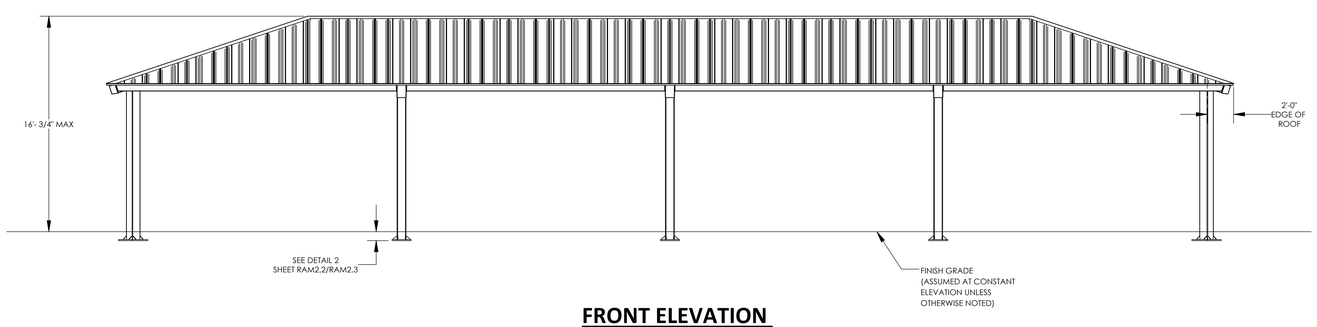

FRONT ELEVATION

SCALE: 3/16" = 1'-0"

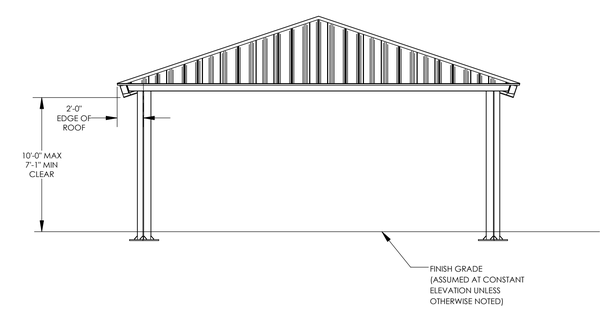

SIDE ELEVATION

SCALE: 3/16" = 1'-0"

STATE APPROVALS-SITE

IDENTIFICATION STAMP
DIV. OF THE STATE ARCHITECT
APP: 02-121836 INC:
REVIEWED FOR
SS ☑ FLS ☑ ACS ☑
DATE: 11/02/2023

4080 PLAZA GOLDORADO CIRCLE
SUITE B
CAMERON PARK, CA 95682
530.677.5016

poligon PORTER

REGISTERED PROFESSIONAL ENGINEER
JESSICA E. NAPIER
No. S5476
STRUCTURAL
STATE OF CALIFORNIA

STATE APPROVALS-PC

IDENTIFICATION STAMP
DIV. OF THE STATE ARCHITECT
APP: 02-121213 PC
REVIEWED FOR
SS ☑ FLS ☑ ACS ☑ CG ☐
DATE: 7/18/2023

PRE-CHECK (PC) DOCUMENT
CODE: 2022 CBC
A SEPARATE PROJECT APPLICATION FOR CONSTRUCTION IS REQUIRED.

ARCHITECTURAL VIEWS

HIP ROOF - RAM 30

RAM5.1

STANDING SEAM INSTALLATION NOTES:

THE DETAILS SHOWN ARE SUGGESTIONS OR GUIDELINES ON HOW TO ERECT THE SYSTEMS. THE INFORMATION SHOWN IS ACCURATE, BUT IT IS NOT INTENDED TO COVER ALL INSTANCES, BUILDING REQUIREMENTS, DESIGNS OR CODES. THE DETAILS MAY REQUIRE CHANGES OR REVISIONS DUE TO FIELD CONDITIONS.

IT SHALL BE THE RESPONSIBILITY OF THE ERECTOR TO ENSURE THAT THE DETAILS MEET PARTICULAR BUILDING REQUIREMENTS AND TO ASSURE ADEQUATE WATER TIGHTNESS.

THE ERECTOR SHOULD THOROUGHLY FAMILIARIZE HIMSELF/HERSELF WITH ALL ERECTION INSTRUCTIONS BEFORE STARTING WORK.

THE PANELS SHOULD BE INSTALLED PLUMB, STRAIGHT, AND ACCURATELY TO THE ADJACENT WORK.

FLASHING AND TRIM SHALL BE INSTALLED TRUE, AND IN PROPER ALIGNMENT, WITH ANY EXPOSED FASTENERS EQUALLY SPACED FOR THE BEST APPEARANCE.

SEALANT SHALL BE FIELD APPLIED ON DRY, CLEAN SURFACES. SOME FIELD CUTTING AND FITTING OF PANELS AND FLASHING IS TO BE EXPECTED BY THE ERECTOR AND MINOR FIELD CORRECTIONS ARE A PART OF NORMAL ERECTION WORK.

WORKMANSHIP SHALL BE OF THE BEST INDUSTRY STANDARDS AND INSTALLATION SHALL BE PERFORMED BY EXPERIENCED METAL CRAFTSMEN.

METAL SHAVINGS FROM DRILLING OR INSTALLATION OF ROOF FASTENERS MUST BE CAREFULLY REMOVED FROM THE ROOF BY BRUSHING OR SWEEPING AT THE END OF EACH DAY DURING INSTALLATION. SHAVINGS LEFT ON THE ROOF WILL QUICKLY RUST AND STAIN THE ROOF FINISH.

COVER ACCESS HOLES WITH GRACE ICE AND WATER SHIELD BEFORE ATTACHING ROOF DECKING

METAL ROOFING PRODUCT AND INSTALLATION SHALL MEET ALL REQUIREMENTS OF ICC-ES REPORT ESL-1082.

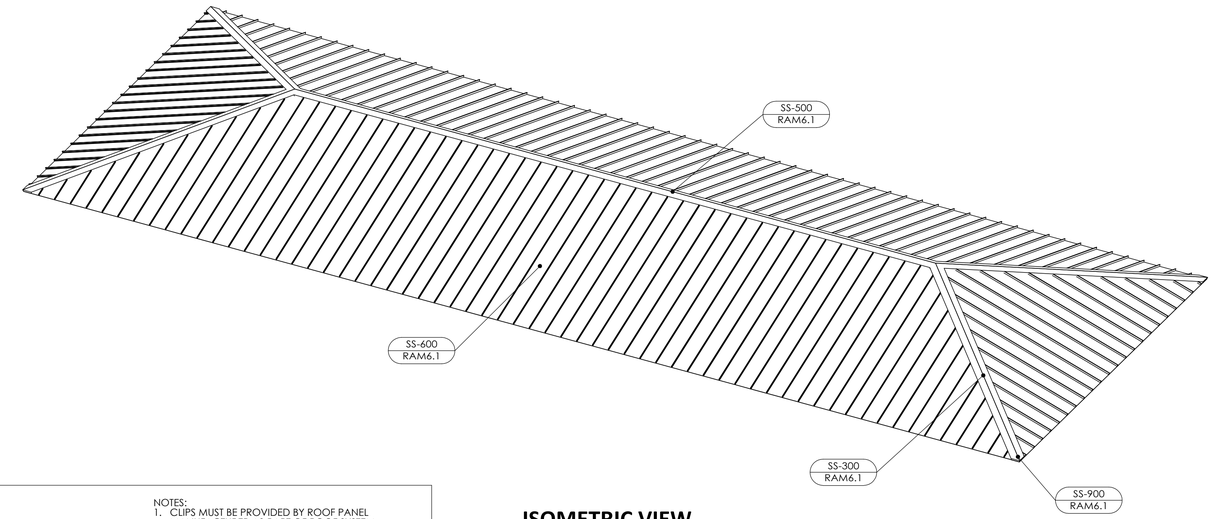

ISOMETRIC VIEW

SCALE: 3/16" = 1'-0"

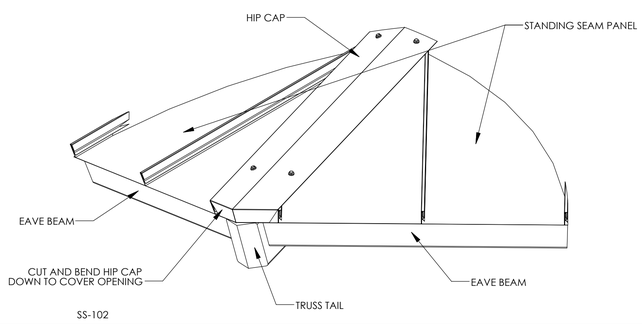

CORNER DETAIL — SS-900

NOTES:
1. CLIPS MUST BE PROVIDED BY ROOF PANEL MANUFACTURER AS PART OF ROOF SYSTEM.
2. MATERIAL THICKNESS MUST BE 18 GAGE (0.048"-0.053")

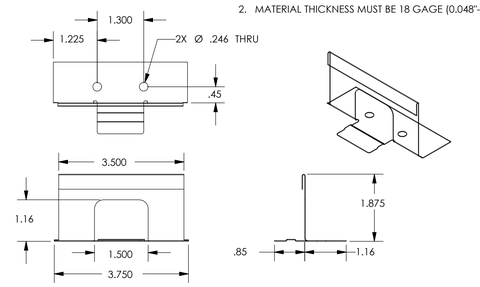

CLIP DETAIL — SS-CLP

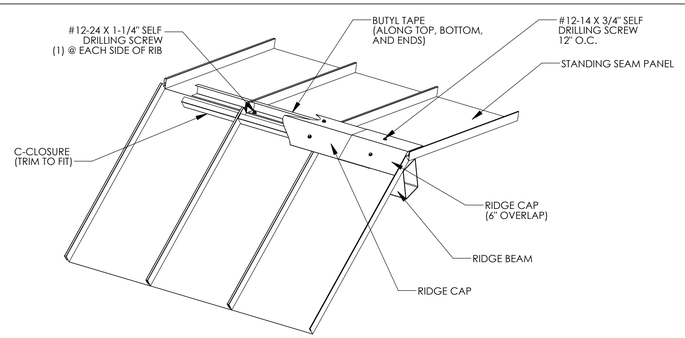

RIDGE DETAIL — SS-500

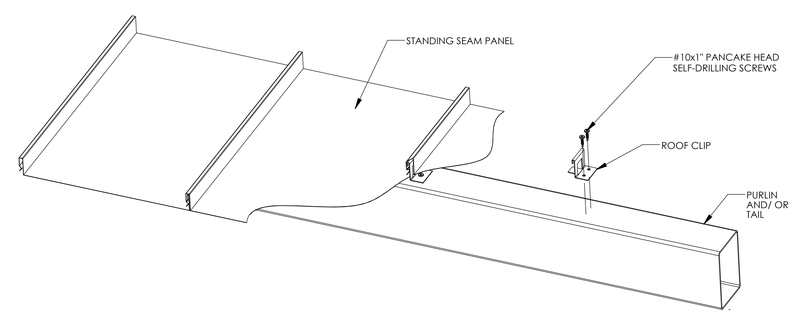

PURLIN DETAIL — SS-600

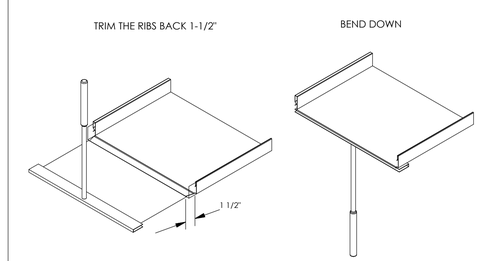

HEMMING DETAIL — SS-HEM

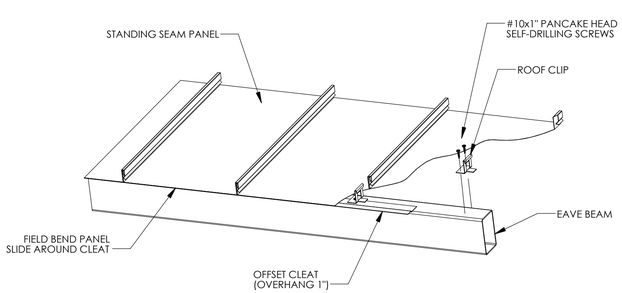

EAVE DETAIL — SS-200

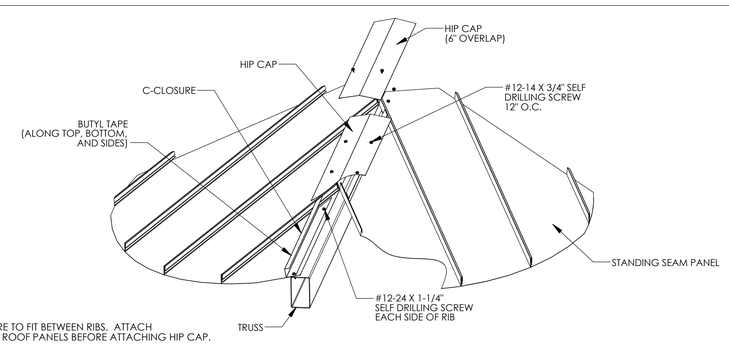

NOTE:
TRIM C-CLOSURE TO FIT BETWEEN RIBS. ATTACH C-CLOSURE TO ROOF PANELS BEFORE ATTACHING HIP CAP.

TRUSS DETAIL — SS-300

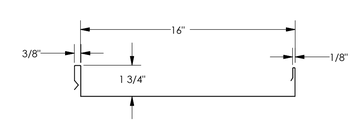

GENERAL
GAGE = 22
FY = 50 KSI

TOP IN COMPRESSION
Ix = 0.1200 IN^4
Se = 0.0803 IN^3
Ma = 2.4056 IN-KIPS

BOTTOM IN COMPRESSION
Ix = 0.0570 IN^4
Se = 0.0729 IN^3
Ma = 1.7220 IN-KIPS

ROOF DECK SECTION PROPERTIES — SS-950

STATE APPROVALS-SITE

IDENTIFICATION STAMP
DIV. OF THE STATE ARCHITECT
APP: 02-121836 INC:
REVIEWED FOR
SS ☑ FLS ☑ ACS ☑
DATE: 11/02/2023

GHD
4600 PLAZA GOLDLOOP/ADC CIRCLE
SUITE B
CAMERON PK, CA 95682
530.677.0316

poligon
PORTER LLC

REGISTERED PROFESSIONAL ENGINEER
JESSICA E. NAPIER
No. S5476
STRUCTURAL
STATE OF CALIFORNIA

STATE APPROVALS-PC

IDENTIFICATION STAMP
DIV. OF THE STATE ARCHITECT
APP: 02-121213 PC
REVIEWED FOR
SS ☑ FLS ☑ ACS ☑ CG ☐
DATE: 7/18/2023

PRE-CHECK (PC) DOCUMENT
CODE: 2022 CBC
A SEPARATE PROJECT APPLICATION FOR CONSTRUCTION IS REQUIRED.

ROOF CONNECTION DETAILS

HIP ROOF - RAM

RAM6.1

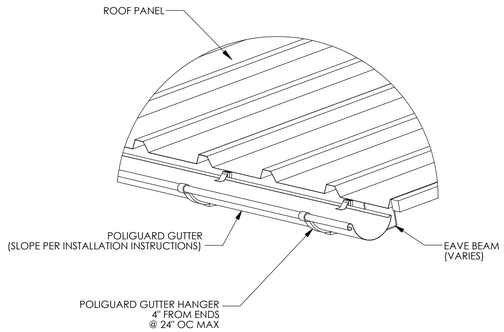

GUTTER DETAIL

GS-100

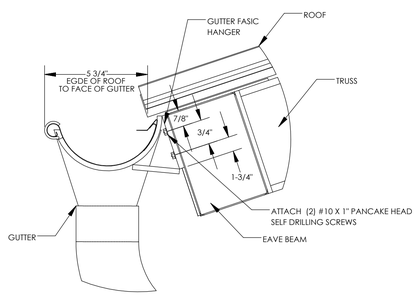

GUTTER DETAIL

GS-200

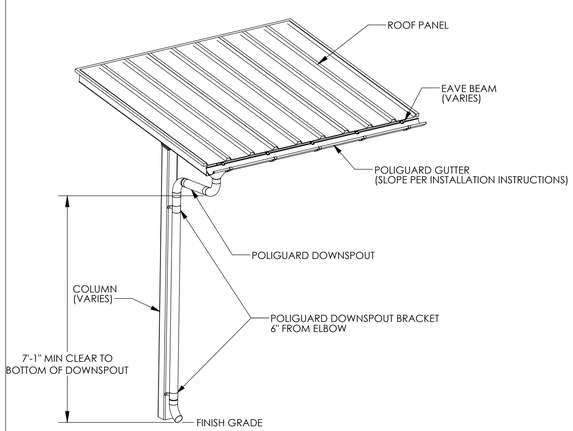

DOWNSPOUT DETAIL

GS-300

POLIGUARD GUTTER SYSTEM NOTES:

1. PREFABRICATED GUTTER SYSTEM IS ATTACHED TO THE STRUCTURE AFTER ROOF IS INSTALLED.
2. DETAILED INSTALLATION INSTRUCTIONS ARE SHIPPED WITH THE STRUCTURE.
3. ~~DOWNSPOUTS REQUIRED AT EACH COLUMN.~~

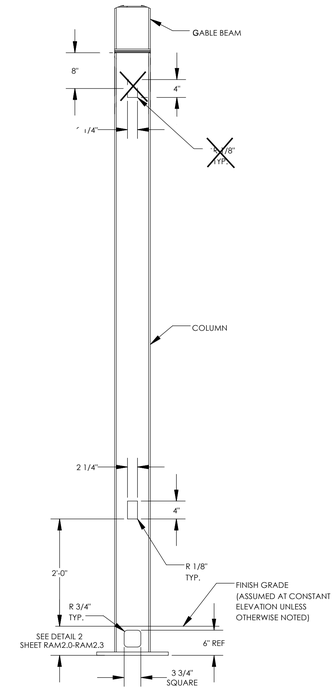

ELECTRICAL CUTOUT IN COLUMNS

EC-100

ELECTRICAL CUTOUT NOTES:

1. MAXIMUM ONE CUTOUT PERMITTED IN EACH MEMBER.
2. CUTOUTS CAN BE PLACED ON ANY SIDE OF A MEMBER.
3. CUTOUTS CAN BE PLACED ALONG MEMBERS AS INDICATED IN THE DETAILS.
4. ARCHITECTS REQUESTING CUTOUTS MUST MARKUP APPROVED PC DRAWINGS TO LOCATE CUTOUTS FOR APPROVAL AND FABRICATION.

STATE APPROVALS-SITE

IDENTIFICATION STAMP
DIV. OF THE STATE ARCHITECT
APP: 02-121836 INC:
REVIEWED FOR
SS ☑ FLS ☑ ACS ☑
DATE: 11/02/2023

4000 P-3 SOUTH GOLD DORADO CIRCLE
SUITE B
CAMERON PARK, CA 95682
530.677.3575

poligon

PORTER

REGISTERED PROFESSIONAL ENGINEER
JESSICA E. NAPIER
No. S5476
STRUCTURAL
STATE OF CALIFORNIA

STATE APPROVALS-PC

IDENTIFICATION STAMP
DIV. OF THE STATE ARCHITECT
APP: 02-121213 PC
REVIEWED FOR
SS ☑ FLS ☑ ACS ☑ CG ☐
DATE: 7/18/2023

PRE-CHECK (PC) DOCUMENT
CODE: 2022 CBC
A SEPARATE PROJECT APPLICATION FOR CONSTRUCTION IS REQUIRED.

MISC DESIGN OPTIONS

HIP ROOF - RAM

RAM7.0

ELECTRICAL CUTOUT AND ACCESS INSTRUCTIONS

- IF 'YES' IS NOT SELECTED IN STEP 2 ON ORDER FORM, THEN THIS SHEET NEED NOT BE INCLUDED IN SITE-SPECIFIC DRAWINGS
- ONLY COLUMNS ARE PERMITTED TO HAVE ELECTRICAL ACCESS
- THE COLUMN CUTOUTS ARE STATIC AND SHOWN IN THE 'MISC DESIGN OPTIONS SHEET'
- IDENTIFY THE COLUMNS WITH ELECTRICAL CUTOUTS BELOW (REFERENCE GRID LINES IN ISOMETRIC FRAME VIEW TO THE RIGHT)
- STRUCTURES MAY BE LONGER OR SHORTER THAN THE ISOMETRIC FRAME VIEW SHOWN
- IF SITE-SPECIFIC STRUCTURE HAS A DIFFERENT NUMBER OF COLUMNS THAN ISOMETRIC SHOWN, REFERENCE COLUMN A1 IN THE ISOMETRIC VIEW AND CONTINUE PATTERN TO FIT SITE-SPECIFIC LAYOUT
- IF NO COLUMNS ARE IDENTIFIED, POLIGON WILL ASSUME CUTOUTS ONLY IN COLUMN A1
- CONTACT POLIGON ENGINEERING FOR SPECIAL PROJECT SPECIFIC REQUIREMENTS

ELECTRICAL CUTOUT IDENTIFICATION IN COLUMNS

SPECIFIC MEMBERS A1, E2

~~**EXAMPLE:**~~

~~**ELECTRICAL CUTOUT IDENTIFICATION IN COLUMNS**~~

~~SPECIFIC MEMBERS: A1 , B1, F1~~

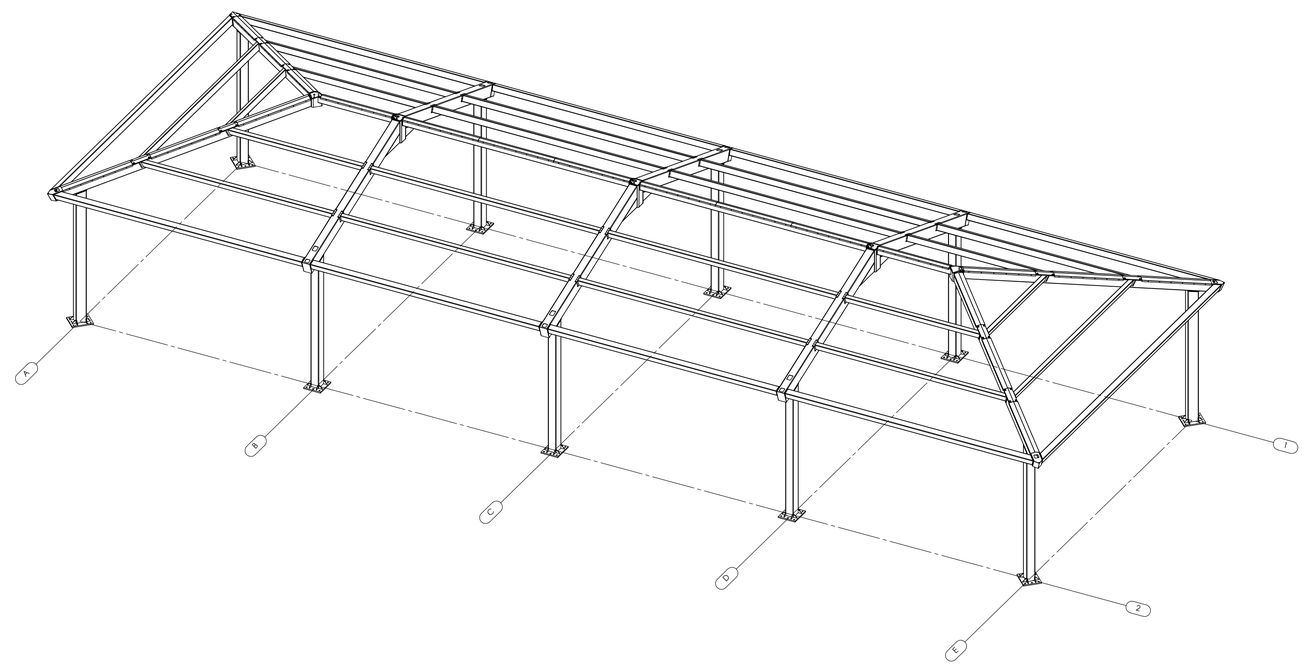

STATE APPROVALS-SITE

IDENTIFICATION STAMP
DIV. OF THE STATE ARCHITECT
APP: 02-121836 INC:
REVIEWED FOR
SS ☑ FLS ☑ ACS ☑
DATE: 11/02/2023

4600 PLAZA GOLDCREEK DR, SUITE B
CHANHASSEN, MN, 55317
952.277.6916

poligon

PORTER

REGISTERED PROFESSIONAL ENGINEER
JESSICA E. NAPIER
No. S5476
STRUCTURAL
STATE OF CALIFORNIA

STATE APPROVALS-PC

IDENTIFICATION STAMP
DIV. OF THE STATE ARCHITECT
APP: 02-121213 PC
REVIEWED FOR
SS ☑ FLS ☑ ACS ☑ CG ☐
DATE: 7/18/2023

PRE-CHECK (PC) DOCUMENT
CODE: 2022 CBC
A SEPARATE PROJECT APPLICATION FOR CONSTRUCTION IS REQUIRED.

ELECTRICAL CUTOUTS

HIP ROOF - RAM

RAM7.1

THE LINE SHOWN ABOVE IS 1" WHEN PRINTED ON THIS SHEETS ORIGINAL PAGE SIZE

LODI UNIFIED SCHOOL DISTRICT

LODI UNIFIED SCHOOL DISTRICT LUNCH SHELTERS - CHRISTA MCAULIFFE MIDDLE SCHOOL

3880 IRON CANYON CIRCLE, STOCKTON, CA 95209

GENERAL NOTES

1. CONSTRUCTION DOCUMENTS DESCRIBE THE PRODUCTS, SYSTEMS, QUANTITIES, CONFIGURATION, AND PERFORMANCE SPECIFICATIONS THAT DELIVER THE OVERALL DESIGN INTENT OF THE PROJECT.
2. THE CONSTRUCTION DOCUMENT DRAWINGS AND SPECIFICATIONS ARE COMPLEMENTARY, AND WHAT IS REQUIRED BY ONE SHALL BE AS BINDING AS IF REQUIRED BY BOTH.
3. PERFORMANCE BY THE CONSTRUCTION TEAM SHALL BE CONSISTENT WITH THE CONSTRUCTION DRAWINGS AND SPECIFICATIONS AS NECESSARY TO DELIVER THE INDICATED RESULTS OF THE DESIGN INTENT.
4. VERIFY ALL DIMENSIONS, LOCATIONS OF EXISTING UTILITIES, AND CONDITIONS ON THE JOB SITE PRIOR TO THE START OF WORK OR PORTIONS OF THE WORK. NOTIFY THE ARCHITECT IMMEDIATELY OF ANY DISCREPANCIES BETWEEN THE ACTUAL FIELD CONDITIONS AND THE CONSTRUCTION DOCUMENTS. EXISTING CONDITIONS ARE INDICATED AS A RESULT OF FIELD OBSERVATIONS, INFORMATION SHOWN ON AVAILABLE DOCUMENTS AND FIELD CONDITIONS AT THE TIME OF PREPARATION.
5. ALL MATERIALS AND WORKMANSHIP SHALL COMPLY WITH ALL GOVERNING CODES, ORDINANCES, REGULATIONS AND LAWS.
6. THE DESIGN ADEQUACY AND SAFETY OF ERECTION BRACING, SHORING, TEMPORARY SUPPORTS AND SCAFFOLDING IS THE SOLE RESPONSIBILITY OF THE CONTRACTOR.
7. WHERE ANY CONFLICT OCCURS BETWEEN THE REQUIREMENTS OF LAWS, CODES, ORDINANCES, RULES AND REGULATIONS, THE MOST STRINGENT SHALL GOVERN.
8. IN NO CASE SHALL WORKING DIMENSIONS BE SCALED FROM PLANS, SECTIONS OR DETAILS ON THE DRAWINGS.
9. DETAILS MARKED 'TYPICAL' SHALL APPLY IN ALL CASES UNLESS SPECIFICALLY NOTED OTHERWISE.
10. ENACT ALL MEASURES TO PROTECT AND SAFEGUARD ALL EXISTING ELEMENTS TO REMAIN FROM BEING DAMAGED. REPLACE OR REPAIR EXISTING ELEMENTS DAMAGED BY THE EXECUTION OF THIS CONTRACT TO EQUAL OR BETTER CONDITION.
11. PRIOR TO THE START OF WORK THE CONTRACTOR SHALL COORDINATE BETWEEN THE REQUIREMENTS OF ALL DISCIPLINES HEREIN AND BETWEEN THE REQUIREMENTS OF ALL DRAWINGS AND SPECIFICATIONS IN ORDER THAT ALL ITEMS SATISFACTORILY RELATE TO ONE ANOTHER. NOTIFY ARCHITECT IMMEDIATELY REGARDING ANY ITEMS THAT CANNOT BE COORDINATED.
12. CONTRACTOR SHALL EXCERCISE EXTREME CAUTION IN EXCAVATING AND TRENCHING ON THIS SITE TO AVOID EXISTING DUCTS, PIPING, CONDUIT, ETC. AND TO PREVENT HAZARD TO PERSONNEL AND/OR TO EXISTING UNDERGROUND UTILITIES OR STRUCTURES. THE CONTRACTOR SHALL IMMEDIATELY NOTIFY THE ARCHITECT SHOULD SUCH UNIDENTIFIED CONDITIONS BE DISCOVERED. THESE DRAWINGS AND SPECIFICATIONS DO NOT INCLUDE THE NECESSARY COMPONENTS FOR CONSTRUCTION SAFETY.
13. PROVIDE SAFE MEANS OF EGRESS THROUGH THE BUILDING AND ON SITE AT ALL TIMES.
14. PROVIDE FIRE EXTINGUISHERS PER CFC AT ALL TIMES THROUGHOUT CONSTRUCTION AREA.
15. PROVIDE CONSTRUCTION BARRIERS BETWEEN CONSTRUCTION AREAS AND OCCUPIED AREAS AT ALL TIMES.
16. CUTTING, BORING, SAWCUTTING OR DRILLING THROUGH THE EXISTING OR NEW STRUCTURAL ELEMENTS SHALL NOT TO BE STARTED UNTIL THE DETAILS HAVE BEEN REVIEWED AND APPROVED BY THE ARCHITECT, AND STRUCTURAL ENGINEER OF RECORD.
17. AVOID DISRUPTION TO ADJACENT AREAS. KEEP NOISE TO A LEVEL ACCEPTABLE TO THE OWNER BY SCHEDULING EXCESSIVE NOISE TASKS WITH OWNER REPRESENTATIVE. THIS MAY REQUIRE AFTER HOURS WORK.
18. **STATEMENT OF HAZARDOUS MATERIAL DISCOVERY**
    IF THE CONTRACTOR ENCOUNTERS A HAZARDOUS MATERIAL OR SUBSTANCE NOT ADDRESSED IN THE HAZARDOUS MATERIAL REPORT OR IN A CONCEALED CONDITION, THE CONTRACTOR SHALL, UPON RECOGNIZING THE CONDITION, IMMEDIATELY STOP WORK IN THE AFFECTED AREA AND REPORT THE CONDITION TO THE OWNER AND ARCHITECT IN WRITING.
    UPON RECEIPT OF THE CONTRACTOR'S WRITTEN NOTICE, THE OWNER SHALL OBTAIN THE SERVICES OF A LICENSED LABORATORY TO VERIFY THE PRESENCE OR ABSENCE OF THE MATERIAL OR SUBSTANCE REPORTED BY THE CONTRACTOR AND, IN THE EVENT SUCH MATERIAL OR SUBSTANCE IS FOUND TO BE PRESENT, TO PROVIDE RECOMMENDATIONS TO CAUSE IT TO BE ABATED AND RENDERED HARMLESS.
    WHEN THE MATERIAL OR SUBSTANCE HAS BEEN ABATED AND RENDERED HARMLESS, WORK IN THE AFFECTED AREA SHALL RESUME UPON WRITTEN AGREEMENT OF THE OWNER AND CONTRACTOR.
19. PENETRATIONS TO FIRE RATED MATERIALS OR ASSEMBLIES SHALL BE RESTORED TO EQUAL RATING. SPECIAL INSPECTOR DSA 103 REQ'D.
21. COMPLY WITH TITLE 24, PART 9, CALIFORNIA FIRE CODE, CHAPTER 33 FIRE SAFETY DURING CONSTRUCTION AND DEMOLITION, DURING ALL PHASES OF PROJECT.
22. ALL WORK SHALL CONFORM TO 2022 TITLE 24, CALIFORNIA CODE OF REGULATIONS (CCR);
23. CHANGES TO THE APPROVED DRAWINGS AND SPECIFICATIONS SHALL BE MADE BY AN ADDENDUM OR A CONSTRUCTION CHANGED DOCUMENT (CCD) APPROVED BY THE DIVISION OF THE STATE ARCHITECT, AS REQUIRED BY SECTION 4-338, PART 1, TITLE 24, CCR.
24. A "DSA CERTIFIED" CLASS 3 PROJECT INSPECTOR EMPLOYED BY THE DISTRICT (OWNER) AND APPROVED BY THE DSA SHALL PROVIDE CONTINUOUS INSPECTION OF THE WORK. THE DUTIES OF THE INSPECTOR ARE DEFINED IN SECTION 4-342, PART 1, TITLE 24, CCR.
25. A DSA ACCEPTED TESTING LABORATORY DIRECTLY EMPLOYED BY THE DISTRICT (OWNER) SHALL CONDUCT ALL THE REQUIRED TESTS AND INSPECTIONS FOR THE PROJECT.
26. THE INTENT OF THESE DRAWINGS AND SPECIFICATIONS IS THAT THE WORK OF THE ALTERATION, REHABILITATION OR RECONSTRUCTION IS TO BE IN ACCORDANCE WITH TITLE 24, CCR. SHOULD ANY EXISTING CONDITIONS SUCH AS DETERIORATION OR NON-COMPLYING CONSTRUCTION BE DISCOVERED WHICH IS NOT COVERED BY THE CONTRACT DOCUMENTS WHEREIN THE FINISHED WORK WILL NOT COMPLY WITH TITLE 24, CCR, A CONSTRUCTION CHANGE DOCUMENT (CCD), OR A SEPARATE SET OF PLANS AND SPECIFICATIONS, DETAILING AND SPECIFYING THE REQUIRED WORK SHALL BE SUBMITTED TO AND APPROVED BY DSA BEFORE PROCEEDING WITH THE WORK. (SECTION 4-317(c), PART 1, TITLE 24, CCR)
27. GRADING PLANS, DRAINAGE IMPROVEMENTS, ROAD AND ACCESS REQUIREMENTS AND ENVIRONMENTAL HEALTH CONSIDERATIONS SHALL COMPLY WITH ALL LOCAL ORDINANCES.
28. SUBSTITUTIONS AFFECTING DSA REGULATED ITEMS SHALL BE CONSIDERED AS A CONSTRUCTION CHANGE DOCUMENT OR ADDENDUM, AND SHALL BE APPROVED BY DSA PRIOR TO FABRICATION AND INSTALLATION PER DSA IR A-6 AND SECTION 338(c) PART 1, TITLE 24, CCR.

CODES

PARTIAL LIST OF APPLICABLE CODES

2022	CALIFORNIA ADMINISTRATIVE CODE, PART 1, TITLE 24 C.C.R.	
2022	CALIFORNIA BUILDING CODE (CBC), PART 2, TITLE 24 C.C.R. (2021 INTERNATIONAL BUILDING CODE VOLUMES 1 & 2 AND 2022 CALIFORNIA AMENDMENTS)	
2022	CALIFORNIA ELECTRICAL CODE (CEC), PART 3, TITLE 24 C.C.R. (2020 NATIONAL ELECTRICAL CODE AND 2022 CALIFORNIA AMENDMENTS)	
2022	CALIFORNIA MECHANICAL CODE (CMC) PART 4, TITLE 24 C.C.R. (2021 UNIFORM MECHANICAL CODE AND 2022 CALIFORNIA AMENDMENTS)	
2022	CALIFORNIA PLUMBING CODE (CPC), PART 5, TITLE 24 C.C.R. (2021 UNIFORM PLUMBING CODE AND 2022 CALIFORNIA AMENDMENTS)	
2022	CALIFORNIA ENERGY CODE (CEC), PART 6, TITLE 24 C.C.R.	
2022	CALIFORNIA HISTORICAL BUILDING CODE (CHBC), PART 8, TITLE 24 C.C.R.	
2022	CALIFORNIA FIRE CODE, PART 9, TITLE 24 C.C.R. (2021 INTERNATIONAL FIRE CODE AND 2022 CALIFORNIA AMENDMENTS)	
2022	CALIFORNIA EXISTING BUILDING CODE (CEBC), PART 10, TITLE 24 C.C.R. (2021 INTERNATIONAL EXISTING CODE AND 2022 CALIFORNIA AMENDMENTS)	
2022	CALIFORNIA GREEN BUILDING STANDARDS CODE (CALGREEN), PART 11, TITLE 24 C.C.R.	
2022	CALIFORNIA REFERENCED STANDARDS, PART 12,TITLE 24 C.C.R.	
TITLE 19 C.C.R., PUBLIC SAFETY, STATE FIRE MARSHAL REGULATIONS.		
2019	ASME A17.1/B44-19 SAFETY CODE FOR ELEVATORS AND ESCALATORS	
2020	ASME 18.1 - SAFETY STANDARD FOR PLATFORM LIFTS AND STAIRWAY CHAIR LIFTS	

NOTE TO CONTRACTOR:
THE CALIFORNIA ENERGY CODE SECTION 10-103 REQUIRES ACCEPTANCE TESTING ON ALL NEWLY INSTALLED LIGHTING CONTROLS, MECHANICAL SYSTEMS, ENVELOPES, AND PROCESS EQUIPMENT AFTER INSTALLATION AND BEFORE PROJECT COMPLETION. AN ACCEPTANCE TEST IS A FUNCTIONAL PERFORMANCE TEST TO HELP ENSURE THAT NEWLY INSTALLED EQUIPMENT IS OPERATING AND IN COMPLIANCE WITH ENERGY CODE.

LIGHTING CONTROLS ACCEPTANCE TESTS MUST BE PERFORMED BY A CERTIFIED LIGHTING CONTROLS ACCEPTANCE TEST TECHNICIAN (ATT).

MECHANICAL SYSTEM ACCEPATANCE TEST MUST BE PERFORMED BY A CERTIFIED MECHANICAL ATT FOR PROJECTS SUBMITTED ON OR AFTER OCTOBER 1, 2021.

A LISTING OF CERTIFIED ATTs CAN BE FOUND AT:
HTTPS://WWW.ENERGY.CA.GOV/PROGRAMS-AND-TOPICS/PROGRAMS/ACCEPTANCE-TEST-TECHNICIAN-CERTIFICATION-PROVIDER-PROGAM/ACCEPTANCE

THE ACCEPTANCE TESTING PROCEDURES MUST BE REPEATED, AND DEFICIENCIES MUST BE CORRECTED BY THE BUILDER OR INSTALLING CONTRACTOR UNITL THE CONSTUCTION/INSTALLATION OF THE SPECIFIED SYSTEMS CONFORM AND PASS THE REQUIRED ACCEPTANCE CRITERIA.

PROJECT INSPECTORS WILL BE COLLECTING THE FORMS TO CONFIRM THAT THE REQUIRED ACCEPTANCE TESTS HAVE BEEN COMPLETED.

PARTIAL LIST OF APPLICABLE STANDARDS

NFPA 13	STANDARD FOR AUTOMATIC FIRE SPRINKLER SYSTEMS (CA AMENDED)	2022 ED.
NFPA 14	STANDARD FOR STANDPIPE AND HOSE SYSTEMS (CA AMENDED)	2019 ED.
NFPA 17	STANDARD FOR DRY CHEMICAL EXTINGUISHING SYSTEMS	2021 ED.
NFPA 17A	STANDARD FOR WET CHEMICAL EXTINGUISHING SYSTEMS	2021 ED.
NFPA 20	STANDARD FOR STATIONARY PUMPS FOR FIRE PROTECTION	2019 ED.
NFPA 22	STANDARD FOR WATER TANKS FOR PRIVATE FIRE PROTECTION	2018 ED.
NFPA 24	STANDARD FOR THE INSTALLATION OF PRIVATE FIRE MAINS AND THEIR APPURTENANCES (CA AMENDED)	2019 ED.
NFPA 72	NATIONAL FIRE ALARM & SIGNALING CODE (CA AMENDED)	2022 ED.
NFPA 80	STANDARD FOR FIRE DOORS AND OTHER OPENING PROTECTIVES	2019 ED.
NFPA 2001	STANDARD ON CLEAN AGENT FIRE EXTINGUISHING SYSTEMS (CA AMENDED)	2018 ED.
UL 300	STANDARD FOR FIRE TESTING OF FIRE EXTINGUISHING SYSTEMS FOR PROTECTION OF COMMERCIAL COOKING EQUIPMENT	2005 (R2014)
UL 464	AUDIBLE SIGNAL APPLIANCES FOR FIRE ALARM AND SIGNALING SYSTEMS, INCLUDING ACCESSORIES	2003 ED.
UL 521	STANDARD FOR HEAT DETECTORS FOR FIRE PROTECTIVE SIGNALING SYSTEMS	1999 ED. (R2005)
UL 1971	STANDARD FOR SIGNALING DEVICES FOR THE HEARING IMPAIRED	2002 ED. (R2018)
ICC 300	STANDARD FOR BLEACHERS, FOLDING AND TELESCOPING SEATING AND GRANDSTANDS	2017 ED.

FOR A COMPLETE LIST OF APPLICABLE NFPA STANDARDS REFER TO 2022 CBC (SFM) CHAPTER 35 AND CALIFORNIA FIRE CODE CHAPTER 80.
SEE CALIFORNIA BUILDING CODE, CHAPTER 35 FOR STATE OF CALIFORNIA AMENDMENTS TO NFPA STANDARDS.

PROJECT DESCRIPTION

SCOPE OF WORK

26' X 56' PC LUNCH SHELTER

SITE WORK INCLUDING ACCESSIBILITY UPGRADES AND TOILET ROOM UPGRADES

PROJECT DATA

PROJECT ADDRESS:

233 NORTH MILLS AVENUE
LODI, CA 95242

OWNER:
LODI UNIFIED SCHOOL DISTRICT
1305 EAST VINE ST. LODI, CA
PHONE #: 209-331-7225

STATEMENT OF GENERAL CONFORMANCE

(X) THE DRAWINGS OR SHEETS LISTED ON THE INDEX SHEET
(X) THIS DRAWING PAGE OF SPECIFICATIONS/CALCULATIONS

HAVE BEEN PREPARED BY OTHER DESIGN PROFESSIONALS OR CONSULTANTS WHO ARE LICENSED AND/OR AUTHORIZED TO PREPARE SUCH DRAWINGS IN THIS STATE. IT HAS BEEN EXAMINED BY ME FOR:

1) DESIGN INTENT AND APPEARS TO MEET THE APPROPRIATE REQUIREMENTS OF TITLE 24, CALIFORNIA CODE OF REGULATIONS AND THE PROJECT SPECIFICATIONS PREPARED BY ME, AND
2) COORDINATION WITH MY PLANS AND SPECIFICATIONS AND IS ACCEPTABLE FOR INCORPORATION INTO THE CONSTRUCTION OF THIS PROJECT.

THE STATEMENT OF GENERAL CONFORMANCE "SHALL NOT BE CONSTRUED AS RELIEVING ME OF MY RIGHTS, DUTIES, AND RESPONSIBILITIES UNDER SECTIONS 17302 AND 81138 OF THE EDUCATION CODE AND SECTIONS 4-336, 4-341 AND 4-344" OF TITLE 24, PART 1. (TITLE 24, PART 1, SECTION 4-317 (B))

I CERTIFY THAT:

THE PC APPROVED MANUFACTURER DRAWINGS LISTED ON THE INDEX SHEET ARE IN GENERAL CONFORMANCE WITH THE PROJECT DESIGN INTENT, AND THEY HAVE BEEN COORDINATED WITH THE PROJECT PLANS AND SPECIFICATIONS.

SIGNATURE — DATE 11/28/2023
ARCHITECT OR ENGINEER DESIGNATED TO BE IN GENERAL RESPONSIBLE CHARGE

Jeffrey Grau
PRINT NAME

C-14648 — 05-31-2025
LICENSE NUMBER — EXPIRATION DATE

ABBREVIATIONS

(E)	EXISTING
AB	ANCHOR BOLT
AC PAVING	ASPHALTIC CONCRETE PAVING
ACC	ACCESS/ACCESSIBLE
ACP	ACOUSTICAL CEILING PANEL
ACT	ACOUSTICAL CEILING TILE
ADJ	ADJACENT/ADJUSTABLE
AFF	ABOVE FINISH FLOOR
AGG	AGGREGATE
AHU	AIR HANDLING UNIT
ARCH	ARCHITECTURAL
ATT	ATTENUATION
AUTO	AUTOMATIC
BD	BOARD
BLCG	BLOCKING
BUR	BUILT UP ROOFING
CABT	CABINET
CF	CUBIC FEET
CFCI	CONTRACTOR FURNISHED, CONTRACTOR INSTALLED
CFOI	CONTRACTOR FURNISHED, OWNER INSTALLED
CG	CORNER GUARD
CJ	CONTROL JOINT
CL	CENTER LINE
CLF	CHAIN LINK FENCE
CLR	CLEAR
CMU	CONCRETE MASONRY UNIT
CO	CLEANOUT
COL	COLUMN
COMP	COMPRESSION / COMPOSITE
CF	CUBIC FEET
COORD	COORDINATE
CORR	CORRUGATED
CT	CERAMIC TILE
CTSK	COUNTER SKUNK
CW	CURTAINWALL
DEPR	DEPRESSED / DEPRESSION
DF	DRINKING FOUNTAIN
DIM	DIMENSION
DISP	DISPENSER
DS	DOWNSPOUT
DTL	DETAIL
DW	DISHWASHER
E/W	EACH WAY
EIFS	EXTERIOR INSULATION FINISH SYSTEM
EJ	EXPANSION JOINT
ELEC	ELECTRICAL
ELEV	ELEVATION / ELEVATOR
ENCL	ENCLOSE / ENCLOSURE
EOS	EDGE OF SLAB
EP	ELECTRICAL PANEL
EQ	EQUAL
ESC	EXCUTCHEON
EWC	ELECTRIC WATER COOLER
EXP	EXPOSED
FA	FIRE ALARM
FD	FLOOR DRAIN
FDC	FIRE DEPARTMENT CONNECTION
FE	FIRE EXTINGUISHER
FEC	FIRE EXTINGUISHER W/ CABINET
FF	FINISH FLOOR
FG	FINISH GRADE
FH	FIRE HYDRANT
FHC	FIRE HOSE CABINET
FSH	FLAT HEAD SCREW
FIN	FINISH
FLR	FLOOR
FOC	FACE OF CONCRETE
FOF	FACE OF FINISH
FOM	FACE OF MASONRY
FOS	FACE OF STUD
FP	FIREPROOFING
FR	FIRE RATED
FRG	FIRE RATED GLASS
FRP	FIBERGLASS REINFORCED PLASTIC
FRT	FIRE RETARDANT TREATED
FS	FINISH SURFACE
FTG	FOOTING
GB	GRAB BAR
GFRC	GLASS FIBER REINFORCED CONCRETE
GL	GLASS TYPE
GLB	GLUE LAMINATED BEAM
GYP BD	GYPSUM BOARD
GYP PLAS	GYPSUM PLASTIC
HB	HOSE BIBB
HD	HEAVY DUTY
HDR	HEADER
HDWR	HARDWARE BOARD
HGT	HEIGHT
HM	HOLLOW METAL
HP	HIGH POINT
HSS	HOLLOW STEEL SECTION
ID	INSIDE DIAMTER
INT	INTERIOR
INV	INVERT
LANDS	LANDSCAPE
LAV	LAVATORY
LLH	LONG LEG HORIZONTAL
LLV	LONG LEG VERTICAL
LP	LOW POINT
LT WT	LIGHT WEIGHT
LVR	LOUVER
MACH	MACHINE
MB	MACHINE BOLT
MDF	MEDIUM DENSITY FIBERBOARD
MDO	MEDIUM DENSITY OVERLAY
MECH	MECHANICAL
MED	MEDIUM
MEMB	MEMBRANE
MFR	MANUFACTURER
MH	MANHOLE
MO	MASONRY OPENING
MTD	MOUNTED
MTL	METAL
NIC	NOT IN CONTRACT
NR	NON RATED
NRC	NOISE REDUCTION COEFFICIENT
NTS	NOT TO SCALE
O/	OVER
O/A	OVERALL
OC	ON CENTER
OD	OUTSIDE DIAMTER
OFCI	OWNER FURNISHED, CONTRACTOR INSTALLED
OFOI	OWNER FURNISHED, OWNER INSTALLED
OFVI	OWNER FURNISHED, VENDOR INSTALLED
OH	OPPOSITE HAND
OPER	OPERABLE
OPNG	OPENING
ORD	OVERFLOW ROOF DRAIN
P/L	PROPERTY LINE
PA	PUBLIC ADDRESS
PAF	POWDER ACTUATED FASTENER
PCC	PORTLAND CEMENT CONCRETE
PD	PAVING
PED	PEDESTRIAN
PERF	PERFORATED
PERIM	PERIMETER
PERP	PERPENDICULAR
PH	PANIC HARDWARE
P/V	POST INDICATOR VALVE
PL	PLATE
PLAM	PLASTIC LAMINATE
PLAS	PLASTER
PLUMB	PLUMBING
PNL	PANEL
PNT	PAINT / PAINTED
POC	POINT OF CONNECTION
POLY ISO	POLYISOCYANURATE
PREFIN	PREFINISHED
PREP	PREP / PREPARATION
PTC	POST TENSIONED CONCRETE
PTD	PAPER TOWEL DISPENSER
PTN	PARTITION
PTS	PNEUMATIC TUBE STATION / SYSTEM
PVC	POLYVINYL CHLORIDE
PVMT	PAVEMENT
QT	QUARRY TILE
R	RADIUS, RISER
RB	RESILIENT BASE
RD	ROOF DRAIN
RECEPT	ECEPTACLE
REF	REFERENCE
REFL	REFLECT(ED), (IVE)
REFL	REFLECT(ED), (IVE)
REFR	REFRIGERATOR
REINF	REINFORCE/REINFORCED/ REINFORCEMENT
REM	REMOVE
RH	ROUND HEAD
RHS	ROUND HEAD SCREW
RO	ROUGH OPENING
ROW	RIGHT OF WAY
SCH	SCHEDULE (FOR PIPE)
SCHED	SCHEDULE / SCHEDULING
SD	STORM DRAIN / SOAP DISPENSER
SECT	SECTION
SG	SAFETY GLASS
SHT	SHEET
SHTG	SHEATHING
SMS	SHEET METAL SCREW
SND	SANITARY NAPKIN DISPOSAL
SOV	SHUT OFF VALVE
SPEC	SPECIFICATIONS
SS	STAINLESS STEEL
STC	SOUND TRAMISSION CLASS
STL	STEEL
STSMS SCREW	SELF TAPPING SHEET METAL
SUSP	SUSPENDED
SV	SHEET VINYL
SYM	SYMMETRICAL
T	TREAD
T&B	TOP AND BOTTOM
TO	TOP OF
TOC	TOP OF CURB / CONCRETE
TOP	TOP OF PARAPET
TOS	TOP OF STEEL
TOW	TOP OF WALL
TPD	TOILET PAPER DISPENSER
TS	TACKABLE SURFACE
U/C	UNDER CABINET (OR COUNTER
UNO	UNLESS NOTED OTHERWISE
UR	URINAL
VAC	VACUUM
VB	VAPOR BARRIER
VCT	VINYL COMPOSITION TILE
VIF	VERIFY IN FIELD
VTR	VENT THROUGH ROOF
VWC	VINYL WALL COVERING
W/	WITH
W/O	WITHOUT
WB	WOOD BASE
WC	WATER CLOSET
WD	WOOD
WDW	WINDOW
WGT	WEIGHT
WH	WATER HEATER
WP	WATERPROOFING/WALL PROTECTION
WR	WATER RESISTANT
WRGB	WATER RESISTANT GYPSUM BOARD
WS	WOOD SCREW
WSCT	WAINSCOT
WWF	WELDED WIRE FABRIC

NOTE:
OTHER ABBREVIATIONS USED ON THESE DRAWINGS ARE CONSIDERED STANDARDS IN THE BUILDING INDUSTRY. CONTACT ARCHITECT FOR NECESSARY CLARIFICATION.

SHEET INDEX

NUMBER	NAME
GENERAL SHEET	
G0.10	COVER SHEET
1	
CIVIL	
C1.1	TITLE SHEET AND DETAIL SHEET
C2.1	DEMOLITION PLAN
C3.1	GRADING, DRAINAGE AND PAVING PLAN
3	
ARCHITECTURE	
A1.21	CODE INFORMATION SITE PLAN
A1.23	ENLARGED PLAN AND SECTION
A1.24	ENLARGED PLAN AND SECTION Copy 1
A2.11	ENLARGED TOILET ROOM PLANS
A8.11	1ST FLOOR - INTERIOR ELEVATIONS
A10.1	SITE DETAILS
A10.2	TYPICAL MOUNTING HEIGHTS AND DETAILS
7	
PC #02-121213	
RAM1.0	ORDER FORM
RAM1.1	NOTES AND SPECIAL INSTRUCTIONS
RAM2.3	FOUNDATION PLAN DRILLED PIER
RAM3.1	FRAMING PLAN
RAM4.2	FRAME CONNECTION DETAILS
RAM4.3	SECTION DETAILS
RAM5.1	ARCHITECTURAL VIEWS
RAM6.1	ROOF CONNECTION DETAILS
RAM7.0	MISC DESIGN OPTIONS
RAM7.1	ELECTRICAL CUTOUTS
10	
Grand total: 21	

DEFERRED APPROVALS

NONE

WIND AND SEISMIC DATA

1. Wind Design
   Basic Wind Speed: 93Vmph
   Risk Category: II
   Wind Exposure: C
2. Seismic Design
   Risk Category: II
   Seismic Important Factor: 1.0
   Ss = 0.739
   S1 = 0.289
   Site Class: D
   Seismic Design Category: D

SYMBOL LEGEND

NORTH ARROW
TICK INDICATES PLAN NORTH
ARROW INDICATES TRUE NORTH

DETAIL CALLOUT
INDICATES A SIMILAR CONDITION
LOCATION ON SHEET
SHEET WHERE SECTION IS DRAWN

ELEVATION CALLOUT (TYPICAL FOR EXTERIOR)
LOCATION ON SHEET
SHEET WHERE ELEVATION IS DRAWN

CONTROL OR DATUM POINT
NAME OF ELEVATION (IF APPLICABLE)
ELEVATION ABOVE FINISHED FLOOR

ELEVATION CALLOUT (TYPICAL FOR INTERIOR)
LOCATION ON SHEET
SHEET WHERE ELEVATION IS DRAWN

DOOR CALLOUT
DOOR NUMBER

SECTION CALLOUT
INDICATES A SIMILAR CONDITION
LOCATION ON SHEET
SHEET WHERE SECTION IS DRAWN

INTERIOR FINISH CALLOUT
MATERIAL FINISH TYPE
(SEE FINISH SCHEDULE)

KEYNOTE
KEYNOTE NUMBER (SEE LEGEND ON SHEET)

WINDOW CALLOUT
WINDOW NUMBER
(SEE WINDOW SCHEDULE)

STATE MAP

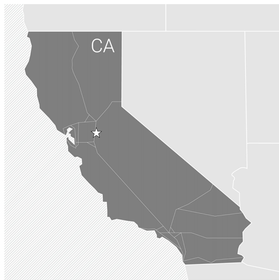

VICINITY MAP

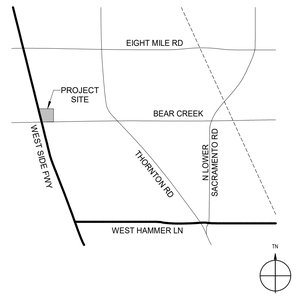

AGENCY APPROVAL:

IDENTIFICATION STAMP
DIV. OF THE STATE ARCHITECT
APP: 02-122004 INC:
REVIEWED FOR
SS ☑ FLS ☑ ACS ☑
DATE: 12/06/2023

LODI USD

HMC Architects
R221551X00
2101 CAPITOL AVENUE, SUITE 100,
SACRAMENTO, CA, 95816
916 368 7990 / www.hmcarchitects.com

LICENSED ARCHITECT JEFFREY ALAN FRAND C-14648 5/31/25 RENEWAL DATE STATE OF CALIFORNIA

PROJECT TEAM

CIVIL ENGINEER
WARREN GREEN ENGINEERING
3114 BRENNANS RD. LOOMIS, CA 95650
916-663-2323

FACILITY:
CHRISTA MCAULIFFE MIDDLE SCHOOL
3880 IRON CANYON CIRCLE, STOCKTON, CA 95209

PROJECT:
LODI UNIFIED SCHOOL DISTRICT LUNCH SHELTERS - CHRISTA MCAULIFFE MIDDLE SCHOOL

SHEET NAME:
COVER SHEET

CONSTRUCTION DOCUMENTS

DATE: **11/28/2023** | CLIENT PROJ NO: **R221551X00**

SHEET:

G0.10

Autodesk Docs://R221551X00 Lodi USD Lunch Shelters/R221551X00-A-MCAULIFFE-MS-LUNCH-SHELTER.rvt
11/28/2023 3:19:47 PM

PLEASE RECYCLE

THE LINE SHOWN ABOVE IS EXACTLY 1" WHEN PLOTTED ON ANSI D SHEETS ORIGINAL IMAGE SIZE

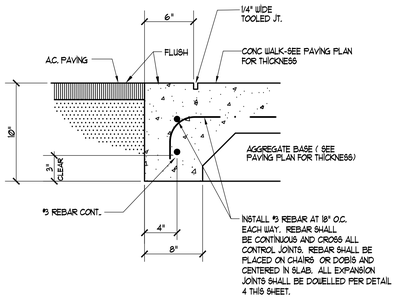

1 / C1.1 FLUSH CONC. WALK @ AC

N.T.S.

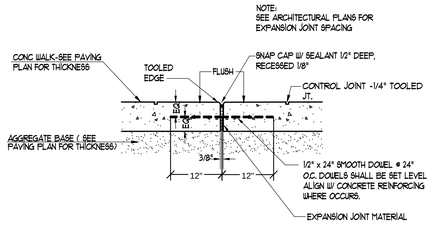

4 / C1.1 EXPANSION JOINT

N.T.S.

NOTE:
TRANSITION FROM NEW CONCRETE WALKWAYS TO EXISTING LANDSCAPE GRADE TO BE AT A MAXIMUM OF 5 : 1 SLOPE UNLESS OTHERWISE NOTED ON PLANS.

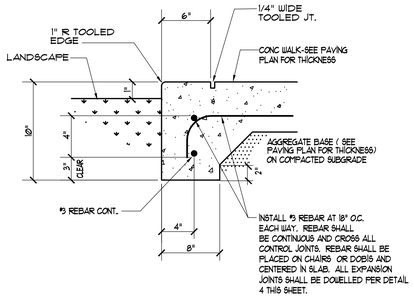

2 / C1.1 FLUSH CONC. WALK @ LANDSCAPE

N.T.S.

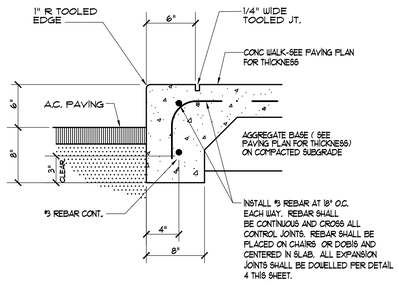

5 / C1.1 THICKENED EDGE CONC. WALK

N.T.S.

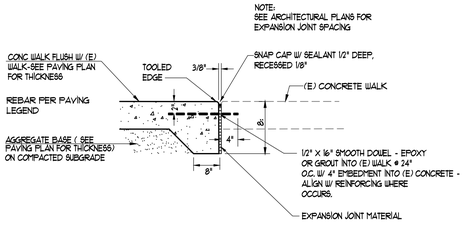

3 / C1.1 CONC. WALK AT EXISTING CONDITIONS

N.T.S.

LEGEND

× 43.15	EXISTING ELEVATION
8"SD	EXISTING STORM DRAIN
6"SS	EXISTING SANITARY SEWER
8"W	EXISTING WATER MAIN
	EXISTING WATER VALVE
	EXIST. FIRE HYDRANT
C	EXISTING COMMUNICATION LINE
IR	EXISTING IRRIGATION CONTROL LINE
E	EXISTING ELECTRICAL LINE
T	EXISTING TELEPHONE LINE
31.92	NEW ELEVATION

ABBREVIATIONS

AC	ASPHALT CONCRETE	LD	LANDSCAPE DRAIN
AB	AGGREGATE BASE	LF	LINEAR FEET
ADD. ALT.	ADDITIVE ALTERNATE	MH	MANHOLE
BLDG	BUILDING	MIN	MINIMUM
BO	BLOW OFF	MS	MOW STRIP
BOW	BACK OF WALK	(N)	NEW
BW	BOTTOM OF WALL	N.I.C.	NOT IN CONTRACT
CC	CONCRETE (TOP OF CONCRETE WALK)	OG	ORIGINAL GRADE
CL	CENTER LINE	P	PROPOSED
CONC	CONCRETE	PD	PLANTER DRAIN
CONST.	CONSTRUCT	PIV	POST INDICATOR VALVE
COTG	CLEANOUT TO GRADE	POC	POINT OF CONNECTION
DI	DRAIN INLET	PP	POWER POLE
DIP	DUCTILE IRON PIPE	PUE	PUBLIC UTILITY EASEMENT
DS	DOWNSPOUT	RCP	REINFORCED CONCRETE PIPE
DWY	DRIVEWAY	RD	ROOF DRAIN
(E)	EXISTING	RDWD	REDWOOD
E. BOX	ELECTRICAL BOX	RET	RETAINING
E. COND.	ELECTRICAL CONDUIT	RP	REDUCED PRESSURE
ELEC	ELECTRIC	R/W	RIGHT OF WAY
EP	EDGE OF PAVEMENT	RWL	RAIN WATER LEADER
EXIST.	EXISTING	S	SLOPE
FDC	FIRE DEPARTMENT CONNECTION	SD	STORM DRAIN
FF	FINISH FLOOR	SS	SANITARY SEWER
FG	FINISH GRADE	ST. LT.	STREET LIGHT
FH	FIRE HYDRANT	TBM	TEMPORARY BENCH MARK
FL	FLOW LINE	T	TRANSFORMER
FM	FIRE MAIN	TEL	TELEPHONE
FS	FIRE SERVICE	TC	TOP OF CURB
G	GAS	TW	TOP OF WALL
GB	GRADE BREAK	TYP	TYPICAL
GR	GRATE	VCP	VITRIFIED CLAY PIPE
GV	GATE VALVE	W	WATER
HDR	HEADER	WV	WATER VALVE
HP	HIGH POINT	VB	VALVE BOX
INV	INVERT ELEVATION	YD	YARD DRAIN
JP	JOINT POLE		

INDEX OF CIVIL DRAWINGS

C1.1 TITLE SHEET AND DETAIL SHEET

C2.1 DEMOLITION PLAN

C3.1 GRADING, DRAINAGE AND PAVING PLAN

AGENCY APPROVAL:

IDENTIFICATION STAMP
DIV. OF THE STATE ARCHITECT
APP: 02-122004 INC:
REVIEWED FOR
SS ☑ FLS ☑ ACS ☑
DATE: 12/06/2023

LODI USD

HMC Architects

R2211551

2101 CAPITOL AVENUE, SUITE 100,
SACRAMENTO, CA. 95816
916 368 7990 / www.hmcarchitects.com

Δ	DESCRIPTION	DATE

CONSULTANT:

REGISTERED PROFESSIONAL ENGINEER
JOHN A. GREEN
NO. 36500
Exp. 6-30-24
CIVIL
STATE OF CALIFORNIA

Warren-Green ENGINEERING
3114 Brennans Road
Loomis, CA 95690

FACILITY:

CHRISTA McAULIFFE MIDDLE SCHOOL
3880 IRON CANYON CIRCLE, STOCKTON, CA 95209

PROJECT:

LODI UNIFIED SCHOOL DISTRICT LUNCH SHELTERS-
CHRISTA McAULIFFE MIDDLE SCHOOL

SHEET NAME:

CONSTRUCTION DOCUMENTS

FILE NO.: CMMS-CD **A NO.:** R2211551

DATE: **NOV. 21, 2023** CLIENT PROJ NO:

SHEET:

C1.1

PLEASE RECYCLE

DEMOLITION LEGEND

- REMOVE (E) AC PAVING
- REMOVE (E) CONCRETE
- SAWCUT LINE
- REMOVE (E) CURB
- REMOVE (E) TREE

DEMOLITION NOTES:

1. CONTRACTOR SHALL REMOVE / DEMOLISH ALL (E) IMPROVEMENTS AS NECESSARY FOR CONSTRUCTION OF NEW IMPROVEMENTS UNDER THIS CONTRACT. CONTRACTOR SHALL FIELD WALK SITE TO REVIEW AND CONFIRM THE EXTENT OF ALL CLEARING WORK PRIOR TO BID.
2. ALL MATERIAL REMOVED BY CONTRACTOR SHALL BE PROPERLY AND LEGALLY DISPOSED OFFSITE (UNLESS SPECIFICALLY IDENTIFIED TO BE DELIVERED TO OWNER.)
3. NUMEROUS UNDERGROUND UTILITIES EXIST WITHIN THE AREAS OF EXISTING CONCRETE REMOVAL. CONTRACTOR SHALL USE CAUTION DURING DEMOLITION AND SUBGRADE SCARIFICATION AND COMPACTION TO PROTECT SAID UTILITIES.

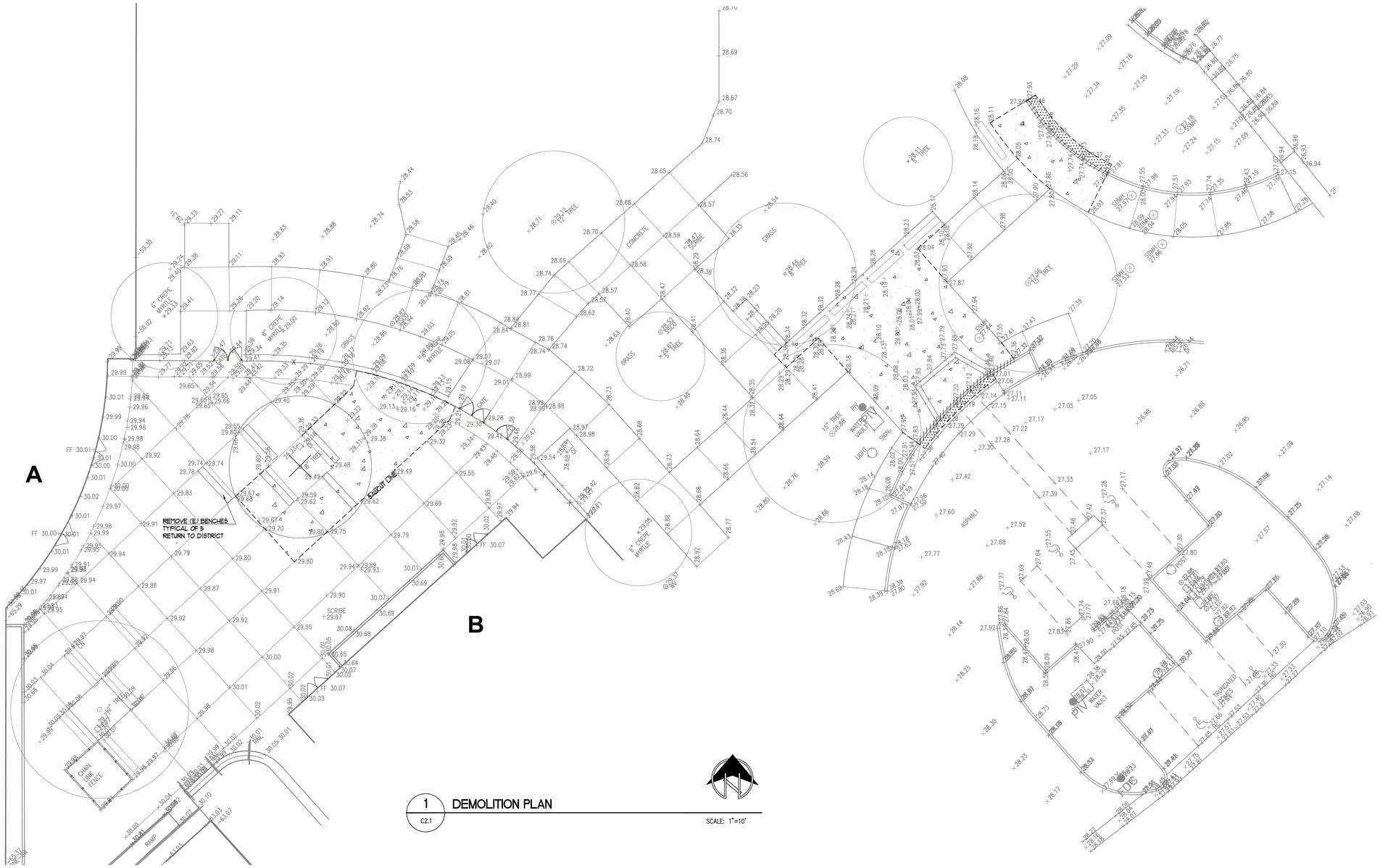

1 DEMOLITION PLAN
C2.1
SCALE: 1"=10'

AGENCY APPROVAL:

IDENTIFICATION STAMP
DIV. OF THE STATE ARCHITECT
APP: 02-122004 INC:
REVIEWED FOR
SS ☑ FLS ☑ ACS ☑
DATE: 12/06/2023

LODI USD

HMC Architects

R2211551

2101 CAPITOL AVENUE, SUITE 100,
SACRAMENTO, CA, 95816
916 368 7990 / www.hmcarchitects.com

Δ	DESCRIPTION	DATE

CONSULTANT:

REGISTERED PROFESSIONAL ENGINEER
LORI A. GREEN
NO. 36500
Exp. 6-30-24
STATE OF CALIFORNIA

Warren-Green ENGINEERING
3114 Brennans Road
Loomis, CA 95690

FACILITY:

CHRISTA McAULIFFE MIDDLE SCHOOL
3880 IRON CANYON CIRCLE, STOCKTON, CA 95209

PROJECT:

LODI UNIFIED SCHOOL DISTRICT LUNCH SHELTERS-CHRISTA McAULIFFE MIDDLE SCHOOL

SHEET NAME:

CONSTRUCTION DOCUMENTS

FILE NO.: CMMS-CD	A NO.: R2211551
DATE: NOV. 21, 2023	CLIENT PROJ NO:

SHEET:

C2.1

PLEASE RECYCLE

KEY NOTE LEGEND

1. 1.8% MAX. SLOPE IN ANY DIRECTION.
2. RAMP - 8% MAX. SLOPE IN DIRECTION OF TRAVEL, 1.8% MAX. CROSS SLOPE
3. 1.8% MAX. CROSS SLOPE 4.75% MAX. SLOPE IN DIRECTION OF TRAVEL.
4. MATCH (E) AC GRADE AT SAWCUT LINE.
5. MATCH (E) CONC. GRADE AT SAWCUT LINE.
6. SHADE STRUCTURE FOOTING - TYPICAL
7. SHADE STRUCTURE ROOF LINE
8. CONTRACTOR SHALL LOCATE EXISTING UTILITIES PRIOR TO START OF CONSTRUCTION. NOTIFY ARCHITECT IF CONFLICT WITH NEW FOOTINGS EXISTS.

NOTES:

1. CONCRETE SLAB IS NOT PART OF STRUCTURAL SUPPORT FOR SHADE STRUCTURE
2. CONTRACTOR SHALL LOCATE ALL UTILITIES IN AREA OF WORK PRIOR TO START OF CONSTRUCTION. NOTIFY ARCHITECT IF ANY CONFLICTS WITH NEW FOOTINGS OCCUR.
3. ALL UTILITIES (VALVE BOX COVERS, VAULTS, CLEANOUTS, ETC. SHALL BE ADJUSTED TO NEW FINISH GRADES.

PAVING LEGEND

- VARIABLE THICKNESS AC OVERLAY
- 3" ASPHALT CONCRETE ON 6" AGGREGATE BASE ON COMPACTED SUBGRADE
- 5" CONCRETE ON 6" AGGREGATE BASE ON COMPACTED SUBGRADE W/ #3 REBAR AT 18" O.C. EACH WAY

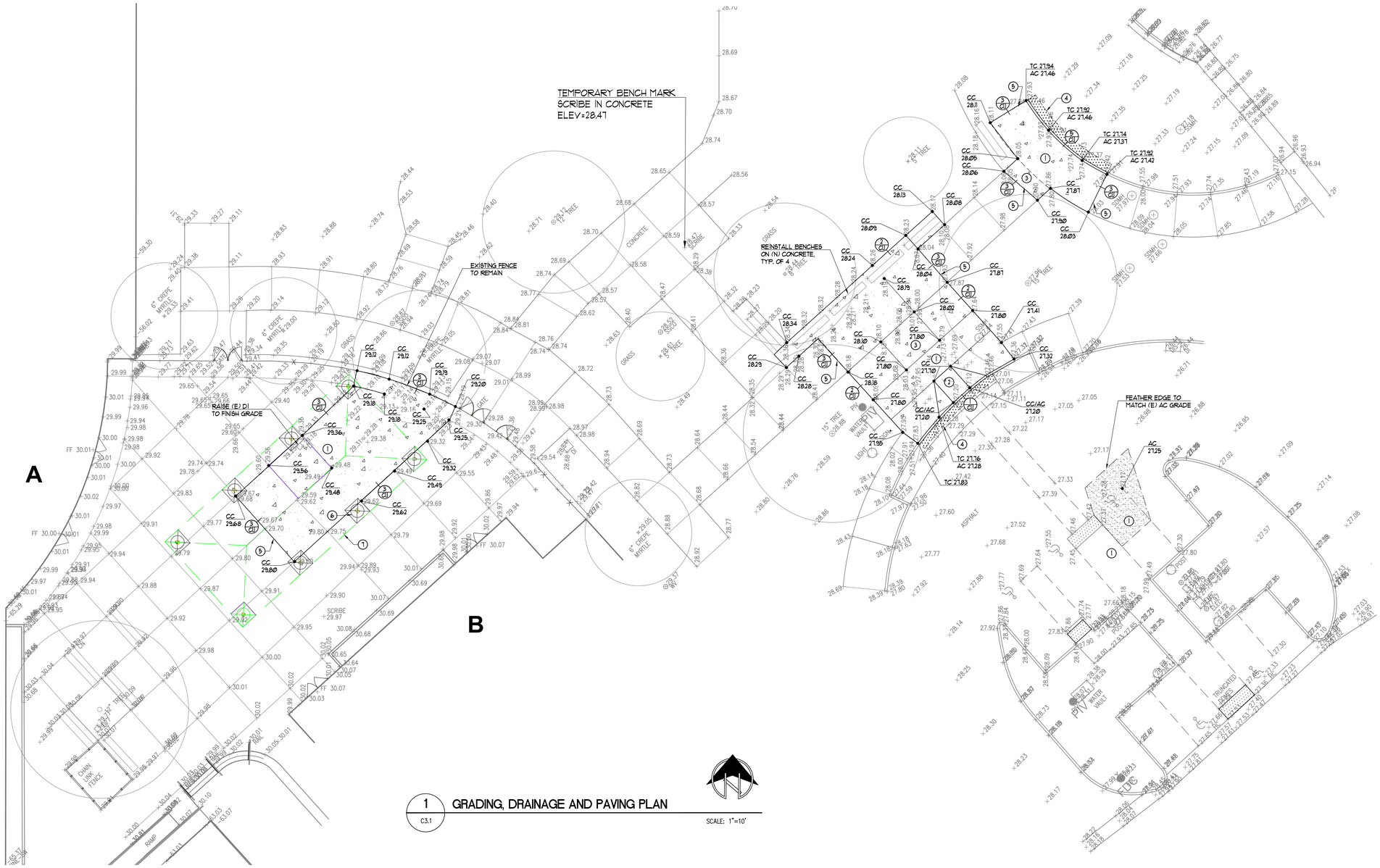

1 C3.1 GRADING, DRAINAGE AND PAVING PLAN

SCALE: 1"=10'

AGENCY APPROVAL:

IDENTIFICATION STAMP
DIV. OF THE STATE ARCHITECT
APP: 02-122004 INC:
REVIEWED FOR
SS ☑ FLS ☑ ACS ☑
DATE: 12/06/2023

LODI USD

HMC Architects

R2211551

2101 CAPITOL AVENUE, SUITE 100,
SACRAMENTO, CA, 95816
916 368 7990 / www.hmcarchitects.com

Δ DESCRIPTION DATE

CONSULTANT:

REGISTERED PROFESSIONAL ENGINEER
LORI A. GREEN
NO. 36500
Exp. 6-30-24
STATE of CALIFORNIA

Warren-Green ENGINEERING
3114 Brennans Road
Loomis, CA 95690

FACILITY:

CHRISTA McAULIFFE MIDDLE SCHOOL
3880 IRON CANYON CIRCLE, STOCKTON, CA 95209

PROJECT:

LODI UNIFIED SCHOOL DISTRICT LUNCH SHELTERS-
CHRISTA McAULIFFE MIDDLE SCHOOL

SHEET NAME:

CONSTRUCTION DOCUMENTS

FILE NO.: CMMS-CD A NO.: R2211551

DATE: NOV. 21, 2023 CLIENT PROJ NO:

SHEET:

C3.1

PLEASE RECYCLE

THE LINE SHOWN ABOVE IS 1" WHEN PRINTED ON THIS SHEET'S ORIGINAL PAGE SIZE

INCREMENT 2 BUILDING DATA AND ALLOWABLE AREA ANALYSIS

BUILDING	OCCUPANCY	CONSTRUCTION TYPE	ALLOWABLE AREA (TABLE 506.2)	ACTUAL BLDG. AREA	OCCUPANCY CALCULATION
LS	A-2	V-B NON-SPRINLERED	6,000 S.F.	1,456 S.F.	1456 SF / 15 NET = 98 OCC.

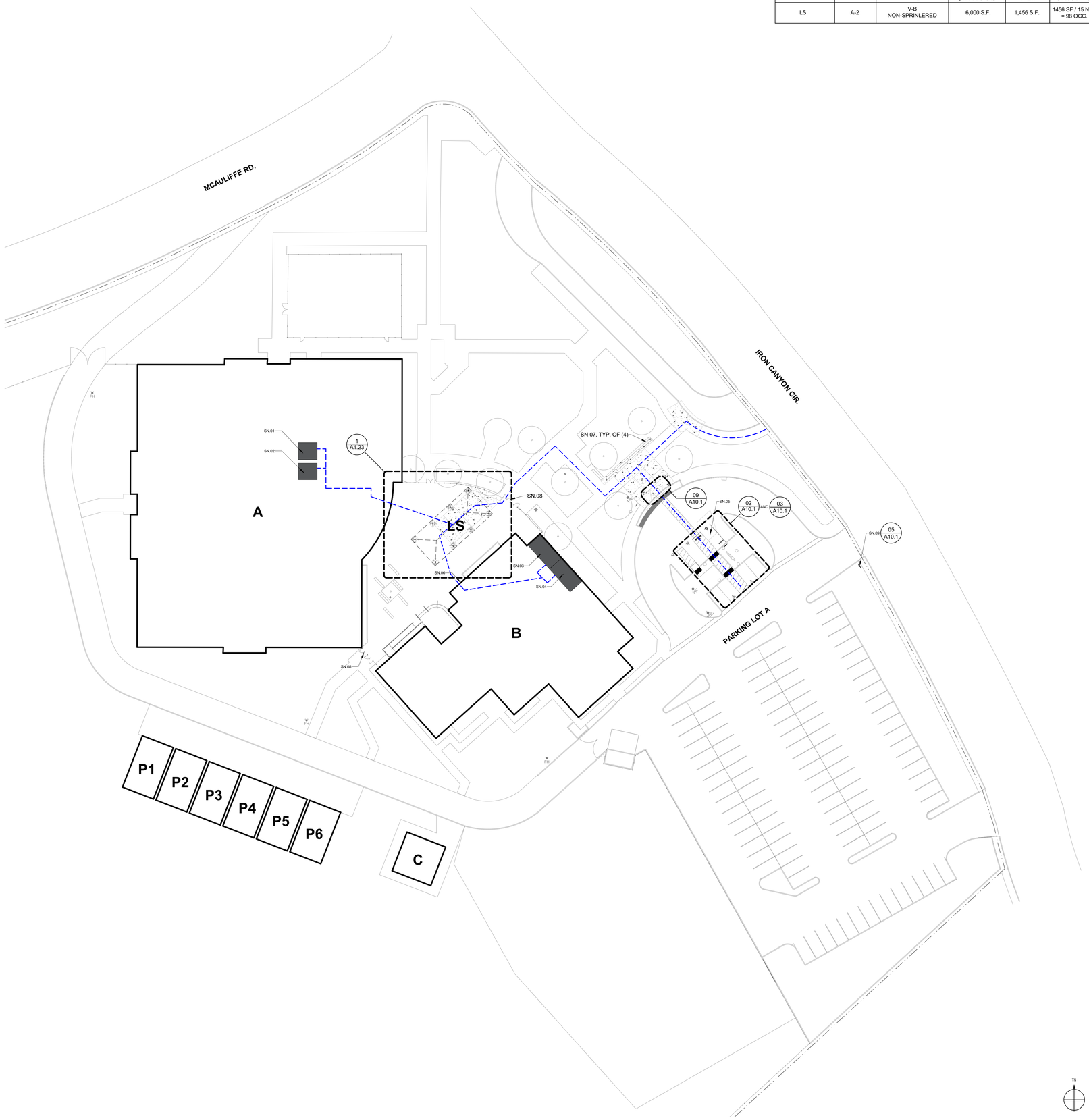

SHEET NOTES

SN.01 (E) MEN'S RESTROOM, PER DSA #02-102956, UPGRADED PER THIS APPLICATION
SN.02 (E) WOMEN'S RESTROOM, PER DSA #02-102956, UPGRADED PER THIS APPLICATION
SN.03 (E) BOY'S RESTROOM, PER DSA #02-102956, UPGRADED PER THIS APPLICATION
SN.04 (E) GIRL'S RESTROOM, PER DSA #02-102956, UPGRADED PER THIS APPLICATION
SN.05 ACCESSIBLE PARKING STALL PER DSA #02-102956, UPGRADED PER THIS APPLICATION
SN.06 (E) FIRE ALARM HORN
SN.07 REMOVE (E) BENCHES, SALVAGE FOR REINSTALLATION, AND REINSTALL
SN.08 (E) ACCESSIBLE PR 3'-0" GATE WITH PANIC HARDWARE AND KICKPLATE
SN.09 PARKING LOT ENTRANCE SIGN PER THIS APPLICATION

BUILDING DESIGNATIONS

DSA #02-102956

UNIT A - ADMINISTRATION AND CLASSROOM BUILDING

UNIT B - MULTIPUPROSE BUILDING

DSA #02-111054

UNIT C - CONCESSIONS BUILDING

DSA #02-107065

UNIT P1 - CLASSROOM BUILDING
UNIT P2 - CLASSROOM BUILDING
UNIT P3 - CLASSROOM BUILDING
UNIT P4 - CLASSROOM BUILDING
UNIT P5 - CLASSROOM BUILDING
UNIT P6 - CLASSROOM BUILDING

ACCESSIBLE PARKING LOT A CALCULATIONS

TOTAL PARKING STALL COUNT: 108
ACCESSIBLE PARKING STALLS: 05 (TABLE 11B-604)

REQUIRED ACCESSIBLE STALLS: 04 (76-100 TOTAL STALLS)
REQUIRED VAN ACCESSIBLE STALLS: 01 (1-6 ACCESSIBLE STALLS)

ACCESSIBLE STALLS PROVIDED: 4 STANDARD AND 1 VAN

EXISTING PATH OF TRAVEL (POT): ARCHITECT STATEMENT

DESIGN PROFESSIONAL IN GENERAL RESPONSIBLE IN CHARGE STATEMENT: THE POT IDENTIFIED IN THESE CONSTRUCTION DOCUMENTS IS COMPLIANT WITH THE CURRENT APPLICABLE CALIFORNIA BUILDING CODE ACCESSIBILITY PROVISIONS FOR **PATH OF TRAVEL REQUIREMENTS FOR ALTERATIONS, ADDITIONS AND STRUCTURAL REPAIRS**. AS PART OF THE DESIGN OF THIS PROJECT, THE POT WAS EXAMINED AND ANY ELEMENTS, COMPONENTS OR PORTIONS OF THE POT THAT WERE DETERMINED TO BE NON-COMPLIANT
1) HAVE BEEN IDENTIFIED AND
2) THE CORRECTIVE WORK NECESSARY TO BRING THEM INTO COMPLIANCE HAS BEEN INCLUDED WITHIN THE SCOPE OF THIS PROJECT'S WORK THROUGH DETAILS, DRAWINGS, AND SPECIFICATIONS INCORPORATED INTO THESE CONSTRUCTION DOCUMENTS.

ANY NONCOMPLIANT ELEMENTS, COMPONENTS OR PORTIONS OF THE POT THAT WILL NOT BE CORRECTED BY THIS PROJECT BASED ON VALUATION THRESHOLD LIMITATIONS OR A FINDING OF UNREASONABLE HARDSHIP ARE SO INDICATED IN THESE CONSTRUCTION DOCUMENTS.

DURING CONSTRUCTION, IF POT ITEMS WITHIN THE SCOPE OF THE PROJECT REPRESENTED AS CODE COMPLIANT ARE FOUND TO BE NON-CONFORMING BEYOND REASONABLE CONSTRUCTION TOLERANCES, THEY SHALL BE BROUGHT TO COMPLIANCE WITH THE CBC AS PART OF THIS PROJECT BY MEANS OF A CONSTRUCTION CHANGE DOCUMENT.

CODE INFORMATION SITE PLAN 1 1" = 30'-0"

AGENCY APPROVAL:

IDENTIFICATION STAMP
DIV. OF THE STATE ARCHITECT
APP: 02-122004 INC:
REVIEWED FOR
SS ☑ FLS ☑ ACS ☑
DATE: 12/06/2023

LODI USD

HMC Architects

R221551X00

LICENSED ARCHITECT JEFFREY ALAN FAPP C-14248 5/31/25 RENEWAL DATE STATE OF CALIFORNIA

2101 CAPITOL AVENUE, SUITE 100,
SACRAMENTO, CA, 95816
916 368 7990 / www.hmcarchitects.com

ISSUE

Δ	DESCRIPTION	DATE

LEGEND

ACCESSIBLE PATH OF TRAVEL
PROPERTY LINE
EXISTING CHAIN LINK FENCE
EXISTING ORNAMENTAL FENCE
X EXISTING BUILDING
EXISTING FIRE HYDRANT

ACCESSIBLE PATH OF TRAVEL

1. ACCESSIBLE PATH OF TRAVEL (P.O.T.): SITE WALKWAYS SHALL PROVIDE A BARRIER-FREE P.O.T. ABRUPT CHANGES IN LEVEL ALONG ANY P.O.T. ARE ALLOWED UP TO 1/2". ONLY ABRUPT CHANGES IN ELEVATION UP TO 1/4" ARE ALLOWED TO HAVE A VERTICAL TRANSITION. ABRUPT CHANGES IN ELEVATION BETWEEN 1/4" AND 1/2" SHALL BE BEVELED WITH A SLOPE NO GREATER THAN 1-UNIT VERTICAL TO 2-UNITS HORIZONTAL. GATES IN THE P.O.T. SHALL HAVE A SIGN ADJACENT TO THE GATE, IN ALL CAPITALIZED LETTERS, WHICH READS: "THIS GATE TO REMAIN LOCKED IN OPEN POSITION DURING SCHOOL HOURS OR ANY PUBLIC EVENT".
2. THE CONTRACTOR SHALL PROVIDE A P.O.T. FROM THE DISABLED ACCESSIBLE PARKING STALLS TO ALL BUILDINGS AND SITE FUNCTIONS. CONTRACTOR SHALL VERIFY THAT THE P.O.T. IS BARRIER-FREE AS DESCRIBED IN THESE NOTES.
3. WALKWAYS SHALL BE FREE OF GRATINGS WHEREVER POSSIBLE. GRATING WHICH OCCUR WITHIN THE P.O.T. SHALL HAVE OPENINGS WHICH DO NOT EXCEED 1/2" IN THE DIRECTION OF TRAVEL PER CBC SECTION 1133B.7.2.
4. AN ABRUPT DROP-OFF CHANGE IN ELEVATION AT THE EDGE OF ANY WALK INTO AN ADJACENT PLANTER SHALL NOT EXCEED 4".
5. SLOPES IN THE DIRECTION OF THE P.O.T. GREATER THAN 1-UNIT VERTICAL TO 20-UNITS HORIZONTAL SHALL BE CONSIDERED A RAMP AND WILL REQUIRE HANDRAILS ON BOTH SIDES PER CBC SECTION 1133B.5.5 SLOPES IN THE DIRECTION OF THE P.O.T. ALONG WALKWAYS SHALL NOT EXCEED 5%. CROSS SLOPES IN THE P.O.T. ALONG WALKWAYS SHALL NOT EXCEED 2%.
6. ALL WALKWAYS WITHIN THE P.O.T. SHALL BE A MINIMUM OF 48" IN WIDTH. SURFACES WITH A SLOPE OF LESS THAN 6% SHALL BE AT LEAST AS SLIP-RESISTANT AS THAT PROVIDED BY A MEDIUM BROOM FINISH. SURFACES WITH A SLOPE OF MORE THAN 6% SHALL BE SLIP-RESISTANT.
7. OBJECTS PROTRUDING INTO THE P.O.T. SHALL NOT REDUCE THE C LEAR WIDTH OR MANEUVERING SPACE WITHIN THE P.O.T. PER CBC SECTION 1133B.8.6.
8. ARCHITECT HAS SURVEYED/ INSPECTED THE PATH OF TRAVEL (P.O.T.) AS INDICATED ON THE PLANS AND HAS FOUND IT TO BE, OR HAS INDICATED ON THE PLANS REMEDIAL WORK WHICH WOULD CAUSE IT TO BE, A BARRIER-FREE ACCESSIBLE ROUTE:
   a. AT LEAST 48" IN. WIDTH; OR AS APPROVED BY CODE;
   b. WITHOUT ABRUPT LEVEL CHANGES EXCEEDING 1/2" IF BELVELED AT 1:2 MAXIMUM SLOPE, OR VERTICAL LEVEL CHANGES EXCEEDING 1/4";
   c. WITH A FIRM, STABLE, AND SLIP RESISTANT WALKING SURFACE;
   d. WITH A RUNNING SLOPE OF 1:20 OR LESS, UNLESS OTHERWISE INDICATED, AND A CROSS SLOPE OF 1:50 OR LESS;
   e. IS FREE OF OVERHEAD OBSTRUCTIONS WITHIN 80" ABOVE THE WALKING SURFACE; AND
   f. IS FREE OF OBJECTS WHICH PROTRUDE MORE THAN 4" BETWEEN THE HEIGHTS OF 27" AND 80" ABOVE THE WALKING SURFACE.

FACILITY:
CHRISTA MCAULIFFE MIDDLE SCHOOL
3880 IRON CANYON CIRCLE, STOCKTON, CA 95209

PROJECT:
LODI UNIFIED SCHOOL DISTRICT LUNCH SHELTERS - CHRISTA MCAULIFFE MIDDLE SCHOOL

SHEET NAME:
CODE INFORMATION SITE PLAN

CONSTRUCTION DOCUMENTS

DATE: **11/28/2023** CLIENT PROJ NO: **R221551X00**

SHEET:

A1.21

Autodesk Docs://R221551X00 Lodi USD Lunch Shelters/R221551X00-A-MCAULIFFE-MS-LUNCH-SHELTER.rvt
11/28/2023 2:17:46 PM

PLEASE RECYCLE

THE LINE SHOWN ABOVE IS 1" WHEN PLOTTED ON ANSI E SHEETS ORIGINAL PAGE SIZE

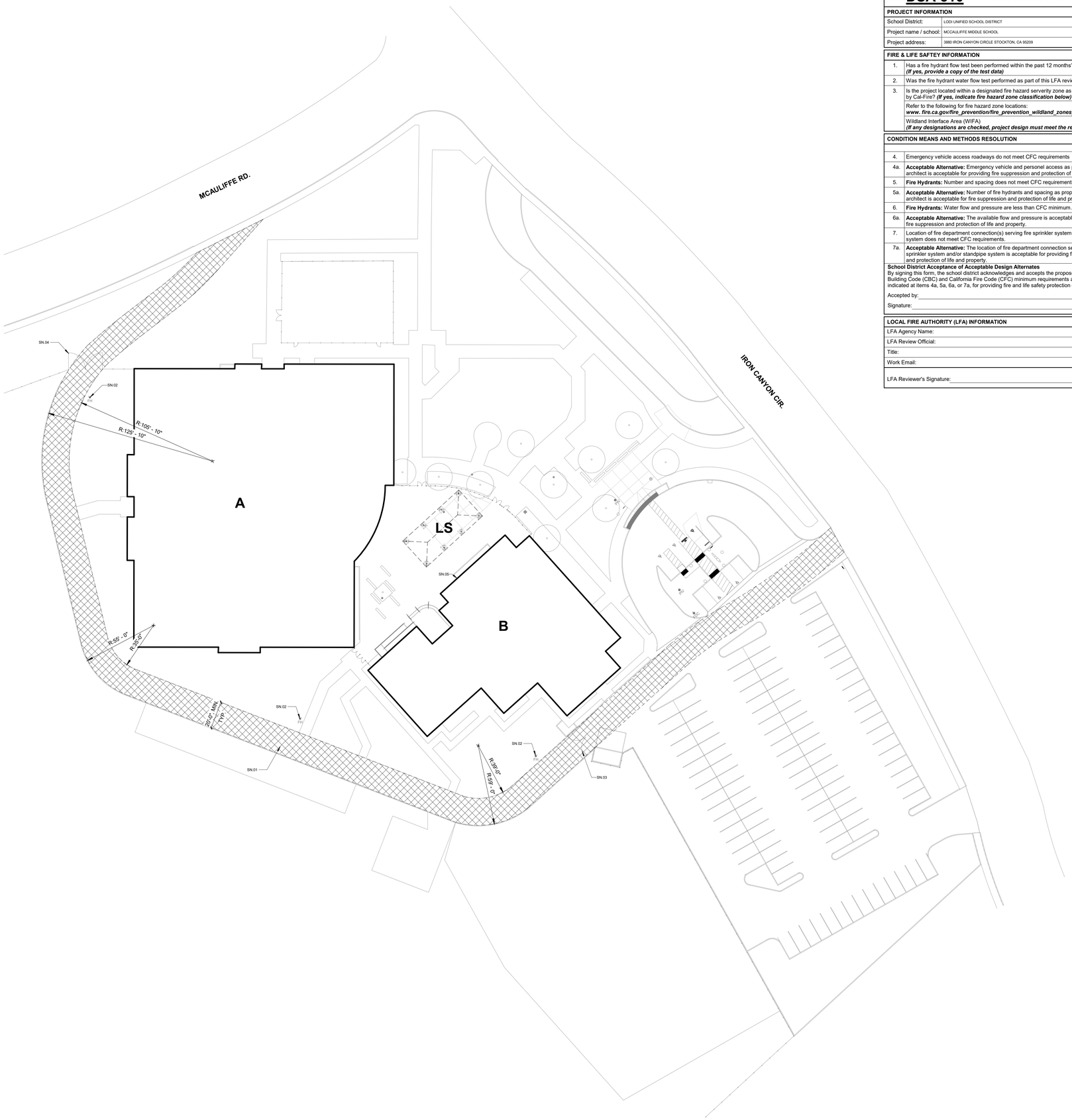

DSA-810 FIRE & LIFE SAFETY SITE CONDITIONS SUBMITTAL

PROJECT INFORMATION

School District:	LODI UNIFIED SCHOOL DISTRICT
Project name / school:	MCCAULIFFE MIDDLE SCHOOL
Project address:	3880 IRON CANYON CIRCLE STOCKTON, CA 95209

FIRE & LIFE SAFTEY INFORMATION — ALTERNATE ACCEPTED

1.	Has a fire hydrant flow test been performed within the past 12 months? ***(If yes, provide a copy of the test data)***	Yes ☐	No ☒
2.	Was the fire hydrant water flow test performed as part of this LFA review?	Yes ☐	No ☒
3.	Is the project located within a designated fire hazard serverity zone as established by Cal-Fire? ***(If yes, indicate fire hazard zone classification below)***	Yes ☐	No ☒

	Moderate	High	Very High
Refer to the following for fire hazard zone locations: ***www. fire.ca.gov/fire_prevention/fire_prevention_wildland_zones_maps***	☐	☐	☐
			WIFA
Wildland Interface Area (WIFA) ***(If any designations are checked, project design must meet the requirements of CBC Chapter 7A)***			☐

CONDITION MEANS AND METHODS RESOLUTION — ALTERNATE ACCEPTED

		Yes	No	N/A	N/R
4.	Emergency vehicle access roadways do not meet CFC requirements			X	
4a.	**Acceptable Alternative:** Emergency vehicle and personel access as proposed by the architect is acceptable for providing fire suppression and protection of life and property				
5.	**Fire Hydrants:** Number and spacing does not meet CFC requirements			X	
5a.	**Acceptable Alternative:** Number of fire hydrants and spacing as proposed by the architect is acceptable for fire suppression and protection of life and property.				
6.	**Fire Hydrants:** Water flow and pressure are less than CFC minimum.			X	
6a.	**Acceptable Alternative:** The available flow and pressure is acceptable for providing fire suppression and protection of life and property.				
7.	Location of fire department connection(s) serving fire sprinkler system or standpipe system does not meet CFC requirements.			X	
7a.	**Acceptable Alternative:** The location of fire department connection serving the fire sprinkler system and/or standpipe system is acceptable for providing fire suppression and protection of life and property.				

School District Acceptance of Acceptable Design Alternates
By signing this form, the school district acknowledges and accepts the proposed design as an alternative to California Building Code (CBC) and California Fire Code (CFC) minimum requirements as indicated by one of more of the conditions indicated at items 4a, 5a, 6a, or 7a, for providing fire and life safety protection of life and property.

Accepted by: _____ Title: _____

Signature: _____ Date: _____

LOCAL FIRE AUTHORITY (LFA) INFORMATION

LFA Agency Name:	
LFA Review Official:	
Title:	Work Phone:
Work Email:	

LFA Reviewer's Signature: _____ Date: _____

AGENCY APPROVAL:

IDENTIFICATION STAMP
DIV. OF THE STATE ARCHITECT
APP: 02-122004 INC:
REVIEWED FOR
SS ☑ FLS ☑ ACS ☑
DATE: 12/06/2023

LODI USD

HMC Architects

R221551X00

LICENSED ARCHITECT JEFFREY ALAN PAPP C-14248 5/31/25 RENEWAL DATE STATE OF CALIFORNIA

2101 CAPITOL AVENUE, SUITE 100,
SACRAMENTO, CA, 95816
916 368 7990 / www.hmcarchitects.com

ISSUE

Δ	DESCRIPTION	DATE

LEGEND

- PROPERTY LINE
- EXISTING CHAIN LINK FENCE
- EXISTING ORNAMENTAL FENCE
- X — EXISTING BUILDINGS
- EXISTING FIRE LANE
- FIRE HYDRANT - SEE CIVIL DRAWINGS

SHEET NOTES

SN.01	EXISTING FIRE LANE
SN.02	EXISTING FIRE HYDRANT
SN.03	EXISTING 20' - 0" CHAINLINK GATE. PROVIDE NEW KNOX BOX.
SN.04	EXISTING 25' - 0" CHAINLINK GATE.PROVIDE NEW KNOX BOX.
SN.05	(E) FIRE ALARM HORN

FACILITY:
CHRISTA MCAULIFFE MIDDLE SCHOOL
3880 IRON CANYON CIRCLE, STOCKTON, CA 95209

PROJECT:
LODI UNIFIED SCHOOL DISTRICT LUNCH SHELTERS - CHRISTA MCAULIFFE MIDDLE SCHOOL

SHEET NAME:
LOCAL FIRE AUTHORITY SITE PLAN

CONSTRUCTION DOCUMENTS

DATE: **11/28/2023** CLIENT PROJ NO: **R221551X00**

SHEET:

A1.22

LOCAL FIRE AUTHORITY SITE ACCESS PLAN 1 1" = 30'-0"

PLEASE RECYCLE

Autodesk Docs://R221551X00 Lodi USD Lunch Shelters/R221551X00-A-MCAULIFFE-MS-LUNCH-SHELTER.rvt
11/28/2023 2:17:48 PM

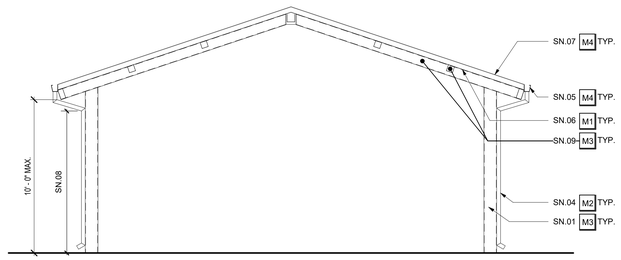

LUNCH SHELTER SECTION 2
1/4" = 1'-0"

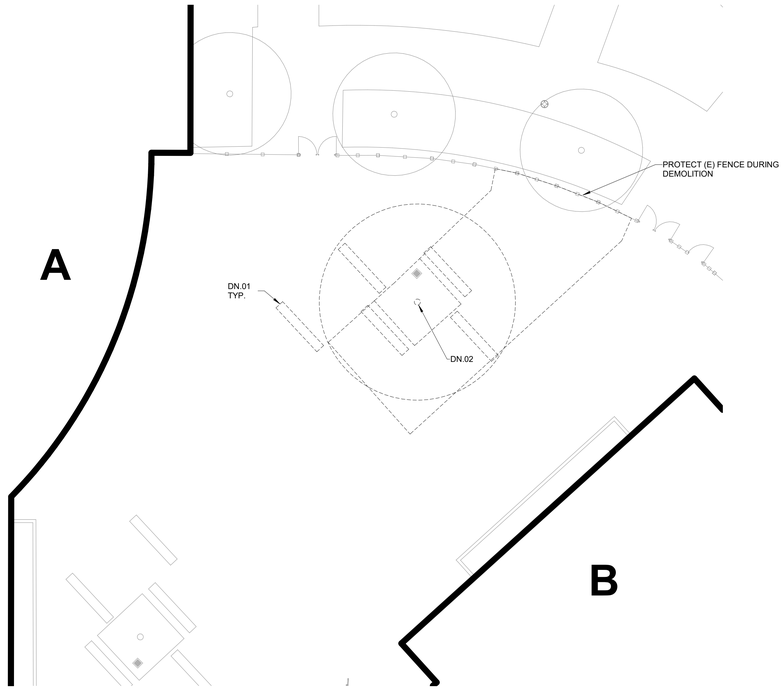

ENLARGED DEMOLITION SITE PLAN 3
1" = 10'-0"

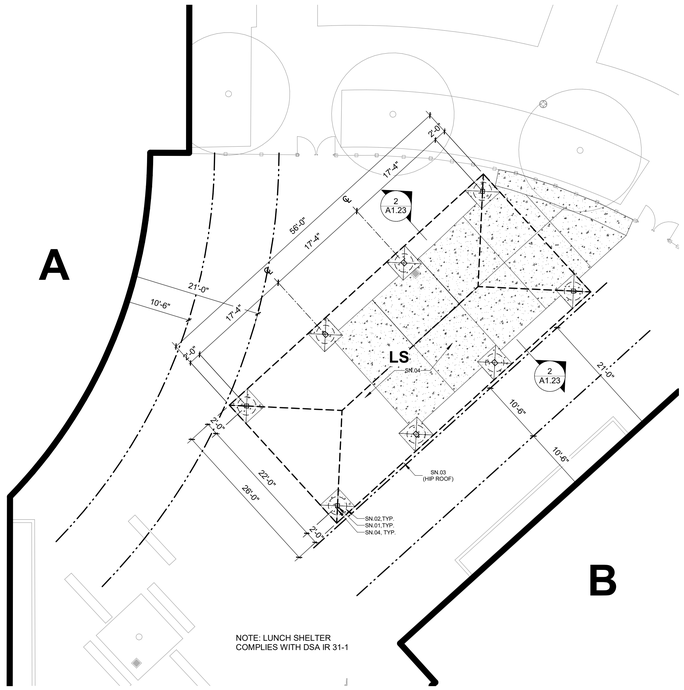

ENLARGED SITE PLAN - LUNCH SHELTER 1
1" = 10'-0"

THE LINE SHOWN ABOVE IS EXACTLY ONE INCH ON THIS SHEETS ORIGINAL PAGE SIZE

Autodesk Docs://R221551X00 Lodi USD Lunch Shelters/R221551X00-A-MCAULIFFE-MS-LUNCH-SHELTER.rvt
11/28/2023 2:17:49 PM

AGENCY APPROVAL:

IDENTIFICATION STAMP
DIV. OF THE STATE ARCHITECT
APP: 02-122004 INC:
REVIEWED FOR
SS ☑ FLS ☑ ACS ☑
DATE: 12/06/2023

LODI USD

HMC Architects
R221551X00
2101 CAPITOL AVENUE, SUITE 100,
SACRAMENTO, CA, 95816
916 368 7990 / www.hmcarchitects.com

LICENSED ARCHITECT JEFFREY ALAN GRAY C-14248 5/31/25 RENEWAL DATE STATE OF CALIFORNIA

ISSUE

Δ	DESCRIPTION	DATE

LEGEND

- PROPERTY LINE
- EXISTING CHAIN LINK FENCE
- ACCESSIBLE PATH OF TRAVEL
- X — EXISTING BUILDINGS
- X — PC LUNCH SHELTER
- EXPANSION JOINT
- CONCRETE WALK / PAVING
- CONTROL JOINT

DEMOLITION NOTES

DN.01 REMOVE (E) BENCH AND RETURN TO DISTRICT
DN.02 REMOVE (E) TREE AND GRIND STUMP

SHEET NOTES

SN.01 HSS COLUMN
SN.02 DRILLED PIER FOOTING
SN.03 ROOF OVERHANG ABOVE
SN.04 3" DIAMETER SCHEDULE 40 STEEL DOWNSPOUT
SN.05 PREFINISHED GUTTER AND FLASHING
SN.06 PAINT DECK UNDERSIDE
SN.07 PREFINISHED STANDING SEAM ROOF
SN.08 HOLD TIGHT TO UNDERSIDE OF FRAMING: MAINTAIN 9' - 0' CLEARANCE MIN.
SN.09 HSS BEAM

EXTERIOR COLOR SCHEDULE

	MATERIAL	COLOR
M1	METAL	METAL FINISH COLOR 1 (1)
M2	METAL	METAL FINISH COLOR 2 (1)
M3	METAL	METAL PREFINISH COLOR (1) (3)
M4	METAL	METAL PREFINISH COLOR (1) (4)

(1) CUSTOM COLORS TO BE SUBMITTED PER SPECIFICATIONS.
(2) CLEAN, PREP AND PAINT ALL SURFACES NOT PREFINISHED.

FACILITY:
CHRISTA MCAULIFFE MIDDLE SCHOOL
3880 IRON CANYON CIRCLE, STOCKTON, CA 95209

PROJECT:
LODI UNIFIED SCHOOL DISTRICT LUNCH SHELTERS - CHRISTA MCAULIFFE MIDDLE SCHOOL

SHEET NAME:
ENLARGED PLAN AND SECTION

CONSTRUCTION DOCUMENTS

DATE: **11/28/2023** CLIENT PROJ NO: **R221551X00**
SHEET:

A1.23

PLEASE RECYCLE

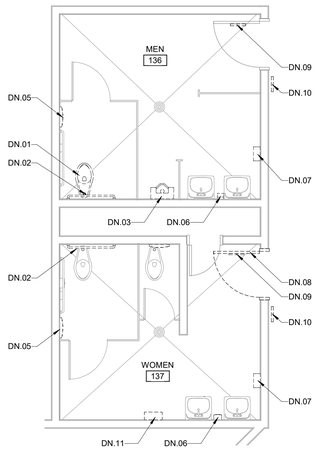

PN

UNIT A - RESTROOMS DEMOLITION PLAN 04

1/4" = 1'-0"

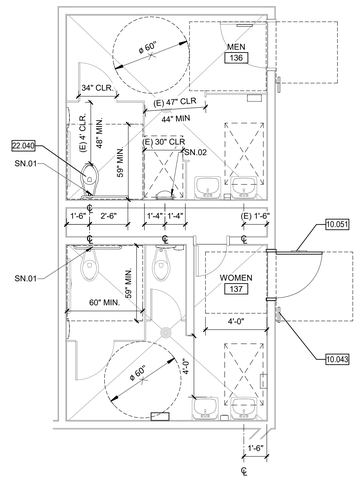

PN

UNIT A - RESTROOMS IMPROVEMENT PLAN 02

1/4" = 1'-0"

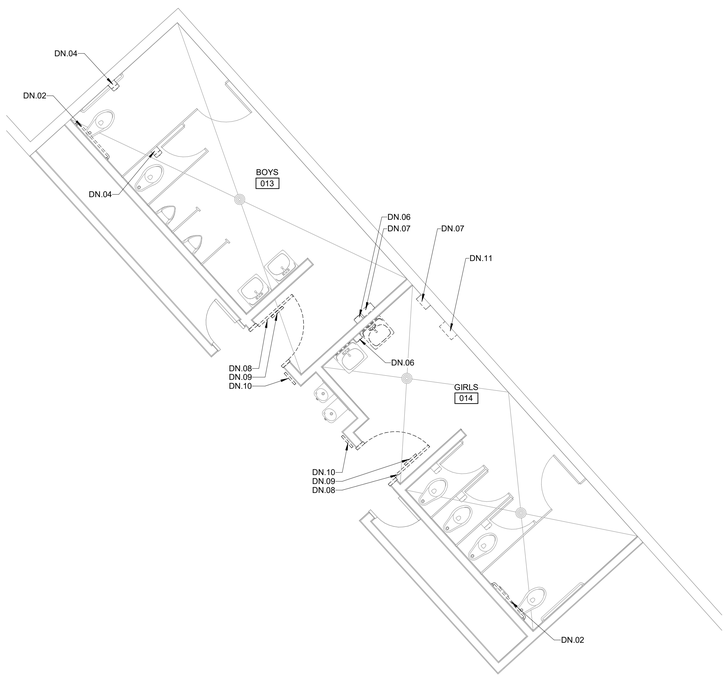

PN

UNIT B - RESTROOMS DEMOLITION PLAN 03

1/4" = 1'-0"

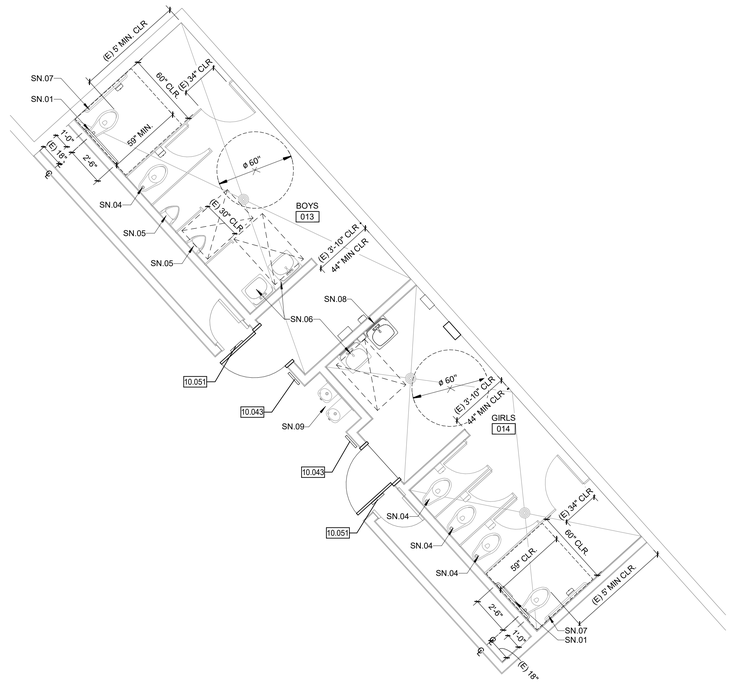

PN

UNIT B - RESTROOMS PLAN 01

1/4" = 1'-0"

DEMOLITION NOTES

DN.01 REMOVE (E) FLOOR MOUNTED WATER CLOSET
DN.02 REMOVE (E) 36" GRAB BAR AND SALVAGE FOR REINSTILLATION
DN.03 REMOVE (E) URINAL AND SALVAGE FOR REINSTILLATION
DN.04 REMOVE (E) TOILET PAPER DISPENSER AND SALVAGE FOR REINSTILLATION
DN.05 REMOVE (E) TOILET SEAT COVER DISPENSER AND SALVAGE FOR REINSTILLATION
DN.06 REMOVE (E) SOAP DISPENSER AND SALVAGE FOR REINSTILLATION
DN.07 REMOVE (E) PAPER TOWEL DISPENSER AND SALVAGE FOR REINSTILLATION
DN.08 REMOVE (E) DOOR AND SALVAGE FOR REINSTILLATION
DN.09 REMOVE (E) DOOR SIGNAGE
DN.10 REMOVE (E) ROOM ID SIGNAGE
DN.11 REMOVE (E) SANITARY NAPKIN DISPENSER AND SALVAGE FOR REINSTILLATION
DN.12 REMOVE (E) LAVATORY AND SALVAGE FOR REINSTILLATION

SHEET NOTES

SN.01 REINSTALL SALVAGED 36" GRAB BAR TO COMPLY WITH A10.2. MAINTAIN 1 1/2" CLEARANCE ALL AROUND GRAB BAR.
PROVIDE BLOCKING DETAIL PER 09/A10.2

CONTRACTORS OPTION, STAINLESS STEEL PLATE GRAB BAR PER DETAIL 03/A10.2

REMOVE AND REPLACE FRP FINISH IN FULL SHEET AS REQUIRED
SN.02 REINSTALL SALVAGED URINAL TO COMPLY WITH A10.2
SN.03 REINSTALL (E) DOOR IN (E) FRAME PER NEW CONFIGURATION. ADJUST ALL HARDWARE AS REQUIRED. PATH HOLES AND PAINT DOORS. CONTRACTORS OPTION, REPLACE EXISTING DOOR AND HARDWARE IN KIND.
SN.04 (E) WATER CLOSET TO REMAIN
SN.05 (E) URINAL TO REMAIN
SN.06 (E) LAVATORY TO REMAIN
SN.07 (E) 42" GRAB BAR TO REMAIN\
SN.08 REINSTALL SALVAGED LAVATORY TO COMPLY WITH A10.2
SN.09 (E) ACCESSIBLE DRINKING FOUNTAIN

GENERAL NOTES

1. TYPICAL MOUNTING HEIGHTS AND DETAILS APPLY TO ENTIRE PROJECT, WHETHER REFERENCED OR NOT, UNLESS OTHERWISE NOTED.
2. ALL DISABLED ACCESSIBLE DIMENSIONS, ARE MAXIMUM DIMENSIONS UNLESS OTHERWISE NOTED.
3. REMOVE OR MODIFY ALL ITEMS AS REQUIRED TO INSTALL NEW WORK, WHETHER OR NOT SPECIFICALLY SHOWN TO BE REMOVED OR MODIFIED.
4. WHERE DRAINS, PIPING AND OTHER MATERIALS AND EQUIPMENT ARE REMOVED FROM THE SLAB, IT SHALL BE BACKFILLED, FINISHED FLUSHED WITH ADJACENT SURFACES AND PREPARED TO RECEIVE THE NEW FINISH.
5. CUT AND PATCH EXISTING SLAB AS REQUIRED FOR NEW PLUMBING WORK.
6. DEMO AND REPAIR WALL FINISH AS NECESSARY TO PERFORM FIXTURE AND EQUIPMENT WORK AS NOTED. ADJACENT FINISHES TO BE VERIFIED BY CONTRACTOR
7. EQUIPMENT/FIXTURES NOTED AS "SALVAGED FOR REINSTALLATION" WILL BE REMOVED AND STORED BY THE CONTRACTOR PRIOR TO START OF DEMOLITION. THESE EQUIPMENT/FIXTURES SHALL BE REINSTALLED BY THE CONTRACTOR UNDER THIS CONTRACT.

AGENCY APPROVAL:

IDENTIFICATION STAMP
DIV. OF THE STATE ARCHITECT
APP: 02-122004 INC:
REVIEWED FOR
SS ☑ FLS ☑ ACS ☑
DATE: 12/06/2023

LODI USD

HMC Architects
R221551X00
2101 CAPITOL AVENUE, SUITE 100,
SACRAMENTO, CA, 95816
916 368 7990 / www.hmcarchitects.com

LICENSED ARCHITECT JEFFREY ALAN HAND C-14248 5/31/25 RENEWAL DATE STATE OF CALIFORNIA

ISSUE

Δ	DESCRIPTION	DATE

LEGEND

EXISTING WALL TO REMAIN

CONSECUTIVE NUMBERING CONVENTION FOR INTERIOR ELEVATIONS AND ROOM FINISHES.

REMOVE (E) DOOR, HARDWARE AND FRAME U.O.N.

30" x 48" CLEAR FLOOR SPACE

60" CLEAR FLOOR SPACE

KEYNOTES

10.043	SIGNAGE: TOILET ROOM IDENTIFICATION
10.051	SIGNAGE: TOILET ROOM DOOR SYMBOL
22.040	WATER CLOSET

KEY PLAN

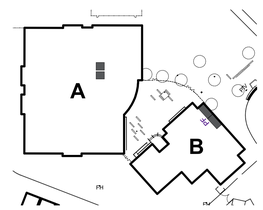

FACILITY:
CHRISTA MCAULIFFE MIDDLE SCHOOL
3880 IRON CANYON CIRCLE, STOCKTON, CA 95209

PROJECT:
LODI UNIFIED SCHOOL DISTRICT LUNCH SHELTERS - CHRISTA MCAULIFFE MIDDLE SCHOOL

SHEET NAME:
ENLARGED TOILET ROOM PLANS

CONSTRUCTION DOCUMENTS

DATE: **11/28/2023** CLIENT PROJ NO: **R221551X00**

SHEET:

A2.11

PLEASE RECYCLE

THE LINE SHOWN ABOVE IS EXACTLY 1" WHEN PLOTTED ON THIS SHEET'S ORIGINAL PAGE SIZE
Autodesk Docs://R221551X00 Lodi USD Lunch Shelters/R221551X00-A-MCAULIFFE-MS-LUNCH-SHELTER.rvt
11/28/2023 3:00:01 PM

THE LINE SHOWN ABOVE IS EXACTLY 1" WHEN PLOTTED ON THIS SHEET'S ORIGINAL PAGE SIZE

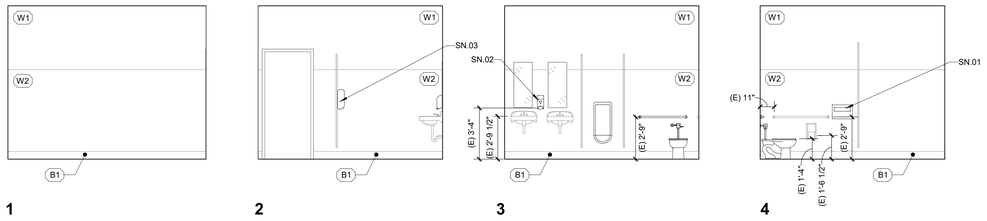

UNIT A - MENS RESTROOM 04

1/4" = 1'-0"

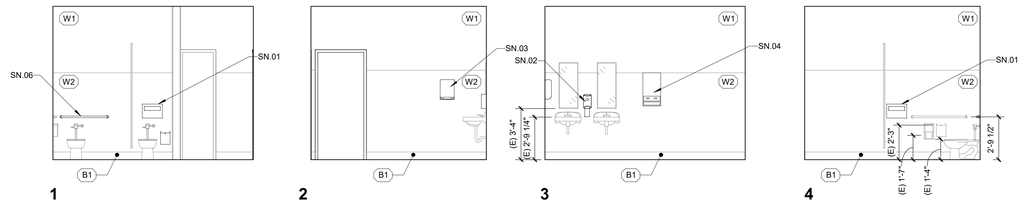

UNIT A - WOMENS RESTROOM 03

1/4" = 1'-0"

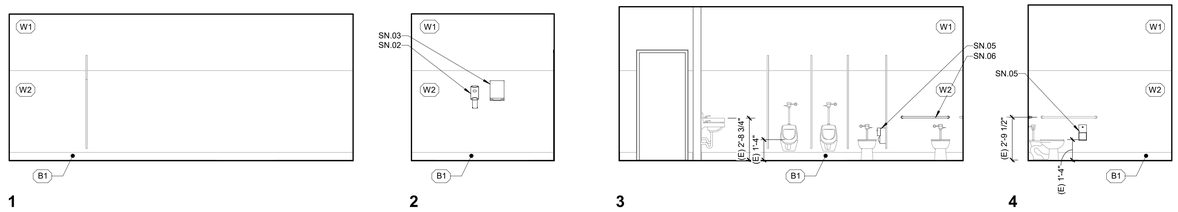

UNIT B - BOYS RESTROOM 02

1/4" = 1'-0"

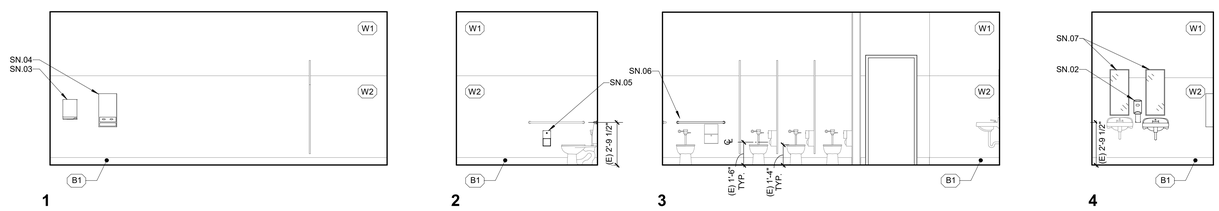

UNIT B - GIRLS RESTROOM 01

1/4" = 1'-0"

LEGEND

APPROX. EXTENT OF WALL FINISH AND BASE (AS APPLICABLE) PATCH. MATCH ADJACENT.

CONSECUTIVE NUMBERING CONVENTION FOR INTERIOR ELEVATIONS AND ROOM FINISHES.

GENERAL NOTES

1. TYPICAL MOUNTING HEIGHTS AND DETAILS APPLY TO ENTIRE PROJECT, WHETHER REFERENCED OR NOT, UNLESS OTHERWISE NOTED.
2. ALL DISABLED ACCESSIBLE DIMENSIONS, ARE MAXIMUM DIMENSIONS UNLESS OTHERWISE NOTED.
3. REMOVE OR MODIFY ALL ITEMS AS REQUIRED TO INSTALL NEW WORK, WHETHER OR NOT SPECIFICALLY SHOWN TO BE REMOVED OR MODIFIED.
4. WHERE DRAINS, PIPING AND OTHER MATERIALS AND EQUIPMENT ARE REMOVED FROM THE SLAB, IT SHALL BE BACKFILLED, FINISHED FLUSHED WITH ADJACENT SURFACES AND PREPARED TO RECEIVE THE NEW FINISH.
5. CUT AND PATCH EXISTING SLAB AS REQUIRED FOR NEW PLUMBING WORK.
6. DEMO AND REPAIR WALL FINISH AS NECESSARY TO PERFORM FIXTURE AND EQUIPMENT WORK AS NOTED. ADJACENT FINISHES TO BE VERIFIED BY CONTRACTOR
7. EQUIPMENT/FIXTURES NOTED AS "SALVAGED FOR REINSTALLATION" WILL BE REMOVED AND STORED BY THE CONTRACTOR PRIOR TO START OF DEMOLITION. THESE EQUIPMENT/FIXTURES SHALL BE REINSTALLED BY THE CONTRACTOR UNDER THIS CONTRACT.

SHEET NOTES

SN.01 REINSTALL SALVAGED TOILET SEAT COVER DISPENSER TO COMPLY WITH A10.2
SN.02 REINSTALL SALVAGED SOAP DISPENSER TO COMPLY WITH A10.2
SN.03 REINSTALL SALVAGED PAPER TOWEL DISPENSER TO COMPLY WITH A10.2
SN.04 REINSTALL SALVAGED SANITARY NAPKIN DISPENSER TO COMPLY A 10.2
SN.05 REINSTALL SALVAGED TOILET PAPER DISPENSER TO COMPLY WITH A10.2
SN.06 REINSTALL SALVAGED 36" GRAB BAR TO COMPLY WITH A10.2. MAINTAIN 1 1/2" CLEARANCE ALL AROUND GRAB BAR.
PROVIDE BLOCKING DETAIL PER 09/A10.2

CONTRACTORS OPTION, STAINLESS STEEL PLATE GRAB BAR PER DETAIL 03/A10.2

REMOVE AND REPLACE FRP FINISH IN FULL SHEET AS REQUIRED
SN.07 REINSTALL SALVAGED MIRROR TO COMPLY WITH A10.2

FINISHES

WALL

W1 (E) GYPSUM BOARD

W2 (E) EPOXY COVERING

BASE

B1 (E) 6" EPOXY BASE

AGENCY APPROVAL:

IDENTIFICATION STAMP
DIV. OF THE STATE ARCHITECT
APP: 02-122004 INC:
REVIEWED FOR
SS ☑ FLS ☑ ACS ☑
DATE: 12/06/2023

LODI USD

HMC Architects

R221551X00

2101 CAPITOL AVENUE, SUITE 100,
SACRAMENTO, CA, 95816
916 368 7990 / www.hmcarchitects.com

LICENSED ARCHITECT JEFFREY ALAN GRAFF C-14248 5/31/25 RENEWAL DATE STATE OF CALIFORNIA

ISSUE

Δ	DESCRIPTION	DATE

FACILITY:
CHRISTA MCAULIFFE MIDDLE SCHOOL
3880 IRON CANYON CIRCLE, STOCKTON, CA 95209

PROJECT:
LODI UNIFIED SCHOOL DISTRICT LUNCH SHELTERS - CHRISTA MCAULIFFE MIDDLE SCHOOL

SHEET NAME:
1ST FLOOR - INTERIOR ELEVATIONS

CONSTRUCTION DOCUMENTS

DATE: **11/28/2023** CLIENT PROJ NO: **R221551X00**

SHEET:

A8.11

Autodesk Docs://R221551X00 Lodi USD Lunch Shelters/R221551X00-A-MCAULIFFE-MS-LUNCH-SHELTER.rvt
11/28/2023 2:17:59 PM

PLEASE RECYCLE

THE LINE SHOWN ABOVE IS EXACTLY ONE INCH ON THIS SHEETS ORIGINAL PAGE SIZE

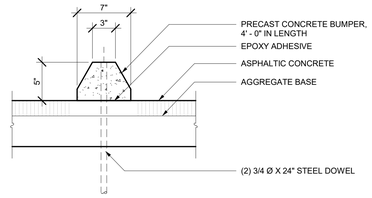

PRECAST CONCRETE BUMPER 32100 — **07** 1 1/2" = 1'-0"

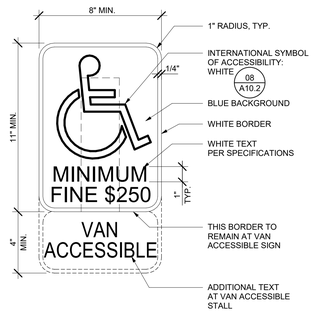

DISABLED ACCESSIBLE PARKING STALL

PARKING SIGNAGE — **06** 3" = 1'-0"

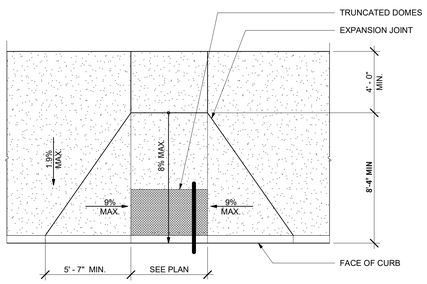

NOTES:

1. FOR CONCRETE EXPANSION JOINTS NOT SHOWN, SEE SITE PLAN

CURB RAMP — **09** 1/4" = 1'-0"

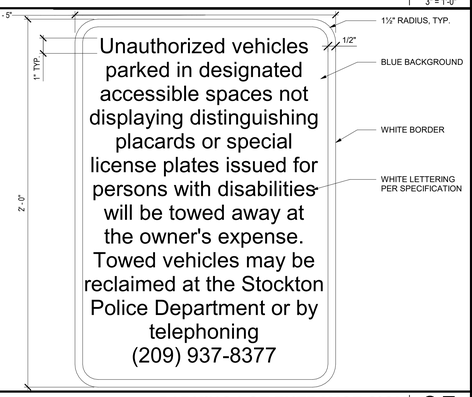

PARKING LOT ENTRANCE SIGN — **05** 3" = 1'-0"

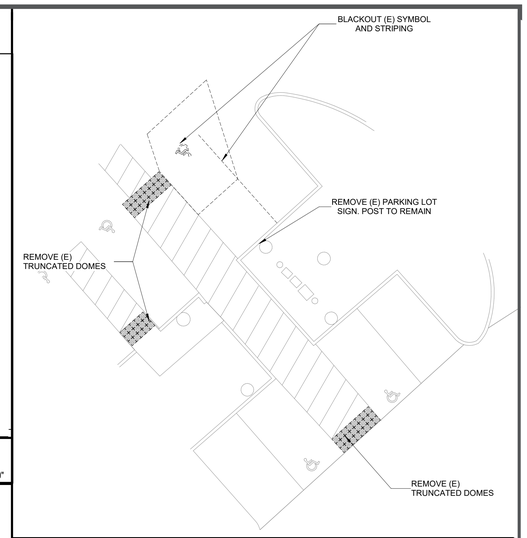

ENLARGED PARKING PLAN - DEMOLITION — **03** 1" = 10'-0"

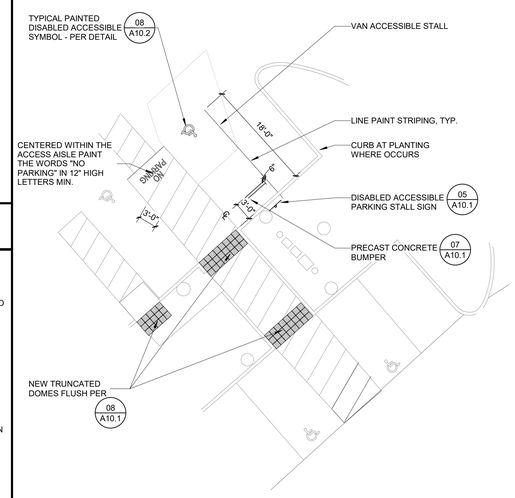

ENLARGED PARKING PLAN - IMPROVEMENT — **02** 1" = 10'-0"

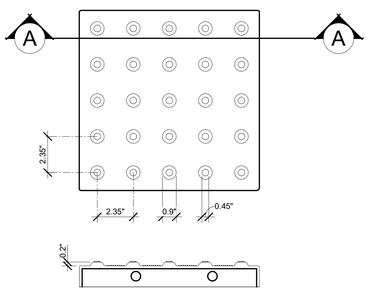

TYPICAL SECTION A-A

TRUNCATED DOMES — **08** 3" = 1'-0"

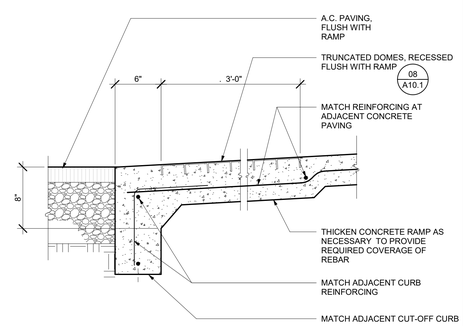

CURB RAMP 32201 — **04** 1 1/2" = 1'-0"

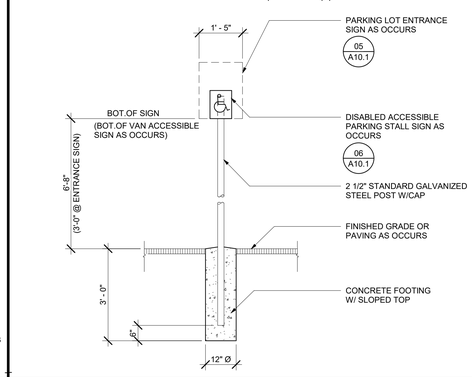

METAL SIGNS 10100 — **01** 1/2" = 1'-0"

AGENCY APPROVAL:

IDENTIFICATION STAMP
DIV. OF THE STATE ARCHITECT
APP: 02-122004 INC:
REVIEWED FOR
SS ☑ FLS ☑ ACS ☑
DATE: 12/06/2023

LODI USD

HMC Architects

R221551X00

LICENSED ARCHITECT JEFFREY ALAN STAPP C-14848 5/31/25 RENEWAL DATE STATE OF CALIFORNIA

2101 CAPITOL AVENUE, SUITE 100,
SACRAMENTO, CA, 95816
916 368 7990 / www.hmcarchitects.com

ISSUE

Δ	DESCRIPTION	DATE

KEYNOTES

NOTES

FACILITY:
CHRISTA MCAULIFFE MIDDLE SCHOOL
3880 IRON CANYON CIRCLE, STOCKTON, CA 95209

PROJECT:
LODI UNIFIED SCHOOL DISTRICT LUNCH SHELTERS - CHRISTA MCAULIFFE MIDDLE SCHOOL

SHEET NAME:
SITE DETAILS

CONSTRUCTION DOCUMENTS

DATE: **11/28/2023** | CLIENT PROJ NO: **R221551X00**

SHEET:

A10.1

Autodesk Docs://R221551X00 Lodi USD Lunch Shelters/R221551X00-A-MCAULIFFE-MS-LUNCH-SHELTER.rvt
11/28/2023 2:16:02 PM

PLEASE RECYCLE

THE LINE SHOWN ABOVE IS 1" WHEN PLOTTED AT FULL SIZE ON THIS SHEET'S ORIGINAL PAGE SIZE

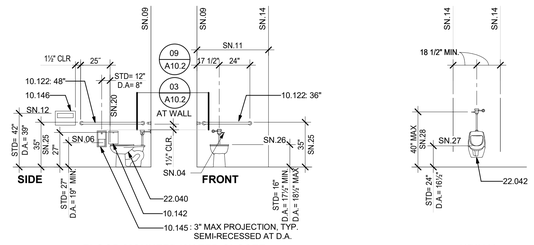

FLOOR MOUNTED WATER CLOSET

URINAL

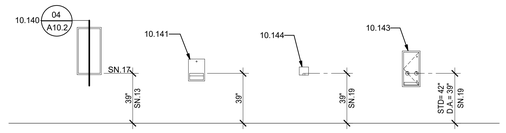

MIRROR | PAPER TOWEL DISPENSER | SOAP DISPENSER | SANITARY NAPKIN / TAMPON DISPENSER

ACCESSORY HEIGHTS

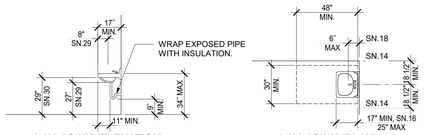

LAV. / SINK (ELEVATION) | LAV. / SINK (PLAN) | HI-LO DRINKING FOUNTAIN | SIGNAGE MOUNTING

FIXTURE AND FURNITURE EQUIPMENT HEIGHTS

TYPICAL MOUNTING HEIGHTS AND DETAILS 07 — 1/4" = 1'-0"

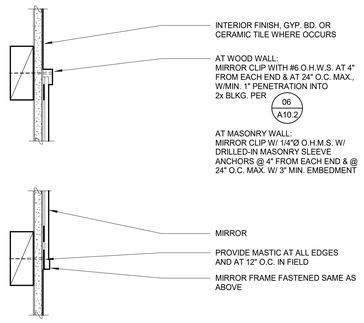

MIRROR ATTACHMENT 04 — 3" = 1'-0"

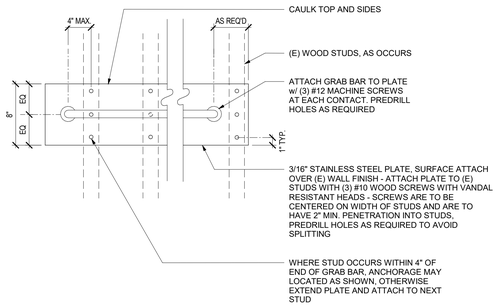

GRAB BAR - STAINLESS STEEL PLATE 03 — 1 1/2" = 1'-0"

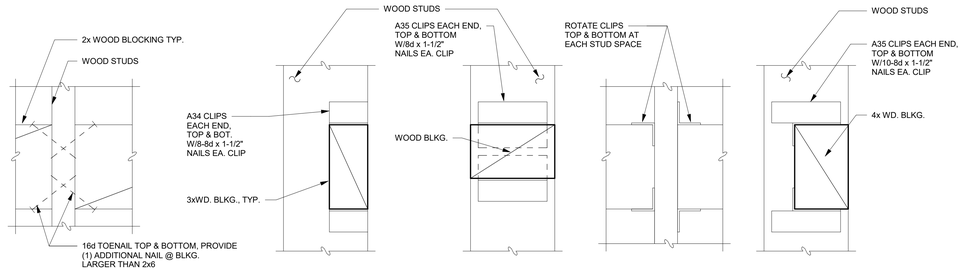

TYP. 2X ELEVATION | VERT. 3X | HORIZ. 3X OR 4X SECTIONS | HORIZ. 3X OR 4X ELEVATION | VERT. 4X

TYPICAL WOOD BLOCKING 06 — 3" = 1'-0"

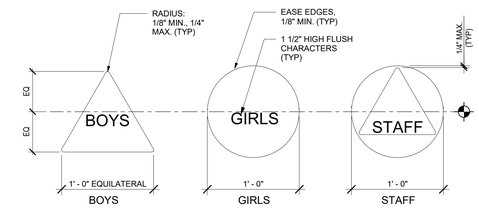

NOTE:
1. TEXT ON DOOR SYMBOL TO BE AS INDICATED ON DRAWINGS

TOILET ROOM DOOR SYMBOLS 02 — 1 1/2" = 1'-0"

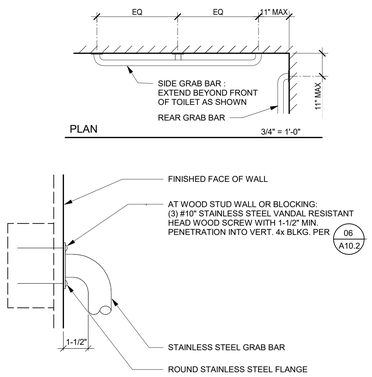

TYPICAL GRAB BAR AT WALL 09 — 3" = 1'-0"

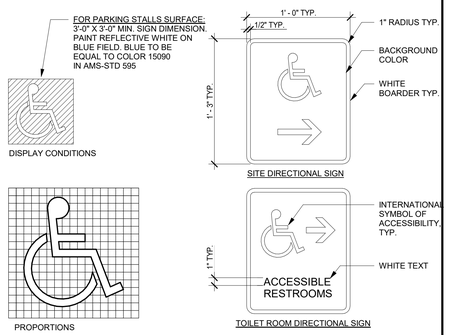

SYMBOL OF ACCESSIBILITY 08 — 1 : 1

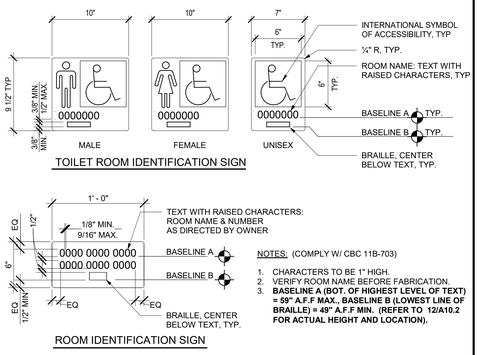

IDENTIFICATION SIGNS 05 — 1 1/2" = 1'-0"

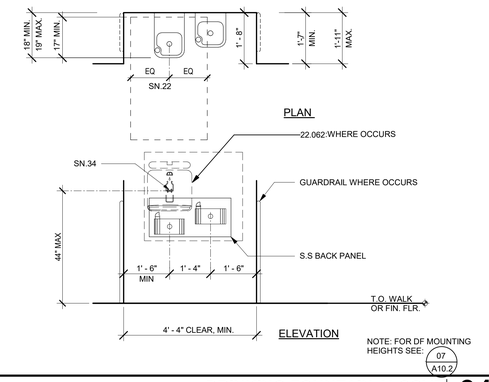

DRINKING FOUNTAIN ALCOVE 01 — 1/2" = 1'-0"

AGENCY APPROVAL:

IDENTIFICATION STAMP
DIV. OF THE STATE ARCHITECT
APP: 02-122004 INC:
REVIEWED FOR
SS ☑ FLS ☑ ACS ☑
DATE: 12/06/2023

LODI USD

HMC Architects

R221551X00

LICENSED ARCHITECT JEFFREY ALAN CRAIG C-14148 50/25 RENEWAL DATE STATE OF CALIFORNIA

2101 CAPITOL AVENUE, SUITE 100,
SACRAMENTO, CA, 95816
916 368 7990 / www.hmcarchitects.com

ISSUE

Δ	DESCRIPTION	DATE

LEGEND

M.S. MIDDLE SCHOOL
H.S. HIGH SCHOOL

GENERAL NOTES

1. TYPICAL MOUNTING HEIGHTS AND DETAILS APPLY TO ENTIRE PROJECT, WHETHER REFERENCED OR NOT, UNLESS OTHERWISE NOTED.
2. ALL DISABLED ACCESSIBLE DIMENSIONS, ARE MAXIMUM DIMENSIONS UNLESS OTHERWISE NOTED.
3. HEIGHTS ARE MEASURED FROM FINISH FLOOR, UNLESS OTHERWISE NOTED.

SHEET NOTES

SN.01 TOP OF SHELF
SN.02 MIDDLE SHELF FIXED
SN.03 PROVIDE 2X BLOCKING PER DETAIL 06 A10.2
SN.04 AT ACCESSIBLE WATER CLOSETS, FLUSH CONTROL HANDLE SHALL BE MOUNTED ON THE WIDE SIDE OF THE TOILET ENCLOSURE
SN.05 TO OPERATOR OR PUSH BUTTON
SN.06 DIMENSION TO CENTERLINE OF TOILET PAPER ROLL POSITION
SN.07 PROVIDE AT ALL TOILET ROOM DOORS
SN.08 AT DISABLED ACCESSIBLE CASEWORK
SN.09 TO FACE OF FINISH
SN.10 FOR SIGNS MOUNTED BACK-TO-BACK ON WINDOW GLAZING, SEE SPECIFICATIONS FOR REQUIREMENTS.
SN.11 62" CLR MIN. TO FINISH WALL/ PARTITION/ FIXTURE
SN.12 TO TOP OF OPENING
SN.13 34" MAX. IF MIRROR IS NOT MOUNTED OVER A LAV. OR COUNTER; TOP OF MIRROR 74" MIN. FOR HIGH SCHOOL & ADULTS.
SN.14 FACE OF OBJECTS OR WALLS
SN.15 CENTERLINE OF SIGN.
SN.16 19" MINIMUM AT SINK
SN.17 BOTTOM EDGE OF REFLECTIVE SURFACE
SN.18 FROM FARTHEST DEPTH OF THE CLEAR FLOOR SPACE TO FACE OF PLUMBING AND OTHER OBSTACLES
SN.19 TO CENTERLINE CONTROL.
SN.20 FRONT EDGE OF WATER CLOSET.
SN.21 NOT USED
SN.22 WHEELCHAIR, CLEAR FLOOR SPACE: 30"X48"
SN.23 CENTERLINE OF SYMBOL
SN.24 NOT USED.
SN.25 TOP OF GRAB BAR
SN.26 TOP OF SEAT
SN.27 LIP HEIGHT
SN.28 FLUSH HANDLE HEIGHT
SN.29 MINIMUM KNEE CLEARANCE
SN.30 MINIMUM APRON CLEARANCE
SN.31 BUBBLER HEIGHT
SN.32 FOR BOTTLE STATION AT DRINKING FOUNTAIN
SN.33 TO TOP OF SINK RIM; WHERE OCCURS
SN.34 ACTIVATION SENSOR.

KEYNOTES

10.041 SIGNAGE: ROOM IDENTIFICATION
10.043 SIGNAGE: TOILET ROOM IDENTIFICATION
10.051 SIGNAGE: TOILET ROOM DOOR SYMBOL
10.122 TOILET ACCESSORY: GRAB BAR
10.140 TOILET ACCESSORY: MIRROR
10.141 TOILET ACCESSORY: PAPER TOWEL DISPENSER
10.142 TOILET ACCESSORY: SANITARY NAPKIN DISPOSAL
10.143 TOILET ACCESSORY: SANITARY NAPKIN/TAMPON DISPENSER
10.144 TOILET ACCESSORY: SOAP DISPENSER
10.145 TOILET ACCESSORY: TOILET PAPER DISPENSER
10.146 TOILET ACCESSORY: TOILET SEAT COVER DISPENSER
22.040 WATER CLOSET
22.042 URINAL
22.062 BOTTLE FILL STATION

FACILITY:
CHRISTA MCAULIFFE MIDDLE SCHOOL
3880 IRON CANYON CIRCLE, STOCKTON, CA 95209

PROJECT:
LODI UNIFIED SCHOOL DISTRICT LUNCH SHELTERS - CHRISTA MCAULIFFE MIDDLE SCHOOL

SHEET NAME:
TYPICAL MOUNTING HEIGHTS AND DETAILS

CONSTRUCTION DOCUMENTS

DATE: **11/28/2023** | CLIENT PROJ NO: **R221551X00**

SHEET:

A10.2

Autodesk Docs://R221551X00 Lodi USD Lunch Shelters/R221551X00-A-MCAULIFFE-MS-LUNCH-SHELTER.rvt
11/28/2023 2:18:08 PM

PLEASE RECYCLE

DESIGN VALUES

DESCRIPTION	DESIGN VALUES [1]
DEAD AND LIVE LOADS	
ROOF LIVE LOAD	20 PSF
ROOF DEAD LOAD (SUPERIMPOSED ON FRAME) [2]	LOAD SCENARIO= {1,2} DL = {3.5 PSF, 2.0 PSF}
ALLOWABLE SOIL PRESSURE [3, 5]	
SPREAD PAD	
VERTICAL BEARING: DL + Lr + SEISMIC (CONCRETE FOOTING)	1500 PSF
LATERAL COHESION: DL + Lr + SEISMIC (CONCRETE FOOTING)	130 PSF
DRILLED PIER	
SKIN FRICTION DOWN : DL + Lr + SEISMIC (CONCRETE FOOTING) PER 1810A.3.3.1.4	167 PSF
SKIN FRICTION (UPLIFT): DL + LR SEISMIC (CONCRETE FOOTING) PER 1810A.3.31.5	83 PSF
LATERAL BEARING: DL + Lr + SEISMIC (CONCRETE FOOTING) PER 1810A.3.3.2	100 PSF/FT
ROOF SNOW LOAD [6]	
GROUND SNOW LOAD, Pg	10 PSF
RISK CATEGORY	II
ROOF SNOW LOAD: [ ] FLAT, Pf OR [ ] LOW SLOPE, Pm OR [X] SLOPED, Ps	10 PSF
SNOW ROOF SLOPE FACTOR, Cs	1
SNOW EXPOSURE FACTOR, Ce	1.2
SNOW LOAD IMPORTANCE FACTOR, Is	1.0
THERMAL FACTOR, Ct	1.2
DRIFT SURCHARGE LOAD, Pd	0 PSF
DISTANCE FROM ADJACENT STRUCTURE, Pg = 0 PSF	4 IN
DISTANCE FROM ADJACENT STRUCTURE, Pg > 0 PSF	20 FT
ICE LOAD	0 PSF
FLOOD DESIGN	
FLOOD HAZARD AREA	NO
WIND DESIGN [4]	
BASIC WIND SPEED (3 SECOND GUST), Vult	110 MPH
EXPOSURE CATEGORY	C
TOPOGRAPHIC FACTOR, Kzt (1 MINIMUM)	1
INTERNAL PRESSURE COEFFICIENT, GCpi (IF APPLICABLE)	0.0
CLEAR WIND FLOW	YES
OBSTRUCTED WIND FLOW	YES
SEISMIC DESIGN [4]	
LATERAL FORCE-RESISTING SYSTEM	STEEL ORDINARY CANTILEVER COLUMN SYSTEM
ANALYSIS PROCEDURE	EQUIVALENT LATERAL FORCE PROCEDURE
SEISMIC DESIGN CATEGORY (SDC)	E
SEISMIC IMPORTANCE FACTOR, Ie	1.0
DESIGN BASE SHEAR, V	Cs x W
SEISMIC RESPONSE COEFFICIENT, Cs	LOAD SCENARIO = {1,2} Cs = {0.90,1.32}
RESPONSE MODIFICATION FACTOR, R	1.25
SITE CLASS [7]	E
REDUNDANCY FACTOR, p	1.3
MAPPED SPECTRAL RESPONSE ACCELERATION AT SHORT PERIOD, Ss - USED TO DETERMINE Cs	LOAD SCENARIO = {1,2} Ss = {1.406, 2.063}
SHORT-PERIOD SITE COEFFICIENT, Fa	1.2
DESIGN SPECTRAL RESPONSE ACCELERATION AT SHORT PERIOD, Sds - USED TO DETERMINE Cs	LOAD SCENARIO = {1,2} Sds (MAX) = {1.125, 1.650}
MAPPED SPECTRAL RESPONSE ACCELERATION AT 1 SECOND PERIOD, S1	LOAD SCENARIO = {1,2} S1 = {0.844, 1.07}
LONG-PERIOD SITE COEFFICIENT, Fv	2.0
DESIGN SPECTRAL RESPONSE ACCELERATION AT 1 SECOND PERIOD, Sd1	LOAD SCENARIO = {1,2} Sd1 = {1.125, 1.427}
HORIZONTAL OR VERTICAL IRREGULARITIES TYPE(S)	NONE

1. IF SITE-SPECIFICDESIGN CRITERIA ARE OUTSIDE THE LIMITS OF THESE PC DRAWINGS, CONTACT POLIGON ENGINEERING TO SEE IF AN ENGINEERING LETTER, SUPPLEMENTAL DRAWINGS, AND/OR CALCULATIONS COULD BE SUBMITTED FOR A SITE-SPECIFIC SOLUTION. ANY SITE- SPECIFIC DEVIATION FROM THIS PC MAY NOT BE SUBMITTING TO DSA AS AN OVER-THE-COUNTER.
2. STRUCTURE IS NOT DESIGNED TO SUPPORT SOLAR PANELS. STRUCTURE IS NOT DESIGNED TO SUPPORT SPRINKLER SYSTEMS IN LOAD SCENARIO 2 REGIONS.
3. GEOHAZARD REPORTS ARE REQUIRED IF THE AREA COVERED UNDER THE ROOF EXCEEDS 4000 SQ FT OR IS LOCATED WITHIN STATE OR LOCAL GEOLOGIC HAZARD ZONE. VERIFY SUBMITTAL AND APPROVAL OF A GEOHAZARD REPORT BY CGS PRIOR TO DSA SITE APPLICATION.
4. STRUCTURAL SEPARATION BETWEEN ADJACENT STRUCTURES: RAM 20= 5.0", RAM 30= 3.0" STRUCTURAL SEPARATION BETWEEN EXISTING STRUCTURES: RAM 20= 5.5", RAM 30= 4.0"
5. WHEN PLACING MULTIPLE CANOPIES WITH PIER FOOTINGS ADJACENT TO ONE ANOTHER, THE DESIGN MAY REQUIRE AN ANALYSIS OF GROUP EFFECTS ON THE FOUNDATIONS. THE MINIMUM CLEARANCE BETWEEN CENTER OF PIERS IS EIGHT TIMES PIER DIAMETER WITHOUT AN ACCOMPANYING ENGINEERING LETTER
6. SITE APPLICATION DESIGN PROFESSIONAL AND DSA REVIEWER SHALL VERIFY THE STRUCTURE TO BE LOCATED AT LEAST 20 FEET FROM ANY HIGHER ADJACENT STRUCTURE IF GROUND SNOW IS GREATER THAN ZERO.
7. DESIGN COMPLIES WITH THE CONDITIONS OF EXCEPTION 1 OF ASCE 7-16 SECTION 11.4.8, ITEM 2.
8. APPROVED FIRE APPARATUS ACCESS ROADS SHALL EXTEND TO WITHIN 150 FEET OF ALL PORTIONS OF THE PERIMETER OF THE STRUCTURE PER CFC 503.1.1.

ARCHITECTURAL REQUIREMENTS:

DESCRIPTION	DESIGN VALUES
TYPE OF CONSTRUCTION	II B
NUMBER OF STORIES	1
FIRE SPRINKLER SYSTEM	NOT BY POLIGON

RELATED BUILDING CODES AND STANDARDS:

TITLE 24 CODES:

2022 California Administrative Code (CAC)..........................(Part 1, Title 24, CCR)
2022 California Building Code (CBC), Volumes 1 and 2 (Part 2, Title 24, CCR)
(2021 International Building Code with 2022 California amendments)
2022 California Electrical Code ....(Part 3, Title 24, CCR)
(2020 National Electrical Code with 2022 California amendments)
2022 California Mechanical Code (CMC) ....(Part 4, Title 24, CCR)
(2021 Uniform Mechanical Code with 2022 California amendments)
2022 California Plumbing Code (CPC) ....(Part 5, Title 24, CCR)
(2021 Uniform Plumbing Code with 2022 California amendments)
2022 California Energy Code ....(Part 6, Title 24, CCR)
2022 California Fire Code (CFC) ....(Part 9, Title 24, CCR)
(2021 International Fire Code with 2022 California Amendments)
2022 California Existing Building Code (CEBC)......................(Part 10, Title 24, CCR)
2022 California Green Building Standards Code...................(Part 11, Title 24, CCR)
2022 California Referenced Standards Code .... (Part 12, Title 24, CCR)
Title 19 CCR, Public Safety, State Marshal Regulations

NFPA 13 - 2016
NFPA 72 - 2016

REFERENCE CODE SECTIONS FOR APPLICABLE STANDARDS:

2022 CBC, CHAPTER **35**
2022 CFC, CHAPTER **80**

SCOPE OF WORK NARRATIVE:

THESE DRAWINGS ILLUSTRATE THE FABRICATION AND INSTALLATION REQUIREMENTS FOR A FREE-STANDING PREFABRICATED STEEL SHADE STRUCTURE. THE ENTIRE STRUCTURAL SYSTEM IS COMPRISED OF TUBULAR STEEL MEMBERS SUPPORTED ON CONCRETE FOUNDATIONS. THE FLEXIBILITY INCLUDED HEREIN ALLOWS THIS STRUCTURE TO COMPLY WITH A WIDE VARIETY OF PROJECT SITES AND LOADING REQUIREMENTS.

INSTRUCTIONS FOR ARCHITECTS PLANNING TO SUBMIT THESE PRE-CHECKED DRAWINGS TO DSA:

STEP 1 PROJECT INFORMATION

PROJECT NAME	LODI UNIFIED SCHOOL DISTRICT LUNCH SHELTERS - **CHRISTA MCAULIFFE MIDDLE SCHOOL**	
SCHOOL DISTRICT	LODI UNIFIED SCHOOL DISTRICT	
USE AND OCCUPANCY CLASSIFICATION	**A-2**	**(PROPOSED OCCUPANCY: A1, A2, A3, A4, A5, B, E)**
OCCUPANT LOAD FACTOR	15	**(15 SQFT/PERSON MAX; 5 SQFT/PERSON MIN FOR ANY A OCCUPANCY 20 SQFT/PERSON MAX FOR B OR E OCCUPANCY)**
TOTAL ROOF AREA	**1,456**	**(MAXIMUM 4500 SQFT FOR ANY A OCCUPANCY, 10,000 SQFT FOR B OCCUPANCY, AND 5000 SQFT FOR E OCCUPANCY)**
NUMBER OF OCCUPANTS	**98**	**(MAXIMUM 300 FOR ANY A OCCUPANCY, 500 FOR B OCCUPANCY, AND 250 FOR E OCCUPANCY)**

STEP 2 DESIGN OPTIONS

ROOF DECK	[ ] MULTI-RIB (MR)	**DEFAULT**, WEIGHT 1.2 PSF
	[X] STANDING SEAM (SS)	WEIGHT 1.8 PSF
GUTTERS	[ ] NO	**DEFAULT**
	[X] YES	SEE RAM7.0 FOR DETAILS
ELECTRICAL ACCESS	[ ] NO	**DEFAULT**
	[X] YES	SEE RAM7.1 FOR DETAILS
CLEAR HEIGHT	[ ] 8'	**DEFAULT**
	[X] 10' OTHER	10' MAX

STEP 3 SEISMIC ACCELERATION

Ss 0 . 7 3 9 (g)
S1 0 . 2 8 9 (g)

STEP 4 SEISMIC REGIONS

0.000 < Ss <= 1.406 S1 <= 0.844	[X] WHITE	3.5 PSF MAX DEA LOAD
1.406 < Ss <= 2.063 S1 <= 1.070	[ ] GREEN	2.0 PSF MAX DEAD LOAD

STEP 5 TOTAL ROOF DEAD LOAD

ROOF DECK	1 . 8 PSF	SEE STEP 2' 'ROOF DECK FOR WEIGHTS
COLLATERAL	0 . 0 PSF	LIGHTING , FIRE SUPPRESSION, ETC.
TOTAL	1 . 8 PSF	ADD 'ROOF DECK' AND 'COLLATERAL'

STEP 6 LOAD SCENARIO

WHITE	TOTAL ROOF DEAD LAOD <= 3.5 PSF	[X] **LOAD SCENARIO 1**
GREEN	TOTAL ROOF DEAD LOAD < 2.0 PSF	[ ] **LOAD SCENARIO 2**

STEP 7 PC STRUCTURE

ROOF WIDTH <= 20	[ ] **RAM 20**
20 < ROOF WIDTH <= 30	[X] **RAM 30**

STEP 8 STRUCTURE SIZE

	RAM 20		RAM 30	
ROOF WIDTH	[ ] 20'	**DEFAULT**	[ ] 30'	**DEFAULT**
	[ ] ________ OTHER	9' MIN; 20' MAX	[X] 26' OTHER	20'-6" MIN; 30' MAX
ROOF LENGTH	[ ] 44'	2 BAYS	[ ] 44'	2 BAYS
	[ ] 64'	3 BAYS	[ ] 64'	3 BAYS
	[ ] 84'	4 BAYS	[ ] 84'	4 BAYS
	[ ] ________ OTHER		[X] 56' OTHER	3 BAYS

STEP 9 FOUNDATION TYPE

	RAM 20		RAM 30	
FOUNATION TYPE	[ ] SPREAD PAD	[ ] DRILLED PIER	[ ] SPREAD PAD	[X] DRILLED PIER

STEP 10 FOUNDATION SUMMARY

RAM 20		RAM 30	
[ ] LOAD SCENARIO 1 SPREAD PAD	[ ] LOAD SCENARIO 1 DRILLED PIER	[ ] LOAD SCENARIO 1 SPREAD PAD	[X] LOAD SCENARIO 1 DRILLED PIER
[ ] LOAD SCENARIO 2 SPREAD PAD	[ ] LOAD SCENARIO 2 DRILLED PIER	[ ] LOAD SCENARIO 2 SPREAD PAD	[ ] LOAD SCENARIO 2 DRILLED PIER

STEP 11 SHEET INDEX

BASE FRAME	RAM 20 SHEET INDEX				RAM 30 SHEET INDEX			
ROOF DECK	MR		SS		MR		SS	
FOUNDATION TYPE	SPREAD PAD	DRILLED PIER	SPREAD PAD	DRILLED PIER	SPREAD PAD	DRILLED PIER	SPREAD PAD	DRILLED PIER
SELECT ONE	[ ]	[ ]	[ ]	[ ]	[ ]	[ ]	[ ]	[X]
ORDER FORM	RAM1.0	RAM1.0	RAM1.0	RAM1.0	RAM1.0	RAM1.0	RAM1.0	RAM1.0
NOTES AND SPECIAL INSPECTIONS	RAM1.1	RAM1.1	RAM1.1	RAM1.1	RAM1.1	RAM1.1	RAM1.1	RAM1.1
FOUNDATION PLAN	RAM2.0	RAM2.1	RAM2.0	RAM2.1	RAM2.2	RAM2.3	RAM2.2	RAM2.3
FRAMING PLAN	RAM3.0	RAM3.0	RAM3.0	RAM3.0	RAM3.1	RAM3.1	RAM3.1	RAM3.1
FRAME CONNECTION DETAILS	RAM4.0	RAM4.0	RAM4.0	RAM4.0	RAM4.2	RAM4.2	RAM4.2	RAM4.2
SECTION DETAILS	RAM4.1	RAM4.1	RAM4.1	RAM4.1	RAM4.3	RAM4.3	RAM4.3	RAM4.3
ARCHITECTURAL VIEWS	RAM5.0	RAM5.0	RAM5.0	RAM5.0	RAM5.1	RAM5.1	RAM5.1	RAM5.1
ROOF CONNECTION DETAILS	RAM6.0	RAM6.0	RAM6.1	RAM6.1	RAM6.0	RAM6.0	RAM6.1	RAM6.1
MISC DESIGN OPTIONS	RAM7.0	RAM7.0	RAM7.0	RAM7.0	RAM7.0	RAM7.0	RAM7.0	RAM7.0
ELETRICAL CUTOUTS	RAM7.1	RAM7.1	RAM7.1	RAM7.1	RAM7.1	RAM7.1	RAM7.1	RAM7.1

STEP 12 MULTIPLE STRUCTURES

	ROOF WIDTH X LENGTH	QTY
MULTIPLE STRUCTURES		

STEP 1: GENERAL PROJECT INFORMATION

- IDENTIFY PROJECT NAME AND SCHOOL DISTRICT
- IDENTIFY USE AND OCCUPANCY CLASSIFICATION
  - THE USE AND OCCUPANCY DETERMINE THE MAXIMUM SQUARE FOOTAGE OF THE STRUCTURE
  - THE MAXIMUM SQUARE FOOTAGE IS ALSO LIMITED BY THE NUMBER OF OCCUPANTS
- IDENTIFY THE OCCUPANT LOAD PER TABLE 1004.5 IN THE CBC
- IDENTIFY TOTAL ROOF AREA WHICH SHALL NOT EXCEED ALLOWABLE AREA PER TABLE 506.2 IN THE CBC.
- IDENTIFY EXPECTED NUMBER OF OCCUPANTS BASED ON THE ESTIMATED OCCUPANT LOAD
  - TOTAL ROOF AREA DIVIDED BY OCCUPANT LOAD CAN DETERMINE NUMBER OF OCCUPANTS

STEP 2: DESIGN OPTIONS

- SELECT ROOF DECK FOR YOUR PROJECT
  - "MR" REPRESENTS MCELROY METAL "MULTI-RIB" ROOF DECK
  - "SS" REPRESENTS MCELROY METAL "MEDALLION-LOK" 16" STANDING SEAM ROOF DECK
- SELECT WHETHER GUTTERS AND DOWNSPOUTS FROM POLIGON IS NEEDED FOR YOUR PROJECT
  - IF "YES", THEN INCLUDE SHEET RAM7.0 IN THE DRAWING SET
-SELECT WHETHER ELECTRICAL CUTOUTS ARE NEEDED FOR YOUR PROJECT
  - SHEET RAM7.0 SHOWS ELECTRICAL CUTOUT SIZE AND LOCATION CUTOUTS IN COLUMNS
  - SHEET RAM7.1 HAS INSTRUCTIONS AND SHEET TO IDENTIFY WHICH COLUMNS
  - SHEET RAM7.1 MUST BE FILLED OUT IN THE SUBMITTAL SET APPROVED BY DSA
  - IF NOTHING IS FILLED IN ON RAM7.1, POLIGON WILL ASSUME CUTOTUS ARE ONLY IN COLUMN A1 (SEE 'FRAMING PLAN' FOR REFERENCE)
- SELECT CLEAR HEIGHT (SEE 'ARCHITECTURAL VIEWS' SHEET FOR REFERENCE)
  - MIN 7'-1"; MAX 10'-0"
- **IF NOTHING IS SELECTED, POLIGON WILL ASSUME THE DEFAULT FOR EACH DESIGN OPTION**

STEP 3: IDENTIFY THE Ss & S1 ACCELERATION (g) FOR YOUR PROJECT AND GEOTECHNICAL INFORMATION

- Ss & S1 VALUE DETERMINES THE REQUIRED SEISMIC DESIGN FORCES
- Ss & S1 VALUE DEPENDS ON PROJECT'S GEOGRAPHICAL LOCATION
  - FIND Ss & S1 VALUES FOR YOUR PROJECT IN THE SITE SPECIFIC GEOTECHNICAL REPORT
  - FIND Ss & S1 VALUES FOR YOUR PROJECT USING (https://asce7hazardtool.online/)
- THIS PC IS NOT APPROVED FOR Ss VALUES GREATER THAN 2.063 (CONTACT POLIGON FOR ADDITIONAL OPTIONS)

STEP 4: IDENTIFY THE SEISMIC REGION FOR YOUR PROJECT

- THE REGIONS ARE DEPENDANT ON THE Ss & S1 VALUE DETERMINED IN STEP 3
- THE SEISMIC REGION DICTATES THE MAXIMUM DEAD LOAD PERMITTED (SEE TABLE TO THE LEFT)

STEP 5: IDENTIFY THE ROOF DEAD LOAD FOR YOUR PROJECT

- THE ROOF DECK DEAD LOAD WILL ALWAYS BE INCLUDED
- THE COLLATERAL LOAD REPRESENTS ADDITIONAL LOAD THAT CAN BE SUPPORTED BY THE FRAME
- TOTAL ROOF DEAD LOAD MUST BE LESS THAN OR EQUAL TO THE MAX DEAD LOAD SHOWN IN STEP 4
- CUT SHEETS OF ANY BOARDS, BOXES AND EQUIPMENT TO BE MOUNTED ON THE STRUCTURE, INCLUDING WEIGHTS AND DIMENSIONS ARE REQUIRED

STEP 6: IDENTIFY THE LOAD SCENARIO

- REFERENCE THE STEP 4 COLOR AND SELECT THE APPLICABLE LOAD SCENARIO
- LOAD SCENARIOS HAVE NO IMPACT ON FRAME DESIGN OR COST, BUT DO AFFECT FOUNDATION SIZE

STEP 7: IDENTIFY PC STRUCTURE

- ROOF WIDTHS UP TO 20' WIDE USE THE "RAM 20"
- ROOF WIDTHS UP TO 30' WIDE USE THE "RAM 30"
- THE 20' AND 30' WIDTHS ARE SUGGESTED BECAUSE THEY ARE THE MOST ECONOMICAL
- MAXIMUM WIDTH IS 30'; (SEE 'ARCHITECTURAL VIEWS' SHEET FOR REFERENCE)

STEP 8: IDENTIFY SITE SPECIFIC ROOF WIDTH AND LENGTH

- DO NOT EXCEED THE TOTAL ROOF AREA FROM STEP 1 (ROOF WIDTH MULTIPLIED BY ROOF LENGTH)

STEP 9: FOUNDATION TYPE

- SELECT A FOUNDATION BASED THE DESIRED FOUNDATION TYPE
- SELECT EITHER SPREAD PAD OR DRILLED PIER FOUNDATION PRIOR TO APPROVAL
- FOUNDATION TYPE IMPACTS CONSTRUCTION (TIMING, SEQUENCE, COST, ETC.)
- FOUNDATION TYPE IMPACTS ANCHOR BOLT LENGTH (NOT PROVIDED BY POLIGON)
- REVIEW OF SITE-SPECIFIC SOILS REPORT TO EVALUATE APPLICABILITY OF FOUNDATION OPTIONS AVAILABLE

STEP 10: FOUNDATION SUMMARY

- USE THE SELECTIONS FROM STEP 6 AND STEP 9 TO SELECT THE APPROPRIATE FOUNDATION

STEP 11: SELECT APPLICABLE SHEET INDEX FOR YOUR PROJECT

- IDENTIFY THE APPLICABLE SHEET INDEX
- INCLUDE APPLICABLE SHEETS WITH YOUR DSA SUBMITTAL
- EXCLUDE 'MISC DESIGN OPTIONS' SHEET FOR PROJECTS WITHOUT ELECTRICAL CUTOUTS OR GUTTERS
- EXCLUDE 'ELECTRICAL CUTOUTS' SHEET FOR PROJECTS WITHOUT ELECTRICAL CUTOUTS

STEP 12: MULTIPLE STRUCTURES WITH THE SAME PC#

- FILL IN ROOF LENGTH AND WIDTH OF STRUCTURES AS WELL AS QUANTITY
- UNO ON THE POLIGON DRAWINGS, POLIGON WILL ASSUME ALL DESIGN CRITERIA FOR EACH STRUCTURE IS THE SAME
- CONTACT POLIGON FOR FURTHER INFORMATION

SHEET INDEX

1	RAM1.0	ORDER FORM	11	RAM4.2	FRAME CONNECTION DETAILS - RAM 30
2	RAM1.1	NOTES AND SPECIAL INSPECTIONS	12	RAM4.3	SECTION DETAILS - RAM 30
~~3~~	~~RAM2.0~~	~~FOUNDATION PLAN SPREAD PAD - RAM 20~~	~~13~~	~~RAM5.0~~	~~ARCHITECTURAL VIEWS - RAM 20~~
~~4~~	~~RAM2.1~~	~~FOUNDATION PLAN DRILLED PIER - RAM 20~~	14	RAM5.1	ARCHITECTURAL VIEWS - RAM 30
~~5~~	~~RAM2.2~~	~~FOUNDATION PLAN SPREAD PAD - RAM 30~~	~~15~~	~~RAM6.0~~	~~ROOF CONNECTION DETAILS~~
6	RAM2.3	FOUNDATION PLAN DRILLED PIER - RAM 30	16	RAM6.1	ROOF CONNECTION DETAILS
~~7~~	~~RAM3.0~~	~~FRAMING PLAN - RAM 20~~	17	RAM7.0	MISC DESIGN OPTIONS
8	RAM3.1	FRAMING PLAN - RAM 30	18	RAM7.1	ELECTRICAL CUTOUTS
~~9~~	~~RAM4.0~~	~~FRAME CONNECTION DETAILS - RAM 20~~			
~~10~~	~~RAM4.1~~	~~SECTION DETAILS - RAM 20~~			

TOTAL SHEETS = 10

ABBREVIATIONS:

ACI	AMERICAN CONCRETE INSTITUTE	MR	MULTI-RIB ROOF PANEL (MCELROY)
AISC	AMERICAN INSTITUTE OF STEEL CONSTRUCTION	NTS	NOT TO SCALE
ASM	ASSEMBLY (INTERNAL REFERENCE)	NO	NUMBER
ASTM	AMERICAN SOCIETY FOR TESTING AND MAT'LS	OC	ON CENTER
AWS	AMERICAN WELDING SOCIETY	OSHA	OCCUPATIONAL HEALTH AND SAFETY ADM.
CBC	CALIFORNIA BUILDING CODE	PCF	POUNDS PER CUBIC FOOT
CJP	COMPLETE JOINT PENETRATION	PD	POLIGON DRAWING
CLR	CLEAR	PJ	PRETENSIONED JOINT
DEG	DEGREE	PLCS	PLACES
DIA	DIAMETER	PLT	PLATE
DIM	DIMENSION	PSF	POUNDS PER SQUARE FOOT
DSA	DIVISION OF THE STATE ARCHITECT	PSI	POUNDS PER SQUARE INCH
EQ	EQUAL	QTY	QUANTITY
FT	FEET	REF	REFERENCE
GA	GAGE	SQ	SQUARE
IN	INCHES	SS	STANDING SEAM ROOF PANEL (MCELROY)
KSI	KIPS PER SQUARE INCH	TYP	TYPICAL
MAX	MAXIMUM	UNO	UNLESS NOTED OTHERWISE
MIN	MINIMUM	USGS	U.S. GEOLOGICAL SURVEY
MISC	MISCELLANEOUS	W/	WITH
MPH	MILES PER HOUR		

SPECIFICATIONS

PART 1 - GENERAL

1.1 STRUCTURE DESCRIPTION
A. STRUCTURE(S) BASED ON THE FOLLOWING PC DESIGN(S):
1. HIP ROOF (RAM)

1.2 DESIGN REQUIREMENTS
A. MEET THE DESIGN INTENT SHOWN ON THE PC DRAWINGS APPROVED FOR THIS PROJECT.
1. DESIGN CRITERIA
2. MEMBERS SIZES
3. HIDDEN BOLTED CONNECTIONS BETWEEN STRUCTURAL MEMBERS
4. COLUMN ANCHORAGE SHALL INCLUDE FOUR (4) BOLTS IN COMPLIANCE WITH OSHA 1926.755(A)(1).
5. NO FIELD WELDING PERMITTED
6. NO FIELD PAINTING PERMITTED
7. ROOF DIMENSIONS AND SLOPES
8. EXPOSED STEEL ROOF FASTENERS (IF APPLICABLE) POWDER COATED BY MANUFACTURER
9. ROOF DECK SPANS FROM PEAK TO EAVE AND PERMITS PROPER DRAINAGE WITHOUT DEBRIS BUILD-UP.

1.3 SUBMITTALS
A. DRAWINGS AND CALCULATIONS SEALED BY A PROFESSIONAL ENGINEER LICENSED IN THE APPROPRIATE STATE.
B. ONLY MANUFACTURERS THAT SUBMIT DRAWINGS AND CALCULATIONS PRIOR TO BID SHALL BE CONSIDERED.
C. MANUFACTURER MUST BE ABLE TO SUBMIT APPROPRIATE LABORATORY TESTS FOR THE FOLLOWING:
1. FRAME FINISH REQUIREMENTS LISTED IN PART 2 OF THIS SPECIFICATION.
2. CERTIFIED MILL TEST REPORTS FOR STRUCTURAL STEEL (DESCRIBING THE CHEMICAL AND PHYSICAL PROPERTIES).
3. CERTIFIED MILL TEST REPORTS FOR STRUCTURAL BOLTS.

1.4 TECHNICAL SUPPORT
A. MANUFACTURER MUST HAVE IN-HOUSE ENGINEERING DEPARTMENT AND A PROFESSIONAL ENGINEER LICENSED IN THE APPROPRIATE STATE TO ANSWER TECHNICAL QUESTIONS.

1.5 QUALITY ASSURANCE
A. GENERAL
1. FABRICATION PROCEDURES SHALL COMPLY WITH APPLICABLE CODES AND LOCAL REGULATIONS.
2. REQUIRED STRUCTURAL TESTS AND SPECIAL INSPECTIONS INCLUDED ON THE PROJECT DSA-103 FORM.
B. MANUFACTURER QUALIFICATIONS
1. MINIMUM (10) YEARS ENGINEERING AND FABRICATING PRE-ENGINEERED STRUCTURES
2. MANUFACTURER OWNED AND OPERATED POWDER COAT PAINT FINISH SYSTEM
3. ALL AWS CERTIFIED WELDERS
4. FULL-TIME PROFESSIONAL ENGINEER ON STAFF LICENSED IN THE APPROPRIATE STATE
5. FULL-TIME AWS CERTIFIED ASSOCIATE WELDING INSPECTOR ON STAFF
6. FULL-TIME QUALITY ASSURANCE MANAGER ON STAFF
7. FULL-TIME LEED AP ON STAFF
C. MANUFACTURER CERTIFICATIONS
1. PCI 4000 CERTIFICATION THROUGH POWDER COATING INSTITUTE (PCI)
2. AISC CERTIFIED FABRICATOR

1.6 MANUFACTURER WARRANTY
A. STRUCTURE MUST HAVE (10) YEAR LIMITED WARRANTY ON STEEL FRAME MEMBERS.
B. STRUCTURE MUST HAVE (10) YEAR LIMITED WARRANTY ON PAINT SYSTEM.
C. PASS THROUGH WARRANTY OF ROOFING MANUFACTURER SHALL BE PROVIDED UPON REQUEST.

PART 2 - PRODUCTS

2.1 MANUFACTURER
A. ACCEPTABLE MANUFACTURERS
1. POLIGON, A DIVISION OF PORTERCORP.
A. 4240 N 136TH AVE., HOLLAND, MI 49424; (616) 399-1963; WWW.POLIGON.COM .
I. FOR POLIGON STRUCTURES IN *NORTHERN CALIFORNIA*, THE LOCAL REPRESENTATIVE IS ALL ABOUT PLAY (WWW.PLAYGROUNDPROS.COM). EMAIL AAP@PLAYGROUNDPROS.COM OR CALL (916) 923-2180
II. FOR POLIGON STRUCTURES IN *SOUTHERN CALIFORNIA*, THE LOCAL REPRESENTATIVE IS MIRACLE PLAYGROUND SALES (MIRACLEPLAYGROUNDSALES.COM EMAIL SALES@MIRACLEPLAYGROUND.COM OR CALL (951) 695-4515
B. SUBSTITUTION LIMITATIONS
1. THE ENGINEERING FOR THIS STRUCTURE IS ONLY APPLICABLE IF POLIGON SUPPLIES THE MATERIAL.
2. IF THE CONTRACTOR ELECTS TO SUBSTITUTE A DIFFERENT STRUCTURE, THEY ARE RESPONSIBLE TO OBTAIN THE NECESSARY DSA APPROVAL WITH:
A. NO COST TO THE DISTRICT OR ARCHITECT
B. NO CHANGE TO THE CONSTRUCTION SCHEDULE
3. SUBSTITUTIONS MUST BE APPROVED A MINIMUM OF (10) DAYS BEFORE BID.
4. ALL APPROVED MANUFACTURERS SHALL BE NOTIFIED IN WRITING BEFORE THE BID DATE.
5. SUBSTITUTE MANUFACTURERS SHALL NOT BE ALLOWED TO BID WITHOUT WRITTEN NOTIFICATION.
6. SUBSTITUTE MANUFACTURERS MUST MEET "MANUFACTURER QUALIFICATIONS" LISTED IN PART 1 OF THIS SPECIFICATION.
7. SUBSTITUTE MANUFACTURERS MUST PROVIDE PROOF OF "MANUFACTURER CERTIFICATIONS" ABOVE.
8. SUBSTITUTE MANUFACTURERS MUST PROVIDE PAINT FINISH DESCRIBED IN "FRAME FINISH" BELOW.

2.2 FRAME
A. MATERIALS
1. ANCHOR BOLTS: SEE DRAWINGS FOR REQUIREMENTS. ANCHOR BOLTS NOT PROVIDED BY MANUFACTURER
2. STRUCTURAL STEEL: SEE DRAWINGS FOR REQUIREMENTS.
3. STRUCTURAL BOLTS: SEE DRAWINGS FOR REQUIREMENTS.
B. FINISH
1. FRAME FINISH: POLI-5000 POWDER COAT. NO FIELD PAINTING PERMITTED.
A. COMPONENTS SHALL BE CLEANED, PRE-TREATED, AND FINISHED AT A FACILITY OWNED AND DIRECTLY SUPERVISED BY THE MANUFACTURER.
B. COMPONENTS SHALL BE SHOT BLASTED TO SSPC-SP10 NEAR-WHITE BLAST CLEANING. SSPC-SP2 HAND TOOL CLEANING WILL NOT BE AN ACCEPTABLE ALTERNATIVE.
C. COMPONENTS SHALL BE PRETREATED IN A (3) STAGE IRON PHOSPHATE OR EQUAL WASHER.
D. COMPONENTS SHALL RECEIVE EPOXY PRIMER COAT FOR SUPERIOR CORROSION PROTECTION.
E. COMPONENTS SHALL RECEIVE TOP COAT OF SUPER DURABLE TGIC POWDER COAT.
F. FINISH SHALL NOT HAVE ANY VOC EMISSIONS.
G. MANUFACTURER SHALL BE ABLE TO PRODUCE DOCUMENTATION STATING SAMPLE PRODUCTION COMPONENTS HAVE BEEN TESTED TO MEET THE FOLLOWING:
I. SALT SPRAY RESISTANCE PER ASTM B 117/ ASTM D 1654 TO 10,000 HOURS WITH NO CREEP FROM SCRIBE LINE AND RATING OF 10.
II. HUMIDITY RESISTANCE PER ASTM D2247-02 TO 5,000 HOURS WITH NO LOSS OF ADHESION OR BLISTERING.
III. COLOR/UV RESISTANCE PER ASTM G154-04 TO 2,000 HOURS EXPOSURE, ALTERNATE CYCLES WITH RESULTS OF NO CHALKING, 75% COLOR RETENTION, COLOR VARIATION MAXIMUM 3.0 E VARIATION CIE FORMULA (BEFORE AND AFTER 2,000 HOURS EXPOSURE).
2. FRAME COLOR: DETERMINED BY DISTRICT.
C. FABRICATION
1. FABRICATE COMPONENTS TO PERMIT BOLTED CONNECTIONS ON SITE. NO FIELD WELDING PERMITTED.
2. LABEL EACH MEMBER WITH UNIQUE PART NUMBER TO STREAMLINE ERECTION.
3. WELDING REQUIREMENTS: SEE DRAWINGS FOR REQUIREMENTS.

2.3 ROOF
A. MATERIALS
1. ROOF MATERIAL: SEE DRAWINGS FOR REQUIREMENTS.
2. ROOF HARDWARE: SEE DRAWINGS FOR REQUIREMENTS.
B. FINISH
1. ROOF FINISH: KYNAR 500 HIGH-PERFORMANCE RESIN-BASED PAINT.
2. ROOF COLOR: DETERMINED BY OWNER.

2.4 MISCELLANEOUS
A. MATERIALS
1. CONCRETE MATERIAL: SEE DRAWINGS FOR REQUIREMENTS. CONCRETE NOT PROVIDED BY MANUFACTURER.

PART 3 - EXECUTION

3.1 STORAGE AND HANDLING
A. PROTECT MATERIAL AFTER DELIVERY FROM WEATHER, SUNLIGHT, AND DAMAGE.
B. ELEVATE MATERIAL TO ALLOW CIRCULATION AND REDUCE MOLD, FUNGI DECAY, AND INSECT INFESTATION.
C. HANDLE MATERIAL WITH PROTECTIVE STRAPS OR PADDED FORKLIFT. HANDLING MATERIAL WITH CHAIN OR CABLE WILL NOT BE ACCEPTED AND MAY VOID MANUFACTURER'S WARRANTY.
D. TO PREVENT MOISTURE DAMAGE TO ANY WOOD MATERIAL (IF APPLICABLE), KEEP WOOD PACKAGED BEFORE INSTALLATION AND COVER IMMEDIATELY WITH ANY SECONDARY ROOF MATERIAL.

3.2 ERECTION
A. INSTALL COMPONENTS ACCORDING TO MANUFACTURER'S INSTALLATION DRAWINGS AND THESE SPECIFICATIONS.
B. ANCHOR BOLT AND COLUMN LAYOUT IS CRITICAL.
C. COMPLY WITH SPECIFIC BOLTING INSTALLATION REQUIREMENTS PROVIDED ON DRAWINGS REQUIRING THE CONTRACTOR TO COORDINATE THIS PHASE OF CONSTRUCTION WITH THE SPECIAL BOLTING INSPECTOR AND THE INSPECTOR OF RECORD *PRIOR TO THE ERECTION OF THE FRAME.*
D. NO FIELD SLOTTING OR OPENING OF HOLES WILL BE ALLOWED. TOLERANCES ON STEEL STRUCTURAL MEMBERS ARE SET ACCORDING TO AISC CONSTRUCTION PRACTICES, FOLLOWED DURING FABRICATION, AND CANNOT BE INCREASED.
E. AFTER INSTALLATION, RESTORE DAMAGED SURFACES TO THE ORIGINAL CONDITION USING TOUCH-UP PAINT PROVIDED BY MANUFACTURER. IF THE ARCHITECT DOES NOT ACCEPT THAT, REPLACE DAMAGED MATERIAL AT NO COST TO THE DISTRICT.
F. COORDINATE AS REQUIRED WITH OTHER DISCIPLINES (ELECTRICAL, PLUMBING, ETC.)
G. COMPLY WITH ALL APPLICABLE OHSA REQUIREMENTS

3.3 REPAIR
A. DO NOT ATTEMPT ANY FIELD CHANGES TO THE STRUCTURE WITHOUT FIRST CONTACTING THE MANUFACTURER.

3.4 QUALITY CONTROL
A. TESTS AND INSPECTIONS DURING ERECTION ARE NOT REQUIRED BY THE MANUFACTURER, BUT MAY BE REQUIRED BY OTHERS.
B. THE PROJECT INSPECTOR, AND ENTIRE CONSTRUCTION OVERSIGHT PROCESS, SHALL COMPLY WITH DSA PR 13-01. DO NOT PROCEED UNTIL UNSATISFACTORY CONDITIONS HAVE BEEN CORRECTED.

STATE APPROVALS-SITE

IDENTIFICATION STAMP
DIV. OF THE STATE ARCHITECT
APP: 02-122004 INC:
REVIEWED FOR
SS ☑ FLS ☑ ACS ☑
DATE: 12/06/2023

4080 PLAZA GOLDORADO CIRCLE
SUITE B,
CAMERON PARK, CA 95682
530.677.5615

REGISTERED PROFESSIONAL ENGINEER
JESSICA E. NAPIER
No. S5476
STRUCTURAL
STATE OF CALIFORNIA

STATE APPROVALS-PC

~~IDENTIFICATION STAMP~~
~~DIV. OF THE STATE ARCHITECT~~
~~APP: 02-121213 PC~~
~~REVIEWED FOR~~
~~SS ☑ FLS ☑ ACS ☑ CG ☐~~
~~DATE: 7/18/2023~~

PRE-CHECK (PC) DOCUMENT
CODE: 2022 CBC
A SEPARATE PROJECT APPLICATION FOR CONSTRUCTION IS REQUIRED.

ORDER FORM

HIP ROOF - RAM

RAM1.0

GENERAL:

1. GENERAL NOTES AND TYPICAL DETAILS SHALL APPLY TO ALL PARTS OF THE JOB EXCEPT WHERE THEY MAY CONFLICT WITH DETAILS AND NOTES ON OTHER SHEETS. WHERE CONDITIONS ARE NOT SPECIFICALLY INDICATED BUT ARE OF SIMILAR CHARACTER TO DETAILS SHOWN, SIMILAR DETAILS OF CONSTRUCTION SHALL BE USED SUBJECT TO REVIEW BY THE STRUCTURAL ENGINEER FOR THIS PROJECT.
2. WORK SHALL CONFORM TO THE REQUIREMENTS, AS AMENDED TO DATE, OF THE LATEST ADOPTED EDITION OF THE CBC, C.A.C. TITLE 24, AND ALL OTHER LOCAL, STATE AND FEDERAL REGULATIONS.
3. OMISSIONS OR CONFLICTS BETWEEN THE VARIOUS ELEMENTS OF THE WORKING DRAWINGS AND/OR SPECIFICATIONS SHALL BE BROUGHT TO THE ATTENTION OF THE STRUCTURAL ENGINEER FOR THIS PROJECT PRIOR TO PROCEEDING WITH ANY WORK INVOLVED.
4. THE CONTRACTOR SHALL BE RESPONSIBLE FOR COORDINATING THE WORK OF ALL TRADES AND SHALL CHECK ALL DIMENSIONS. ALL DISCREPANCIES SHALL BE CALLED TO THE ATTENTION OF THE STRUCTURAL ENGINEER FOR THIS PROJECT AND BE RESOLVED BEFORE PROCEEDING WITH THE WORK.
5. THESE CONSTRUCTION DRAWINGS AND SPECIFICATIONS REPRESENT THE FINISHED STRUCTURE AND DO NOT INDICATE THE METHOD OF CONSTRUCTION. THE CONTRACTOR SHALL SUPERVISE AND DIRECT THE WORK AND SHALL BE SOLELY RESPONSIBLE FOR CONSTRUCTION MEANS, METHODS, TECHNIQUES, SEQUENCES AND PROCEDURES, INCLUDING, BUT NOT LIMITED TO, BRACING, TEMPORARY SUPPORTS, AND SHORING. OBSERVATION VISITS TO THE SITE BY FIELD REPRESENTATIVES OF THE ARCHITECT/ENGINEER SHALL NOT INCLUDE INSPECTIONS OF THE PROTECTIVE MEASURES OR THE CONSTRUCTION PROCEDURES. ANY SUPPORT SERVICES PERFORMED BY THE ARCHITECT/ENGINEER DURING THE CONSTRUCTION SHALL BE DISTINGUISHED FROM CONSTRUCTION AND DETAILED INSPECTION SERVICES WHICH ARE FURNISHED BY OTHERS. THESE SUPPORT SERVICES PERFORMED BY THE ARCHITECT/ENGINEER, WHETHER OF MATERIAL OR WORK, ARE FOR THE PURPOSE OF ASSISTING IN QUALITY CONTROL AND IN ACHIEVING CONFORMANCE WITH CONTRACT DOCUMENTS, BUT DO NOT GUARANTEE CONSTRUCTION.
6. ASTM DESIGNATIONS AND ALL STANDARDS REFER TO THE LATEST AMENDMENTS.
7. CONFORM TO APPLICABLE CAL/OSHA CONSTRUCTION SAFETY REGULATIONS FOR ALL WORK PERFORMED DURING CONSTRUCTION. JOB SITE SAFETY IS STRICTLY THE RESPONSIBILITY OF THE CONTRACTOR AND NOT THE ARCHITECT/ENGINEER OR OWNER.
8. THE ENGINEER AND THEIR CONSULTANTS SHALL HAVE NO RESPONSIBILITY FOR THE DISCOVERY, HANDLING, REMOVAL OR DISPOSAL OF HAZARDOUS MATERIALS AT THE PROJECT SITE, INCLUDING BUT NOT LIMITED, TO ASBESTOS, ASBESTOS PRODUCTS, POLYCHLORINATED BIPHENYL (PCB) OR OTHER TOXIC SUBSTANCES.
9. SHOULD ANY CONDITIONS DEVELOP NOT COVERED BY THE CONTRACT DOCUMENTS, OR IF A CHANGE IN THE SCOPE OF WORK IS PROPOSED, A CONSTRUCTION CHANGE DOCUMENT DETAILING AND SPECIFYING THE REQUIRED CHANGE(S) SHALL BE SUBMITTED TO AND APPROVED BY DSA BEFORE PROCEEDING WITH THE WORK.
10. THE SCHOOL DISTRICT'S INSPECTOR OF RECORD SHALL INSPECT AND APPROVE THE ERECTED FRAME PRIOR TO ROOF INSTALLATION.
11. SEE REQUIREMENTS FOR LOCATION IN ANY FIRE HAZARD SEVERITY ZONE FOR WILDLAND URBAN INTERFACE AREAS (WUI) AS SPECIFIED IN THE APPLICABLE VERSION OF THE CALIFORNIA BUILDING CODE. PROVIDE PROTECTION AND DETAILS OF ALL AREAS COMPLYING WITH THE WUI REQUIRMENTS.
12. LOCATING THIS STRUCTURE CLOSER THAN 20 FEET TO OTHER STRUCTURES MAY AFFECT THE ALLOWABLE AREA FOR THE EXISTING CONSTRUCTION PER THE APPLICABLE VERSION OF THE CALIFORNIA BUILDING CODE.
13. VIEWS AND DETAILS ARE NOT DRAWN TO SCALE (UNLESS NOTED OTHERWISE). DO NOT SCALE THESE DRAWINGS.
14. OTHER SITE SPECIFIC ITEMS MAY BE REQUIRED.
15. WHEN A SITE-SPECIFIC PROJECT IS LOCATED IN A FLOOD ZONE OTHER THAN ZONE X, A LETTER STAMPED AND SIGNED FROM A SOILS ENGINEEER IS NEEDED TO VALIDATE THE ALLOWABLE SOIL VALUES SPECIFIED IN THE PC ARE STILL APPLICABLE.

STRUCTURAL AND MISCELLANEOUS STEEL:

1. ALL STRUCTURAL STEEL SHALL BE DETAILED, FABRICATED AND ERECTED IN ACCORDANCE WITH THE AMERICAN INSTITUTE OF STEEL CONSTRUCTION (AISC) 360 - 16 AND 303-16 MANUAL REFERENCED BY THE 2022 EDITION OF THE CALIFORNIA BUILDING CODE.
2. PIPE SECTIONS SHALL CONFORM TO ASTM A53, Fy = 35 ksi, GRADE B UNLESS NOTED OTHERWISE.
3. STRUCTURAL TUBING (HSS SHAPES) SHALL CONFORM TO ASTM A500, GRADE B (OR HIGHER), Fy = 46 KSI.
4. IF MATERIAL AVAILABILITY IS LIMITED, MEMBER THICKNESSES CAN BE INCREASED BEYOND WHAT IS SHOWN IN THESE DRAWINGS (MAXIMUM INCREASE OF 1/8").
5. ALL CHANNELS, ANGLES, PLATES AND MISC. STEEL SHALL CONFORM TO ASTM A36, Fy = 36 KSI.
6. ALL COLD FORM STEEL SHALL CONFORM TO ASTM A653, CS = TYPE B, Fy = 50 KSI.
7. STRUCTURAL STEEL AND DECK SHALL BE IDENTIFIED FOR CONFORMITY PER CBC 2202A.1.
8. ROOF DECK SHALL HAVE KYNAR 5000 METAL COATING.
9. ROOF DECK SHALL CONFORM TO ATSM A792, Fy = 50 KSI.
10. MR ROOF SCREWS MEET ASTM A510 WITH A HEAD DIMENSION OF 0.31" (FLAT-TO-FLAT) AND INTEGRAL WASHER DIMENSION OF 0.58" (OUTSIDE DIAMETER).
11. SS ROOF SCREWS MEET ASTM A510 WITH A HEAD DIMENSION OF 0.437" (OUTSIDE DIAMETER).

WELDING:

1. ALL WELDING SHALL COMPLY WITH AWS D1.1 SPECIFICATIONS AND SHALL BE DONE BY AWS QUALIFIED WELDERS CERTIFIED FOR THE TYPE OF WELDING TO BE PERFORMED.
2. ALL WELDING SHALL BE DONE BY GAS METAL ARC PROCESS WITH E70XX ELECTRODES. FLUX CORE ARC WELD SHALL CONFORM TO CHARPY NOTCH TOUGHNESS RATING OF 20 ft-lb @ (O° F).
3. ALL WELDING SHALL BE DONE IN THE SHOP WITH REQUIRED INSPECTION, PRE-APPROVED BY DSA, TO ENSURE PROPER MATERIAL ID AND WELDING.
4. WELD FILLER METAL MANUFACTURER SHALL PROVIDE WRITTEN CERTIFICATION OF COMPLIANCE WITH CODE AND SPECIFICATIONS.

BOLTING:

1. ALL BOLTS SHOWN ON THESE DRAWINGS ARE ASTM F3125 (A325 TYPE 1) HIGH STRENGTH BOLTS (UNO) AND SHALL BE HOT DIPPED GALVANIZED PER ASTM F2329.
2. HIGH STRENGTH BOLTS SHALL BE SAMPLED AND TESTED IN COMPLANCE WITH CBC 2213A.1.
3. BEFORE ERECTING THE FRAME, VERIFY ALL BOLTS AND NUTS ARE CLEAN OF DEBRIS AND BURRS - INCLUDING THE HARDWARE ALREADY FASTENED INSIDE THE MEMBERS. CHASING SOME OF THE BOLTS AND NUTS MAY BE REQUIRED.
4. ANCHOR BOLTS (HEAVY HEX HEAD, ASTM F1554, GRADE 55) SHALL BE HOT DIPPED GALVANIZED PER ASTM F2329. ANCHOR BOLTS MAY BE HEADED OR THREADED WITH A NUT THAT IS PREVENTED FROM ROTATING.
5. HIGH STRENGTH NUTS SHALL CONFORM TO ASTM A563 AND SHALL BE GALVANIZED PER ASTM F2329.
6. HIGH STRENGTH WASHERS SHALL CONFORM TO ASTM F436 AND SHALL BE GALVANIZED PER ASTM F2329.
7. THE BOLTING INSTALLATION REQUIREMENTS OUTLINED BELOW ARE CRITICAL TO THE STRUCTURE'S DESIGN AND PERFORMANCE. **THE INSTALLER IS REQUIRED TO COORDINATE THIS PHASE OF CONSTRUCTION WITH THE SPECIAL BOLTING INSPECTOR AND THE INSPECTOR OF RECORD PRIOR TO THE ERECTION OF THE FRAME**. ALL BOLTS SHALL BE INSTALLED AND INSPECTED PER THE APPLICABLE VERSION OF AISC'S "SPECIFICATION FOR STRUCTURAL JOINTS USING HIGH-STRENGTH BOLTS", CBC 1705A.2.1; AISC 341-16 J7; AISC 360-16 N5.6.

   A. PRETENSIONED JOINTS (IDENTIFIED ON THE FRAME CONNECTION DETAILS WITH A "PJ REQUIRED") MUST BE INSTALLED AND INSPECTED TO MEET ONE OF FOLLOWING REQUIREMENTS:

      1. TURN-OF-NUT PRETENSIONING
      2. CALIBRATED WRENCH PRENTENSIONING
      3. DIRECT-TENSION-INDICATOR PRETENSIONING (CONTRACTOR RESPONSIBLE FOR PURCHASE OF REQUIRED WASHERS)

   B. ALL OTHER JOINTS MUST BE INSTALLED AND INSPECTED TO MEET THE REQUIREMENTS OF SNUG-TIGHTENED JOINTS. **NOTE TO INSTALLER AND INSPECTOR(S): THE SNUG-TIGHT CONDITION EXISTS, IN PART, WHEN ALL THE BOLTS IN THE JOINT HAVE BEEN TIGHTENED SUFFICIENTLY TO PREVENT THE REMOVAL OF THE NUTS WITHOUT THE USE OF A WRENCH.**

   THE CONTRACTOR, SPECIAL BOLTING INSPECTOR AND THE INSPECTOR OF RECORD MUST ALL AGREE ON WHICH APPROACH WILL BE USED TO PRETENSION THE BOLTS. THE CONTRACTOR IS RESPONSIBLE FOR DOCUMENTING THE APPROACH AGREED TO BY ALL PARTIES LISTED ABOVE.

FOUNDATIONS:

1. ALLOWABLE SOIL PRESSURES ASSUME CLASS 5 SOIL CLASSIFICATION PER 2022 CBC TABLE 1806A. 2.
2. FILL AND BACKFILL SHALL BE COMPACTED TO 95% OF MAX. DENSITY IN ACCORDANCE WITH ASTM TEST METHOD D1557. FLOODING NOT PERMITTED.
3. THE CONTRACTOR SHALL BE RESPONSIBLE FOR ALL SHORING, ETC. NECCESSARY TO SUPPORT CUT AND/OR FILL BANKS DURING EXCAVATION, AND FORMING AND PLACEMENT OF CONCRETE.
4. STRUCTURES SHALL BE SETBACK FROM ADAJCENT SLOPES TO PROVIDE FIRM MATERIAL FOR EMBEDMENT AND FOR PROTECTION FROM SLOPE DRAINAGE, EROSION, AND SHALLOW FAILURES.

   A. BOTTOM OF ASCENDING SLOPE: THE SMALLER OF HALF THE HEIGHT OF THE SLOPE AND 15FT MEASURED FROM THE FACE OF THE STRUCTURE TO THE TOE OF THE SLOPE
   B. TOP OF DECENDING SLOPE: THE SMALLER OF A THIRD OF THE HEIGHT OF THE SLOPE AND 40 FT MEASURED FROM THE FACE OF THE FOOTING TO THE TOP OF THE SLOPE

   ALTERNATE SETBACKS ARE PERMITTED, SUBJECT FOR APPROVAL. A GEOTECHNICAL INVESTIGATION MAY BE REQUIRED.
5. STRUCTURES PLACED ON LIQUIFIABLE SOILS OR SITE CLASS F MAY NOT BE SUBMITTED FOR AN OVER THE COUNTER REVIEW.

CONCRETE:

1. MIX DESIGN REQUIREMENTS: (NORMAL WEIGHT CONCRETE)

MINIMUM STRENGTH f'c (28 DAYS)	EXPOSURE CATEGORY	W/C RATIO MAXIMUM)	SLUMP (± 1")	UNIT WEIGHT (NORMAL WEIGHT)
5000 PSI	F3, S3, W2, C2	0.4	4"	150 PCF

2. CHANGES TO THE MIX DESIGN MUST BE APPROVED BY THE ENGINEER OR ARCHITECT OF RECORD AND DSA
3. AGGREGATES SHALL CONFORM TO ASTM C33. MAX AGGREGATE SIZE = 1".
4. CEMENT SHALL CONFORM TO ASTM C150 (TYPE V) WITH A MAXIMUM EXPANSION OF 0.040%, FOR SULFATE RESISTANCE.
5. ADMIXTURES CONTAINING CALCIUM CHLORIDE ARE PROHIBITED.
6. CONCRETE EXPOSED TO FREEZING-AND-THAWING CYCLES SHALL BE AIR ENTRAINED PER ACI 318-19 SECTION 19.3.3.
7. CONCRETE SHALL BE MAINTAINED IN A MOIST CONDITION FOR A MINIMUM OF FIVE DAYS AFTER PLACEMENT. ALTERNATE METHODS WILL BE APPROVED IF SATISFACTORY PERFORMANCE CAN BE ASSURED.
8. CONCRETE SHALL NOT FREE FALL MORE THAN FIVE FEET.
9. CONCRETE SHALL BE PROPORTIONED PER ACI 318-19 26.4.
10. CONCRETE SHALL BE TESTED PER CBC 1910A.1, 1705A.3, AND ACI 318-19 26.13. BATCH PLANT INSPECTION NOT REQUIRED. CONTRACTOR SHALL IMPLEMENT WEIGHTMASTER AND BATCH TICKET REQUIREMENTS OF CBC 1705A.3.3.1.

REINFORCING STEEL:

1. REINFORCING STEEL SHALL BE DEFORMED STEEL CONFORMING TO THE REQUIREMENTS OF ASTM A615, (DEFORMATIONS SHALL BE IN ACCORDANCE WITH ASTM A305) AS FOLLOWS:
   GR 60: (#4 BARS AND LARGER)
   GR 40: (#3 BARS)
2. DETAILING, FABRICATION, AND ERECTION OF REINFORCING BARS SHALL CONFORM TO THE ACI "MANUAL OF STANDARD PRACTICE FOR DETAILING REINFORCING CONCRETE STRUCTURES."
3. MIN. COVER FOR CAST-IN-PLACE CONCRETE SHALL BE AS FOLLOWS:

   A. CAST AGAINST EARTH.. 3"
   B. CAST AGAINST FORM BELOW GRADE..................... 2"
   C. FORMED SLABS (#11 BAR & SMALLER).................... 3/4"
   D. SLABS ON GRADE (FROM TOP OF SLAB).................. 1"
   E. COLUMNS AND BEAMS (MAIN BARS)...................... 2"
   F. WALLS EXPOSED TO WEATHER (#6-#18 BARS)......... 2"
   (#5 & SMALLER)......... 11/2"
   G. NOT EXPOSED TO WEATHER (#11 & SMALLER)........ 3/4"
4. BARS SHALL BE CLEAN OF RUST, GREASE OR OTHER MATERIAL LIKELY TO IMPAIR BOND. BENDS SHALL BE MADE COLD.
5. FOR #6 BARS AND SMALLER, REINFORCING SHALL BE LAP SPLICED 45 BAR DIA MINIMUM IN CONCRETE. FOR #7 BARS AND LARGER, REINFORCING SHALL BE LAP SPLICED 55 BAR DIAMETERS MINIMUM IN CONCRETE. ALL LAP SPLICES MUST COMPLY WITH ACI 318-19.
6. PRIOR TO PLACING OF CONCRETE, REINFORCING STEEL AND EMBEDDED ITEMS SHALL BE WELL SECURED IN POSITION.
7. WELDING OF REINFORCING IS NOT ALLOWED
8. REINFORCING STEEL SHALL BE SAMPLED AND TESTED PER CBC 1910A.2.

POWDER COATED AND EPOXY PRIMED FINISH:

1. ENTIRE POWDER COATING PROCESS COMPLETED IN SAME FACILITY AS STEEL FABRICATION.
2. ALL CARBON STEEL MEMBERS (COLUMNS, BEAMS, PLATES, ETC.) PAINTED WITH PRIME COAT PER THE "AISC CODE OF STANDARD PRACTICE" AND THE "AISC SPECIFICATION SECTION M3" (UNLESS NOTED OTHERWISE).
3. PARTS PRETREATED IN A 3 STAGE IRON PHOSPHATE WASHER (OR EQUAL).
4. EPOXY PRIMER POWDER COAT APPLIED TO PARTS FOR SUPERIOR CORROSION PROTECTION.
5. TOP POWDER COAT OF SUPER DURABLE TGIC (COLOR SELECTED FROM MANUFACTURER'S STANDARD OPTIONS OR CUSTOM COLOR).
6. SAMPLE PRODUCTION PARTS TESTED TO MEET THE FOLLOWING CRITERIA:
   A. SALT SPRAY RESISTANCE PER ASTM B 117/ ASTM D 1654
      1. 10000 HOURS WITH NO CREEP FROM SCRIBE LINE AND RATING OF 10
   B. HUMIDITY RESISTANCE PER ASTM D2247-02
      1. 5000 HOURS WITH NO LOSS OF ADHESION OR BLISTERING
   C. COLOR/UV RESISTANCE PER ASTM G154-04
      1. 2000 HOURS EXPOSURE ALTERNATE CYCLES WITH NO CHALKING, 75% COLOR RETENTION, AND COLOR VARIATION MAXIMUM 3.0 E VARIATION CIE FORMULA (BEFORE AND AFTER 2000 HOURS EXPOSURE

CONSTRUCTION NOTES

1. A DSA-CERTIFIED CLASS 2 INSPECTOR IS REQUIRED FOR THIS PROJECT.
2. CHANGES TO THE APPROVED DRAWINGS AND SPECIFICATIONS SHALL BE MADE BY ADDENDA OR CONSTRUCTION CHANGE DOCUMENT (CCD) APPROVED BY DSA, AS REQURIED BY SECTION 4-338, PART 1, TITLE 24 CCR AND DSA IR A-6.
3. A "DSA-CERTIFIED" PROJECT INSPECTOR EMPLOYED BY THE OWNER (E.G. DISTRICT, ETC.) AND APPROVED BY DSA SHALL PROVIDE CONTINUOUS INSPECTION OF WORK. THE DUTIES OF THE INSPECTOR ARE DEFINED IN SECTION 4-342, PART 1, TITLE 24, CCR.
4. A DSA ACCEPTED TESTING LABORATORY DIRECTLY EMPLOYED BY THE OWNER (E.G. DISTRICT, ETC.) SHALL CONDUCT ALL THE REQUIRED TEST AND INSPECTIONS FOR THE PROJECT.

NOTICE OF DISCLAIMER FOR STRUCTURAL ENGINEER RESPONIBILITY

1. FOR THE SITE-SPECIFIC PROJECT, NEITHER POLIGON OR GHD ARE THE DESIGN PROFESSIONAL IN GENERAL RESPONSIBLE CHARGE.
2. FOR THE SITE-SPECIFIC PROJECT, GHD AND POLIGON'S RESPONSIBILITY IS LIMITED TO THE PREPARATION OF THE PLANS AND SPECIFICATIONS FOR THE STRUCTURES OF THIS PC ONLY.
3. STRUCTURAL OBSERVATION OF CONSTRUCTION IS SPECIFICALLY EXCLUDED FROM GHD AND POLIGON'S RESPONSIBILITY FOR THE SITE-SPECIFIC PROJECT.
4. ALL CONSTRUCTION ACTIVITIES RELATED TO STRUCTURAL ENGINEERING MAY BE DELEGATED TO A QUALIFIED ENGINEER BY THE DESIGN PROFESSIONAL IN GENERAL RESPONSIBLE CHARGE. THESE ACTIVITIES INCLUDE, BUT ARE NOT LIMITED TO, APPROVAL OF INSPECTOR QUALIFICATIONS, STRUCTURAL OBSERVATIONS OF CONSTRUCTION, REVIEW OF INSPECTIONS REPORTS, AND SIGNING OFF ON THE VERIFIED REPORT FOR COMPLETED WORK.
5. POLIGON WILL BE RESPONSIBLE FOR RESPONDING TO QUESTIONS PERTAINING TO THE PLANS AND SPECIFICATIONS FOR THE STRUCTURES OF THIS PC WHICH ARISE DURING PLAN REVIEW AND CONSTRUCTION.

SPECIAL INSPECTION NOTES:

1. THE PROJECT INSPECTOR AND TESTING AGENCY SHALL BE SELECTED BY THE SCHOOL DISTRICT AND APPROVED BY DSA AND THE ARCHITECT OF RECORD.
2. COSTS OF THE PROJECT INSPECTOR AND THE TESTING AGENCY SHALL BE BORN BY THE SCHOOL DISTRICT.
3. THE PROJECT INSPECTOR, AND ENTIRE CONSTRUCTION OVERSIGHT PROCESS, SHALL COMPLY WITH DSA PR 13-01.
4. ON APPROVED PC DRAWINGS, THE STATEMENT OF STRUCTURAL TESTS AND SPECIAL INSPECTIONS (FORM DSA-103) BELOW IS ONLY AN EXAMPLE. ON APPROVED PC DRAWINGS, THE EXAMPLE FORM DSA-103 MUST BE CROSSED OUT BEFORE THE PC DRAWINGS CAN BE APPROVED AS PART OF A SITE-SPECIFIC (OR STOCKPILE) PROJECT SO THEY WILL NOT CONFLICT WITH THE OFFICIAL FORM DSA-103 FOR THE PROJECT.

DSA 103-22: LISTING OF STRUCTURAL TESTS & SPECIAL INSPECTIONS, 2022 CBC

Application Number:	**School Name:**	**School District:**
DSA File Number:	**Increment Number:**	**Date Submitted:**

2022 CBC

IMPORTANT: This form is only a summary list of structural tests and some of the special inspections required for the project. Generally, the structural tests and special inspections noted on this form are those that will be performed by the Geotechnical Engineer of Record, Laboratory of Record, or Special Inspector. The actual complete test and inspection program must be performed as detailed on the DSA approved documents. The appendix at the bottom of this form identifies work NOT subject to DSA requirements for special inspection or structural testing. The project inspector is responsible for providing inspection of all facets of construction, including but not limited to, special inspections not listed on this form such as structural wood framing, high-load wood diaphragms, cold-formed steel framing, anchorage of non-structural components, etc., per Title 24, Part 2, Chapter 17A (2022 CBC).

***NOTE:** Undefined section and table references found in this document are from the CBC, or California Building Code.

KEY TO COLUMNS

1. TYPE	2. PERFORMED BY
Continuous – Indicates that a continuous special inspection is required **Periodic** – Indicates that a periodic special inspection is required **Test** – Indicates that a test is required	**GE** – Indicates that the special inspection shall be performed by a registered geotechnical engineer or his or her authorized representative. **LOR** – Indicates that the test or special inspection shall be performed by a testing laboratory accepted in the DSA Laboratory Evaluation and Acceptance (LEA) Program. See CAC Section 4-335. **PI** – Indicates that the special inspection may be performed by a project inspector when specifically approved by DSA. **SI** – Indicates that the special inspection shall be performed by an appropriately qualified/approved special inspector.

	S1. GENERAL:			
	Test or Special Inspection	**Type**	**Performed By**	**Code References and Notes**
☑	**a.** Verify that: • Site has been prepared properly prior to placement of controlled fill and/or excavations for foundations. • Foundation excavations are extended to proper depth and have reached proper material. • Materials below footings are adequate to achieve the design bearing capacity.	See Notes	PI	Refer to specific items identified in the Appendix listing exemptions for limitations. Placement of controlled fill exceeding 12" depth under foundations is not permitted without a geotechnical report.

	S2. SOIL COMPACTION AND FILL:			
	Test or Special Inspection	**Type**	**Performed By**	**Code References and Notes**
☑	**a.** Verify use of proper materials, densities and inspect lift thicknesses, placement and compaction during placement of fill.	Continuous	LOR*	* Under the supervision of a geotechnical engineer or LOR's engineering manager. Refer to specific items identified in the Appendix listing exemptions for limitations.
☑	**b.** Compaction testing.	Test	LOR*	* Under the supervision of a geotechnical engineer or LOR's engineering manager. Refer to specific items identified in the Appendix listing exemptions for limitations.

	S4. CAST-IN-PLACE DEEP FOUNDATIONS (PIERS):			
	Test or Special Inspection	**Type**	**Performed By**	**Code References and Notes**
☑	**a.** Inspect drilling operations and maintain complete and accurate records for each pier.	Continuous	PI	Continuous inspection to be provided by project inspector. Refer to specific items identified in the Appendix listing exemptions for limitations.
☑	**b.** Verify pier locations, diameters, plumbness, and lengths. Record concrete or grout volumes.	Continuous	PI	Continuous inspection to be provided by project inspector. Refer to specific items identified in the Appendix listing exemptions for limitations.
☑	**c.** Concrete piers.	Provide tests and inspections per CONCRETE section below.		

	C1. CAST-IN-PLACE CONCRETE			
	Test or Special Inspection	**Type**	**Performed By**	**Code References and Notes**
☑	**a.** Verify use of required design mix.	Periodic	SI	**Table 1705A.3 Item 5, 1910A.1.**
☑	**b.** Identifiy, sample, and test reinforcing steel.	Test	LOR	**1910A.2;** ACI 318-19 Ch. 20 and Section 26.6.1.2; DSA IR 17-10. (See Appendix (end of this form) for exemptions.)
☑	**c.** During concrete placement, fabricate specimens for strength tests, perform slump and air content tests, and determine the temperature of the concrete.	Test	LOR	**Table 1705A.3 Item 6**; ACI 318-19 Sections 26.5 & 26.12.
☑	**d.** Test concrete (f'_c).	Test	LOR	**1905A.1.17;** ACI 318-19 Section 26.12.
☑	**e.** Batch plan inspection:	See Notes	SI	Default of **'Continuous'** per **1705A.3.3**. If approved by DSA, batch plant inspection may be reduced to **'Periodic'** subject to requirements in Section **1705.A.3.3.1**, or eliminated per **1705A.3.3.2**. See IR 17-13. (See Appendix (end of this form) for exemptions.)

	S/A1. STRUCTURAL STEEL, COLD-FORMED STEEL AND ALUMINUM USED FOR STRUCTURAL PURPOSES			
	Test or Special Inspection	**Type**	**Performed By**	**Code References and Notes**
☑	**a.** Verify identification of all materials and: • Mill certificates indicate material properties that comply with requirements. • Material sizes, types and grades comply with requirements.	Periodic	*	**Table 1705A.2.1 Item 3a–3c.** 2202A.1**;** AISI S100-20 Section A3.1 & A3.2, AISI S240-20 Section A3 & A5, AISI S220-20 Sections A4 & A6. * By special inspector or qualified technician when performed off-site.
☑	**b.** Test unidentified materials	Test	LOR	**2202A.1.**
☑	**c.** Examine seam welds of HSS shapes	Periodic	SI	DSA IR 17-3.
☑	**d.** Verify and document steel fabrication per DSA-approved construction documents.	Periodic	SI	Not applicable to cold-formed steel light-frame construction, except for trusses (**1705A.2.4**).

	S/A2. HIGH-STRENGTH BOLTS:			
	Test or Special Inspection	**Type**	**Performed By**	**Code References and Notes**
☑	**a.** Verify identification markings and manufacturer's certificates of compliance conform to ASTM standards specified in the DSA-approved documents.	Periodic	SI	**Table 1705A.2.1 Items 1a & 1b, 2202A.1;** AISC 360-16 Section A3.3, J3.1, and N3.2; RCSC 2014 Section 1.5 & 2.1; DSA IR 17-8 & DSA IR 17-9.
☑	**b.** Test high-strength bolts, nuts and washers.	Test	LOR	**Table 1705A.2.1 Item 1c, 2213A.1**; RCSC 2014 Section 7.2; DSA IR 17-8.
☑	**c.** Bearing-type ("snug tight") connections.	Periodic	SI	**Table 1705A.2.1 Item 2a, 1705A.2.6, 2204A.2;** AISC 360-16 J3.1, J3.2, M2.5 & N5.6; RCSC 2014 Section 9.1; DSA IR 17-9.
☑	**d.** Pretensioned and slip-critical connections.	*	SI	**Table 1705A.2.1 Items 2b & 2c, 1705A.2.6, 2204A.2;** AISC 360-16 J3.1, J3.2, M2.5 & N5.6; RCSC 2014 Sections 9.2 & 9.3; DSA IR 17-9. * "Continuous" or "Periodic" depends on the tightening method used.

	S/A3. WELDING:			
	Test or Special Inspection	**Type**	**Performed By**	**Code References and Notes**
☑	**a.** Verify weld filler material identification markings per AWS designation listed on the DSA- approved documents and the WPS.	Periodic	SI	**1705A.2.5, Table 1705A.2.1 Items 4 & 5**; AWS D1.1 and AWS D1.8 for structural steel; AWS D1.2 for Aluminum; AWS D1.3 for cold-formed steel; AWS D1.4 for reinforcing steel; DSA IR 17- 3.
☑	**b.** Verify weld filler material manufacturer's certificate of compliance.	Periodic	SI	DSA IR 17-3.
☑	**c.** Verify WPS, welder qualifications and equipment.	Periodic	SI	DSA IR 17-3.

	S/A4. SHOP WELDING (IN ADDITION TO SECTION S/A3):			
	Test or Special Inspection	**Type**	**Performed By**	**Code References and Notes**
☑	**a.** Inspect groove welds, multi-pass fillet welds, single pass fillet welds > 5/16", plug and slot welds.	Continuous	SI	**Table 1705A.2.1 Items 5a.1–4;** AISC 360-16 (and AISC 341-16 as applicable); DSA IR 17-3.
☑	**b.** Inspect single-pass fillet welds ≤ 5/16", floor and roof deck welds.	Periodic	SI	**1705A.2.2, Table 1705A.2.1 Items 5a.5 & 5a.6;** AISC 360-16 (and AISC 341-16 as applicable); DSA IR 17-3.

	S/A9. ANCHOR BOLTS AND ANCHOR RODS:			
	Test or Special Inspection	**Type**	**Performed By**	**Code References and Notes**
☑	**a.** Anchor Bolts and Anchor Rods	Test	LOR	Sample and test anchor bolts and anchor rods not readily identifiable per procedures noted in DSA IR 17-11.

Name of Architect or Engineer in general responsible charge:

Name of Structural Engineer (When structural design has been delegated):

Signature of Architect or Structural Engineer: Date:

Note: To facilitate DSA electronic mark-ups and identification stamp application, DSA recommends against using secured electronic or digital signatures.

DSA STAMP

DSA 103-22: LIST OF REQUIRED VERIFIED REPORTS, CBC 2022

1. Soils Testing and Inspection: Geotechnical Verified Report Form DSA 293
2. Structural Testing and Inspection: Laboratory Verified Report Form DSA 291
3. Shop Welding Inspection: Laboratory Verified Report Form DSA 291, or, for independently contracting SI, Special Inspection Verified Report Form DSA 292
4. High-Strength Bolt Installation Inspection: Laboratory Verified Report Form DSA 291, or, for independently contracting SI, Special Inspection Verified Report Form DSA 292

STATE APPROVALS-SITE

IDENTIFICATION STAMP
DIV. OF THE STATE ARCHITECT
APP: 02-122004 INC:
REVIEWED FOR
SS ☑ FLS ☑ ACS ☑
DATE: 12/06/2023

4080 PLAZA GOLDORADO CIRCLE
SUITE B,
CAMERON PARK, CA 95682
530.677.5515

GHD

poligon

PORTER

REGISTERED PROFESSIONAL ENGINEER
JESSICA E. NAPIER
No. S5476
STRUCTURAL
STATE OF CALIFORNIA

STATE APPROVALS-PC

IDENTIFICATION STAMP
DIV. OF THE STATE ARCHITECT
APP: 02-121213 PC
REVIEWED FOR
SS ☑ FLS ☑ ACS ☑ CG ☐
DATE: 7/18/2023

PRE-CHECK (PC) DOCUMENT
CODE: 2022 CBC
A SEPARATE PROJECT APPLICATION FOR CONSTRUCTION IS REQUIRED.

NOTES AND SPECIAL INSPECTIONS

HIP ROOF - RAM

RAM1.1

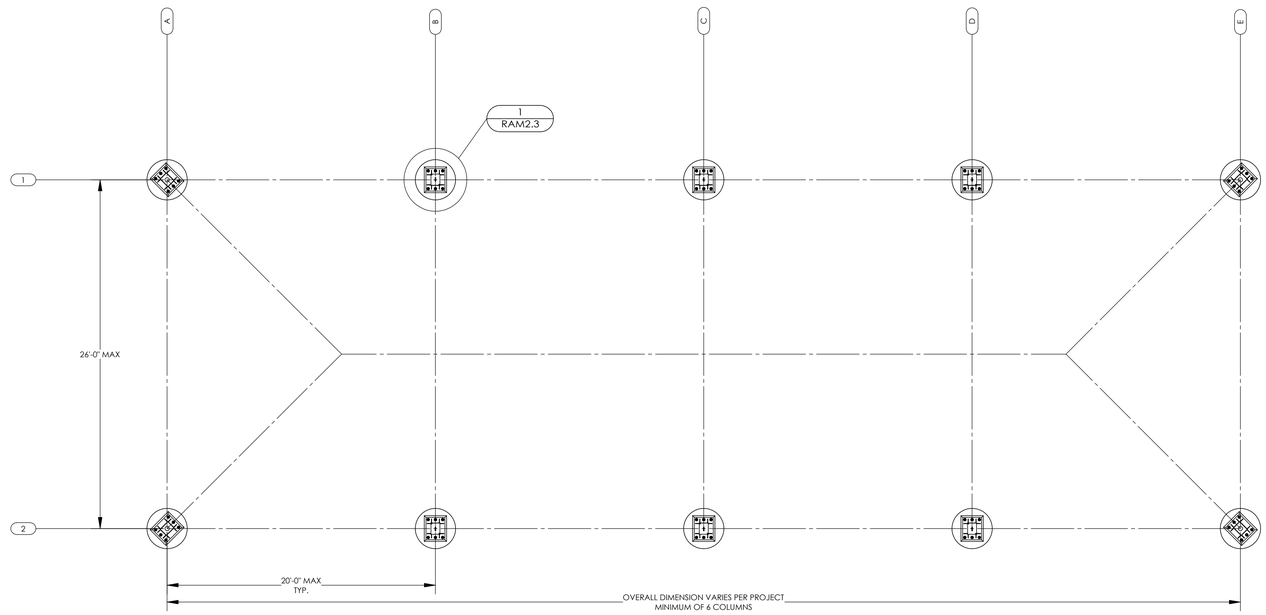

FOUNDATION PLAN (DRILLED PIER)

SCALE: 3/16" = 1'-0"

FOUNDATION PLAN NOTES:

1. TOP OF ALL FOUNDATIONS MUST BE CONSTRUCTED AT ONE COMMON ELEVATION (COORDINATE WITH SITE PLANS - NOT BY POLIGON)
2. ALL FOUNDATIONS MUST BE CENTERED UNDER COLUMNS (UNO).
3. SEE SHEET RAM1.1 FOR CONCRETE REQUIREMENTS.
4. PRIOR TO FORMING AND CASTING FOUNDATIONS, REVIEW FOUNDATION PLAN FOR REQUIRED ORIENTATION.
5. FOUNDATION MATERIAL AND INSTALLATION NOT BY POLIGON.
6. VIBRATE CONCRETE FULL DEPTH OF FOUNDATION.
7. FOR DRILLED PIER FOUNDATIONS, PREVENT SOIL FROM ENTERING EXCAVATED HOLE (FORM, ETC).

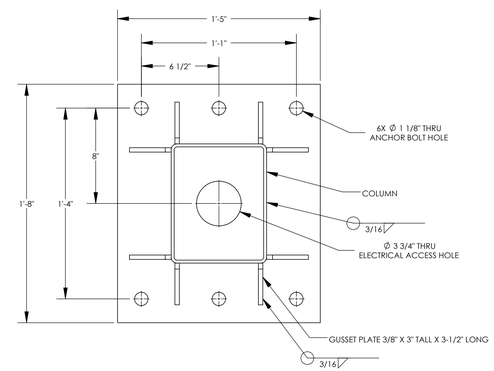

DETAIL 3

SCALE: 1-1/2" = 1'-0"

COLUMN BASEPLATE

3

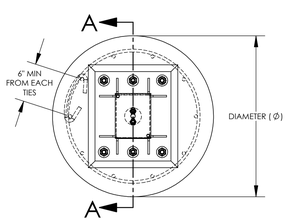

DETAIL 1

SCALE: 3/4" = 1'-0"

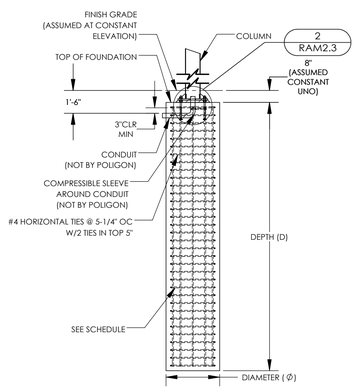

SECTION A-A

SCALE: 1/4" = 1'-0"

FOUNDATION REQUIREMENTS VARY PER PROJECT

SEE SHEET RAM1.0 FOR REQUIRED LOAD SCENARIO AND FOUNDATION TYPE (STEP 9 OF 'INSTRUCTIONS')

ONLY REFERENCE COPY OF PC DRAWINGS SUBMITTED FOR THIS PROJECT

DRILLED PIER

SIZE AND REINFORCING REQUIREMENTS

LOAD SCENARIO	DIAMETER (Ø)	DEPTH (D)	VERTICAL REINFORCING[1]	
			QTY	SIZE
1	3'-0"	13'-0"	10	#7
~~2~~	~~3'-0"~~	~~15'-0"~~	~~10~~	~~#7~~

[1] EQUALLY SPACED AROUND DRILLED PIER

DRILLED PIER FOUNDATION

1

NOTES:

1. GROUT SHALL BE NON-METALLIC, NON-SHRINK GROUT WITH MINIMUM F'c=6500 PSI.
2. COLUMNS FABICATED ASSUMING 1-1/2" GROUT PAD.
3. COLUMN BASES BELOW FINISH GRADE SHOULD BE PROTECTED FROM CORROSION, SELECT ONE OF THE FOLLOWING OPTIONS BELOW.

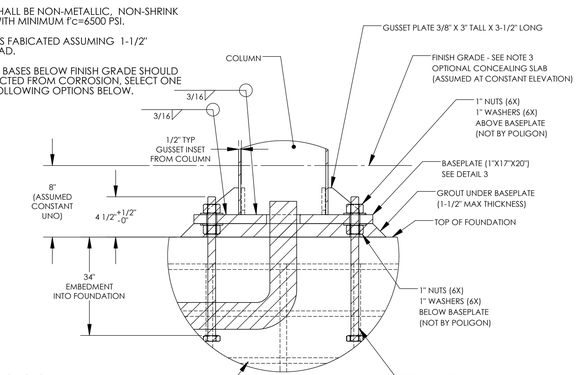

COLUMN BASE PROTECTION

BELOW SURFACE COLUMN INSTALLATION

[ ] CONCRETE SLAB - 3" MIN ANCHOR BOLT COVER

[ ] MASTIC COATING - 1/4" THICK MIN COATING ON ALL STEEL SURFACES BELOW GRADE

DETAIL 2

SCALE: 1-1/2" = 1'-0"

COLUMN BASEPLATE AND ANCHOR BOLTS

2

STATE APPROVALS-SITE

IDENTIFICATION STAMP
DIV. OF THE STATE ARCHITECT
APP: 02-122004 INC:
REVIEWED FOR
SS ☑ FLS ☑ ACS ☑
DATE: 12/06/2023

4600 PLAZA GOLDCREEK DR, STE 110
SUITE B
CHANHASSEN, MN 55317
530.677.1516

STATE APPROVALS-PC

IDENTIFICATION STAMP
DIV. OF THE STATE ARCHITECT
APP: 02-121213 PC
REVIEWED FOR
SS ☑ FLS ☑ ACS ☑ CG ☐
DATE: 7/18/2023

PRE-CHECK (PC) DOCUMENT
CODE: 2022 CBC
A SEPARATE PROJECT APPLICATION FOR CONSTRUCTION IS REQUIRED.

FOUNDATION PLAN DRILLED PIER

HIP ROOF - RAM 30

RAM2.3

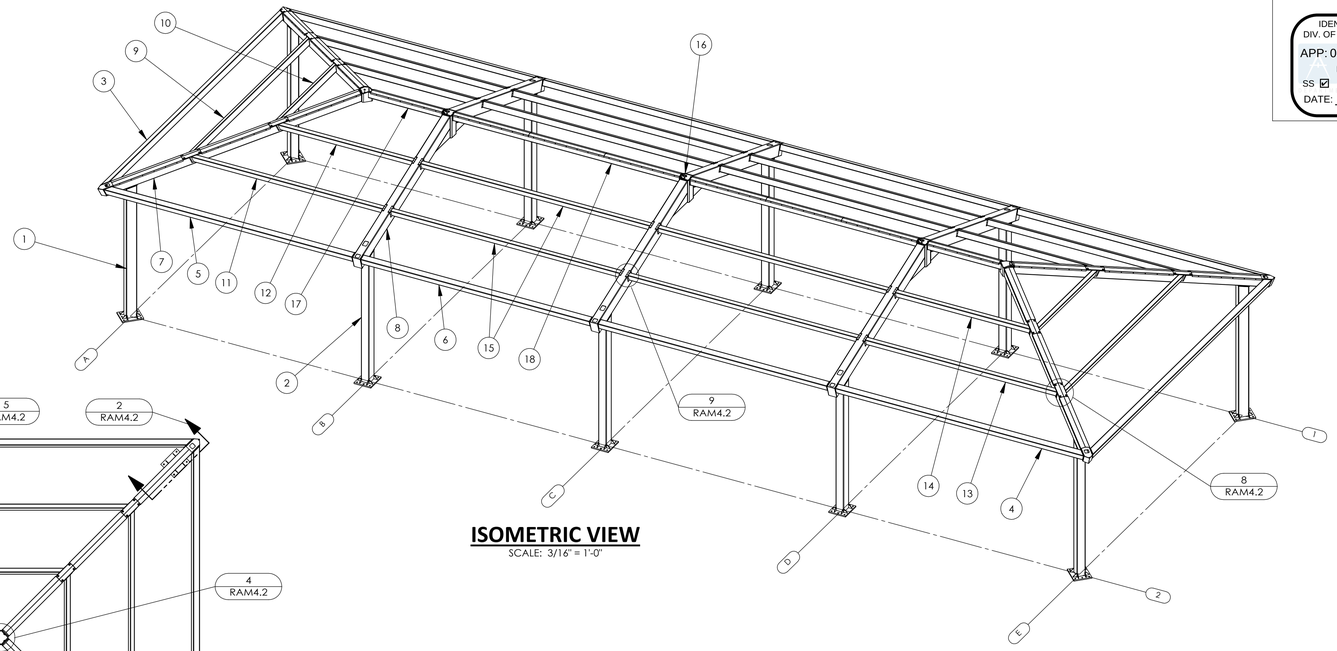

ISOMETRIC VIEW

SCALE: 3/16" = 1'-0"

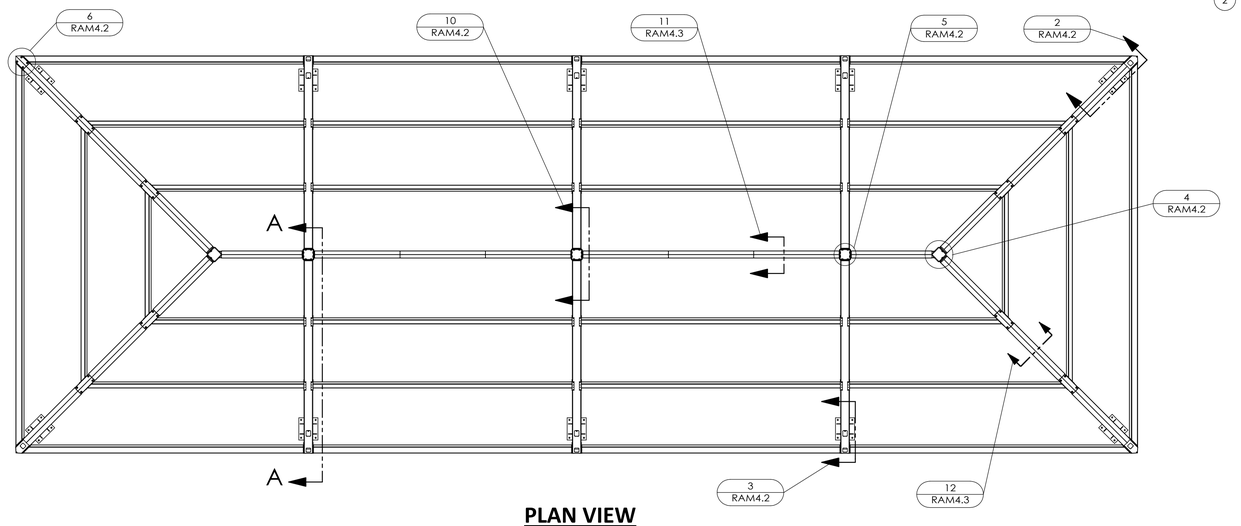

PLAN VIEW

SCALE: 3/16" = 1'-0"

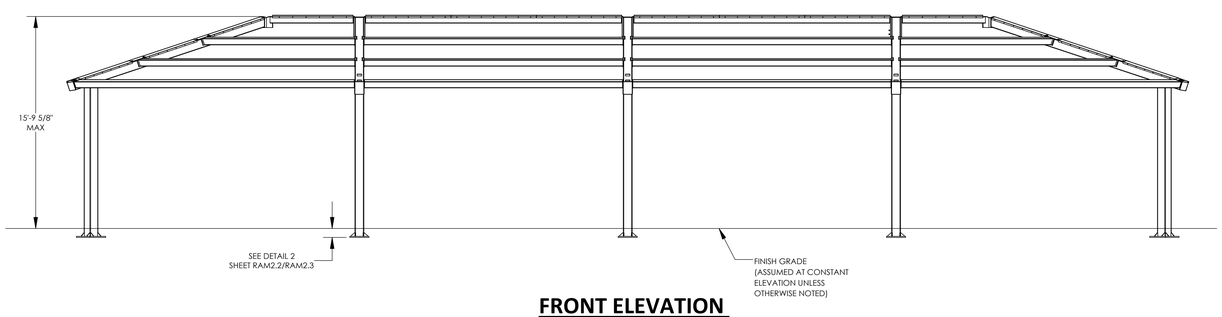

FRONT ELEVATION

SCALE: 3/16" = 1'-0"

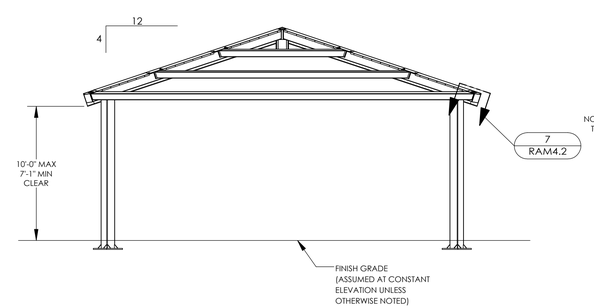

SIDE ELEVATION

SCALE: 3/16" = 1'-0"

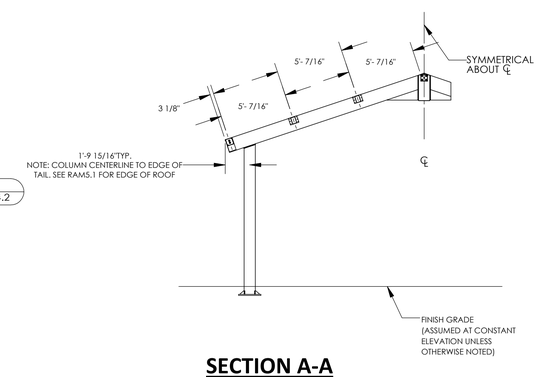

SECTION A-A

SCALE: 3/16" = 1'-0"

ITEM	QTY.	PART NO.	DESCRIPTION	MATERIAL	WEIGHT
18	2	-	R-BEAM ASM	HSS6X6X3/16	287.26
17	2	-	END R-BEAM ASM	HSS6X6X3/16	154.14
16	6	-	C-TUBE ASM	HSS10X10X5/8	143.92
15	8	-	SIDE PURLIN ASM	HSS6X4x3/16	234.29
14	2	-	CORNER PURLIN ASM	HSS6X4x3/16	136.79
13	2	-	CORNER PURLIN ASM	HSS6X4x3/16	193.62
12	2	-	CORNER PURLIN ASM	HSS6X4x3/16	136.94
11	2	-	CORNER PURLIN ASM	HSS6X4x3/16	193.78
10	2	-	END PURLIN ASM	HSS6X4x3/16	110.56
9	2	-	END PURLIN ASM	HSS6X4x3/16	224.23
8	6	-	GABLE BEAM ASM	HSS12X8X1/4	559.76
7	4	-	HIP BEAM ASM	HSS8X8X3/16	431.12
6	4	-	SIDE EAVE BEAM ASM	HSS6X6X3/16	284.96
5	2	-	CORNER EAVE BEAM ASM	HSS6X6X3/16	306.07
4	2	-	CORNER EAVE BEAM ASM	HSS6X6X3/16	306.00
3	2	-	END EAVE BEAM ASM	HSS6X6X3/16	413.48
2	6	-	SIDE COLUMN ASM	HSS10X8X1/4	425.36
1	4	-	CORNER COLUMN ASM	HSS10X8X1/4	433.63

STATE APPROVALS-SITE

IDENTIFICATION STAMP
DIV. OF THE STATE ARCHITECT
APP: 02-122004 INC:
REVIEWED FOR
SS ☑ FLS ☑ ACS ☑
DATE: 12/06/2023

4080 PLAZA GOLDORADO CIRCLE
SUITE B
CAMERON PARK, CA 95682
530.677.5016

poligon PORTER

REGISTERED PROFESSIONAL ENGINEER
JESSICA E. NAPIER
No. S5476
STRUCTURAL
STATE OF CALIFORNIA

STATE APPROVALS-PC

IDENTIFICATION STAMP
DIV. OF THE STATE ARCHITECT
APP: 02-121213 PC
REVIEWED FOR
SS ☑ FLS ☑ ACS ☑ CG ☐
DATE: 7/18/2023

PRE-CHECK (PC) DOCUMENT
CODE: 2022 CBC
A SEPARATE PROJECT APPLICATION FOR CONSTRUCTION IS REQUIRED.

FRAMING PLAN

HIP ROOF - RAM 30

RAM3.1

ALL HIDDEN NUTS AND BOLTS (INSTALLED IN SHOP DURING FABRICATION) ARE SECURED WITH THIS NUT AND BOLT RESTAINING SYSTEM.

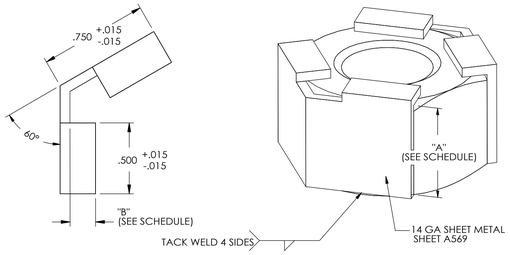

DIMENSION SCHEDULE				
FASTENER	DIM A		DIM B	
5/8" NUT	.631	+.000 -.015	.180	+.015 -.015
5/8" BOLT	.403	+.000 -.015	.250	+.015 -.015
3/4" NUT	.758	+.000 -.015	.180	+.015 -.015
3/4" BOLT	.483	+.000 -.015	.375	+.015 -.015
1" NUT	1.012	+.000 -.015	.180	+.015 -.015
1" BOLT	.643	+.000 -.015	.375	+.015 -.015

NUT & BOLT RESTRAINING SYSTEM 1

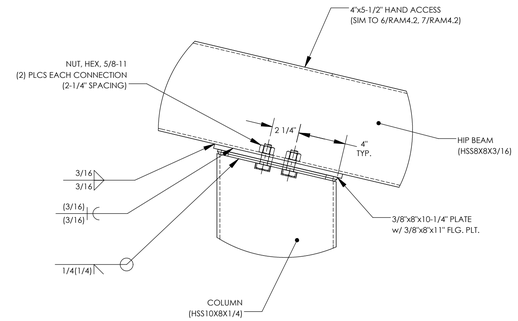

HIP BEAM CONNECTION @ COLUMN 2

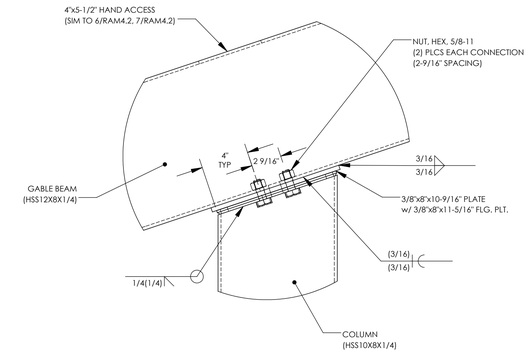

GABLE BEAM CONNECTION @ COLUMN 3

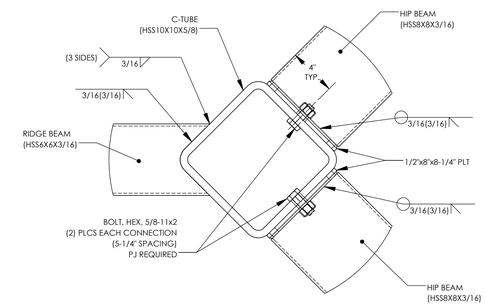

HIP BEAM CONNECTION @ COMPRESSION TUBE 4

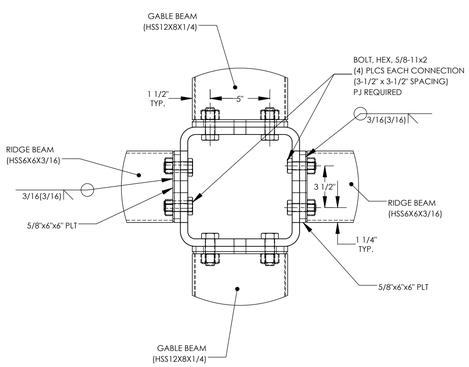

RIDGE BEAM CONNECTION @ COMPRESSION TUBE 5

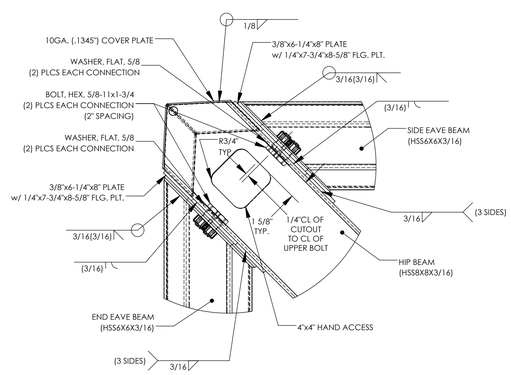

EAVE BEAM CONNECTION @ HIP BEAM 6

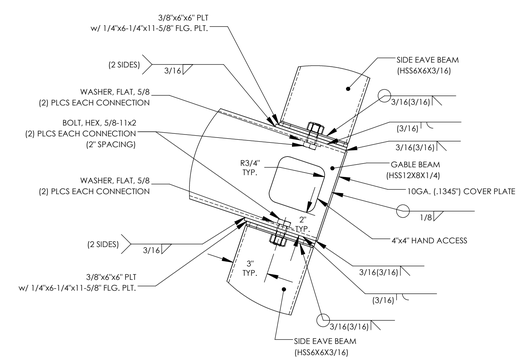

EAVE BEAM CONNECTION @ GABLE BEAM 7

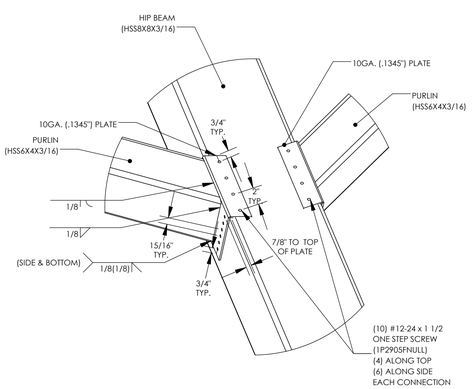

PURLIN CONNECTION @ HIP BEAM 8

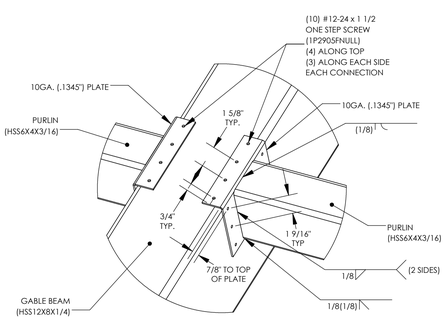

PURLIN CONNECTION @ GABLE BEAM 9

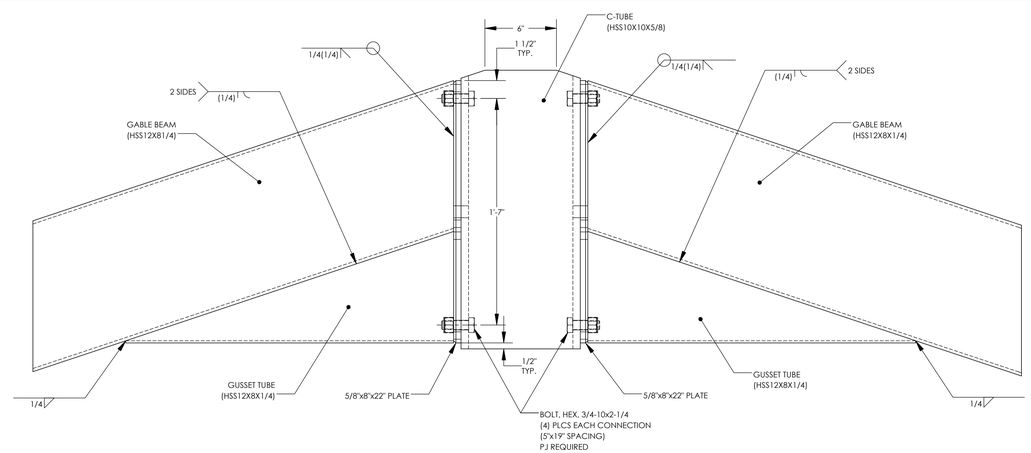

GABLE BEAM CONNECTION @ COMPRESSION TUBE 10

STATE APPROVALS-SITE

IDENTIFICATION STAMP
DIV. OF THE STATE ARCHITECT
APP: 02-122004 INC:
REVIEWED FOR
SS ☑ FLS ☑ ACS ☑
DATE: 12/06/2023

4000 PLAZA, GOLDSCRADDC 12PCLLE
SUITE B
CAMERON PARK, CA 95682
530.677.1016

STATE APPROVALS-PC

IDENTIFICATION STAMP
DIV. OF THE STATE ARCHITECT
APP: 02-121213 PC
REVIEWED FOR
SS ☑ FLS ☑ ACS ☑ CG ☐
DATE: 7/18/2023

PRE-CHECK (PC) DOCUMENT
CODE: 2022 CBC
A SEPARATE PROJECT APPLICATION FOR CONSTRUCTION IS REQUIRED.

FRAME CONNECTION DETAILS

HIP ROOF - RAM 30

RAM4.2

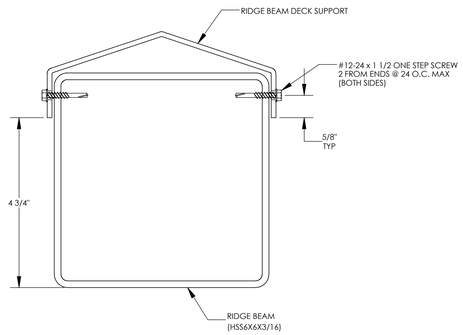

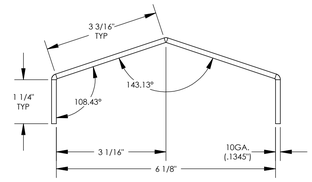

RAM 30 - RIDGE
Fy = 36 KSI
A = 1.231 IN^2
Ix = 1.149 IN^4
Iy = 6.272 IN^4
Sx = 0.771 IN^3
Sy = 1.962 IN^3

RIDGE BEAM DECK SUPPORT DETAIL

11

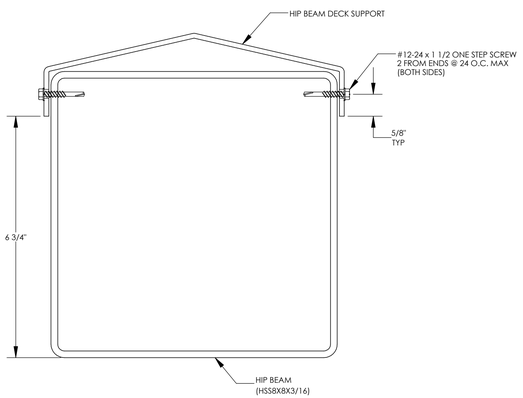

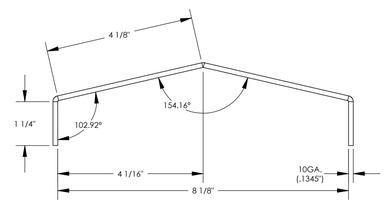

RAM 30 - HIP
Fy = 36 KSI
A = 1.484 IN^2
Ix = 1.341 IN^4
Iy = 12.353 IN^4
Sx = 0.886 IN^3
Sy = 2.943 IN^3

HIP BEAM DECK SUPPORT DETAIL

12

STATE APPROVALS-SITE

IDENTIFICATION STAMP
DIV. OF THE STATE ARCHITECT
APP: 02-122004 INC:
REVIEWED FOR
SS ☑ FLS ☑ ACS ☑
DATE: 12/06/2023

4000 PLAZA GOLDCREST DRIVE
SUITE B
CAMERON PARK, CA 95682
530.677.0016

poligon PORTER

REGISTERED PROFESSIONAL ENGINEER
JESSICA E. NAPIER
No. S5476
STRUCTURAL
STATE OF CALIFORNIA

STATE APPROVALS-PC

IDENTIFICATION STAMP
DIV. OF THE STATE ARCHITECT
APP: 02-121213 PC
REVIEWED FOR
SS ☑ FLS ☑ ACS ☑ CG ☐
DATE: 7/18/2023

PRE-CHECK (PC) DOCUMENT
CODE: 2022 CBC
A SEPARATE PROJECT APPLICATION FOR CONSTRUCTION IS REQUIRED.

SECTION DETAILS

HIP ROOF - RAM 30

RAM4.3

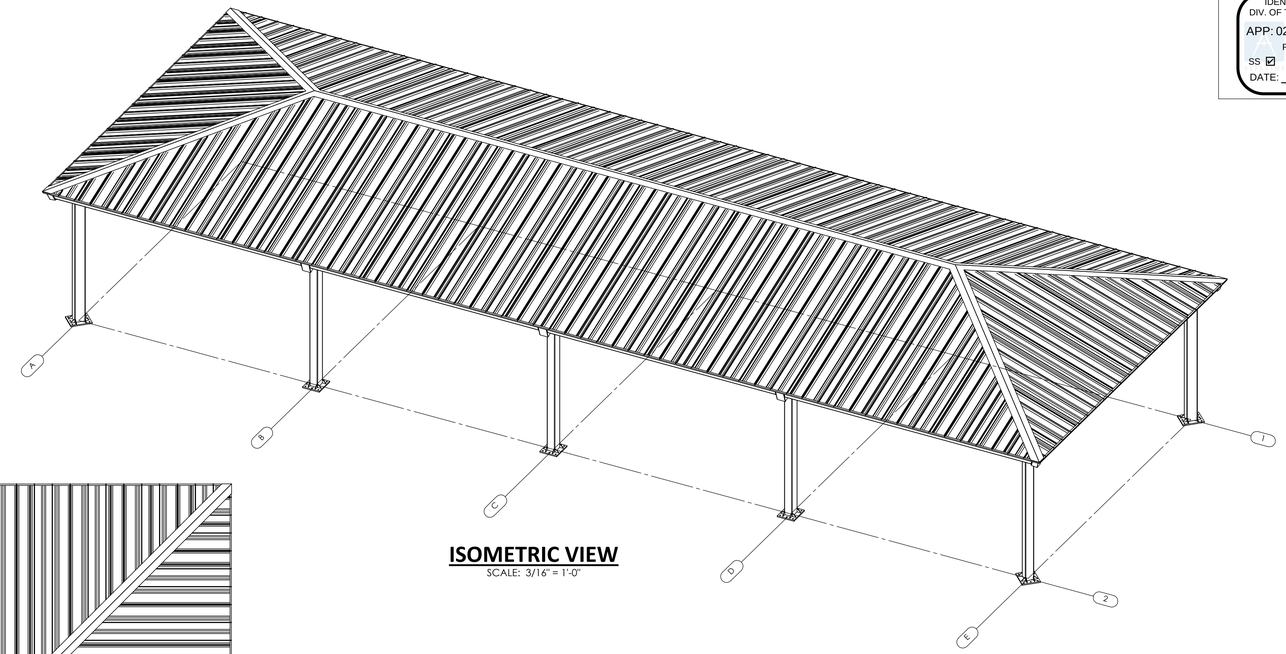

ISOMETRIC VIEW
SCALE: 3/16" = 1'-0"

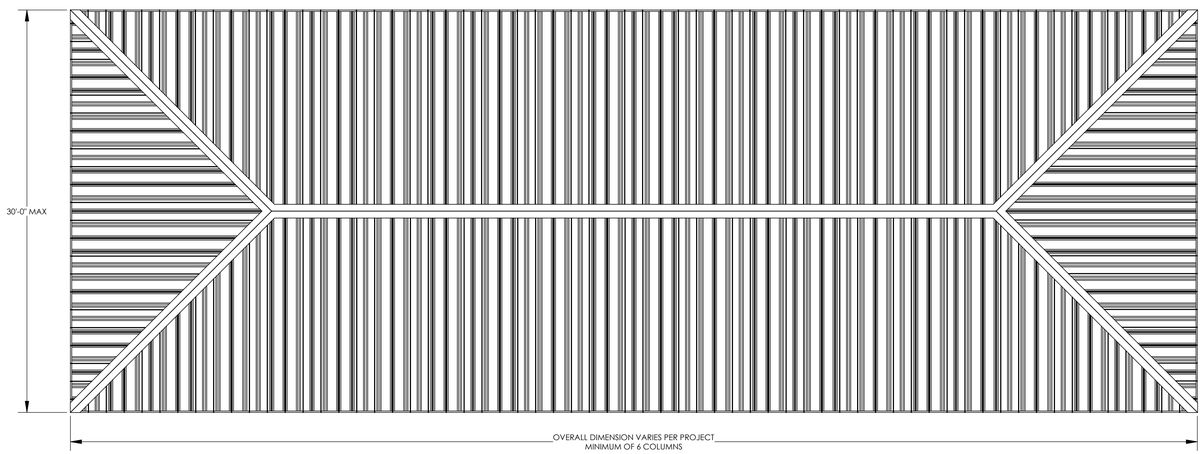

PLAN VIEW
SCALE: 3/16" = 1'-0"

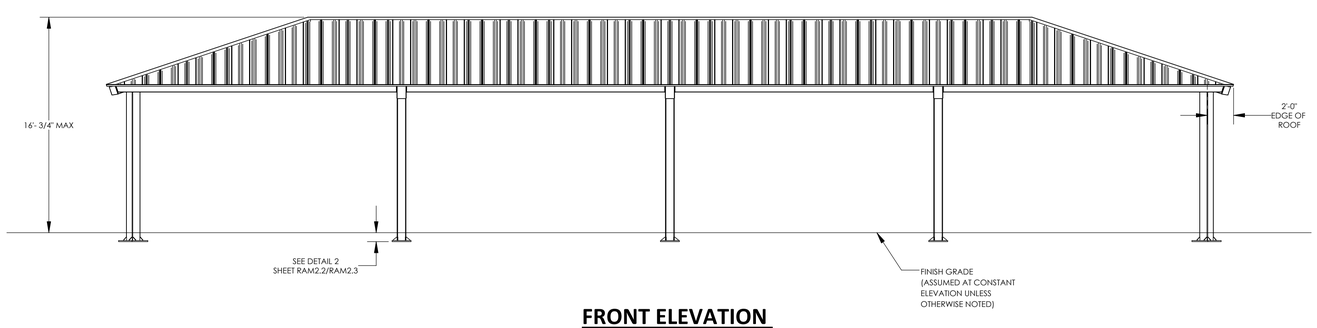

FRONT ELEVATION
SCALE: 3/16" = 1'-0"

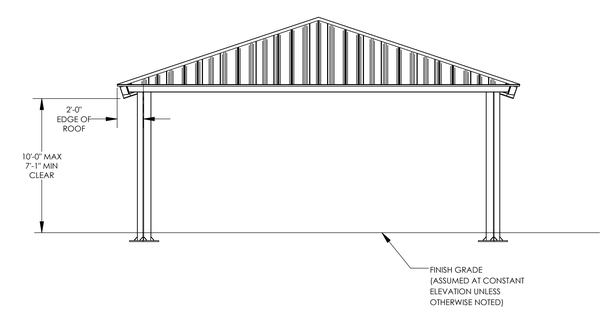

SIDE ELEVATION
SCALE: 3/16" = 1'-0"

STATE APPROVALS-SITE

IDENTIFICATION STAMP
DIV. OF THE STATE ARCHITECT
APP: 02-122004 INC:
REVIEWED FOR
SS ☑ FLS ☑ ACS ☑
DATE: 12/06/2023

4600 PLAZA GOLDCREK DR. STE. B
CAMERON PARK, CA 95682
530.677.0916

STATE APPROVALS-PC

IDENTIFICATION STAMP
DIV. OF THE STATE ARCHITECT
APP: 02-122123 PC
REVIEWED FOR
SS ☑ FLS ☑ ACS ☑ CG ☐
DATE: 7/18/2023

PRE-CHECK (PC) DOCUMENT
CODE: 2022 CBC
A SEPARATE PROJECT APPLICATION FOR CONSTRUCTION IS REQUIRED.

ARCHITECTURAL VIEWS

HIP ROOF - RAM 30

RAM5.1

STANDING SEAM INSTALLATION NOTES:

THE DETAILS SHOWN ARE SUGGESTIONS OR GUIDELINES ON HOW TO ERECT THE SYSTEMS. THE INFORMATION SHOWN IS ACCURATE, BUT IT IS NOT INTENDED TO COVER ALL INSTANCES, BUILDING REQUIREMENTS, DESIGNS OR CODES. THE DETAILS MAY REQUIRE CHANGES OR REVISIONS DUE TO FIELD CONDITIONS.

IT SHALL BE THE RESPONSIBILITY OF THE ERECTOR TO ENSURE THAT THE DETAILS MEET PARTICULAR BUILDING REQUIREMENTS AND TO ASSURE ADEQUATE WATER TIGHTNESS.

THE ERECTOR SHOULD THOROUGHLY FAMILIARIZE HIMSELF/HERSELF WITH ALL ERECTION INSTRUCTIONS BEFORE STARTING WORK.

THE PANELS SHOULD BE INSTALLED PLUMB, STRAIGHT, AND ACCURATELY TO THE ADJACENT WORK.

FLASHING AND TRIM SHALL BE INSTALLED TRUE, AND IN PROPER ALIGNMENT, WITH ANY EXPOSED FASTENERS EQUALLY SPACED FOR THE BEST APPEARANCE.

SEALANT SHALL BE FIELD APPLIED ON DRY, CLEAN SURFACES. SOME FIELD CUTTING AND FITTING OF PANELS AND FLASHING IS TO BE EXPECTED BY THE ERECTOR AND MINOR FIELD CORRECTIONS ARE A PART OF NORMAL ERECTION WORK.

WORKMANSHIP SHALL BE OF THE BEST INDUSTRY STANDARDS AND INSTALLATION SHALL BE PERFORMED BY EXPERIENCED METAL CRAFTSMEN.

METAL SHAVINGS FROM DRILLING OR INSTALLATION OF ROOF FASTENERS MUST BE CAREFULLY REMOVED FROM THE ROOF BY BRUSHING OR SWEEPING AT THE END OF EACH DAY DURING INSTALLATION. SHAVINGS LEFT ON THE ROOF WILL QUICKLY RUST AND STAIN THE ROOF FINISH.

COVER ACCESS HOLES WITH GRACE ICE AND WATER SHIELD BEFORE ATTACHING ROOF DECKING

METAL ROOFING PRODUCT AND INSTALLATION SHALL MEET ALL REQUIREMENTS OF ICC-ES REPORT ESL-1082.

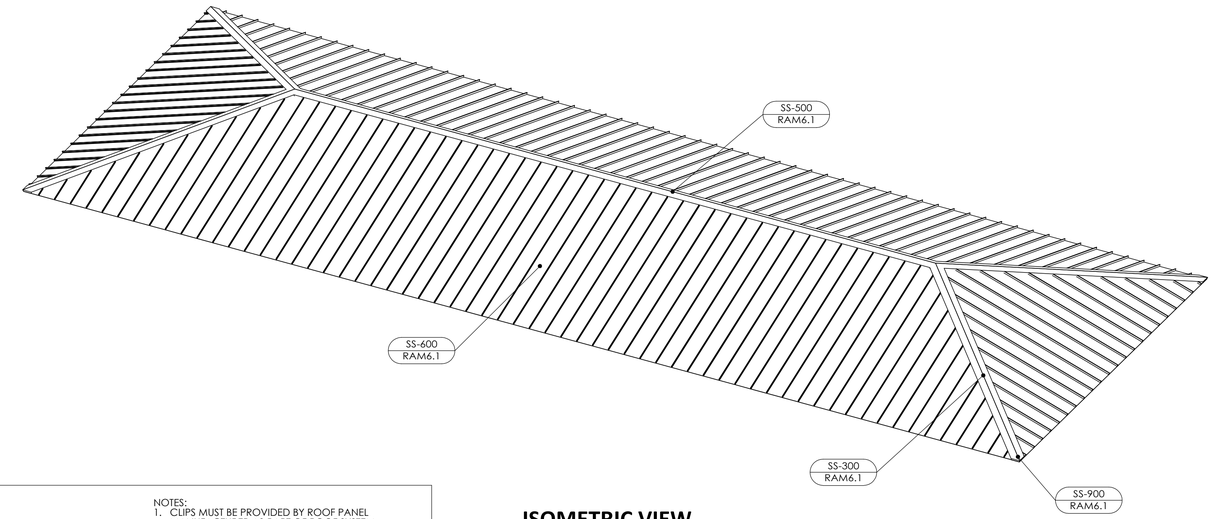

ISOMETRIC VIEW

SCALE: 3/16" = 1'-0"

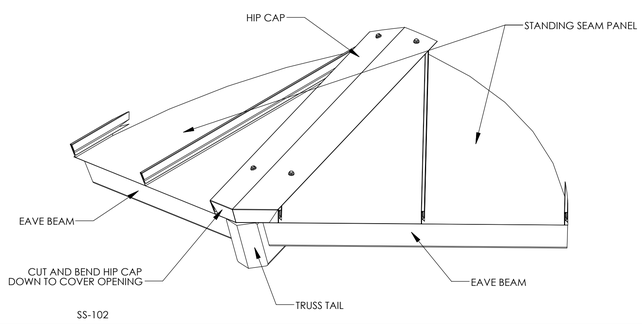

CORNER DETAIL | SS-900

NOTES:
1. CLIPS MUST BE PROVIDED BY ROOF PANEL MANUFACTURER AS PART OF ROOF SYSTEM.
2. MATERIAL THICKNESS MUST BE 18 GAGE (0.048"-0.053")

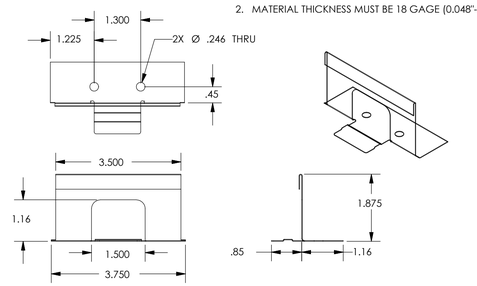

CLIP DETAIL | SS-CLP

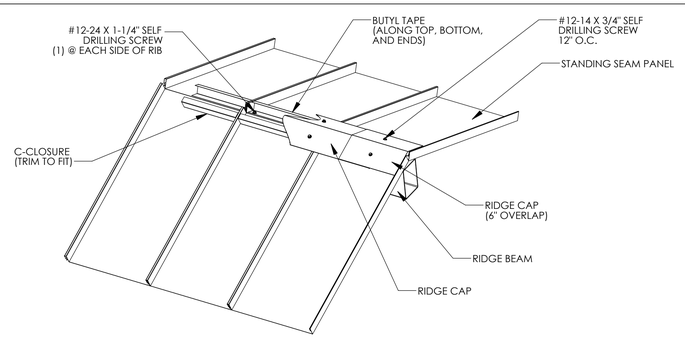

RIDGE DETAIL | SS-500

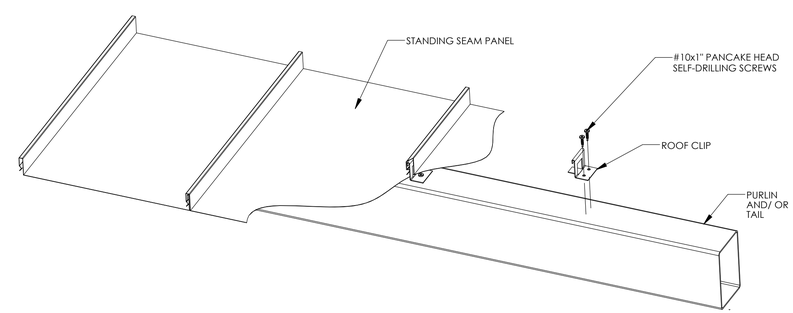

PURLIN DETAIL | SS-600

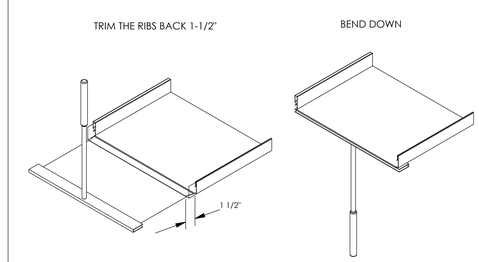

HEMMING DETAIL | SS-HEM

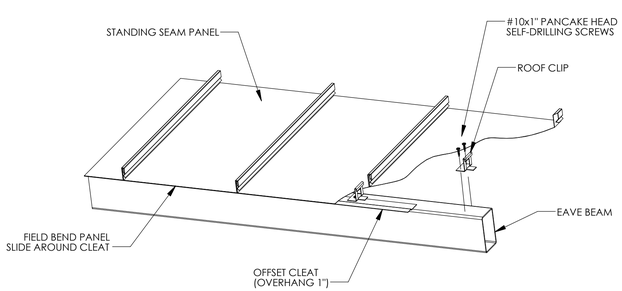

EAVE DETAIL | SS-200

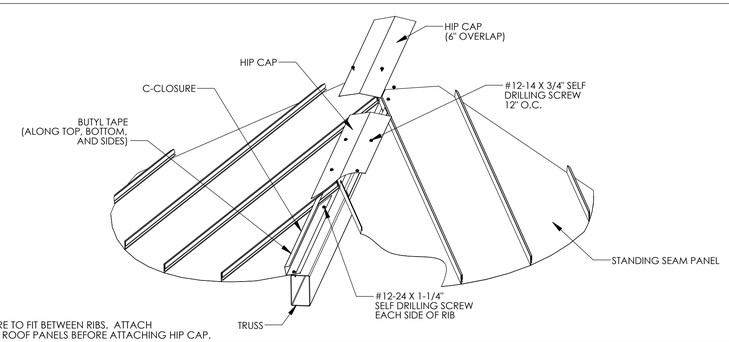

NOTE:
TRIM C-CLOSURE TO FIT BETWEEN RIBS. ATTACH C-CLOSURE TO ROOF PANELS BEFORE ATTACHING HIP CAP.

TRUSS DETAIL | SS-300

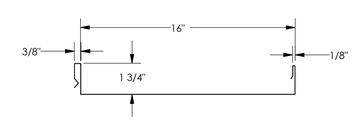

GENERAL
GAGE = 22
FY = 50 KSI

TOP IN COMPRESSION
Ix = 0.1200 IN^4
Se = 0.0803 IN^3
Ma = 2.4056 IN-KIPS

BOTTOM IN COMPRESSION
Ix = 0.0570 IN^4
Se = 0.0729 IN^3
Ma = 1.7220 IN-KIPS

ROOF DECK SECTION PROPERTIES | SS-950

STATE APPROVALS-SITE

IDENTIFICATION STAMP
DIV. OF THE STATE ARCHITECT
APP: 02-122004 INC:
REVIEWED FOR
SS ☑ FLS ☑ ACS ☑
DATE: 12/06/2023

GHD
4600 PLAZA GOLDORADO CIRCLE
SUITE B
CAMERON PARK, CA 95682
530.677.0316

poligon
PORTER

REGISTERED PROFESSIONAL ENGINEER
JESSICA E. NAPIER
No. S5476
STRUCTURAL
STATE OF CALIFORNIA

STATE APPROVALS-PC

IDENTIFICATION STAMP
DIV. OF THE STATE ARCHITECT
APP: 02-121213 PC
REVIEWED FOR
SS ☑ FLS ☑ ACS ☑ CG ☐
DATE: 7/18/2023

PRE-CHECK (PC) DOCUMENT
CODE: 2022 CBC
A SEPARATE PROJECT APPLICATION FOR CONSTRUCTION IS REQUIRED.

ROOF CONNECTION DETAILS

HIP ROOF - RAM

RAM6.1

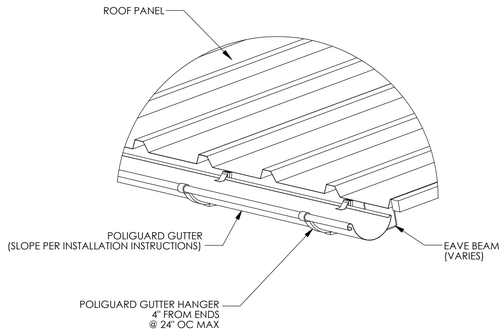

GUTTER DETAIL

GS-100

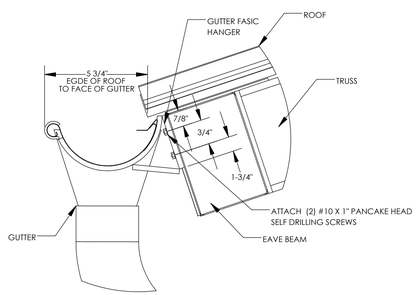

GUTTER DETAIL

GS-200

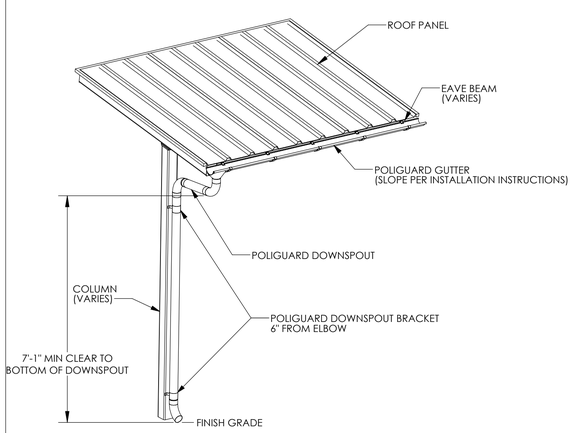

DOWNSPOUT DETAIL

GS-300

POLIGUARD GUTTER SYSTEM NOTES:

1. PREFABRICATED GUTTER SYSTEM IS ATTACHED TO THE STRUCTURE AFTER ROOF IS INSTALLED.
2. DETAILED INSTALLATION INSTRUCTIONS ARE SHIPPED WITH THE STRUCTURE.
3. ~~DOWNSPOUTS REQUIRED AT EACH COLUMN.~~

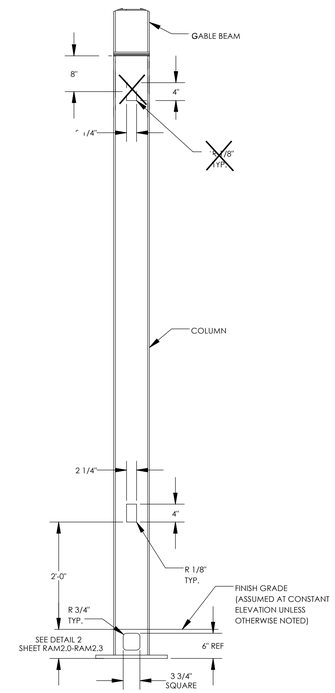

ELECTRICAL CUTOUT IN COLUMNS

EC-100

ELECTRICAL CUTOUT NOTES:

1. MAXIMUM ONE CUTOUT PERMITTED IN EACH MEMBER.
2. CUTOUTS CAN BE PLACED ON ANY SIDE OF A MEMBER.
3. CUTOUTS CAN BE PLACED ALONG MEMBERS AS INDICATED IN THE DETAILS.
4. ARCHITECTS REQUESTING CUTOUTS MUST MARKUP APPROVED PC DRAWINGS TO LOCATE CUTOUTS FOR APPROVAL AND FABRICATION.

STATE APPROVALS-SITE

IDENTIFICATION STAMP
DIV. OF THE STATE ARCHITECT
APP: 02-122004 INC:
REVIEWED FOR
SS ☑ FLS ☑ ACS ☑
DATE: 12/06/2023

4080 PLAZA GOLDORADO CIRCLE
SUITE B
CAMERON PARK, CA 95682
530.867.8515

poligon PORTER

REGISTERED PROFESSIONAL ENGINEER
JESSICA E. NAPIER
No. S5476
STRUCTURAL
STATE OF CALIFORNIA

STATE APPROVALS-PC

IDENTIFICATION STAMP
DIV. OF THE STATE ARCHITECT
APP: 02-121213 PC
REVIEWED FOR
SS ☑ FLS ☑ ACS ☑ CG ☐
DATE: 7/18/2023

PRE-CHECK (PC) DOCUMENT
CODE: 2022 CBC
A SEPARATE PROJECT APPLICATION FOR CONSTRUCTION IS REQUIRED.

MISC DESIGN OPTIONS

HIP ROOF - RAM

RAM7.0

ELECTRICAL CUTOUT AND ACCESS INSTRUCTIONS

- IF 'YES' IS NOT SELECTED IN STEP 2 ON ORDER FORM, THEN THIS SHEET NEED NOT BE INCLUDED IN SITE-SPECIFIC DRAWINGS
- ONLY COLUMNS ARE PERMITTED TO HAVE ELECTRICAL ACCESS
- THE COLUMN CUTOUTS ARE STATIC AND SHOWN IN THE 'MISC DESIGN OPTIONS SHEET'
- IDENTIFY THE COLUMNS WITH ELECTRICAL CUTOUTS BELOW (REFERENCE GRID LINES IN ISOMETRIC FRAME VIEW TO THE RIGHT)
- STRUCTURES MAY BE LONGER OR SHORTER THAN THE ISOMETRIC FRAME VIEW SHOWN
- IF SITE-SPECIFIC STRUCTURE HAS A DIFFERENT NUMBER OF COLUMNS THAN ISOMETRIC SHOWN, REFERENCE COLUMN A1 IN THE ISOMETRIC VIEW AND CONTINUE PATTERN TO FIT SITE-SPECIFIC LAYOUT
- IF NO COLUMNS ARE IDENTIFIED, POLIGON WILL ASSUME CUTOUTS ONLY IN COLUMN A1
- CONTACT POLIGON ENGINEERING FOR SPECIAL PROJECT SPECIFIC REQUIREMENTS

ELECTRICAL CUTOUT IDENTIFICATION IN COLUMNS
SPECIFIC MEMBERS A1, E2

~~EXAMPLE:~~

~~ELECTRICAL CUTOUT IDENTIFICATION IN COLUMNS~~
~~SPECIFIC MEMBERS A1 , B1, F1~~

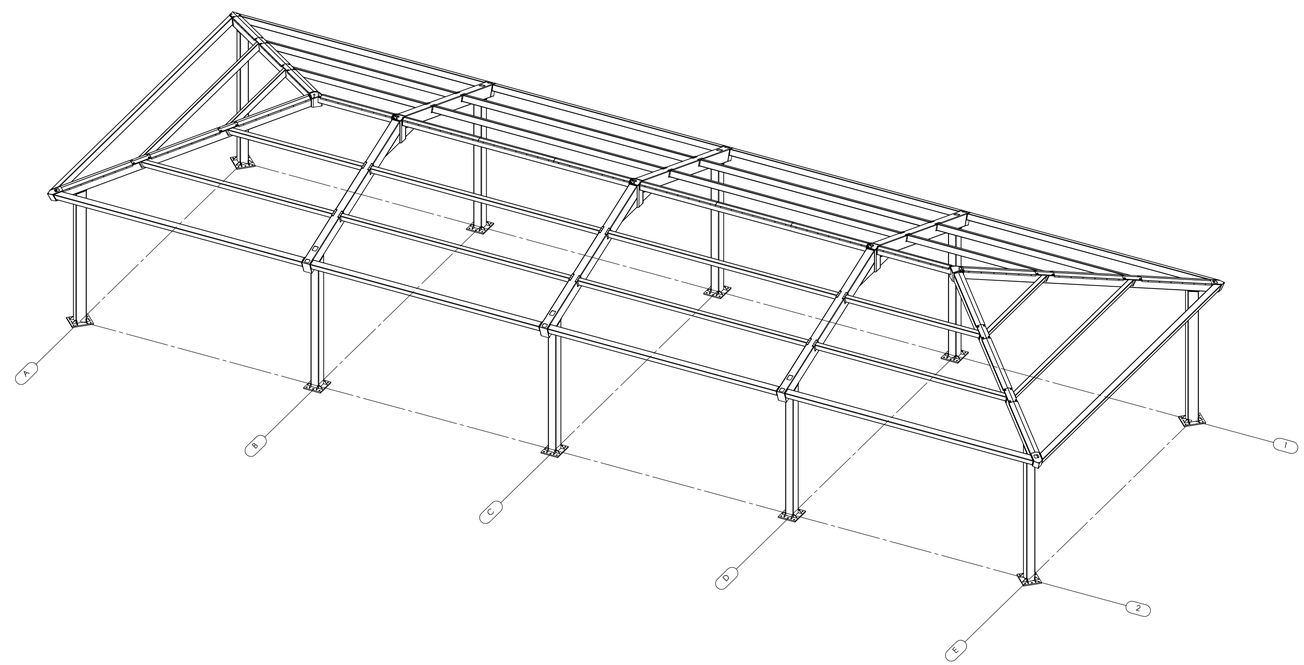

STATE APPROVALS-SITE

IDENTIFICATION STAMP
DIV. OF THE STATE ARCHITECT
APP: 02-122004 INC:
REVIEWED FOR
SS ☑ FLS ☑ ACS ☑
DATE: 12/06/2023

4080 PLAZA GOLDORADO CIRCLE
SUITE B
CAMERON PARK, CA 95682
530.677.0316

poligon PORTER

REGISTERED PROFESSIONAL ENGINEER
JESSICA E. NAPIER
No. S5476
STRUCTURAL
STATE OF CALIFORNIA

STATE APPROVALS-PC

~~IDENTIFICATION STAMP~~
~~DIV. OF THE STATE ARCHITECT~~
~~APP: 02-121213 PC~~
~~REVIEWED FOR~~
~~SS ☑ FLS ☑ ACS ☑ CG ☐~~
~~DATE: 7/18/2023~~

PRE-CHECK (PC) DOCUMENT
CODE: 2022 CBC
A SEPARATE PROJECT APPLICATION FOR CONSTRUCTION IS REQUIRED.

ELECTRICAL CUTOUTS

HIP ROOF - RAM

RAM7.1

THE LINE SHOWN ABOVE IS EXACTLY ONE INCH LONG AT THIS SHEETS ORIGINAL PAGE SIZE

LODI UNIFIED SCHOOL DISTRICT

LODI UNIFIED SCHOOL DISTRICT LUNCH SHELTERS - MILLSWOOD MIDDLE SCHOOL

233 NORTH MILLS AVENUE
LODI, CA 95242

GENERAL NOTES

1. CONSTRUCTION DOCUMENTS DESCRIBE THE PRODUCTS, SYSTEMS, QUANTITIES, CONFIGURATION, AND PERFORMANCE SPECIFICATIONS THAT DELIVER THE OVERALL DESIGN INTENT OF THE PROJECT.
2. THE CONSTRUCTION DOCUMENT DRAWINGS AND SPECIFICATIONS ARE COMPLEMENTARY, AND WHAT IS REQUIRED BY ONE SHALL BE AS BINDING AS IF REQUIRED BY BOTH.
3. PERFORMANCE BY THE CONSTRUCTION TEAM SHALL BE CONSISTENT WITH THE CONSTRUCTION DRAWINGS AND SPECIFICATIONS AS NECESSARY TO DELIVER THE INDICATED RESULTS OF THE DESIGN INTENT.
4. VERIFY ALL DIMENSIONS, LOCATIONS OF EXISTING UTILITIES, AND CONDITIONS ON THE JOB SITE PRIOR TO THE START OF WORK OR PORTIONS OF THE WORK. NOTIFY THE ARCHITECT IMMEDIATELY OF ANY DISCREPANCIES BETWEEN THE ACTUAL FIELD CONDITIONS AND THE CONSTRUCTION DOCUMENTS. EXISTING CONDITIONS ARE INDICATED AS A RESULT OF FIELD OBSERVATIONS, INFORMATION SHOWN ON AVAILABLE DOCUMENTS AND FIELD CONDITIONS AT THE TIME OF PREPARATION.
5. ALL MATERIALS AND WORKMANSHIP SHALL COMPLY WITH ALL GOVERNING CODES, ORDINANCES, REGULATIONS AND LAWS.
6. THE DESIGN ADEQUACY AND SAFETY OF ERECTION BRACING, SHORING, TEMPORARY SUPPORTS AND SCAFFOLDING IS THE SOLE RESPONSIBILITY OF THE CONTRACTOR.
7. WHERE ANY CONFLICT OCCURS BETWEEN THE REQUIREMENTS OF LAWS, CODES, ORDINANCES, RULES AND REGULATIONS, THE MOST STRINGENT SHALL GOVERN.
8. IN NO CASE SHALL WORKING DIMENSIONS BE SCALED FROM PLANS, SECTIONS OR DETAILS ON THE DRAWINGS.
9. DETAILS MARKED 'TYPICAL' SHALL APPLY IN ALL CASES UNLESS SPECIFICALLY NOTED OTHERWISE.
10. ENACT ALL MEASURES TO PROTECT AND SAFEGUARD ALL EXISTING ELEMENTS TO REMAIN FROM BEING DAMAGED. REPLACE OR REPAIR EXISTING ELEMENTS DAMAGED BY THE EXECUTION OF THIS CONTRACT TO EQUAL OR BETTER CONDITION.
11. PRIOR TO THE START OF WORK THE CONTRACTOR SHALL COORDINATE BETWEEN THE REQUIREMENTS OF ALL DISCIPLINES HEREIN AND BETWEEN THE REQUIREMENTS OF ALL DRAWINGS AND SPECIFICATIONS IN ORDER THAT ALL ITEMS SATISFACTORILY RELATE TO ONE ANOTHER. NOTIFY ARCHITECT IMMEDIATELY REGARDING ANY ITEMS THAT CANNOT BE COORDINATED.
12. CONTRACTOR SHALL EXCERCISE EXTREME CAUTION IN EXCAVATING AND TRENCHING ON THIS SITE TO AVOID EXISTING DUCTS, PIPING, CONDUIT, ETC. AND TO PREVENT HAZARD TO PERSONNEL AND/OR TO EXISTING UNDERGROUND UTILITIES OR STRUCTURES. THE CONTRACTOR SHALL IMMEDIATELY NOTIFY THE ARCHITECT SHOULD SUCH UNIDENTIFIED CONDITIONS BE DISCOVERED. THESE DRAWINGS AND SPECIFICATIONS DO NOT INCLUDE THE NECESSARY COMPONENTS FOR CONSTRUCTION SAFETY.
13. PROVIDE SAFE MEANS OF EGRESS THROUGH THE BUILDING AND ON SITE AT ALL TIMES.
14. PROVIDE FIRE EXTINGUISHERS PER CFC AT ALL TIMES THROUGHOUT CONSTRUCTION AREA.
15. PROVIDE CONSTRUCTION BARRIERS BETWEEN CONSTRUCTION AREAS AND OCCUPIED AREAS AT ALL TIMES.
16. CUTTING, BORING, SAWCUTTING OR DRILLING THROUGH THE EXISTING OR NEW STRUCTURAL ELEMENTS SHALL NOT TO BE STARTED UNTIL THE DETAILS HAVE BEEN REVIEWED AND APPROVED BY THE ARCHITECT, AND STRUCTURAL ENGINEER OF RECORD.
17. AVOID DISRUPTION TO ADJACENT AREAS. KEEP NOISE TO A LEVEL ACCEPTABLE TO THE OWNER BY SCHEDULING EXCESSIVE NOISE TASKS WITH OWNER REPRESENTATIVE. THIS MAY REQUIRE AFTER HOURS WORK.
18. **STATEMENT OF HAZARDOUS MATERIAL DISCOVERY**
IF THE CONTRACTOR ENCOUNTERS A HAZARDOUS MATERIAL OR SUBSTANCE NOT ADDRESSED IN THE HAZARDOUS MATERIAL REPORT OR IN A CONCEALED CONDITION, THE CONTRACTOR SHALL, UPON RECOGNIZING THE CONDITION, IMMEDIATELY STOP WORK IN THE AFFECTED AREA AND REPORT THE CONDITION TO THE OWNER AND ARCHITECT IN WRITING.
UPON RECEIPT OF THE CONTRACTOR'S WRITTEN NOTICE, THE OWNER SHALL OBTAIN THE SERVICES OF A LICENSED LABORATORY TO VERIFY THE PRESENCE OR ABSENCE OF THE MATERIAL OR SUBSTANCE REPORTED BY THE CONTRACTOR AND, IN THE EVENT SUCH MATERIAL OR SUBSTANCE IS FOUND TO BE PRESENT, TO PROVIDE RECOMMENDATIONS TO CAUSE IT TO BE ABATED AND RENDERED HARMLESS.
WHEN THE MATERIAL OR SUBSTANCE HAS BEEN ABATED AND RENDERED HARMLESS, WORK IN THE AFFECTED AREA SHALL RESUME UPON WRITTEN AGREEMENT OF THE OWNER AND CONTRACTOR.
19. PENETRATIONS TO FIRE RATED MATERIALS OR ASSEMBLIES SHALL BE RESTORED TO EQUAL RATING. SPECIAL INSPECTOR DSA 103 REQ'D.
21. COMPLY WITH TITLE 24, PART 9, CALIFORNIA FIRE CODE, CHAPTER 33 FIRE SAFETY DURING CONSTRUCTION AND DEMOLITION, DURING ALL PHASES OF PROJECT.
22. ALL WORK SHALL CONFORM TO 2022 TITLE 24, CALIFORNIA CODE OF REGULATIONS (CCR).
23. CHANGES TO THE APPROVED DRAWINGS AND SPECIFICATIONS SHALL BE MADE BY AN ADDENDUM OR A CONSTRUCTION CHANGED DOCUMENT (CCD) APPROVED BY THE DIVISION OF THE STATE ARCHITECT, AS REQUIRED BY SECTION 4-338, PART 1, TITLE 24, CCR.
24. A "DSA CERTIFIED" CLASS 2 PROJECT INSPECTOR EMPLOYED BY THE DISTRICT (OWNER) AND APPROVED BY THE DSA SHALL PROVIDE CONTINUOUS INSPECTION OF THE WORK. THE DUTIES OF THE INSPECTOR ARE DEFINED IN SECTION 4-342, PART 1, TITLE 24, CCR.
25. A DSA ACCEPTED TESTING LABORATORY DIRECTLY EMPLOYED BY THE DISTRICT (OWNER) SHALL CONDUCT ALL THE REQUIRED TESTS AND INSPECTIONS FOR THE PROJECT.
26. THE INTENT OF THESE DRAWINGS AND SPECIFICATIONS IS THAT THE WORK OF THE ALTERATION, REHABILITATION OR RECONSTRUCTION IS TO BE IN ACCORDANCE WITH TITLE 24, CCR. SHOULD ANY EXISTING CONDITIONS SUCH AS DETERIORATION OR NON-COMPLYING CONSTRUCTION BE DISCOVERED WHICH IS NOT COVERED BY THE CONTRACT DOCUMENTS WHEREIN THE FINISHED WORK WILL NOT COMPLY WITH TITLE 24, CCR, A CONSTRUCTION CHANGE DOCUMENT (CCD), OR A SEPARATE SET OF PLANS AND SPECIFICATIONS, DETAILING AND SPECIFYING THE REQUIRED WORK SHALL BE SUBMITTED TO AND APPROVED BY DSA BEFORE PROCEEDING WITH THE WORK. (SECTION 4-317(c), PART 1, TITLE 24, CCR)
27. GRADING PLANS, DRAINAGE IMPROVEMENTS, ROAD AND ACCESS REQUIREMENTS AND ENVIRONMENTAL HEALTH CONSIDERATIONS SHALL COMPLY WITH ALL LOCAL ORDINANCES.
28. SUBSTITUTIONS AFFECTING DSA REGULATED ITEMS SHALL BE CONSIDERED AS A CONSTRUCTION CHANGE DOCUMENT OR ADDENDUM, AND SHALL BE APPROVED BY DSA PRIOR TO FABRICATION AND INSTALLATION PER DSA IR A-6 AND SECTION 338(c) PART 1, TITLE 24, CCR.

CODES

PARTIAL LIST OF APPLICABLE CODES

2022	CALIFORNIA ADMINISTRATIVE CODE, PART 1, TITLE 24 C.C.R.
2022	CALIFORNIA BUILDING CODE (CBC), PART 2, TITLE 24 C.C.R. (2021 INTERNATIONAL BUILDING CODE VOLUMES 1 & 2 AND 2022 CALIFORNIA AMENDMENTS)
2022	CALIFORNIA ELECTRICAL CODE (CEC), PART 3, TITLE 24 C.C.R. (2020 NATIONAL ELECTRICAL CODE AND 2022 CALIFORNIA AMENDMENTS)
2022	CALIFORNIA MECHANICAL CODE (CMC) PART 4, TITLE 24 C.C.R. (2021 UNIFORM MECHANICAL CODE AND 2022 CALIFORNIA AMENDMENTS)
2022	CALIFORNIA PLUMBING CODE (CPC), PART 5, TITLE 24 C.C.R. (2021 UNIFORM PLUMBING CODE AND 2022 CALIFORNIA AMENDMENTS)
2022	CALIFORNIA ENERGY CODE (CEC), PART 6, TITLE 24 C.C.R.
2022	CALIFORNIA HISTORICAL BUILDING CODE (CHBC), PART 8, TITLE 24 C.C.R.
2022	CALIFORNIA FIRE CODE, PART 9, TITLE 24 C.C.R. (2021 INTERNATIONAL FIRE CODE AND 2022 CALIFORNIA AMENDMENTS)
2022	CALIFORNIA EXISTING BUILDING CODE (CEBC), PART 10, TITLE 24 C.C.R. (2021 INTERNATIONAL EXISTING CODE AND 2022 CALIFORNIA AMENDMENTS)
2022	CALIFORNIA GREEN BUILDING STANDARDS CODE (CALGREEN), PART 11, TITLE 24 C.C.R.
2022	CALIFORNIA REFERENCED STANDARDS, PART 12,TITLE 24 C.C.R.
TITLE 19	C.C.R., PUBLIC SAFETY, STATE FIRE MARSHAL REGULATIONS.
2019	ASME A17.1/B44-19 SAFETY CODE FOR ELEVATORS AND ESCALATORS
2020	ASME 18.1 - SAFETY STANDARD FOR PLATFORM LIFTS AND STAIRWAY CHAIR LIFTS

NOTE TO CONTRACTOR:
THE CALIFORNIA ENERGY CODE SECTION 10-103 REQUIRES ACCEPTANCE TESTING ON ALL NEWLY INSTALLED LIGHTING CONTROLS, MECHANICAL SYSTEMS, ENVELOPES, AND PROCESS EQUIPMENT AFTER INSTALLATION AND BEFORE PROJECT COMPLETION. AN ACCEPTANCE TEST IS A FUNCTIONAL PERFORMANCE TEST TO HELP ENSURE THAT NEWLY INSTALLED EQUIPMENT IS OPERATING AND IN COMPLIANCE WITH ENERGY CODE.

LIGHTING CONTROLS ACCEPTANCE TESTS MUST BE PERFORMED BY A CERTIFIED LIGHTING CONTROLS ACCEPTANCE TEST TECHNICIAN (ATT).

MECHANICAL SYSTEM ACCEPATANCE TEST MUST BE PERFORMED BY A CERTIFIED MECHANICAL ATT FOR PROJECTS SUBMITTED ON OR AFTER OCTOBER 1, 2021.

A LISTING OF CERTIFIED ATTs CAN BE FOUND AT: HTTPS://WWW.ENERGY.CA.GOV/PROGRAMS-AND-TOPICS/PROGRAMS/ACCEPTANCE-TEST-TECHNICIAN-CERTIFICATION-PROVIDER-PROGAM/ACCEPTANCE

THE ACCEPTANCE TESTING PROCEDURES MUST BE REPEATED, AND DEFICIENCIES MUST BE CORRECTED BY THE BUILDER OR INSTALLING CONTRACTOR UNITL THE CONSTUCTION/INSTALLATION OF THE SPECIFIED SYSTEMS CONFORM AND PASS THE REQUIRED ACCEPTANCE CRITERIA.

PROJECT INSPECTORS WILL BE COLLECTING THE FORMS TO CONFIRM THAT THE REQUIRED ACCEPTANCE TESTS HAVE BEEN COMPLETED.

PARTIAL LIST OF APPLICABLE STANDARDS

NFPA 13	STANDARD FOR AUTOMATIC FIRE SPRINKLER SYSTEMS (CA AMENDED)	2022 ED.
NFPA 14	STANDARD FOR STANDPIPE AND HOSE SYSTEMS (CA AMENDED)	2019 ED.
NFPA 17	STANDARD FOR DRY CHEMICAL EXTINGUISHING SYSTEMS	2021 ED.
NFPA 17A	STANDARD FOR WET CHEMICAL EXTINGUISHING SYSTEMS	2021 ED.
NFPA 20	STANDARD FOR STATIONARY PUMPS FOR FIRE PROTECTION	2019 ED.
NFPA 22	STANDARD FOR WATER TANKS FOR PRIVATE FIRE PROTECTION	2018 ED.
NFPA 24	STANDARD FOR THE INSTALLATION OF PRIVATE FIRE MAINS AND THEIR APPURTENANCES (CA AMENDED)	2019 ED.
NFPA 72	NATIONAL FIRE ALARM & SIGNALING CODE (CA AMENDED)	2022 ED.
NFPA 80	STANDARD FOR FIRE DOORS AND OTHER OPENING PROTECTIVES	2019 ED.
NFPA 2001	STANDARD ON CLEAN AGENT FIRE EXTINGUISHING SYSTEMS (CA AMENDED)	2018 ED.
UL 300	STANDARD FOR FIRE TESTING OF FIRE EXTINGUISHING SYSTEMS FOR PROTECTION OF COMMERCIAL COOKING EQUIPMENT	2005 (R2014)
UL 464	AUDIBLE SIGNAL APPLIANCES FOR FIRE ALARM AND SIGNALING SYSTEMS, INCLUDING ACCESSORIES	2003 ED.
UL 521	STANDARD FOR HEAT DETECTORS FOR FIRE PROTECTIVE SIGNALING SYSTEMS	1999 ED. (R2005)
UL 1971	STANDARD FOR SIGNALING DEVICES FOR THE HEARING IMPAIRED	2002 ED. (R2018)
ICC 300	STANDARD FOR BLEACHERS, FOLDING AND TELESCOPING SEATING AND GRANDSTANDS	2017 ED.

FOR A COMPLETE LIST OF APPLICABLE NFPA STANDARDS REFER TO 2022 CBC (SFM) CHAPTER 35 AND CALIFORNIA FIRE CODE CHAPTER 80.
SEE CALIFORNIA BUILDING CODE, CHAPTER 35 FOR STATE OF CALIFORNIA AMENDMENTS TO NFPA STANDARDS.

PROJECT DESCRIPTION

SCOPE OF WORK

26' X 56' PC LUNCH SHELTER

SITE WORK INCLUDING ACCESSIBILITY UPGRADES AND TOILET ROOM UPGRADES

PROJECT DATA

PROJECT ADDRESS:

233 NORTH MILLS AVENUE
LODI, CA 95242

OWNER:
LODI UNIFIED SCHOOL DISTRICT
1305 EAST VINE ST. LODI, CA
PHONE #: 209-331-7225

STATEMENT OF GENERAL CONFORMANCE

(X) THE DRAWINGS OR SHEETS LISTED ON THE INDEX SHEET
(X) THIS DRAWING PAGE OF SPECIFICATIONS/CALCULATIONS

HAVE BEEN PREPARED BY OTHER DESIGN PROFESSIONALS OR CONSULTANTS WHO ARE LICENSED AND/OR AUTHORIZED TO PREPARE SUCH DRAWINGS IN THIS STATE. IT HAS BEEN EXAMINED BY ME FOR:

1) DESIGN INTENT AND APPEARS TO MEET THE APPROPRIATE REQUIREMENTS OF TITLE 24, CALIFORNIA CODE OF REGULATIONS AND THE PROJECT SPECIFICATIONS PREPARED BY ME, AND
2) COORDINATION WITH MY PLANS AND SPECIFICATIONS AND IS ACCEPTABLE FOR INCORPORATION INTO THE CONSTRUCTION OF THIS PROJECT.

THE STATEMENT OF GENERAL CONFORMANCE "SHALL NOT BE CONSTRUED AS RELIEVING ME OF MY RIGHTS, DUTIES, AND RESPONSIBILITIES UNDER SECTIONS 17302 AND 81138 OF THE EDUCATION CODE AND SECTIONS 4-336, 4-341 AND 4-344" OF TITLE 24, PART 1. (TITLE 24, PART 1, SECTION 4-317 (B))

I CERTIFY THAT:

THE PC APPROVED MANUFACTURER DRAWINGS LISTED ON THE INDEX SHEET ARE IN GENERAL CONFORMANCE WITH THE PROJECT DESIGN INTENT, AND THEY HAVE BEEN COORDINATED WITH THE PROJECT PLANS AND SPECIFICATIONS.

SIGNATURE — DATE 11/28/2023
ARCHITECT OR ENGINEER DESIGNATED TO BE IN GENERAL RESPONSIBLE CHARGE

Jeffrey Grau
PRINT NAME

C-14648 — 05-31-25
LICENSE NUMBER — EXPIRATION DATE

SHEET INDEX

NUMBER	NAME
GENERAL SHEET	
G0.10	COVER SHEET
1	
CIVIL	
C1.1	TITLE SHEET AND DETAIL SHEET
C2.1	DEMOLITION PLAN
C3.1	GRADING, DRAINAGE, AND PAVING PLAN
3	
ARCHITECTURE	
A1.21	CODE INFORMATION SITE PLAN
A1.22	LOCAL FIRE AUTHORITY SITE PLAN
A1.23	ENLARGED SITE PLAN AND SECTION - LUNCH SHELTER
A2.11	UNIT A - ENLARGED RESTROOM PLANS
A8.11	INTERIOR ELEVATIONS
A10.1	SITE DETAILS
A10.2	TYPICAL MOUNTING HEIGHTS AND DETAILS
7	
PC #02-121213	
RAM1.0	ORDER FORM
RAM1.1	NOTES AND SPECIAL INSPECTIONS
RAM2.3	FOUNDATION PLAN DRILLED PIER
RAM3.1	FRAMING PLAN
RAM4.2	FRAME CONNECTION DETAILS
RAM4.3	SECTION DETAILS
RAM5.1	ARCHITECTURAL VIEWS
RAM6.1	ROOF CONNECTION DETAILS
RAM7.0	MISC DESIGN OPTIONS
RAM7.1	ELECTRICAL CUTOUTS
10	
Grand total: 21	

WIND AND SEISMIC DATA

1. Wind Design
Basic Wind Speed: 93Vmph
Risk Category: II
Wind Exposure: C
2. Seismic Design
Risk Category: II
Seismic Important Factor: 1.0
Ss = 0.627
S1 = 0.26
Site Class: D
Seismic Design Category: D

ABBREVIATIONS

(E)	EXISTING
AB	ANCHOR BOLT
AC PAVING	ASPHALTIC CONCRETE PAVING
ACC	ACCESS/ACCESSIBLE
ACP	ACOUSTICAL CEILING PANEL
ACT	ACOUSTICAL CEILING TILE
ADJ	ADJACENT/ADJUSTABLE
AFF	ABOVE FINISH FLOOR
AGG	AGGREGATE
AHU	AIR HANDLING UNIT
ARCH	ARCHITECTURAL
ATT	ATTENUATION
AUTO	AUTOMATIC
BD	BOARD
BLCG	BLOCKING
BUR	BUILT UP ROOFING
CABT	CABINET
CF	CUBIC FEET
CFCI	CONTRACTOR FURNISHED, CONTRACTOR INSTALLED
CFOI	CONTRACTOR FURNISHED, OWNER INSTALLED
CG	CORNER GUARD
CJ	CONTROL JOINT
CL	CENTER LINE
CLF	CHAIN LINK FENCE
CLR	CLEAR
CMU	CONCRETE MASONRY UNIT
CO	CLEANOUT
COL	COLUMN
COMP	COMPRESSION / COMPOSITE
CF	CUBIC FEET
COORD	COORDINATE
CORR	CORRUGATED
CT	CERAMIC TILE
CTSK	COUNTER SKUNK
CW	CURTAINWALL
DEPR	DEPRESSED / DEPRESSION
DF	DRINKING FOUNTAIN
DIM	DIMENSION
DISP	DISPENSER
DS	DOWNSPOUT
DTL	DETAIL
DW	DISHWASHER
E/W	EACH WAY
EIFS SYSTEM	EXTERIOR INSULATION FINISH
EJ	EXPANSION JOINT
ELEC	ELECTRICAL
ELEV	ELEVATION / ELEVATOR
ENCL	ENCLOSE / ENCLOSURE
EOS	EDGE OF SLAB
EP	ELECTRICAL PANEL
EQ	EQUAL
ESC	EXCUTCHEON
EWC	ELECTRIC WATER COOLER
EXP	EXPOSED
FA	FIRE ALARM
FD	FLOOR DRAIN
FDC	FIRE DEPARTMENT CONNECTION
FE	FIRE EXTINGUISHER
FEC	FIRE EXTINGUISHER W/ CABINET
FF	FINISH FLOOR
FG	FINISH GRADE
FH	FIRE HYDRANT
FHC	FIRE HOSE CABINET
FSH	FLAT HEAD SCREW
FIN	FINISH
FLR	FLOOR
FOC	FACE OF CONCRETE
FOF	FACE OF FINISH
FOM	FACE OF MASONRY
FOS	FACE OF STUD
FP	FIREPROOFING
FR	FIRE RATED
FRG	FIRE RATED GLASS

FRP	FIBERGLASS REINFORCED PLASTIC
FRT	FIRE RETARDANT TREATED
FS	FINISH SURFACE
FTG	FOOTING
GB	GRAB BAR
GFRC	GLASS FIBER REINFORCED CONCRETE
GL	GLASS TYPE
GLB	GLUE LAMINATED BEAM
GYP BD	GYPSUM BOARD
GYP PLAS	GYPSUM PLASTIC
HB	HOSE BIBB
HD	HEAVY DUTY
HDR	HEADER
HDWR	HARDWARE
HGT	HEIGHT
HM	HOLLOW METAL
HP	HIGH POINT
HSS	HOLLOW STEEL SECTION
ID	INSIDE DIAMTER
INT	INTERIOR
INV	INVERT
LANDS	LANDSCAPE
LAV	LAVATORY
LLH	LONG LEG HORIZONTAL
LLV	LONG LEG VERTICAL
LP	LOW POINT
LT WT	LIGHT WEIGHT
LVR	LOUVER
MACH	MACHINE
MB	MACHINE BOLT
MDF	MEDIUM DENSITY FIBERBOARD
MDO	MEDIUM DENSITY OVERLAY
MECH	MECHANICAL
MED	MEDIUM
MEMB	MEMBRANE
MFR	MANUFACTURER
MH	MANHOLE
MO	MASONRY OPENING
MTD	MOUNTED
MTL	METAL
NIC	NOT IN CONTRACT
NR	NON RATED
NRC	NOISE REDUCTION COEFFICIENT
NTS	NOT TO SCALE
O/	OVER
O/A	OVERALL
OC	ON CENTER
OD	OUTSIDE DIAMTER
OFCI	OWNER FURNISHED, CONTRACTOR INSTALLED
OFOI	OWNER FURNISHED, OWNER INSTALLED
OFVI	OWNER FURNISHED, VENDOR INSTALLED
OH	OPPOSITE HAND
OPER	OPERABLE
OPNG	OPENING
ORD	OVERFLOW ROOF DRAIN
P/L	PROPERTY LINE
PA	PUBLIC ADDRESS
PAF	POWDER ACTUATED FASTENER PAVING
PCC	PORTLAND CEMENT CONCRETE PAVING
PED	PEDESTRIAN
PERF	PERFORATED
PERIM	PERIMETER
PERP	PERPENDICULAR
PH	PANIC HARDWARE
PIV	POST INDICATOR VALVE
PL	PLATE
PLAM	PLASTIC LAMINATE
PLAS	PLASTER
PLUMB	PLUMBING
PNL	PANEL
PNT	PAINT / PAINTED
POC	POINT OF CONNECTION
POLY ISO	POLYISOCYANURATE
PREFIN	PREFINISHED
PREP	PREP / PREPARATION

PTC	POST TENSIONED CONCRETE
PTD	PAPER TOWEL DISPENSER
PTN	PARTITION
PTS	PNEUMATIC TUBE STATION / SYSTEM
PVC	POLYVINYL CHLORIDE
PVMT	PAVEMENT
QT	QUARRY TILE
R	RADIUS, RISER
RB	RESILIENT BASE
RD	ROOF DRAIN
RECEPT	ECEPTACLE
REF	REFERENCE
REFL	REFLECT(ED), (IVE)
REFL	REFLECT(ED), (IVE)
REFR	REFRIGERATOR
REINF	REINFORCE/REINFORCED/ REINFORCEMENT
REM	REMOVE
RH	ROUND HEAD
RHS	ROUND HEAD SCREW
RO	ROUGH OPENING
ROW	RIGHT OF WAY
SCH	SCHEDULE (FOR PIPE)
SCHED	SCHEDULE / SCHEDULING
SD	STORM DRAIN / SOAP DISPENSER
SECT	SECTION
SG	SAFETY GLASS
SHT	SHEET
SHTG	SHEATHING
SMS	SHEET METAL SCREW
SND	SANITARY NAPKIN DISPOSAL
SOV	SHUT OFF VALVE
SPEC	SPECIFICATIONS
SS	STAINLESS STEEL
STC	SOUND TRAMISSION CLASS
STL	STEEL
STSMS SCREW	SELF TAPPING SHEET METAL
SUSP	SUSPENDED
SV	SHEET VINYL
SYM	SYMMETRICAL
T	TREAD
T&B	TOP AND BOTTOM
TO	TOP OF
TOC	TOP OF CURB / CONCRETE
TOP	TOP OF PARAPET
TOS	TOP OF STEEL
TOW	TOP OF WALL
TPD	TOILET PAPER DISPENSER
TS	TACKABLE SURFACE
U/C	UNDER CABINET (OR COUNTER
UNO	UNLESS NOTED OTHERWISE
UR	URINAL
VAC	VACUUM
VB	VAPOR BARRIER
VCT	VINYL COMPOSITION TILE
VIF	VERIFY IN FIELD
VTR	VENT THROUGH ROOF
VWC	VINYL WALL COVERING
W/	WITH
W/O	WITHOUT
WB	WOOD BASE
WC	WATER CLOSET
WD	WOOD
WDW	WINDOW
WGT	WEIGHT
WH	WATER HEATER
WP	WATERPROOFING/WALL PROTECTION
WR	WATER RESISTANT
WRGB	WATER RESISTANT GYPSUM BOARD
WS	WOOD SCREW
WSCT	WAINSCOT
WWF	WELDED WIRE FABRIC

NOTE:
OTHER ABBREVIATIONS USED ON THESE DRAWINGS ARE CONSIDERED STANDARDS IN THE BUILDING INDUSTRY. CONTACT ARCHITECT FOR NECESSARY CLARIFICATION.

SYMBOL LEGEND

NORTH ARROW
N
TICK INDICATES PLAN NORTH
ARROW INDICATES TRUE NORTH

DETAIL CALLOUT
SIM / 1 / AX.XX
INDICATES A SIMILAR CONDITION
LOCATION ON SHEET
SHEET WHERE SECTION IS DRAWN

ELEVATION CALLOUT (TYPICAL FOR EXTERIOR)
1 / AX.XX
LOCATION ON SHEET
SHEET WHERE ELEVATION IS DRAWN

CONTROL OR DATUM POINT
FIRST FLOOR / +0' - 0"
NAME OF ELEVATION (IF APPLICABLE)
ELEVATION ABOVE FINISHED FLOOR

ELEVATION CALLOUT (TYPICAL FOR INTERIOR)
A1 / A2 / A3 / A4 / AX.XX
LOCATION ON SHEET
SHEET WHERE ELEVATION IS DRAWN

DOOR CALLOUT
101A
DOOR NUMBER

SECTION CALLOUT
SIM / 1 / AX.XX
INDICATES A SIMILAR CONDITION
LOCATION ON SHEET
SHEET WHERE SECTION IS DRAWN

INTERIOR FINISH CALLOUT
FA
MATERIAL FINISH TYPE
(SEE FINISH SCHEDULE)

KEYNOTE
?
KEYNOTE NUMBER (SEE LEGEND ON SHEET)

WINDOW CALLOUT
09-WF1
WINDOW NUMBER
(SEE WINDOW SCHEDULE)

DEFERRED APPROVALS

NONE

STATE MAP

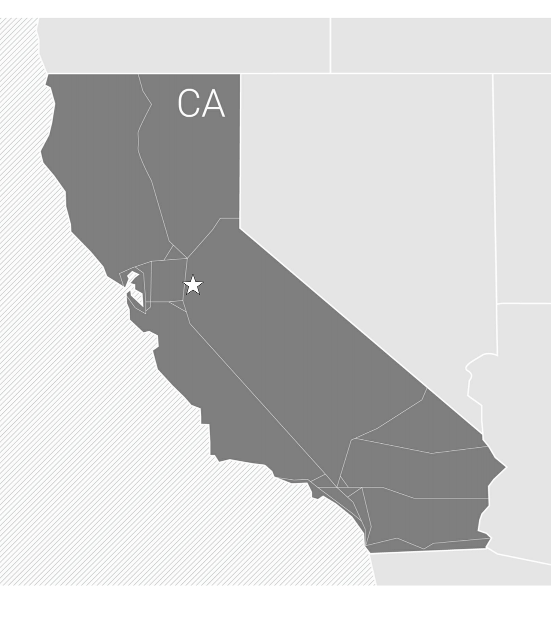

VICINITY MAP

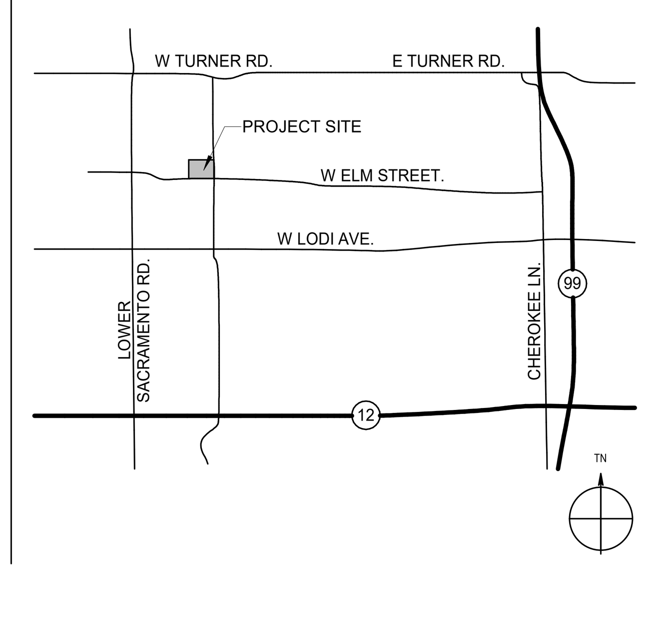

AGENCY APPROVAL:

IDENTIFICATION STAMP
DIV. OF THE STATE ARCHITECT
APP: 02-122005 INC:
REVIEWED FOR
SS ☑ FLS ☑ ACS ☑
DATE: 12/06/2023

LODI USD

HMC Architects
R221551X00
2101 CAPITOL AVENUE, SUITE 100,
SACRAMENTO, CA, 95816
916 368 7990 / www.hmcarchitects.com

LICENSED ARCHITECT JEFFREY ALAN GRAU C-14648 5/31/25 RENEWAL DATE STATE OF CALIFORNIA

PROJECT TEAM

CIVIL ENGINEER
WARREN GREEN ENGINEERING
3114 BRENNANS RD, LOOMIS, CA 95650
916-663-2323

FACILITY:
MILLSWOOD MIDDLE SCHOOL
233 NORTH MILLS AVENUE
LODI, CA 95242

PROJECT:
LODI UNIFIED SCHOOL DISTRICT LUNCH SHELTERS - MILLSWOOD MIDDLE SCHOOL

SHEET NAME:
COVER SHEET

CONSTRUCTION DOCUMENTS

DATE: 12/05/23 — CLIENT PROJ NO: R221551X00

SHEET:
G0.10

Autodesk Docs://R221551X00 Lodi USD Lunch Shelters/R221551X00-A-MILLSWOOD-MS-LUNCH-SHELTER.rvt
11/28/2023 5:35:27 PM

PLEASE RECYCLE

THE LINE SHOWN ABOVE IS EXACTLY ONE INCH ON ORIGINAL PLANS SHEET 0 ORIGINAL IMAGE SIZE

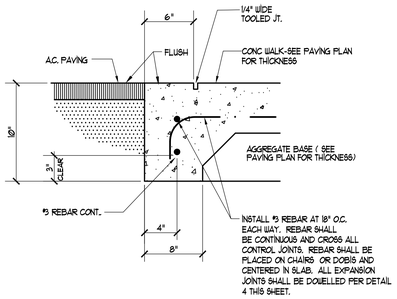

1 / C1.1 FLUSH CONC. WALK @ AC

N.T.S.

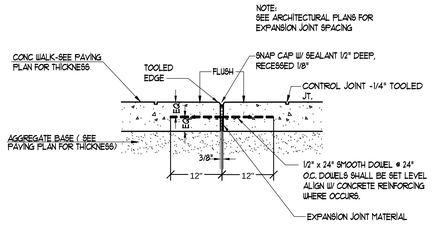

4 / C1.1 EXPANSION JOINT

N.T.S.

NOTE:
TRANSITION FROM NEW CONCRETE WALKWAYS TO EXISTING LANDSCAPE GRADE TO BE AT A MAXIMUM OF 5 : 1 SLOPE UNLESS OTHERWISE NOTED ON PLANS.

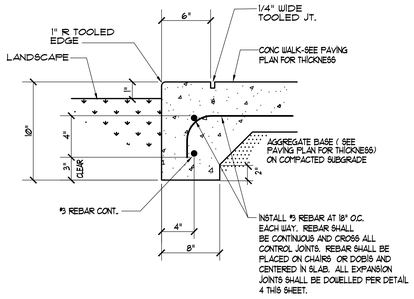

2 / C1.1 FLUSH CONC. WALK @ LANDSCAPE

N.T.S.

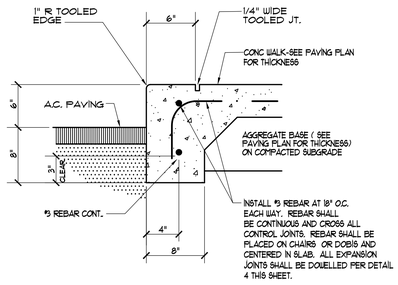

5 / C1.1 THICKENED EDGE CONC. WALK

N.T.S.

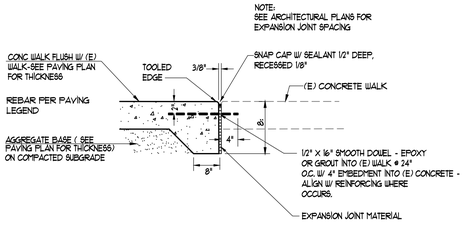

3 / C1.1 CONC. WALK AT EXISTING CONDITIONS

N.T.S.

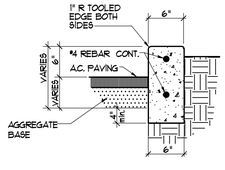

NOTES:
1. PROVIDE EXPANSION JOINTS @ 18'-0" O.C. OR AS INDICATED ON PLANS.
2. CURB SHALL EXTEND 4" BELOW SUBGRADE.

6 / C1.1 PLANTER CURB

LEGEND

× 43.15	EXISTING ELEVATION
8"SD	EXISTING STORM DRAIN
6"SS	EXISTING SANITARY SEWER
8"W	EXISTING WATER MAIN
	EXISTING WATER VALVE
	EXIST. FIRE HYDRANT
C	EXISTING COMMUNICATION LINE
IR	EXISTING IRRIGATION CONTROL LINE
E	EXISTING ELECTRICAL LINE
T	EXISTING TELEPHONE LINE
31.92	NEW ELEVATION

ABBREVIATIONS

AC	ASPHALT CONCRETE	LD	LANDSCAPE DRAIN
AB	AGGREGATE BASE	LF	LINEAR FEET
ADD. ALT.	ADDITIVE ALTERNATE	MH	MANHOLE
BLDG	BUILDING	MIN	MINIMUM
BO	BLOW OFF	MS	MOW STRIP
BOW	BACK OF WALK	(N)	NEW
BW	BOTTOM OF WALL	N.I.C.	NOT IN CONTRACT
CC	CONCRETE (TOP OF CONCRETE WALK)	OG	ORIGINAL GRADE
CL	CENTER LINE	P	PROPOSED
CONC	CONCRETE	PD	PLANTER DRAIN
CONST.	CONSTRUCT	PIV	POST INDICATOR VALVE
COTG	CLEANOUT TO GRADE	POC	POINT OF CONNECTION
DI	DRAIN INLET	PP	POWER POLE
DIP	DUCTILE IRON PIPE	PUE	PUBLIC UTILITY EASEMENT
DS	DOWNSPOUT	RCP	REINFORCED CONCRETE PIPE
DWY	DRIVEWAY	RD	ROOF DRAIN
(E)	EXISTING	RDWD	REDWOOD
E. BOX	ELECTRICAL BOX	RET	RETAINING
E. COND.	ELECTRICAL CONDUIT	RP	REDUCED PRESSURE
ELEC	ELECTRIC	R/W	RIGHT OF WAY
EP	EDGE OF PAVEMENT	RWL	RAIN WATER LEADER
EXIST.	EXISTING	S	SLOPE
FDC	FIRE DEPARTMENT CONNECTION	SD	STORM DRAIN
FF	FINISH FLOOR	SS	SANITARY SEWER
FG	FINISH GRADE	ST. LT.	STREET LIGHT
FH	FIRE HYDRANT	TBM	TEMPORARY BENCH MARK
FL	FLOW LINE	T	TRANSFORMER
FM	FIRE MAIN	TEL	TELEPHONE
FS	FIRE SERVICE	TC	TOP OF CURB
G	GAS	TW	TOP OF WALL
GB	GRADE BREAK	TYP	TYPICAL
GR	GRATE	VCP	VITRIFIED CLAY PIPE
GV	GATE VALVE	W	WATER
HDR	HEADER	WV	WATER VALVE
HP	HIGH POINT	VB	VALVE BOX
INV	INVERT ELEVATION	YD	YARD DRAIN
JP	JOINT POLE		

INDEX OF CIVIL DRAWINGS

C1.1 TITLE SHEET AND DETAIL SHEET
C2.1 DEMOLITION PLAN
C3.1 GRADING, DRAINAGE AND PAVING PLAN

AGENCY APPROVAL:

IDENTIFICATION STAMP
DIV. OF THE STATE ARCHITECT
APP: 02-122005 INC:
REVIEWED FOR
SS ☑ FLS ☑ ACS ☑
DATE: 12/06/2023

LODI USD

HMC Architects
R2211551
2101 CAPITOL AVENUE, SUITE 100,
SACRAMENTO, CA. 95816
916 368 7990 / www.hmcarchitects.com

Δ DESCRIPTION DATE

CONSULTANT:

REGISTERED PROFESSIONAL ENGINEER
JOHN A. GREEN
NO. 36500
Exp. 6-30-24
CIVIL
STATE OF CALIFORNIA

Warren-Green ENGINEERING
3114 Brennans Road
Loomis, CA 95690

FACILITY:

MILLSWOOD MIDDLE SCHOOL
233 N. MILLS AVENUE, LODI, CA 95242

PROJECT:

LODI UNIFIED SCHOOL DISTRICT LUNCH SHELTERS-MILLSWOOD MIDDLE SCHOOL

SHEET NAME:

CONSTRUCTION DOCUMENTS

FILE NO.: MMS-CD | A NO.: R2211551

DATE: NOV. 21, 2023 | CLIENT PROJ NO:

SHEET:

C1.1

PLEASE RECYCLE

1 DEMOLITION PLAN
C2.1

SCALE: 1"=10'

DEMOLITION LEGEND

REMOVE (E) AC PAVING

REMOVE (E) CONCRETE

SAWCUT LINE

REMOVE (E) CURB

REMOVE (E) TREE

DEMOLITION NOTES:

1. CONTRACTOR SHALL REMOVE / DEMOLISH ALL (E) IMPROVEMENTS AS NECESSARY FOR CONSTRUCTION OF NEW IMPROVEMENTS UNDER THIS CONTRACT. CONTRACTOR SHALL FIELD WALK SITE TO REVIEW AND CONFIRM THE EXTENT OF ALL CLEARING WORK PRIOR TO BID.
2. ALL MATERIAL REMOVED BY CONTRACTOR SHALL BE PROPERLY AND LEGALLY DISPOSED OFFSITE (UNLESS SPECIFICALLY IDENTIFIED TO BE DELIVERED TO OWNER)
3. NUMEROUS UNDERGROUND UTILITIES EXIST WITHIN THE AREAS OF EXISTING CONCRETE REMOVAL. CONTRACTOR SHALL USE CAUTION DURING DEMOLITION AND SUBGRADE SCARIFICATION AND COMPACTION TO PROTECT SAID UTILITIES.

AGENCY APPROVAL:

IDENTIFICATION STAMP
DIV. OF THE STATE ARCHITECT
APP: 02-122005 INC:
REVIEWED FOR
SS ☑ FLS ☑ ACS ☑
DATE: 12/06/2023

LODI USD

HMC Architects

R2211551

2101 CAPITOL AVENUE, SUITE 100,
SACRAMENTO, CA, 95816
916 368 7990 / www.hmcarchitects.com

Δ	DESCRIPTION	DATE

CONSULTANT:

REGISTERED PROFESSIONAL ENGINEER
LORI A. GREEN
NO. 36500
Exp. 6-30-24
CIVIL
STATE OF CALIFORNIA

Warren-Green ENGINEERING
3114 Brennans Road
Loomis, CA 95690

FACILITY:

MILLSWOOD MIDDLE SCHOOL
233 N. MILLS AVENUE, LODI, CA 95242

PROJECT:

LODI UNIFIED SCHOOL DISTRICT LUNCH SHELTERS-MILLSWOOD MIDDLE SCHOOL

SHEET NAME:

CONSTRUCTION DOCUMENTS

FILE NO.: MMS-CD	A NO.: R2211551
DATE: NOV. 21, 2023	CLIENT PROJ NO:

SHEET:

C2.1

PLEASE RECYCLE

THE LINE SHOWN ABOVE IS EXTENDED FROM SHEET C1.1 SHEET 1 ORIGINAL PAGE SIZE

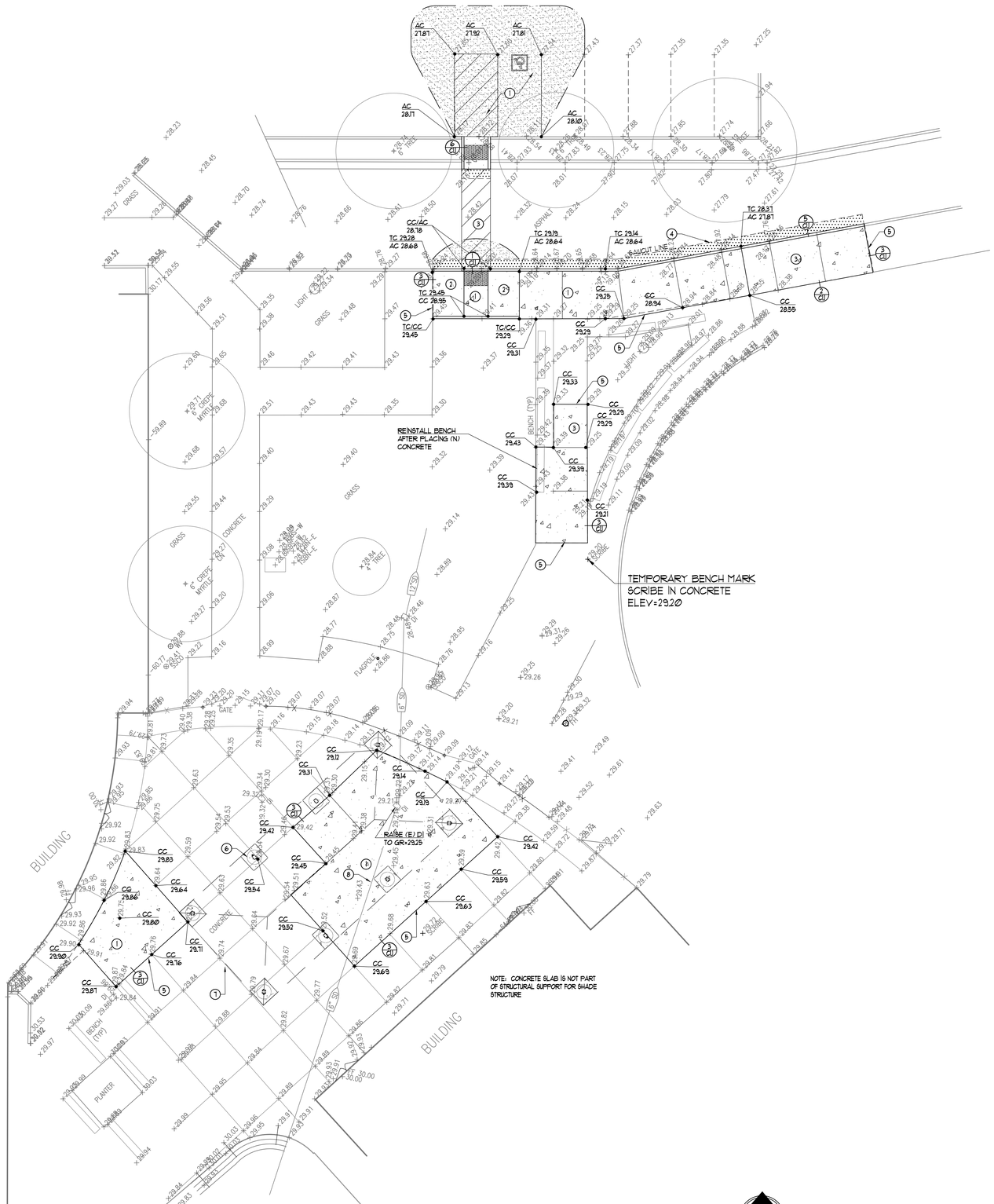

1 GRADING, DRAINAGE AND PAVING PLAN

C3.1

SCALE: 1"=10'

NOTES:

1. CONCRETE SLAB IS NOT PART OF STRUCTURAL SUPPORT FOR SHADE STRUCTURE
2. CONTRACTOR SHALL LOCATE ALL UTILITIES IN AREA OF WORK PRIOR TO START OF CONSTRUCTION. NOTIFY ARCHITECT IF ANY CONFLICTS WITH NEW FOOTINGS OCCUR.
3. ALL UTILITIES (VALVE BOX COVERS, VAULTS, CLEANOUTS, ETC. SHALL BE ADJUSTED TO NEW FINISH GRADES.
4. DRINKING FOUNTAINS SHALL BE RESET AS NECESSARY TO MEET HEIGHT STANDARDS FOR ACCESSIBILITY (SEE ARCHITECTURAL)

KEY NOTE LEGEND

1. 18% MAX. SLOPE IN ANY DIRECTION.
2. RAMP - 8% MAX. SLOPE IN DIRECTION OF TRAVEL, 18% MAX. CROSS SLOPE
3. 18% MAX. CROSS SLOPE 4.75% MAX. SLOPE IN DIRECTION OF TRAVEL.
4. MATCH (E) AC GRADE AT SAWCUT LINE.
5. MATCH (E) CONC. GRADE AT SAWCUT LINE.
6. SHADE STRUCTURE FOOTING - TYPICAL
7. SHADE STRUCTURE ROOF LINE
8. CONTRACTOR SHALL LOCATE EXISTING UTILITIES PRIOR TO START OF CONSTRUCTION. NOTIFY ARCHITECT IF CONFLICT WITH NEW FOOTINGS EXISTS.

PAVING LEGEND

- VARIABLE THICKNESS AC OVERLAY
- 3" ASPHALT CONCRETE ON 6" AGGREGATE BASE ON COMPACTED SUBGRADE
- 5" CONCRETE ON 6" AGGREGATE BASE ON COMPACTED SUBGRADE W/ #3 REBAR AT 18" O.C. EACH WAY

AGENCY APPROVAL:

IDENTIFICATION STAMP
DIV. OF THE STATE ARCHITECT
APP: 02-122005 INC:
REVIEWED FOR
SS ☑ FLS ☑ ACS ☑
DATE: 12/06/2023

LODI USD

HMC Architects

R2211551

2101 CAPITOL AVENUE, SUITE 100,
SACRAMENTO, CA, 95816
916 368 7990 / www.hmcarchitects.com

Δ DESCRIPTION DATE

CONSULTANT:

REGISTERED PROFESSIONAL ENGINEER
LORI A. GROSS
NO. 36500
Exp. 6-30-24
CIVIL
STATE OF CALIFORNIA

Warren-Green ENGINEERING
3114 Brennans Road
Loomis, CA 95650

FACILITY:

MILLSWOOD MIDDLE SCHOOL
233 N. MILLS AVENUE, LODI, CA 95242

PROJECT:

LODI UNIFIED SCHOOL DISTRICT LUNCH SHELTERS-MILLSWOOD MIDDLE SCHOOL

SHEET NAME:

CONSTRUCTION DOCUMENTS

FILE NO.: MMS-CD	A NO.: R2211551
DATE: NOV. 21, 2023	CLIENT PROJ NO:
SHEET:	

C3.1

PLEASE RECYCLE

THE LINE SHOWN ABOVE IS EXACTLY 1" WHEN PLOTTED AT THIS SHEET'S ORIGINAL PAGE SIZE

INCREMENT 2 BUILDING DATA AND ALLOWABLE AREA ANALYSIS

BUILDING	OCCUPANCY	CONSTRUCTION TYPE	ALLOWABLE AREA (TABLE 506.2)	ACTUAL BLDG. AREA	OCCUPANCY CALCULATION
LS	A-2	II-B NON-SPRINKLERED	9,500 S.F.	1,456 S.F.	1,456 S.F. / 15 NET = 98 OCC.

EXISTING PATH OF TRAVEL (POT): ARCHITECT STATEMENT

DESIGN PROFESSIONAL IN GENERAL RESPONSIBLE IN CHARGE STATEMENT: THE POT IDENTIFIED IN THESE CONSTRUCTION DOCUMENTS IS COMPLIANT WITH THE CURRENT APPLICABLE CALIFORNIA BUILDING CODE ACCESSIBILITY PROVISIONS FOR **PATH OF TRAVEL REQUIREMENTS FOR ALTERATIONS, ADDITIONS AND STRUCTURAL REPAIRS**. AS PART OF THE DESIGN OF THIS PROJECT, THE POT WAS EXAMINED AND ANY ELEMENTS, COMPONENTS OR PORTIONS OF THE POT THAT WERE DETERMINED TO BE NON-COMPLIANT

1) HAVE BEEN IDENTIFIED AND
2) THE CORRECTIVE WORK NECESSARY TO BRING THEM INTO COMPLIANCE HAS BEEN INCLUDED WITHIN THE SCOPE OF THIS PROJECTS WORK THROUGH DETAILS, DRAWINGS, AND SPECIFICATIONS INCORPORATED INTO THESE CONSTRUCTION DOCUMENTS.

ANY NONCOMPLIANT ELEMENTS, COMPONENTS OR PORTIONS OF THE POT THAT WILL NOT BE CORRECTED BY THIS PROJECT BASED ON VALUATION THRESHOLD LIMITATIONS OR A FINDING OF UNREASONABLE HARDSHIP ARE SO INDICATED IN THESE CONSTRUCTION DOCUMENTS.

DURING CONSTRUCTION, IF POT ITEMS WITHIN THE SCOPE OF THE PROJECT REPRESENTED AS CODE COMPLIANT ARE FOUND TO BE NON-CONFORMING BEYOND REASONABLE CONSTRUCTION TOLERANCES, THEY SHALL BE BROUGHT TO COMPLIANCE WITH THE CBC AS PART OF THIS PROJECT BY MEANS OF A CONSTRUCTION CHANGE DOCUMENT.

ACCESSIBLE PARKING STALL CALCULATION

TOTAL PARKING STALL COUNT:	95 STALLS
ACCESSIBLE PARKING STALLS	(TABLE 11B-208.2)
REQUIRED ACCESSIBLE STALLS:	4 (76-100 TOTAL STALLS)
REQUIRED VAN ACCESSIBLE STALLS:	1 (1-6 ACCESSIBLE STALLS)
ACCESSIBLE STALLS PROVIDED:	3 STANDARD & 2 VAN

NOTE: LUNCH SHELTER COMPLIES WITH DSA IR 31-1

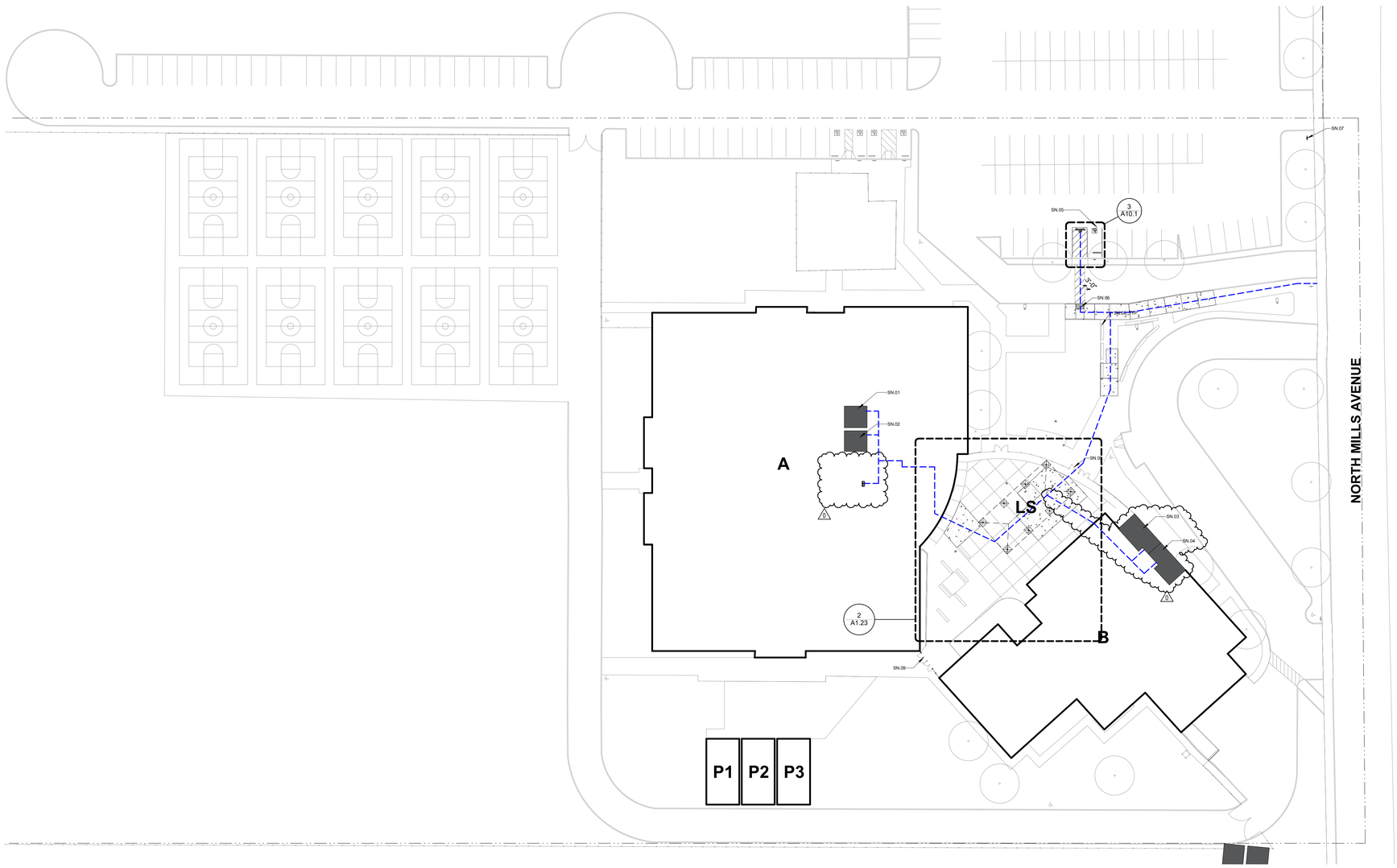

LEGEND

- ACCESSIBLE PATH OF TRAVEL
- PROPERTY LINE
- EXISTING CHAINLINK FENCE
- EXISTING ORNAMENTAL FENCE
- X — EXISTING BUILDINGS
- EXISTING FIRE HYDRANT

SHEET NOTES

SN.01	(E) MEN'S TOILET ROOM PER DSA DSA #02-102956, UPGRADED PER THIS APPLICATION
SN.02	(E) WOMEN'S TOILET ROOM PER DSA DSA #02-102956, UPGRADED PER THIS APPLICATION
SN.03	(E) BOYS TOILET ROOM PER DSA DSA #02-102956, UPGRADED PER THIS APPLICATION
SN.04	(E) GIRL'S TOILET ROOM PER DSA DSA #02-102956, UPGRADED PER THIS APPLICATION
SN.05	ACCESSIBLE PARKING STALL PER THIS APPLICATION
SN.06	(N) TRUNCTED DOMES PER 6/A10.1
SN.07	NEW ACCESSIBLE PARKING LOT ENTRANCE SIGN
SN.08	(E) BENCH
SN.09	(E) ACCESSIBLE PR 3'-0" GATE WITH PANIC HARDWARE AND KICKPLATE

BUILDING DESIGNATIONS

DSA #02-102956

UNIT A	-	ADMIN AND CLASSROOM BUILDING
UNIT B	-	MULTIPURPOSE BUILDING

DSA #02-107065

UNIT P1	-	PORTABLE CLASSROOM BUILDING
UNIT P2	-	PORTABLE CLASSROOM BUILDING
UNIT P3	-	PORTABLE CLASSROOM BUILDING

AGENCY APPROVAL:

LODI USD

HMC Architects

R221551X00

LICENSED ARCHITECT JEFFREY ALAN HRAND C-14648 5/31/25 RENEWAL DATE STATE OF CALIFORNIA

2101 CAPITOL AVENUE, SUITE 100,
SACRAMENTO, CA, 95816
916 368 7990 / www.hmcarchitects.com

ISSUE

Δ	DESCRIPTION	DATE
0	Revision 1	2/24/24

ACCESSIBLE PATH OF TRAVEL

1. ACCESSIBLE PATH OF TRAVEL (P.O.T.): SITE WALKWAYS SHALL PROVIDE A BARRIER-FREE P.O.T. ABRUPT CHANGES IN LEVEL ALONG ANY P.O.T. ARE ALLOWED UP TO 1/2". ONLY ABRUPT CHANGES IN ELEVATION UP TO 1/4" ARE ALLOWED TO HAVE A VERTICAL TRANSITION. ABRUPT CHANGES IN ELEVATION BETWEEN 1/4" AND 1/2" SHALL BE BEVELED WITH A SLOPE NO GREATER THAN 1-UNIT VERTICAL TO 2-UNITS HORIZONTAL. GATES IN THE P.O.T. SHALL HAVE A SIGN ADJACENT TO THE GATE, IN ALL CAPITALIZED LETTERS, WHICH READS: "THIS GATE TO REMAIN LOCKED IN OPEN POSITION DURING SCHOOL HOURS OR ANY PUBLIC EVENT".
2. THE CONTRACTOR SHALL PROVIDE A P.O.T. FROM THE DISABLED ACCESSIBLE PARKING STALLS TO ALL BUILDINGS AND SITE FUNCTIONS. CONTRACTOR SHALL VERIFY THAT THE P.O.T. IS BARRIER-FREE AS DESCRIBED IN THESE NOTES.
3. WALKWAYS SHALL BE FREE OF GRATINGS WHEREVER POSSIBLE. GRATING WHICH OCCUR WITHIN THE P.O.T. SHALL HAVE OPENINGS WHICH DO NOT EXCEED 1/2" IN THE DIRECTION OF TRAVEL PER CBC SECTION 1133B.7.2.
4. AN ABRUPT DROP-OFF CHANGE IN ELEVATION AT THE EDGE OF ANY WALK INTO AN ADJACENT PLANTER SHALL NOT EXCEED 4".
5. SLOPES IN THE DIRECTION OF THE P.O.T. GREATER THAN 1-UNIT VERTICAL TO 20-UNITS HORIZONTAL SHALL BE CONSIDERED A RAMP AND WILL REQUIRE HANDRAILS ON BOTH SIDES PER CBC SECTION 1133B.5.5 SLOPES IN THE DIRECTION OF THE P.O.T. ALONG WALKWAYS SHALL NOT EXCEED 5%. CROSS SLOPES IN THE P.O.T. ALONG WALKWAYS SHALL NOT EXCEED 2%.
6. ALL WALKWAYS WITHIN THE P.O.T. SHALL BE A MINIMUM OF 48" IN WIDTH. SURFACES WITH A SLOPE OF LESS THAN 6% SHALL BE AT LEAST AS SLIP-RESISTANT AS THAT PROVIDED BY A MEDIUM BROOM FINISH. SURFACES WITH A SLOPE OF MORE THAN 6% SHALL BE SLIP-RESISTANT.
7. OBJECTS PROTRUDING INTO THE P.O.T. SHALL NOT REDUCE THE C LEAR WIDTH OR MANEUVERING SPACE WITHIN THE P.O.T. PER CBC SECTION 1133B.8.6.
8. ARCHITECT HAS SURVEYED/ INSPECTED THE PATH OF TRAVEL (P.O.T.) AS INDICATED ON THE PLANS AND HAS FOUND IT TO BE, OR HAS INDICATED ON THE PLANS REMEDIAL WORK WHICH WOULD CAUSE IT TO BE, A BARRIER-FREE ACCESSIBLE ROUTE:
   a. AT LEAST 48" IN. WIDTH; OR AS APPROVED BY CODE;
   b. WITHOUT ABRUPT LEVEL CHANGES EXCEEDING 1/2" IF BELVELED AT 1:2 MAXIMUM SLOPE, OR VERTICAL LEVEL CHANGES EXCEEDING 1/4";
   c. WITH A FIRM, STABLE, AND SLIP RESISTANT WALKING SURFACE;
   d. WITH A RUNNING SLOPE OF 1:20 OR LESS, UNLESS OTHERWISE INDICATED, AND A CROSS SLOPE OF 1:50 OR LESS;
   e. IS FREE OF OVERHEAD OBSTRUCTIONS WITHIN 80" ABOVE THE WALKING SURFACE; AND
   f. IS FREE OF OBJECTS WHICH PROTRUDE MORE THAN 4" BETWEEN THE HEIGHTS OF 27" AND 80" ABOVE THE WALKING SURFACE.

FACILITY:

MILLSWOOD MIDDLE SCHOOL
233 NORTH MILLS AVENUE
LODI, CA 95242

PROJECT:

LODI UNIFIED SCHOOL DISTRICT LUNCH SHELTERS - MILLSWOOD MIDDLE SCHOOL

SHEET NAME:

CODE INFORMATION SITE PLAN

CONSTRUCTION DOCUMENTS

DATE: **12/05/23** | CLIENT PROJ NO: **R221551X00**

SHEET:

A1.21

CODE INFORMATION SITE PLAN 1 (1" = 30'-0")

Autodesk Docs://R221551X00 Lodi USD Lunch Shelters/R221551X00-A-MILLSWOOD-MS-LUNCH-SHELTER.rvt
2/14/2024 5:23:46 PM

PLEASE RECYCLE

THE LINE SHOWN ABOVE IS EXACTLY ONE INCH ON THIS SHEET'S ORIGINAL PAGE SIZE

DSA-810 FIRE & LIFE SAFETY SITE CONDITIONS SUBMITTAL

PROJECT INFORMATION

School District:	LODI UNIFIED SCHOOL DISTRICT
Project name / school:	MILLSWOOD MIDDLE SCHOOL
Project address:	233 NORTH MILLS AVENUE LODI, CA 95242

FIRE & LIFE SAFTEY INFORMATION — ALTERNATE ACCEPTED

1.	Has a fire hydrant flow test been performed within the past 12 months? ***(If yes, provide a copy of the test data)***	Yes ☐	No ☒
2.	Was the fire hydrant water flow test performed as part of this LFA review?	Yes ☐	No ☒
3.	Is the project located within a designated fire hazard serverity zone as established by Cal-Fire? ***(If yes, indicate fire hazard zone classification below)***	Yes ☐	No ☒

	Moderate	High	Very High
Refer to the following for fire hazard zone locations: ***www. fire.ca.gov/fire_prevention/fire_prevention_wildland_zones_maps***	☐	☐	☐
Wildland Interface Area (WIFA) ***(If any designations are checked, project design must meet the requirements of CBC Chapter 7A)***			WIFA ☐

CONDITION MEANS AND METHODS RESOLUTION — ALTERNATE ACCEPTED

		Yes	No	N/A	N/R
4.	Emergency vehicle access roadways do not meet CFC requirements			☒	
4a.	**Acceptable Alternative:** Emergency vehicle and personel access as proposed by the architect is acceptable for providing fire suppression and protection of life and property				
5.	**Fire Hydrants:** Number and spacing does not meet CFC requirements				
5a.	**Acceptable Alternative:** Number of fire hydrants and spacing as proposed by the architect is acceptable for fire suppression and protection of life and property.	☒			
6.	**Fire Hydrants:** Water flow and pressure are less than CFC minimum.			☒	
6a.	**Acceptable Alternative:** The available flow and pressure is acceptable for providing fire suppression and protection of life and property.				
7.	Location of fire department connection(s) serving fire sprinkler system or standpipe system does not meet CFC requirements.			☒	
7a.	**Acceptable Alternative:** The location of fire department connection serving the fire sprinkler system and/or standpipe system is acceptable for providing fire suppression and protection of life and property.				

School District Acceptance of Acceptable Design Alternates

By signing this form, the school district acknowledges and accepts the proposed design as an alternative to California Building Code (CBC) and California Fire Code (CFC) minimum requirements as indicated by one of more of the conditions indicated at items 4a, 5a, 6a, or 7a, for providing fire and life safety protection of life and property.

Accepted by: Leonard Kahn Title: CBO

Signature: Date: 12/31/2023

LOCAL FIRE AUTHORITY (LFA) INFORMATION

LFA Agency Name: Lodi Fire Dept.

LFA Review Official: Brad Dpell

Title: Battalion Chief / Fire Marshall Work Phone: 209-333-6739

Work Email: BDOPELL@Lodi.gov

LFA Reviewer's Signature: Date: 12/31/23

LEGEND

- PROPERTY LINE
- EXISTING CHAINLINK FENCE
- EXISTING ORNAMENTAL FENCE
- X — EXISTING BUILDING
- EXISTING FIRE LANE
- EXISTING FIRE HYDRANT

SHEET NOTES

SN.01	(E) FIRE LANE
SN.02	(E) FIRE HYDRANT
SN.03	(E) PR 10'-0" WIDE CHAIN LINK GATES. PROVIDE KNOX LOCK
SN.04	(E) ACCESSIBLE PR 3'-0" GATE WITH PANIC HARDWARE. PROVIDE KNOX LOCK
SN.05	PC LUNCH SHELTER, NON-SPRINKLERED 1,456 S.F.
SN.06	(E) FIRE ALARM HORN

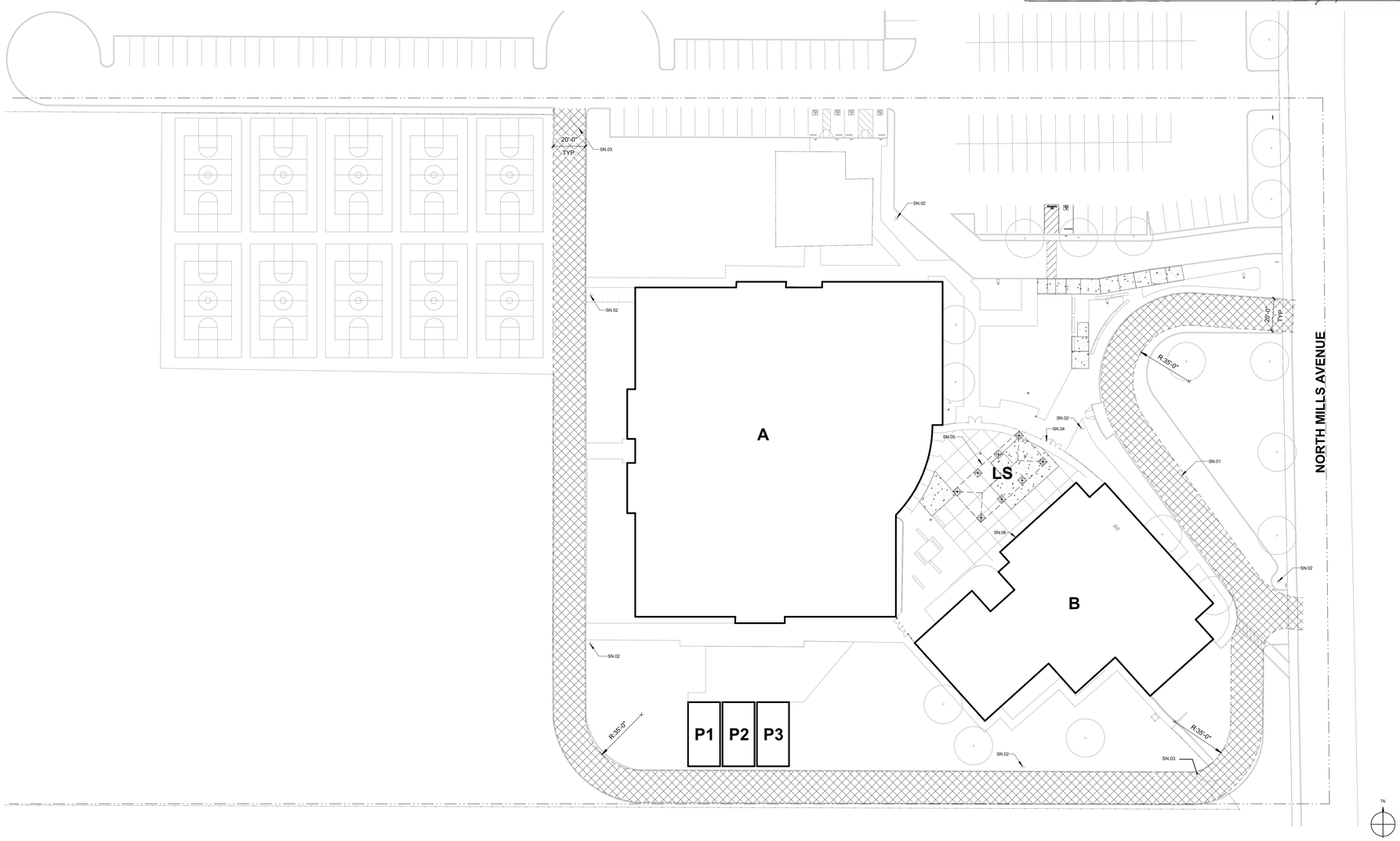

LOCAL FIRE AUTHORITY SITE ACCESS PLAN 1 1" = 30'-0"

AGENCY APPROVAL:

IDENTIFICATION STAMP
DIV. OF THE STATE ARCHITECT
APP: 02-122005 INC:
REVIEWED FOR
SS ☑ FLS ☑ ACS ☑
DATE: 12/06/2023

LODI USD

HMC Architects
R221551X00
2101 CAPITOL AVENUE, SUITE 100,
SACRAMENTO, CA, 95816
916 368 7990 / www.hmcarchitects.com

LICENSED ARCHITECT JEFFREY ALAN HARP C-14648 5/31/26 RENEWAL DATE STATE OF CALIFORNIA

ISSUE

Δ	DESCRIPTION	DATE

FACILITY:
MILLSWOOD MIDDLE SCHOOL
233 NORTH MILLS AVENUE
LODI, CA 95242

PROJECT:
LODI UNIFIED SCHOOL DISTRICT LUNCH SHELTERS - MILLSWOOD MIDDLE SCHOOL

SHEET NAME:
LOCAL FIRE AUTHORITY SITE PLAN

CONSTRUCTION DOCUMENTS

DATE: 12/05/23 CLIENT PROJ NO: R221551X00

SHEET:

A1.22

Autodesk Docs://R221551X00 Lodi USD Lunch Shelters/R221551X00-A-MILLSWOOD-MS-LUNCH-SHELTER.rvt
11/28/2023 5:35:08 PM

PLEASE RECYCLE

THE LINE SHOWN ABOVE IS EXACTLY ONE INCH LONG ON THIS SHEET'S ORIGINAL PAGE SIZE

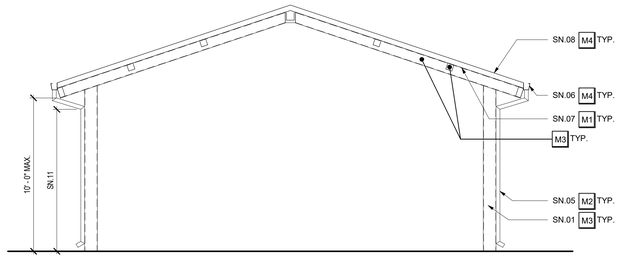

LUNCH SHELTER SECTION 2
1/4" = 1'-0"

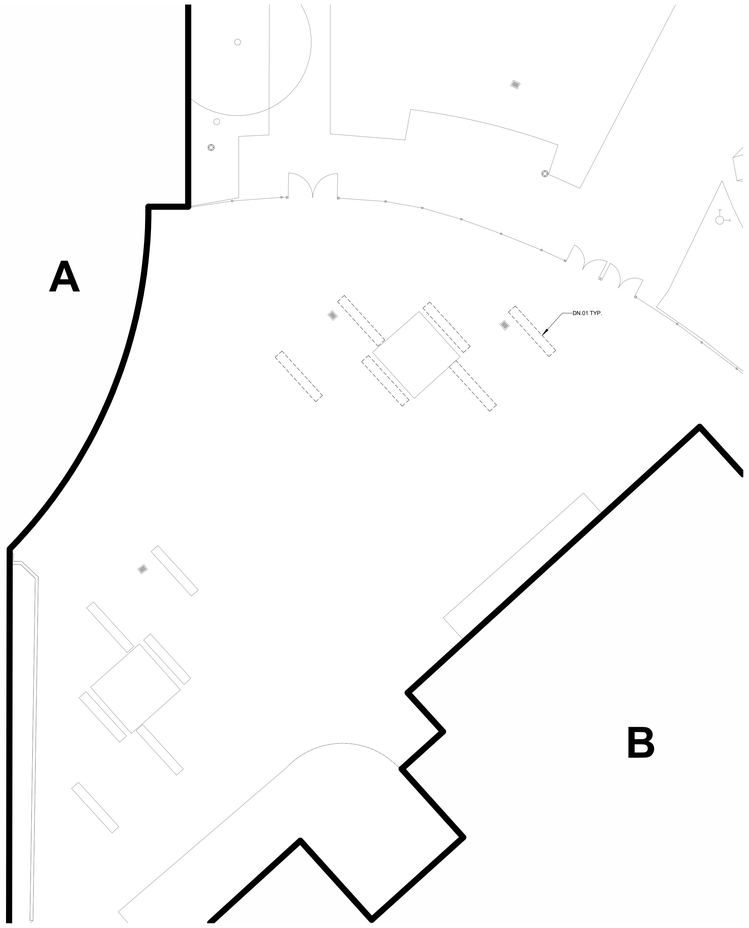

ENLARGED DEMOLITION SITE PLAN 3
1" = 1'0"-0"

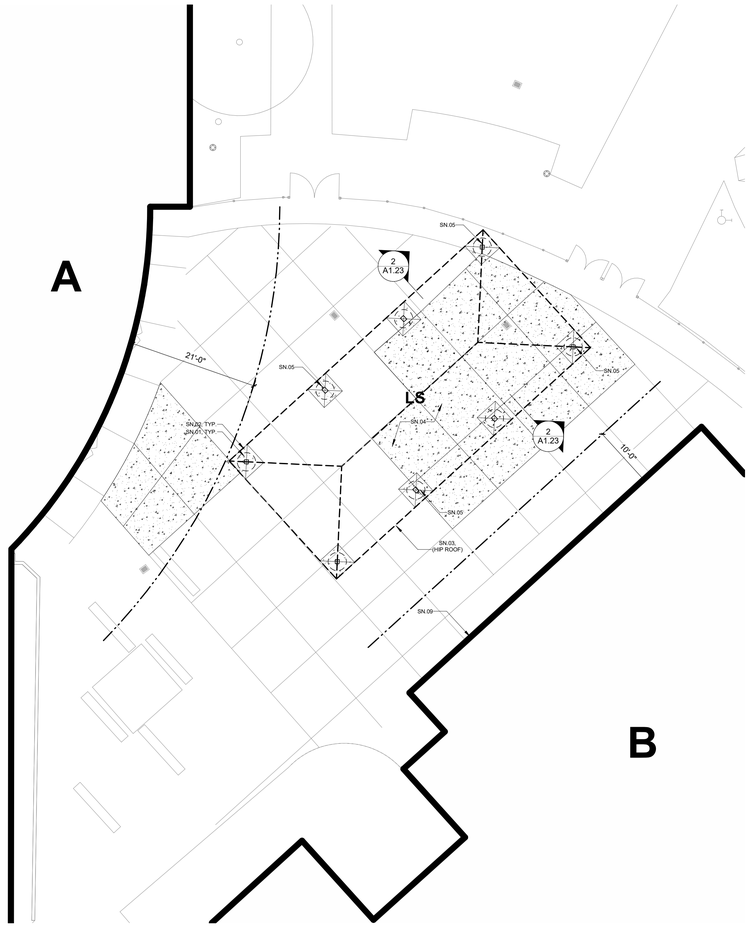

ENLARGED SITE PLAN - LUNCH SHELTER 1
1" = 1'0"-0"

LEGEND

- PROPERTY LINE
- EXISTING CHAINLINK FENCE
- EXISTING ORNAMENTAL FENCE
- X — EXISTING BUILDINGS
- X — PC LUNCH SHELTER
- EXPANSION JOINT
- EXISTING BUILDINGS
- CONTROL JOINT
- X — EXISTING BUILDINGS

EXTERIOR COLOR SCHEDULE

	MATERIAL	COLOR
M1	METAL	METAL FINISH COLOR 1 (1)
M2	METAL	METAL FINISH COLOR 2 (1)
M3	METAL	METAL PREFINISH COLOR (1) (2)
M4	METAL	METAL PREFINISH COLOR (1) (4)

(1) CUSTOM COLORS TO BE SUBMITTED PER SPECIFICATIONS.

(2) CLEAN, PREP AND PAINT ALL SURFACES NOT PREFINISHED.

SHEET NOTES

SN.01 HSS COLUMN
SN.02 DRILLED PIER FOOTING
SN.03 ROOF OVERHANG ABOVE
SN.04 (E) CONCRETE TO REMAIN
SN.05 3" DIAMETER SCHEDULE 40 STEEL DOWNSPOUT
SN.06 PREFINISHED GUTTER
SN.07 PAINT DECK UNDERSIDE
SN.08 STANDING SEAM ROOF
SN.09 (E) FIRE ALARM HORN

DEMOLITION NOTES

DN.01 REMOVE (E) BENCH. RETURN BENCH TO DISTRICT

AGENCY APPROVAL:

IDENTIFICATION STAMP
DIV. OF THE STATE ARCHITECT
APP: 02-122005 INC:
REVIEWED FOR
SS ☑ FLS ☑ ACS ☑
DATE: 12/06/2023

LODI USD

HMC Architects

R221551X00

2101 CAPITOL AVENUE, SUITE 100,
SACRAMENTO, CA, 95816
916 368 7990 / www.hmcarchitects.com

LICENSED ARCHITECT JEFFREY ALAN HAND C-14648 5/31/26 RENEWAL DATE STATE OF CALIFORNIA

ISSUE

Δ	DESCRIPTION	DATE

FACILITY:
MILLSWOOD MIDDLE SCHOOL
233 NORTH MILLS AVENUE
LODI, CA 95242

PROJECT:
LODI UNIFIED SCHOOL DISTRICT LUNCH SHELTERS - MILLSWOOD MIDDLE SCHOOL

SHEET NAME:
ENLARGED SITE PLAN AND SECTION - LUNCH SHELTER

CONSTRUCTION DOCUMENTS

DATE: **12/05/23** CLIENT PROJ NO: **R221551X00**

SHEET:

A1.23

Autodesk Docs://R221551X00 Lodi USD Lunch Shelters/R221551X00-A-MILLSWOOD-MS-LUNCH-SHELTER.rvt
11/28/2023 8:35:10 PM

PLEASE RECYCLE

THE LINE SHOWN ABOVE IS EXACTLY ONE INCH ON THIS SHEETS ORIGINAL PAGE SIZE

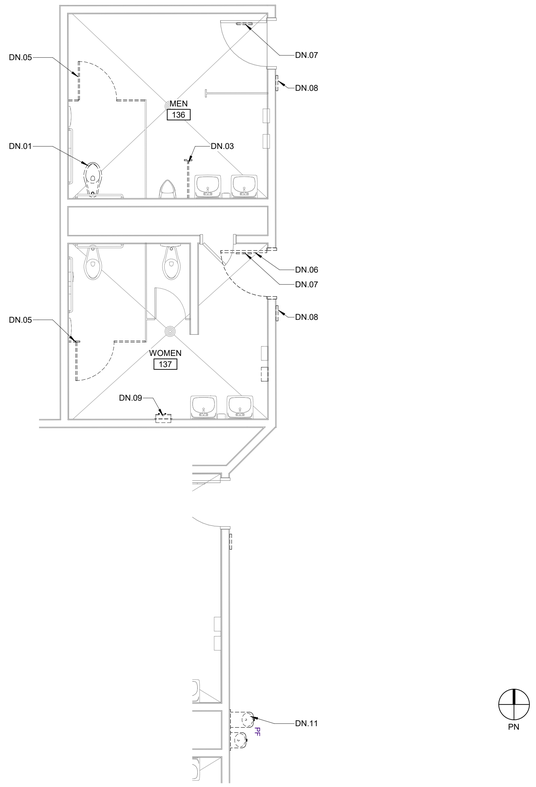

UNIT A - STAFF TOILET ROOM DEMOLITION PLAN 1

1/4" = 1'-0"

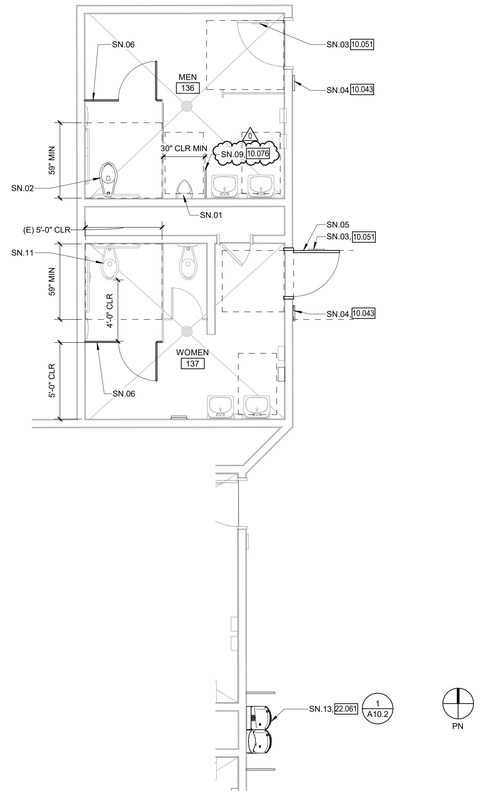

UNIT A - STAFF TOILET ROOM IMPROVEMENT PLAN 2

1/4" = 1'-0"

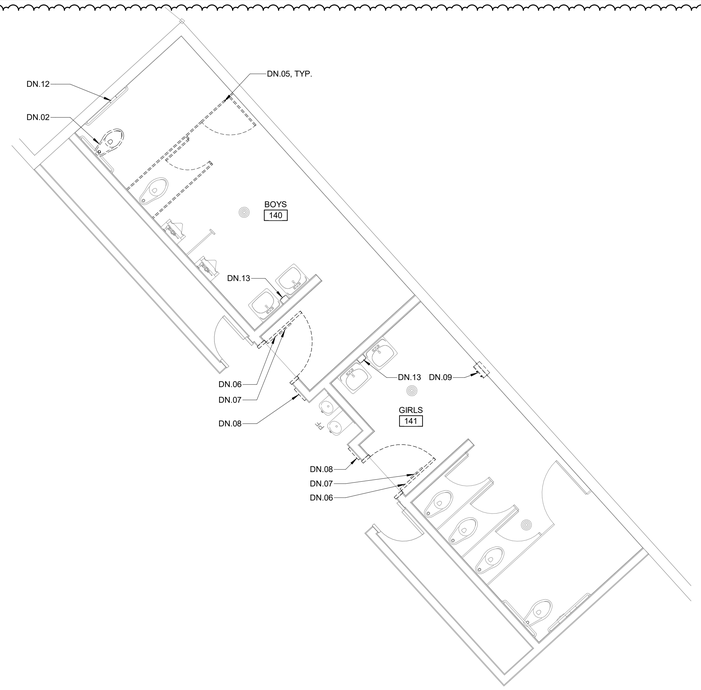

UNIT B - BOYS/GIRLS TOILET ROOM DEMOLITION PLAN 4

1/4" = 1'-0"

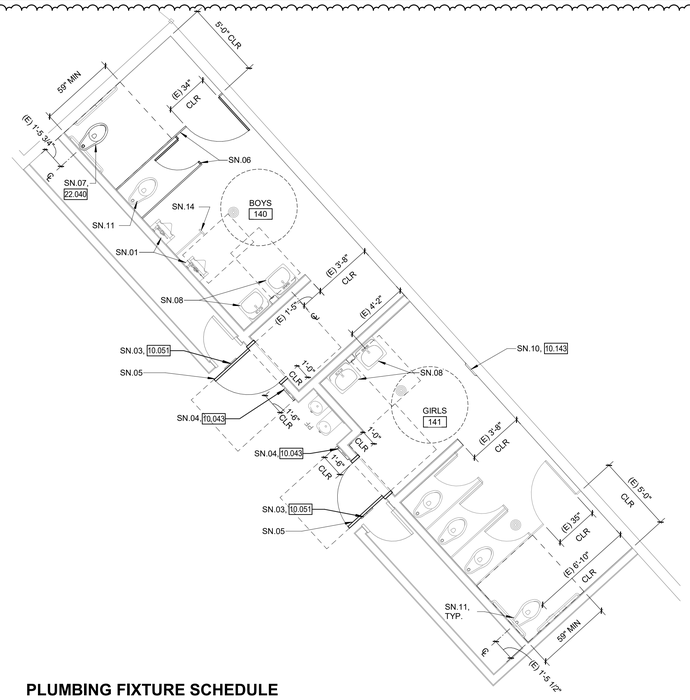

UNIT B - BOYS/GIRLS TOILET ROOM IMPROVEMENT PLAN 5

1/4" = 1'-0"

PLUMBING FIXTURE SCHEDULE

SYMBOL	FIXTURE	FIXTURE MFR AND MODEL	VALVE OR FAUCET	TRIM	NOTES
WC-1	WATER CLOSET FLUSH VALVE FLOOR MTD ADA	KOHLER HIGHCLIFF ULTRA MODEL K-6607, VITREOUS CHINA, ELONGATED, SIPHON JET ACTION, 1-1/2" TOP SPUD	"SLOAN" ROYAL MODEL 111-1.28 FLUSH VALVE 1 28 GPF W/HIGH BACK PRESSURE VACUUM BREAKER	SEAT: "CHURCH" MODEL 295SSCT ELONGATED SEAT, SELF SUSTAINING CONCEALED CHECK HINGES, ONE PIECE SS POST HINGES. WHITE.	MOUNT FLUSH HANDLE ON WIDE SIDE OF WATER CLOSET ENCLOSURE. RECONNECT TO EXISTING WASTE, WATER LINE AND VENT.

LEGEND

EXISTING WALL TO REMAIN

CONSECUTIVE NUMBERING CONVENTION FOR INTERIOR ELEVATIONS AND ROOM FINISHES.

REMOVE (E) DOOR, HARDWARE AND FRAME U.O.N.

30" x 48" CLEAR FLOOR SPACE

60" CLEAR FLOOR SPACE

GENERAL NOTES

1. TYPICAL MOUNTING HEIGHTS AND DETAILS APPLY TO ENTIRE PROJECT, WHETHER REFERENCED OR NOT, UNLESS OTHERWISE NOTED.
2. ALL DISABLED ACCESSIBLE DIMENSIONS, ARE MAXIMUM DIMENSIONS UNLESS OTHERWISE NOTED.
3. REMOVE OR MODIFY ALL ITEMS AS REQUIRED TO INSTALL NEW WORK, WHETHER OR NOT SPECIFICALLY SHOWN TO BE REMOVED OR MODIFIED.
4. WHERE DRAINS, PIPING AND OTHER MATERIALS AND EQUIPMENT ARE REMOVED FROM THE SLAB, IT SHALL BE BACKFILLED, FINISHED FLUSHED WITH ADJACENT SURFACES AND PREPARED TO RECEIVE THE NEW FINISH.
5. CUT AND PATCH EXISTING SLAB AS REQUIRED FOR NEW PLUMBING WORK.
6. DEMO AND REPAIR WALL FINISH AS NECESSARY TO PERFORM FIXTURE AND EQUIPMENT WORK AS NOTED. ADJACENT FINISHES TO BE VERIFIED BY CONTRACTOR
7. EQUIPMENT/FIXTURES NOTED AS "SALVAGED FOR REINSTALLATION" WILL BE REMOVED AND STORED BY THE CONTRACTOR PRIOR TO START OF DEMOLITION. THESE EQUIPMENT/FIXTURES SHALL BE REINSTALLED BY THE CONTRACTOR UNDER THIS CONTRACT.

DEMOLITION NOTES

DN.01 REMOVE (E) WATER CLOSET AND SALVAGE FOR REINSTALLATION
DN.02 REMOVE (E) WATER CLOSET
DN.03 REMOVE (E) URINAL PARTITION
DN.04 NOT USED
DN.05 REMOVE (E) TOILET PARTITION AND SALVAGE FOR REINSTALLATION
DN.06 REMOVE (E) DOOR AND SALVAGE FOR REINSTALLATION
DN.07 REMOVE (E) DOOR SIGNAGE
DN.08 REMOVE (E) ROOM I.D. SIGN.
DN.09 REMOVE (E) SANITARY NAPKIN DISPENSER AND RETURN TO THE DISTRICT
DN.10 REMOVE (E) PAPER TOWEL DISPENSER AND SALVAGE FOR REINSTALLATION
DN.11 REMOVE (E) DRINKING FOUNTAIN, WATER BOTTLE FILLER AND GUARDRAILS
DN.12 REMOVE (E) TOILET PAPER DISPENSER AND SALVAGE FOR REINSTALLATION
DN.13 REMOVE (E) SOAP DISPENSER AND SALVAGE FOR REINSTALLATION

SHEET NOTES

SN.01 (E) URINAL TO REMAIN
SN.02 REINSTALL SALVAGED WATER CLOSET TO COMPLY WITH A10.2
SN.03 INSTALL DOOR I.D. SIGN TO COMPLY WITH A10.2
SN.04 INSTALL ROOM I.D. SIGN TO COMPLY WITH A10.2
SN.05 REINSTALL (E) DOOR IN (E) FRAME PER NEW CONFIGURATION. ADJUST ALL HARDWARE AS REQUIRED. PATCH HOLES AND PAINT DOORS. CONTRACTOR'S OPTION, REPLACE EXISTING DOOR AND HARDWARE IN KIND
SN.06 REINSTALL SALVAGED PARTITION PER NEW CONFIGURATION. PROVIDE NEW OVERHEAD BRACE AND ACCESSORIES AS REQUIRED FOR ADJUSTMENT
SN.07 INSTALL WATER CLOSET TO COMPLY WITH A10.2. CONNECT TO (E) WASTE LINE, WATER LINE AND VENT.SEE PLUMBING FIXTURE SCHEDULE FOR WATER CLOSET TYPE
SN.08 (E) LAVATORY TO REMAIN. WRAP EXPOSED PIPE W/INSULATION
SN.09 INSTALL URINAL PARTITION TO COMPLY WITH A10.2
SN.10 INSTALL SANITARY NAPKIN DISPENSER TO COMPLY WITH A10.2
SN.11 (E) WATER CLOSET TO REMAIN
SN.12 NOT USED
SN.13 INSTALL DRINKING FOUNTAIN WITH GUARDRAILS TO COMPLY WITH A10.2
SN.14 (E) URINAL PARTITION TO REMAIN

KEYNOTES

10.043 SIGNAGE: TOILET ROOM IDENTIFICATION
10.051 SIGNAGE: TOILET ROOM DOOR SYMBOL
10.076 PLASTIC TOILET COMPARTMENT: URINAL SCREEN
10.143 TOILET ACCESSORY: SANITARY NAPKIN/TAMPON DISPENSER
22.040 WATER CLOSET
22.061 DRINKING FOUNTAIN WITH BOTTLE FILLER

AGENCY APPROVAL:

LODI USD

HMC Architects

R221551X00

2101 CAPITOL AVENUE, SUITE 100,
SACRAMENTO, CA, 95816
916 368 7990 / www.hmcarchitects.com

LICENSED ARCHITECT JEFFREY ALAN BRAND C-14648 5/31/25 RENEWAL DATE STATE OF CALIFORNIA

ISSUE

Δ	DESCRIPTION	DATE
0	Revision 1	2/24/24

NOTES

1. REFER TO SHEET G0.11 FOR TYPICAL SYMBOLS AND ABBREVIATIONS.
2. REFER TO G-SERIES SHEETS FOR ADDITIONAL INFO AND CODE REQUIREMENTS.
3. FOR ADDITIONAL ELEVATION CALLOUTS SEE ENLARGED PLANS.
4. REFER TO PARTIAL PLANS FOR MORE INFORMATION. OVERALL PLANS ARE INTENDED TO PROVIDE CONTEXT FOR PARTIAL PLANS.

KEY PLAN

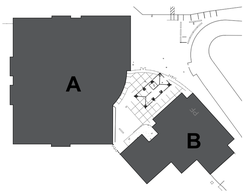

FACILITY:

MILLSWOOD MIDDLE SCHOOL
233 NORTH MILLS AVENUE
LODI, CA 95242

PROJECT:

LODI UNIFIED SCHOOL DISTRICT LUNCH SHELTERS - MILLSWOOD MIDDLE SCHOOL

SHEET NAME:

UNIT A - ENLARGED RESTROOM PLANS

CONSTRUCTION DOCUMENTS

DATE: **12/05/23** | CLIENT PROJ NO: **R221551X00**

SHEET:

A2.11

Autodesk Docs://R221551X00 Lodi USD Lunch Shelters/R221551X00-A-MILLSWOOD-MS-LUNCH-SHELTER.rvt
2/14/2024 5:23:50 PM

PLEASE RECYCLE

THE LINE SHOWN ABOVE IS EXACTLY 1" WHEN PLOTTED AT THIS SHEET'S ORIGINAL PAGE SIZE

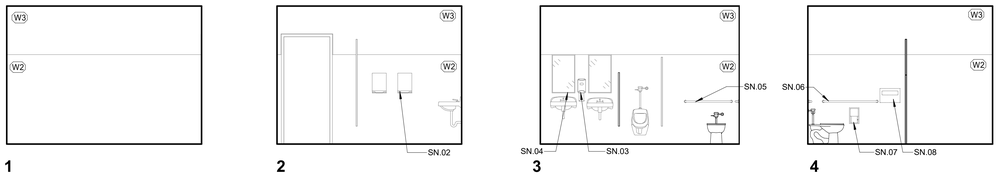

UNIT A - MENS RESTROOM 04

1/4" = 1'-0"

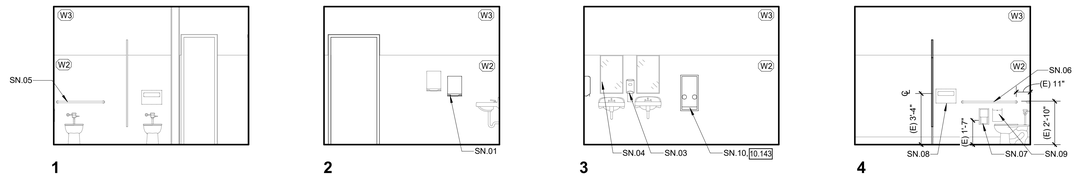

UNIT A - WOMENS RESTROOM 03

1/4" = 1'-0"

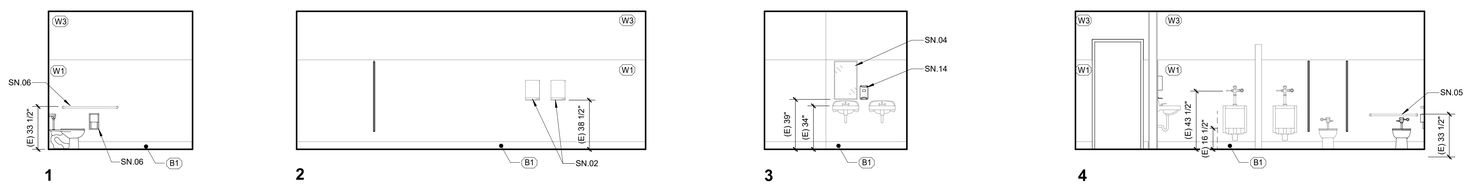

UNIT B - BOYS RESTROOM 02

1/4" = 1'-0"

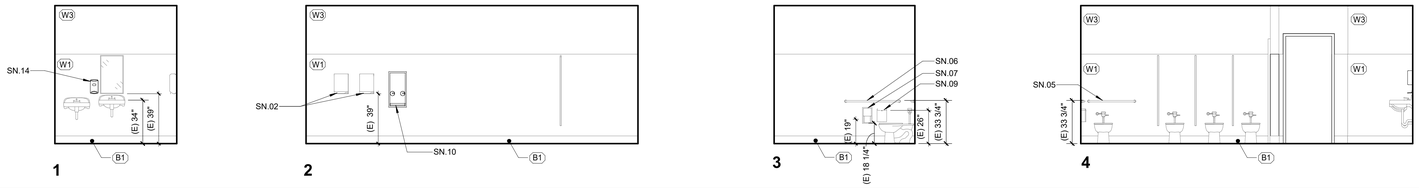

UNIT B - GIRLS RESTROOM 01

1/4" = 1'-0"

LEGEND

APPROX. EXTENT OF WALL FINISH AND BASE (AS APPLICABLE) PATCH. MATCH ADJACENT.

CONSECUTIVE NUMBERING CONVENTION FOR INTERIOR ELEVATIONS AND ROOM FINISHES.

GENERAL NOTES

1. TYPICAL MOUNTING HEIGHTS AND DETAILS APPLY TO ENTIRE PROJECT, WHETHER REFERENCED OR NOT, UNLESS OTHERWISE NOTED.
2. ALL DISABLED ACCESSIBLE DIMENSIONS, ARE MAXIMUM DIMENSIONS UNLESS OTHERWISE NOTED.
3. REMOVE OR MODIFY ALL ITEMS AS REQUIRED TO INSTALL NEW WORK, WHETHER OR NOT SPECIFICALLY SHOWN TO BE REMOVED OR MODIFIED.
4. WHERE DRAINS, PIPING AND OTHER MATERIALS AND EQUIPMENT ARE REMOVED FROM THE SLAB, IT SHALL BE BACKFILLED, FINISHED FLUSHED WITH ADJACENT SURFACES AND PREPARED TO RECEIVE THE NEW FINISH.
5. CUT AND PATCH EXISTING SLAB AS REQUIRED FOR NEW PLUMBING WORK.
6. DEMO AND REPAIR WALL FINISH AS NECESSARY TO PERFORM FIXTURE AND EQUIPMENT WORK AS NOTED. ADJACENT FINISHES TO BE VERIFIED BY CONTRACTOR
7. EQUIPMENT/FIXTURES NOTED AS "SALVAGED FOR REINSTALLATION" WILL BE REMOVED AND STORED BY THE CONTRACTOR PRIOR TO START OF DEMOLITION. THESE EQUIPMENT/FIXTURES SHALL BE REINSTALLED BY THE CONTRACTOR UNDER THIS CONTRACT.

SHEET NOTES

SN.01 REINSTALL SALVAGED PAPER TOWEL DISPENSER TO COMPLY WITH A10.2
SN.02 (E) PAPER TOWEL DISPENSER TO REMAIN
SN.03 (E) SOAP DISPENSER TO REMAIN
SN.04 (E) MIRROR TO REMAIN
SN.05 (E) 36" GRAB BAR TO REMAIN
SN.06 (E) 42" GRAB BAR TO REMAIN
SN.07 (E) TOILET PAPER DISPENSER TO REMAIN
SN.08 (E) TOILET SEAT COVER DISPENSER TO REMAIN
SN.09 (E) SANITARY NAPKIN DISPOSAL TO REMAIN
SN.10 INSTALL SANITARY NAPKIN DISPENSER TO COMPLY WITH A10.2
SN.11 NOT USED
SN.12 (E) 42" GRAB BARS TO REMAIN
SN.13 REINSTALL SALVAGED TOILET PAPER DISPENSER TO COMPLY WITH A10.2
SN.14 REINSTALL SALVAGED SOAP DISPENSER TO COMPLY WITH A10.2

KEY NOTES

10.143 TOILET ACCESSORY: SANITARY NAPKIN/TAMPON DISPENSER

FINISHES

W3 WALL
W1 (E) FIBER REINFORCED LAMINATE PANELS
W2 (E) EPOXY AND BASE
W3 (E) GYPSUM WALLBOARD

B1 BASE
B1 (E) EPOXY BASE

AGENCY APPROVAL:

LODI USD

HMC Architects
R221551X00
2101 CAPITOL AVENUE, SUITE 100,
SACRAMENTO, CA, 95816
916 368 7990 / www.hmcarchitects.com

LICENSED ARCHITECT JEFFREY ALAN BRAND C-14648 5/31/25 RENEWAL DATE STATE OF CALIFORNIA

ISSUE

Δ	DESCRIPTION	DATE
0	Revision 1	2/24/24

FACILITY:
MILLSWOOD MIDDLE SCHOOL
233 NORTH MILLS AVENUE
LODI, CA 95242

PROJECT:
LODI UNIFIED SCHOOL DISTRICT LUNCH SHELTERS - MILLSWOOD MIDDLE SCHOOL

SHEET NAME:
INTERIOR ELEVATIONS

CONSTRUCTION DOCUMENTS

DATE: **12/05/23** CLIENT PROJ NO: **R221551X00**

SHEET:

A8.11

Autodesk Docs://R221551X00 Lodi USD Lunch Shelters/R221551X00-A-MILLSWOOD-MS-LUNCH-SHELTER.rvt
2/14/2024 5:23:54 PM

PLEASE RECYCLE

THE LINE SHOWN ABOVE IS EXACTLY ONE INCH LONG ON THIS SHEETS ORIGINAL PAGE SIZE

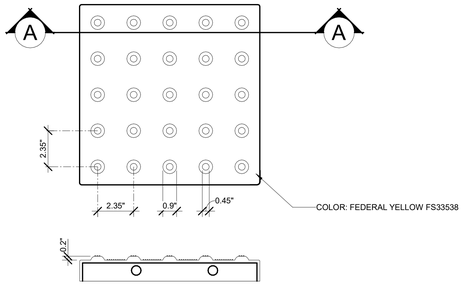

TYPICAL SECTION A-A

6 TRUNCATED DOMES

3" = 1'-0"

32220

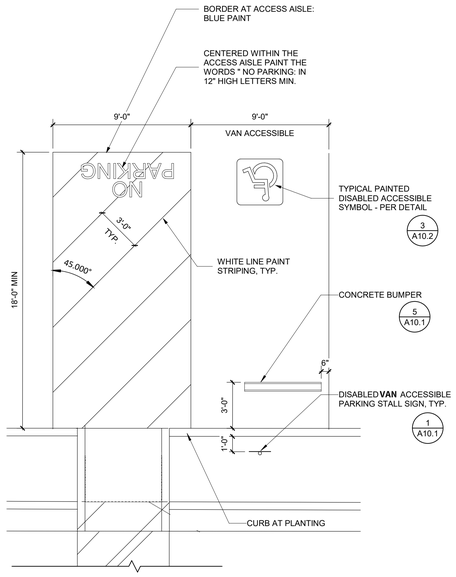

1. PARKING STALL SHALL BE STRIPED USING WHITE PAINT (U.O.N.). STRIPES SHALL BE 4" WIDE.

3 ENLARGED PARKING PLAN

1/4" = 1'-0"

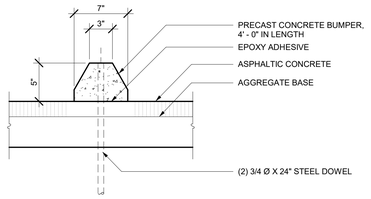

5 PRECAST CONCRETE BUMPER

1 1/2" = 1'-0"

32100

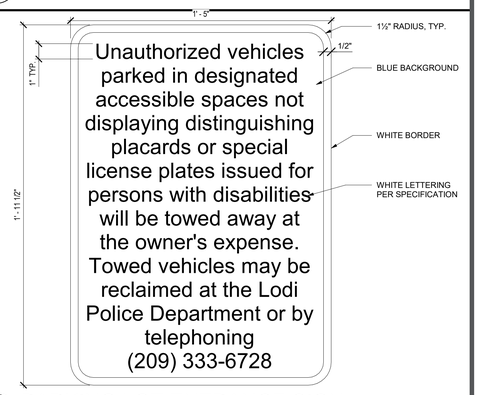

2 PARKING LOT ENTRANCE SIGN

3" = 1'-0"

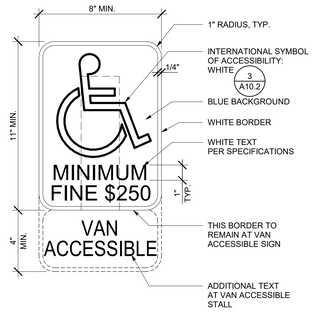

DISABLED ACCESSIBLE PARKING STALL

4 PARKING SIGNAGE

3" = 1'-0"

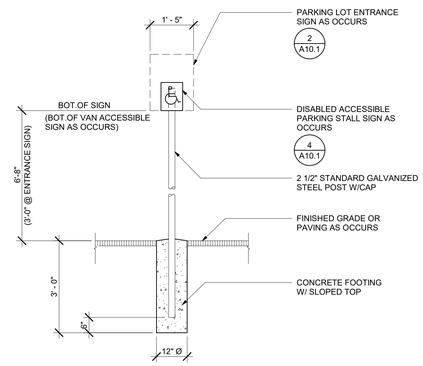

1 METAL SIGNS

1/2" = 1'-0"

10100

PLEASE RECYCLE

AGENCY APPROVAL:

IDENTIFICATION STAMP
DIV. OF THE STATE ARCHITECT
APP: 02-122005 INC:
REVIEWED FOR
SS ☑ FLS ☑ ACS ☑
DATE: 12/06/2023

LODI USD

HMC Architects

R221551X00

LICENSED ARCHITECT JEFFREY ALAN SHAPIRO C-14648 5/31/25 RENEWAL DATE STATE OF CALIFORNIA

3546 CONCOURS STREET
ONTARIO, CA 91764
909 989 9979 / www.hmcarchitects.com

ISSUE

Δ	DESCRIPTION	DATE

FACILITY:

MILLSWOOD MIDDLE SCHOOL
233 NORTH MILLS AVENUE
LODI, CA 95242

PROJECT:

LODI UNIFIED SCHOOL DISTRICT LUNCH SHELTERS - MILLSWOOD MIDDLE SCHOOL

SHEET NAME:

SITE DETAILS

CONSTRUCTION DOCUMENTS

DATE: **12/05/23** | CLIENT PROJ NO: **R221551X00**

SHEET:

A10.1

Autodesk Docs://R221551X00 Lodi USD Lunch Shelters/R221551X00-A-MILLSWOOD-MS-LUNCH-SHELTER.rvt
11/28/2023 5:35:22 PM

THE LINE SHOWN ABOVE IS EXACTLY ONE INCH LONG AT THIS SHEETS ORIGINAL PAGE SIZE

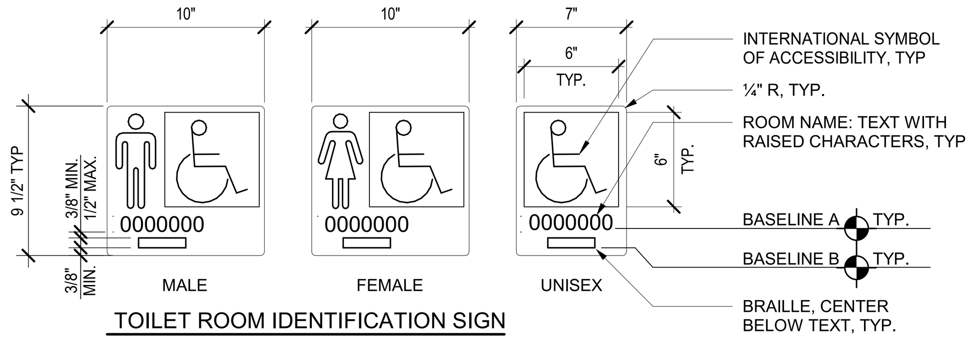

TOILET ROOM IDENTIFICATION SIGN

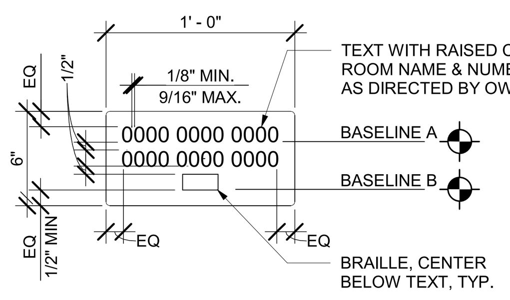

NOTES: (COMPLY W/ CBC 11B-703)

1. CHARACTERS TO BE 1" HIGH.
2. VERIFY ROOM NAME BEFORE FABRICATION.
3. **BASELINE A (BOT. OF HIGHEST LEVEL OF TEXT) = 59" A.F.F MAX., BASELINE B (LOWEST LINE OF BRAILLE) = 49" A.F.F MIN. (REFER TO 12/A10.2 FOR ACTUAL HEIGHT AND LOCATION).**

ROOM IDENTIFICATION SIGN

9 IDENTIFICATION SIGNS
1 1/2" = 1'-0"

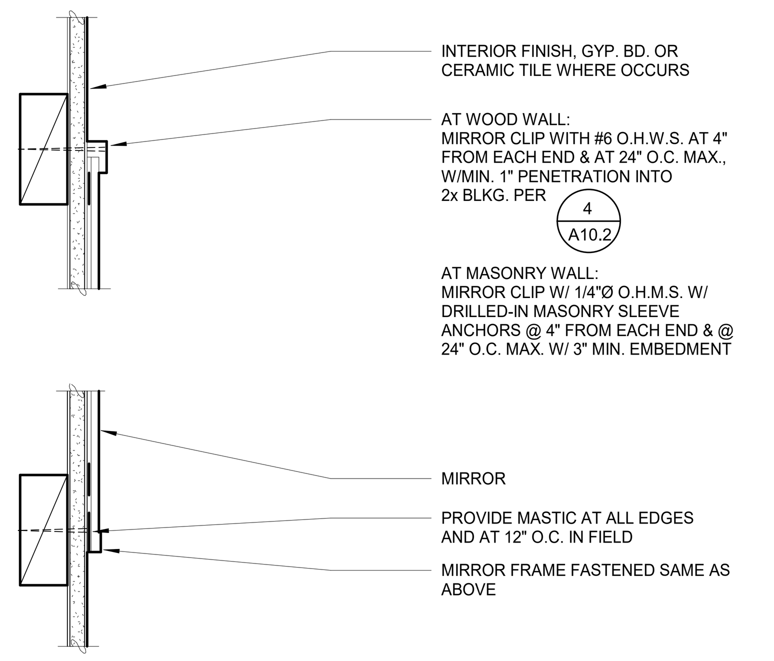

8 MIRROR ATTACHMENT
3" = 1'-0"

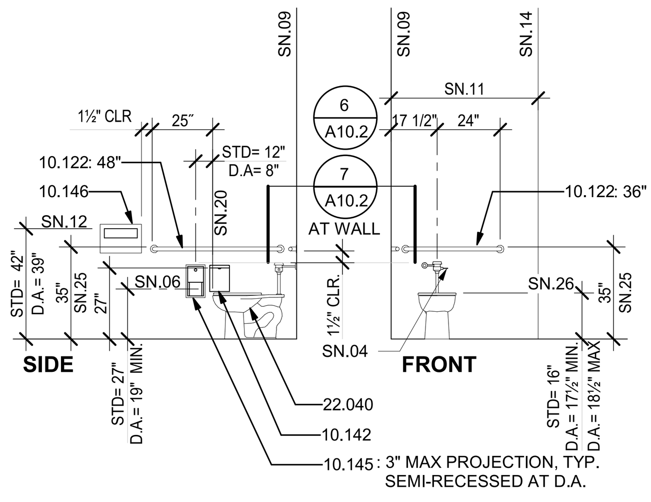

FLOOR MOUNTED WATER CLOSET

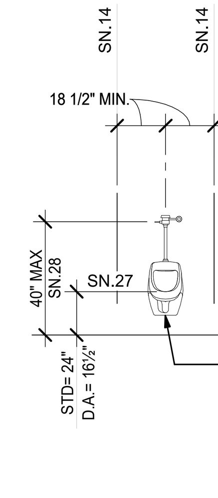

URINAL

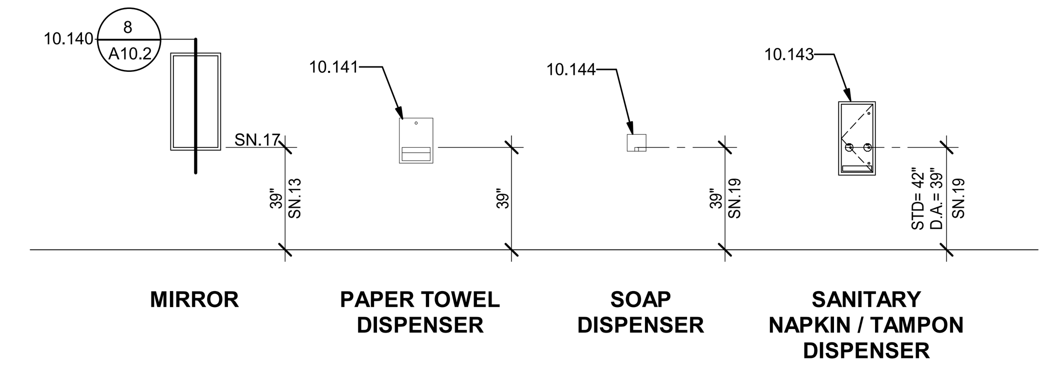

ACCESSORY HEIGHTS

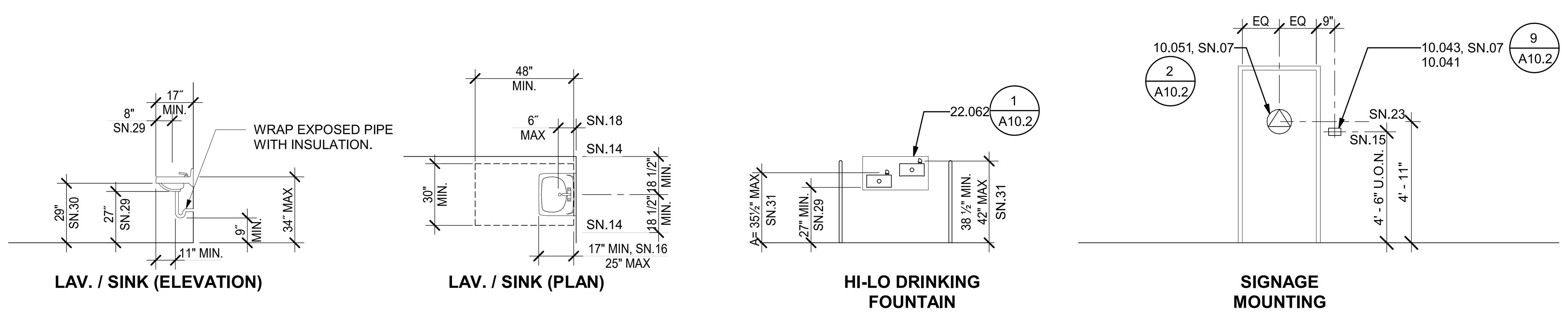

FIXTURE AND FURNITURE EQUIPMENT HEIGHTS

5 TYPICAL MOUNTING HEIGHTS AND DETAILS
1/4" = 1'-0"

LEGEND
M.S. MIDDLE SCHOOL
H.S. HIGH SCHOOL

GENERAL NOTES
1. TYPICAL MOUNTING HEIGHTS AND DETAILS APPLY TO ENTIRE PROJECT, WHETHER REFERENCED OR NOT, UNLESS OTHERWISE NOTED.
2. ALL DISABLED ACCESSIBLE DIMENSIONS, ARE MAXIMUM DIMENSIONS UNLESS OTHERWISE NOTED.
3. HEIGHTS ARE MEASURED FROM FINISH FLOOR, UNLESS OTHERWISE NOTED.

SHEET NOTES
SN.01	TOP OF SHELF
SN.02	MIDDLE SHELF FIXED
SN.03	PROVIDE 2X BLOCKING PER DETAIL 4/A10.2
SN.04	AT ACCESSIBLE WATER CLOSETS, FLUSH CONTROL HANDLE SHALL BE MOUNTED ON THE WIDE SIDE OF THE TOILET ENCLOSURE
SN.05	TO OPERATOR OR PUSH BUTTON
SN.06	DIMENSION TO CENTERLINE OF TOILET PAPER ROLL POSITION
SN.07	PROVIDE AT ALL TOILET ROOM DOORS
SN.08	AT DISABLED ACCESSIBLE CASEWORK
SN.09	TO FACE OF FINISH
SN.10	FOR SIGNS MOUNTED BACK-TO-BACK ON WINDOW GLAZING, SEE SPECIFICATIONS FOR REQUIREMENTS.
SN.11	62" CLR MIN. TO FINISH WALL/ PARTITION/ FIXTURE
SN.12	TO TOP OF OPENING
SN.13	34" MAX. IF MIRROR IS NOT MOUNTED OVER A LAV. OR COUNTER; TOP OF MIRROR 74" MIN. FOR HIGH SCHOOL & ADULTS.
SN.14	FACE OF OBJECTS OR WALLS
SN.15	CENTERLINE OF SIGN.
SN.16	19" MINIMUM AT SINK
SN.17	BOTTOM EDGE OF REFLECTIVE SURFACE
SN.18	FROM FARTHEST DEPTH OF THE CLEAR FLOOR SPACE TO FACE OF PLUMBING AND OTHER OBSTACLES
SN.19	TO CENTERLINE CONTROL.
SN.20	FRONT EDGE OF WATER CLOSET.
SN.21	NOT USED
SN.22	WHEELCHAIR, CLEAR FLOOR SPACE: 30"X48"
SN.23	CENTERLINE OF SYMBOL
SN.24	NOT USED.
SN.25	TOP OF GRAB BAR
SN.26	TOP OF SEAT
SN.27	LIP HEIGHT
SN.28	FLUSH HANDLE HEIGHT
SN.29	MINIMUM KNEE CLEARANCE
SN.30	MINIMUM APRON CLEARANCE
SN.31	BUBBLER HEIGHT
SN.32	FOR BOTTLE STATION AT DRINKING FOUNTAIN
SN.33	TO TOP OF SINK RIM; WHERE OCCURS
SN.34	ACTIVATION SENSOR.

KEYNOTES
10.041	SIGNAGE: ROOM IDENTIFICATION
10.043	SIGNAGE: TOILET ROOM IDENTIFICATION
10.051	SIGNAGE: TOILET ROOM DOOR SYMBOL
10.122	TOILET ACCESSORY: GRAB BAR
10.140	TOILET ACCESSORY: MIRROR
10.141	TOILET ACCESSORY: PAPER TOWEL DISPENSER
10.142	TOILET ACCESSORY: SANITARY NAPKIN DISPOSAL
10.143	TOILET ACCESSORY: SANITARY NAPKIN/TAMPON DISPENSER
10.144	TOILET ACCESSORY: SOAP DISPENSER
10.145	TOILET ACCESSORY: TOILET PAPER DISPENSER
10.146	TOILET ACCESSORY: TOILET SEAT COVER DISPENSER
22.040	WATER CLOSET
22.042	URINAL
22.062	BOTTLE FILL STATION

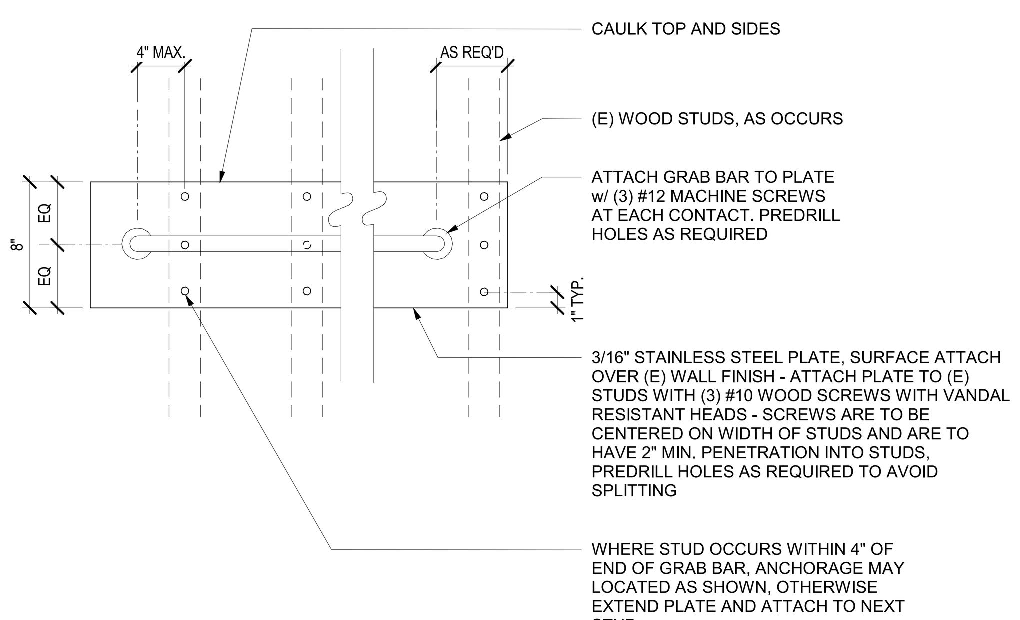

NOTES:
- EASE ALL EXPOSED STAINLESS STEEL EDGES
- (E) FINISH THICKNESS = 1" MAX.

7 GRAB BAR - STAINLESS STEEL PLATE
1 1/2" = 1'-0"

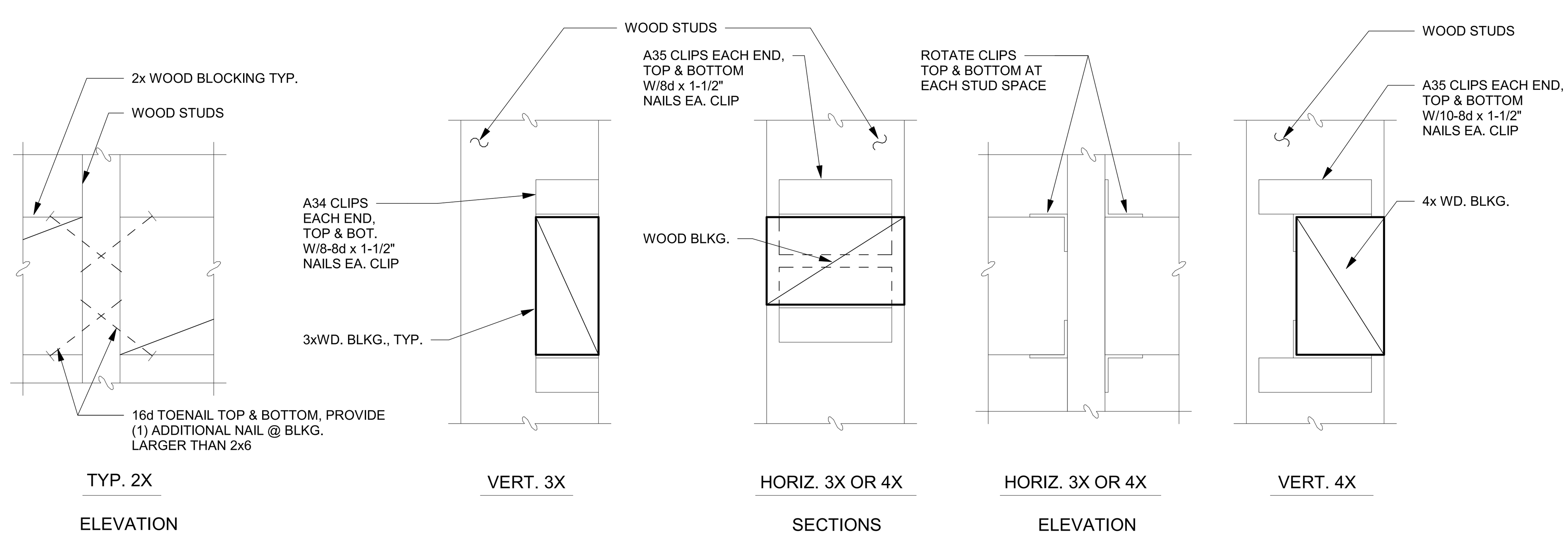

4 TYPICAL WOOD BLOCKING
3" = 1'-0"

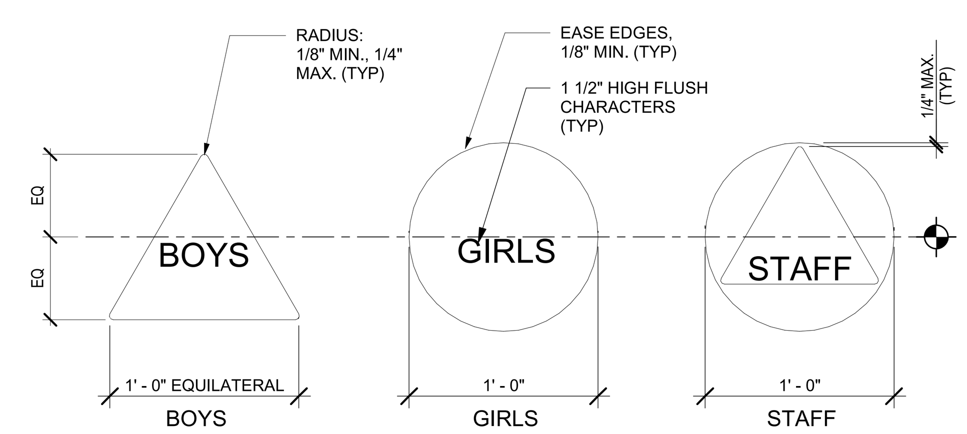

NOTE:

1. TEXT ON DOOR SYMBOL TO BE AS INDICATED ON DRAWINGS

2 TOILET ROOM DOOR SYMBOLS
1 1/2" = 1'-0"

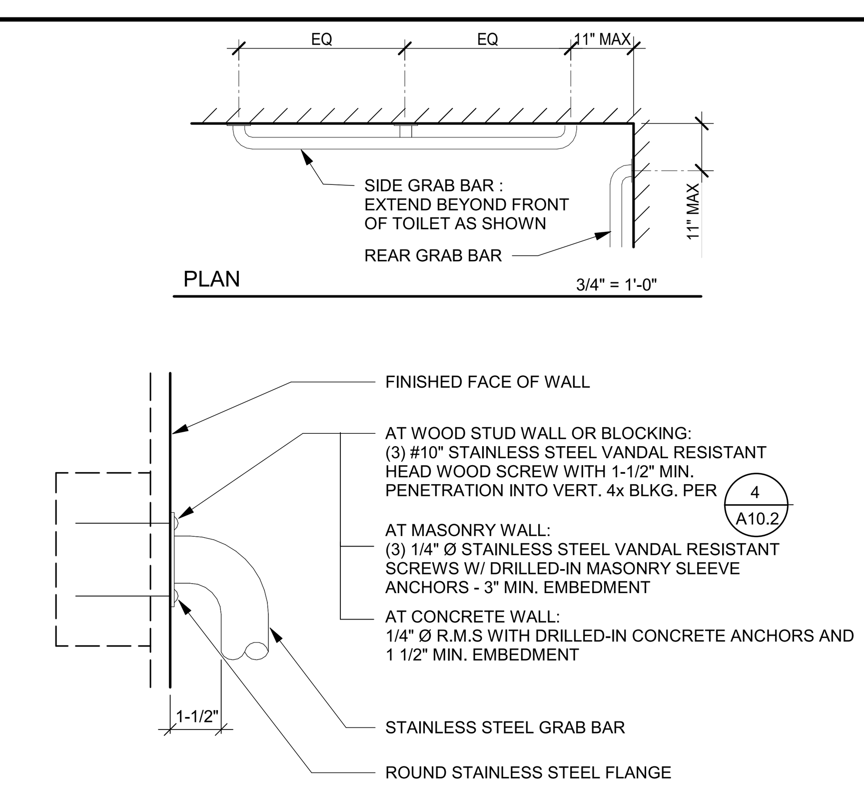

6 TYPICAL GRAB BAR AT WALL
3" = 1'-0"

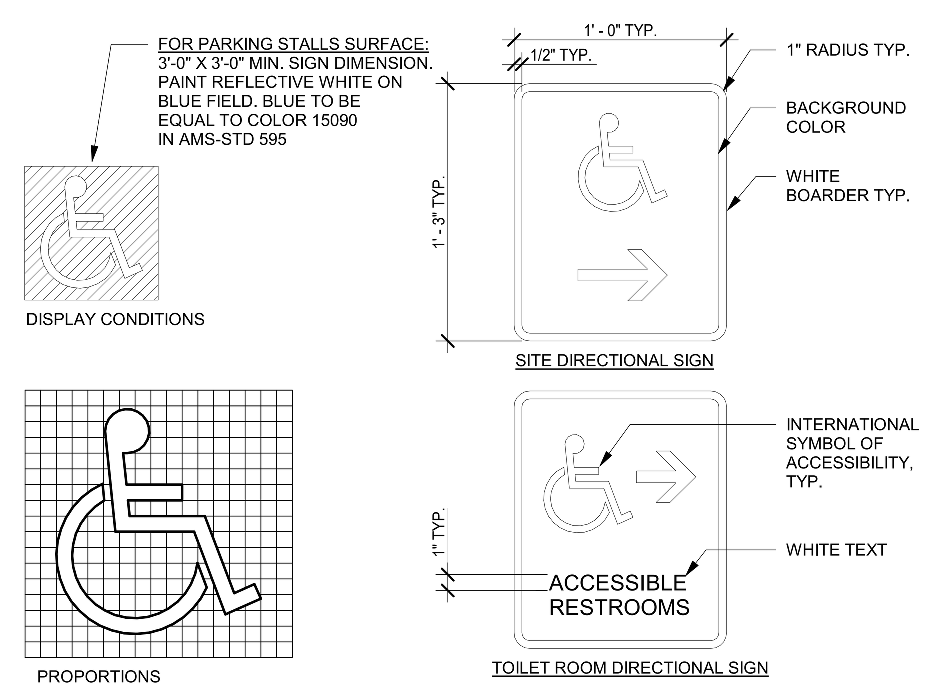

PROVIDE DIRECTIONAL SIGN WHERE SHOWN.

3 SYMBOL OF ACCESSIBILITY
NOT TO SCALE

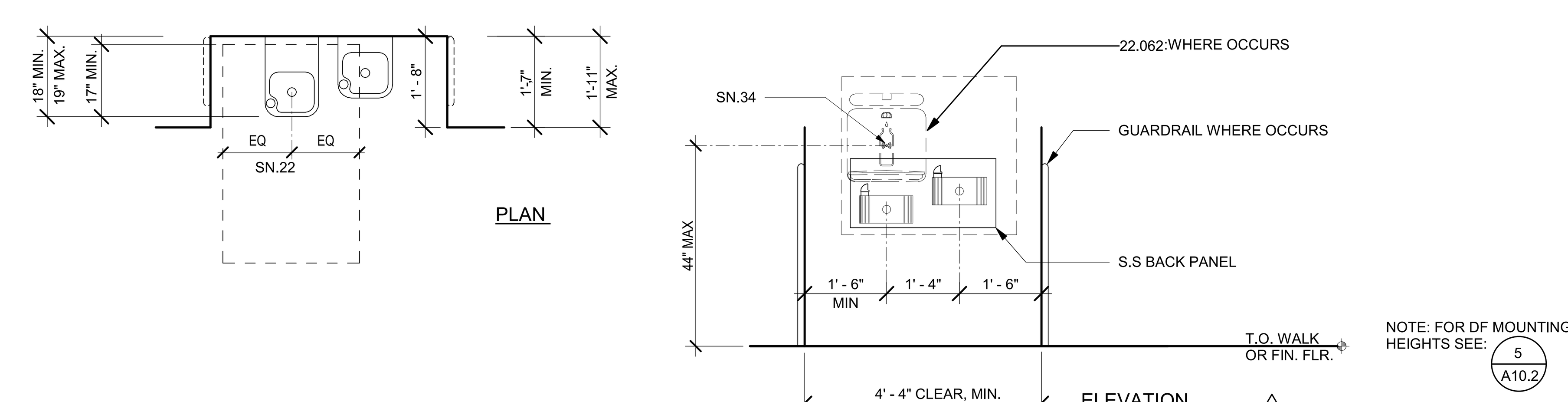

NOTE: FOR DF MOUNTING HEIGHTS SEE: 5/A10.2

PLUMBING FIXTURE SCHEDULE - BASIS OF DESIGN				UTILITY CONNECTIONS						
					WASTE		COLD WATER		HOT WATER	
	FIXTURE	FIXTURE MFR. AND MODEL	NOTES	VENT	BRANCH	OUTLET	BRANCH	OUTLET	BRANCH	OUTLET
DF-1 (ADA)	DRINKING FOUNTAIN DUAL HEIGHT BOTTLE FILLER	"HAWS" MODEL 1119FRP WALL MOUNT DUAL HEIGHT DRINKING FOUNTAIN, BARRIER FREE, PUSH BUTTON OPERATED BUBBLER, SAFE BUBBLER HEAD	PROVIDE MANUFACTURER'S INTERNAL SUPPORT SYSTEM. SET AT HEIGHT INDICATED ON ARCH DWGS FAUCET OR VALVE: INTEGRAL TRIM: INTEGRAL STRAINER AND P-TRAP	1 1/2"	2"	1 1/2"	3/4"	1/2"	-	-

1 DRINKING FOUNTAIN ALCOVE
1/2" = 1'-0"

AGENCY APPROVAL:

KEYNOTES

NOTES

HMC Architects
R221551X00
3546 CONCOURS STREET
ONTARIO, CA 91764
909 989 9979 / www.hmcarchitects.com

LICENSED ARCHITECT JEFFREY ALAN GRAU C-14648 5/31/25 RENEWAL DATE STATE OF CALIFORNIA

ISSUE

Δ	DESCRIPTION	DATE
0	Revision 1	2/24/24

FACILITY:
MILLSWOOD MIDDLE SCHOOL
233 NORTH MILLS AVENUE
LODI, CA 95242

PROJECT:
LODI UNIFIED SCHOOL DISTRICT LUNCH SHELTERS - MILLSWOOD MIDDLE SCHOOL

SHEET NAME:
TYPICAL MOUNTING HEIGHTS AND DETAILS

CONSTRUCTION DOCUMENTS

DATE: **12/05/23** CLIENT PROJ NO: **R221551X00**

SHEET:
A10.2

Autodesk Docs://R221551X00 Lodi USD Lunch Shelters/R221551X00-A-MILLSWOOD-MS-LUNCH-SHELTER.rvt
2/14/2024 5:23:58 PM

PLEASE RECYCLE

DESIGN VALUES

DESCRIPTION	DESIGN VALUES [1]
DEAD AND LIVE LOADS	
ROOF LIVE LOAD	20 PSF
ROOF DEAD LOAD (SUPERIMPOSED ON FRAME) [2]	LOAD SCENARIO= {1,2} DL = {3.5 PSF, 2.0 PSF}
ALLOWABLE SOIL PRESSURE [3, 5]	
SPREAD PAD	
VERTICAL BEARING: DL + Lr + SEISMIC (CONCRETE FOOTING)	1500 PSF
LATERAL COHESION: DL + Lr + SEISMIC (CONCRETE FOOTING)	130 PSF
DRILLED PIER	
SKIN FRICTION DOWN : DL + Lr + SEISMIC (CONCRETE FOOTING) PER 1810A.3.3.1.4	167 PSF
SKIN FRICTION (UPLIFT): DL + LR SEISMIC (CONCRETE FOOTING) PER 1810A.3.31.5	83 PSF
LATERAL BEARING: DL + Lr + SEISMIC (CONCRETE FOOTING) PER 1810A.3.3.2	100 PSF/FT
ROOF SNOW LOAD [6]	
GROUND SNOW LOAD, Pg	10 PSF
RISK CATEGORY	II
ROOF SNOW LOAD: [ ] FLAT, Pf OR [ ] LOW SLOPE, Pm OR [X] SLOPED, Ps	10 PSF
SNOW ROOF SLOPE FACTOR, Cs	1
SNOW EXPOSURE FACTOR, Ce	1.2
SNOW LOAD IMPORTANCE FACTOR, Is	1.0
THERMAL FACTOR, Ct	1.2
DRIFT SURCHARGE LOAD, Pd	0 PSF
DISTANCE FROM ADJACENT STRUCTURE, Pg = 0 PSF	4 IN
DISTANCE FROM ADJACENT STRUCTURE, Pg > 0 PSF	20 FT
ICE LOAD	0 PSF
FLOOD DESIGN	
FLOOD HAZARD AREA	NO
WIND DESIGN [4]	
BASIC WIND SPEED (3 SECOND GUST), Vult	110 MPH
EXPOSURE CATEGORY	C
TOPOGRAPHIC FACTOR, Kzt (1 MINIMUM)	1
INTERNAL PRESSURE COEFFICIENT, GCpi (IF APPLICABLE)	0.0
CLEAR WIND FLOW	YES
OBSTRUCTED WIND FLOW	YES
SEISMIC DESIGN [4]	
LATERAL FORCE-RESISTING SYSTEM	STEEL ORDINARY CANTILEVER COLUMN SYSTEM
ANALYSIS PROCEDURE	EQUIVALENT LATERAL FORCE PROCEDURE
SEISMIC DESIGN CATEGORY (SDC)	E
SEISMIC IMPORTANCE FACTOR, Ie	1.0
DESIGN BASE SHEAR, V	Cs x W
SEISMIC RESPONSE COEFFICIENT, Cs	LOAD SCENARIO = {1,2} Cs = {0.90,1.32}
RESPONSE MODIFICATION FACTOR, R	1.25
SITE CLASS [7]	E
REDUNDANCY FACTOR, p	1.3
MAPPED SPECTRAL RESPONSE ACCELERATION AT SHORT PERIOD, Ss - USED TO DETERMINE Cs	LOAD SCENARIO = {1,2} Ss = {1.406, 2.063}
SHORT-PERIOD SITE COEFFICIENT, Fa	1.2
DESIGN SPECTRAL RESPONSE ACCELERATION AT SHORT PERIOD, Sds - USED TO DETERMINE Cs	LOAD SCENARIO = {1,2} Sds (MAX) = {1.125, 1.650}
MAPPED SPECTRAL RESPONSE ACCELERATION AT 1 SECOND PERIOD, S1	LOAD SCENARIO = {1,2} S1 = {0.844, 1.07}
LONG-PERIOD SITE COEFFICIENT, Fv	2.0
DESIGN SPECTRAL RESPONSE ACCELERATION AT 1 SECOND PERIOD, Sd1	LOAD SCENARIO = {1,2} Sd1 = {1.125, 1.427}
HORIZONTAL OR VERTICAL IRREGULARITIES TYPE(S)	NONE

1. IF SITE-SPECIFICDESIGN CRITERIA ARE OUTSIDE THE LIMITS OF THESE PC DRAWINGS, CONTACT POLIGON ENGINEERING TO SEE IF AN ENGINEERING LETTER, SUPPLEMENTAL DRAWINGS, AND/OR CALCULATIONS COULD BE SUBMITTED FOR A SITE-SPECIFIC SOLUTION. ANY SITE- SPECIFIC DEVIATION FROM THIS PC MAY NOT BE SUBMITTING TO DSA AS AN OVER-THE-COUNTER.
2. STRUCTURE IS NOT DESIGNED TO SUPPORT SOLAR PANELS. STRUCTURE IS NOT DESIGNED TO SUPPORT SPRINKLER SYSTEMS IN LOAD SCENARIO 2 REGIONS.
3. GEOHAZARD REPORTS ARE REQUIRED IF THE AREA COVERED UNDER THE ROOF EXCEEDS 4000 SQ FT OR IS LOCATED WITHIN STATE OR LOCAL GEOLOGIC HAZARD ZONE. VERIFY SUBMITTAL AND APPROVAL OF A GEOHAZARD REPORT BY CGS PRIOR TO DSA SITE APPLICATION.
4. STRUCTURAL SEPARATION BETWEEN ADJACENT STRUCTURES: RAM 20= 5.0", RAM 30= 3.0"
   STRUCTURAL SEPARATION BETWEEN EXISTING STRUCTURES: RAM 20= 5.5", RAM 30= 4.0"
5. WHEN PLACING MULTIPLE CANOPIES WITH PIER FOOTINGS ADJACENT TO ONE ANOTHER, THE DESIGN MAY REQUIRE AN ANALYSIS OF GROUP EFFECTS ON THE FOUNDATIONS. THE MINIMUM CLEARANCE BETWEEN CENTER OF PIERS IS EIGHT TIMES PIER DIAMETER WITHOUT AN ACCOMPANYING ENGINEERING LETTER
6. SITE APPLICATION DESIGN PROFESSIONAL AND DSA REVIEWER SHALL VERIFY THE STRUCTURE TO BE LOCATED AT LEAST 20 FEET FROM ANY HIGHER ADJACENT STRUCTURE IF GROUND SNOW IS GREATER THAN ZERO.
7. DESIGN COMPLIES WITH THE CONDITIONS OF EXCEPTION 1 OF ASCE 7-16 SECTION 11.4.8, ITEM 2.
8. APPROVED FIRE APPARATUS ACCESS ROADS SHALL EXTEND TO WITHIN 150 FEET OF ALL PORTIONS OF THE PERIMETER OF THE STRUCTURE PER CFC 503.1.1.

ARCHITECTURAL REQUIREMENTS:

DESCRIPTION	DESIGN VALUES
TYPE OF CONSTRUCTION	II B
NUMBER OF STORIES	1
FIRE SPRINKLER SYSTEM	NOT BY POLIGON

RELATED BUILDING CODES AND STANDARDS:

TITLE 24 CODES:

2022 California Administrative Code (CAC)..........................(Part 1, Title 24, CCR)
2022 California Building Code (CBC), Volumes 1 and 2 (Part 2, Title 24, CCR)
(2021 International Building Code with 2022 California amendments)
2022 California Electrical Code ....(Part 3, Title 24, CCR)
(2020 National Electrical Code with 2022 California amendments)
2022 California Mechanical Code (CMC) ....(Part 4, Title 24, CCR)
(2021 Uniform Mechanical Code with 2022 California amendments)
2022 California Plumbing Code (CPC) ....(Part 5, Title 24, CCR)
(2021 Uniform Plumbing Code with 2022 California amendments)
2022 California Energy Code ....(Part 6, Title 24, CCR)
2022 California Fire Code (CFC) ....(Part 9, Title 24, CCR)
(2021 International Fire Code with 2022 California Amendments)
2022 California Existing Building Code (CEBC)......................(Part 10, Title 24, CCR)
2022 California Green Building Standards Code...................(Part 11, Title 24, CCR)
2022 California Referenced Standards Code .... (Part 12, Title 24, CCR)
Title 19 CCR, Public Safety, State Marshal Regulations

NFPA 13 - 2016
NFPA 72 - 2016

REFERENCE CODE SECTIONS FOR APPLICABLE STANDARDS:

2022 CBC, CHAPTER **35**
2022 CFC, CHAPTER **80**

SCOPE OF WORK NARRATIVE:

THESE DRAWINGS ILLUSTRATE THE FABRICATION AND INSTALLATION REQUIREMENTS FOR A FREE-STANDING PREFABRICATED STEEL SHADE STRUCTURE. THE ENTIRE STRUCTURAL SYSTEM IS COMPRISED OF TUBULAR STEEL MEMBERS SUPPORTED ON CONCRETE FOUNDATIONS. THE FLEXIBILITY INCLUDED HEREIN ALLOWS THIS STRUCTURE TO COMPLY WITH A WIDE VARIETY OF PROJECT SITES AND LOADING REQUIREMENTS.

INSTRUCTIONS FOR ARCHITECTS PLANNING TO SUBMIT THESE PRE-CHECKED DRAWINGS TO DSA:

STEP 1 PROJECT INFORMATION

PROJECT NAME	LODI UNIFIED SCHOOL DISTRICT LUNCH SHELTERS - ANSEL ADAMS ELEMENTARY SCHOOL	
SCHOOL DISTRICT	LODI UNIFIED SCHOOL DISTRICT	
USE AND OCCUPANCY CLASSIFICATION	**A-2**	**(PROPOSED OCCUPANCY: A1, A2, A3, A4, A5, B, E)**
OCCUPANT LOAD FACTOR	15	**(15 SQFT/PERSON MAX; 5 SQFT/PERSON MIN FOR ANY A OCCUPANCY 20 SQFT/PERSON MAX FOR B OR E OCCUPANCY)**
TOTAL ROOF AREA	**1,456**	**(MAXIMUM 4500 SQFT FOR ANY A OCCUPANCY, 10,000 SQFT FOR B OCCUPANCY, AND 5000 SQFT FOR E OCCUPANCY)**
NUMBER OF OCCUPANTS	**98**	**(MAXIMUM 300 FOR ANY A OCCUPANCY, 500 FOR B OCCUPANCY, AND 250 FOR E OCCUPANCY)**

STEP 2 DESIGN OPTIONS

ROOF DECK	[ ] MULTI-RIB (MR)	**DEFAULT**, WEIGHT 1.2 PSF
	[X] STANDING SEAM (SS)	WEIGHT 1.8 PSF
GUTTERS	[ ] NO	**DEFAULT**
	[X] YES	SEE RAM7.0 FOR DETAILS
ELECTRICAL ACCESS	[ ] NO	**DEFAULT**
	[X] YES	SEE RAM7.1 FOR DETAILS
CLEAR HEIGHT	[ ] 8'	**DEFAULT**
	[X] 10' OTHER	10' MAX

STEP 3 SEISMIC ACCELERATION

Ss 0 . 6 2 7 (g)
S1 0 . 2 6 0 (g)

STEP 4 SEISMIC REGIONS

0.000 < Ss <= 1.406 S1 <= 0.844	[X] WHITE	3.5 PSF MAX DEA LOAD
1.406 < Ss <= 2.063 S1 <= 1.070	[ ] GREEN	2.0 PSF MAX DEAD LOAD

STEP 5 TOTAL ROOF DEAD LOAD

ROOF DECK	1 . 8 PSF	SEE STEP 2' 'ROOF DECK FOR WEIGHTS
COLLATERAL	0 . 0 PSF	LIGHTING , FIRE SUPPRESSION, ETC.
TOTAL	1 . 8 PSF	ADD 'ROOF DECK' AND 'COLLATERAL'

STEP 6 LOAD SCENARIO

WHITE	TOTAL ROOF DEAD LAOD <= 3.5 PSF	[X] **LOAD SCENARIO 1**
GREEN	TOTAL ROOF DEAD LOAD < 2.0 PSF	[ ] **LOAD SCENARIO 2**

STEP 7 PC STRUCTURE

ROOF WIDTH <= 20	[ ] **RAM 20**
20 < ROOF WIDTH <= 30	[X] **RAM 30**

STEP 8 STRUCTURE SIZE

	RAM 20		RAM 30	
ROOF WIDTH	[ ] 20'	**DEFAULT**	[ ] 30'	**DEFAULT**
	[ ] ________ OTHER 9' MIN; 20' MAX		[X] **26'** OTHER	20'-6" MIN; 30' MAX
ROOF LENGTH	[ ] 44'	2 BAYS	[ ] 44'	2 BAYS
	[ ] 64'	3 BAYS	[ ] 64'	3 BAYS
	[ ] 84'	4 BAYS	[ ] 84'	4 BAYS
	[ ] ________ OTHER		[X] **56'** OTHER	3 BAYS

STEP 9 FOUNDATION TYPE

	RAM 20		RAM 30	
FOUNATION TYPE	[ ] SPREAD PAD	[ ] DRILLED PIER	[ ] SPREAD PAD	[X] DRILLED PIER

STEP 10 FOUNDATION SUMMARY

RAM 20		RAM 30	
[ ] LOAD SCENARIO 1 SPREAD PAD	[ ] LOAD SCENARIO 1 DRILLED PIER	[ ] LOAD SCENARIO 1 SPREAD PAD	[X] LOAD SCENARIO 1 DRILLED PIER
[ ] LOAD SCENARIO 2 SPREAD PAD	[ ] LOAD SCENARIO 2 DRILLED PIER	[ ] LOAD SCENARIO 2 SPREAD PAD	[ ] LOAD SCENARIO 2 DRILLED PIER

STEP 11 SHEET INDEX

BASE FRAME	RAM 20 SHEET INDEX				RAM 30 SHEET INDEX			
ROOF DECK	MR		SS		MR		SS	
FOUNDATION TYPE	SPREAD PAD	DRILLED PIER	SPREAD PAD	DRILLED PIER	SPREAD PAD	DRILLED PIER	SPREAD PAD	DRILLED PIER
SELECT ONE	[ ]	[ ]	[ ]	[ ]	[ ]	[ ]	[ ]	[X]
ORDER FORM	RAM1.0	RAM1.0	RAM1.0	RAM1.0	RAM1.0	RAM1.0	RAM1.0	RAM1.0
NOTES AND SPECIAL INSPECTIONS	RAM1.1	RAM1.1	RAM1.1	RAM1.1	RAM1.1	RAM1.1	RAM1.1	RAM1.1
FOUNDATION PLAN	RAM2.0	RAM2.1	RAM2.0	RAM2.1	RAM2.2	RAM2.3	RAM2.2	RAM2.3
FRAMING PLAN	RAM3.0	RAM3.0	RAM3.0	RAM3.0	RAM3.1	RAM3.1	RAM3.1	RAM3.1
FRAME CONNECTION DETAILS	RAM4.0	RAM4.0	RAM4.0	RAM4.0	RAM4.2	RAM4.2	RAM4.2	RAM4.2
SECTION DETAILS	RAM4.1	RAM4.1	RAM4.1	RAM4.1	RAM4.3	RAM4.3	RAM4.3	RAM4.3
ARCHITECTURAL VIEWS	RAM5.0	RAM5.0	RAM5.0	RAM5.0	RAM5.1	RAM5.1	RAM5.1	RAM5.1
ROOF CONNECTION DETAILS	RAM6.0	RAM6.0	RAM6.1	RAM6.1	RAM6.0	RAM6.0	RAM6.1	RAM6.1
MISC DESIGN OPTIONS	RAM7.0	RAM7.0	RAM7.0	RAM7.0	RAM7.0	RAM7.0	RAM7.0	RAM7.0
ELETRICAL CUTOUTS	RAM7.1	RAM7.1	RAM7.1	RAM7.1	RAM7.1	RAM7.1	RAM7.1	RAM7.1

STEP 12 MULTIPLE STRUCTURES

	ROOF WIDTH X LENGTH	QTY
MULTIPLE STRUCTURES		

STEP 1: GENERAL PROJECT INFORMATION

- IDENTIFY PROJECT NAME AND SCHOOL DISTRICT
- IDENTIFY USE AND OCCUPANCY CLASSIFICATION
  - THE USE AND OCCUPANCY DETERMINE THE MAXIMUM SQUARE FOOTAGE OF THE STRUCTURE
  - THE MAXIMUM SQUARE FOOTAGE IS ALSO LIMITED BY THE NUMBER OF OCCUPANTS
- IDENTIFY THE OCCUPANT LOAD PER TABLE 1004.5 IN THE CBC
- IDENTIFY TOTAL ROOF AREA WHICH SHALL NOT EXCEED ALLOWABLE AREA PER TABLE 506.2 IN THE CBC.
- IDENTIFY EXPECTED NUMBER OF OCCUPANTS BASED ON THE ESTIMATED OCCUPANT LOAD
  - TOTAL ROOF AREA DIVIDED BY OCCUPANT LOAD CAN DETERMINE NUMBER OF OCCUPANTS

STEP 2: DESIGN OPTIONS

- SELECT ROOF DECK FOR YOUR PROJECT
  - "MR" REPRESENTS MCELROY METAL "MULTI-RIB" ROOF DECK
  - "SS" REPRESENTS MCELROY METAL "MEDALLION-LOK" 16" STANDING SEAM ROOF DECK
- SELECT WHETHER GUTTERS AND DOWNSPOUTS FROM POLIGON IS NEEDED FOR YOUR PROJECT
  - IF "YES", THEN INCLUDE SHEET RAM7.0 IN THE DRAWING SET
- SELECT WHETHER ELECTRICAL CUTOUTS ARE NEEDED FOR YOUR PROJECT
  - SHEET RAM7.0 SHOWS ELECTRICAL CUTOUT SIZE AND LOCATION CUTOUTS IN COLUMNS
  - SHEET RAM7.1 HAS INSTRUCTIONS AND SHEET TO IDENTIFY WHICH COLUMNS
  - SHEET RAM7.1 MUST BE FILLED OUT IN THE SUBMITTAL SET APPROVED BY DSA
  - IF NOTHING IS FILLED IN ON RAM7.1, POLIGON WILL ASSUME CUTOTUS ARE ONLY IN COLUMN A1 (SEE 'FRAMING PLAN' FOR REFERENCE)
- SELECT CLEAR HEIGHT (SEE 'ARCHITECTURAL VIEWS' SHEET FOR REFERENCE)
  - MIN 7'-1"; MAX 10'-0"
- **IF NOTHING IS SELECTED, POLIGON WILL ASSUME THE DEFAULT FOR EACH DESIGN OPTION**

STEP 3: IDENTIFY THE Ss & S1 ACCELERATION (g) FOR YOUR PROJECT AND GEOTECHNICAL INFORMATION

- Ss & S1 VALUE DETERMINES THE REQUIRED SEISMIC DESIGN FORCES
- Ss & S1 VALUE DEPENDS ON PROJECT'S GEOGRAPHICAL LOCATION
  - FIND Ss & S1 VALUES FOR YOUR PROJECT IN THE SITE SPECIFIC GEOTECHNICAL REPORT
  - FIND Ss & S1 VALUES FOR YOUR PROJECT USING (https://asce7hazardtool.online/)
- THIS PC IS NOT APPROVED FOR Ss VALUES GREATER THAN 2.063 (CONTACT POLIGON FOR ADDITIONAL OPTIONS)

STEP 4: IDENTIFY THE SEISMIC REGION FOR YOUR PROJECT

- THE REGIONS ARE DEPENDANT ON THE Ss & S1 VALUE DETERMINED IN STEP 3
- THE SEISMIC REGION DICTATES THE MAXIMUM DEAD LOAD PERMITTED (SEE TABLE TO THE LEFT)

STEP 5: IDENTIFY THE ROOF DEAD LOAD FOR YOUR PROJECT

- THE ROOF DECK DEAD LOAD WILL ALWAYS BE INCLUDED
- THE COLLATERAL LOAD REPRESENTS ADDITIONAL LOAD THAT CAN BE SUPPORTED BY THE FRAME
- TOTAL ROOF DEAD LOAD MUST BE LESS THAN OR EQUAL TO THE MAX DEAD LOAD SHOWN IN STEP 4
- CUT SHEETS OF ANY BOARDS, BOXES AND EQUIPMENT TO BE MOUNTED ON THE STRUCTURE, INCLUDING WEIGHTS AND DIMENSIONS ARE REQUIRED

STEP 6: IDENTIFY THE LOAD SCENARIO

- REFERENCE THE STEP 4 COLOR AND SELECT THE APPLICABLE LOAD SCENARIO
- LOAD SCENARIOS HAVE NO IMPACT ON FRAME DESIGN OR COST, BUT DO AFFECT FOUNDATION SIZE

STEP 7: IDENTIFY PC STRUCTURE

- ROOF WIDTHS UP TO 20' WIDE USE THE "RAM 20"
- ROOF WIDTHS UP TO 30' WIDE USE THE "RAM 30"
- THE 20' AND 30' WIDTHS ARE SUGGESTED BECAUSE THEY ARE THE MOST ECONOMICAL
- MAXIMUM WIDTH IS 30'; (SEE 'ARCHITECTURAL VIEWS' SHEET FOR REFERENCE)

STEP 8: IDENTIFY SITE SPECIFIC ROOF WIDTH AND LENGTH

- DO NOT EXCEED THE TOTAL ROOF AREA FROM STEP 1 (ROOF WIDTH MULTIPLIED BY ROOF LENGTH)

STEP 9: FOUNDATION TYPE

- SELECT A FOUNDATION BASED THE DESIRED FOUNDATION TYPE
- SELECT EITHER SPREAD PAD OR DRILLED PIER FOUNDATION PRIOR TO APPROVAL
- FOUNDATION TYPE IMPACTS CONSTRUCTION (TIMING, SEQUENCE, COST, ETC.)
- FOUNDATION TYPE IMPACTS ANCHOR BOLT LENGTH (NOT PROVIDED BY POLIGON)
- REVIEW OF SITE-SPECIFIC SOILS REPORT TO EVALUATE APPLICABILITY OF FOUNDATION OPTIONS AVAILABLE

STEP 10: FOUNDATION SUMMARY

- USE THE SELECTIONS FROM STEP 6 AND STEP 9 TO SELECT THE APPROPRIATE FOUNDATION

STEP 11: SELECT APPLICABLE SHEET INDEX FOR YOUR PROJECT

- IDENTIFY THE APPLICABLE SHEET INDEX
- INCLUDE APPLICABLE SHEETS WITH YOUR DSA SUBMITTAL
- EXCLUDE 'MISC DESIGN OPTIONS' SHEET FOR PROJECTS WITHOUT ELECTRICAL CUTOUTS OR GUTTERS
- EXCLUDE 'ELECTRICAL CUTOUTS' SHEET FOR PROJECTS WITHOUT ELECTRICAL CUTOUTS

STEP 12: MULTIPLE STRUCTURES WITH THE SAME PC#

- FILL IN ROOF LENGTH AND WIDTH OF STRUCTURES AS WELL AS QUANTITY
- UNO ON THE POLIGON DRAWINGS, POLIGON WILL ASSUME ALL DESIGN CRITERIA FOR EACH STRUCTURE IS THE SAME
- CONTACT POLIGON FOR FURTHER INFORMATION

SHEET INDEX

1	RAM1.0	ORDER FORM	11	RAM4.2	FRAME CONNECTION DETAILS - RAM 30
2	RAM1.1	NOTES AND SPECIAL INSPECTIONS	12	RAM4.3	SECTION DETAILS - RAM 30
~~3~~	~~RAM2.0~~	~~FOUNDATION PLAN SPREAD PAD - RAM 20~~	~~13~~	~~RAM5.0~~	~~ARCHITECTURAL VIEWS - RAM 20~~
~~4~~	~~RAM2.1~~	~~FOUNDATION PLAN DRILLED PIER - RAM 20~~	14	RAM5.1	ARCHITECTURAL VIEWS - RAM 30
~~5~~	~~RAM2.2~~	~~FOUNDATION PLAN SPREAD PAD - RAM 30~~	~~15~~	~~RAM6.0~~	~~ROOF CONNECTION DETAILS~~
6	RAM2.3	FOUNDATION PLAN DRILLED PIER - RAM 30	16	RAM6.1	ROOF CONNECTION DETAILS
~~7~~	~~RAM3.0~~	~~FRAMING PLAN - RAM 20~~	17	RAM7.0	MISC DESIGN OPTIONS
8	RAM3.1	FRAMING PLAN - RAM 30	18	RAM7.1	ELECTRICAL CUTOUTS
~~9~~	~~RAM4.0~~	~~FRAME CONNECTION DETAILS - RAM 20~~			
~~10~~	~~RAM4.1~~	~~SECTION DETAILS - RAM 20~~			
TOTAL SHEETS = 10					

ABBREVIATIONS:

ACI	AMERICAN CONCRETE INSTITUTE	MR	MULTI-RIB ROOF PANEL (MCELROY)
AISC	AMERICAN INSTITUTE OF STEEL CONSTRUCTION	NTS	NOT TO SCALE
ASM	ASSEMBLY (INTERNAL REFERENCE)	NO	NUMBER
ASTM	AMERICAN SOCIETY FOR TESTING AND MAT'LS	OC	ON CENTER
AWS	AMERICAN WELDING SOCIETY	OSHA	OCCUPATIONAL HEALTH AND SAFETY ADM.
CBC	CALIFORNIA BUILDING CODE	PCF	POUNDS PER CUBIC FOOT
CJP	COMPLETE JOINT PENETRATION	PD	POLIGON DRAWING
CLR	CLEAR	PJ	PRETENSIONED JOINT
DEG	DEGREE	PLCS	PLACES
DIA	DIAMETER	PLT	PLATE
DIM	DIMENSION	PSF	POUNDS PER SQUARE FOOT
DSA	DIVISION OF THE STATE ARCHITECT	PSI	POUNDS PER SQUARE INCH
EQ	EQUAL	QTY	QUANTITY
FT	FEET	REF	REFERENCE
GA	GAGE	SQ	SQUARE
IN	INCHES	SS	STANDING SEAM ROOF PANEL (MCELROY)
KSI	KIPS PER SQUARE INCH	TYP	TYPICAL
MAX	MAXIMUM	UNO	UNLESS NOTED OTHERWISE
MIN	MINIMUM	USGS	U.S. GEOLOGICAL SURVEY
MISC	MISCELLANEOUS	W/	WITH
MPH	MILES PER HOUR		

SPECIFICATIONS

PART 1 - GENERAL

1.1 STRUCTURE DESCRIPTION
A. STRUCTURE(S) BASED ON THE FOLLOWING PC DESIGN(S):
1. HIP ROOF (RAM)

1.2 DESIGN REQUIREMENTS
A. MEET THE DESIGN INTENT SHOWN ON THE PC DRAWINGS APPROVED FOR THIS PROJECT.
1. DESIGN CRITERIA
2. MEMBERS SIZES
3. HIDDEN BOLTED CONNECTIONS BETWEEN STRUCTURAL MEMBERS
4. COLUMN ANCHORAGE SHALL INCLUDE FOUR (4) BOLTS IN COMPLIANCE WITH OSHA 1926.755(A)(1).
5. NO FIELD WELDING PERMITTED
6. NO FIELD PAINTING PERMITTED
7. ROOF DIMENSIONS AND SLOPES
8. EXPOSED STEEL ROOF FASTENERS (IF APPLICABLE) POWDER COATED BY MANUFACTURER
9. ROOF DECK SPANS FROM PEAK TO EAVE AND PERMITS PROPER DRAINAGE WITHOUT DEBRIS BUILD-UP.

1.3 SUBMITTALS
A. DRAWINGS AND CALCULATIONS SEALED BY A PROFESSIONAL ENGINEER LICENSED IN THE APPROPRIATE STATE.
B. ONLY MANUFACTURERS THAT SUBMIT DRAWINGS AND CALCULATIONS PRIOR TO BID SHALL BE CONSIDERED.
C. MANUFACTURER MUST BE ABLE TO SUBMIT APPROPRIATE LABORATORY TESTS FOR THE FOLLOWING:
1. FRAME FINISH REQUIREMENTS LISTED IN PART 2 OF THIS SPECIFICATION.
2. CERTIFIED MILL TEST REPORTS FOR STRUCTURAL STEEL (DESCRIBING THE CHEMICAL AND PHYSICAL PROPERTIES).
3. CERTIFIED MILL TEST REPORTS FOR STRUCTURAL BOLTS.

1.4 TECHNICAL SUPPORT
A. MANUFACTURER MUST HAVE IN-HOUSE ENGINEERING DEPARTMENT AND A PROFESSIONAL ENGINEER LICENSED IN THE APPROPRIATE STATE TO ANSWER TECHNICAL QUESTIONS.

1.5 QUALITY ASSURANCE
A. GENERAL
1. FABRICATION PROCEDURES SHALL COMPLY WITH APPLICABLE CODES AND LOCAL REGULATIONS.
2. REQUIRED STRUCTURAL TESTS AND SPECIAL INSPECTIONS INCLUDED ON THE PROJECT DSA-103 FORM.
B. MANUFACTURER QUALIFICATIONS
1. MINIMUM (10) YEARS ENGINEERING AND FABRICATING PRE-ENGINEERED STRUCTURES
2. MANUFACTURER OWNED AND OPERATED POWDER COAT PAINT FINISH SYSTEM
3. ALL AWS CERTIFIED WELDERS
4. FULL-TIME PROFESSIONAL ENGINEER ON STAFF LICENSED IN THE APPROPRIATE STATE
5. FULL-TIME AWS CERTIFIED ASSOCIATE WELDING INSPECTOR ON STAFF
6. FULL-TIME QUALITY ASSURANCE MANAGER ON STAFF
7. FULL-TIME LEED AP ON STAFF
C. MANUFACTURER CERTIFICATIONS
1. PCI 4000 CERTIFICATION THROUGH POWDER COATING INSTITUTE (PCI)
2. AISC CERTIFIED FABRICATOR

1.6 MANUFACTURER WARRANTY
A. STRUCTURE MUST HAVE (10) YEAR LIMITED WARRANTY ON STEEL FRAME MEMBERS.
B. STRUCTURE MUST HAVE (10) YEAR LIMITED WARRANTY ON PAINT SYSTEM.
C. PASS THROUGH WARRANTY OF ROOFING MANUFACTURER SHALL BE PROVIDED UPON REQUEST.

PART 2 - PRODUCTS

2.1 MANUFACTURER
A. ACCEPTABLE MANUFACTURERS
1. POLIGON, A DIVISION OF PORTERCORP.
A. 4240 N 136TH AVE., HOLLAND, MI 49424; (616) 399-1963; WWW.POLIGON.COM .
I. FOR POLIGON STRUCTURES IN *NORTHERN CALIFORNIA*, THE LOCAL REPRESENTATIVE IS ALL ABOUT PLAY (WWW.PLAYGROUNDPROS.COM). EMAIL AAP@PLAYGROUNDPROS.COM OR CALL (916) 923-2180
II. FOR POLIGON STRUCTURES IN *SOUTHERN CALIFORNIA*, THE LOCAL REPRESENTATIVE IS MIRACLE PLAYGROUND SALES (MIRACLEPLAYGROUNDSALES.COM EMAIL SALES@MIRACLEPLAYGROUND.COM OR CALL (951) 695-4515
B. SUBSTITUTION LIMITATIONS
1. THE ENGINEERING FOR THIS STRUCTURE IS ONLY APPLICABLE IF POLIGON SUPPLIES THE MATERIAL.
2. IF THE CONTRACTOR ELECTS TO SUBSTITUTE A DIFFERENT STRUCTURE, THEY ARE RESPONSIBLE TO OBTAIN THE NECESSARY DSA APPROVAL WITH:
A. NO COST TO THE DISTRICT OR ARCHITECT
B. NO CHANGE TO THE CONSTRUCTION SCHEDULE
3. SUBSTITUTIONS MUST BE APPROVED A MINIMUM OF (10) DAYS BEFORE BID.
4. ALL APPROVED MANUFACTURERS SHALL BE NOTIFIED IN WRITING BEFORE THE BID DATE.
5. SUBSTITUTE MANUFACTURERS SHALL NOT BE ALLOWED TO BID WITHOUT WRITTEN NOTIFICATION.
6. SUBSTITUTE MANUFACTURERS MUST MEET "MANUFACTURER QUALIFICATIONS" LISTED IN PART 1 OF THIS SPECIFICATION.
7. SUBSTITUTE MANUFACTURERS MUST PROVIDE PROOF OF "MANUFACTURER CERTIFICATIONS" ABOVE.
8. SUBSTITUTE MANUFACTURERS MUST PROVIDE PAINT FINISH DESCRIBED IN "FRAME FINISH" BELOW.

2.2 FRAME
A. MATERIALS
1. ANCHOR BOLTS: SEE DRAWINGS FOR REQUIREMENTS. ANCHOR BOLTS NOT PROVIDED BY MANUFACTURER
2. STRUCTURAL STEEL: SEE DRAWINGS FOR REQUIREMENTS.
3. STRUCTURAL BOLTS: SEE DRAWINGS FOR REQUIREMENTS.
B. FINISH
1. FRAME FINISH: POLI-5000 POWDER COAT. NO FIELD PAINTING PERMITTED.
A. COMPONENTS SHALL BE CLEANED, PRE-TREATED, AND FINISHED AT A FACILITY OWNED AND DIRECTLY SUPERVISED BY THE MANUFACTURER.
B. COMPONENTS SHALL BE SHOT BLASTED TO SSPC-SP10 NEAR-WHITE BLAST CLEANING. SSPC-SP2 HAND TOOL CLEANING WILL NOT BE AN ACCEPTABLE ALTERNATIVE.
C. COMPONENTS SHALL BE PRETREATED IN A (3) STAGE IRON PHOSPHATE OR EQUAL WASHER.
D. COMPONENTS SHALL RECEIVE EPOXY PRIMER COAT FOR SUPERIOR CORROSION PROTECTION.
E. COMPONENTS SHALL RECEIVE TOP COAT OF SUPER DURABLE TGIC POWDER COAT.
F. FINISH SHALL NOT HAVE ANY VOC EMISSIONS.
G. MANUFACTURER SHALL BE ABLE TO PRODUCE DOCUMENTATION STATING SAMPLE PRODUCTION COMPONENTS HAVE BEEN TESTED TO MEET THE FOLLOWING:
I. SALT SPRAY RESISTANCE PER ASTM B 117/ ASTM D 1654 TO 10,000 HOURS WITH NO CREEP FROM SCRIBE LINE AND RATING OF 10.
II. HUMIDITY RESISTANCE PER ASTM D2247-02 TO 5,000 HOURS WITH NO LOSS OF ADHESION OR BLISTERING.
III. COLOR/UV RESISTANCE PER ASTM G154-04 TO 2,000 HOURS EXPOSURE, ALTERNATE CYCLES WITH RESULTS OF NO CHALKING, 75% COLOR RETENTION, COLOR VARIATION MAXIMUM 3.0 E VARIATION CIE FORMULA (BEFORE AND AFTER 2,000 HOURS EXPOSURE).
2. FRAME COLOR: DETERMINED BY DISTRICT.
C. FABRICATION
1. FABRICATE COMPONENTS TO PERMIT BOLTED CONNECTIONS ON SITE. NO FIELD WELDING PERMITTED.
2. LABEL EACH MEMBER WITH UNIQUE PART NUMBER TO STREAMLINE ERECTION.
3. WELDING REQUIREMENTS: SEE DRAWINGS FOR REQUIREMENTS.

2.3 ROOF
A. MATERIALS
1. ROOF MATERIAL: SEE DRAWINGS FOR REQUIREMENTS.
2. ROOF HARDWARE: SEE DRAWINGS FOR REQUIREMENTS.
B. FINISH
1. ROOF FINISH: KYNAR 500 HIGH-PERFORMANCE RESIN-BASED PAINT.
2. ROOF COLOR: DETERMINED BY OWNER.

2.4 MISCELLANEOUS
A. MATERIALS
1. CONCRETE MATERIAL: SEE DRAWINGS FOR REQUIREMENTS. CONCRETE NOT PROVIDED BY MANUFACTURER.

PART 3 - EXECUTION

3.1 STORAGE AND HANDLING
A. PROTECT MATERIAL AFTER DELIVERY FROM WEATHER, SUNLIGHT, AND DAMAGE.
B. ELEVATE MATERIAL TO ALLOW CIRCULATION AND REDUCE MOLD, FUNGI DECAY, AND INSECT INFESTATION.
C. HANDLE MATERIAL WITH PROTECTIVE STRAPS OR PADDED FORKLIFT. HANDLING MATERIAL WITH CHAIN OR CABLE WILL NOT BE ACCEPTED AND MAY VOID MANUFACTURER'S WARRANTY.
D. TO PREVENT MOISTURE DAMAGE TO ANY WOOD MATERIAL (IF APPLICABLE), KEEP WOOD PACKAGED BEFORE INSTALLATION AND COVER IMMEDIATELY WITH ANY SECONDARY ROOF MATERIAL.

3.2 ERECTION
A. INSTALL COMPONENTS ACCORDING TO MANUFACTURER'S INSTALLATION DRAWINGS AND THESE SPECIFICATIONS.
B. ANCHOR BOLT AND COLUMN LAYOUT IS CRITICAL.
C. COMPLY WITH SPECIFIC BOLTING INSTALLATION REQUIREMENTS PROVIDED ON DRAWINGS REQUIRING THE CONTRACTOR TO COORDINATE THIS PHASE OF CONSTRUCTION WITH THE SPECIAL BOLTING INSPECTOR AND THE INSPECTOR OF RECORD *PRIOR TO THE ERECTION OF THE FRAME.*
D. NO FIELD SLOTTING OR OPENING OF HOLES WILL BE ALLOWED. TOLERANCES ON STEEL STRUCTURAL MEMBERS ARE SET ACCORDING TO AISC CONSTRUCTION PRACTICES, FOLLOWED DURING FABRICATION, AND CANNOT BE INCREASED.
E. AFTER INSTALLATION, RESTORE DAMAGED SURFACES TO THE ORIGINAL CONDITION USING TOUCH-UP PAINT PROVIDED BY MANUFACTURER. IF THE ARCHITECT DOES NOT ACCEPT THAT, REPLACE DAMAGED MATERIAL AT NO COST TO THE DISTRICT.
F. COORDINATE AS REQUIRED WITH OTHER DISCIPLINES (ELECTRICAL, PLUMBING, ETC.)
G. COMPLY WITH ALL APPLICABLE OHSA REQUIREMENTS

3.3 REPAIR
A. DO NOT ATTEMPT ANY FIELD CHANGES TO THE STRUCTURE WITHOUT FIRST CONTACTING THE MANUFACTURER.

3.4 QUALITY CONTROL
A. TESTS AND INSPECTIONS DURING ERECTION ARE NOT REQUIRED BY THE MANUFACTURER, BUT MAY BE REQUIRED BY OTHERS.
B. THE PROJECT INSPECTOR, AND ENTIRE CONSTRUCTION OVERSIGHT PROCESS, SHALL COMPLY WITH DSA PR 13-01. DO NOT PROCEED UNTIL UNSATISFACTORY CONDITIONS HAVE BEEN CORRECTED.

STATE APPROVALS-SITE

IDENTIFICATION STAMP
DIV. OF THE STATE ARCHITECT
APP: 02-122005 INC:
REVIEWED FOR
SS ☑ FLS ☑ ACS ☑
DATE: 12/06/2023

4080 PLAZA GOLDORADO CIRCLE
SUITE B,
CAMERON PARK, CA 95682
530.677.5615

GHD

poligon
PORTER

REGISTERED PROFESSIONAL ENGINEER
JESSICA E. NAPIER
No. S5476
STRUCTURAL
STATE OF CALIFORNIA

STATE APPROVALS-PC

IDENTIFICATION STAMP
DIV. OF THE STATE ARCHITECT
APP: 02-121213 PC
REVIEWED FOR
SS ☑ FLS ☑ ACS ☑ CG ☐
DATE: 7/18/2023

PRE-CHECK (PC) DOCUMENT
CODE: 2022 CBC
A SEPARATE PROJECT APPLICATION FOR CONSTRUCTION IS REQUIRED.

ORDER FORM

HIP ROOF - RAM

RAM1.0

GENERAL:

1. GENERAL NOTES AND TYPICAL DETAILS SHALL APPLY TO ALL PARTS OF THE JOB EXCEPT WHERE THEY MAY CONFLICT WITH DETAILS AND NOTES ON OTHER SHEETS. WHERE CONDITIONS ARE NOT SPECIFICALLY INDICATED BUT ARE OF SIMILAR CHARACTER TO DETAILS SHOWN, SIMILAR DETAILS OF CONSTRUCTION SHALL BE USED SUBJECT TO REVIEW BY THE STRUCTURAL ENGINEER FOR THIS PROJECT.
2. WORK SHALL CONFORM TO THE REQUIREMENTS, AS AMENDED TO DATE, OF THE LATEST ADOPTED EDITION OF THE CBC, C.A.C. TITLE 24, AND ALL OTHER LOCAL, STATE AND FEDERAL REGULATIONS.
3. OMISSIONS OR CONFLICTS BETWEEN THE VARIOUS ELEMENTS OF THE WORKING DRAWINGS AND/OR SPECIFICATIONS SHALL BE BROUGHT TO THE ATTENTION OF THE STRUCTURAL ENGINEER FOR THIS PROJECT PRIOR TO PROCEEDING WITH ANY WORK INVOLVED.
4. THE CONTRACTOR SHALL BE RESPONSIBLE FOR COORDINATING THE WORK OF ALL TRADES AND SHALL CHECK ALL DIMENSIONS. ALL DISCREPANCIES SHALL BE CALLED TO THE ATTENTION OF THE STRUCTURAL ENGINEER FOR THIS PROJECT AND BE RESOLVED BEFORE PROCEEDING WITH THE WORK.
5. THESE CONSTRUCTION DRAWINGS AND SPECIFICATIONS REPRESENT THE FINISHED STRUCTURE AND DO NOT INDICATE THE METHOD OF CONSTRUCTION. THE CONTRACTOR SHALL SUPERVISE AND DIRECT THE WORK AND SHALL BE SOLELY RESPONSIBLE FOR CONSTRUCTION MEANS, METHODS, TECHNIQUES, SEQUENCES AND PROCEDURES, INCLUDING, BUT NOT LIMITED TO, BRACING, TEMPORARY SUPPORTS, AND SHORING. OBSERVATION VISITS TO THE SITE BY FIELD REPRESENTATIVES OF THE ARCHITECT/ENGINEER SHALL NOT INCLUDE INSPECTIONS OF THE PROTECTIVE MEASURES OR THE CONSTRUCTION PROCEDURES. ANY SUPPORT SERVICES PERFORMED BY THE ARCHITECT/ENGINEER DURING THE CONSTRUCTION SHALL BE DISTINGUISHED FROM CONSTRUCTION AND DETAILED INSPECTION SERVICES WHICH ARE FURNISHED BY OTHERS. THESE SUPPORT SERVICES PERFORMED BY THE ARCHITECT/ENGINEER, WHETHER OF MATERIAL OR WORK, ARE FOR THE PURPOSE OF ASSISTING IN QUALITY CONTROL AND IN ACHIEVING CONFORMANCE WITH CONTRACT DOCUMENTS, BUT DO NOT GUARANTEE CONSTRUCTION.
6. ASTM DESIGNATIONS AND ALL STANDARDS REFER TO THE LATEST AMENDMENTS.
7. CONFORM TO APPLICABLE CAL/OSHA CONSTRUCTION SAFETY REGULATIONS FOR ALL WORK PERFORMED DURING CONSTRUCTION. JOB SITE SAFETY IS STRICTLY THE RESPONSIBILITY OF THE CONTRACTOR AND NOT THE ARCHITECT/ENGINEER OR OWNER.
8. THE ENGINEER AND THEIR CONSULTANTS SHALL HAVE NO RESPONSIBILITY FOR THE DISCOVERY, HANDLING, REMOVAL OR DISPOSAL OF HAZARDOUS MATERIALS AT THE PROJECT SITE, INCLUDING BUT NOT LIMITED, TO ASBESTOS, ASBESTOS PRODUCTS, POLYCHLORINATED BIPHENYL (PCB) OR OTHER TOXIC SUBSTANCES.
9. SHOULD ANY CONDITIONS DEVELOP NOT COVERED BY THE CONTRACT DOCUMENTS, OR IF A CHANGE IN THE SCOPE OF WORK IS PROPOSED, A CONSTRUCTION CHANGE DOCUMENT DETAILING AND SPECIFYING THE REQUIRED CHANGE(S) SHALL BE SUBMITTED TO AND APPROVED BY DSA BEFORE PROCEEDING WITH THE WORK.
10. THE SCHOOL DISTRICT'S INSPECTOR OF RECORD SHALL INSPECT AND APPROVE THE ERECTED FRAME PRIOR TO ROOF INSTALLATION.
11. SEE REQUIREMENTS FOR LOCATION IN ANY FIRE HAZARD SEVERITY ZONE FOR WILDLAND URBAN INTERFACE AREAS (WUI) AS SPECIFIED IN THE APPLICABLE VERSION OF THE CALIFORNIA BUILDING CODE. PROVIDE PROTECTION AND DETAILS OF ALL AREAS COMPLYING WITH THE WUI REQUIRMENTS.
12. LOCATING THIS STRUCTURE CLOSER THAN 20 FEET TO OTHER STRUCTURES MAY AFFECT THE ALLOWABLE AREA FOR THE EXISTING CONSTRUCTION PER THE APPLICABLE VERSION OF THE CALIFORNIA BUILDING CODE.
13. VIEWS AND DETAILS ARE NOT DRAWN TO SCALE (UNLESS NOTED OTHERWISE). DO NOT SCALE THESE DRAWINGS.
14. OTHER SITE SPECIFIC ITEMS MAY BE REQUIRED.
15. WHEN A SITE-SPECIFIC PROJECT IS LOCATED IN A FLOOD ZONE OTHER THAN ZONE X, A LETTER STAMPED AND SIGNED FROM A SOILS ENGINEEER IS NEEDED TO VALIDATE THE ALLOWABLE SOIL VALUES SPECIFIED IN THE PC ARE STILL APPLICABLE.

STRUCTURAL AND MISCELLANEOUS STEEL:

1. ALL STRUCTURAL STEEL SHALL BE DETAILED, FABRICATED AND ERECTED IN ACCORDANCE WITH THE AMERICAN INSTITUTE OF STEEL CONSTRUCTION (AISC) 360 - 16 AND 303-16 MANUAL REFERENCED BY THE 2022 EDITION OF THE CALIFORNIA BUILDING CODE.
2. PIPE SECTIONS SHALL CONFORM TO ASTM A53, Fy = 35 ksi, GRADE B UNLESS NOTED OTHERWISE.
3. STRUCTURAL TUBING (HSS SHAPES) SHALL CONFORM TO ASTM A500, GRADE B (OR HIGHER), Fy = 46 KSI.
4. IF MATERIAL AVAILABILITY IS LIMITED, MEMBER THICKNESSES CAN BE INCREASED BEYOND WHAT IS SHOWN IN THESE DRAWINGS (MAXIMUM INCREASE OF 1/8").
5. ALL CHANNELS, ANGLES, PLATES AND MISC. STEEL SHALL CONFORM TO ASTM A36, Fy = 36 KSI.
6. ALL COLD FORM STEEL SHALL CONFORM TO ASTM A653, CS = TYPE B, Fy = 50 KSI.
7. STRUCTURAL STEEL AND DECK SHALL BE IDENTIFIED FOR CONFORMITY PER CBC 2202A.1.
8. ROOF DECK SHALL HAVE KYNAR 5000 METAL COATING.
9. ROOF DECK SHALL CONFORM TO ATSM A792, Fy = 50 KSI.
10. MR ROOF SCREWS MEET ASTM A510 WITH A HEAD DIMENSION OF 0.31" (FLAT-TO-FLAT) AND INTEGRAL WASHER DIMENSION OF 0.58" (OUTSIDE DIAMETER).
11. SS ROOF SCREWS MEET ASTM A510 WITH A HEAD DIMENSION OF 0.437" (OUTSIDE DIAMETER).

WELDING:

1. ALL WELDING SHALL COMPLY WITH AWS D1.1 SPECIFICATIONS AND SHALL BE DONE BY AWS QUALIFIED WELDERS CERTIFIED FOR THE TYPE OF WELDING TO BE PERFORMED.
2. ALL WELDING SHALL BE DONE BY GAS METAL ARC PROCESS WITH E70XX ELECTRODES. FLUX CORE ARC WELD SHALL CONFORM TO CHARPY NOTCH TOUGHNESS RATING OF 20 ft-lb @ (O° F).
3. ALL WELDING SHALL BE DONE IN THE SHOP WITH REQUIRED INSPECTION, PRE-APPROVED BY DSA, TO ENSURE PROPER MATERIAL ID AND WELDING.
4. WELD FILLER METAL MANUFACTURER SHALL PROVIDE WRITTEN CERTIFICATION OF COMPLIANCE WITH CODE AND SPECIFICATIONS.

BOLTING:

1. ALL BOLTS SHOWN ON THESE DRAWINGS ARE ASTM F3125 (A325 TYPE 1) HIGH STRENGTH BOLTS (UNO) AND SHALL BE HOT DIPPED GALVANIZED PER ASTM F2329.
2. HIGH STRENGTH BOLTS SHALL BE SAMPLED AND TESTED IN COMPLANCE WITH CBC 2213A.1.
3. BEFORE ERECTING THE FRAME, VERIFY ALL BOLTS AND NUTS ARE CLEAN OF DEBRIS AND BURRS - INCLUDING THE HARDWARE ALREADY FASTENED INSIDE THE MEMBERS. CHASING SOME OF THE BOLTS AND NUTS MAY BE REQUIRED.
4. ANCHOR BOLTS (HEAVY HEX HEAD, ASTM F1554, GRADE 55) SHALL BE HOT DIPPED GALVANIZED PER ASTM F2329. ANCHOR BOLTS MAY BE HEADED OR THREADED WITH A NUT THAT IS PREVENTED FROM ROTATING.
5. HIGH STRENGTH NUTS SHALL CONFORM TO ASTM A563 AND SHALL BE GALVANIZED PER ASTM F2329.
6. HIGH STRENGTH WASHERS SHALL CONFORM TO ASTM F436 AND SHALL BE GALVANIZED PER ASTM F2329.
7. THE BOLTING INSTALLATION REQUIREMENTS OUTLINED BELOW ARE CRITICAL TO THE STRUCTURE'S DESIGN AND PERFORMANCE. **THE INSTALLER IS REQUIRED TO COORDINATE THIS PHASE OF CONSTRUCTION WITH THE SPECIAL BOLTING INSPECTOR AND THE INSPECTOR OF RECORD PRIOR TO THE ERECTION OF THE FRAME**. ALL BOLTS SHALL BE INSTALLED AND INSPECTED PER THE APPLICABLE VERSION OF AISC'S "SPECIFICATION FOR STRUCTURAL JOINTS USING HIGH-STRENGTH BOLTS", CBC 1705A.2.1; AISC 341-16 J7; AISC 360-16 N5.6.

   A. PRETENSIONED JOINTS (IDENTIFIED ON THE FRAME CONNECTION DETAILS WITH A "PJ REQUIRED") MUST BE INSTALLED AND INSPECTED TO MEET ONE OF FOLLOWING REQUIREMENTS:

      1. TURN-OF-NUT PRETENSIONING
      2. CALIBRATED WRENCH PRENTENSIONING
      3. DIRECT-TENSION-INDICATOR PRETENSIONING (CONTRACTOR RESPONSIBLE FOR PURCHASE OF REQUIRED WASHERS)

   B. ALL OTHER JOINTS MUST BE INSTALLED AND INSPECTED TO MEET THE REQUIREMENTS OF SNUG-TIGHTENED JOINTS. **NOTE TO INSTALLER AND INSPECTOR(S): THE SNUG-TIGHT CONDITION EXISTS, IN PART, WHEN ALL THE BOLTS IN THE JOINT HAVE BEEN TIGHTENED SUFFICIENTLY TO PREVENT THE REMOVAL OF THE NUTS WITHOUT THE USE OF A WRENCH.**

   THE CONTRACTOR, SPECIAL BOLTING INSPECTOR AND THE INSPECTOR OF RECORD MUST ALL AGREE ON WHICH APPROACH WILL BE USED TO PRETENSION THE BOLTS. THE CONTRACTOR IS RESPONSIBLE FOR DOCUMENTING THE APPROACH AGREED TO BY ALL PARTIES LISTED ABOVE.

FOUNDATIONS:

1. ALLOWABLE SOIL PRESSURES ASSUME CLASS 5 SOIL CLASSIFICATION PER 2022 CBC TABLE 1806A. 2.
2. FILL AND BACKFILL SHALL BE COMPACTED TO 95% OF MAX. DENSITY IN ACCORDANCE WITH ASTM TEST METHOD D1557. FLOODING NOT PERMITTED.
3. THE CONTRACTOR SHALL BE RESPONSIBLE FOR ALL SHORING, ETC. NECCESSARY TO SUPPORT CUT AND/OR FILL BANKS DURING EXCAVATION, AND FORMING AND PLACEMENT OF CONCRETE.
4. STRUCTURES SHALL BE SETBACK FROM ADAJCENT SLOPES TO PROVIDE FIRM MATERIAL FOR EMBEDMENT AND FOR PROTECTION FROM SLOPE DRAINAGE, EROSION, AND SHALLOW FAILURES.

   A. BOTTOM OF ASCENDING SLOPE: THE SMALLER OF HALF THE HEIGHT OF THE SLOPE AND 15FT MEASURED FROM THE FACE OF THE STRUCTURE TO THE TOE OF THE SLOPE
   B. TOP OF DECENDING SLOPE: THE SMALLER OF A THIRD OF THE HEIGHT OF THE SLOPE AND 40 FT MEASURED FROM THE FACE OF THE FOOTING TO THE TOP OF THE SLOPE

   ALTERNATE SETBACKS ARE PERMITTED, SUBJECT FOR APPROVAL. A GEOTECHNICAL INVESTIGATION MAY BE REQUIRED.
5. STRUCTURES PLACED ON LIQUIFIABLE SOILS OR SITE CLASS F MAY NOT BE SUBMITTED FOR AN OVER THE COUNTER REVIEW.

CONCRETE:

1. MIX DESIGN REQUIREMENTS: (NORMAL WEIGHT CONCRETE)

MINIMUM STRENGTH f'c (28 DAYS)	EXPOSURE CATEGORY	W/C RATIO MAXIMUM)	SLUMP (± 1")	UNIT WEIGHT (NORMAL WEIGHT)
5000 PSI	F3, S3, W2, C2	0.4	4"	150 PCF

2. CHANGES TO THE MIX DESIGN MUST BE APPROVED BY THE ENGINEER OR ARCHITECT OF RECORD AND DSA
3. AGGREGATES SHALL CONFORM TO ASTM C33. MAX AGGREGATE SIZE = 1".
4. CEMENT SHALL CONFORM TO ASTM C150 (TYPE V) WITH A MAXIMUM EXPANSION OF 0.040%, FOR SULFATE RESISTANCE.
5. ADMIXTURES CONTAINING CALCIUM CHLORIDE ARE PROHIBITED.
6. CONCRETE EXPOSED TO FREEZING-AND-THAWING CYCLES SHALL BE AIR ENTRAINED PER ACI 318-19 SECTION 19.3.3.
7. CONCRETE SHALL BE MAINTAINED IN A MOIST CONDITION FOR A MINIMUM OF FIVE DAYS AFTER PLACEMENT. ALTERNATE METHODS WILL BE APPROVED IF SATISFACTORY PERFORMANCE CAN BE ASSURED.
8. CONCRETE SHALL NOT FREE FALL MORE THAN FIVE FEET.
9. CONCRETE SHALL BE PROPORTIONED PER ACI 318-19 26.4.
10. CONCRETE SHALL BE TESTED PER CBC 1910A.1, 1705A.3, AND ACI 318-19 26.13. BATCH PLANT INSPECTION NOT REQUIRED. CONTRACTOR SHALL IMPLEMENT WEIGHTMASTER AND BATCH TICKET REQUIREMENTS OF CBC 1705A.3.3.1.

REINFORCING STEEL:

1. REINFORCING STEEL SHALL BE DEFORMED STEEL CONFORMING TO THE REQUIREMENTS OF ASTM A615, (DEFORMATIONS SHALL BE IN ACCORDANCE WITH ASTM A305) AS FOLLOWS:
   GR 60: (#4 BARS AND LARGER)
   GR 40: (#3 BARS)
2. DETAILING, FABRICATION, AND ERECTION OF REINFORCING BARS SHALL CONFORM TO THE ACI "MANUAL OF STANDARD PRACTICE FOR DETAILING REINFORCING CONCRETE STRUCTURES."
3. MIN. COVER FOR CAST-IN-PLACE CONCRETE SHALL BE AS FOLLOWS:

   A. CAST AGAINST EARTH.. 3"
   B. CAST AGAINST FORM BELOW GRADE..................... 2"
   C. FORMED SLABS (#11 BAR & SMALLER).................... 3/4"
   D. SLABS ON GRADE (FROM TOP OF SLAB).................. 1"
   E. COLUMNS AND BEAMS (MAIN BARS)...................... 2"
   F. WALLS EXPOSED TO WEATHER (#6-#18 BARS)......... 2"
   (#5 & SMALLER)......... 11/2"
   G. NOT EXPOSED TO WEATHER (#11 & SMALLER)........ 3/4"
4. BARS SHALL BE CLEAN OF RUST, GREASE OR OTHER MATERIAL LIKELY TO IMPAIR BOND. BENDS SHALL BE MADE COLD.
5. FOR #6 BARS AND SMALLER, REINFORCING SHALL BE LAP SPLICED 45 BAR DIA MINIMUM IN CONCRETE. FOR #7 BARS AND LARGER, REINFORCING SHALL BE LAP SPLICED 55 BAR DIAMETERS MINIMUM IN CONCRETE. ALL LAP SPLICES MUST COMPLY WITH ACI 318-19.
6. PRIOR TO PLACING OF CONCRETE, REINFORCING STEEL AND EMBEDDED ITEMS SHALL BE WELL SECURED IN POSITION.
7. WELDING OF REINFORCING IS NOT ALLOWED
8. REINFORCING STEEL SHALL BE SAMPLED AND TESTED PER CBC 1910A.2.

POWDER COATED AND EPOXY PRIMED FINISH:

1. ENTIRE POWDER COATING PROCESS COMPLETED IN SAME FACILITY AS STEEL FABRICATION.
2. ALL CARBON STEEL MEMBERS (COLUMNS, BEAMS, PLATES, ETC.) PAINTED WITH PRIME COAT PER THE "AISC CODE OF STANDARD PRACTICE" AND THE "AISC SPECIFICATION SECTION M3" (UNLESS NOTED OTHERWISE).
3. PARTS PRETREATED IN A 3 STAGE IRON PHOSPHATE WASHER (OR EQUAL).
4. EPOXY PRIMER POWDER COAT APPLIED TO PARTS FOR SUPERIOR CORROSION PROTECTION.
5. TOP POWDER COAT OF SUPER DURABLE TGIC (COLOR SELECTED FROM MANUFACTURER'S STANDARD OPTIONS OR CUSTOM COLOR).
6. SAMPLE PRODUCTION PARTS TESTED TO MEET THE FOLLOWING CRITERIA:
   A. SALT SPRAY RESISTANCE PER ASTM B 117/ ASTM D 1654
      1. 10000 HOURS WITH NO CREEP FROM SCRIBE LINE AND RATING OF 10
   B. HUMIDITY RESISTANCE PER ASTM D2247-02
      1. 5000 HOURS WITH NO LOSS OF ADHESION OR BLISTERING
   C. COLOR/UV RESISTANCE PER ASTM G154-04
      1. 2000 HOURS EXPOSURE ALTERNATE CYCLES WITH NO CHALKING, 75% COLOR RETENTION, AND COLOR VARIATION MAXIMUM 3.0 E VARIATION CIE FORMULA (BEFORE AND AFTER 2000 HOURS EXPOSURE

CONSTRUCTION NOTES

1. A DSA-CERTIFIED CLASS 2 INSPECTOR IS REQUIRED FOR THIS PROJECT.
2. CHANGES TO THE APPROVED DRAWINGS AND SPECIFICATIONS SHALL BE MADE BY ADDENDA OR CONSTRUCTION CHANGE DOCUMENT (CCD) APPROVED BY DSA, AS REQURIED BY SECTION 4-338, PART 1, TITLE 24 CCR AND DSA IR A-6.
3. A "DSA-CERTIFIED" PROJECT INSPECTOR EMPLOYED BY THE OWNER (E.G. DISTRICT, ETC.) AND APPROVED BY DSA SHALL PROVIDE CONTINUOUS INSPECTION OF WORK. THE DUTIES OF THE INSPECTOR ARE DEFINED IN SECTION 4-342, PART 1, TITLE 24, CCR.
4. A DSA ACCEPTED TESTING LABORATORY DIRECTLY EMPLOYED BY THE OWNER (E.G. DISTRICT, ETC.) SHALL CONDUCT ALL THE REQUIRED TEST AND INSPECTIONS FOR THE PROJECT.

NOTICE OF DISCLAIMER FOR STRUCTURAL ENGINEER RESPONIBILITY

1. FOR THE SITE-SPECIFIC PROJECT, NEITHER POLIGON OR GHD ARE THE DESIGN PROFESSIONAL IN GENERAL RESPONSIBLE CHARGE.
2. FOR THE SITE-SPECIFIC PROJECT, GHD AND POLIGON'S RESPONSIBILITY IS LIMITED TO THE PREPARATION OF THE PLANS AND SPECIFICATIONS FOR THE STRUCTURES OF THIS PC ONLY.
3. STRUCTURAL OBSERVATION OF CONSTRUCTION IS SPECIFICALLY EXCLUDED FROM GHD AND POLIGON'S RESPONSIBILITY FOR THE SITE-SPECIFIC PROJECT.
4. ALL CONSTRUCTION ACTIVITIES RELATED TO STRUCTURAL ENGINEERING MAY BE DELEGATED TO A QUALIFIED ENGINEER BY THE DESIGN PROFESSIONAL IN GENERAL RESPONSIBLE CHARGE. THESE ACTIVITIES INCLUDE, BUT ARE NOT LIMITED TO, APPROVAL OF INSPECTOR QUALIFICATIONS, STRUCTURAL OBSERVATIONS OF CONSTRUCTION, REVIEW OF INSPECTIONS REPORTS, AND SIGNING OFF ON THE VERIFIED REPORT FOR COMPLETED WORK.
5. POLIGON WILL BE RESPONSIBLE FOR RESPONDING TO QUESTIONS PERTAINING TO THE PLANS AND SPECIFICATIONS FOR THE STRUCTURES OF THIS PC WHICH ARISE DURING PLAN REVIEW AND CONSTRUCTION.

SPECIAL INSPECTION NOTES:

1. THE PROJECT INSPECTOR AND TESTING AGENCY SHALL BE SELECTED BY THE SCHOOL DISTRICT AND APPROVED BY DSA AND THE ARCHITECT OF RECORD.
2. COSTS OF THE PROJECT INSPECTOR AND THE TESTING AGENCY SHALL BE BORN BY THE SCHOOL DISTRICT.
3. THE PROJECT INSPECTOR, AND ENTIRE CONSTRUCTION OVERSIGHT PROCESS, SHALL COMPLY WITH DSA PR 13-01.
4. ON APPROVED PC DRAWINGS, THE STATEMENT OF STRUCTURAL TESTS AND SPECIAL INSPECTIONS (FORM DSA-103) BELOW IS ONLY AN EXAMPLE. ON APPROVED PC DRAWINGS, THE EXAMPLE FORM DSA-103 MUST BE CROSSED OUT BEFORE THE PC DRAWINGS CAN BE APPROVED AS PART OF A SITE-SPECIFIC (OR STOCKPILE) PROJECT SO THEY WILL NOT CONFLICT WITH THE OFFICIAL FORM DSA-103 FOR THE PROJECT.

DSA 103-22: LISTING OF STRUCTURAL TESTS & SPECIAL INSPECTIONS, 2022 CBC

Application Number:	**School Name:**	**School District:**
DSA File Number:	**Increment Number:**	**Date Submitted:**

2022 CBC

IMPORTANT: This form is only a summary list of structural tests and some of the special inspections required for the project. Generally, the structural tests and special inspections noted on this form are those that will be performed by the Geotechnical Engineer of Record, Laboratory of Record, or Special Inspector. The actual complete test and inspection program must be performed as detailed on the DSA approved documents. The appendix at the bottom of this form identifies work NOT subject to DSA requirements for special inspection or structural testing. The project inspector is responsible for providing inspection of all facets of construction, including but not limited to, special inspections not listed on this form such as structural wood framing, high-load wood diaphragms, cold-formed steel framing, anchorage of non-structural components, etc., per Title 24, Part 2, Chapter 17A (2022 CBC).

NOTE: Undefined section and table references found in this document are from the CBC, or California Building Code.

KEY TO COLUMNS

1. TYPE	2. PERFORMED BY
Continuous – Indicates that a continuous special inspection is required **Periodic** – Indicates that a periodic special inspection is required **Test** – Indicates that a test is required	**GE** – Indicates that the special inspection shall be performed by a registered geotechnical engineer or his or her authorized representative. **LOR** – Indicates that the test or special inspection shall be performed by a testing laboratory accepted in the DSA Laboratory Evaluation and Acceptance (LEA) Program. See CAC Section 4-335. **PI** – Indicates that the special inspection may be performed by a project inspector when specifically approved by DSA. **SI** – Indicates that the special inspection shall be performed by an appropriately qualified/approved special inspector.

	Test or Special Inspection	Type	Performed By	Code References and Notes
	S1. GENERAL:			
☑	**a.** Verify that: • Site has been prepared properly prior to placement of controlled fill and/or excavations for foundations. • Foundation excavations are extended to proper depth and have reached proper material. • Materials below footings are adequate to achieve the design bearing capacity.	See Notes	PI	Refer to specific items identified in the Appendix listing exemptions for limitations. Placement of controlled fill exceeding 12" depth under foundations is not permitted without a geotechnical report.
	S2. SOIL COMPACTION AND FILL:			
☑	**a.** Verify use of proper materials, densities and inspect lift thicknesses, placement and compaction during placement of fill.	Continuous	LOR*	* Under the supervision of a geotechnical engineer or LOR's engineering manager. Refer to specific items identified in the Appendix listing exemptions for limitations.
☑	**b.** Compaction testing.	Test	LOR*	* Under the supervision of a geotechnical engineer or LOR's engineering manager. Refer to specific items identified in the Appendix listing exemptions for limitations.
	S4. CAST-IN-PLACE DEEP FOUNDATIONS (PIERS):			
☑	**a.** Inspect drilling operations and maintain complete and accurate records for each pier.	Continuous	PI	Continuous inspection to be provided by project inspector. Refer to specific items identified in the Appendix listing exemptions for limitations.
☑	**b.** Verify pier locations, diameters, plumbness, and lengths. Record concrete or grout volumes.	Continuous	PI	Continuous inspection to be provided by project inspector. Refer to specific items identified in the Appendix listing exemptions for limitations.
☑	**c.** Concrete piers.	Provide tests and inspections per CONCRETE section below.		
	C1. CAST-IN-PLACE CONCRETE			
☑	**a.** Verify use of required design mix.	Periodic	SI	**Table 1705A.3 Item 5, 1910A.1.**
☑	**b.** Identifiy, sample, and test reinforcing steel.	Test	LOR	**1910A.2;** ACI 318-19 Ch. 20 and Section 26.6.1.2; DSA IR 17-10. (See Appendix (end of this form) for exemptions.)
☑	**c.** During concrete placement, fabricate specimens for strength tests, perform slump and air content tests, and determine the temperature of the concrete.	Test	LOR	**Table 1705A.3 Item 6**; ACI 318-19 Sections 26.5 & 26.12.
☑	**d.** Test concrete (f'_c).	Test	LOR	**1905A.1.17;** ACI 318-19 Section 26.12.
☑	**e.** Batch plan inspection:	See Notes	SI	Default of **'Continuous'** per **1705A.3.3**. If approved by DSA, batch plant inspection may be reduced to **'Periodic'** subject to requirements in Section **1705.A.3.3.1**, or eliminated per **1705A.3.3.2**. See IR 17-13. (See Appendix (end of this form) for exemptions.)
	S/A1. STRUCTURAL STEEL, COLD-FORMED STEEL AND ALUMINUM USED FOR STRUCTURAL PURPOSES			
☑	**a.** Verify identification of all materials and: • Mill certificates indicate material properties that comply with requirements. • Material sizes, types and grades comply with requirements.	Periodic	*	**Table 1705A.2.1 Item 3a–3c.** 2202A.1**;** AISI S100-20 Section A3.1 & A3.2, AISI S240-20 Section A3 & A5, AISI S220-20 Sections A4 & A6. * By special inspector or qualified technician when performed off-site.
☑	**b.** Test unidentified materials	Test	LOR	**2202A.1.**
☑	**c.** Examine seam welds of HSS shapes	Periodic	SI	DSA IR 17-8.
☑	**d.** Verify and document steel fabrication per DSA-approved construction documents.	Periodic	SI	Not applicable to cold-formed steel light-frame construction, except for trusses (**1705A.2.4**).
	S/A2. HIGH-STRENGTH BOLTS:			
☑	**a.** Verify identification markings and manufacturer's certificates of compliance conform to ASTM standards specified in the DSA-approved documents.	Periodic	SI	**Table 1705A.2.1 Items 1a & 1b, 2202A.1;** AISC 360-16 Section A3.3, J3.1, and N3.2; RCSC 2014 Section 1.5 & 2.1; DSA IR 17-8 & DSA IR 17-9.
☑	**b.** Test high-strength bolts, nuts and washers.	Test	LOR	**Table 1705A.2.1 Item 1c, 2213A.1**; RCSC 2014 Section 7.2; DSA IR 17-8.
☑	**c.** Bearing-type ("snug tight") connections.	Periodic	SI	**Table 1705A.2.1 Item 2a, 1705A.2.6, 2204A.2;** AISC 360-16 J3.1, J3.2, M2.5 & N5.6; RCSC 2014 Section 9.1; DSA IR 17-9.
☑	**d.** Pretensioned and slip-critical connections.	*	SI	**Table 1705A.2.1 Items 2b & 2c, 1705A.2.6, 2204A.2;** AISC 360-16 J3.1, J3.2, M2.5 & N5.6; RCSC 2014 Sections 9.2 & 9.3; DSA IR 17-9. * "Continuous" or "Periodic" depends on the tightening method used.
	S/A3. WELDING:			
☑	**a.** Verify weld filler material identification markings per AWS designation listed on the DSA- approved documents and the WPS.	Periodic	SI	**1705A.2.5, Table 1705A.2.1 Items 4 & 5**; AWS D1.1 and AWS D1.8 for structural steel; AWS D1.2 for Aluminum; AWS D1.3 for cold-formed steel; AWS D1.4 for reinforcing steel; DSA IR 17- 3.
☑	**b.** Verify weld filler material manufacturer's certificate of compliance.	Periodic	SI	DSA IR 17-3.
☑	**c.** Verify WPS, welder qualifications and equipment.	Periodic	SI	DSA IR 17-3.
	S/A4. SHOP WELDING (IN ADDITION TO SECTION S/A3):			
☑	**a.** Inspect groove welds, multi-pass fillet welds, single pass fillet welds > 5/16", plug and slot welds.	Continuous	SI	**Table 1705A.2.1 Items 5a.1–4;** AISC 360-16 (and AISC 341-16 as applicable); DSA IR 17-3.
☑	**b.** Inspect single-pass fillet welds ≤ 5/16", floor and roof deck welds.	Periodic	SI	**1705A.2.2, Table 1705A.2.1 Items 5a.5 & 5a.6;** AISC 360-16 (and AISC 341-16 as applicable); DSA IR 17-3.
	S/A9. ANCHOR BOLTS AND ANCHOR RODS:			
☑	**a.** Anchor Bolts and Anchor Rods	Test	LOR	Sample and test anchor bolts and anchor rods not readily identifiable per procedures noted in DSA IR 17-11.

Name of Architect or Engineer in general responsible charge:

Name of Structural Engineer (When structural design has been delegated):

Signature of Architect or Structural Engineer: Date:

Note: To facilitate DSA electronic mark-ups and identification stamp application, DSA recommends against using secured electronic or digital signatures.

DSA STAMP

DSA 103-22: LIST OF REQUIRED VERIFIED REPORTS, CBC 2022

1. Soils Testing and Inspection: Geotechnical Verified Report Form DSA 293
2. Structural Testing and Inspection: Laboratory Verified Report Form DSA 291
3. Shop Welding Inspection: Laboratory Verified Report Form DSA 291, or, for independently contracting SI, Special Inspection Verified Report Form DSA 292
4. High-Strength Bolt Installation Inspection: Laboratory Verified Report Form DSA 291, or, for independently contracting SI, Special Inspection Verified Report Form DSA 292

STATE APPROVALS-SITE

IDENTIFICATION STAMP
DIV. OF THE STATE ARCHITECT
APP: 02-122005 INC:
REVIEWED FOR
SS ☑ FLS ☑ ACS ☑
DATE: 12/06/2023

4080 PLAZA GOLDORADO CIRCLE
SUITE B,
CAMERON PARK, CA 95682
530.677.5515

GHD

poligon

PORTER

REGISTERED PROFESSIONAL ENGINEER
JESSICA E. NAPIER
No. S5476
STRUCTURAL
STATE OF CALIFORNIA

STATE APPROVALS-PC

IDENTIFICATION STAMP
DIV. OF THE STATE ARCHITECT
APP: 02-121213 PC
REVIEWED FOR
SS ☑ FLS ☑ ACS ☑ CG ☐
DATE: 7/18/2023

PRE-CHECK (PC) DOCUMENT
CODE: 2022 CBC
A SEPARATE PROJECT APPLICATION FOR CONSTRUCTION IS REQUIRED.

NOTES AND SPECIAL INSPECTIONS

HIP ROOF - RAM

RAM1.1

FOUNDATION PLAN NOTES:

1. TOP OF ALL FOUNDATIONS MUST BE CONSTRUCTED AT ONE COMMON ELEVATION (COORDINATE WITH SITE PLANS - NOT BY POLIGON)
2. ALL FOUNDATIONS MUST BE CENTERED UNDER COLUMNS (UNO).
3. SEE SHEET RAM1.1 FOR CONCRETE REQUIREMENTS.
4. PRIOR TO FORMING AND CASTING FOUNDATIONS, REVIEW FOUNDATION PLAN FOR REQUIRED ORIENTATION.
5. FOUNDATION MATERIAL AND INSTALLATION NOT BY POLIGON.
6. VIBRATE CONCRETE FULL DEPTH OF FOUNDATION.
7. FOR DRILLED PIER FOUNDATIONS, PREVENT SOIL FROM ENTERING EXCAVATED HOLE (FORM, ETC).

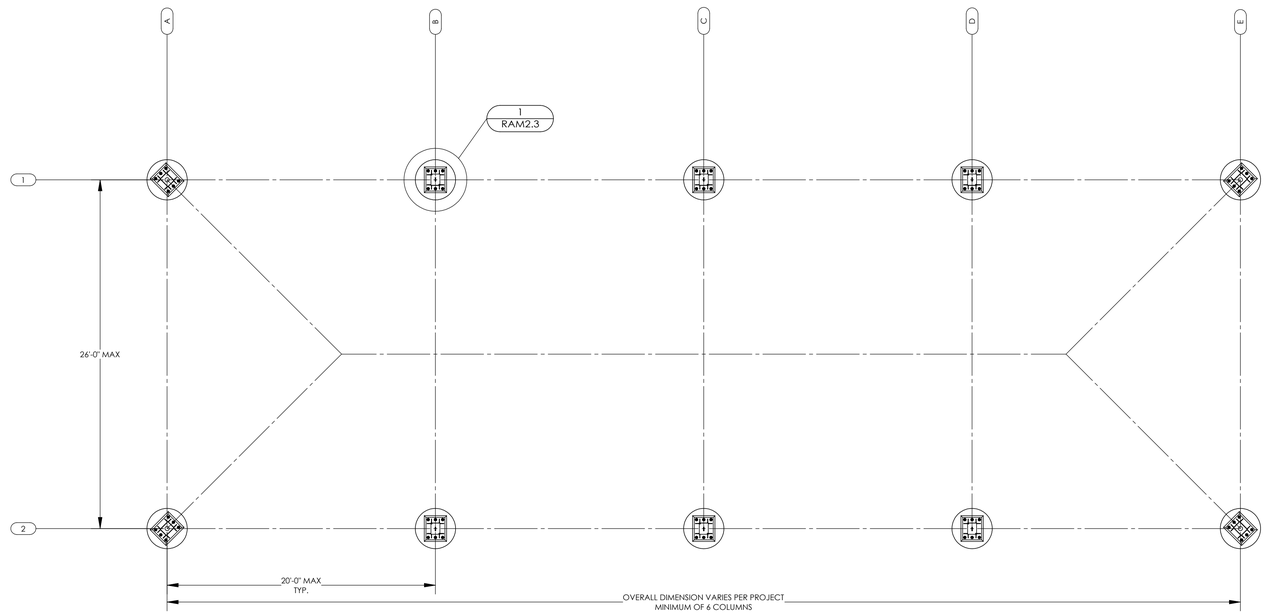

FOUNDATION PLAN (DRILLED PIER)

SCALE: 3/16" = 1'-0"

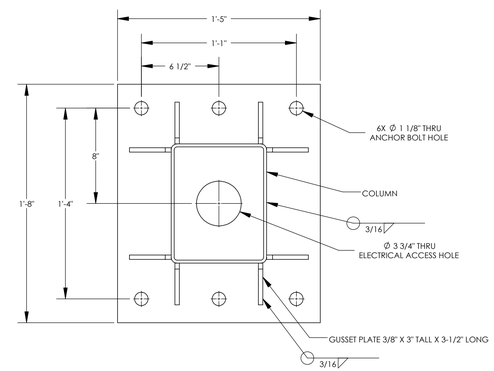

DETAIL 3

SCALE: 1-1/2" = 1'-0"

COLUMN BASEPLATE

3

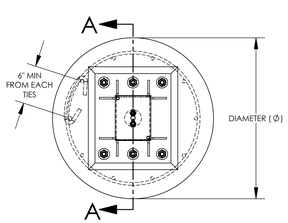

DETAIL 1

SCALE: 3/4" = 1'-0"

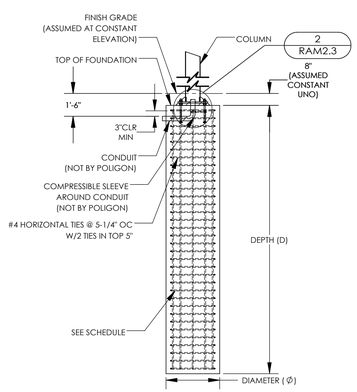

SECTION A-A

SCALE: 1/4" = 1'-0"

FOUNDATION REQUIREMENTS VARY PER PROJECT

SEE SHEET RAM1.0 FOR REQUIRED LOAD SCENARIO AND FOUNDATION TYPE (STEP 9 OF 'INSTRUCTIONS')

ONLY REFERENCE COPY OF PC DRAWINGS SUBMITTED FOR THIS PROJECT

DRILLED PIER

SIZE AND REINFORCING REQUIREMENTS

LOAD SCENARIO	DIAMETER (Ø)	DEPTH (D)	VERTICAL REINFORCING[1]	
			QTY	SIZE
1	3'-0"	13'-0"	10	#7
~~2~~	~~3'-0"~~	~~15'-0"~~	~~10~~	~~#7~~

[1] EQUALLY SPACED AROUND DRILLED PIER

DRILLED PIER FOUNDATION

1

NOTES:

1. GROUT SHALL BE NON-METALLIC, NON-SHRINK GROUT WITH MINIMUM F'c=6500 PSI.
2. COLUMNS FABICATED ASSUMING 1-1/2" GROUT PAD.
3. COLUMN BASES BELOW FINISH GRADE SHOULD BE PROTECTED FROM CORROSION, SELECT ONE OF THE FOLLOWING OPTIONS BELOW.

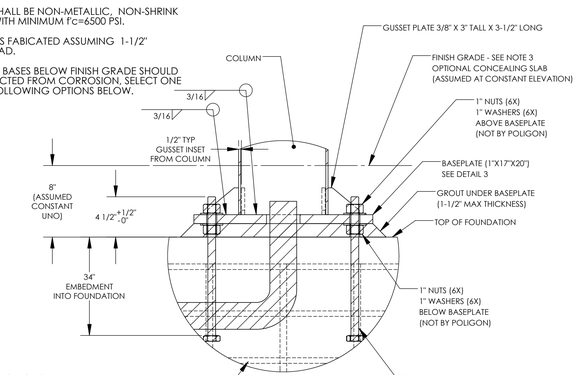

COLUMN BASE PROTECTION

BELOW SURFACE COLUMN INSTALLATION

[ ] CONCRETE SLAB - 3" MIN ANCHOR BOLT COVER

[ ] MASTIC COATING - 1/4" THICK MIN COATING ON ALL STEEL SURFACES BELOW GRADE

DETAIL 2

SCALE: 1-1/2" = 1'-0"

COLUMN BASEPLATE AND ANCHOR BOLTS

2

STATE APPROVALS-SITE

IDENTIFICATION STAMP
DIV. OF THE STATE ARCHITECT
APP: 02-122005 INC:
REVIEWED FOR
SS ☑ FLS ☑ ACS ☑
DATE: 12/06/2023

4600 PLAZA GOLDORADO CIRCLE
SUITE B
CAMERON PARK, CA 95682
530.677.1516

STATE APPROVALS-PC

IDENTIFICATION STAMP
DIV. OF THE STATE ARCHITECT
APP: 02-121213 PC
REVIEWED FOR
SS ☑ FLS ☑ ACS ☑ CG ☐
DATE: 7/18/2023

PRE-CHECK (PC) DOCUMENT
CODE: 2022 CBC
A SEPARATE PROJECT APPLICATION FOR CONSTRUCTION IS REQUIRED.

FOUNDATION PLAN DRILLED PIER

HIP ROOF - RAM 30

RAM2.3

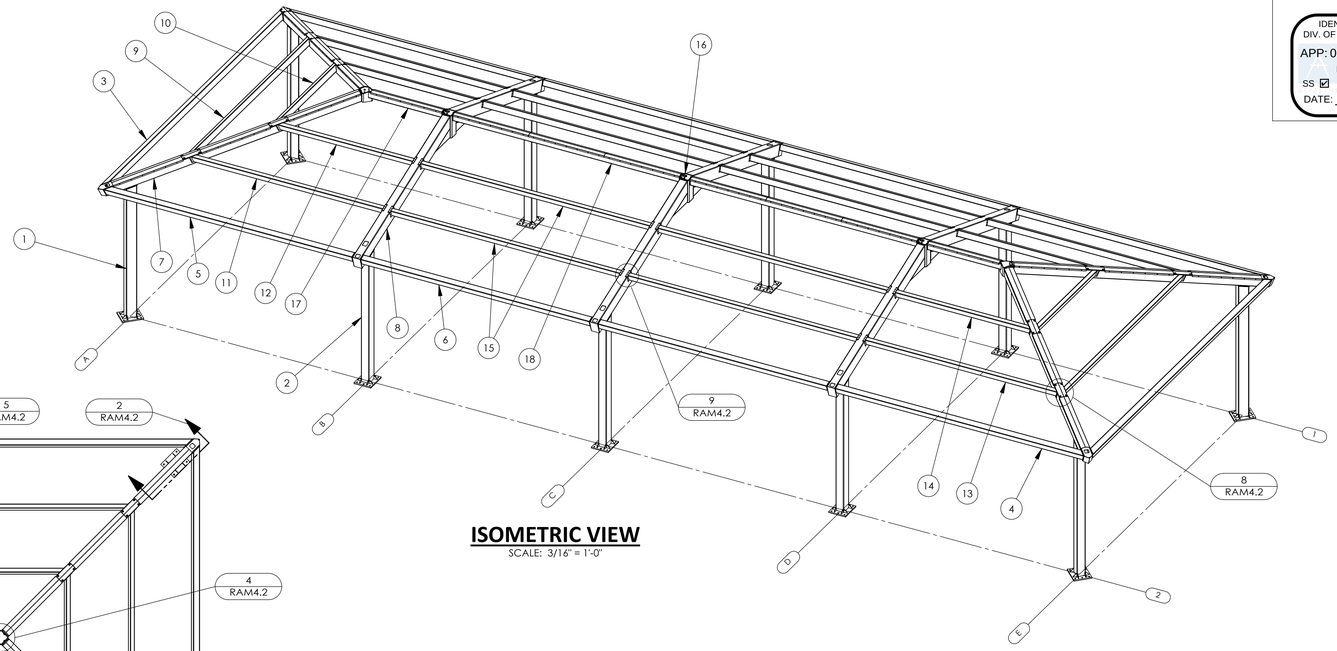

ISOMETRIC VIEW

SCALE: 3/16" = 1'-0"

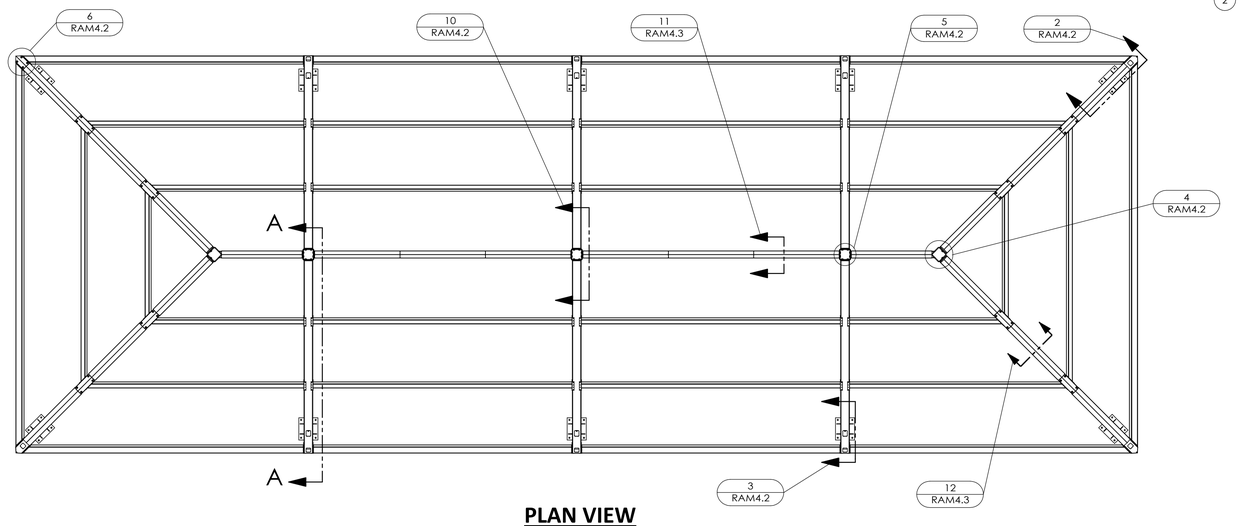

PLAN VIEW

SCALE: 3/16" = 1'-0"

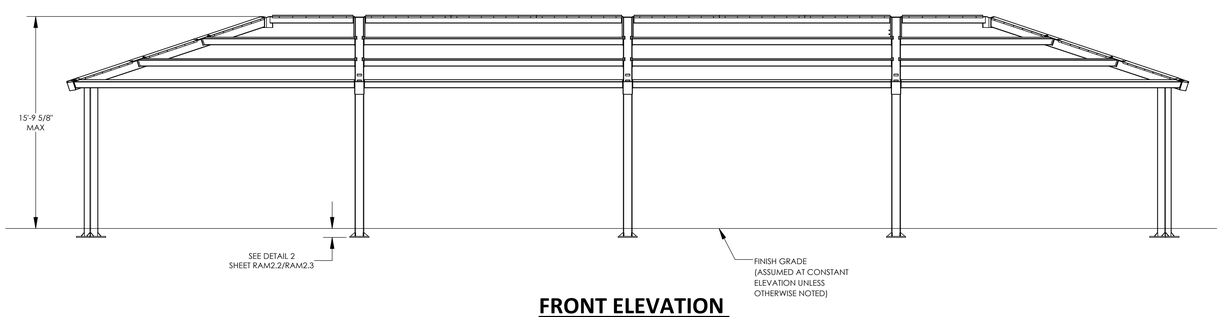

FRONT ELEVATION

SCALE: 3/16" = 1'-0"

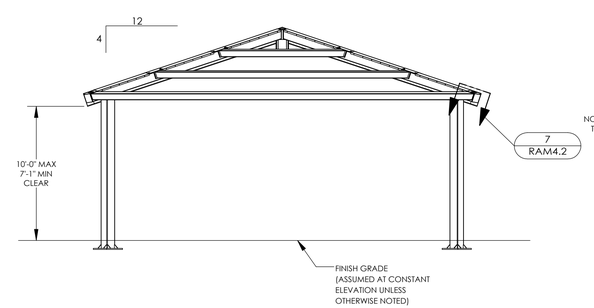

SIDE ELEVATION

SCALE: 3/16" = 1'-0"

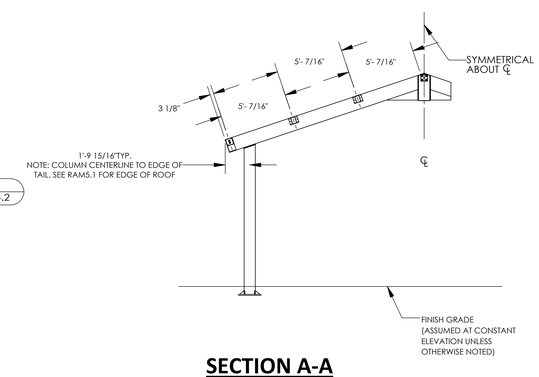

SECTION A-A

SCALE: 3/16" = 1'-0"

ITEM	QTY.	PART NO.	DESCRIPTION	MATERIAL	WEIGHT
18	2	-	R-BEAM ASM	HSS6X6X3/16	287.26
17	2	-	END R-BEAM ASM	HSS6X6X3/16	154.14
16	6	-	C-TUBE ASM	HSS10X10X5/8	143.92
15	8	-	SIDE PURLIN ASM	HSS6X4x3/16	234.29
14	2	-	CORNER PURLIN ASM	HSS6X4x3/16	136.79
13	2	-	CORNER PURLIN ASM	HSS6X4x3/16	193.62
12	2	-	CORNER PURLIN ASM	HSS6X4x3/16	136.94
11	2	-	CORNER PURLIN ASM	HSS6X4x3/16	193.78
10	2	-	END PURLIN ASM	HSS6X4x3/16	110.56
9	2	-	END PURLIN ASM	HSS6X4x3/16	224.23
8	6	-	GABLE BEAM ASM	HSS12X8X1/4	559.76
7	4	-	HIP BEAM ASM	HSS8X8X3/16	431.12
6	4	-	SIDE EAVE BEAM ASM	HSS6X6X3/16	284.96
5	2	-	CORNER EAVE BEAM ASM	HSS6X6X3/16	306.07
4	2	-	CORNER EAVE BEAM ASM	HSS6X6X3/16	306.00
3	2	-	END EAVE BEAM ASM	HSS6X6X3/16	413.48
2	6	-	SIDE COLUMN ASM	HSS10X8X1/4	425.36
1	4	-	CORNER COLUMN ASM	HSS10X8X1/4	433.63

STATE APPROVALS-SITE

IDENTIFICATION STAMP
DIV. OF THE STATE ARCHITECT
APP: 02-122005 INC:
REVIEWED FOR
SS ☑ FLS ☑ ACS ☑
DATE: 12/06/2023

4080 PLAZA GOLDORADO CIRCLE
SUITE B
CAMERON PARK, CA 95682
530.677.5016

poligon PORTER

REGISTERED PROFESSIONAL ENGINEER
JESSICA E. NAPIER
No. S5476
STRUCTURAL
STATE OF CALIFORNIA

STATE APPROVALS-PC

IDENTIFICATION STAMP
DIV. OF THE STATE ARCHITECT
APP: 02-121213 PC
REVIEWED FOR
SS ☑ FLS ☑ ACS ☑ CG ☐
DATE: 7/18/2023

PRE-CHECK (PC) DOCUMENT
CODE: 2022 CBC
A SEPARATE PROJECT APPLICATION FOR CONSTRUCTION IS REQUIRED.

FRAMING PLAN

HIP ROOF - RAM 30

RAM3.1

ALL HIDDEN NUTS AND BOLTS (INSTALLED IN SHOP DURING FABRICATION) ARE SECURED WITH THIS NUT AND BOLT RESTAINING SYSTEM.

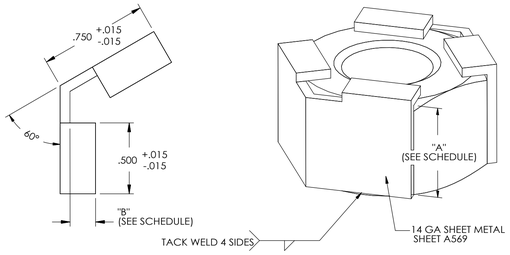

DIMENSION SCHEDULE				
FASTENER	DIM A		DIM B	
5/8" NUT	.631	+.000 -.015	.180	+.015 -.015
5/8" BOLT	.403	+.000 -.015	.250	+.015 -.015
3/4" NUT	.758	+.000 -.015	.180	+.015 -.015
3/4" BOLT	.483	+.000 -.015	.375	+.015 -.015
1" NUT	1.012	+.000 -.015	.180	+.015 -.015
1" BOLT	.643	+.000 -.015	.375	+.015 -.015

NUT & BOLT RESTRAINING SYSTEM 1

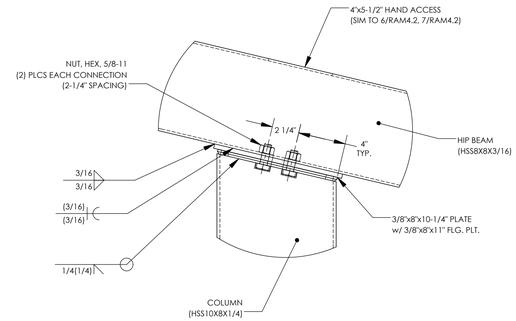

HIP BEAM CONNECTION @ COLUMN 2

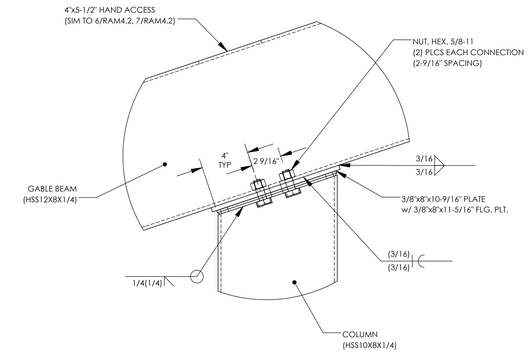

GABLE BEAM CONNECTION @ COLUMN 3

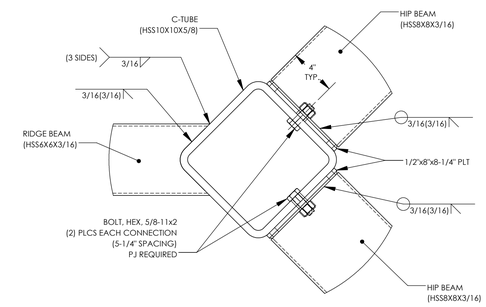

HIP BEAM CONNECTION @ COMPRESSION TUBE 4

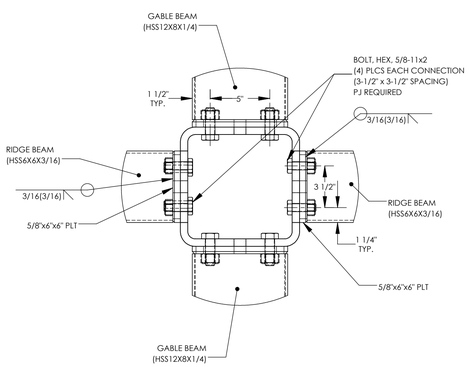

RIDGE BEAM CONNECTION @ COMPRESSION TUBE 5

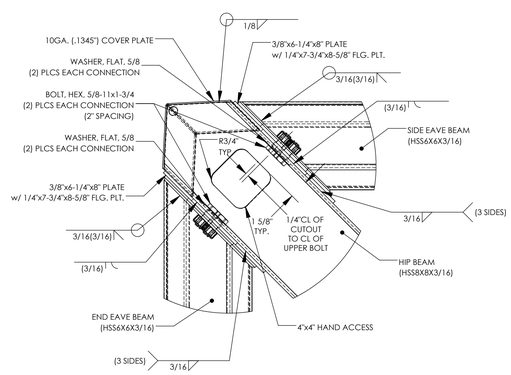

EAVE BEAM CONNECTION @ HIP BEAM 6

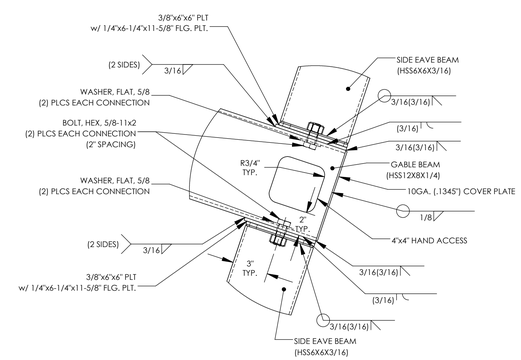

EAVE BEAM CONNECTION @ GABLE BEAM 7

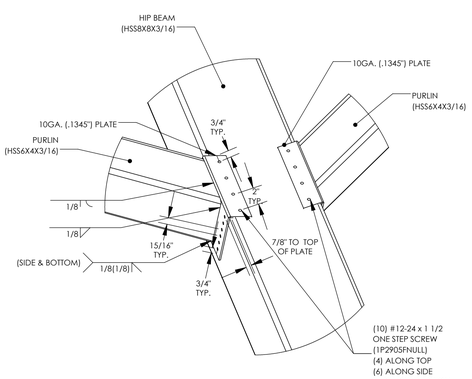

PURLIN CONNECTION @ HIP BEAM 8

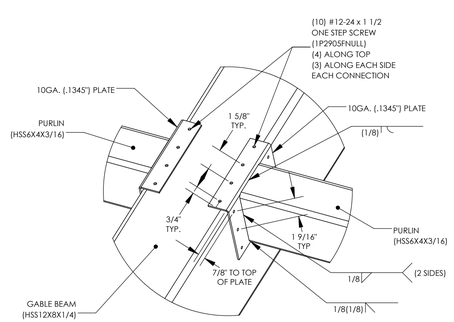

PURLIN CONNECTION @ GABLE BEAM 9

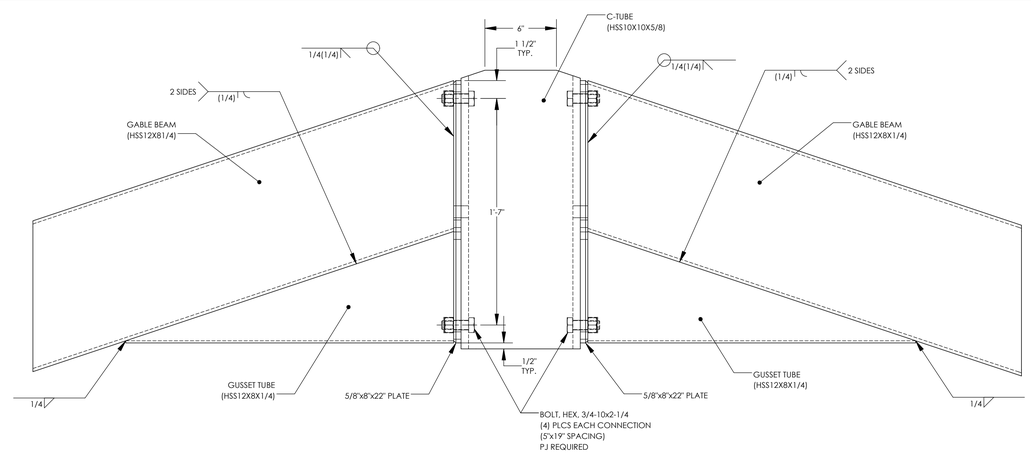

GABLE BEAM CONNECTION @ COMPRESSION TUBE 10

STATE APPROVALS-SITE

IDENTIFICATION STAMP
DIV. OF THE STATE ARCHITECT
APP: 02-122005 INC:
REVIEWED FOR
SS ☑ FLS ☑ ACS ☑
DATE: 12/06/2023

4005 PLAZA GOLDORADO CIRCLE
SUITE B
CAMERON PARK, CA 95682
530.677.1016
GHD
poligon
PORTER

REGISTERED PROFESSIONAL ENGINEER
JESSICA E. NAPPER
No. S5476
STRUCTURAL
STATE OF CALIFORNIA

STATE APPROVALS-PC

IDENTIFICATION STAMP
DIV. OF THE STATE ARCHITECT
APP: 02-121213 PC
REVIEWED FOR
SS ☑ FLS ☑ ACS ☑ CG ☐
DATE: 7/18/2023

PRE-CHECK (PC) DOCUMENT
CODE: 2022 CBC
A SEPARATE PROJECT APPLICATION FOR CONSTRUCTION IS REQUIRED.

FRAME CONNECTION DETAILS

HIP ROOF - RAM 30

RAM4.2

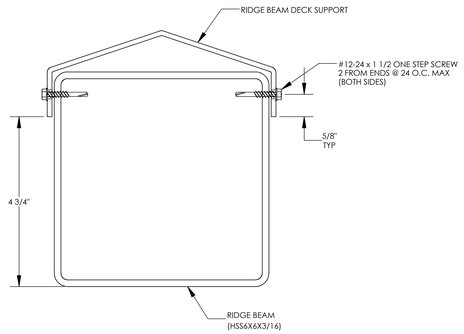

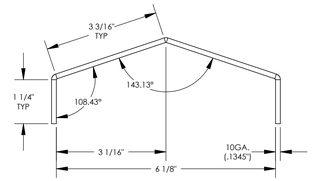

RAM 30 - RIDGE
Fy = 36 KSI
A = 1.231 IN^2
Ix = 1.149 IN^4
Iy = 6.272 IN^4
Sx = 0.771 IN^3
Sy = 1.962 IN^3

RIDGE BEAM DECK SUPPORT DETAIL

11

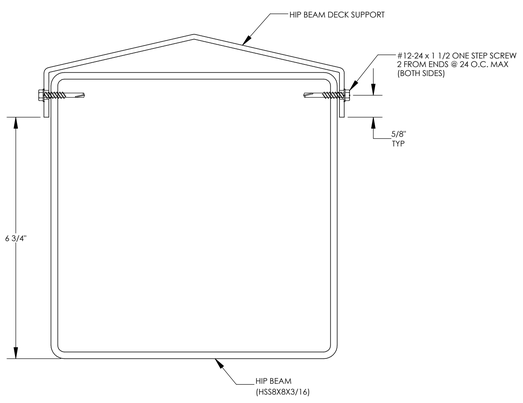

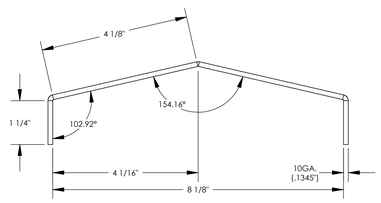

RAM 30 - HIP
Fy = 36 KSI
A = 1.484 IN^2
Ix = 1.341 IN^4
Iy = 12.353 IN^4
Sx = 0.886 IN^3
Sy = 2.943 IN^3

HIP BEAM DECK SUPPORT DETAIL

12

STATE APPROVALS-SITE

IDENTIFICATION STAMP
DIV. OF THE STATE ARCHITECT
APP: 02-122005 INC:
REVIEWED FOR
SS ☑ FLS ☑ ACS ☑
DATE: 12/06/2023

4000 PLAZA GOLDCREST CIRCLE
SUITE B
CAMERON PARK, CA 95682
530.677.0016

poligon PORTER

REGISTERED PROFESSIONAL ENGINEER
JESSICA E. NAPIER
No. S5476
STRUCTURAL
STATE OF CALIFORNIA

STATE APPROVALS-PC

IDENTIFICATION STAMP
DIV. OF THE STATE ARCHITECT
APP: 02-121213 PC
REVIEWED FOR
SS ☑ FLS ☑ ACS ☑ CG ☐
DATE: 7/18/2023

PRE-CHECK (PC) DOCUMENT
CODE: 2022 CBC
A SEPARATE PROJECT APPLICATION FOR CONSTRUCTION IS REQUIRED.

SECTION DETAILS

HIP ROOF - RAM 30

RAM4.3

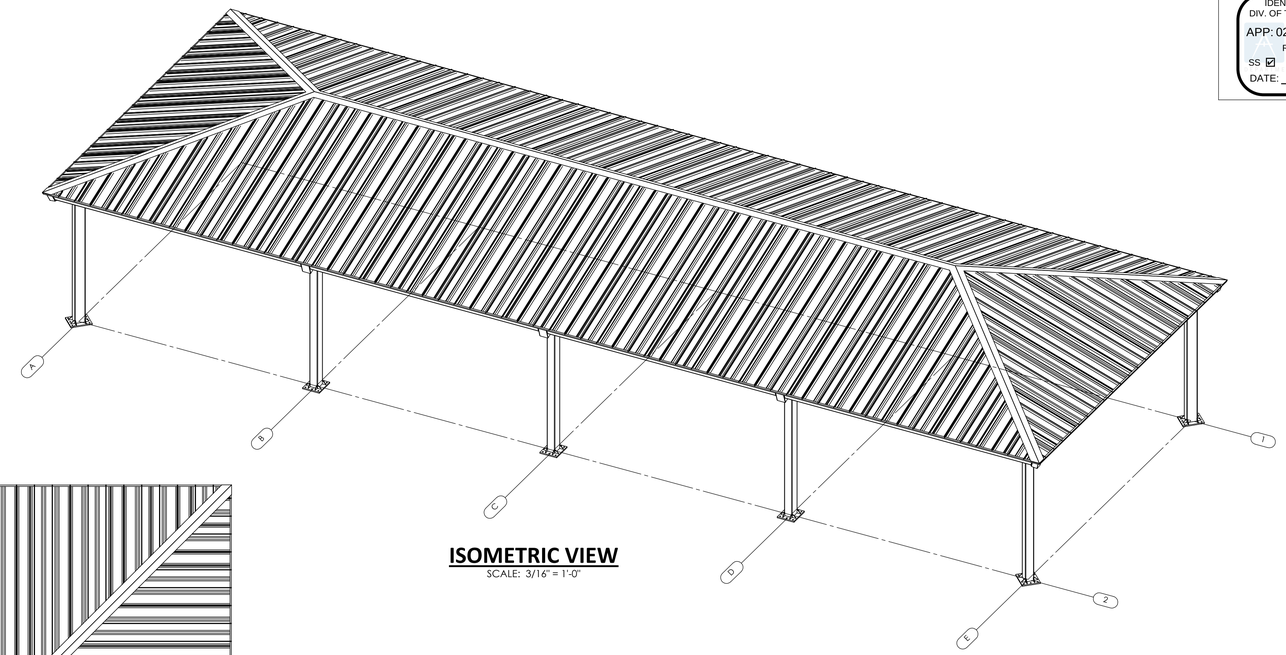

ISOMETRIC VIEW

SCALE: 3/16" = 1'-0"

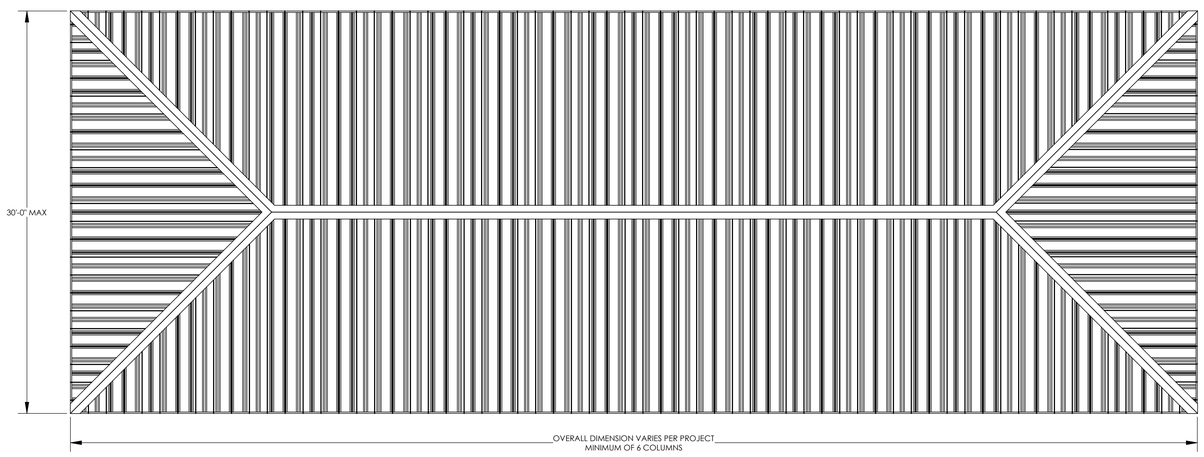

PLAN VIEW

SCALE: 3/16" = 1'-0"

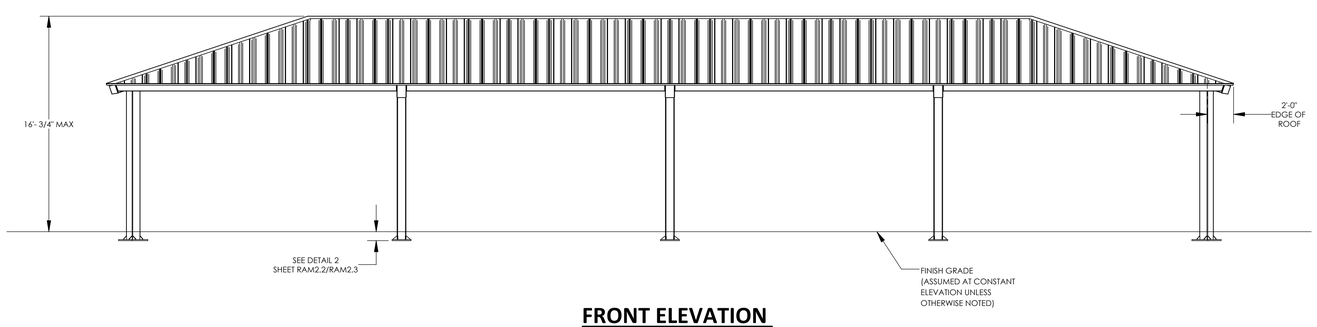

FRONT ELEVATION

SCALE: 3/16" = 1'-0"

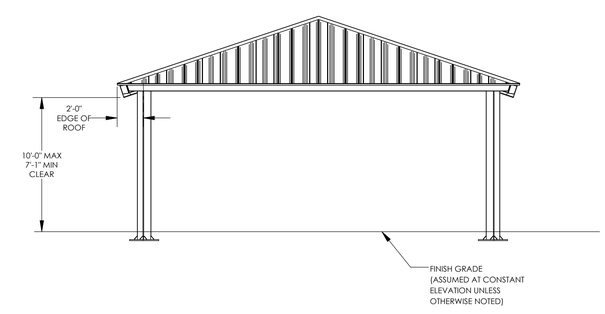

SIDE ELEVATION

SCALE: 3/16" = 1'-0"

STATE APPROVALS-SITE

IDENTIFICATION STAMP
DIV. OF THE STATE ARCHITECT
APP: 02-122005 INC:
REVIEWED FOR
SS ☑ FLS ☑ ACS ☑
DATE: 12/06/2023

GHD
4080 PLAZA GOLDORADO CIRCLE
SUITE B
CAMERON PARK, CA 95682
530.677.0016

poligon
PORTER

REGISTERED PROFESSIONAL ENGINEER
JESSICA E. NAPIER
No. S5476
STRUCTURAL
STATE OF CALIFORNIA

STATE APPROVALS-PC

IDENTIFICATION STAMP
DIV. OF THE STATE ARCHITECT
APP: 02-121213 PC
REVIEWED FOR
SS ☑ FLS ☑ ACS ☑ CG ☐
DATE: 7/18/2023

PRE-CHECK (PC) DOCUMENT
CODE: 2022 CBC
A SEPARATE PROJECT APPLICATION FOR CONSTRUCTION IS REQUIRED.

ARCHITECTURAL VIEWS

HIP ROOF - RAM 30

RAM5.1

STANDING SEAM INSTALLATION NOTES:

THE DETAILS SHOWN ARE SUGGESTIONS OR GUIDELINES ON HOW TO ERECT THE SYSTEMS. THE INFORMATION SHOWN IS ACCURATE, BUT IT IS NOT INTENDED TO COVER ALL INSTANCES, BUILDING REQUIREMENTS, DESIGNS OR CODES. THE DETAILS MAY REQUIRE CHANGES OR REVISIONS DUE TO FIELD CONDITIONS.

IT SHALL BE THE RESPONSIBILITY OF THE ERECTOR TO ENSURE THAT THE DETAILS MEET PARTICULAR BUILDING REQUIREMENTS AND TO ASSURE ADEQUATE WATER TIGHTNESS.

THE ERECTOR SHOULD THOROUGHLY FAMILIARIZE HIMSELF/HERSELF WITH ALL ERECTION INSTRUCTIONS BEFORE STARTING WORK.

THE PANELS SHOULD BE INSTALLED PLUMB, STRAIGHT, AND ACCURATELY TO THE ADJACENT WORK.

FLASHING AND TRIM SHALL BE INSTALLED TRUE, AND IN PROPER ALIGNMENT, WITH ANY EXPOSED FASTENERS EQUALLY SPACED FOR THE BEST APPEARANCE.

SEALANT SHALL BE FIELD APPLIED ON DRY, CLEAN SURFACES. SOME FIELD CUTTING AND FITTING OF PANELS AND FLASHING IS TO BE EXPECTED BY THE ERECTOR AND MINOR FIELD CORRECTIONS ARE A PART OF NORMAL ERECTION WORK.

WORKMANSHIP SHALL BE OF THE BEST INDUSTRY STANDARDS AND INSTALLATION SHALL BE PERFORMED BY EXPERIENCED METAL CRAFTSMEN.

METAL SHAVINGS FROM DRILLING OR INSTALLATION OF ROOF FASTENERS MUST BE CAREFULLY REMOVED FROM THE ROOF BY BRUSHING OR SWEEPING AT THE END OF EACH DAY DURING INSTALLATION. SHAVINGS LEFT ON THE ROOF WILL QUICKLY RUST AND STAIN THE ROOF FINISH.

COVER ACCESS HOLES WITH GRACE ICE AND WATER SHIELD BEFORE ATTACHING ROOF DECKING

METAL ROOFING PRODUCT AND INSTALLATION SHALL MEET ALL REQUIREMENTS OF ICC-ES REPORT ESL-1082.

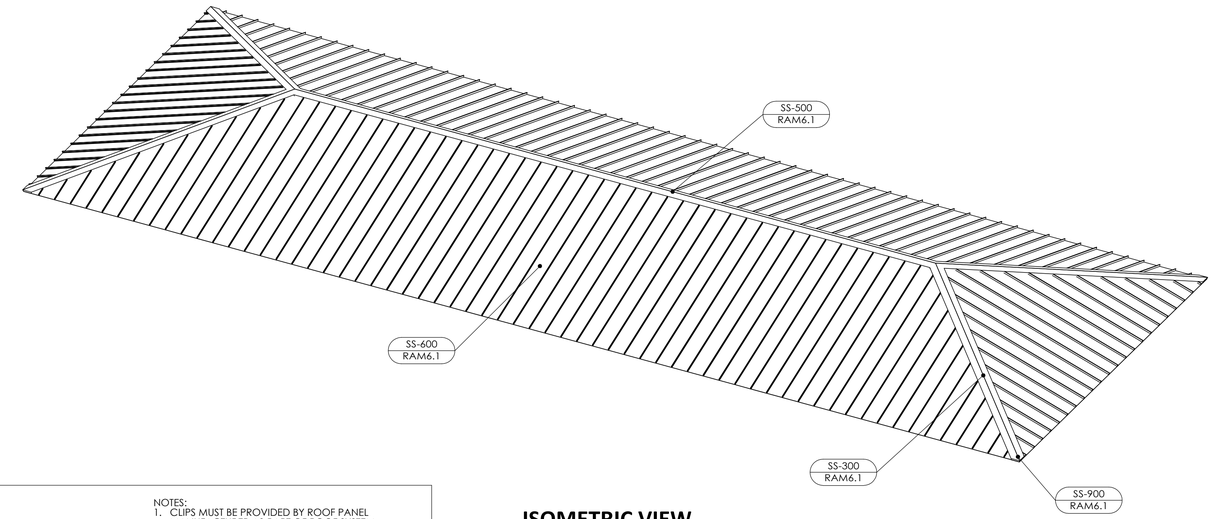

ISOMETRIC VIEW

SCALE: 3/16" = 1'-0"

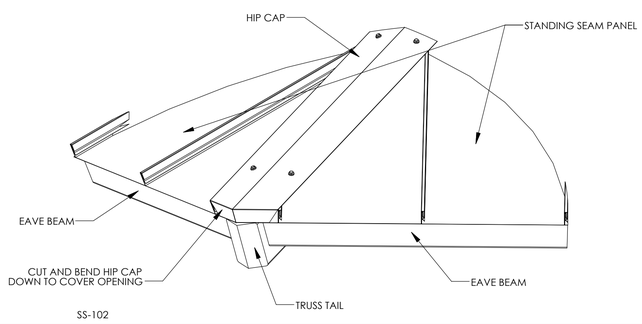

CORNER DETAIL — SS-900

NOTES:
1. CLIPS MUST BE PROVIDED BY ROOF PANEL MANUFACTURER AS PART OF ROOF SYSTEM.
2. MATERIAL THICKNESS MUST BE 18 GAGE (0.048"-0.053")

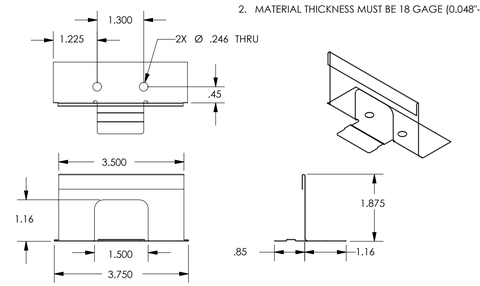

CLIP DETAIL — SS-CLP

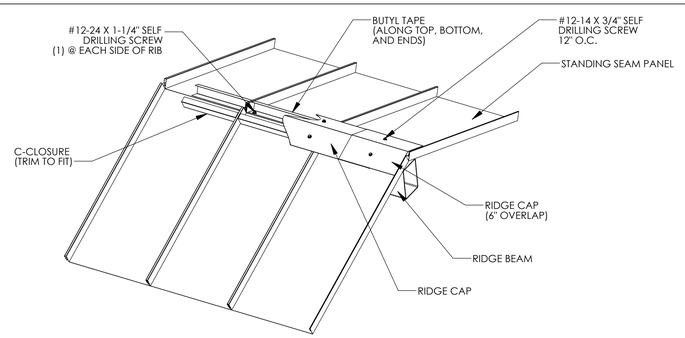

RIDGE DETAIL — SS-500

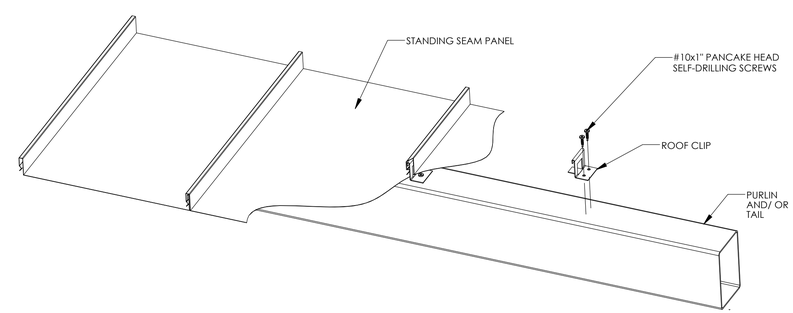

PURLIN DETAIL — SS-600

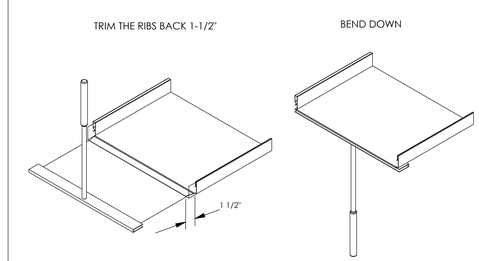

HEMMING DETAIL — SS-HEM

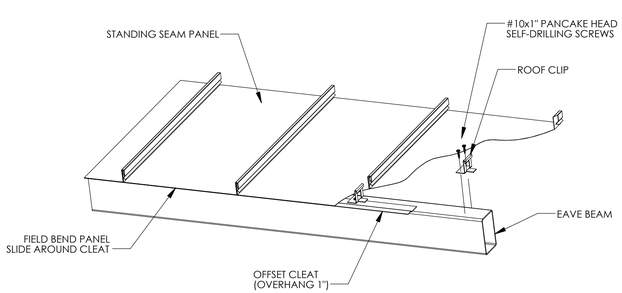

EAVE DETAIL — SS-200

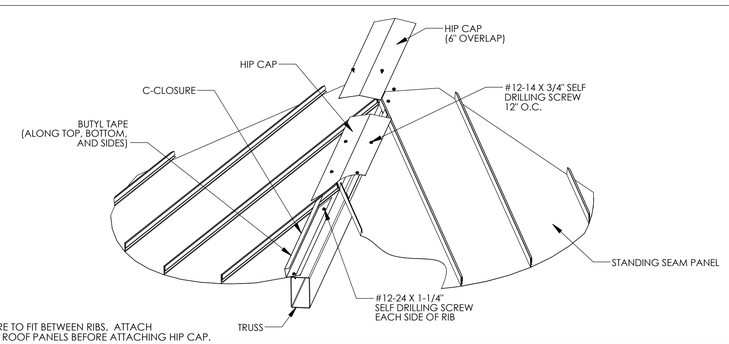

NOTE:
TRIM C-CLOSURE TO FIT BETWEEN RIBS. ATTACH C-CLOSURE TO ROOF PANELS BEFORE ATTACHING HIP CAP.

TRUSS DETAIL — SS-300

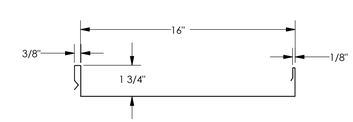

GENERAL
GAGE = 22
FY = 50 KSI

TOP IN COMPRESSION
Ix = 0.1200 IN^4
Se = 0.0803 IN^3
Ma = 2.4056 IN-KIPS

BOTTOM IN COMPRESSION
Ix = 0.0570 IN^4
Se = 0.0729 IN^3
Ma = 1.7220 IN-KIPS

ROOF DECK SECTION PROPERTIES — SS-950

STATE APPROVALS-SITE

IDENTIFICATION STAMP
DIV. OF THE STATE ARCHITECT
APP: 02-122005 INC:
REVIEWED FOR
SS ☑ FLS ☑ ACS ☑
DATE: 12/06/2023

GHD
4600 PLAZA GOLDORADO CIRCLE
SUITE B
CAMERON PK, CA 95682
530.677.0316

poligon
PORTER LLC

REGISTERED PROFESSIONAL ENGINEER
JESSICA E. NAPIER
No. S5476
STRUCTURAL
STATE OF CALIFORNIA

STATE APPROVALS-PC

IDENTIFICATION STAMP
DIV. OF THE STATE ARCHITECT
APP: 02-121213 PC
REVIEWED FOR
SS ☑ FLS ☑ ACS ☑ CG ☐
DATE: 7/18/2023

PRE-CHECK (PC) DOCUMENT
CODE: 2022 CBC
A SEPARATE PROJECT APPLICATION FOR CONSTRUCTION IS REQUIRED.

ROOF CONNECTION DETAILS

HIP ROOF - RAM

RAM6.1

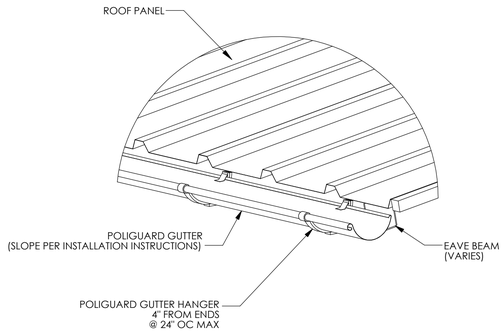

GUTTER DETAIL

GS-100

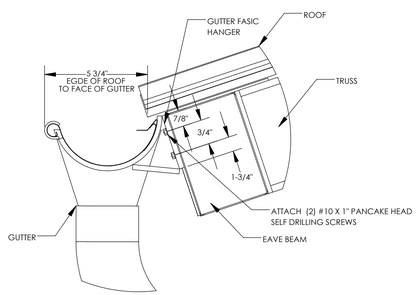

GUTTER DETAIL

GS-200

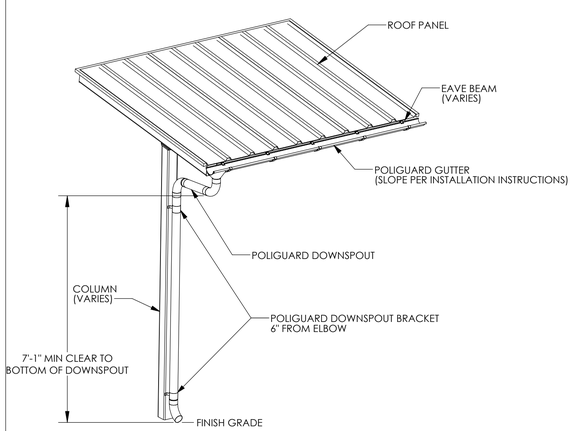

DOWNSPOUT DETAIL

GS-300

POLIGUARD GUTTER SYSTEM NOTES:

1. PREFABRICATED GUTTER SYSTEM IS ATTACHED TO THE STRUCTURE AFTER ROOF IS INSTALLED.
2. DETAILED INSTALLATION INSTRUCTIONS ARE SHIPPED WITH THE STRUCTURE.
3. ~~DOWNSPOUTS REQUIRED AT EACH COLUMN.~~

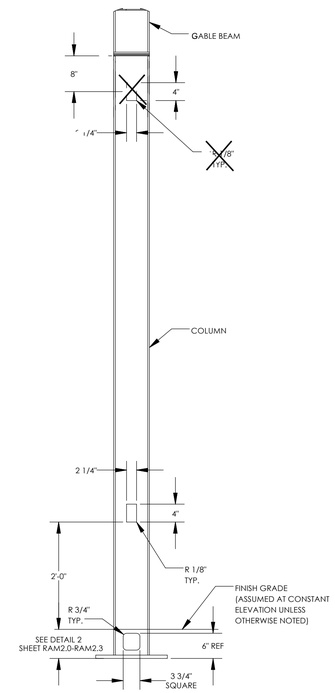

ELECTRICAL CUTOUT IN COLUMNS

EC-100

ELECTRICAL CUTOUT NOTES:

1. MAXIMUM ONE CUTOUT PERMITTED IN EACH MEMBER.
2. CUTOUTS CAN BE PLACED ON ANY SIDE OF A MEMBER.
3. CUTOUTS CAN BE PLACED ALONG MEMBERS AS INDICATED IN THE DETAILS.
4. ARCHITECTS REQUESTING CUTOUTS MUST MARKUP APPROVED PC DRAWINGS TO LOCATE CUTOUTS FOR APPROVAL AND FABRICATION.

STATE APPROVALS-SITE

IDENTIFICATION STAMP
DIV. OF THE STATE ARCHITECT
APP: 02-122005 INC:
REVIEWED FOR
SS ☑ FLS ☑ ACS ☑
DATE: 12/06/2023

4080 PLAZA GOLDORADO CIRCLE
SUITE B
CAMERON PARK, CA 95682
530.677.5515

poligon PORTER

REGISTERED PROFESSIONAL ENGINEER
JESSICA E. NAPIER
No. S5476
STRUCTURAL
STATE OF CALIFORNIA

STATE APPROVALS-PC

IDENTIFICATION STAMP
DIV. OF THE STATE ARCHITECT
APP: 02-121213 PC
REVIEWED FOR
SS ☑ FLS ☑ ACS ☑ CG ☐
DATE: 7/18/2023

PRE-CHECK (PC) DOCUMENT
CODE: 2022 CBC
A SEPARATE PROJECT APPLICATION FOR CONSTRUCTION IS REQUIRED.

MISC DESIGN OPTIONS

HIP ROOF - RAM

RAM7.0

ELECTRICAL CUTOUT AND ACCESS INSTRUCTIONS

- IF 'YES' IS NOT SELECTED IN STEP 2 ON ORDER FORM, THEN THIS SHEET NEED NOT BE INCLUDED IN SITE-SPECIFIC DRAWINGS
- ONLY COLUMNS ARE PERMITTED TO HAVE ELECTRICAL ACCESS
- THE COLUMN CUTOUTS ARE STATIC AND SHOWN IN THE 'MISC DESIGN OPTIONS SHEET'
- IDENTIFY THE COLUMNS WITH ELECTRICAL CUTOUTS BELOW (REFERENCE GRID LINES IN ISOMETRIC FRAME VIEW TO THE RIGHT)
- STRUCTURES MAY BE LONGER OR SHORTER THAN THE ISOMETRIC FRAME VIEW SHOWN
- IF SITE-SPECIFIC STRUCTURE HAS A DIFFERENT NUMBER OF COLUMNS THAN ISOMETRIC SHOWN, REFERENCE COLUMN A1 IN THE ISOMETRIC VIEW AND CONTINUE PATTERN TO FIT SITE-SPECIFIC LAYOUT
- IF NO COLUMNS ARE IDENTIFIED, POLIGON WILL ASSUME CUTOUTS ONLY IN COLUMN A1
- CONTACT POLIGON ENGINEERING FOR SPECIAL PROJECT SPECIFIC REQUIREMENTS

ELECTRICAL CUTOUT IDENTIFICATION IN COLUMNS
SPECIFIC MEMBERS A1, E2

~~EXAMPLE:~~

~~ELECTRICAL CUTOUT IDENTIFICATION IN COLUMNS~~
~~SPECIFIC MEMBERS: A1 , B1, F1~~

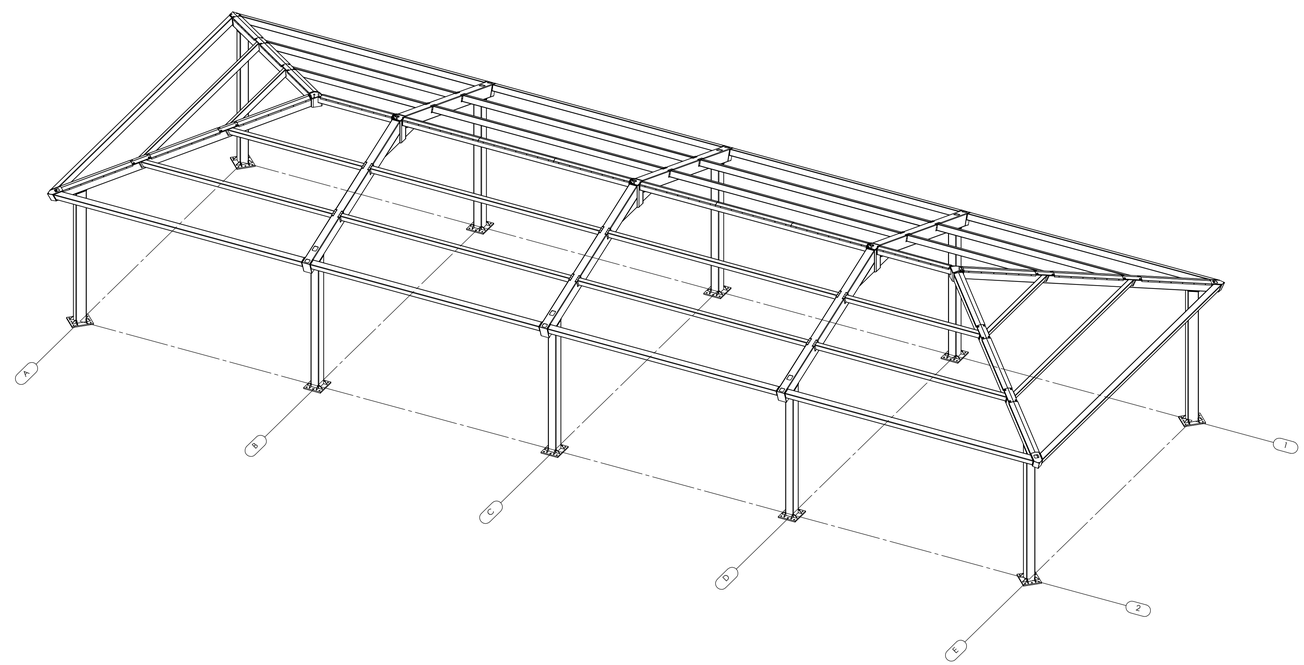

STATE APPROVALS-SITE

IDENTIFICATION STAMP
DIV. OF THE STATE ARCHITECT
APP: 02-122005 INC:
REVIEWED FOR
SS ☑ FLS ☑ ACS ☑
DATE: 12/06/2023

4600 PLAZA GOLDORADO CIRCLE
SUITE B
CAMERON PK, CA 95682
530.677.0316

STATE APPROVALS-PC

IDENTIFICATION STAMP
DIV. OF THE STATE ARCHITECT
APP: 02-121213 PC
REVIEWED FOR
SS ☑ FLS ☑ ACS ☑ CG ☐
DATE: 7/18/2023

PRE-CHECK (PC) DOCUMENT
CODE: 2022 CBC
A SEPARATE PROJECT APPLICATION FOR CONSTRUCTION IS REQUIRED.

ELECTRICAL CUTOUTS

HIP ROOF - RAM

RAM7.1

LODI UNIFIED SCHOOL DISTRICT

LODI UNIFIED SCHOOL DISTRICT LUNCH SHELTERS - MANLIO SILVA ELEMENTARY SCHOOL

6250 SCOTT CREEK DRIVE STOCKTON, CA 95219

THE LINE SHOWN ABOVE IS EXACTLY ONE INCH LONG AT THIS SHEETS ORIGINAL PAGE SIZE

GENERAL NOTES

1. CONSTRUCTION DOCUMENTS DESCRIBE THE PRODUCTS, SYSTEMS, QUANTITIES, CONFIGURATION, AND PERFORMANCE SPECIFICATIONS THAT DELIVER THE OVERALL DESIGN INTENT OF THE PROJECT.
2. THE CONSTRUCTION DOCUMENT DRAWINGS AND SPECIFICATIONS ARE COMPLEMENTARY, AND WHAT IS REQUIRED BY ONE SHALL BE AS BINDING AS IF REQUIRED BY BOTH.
3. PERFORMANCE BY THE CONSTRUCTION TEAM SHALL BE CONSISTENT WITH THE CONSTRUCTION DRAWINGS AND SPECIFICATIONS AS NECESSARY TO DELIVER THE INDICATED RESULTS OF THE DESIGN INTENT.
4. VERIFY ALL DIMENSIONS, LOCATIONS OF EXISTING UTILITIES, AND CONDITIONS ON THE JOB SITE PRIOR TO THE START OF WORK OR PORTIONS OF THE WORK. NOTIFY THE ARCHITECT IMMEDIATELY OF ANY DISCREPANCIES BETWEEN THE ACTUAL FIELD CONDITIONS AND THE CONSTRUCTION DOCUMENTS. EXISTING CONDITIONS ARE INDICATED AS A RESULT OF FIELD OBSERVATIONS, INFORMATION SHOWN ON AVAILABLE DOCUMENTS AND FIELD CONDITIONS AT THE TIME OF PREPARATION.
5. ALL MATERIALS AND WORKMANSHIP SHALL COMPLY WITH ALL GOVERNING CODES, ORDINANCES, REGULATIONS AND LAWS.
6. THE DESIGN ADEQUACY AND SAFETY OF ERECTION BRACING, SHORING, TEMPORARY SUPPORTS AND SCAFFOLDING IS THE SOLE RESPONSIBILITY OF THE CONTRACTOR.
7. WHERE ANY CONFLICT OCCURS BETWEEN THE REQUIREMENTS OF LAWS, CODES, ORDINANCES, RULES AND REGULATIONS, THE MOST STRINGENT SHALL GOVERN.
8. IN NO CASE SHALL WORKING DIMENSIONS BE SCALED FROM PLANS, SECTIONS OR DETAILS ON THE DRAWINGS.
9. DETAILS MARKED 'TYPICAL' SHALL APPLY IN ALL CASES UNLESS SPECIFICALLY NOTED OTHERWISE.
10. ENACT ALL MEASURES TO PROTECT AND SAFEGUARD ALL EXISTING ELEMENTS TO REMAIN FROM BEING DAMAGED. REPLACE OR REPAIR EXISTING ELEMENTS DAMAGED BY THE EXECUTION OF THIS CONTRACT TO EQUAL OR BETTER CONDITION.
11. PRIOR TO THE START OF WORK THE CONTRACTOR SHALL COORDINATE BETWEEN THE REQUIREMENTS OF ALL DISCIPLINES HEREIN AND BETWEEN THE REQUIREMENTS OF ALL DRAWINGS AND SPECIFICATIONS IN ORDER THAT ALL ITEMS SATISFACTORILY RELATE TO ONE ANOTHER. NOTIFY ARCHITECT IMMEDIATELY REGARDING ANY ITEMS THAT CANNOT BE COORDINATED.
12. CONTRACTOR SHALL EXCERCISE EXTREME CAUTION IN EXCAVATING AND TRENCHING ON THIS SITE TO AVOID EXISTING DUCTS, PIPING, CONDUIT, ETC. AND TO PREVENT HAZARD TO PERSONNEL AND/OR TO EXISTING UNDERGROUND UTILITIES OR STRUCTURES. THE CONTRACTOR SHALL IMMEDIATELY NOTIFY THE ARCHITECT SHOULD SUCH UNIDENTIFIED CONDITIONS BE DISCOVERED. THESE DRAWINGS AND SPECIFICATIONS DO NOT INCLUDE THE NECESSARY COMPONENTS FOR CONSTRUCTION SAFETY.
13. PROVIDE SAFE MEANS OF EGRESS THROUGH THE BUILDING AND ON SITE AT ALL TIMES.
14. PROVIDE FIRE EXTINGUISHERS PER CFC AT ALL TIMES THROUGHOUT CONSTRUCTION AREA.
15. PROVIDE CONSTRUCTION BARRIERS BETWEEN CONSTRUCTION AREAS AND OCCUPIED AREAS AT ALL TIMES.
16. CUTTING, BORING, SAWCUTTING OR DRILLING THROUGH THE EXISTING OR NEW STRUCTURAL ELEMENTS SHALL NOT TO BE STARTED UNTIL THE DETAILS HAVE BEEN REVIEWED AND APPROVED BY THE ARCHITECT, AND STRUCTURAL ENGINEER OF RECORD.
17. AVOID DISRUPTION TO ADJACENT AREAS. KEEP NOISE TO A LEVEL ACCEPTABLE TO THE OWNER BY SCHEDULING EXCESSIVE NOISE TASKS WITH OWNER REPRESENTATIVE. THIS MAY REQUIRE AFTER HOURS WORK.
18. **STATEMENT OF HAZARDOUS MATERIAL DISCOVERY** IF THE CONTRACTOR ENCOUNTERS A HAZARDOUS MATERIAL OR SUBSTANCE NOT ADDRESSED IN THE HAZARDOUS MATERIAL REPORT OR IN A CONCEALED CONDITION, THE CONTRACTOR SHALL, UPON RECOGNIZING THE CONDITION, IMMEDIATELY STOP WORK IN THE AFFECTED AREA AND REPORT THE CONDITION TO THE OWNER AND ARCHITECT IN WRITING.
UPON RECEIPT OF THE CONTRACTOR'S WRITTEN NOTICE, THE OWNER SHALL OBTAIN THE SERVICES OF A LICENSED LABORATORY TO VERIFY THE PRESENCE OR ABSENCE OF THE MATERIAL OR SUBSTANCE REPORTED BY THE CONTRACTOR AND, IN THE EVENT SUCH MATERIAL OR SUBSTANCE IS FOUND TO BE PRESENT, TO PROVIDE RECOMMENDATIONS TO CAUSE IT TO BE ABATED AND RENDERED HARMLESS.
WHEN THE MATERIAL OR SUBSTANCE HAS BEEN ABATED AND RENDERED HARMLESS, WORK IN THE AFFECTED AREA SHALL RESUME UPON WRITTEN AGREEMENT OF THE OWNER AND CONTRACTOR.
19. PENETRATIONS TO FIRE RATED MATERIALS OR ASSEMBLIES SHALL BE RESTORED TO EQUAL RATING. SPECIAL INSPECTOR DSA 103 REQ'D.
21. COMPLY WITH TITLE 24, PART 9, CALIFORNIA FIRE CODE, CHAPTER 33 FIRE SAFETY DURING CONSTRUCTION AND DEMOLITION, DURING ALL PHASES OF PROJECT.
22. ALL WORK SHALL CONFORM TO 2019 TITLE 24, CALIFORNIA CODE OF REGULATIONS (CCR).
23. CHANGES TO THE APPROVED DRAWINGS AND SPECIFICATIONS SHALL BE MADE BY AN ADDENDUM OR A CONSTRUCTION CHANGED DOCUMENT (CCD) APPROVED BY THE DIVISION OF THE STATE ARCHITECT, AS REQUIRED BY SECTION 4-338, PART 1, TITLE 24, CCR.
24. A "DSA CERTIFIED" CLASS 2 PROJECT INSPECTOR EMPLOYED BY THE DISTRICT (OWNER) AND APPROVED BY THE DSA SHALL PROVIDE CONTINUOUS INSPECTION OF THE WORK. THE DUTIES OF THE INSPECTOR ARE DEFINED IN SECTION 4-342, PART 1, TITLE 24, CCR.
25. A DSA ACCEPTED TESTING LABORATORY DIRECTLY EMPLOYED BY THE DISTRICT (OWNER) SHALL CONDUCT ALL THE REQUIRED TESTS AND INSPECTIONS FOR THE PROJECT.
26. THE INTENT OF THESE DRAWINGS AND SPECIFICATIONS IS THAT THE WORK OF THE ALTERATION, REHABILITATION OR RECONSTRUCTION IS TO BE IN ACCORDANCE WITH TITLE 24, CCR. SHOULD ANY EXISTING CONDITIONS SUCH AS DETERIORATION OR NON-COMPLYING CONSTRUCTION BE DISCOVERED WHICH IS NOT COVERED BY THE CONTRACT DOCUMENTS WHEREIN THE FINISHED WORK WILL NOT COMPLY WITH TITLE 24, CCR, A CONSTRUCTION CHANGE DOCUMENT (CCD), OR A SEPARATE SET OF PLANS AND SPECIFICATIONS, DETAILING AND SPECIFYING THE REQUIRED WORK SHALL BE SUBMITTED TO AND APPROVED BY DSA BEFORE PROCEEDING WITH THE WORK. (SECTION 4-317(c), PART 1, TITLE 24, CCR)
27. GRADING PLANS, DRAINAGE IMPROVEMENTS, ROAD AND ACCESS REQUIREMENTS AND ENVIRONMENTAL HEALTH CONSIDERATIONS SHALL COMPLY WITH ALL LOCAL ORDINANCES.
28. SUBSTITUTIONS AFFECTING DSA REGULATED ITEMS SHALL BE CONSIDERED AS A CONSTRUCTION CHANGE DOCUMENT, AND SHALL BE APPROVED BY DSA PRIOR TO FABRICATION AND INSTALLATION PER DSA IR A-6 AND SECTION 338(c) PART 1, TITLE 24, CCR.

CODES

PARTIAL LIST OF APPLICABLE CODES

2022	CALIFORNIA ADMINISTRATIVE CODE, PART 1, TITLE 24 C.C.R.
2022	CALIFORNIA BUILDING CODE (CBC), PART 2, TITLE 24 C.C.R. (2021 INTERNATIONAL BUILDING CODE VOLUMES 1 & 2 AND 2022 CALIFORNIA AMENDMENTS)
2022	CALIFORNIA ELECTRICAL CODE (CEC), PART 3, TITLE 24 C.C.R. (2020 NATIONAL ELECTRICAL CODE AND 2022 CALIFORNIA AMENDMENTS)
2022	CALIFORNIA MECHANICAL CODE (CMC) PART 4, TITLE 24 C.C.R. (2021 UNIFORM MECHANICAL CODE AND 2022 CALIFORNIA AMENDMENTS)
2022	CALIFORNIA PLUMBING CODE (CPC), PART 5, TITLE 24 C.C.R. (2021 UNIFORM PLUMBING CODE AND 2022 CALIFORNIA AMENDMENTS)
2022	CALIFORNIA ENERGY CODE (CEC), PART 6, TITLE 24 C.C.R.
2022	CALIFORNIA HISTORICAL BUILDING CODE (CHBC), PART 8, TITLE 24 C.C.R.
2022	CALIFORNIA FIRE CODE, PART 9, TITLE 24 C.C.R. (2021 INTERNATIONAL FIRE CODE AND 2022 CALIFORNIA AMENDMENTS)
2022	CALIFORNIA EXISTING BUILDING CODE (CEBC), PART 10, TITLE 24 C.C.R. (2021 INTERNATIONAL EXISTING CODE AND 2022 CALIFORNIA AMENDMENTS)
2022	CALIFORNIA GREEN BUILDING STANDARDS CODE (CALGREEN), PART 11, TITLE 24 C.C.R.
2022	CALIFORNIA REFERENCED STANDARDS, PART 12,TITLE 24 C.C.R.
TITLE 19	C.C.R., PUBLIC SAFETY, STATE FIRE MARSHAL REGULATIONS.
2019	ASME A17.1/B44-19 SAFETY CODE FOR ELEVATORS AND ESCALATORS
2020	ASME 18.1 - SAFETY STANDARD FOR PLATFORM LIFTS AND STAIRWAY CHAIR LIFTS

NOTE TO CONTRACTOR:
THE CALIFORNIA ENERGY CODE SECTION 10-103 REQUIRES ACCEPTANCE TESTING ON ALL NEWLY INSTALLED LIGHTING CONTROLS, MECHANICAL SYSTEMS, ENVELOPES, AND PROCESS EQUIPMENT AFTER INSTALLATION AND BEFORE PROJECT COMPLETION. AN ACCEPTANCE TEST IS A FUNCTIONAL PERFORMANCE TEST TO HELP ENSURE THAT NEWLY INSTALLED EQUIPMENT IS OPERATING AND IN COMPLIANCE WITH ENERGY CODE.

LIGHTING CONTROLS ACCEPTANCE TESTS MUST BE PERFORMED BY A CERTIFIED LIGHTING CONTROLS ACCEPTANCE TEST TECHNICIAN (ATT).

MECHANICAL SYSTEM ACCEPATANCE TEST MUST BE PERFORMED BY A CERTIFIED MECHANICAL ATT FOR PROJECTS SUBMITTED ON OR AFTER OCTOBER 1, 2021.

A LISTING OF CERTIFIED ATTs CAN BE FOUND AT: HTTPS://WWW.ENERGY.CA.GOV/PROGRAMS-AND-TOPICS/PROGRAMS/ACCEPTANCE-TEST-TECHNICIAN-CERTIFICATION-PROVIDER-PROGAM/ACCEPTANCE

THE ACCEPTANCE TESTING PROCEDURES MUST BE REPEATED, AND DEFICIENCIES MUST BE CORRECTED BY THE BUILDER OR INSTALLING CONTRACTOR UNITL THE CONSTUCTION/INSTALLATION OF THE SPECIFIED SYSTEMS CONFORM AND PASS THE REQUIRED ACCEPTANCE CRITERIA.

PROJECT INSPECTORS WILL BE COLLECTING THE FORMS TO CONFIRM THAT THE REQUIRED ACCEPTANCE TESTS HAVE BEEN COMPLETED.

PARTIAL LIST OF APPLICABLE STANDARDS

NFPA 13	STANDARD FOR AUTOMATIC FIRE SPRINKLER SYSTEMS (CA AMENDED)	2022 ED.
NFPA 14	STANDARD FOR STANDPIPE AND HOSE SYSTEMS (CA AMENDED)	2019 ED.
NFPA 17	STANDARD FOR DRY CHEMICAL EXTINGUISHING SYSTEMS	2021 ED.
NFPA 17A	STANDARD FOR WET CHEMICAL EXTINGUISHING SYSTEMS	2021 ED.
NFPA 20	STANDARD FOR STATIONARY PUMPS FOR FIRE PROTECTION	2019 ED.
NFPA 22	STANDARD FOR WATER TANKS FOR PRIVATE FIRE PROTECTION	2013 ED.
NFPA 24	STANDARD FOR THE INSTALLATION OF PRIVATE FIRE MAINS AND THEIR APPURTENANCES (CA AMENDED)	2019 ED.
NFPA 72	NATIONAL FIRE ALARM & SIGNALING CODE (CA AMENDED)	2022 ED.
NFPA 80	STANDARD FOR FIRE DOORS AND OTHER OPENING PROTECTIVES	2019 ED.
NFPA 2001	STANDARD ON CLEAN AGENT FIRE EXTINGUISHING SYSTEMS (CA AMENDED)	2018 ED.
UL 300	STANDARD FOR FIRE TESTING OF FIRE EXTINGUISHING SYSTEMS FOR PROTECTION OF COMMERCIAL COOKING EQUIPMENT	2005 (R2014)
UL 464	AUDIBLE SIGNAL APPLIANCES FOR FIRE ALARM AND SIGNALING SYSTEMS, INCLUDING ACCESSORIES	2003 ED.
UL 521	STANDARD FOR HEAT DETECTORS FOR FIRE PROTECTIVE SIGNALING SYSTEMS	1999 ED. (R2005)
UL 1971	STANDARD FOR SIGNALING DEVICES FOR THE HEARING IMPAIRED	2002 ED. (R2018)
ICC 300	STANDARD FOR BLEACHERS, FOLDING AND TELESCOPING SEATING AND GRANDSTANDS	2017 ED.

FOR A COMPLETE LIST OF APPLICABLE NFPA STANDARDS REFER TO 2022 CBC (SFM) CHAPTER 35 AND CALIFORNIA FIRE CODE CHAPTER 80.
SEE CALIFORNIA BUILDING CODE, CHAPTER 35 FOR STATE OF CALIFORNIA AMENDMENTS TO NFPA STANDARDS.

PROJECT DESCRIPTION

SCOPE OF WORK:

30' X 64' PC LUNCH SHELTER

SITE WORK INCLUDING ACCESSIBILITY UPRADES AND TOILET ROOM UPGRADES

PROJECT DATA

PROJECT ADDRESS:
17670 BRUELLA ROAD
LODI, CA 95240

OWNER:
LODI UNIFIED SCHOOL DISTRICT
PHONE #: 209-331-7225

STATEMENT OF GENERAL CONFORMANCE

(X) THE DRAWINGS OR SHEETS LISTED ON THE INDEX SHEET
(X) THIS DRAWING PAGE OF SPECIFICATIONS/CALCULATIONS

HAVE BEEN PREPARED BY OTHER DESIGN PROFESSIONALS OR CONSULTANTS WHO ARE LICENSED AND/OR AUTHORIZED TO PREPARE SUCH DRAWINGS IN THIS STATE. IT HAS BEEN EXAMINED BY ME FOR:

1) DESIGN INTENT AND APPEARS TO MEET THE APPROPRIATE REQUIREMENTS OF TITLE 24, CALIFORNIA CODE OF REGULATIONS AND THE PROJECT SPECIFICATIONS PREPARED BY ME, AND
2) COORDINATION WITH MY PLANS AND SPECIFICATIONS AND IS ACCEPTABLE FOR INCORPORATION INTO THE CONSTRUCTION OF THIS PROJECT.

THE STATEMENT OF GENERAL CONFORMANCE "SHALL NOT BE CONSTRUED AS RELIEVING ME OF MY RIGHTS, DUTIES, AND RESPONSIBILITIES UNDER SECTIONS 17302 AND 81138 OF THE EDUCATION CODE AND SECTIONS 4-336, 4-341 AND 4-344" OF TITLE 24, PART 1. (TITLE 24, PART 1, SECTION 4-317 (B))

I CERTIFY THAT:

THE PC APPROVED MANUFACTURER DRAWINGS LISTED ON THE INDEX SHEET ARE IN GENERAL CONFORMANCE WITH THE PROJECT DESIGN INTENT, AND THEY HAVE BEEN COORDINATED WITH THE PROJECT PLANS AND SPECIFICATIONS.

SIGNATURE
ARCHITECT OR ENGINEER DESIGNATED TO BE IN GENERAL RESPONSIBLE CHARGE

DATE: 10/11/23

Jeffrey Grau
PRINT NAME

C-14648 — LICENSE NUMBER
05-31-25 — EXPIRATION DATE

SHEET INDEX

NUMBER	NAME
GENERAL SHEET	
G0.10	COVER SHEET
1	
CIVIL	
C1.1	TITLE SHEET AND DETAIL SHEET
C2.1	DEMOLITION PLAN
C3.1	GRADING, DRAINAGE, AND PAVING PLAN
3	
ARCHITECTURE	
A1.21	CODE INFORMATION SITE PLAN
A1.22	LOCAL FIRE AUTHORITY SITE ACCESS PLAN
A1.23	ENLARGED SITE PLAN AND SECTION - LUNCH SHELTER
A2.11	UNIT A - ENLARGED RESTROOM PLANS
A8.11	1ST FLOOR - INTERIOR ELEVATIONS
A10.1	SITE DETAILS
A10.2	TYPICAL MOUNTING HEIGHTS AND DETAILS
7	
PC DRAWINGS	
RAM1.0	ORDER FORM
RAM1.1	NOTES AND SPECIAL INSPECTIONS
RAM2.3	FOUNDATION PLAN DRILLED PIER
RAM3.1	FRAMING PLAN
RAM4.2	FRAME CONNECTION DETAILS
RAM4.3	SECTION DETAILS
RAM5.1	ARCHITECTURAL VIEWS
RAM6.1	ROOF CONNECTION DETAILS
RAM7.0	MISC DESIGN OPTIONS
RAM7.1	ELECTRICAL CUTOUTS
10	
Grand total 21	

ABBREVIATIONS

(E)	EXISTING
AB	ANCHOR BOLT
AC PAVING	ASPHALTIC CONCRETE PAVING
ACC	ACCESS/ACCESSIBLE
ACP	ACOUSTICAL CEILING PANEL
ACT	ACOUSTICAL CEILING TILE
ADJ	ADJACENT/ADJUSTABLE
AFF	ABOVE FINISH FLOOR
AGG	AGGREGATE
AHU	AIR HANDLING UNIT
ARCH	ARCHITECTURAL
ATT	ATTENUATION
AUTO	AUTOMATIC
BD	BOARD
BLCG	BLOCKING
BUR	BUILT UP ROOFING
CABT	CABINET
CF	CUBIC FEET
CFCI	CONTRACTOR FURNISHED, CONTRACTOR INSTALLED
CFOI	CONTRACTOR FURNISHED, OWNER INSTALLED
CG	CORNER GUARD
CJ	CONTROL JOINT
CL	CENTER LINE
CLF	CHAIN LINK FENCE
CLR	CLEAR
CMU	CONCRETE MASONRY UNIT
CO	CLEANOUT
COL	COLUMN
COMP	COMPRESSION / COMPOSITE
CF	CUBIC FEET
COORD	COORDINATE
CORR	CORRUGATED
CT	CERAMIC TILE
CTSK	COUNTER SKUNK
CW	CURTAINWALL
DEPR	DEPRESSED / DEPRESSION
DF	DRINKING FOUNTAIN
DIM	DIMENSION
DISP	DISPENSER
DS	DOWNSPOUT
DTL	DETAIL
DW	DISHWASHER
E/W	EACH WAY
EIFS SYSTEM	EXTERIOR INSULATION FINISH
EJ	EXPANSION JOINT
ELEC	ELECTRICAL
ELEV	ELEVATION / ELEVATOR
ENCL	ENCLOSE / ENCLOSURE
EOS	EDGE OF SLAB
EP	ELECTRICAL PANEL
EQ	EQUAL
ESC	EXCUTCHEON
EWC	ELECTRIC WATER COOLER
EXP	EXPOSED
FA	FIRE ALARM
FD	FLOOR DRAIN
FDC	FIRE DEPARTMENT CONNECTION
FE	FIRE EXTINGUISHER
FEC	FIRE EXTINGUISHER W/ CABINET
FF	FINISH FLOOR
FG	FINISH GRADE
FH	FIRE HYDRANT
FHC	FIRE HOSE CABINET
FSH	FLAT HEAD SCREW
FIN	FINISH
FLR	FLOOR
FOC	FACE OF CONCRETE
FOF	FACE OF FINISH
FOM	FACE OF MASONRY
FOS	FACE OF STUD
FP	FIREPROOFING
FR	FIRE RATED
FRG	FIRE RATED GLASS
FRP	FIBERGLASS REINFORCED PLASTIC
FRT	FIRE RETARDANT TREATED
FS	FINISH SURFACE
FTG	FOOTING
GB	GRAB BAR
GFRC	GLASS FIBER REINFORCED CONCRETE
GL	GLASS TYPE
GLB	GLUE LAMINATED BEAM
GYP BD	GYPSUM BOARD
GYP PLAS	GYPSUM PLASTIC
HB	HOSE BIBB
HD	HEAVY DUTY
HDR	HEADER
HDWR	HARDWARE
HGT	HEIGHT
HM	HOLLOW METAL
HP	HIGH POINT
HSS	HOLLOW STEEL SECTION
ID	INSIDE DIAMTER
INT	INTERIOR
INV	INVERT
LANDS	LANDSCAPE
LAV	LAVATORY
LLH	LONG LEG HORIZONTAL
LLV	LONG LEG VERTICAL
LP	LOW POINT
LT WT	LIGHT WEIGHT
LVR	LOUVER
MACH	MACHINE
MB	MACHINE BOLT
MDF	MEDIUM DENSITY FIBERBOARD
MDO	MEDIUM DENSITY OVERLAY
MECH	MECHANICAL
MED	MEDIUM
MEMB	MEMBRANE
MFR	MANUFACTURER
MH	MANHOLE
MO	MASONRY OPENING
MTD	MOUNTED
MTL	METAL
NIC	NOT IN CONTRACT
NR	NON RATED
NRC	NOISE REDUCTION COEFFICIENT
NTS	NOT TO SCALE
O/	OVER
O/A	OVERALL
OC	ON CENTER
OD	OUTSIDE DIAMTER
OFCI	OWNER FURNISHED, CONTRACTOR INSTALLED
OFOI	OWNER FURNISHED, OWNER INSTALLED
OFVI	OWNER FURNISHED, VENDOR INSTALLED
OH	OPPOSITE HAND
OPER	OPERABLE
OPNG	OPENING
ORD	OVERFLOW ROOF DRAIN
P/L	PROPERTY LINE
PA	PUBLIC ADDRESS
PAF	POWDER ACTUATED FASTENER PAVING
PCC	PORTLAND CEMENT CONCRETE PAVING
PED	PEDESTRIAN
PERF	PERFORATED
PERIM	PERIMETER
PERP	PERPENDICULAR
PH	PANIC HARDWARE
PIV	POST INDICATOR VALVE
PL	PLATE
PLAM	PLASTIC LAMINATE
PLAS	PLASTER
PLUMB	PLUMBING
PNL	PANEL
PNT	PAINT / PAINTED
POC	POINT OF CONNECTION
POLY ISO	POLYISOCYANURATE
PREFIN	PREFINISHED
PREP	PREP / PREPARATION
PTC	POST TENSIONED CONCRETE
PTD	PAPER TOWEL DISPENSER
PTN	PARTITION
PTS	PNEUMATIC TUBE STATION / SYSTEM
PVC	POLYVINYL CHLORIDE
PVMT	PAVEMENT
QT	QUARRY TILE
R	RADIUS, RISER
RB	RESILIENT BASE
RD	ROOF DRAIN
RECEPT	ECEPTACLE
REF	REFERENCE
REFL	REFLECT(ED), (IVE)
REFL	REFLECT(ED), (IVE)
REFR	REFRIGERATOR
REINF	REINFORCE/REINFORCED/ REINFORCEMENT
REM	REMOVE
RH	ROUND HEAD
RHS	ROUND HEAD SCREW
RO	ROUGH OPENING
ROW	RIGHT OF WAY
SCH	SCHEDULE (FOR PIPE)
SCHED	SCHEDULE / SCHEDULING
SD	STORM DRAIN / SOAP DISPENSER
SECT	SECTION
SG	SAFETY GLASS
SHT	SHEET
SHTG	SHEATHING
SMS	SHEET METAL SCREW
SND	SANITARY NAPKIN DISPOSAL
SOV	SHUT OFF VALVE
SPEC	SPECIFICATIONS
SS	STAINLESS STEEL
STC	SOUND TRAMISSION CLASS
STL	STEEL
STSMS SCREW	SELF TAPPING SHEET METAL
SUSP	SUSPENDED
SV	SHEET VINYL
SYM	SYMMETRICAL
T	TREAD
T&B	TOP AND BOTTOM
TO	TOP OF
TOC	TOP OF CURB / CONCRETE
TOP	TOP OF PARAPET
TOS	TOP OF STEEL
TOW	TOP OF WALL
TPD	TOILET PAPER DISPENSER
TS	TACKABLE SURFACE
U/C	UNDER CABINET (OR COUNTER
UNO	UNLESS NOTED OTHERWISE
UR	URINAL
VAC	VACUUM
VB	VAPOR BARRIER
VCT	VINYL COMPOSITION TILE
VIF	VERIFY IN FIELD
VTR	VENT THROUGH ROOF
VWC	VINYL WALL COVERING
W/	WITH
W/O	WITHOUT
WB	WOOD BASE
WC	WATER CLOSET
WD	WOOD
WDW	WINDOW
WGT	WEIGHT
WH	WATER HEATER
WP	WATERPROOFING/WALL PROTECTION
WR	WATER RESISTANT
WRGB	WATER RESISTANT GYPSUM BOARD
WS	WOOD SCREW
WSCT	WAINSCOT
WWF	WELDED WIRE FABRIC

NOTE:
OTHER ABBREVIATIONS USED ON THESE DRAWINGS ARE CONSIDERED STANDARDS IN THE BUILDING INDUSTRY. CONTACT ARCHITECT FOR NECESSARY CLARIFICATION.

SYMBOL LEGEND

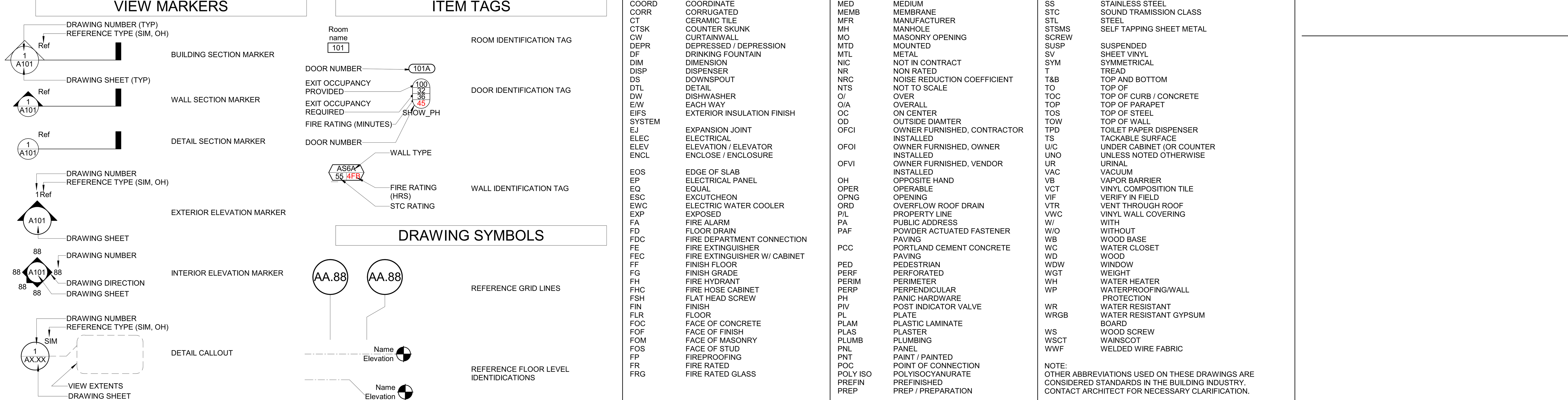

STATE MAP

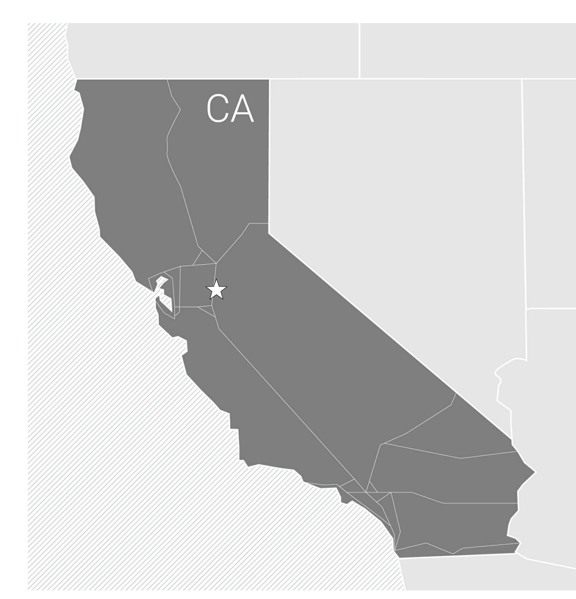

VICINITY MAP

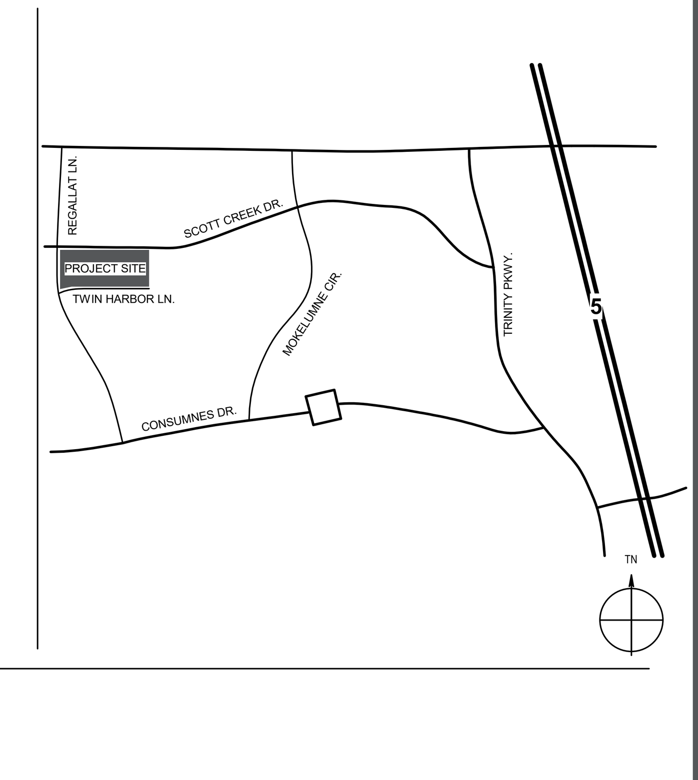

AGENCY APPROVAL:

IDENTIFICATION STAMP
DIV. OF THE STATE ARCHITECT
APP: 02-121837 INC:
REVIEWED FOR
SS ☑ FLS ☑ ACS ☑
DATE: 10/19/2023

LODI USD

HMC Architects

R221551X00

2101 CAPITOL AVENUE, SUITE 100,
SACRAMENTO, CA, 95816
916 368 7990 / www.hmcarchitects.com

LICENSED ARCHITECT
JEFFREY ALAN GRAU
C-14648
5/31/25
RENEWAL DATE
STATE OF CALIFORNIA

PROJECT TEAM

CIVIL ENGINEER
WARREN GREEN ENGINEERING
3114 BRENNANS RD. LOOMIS, CA 95650
916.663.2323

FACILITY:
MANLIO SILVA ELEMENTARY SCHOOL
6250 SCOTT CREEK DRIVE STOCKTON, CA 95219

PROJECT:
LODI UNIFIED SCHOOL DISTRICT LUNCH SHELTERS - MANLIO SILVA ELEMENTARY SCHOOL

SHEET NAME:
COVER SHEET

CONSTRUCTION DOCUMENTS

DATE: **10/18/2023** | CLIENT PROJ NO: **R221551X00**

SHEET:
G0.10

PLEASE RECYCLE

Autodesk Docs://R221551X00 Lodi USD Lunch Shelters/R221551X00-A-SILVA-ES-LUNCH-SHELTER.rvt
10/11/2023 12:34:54 PM

THE LINE SHOWN ABOVE IS EXACTLY 1" ON ORIGINAL 24X36 SHEETS ORIGINAL IMAGE SIZE

NOTE:
SEE ARCHITECTURAL PLANS FOR EXPANSION JOINT SPACING

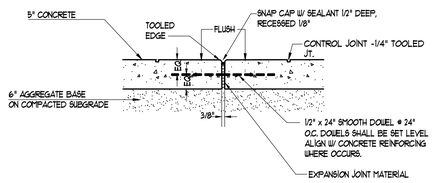

1 / C1.1 NOT USED

N.T.S.

4 / C1.1 EXPANSION JOINT

N.T.S.

NOTE:
TRANSITION FROM NEW CONCRETE WALKWAYS TO EXISTING LANDSCAPE GRADE TO BE AT A MAXIMUM OF 5 : 1 SLOPE UNLESS OTHERWISE NOTED ON PLANS.

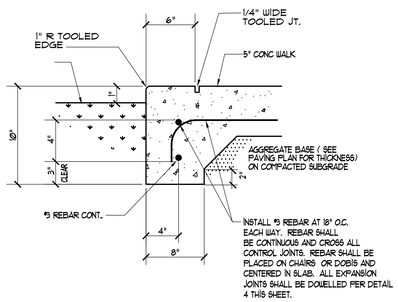

2 / C1.1 FLUSH CONC. WALK @ LANDSCAPE

N.T.S.

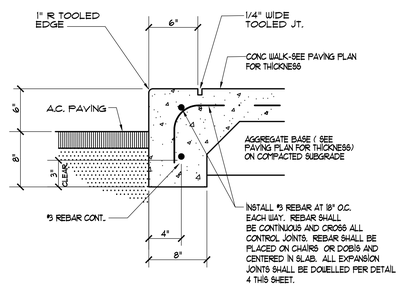

5 / C1.1 THICKENED EDGE CONC. WALK

N.T.S.

NOTE:
SEE ARCHITECTURAL PLANS FOR EXPANSION JOINT SPACING

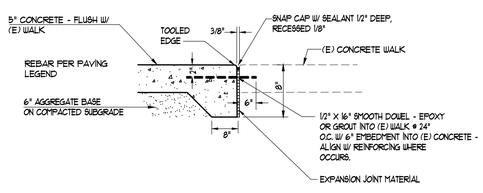

3 / C1.1 CONC. WALK AT EXISTING CONDITIONS

N.T.S.

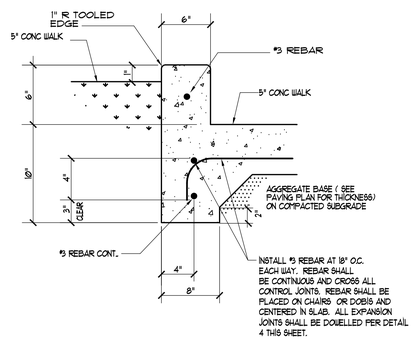

6 / C1.1 PLANTER CURB

LEGEND

× 43.15	EXISTING ELEVATION
8"SD	EXISTING STORM DRAIN
6"SS	EXISTING SANITARY SEWER
8"W	EXISTING WATER MAIN
	EXISTING WATER VALVE
	EXIST. FIRE HYDRANT
C	EXISTING COMMUNICATION LINE
IR	EXISTING IRRIGATION CONTROL LINE
E	EXISTING ELECTRICAL LINE
T	EXISTING TELEPHONE LINE
3190	NEW ELEVATION

ABBREVIATIONS

AC	ASPHALT CONCRETE	LD	LANDSCAPE DRAIN
AB	AGGREGATE BASE	LF	LINEAR FEET
ADD. ALT.	ADDITIVE ALTERNATE	MH	MANHOLE
BLDG	BUILDING	MIN	MINIMUM
BO	BLOW OFF	MS	MOW STRIP
BOW	BACK OF WALK	(N)	NEW
BW	BOTTOM OF WALL	N.I.C.	NOT IN CONTRACT
CC	CONCRETE (TOP OF CONCRETE WALK)	OG	ORIGINAL GRADE
CL	CENTER LINE	P	PROPOSED
CONC	CONCRETE	PD	PLANTER DRAIN
CONST.	CONSTRUCT	PIV	POST INDICATOR VALVE
COTG	CLEANOUT TO GRADE	POC	POINT OF CONNECTION
DI	DRAIN INLET	PP	POWER POLE
DIP	DUCTILE IRON PIPE	PUE	PUBLIC UTILITY EASEMENT
DS	DOWNSPOUT	RCP	REINFORCED CONCRETE PIPE
DWY	DRIVEWAY	RD	ROOF DRAIN
(E)	EXISTING	RDWD	REDWOOD
E. BOX	ELECTRICAL BOX	RET	RETAINING
E. COND.	ELECTRICAL CONDUIT	RP	REDUCED PRESSURE
ELEC	ELECTRIC	R/W	RIGHT OF WAY
EP	EDGE OF PAVEMENT	RWL	RAIN WATER LEADER
EXIST.	EXISTING	S	SLOPE
FDC	FIRE DEPARTMENT CONNECTION	SD	STORM DRAIN
FF	FINISH FLOOR	SS	SANITARY SEWER
FG	FINISH GRADE	ST. LT.	STREET LIGHT
FH	FIRE HYDRANT	TBM	TEMPORARY BENCH MARK
FL	FLOW LINE	T	TRANSFORMER
FM	FIRE MAIN	TEL	TELEPHONE
FS	FIRE SERVICE	TC	TOP OF CURB
G	GAS	TW	TOP OF WALL
GB	GRADE BREAK	TYP	TYPICAL
GR	GRATE	VCP	VITRIFIED CLAY PIPE
GV	GATE VALVE	W	WATER
HDR	HEADER	WV	WATER VALVE
HP	HIGH POINT	VB	VALVE BOX
INV	INVERT ELEVATION	YD	YARD DRAIN
JP	JOINT POLE		

INDEX OF CIVIL DRAWINGS

C1.1 TITLE SHEET AND DETAIL SHEET
C2.1 DEMOLITION PLAN
C3.1 GRADING, DRAINAGE AND PAVING PLAN

AGENCY APPROVAL:

IDENTIFICATION STAMP
DIV. OF THE STATE ARCHITECT
APP: 02-121837 INC:
REVIEWED FOR
SS ☑ FLS ☑ ACS ☑
DATE: 10/19/2023

LODI USD

HMC Architects
R2211551
2101 CAPITOL AVENUE, SUITE 100,
SACRAMENTO, CA. 95816
916 368 7990 / www.hmcarchitects.com

Δ DESCRIPTION DATE

CONSULTANT:

REGISTERED PROFESSIONAL ENGINEER LORI A. GREEN NO. 36500 Exp. 6-30-24 CIVIL STATE OF CALIFORNIA

Warren-Green ENGINEERING
3114 Brennans Road
Loomis, CA 95690

FACILITY:

MANLIO SILVA ELEMENTARY SCHOOL
6250 SCOTT CREEK DRIVE STOCKTON, CA 95219

PROJECT:

LODI UNIFIED SCHOOL DISTRICT LUNCH SHELTERS-MANLIO SILVA ELEMENTARY SCHOOL

SHEET NAME:

CONSTRUCTION DOCUMENTS

FILE NO.: **MSES-CD** A NO.: R2211551

DATE: **OCT. 18, 2023** CLIENT PROJ NO:

SHEET:

C1.1

PLEASE RECYCLE

THE LINE SHOWN ABOVE IS EXACTLY ONE INCH AT THIS SHEET'S ORIGINAL PAGE SIZE

DEMOLITION NOTES:

1. CONTRACTOR SHALL REMOVE / DEMOLISH ALL (E) IMPROVEMENTS AS NECESSARY FOR CONSTRUCTION OF NEW IMPROVEMENTS UNDER THIS CONTRACT. CONTRACTOR SHALL FIELD WALK SITE TO REVIEW AND CONFIRM THE EXTENT OF ALL CLEARING WORK PRIOR TO BID.
2. ALL MATERIAL REMOVED BY CONTRACTOR SHALL BE PROPERLY AND LEGALLY DISPOSED OFFSITE (UNLESS SPECIFICALLY IDENTIFIED TO BE DELIVERED TO OWNER)
3. NUMEROUS UNDERGROUND UTILITIES EXIST WITHIN THE AREAS OF EXISTING CONCRETE REMOVAL. CONTRACTOR SHALL USE CAUTION DURING DEMOLITION AND SUBGRADE SCARIFICATION AND COMPACTION TO PROTECT SAID UTILITIES.

DEMOLITION LEGEND

SAWCUT LINE

REMOVE (E) CONCRETE

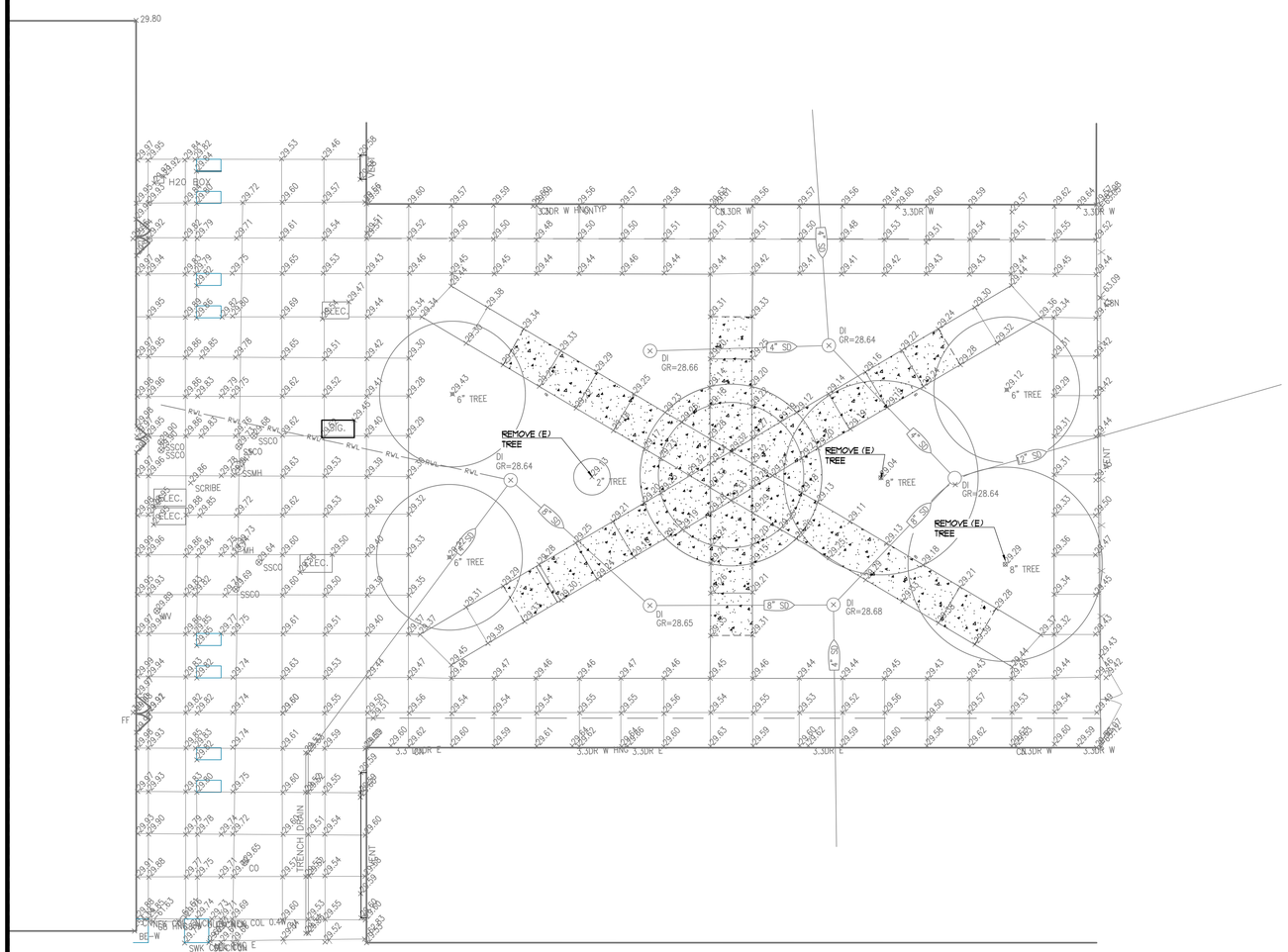

1 DEMOLITION PLAN
C2.1
SCALE: 1"=10'

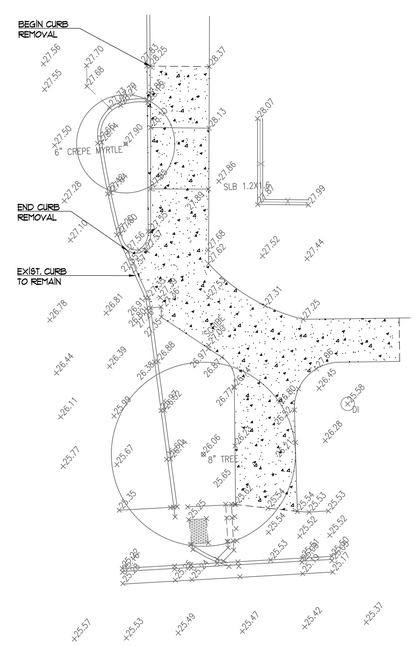

2 DEMOLITION PLAN
C2.1
SCALE: 1"=10'

AGENCY APPROVAL:

IDENTIFICATION STAMP
DIV. OF THE STATE ARCHITECT
APP: 02-121837 INC:
REVIEWED FOR
SS ☑ FLS ☑ ACS ☑
DATE: 10/19/2023

LODI USD

HMC Architects

R2211551

2101 CAPITOL AVENUE, SUITE 100,
SACRAMENTO, CA, 95816
916 368 7990 / www.hmcarchitects.com

Δ	DESCRIPTION	DATE

CONSULTANT:

REGISTERED PROFESSIONAL ENGINEER
LORI A. GREEN
NO. 36500
Exp. 6-30-24
STATE OF CALIFORNIA

Warren-Green ENGINEERING
3114 Brennans Road
Loomis, CA 95690

FACILITY:

MANLIO SILVA ELEMENTARY SCHOOL
6250 SCOTT CREEK DRIVE STOCKTON, CA 95219

PROJECT:

LODI UNIFIED SCHOOL DISTRICT LUNCH SHELTERS-
MANLIO SILVA ELEMENTARY SCHOOL

SHEET NAME:

CONSTRUCTION DOCUMENTS

FILE NO.: MSES-CD
A NO.: R2211551
DATE: OCT. 18, 2023
CLIENT PROJ NO:
SHEET:

C2.1

PLEASE RECYCLE

PAVING LEGEND

5" CONCRETE ON
6" AGGREGATE BASE ON
COMPACTED SUBGRADE W/
#3 REBAR AT 18" O.C. EACH WAY

KEY NOTE LEGEND

1. 1.8% MAX. SLOPE IN ANY DIRECTION.
2. RAMP - 8% MAX. SLOPE IN DIRECTION OF TRAVEL, 1.8% MAX. CROSS SLOPE
3. 1.8% MAX. CROSS SLOPE 4.75% MAX. SLOPE IN DIRECTION OF TRAVEL.
4. MATCH (E) AC GRADE AT SAWCUT LINE.
5. MATCH (E) CONC. GRADE AT SAWCUT LINE.
6. SHADE STRUCTURE FOOTING - TYPICAL
7. SHADE STRUCTURE ROOF LINE ALIGNES WITH EDGE OF CONCRETE.
8. CONTRACTOR SHALL LOCATE EXISTING UTILITIES PRIOR TO START OF CONSTRUCTION. NOTIFY ARCHITECT IF CONFLICT WITH NEW FOOTINGS EXISTS.
9. REGRADE PLANTER TO DRAIN TO NEW DI GRATE ELEVATION.

NOTES:

1. CONCRETE SLAB IS NOT PART OF STRUCTURAL SUPPORT FOR SHADE STRUCTURE
2. CONTRACTOR SHALL LOCATE ALL UTILITIES IN AREA OF WORK PRIOR TO START OF CONSTRUCTION. NOTIFY ARCHITECT IF ANY CONFLICTS WITH NEW FOOTINGS OCCUR.
3. ALL UTILITIES (VALVE BOX COVERS, VAULTS, CLEANOUTS, ETC. SHALL BE ADJUSTED TO NEW FINISH GRADES.

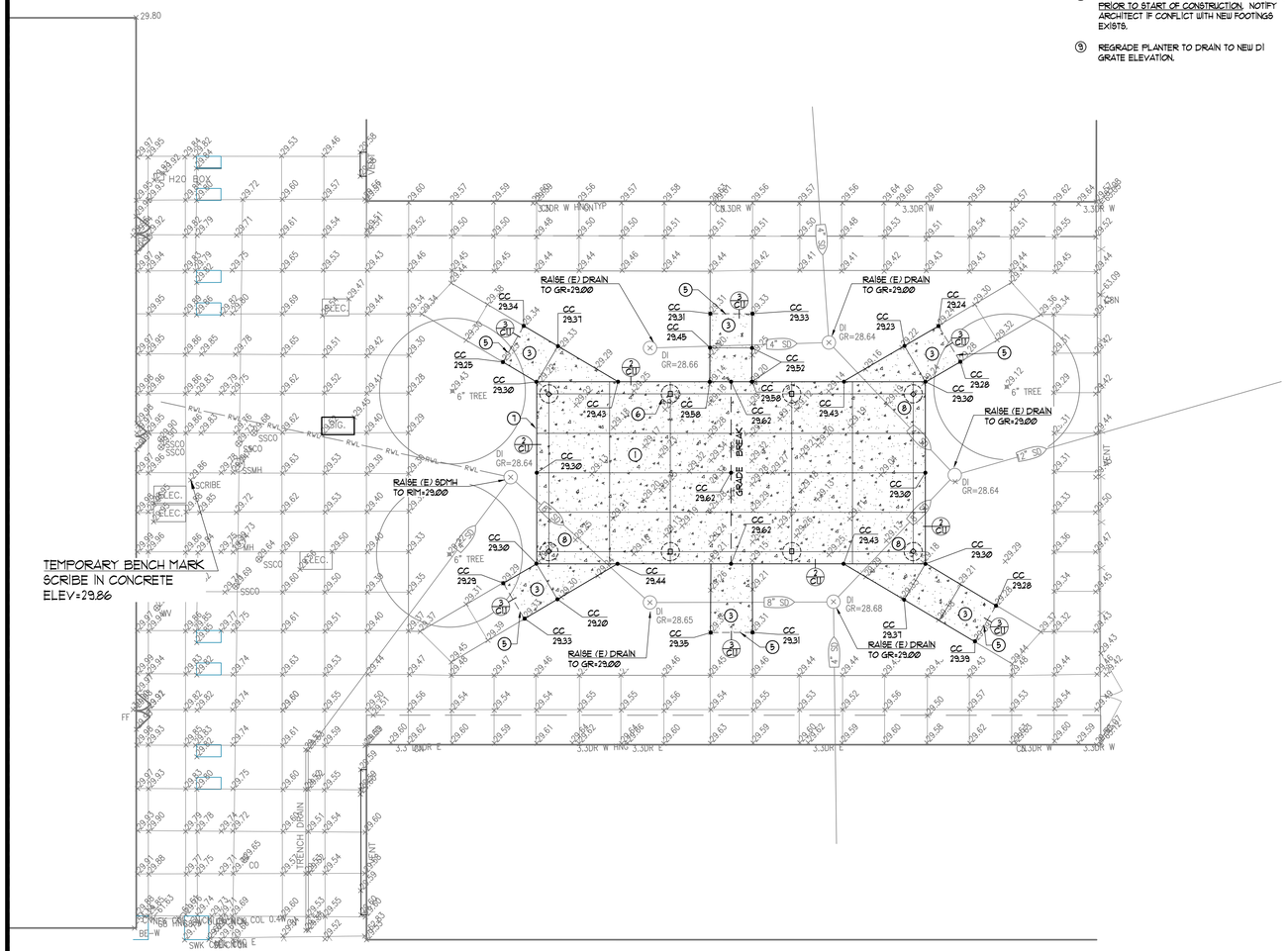

1 GRADING, DRAINAGE AND PAVING PLAN
C3.1
SCALE: 1"=10'

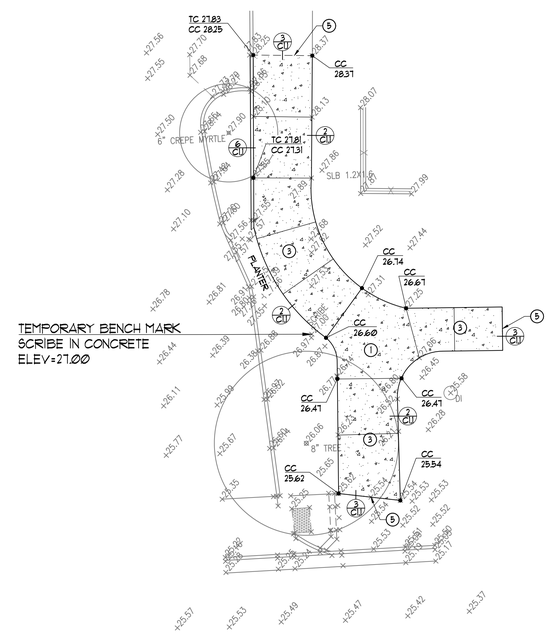

2 GRADING, DRAINAGE AND PAVING PLAN
C3.1
SCALE: 1"=10'

AGENCY APPROVAL:

IDENTIFICATION STAMP
DIV. OF THE STATE ARCHITECT
APP: 02-121837 INC:
REVIEWED FOR
SS ☑ FLS ☑ ACS ☑
DATE: 10/19/2023

LODI USD

HMC Architects

R2211551

2101 CAPITOL AVENUE, SUITE 100,
SACRAMENTO, CA, 95816
916 368 7990 / www.hmcarchitects.com

Δ	DESCRIPTION	DATE

CONSULTANT:

REGISTERED PROFESSIONAL ENGINEER
LORI A. GREEN
NO. 36500
Exp. 6-30-24
STATE OF CALIFORNIA

Warren-Green ENGINEERING
3114 Brennans Road
Loomis, CA 95690

FACILITY:

MANLIO SILVA ELEMENTARY SCHOOL
6250 SCOTT CREEK DRIVE STOCKTON, CA 95219

PROJECT:

LODI UNIFIED SCHOOL DISTRICT LUNCH SHELTERS-
MANLIO SILVA ELEMENTARY SCHOOL

SHEET NAME:

CONSTRUCTION DOCUMENTS

FILE NO.: MSES-CD
A NO.: R2211551
DATE: OCT. 18, 2023
CLIENT PROJ NO:
SHEET:

C3.1

PLEASE RECYCLE

THE LINE SHOWN ABOVE IS EXACTLY 1" WHEN PLOTTED ON THIS SHEET ORIGINAL PAGE SIZE

PROPOSED LUNCH SHELTER

UNIT	DESCRIPTION	OCCUPANCY	CONSTRUCTION TYPE	ALLOWABLE AREA (TABLE 506.2)	ACTUAL AREA	OCCUPANCY CALCULATION
LS	LUNCH SHELTER	A-2	II-B NON-SPRINKLERED	9,500 S.F.	1,920 S.F.	1,920 S.F. / 15 NET = 128 OCC.

EXISTING BUILDING DESIGNATIONS

UNIT	DESCRIPTION	DSA APPLICATION #	AREA (SF)	NOTES
A	ADMINISTRATION / MULTIPURPOSE / LIBRARY / CLASSROOMS	02-105720, THIS APPLICATION	49,642 S.F.	
P1 / P2 / P3	CLASSROOMS / TOILET ROOMS	02-105720	3,840 S.F.	
P4 / P5 / P6 / P7	CLASSROOMS	02-105720	3,840 S.F.	
P8 / P9	CLASSROOMS	--	1,920 S.F.	

EXISTING PATH OF TRAVEL (POT): ARCHITECT STATEMENT

DESIGN PROFESSIONAL IN GENERAL RESPONSIBLE IN CHARGE STATEMENT: THE POT IDENTIFIED IN THESE CONSTRUCTION DOCUMENTS IS COMPLIANT WITH THE CURRENT APPLICABLE CALIFORNIA BUILDING CODE ACCESSIBILITY PROVISIONS FOR **PATH OF TRAVEL REQUIREMENTS FOR ALTERATIONS, ADDITIONS AND STRUCTURAL REPAIRS**. AS PART OF THE DESIGN OF THIS PROJECT, THE POT WAS EXAMINED AND ANY ELEMENTS, COMPONENTS OR PORTIONS OF THE POT THAT WERE DETERMINED TO BE NON-COMPLIANT

1) HAVE BEEN IDENTIFIED AND
2) THE CORRECTIVE WORK NECESSARY TO BRING THEM INTO COMPLIANCE HAS BEEN INCLUDED WITHIN THE SCOPE OF THIS PROJECT'S WORK THROUGH DETAILS, DRAWINGS, AND SPECIFICATIONS INCORPORATED INTO THESE CONSTRUCTION DOCUMENTS.

ANY NONCOMPLIANT ELEMENTS, COMPONENTS OR PORTIONS OF THE POT THAT WILL NOT BE CORRECTED BY THIS PROJECT BASED ON VALUATION THRESHOLD LIMITATIONS OR A FINDING OF UNREASONABLE HARDSHIP ARE SO INDICATED IN THESE CONSTRUCTION DOCUMENTS.

DURING CONSTRUCTION, IF POT ITEMS WITHIN THE SCOPE OF THE PROJECT REPRESENTED AS CODE COMPLIANT ARE FOUND TO BE NON-CONFORMING BEYOND REASONABLE CONSTRUCTION TOLERANCES, THEY SHALL BE BROUGHT TO COMPLIANCE WITH THE CBC AS PART OF THIS PROJECT BY MEANS OF A CONSTRUCTION CHANGE DOCUMENT.

ACCESSIBLE PARKING STALL CALCULATION

TOTAL PARKING STALL COUNT:	127 STALLS
ACCESSIBLE PARKING STALLS:	(TABLE 11B-208.2)
REQUIRED ACCESSIBLE STALLS:	5 (101-150 TOTAL STALLS)
REQUIRED VAN ACCESSIBLE STALLS:	1 (1-6 ACCESSIBLE STALLS)
ACCESSIBLE STALLS PROVIDED:	5 STANDARD & 1 VAN

NOTE: LUNCH SHELTER COMPLIES WITH DSA IR 31-1.

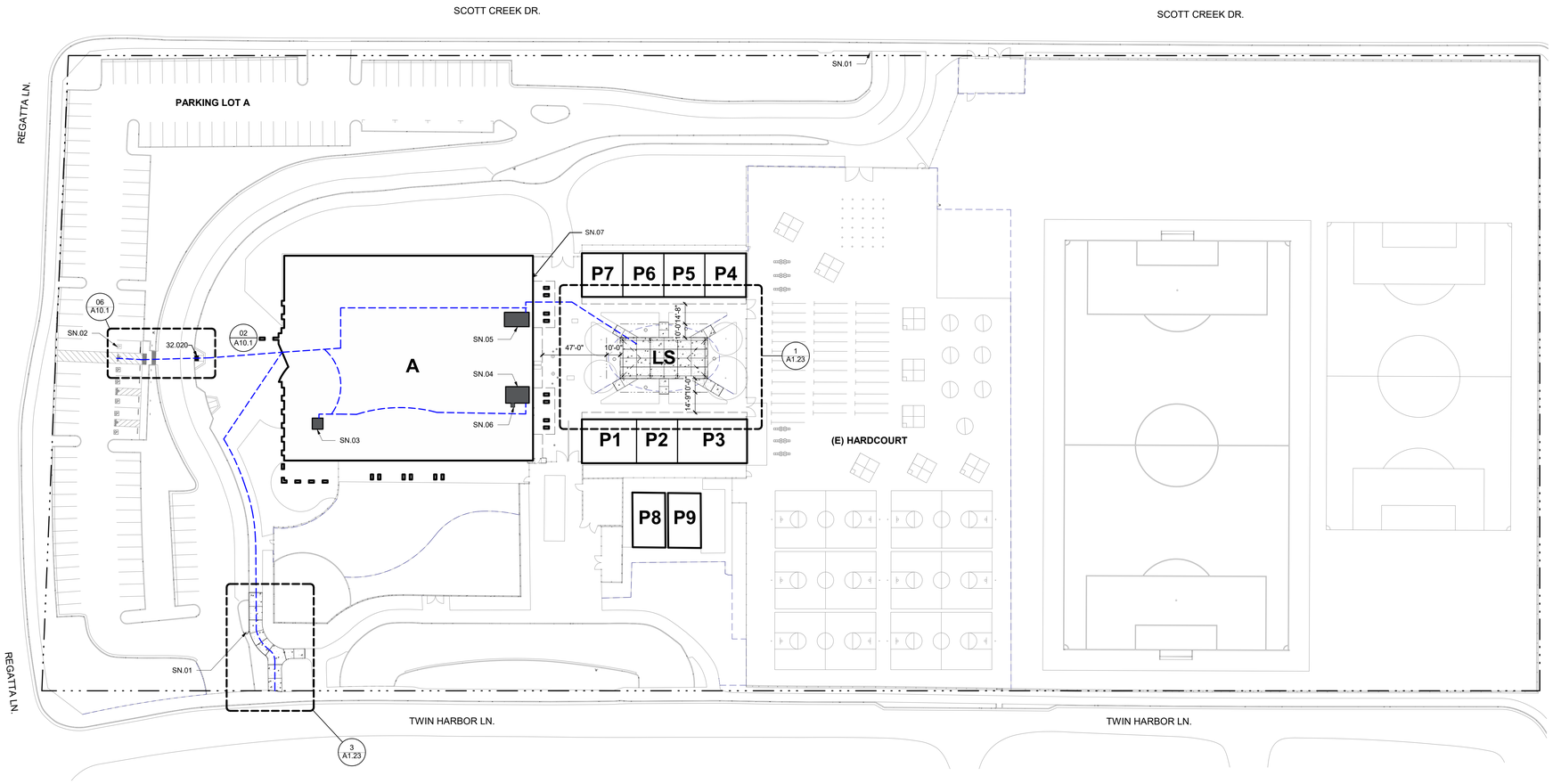

LEGEND

- PROPERTY LINE
- ASSUMED PROPERTY LINE
- EXISTING BUILDINGS
- PC LUNCH SHELTER
- EXPANSION JOINT
- CONCRETE WALK / PAVING
- CONTROL JOINT
- ASPHALT CONCRETE PAVING
- (E) FENCING
- ACCESSIBLE PATH OF TRAVEL

SHEET NOTES

SN.01 (E) PARKING LOT ENTRANCE SIGN REVIEWED AND VERIFIED PER THIS APPLICATION
SN.02 (E) VAN ACCESSIBLE PARKING STALL, UPGRADED PER THIS APPLICATION
SN.03 (E) ACCESSIBLE STAFF TOILET ROOM UPGRADED PER THIS APPLICATION
SN.04 (E) ACCESSIBLE GIRL'S TOILET ROOM UPGRADED PER THIS APPLICATION
SN.05 (E) ACCESSIBLE BOY'S TOILET ROOM UPGRADED PER THIS APPLICATION
SN.06 (E) ACCESSIBLE DRINKING FOUNTAIN REVIEWED AND VERIFIED PER THIS APPLICATION
SN.07 (E) FIRE ALARM HORN

BUILDING DESIGNATIONS

DSA #02-105720

UNIT A - ADMIN / MULTI-USE / LIBRARY / CLASSROOMS

UNIT P1 - PORTABLE CLASSROOM BUILDING
UNIT P2 - PORTABLE CLASSROOM BUILDING
UNIT P3 - PORTABLE CLASSROOM BUILDING
UNIT P4 - PORTABLE CLASSROOM BUILDING
UNIT P5 - PORTABLE CLASSROOM BUILDING
UNIT P6 - PORTABLE CLASSROOM BUILDING
UNIT P7 - PORTABLE CLASSROOM BUILDING
UNIT P8 - PORTABLE CLASSROOM BUILDING
UNIT P9 - PORTABLE CLASSROOM BUILDING

THIS APPLICATION

UNIT LS - 30 X 64 LUNCH SHELTER

AGENCY APPROVAL:

IDENTIFICATION STAMP
DIV. OF THE STATE ARCHITECT
APP: 02-121837 INC:
REVIEWED FOR
SS ☑ FLS ☑ ACS ☑
DATE: 10/19/2023

LODI USD

HMC Architects

R221551X00

LICENSED ARCHITECT JEFFREY ALAN GRAD C-14648 5/31/25 RENEWAL DATE STATE OF CALIFORNIA

2101 CAPITOL AVENUE, SUITE 100,
SACRAMENTO, CA, 95816
916 368 7990 / www.hmcarchitects.com

ISSUE

Δ	DESCRIPTION	DATE

ACCESSIBLE PATH OF TRAVEL

1. ACCESSIBLE PATH OF TRAVEL (P.O.T.): SITE WALKWAYS SHALL PROVIDE A BARRIER-FREE P.O.T. ABRUPT CHANGES IN LEVEL ALONG ANY P.O.T. ARE ALLOWED UP TO 1/2". ONLY ABRUPT CHANGES IN ELEVATION UP TO 1/4" ARE ALLOWED TO HAVE A VERTICAL TRANSITION. ABRUPT CHANGES IN ELEVATION BETWEEN 1/4" AND 1/2" SHALL BE BEVELED WITH A SLOPE NO GREATER THAN 1-UNIT VERTICAL TO 2-UNITS HORIZONTAL. GATES IN THE P.O.T. SHALL HAVE A SIGN ADJACENT TO THE GATE, IN ALL CAPITALIZED LETTERS, WHICH READS: "THIS GATE TO REMAIN LOCKED IN OPEN POSITION DURING SCHOOL HOURS OR ANY PUBLIC EVENT".
2. THE CONTRACTOR SHALL PROVIDE A P.O.T. FROM THE DISABLED ACCESSIBLE PARKING STALLS TO ALL BUILDINGS AND SITE FUNCTIONS. CONTRACTOR SHALL VERIFY THAT THE P.O.T. IS BARRIER-FREE AS DESCRIBED IN THESE NOTES.
3. WALKWAYS SHALL BE FREE OF GRATINGS WHEREVER POSSIBLE. GRATING WHICH OCCUR WITHIN THE P.O.T. SHALL HAVE OPENINGS WHICH DO NOT EXCEED 1/2" IN THE DIRECTION OF TRAVEL PER CBC SECTION 1133B.7.2.
4. AN ABRUPT DROP-OFF CHANGE IN ELEVATION AT THE EDGE OF ANY WALK INTO AN ADJACENT PLANTER SHALL NOT EXCEED 4".
5. SLOPES IN THE DIRECTION OF THE P.O.T. GREATER THAN 1-UNIT VERTICAL TO 20-UNITS HORIZONTAL SHALL BE CONSIDERED A RAMP AND WILL REQUIRE HANDRAILS ON BOTH SIDES PER CBC SECTION 1133B.5.5 SLOPES IN THE DIRECTION OF THE P.O.T. ALONG WALKWAYS SHALL NOT EXCEED 5%. CROSS SLOPES IN THE P.O.T. ALONG WALKWAYS SHALL NOT EXCEED 2%.
6. ALL WALKWAYS WITHIN THE P.O.T. SHALL BE A MINIMUM OF 48" IN WIDTH. SURFACES WITH A SLOPE OF LESS THAN 6% SHALL BE AT LEAST AS SLIP-RESISTANT AS THAT PROVIDED BY A MEDIUM BROOM FINISH. SURFACES WITH A SLOPE OF MORE THAN 6% SHALL BE SLIP-RESISTANT.
7. OBJECTS PROTRUDING INTO THE P.O.T. SHALL NOT REDUCE THE C LEAR WIDTH OR MANEUVERING SPACE WITHIN THE P.O.T. PER CBC SECTION 1133B.8.6.
8. ARCHITECT HAS SURVEYED/ INSPECTED THE PATH OF TRAVEL (P.O.T.) AS INDICATED ON THE PLANS AND HAS FOUND IT TO BE, OR HAS INDICATED ON THE PLANS REMEDIAL WORK WHICH WOULD CAUSE IT TO BE, A BARRIER-FREE ACCESSIBLE ROUTE:
   a. AT LEAST 48" IN. WIDTH; OR AS APPROVED BY CODE;
   b. WITHOUT ABRUPT LEVEL CHANGES EXCEEDING 1/2" IF BELVELED AT 1:2 MAXIMUM SLOPE, OR VERTICAL LEVEL CHANGES EXCEEDING 1/4";
   c. WITH A FIRM, STABLE, AND SLIP RESISTANT WALKING SURFACE;
   d. WITH A RUNNING SLOPE OF 1:20 OR LESS, UNLESS OTHERWISE INDICATED, AND A CROSS SLOPE OF 1:50 OR LESS;
   e. IS FREE OF OVERHEAD OBSTRUCTIONS WITHIN 80" ABOVE THE WALKING SURFACE; AND
   f. IS FREE OF OBJECTS WHICH PROTRUDE MORE THAN 4" BETWEEN THE HEIGHTS OF 27" AND 80" ABOVE THE WALKING SURFACE.

KEYNOTES

32.020 TRUNCATED DOMES

NOTES

FACILITY:
MANLIO SILVA ELEMENTARY SCHOOL
6250 SCOTT CREEK DRIVE STOCKTON, CA 95219

PROJECT:
LODI UNIFIED SCHOOL DISTRICT LUNCH SHELTERS - MANLIO SILVA ELEMENTARY SCHOOL

SHEET NAME:
CODE INFORMATION SITE PLAN

CONSTRUCTION DOCUMENTS

DATE: **10/18/2023** CLIENT PROJ NO: **R221551X00**

SHEET:

A1.21

CODE INFORMATION SITE PLAN 1 1" = 40'-0"

Autodesk Docs://R221551X00 Lodi USD Lunch Shelters/R221551X00-A-SILVA-ES-LUNCH-SHELTER.rvt
10/11/2023 12:34:14 PM

PLEASE RECYCLE

THE LINE SHOWN ABOVE IS EXACTLY 1" WHEN PLOTTED ON THE SHEET'S ORIGINAL PAGE SIZE

DSA-810 FIRE & LIFE SAFETY SITE CONDITIONS SUBMITTAL

PROJECT INFORMATION

School District:	LODI UNIFIED SCHOOL DISTRICT
Project name / school:	MANLIO SILVA ELEMENTARY SCHOOL
Project address:	6250 SCOTT CREEK DR, STOCKTON, CA 95219

FIRE & LIFE SAFTEY INFORMATION — ALTERNATE ACCEPTED

1.	Has a fire hydrant flow test been performed within the past 12 months? ***(If yes, provide a copy of the test data)***	Yes ☐	No ☒
2.	Was the fire hydrant water flow test performed as part of this LFA review?	Yes ☐	No ☒
3.	Is the project located within a designated fire hazard serverity zone as established by Cal-Fire? ***(If yes, indicate fire hazard zone classification below)***	Yes ☐	No ☒
	Refer to the following for fire hazard zone locations: ***www. fire.ca.gov/fire_prevention/fire_prevention_wildland_zones_maps***	Moderate ☐ / High ☐	Very High ☐
	Wildland Interface Area (WIFA) ***(If any designations are checked, project design must meet the requirements of CBC Chapter 7A)***		WIFA ☐

CONDITION MEANS AND METHODS RESOLUTION — ALTERNATE ACCEPTED

		Yes	No	N/A	N/R
4.	Emergency vehicle access roadways do not meet CFC requirements			X	
4a.	**Acceptable Alternative:** Emergency vehicle and personel access as proposed by the architect is acceptable for providing fire suppression and protection of life and property				
5.	**Fire Hydrants:** Number and spacing does not meet CFC requirements			X	
5a.	**Acceptable Alternative:** Number of fire hydrants and spacing as proposed by the architect is acceptable for fire suppression and protection of life and property.				
6.	**Fire Hydrants:** Water flow and pressure are less than CFC minimum.			X	
6a.	**Acceptable Alternative:** The available flow and pressure is acceptable for providing fire suppression and protection of life and property.				
7.	Location of fire department connection(s) serving fire sprinkler system or standpipe system does not meet CFC requirements.			X	
7a.	**Acceptable Alternative:** The location of fire department connection serving the fire sprinkler system and/or standpipe system is acceptable for providing fire suppression and protection of life and property.				

School District Acceptance of Acceptable Design Alternates
By signing this form, the school district acknowledges and accepts the proposed design as an alternative to California Building Code (CBC) and California Fire Code (CFC) minimum requirements as indicated by one of more of the conditions indicated at items 4a, 5a, 6a, or 7a, for providing fire and life safety protection of life and property.

Accepted by:_____ Title:_____

Signature:_____ Date:_____

LOCAL FIRE AUTHORITY (LFA) INFORMATION

LFA Agency Name:	
LFA Review Official:	
Title:	Work Phone:
Work Email:	

LFA Reviewer's Signature:_____ Date:_____

LEGEND

- PROPERTY LINE
- X — EXISTING BUILDINGS
- X — PC LUNCH SHELTER
- (E) EMERGENCY ACCESS LANE
- (E) FENCING
- (E) FIRE HYDRANT (NTS)

SHEET NOTES

SN.01 (E) FIRE HYDRANT
SN.02 (E) 20' - 0" WIDE GATE. PROVIDE KNOX LOCK BOX
SN.03 (E) 14' - 0" WIDE GATE. PROVIDE KNOX LOCK BOX

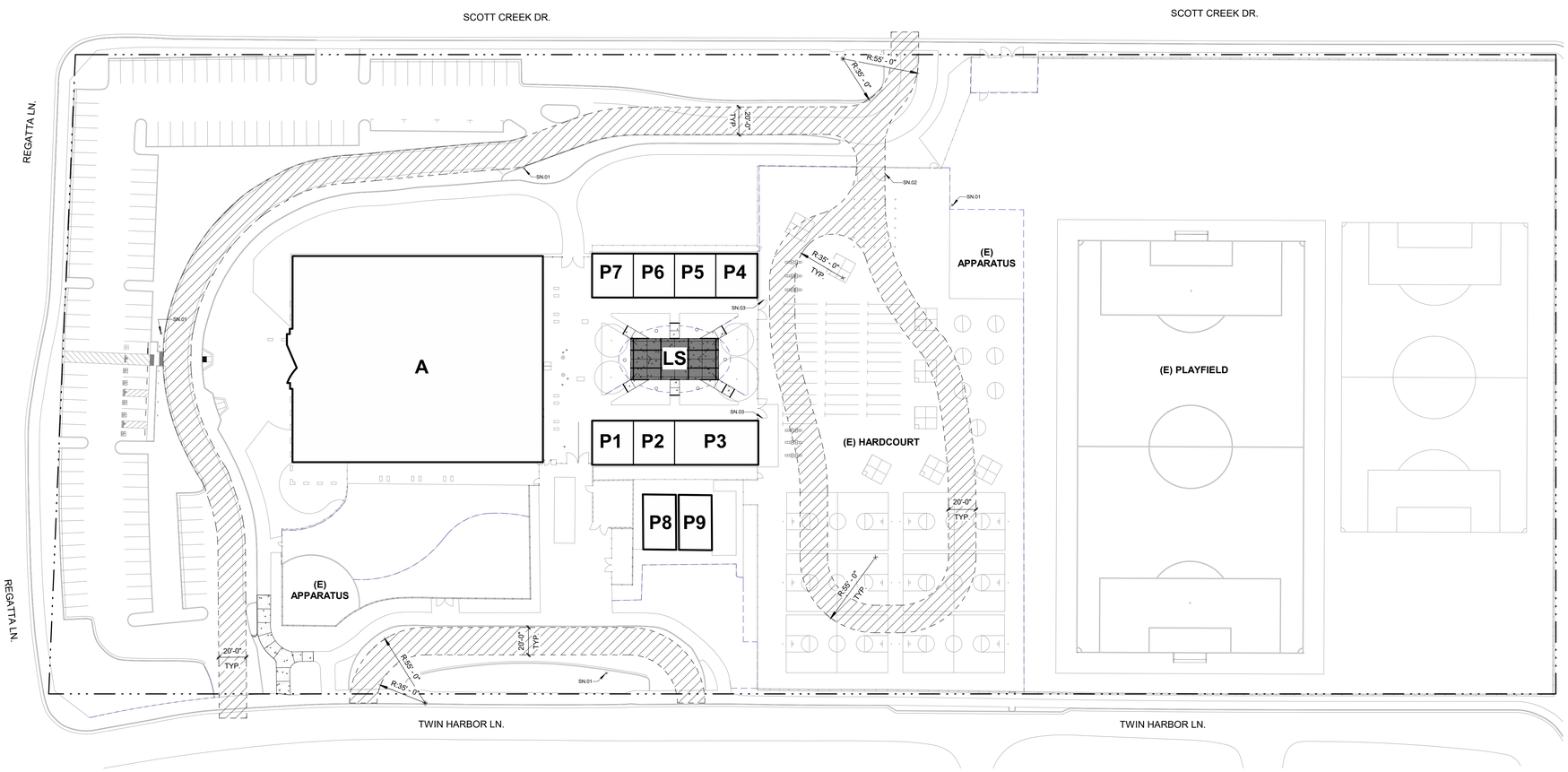

TN

SEE OTHER SHEETS FOR CONSTRUCTION

THIS PLAN INCLUDES INFORMATION FOR LOCAL FIRE AUTHORITY APPROVAL ONLY. REFER TO OTHER SHEETS FOR SITE CONSTRUCTION DETAILS.

LOCAL FIRE AUTHORITY SITE ACCESS PLAN 1 — 1" = 40'-0"

AGENCY APPROVAL:

IDENTIFICATION STAMP
DIV. OF THE STATE ARCHITECT
APP: 02-121837 INC:
REVIEWED FOR
SS ☑ FLS ☑ ACS ☑
DATE: 10/19/2023

LODI USD

HMC Architects
R221551X00
2101 CAPITOL AVENUE, SUITE 100,
SACRAMENTO, CA, 95816
916 368 7990 / www.hmcarchitects.com

LICENSED ARCHITECT JEFFREY ALAN GRAD C-14648 5/31/25 RENEWAL DATE STATE OF CALIFORNIA

ISSUE

Δ	DESCRIPTION	DATE

KEYNOTES

NOTES

FACILITY:
MANLIO SILVA ELEMENTARY SCHOOL
6250 SCOTT CREEK DRIVE STOCKTON, CA 95219

PROJECT:
LODI UNIFIED SCHOOL DISTRICT LUNCH SHELTERS - MANLIO SILVA ELEMENTARY SCHOOL

SHEET NAME:
LOCAL FIRE AUTHORITY SITE ACCESS PLAN

CONSTRUCTION DOCUMENTS

DATE: **10/18/2023** CLIENT PROJ NO: **R221551X00**

SHEET:

A1.22

Autodesk Docs://R221551X00 Lodi USD Lunch Shelters/R221551X00-A-SILVA-ES-LUNCH-SHELTER.rvt
10/11/2023 12:34:30 PM

PLEASE RECYCLE

THE LINE SHOWN ABOVE IS EXACTLY ONE INCH ON THIS SHEET IF ORIGINAL PAGE SIZE

ENLARGED PLAN - CONCRETE PATH **3** 1" = 10'-0"

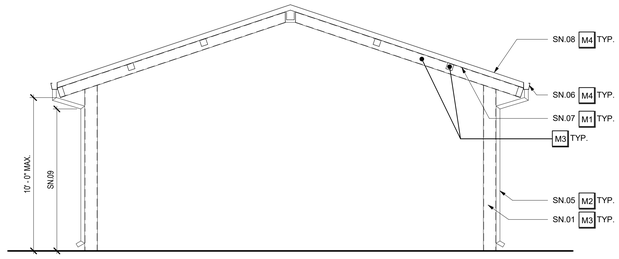

LUNCH SHELTER - SECTION **2** 1/4" = 1'-0"

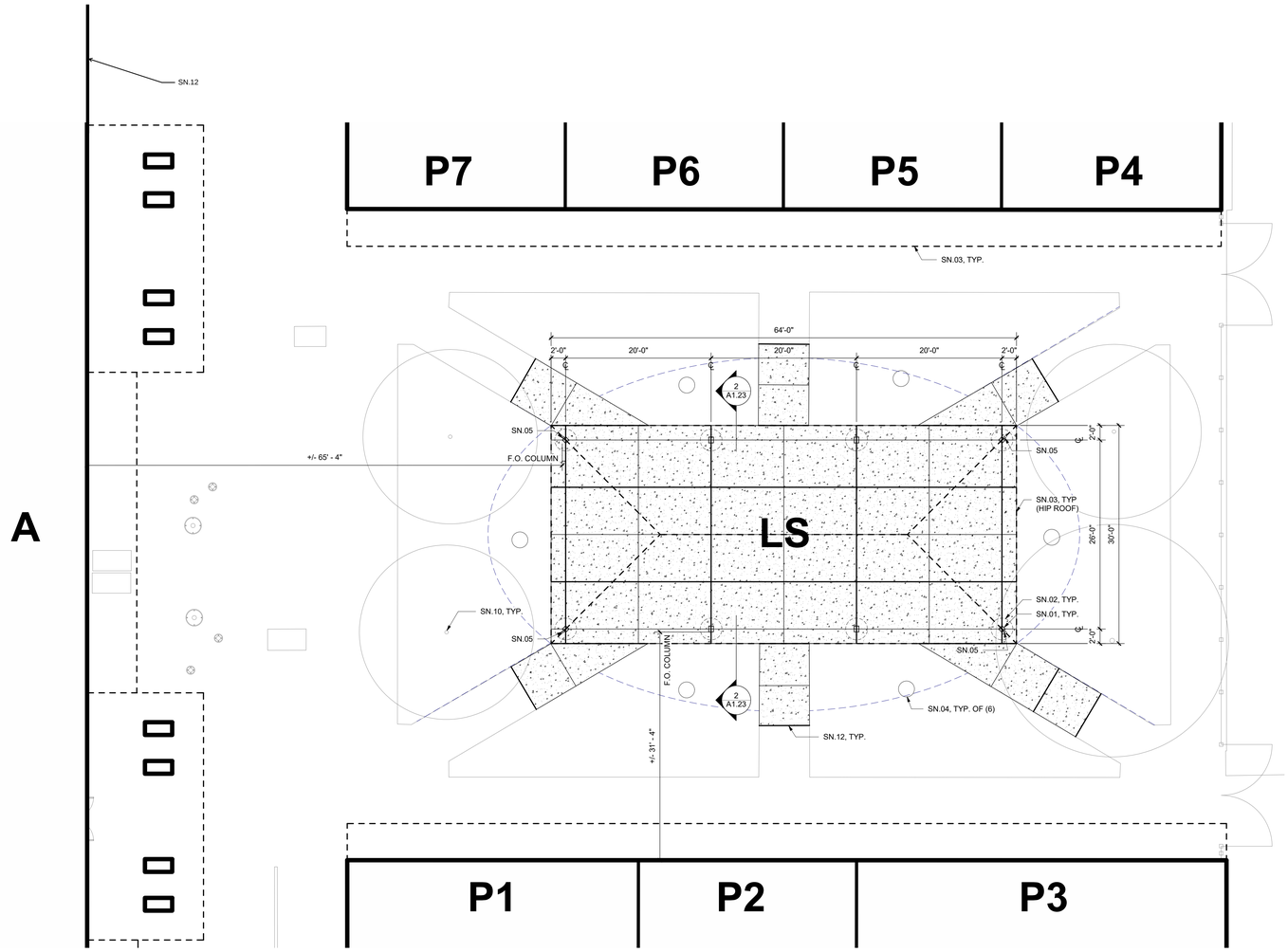

NOTE: LUNCH SHELTER COMPLIES WITH DSA IR 31-1.

ENLARGED PLAN - LUNCH SHELTER **1** 1/8" = 1'-0"

LEGEND

- PROPERTY LINE
- ASSUMED PROPERTY LINE
- EXISTING BUILDINGS
- PC LUNCH SHELTER
- EXPANSION JOINT
- CONCRETE WALK / PAVING
- CONTROL JOINT
- ASPHALT CONCRETE PAVING
- (E) FENCING

EXTERIOR COLOR SCHEDULE

	MATERIAL	COLOR
M1	METAL	METAL FINISH COLOR 1 (1)
M2	METAL	METAL FINISH COLOR 2 (1)
M3	METAL	METAL PREFINISH COLOR 1 (1)(3)
M4	METAL	METAL PREFINISH COLOR 2 (1)(4)

(1) CUSTOM COLORS TO BE SUBMITTED PER SPECIFICATIONS.

(2) CLEAN, PREP AND PAINT ALL SURFACES NOT PREFINISHED.

(3) MATCH METAL PAINT "COLOR 1" WITH COLOR DESIRED IN PREFINISHED "COLOR 1"

(4) MATCH METAL PAINT "COLOR 2" WITH COLOR DESIRED IN PREFINISHED "COLOR 2"

SHEET NOTES

SN.01 HSS COLUMN
SN.02 DRILLED PIER FOOTING, SHOWN DASHED
SN.03 ROOF OVERHANG ABOVE
SN.04 RAISE (E) DRAIN, SEE CIVIL
SN.05 3" DIAMETER SCHEDULE 40 STEEL DOWNSPOUT, PAINTED
SN.06 PREFINISEHD GUTTER AND FLASHING
SN.07 PAINT DECK UNDERSIDE
SN.08 PREFINISHED STANDING SEAM ROOF
SN.09 HOLD TIGHT TO UNDERSIDE OF FRAMING: MAINTAIN 9'-0" CLEARANCE MIN.
SN.10 (E) TREE TO REMAIN. PROTECT DURING CONSTRUCTION
SN.11 PROVIDE EXPANSION JOINT AT ALL INTERSECTIONS OF EXISTING AND NEW CONCRETE
SN.12 (E) FIRE ALARM HORN

AGENCY APPROVAL:

IDENTIFICATION STAMP
DIV. OF THE STATE ARCHITECT
APP: 02-121837 INC:
REVIEWED FOR
SS ☑ FLS ☑ ACS ☑
DATE: 10/19/2023

LODI USD

HMC Architects

R221551X00

LICENSED ARCHITECT JEFFREY ALAN GRAD C-14648 5/31/25 RENEWAL DATE STATE OF CALIFORNIA

2101 CAPITOL AVENUE, SUITE 100,
SACRAMENTO, CA, 95816
916 368 7990 / www.hmcarchitects.com

ISSUE

Δ	DESCRIPTION	DATE

NOTES

KEYNOTES

FACILITY:
MANLIO SILVA ELEMENTARY SCHOOL
6250 SCOTT CREEK DRIVE STOCKTON, CA 95219

PROJECT:
LODI UNIFIED SCHOOL DISTRICT LUNCH SHELTERS - MANLIO SILVA ELEMENTARY SCHOOL

SHEET NAME:
ENLARGED SITE PLAN AND SECTION - LUNCH SHELTER

CONSTRUCTION DOCUMENTS

DATE: **10/18/2023** CLIENT PROJ NO: **R221551X00**

SHEET: **A1.23**

Autodesk Docs://R221551X00 Lodi USD Lunch Shelters/R221551X00-A-SILVA-ES-LUNCH-SHELTER.rvt
10/11/2023 12:34:36 PM

PLEASE RECYCLE

THE LINE SHOWN ABOVE IS EXACTLY ONE INCH ON THIS SHEET ORIGINAL PAGE SIZE

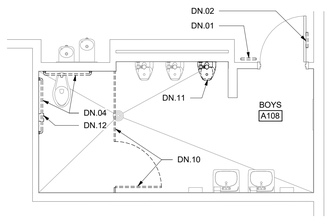

A108 ENLARGED BOY'S TOILET ROOM PLAN — **2** 1/4" = 1'-0"

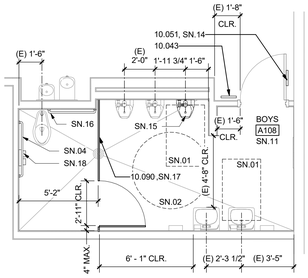

A108 ENLARGED BOY'S TOILET ROOM IMPROVEMENT PLAN — **1** 1/4" = 1'-0"

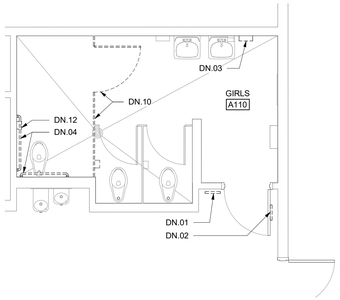

A110 ENLARGED GIRL'S TOILET ROOM PLAN — **4** 1/4" = 1'-0"

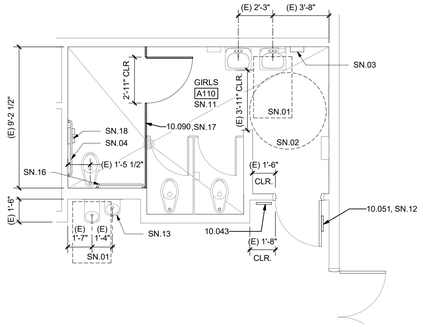

A110 ENLARGED GIRL'S TOILET ROOM IMPROVEMENTPLAN — **3** 1/4" = 1'-0"

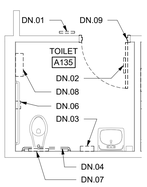

A135 ENLARGED STAFF TOILET ROOMS - DEMOLITION PLAN — **6** 1/4" = 1'-0"

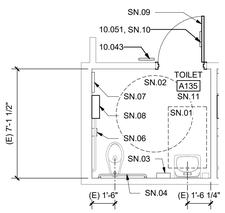

A135 ENLARGED STAFF TOILET ROOMS - IMPROVEMENT PLAN — **5** 1/4" = 1'-0"

LEGEND

CONSECUTIVE NUMBERING CONVENTION FOR INTERIOR ELEVATIONS AND ROOM FINISHES.

GENERAL NOTES

1. TYPICAL MOUNTING HEIGHTS AND DETAILS APPLY TO ENTIRE PROJECT, WHETHER REFERENCED OR NOT, UNLESS OTHERWISE NOTED.
2. ALL DISABLED ACCESSIBLE DIMENSIONS, ARE MAXIMUM DIMENSIONS UNLESS OTHERWISE NOTED.
3. REMOVE OR MODIFY ALL ITEMS AS REQUIRED TO INSTALL NEW WORK, WHETHER OR NOT SPECIFICALLY SHOWN TO BE REMOVED OR MODIFIED.
4. WHERE DRAINS, PIPING AND OTHER MATERIALS AND EQUIPMENT ARE REMOVED FROM THE SLAB, IT SHALL BE BACKFILLED, FINISHED FLUSHED WITH ADJACENT SURFACES AND PREPARED TO RECEIVE THE NEW FINISH.
5. CUT AND PATCH EXISTING SLAB AS REQUIRED FOR NEW PLUMBING WORK.
6. DEMO AND REPAIR WALL FINISH AS NECESSARY TO PERFORM FIXTURE AND EQUIPMENT WORK AS NOTED. ADJACENT FINISHES TO BE VERIFIED BY CONTRACTOR
7. EQUIPMENT/FIXTURES NOTED AS "SALVAGED FOR REINSTALLATION" WILL BE REMOVED AND STORED BY THE CONTRACTOR PRIOR TO START OF DEMOLITION. THESE EQUIPMENT/FIXTURES SHALL BE REINSTALLED BY THE CONTRACTOR UNDER THIS CONTRACT.

DEMOLITION NOTES

DN.01 REMOVE (E) TOILET ROOM I.D. SIGN
DN.02 REMOVE (E) TOILET ROOM DOOR SYMBOL
DN.03 REMOVE (E) PAPER TOWEL DISPENSER AND SALVAGE FOR REINSTALLATION
DN.04 REMOVE (E) GRAB BAR AND SALVAGE FOR REINSTALLATION
DN.05 REMOVE (E) SOAP DISPENSER AND SALVAGE FOR REINSTALLATION
DN.06 REMOVE (E) TOILET PAPER DISPENSER AND SALVAGE FOR REINSTALLATION
DN.07 REMOVE (E) TOILET SEAT COVER DISPENSER AND SALVAGE FOR REINSTALLATION
DN.08 REMOVE (E) SANITARY NAPKIN DISPENSER AND SALVAGE FOR REINSTALLATION
DN.09 REMOVE (E) DOOR AND SALVAGE FOR REINSTALLATION
DN. 10 REMOVE (E) PARTITION AND DOOR
DN.11 REMOVE (E) URINAL AND SALVAGE FOR REINSTALLATION
DN.12 REMOVE (E) TOILET PAPER DISPENSER

SHEET NOTES

SN.01 30" X 48" CLEAR SPACE
SN.02 60" DIA. TURNING CIRCLE
SN.03 REINSTALL (E) SALVAGED PAPER TOWEL DISPENSER TO COMPLY WITH A10.2
SN.04 REINSTALL (E) SALVAGED GRAB BAR TO COMPLY WITH A10.2 AND PER (04 / A10.2)
SN.05 REINSTALL (E) SALVAGED SOAP DISPENSER TO COMPLY WITH A10.2
SN.06 REINSTALL (E) SALVAGED TOILET PAPER DISPENSER TO COMPLY WITH A10.2
SN.07 REINSTALL (E) SALVAGED TOILET SEAT DISPENSER TO COMPLY WITH A10.2
SN.08 REINSTALL (E) SANITARY NAPKIN DISPENSER TO COMPLY WITH A10.2
SN.09 REINSTALL (E) SALVAGED DOOR. CHANGE THE DIRECTION OF THE DOOR SWING AS SHOWN
SN.10 SIGN TO READ "STAFF"
SN.11 WRAP ALL EXPOSED PIPES WITH INSULATION AT LAVATORIES
SN.12 SIGN TO READ "GIRLS"
SN.13 (E) ACCESSIBLE DRINKING FOUNTAIN REVIEWED AND VERIFIED PER THIS APPLICATION
SN.14 SIGN TO READ "BOYS"
SN.15 REINSTALL (E) SALVAGED URINAL TO COMPLY WITH A10.2
SN.16 INSTALL 36" GRAB BAR TO COMPLY WITH A10.2 ELEMENTARY. MAINTAIN 1 1/2" CLEARANCE ALL AROUND GRAB BAR.PROVIDE BLOCKING PER DETAIL (04 / A10.2)

CONTRACTORS OPTION. STAINLESS STEEL PLATE GRAB BAR PER DETAIL (08 / A10.2)

REMOVE AND REPLACE FRP FINISH IN FULL SHEET AS REQUIRED
SN.17 ADJUST TOILET PARTITION AS NECESSARY FOR REQUIRED GRAB BAR CLEARANCE.
SN.18 INSTALL TOILET PAPER DISPENSER TO COMPLY WITH A10.2 ELEMENTARY

KEYNOTES

10.043 SIGNAGE: TOILET ROOM IDENTIFICATION
10.051 SIGNAGE: TOILET ROOM DOOR SYMBOL
10.090 COMPOSITE TOILET COMPARTMENT

AGENCY APPROVAL:

IDENTIFICATION STAMP
DIV. OF THE STATE ARCHITECT
APP: 02-121837 INC:
REVIEWED FOR
SS ☑ FLS ☑ ACS ☑
DATE: 10/19/2023

LODI USD

HMC Architects

R221551X00

2101 CAPITOL AVENUE, SUITE 100,
SACRAMENTO, CA, 95816
916 368 7990 / www.hmcarchitects.com

LICENSED ARCHITECT
JEFFREY ALAN GRAFF
C-14648
5/31/25
RENEWAL DATE
STATE OF CALIFORNIA

ISSUE

Δ	DESCRIPTION	DATE

NOTES

KEY PLAN

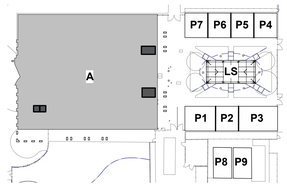

FACILITY:
MANLIO SILVA ELEMENTARY SCHOOL
6250 SCOTT CREEK DRIVE STOCKTON, CA 95219

PROJECT:
LODI UNIFIED SCHOOL DISTRICT LUNCH SHELTERS - MANLIO SILVA ELEMENTARY SCHOOL

SHEET NAME:
UNIT A - ENLARGED RESTROOM PLANS

CONSTRUCTION DOCUMENTS

DATE: **10/18/2023** | CLIENT PROJ NO: **R221551X00**

SHEET:

A2.11

Autodesk Docs://R221551X00 Lodi USD Lunch Shelters/R221551X00-A-SILVA-ES-LUNCH-SHELTER.rvt
10/11/2023 12:34:43 PM

PLEASE RECYCLE

THE LINE SHOWN ABOVE IS EXACTLY ONE INCH ON ORIGINAL 22X34 SHEETS ORIGINAL PAGE SIZE

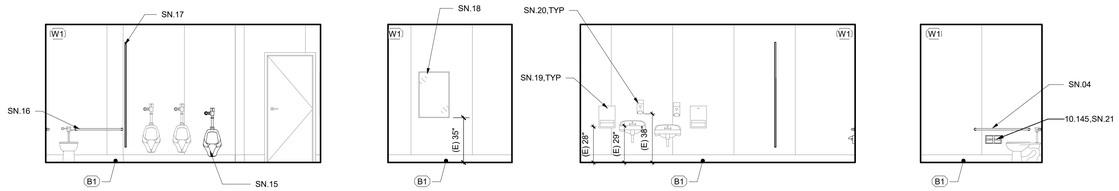

UNIT A108 BOY'S RESTROOM 3

1/4" = 1'-0"

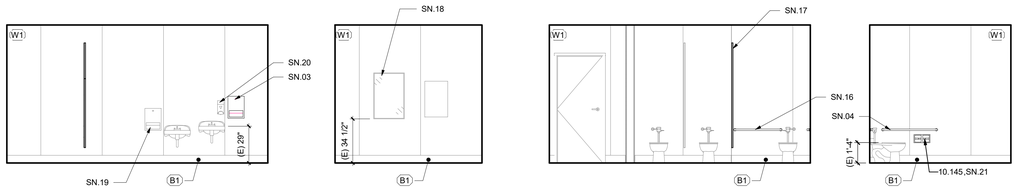

UNIT A110 GIRL'S RESTROOM 2

1/4" = 1'-0"

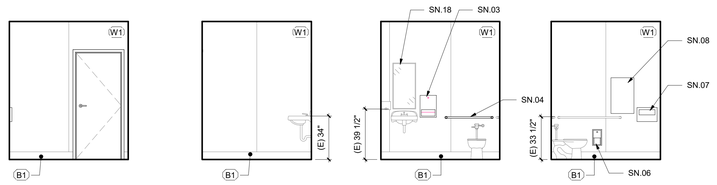

UNIT A135 STAFF TOILET ROOM 1

1/4" = 1'-0"

LEGEND

APPROX. EXTENT OF WALL FINISH AND BASE (AS APPLICABLE) PATCH. MATCH ADJACENT.

1 4.5 1.5 4 INTERIOR ELEV. 2 3.5 2.5 3

CONSECUTIVE NUMBERING CONVENTION FOR INTERIOR ELEVATIONS AND ROOM FINISHES.

GENERAL NOTES

1. TYPICAL MOUNTING HEIGHTS AND DETAILS APPLY TO ENTIRE PROJECT, WHETHER REFERENCED OR NOT, UNLESS OTHERWISE NOTED.
2. ALL DISABLED ACCESSIBLE DIMENSIONS, ARE MAXIMUM DIMENSIONS UNLESS OTHERWISE NOTED.
3. REMOVE OR MODIFY ALL ITEMS AS REQUIRED TO INSTALL NEW WORK, WHETHER OR NOT SPECIFICALLY SHOWN TO BE REMOVED OR MODIFIED.
4. WHERE DRAINS, PIPING AND OTHER MATERIALS AND EQUIPMENT ARE REMOVED FROM THE SLAB, IT SHALL BE BACKFILLED, FINISHED FLUSHED WITH ADJACENT SURFACES AND PREPARED TO RECEIVE THE NEW FINISH.
5. CUT AND PATCH EXISTING SLAB AS REQUIRED FOR NEW PLUMBING WORK.
6. DEMO AND REPAIR WALL FINISH AS NECESSARY TO PERFORM FIXTURE AND EQUIPMENT WORK AS NOTED. ADJACENT FINISHES TO BE VERIFIED BY CONTRACTOR
7. EQUIPMENT/FIXTURES NOTED AS "SALVAGED FOR REINSTALLATION" WILL BE REMOVED AND STORED BY THE CONTRACTOR PRIOR TO START OF DEMOLITION. THESE EQUIPMENT/FIXTURES SHALL BE REINSTALLED BY THE CONTRACTOR UNDER THIS CONTRACT.

SHEET NOTES

SN.01 NOT USED
SN.02 NOT USED
SN.03 REINSTALL (E) SALVAGED PAPER TOWEL DISPENSER TO COMPLY WITH A10.2
SN.04 REINSTALL (E) SALVAGED GRAB BAR TO COMPLY WITH A10.2 AND PER 04/A10.2
SN.05 REINSTALL (E) SALVAGED SOAP DISPENSER TO COMPLY WITH A10.2
SN.06 REINSTALL (E) SALVAGED TOILET PAPER DISPENSER TO COMPLY WITH A10.2
SN.07 REINSTALL (E) SALVAGED TOILET SEAT DISPENSER TO COMPLY WITH A10.2
SN.08 REINSTALL (E) SANITARY NAPKIN DISPENSER TO COMPLY WITH A10.2
SN.09 REINSTALL (E) SALVAGED DOOR. CHANGE THE DIRECTION OF THE DOOR SWING AS SHOWN
SN.10 SIGN TO READ "STAFF"
SN.11 WRAP ALL EXPOSED PIPES WITH INSULATION AT LAVATORIES
SN.12 SIGN TO READ "GIRLS"
SN.13 (E) ACCESSIBLE DRINKING FOUNTAIN REVIEWED AND VERIFIED PER THIS APPLICATION
SN.14 SIGN TO READ "BOYS"
SN.15 REINSTALL (E) SALVAGED URINAL TO COMPLY WITH A10.2
SN.16 INSTALL 36" GRAB BAR TO COMPLY WITH A10.2 ELEMENTARY. MAINTAIN 1 1/2" CLEARANCE ALL AROUND GRAB BAR.PROVIDE BLOCKING PER DETAIL 04/A10.2

CONTRACTORS OPTION, STAINLESS STEEL PLATE GRAB BAR PER DETAIL 08/A10.2

REMOVE AND REPLACE FRP FINISH IN FULL SHEET AS REQUIRED
SN.17 ADJUST TOILET PARTITION AS NECESSARY FOR REQUIRED GRAB BAR CLEARANCE.
SN.18 (E) MIRROR TO REMAIN
SN.19 (E) PAPER TOWEL DISPENSER TO REMAIN
SN.20 (E) SOAP DISPENSER TO REMAIN
SN.21 INSTALL TOILET PAPER DISPENSER TO COMPLY WITH A10.2 ELEMENTARY
SN.22 (E) 42" GRAB BAR TO REMAIN

KEY NOTES

10.145 TOILET ACCESSORY: TOILET PAPER DISPENSER

FINISHES

WALL

W1 (E) FIBER REINFORCED LAMINATE PANELS

BASE

B1 (E) INTEGRAL COVED BASE

AGENCY APPROVAL:

IDENTIFICATION STAMP
DIV. OF THE STATE ARCHITECT
APP: 02-121837 INC:
REVIEWED FOR
SS ☑ FLS ☑ ACS ☑
DATE: 10/19/2023

LODI USD

HMC Architects

R221551X00

2101 CAPITOL AVENUE, SUITE 100,
SACRAMENTO, CA, 95816
916 368 7990 / www.hmcarchitects.com

LICENSED ARCHITECT JEFFREY ALAN GRAD C-14648 5/31/25 RENEWAL DATE STATE OF CALIFORNIA

ISSUE

Δ	DESCRIPTION	DATE

KEYNOTES

NOTES

FACILITY:
MANLIO SILVA ELEMENTARY SCHOOL
6250 SCOTT CREEK DRIVE STOCKTON, CA 95219

PROJECT:
LODI UNIFIED SCHOOL DISTRICT LUNCH SHELTERS - MANLIO SILVA ELEMENTARY SCHOOL

SHEET NAME:
INTERIOR ELEVATIONS

CONSTRUCTION DOCUMENTS

DATE: **10/18/2023** CLIENT PROJ NO: **R221551X00**

SHEET:

A8.11

Autodesk Docs://R221551X00 Lodi USD Lunch Shelters/R221551X00-A-SILVA-ES-LUNCH-SHELTER.rvt
10/11/2023 12:34:46 PM

PLEASE RECYCLE

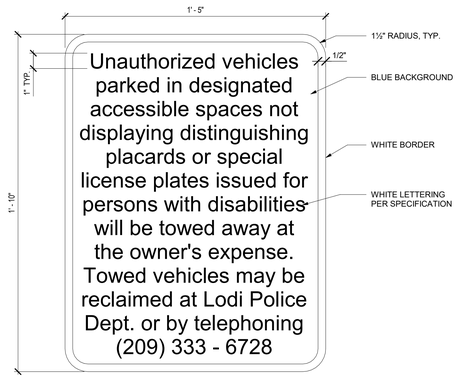

05 PARKING LOT ENTRANCE SIGN
3" = 1'-0"

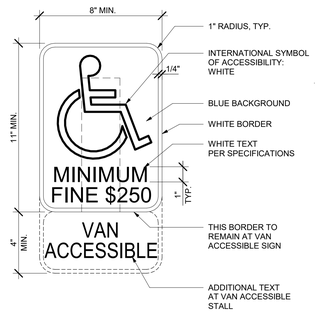

DISABLED ACCESSIBLE PARKING STALL

04 PARKING SIGNAGE
3" = 1'-0"

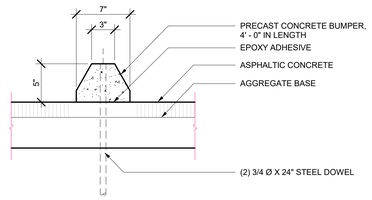

03 PRECAST CONCRETE BUMPER
1 1/2" = 1'-0"

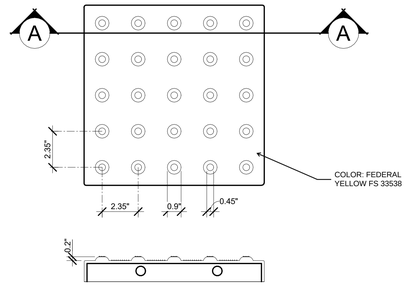

TYPICAL SECTION A-A

02 TRUNCATED DOMES
3" = 1'-0"

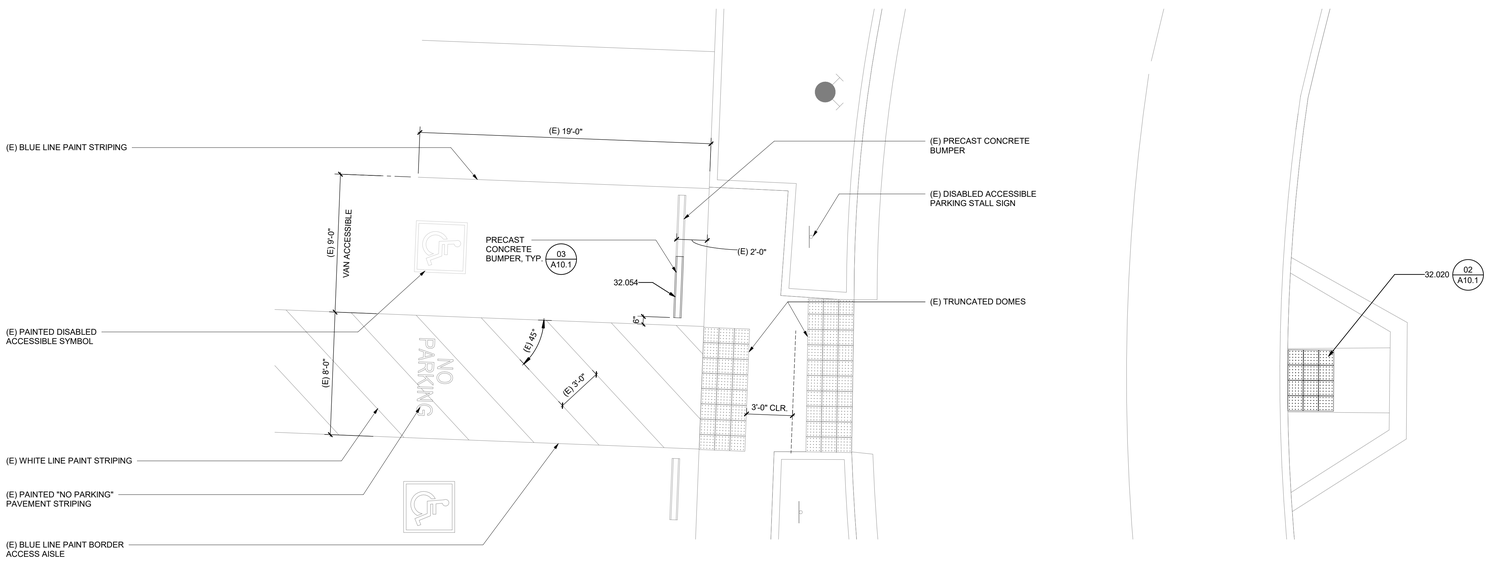

06 ENLARGED PLAN - PARKING
1/4" = 1'-0"

AGENCY APPROVAL:

IDENTIFICATION STAMP
DIV. OF THE STATE ARCHITECT
APP: 02-121837 INC:
REVIEWED FOR
SS ☑ FLS ☑ ACS ☑
DATE: 10/19/2023

LODI USD

HMC Architects

R221551X00

LICENSED ARCHITECT
JEFFREY ALAN GRAD
C-14648
5/31/25
RENEWAL DATE
STATE OF CALIFORNIA

2101 CAPITOL AVENUE, SUITE 100,
SACRAMENTO, CA, 95816
916 368 7990 / www.hmcarchitects.com

ISSUE

Δ	DESCRIPTION	DATE

NOTES

KEYNOTES

32.020	TRUNCATED DOMES
32.054	PRECAST CONCRETE BUMPER

FACILITY:
MANLIO SILVA ELEMENTARY SCHOOL
6250 SCOTT CREEK DRIVE STOCKTON, CA 95219

PROJECT:
LODI UNIFIED SCHOOL DISTRICT LUNCH SHELTERS - MANLIO SILVA ELEMENTARY SCHOOL

SHEET NAME:
SITE DETAILS

CONSTRUCTION DOCUMENTS

DATE: **10/18/2023** CLIENT PROJ NO: **R221551X00**

SHEET:

A10.1

THE LINE SHOWN ABOVE IS EXACTLY 1" WHEN PLOTTED ON THE SHEET'S ORIGINAL PAGE SIZE

Autodesk Docs://R221551X00 Lodi USD Lunch Shelters/R221551X00-A-SILVA-ES-LUNCH-SHELTER.rvt
10/11/2023 12:34:49 PM

PLEASE RECYCLE

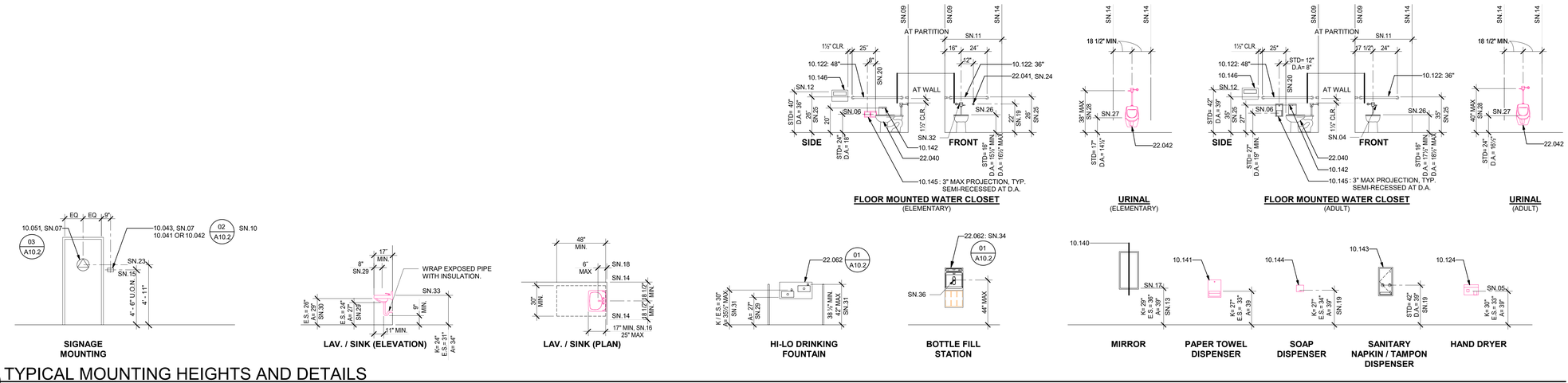

07 TYPICAL MOUNTING HEIGHTS AND DETAILS

1/4" = 1'-0"

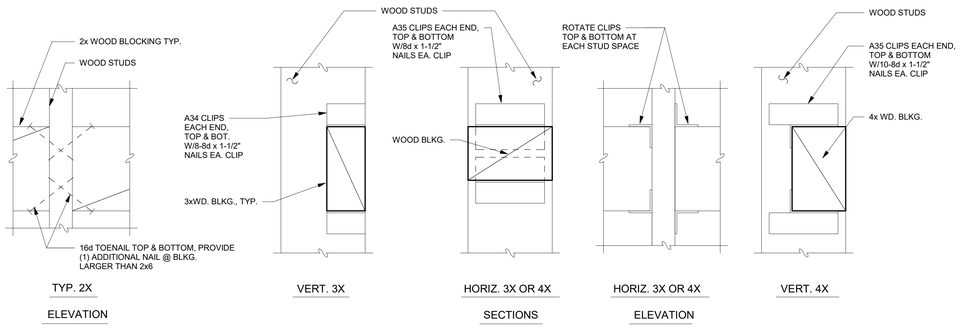

06 TYPICAL WOOD BLOCKING

3" = 1'-0"

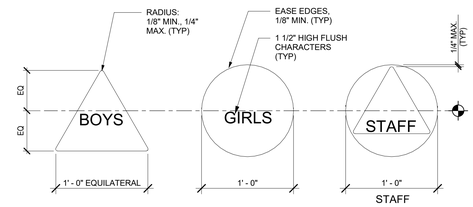

NOTE:

1. TEXT ON DOOR SYMBOL TO BE AS INDICATED ON DRAWINGS

03 TOILET ROOM DOOR SYMBOLS

1 1/2" = 1'-0"

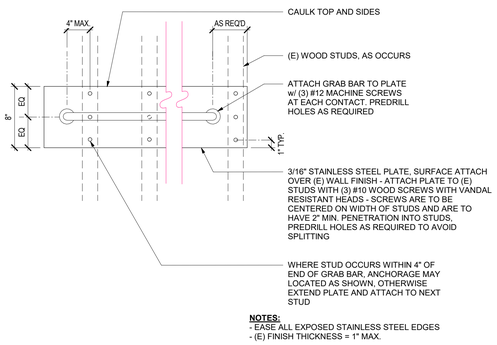

08 GRAB BAR - STAINLESS STEEL PLATE

1 1/2" = 1'-0"

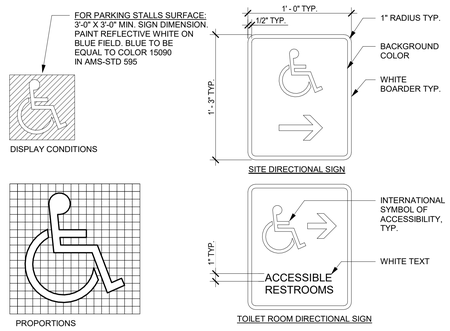

05 SYMBOL OF ACCESSIBILITY

NOT TO SCALE

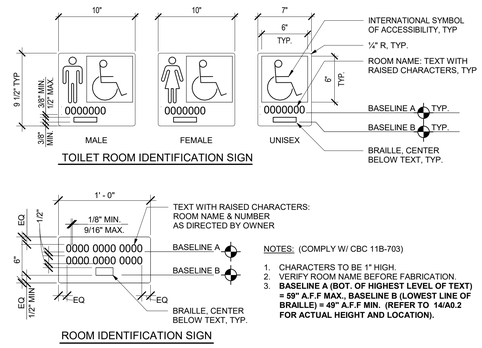

02 IDENTIFICATION SIGNS

1 1/2" = 1'-0"

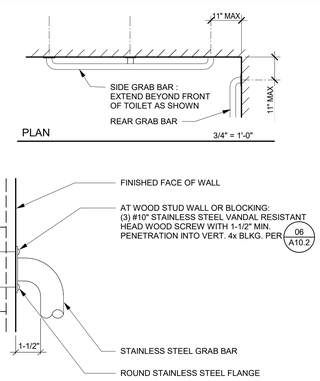

04 TYPICAL GRAB BAR AT WALL

3" = 1'-0"

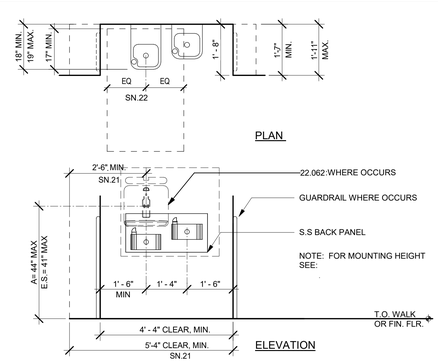

01 DRINKING FOUNTAIN ALCOVE

1/2" = 1'-0"

LEGEND

A ADULT / STAFF
E.S. ELEMENTARY SCHOOL
K KINDERGARTEN

GENERAL NOTES

1. TYPICAL MOUNTING HEIGHTS AND DETAILS APPLY TO ENTIRE PROJECT, WHETHER REFERENCED OR NOT, UNLESS OTHERWISE NOTED.
2. ALL DISABLED ACCESSIBLE DIMENSIONS, ARE MAXIMUM DIMENSIONS UNLESS OTHERWISE NOTED.
3. HEIGHTS ARE MEASURED FROM FINISH FLOOR, UNLESS OTHERWISE NOTED.

SHEET NOTES

SN.01	TOP OF SHELF
SN.02	MIDDLE SHELF FIXED
SN.03	PROVIDE 2X BLOCKING PER DETAIL
SN.04	AT ACCESSIBLE WATER CLOSETS, FLUSH CONTROL HANDLE SHALL BE MOUNTED ON THE WIDE SIDE OF THE TOILET ENCLOSURE
SN.05	TO OPERATOR OR PUSH BUTTON
SN.06	DIMENSION TO CENTERLINE OF TOILET PAPER ROLL POSITION
SN.07	PROVIDE AT ALL TOILET ROOM DOORS
SN.08	AT DISABLED ACCESSIBLE CASEWORK
SN.09	TO FACE OF FINISH
SN.10	FOR SIGNS MOUNTED BACK-TO-BACK ON WINDOW GLAZING, SEE SPECIFICATIONS FOR REQUIREMENTS.
SN.11	62" CLR MIN. TO FINISH WALL/ PARTITION/ FIXTURE
SN.12	TOP OF OPENING
SN.13	34" MAX. IF MIRROR IS NOT MOUNTED OVER A LAV. OR COUNTER; TOP OF MIRROR 74" MIN. FOR HIGH SCHOOL & ADULTS.
SN.14	FACE OF OBJECTS OR WALLS
SN.15	CENTERLINE OF SIGN.
SN.16	19" MINIMUM AT SINK
SN.17	BOTTOM EDGE OF REFLECTIVE SURFACE
SN.18	FROM FARTHEST DEPTH OF THE CLEAR FLOOR SPACE TO FACE OF PLUMBING AND OTHER OBSTACLES
SN.19	TO CENTERLINE CONTROL.
SN.20	FRONT EDGE OF WATER CLOSET.
SN.21	AT CHILDREN'S DRINKING FOUNTAIN
SN.22	WHEELCHAIR, CLEAR FLOOR SPACE: 30"X48"
SN.23	CENTERLINE OF SYMBOL.
SN.24	WHERE SPECIFIED (ELEMENTARY / KINDERGARTEN)
SN.25	TOP OF GRAB BAR
SN.26	TOP OF SEAT
SN.27	LIP HEIGHT
SN.28	FLUSH HANDLE HEIGHT
SN.29	MINIMUM KNEE CLEARANCE
SN.30	MINIMUM APRON CLEARANCE
SN.31	BUBBLER HEIGHT
SN.32	NO TOILET MOUNTED FLUSH VALVE AT CHILDREN'S ACCESSIBLE WATER CLOSET
SN.33	MAXIMUM HEIGHT
SN.34	FOR BOTTLE FILL STATION AT DRINKING FOUNTAIN
SN.35	TO TOP OF SINK RIM; WHERE OCCURS.
SN.36	ACTIVATION SENSOR.

KEYNOTES

10.041	SIGNAGE: ROOM IDENTIFICATION
10.042	SIGNAGE: TACTILE EXIT
10.043	SIGNAGE: TOILET ROOM IDENTIFICATION
10.051	SIGNAGE: TOILET ROOM DOOR SYMBOL
10.122	TOILET ACCESSORY: GRAB BAR
10.124	TOILET ACCESSORY: HAND DRYER
10.140	TOILET ACCESSORY: MIRROR
10.141	TOILET ACCESSORY: PAPER TOWEL DISPENSER
10.142	TOILET ACCESSORY: SANITARY NAPKIN DISPOSAL
10.143	TOILET ACCESSORY: SANITARY NAPKIN/TAMPON DISPENSER
10.144	TOILET ACCESSORY: SOAP DISPENSER
10.145	TOILET ACCESSORY: TOILET PAPER DISPENSER
10.146	TOILET ACCESSORY: TOILET SEAT COVER DISPENSER
22.040	WATER CLOSET
22.041	MANUALLY OPERATED CONCEALED FLUSH VALVE
22.042	URINAL
22.062	BOTTLE FILL STATION

AGENCY APPROVAL:

IDENTIFICATION STAMP
DIV. OF THE STATE ARCHITECT
APP: 02-121837 INC:
REVIEWED FOR
SS ☑ FLS ☑ ACS ☑
DATE: 10/19/2023

LODI USD

HMC Architects
R221551X00
2101 CAPITOL AVENUE, SUITE 100,
SACRAMENTO, CA, 95816
916 368 7990 / www.hmcarchitects.com
LICENSED ARCHITECT JEFFREY ALAN HAND C-14648 5/31/25 RENEWAL DATE STATE OF CALIFORNIA

ISSUE

Δ	DESCRIPTION	DATE

NOTES

FACILITY:
MANLIO SILVA ELEMENTARY SCHOOL
6250 SCOTT CREEK DRIVE STOCKTON, CA 95219

PROJECT:
LODI UNIFIED SCHOOL DISTRICT LUNCH SHELTERS - MANLIO SILVA ELEMENTARY SCHOOL

SHEET NAME:
TYPICAL MOUNTING HEIGHTS AND DETAILS

CONSTRUCTION DOCUMENTS

DATE: **10.18.2023** CLIENT PROJ NO: **R221551X00**

SHEET:

A10.2

THE LINE SHOWN ABOVE IS EXACTLY 1" WHEN PLOTTED ON THIS SHEET'S ORIGINAL PAGE SIZE
Autodesk Docs://R221551X00 Lodi USD Lunch Shelters/R221551X00-A-SILVA-ES-LUNCH-SHELTER.rvt
10/11/2023 12:34:50 PM
PLEASE RECYCLE

DESIGN VALUES

DESCRIPTION	DESIGN VALUES [1]
DEAD AND LIVE LOADS	
ROOF LIVE LOAD	20 PSF
ROOF DEAD LOAD (SUPERIMPOSED ON FRAME) [2]	LOAD SCENARIO= {1,2} DL = {3.5 PSF, 2.0 PSF}
ALLOWABLE SOIL PRESSURE [3, 5]	
SPREAD PAD	
VERTICAL BEARING: DL + Lr + SEISMIC (CONCRETE FOOTING)	1500 PSF
LATERAL COHESION: DL + Lr + SEISMIC (CONCRETE FOOTING)	130 PSF
DRILLED PIER	
SKIN FRICTION DOWN : DL + Lr + SEISMIC (CONCRETE FOOTING) PER 1810A.3.3.1.4	167 PSF
SKIN FRICTION (UPLIFT): DL + LR SEISMIC (CONCRETE FOOTING) PER 1810A.3.31.5	83 PSF
LATERAL BEARING: DL + Lr + SEISMIC (CONCRETE FOOTING) PER 1810A.3.3.2	100 PSF/FT
ROOF SNOW LOAD [6]	
GROUND SNOW LOAD, Pg	10 PSF
RISK CATEGORY	II
ROOF SNOW LOAD: [ ] FLAT, Pf OR [ ] LOW SLOPE, Pm OR [X] SLOPED, Ps	10 PSF
SNOW ROOF SLOPE FACTOR, Cs	1
SNOW EXPOSURE FACTOR, Ce	1.2
SNOW LOAD IMPORTANCE FACTOR, Is	1.0
THERMAL FACTOR, Ct	1.2
DRIFT SURCHARGE LOAD, Pd	0 PSF
DISTANCE FROM ADJACENT STRUCTURE, Pg = 0 PSF	4 IN
DISTANCE FROM ADJACENT STRUCTURE, Pg > 0 PSF	20 FT
ICE LOAD	0 PSF
FLOOD DESIGN	
FLOOD HAZARD AREA	NO
WIND DESIGN [4]	
BASIC WIND SPEED (3 SECOND GUST), Vult	110 MPH
EXPOSURE CATEGORY	C
TOPOGRAPHIC FACTOR, Kzt (1 MINIMUM)	1
INTERNAL PRESSURE COEFFICIENT, GCpi (IF APPLICABLE)	0.0
CLEAR WIND FLOW	YES
OBSTRUCTED WIND FLOW	YES
SEISMIC DESIGN [4]	
LATERAL FORCE-RESISTING SYSTEM	STEEL ORDINARY CANTILEVER COLUMN SYSTEM
ANALYSIS PROCEDURE	EQUIVALENT LATERAL FORCE PROCEDURE
SEISMIC DESIGN CATEGORY (SDC)	E
SEISMIC IMPORTANCE FACTOR, Ie	1.0
DESIGN BASE SHEAR, V	Cs x W
SEISMIC RESPONSE COEFFICIENT, Cs	LOAD SCENARIO = {1,2} Cs = {0.90,1.32}
RESPONSE MODIFICATION FACTOR, R	1.25
SITE CLASS [7]	E
REDUNDANCY FACTOR, p	1.3
MAPPED SPECTRAL RESPONSE ACCELERATION AT SHORT PERIOD, Ss - USED TO DETERMINE Cs	LOAD SCENARIO = {1,2} Ss = {1.406, 2.063}
SHORT-PERIOD SITE COEFFICIENT, Fa	1.2
DESIGN SPECTRAL RESPONSE ACCELERATION AT SHORT PERIOD, Sds - USED TO DETERMINE Cs	LOAD SCENARIO = {1,2} Sds (MAX) = {1.125, 1.650}
MAPPED SPECTRAL RESPONSE ACCELERATION AT 1 SECOND PERIOD, S1	LOAD SCENARIO = {1,2} S1 = {0.844, 1.07}
LONG-PERIOD SITE COEFFICIENT, Fv	2.0
DESIGN SPECTRAL RESPONSE ACCELERATION AT 1 SECOND PERIOD, Sd1	LOAD SCENARIO = {1,2} Sd1 = {1.125, 1.427}
HORIZONTAL OR VERTICAL IRREGULARITIES TYPE(S)	NONE

1. IF SITE-SPECIFICDESIGN CRITERIA ARE OUTSIDE THE LIMITS OF THESE PC DRAWINGS, CONTACT POLIGON ENGINEERING TO SEE IF AN ENGINEERING LETTER, SUPPLEMENTAL DRAWINGS, AND/OR CALCULATIONS COULD BE SUBMITTED FOR A SITE-SPECIFIC SOLUTION. ANY SITE- SPECIFIC DEVIATION FROM THIS PC MAY NOT BE SUBMITTING TO DSA AS AN OVER-THE-COUNTER.
2. STRUCTURE IS NOT DESIGNED TO SUPPORT SOLAR PANELS. STRUCTURE IS NOT DESIGNED TO SUPPORT SPRINKLER SYSTEMS IN LOAD SCENARIO 2 REGIONS.
3. GEOHAZARD REPORTS ARE REQUIRED IF THE AREA COVERED UNDER THE ROOF EXCEEDS 4000 SQ FT OR IS LOCATED WITHIN STATE OR LOCAL GEOLOGIC HAZARD ZONE. VERIFY SUBMITTAL AND APPROVAL OF A GEOHAZARD REPORT BY CGS PRIOR TO DSA SITE APPLICATION.
4. STRUCTURAL SEPARATION BETWEEN ADJACENT STRUCTURES: RAM 20= 5.0", RAM 30= 3.0" STRUCTURAL SEPARATION BETWEEN EXISTING STRUCTURES: RAM 20= 5.5", RAM 30= 4.0"
5. WHEN PLACING MULTIPLE CANOPIES WITH PIER FOOTINGS ADJACENT TO ONE ANOTHER, THE DESIGN MAY REQUIRE AN ANALYSIS OF GROUP EFFECTS ON THE FOUNDATIONS. THE MINIMUM CLEARANCE BETWEEN CENTER OF PIERS IS EIGHT TIMES PIER DIAMETER WITHOUT AN ACCOMPANYING ENGINEERING LETTER
6. SITE APPLICATION DESIGN PROFESSIONAL AND DSA REVIEWER SHALL VERIFY THE STRUCTURE TO BE LOCATED AT LEAST 20 FEET FROM ANY HIGHER ADJACENT STRUCTURE IF GROUND SNOW IS GREATER THAN ZERO.
7. DESIGN COMPLIES WITH THE CONDITIONS OF EXCEPTION 1 OF ASCE 7-16 SECTION 11.4.8, ITEM 2.
8. APPROVED FIRE APPARATUS ACCESS ROADS SHALL EXTEND TO WITHIN 150 FEET OF ALL PORTIONS OF THE PERIMETER OF THE STRUCTURE PER CFC 503.1.1.

ARCHITECTURAL REQUIREMENTS:

DESCRIPTION	DESIGN VALUES
TYPE OF CONSTRUCTION	II B
NUMBER OF STORIES	1
FIRE SPRINKLER SYSTEM	NOT BY POLIGON

RELATED BUILDING CODES AND STANDARDS:

TITLE 24 CODES:

2022 California Administrative Code (CAC)..........................(Part 1, Title 24, CCR)
2022 California Building Code (CBC), Volumes 1 and 2 (Part 2, Title 24, CCR)
(2021 International Building Code with 2022 California amendments)
2022 California Electrical Code ....(Part 3, Title 24, CCR)
(2020 National Electrical Code with 2022 California amendments)
2022 California Mechanical Code (CMC) ....(Part 4, Title 24, CCR)
(2021 Uniform Mechanical Code with 2022 California amendments)
2022 California Plumbing Code (CPC) ....(Part 5, Title 24, CCR)
(2021 Uniform Plumbing Code with 2022 California amendments)
2022 California Energy Code ....(Part 6, Title 24, CCR)
2022 California Fire Code (CFC) ....(Part 9, Title 24, CCR)
(2021 International Fire Code with 2022 California Amendments)
2022 California Existing Building Code (CEBC)......................(Part 10, Title 24, CCR)
2022 California Green Building Standards Code...................(Part 11, Title 24, CCR)
2022 California Referenced Standards Code .... (Part 12, Title 24, CCR)
Title 19 CCR, Public Safety, State Marshal Regulations

NFPA 13 - 2016
NFPA 72 - 2016

REFERENCE CODE SECTIONS FOR APPLICABLE STANDARDS:

2022 CBC, CHAPTER **35**
2022 CFC, CHAPTER **80**

SCOPE OF WORK NARRATIVE:

THESE DRAWINGS ILLUSTRATE THE FABRICATION AND INSTALLATION REQUIREMENTS FOR A FREE-STANDING PREFABRICATED STEEL SHADE STRUCTURE. THE ENTIRE STRUCTURAL SYSTEM IS COMPRISED OF TUBULAR STEEL MEMBERS SUPPORTED ON CONCRETE FOUNDATIONS. THE FLEXIBILITY INCLUDED HEREIN ALLOWS THIS STRUCTURE TO COMPLY WITH A WIDE VARIETY OF PROJECT SITES AND LOADING REQUIREMENTS.

INSTRUCTIONS FOR ARCHITECTS PLANNING TO SUBMIT THESE PRE-CHECKED DRAWINGS TO DSA:

STEP 1 PROJECT INFORMATION

PROJECT NAME	LODI UNIFIED SCHOOL DISTRICT LUNCH SHELTERS - ANSEL ADAMS ELEMENTARY SCHOOL	
SCHOOL DISTRICT	LODI UNIFIED SCHOOL DISTRICT	
USE AND OCCUPANCY CLASSIFICATION	A-3	**(PROPOSED OCCUPANCY: A1, A2, A3, A4, A5, B, E)**
OCCUPANT LOAD FACTOR	15	**(15 SQFT/PERSON MAX; 5 SQFT/PERSON MIN FOR ANY A OCCUPANCY 20 SQFT/PERSON MAX FOR B OR E OCCUPANCY)**
TOTAL ROOF AREA	1,920	**(MAXIMUM 4500 SQFT FOR ANY A OCCUPANCY, 10,000 SQFT FOR B OCCUPANCY, AND 5000 SQFT FOR E OCCUPANCY)**
NUMBER OF OCCUPANTS	128	**(MAXIMUM 300 FOR ANY A OCCUPANCY, 500 FOR B OCCUPANCY, AND 250 FOR E OCCUPANCY)**

STEP 2 DESIGN OPTIONS

ROOF DECK	[ ] MULTI-RIB (MR)	**DEFAULT**, WEIGHT 1.2 PSF
	[X] STANDING SEAM (SS)	WEIGHT 1.8 PSF
GUTTERS	[ ] NO	**DEFAULT**
	[X] YES	SEE RAM7.0 FOR DETAILS
ELECTRICAL ACCESS	[ ] NO	**DEFAULT**
	[X] YES	SEE RAM7.1 FOR DETAILS
CLEAR HEIGHT	[ ] 8'	**DEFAULT**
	[X] 10' OTHER	10' MAX

STEP 3 SEISMIC ACCELERATION

Ss 0 . 7 8 0 **(g)**
S1 0 . 2 6 0 **(g)**

STEP 4 SEISMIC REGIONS

0.000 < Ss <= 1.406 S1 <= 0.844	[X] WHITE	3.5 PSF MAX DEA LOAD
1.406 < Ss <= 2.063 S1 <= 1.070	[ ] GREEN	2.0 PSF MAX DEAD LOAD

STEP 5 TOTAL ROOF DEAD LOAD

ROOF DECK	1 . 8 PSF	SEE STEP 2' 'ROOF DECK FOR WEIGHTS
COLLATERAL	0 . 0 PSF	LIGHTING , FIRE SUPPRESSION, ETC.
TOTAL	1 . 8 PSF	ADD 'ROOF DECK' AND 'COLLATERAL'

STEP 6 LOAD SCENARIO

WHITE	TOTAL ROOF DEAD LAOD <= 3.5 PSF	[X] **LOAD SCENARIO 1**
GREEN	TOTAL ROOF DEAD LOAD < 2.0 PSF	[ ] **LOAD SCENARIO 2**

STEP 7 PC STRUCTURE

ROOF WIDTH <= 20	[ ] **RAM 20**
20 < ROOF WIDTH <= 30	[X] **RAM 30**

STEP 8 STRUCTURE SIZE

	RAM 20		RAM 30	
ROOF WIDTH	[ ] 20'	**DEFAULT**	[X] 30'	**DEFAULT**
	[ ] ________ OTHER 9' MIN; 20' MAX		[ ] ________ OTHER	20'-6" MIN; 30' MAX
ROOF LENGTH	[ ] 44'	2 BAYS	[ ] 44'	2 BAYS
	[ ] 64'	3 BAYS	[X] 64'	3 BAYS
	[ ] 84'	4 BAYS	[ ] 84'	4 BAYS
	[ ] ________ OTHER		[ ] ________ OTHER	

STEP 9 FOUNDATION TYPE

	RAM 20		RAM 30	
FOUNATION TYPE	[ ] SPREAD PAD	[ ] DRILLED PIER	[ ] SPREAD PAD	[X] DRILLED PIER

STEP 10 FOUNDATION SUMMARY

RAM 20		RAM 30	
[ ] LOAD SCENARIO 1 SPREAD PAD	[ ] LOAD SCENARIO 1 DRILLED PIER	[ ] LOAD SCENARIO 1 SPREAD PAD	[X] LOAD SCENARIO 1 DRILLED PIER
[ ] LOAD SCENARIO 2 SPREAD PAD	[ ] LOAD SCENARIO 2 DRILLED PIER	[ ] LOAD SCENARIO 2 SPREAD PAD	[ ] LOAD SCENARIO 2 DRILLED PIER

STEP 11 SHEET INDEX

BASE FRAME	RAM 20 SHEET INDEX				RAM 30 SHEET INDEX			
ROOF DECK	MR		SS		MR		SS	
FOUNDATION TYPE	SPREAD PAD	DRILLED PIER	SPREAD PAD	DRILLED PIER	SPREAD PAD	DRILLED PIER	SPREAD PAD	DRILLED PIER
SELECT ONE	[ ]	[ ]	[ ]	[ ]	[ ]	[ ]	[ ]	[X]
ORDER FORM	RAM1.0	RAM1.0	RAM1.0	RAM1.0	RAM1.0	RAM1.0	RAM1.0	RAM1.0
NOTES AND SPECIAL INSPECTIONS	RAM1.1	RAM1.1	RAM1.1	RAM1.1	RAM1.1	RAM1.1	RAM1.1	RAM1.1
FOUNDATION PLAN	RAM2.0	RAM2.1	RAM2.0	RAM2.1	RAM2.2	RAM2.3	RAM2.2	RAM2.3
FRAMING PLAN	RAM3.0	RAM3.0	RAM3.0	RAM3.0	RAM3.1	RAM3.1	RAM3.1	RAM3.1
FRAME CONNECTION DETAILS	RAM4.0	RAM4.0	RAM4.0	RAM4.0	RAM4.2	RAM4.2	RAM4.2	RAM4.2
SECTION DETAILS	RAM4.1	RAM4.1	RAM4.1	RAM4.1	RAM4.3	RAM4.3	RAM4.3	RAM4.3
ARCHITECTURAL VIEWS	RAM5.0	RAM5.0	RAM5.0	RAM5.0	RAM5.1	RAM5.1	RAM5.1	RAM5.1
ROOF CONNECTION DETAILS	RAM6.0	RAM6.0	RAM6.1	RAM6.1	RAM6.0	RAM6.0	RAM6.1	RAM6.1
MISC DESIGN OPTIONS	RAM7.0	RAM7.0	RAM7.0	RAM7.0	RAM7.0	RAM7.0	RAM7.0	RAM7.0
ELETRICAL CUTOUTS	RAM7.1	RAM7.1	RAM7.1	RAM7.1	RAM7.1	RAM7.1	RAM7.1	RAM7.1

STEP 12 MULTIPLE STRUCTURES

	ROOF WIDTH X LENGTH	QTY
MULTIPLE STRUCTURES		

STEP 1: GENERAL PROJECT INFORMATION

- IDENTIFY PROJECT NAME AND SCHOOL DISTRICT
- IDENTIFY USE AND OCCUPANCY CLASSIFICATION
  - THE USE AND OCCUPANCY DETERMINE THE MAXIMUM SQUARE FOOTAGE OF THE STRUCTURE
  - THE MAXIMUM SQUARE FOOTAGE IS ALSO LIMITED BY THE NUMBER OF OCCUPANTS
- IDENTIFY THE OCCUPANT LOAD PER TABLE 1004.5 IN THE CBC
- IDENTIFY TOTAL ROOF AREA WHICH SHALL NOT EXCEED ALLOWABLE AREA PER TABLE 506.2 IN THE CBC.
- IDENTIFY EXPECTED NUMBER OF OCCUPANTS BASED ON THE ESTIMATED OCCUPANT LOAD
  - TOTAL ROOF AREA DIVIDED BY OCCUPANT LOAD CAN DETERMINE NUMBER OF OCCUPANTS

STEP 2: DESIGN OPTIONS

- SELECT ROOF DECK FOR YOUR PROJECT
  - "MR" REPRESENTS MCELROY METAL "MULTI-RIB" ROOF DECK
  - "SS" REPRESENTS MCELROY METAL "MEDALLION-LOK" 16" STANDING SEAM ROOF DECK
- SELECT WHETHER GUTTERS AND DOWNSPOUTS FROM POLIGON IS NEEDED FOR YOUR PROJECT
  - IF "YES", THEN INCLUDE SHEET RAM7.0 IN THE DRAWING SET
- SELECT WHETHER ELECTRICAL CUTOUTS ARE NEEDED FOR YOUR PROJECT
  - SHEET RAM7.0 SHOWS ELECTRICAL CUTOUT SIZE AND LOCATION CUTOUTS IN COLUMNS
  - SHEET RAM7.1 HAS INSTRUCTIONS AND SHEET TO IDENTIFY WHICH COLUMNS
  - SHEET RAM7.1 MUST BE FILLED OUT IN THE SUBMITTAL SET APPROVED BY DSA
  - IF NOTHING IS FILLED IN ON RAM7.1, POLIGON WILL ASSUME CUTOTUS ARE ONLY IN COLUMN A1 (SEE 'FRAMING PLAN' FOR REFERENCE)
- SELECT CLEAR HEIGHT (SEE 'ARCHITECTURAL VIEWS' SHEET FOR REFERENCE)
  - MIN 7'-1"; MAX 10'-0"
- **IF NOTHING IS SELECTED, POLIGON WILL ASSUME THE DEFAULT FOR EACH DESIGN OPTION**

STEP 3: IDENTIFY THE Ss & S1 ACCELERATION (g) FOR YOUR PROJECT AND GEOTECHNICAL INFORMATION

- Ss & S1 VALUE DETERMINES THE REQUIRED SEISMIC DESIGN FORCES
- Ss & S1 VALUE DEPENDS ON PROJECT'S GEOGRAPHICAL LOCATION
  - FIND Ss & S1 VALUES FOR YOUR PROJECT IN THE SITE SPECIFIC GEOTECHNICAL REPORT
  - FIND Ss & S1 VALUES FOR YOUR PROJECT USING (https://asce7hazardtool.online/)
- THIS PC IS NOT APPROVED FOR Ss VALUES GREATER THAN 2.063 (CONTACT POLIGON FOR ADDITIONAL OPTIONS)

STEP 4: IDENTIFY THE SEISMIC REGION FOR YOUR PROJECT

- THE REGIONS ARE DEPENDANT ON THE Ss & S1 VALUE DETERMINED IN STEP 3
- THE SEISMIC REGION DICTATES THE MAXIMUM DEAD LOAD PERMITTED (SEE TABLE TO THE LEFT)

STEP 5: IDENTIFY THE ROOF DEAD LOAD FOR YOUR PROJECT

- THE ROOF DECK DEAD LOAD WILL ALWAYS BE INCLUDED
- THE COLLATERAL LOAD REPRESENTS ADDITIONAL LOAD THAT CAN BE SUPPORTED BY THE FRAME
- TOTAL ROOF DEAD LOAD MUST BE LESS THAN OR EQUAL TO THE MAX DEAD LOAD SHOWN IN STEP 4
- CUT SHEETS OF ANY BOARDS, BOXES AND EQUIPMENT TO BE MOUNTED ON THE STRUCTURE, INCLUDING WEIGHTS AND DIMENSIONS ARE REQUIRED

STEP 6: IDENTIFY THE LOAD SCENARIO

- REFERENCE THE STEP 4 COLOR AND SELECT THE APPLICABLE LOAD SCENARIO
- LOAD SCENARIOS HAVE NO IMPACT ON FRAME DESIGN OR COST, BUT DO AFFECT FOUNDATION SIZE

STEP 7: IDENTIFY PC STRUCTURE

- ROOF WIDTHS UP TO 20' WIDE USE THE "RAM 20"
- ROOF WIDTHS UP TO 30' WIDE USE THE "RAM 30"
- THE 20' AND 30' WIDTHS ARE SUGGESTED BECAUSE THEY ARE THE MOST ECONOMICAL
- MAXIMUM WIDTH IS 30'; (SEE 'ARCHITECTURAL VIEWS' SHEET FOR REFERENCE)

STEP 8: IDENTIFY SITE SPECIFIC ROOF WIDTH AND LENGTH

- DO NOT EXCEED THE TOTAL ROOF AREA FROM STEP 1 (ROOF WIDTH MULTIPLIED BY ROOF LENGTH)

STEP 9: FOUNDATION TYPE

- SELECT A FOUNDATION BASED THE DESIRED FOUNDATION TYPE
- SELECT EITHER SPREAD PAD OR DRILLED PIER FOUNDATION PRIOR TO APPROVAL
- FOUNDATION TYPE IMPACTS CONSTRUCTION (TIMING, SEQUENCE, COST, ETC.)
- FOUNDATION TYPE IMPACTS ANCHOR BOLT LENGTH (NOT PROVIDED BY POLIGON)
- REVIEW OF SITE-SPECIFIC SOILS REPORT TO EVALUATE APPLICABILITY OF FOUNDATION OPTIONS AVAILABLE

STEP 10: FOUNDATION SUMMARY

- USE THE SELECTIONS FROM STEP 6 AND STEP 9 TO SELECT THE APPROPRIATE FOUNDATION

STEP 11: SELECT APPLICABLE SHEET INDEX FOR YOUR PROJECT

- IDENTIFY THE APPLICABLE SHEET INDEX
- INCLUDE APPLICABLE SHEETS WITH YOUR DSA SUBMITTAL
- EXCLUDE 'MISC DESIGN OPTIONS' SHEET FOR PROJECTS WITHOUT ELECTRICAL CUTOUTS OR GUTTERS
- EXCLUDE 'ELECTRICAL CUTOUTS' SHEET FOR PROJECTS WITHOUT ELECTRICAL CUTOUTS

STEP 12: MULTIPLE STRUCTURES WITH THE SAME PC#

- FILL IN ROOF LENGTH AND WIDTH OF STRUCTURES AS WELL AS QUANTITY
- UNO ON THE POLIGON DRAWINGS, POLIGON WILL ASSUME ALL DESIGN CRITERIA FOR EACH STRUCTURE IS THE SAME
- CONTACT POLIGON FOR FURTHER INFORMATION

SHEET INDEX

1	RAM1.0	ORDER FORM	11	RAM4.2	FRAME CONNECTION DETAILS - RAM 30
2	RAM1.1	NOTES AND SPECIAL INSPECTIONS	12	RAM4.3	SECTION DETAILS - RAM 30
3	RAM2.0	FOUNDATION PLAN SPREAD PAD - RAM 20	13	RAM5.0	ARCHITECTURAL VIEWS - RAM 20
4	RAM2.1	FOUNDATION PLAN DRILLED PIER - RAM 20	14	RAM5.1	ARCHITECTURAL VIEWS - RAM 30
5	RAM2.2	FOUNDATION PLAN SPREAD PAD - RAM 30	15	RAM6.0	ROOF CONNECTION DETAILS
6	RAM2.3	FOUNDATION PLAN DRILLED PIER - RAM 30	16	RAM6.1	ROOF CONNECTION DETAILS
7	RAM3.0	FRAMING PLAN - RAM 20	17	RAM7.0	MISC DESIGN OPTIONS
8	RAM3.1	FRAMING PLAN - RAM 30	18	RAM7.1	ELECTRICAL CUTOUTS
9	RAM4.0	FRAME CONNECTION DETAILS - RAM 20			
10	RAM4.1	SECTION DETAILS - RAM 20			
TOTAL SHEETS = 18					

ABBREVIATIONS:

ACI	AMERICAN CONCRETE INSTITUTE	MR	MULTI-RIB ROOF PANEL (MCELROY)
AISC	AMERICAN INSTITUTE OF STEEL CONSTRUCTION	NTS	NOT TO SCALE
ASM	ASSEMBLY (INTERNAL REFERENCE)	NO	NUMBER
ASTM	AMERICAN SOCIETY FOR TESTING AND MAT'LS	OC	ON CENTER
AWS	AMERICAN WELDING SOCIETY	OSHA	OCCUPATIONAL HEALTH AND SAFETY ADM.
CBC	CALIFORNIA BUILDING CODE	PCF	POUNDS PER CUBIC FOOT
CJP	COMPLETE JOINT PENETRATION	PD	POLIGON DRAWING
CLR	CLEAR	PJ	PRETENSIONED JOINT
DEG	DEGREE	PLCS	PLACES
DIA	DIAMETER	PLT	PLATE
DIM	DIMENSION	PSF	POUNDS PER SQUARE FOOT
DSA	DIVISION OF THE STATE ARCHITECT	PSI	POUNDS PER SQUARE INCH
EQ	EQUAL	QTY	QUANTITY
FT	FEET	REF	REFERENCE
GA	GAGE	SQ	SQUARE
IN	INCHES	SS	STANDING SEAM ROOF PANEL (MCELROY)
KSI	KIPS PER SQUARE INCH	TYP	TYPICAL
MAX	MAXIMUM	UNO	UNLESS NOTED OTHERWISE
MIN	MINIMUM	USGS	U.S. GEOLOGICAL SURVEY
MISC	MISCELLANEOUS	W/	WITH
MPH	MILES PER HOUR		

SPECIFICATIONS

PART 1 - GENERAL

1.1 STRUCTURE DESCRIPTION
A. STRUCTURE(S) BASED ON THE FOLLOWING PC DESIGN(S):
1. HIP ROOF (RAM)

1.2 DESIGN REQUIREMENTS
A. MEET THE DESIGN INTENT SHOWN ON THE PC DRAWINGS APPROVED FOR THIS PROJECT.
1. DESIGN CRITERIA
2. MEMBERS SIZES
3. HIDDEN BOLTED CONNECTIONS BETWEEN STRUCTURAL MEMBERS
4. COLUMN ANCHORAGE SHALL INCLUDE FOUR (4) BOLTS IN COMPLIANCE WITH OSHA 1926.755(A)(1).
5. NO FIELD WELDING PERMITTED
6. NO FIELD PAINTING PERMITTED
7. ROOF DIMENSIONS AND SLOPES
8. EXPOSED STEEL ROOF FASTENERS (IF APPLICABLE) POWDER COATED BY MANUFACTURER
9. ROOF DECK SPANS FROM PEAK TO EAVE AND PERMITS PROPER DRAINAGE WITHOUT DEBRIS BUILD-UP.

1.3 SUBMITTALS
A. DRAWINGS AND CALCULATIONS SEALED BY A PROFESSIONAL ENGINEER LICENSED IN THE APPROPRIATE STATE.
B. ONLY MANUFACTURERS THAT SUBMIT DRAWINGS AND CALCULATIONS PRIOR TO BID SHALL BE CONSIDERED.
C. MANUFACTURER MUST BE ABLE TO SUBMIT APPROPRIATE LABORATORY TESTS FOR THE FOLLOWING:
1. FRAME FINISH REQUIREMENTS LISTED IN PART 2 OF THIS SPECIFICATION.
2. CERTIFIED MILL TEST REPORTS FOR STRUCTURAL STEEL (DESCRIBING THE CHEMICAL AND PHYSICAL PROPERTIES).
3. CERTIFIED MILL TEST REPORTS FOR STRUCTURAL BOLTS.

1.4 TECHNICAL SUPPORT
A. MANUFACTURER MUST HAVE IN-HOUSE ENGINEERING DEPARTMENT AND A PROFESSIONAL ENGINEER LICENSED IN THE APPROPRIATE STATE TO ANSWER TECHNICAL QUESTIONS.

1.5 QUALITY ASSURANCE
A. GENERAL
1. FABRICATION PROCEDURES SHALL COMPLY WITH APPLICABLE CODES AND LOCAL REGULATIONS.
2. REQUIRED STRUCTURAL TESTS AND SPECIAL INSPECTIONS INCLUDED ON THE PROJECT DSA-103 FORM.
B. MANUFACTURER QUALIFICATIONS
1. MINIMUM (10) YEARS ENGINEERING AND FABRICATING PRE-ENGINEERED STRUCTURES
2. MANUFACTURER OWNED AND OPERATED POWDER COAT PAINT FINISH SYSTEM
3. ALL AWS CERTIFIED WELDERS
4. FULL-TIME PROFESSIONAL ENGINEER ON STAFF LICENSED IN THE APPROPRIATE STATE
5. FULL-TIME AWS CERTIFIED ASSOCIATE WELDING INSPECTOR ON STAFF
6. FULL-TIME QUALITY ASSURANCE MANAGER ON STAFF
7. FULL-TIME LEED AP ON STAFF
C. MANUFACTURER CERTIFICATIONS
1. PCI 4000 CERTIFICATION THROUGH POWDER COATING INSTITUTE (PCI)
2. AISC CERTIFIED FABRICATOR

1.6 MANUFACTURER WARRANTY
A. STRUCTURE MUST HAVE (10) YEAR LIMITED WARRANTY ON STEEL FRAME MEMBERS.
B. STRUCTURE MUST HAVE (10) YEAR LIMITED WARRANTY ON PAINT SYSTEM.
C. PASS THROUGH WARRANTY OF ROOFING MANUFACTURER SHALL BE PROVIDED UPON REQUEST.

PART 2 - PRODUCTS

2.1 MANUFACTURER
A. ACCEPTABLE MANUFACTURERS
1. POLIGON, A DIVISION OF PORTERCORP.
A. 4240 N 136TH AVE., HOLLAND, MI 49424; (616) 399-1963; WWW.POLIGON.COM .
I. FOR POLIGON STRUCTURES IN *NORTHERN CALIFORNIA*, THE LOCAL REPRESENTATIVE IS ALL ABOUT PLAY (WWW.PLAYGROUNDPROS.COM). EMAIL AAP@PLAYGROUNDPROS.COM OR CALL (916) 923-2180
II. FOR POLIGON STRUCTURES IN *SOUTHERN CALIFORNIA*, THE LOCAL REPRESENTATIVE IS MIRACLE PLAYGROUND SALES (MIRACLEPLAYGROUNDSALES.COM EMAIL SALES@MIRACLEPLAYGROUND.COM OR CALL (951) 695-4515
B. SUBSTITUTION LIMITATIONS
1. THE ENGINEERING FOR THIS STRUCTURE IS ONLY APPLICABLE IF POLIGON SUPPLIES THE MATERIAL.
2. IF THE CONTRACTOR ELECTS TO SUBSTITUTE A DIFFERENT STRUCTURE, THEY ARE RESPONSIBLE TO OBTAIN THE NECESSARY DSA APPROVAL WITH:
A. NO COST TO THE DISTRICT OR ARCHITECT
B. NO CHANGE TO THE CONSTRUCTION SCHEDULE
3. SUBSTITUTIONS MUST BE APPROVED A MINIMUM OF (10) DAYS BEFORE BID.
4. ALL APPROVED MANUFACTURERS SHALL BE NOTIFIED IN WRITING BEFORE THE BID DATE.
5. SUBSTITUTE MANUFACTURERS SHALL NOT BE ALLOWED TO BID WITHOUT WRITTEN NOTIFICATION.
6. SUBSTITUTE MANUFACTURERS MUST MEET "MANUFACTURER QUALIFICATIONS" LISTED IN PART 1 OF THIS SPECIFICATION.
7. SUBSTITUTE MANUFACTURERS MUST PROVIDE PROOF OF "MANUFACTURER CERTIFICATIONS" ABOVE.
8. SUBSTITUTE MANUFACTURERS MUST PROVIDE PAINT FINISH DESCRIBED IN "FRAME FINISH" BELOW.

2.2 FRAME
A. MATERIALS
1. ANCHOR BOLTS: SEE DRAWINGS FOR REQUIREMENTS. ANCHOR BOLTS NOT PROVIDED BY MANUFACTURER
2. STRUCTURAL STEEL: SEE DRAWINGS FOR REQUIREMENTS.
3. STRUCTURAL BOLTS: SEE DRAWINGS FOR REQUIREMENTS.
B. FINISH
1. FRAME FINISH: POLI-5000 POWDER COAT. NO FIELD PAINTING PERMITTED.
A. COMPONENTS SHALL BE CLEANED, PRE-TREATED, AND FINISHED AT A FACILITY OWNED AND DIRECTLY SUPERVISED BY THE MANUFACTURER.
B. COMPONENTS SHALL BE SHOT BLASTED TO SSPC-SP10 NEAR-WHITE BLAST CLEANING. SSPC-SP2 HAND TOOL CLEANING WILL NOT BE AN ACCEPTABLE ALTERNATIVE.
C. COMPONENTS SHALL BE PRETREATED IN A (3) STAGE IRON PHOSPHATE OR EQUAL WASHER.
D. COMPONENTS SHALL RECEIVE EPOXY PRIMER COAT FOR SUPERIOR CORROSION PROTECTION.
E. COMPONENTS SHALL RECEIVE TOP COAT OF SUPER DURABLE TGIC POWDER COAT.
F. FINISH SHALL NOT HAVE ANY VOC EMISSIONS.
G. MANUFACTURER SHALL BE ABLE TO PRODUCE DOCUMENTATION STATING SAMPLE PRODUCTION COMPONENTS HAVE BEEN TESTED TO MEET THE FOLLOWING:
I. SALT SPRAY RESISTANCE PER ASTM B 117/ ASTM D 1654 TO 10,000 HOURS WITH NO CREEP FROM SCRIBE LINE AND RATING OF 10.
II. HUMIDITY RESISTANCE PER ASTM D2247-02 TO 5,000 HOURS WITH NO LOSS OF ADHESION OR BLISTERING.
III. COLOR/UV RESISTANCE PER ASTM G154-04 TO 2,000 HOURS EXPOSURE, ALTERNATE CYCLES WITH RESULTS OF NO CHALKING, 75% COLOR RETENTION, COLOR VARIATION MAXIMUM 3.0 E VARIATION CIE FORMULA (BEFORE AND AFTER 2,000 HOURS EXPOSURE).
2. FRAME COLOR: DETERMINED BY DISTRICT.
C. FABRICATION
1. FABRICATE COMPONENTS TO PERMIT BOLTED CONNECTIONS ON SITE. NO FIELD WELDING PERMITTED.
2. LABEL EACH MEMBER WITH UNIQUE PART NUMBER TO STREAMLINE ERECTION.
3. WELDING REQUIREMENTS: SEE DRAWINGS FOR REQUIREMENTS.

2.3 ROOF
A. MATERIALS
1. ROOF MATERIAL: SEE DRAWINGS FOR REQUIREMENTS.
2. ROOF HARDWARE: SEE DRAWINGS FOR REQUIREMENTS.
B. FINISH
1. ROOF FINISH: KYNAR 500 HIGH-PERFORMANCE RESIN-BASED PAINT.
2. ROOF COLOR: DETERMINED BY OWNER.

2.4 MISCELLANEOUS
A. MATERIALS
1. CONCRETE MATERIAL: SEE DRAWINGS FOR REQUIREMENTS. CONCRETE NOT PROVIDED BY MANUFACTURER.

PART 3 - EXECUTION

3.1 STORAGE AND HANDLING
A. PROTECT MATERIAL AFTER DELIVERY FROM WEATHER, SUNLIGHT, AND DAMAGE.
B. ELEVATE MATERIAL TO ALLOW CIRCULATION AND REDUCE MOLD, FUNGI DECAY, AND INSECT INFESTATION.
C. HANDLE MATERIAL WITH PROTECTIVE STRAPS OR PADDED FORKLIFT. HANDLING MATERIAL WITH CHAIN OR CABLE WILL NOT BE ACCEPTED AND MAY VOID MANUFACTURER'S WARRANTY.
D. TO PREVENT MOISTURE DAMAGE TO ANY WOOD MATERIAL (IF APPLICABLE), KEEP WOOD PACKAGED BEFORE INSTALLATION AND COVER IMMEDIATELY WITH ANY SECONDARY ROOF MATERIAL.

3.2 ERECTION
A. INSTALL COMPONENTS ACCORDING TO MANUFACTURER'S INSTALLATION DRAWINGS AND THESE SPECIFICATIONS.
B. ANCHOR BOLT AND COLUMN LAYOUT IS CRITICAL.
C. COMPLY WITH SPECIFIC BOLTING INSTALLATION REQUIREMENTS PROVIDED ON DRAWINGS REQUIRING THE CONTRACTOR TO COORDINATE THIS PHASE OF CONSTRUCTION WITH THE SPECIAL BOLTING INSPECTOR AND THE INSPECTOR OF RECORD *PRIOR TO THE ERECTION OF THE FRAME.*
D. NO FIELD SLOTTING OR OPENING OF HOLES WILL BE ALLOWED. TOLERANCES ON STEEL STRUCTURAL MEMBERS ARE SET ACCORDING TO AISC CONSTRUCTION PRACTICES, FOLLOWED DURING FABRICATION, AND CANNOT BE INCREASED.
E. AFTER INSTALLATION, RESTORE DAMAGED SURFACES TO THE ORIGINAL CONDITION USING TOUCH-UP PAINT PROVIDED BY MANUFACTURER. IF THE ARCHITECT DOES NOT ACCEPT THAT, REPLACE DAMAGED MATERIAL AT NO COST TO THE DISTRICT.
F. COORDINATE AS REQUIRED WITH OTHER DISCIPLINES (ELECTRICAL, PLUMBING, ETC.)
G. COMPLY WITH ALL APPLICABLE OHSA REQUIREMENTS

3.3 REPAIR
A. DO NOT ATTEMPT ANY FIELD CHANGES TO THE STRUCTURE WITHOUT FIRST CONTACTING THE MANUFACTURER.

3.4 QUALITY CONTROL
A. TESTS AND INSPECTIONS DURING ERECTION ARE NOT REQUIRED BY THE MANUFACTURER, BUT MAY BE REQUIRED BY OTHERS.
B. THE PROJECT INSPECTOR, AND ENTIRE CONSTRUCTION OVERSIGHT PROCESS, SHALL COMPLY WITH DSA PR 13-01. DO NOT PROCEED UNTIL UNSATISFACTORY CONDITIONS HAVE BEEN CORRECTED.

STATE APPROVALS-SITE

IDENTIFICATION STAMP
DIV. OF THE STATE ARCHITECT
APP: 02-121837 INC:
REVIEWED FOR
SS ☑ FLS ☑ ACS ☑
DATE: 10/19/2023

4080 PLAZA GOLDORADO CIRCLE
SUITE B,
CAMERON PARK, CA 95682
530.677.5515
GHD

poligon
PORTER

REGISTERED PROFESSIONAL ENGINEER
JESSICA E. NAPIER
No. S5476
STRUCTURAL
STATE OF CALIFORNIA

STATE APPROVALS-PC

IDENTIFICATION STAMP
DIV. OF THE STATE ARCHITECT
APP: 02-121213 PC
REVIEWED FOR
SS ☑ FLS ☑ ACS ☑ CG ☐
DATE: 7/18/2023

PRE-CHECK (PC) DOCUMENT
CODE: 2022 CBC
A SEPARATE PROJECT APPLICATION FOR CONSTRUCTION IS REQUIRED.

ORDER FORM

HIP ROOF - RAM

RAM1.0

GENERAL:

1. GENERAL NOTES AND TYPICAL DETAILS SHALL APPLY TO ALL PARTS OF THE JOB EXCEPT WHERE THEY MAY CONFLICT WITH DETAILS AND NOTES ON OTHER SHEETS. WHERE CONDITIONS ARE NOT SPECIFICALLY INDICATED BUT ARE OF SIMILAR CHARACTER TO DETAILS SHOWN, SIMILAR DETAILS OF CONSTRUCTION SHALL BE USED SUBJECT TO REVIEW BY THE STRUCTURAL ENGINEER FOR THIS PROJECT.
2. WORK SHALL CONFORM TO THE REQUIREMENTS, AS AMENDED TO DATE, OF THE LATEST ADOPTED EDITION OF THE CBC, C.A.C. TITLE 24, AND ALL OTHER LOCAL, STATE AND FEDERAL REGULATIONS.
3. OMISSIONS OR CONFLICTS BETWEEN THE VARIOUS ELEMENTS OF THE WORKING DRAWINGS AND/OR SPECIFICATIONS SHALL BE BROUGHT TO THE ATTENTION OF THE STRUCTURAL ENGINEER FOR THIS PROJECT PRIOR TO PROCEEDING WITH ANY WORK INVOLVED.
4. THE CONTRACTOR SHALL BE RESPONSIBLE FOR COORDINATING THE WORK OF ALL TRADES AND SHALL CHECK ALL DIMENSIONS. ALL DISCREPANCIES SHALL BE CALLED TO THE ATTENTION OF THE STRUCTURAL ENGINEER FOR THIS PROJECT AND BE RESOLVED BEFORE PROCEEDING WITH THE WORK.
5. THESE CONSTRUCTION DRAWINGS AND SPECIFICATIONS REPRESENT THE FINISHED STRUCTURE AND DO NOT INDICATE THE METHOD OF CONSTRUCTION. THE CONTRACTOR SHALL SUPERVISE AND DIRECT THE WORK AND SHALL BE SOLELY RESPONSIBLE FOR CONSTRUCTION MEANS, METHODS, TECHNIQUES, SEQUENCES AND PROCEDURES, INCLUDING, BUT NOT LIMITED TO, BRACING, TEMPORARY SUPPORTS, AND SHORING. OBSERVATION VISITS TO THE SITE BY FIELD REPRESENTATIVES OF THE ARCHITECT/ENGINEER SHALL NOT INCLUDE INSPECTIONS OF THE PROTECTIVE MEASURES OR THE CONSTRUCTION PROCEDURES. ANY SUPPORT SERVICES PERFORMED BY THE ARCHITECT/ENGINEER DURING THE CONSTRUCTION SHALL BE DISTINGUISHED FROM CONSTRUCTION AND DETAILED INSPECTION SERVICES WHICH ARE FURNISHED BY OTHERS. THESE SUPPORT SERVICES PERFORMED BY THE ARCHITECT/ENGINEER, WHETHER OF MATERIAL OR WORK, ARE FOR THE PURPOSE OF ASSISTING IN QUALITY CONTROL AND IN ACHIEVING CONFORMANCE WITH CONTRACT DOCUMENTS, BUT DO NOT GUARANTEE CONSTRUCTION.
6. ASTM DESIGNATIONS AND ALL STANDARDS REFER TO THE LATEST AMENDMENTS.
7. CONFORM TO APPLICABLE CAL/OSHA CONSTRUCTION SAFETY REGULATIONS FOR ALL WORK PERFORMED DURING CONSTRUCTION. JOB SITE SAFETY IS STRICTLY THE RESPONSIBILITY OF THE CONTRACTOR AND NOT THE ARCHITECT/ENGINEER OR OWNER.
8. THE ENGINEER AND THEIR CONSULTANTS SHALL HAVE NO RESPONSIBILITY FOR THE DISCOVERY, HANDLING, REMOVAL OR DISPOSAL OF HAZARDOUS MATERIALS AT THE PROJECT SITE, INCLUDING BUT NOT LIMITED, TO ASBESTOS, ASBESTOS PRODUCTS, POLYCHLORINATED BIPHENYL (PCB) OR OTHER TOXIC SUBSTANCES.
9. SHOULD ANY CONDITIONS DEVELOP NOT COVERED BY THE CONTRACT DOCUMENTS, OR IF A CHANGE IN THE SCOPE OF WORK IS PROPOSED, A CONSTRUCTION CHANGE DOCUMENT DETAILING AND SPECIFYING THE REQUIRED CHANGE(S) SHALL BE SUBMITTED TO AND APPROVED BY DSA BEFORE PROCEEDING WITH THE WORK.
10. THE SCHOOL DISTRICT'S INSPECTOR OF RECORD SHALL INSPECT AND APPROVE THE ERECTED FRAME PRIOR TO ROOF INSTALLATION.
11. SEE REQUIREMENTS FOR LOCATION IN ANY FIRE HAZARD SEVERITY ZONE FOR WILDLAND URBAN INTERFACE AREAS (WUI) AS SPECIFIED IN THE APPLICABLE VERSION OF THE CALIFORNIA BUILDING CODE. PROVIDE PROTECTION AND DETAILS OF ALL AREAS COMPLYING WITH THE WUI REQUIRMENTS.
12. LOCATING THIS STRUCTURE CLOSER THAN 20 FEET TO OTHER STRUCTURES MAY AFFECT THE ALLOWABLE AREA FOR THE EXISTING CONSTRUCTION PER THE APPLICABLE VERSION OF THE CALIFORNIA BUILDING CODE.
13. VIEWS AND DETAILS ARE NOT DRAWN TO SCALE (UNLESS NOTED OTHERWISE). DO NOT SCALE THESE DRAWINGS.
14. OTHER SITE SPECIFIC ITEMS MAY BE REQUIRED.
15. WHEN A SITE-SPECIFIC PROJECT IS LOCATED IN A FLOOD ZONE OTHER THAN ZONE X, A LETTER STAMPED AND SIGNED FROM A SOILS ENGINEEER IS NEEDED TO VALIDATE THE ALLOWABLE SOIL VALUES SPECIFIED IN THE PC ARE STILL APPLICABLE.

STRUCTURAL AND MISCELLANEOUS STEEL:

1. ALL STRUCTURAL STEEL SHALL BE DETAILED, FABRICATED AND ERECTED IN ACCORDANCE WITH THE AMERICAN INSTITUTE OF STEEL CONSTRUCTION (AISC) 360 - 16 AND 303-16 MANUAL REFERENCED BY THE 2022 EDITION OF THE CALIFORNIA BUILDING CODE.
2. PIPE SECTIONS SHALL CONFORM TO ASTM A53, Fy = 35 ksi, GRADE B UNLESS NOTED OTHERWISE.
3. STRUCTURAL TUBING (HSS SHAPES) SHALL CONFORM TO ASTM A500, GRADE B (OR HIGHER), Fy = 46 KSI.
4. IF MATERIAL AVAILABILITY IS LIMITED, MEMBER THICKNESSES CAN BE INCREASED BEYOND WHAT IS SHOWN IN THESE DRAWINGS (MAXIMUM INCREASE OF 1/8").
5. ALL CHANNELS, ANGLES, PLATES AND MISC. STEEL SHALL CONFORM TO ASTM A36, Fy = 36 KSI.
6. ALL COLD FORM STEEL SHALL CONFORM TO ASTM A653, CS = TYPE B, Fy = 50 KSI.
7. STRUCTURAL STEEL AND DECK SHALL BE IDENTIFIED FOR CONFORMITY PER CBC 2202A.1.
8. ROOF DECK SHALL HAVE KYNAR 5000 METAL COATING.
9. ROOF DECK SHALL CONFORM TO ATSM A792, Fy = 50 KSI.
10. MR ROOF SCREWS MEET ASTM A510 WITH A HEAD DIMENSION OF 0.31" (FLAT-TO-FLAT) AND INTEGRAL WASHER DIMENSION OF 0.58" (OUTSIDE DIAMETER).
11. SS ROOF SCREWS MEET ASTM A510 WITH A HEAD DIMENSION OF 0.437" (OUTSIDE DIAMETER).

WELDING:

1. ALL WELDING SHALL COMPLY WITH AWS D1.1 SPECIFICATIONS AND SHALL BE DONE BY AWS QUALIFIED WELDERS CERTIFIED FOR THE TYPE OF WELDING TO BE PERFORMED.
2. ALL WELDING SHALL BE DONE BY GAS METAL ARC PROCESS WITH E70XX ELECTRODES. FLUX CORE ARC WELD SHALL CONFORM TO CHARPY NOTCH TOUGHNESS RATING OF 20 ft-lb @ (O° F).
3. ALL WELDING SHALL BE DONE IN THE SHOP WITH REQUIRED INSPECTION, PRE-APPROVED BY DSA, TO ENSURE PROPER MATERIAL ID AND WELDING.
4. WELD FILLER METAL MANUFACTURER SHALL PROVIDE WRITTEN CERTIFICATION OF COMPLIANCE WITH CODE AND SPECIFICATIONS.

BOLTING:

1. ALL BOLTS SHOWN ON THESE DRAWINGS ARE ASTM F3125 (A325 TYPE 1) HIGH STRENGTH BOLTS (UNO) AND SHALL BE HOT DIPPED GALVANIZED PER ASTM F2329.
2. HIGH STRENGTH BOLTS SHALL BE SAMPLED AND TESTED IN COMPLANCE WITH CBC 2213A.1.
3. BEFORE ERECTING THE FRAME, VERIFY ALL BOLTS AND NUTS ARE CLEAN OF DEBRIS AND BURRS - INCLUDING THE HARDWARE ALREADY FASTENED INSIDE THE MEMBERS. CHASING SOME OF THE BOLTS AND NUTS MAY BE REQUIRED.
4. ANCHOR BOLTS (HEAVY HEX HEAD, ASTM F1554, GRADE 55) SHALL BE HOT DIPPED GALVANIZED PER ASTM F2329. ANCHOR BOLTS MAY BE HEADED OR THREADED WITH A NUT THAT IS PREVENTED FROM ROTATING.
5. HIGH STRENGTH NUTS SHALL CONFORM TO ASTM A563 AND SHALL BE GALVANIZED PER ASTM F2329.
6. HIGH STRENGTH WASHERS SHALL CONFORM TO ASTM F436 AND SHALL BE GALVANIZED PER ASTM F2329.
7. THE BOLTING INSTALLATION REQUIREMENTS OUTLINED BELOW ARE CRITICAL TO THE STRUCTURE'S DESIGN AND PERFORMANCE. **THE INSTALLER IS REQUIRED TO COORDINATE THIS PHASE OF CONSTRUCTION WITH THE SPECIAL BOLTING INSPECTOR AND THE INSPECTOR OF RECORD PRIOR TO THE ERECTION OF THE FRAME**. ALL BOLTS SHALL BE INSTALLED AND INSPECTED PER THE APPLICABLE VERSION OF AISC'S "SPECIFICATION FOR STRUCTURAL JOINTS USING HIGH-STRENGTH BOLTS", CBC 1705A.2.1; AISC 341-16 J7; AISC 360-16 N5.6.

   A. PRETENSIONED JOINTS (IDENTIFIED ON THE FRAME CONNECTION DETAILS WITH A "PJ REQUIRED") MUST BE INSTALLED AND INSPECTED TO MEET ONE OF FOLLOWING REQUIREMENTS:

      1. TURN-OF-NUT PRETENSIONING
      2. CALIBRATED WRENCH PRENTENSIONING
      3. DIRECT-TENSION-INDICATOR PRETENSIONING (CONTRACTOR RESPONSIBLE FOR PURCHASE OF REQUIRED WASHERS)

   B. ALL OTHER JOINTS MUST BE INSTALLED AND INSPECTED TO MEET THE REQUIREMENTS OF SNUG-TIGHTENED JOINTS. **NOTE TO INSTALLER AND INSPECTOR(S): THE SNUG-TIGHT CONDITION EXISTS, IN PART, WHEN ALL THE BOLTS IN THE JOINT HAVE BEEN TIGHTENED SUFFICIENTLY TO PREVENT THE REMOVAL OF THE NUTS WITHOUT THE USE OF A WRENCH.**

   THE CONTRACTOR, SPECIAL BOLTING INSPECTOR AND THE INSPECTOR OF RECORD MUST ALL AGREE ON WHICH APPROACH WILL BE USED TO PRETENSION THE BOLTS. THE CONTRACTOR IS RESPONSIBLE FOR DOCUMENTING THE APPROACH AGREED TO BY ALL PARTIES LISTED ABOVE.

FOUNDATIONS:

1. ALLOWABLE SOIL PRESSURES ASSUME CLASS 5 SOIL CLASSIFICATION PER 2022 CBC TABLE 1806A. 2.
2. FILL AND BACKFILL SHALL BE COMPACTED TO 95% OF MAX. DENSITY IN ACCORDANCE WITH ASTM TEST METHOD D1557. FLOODING NOT PERMITTED.
3. THE CONTRACTOR SHALL BE RESPONSIBLE FOR ALL SHORING, ETC. NECCESSARY TO SUPPORT CUT AND/OR FILL BANKS DURING EXCAVATION, AND FORMING AND PLACEMENT OF CONCRETE.
4. STRUCTURES SHALL BE SETBACK FROM ADAJCENT SLOPES TO PROVIDE FIRM MATERIAL FOR EMBEDMENT AND FOR PROTECTION FROM SLOPE DRAINAGE, EROSION, AND SHALLOW FAILURES.

   A. BOTTOM OF ASCENDING SLOPE: THE SMALLER OF HALF THE HEIGHT OF THE SLOPE AND 15FT MEASURED FROM THE FACE OF THE STRUCTURE TO THE TOE OF THE SLOPE
   B. TOP OF DECENDING SLOPE: THE SMALLER OF A THIRD OF THE HEIGHT OF THE SLOPE AND 40 FT MEASURED FROM THE FACE OF THE FOOTING TO THE TOP OF THE SLOPE

   ALTERNATE SETBACKS ARE PERMITTED, SUBJECT FOR APPROVAL. A GEOTECHNICAL INVESTIGATION MAY BE REQUIRED.
5. STRUCTURES PLACED ON LIQUIFIABLE SOILS OR SITE CLASS F MAY NOT BE SUBMITTED FOR AN OVER THE COUNTER REVIEW.

CONCRETE:

1. MIX DESIGN REQUIREMENTS: (NORMAL WEIGHT CONCRETE)

MINIMUM STRENGTH f'c (28 DAYS)	EXPOSURE CATEGORY	W/C RATIO MAXIMUM)	SLUMP (± 1")	UNIT WEIGHT (NORMAL WEIGHT)
5000 PSI	F3, S3, W2, C2	0.4	4"	150 PCF

2. CHANGES TO THE MIX DESIGN MUST BE APPROVED BY THE ENGINEER OR ARCHITECT OF RECORD AND DSA
3. AGGREGATES SHALL CONFORM TO ASTM C33. MAX AGGREGATE SIZE = 1".
4. CEMENT SHALL CONFORM TO ASTM C150 (TYPE V) WITH A MAXIMUM EXPANSION OF 0.040%, FOR SULFATE RESISTANCE.
5. ADMIXTURES CONTAINING CALCIUM CHLORIDE ARE PROHIBITED.
6. CONCRETE EXPOSED TO FREEZING-AND-THAWING CYCLES SHALL BE AIR ENTRAINED PER ACI 318-19 SECTION 19.3.3.
7. CONCRETE SHALL BE MAINTAINED IN A MOIST CONDITION FOR A MINIMUM OF FIVE DAYS AFTER PLACEMENT. ALTERNATE METHODS WILL BE APPROVED IF SATISFACTORY PERFORMANCE CAN BE ASSURED.
8. CONCRETE SHALL NOT FREE FALL MORE THAN FIVE FEET.
9. CONCRETE SHALL BE PROPORTIONED PER ACI 318-19 26.4.
10. CONCRETE SHALL BE TESTED PER CBC 1910A.1, 1705A.3, AND ACI 318-19 26.13. BATCH PLANT INSPECTION NOT REQUIRED. CONTRACTOR SHALL IMPLEMENT WEIGHTMASTER AND BATCH TICKET REQUIREMENTS OF CBC 1705A.3.3.1.

REINFORCING STEEL:

1. REINFORCING STEEL SHALL BE DEFORMED STEEL CONFORMING TO THE REQUIREMENTS OF ASTM A615, (DEFORMATIONS SHALL BE IN ACCORDANCE WITH ASTM A305) AS FOLLOWS:
   GR 60: (#4 BARS AND LARGER)
   GR 40: (#3 BARS)
2. DETAILING, FABRICATION, AND ERECTION OF REINFORCING BARS SHALL CONFORM TO THE ACI "MANUAL OF STANDARD PRACTICE FOR DETAILING REINFORCING CONCRETE STRUCTURES."
3. MIN. COVER FOR CAST-IN-PLACE CONCRETE SHALL BE AS FOLLOWS:

   A. CAST AGAINST EARTH.. 3"
   B. CAST AGAINST FORM BELOW GRADE...................... 2"
   C. FORMED SLABS (#11 BAR & SMALLER).................... 3/4"
   D. SLABS ON GRADE (FROM TOP OF SLAB).................. 1"
   E. COLUMNS AND BEAMS (MAIN BARS)...................... 2"
   F. WALLS EXPOSED TO WEATHER (#6-#18 BARS)......... 2"
   (#5 & SMALLER)......... 11/2"
   G. NOT EXPOSED TO WEATHER (#11 & SMALLER)........ 3/4"
4. BARS SHALL BE CLEAN OF RUST, GREASE OR OTHER MATERIAL LIKELY TO IMPAIR BOND. BENDS SHALL BE MADE COLD.
5. FOR #6 BARS AND SMALLER, REINFORCING SHALL BE LAP SPLICED 45 BAR DIA MINIMUM IN CONCRETE. FOR #7 BARS AND LARGER, REINFORCING SHALL BE LAP SPLICED 55 BAR DIAMETERS MINIMUM IN CONCRETE. ALL LAP SPLICES MUST COMPLY WITH ACI 318-19.
6. PRIOR TO PLACING OF CONCRETE, REINFORCING STEEL AND EMBEDDED ITEMS SHALL BE WELL SECURED IN POSITION.
7. WELDING OF REINFORCING IS NOT ALLOWED
8. REINFORCING STEEL SHALL BE SAMPLED AND TESTED PER CBC 1910A.2.

POWDER COATED AND EPOXY PRIMED FINISH:

1. ENTIRE POWDER COATING PROCESS COMPLETED IN SAME FACILITY AS STEEL FABRICATION.
2. ALL CARBON STEEL MEMBERS (COLUMNS, BEAMS, PLATES, ETC.) PAINTED WITH PRIME COAT PER THE "AISC CODE OF STANDARD PRACTICE" AND THE "AISC SPECIFICATION SECTION M3" (UNLESS NOTED OTHERWISE).
3. PARTS PRETREATED IN A 3 STAGE IRON PHOSPHATE WASHER (OR EQUAL).
4. EPOXY PRIMER POWDER COAT APPLIED TO PARTS FOR SUPERIOR CORROSION PROTECTION.
5. TOP POWDER COAT OF SUPER DURABLE TGIC (COLOR SELECTED FROM MANUFACTURER'S STANDARD OPTIONS OR CUSTOM COLOR).
6. SAMPLE PRODUCTION PARTS TESTED TO MEET THE FOLLOWING CRITERIA:
   A. SALT SPRAY RESISTANCE PER ASTM B 117/ ASTM D 1654
      1. 10000 HOURS WITH NO CREEP FROM SCRIBE LINE AND RATING OF 10
   B. HUMIDITY RESISTANCE PER ASTM D2247-02
      1. 5000 HOURS WITH NO LOSS OF ADHESION OR BLISTERING
   C. COLOR/UV RESISTANCE PER ASTM G154-04
      1. 2000 HOURS EXPOSURE ALTERNATE CYCLES WITH NO CHALKING, 75% COLOR RETENTION, AND COLOR VARIATION MAXIMUM 3.0 E VARIATION CIE FORMULA (BEFORE AND AFTER 2000 HOURS EXPOSURE

CONSTRUCTION NOTES

1. A DSA-CERTIFIED CLASS 2 INSPECTOR IS REQUIRED FOR THIS PROJECT.
2. CHANGES TO THE APPROVED DRAWINGS AND SPECIFICATIONS SHALL BE MADE BY ADDENDA OR CONSTRUCTION CHANGE DOCUMENT (CCD) APPROVED BY DSA, AS REQURIED BY SECTION 4-338, PART 1, TITLE 24 CCR AND DSA IR A-6.
3. A "DSA-CERTIFIED" PROJECT INSPECTOR EMPLOYED BY THE OWNER (E.G. DISTRICT, ETC.) AND APPROVED BY DSA SHALL PROVIDE CONTINUOUS INSPECTION OF WORK. THE DUTIES OF THE INSPECTOR ARE DEFINED IN SECTION 4-342, PART 1, TITLE 24, CCR.
4. A DSA ACCEPTED TESTING LABORATORY DIRECTLY EMPLOYED BY THE OWNER (E.G. DISTRICT, ETC.) SHALL CONDUCT ALL THE REQUIRED TEST AND INSPECTIONS FOR THE PROJECT.

NOTICE OF DISCLAIMER FOR STRUCTURAL ENGINEER RESPONIBILITY

1. FOR THE SITE-SPECIFIC PROJECT, NEITHER POLIGON OR GHD ARE THE DESIGN PROFESSIONAL IN GENERAL RESPONSIBLE CHARGE.
2. FOR THE SITE-SPECIFIC PROJECT, GHD AND POLIGON'S RESPONSIBILITY IS LIMITED TO THE PREPARATION OF THE PLANS AND SPECIFICATIONS FOR THE STRUCTURES OF THIS PC ONLY.
3. STRUCTURAL OBSERVATION OF CONSTRUCTION IS SPECIFICALLY EXCLUDED FROM GHD AND POLIGON'S RESPONSIBILITY FOR THE SITE-SPECIFIC PROJECT.
4. ALL CONSTRUCTION ACTIVITIES RELATED TO STRUCTURAL ENGINEERING MAY BE DELEGATED TO A QUALIFIED ENGINEER BY THE DESIGN PROFESSIONAL IN GENERAL RESPONSIBLE CHARGE. THESE ACTIVITIES INCLUDE, BUT ARE NOT LIMITED TO, APPROVAL OF INSPECTOR QUALIFICATIONS, STRUCTURAL OBSERVATIONS OF CONSTRUCTION, REVIEW OF INSPECTIONS REPORTS, AND SIGNING OFF ON THE VERIFIED REPORT FOR COMPLETED WORK.
5. POLIGON WILL BE RESPONSIBLE FOR RESPONDING TO QUESTIONS PERTAINING TO THE PLANS AND SPECIFICATIONS FOR THE STRUCTURES OF THIS PC WHICH ARISE DURING PLAN REVIEW AND CONSTRUCTION.

SPECIAL INSPECTION NOTES:

1. THE PROJECT INSPECTOR AND TESTING AGENCY SHALL BE SELECTED BY THE SCHOOL DISTRICT AND APPROVED BY DSA AND THE ARCHITECT OF RECORD.
2. COSTS OF THE PROJECT INSPECTOR AND THE TESTING AGENCY SHALL BE BORN BY THE SCHOOL DISTRICT.
3. THE PROJECT INSPECTOR, AND ENTIRE CONSTRUCTION OVERSIGHT PROCESS, SHALL COMPLY WITH DSA PR 13-01.
4. ON APPROVED PC DRAWINGS, THE STATEMENT OF STRUCTURAL TESTS AND SPECIAL INSPECTIONS (FORM DSA-103) BELOW IS ONLY AN EXAMPLE. ON APPROVED PC DRAWINGS, THE EXAMPLE FORM DSA-103 MUST BE CROSSED OUT BEFORE THE PC DRAWINGS CAN BE APPROVED AS PART OF A SITE-SPECIFIC (OR STOCKPILE) PROJECT SO THEY WILL NOT CONFLICT WITH THE OFFICIAL FORM DSA-103 FOR THE PROJECT.

DSA 103-22: LISTING OF STRUCTURAL TESTS & SPECIAL INSPECTIONS, 2022 CBC

Application Number:	**School Name:**	**School District:**
DSA File Number:	**Increment Number:**	**Date Submitted:**

2022 CBC

IMPORTANT: This form is only a summary list of structural tests and some of the special inspections required for the project. Generally, the structural tests and special inspections noted on this form are those that will be performed by the Geotechnical Engineer of Record, Laboratory of Record, or Special Inspector. The actual complete test and inspection program must be performed as detailed on the DSA approved documents. The appendix at the bottom of this form identifies work NOT subject to DSA requirements for special inspection or structural testing. The project inspector is responsible for providing inspection of all facets of construction, including but not limited to, special inspections not listed on this form such as structural wood framing, high-load wood diaphragms, cold-formed steel framing, anchorage of non-structural components, etc., per Title 24, Part 2, Chapter 17A (2022 CBC).

***NOTE:** Undefined section and table references found in this document are from the CBC, or California Building Code.

KEY TO COLUMNS

1. TYPE	2. PERFORMED BY
Continuous – Indicates that a continuous special inspection is required **Periodic** – Indicates that a periodic special inspection is required **Test** – Indicates that a test is required	**GE** – Indicates that the special inspection shall be performed by a registered geotechnical engineer or his or her authorized representative. **LOR** – Indicates that the test or special inspection shall be performed by a testing laboratory accepted in the DSA Laboratory Evaluation and Acceptance (LEA) Program. See CAC Section 4-335. **PI** – Indicates that the special inspection may be performed by a project inspector when specifically approved by DSA. **SI** – Indicates that the special inspection shall be performed by an appropriately qualified/approved special inspector.

	Test or Special Inspection	Type	Performed By	Code References and Notes
	S1. GENERAL:			
☑	**a.** Verify that: • Site has been prepared properly prior to placement of controlled fill and/or excavations for foundations. • Foundation excavations are extended to proper depth and have reached proper material. • Materials below footings are adequate to achieve the design bearing capacity.	See Notes	PI	Refer to specific items identified in the Appendix listing exemptions for limitations. Placement of controlled fill exceeding 12" depth under foundations is not permitted without a geotechnical report.
	S2. SOIL COMPACTION AND FILL:			
☑	**a.** Verify use of proper materials, densities and inspect lift thicknesses, placement and compaction during placement of fill.	Continuous	LOR*	* Under the supervision of a geotechnical engineer or LOR's engineering manager. Refer to specific items identified in the Appendix listing exemptions for limitations.
☑	**b.** Compaction testing.	Test	LOR*	* Under the supervision of a geotechnical engineer or LOR's engineering manager. Refer to specific items identified in the Appendix listing exemptions for limitations.
	S4. CAST-IN-PLACE DEEP FOUNDATIONS (PIERS):			
☑	**a.** Inspect drilling operations and maintain complete and accurate records for each pier.	Continuous	PI	Continuous inspection to be provided by project inspector. Refer to specific items identified in the Appendix listing exemptions for limitations.
☑	**b.** Verify pier locations, diameters, plumbness, and lengths. Record concrete or grout volumes.	Continuous	PI	Continuous inspection to be provided by project inspector. Refer to specific items identified in the Appendix listing exemptions for limitations.
☑	**c.** Concrete piers.	Provide tests and inspections per CONCRETE section below.		
	C1. CAST-IN-PLACE CONCRETE			
☑	**a.** Verify use of required design mix.	Periodic	SI	**Table 1705A.3 Item 5, 1910A.1.**
☑	**b.** Identifiy, sample, and test reinforcing steel.	Test	LOR	**1910A.2;** ACI 318-19 Ch. 20 and Section 26.6.1.2; DSA IR 17-10. (See Appendix (end of this form) for exemptions.)
☑	**c.** During concrete placement, fabricate specimens for strength tests, perform slump and air content tests, and determine the temperature of the concrete.	Test	LOR	**Table 1705A.3 Item 6**; ACI 318-19 Sections 26.5 & 26.12.
☑	**d.** Test concrete (f_c).	Test	LOR	**1905A.1.17;** ACI 318-19 Section 26.12.
☑	**e.** Batch plan inspection:	See Notes	SI	Default of **'Continuous'** per **1705A.3.3**. If approved by DSA, batch plant inspection may be reduced to **'Periodic'** subject to requirements in Section **1705.A.3.3.1**, or eliminated per **1705A.3.3.2**. See IR 17-13. (See Appendix (end of this form) for exemptions.)
	S/A1. STRUCTURAL STEEL, COLD-FORMED STEEL AND ALUMINUM USED FOR STRUCTURAL PURPOSES			
☑	**a.** Verify identification of all materials and: • Mill certificates indicate material properties that comply with requirements. • Material sizes, types and grades comply with requirements.	Periodic	*	**Table 1705A.2.1 Item 3a–3c.** 2202A.1**;** AISI S100-20 Section A3.1 & A3.2, AISI S240-20 Section A3 & A5, AISI S220-20 Sections A4 & A6. * By special inspector or qualified technician when performed off-site.
☑	**b.** Test unidentified materials	Test	LOR	**2202A.1.**
☑	**c.** Examine seam welds of HSS shapes	Periodic	SI	DSA IR 17-3.
☑	**d.** Verify and document steel fabrication per DSA-approved construction documents.	Periodic	SI	Not applicable to cold-formed steel light-frame construction, except for trusses (**1705A.2.4**).
	S/A2. HIGH-STRENGTH BOLTS:			
☑	**a.** Verify identification markings and manufacturer's certificates of compliance conform to ASTM standards specified in the DSA-approved documents.	Periodic	SI	**Table 1705A.2.1 Items 1a & 1b, 2202A.1;** AISC 360-16 Section A3.3, J3.1, and N3.2; RCSC 2014 Section 1.5 & 2.1; DSA IR 17-8 & DSA IR 17-9.
☑	**b.** Test high-strength bolts, nuts and washers.	Test	LOR	**Table 1705A.2.1 Item 1c, 2213A.1**; RCSC 2014 Section 7.2; DSA IR 17-8.
☑	**c.** Bearing-type ("snug tight") connections.	Periodic	SI	**Table 1705A.2.1 Item 2a, 1705A.2.6, 2204A.2;** AISC 360-16 J3.1, J3.2, M2.5 & N5.6; RCSC 2014 Section 9.1; DSA IR 17-9.
☑	**d.** Pretensioned and slip-critical connections.	*	SI	**Table 1705A.2.1 Items 2b & 2c, 1705A.2.6, 2204A.2;** AISC 360-16 J3.1, J3.2, M2.5 & N5.6; RCSC 2014 Sections 9.2 & 9.3; DSA IR 17-9. * "Continuous" or "Periodic" depends on the tightening method used.
	S/A3. WELDING:			
☑	**a.** Verify weld filler material identification markings per AWS designation listed on the DSA- approved documents and the WPS.	Periodic	SI	**1705A.2.5, Table 1705A.2.1 Items 4 & 5**; AWS D1.1 and AWS D1.8 for structural steel; AWS D1.2 for Aluminum; AWS D1.3 for cold-formed steel; AWS D1.4 for reinforcing steel; DSA IR 17- 3.
☑	**b.** Verify weld filler material manufacturer's certificate of compliance.	Periodic	SI	DSA IR 17-3.
☑	**c.** Verify WPS, welder qualifications and equipment.	Periodic	SI	DSA IR 17-3.
	S/A4. SHOP WELDING (IN ADDITION TO SECTION S/A3):			
☑	**a.** Inspect groove welds, multi-pass fillet welds, single pass fillet welds > 5/16", plug and slot welds.	Continuous	SI	**Table 1705A.2.1 Items 5a.1–4;** AISC 360-16 (and AISC 341-16 as applicable); DSA IR 17-3.
☑	**b.** Inspect single-pass fillet welds ≤ 5/16", floor and roof deck welds.	Periodic	SI	**1705A.2.2, Table 1705A.2.1 Items 5a.5 & 5a.6;** AISC 360-16 (and AISC 341-16 as applicable); DSA IR 17-3.
	S/A9. ANCHOR BOLTS AND ANCHOR RODS:			
☑	**a.** Anchor Bolts and Anchor Rods	Test	LOR	Sample and test anchor bolts and anchor rods not readily identifiable per procedures noted in DSA IR 17-11.

Name of Architect or Engineer in general responsible charge:

Name of Structural Engineer (When structural design has been delegated):

Signature of Architect or Structural Engineer: Date:

Note: To facilitate DSA electronic mark-ups and identification stamp application, DSA recommends against using secured electronic or digital signatures.

DSA STAMP

DSA 103-22: LIST OF REQUIRED VERIFIED REPORTS, CBC 2022

1. Soils Testing and Inspection: Geotechnical Verified Report Form DSA 293
2. Structural Testing and Inspection: Laboratory Verified Report Form DSA 291
3. Shop Welding Inspection: Laboratory Verified Report Form DSA 291, or, for independently contracting SI, Special Inspection Verified Report Form DSA 292
4. High-Strength Bolt Installation Inspection: Laboratory Verified Report Form DSA 291, or, for independently contracting SI, Special Inspection Verified Report Form DSA 292

STATE APPROVALS-SITE

IDENTIFICATION STAMP
DIV. OF THE STATE ARCHITECT
APP: 02-121837 INC:
REVIEWED FOR
SS ☑ FLS ☑ ACS ☑
DATE: 10/19/2023

4080 PLAZA GOLDORADO CIRCLE
SUITE B,
CAMERON PARK, CA 95682
530.677.5515

GHD

poligon
PORTER

REGISTERED PROFESSIONAL ENGINEER
JESSICA E. NAPIER
No. S5476
STRUCTURAL
STATE OF CALIFORNIA

STATE APPROVALS-PC

IDENTIFICATION STAMP
DIV. OF THE STATE ARCHITECT
APP: 02-121213 PC
REVIEWED FOR
SS ☑ FLS ☑ ACS ☑ CG ☐
DATE: 7/18/2023

PRE-CHECK (PC) DOCUMENT
CODE: 2022 CBC
A SEPARATE PROJECT APPLICATION FOR CONSTRUCTION IS REQUIRED.

NOTES AND SPECIAL INSPECTIONS

HIP ROOF - RAM

RAM1.1

FOUNDATION PLAN NOTES:

1. TOP OF ALL FOUNDATIONS MUST BE CONSTRUCTED AT ONE COMMON ELEVATION (COORDINATE WITH SITE PLANS - NOT BY POLIGON)
2. ALL FOUNDATIONS MUST BE CENTERED UNDER COLUMNS (UNO).
3. SEE SHEET RAM1.1 FOR CONCRETE REQUIREMENTS.
4. PRIOR TO FORMING AND CASTING FOUNDATIONS, REVIEW FOUNDATION PLAN FOR REQUIRED ORIENTATION.
5. FOUNDATION MATERIAL AND INSTALLATION NOT BY POLIGON.
6. VIBRATE CONCRETE FULL DEPTH OF FOUNDATION.
7. FOR DRILLED PIER FOUNDATIONS, PREVENT SOIL FROM ENTERING EXCAVATED HOLE (FORM, ETC).

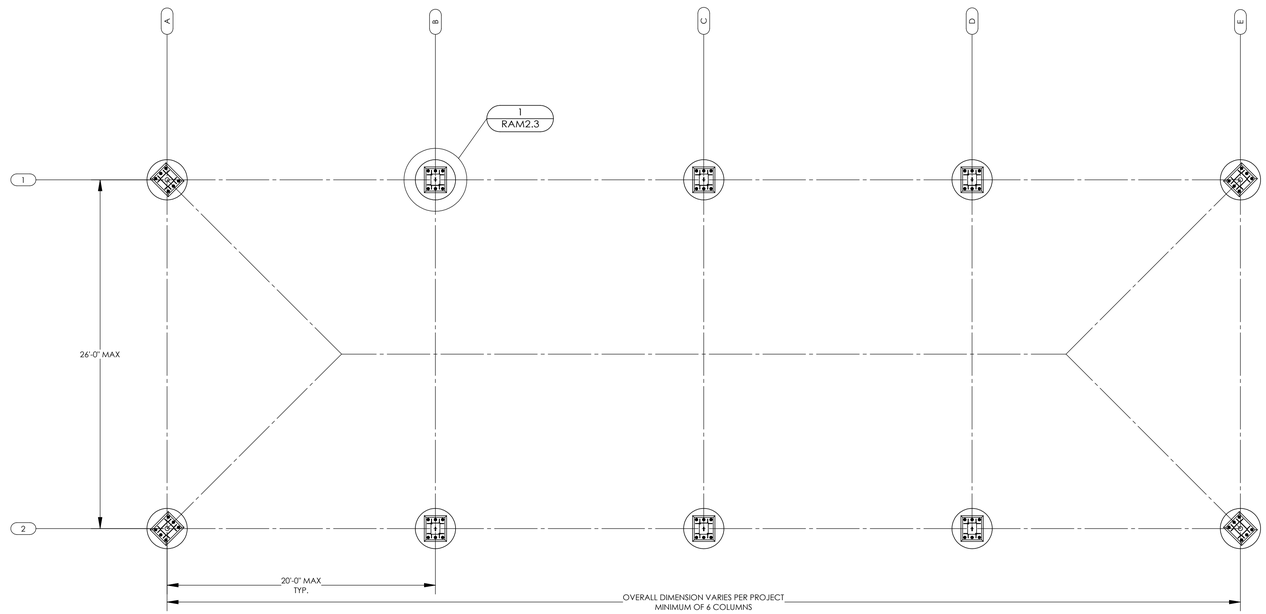

FOUNDATION PLAN (DRILLED PIER)

SCALE: 3/16" = 1'-0"

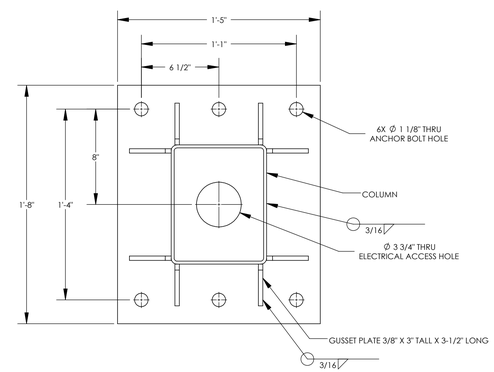

DETAIL 3

SCALE: 1-1/2" = 1'-0"

COLUMN BASEPLATE

3

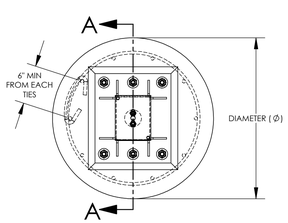

DETAIL 1

SCALE: 3/4" = 1'-0"

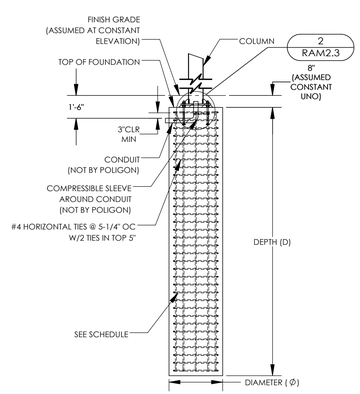

SECTION A-A

SCALE: 1/4" = 1'-0"

FOUNDATION REQUIREMENTS VARY PER PROJECT

SEE SHEET RAM1.0 FOR REQUIRED LOAD SCENARIO AND FOUNDATION TYPE (STEP 9 OF 'INSTRUCTIONS')

ONLY REFERENCE COPY OF PC DRAWINGS SUBMITTED FOR THIS PROJECT

DRILLED PIER

SIZE AND REINFORCING REQUIREMENTS

LOAD SCENARIO	DIAMETER (Ø)	DEPTH (D)	VERTICAL REINFORCING[1]	
			QTY	SIZE
1	3'-0"	13'-0"	10	#7
~~2~~	~~3'-0"~~	~~15'-0"~~	~~10~~	~~#7~~

[1] EQUALLY SPACED AROUND DRILLED PIER

DRILLED PIER FOUNDATION

1

NOTES:

1. GROUT SHALL BE NON-METALLIC, NON-SHRINK GROUT WITH MINIMUM F'c=6500 PSI.
2. COLUMNS FABICATED ASSUMING 1-1/2" GROUT PAD.
3. COLUMN BASES BELOW FINISH GRADE SHOULD BE PROTECTED FROM CORROSION, SELECT ONE OF THE FOLLOWING OPTIONS BELOW.

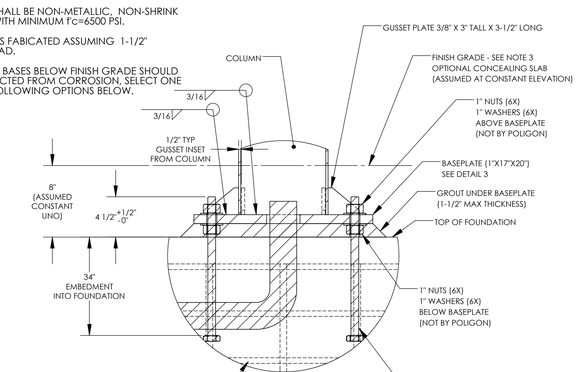

COLUMN BASE PROTECTION

BELOW SURFACE COLUMN INSTALLATION

[ ] CONCRETE SLAB - 3" MIN ANCHOR BOLT COVER

[ ] MASTIC COATING - 1/4" THICK MIN COATING ON ALL STEEL SURFACES BELOW GRADE

DETAIL 2

SCALE: 1-1/2" = 1'-0"

COLUMN BASEPLATE AND ANCHOR BOLTS

2

STATE APPROVALS-SITE

IDENTIFICATION STAMP
DIV. OF THE STATE ARCHITECT
APP: 02-121837 INC:
REVIEWED FOR
SS ☑ FLS ☑ ACS ☑
DATE: 10/19/2023

4600 PLAZA GOLDORADO CIRCLE
SUITE B
CAMERON PARK, CA 95682
530.677.5516

STATE APPROVALS-PC

IDENTIFICATION STAMP
DIV. OF THE STATE ARCHITECT
APP: 02-121213 PC
REVIEWED FOR
SS ☑ FLS ☑ ACS ☑ CG ☐
DATE: 7/18/2023

REGISTERED PROFESSIONAL ENGINEER
JESSICA E. NAPIER
No. S5476
STRUCTURAL
STATE OF CALIFORNIA

PRE-CHECK (PC) DOCUMENT
CODE: 2022 CBC
A SEPARATE PROJECT APPLICATION FOR CONSTRUCTION IS REQUIRED.

FOUNDATION PLAN DRILLED PIER

HIP ROOF - RAM 30

RAM2.3

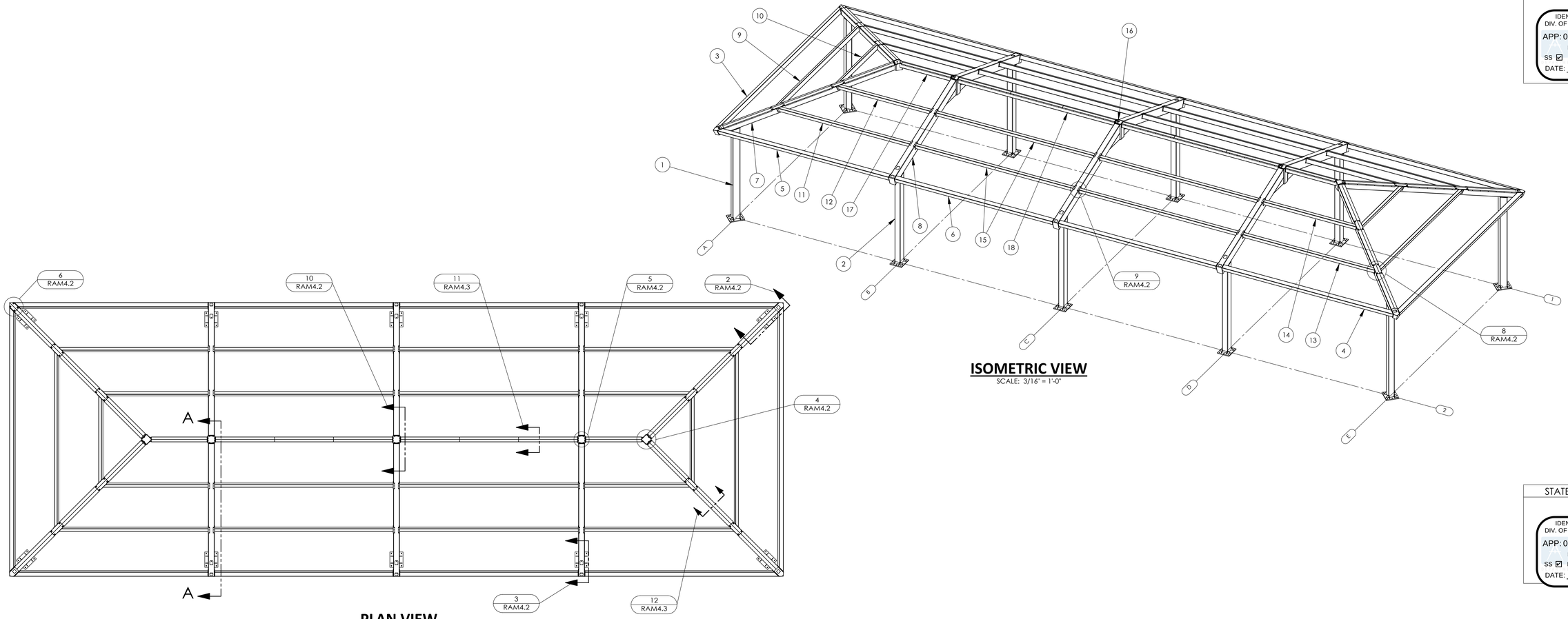

ISOMETRIC VIEW
SCALE: 3/16" = 1'-0"

PLAN VIEW
SCALE: 3/16" = 1'-0"

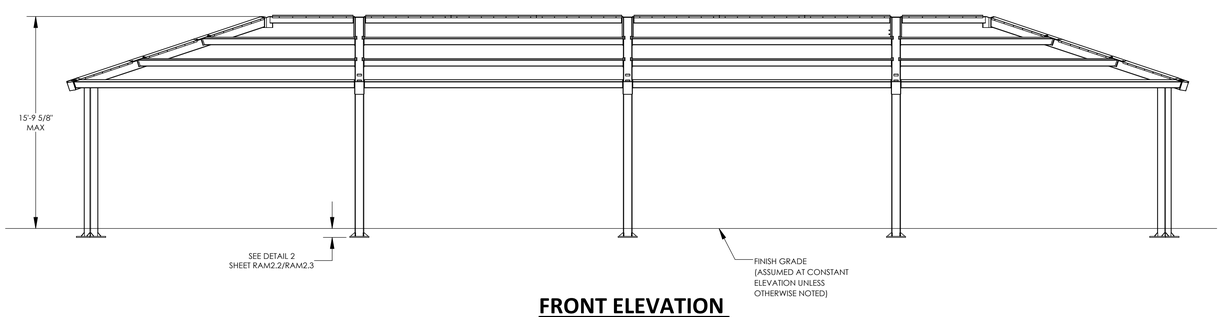

FRONT ELEVATION
SCALE: 3/16" = 1'-0"

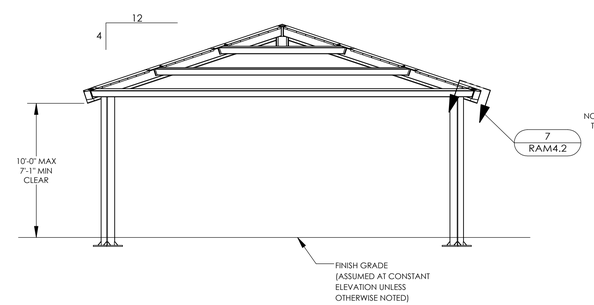

SIDE ELEVATION
SCALE: 3/16" = 1'-0"

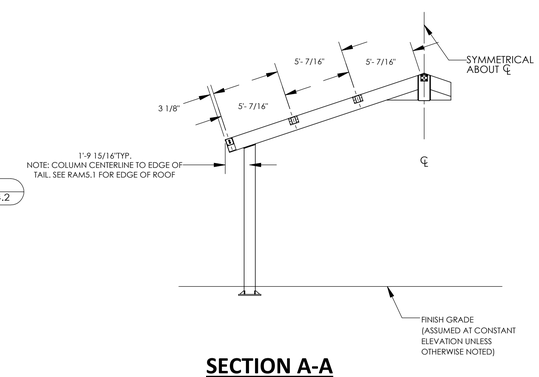

SECTION A-A
SCALE: 3/16" = 1'-0"

ITEM	QTY.	PART NO.	DESCRIPTION	MATERIAL	WEIGHT
18	2	-	R-BEAM ASM	HSS6X6X3/16	287.26
17	2	-	END R-BEAM ASM	HSS6X6X3/16	154.14
16	6	-	C-TUBE ASM	HSS10X10X5/8	143.92
15	8	-	SIDE PURLIN ASM	HSS6X4x3/16	234.29
14	2	-	CORNER PURLIN ASM	HSS6X4x3/16	136.79
13	2	-	CORNER PURLIN ASM	HSS6X4x3/16	193.62
12	2	-	CORNER PURLIN ASM	HSS6X4x3/16	136.94
11	2	-	CORNER PURLIN ASM	HSS6X4x3/16	193.78
10	2	-	END PURLIN ASM	HSS6X4x3/16	110.56
9	2	-	END PURLIN ASM	HSS6X4x3/16	224.23
8	6	-	GABLE BEAM ASM	HSS12X8X1/4	559.76
7	4	-	HIP BEAM ASM	HSS8X8X3/16	431.12
6	4	-	SIDE EAVE BEAM ASM	HSS6X6X3/16	284.96
5	2	-	CORNER EAVE BEAM ASM	HSS6X6X3/16	306.07
4	2	-	CORNER EAVE BEAM ASM	HSS6X6X3/16	306.00
3	2	-	END EAVE BEAM ASM	HSS6X6X3/16	413.48
2	6	-	SIDE COLUMN ASM	HSS10X8X1/4	425.36
1	4	-	CORNER COLUMN ASM	HSS10X8X1/4	433.63

STATE APPROVALS-SITE

IDENTIFICATION STAMP
DIV. OF THE STATE ARCHITECT
APP: 02-121837 INC:
REVIEWED FOR
SS ☑ FLS ☑ ACS ☑
DATE: 10/19/2023

4080 PLAZA GOLDORADO CIRCLE
SUITE B
CAMERON PARK, CA 95682
530.677.5016

poligon PORTER

REGISTERED PROFESSIONAL ENGINEER
JESSICA E. NAPIER
No. S5476
STRUCTURAL
STATE OF CALIFORNIA

STATE APPROVALS-PC

IDENTIFICATION STAMP
DIV. OF THE STATE ARCHITECT
APP: 02-121213 PC
REVIEWED FOR
SS ☑ FLS ☑ ACS ☑ CG ☐
DATE: 7/18/2023

PRE-CHECK (PC) DOCUMENT
CODE: 2022 CBC
A SEPARATE PROJECT APPLICATION FOR CONSTRUCTION IS REQUIRED.

FRAMING PLAN

HIP ROOF - RAM 30

RAM3.1

ALL HIDDEN NUTS AND BOLTS (INSTALLED IN SHOP DURING FABRICATION) ARE SECURED WITH THIS NUT AND BOLT RESTAINING SYSTEM.

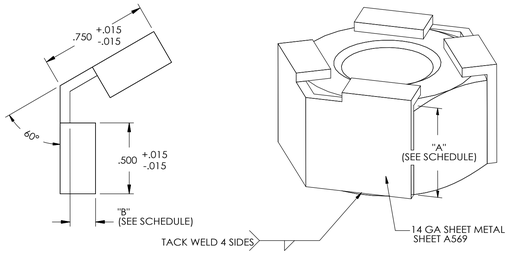

DIMENSION SCHEDULE				
FASTENER	DIM A		DIM B	
5/8" NUT	.631	+.000 -.015	.180	+.015 -.015
5/8" BOLT	.403	+.000 -.015	.250	+.015 -.015
3/4" NUT	.758	+.000 -.015	.180	+.015 -.015
3/4" BOLT	.483	+.000 -.015	.375	+.015 -.015
1" NUT	1.012	+.000 -.015	.180	+.015 -.015
1" BOLT	.643	+.000 -.015	.375	+.015 -.015

NUT & BOLT RESTRAINING SYSTEM 1

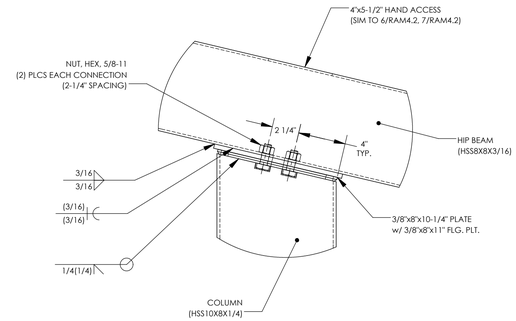

HIP BEAM CONNECTION @ COLUMN 2

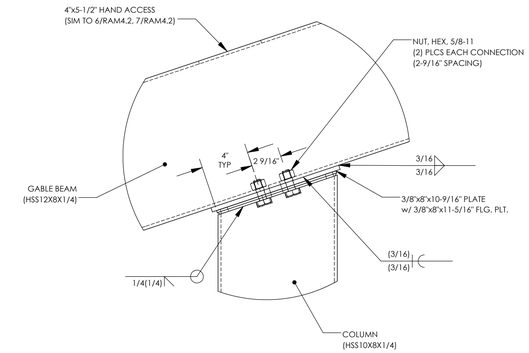

GABLE BEAM CONNECTION @ COLUMN 3

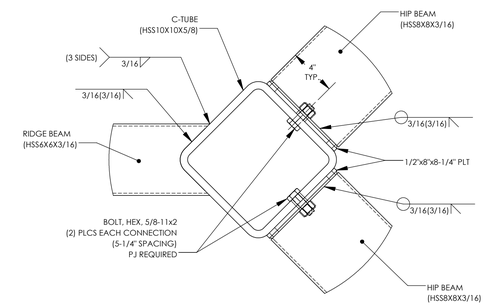

HIP BEAM CONNECTION @ COMPRESSION TUBE 4

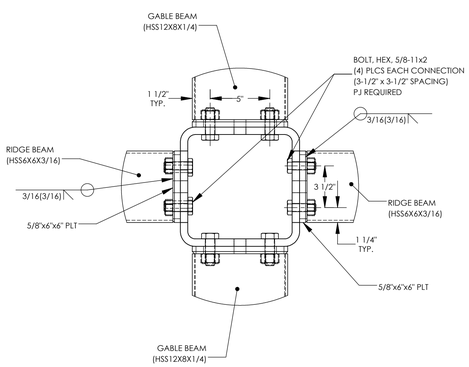

RIDGE BEAM CONNECTION @ COMPRESSION TUBE 5

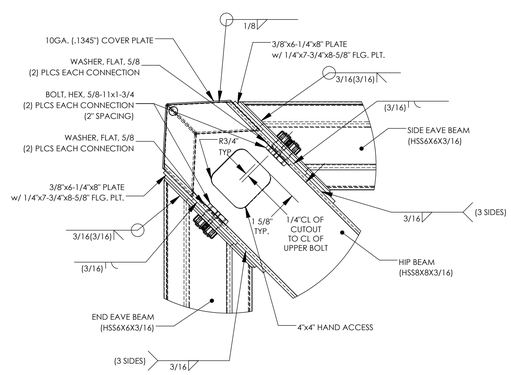

EAVE BEAM CONNECTION @ HIP BEAM 6

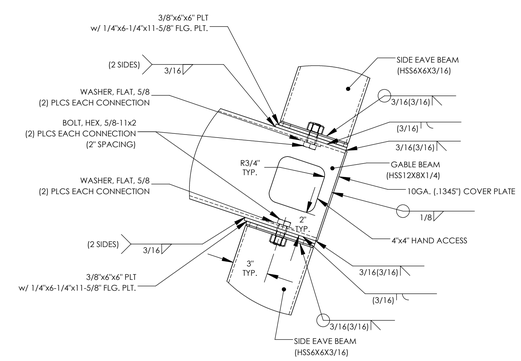

EAVE BEAM CONNECTION @ GABLE BEAM 7

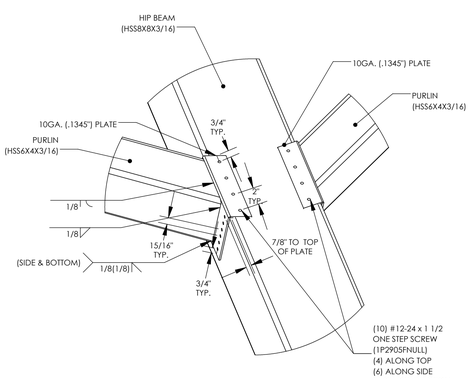

PURLIN CONNECTION @ HIP BEAM 8

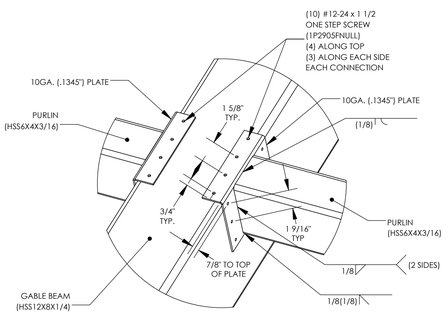

PURLIN CONNECTION @ GABLE BEAM 9

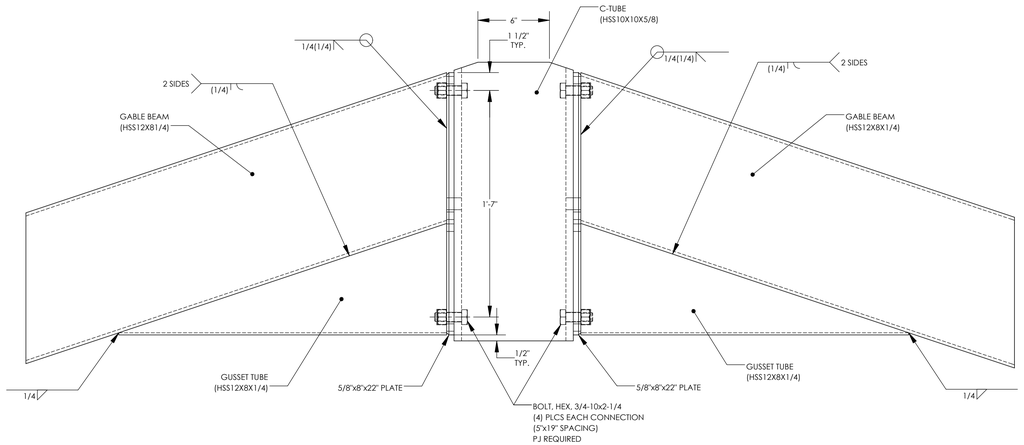

GABLE BEAM CONNECTION @ COMPRESSION TUBE 10

STATE APPROVALS-SITE

IDENTIFICATION STAMP
DIV. OF THE STATE ARCHITECT
APP: 02-121837 INC:
REVIEWED FOR
SS ☑ FLS ☑ ACS ☑
DATE: 10/19/2023

4000 PLAZA GOLDSCRADDC 12PCLE
SUITE B
CAMERON PK, CA 95682
530.677.1016
GHD
poligon
PORTER

REGISTERED PROFESSIONAL ENGINEER JESSICA E. NAPPER No. S5476 STRUCTURAL STATE OF CALIFORNIA

STATE APPROVALS-PC

IDENTIFICATION STAMP
DIV. OF THE STATE ARCHITECT
APP: 02-121213 PC
REVIEWED FOR
SS ☑ FLS ☑ ACS ☑ CG ☐
DATE: 7/18/2023

PRE-CHECK (PC) DOCUMENT
CODE: 2022 CBC
A SEPARATE PROJECT APPLICATION FOR CONSTRUCTION IS REQUIRED.

FRAME CONNECTION DETAILS

HIP ROOF - RAM 30

RAM4.2

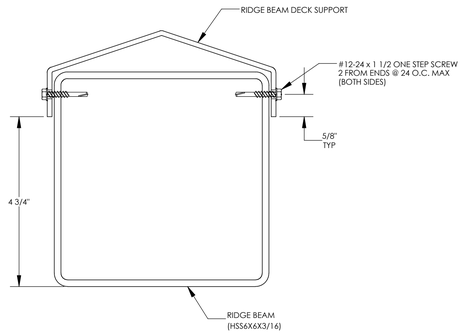

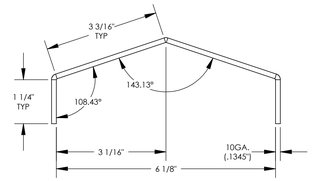

RAM 30 - RIDGE
Fy = 36 KSI
A = 1.231 IN^2
Ix = 1.149 IN^4
Iy = 6.272 IN^4
Sx = 0.771 IN^3
Sy = 1.962 IN^3

RIDGE BEAM DECK SUPPORT DETAIL

11

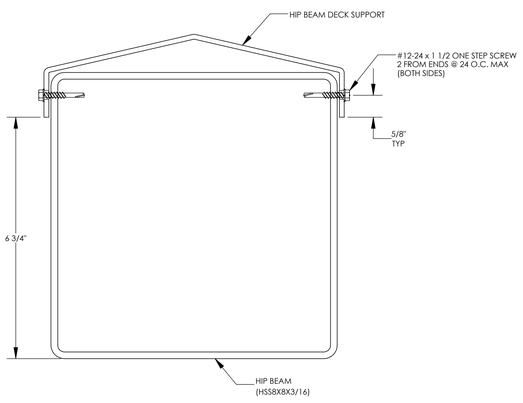

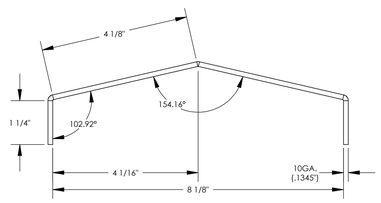

RAM 30 - HIP
Fy = 36 KSI
A = 1.484 IN^2
Ix = 1.341 IN^4
Iy = 12.353 IN^4
Sx = 0.886 IN^3
Sy = 2.943 IN^3

HIP BEAM DECK SUPPORT DETAIL

12

STATE APPROVALS-SITE

IDENTIFICATION STAMP
DIV. OF THE STATE ARCHITECT
APP: 02-121837 INC:
REVIEWED FOR
SS ☑ FLS ☑ ACS ☑
DATE: 10/19/2023

4600 PLAZA GOLDORADO CIRCLE
SUITE B
CAMERON PARK, CA 95682
530.677.0516

STATE APPROVALS-PC

IDENTIFICATION STAMP
DIV. OF THE STATE ARCHITECT
APP: 02-121213 PC
REVIEWED FOR
SS ☑ FLS ☑ ACS ☑ CG ☐
DATE: 7/18/2023

PRE-CHECK (PC) DOCUMENT
CODE: 2022 CBC
A SEPARATE PROJECT APPLICATION FOR CONSTRUCTION IS REQUIRED.

SECTION DETAILS

HIP ROOF - RAM 30

RAM4.3

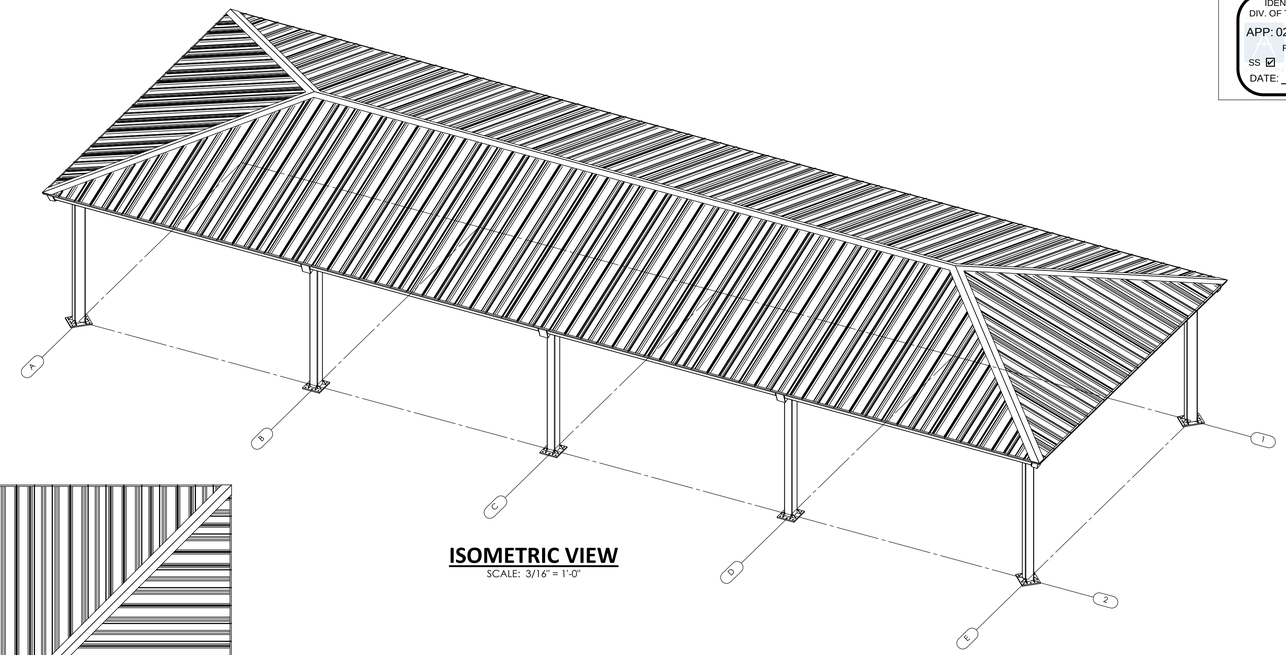

ISOMETRIC VIEW

SCALE: 3/16" = 1'-0"

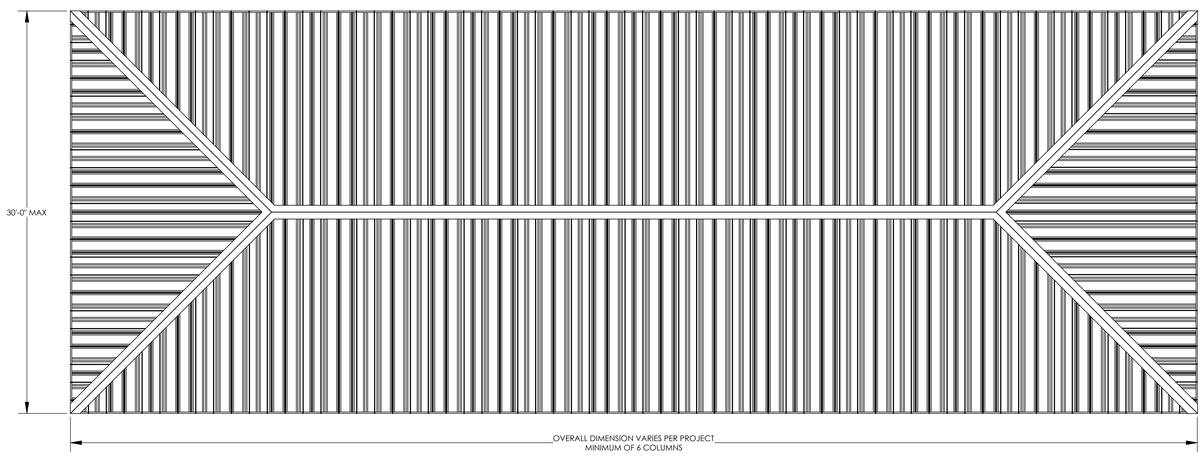

PLAN VIEW

SCALE: 3/16" = 1'-0"

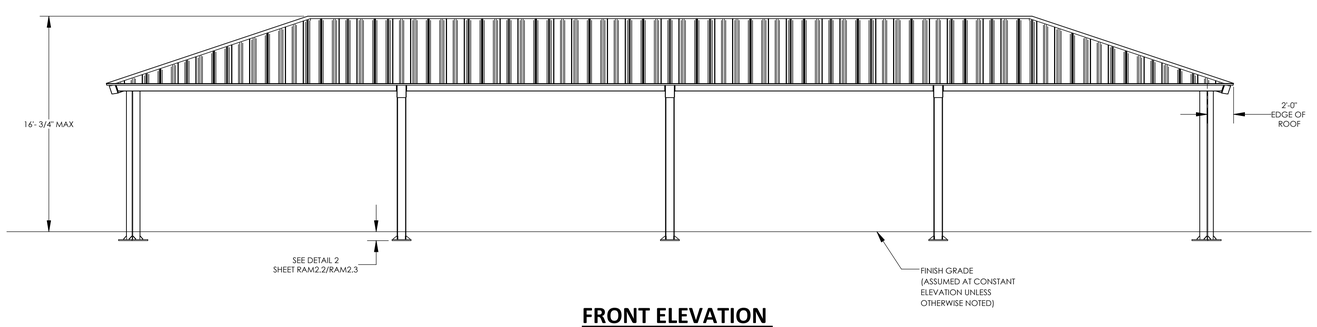

FRONT ELEVATION

SCALE: 3/16" = 1'-0"

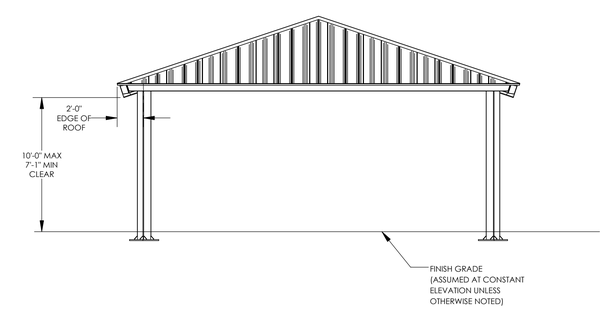

SIDE ELEVATION

SCALE: 3/16" = 1'-0"

STATE APPROVALS-SITE

IDENTIFICATION STAMP
DIV. OF THE STATE ARCHITECT
APP: 02-121837 INC:
REVIEWED FOR
SS ☑ FLS ☑ ACS ☑
DATE: 10/19/2023

GHD
4080 PLAZA GOLDORADO CIRCLE
SUITE B
CAMERON PARK, CA 95682
530.677.0516

poligon
PORTER

REGISTERED PROFESSIONAL ENGINEER
JESSICA E. NAPIER
No. S5476
STRUCTURAL
STATE OF CALIFORNIA

STATE APPROVALS-PC

IDENTIFICATION STAMP
DIV. OF THE STATE ARCHITECT
APP: 02-121213 PC
REVIEWED FOR
SS ☑ FLS ☑ ACS ☑ CG ☐
DATE: 7/18/2023

PRE-CHECK (PC) DOCUMENT
CODE: 2022 CBC
A SEPARATE PROJECT APPLICATION FOR CONSTRUCTION IS REQUIRED.

ARCHITECTURAL VIEWS

HIP ROOF - RAM 30

RAM5.1

STANDING SEAM INSTALLATION NOTES:

THE DETAILS SHOWN ARE SUGGESTIONS OR GUIDELINES ON HOW TO ERECT THE SYSTEMS. THE INFORMATION SHOWN IS ACCURATE, BUT IT IS NOT INTENDED TO COVER ALL INSTANCES, BUILDING REQUIREMENTS, DESIGNS OR CODES. THE DETAILS MAY REQUIRE CHANGES OR REVISIONS DUE TO FIELD CONDITIONS.

IT SHALL BE THE RESPONSIBILITY OF THE ERECTOR TO ENSURE THAT THE DETAILS MEET PARTICULAR BUILDING REQUIREMENTS AND TO ASSURE ADEQUATE WATER TIGHTNESS.

THE ERECTOR SHOULD THOROUGHLY FAMILIARIZE HIMSELF/HERSELF WITH ALL ERECTION INSTRUCTIONS BEFORE STARTING WORK.

THE PANELS SHOULD BE INSTALLED PLUMB, STRAIGHT, AND ACCURATELY TO THE ADJACENT WORK.

FLASHING AND TRIM SHALL BE INSTALLED TRUE, AND IN PROPER ALIGNMENT, WITH ANY EXPOSED FASTENERS EQUALLY SPACED FOR THE BEST APPEARANCE.

SEALANT SHALL BE FIELD APPLIED ON DRY, CLEAN SURFACES. SOME FIELD CUTTING AND FITTING OF PANELS AND FLASHING IS TO BE EXPECTED BY THE ERECTOR AND MINOR FIELD CORRECTIONS ARE A PART OF NORMAL ERECTION WORK.

WORKMANSHIP SHALL BE OF THE BEST INDUSTRY STANDARDS AND INSTALLATION SHALL BE PERFORMED BY EXPERIENCED METAL CRAFTSMEN.

METAL SHAVINGS FROM DRILLING OR INSTALLATION OF ROOF FASTENERS MUST BE CAREFULLY REMOVED FROM THE ROOF BY BRUSHING OR SWEEPING AT THE END OF EACH DAY DURING INSTALLATION. SHAVINGS LEFT ON THE ROOF WILL QUICKLY RUST AND STAIN THE ROOF FINISH.

COVER ACCESS HOLES WITH GRACE ICE AND WATER SHIELD BEFORE ATTACHING ROOF DECKING

METAL ROOFING PRODUCT AND INSTALLATION SHALL MEET ALL REQUIREMENTS OF ICC-ES REPORT ESL-1082.

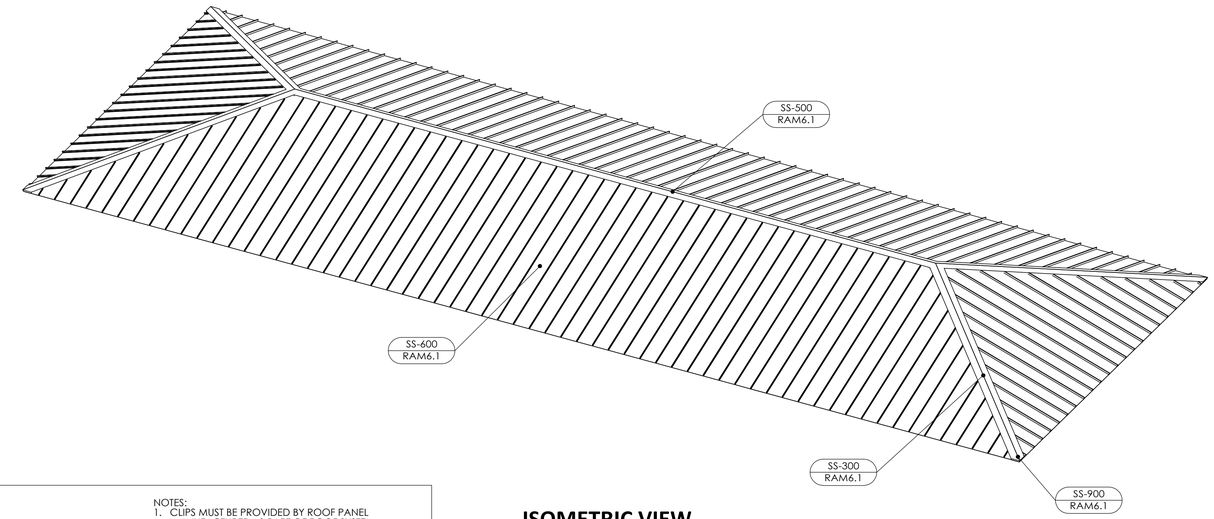

ISOMETRIC VIEW

SCALE: 3/16" = 1'-0"

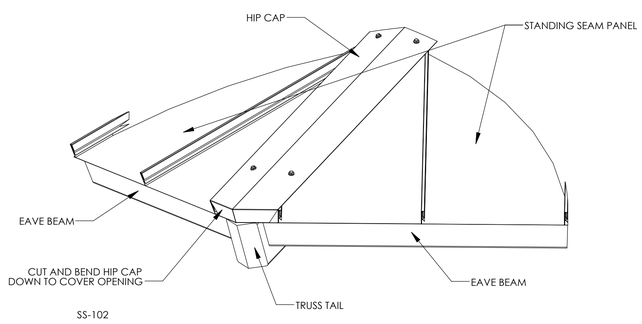

CORNER DETAIL — SS-900

NOTES:
1. CLIPS MUST BE PROVIDED BY ROOF PANEL MANUFACTURER AS PART OF ROOF SYSTEM,
2. MATERIAL THICKNESS MUST BE 18 GAGE (0.048"-0.053")

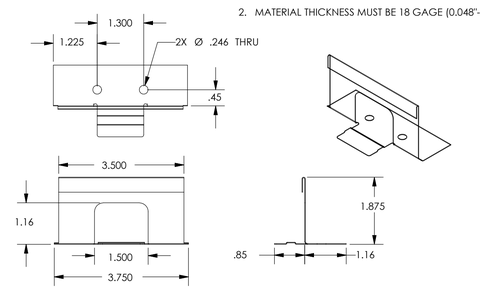

CLIP DETAIL — SS-CLP

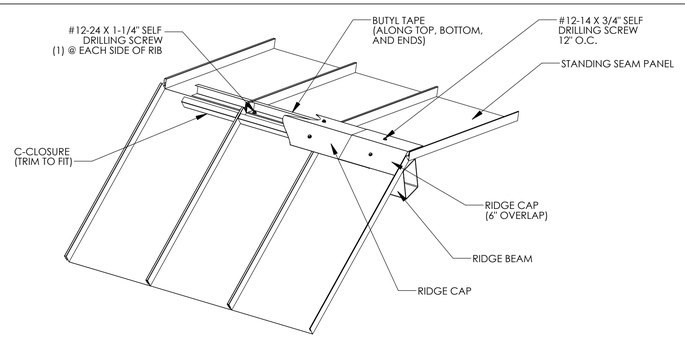

RIDGE DETAIL — SS-500

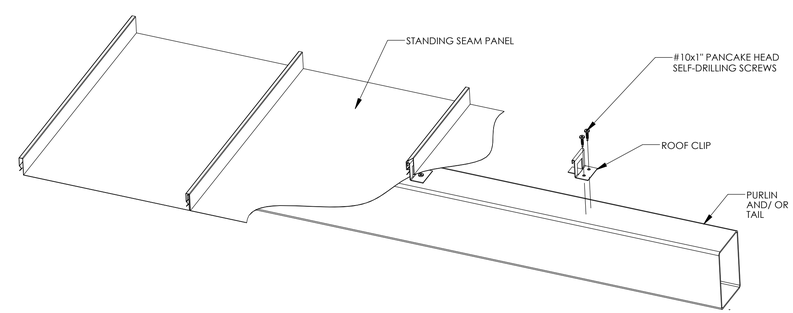

PURLIN DETAIL — SS-600

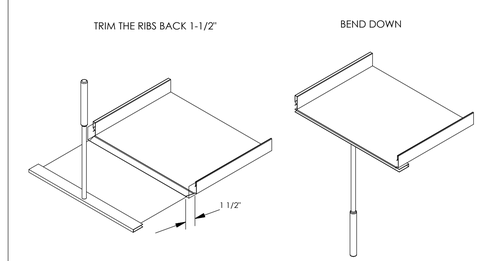

HEMMING DETAIL — SS-HEM

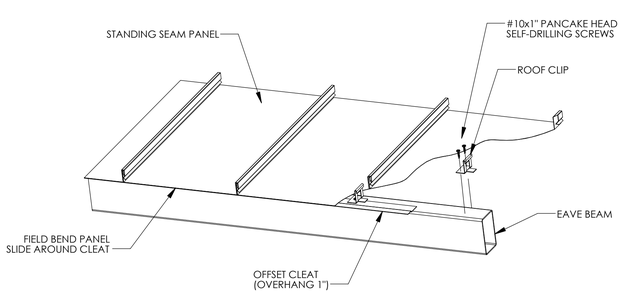

EAVE DETAIL — SS-200

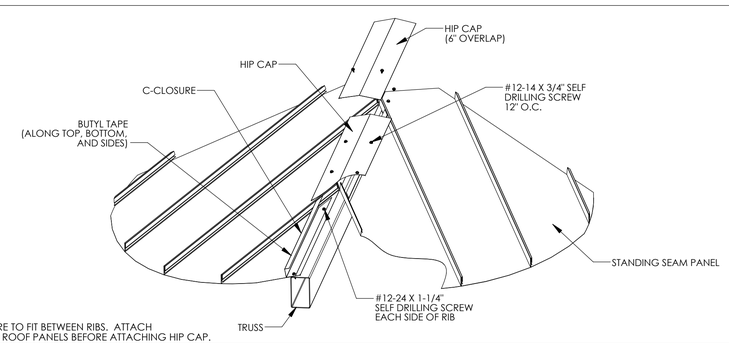

NOTE:
TRIM C-CLOSURE TO FIT BETWEEN RIBS. ATTACH C-CLOSURE TO ROOF PANELS BEFORE ATTACHING HIP CAP.

TRUSS DETAIL — SS-300

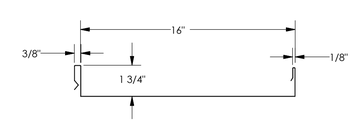

GENERAL
GAGE = 22
FY = 50 KSI

TOP IN COMPRESSION
Ix = 0.1200 IN^4
Se = 0.0803 IN^3
Ma = 2.4056 IN-KIPS

BOTTOM IN COMPRESSION
Ix = 0.0570 IN^4
Se = 0.0729 IN^3
Ma = 1.7220 IN-KIPS

ROOF DECK SECTION PROPERTIES — SS-950

STATE APPROVALS-SITE

IDENTIFICATION STAMP
DIV. OF THE STATE ARCHITECT
APP: 02-121837 INC:
REVIEWED FOR
SS ☑ FLS ☑ ACS ☑
DATE: 10/19/2023

4600 PLAZA GOLDCREEK DR, CIRCLE SUITE B
CHANHASSEN, MN, 55368
530.677.1516

STATE APPROVALS-PC

IDENTIFICATION STAMP
DIV. OF THE STATE ARCHITECT
APP: 02-121213 PC
REVIEWED FOR
SS ☑ FLS ☑ ACS ☑ CG ☐
DATE: 7/18/2023

REGISTERED PROFESSIONAL ENGINEER
JESSICA E. NAPIER
No. S5476
STRUCTURAL
STATE OF CALIFORNIA

PRE-CHECK (PC) DOCUMENT
CODE: 2022 CBC
A SEPARATE PROJECT APPLICATION FOR CONSTRUCTION IS REQUIRED.

ROOF CONNECTION DETAILS

HIP ROOF - RAM

RAM6.1

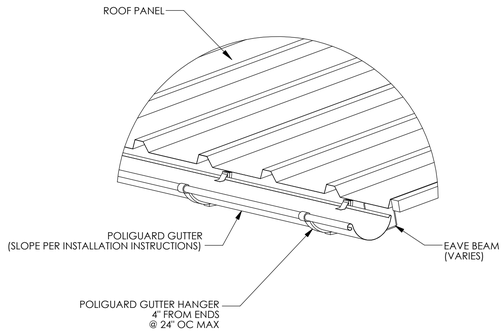

GUTTER DETAIL

GS-100

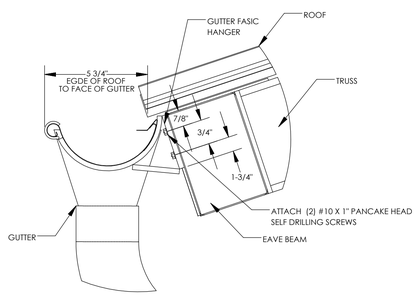

GUTTER DETAIL

GS-200

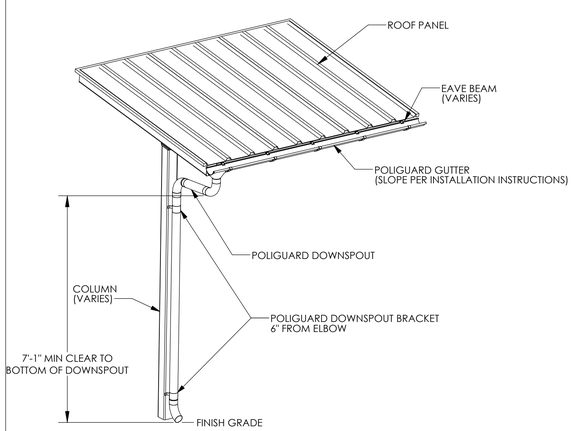

DOWNSPOUT DETAIL

GS-300

POLIGUARD GUTTER SYSTEM NOTES:

1. PREFABRICATED GUTTER SYSTEM IS ATTACHED TO THE STRUCTURE AFTER ROOF IS INSTALLED.
2. DETAILED INSTALLATION INSTRUCTIONS ARE SHIPPED WITH THE STRUCTURE.
3. ~~DOWNSPOUTS REQUIRED AT EACH COLUMN.~~

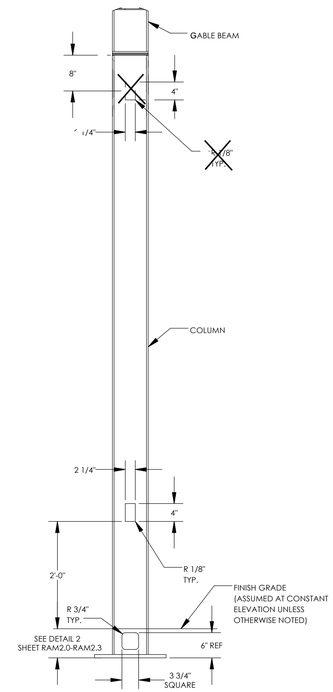

ELECTRICAL CUTOUT IN COLUMNS

EC-100

ELECTRICAL CUTOUT NOTES:

1. MAXIMUM ONE CUTOUT PERMITTED IN EACH MEMBER.
2. CUTOUTS CAN BE PLACED ON ANY SIDE OF A MEMBER.
3. CUTOUTS CAN BE PLACED ALONG MEMBERS AS INDICATED IN THE DETAILS.
4. ARCHITECTS REQUESTING CUTOUTS MUST MARKUP APPROVED PC DRAWINGS TO LOCATE CUTOUTS FOR APPROVAL AND FABRICATION.

STATE APPROVALS-SITE

IDENTIFICATION STAMP
DIV. OF THE STATE ARCHITECT
APP: 02-121837 INC:
REVIEWED FOR
SS ☑ FLS ☑ ACS ☑
DATE: 10/19/2023

4080 PLAZA GOLDORADO CIRCLE
SUITE B
CAMERON PARK, CA 95682
530.677.5515

poligon PORTER

REGISTERED PROFESSIONAL ENGINEER
JESSICA E. NAPIER
No. S5476
STRUCTURAL
STATE OF CALIFORNIA

STATE APPROVALS-PC

IDENTIFICATION STAMP
DIV. OF THE STATE ARCHITECT
APP: 02-121213 PC
REVIEWED FOR
SS ☑ FLS ☑ ACS ☑ CG ☐
DATE: 7/18/2023

PRE-CHECK (PC) DOCUMENT
CODE: 2022 CBC
A SEPARATE PROJECT APPLICATION FOR CONSTRUCTION IS REQUIRED.

MISC DESIGN OPTIONS

HIP ROOF - RAM

RAM7.0

ELECTRICAL CUTOUT AND ACCESS INSTRUCTIONS

- IF 'YES' IS NOT SELECTED IN STEP 2 ON ORDER FORM, THEN THIS SHEET NEED NOT BE INCLUDED IN SITE-SPECIFIC DRAWINGS
- ONLY COLUMNS ARE PERMITTED TO HAVE ELECTRICAL ACCESS
- THE COLUMN CUTOUTS ARE STATIC AND SHOWN IN THE 'MISC DESIGN OPTIONS SHEET'
- IDENTIFY THE COLUMNS WITH ELECTRICAL CUTOUTS BELOW (REFERENCE GRID LINES IN ISOMETRIC FRAME VIEW TO THE RIGHT)
- STRUCTURES MAY BE LONGER OR SHORTER THAN THE ISOMETRIC FRAME VIEW SHOWN
- IF SITE-SPECIFIC STRUCTURE HAS A DIFFERENT NUMBER OF COLUMNS THAN ISOMETRIC SHOWN, REFERENCE COLUMN A1 IN THE ISOMETRIC VIEW AND CONTINUE PATTERN TO FIT SITE-SPECIFIC LAYOUT
- IF NO COLUMNS ARE IDENTIFIED, POLIGON WILL ASSUME CUTOUTS ONLY IN COLUMN A1
- CONTACT POLIGON ENGINEERING FOR SPECIAL PROJECT SPECIFIC REQUIREMENTS

ELECTRICAL CUTOUT IDENTIFICATION IN COLUMNS

SPECIFIC MEMBERS A1, E2

~~**EXAMPLE:**~~

~~**ELECTRICAL CUTOUT IDENTIFICATION IN COLUMNS**~~

~~SPECIFIC MEMBERS: A1 , B1, F1~~

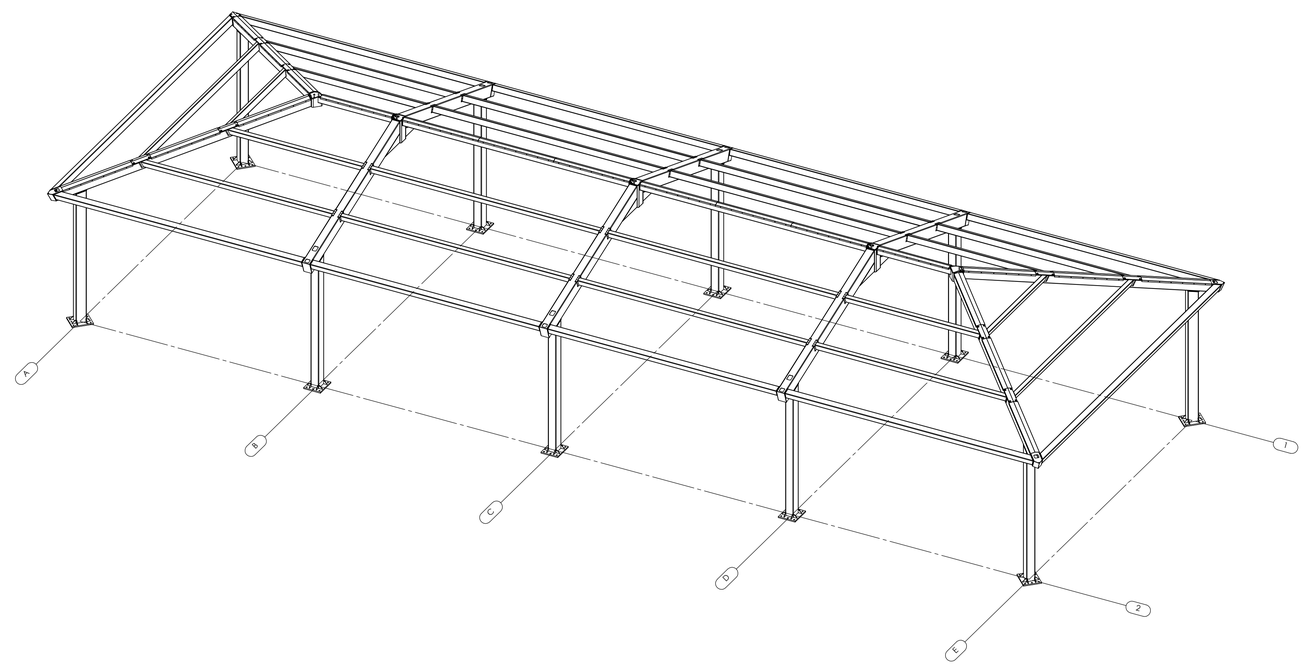

STATE APPROVALS-SITE

IDENTIFICATION STAMP
DIV. OF THE STATE ARCHITECT
APP: 02-121837 INC:
REVIEWED FOR
SS ☑ FLS ☑ ACS ☑
DATE: 10/19/2023

4600 PLAZA GOLDCREEK DR, SUITE B
CHANHASSEN, MN, 55318
952.277.1016

poligon

PORTER

REGISTERED PROFESSIONAL ENGINEER
JESSICA E. NAPIER
No. S5476
STRUCTURAL
STATE OF CALIFORNIA

STATE APPROVALS-PC

IDENTIFICATION STAMP
DIV. OF THE STATE ARCHITECT
APP: 02-121213 PC
REVIEWED FOR
SS ☑ FLS ☑ ACS ☑ CG ☐
DATE: 7/18/2023

PRE-CHECK (PC) DOCUMENT
CODE: 2022 CBC
A SEPARATE PROJECT APPLICATION FOR CONSTRUCTION IS REQUIRED.

ELECTRICAL CUTOUTS

HIP ROOF - RAM

RAM7.1

LODI UNIFIED SCHOOL DISTRICT

LODI UNIFIED SCHOOL DISTRICT LUNCH SHELTERS - SUTHERLAND ELEMENTARY SCHOOL

550 SPRING RIVER CIRCLE
STOCKTON, CA 95210

THE LINE SHOWN ABOVE IS EXACTLY ONE INCH LONG AT THIS SHEETS ORIGINAL PAGE SIZE

GENERAL NOTES

1. CONSTRUCTION DOCUMENTS DESCRIBE THE PRODUCTS, SYSTEMS, QUANTITIES, CONFIGURATION, AND PERFORMANCE SPECIFICATIONS THAT DELIVER THE OVERALL DESIGN INTENT OF THE PROJECT.
2. THE CONSTRUCTION DOCUMENT DRAWINGS AND SPECIFICATIONS ARE COMPLEMENTARY, AND WHAT IS REQUIRED BY ONE SHALL BE AS BINDING AS IF REQUIRED BY BOTH.
3. PERFORMANCE BY THE CONSTRUCTION TEAM SHALL BE CONSISTENT WITH THE CONSTRUCTION DRAWINGS AND SPECIFICATIONS AS NECESSARY TO DELIVER THE INDICATED RESULTS OF THE DESIGN INTENT.
4. VERIFY ALL DIMENSIONS, LOCATIONS OF EXISTING UTILITIES, AND CONDITIONS ON THE JOB SITE PRIOR TO THE START OF WORK OR PORTIONS OF THE WORK. NOTIFY THE ARCHITECT IMMEDIATELY OF ANY DISCREPANCIES BETWEEN THE ACTUAL FIELD CONDITIONS AND THE CONSTRUCTION DOCUMENTS. EXISTING CONDITIONS ARE INDICATED AS A RESULT OF FIELD OBSERVATIONS, INFORMATION SHOWN ON AVAILABLE DOCUMENTS AND FIELD CONDITIONS AT THE TIME OF PREPARATION.
5. ALL MATERIALS AND WORKMANSHIP SHALL COMPLY WITH ALL GOVERNING CODES, ORDINANCES, REGULATIONS AND LAWS.
6. THE DESIGN ADEQUACY AND SAFETY OF ERECTION BRACING, SHORING, TEMPORARY SUPPORTS AND SCAFFOLDING IS THE SOLE RESPONSIBILITY OF THE CONTRACTOR.
7. WHERE ANY CONFLICT OCCURS BETWEEN THE REQUIREMENTS OF LAWS, CODES, ORDINANCES, RULES AND REGULATIONS, THE MOST STRINGENT SHALL GOVERN.
8. IN NO CASE SHALL WORKING DIMENSIONS BE SCALED FROM PLANS, SECTIONS OR DETAILS ON THE DRAWINGS.
9. DETAILS MARKED 'TYPICAL' SHALL APPLY IN ALL CASES UNLESS SPECIFICALLY NOTED OTHERWISE.
10. ENACT ALL MEASURES TO PROTECT AND SAFEGUARD ALL EXISTING ELEMENTS TO REMAIN FROM BEING DAMAGED. REPLACE OR REPAIR EXISTING ELEMENTS DAMAGED BY THE EXECUTION OF THIS CONTRACT TO EQUAL OR BETTER CONDITION.
11. PRIOR TO THE START OF WORK THE CONTRACTOR SHALL COORDINATE BETWEEN THE REQUIREMENTS OF ALL DISCIPLINES HEREIN AND BETWEEN THE REQUIREMENTS OF ALL DRAWINGS AND SPECIFICATIONS IN ORDER THAT ALL ITEMS SATISFACTORILY RELATE TO ONE ANOTHER. NOTIFY ARCHITECT IMMEDIATELY REGARDING ANY ITEMS THAT CANNOT BE COORDINATED.
12. CONTRACTOR SHALL EXCERCISE EXTREME CAUTION IN EXCAVATING AND TRENCHING ON THIS SITE TO AVOID EXISTING DUCTS, PIPING, CONDUIT, ETC. AND TO PREVENT HAZARD TO PERSONNEL AND/OR TO EXISTING UNDERGROUND UTILITIES OR STRUCTURES. THE CONTRACTOR SHALL IMMEDIATELY NOTIFY THE ARCHITECT SHOULD SUCH UNIDENTIFIED CONDITIONS BE DISCOVERED. THESE DRAWINGS AND SPECIFICATIONS DO NOT INCLUDE THE NECESSARY COMPONENTS FOR CONSTRUCTION SAFETY.
13. PROVIDE SAFE MEANS OF EGRESS THROUGH THE BUILDING AND ON SITE AT ALL TIMES.
14. PROVIDE FIRE EXTINGUISHERS PER CFC AT ALL TIMES THROUGHOUT CONSTRUCTION AREA.
15. PROVIDE CONSTRUCTION BARRIERS BETWEEN CONSTRUCTION AREAS AND OCCUPIED AREAS AT ALL TIMES.
16. CUTTING, BORING, SAWCUTTING OR DRILLING THROUGH THE EXISTING OR NEW STRUCTURAL ELEMENTS SHALL NOT TO BE STARTED UNTIL THE DETAILS HAVE BEEN REVIEWED AND APPROVED BY THE ARCHITECT, AND STRUCTURAL ENGINEER OF RECORD.
17. AVOID DISRUPTION TO ADJACENT AREAS. KEEP NOISE TO A LEVEL ACCEPTABLE TO THE OWNER BY SCHEDULING EXCESSIVE NOISE TASKS WITH OWNER REPRESENTATIVE. THIS MAY REQUIRE AFTER HOURS WORK.
18. **STATEMENT OF HAZARDOUS MATERIAL DISCOVERY** IF THE CONTRACTOR ENCOUNTERS A HAZARDOUS MATERIAL OR SUBSTANCE NOT ADDRESSED IN THE HAZARDOUS MATERIAL REPORT OR IN A CONCEALED CONDITION, THE CONTRACTOR SHALL, UPON RECOGNIZING THE CONDITION, IMMEDIATELY STOP WORK IN THE AFFECTED AREA AND REPORT THE CONDITION TO THE OWNER AND ARCHITECT IN WRITING. UPON RECEIPT OF THE CONTRACTOR'S WRITTEN NOTICE, THE OWNER SHALL OBTAIN THE SERVICES OF A LICENSED LABORATORY TO VERIFY THE PRESENCE OR ABSENCE OF THE MATERIAL OR SUBSTANCE REPORTED BY THE CONTRACTOR AND, IN THE EVENT SUCH MATERIAL OR SUBSTANCE IS FOUND TO BE PRESENT, TO PROVIDE RECOMMENDATIONS TO CAUSE IT TO BE ABATED AND RENDERED HARMLESS. WHEN THE MATERIAL OR SUBSTANCE HAS BEEN ABATED AND RENDERED HARMLESS, WORK IN THE AFFECTED AREA SHALL RESUME UPON WRITTEN AGREEMENT OF THE OWNER AND CONTRACTOR.
19. PENETRATIONS TO FIRE RATED MATERIALS OR ASSEMBLIES SHALL BE RESTORED TO EQUAL RATING. SPECIAL INSPECTOR DSA 103 REQ'D.
21. COMPLY WITH TITLE 24, PART 9, CALIFORNIA FIRE CODE, CHAPTER 33 FIRE SAFETY DURING CONSTRUCTION AND DEMOLITION, DURING ALL PHASES OF PROJECT.
22. ALL WORK SHALL CONFORM TO 2022TITLE 24, CALIFORNIA CODE OF REGULATIONS (CCR).
23. CHANGES TO THE APPROVED DRAWINGS AND SPECIFICATIONS SHALL BE MADE BY AN ADDENDUM OR A CONSTRUCTION CHANGED DOCUMENT (CCD) APPROVED BY THE DIVISION OF THE STATE ARCHITECT, AS REQUIRED BY SECTION 4-338, PART 1, TITLE 24, CCR.
24. A "DSA CERTIFIED" CLASS 2 PROJECT INSPECTOR EMPLOYED BY THE DISTRICT (OWNER) AND APPROVED BY THE DSA SHALL PROVIDE CONTINUOUS INSPECTION OF THE WORK. THE DUTIES OF THE INSPECTOR ARE DEFINED IN SECTION 4-342, PART 1, TITLE 24, CCR.
25. A DSA ACCEPTED TESTING LABORATORY DIRECTLY EMPLOYED BY THE DISTRICT (OWNER) SHALL CONDUCT ALL THE REQUIRED TESTS AND INSPECTIONS FOR THE PROJECT.
26. THE INTENT OF THESE DRAWINGS AND SPECIFICATIONS IS THAT THE WORK OF THE ALTERATION, REHABILITATION OR RECONSTRUCTION IS TO BE IN ACCORDANCE WITH TITLE 24, CCR. SHOULD ANY EXISTING CONDITIONS SUCH AS DETERIORATION OR NON-COMPLYING CONSTRUCTION BE DISCOVERED WHICH IS NOT COVERED BY THE CONTRACT DOCUMENTS WHEREIN THE FINISHED WORK WILL NOT COMPLY WITH TITLE 24, CCR, A CONSTRUCTION CHANGE DOCUMENT (CCD), OR A SEPARATE SET OF PLANS AND SPECIFICATIONS, DETAILING AND SPECIFYING THE REQUIRED WORK SHALL BE SUBMITTED TO AND APPROVED BY DSA BEFORE PROCEEDING WITH THE WORK. (SECTION 4-317(c), PART 1, TITLE 24, CCR)
27. GRADING PLANS, DRAINAGE IMPROVEMENTS, ROAD AND ACCESS REQUIREMENTS AND ENVIRONMENTAL HEALTH CONSIDERATIONS SHALL COMPLY WITH ALL LOCAL ORDINANCES.
28. SUBSTITUTIONS AFFECTING DSA REGULATED ITEMS SHALL BE CONSIDERED AS A CONSTRUCTION CHANGE DOCUMENT OR ADDENDUM, AND SHALL BE APPROVED BY DSA PRIOR TO FABRICATION AND INSTALLATION PER DSA IR A-6 AND SECTION 338(c) PART 1, TITLE 24, CCR.

CODES

PARTIAL LIST OF APPLICABLE CODES

2022	CALIFORNIA ADMINISTRATIVE CODE, PART 1, TITLE 24 C.C.R.
2022	CALIFORNIA BUILDING CODE (CBC), PART 2, TITLE 24 C.C.R. (2021 INTERNATIONAL BUILDING CODE VOLUMES 1 & 2 AND 2022 CALIFORNIA AMENDMENTS)
2022	CALIFORNIA ELECTRICAL CODE (CEC), PART 3, TITLE 24 C.C.R. (2020 NATIONAL ELECTRICAL CODE AND 2022 CALIFORNIA AMENDMENTS)
2022	CALIFORNIA MECHANICAL CODE (CMC) PART 4, TITLE 24 C.C.R. (2021 UNIFORM MECHANICAL CODE AND 2022 CALIFORNIA AMENDMENTS)
2022	CALIFORNIA PLUMBING CODE (CPC), PART 5, TITLE 24 C.C.R. (2021 UNIFORM PLUMBING CODE AND 2022 CALIFORNIA AMENDMENTS)
2022	CALIFORNIA ENERGY CODE (CEC), PART 6, TITLE 24 C.C.R.
2022	CALIFORNIA HISTORICAL BUILDING CODE (CHBC), PART 8, TITLE 24 C.C.R.
2022	CALIFORNIA FIRE CODE, PART 9, TITLE 24 C.C.R. (2021 INTERNATIONAL FIRE CODE AND 2022 CALIFORNIA AMENDMENTS)
2022	CALIFORNIA EXISTING BUILDING CODE (CEBC), PART 10, TITLE 24 C.C.R. (2021 INTERNATIONAL EXISTING CODE AND 2022 CALIFORNIA AMENDMENTS)
2022	CALIFORNIA GREEN BUILDING STANDARDS CODE (CALGREEN), PART 11, TITLE 24 C.C.R.
2022	CALIFORNIA REFERENCED STANDARDS, PART 12,TITLE 24 C.C.R. TITLE 19 C.C.R., PUBLIC SAFETY, STATE FIRE MARSHAL REGULATIONS.
2019	ASME A17.1/B44-19 SAFETY CODE FOR ELEVATORS AND ESCALATORS
2020	ASME 18.1 - SAFETY STANDARD FOR PLATFORM LIFTS AND STAIRWAY CHAIR LIFTS

NOTE TO CONTRACTOR:
THE CALIFORNIA ENERGY CODE SECTION 10-103 REQUIRES ACCEPTANCE TESTING ON ALL NEWLY INSTALLED LIGHTING CONTROLS, MECHANICAL SYSTEMS, ENVELOPES, AND PROCESS EQUIPMENT AFTER INSTALLATION AND BEFORE PROJECT COMPLETION. AN ACCEPTANCE TEST IS A FUNCTIONAL PERFORMANCE TEST TO HELP ENSURE THAT NEWLY INSTALLED EQUIPMENT IS OPERATING AND IN COMPLIANCE WITH ENERGY CODE.

LIGHTING CONTROLS ACCEPTANCE TESTS MUST BE PERFORMED BY A CERTIFIED LIGHTING CONTROLS ACCEPTANCE TEST TECHNICIAN (ATT).

MECHANICAL SYSTEM ACCEPATANCE TEST MUST BE PERFORMED BY A CERTIFIED MECHANICAL ATT FOR PROJECTS SUBMITTED ON OR AFTER OCTOBER 1, 2021.

A LISTING OF CERTIFIED ATTs CAN BE FOUND AT: HTTPS://WWW.ENERGY.CA.GOV/PROGRAMS-AND-TOPICS/PROGRAMS/ACCEPTANCE-TEST-TECHNICIAN-CERTIFICATION-PROVIDER-PROGAM/ACCEPTANCE

THE ACCEPTANCE TESTING PROCEDURES MUST BE REPEATED, AND DEFICIENCIES MUST BE CORRECTED BY THE BUILDER OR INSTALLING CONTRACTOR UNITL THE CONSTUCTION/INSTALLATION OF THE SPECIFIED SYSTEMS CONFORM AND PASS THE REQUIRED ACCEPTANCE CRITERIA.

PROJECT INSPECTORS WILL BE COLLECTING THE FORMS TO CONFIRM THAT THE REQUIRED ACCEPTANCE TESTS HAVE BEEN COMPLETED.

PARTIAL LIST OF APPLICABLE STANDARDS

NFPA 13	STANDARD FOR AUTOMATIC FIRE SPRINKLER SYSTEMS (CA AMENDED)	2022 ED.
NFPA 14	STANDARD FOR STANDPIPE AND HOSE SYSTEMS (CA AMENDED)	2019 ED.
NFPA 17	STANDARD FOR DRY CHEMICAL EXTINGUISHING SYSTEMS	2021 ED.
NFPA 17A	STANDARD FOR WET CHEMICAL EXTINGUISHING SYSTEMS	2021 ED.
NFPA 20	STANDARD FOR STATIONARY PUMPS FOR FIRE PROTECTION	2019 ED.
NFPA 22	STANDARD FOR WATER TANKS FOR PRIVATE FIRE PROTECTION	2018 ED.
NFPA 24	STANDARD FOR THE INSTALLATION OF PRIVATE FIRE MAINS AND THEIR APPURTENANCES (CA AMENDED)	2019 ED.
NFPA 72	NATIONAL FIRE ALARM & SIGNALING CODE (CA AMENDED)	2022 ED.
NFPA 80	STANDARD FOR FIRE DOORS AND OTHER OPENING PROTECTIVES	2019 ED.
NFPA 2001	STANDARD ON CLEAN AGENT FIRE EXTINGUISHING SYSTEMS (CA AMENDED)	2018 ED.
UL 300	STANDARD FOR FIRE TESTING OF FIRE EXTINGUISHING SYSTEMS FOR PROTECTION OF COMMERCIAL COOKING EQUIPMENT	2005 (R2014)
UL 464	AUDIBLE SIGNAL APPLIANCES FOR FIRE ALARM AND SIGNALING SYSTEMS, INCLUDING ACCESSORIES	2003 ED.
UL 521	STANDARD FOR HEAT DETECTORS FOR FIRE PROTECTIVE SIGNALING SYSTEMS	1999 ED. (R2005)
UL 1971	STANDARD FOR SIGNALING DEVICES FOR THE HEARING IMPAIRED	2002 ED. (R2018)
ICC 300	STANDARD FOR BLEACHERS, FOLDING AND TELESCOPING SEATING AND GRANDSTANDS	2017 ED.

FOR A COMPLETE LIST OF APPLICABLE NFPA STANDARDS REFER TO 2022 CBC (SFM) CHAPTER 35 AND CALIFORNIA FIRE CODE CHAPTER 80.
SEE CALIFORNIA BUILDING CODE, CHAPTER 35 FOR STATE OF CALIFORNIA AMENDMENTS TO NFPA STANDARDS.

PROJECT DESCRIPTION

30' X 64' PC LUNCH SHELTER

SITE WORK INCLUDING ACCESSIBILITY UPGRADES AND TOILET ROOM UPGRADES

PROJECT DATA

PROJECT ADDRESS:
550 SPRING RIVER CIRCLE
STOCKTON, CA 95210

OWNER:
LODI UNIFIED SCHOOL DISTRICT
1305 EAST VINE ST. LODI, CA
PHONE #: 209-331-7225

STATEMENT OF GENERAL CONFORMANCE

(X) THE DRAWINGS OR SHEETS LISTED ON THE INDEX SHEET
(X) THIS DRAWING PAGE OF SPECIFICATIONS/CALCULATIONS

HAVE BEEN PREPARED BY OTHER DESIGN PROFESSIONALS OR CONSULTANTS WHO ARE LICENSED AND/OR AUTHORIZED TO PREPARE SUCH DRAWINGS IN THIS STATE. IT HAS BEEN EXAMINED BY ME FOR:

1) DESIGN INTENT AND APPEARS TO MEET THE APPROPRIATE REQUIREMENTS OF TITLE 24, CALIFORNIA CODE OF REGULATIONS AND THE PROJECT SPECIFICATIONS PREPARED BY ME, AND
2) COORDINATION WITH MY PLANS AND SPECIFICATIONS AND IS ACCEPTABLE FOR INCORPORATION INTO THE CONSTRUCTION OF THIS PROJECT.

THE STATEMENT OF GENERAL CONFORMANCE "SHALL NOT BE CONSTRUED AS RELIEVING ME OF MY RIGHTS, DUTIES, AND RESPONSIBILITIES UNDER SECTIONS 17302 AND 81138 OF THE EDUCATION CODE AND SECTIONS 4-336, 4-341 AND 4-344" OF TITLE 24, PART 1. (TITLE 24, PART 1, SECTION 4-317 (B))

I CERTIFY THAT:

THE PC APPROVED MANUFACTURER DRAWINGS LISTED ON THE INDEX SHEET ARE IN GENERAL CONFORMANCE WITH THE PROJECT DESIGN INTENT, AND THEY HAVE BEEN COORDINATED WITH THE PROJECT PLANS AND SPECIFICATIONS.

SIGNATURE — DATE 11/28/2023
ARCHITECT OR ENGINEER DESIGNATED TO BE IN GENERAL RESPONSIBLE CHARGE

Jeffrey Grau
PRINT NAME

C-14648 — 05-31-25
LICENSE NUMBER — EXPIRATION DATE

SHEET INDEX

GENERAL SHEET
G0.10 COVER SHEET
1

CIVIL
C1.1 TITLE SHEET AND DETAIL SHEET
C2.1 DEMOLITION PLAN
C3.1 GRADING, DRAINAGE, AND PAVING PLAN
3

ARCHITECTURE
A1.21 CODE INFORMATION SITE PLAN
A1.22 LOCAL FIRE AUTHORITY SITE ACCESS PLAN
A1.23 ENLARGED PLANS AND SECTION
A2.11 ENLARGED TOILET ROOM PLANS
A8.11 INTERIOR ELEVATIONS
A10.1 SITE DETAILS
A10.2 TYPICAL MOUNTING HEIGHTS AND DETAILS
7

PC #02-121213
RAM1.0 ORDER FORM
RAM1.1 NOTES AND SPECIAL INPECTIONS
RAM2.3 FOUNDATION PLAN DRILLED PIER
RAM3.1 FRAMING PLAN
RAM4.2 FRAME CONNECTION DETAILS
RAM4.3 SECTION DETAILS
RAM5.1 ARCHITECTURAL VIEWS
RAM6.1 ROOF CONNECTION DETAILS
RAM7.1 MISC DESIGN OPTIONS
RAM 7.0 ELECTRICAL CUTOUTS
10
Grand total: 21

WIND AND SEISMIC DATA

1.Wind Design
Basic Wind Speed: 93Vmph
Risk Category: II
Wind Exposure: C

2.Seismic Design
Risk Category: II
Seismic Important Factor: 1.0
Ss =0.692
S1 =0.276
Site Class: D
Seismic Design Category: D

ABBREVIATIONS

(E)	EXISTING
AB	ANCHOR BOLT
AC PAVING	ASPHALTIC CONCRETE PAVING
ACC	ACCESS/ACCESSIBLE
ACP	ACOUSTICAL CEILING PANEL
ACT	ACOUSTICAL CEILING TILE
ADJ	ADJACENT/ADJUSTABLE
AFF	ABOVE FINISH FLOOR
AGG	AGGREGATE
AHU	AIR HANDLING UNIT
ARCH	ARCHITECTURAL
ATT	ATTENUATION
AUTO	AUTOMATIC
BD	BOARD
BLCG	BLOCKING
BUR	BUILT UP ROOFING
CABT	CABINET
CF	CUBIC FEET
CFCI	CONTRACTOR FURNISHED, CONTRACTOR INSTALLED
CFOI	CONTRACTOR FURNISHED, OWNER INSTALLED
CG	CORNER GUARD
CJ	CONTROL JOINT
CL	CENTER LINE
CLF	CHAIN LINK FENCE
CLR	CLEAR
CMU	CONCRETE MASONRY UNIT
CO	CLEANOUT
COL	COLUMN
COMP	COMPRESSION / COMPOSITE
CF	CUBIC FEET
COORD	COORDINATE
CORR	CORRUGATED
CT	CERAMIC TILE
CTSK	COUNTER SKUNK
CW	CURTAINWALL
DEPR	DEPRESSED / DEPRESSION
DF	DRINKING FOUNTAIN
DIM	DIMENSION
DISP	DISPENSER
DS	DOWNSPOUT
DTL	DETAIL
DW	DISHWASHER
E/W	EACH WAY
EIFS SYSTEM	EXTERIOR INSULATION FINISH
EJ	EXPANSION JOINT
ELEC	ELECTRICAL
ELEV	ELEVATION / ELEVATOR
ENCL	ENCLOSE / ENCLOSURE
EOS	EDGE OF SLAB
EP	ELECTRICAL PANEL
EQ	EQUAL
ESC	EXCUTCHEON
EWC	ELECTRIC WATER COOLER
EXP	EXPOSED
FA	FIRE ALARM
FD	FLOOR DRAIN
FDC	FIRE DEPARTMENT CONNECTION
FE	FIRE EXTINGUISHER
FEC	FIRE EXTINGUISHER W/ CABINET
FF	FINISH FLOOR
FG	FINISH GRADE
FH	FIRE HYDRANT
FHC	FIRE HOSE CABINET
FSH	FLAT HEAD SCREW
FIN	FINISH
FLR	FLOOR
FOC	FACE OF CONCRETE
FOF	FACE OF FINISH
FOM	FACE OF MASONRY
FOS	FACE OF STUD
FP	FIREPROOFING
FR	FIRE RATED
FRG	FIRE RATED GLASS

FRP	FIBERGLASS REINFORCED PLASTIC
FRT	FIRE RETARDANT TREATED
FS	FINISH SURFACE
FTG	FOOTING
GB	GRAB BAR
GFRC	GLASS FIBER REINFORCED CONCRETE
GL	GLASS TYPE
GLB	GLUE LAMINATED BEAM
GYP BD	GYPSUM BOARD
GYP PLAS	GYPSUM PLASTIC
HB	HOSE BIBB
HD	HEAVY DUTY
HDR	HEADER
HDWR	HARDWARE
HGT	HEIGHT
HM	HOLLOW METAL
HP	HIGH POINT
HSS	HOLLOW STEEL SECTION
ID	INSIDE DIAMTER
INT	INTERIOR
INV	INVERT
LANDS	LANDSCAPE
LAV	LAVATORY
LLH	LONG LEG HORIZONTAL
LLV	LONG LEG VERTICAL
LP	LOW POINT
LT WT	LIGHT WEIGHT
LVR	LOUVER
MACH	MACHINE
MB	MACHINE BOLT
MDF	MEDIUM DENSITY FIBERBOARD
MDO	MEDIUM DENSITY OVERLAY
MECH	MECHANICAL
MED	MEDIUM
MEMB	MEMBRANE
MFR	MANUFACTURER
MH	MANHOLE
MO	MASONRY OPENING
MTD	MOUNTED
MTL	METAL
NIC	NOT IN CONTRACT
NR	NON RATED
NRC	NOISE REDUCTION COEFFICIENT
NTS	NOT TO SCALE
O/	OVER
O/A	OVERALL
OC	ON CENTER
OD	OUTSIDE DIAMTER
OFCI	OWNER FURNISHED, CONTRACTOR INSTALLED
OFOI	OWNER FURNISHED, OWNER INSTALLED
OFVI	OWNER FURNISHED, VENDOR INSTALLED
OH	OPPOSITE HAND
OPER	OPERABLE
OPNG	OPENING
ORD	OVERFLOW ROOF DRAIN
P/L	PROPERTY LINE
PA	PUBLIC ADDRESS
PAF	POWDER ACTUATED FASTENER PAVING
PCC	PORTLAND CEMENT CONCRETE PAVING
PED	PEDESTRIAN
PERF	PERFORATED
PERIM	PERIMETER
PERP	PERPENDICULAR
PH	PANIC HARDWARE
PIV	POST INDICATOR VALVE
PL	PLATE
PLAM	PLASTIC LAMINATE
PLAS	PLASTER
PLUMB	PLUMBING
PNL	PANEL
PNT	PAINT / PAINTED
POC	POINT OF CONNECTION
POLY ISO	POLYISOCYANURATE
PREFIN	PREFINISHED
PREP	PREP / PREPARATION

PTC	POST TENSIONED CONCRETE
PTD	PAPER TOWEL DISPENSER
PTN	PARTITION
PTS	PNEUMATIC TUBE STATION / SYSTEM
PVC	POLYVINYL CHLORIDE
PVMT	PAVEMENT
QT	QUARRY TILE
R	RADIUS, RISER
RB	RESILIENT BASE
RD	ROOF DRAIN
RECEPT	ECEPTACLE
REF	REFERENCE
REFL	REFLECT(ED), (IVE)
REFL	REFLECT(ED), (IVE)
REFR	REFRIGERATOR
REINF	REINFORCE/REINFORCED/ REINFORCEMENT
REM	REMOVE
RH	ROUND HEAD
RHS	ROUND HEAD SCREW
RO	ROUGH OPENING
ROW	RIGHT OF WAY
SCH	SCHEDULE (FOR PIPE)
SCHED	SCHEDULE / SCHEDULING
SD	STORM DRAIN / SOAP DISPENSER
SECT	SECTION
SG	SAFETY GLASS
SHT	SHEET
SHTG	SHEATHING
SMS	SHEET METAL SCREW
SND	SANITARY NAPKIN DISPOSAL
SOV	SHUT OFF VALVE
SPEC	SPECIFICATIONS
SS	STAINLESS STEEL
STC	SOUND TRAMISSION CLASS
STL	STEEL
STSMS SCREW	SELF TAPPING SHEET METAL
SUSP	SUSPENDED
SV	SHEET VINYL
SYM	SYMMETRICAL
T	TREAD
T&B	TOP AND BOTTOM
TO	TOP OF
TOC	TOP OF CURB / CONCRETE
TOP	TOP OF PARAPET
TOS	TOP OF STEEL
TOW	TOP OF WALL
TPD	TOILET PAPER DISPENSER
TS	TACKABLE SURFACE
U/C	UNDER CABINET (OR COUNTER
UNO	UNLESS NOTED OTHERWISE
UR	URINAL
VAC	VACUUM
VB	VAPOR BARRIER
VCT	VINYL COMPOSITION TILE
VIF	VERIFY IN FIELD
VTR	VENT THROUGH ROOF
VWC	VINYL WALL COVERING
W/	WITH
W/O	WITHOUT
WB	WOOD BASE
WC	WATER CLOSET
WD	WOOD
WDW	WINDOW
WGT	WEIGHT
WH	WATER HEATER
WP	WATERPROOFING/WALL PROTECTION
WR	WATER RESISTANT
WRGB	WATER RESISTANT GYPSUM BOARD
WS	WOOD SCREW
WSCT	WAINSCOT
WWF	WELDED WIRE FABRIC

NOTE:
OTHER ABBREVIATIONS USED ON THESE DRAWINGS ARE CONSIDERED STANDARDS IN THE BUILDING INDUSTRY. CONTACT ARCHITECT FOR NECESSARY CLARIFICATION.

SYMBOL LEGEND

VIEW MARKERS

DRAWING NUMBER (TYP)
REFERENCE TYPE (SIM, OH)
Ref 1 A101 — BUILDING SECTION MARKER
DRAWING SHEET (TYP)

Ref 1 A101 — WALL SECTION MARKER

Ref 1 A101 — DETAIL SECTION MARKER

DRAWING NUMBER
REFERENCE TYPE (SIM, OH)
1Ref A101 — EXTERIOR ELEVATION MARKER
DRAWING SHEET

Ref1 88 A101 — INTERIOR ELEVATION MARKER
DRAWING NUMBER
DRAWING DIRECTION
DRAWING SHEET

ITEM TAGS

Room name 101 — ROOM IDENTIFICATION TAG

DRAWING SYMBOLS

DRAWING NUMBER
REFERENCE TYPE (SIM, OH)
SIM 1 AX.XX — DETAIL CALLOUT
VIEW EXTENTS
DRAWING SHEET

AA.88 AA.88 — REFERENCE GRID LINES

Name Elevation — REFERENCE FLOOR LEVEL IDENTIDICATIONS

STATE MAP

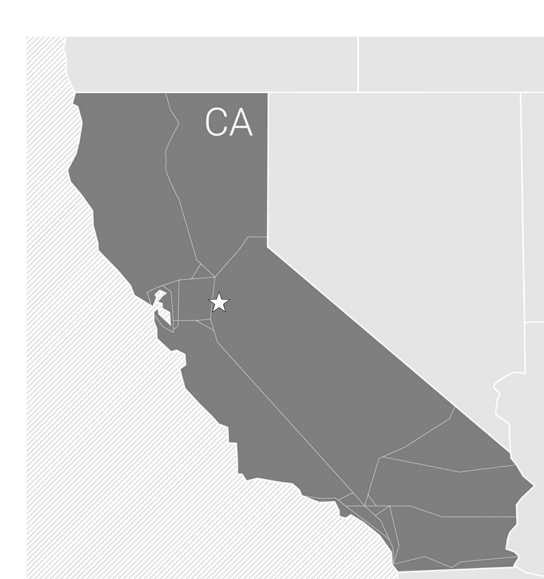

VICINITY MAP

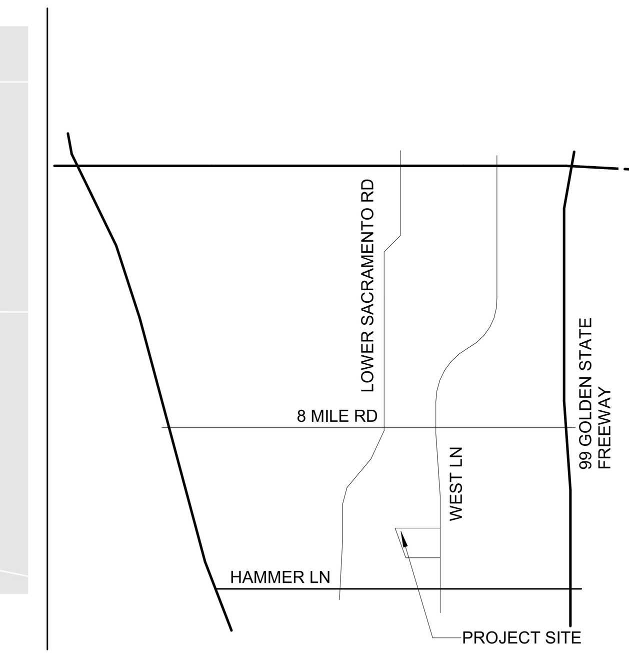

DEFERRED APPROVALS

NONE

AGENCY APPROVAL:

IDENTIFICATION STAMP
DIV. OF THE STATE ARCHITECT
APP: 02-122003 INC:
REVIEWED FOR
SS ☑ FLS ☑ ACS ☑
DATE: 12/05/2023

LODI USD

HMC Architects
R221551X00
2101 CAPITOL AVENUE, SUITE 100,
SACRAMENTO, CA, 95816
916 368 7990 / www.hmcarchitects.com

LICENSED ARCHITECT JEFFREY ALAN GRAU C-14648 5/31/25 RENEWAL DATE STATE OF CALIFORNIA

PROJECT TEAM

CIVIL ENGINEER
WARREN GREEN ENGINEERING
3114 BRENNANS RD LOOMIS, CA 95650
916.663.2323

FACILITY:
SUTHERLAND ELEMENTARY SCHOOL
550 SPRING RIVER CIRCLE
STOCKTON, CA 95210

PROJECT:
LODI UNIFIED SCHOOL DISTRICT LUNCH SHELTERS - SUTHERLAND ELEMENTARY SCHOOL

SHEET NAME:
COVER SHEET

CONSTRUCTION DOCUMENTS

DATE: 12/05/23 — CLIENT PROJ NO: R221551X00

SHEET:
G0.10

THE LINE SHOWN ABOVE IS EXACTLY 1" WHEN PLOTTED ON ANSI D SHEETS ORIGINAL IMAGE SIZE

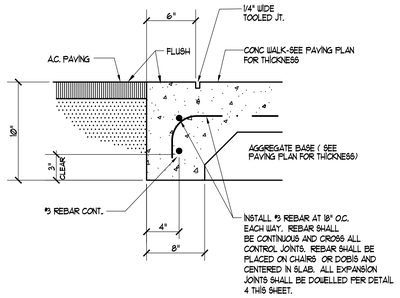

1 / C1.1 FLUSH CONC. WALK @ AC

N.T.S.

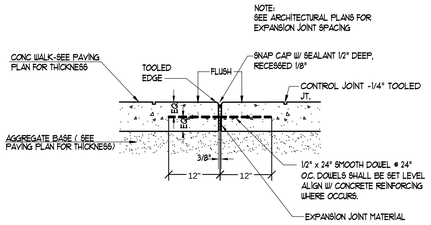

4 / C1.1 EXPANSION JOINT

N.T.S.

NOTE:
TRANSITION FROM NEW CONCRETE WALKWAYS TO EXISTING LANDSCAPE GRADE TO BE AT A MAXIMUM OF 5 : 1 SLOPE UNLESS OTHERWISE NOTED ON PLANS.

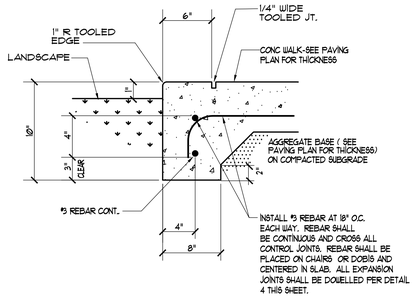

2 / C1.1 FLUSH CONC. WALK @ LANDSCAPE

N.T.S.

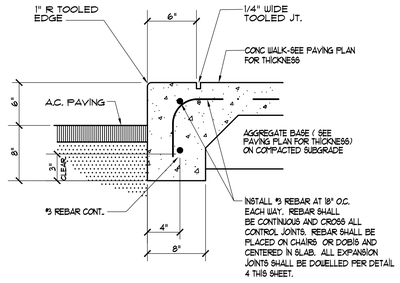

5 / C1.1 THICKENED EDGE CONC. WALK

N.T.S.

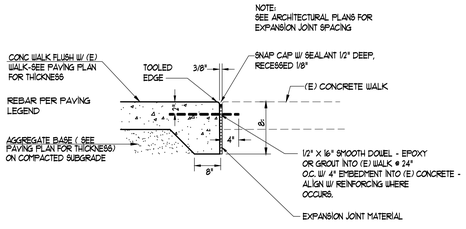

3 / C1.1 CONC. WALK AT EXISTING CONDITIONS

N.T.S.

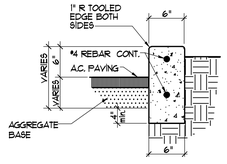

NOTES:
1. PROVIDE EXPANSION JOINTS @ 10'-0" O.C. OR AS INDICATED ON PLANS.
2. CURB SHALL EXTEND 4" BELOW SUBGRADE.

6 / C1.1 PLANTER CURB

LEGEND

× 43.15	EXISTING ELEVATION
8"SD	EXISTING STORM DRAIN
6"SS	EXISTING SANITARY SEWER
8"W	EXISTING WATER MAIN
	EXISTING WATER VALVE
	EXIST. FIRE HYDRANT
C	EXISTING COMMUNICATION LINE
IR	EXISTING IRRIGATION CONTROL LINE
E	EXISTING ELECTRICAL LINE
T	EXISTING TELEPHONE LINE
31.90	NEW ELEVATION

ABBREVIATIONS

AC	ASPHALT CONCRETE	LD	LANDSCAPE DRAIN
AB	AGGREGATE BASE	LF	LINEAR FEET
ADD. ALT.	ADDITIVE ALTERNATE	MH	MANHOLE
BLDG	BUILDING	MIN	MINIMUM
BO	BLOW OFF	MS	MOW STRIP
BOW	BACK OF WALK	(N)	NEW
BW	BOTTOM OF WALL	N.I.C.	NOT IN CONTRACT
CC	CONCRETE (TOP OF CONCRETE WALK)	OG	ORIGINAL GRADE
CL	CENTER LINE	P	PROPOSED
CONC	CONCRETE	PD	PLANTER DRAIN
CONST.	CONSTRUCT	PIV	POST INDICATOR VALVE
COTG	CLEANOUT TO GRADE	POC	POINT OF CONNECTION
DI	DRAIN INLET	PP	POWER POLE
DIP	DUCTILE IRON PIPE	PUE	PUBLIC UTILITY EASEMENT
DS	DOWNSPOUT	RCP	REINFORCED CONCRETE PIPE
DWY	DRIVEWAY	RD	ROOF DRAIN
(E)	EXISTING	RDWD	REDWOOD
E. BOX	ELECTRICAL BOX	RET	RETAINING
E. COND.	ELECTRICAL CONDUIT	RP	REDUCED PRESSURE
ELEC	ELECTRIC	R/W	RIGHT OF WAY
EP	EDGE OF PAVEMENT	RWL	RAIN WATER LEADER
EXIST.	EXISTING	S	SLOPE
FDC	FIRE DEPARTMENT CONNECTION	SD	STORM DRAIN
FF	FINISH FLOOR	SS	SANITARY SEWER
FG	FINISH GRADE	ST. LT.	STREET LIGHT
FH	FIRE HYDRANT	TBM	TEMPORARY BENCH MARK
FL	FLOW LINE	T	TRANSFORMER
FM	FIRE MAIN	TEL	TELEPHONE
FS	FIRE SERVICE	TC	TOP OF CURB
G	GAS	TW	TOP OF WALL
GB	GRADE BREAK	TYP	TYPICAL
GR	GRATE	VCP	VITRIFIED CLAY PIPE
GV	GATE VALVE	W	WATER
HDR	HEADER	WV	WATER VALVE
HP	HIGH POINT	VB	VALVE BOX
INV	INVERT ELEVATION	YD	YARD DRAIN
JP	JOINT POLE		

INDEX OF CIVIL DRAWINGS

C1.1 TITLE SHEET AND DETAIL SHEET
C2.1 DEMOLITION PLAN
C3.1 GRADING, DRAINAGE AND PAVING PLAN

AGENCY APPROVAL:

IDENTIFICATION STAMP
DIV. OF THE STATE ARCHITECT
APP: 02-122003 INC:
REVIEWED FOR
SS ☑ FLS ☑ ACS ☑
DATE: 12/05/2023

LODI USD

HMC Architects
R2211551
2101 CAPITOL AVENUE, SUITE 100,
SACRAMENTO, CA. 95816
916 368 7990 / www.hmcarchitects.com

Δ DESCRIPTION DATE

CONSULTANT:

REGISTERED PROFESSIONAL ENGINEER
JOHN A. GREEN
NO. 36500
Exp. 6-30-24
CIVIL
STATE OF CALIFORNIA

Warren-Green ENGINEERING
3114 Brennans Road
Loomis, CA 95690

FACILITY:

SUTHERLAND ELEMENTARY SCHOOL
550 SPRING RIVER CIRCLE, STOCKTON, CA 95210

PROJECT:

LODI UNIFIED SCHOOL DISTRICT LUNCH SHELTERS-SUTHERLAND ELEMENTARY SCHOOL

SHEET NAME:

TITLE SHEET AND DETAILS

CONSTRUCTION DOCUMENTS

FILE NO.: SES-CD | A NO.: R2211551

DATE: NOV. 21, 2023 | CLIENT PROJ NO:

SHEET:

C1.1

PLEASE RECYCLE

THE LINE SHOWN ABOVE IS EXTENDED FROM SHEET C1.0 SHEETS 1 ORIGINAL SHEET SIZE

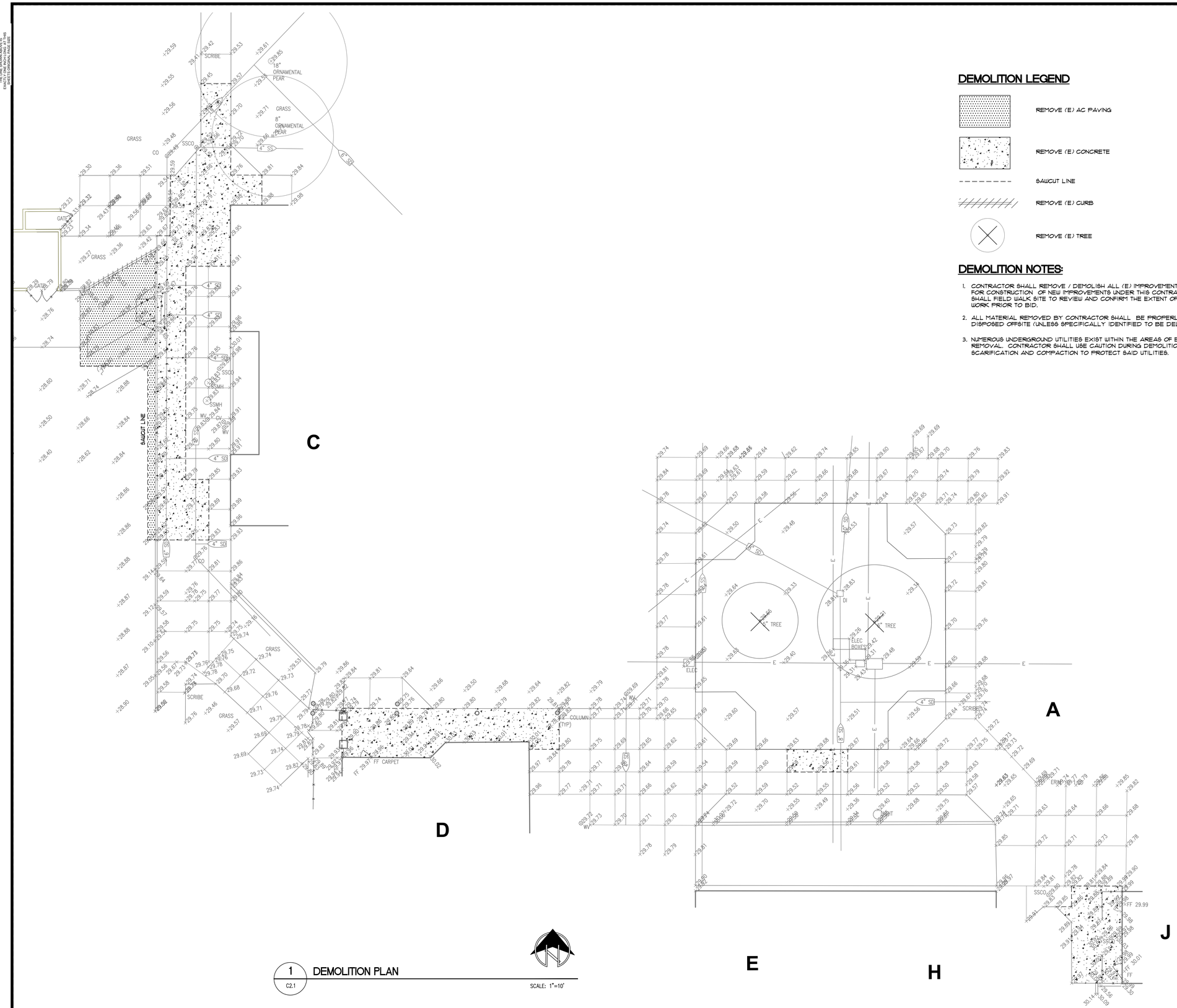

DEMOLITION LEGEND

- REMOVE (E) AC PAVING
- REMOVE (E) CONCRETE
- SAWCUT LINE
- REMOVE (E) CURB
- REMOVE (E) TREE

DEMOLITION NOTES:

1. CONTRACTOR SHALL REMOVE / DEMOLISH ALL (E) IMPROVEMENTS AS NECESSARY FOR CONSTRUCTION OF NEW IMPROVEMENTS UNDER THIS CONTRACT. CONTRACTOR SHALL FIELD WALK SITE TO REVIEW AND CONFIRM THE EXTENT OF ALL CLEARING WORK PRIOR TO BID.
2. ALL MATERIAL REMOVED BY CONTRACTOR SHALL BE PROPERLY AND LEGALLY DISPOSED OFFSITE (UNLESS SPECIFICALLY IDENTIFIED TO BE DELIVERED TO OWNER.)
3. NUMEROUS UNDERGROUND UTILITIES EXIST WITHIN THE AREAS OF EXISTING CONCRETE REMOVAL. CONTRACTOR SHALL USE CAUTION DURING DEMOLITION AND SUBGRADE SCARIFICATION AND COMPACTION TO PROTECT SAID UTILITIES.

1 / C2.1 DEMOLITION PLAN

SCALE: 1"=10'

AGENCY APPROVAL:

IDENTIFICATION STAMP
DIV. OF THE STATE ARCHITECT
APP: 02-122003 INC:
REVIEWED FOR
SS ☑ FLS ☑ ACS ☑
DATE: 12/05/2023

LODI USD

HMC Architects

R2211551

2101 CAPITOL AVENUE, SUITE 100,
SACRAMENTO, CA, 95816
916 368 7990 / www.hmcarchitects.com

Δ DESCRIPTION DATE

CONSULTANT:

REGISTERED PROFESSIONAL ENGINEER LODI A. GREEN NO. 36500 Exp. 6-30-24 STATE OF CALIFORNIA

Warren•Green ENGINEERING
3114 Brennans Road
Loomis, CA 95690

FACILITY:

SUTHERLAND ELEMENTARY SCHOOL
550 SPRING RIVER CIRCLE, STOCKTON, CA 95210

PROJECT:

LODI UNIFIED SCHOOL DISTRICT LUNCH SHELTERS-SUTHERLAND ELEMENTARY SCHOOL

SHEET NAME:

DEMOLITION PLAN

CONSTRUCTION DOCUMENTS

FILE NO.: **SES-CD** A NO.: R2211551

DATE: **NOV. 21, 2023** CLIENT PROJ NO:

SHEET:

C2.1

PLEASE RECYCLE

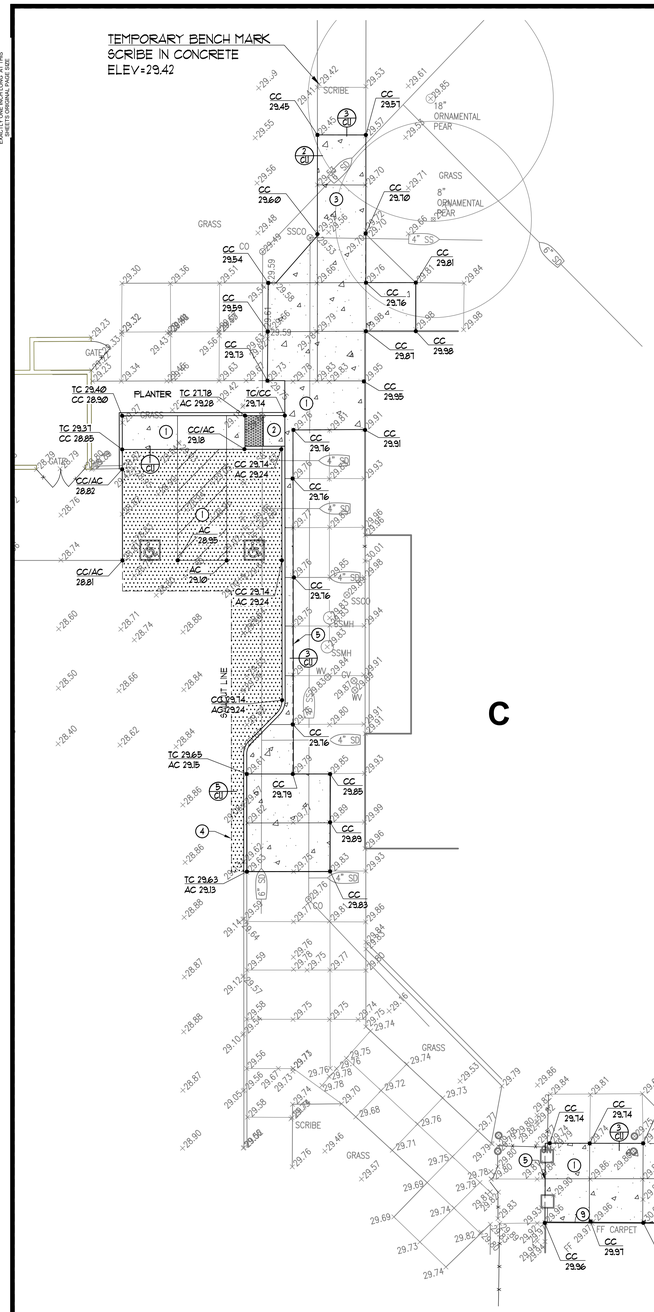

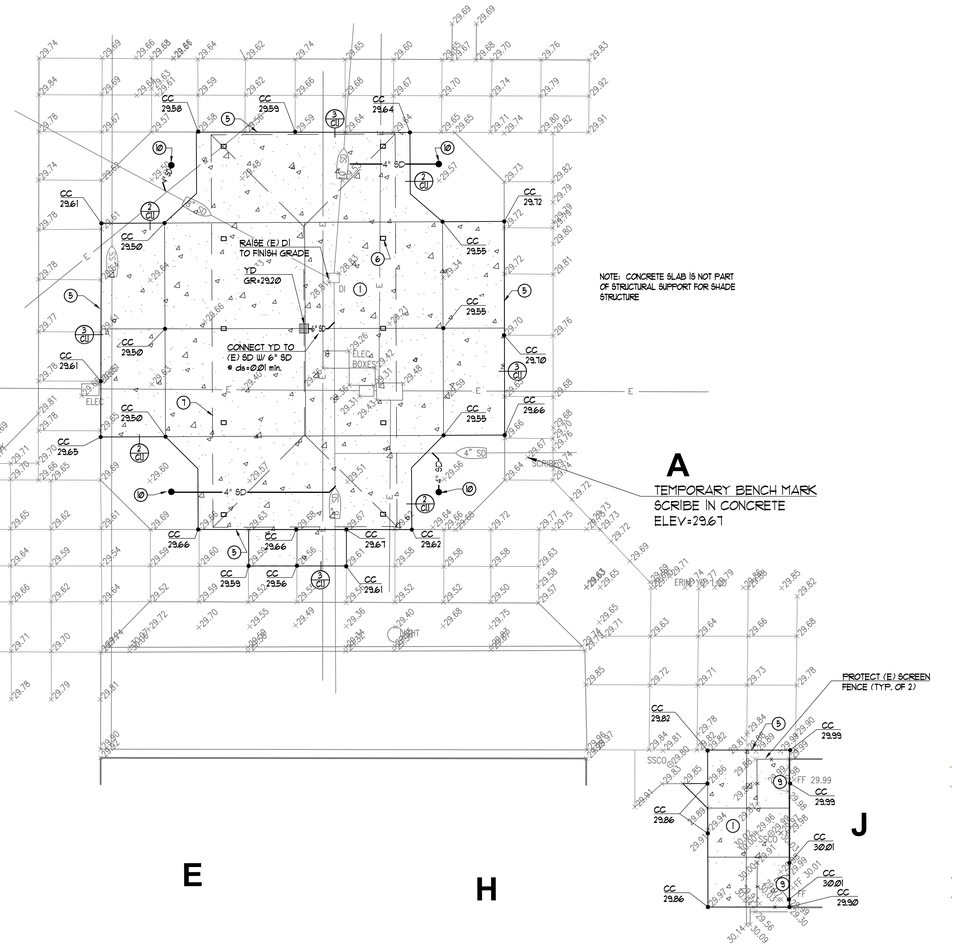

PAVING LEGEND

- VARIABLE THICKNESS AC OVERLAY
- 3" ASPHALT CONCRETE ON 6" AGGREGATE BASE ON COMPACTED SUBGRADE
- 5" CONCRETE ON 6" AGGREGATE BASE ON COMPACTED SUBGRADE W/ #3 REBAR AT 18" O.C. EACH WAY

NOTES:

1. CONCRETE SLAB IS NOT PART OF STRUCTURAL SUPPORT FOR SHADE STRUCTURE
2. CONTRACTOR SHALL LOCATE ALL UTILITIES IN AREA OF WORK PRIOR TO START OF CONSTRUCTION. NOTIFY ARCHITECT IF ANY CONFLICTS WITH NEW FOOTINGS OCCUR.
3. ALL UTILITIES (VALVE BOX COVERS, VAULTS, CLEANOUTS, ETC. SHALL BE ADJUSTED TO NEW FINISH GRADES.

KEY NOTE LEGEND

1. 1.8% MAX. SLOPE IN ANY DIRECTION.
2. RAMP - 8% MAX. SLOPE IN DIRECTION OF TRAVEL, 1.8% MAX. CROSS SLOPE
3. 1.8% MAX. CROSS SLOPE 4.75% MAX. SLOPE IN DIRECTION OF TRAVEL.
4. MATCH (E) AC GRADE AT SAWCUT LINE.
5. MATCH (E) CONC. GRADE AT SAWCUT LINE.
6. SHADE STRUCTURE FOOTING - TYPICAL
7. SHADE STRUCTURE ROOF LINE
8. CONTRACTOR SHALL LOCATE EXISTING UTILITIES PRIOR TO START OF CONSTRUCTION. NOTIFY ARCHITECT IF CONFLICT WITH NEW FOOTINGS EXISTS.
9. CONCRETE LANDINGS SHALL MATCH FINISH FLOOR ELEVATIONS AT DOORS UNLESS OTHERWISE NOTED. PROVIDE 5' MIN. DEEP LANDING AT MAX. 1.8% SLOPE IN ANY DIRECTION.
10. INSTALL PLANTER DRAIN GR=29.25 CONNECT TO STORM DRAIN W/ 4" SD @ ls=0.01 MIN.

1 C3.1 GRADING, DRAINAGE AND PAVING PLAN

SCALE: 1"=10'

AGENCY APPROVAL:

IDENTIFICATION STAMP
DIV. OF THE STATE ARCHITECT
APP: 02-122003 INC:
REVIEWED FOR
SS ☑ FLS ☑ ACS ☑
DATE: 12/05/2023

LODI USD

HMC Architects

R2211551

2101 CAPITOL AVENUE, SUITE 100,
SACRAMENTO, CA, 95816
916 368 7990 / www.hmcarchitects.com

Δ DESCRIPTION DATE

CONSULTANT:

REGISTERED PROFESSIONAL ENGINEER
LORI A. GREEN
NO. 36500
Exp. 6-30-24
STATE OF CALIFORNIA

Warren-Green ENGINEERING
3114 Brennans Road
Loomis, CA 95690

FACILITY:

SUTHERLAND ELEMENTARY SCHOOL
550 SPRING RIVER CIRCLE, STOCKTON, CA 95210

PROJECT:

LODI UNIFIED SCHOOL DISTRICT LUNCH SHELTERS-SUTHERLAND ELEMENTARY SCHOOL

SHEET NAME:

GRADING, DRAINAGE AND PAVING PLAN

CONSTRUCTION DOCUMENTS

FILE NO.: SES-CD A NO.: R2211551

DATE: NOV. 21, 2023 CLIENT PROJ NO:

SHEET:

C3.1

PLEASE RECYCLE

THE LINE SHOWN ABOVE IS EXACTLY 1" WHEN PLOTTED ON THIS SHEET'S ORIGINAL PAGE SIZE

BUILDING DATA AND ALLOWABLE AREA ANALYSIS

BUILDING	OCCUPANCY	CONSTRUCTION TYPE	ALLOWABLE AREA (TABLE 506.2)	ACTUAL BLDG. AREA	OCCUPANY CALCULATION
LS	A-2	II-B NON-SPRINKLERED	9,500 S.F.	1,920 S.F.	1,920 S.F. / 15 NET =128 OCC.

EXISTING PATH OF TRAVEL (POT): ARCHITECT STATEMENT

DESIGN PROFESSIONAL IN GENERAL RESPONSIBLE IN CHARGE STATEMENT: THE POT IDENTIFIED IN THESE CONSTRUCTION DOCUMENTS IS COMPLIANT WITH THE CURRENT APPLICABLE CALIFORNIA BUILDING CODE ACCESSIBILITY PROVISIONS FOR **PATH OF TRAVEL REQUIREMENTS FOR ALTERATIONS, ADDITIONS AND STRUCTURAL REPAIRS**. AS PART OF THE DESIGN OF THIS PROJECT, THE POT WAS EXAMINED AND ANY ELEMENTS, COMPONENTS OR PORTIONS OF THE POT THAT WERE DETERMINED TO BE NON-COMPLIANT

1) HAVE BEEN IDENTIFIED AND
2) THE CORRECTIVE WORK NECESSARY TO BRING THEM INTO COMPLIANCE HAS BEEN INCLUDED WITHIN THE SCOPE OF THIS PROJECT'S WORK THROUGH DETAILS, DRAWINGS, AND SPECIFICATIONS INCORPORATED INTO THESE CONSTRUCTION DOCUMENTS.

ANY NONCOMPLIANT ELEMENTS, COMPONENTS OR PORTIONS OF THE POT THAT WILL NOT BE CORRECTED BY THIS PROJECT BASED ON VALUATION THRESHOLD LIMITATIONS OR A FINDING OF UNREASONABLE HARDSHIP ARE SO INDICATED IN THESE CONSTRUCTION DOCUMENTS.

DURING CONSTRUCTION, IF POT ITEMS WITHIN THE SCOPE OF THE PROJECT REPRESENTED AS CODE COMPLIANT ARE FOUND TO BE NON-CONFORMING BEYOND REASONABLE CONSTRUCTION TOLERANCES, THEY SHALL BE BROUGHT TO COMPLIANCE WITH THE CBC AS PART OF THIS PROJECT BY MEANS OF A CONSTRUCTION CHANGE DOCUMENT.

ACCESSIBLE PARKING STALL CALCULATION

TOTAL PARKING STALL COUNT:	55 STALLS
ACCESSIBLE PARKING STALLS:	(TABLE 11B-208.2)
REQUIRED ACCESSIBLE STALLS:	3 (51-75 TOTAL STALLS)
REQUIRED VAN ACCESSIBLE STALLS:	1 (1 ACCESSIBLE STALLS)
ACCESSIBLE STALLS PROVIDED:	2 STANDARD & 1 VAN

NOTE: LUNCH SHELTER COMPLIES WITH DSA IR 31-1

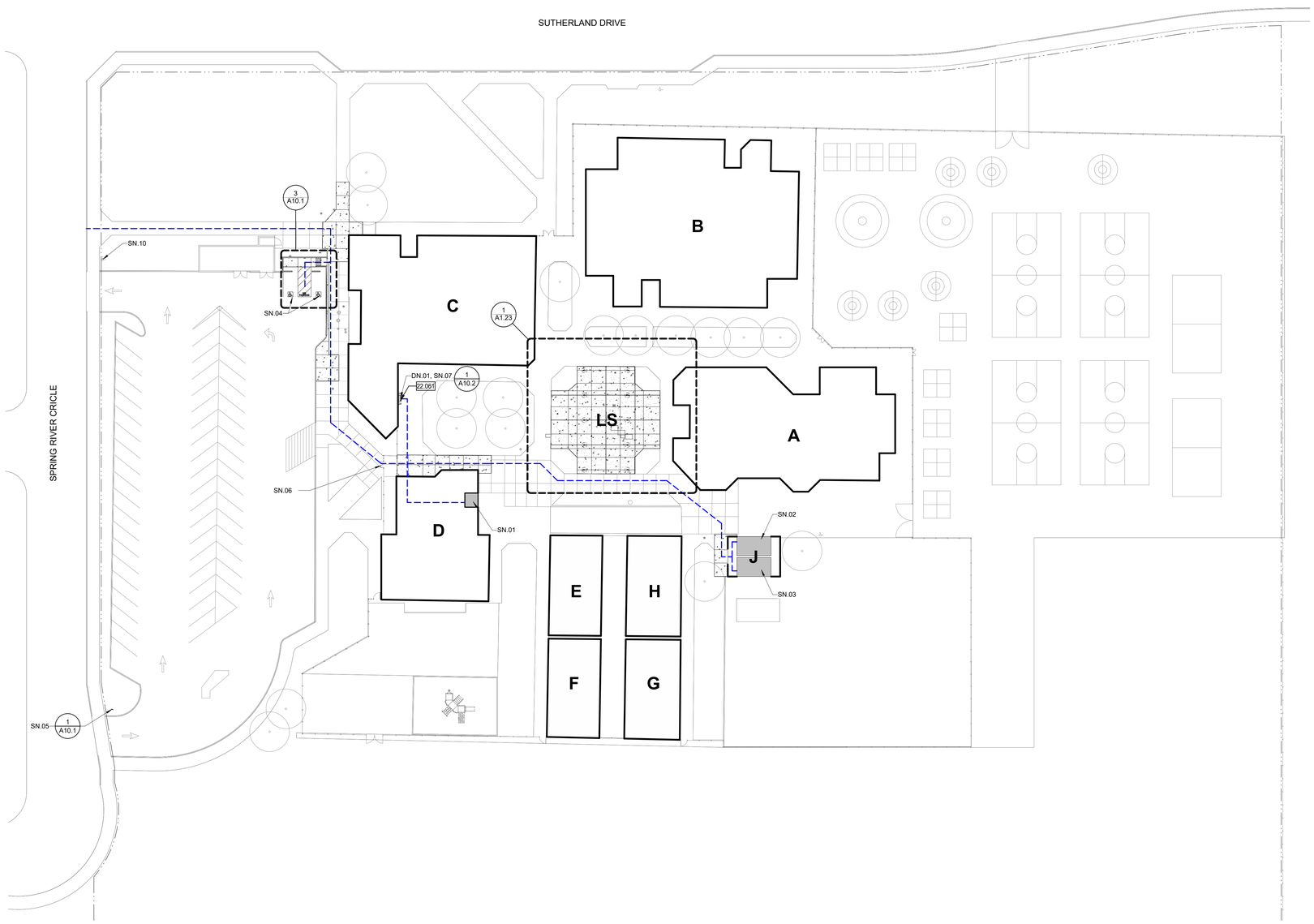

LEGEND

- ACCESSIBLE PATH OF TRAVEL
- PROPERTY LINE
- EXISTING CHAINLINK FENCE
- EXISTING ORNAMENTAL FENCE
- X — EXISTING BUILDINGS
- EXISTING FIRE HYDRANT

DEMOLITION NOTES

DN.01 REMOVE (E) DRINKING FOUNTAIN

SHEET NOTES

SN.01 (E) STAFF TOILET ROOM PER DSA #52551 UPGRADED PER THIS APPLICATION
SN.02 (E) BOYS TOILET ROOM PER DSA #52551 UPGRADED PER THIS APPLICATION
SN.03 (E) GIRLS TOILET ROOM PER DSA #52551 UPGRADED PER THIS APPLICATION
SN.04 (N) ACCESSIBLE PARKING PER THIS APPLICATION
SN.05 NEW ACCESSIBLE PARKING LOT ENTRANCE SIGN
SN.06 (E) ACCESSIBLE 3'-6" WIDE GATE WITH PANIC HARDWARE AND KICKPLATE
SN.07 (E) DRINKING FOUNTAIN PER DSA #52551 UPGRADED PER THIS APPLICATION. PATCH (E) WALL WHERE DF WAS REMOVED TO MATCH (E) FINISH

BUILDING DESIGNATIONS

DSA # 52551

UNIT A - CLASSROOM BUILDING
UNIT B - LIBRARY AND CLASSROOM BUILIDNG
UNIT C - MULTIPURPOSE BUILDING
UNIT D - ADMINISTRATION AND KINDERGARTEN BUILDING
UNIT E - PORTABLE CLASSROOM BUILDING
UNIT F - PORTABLE CLASSROOM BUILDING
UNIT G - PORTABLE CLASSROOM BUILDING
UNIT H - PORTABLE CLASSROOM BUILDING
UNIT J - PORTABLE TOILET ROOM BUILDING

THIS APPLICATION

UNIT LS - 30' X 64' LUNCH SHELTER

KEYNOTES

22.061 DRINKING FOUNTAIN WITH BOTTLE FILLER

AGENCY APPROVAL:

IDENTIFICATION STAMP
DIV. OF THE STATE ARCHITECT
APP: 02-122003 INC:
REVIEWED FOR
SS ☑ FLS ☑ ACS ☑
DATE: 12/05/2023

LODI USD

HMC Architects

R221551X00

LICENSED ARCHITECT JEFFREY ALAN FRAND C-14848 5/31/25 RENEWAL DATE STATE OF CALIFORNIA

2101 CAPITOL AVENUE, SUITE 100,
SACRAMENTO, CA, 95816
916 368 7990 / www.hmcarchitects.com

ISSUE

Δ	DESCRIPTION	DATE

ACCESSIBLE PATH OF TRAVEL

1. ACCESSIBLE PATH OF TRAVEL (P.O.T.): SITE WALKWAYS SHALL PROVIDE A BARRIER-FREE P.O.T. ABRUPT CHANGES IN LEVEL ALONG ANY P.O.T. ARE ALLOWED UP TO 1/2". ONLY ABRUPT CHANGES IN ELEVATION UP TO 1/4" ARE ALLOWED TO HAVE A VERTICAL TRANSITION. ABRUPT CHANGES IN ELEVATION BETWEEN 1/4" AND 1/2" SHALL BE BEVELED WITH A SLOPE NO GREATER THAN 1-UNIT VERTICAL TO 2-UNITS HORIZONTAL. GATES IN THE P.O.T. SHALL HAVE A SIGN ADJACENT TO THE GATE, IN ALL CAPITALIZED LETTERS, WHICH READS: "THIS GATE TO REMAIN LOCKED IN OPEN POSITION DURING SCHOOL HOURS OR ANY PUBLIC EVENT".
2. THE CONTRACTOR SHALL PROVIDE A P.O.T. FROM THE DISABLED ACCESSIBLE PARKING STALLS TO ALL BUILDINGS AND SITE FUNCTIONS. CONTRACTOR SHALL VERIFY THAT THE P.O.T. IS BARRIER-FREE AS DESCRIBED IN THESE NOTES.
3. WALKWAYS SHALL BE FREE OF GRATINGS WHEREVER POSSIBLE. GRATING WHICH OCCUR WITHIN THE P.O.T. SHALL HAVE OPENINGS WHICH DO NOT EXCEED 1/2" IN THE DIRECTION OF TRAVEL PER CBC SECTION 1133B.7.2.
4. AN ABRUPT DROP-OFF CHANGE IN ELEVATION AT THE EDGE OF ANY WALK INTO AN ADJACENT PLANTER SHALL NOT EXCEED 4".
5. SLOPES IN THE DIRECTION OF THE P.O.T. GREATER THAN 1-UNIT VERTICAL TO 20-UNITS HORIZONTAL SHALL BE CONSIDERED A RAMP AND WILL REQUIRE HANDRAILS ON BOTH SIDES PER CBC SECTION 1133B.5.5 SLOPES IN THE DIRECTION OF THE P.O.T. ALONG WALKWAYS SHALL NOT EXCEED 5%. CROSS SLOPES IN THE P.O.T. ALONG WALKWAYS SHALL NOT EXCEED 2%.
6. ALL WALKWAYS WITHIN THE P.O.T. SHALL BE A MINIMUM OF 48" IN WIDTH. SURFACES WITH A SLOPE OF LESS THAN 6% SHALL BE AT LEAST AS SLIP-RESISTANT AS THAT PROVIDED BY A MEDIUM BROOM FINISH. SURFACES WITH A SLOPE OF MORE THAN 6% SHALL BE SLIP-RESISTANT.
7. OBJECTS PROTRUDING INTO THE P.O.T. SHALL NOT REDUCE THE CLEAR WIDTH OR MANEUVERING SPACE WITHIN THE P.O.T. PER CBC SECTION 1133B.8.6.
8. ARCHITECT HAS SURVEYED/ INSPECTED THE PATH OF TRAVEL (P.O.T.) AS INDICATED ON THE PLANS AND HAS FOUND IT TO BE, OR HAS INDICATED ON THE PLANS REMEDIAL WORK WHICH WOULD CAUSE IT TO BE, A BARRIER- FREE ACCESSIBLE ROUTE:
   a. AT LEAST 48" IN. WIDTH; OR AS APPROVED BY CODE;
   b. WITHOUT ABRUPT LEVEL CHANGES EXCEEDING 1/2" IF BELVELED AT 1:2 MAXIMUM SLOPE, OR VERTICAL LEVEL CHANGES EXCEEDING 1/4";
   c. WITH A FIRM, STABLE, AND SLIP RESISTANT WALKING SURFACE;
   d. WITH A RUNNING SLOPE OF 1:20 OR LESS, UNLESS OTHERWISE INDICATED, AND A CROSS SLOPE OF 1:50 OR LESS;
   e. IS FREE OF OVERHEAD OBSTRUCTIONS WITHIN 80" ABOVE THE WALKING SURFACE; AND
   f. IS FREE OF OBJECTS WHICH PROTRUDE MORE THAN 4" BETWEEN THE HEIGHTS OF 27" AND 80" ABOVE THE WALKING SURFACE.

FACILITY:
SUTHERLAND ELEMENTARY SCHOOL
550 SPRING RIVER CIRCLE
STOCKTON, CA 95210

PROJECT:
LODI UNIFIED SCHOOL DISTRICT LUNCH SHELTERS - SUTHERLAND ELEMENTARY SCHOOL

SHEET NAME:
CODE INFORMATION SITE PLAN

CONSTRUCTION DOCUMENTS

DATE: **12/05/23** CLIENT PROJ NO: **R221551X00**

SHEET:

A1.21

CODE INFORMATION SITE PLAN **1** 1" = 30'-0"

Autodesk Docs://R221551X00 Lodi USD Lunch Shelters/R221551X00-A-SUTHERLAND-ES-LUNCH-SHELTER.rvt
11/29/2023 6:42:49 PM

PLEASE RECYCLE

THE LINE SHOWN ABOVE IS EXACTLY ONE INCH ON THIS SHEETS ORIGINAL PAGE SIZE

DSA-810 FIRE & LIFE SAFETY SITE CONDITIONS SUBMITTAL

PROJECT INFORMATION		
School District:	LODI UNIFIED SCHOOL DISTRICT	
Project name / school:	SUTHERLAND ELEMENTARY SCHOOL	
Project address:	550 SPRING RIVER CIRCLE STOCKTON, CA 95210	

FIRE & LIFE SAFTEY INFORMATION				ALTERNATE ACCEPTED
1.	Has a fire hydrant flow test been performed within the past 12 months? ***(If yes, provide a copy of the test data)***			Yes ☐ No ☒
2.	Was the fire hydrant water flow test performed as part of this LFA review?			Yes ☐ No ☒
3.	Is the project located within a designated fire hazard serverity zone as established by Cal-Fire? ***(If yes, indicate fire hazard zone classification below)***			Yes ☐ No ☒
	Refer to the following for fire hazard zone locations: ***www. fire.ca.gov/fire_prevention/fire_prevention_wildland_zones_maps***	Moderate ☐	High ☐	Very High ☐
	Wildland Interface Area (WIFA) ***(If any designations are checked, project design must meet the requirements of CBC Chapter 7A)***			WIFA ☐

CONDITION MEANS AND METHODS RESOLUTION		ALTERNATE ACCEPTED			
		Yes	No	N/A	N/R
4.	Emergency vehicle access roadways do not meet CFC requirements			☒	
4a.	**Acceptable Alternative:** Emergency vehicle and personel access as proposed by the architect is acceptable for providing fire suppression and protection of life and property				
5.	**Fire Hydrants:** Number and spacing does not meet CFC requirements			☒	
5a.	**Acceptable Alternative:** Number of fire hydrants and spacing as proposed by the architect is acceptable for fire suppression and protection of life and property.				
6.	**Fire Hydrants:** Water flow and pressure are less than CFC minimum.			☒	
6a.	**Acceptable Alternative:** The available flow and pressure is acceptable for providing fire suppression and protection of life and property.				
7.	Location of fire department connection(s) serving fire sprinkler system or standpipe system does not meet CFC requirements.			☒	
7a.	**Acceptable Alternative:** The location of fire department connection serving the fire sprinkler system and/or standpipe system is acceptable for providing fire suppression and protection of life and property.				

School District Acceptance of Acceptable Design Alternates
By signing this form, the school district acknowledges and accepts the proposed design as an alternative to California Building Code (CBC) and California Fire Code (CFC) minimum requirements as indicated by one of more of the conditions indicated at items 4a, 5a, 6a, or 7a, for providing fire and life safety protection of life and property.

Accepted by: _____ Title: _____

Signature: _____ Date: _____

LOCAL FIRE AUTHORITY (LFA) INFORMATION	
LFA Agency Name:	
LFA Review Official:	
Title:	Work Phone:
Work Email:	

LFA Reviewer's Signature: _____ Date: _____

LEGEND

- PROPERTY LINE
- EXISTING CHAINLINK FENCE
- EXISTING ORNAMENTAL FENCE
- X — EXISTING BUILDING
- FIRE LANE
- EXISTING FIRE HYDRANT

SHEET NOTES

SN.01 EXISTING FIRE LANE
SN.02 EXISTING FIRE HYDRANT
SN.03 EXISTING PR 10'-0" WIDE CHAIN LINK GATES. PROVIDE KNOX LOCK
SN.04 (E) FIRE ALARM HORN

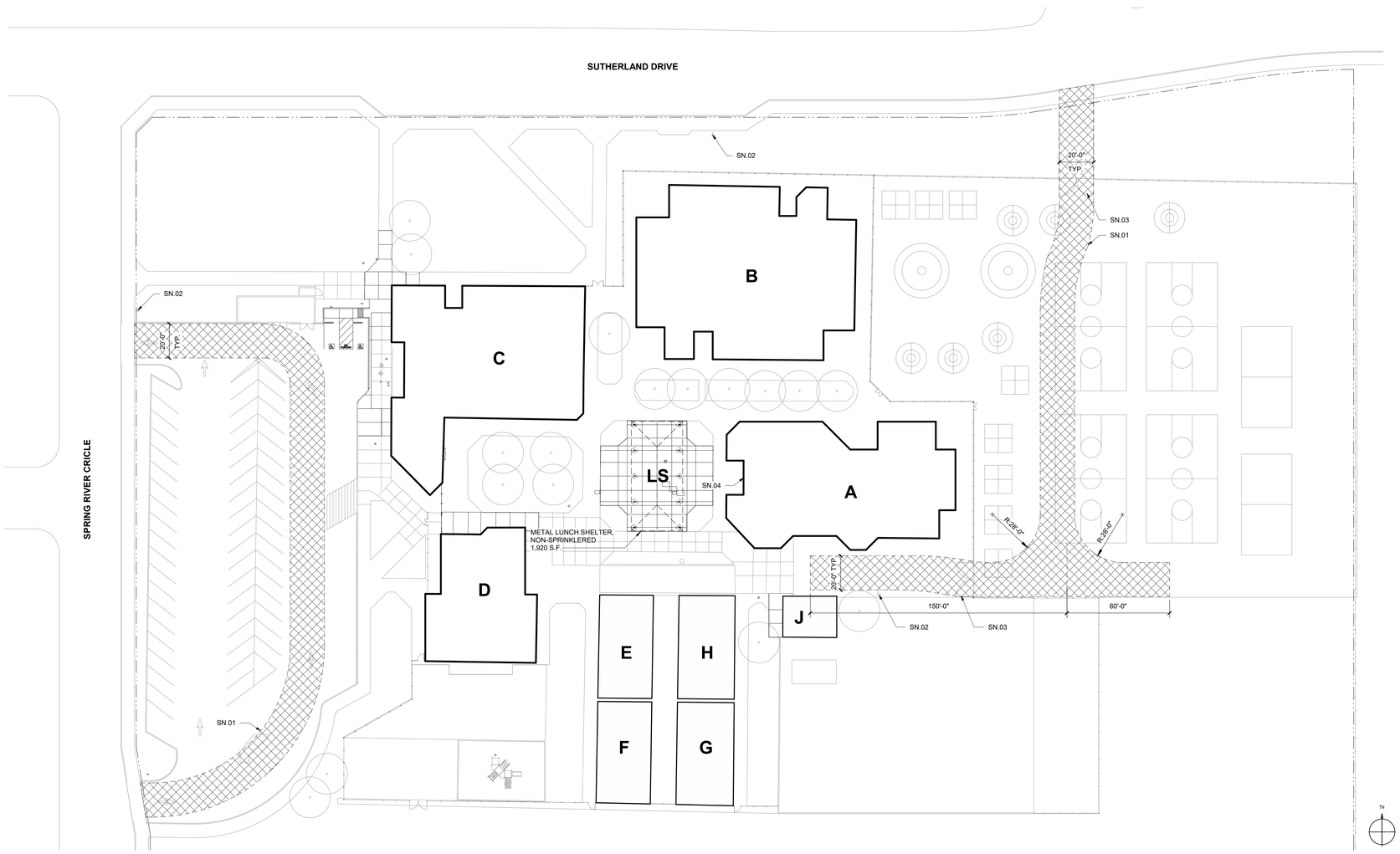

LOCAL FIRE AUTHORITY SITE PLAN 1 1" = 30'-0"

AGENCY APPROVAL:

IDENTIFICATION STAMP
DIV. OF THE STATE ARCHITECT
APP: 02-122003 INC:
REVIEWED FOR
SS ☑ FLS ☑ ACS ☑
DATE: 12/05/2023

LODI USD

HMC Architects
R221551X00
2101 CAPITOL AVENUE, SUITE 100,
SACRAMENTO, CA, 95816
916 368 7990 / www.hmcarchitects.com

LICENSED ARCHITECT JEFFREY ALAN GRAFF C-14248 5/31/25 RENEW DATE STATE OF CALIFORNIA

ISSUE

Δ	DESCRIPTION	DATE

FACILITY:
SUTHERLAND ELEMENTARY SCHOOL
550 SPRING RIVER CIRCLE
STOCKTON, CA 95210

PROJECT:
LODI UNIFIED SCHOOL DISTRICT LUNCH SHELTERS - SUTHERLAND ELEMENTARY SCHOOL

SHEET NAME:
LOCAL FIRE AUTHORITY ACCESS PLAN

CONSTRUCTION DOCUMENTS

DATE: 12/05/23 CLIENT PROJ NO: R221551X00

SHEET:

A1.22

Autodesk Docs://R221551X00 Lodi USD Lunch Shelters/R221551X00-A-SUTHERLAND-ES-LUNCH-SHELTER.rvt
11/27/2023 9:20:47 PM

PLEASE RECYCLE

THE LINE SHOWN ABOVE IS EXACTLY 1" WHEN PLOTTED ON THIS SHEETS ORIGINAL PAGE SIZE

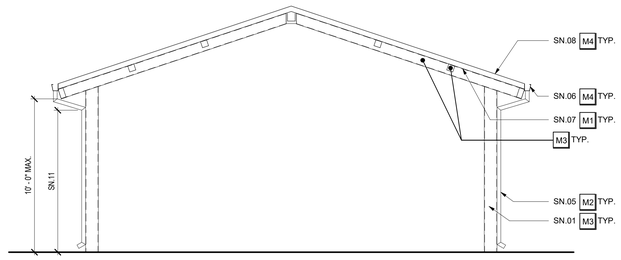

LUNCH SHELTER SECTION 2

1/4" = 1'-0"

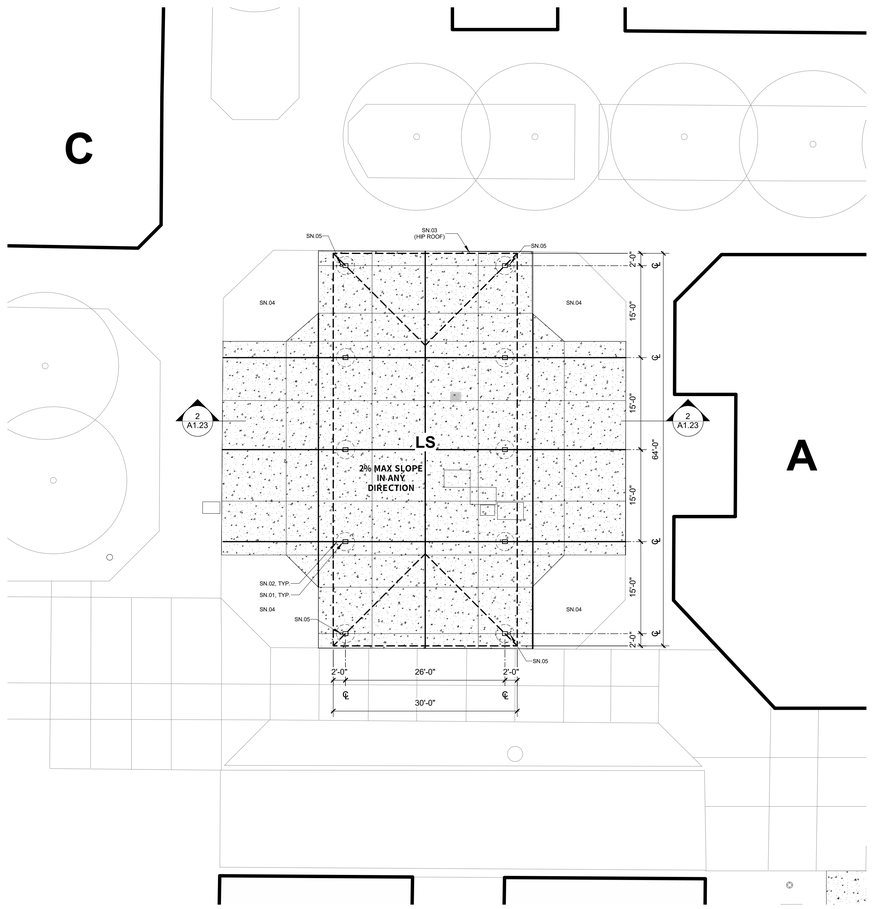

NOTE: LUNCH SHELTER COMPLIES WITH DSA IR 31-1

ENLARGED SITE PLAN - LUNCH SHELTER 1

1" = 10'-0"

LEGEND

- PROPERTY LINE
- EXISTING CHAINLINK FENCE
- EXISTING ORNAMENTAL FENCE
- X — EXISTING BUILDINGS
- X — PC LUNCH SHELTER
- EXPANSION JOINT
- EXISTING BUILDINGS
- CONTROL JOINT
- X — EXISTING BUILDINGS

EXTERIOR COLOR SCHEDULE

	MATERIAL	COLOR
M1	METAL	METAL FINISH COLOR 1 (1)
M2	METAL	METAL FINISH COLOR 2 (1)
M3	METAL	METAL PREFINISH COLOR (1) (2)
M4	METAL	METAL PREFINISH COLOR (1) (4)

(1) CUSTOM COLORS TO BE SUBMITTED PER SPECIFICATIONS.

(2) CLEAN, PREP AND PAINT ALL SURFACES NOT PREFINISHED.

SHEET NOTES

SN.01 HSS COLUMN
SN.02 DRILLED PIER FOOTING
SN.03 ROOF OVERHANG ABOVE
SN.04 PTOTECT (E) LANDSCPAING TO REMAIN WITH FINISHED LAYOUT. RECONFIGURE IRRIGATION AND CONTROLS AS REQUIRED TO PROVIDE A WORKING SYSTEM
SN.05 3" DIAMETER SCHEDULE 40 STEEL DOWNSPOUT
SN.06 PREFINISHED GUTTER
SN.07 PAINT DECK UNDERSIDE
SN.08 STANDING SEAM ROOF

AGENCY APPROVAL:

IDENTIFICATION STAMP
DIV. OF THE STATE ARCHITECT
APP: 02-122003 INC:
REVIEWED FOR
SS ☑ FLS ☑ ACS ☑
DATE: 12/05/2023

LODI USD

HMC Architects

R221551X00

2101 CAPITOL AVENUE, SUITE 100,
SACRAMENTO, CA, 95816
916 368 7990 / www.hmcarchitects.com

LICENSED ARCHITECT JEFFREY ALAN HARP C-14248 5/31/25 RENEWAL DATE STATE OF CALIFORNIA

ISSUE

Δ	DESCRIPTION	DATE

KEYNOTES

NOTES

FACILITY:
SUTHERLAND ELEMENTARY SCHOOL
550 SPRING RIVER CIRCLE
STOCKTON, CA 95210

PROJECT:
LODI UNIFIED SCHOOL DISTRICT LUNCH SHELTERS - SUTHERLAND ELEMENTARY SCHOOL

SHEET NAME:
ENLARGED PLAN AND SECTION

CONSTRUCTION DOCUMENTS

DATE: 12/05/23 | CLIENT PROJ NO: R221551X00

SHEET:

A1.23

Autodesk Docs://R221551X00 Lodi USD Lunch Shelters/R221551X00-A-SUTHERLAND-ES-LUNCH-SHELTER.rvt
11/27/2023 9:20:49 PM

PLEASE RECYCLE

THE LINE SHOWN ABOVE IS EXACTLY 1" WHEN PLOTTED AT THIS SHEETS ORIGINAL PAGE SIZE

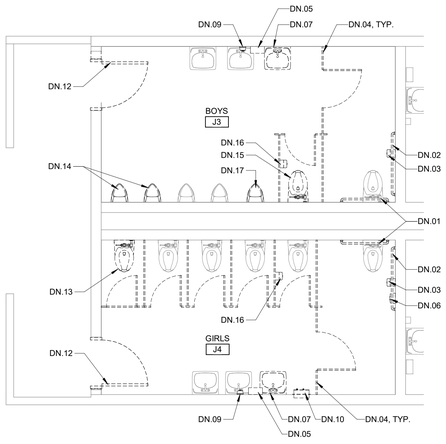

TN

UNIT J BOYS/GIRLS - TOILET ROOM DEMOLITION PLAN 04

1/4" = 1'-0"

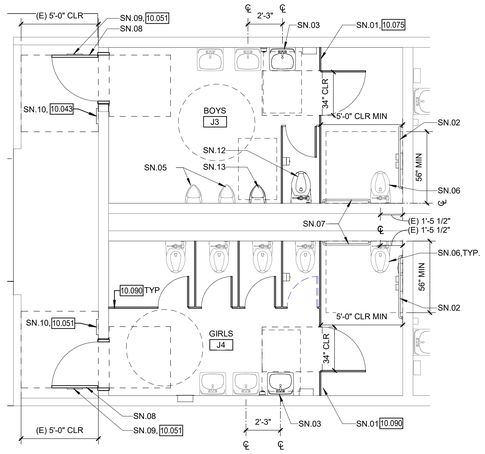

DOOR HARDWARE

GROUP NO. 1 - MULTI OCCUPANCY RESTROOM

3	EA	HINGE	5BB1HW 4.5 X 4.5 NRP	630	IVE
1	EA	VANDL CLASSROOM LOCK	ND94PR6D RHO	626	SCH
1	EA	LOCK GUARD	LG1	630	IVE
1	EA	SURFACE CLOSER	4040XP SHCUSH	689	LCN
1	EA	KICK PLATE	8400 10" X 2" LDW B-CS	630	IVE
1	EA	GASKETING	188SBK PSA	BK	ZER
1	EA	DOOR SWEEP	39A	A	ZER
1	EA	THRESHOLD	PER DETAIL 10/A10.2	A	ZER

TN

UNIT J BOYS/GIRLS - TOILET ROOM IMPROVEMENT PLAN 02

1/4" = 1'-0"

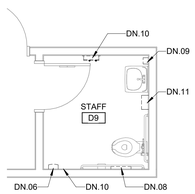

TN

UNIT D - STAFF TOILET ROOM PLAN 03

1/4" = 1'-0"

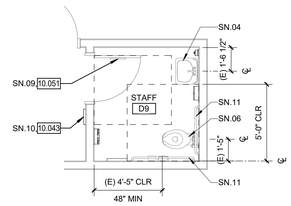

TN

UNIT D - STAFF TOILET ROOM IMPROVEMENT PLAN 01

1/4" = 1'-0"

LEGEND

EXISTING WALL TO REMAIN

CONSECUTIVE NUMBERING CONVENTION FOR INTERIOR ELEVATIONS AND ROOM FINISHES.

REMOVE (E) DOOR, HARDWARE AND FRAME U.O.N.

30" x 48" CLEAR FLOOR SPACE

60" CLEAR FLOOR SPACE

GENERAL NOTES

1. TYPICAL MOUNTING HEIGHTS AND DETAILS APPLY TO ENTIRE PROJECT, WHETHER REFERENCED OR NOT, UNLESS OTHERWISE NOTED.
2. ALL DISABLED ACCESSIBLE DIMENSIONS, ARE MAXIMUM DIMENSIONS UNLESS OTHERWISE NOTED.
3. REMOVE OR MODIFY ALL ITEMS AS REQUIRED TO INSTALL NEW WORK, WHETHER OR NOT SPECIFICALLY SHOWN TO BE REMOVED OR MODIFIED.
4. WHERE DRAINS, PIPING AND OTHER MATERIALS AND EQUIPMENT ARE REMOVED FROM THE SLAB, IT SHALL BE BACKFILLED, FINISHED FLUSHED WITH ADJACENT SURFACES AND PREPARED TO RECEIVE THE NEW FINISH.
5. CUT AND PATCH EXISTING SLAB AS REQUIRED FOR NEW PLUMBING WORK.
6. DEMO AND REPAIR WALL FINISH AS NECESSARY TO PERFORM FIXTURE AND EQUIPMENT WORK AS NOTED. ADJACENT FINISHES TO BE VERIFIED BY CONTRACTOR
7. EQUIPMENT/FIXTURES NOTED AS "SALVAGED FOR REINSTALLATION" WILL BE REMOVED AND STORED BY THE CONTRACTOR PRIOR TO START OF DEMOLITION. THESE EQUIPMENT/FIXTURES SHALL BE REINSTALLED BY THE CONTRACTOR UNDER THIS CONTRACT.

DEMOLITION NOTES

DN.01 REMOVE (E) 36" GRAB BAR AND SALVAGE FOR REINSTILLATION
DN.02 REMOVE (E) 48" GRAB BAR AND SALVAGE FOR REINSTALLATION
DN.03 REMOVE (E) TOILET PAPER DISPENSER
DN.04 REMOVE (E) TOILET PARTITION
DN.05 REMOVE (E) PAPER TOWEL DISPENSER AND SALVAGE FOR REINSTALLATION
DN.06 REMOVE (E) SANITARY NAPKIN DISPOSAL AND SALVAGE FOR REINSTALLATION
DN.07 REMOVE (E) LAVATORY AND SALVAGE FOR REINSTALLATION
DN.08 REMOVE (E) TOILET SEAT COVER DISPENSER AND SALVAGE FOR REINSTALLATION
DN.09 REMOVE (E) SOAP DISPENSER AND SALVAGE FOR REINSTALLATION
DN.10 REMOVE (E) SANITARY NAPKIN DISPENSER AND RETURN TO THE DISTRICT
DN.11 REMOVE (E) PAPER TOWEL DISPENSER AND RETURN TO THE DISTRICT
DN.12 REMOVE (E) DOOR. PREP (E) FRAME FOR NEW DOOR
DN.13 REMOVE (E) WATER CLOSET. CAP PIPING AS NECESSARY AND REPAIR WALL TO MATCH (E) FINISH
DN.14 REMOVE (E) URINAL. CAP PIPING AS NECESSARY AND REPAIR WALL TO MATCH (E) FINISH
DN.15 REMOVE (E) WATER CLOSET AND SALVAGE FOR REINSTALLATION
DN.16 REMOVE (E) TOILET PAPER DISPENSER AND SALVAGE FOR REINSTALLATION
DN.17 REMOVE (E) URINAL AND SALVAGE FOR REINSTALLATION

SHEET NOTES

SN.01 INSTALL ALL NEW TOILET PARTITION AS NECESSARY FOR REQUIRED GRAB BAR CLEARANCE. PROVIDE NEW OVERHEAD BRACE AND ACCESSORIES AS REQUIRED
SN.02 REINSTALL SALVAGED 48" GRAB BAR TO COMPLY WITH A10.2 (ELEMENTARY) PER DETAIL 7/A10.2
SN.03 REINSTALL SALVAGED LAVATORY TO COMPLY WITH A10.2 (ELEMENTARY). WRAP EXPOSED PIPE W/INSULATION. RECONNECT TO (E) WATER LINE, WASTE LINE AND VENT
SN.04 (E) LAVATORY TO REMAIN
SN.05 (E) URINAL TO REMAIN
SN.06 (E) WATER CLOSET TO REMAIN
SN.07 INSTALL 36" GRAB BAR TO COMPLY WITH A10.2 ELEMENTARY. MAINTAIN 1 1/2" CLEARANCE ALL AROUND GRAB BAR.
PROVIDE BLOCKING PER DETAIL 7/A10.2
CONTRACTORS OPTION, STAINLESS STEEL PLATE GRAB BAR PER DETAIL 8/A10.2
REMOVE AND REPLACE FRP FINISH IN FULL SHEET AS REQUIRED
SN.08 INSTALL NEW HOLLOW METAL DOOR WITH HEAVY DUTY LOUVER AT BOTTOM IN (E) FRAME PER NEW CONFIGURATION. PROVIDE NEW DOOR HARDWARE. LOUVER SIZE TO MATCH (E) LOUVER.
SN.09 INSTALL NEW DOOR SIGNAGE PER A10.2
SN.10 INSTALL NEW TOILET ROOM ID SIGN PER A10.2
SN.11 (E) REAR 36" GRAB BAR AND 48" SIDE GRAB BAR TO REMAIN
SN.12 REINSTALL SALVAGED WATER CLOSET PER A10.2 STANDARD (ELEMENTARY) AND ADJUST LOCATION AS NECESSARY FOR NEW PARTITION
SN.13 REINSTALL SALVAGED URINAL TO COMPLY W/A10.2 (ELEMENTARY). RECONNECT TO (E) WATER LINE, WASTE LINE AND VENT.

KEY NOTES

10.043 SIGNAGE: TOILET ROOM IDENTIFICATION
10.051 SIGNAGE: TOILET ROOM DOOR SYMBOL
10.075 PLASTIC TOILET COMPARTMENT
10.090 COMPOSITE TOILET COMPARTMENT

AGENCY APPROVAL:

LODI USD

HMC Architects

R221551X00

2101 CAPITOL AVENUE, SUITE 100,
SACRAMENTO, CA, 95816
916 368 7990 / www.hmcarchitects.com

LICENSED ARCHITECT JEFFREY ALAN HEPP C-14648 5/31/25 RENEWAL DATE STATE OF CALIFORNIA

ISSUE

Δ	DESCRIPTION	DATE
0	Revision 1	2/24/24

KEY PLAN

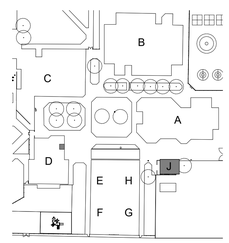

FACILITY:

SUTHERLAND ELEMENTARY SCHOOL
550 SPRING RIVER CIRCLE
STOCKTON, CA 95210

PROJECT:

LODI UNIFIED SCHOOL DISTRICT LUNCH SHELTERS - SUTHERLAND ELEMENTARY SCHOOL

SHEET NAME:

ENLARGED TOILET ROOM PLANS

CONSTRUCTION DOCUMENTS

DATE: **08/07/2023** CLIENT PROJ NO: **R221551X00**

SHEET:

A2.11

Autodesk Docs://R221551X00 Lodi USD Lunch Shelters/R221551X00-A-SUTHERLAND-ES-LUNCH-SHELTER.rvt
2/14/2024 5:19:19 PM

PLEASE RECYCLE

THE LINE SHOWN ABOVE IS EXACTLY 1" WHEN PLOTTED ON THIS SHEET'S ORIGINAL PAGE SIZE

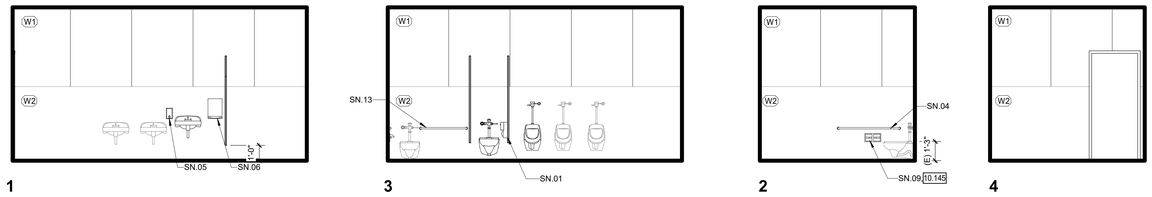

UNIT J - BOYS J3 | 03

1/4" = 1'-0"

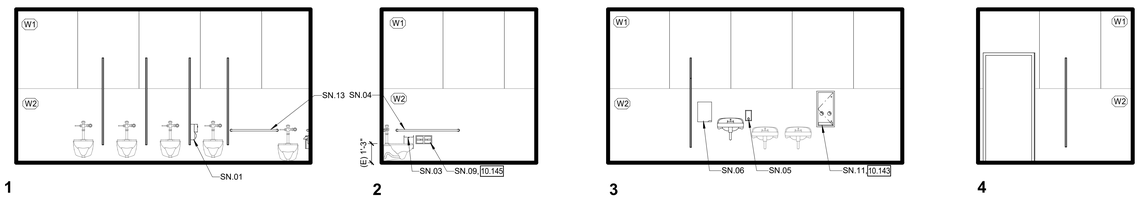

UNIT J - GIRLS J4 | 1

1/4" = 1'-0"

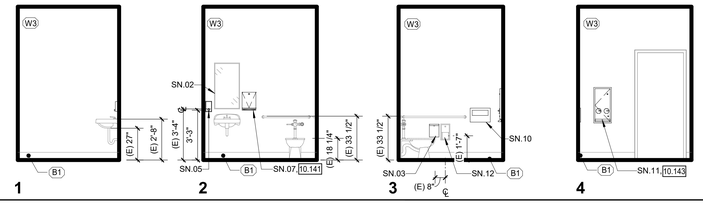

UNIT D - STAFF TOILET ROOM | 01

1/4" = 1'-0"

GENERAL NOTES

1. TYPICAL MOUNTING HEIGHTS AND DETAILS APPLY TO ENTIRE PROJECT, WHETHER REFERENCED OR NOT, UNLESS OTHERWISE NOTED.
2. ALL DISABLED ACCESSIBLE DIMENSIONS, ARE MAXIMUM DIMENSIONS UNLESS OTHERWISE NOTED.
3. REMOVE OR MODIFY ALL ITEMS AS REQUIRED TO INSTALL NEW WORK, WHETHER OR NOT SPECIFICALLY SHOWN TO BE REMOVED OR MODIFIED.
4. WHERE DRAINS, PIPING AND OTHER MATERIALS AND EQUIPMENT ARE REMOVED FROM THE SLAB, IT SHALL BE BACKFILLED, FINISHED FLUSHED WITH ADJACENT SURFACES AND PREPARED TO RECEIVE THE NEW FINISH.
5. CUT AND PATCH EXISTING SLAB AS REQUIRED FOR NEW PLUMBING WORK.
6. DEMO AND REPAIR WALL FINISH AS NECESSARY TO PERFORM FIXTURE AND EQUIPMENT WORK AS NOTED. ADJACENT FINISHES TO BE VERIFIED BY CONTRACTOR
7. EQUIPMENT/FIXTURES NOTED AS "SALVAGED FOR REINSTALLATION" WILL BE REMOVED AND STORED BY THE CONTRACTOR PRIOR TO START OF DEMOLITION. THESE EQUIPMENT/FIXTURES SHALL BE REINSTALLED BY THE CONTRACTOR UNDER THIS CONTRACT.

SHEET NOTES

SN.01 REINSTALL SALVAGED TOILET PAPER DISPENSER PER A10.2 STANDARD (ELEMENTARY)
SN.02 (E) MIRROR TO REMAIN
SN.03 REINSTALL SALVAGED SANITARY NAPKIN DISPOSAL TO COMPLY WITH A10.2 (ELEMENTARY) FOR GIRLS AND (ADULT) FOR STAFF
SN.04 REINSTALL SALVAGED 48" GRAB BAR TO COMPLY WITH A10.2 (ELEMENTARY) FOR BOYS/GIRLS
SN.05 REINSTALL SALVAGED SOAP DISPENSER TO COMPLY WITH A10.2 (ELEMENTARY) FOR BOYS/GIRLS AND (ADULT) FOR STAFF
SN.06 REINSTALL SALVAGED PAPER TOWEL DISPENSER TO COMPLY WITH A10.2 (ELEMENTARY)
SN.07 INSTALL PAPER TOWEL DISPENSER TO COMPLY WITH A10.2
SN.08 NOT USED
SN.09 INSTALL TOILET PAPER DISPENSER TO COMPLY WITH A10.2 (ELEMENTARY)
SN.10 REINSTALL SALVAGED TOILET SEAT COVER DISPENSER TO COMPLY WITH A10.2 (ADULT)
SN.11 INSTALL SANITARY NAPKIN DISPENSER TO COMPLY WITH A10.2
SN.12 (E) TOILET PAPER DISPENSER TO REMAIN
SN.13 INSTALL 36" GRAB BAR TO COMPLY WITH A10.2 ELEMENTARY. MAINTAIN 1 1/2" CLEARANCE ALL AROUND GRAB BAR.
PROVIDE BLOCKING PER DETAIL 7/A10.2

CONTRACTORS OPTION, STAINLESS STEEL PLATE GRAB BAR PER DETAIL 8/A10.2

REMOVE AND REPLACE FRP FINISH IN FULL SHEET AS REQUIRED

KEY NOTES

10.141 TOILET ACCESSORY: PAPER TOWEL DISPENSER
10.143 TOILET ACCESSORY: SANITARY NAPKIN/TAMPON DISPENSER
10.145 TOILET ACCESSORY: TOILET PAPER DISPENSER

FINISHES

W1 **WALL**
W1 (E) FIBER REINFORCED LAMINATE PANELS
W2 (E) EPOXY AND BASE
W3 (E) GYPSUM WALLBOARD

B1 **BASE**
B1 (E) 6" INTEGRAL COVED SHEET VINYL

AGENCY APPROVAL:

IDENTIFICATION STAMP
DIV. OF THE STATE ARCHITECT
APP: 02-122003 INC:
REVIEWED FOR
SS ☑ FLS ☑ ACS ☑
DATE: 12/05/2023

LODI USD

HMC Architects
R221551X00
2101 CAPITOL AVENUE, SUITE 100,
SACRAMENTO, CA, 95816
916 368 7990 / www.hmcarchitects.com

LICENSED ARCHITECT JEFFREY ALAN FRAY C-14648 5/31/25 RENEWAL DATE STATE OF CALIFORNIA

ISSUE

Δ	DESCRIPTION	DATE

FACILITY:
SUTHERLAND ELEMENTARY SCHOOL
550 SPRING RIVER CIRCLE
STOCKTON, CA 95210

PROJECT:
LODI UNIFIED SCHOOL DISTRICT LUNCH SHELTERS - SUTHERLAND ELEMENTARY SCHOOL

SHEET NAME:
INTERIOR ELEVATIONS

CONSTRUCTION DOCUMENTS

DATE: **12/05/23** | CLIENT PROJ NO: **R221551X00**

SHEET:

A8.11

Autodesk Docs://R221551X00 Lodi USD Lunch Shelters/R221551X00-A-SUTHERLAND-ES-LUNCH-SHELTER.rvt
11/28/2023 8:42:53 PM

PLEASE RECYCLE

THE LINE SHOWN ABOVE IS 1" WHEN PRINTED ON THIS SHEET'S ORIGINAL PAGE SIZE

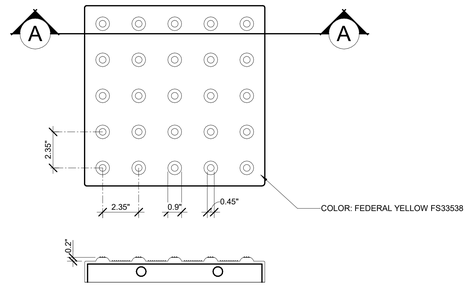

TYPICAL SECTION A-A

7 TRUNCATED DOMES
3" = 1'-0"

32220

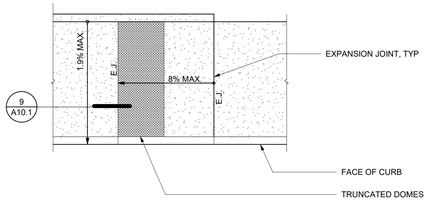

6 CURB RAMP
1/4" = 1'-0"

32203

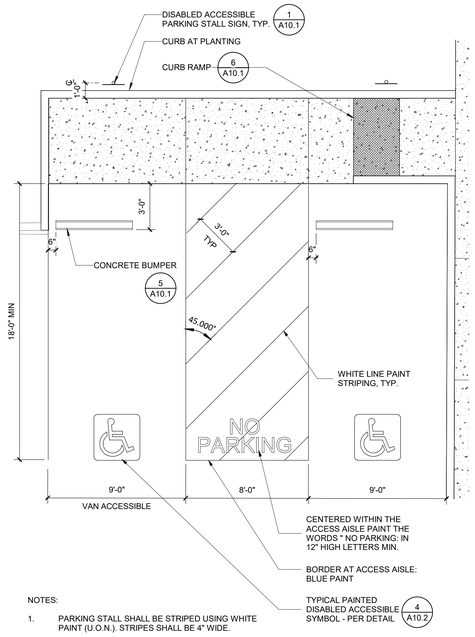

NOTES:

1. PARKING STALL SHALL BE STRIPED USING WHITE PAINT (U.O.N.). STRIPES SHALL BE 4" WIDE.

3 ENLARGED PARKING PLAN
1/4" = 1'-0"

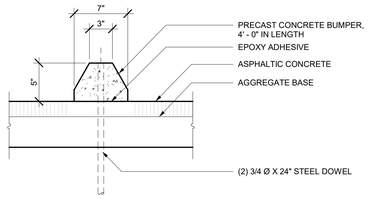

5 PRECAST CONCRETE BUMPER
1 1/2" = 1'-0"

32100

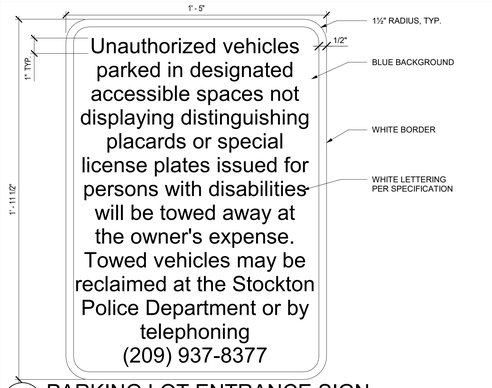

2 PARKING LOT ENTRANCE SIGN
3" = 1'-0"

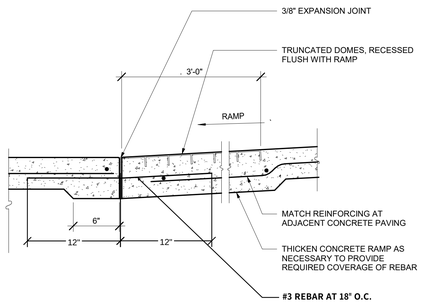

9 BLENDED TRANSITION
1 1/2" = 1'-0"

32212

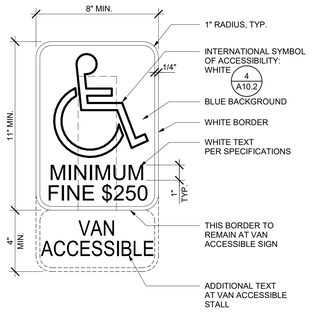

DISABLED ACCESSIBLE PARKING STALL

4 PARKING SIGNAGE
3" = 1'-0"

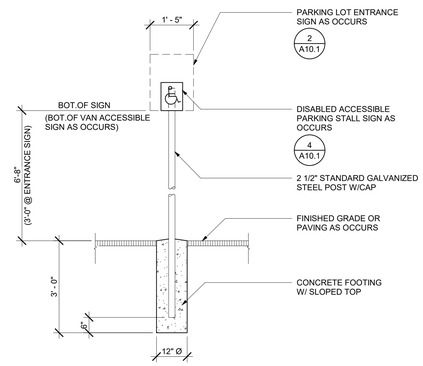

1 METAL SIGNS
1/2" = 1'-0"

10100

AGENCY APPROVAL:

IDENTIFICATION STAMP
DIV. OF THE STATE ARCHITECT
APP: 02-122003 INC:
REVIEWED FOR
SS ☑ FLS ☑ ACS ☑
DATE: 12/05/2023

LODI USD

HMC Architects

R221551X00

3546 CONCOURS STREET
ONTARIO, CA 91764
909 989 9979 / www.hmcarchitects.com

LICENSED ARCHITECT JEFFREY ALAN SHAPIRO C-14148 5/31/25 RENEWAL DATE STATE OF CALIFORNIA

ISSUE

Δ	DESCRIPTION	DATE

FACILITY:

SUTHERLAND ELEMENTARY SCHOOL
550 SPRING RIVER CIRCLE
STOCKTON, CA 95210

PROJECT:

LODI UNIFIED SCHOOL DISTRICT LUNCH SHELTERS - SUTHERLAND ELEMENTARY SCHOOL

SHEET NAME:

SITE DETAILS

CONSTRUCTION DOCUMENTS

DATE: **12/05/23** | CLIENT PROJ NO: **R221551X00**

SHEET:

A10.1

Autodesk Docs://R221551X00 Lodi USD Lunch Shelters/R221551X00-A-SUTHERLAND-ES-LUNCH-SHELTER.rvt
11/28/2023 6:42:53 PM

PLEASE RECYCLE

THE LINE SHOWN ABOVE IS EXACTLY ONE INCH LONG AT THIS SHEETS ORIGINAL PAGE SIZE

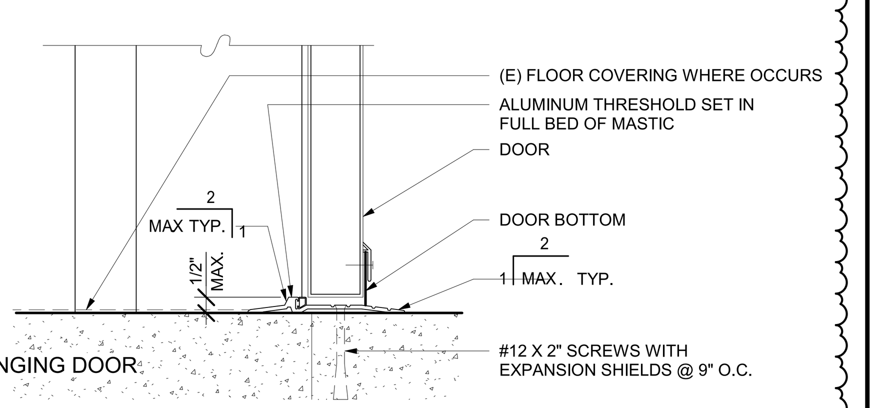

10 EXTERIOR DOOR THRESHOLD
3" = 1'-0"
08030

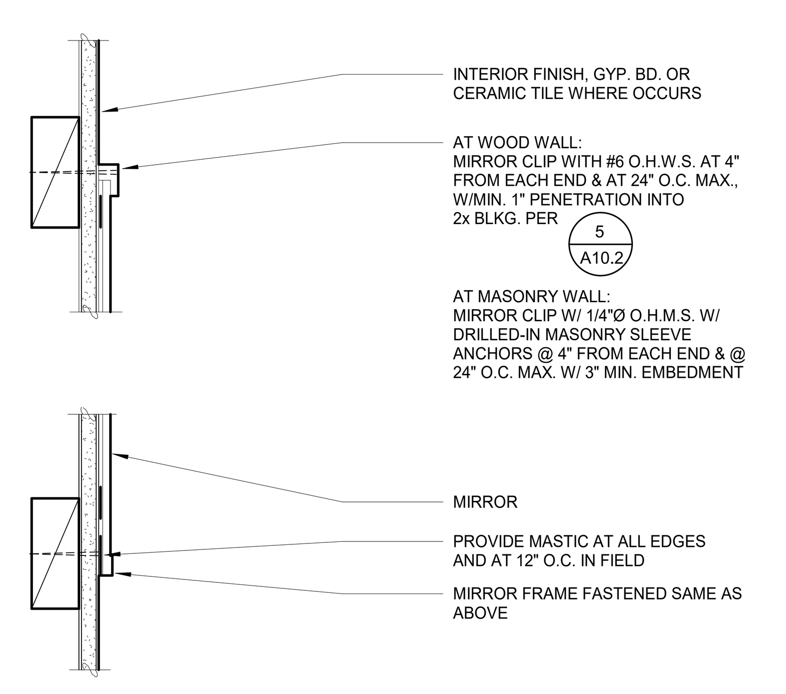

9 MIRROR ATTACHMENT
3" = 1'-0"

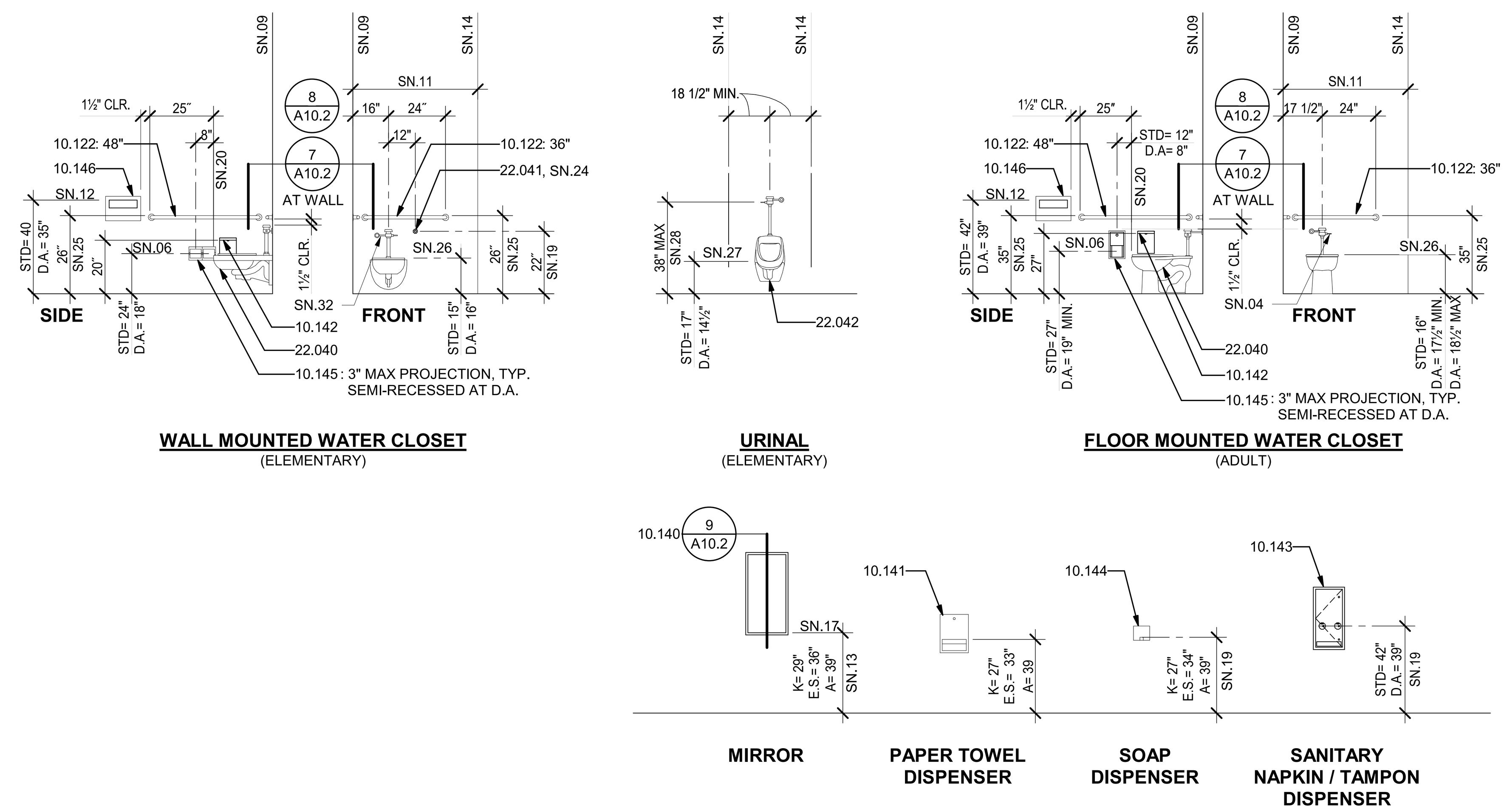

ACCESSORY HEIGHTS

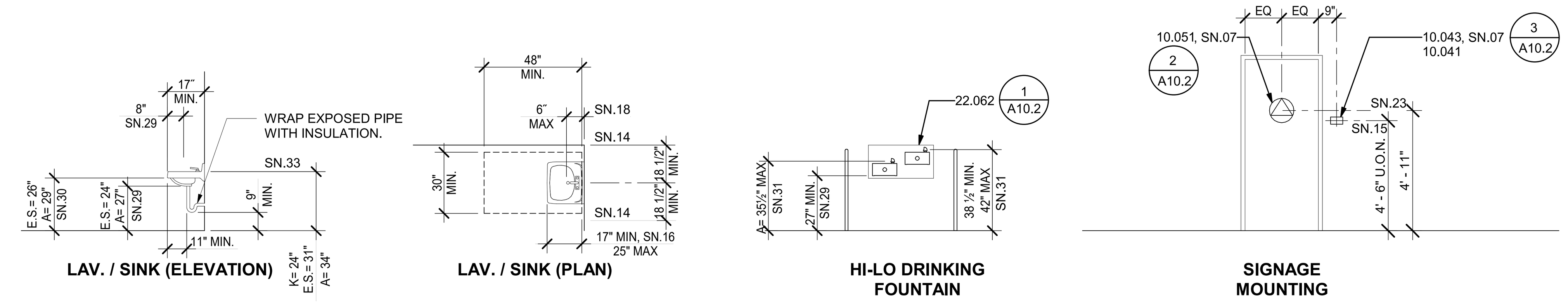

FIXTURE AND FURNITURE EQUIPMENT HEIGHTS

6 TYPICAL MOUNTING HEIGHTS AND DETAILS
1/4" = 1'-0"

LEGEND

A ADULT / STAFF
E.S. ELEMENTARY SCHOOL
K KINDERGARTEN

GENERAL NOTES

1. TYPICAL MOUNTING HEIGHTS AND DETAILS APPLY TO ENTIRE PROJECT, WHETHER REFERENCED OR NOT, UNLESS OTHERWISE NOTED.
2. ALL DISABLED ACCESSIBLE DIMENSIONS, ARE MAXIMUM DIMENSIONS UNLESS OTHERWISE NOTED.
3. HEIGHTS ARE MEASURED FROM FINISH FLOOR, UNLESS OTHERWISE NOTED.

SHEET NOTES

SN.01	TOP OF SHELF
SN.02	MIDDLE SHELF FIXED
SN.03	PROVIDE 2X BLOCKING PER DETAIL 5/A10.2
SN.04	AT ACCESSIBLE WATER CLOSETS, FLUSH CONTROL HANDLE SHALL BE MOUNTED ON THE WIDE SIDE OF THE TOILET ENCLOSURE
SN.05	TO OPERATOR OR PUSH BUTTON
SN.06	DIMENSION TO CENTERLINE OF TOILET PAPER ROLL POSITION
SN.07	PROVIDE AT ALL TOILET ROOM DOORS
SN.08	AT DISABLED ACCESSIBLE CASEWORK
SN.09	TO FACE OF FINISH
SN.10	FOR SIGNS MOUNTED BACK-TO-BACK ON WINDOW GLAZING, SEE SPECIFICATIONS FOR REQUIREMENTS.
SN.11	62" CLR MIN. TO FINISH WALL/ PARTITION/ FIXTURE
SN.12	TOP OF OPENING
SN.13	34" MAX. IF MIRROR IS NOT MOUNTED OVER A LAV. OR COUNTER; TOP OF MIRROR 74" MIN. FOR HIGH SCHOOL & ADULTS.
SN.14	FACE OF OBJECTS OR WALLS
SN.15	CENTERLINE OF SIGN.
SN.16	19" MINIMUM AT SINK
SN.17	BOTTOM EDGE OF REFLECTIVE SURFACE
SN.18	FROM FARTHEST DEPTH OF THE CLEAR FLOOR SPACE TO FACE OF PLUMBING AND OTHER OBSTACLES
SN.19	TO CENTERLINE CONTROL.
SN.20	FRONT EDGE OF WATER CLOSET.
SN.21	AT CHILDREN'S DRINKING FOUNTAIN
SN.22	WHEELCHAIR, CLEAR FLOOR SPACE: 30"X48"
SN.23	CENTERLINE OF SYMBOL.
SN.24	WHERE SPECIFIED (ELEMENTARY / KINDERGARTEN)
SN.25	TOP OF GRAB BAR
SN.26	TOP OF SEAT
SN.27	LIP HEIGHT
SN.28	FLUSH HANDLE HEIGHT
SN.29	MINIMUM KNEE CLEARANCE
SN.30	MINIMUM APRON CLEARANCE
SN.31	BUBBLER HEIGHT
SN.32	NO TOILET MOUNTED FLUSH VALVE AT CHILDREN'S ACCESSIBLE WATER CLOSET
SN.33	MAXIMUM HEIGHT
SN.34	FOR BOTTLE FILL STATION AT DRINKING FOUNTAIN
SN.35	TO TOP OF SINK RIM; WHERE OCCURS.
SN.36	ACTIVATION SENSOR.

KEYNOTES

10.041	SIGNAGE: ROOM IDENTIFICATION
10.043	SIGNAGE: TOILET ROOM IDENTIFICATION
10.051	SIGNAGE: TOILET ROOM DOOR SYMBOL
10.122	TOILET ACCESSORY: GRAB BAR
10.140	TOILET ACCESSORY: MIRROR
10.141	TOILET ACCESSORY: PAPER TOWEL DISPENSER
10.142	TOILET ACCESSORY: SANITARY NAPKIN DISPOSAL
10.143	TOILET ACCESSORY: SANITARY NAPKIN/TAMPON DISPENSER
10.144	TOILET ACCESSORY: SOAP DISPENSER
10.145	TOILET ACCESSORY: TOILET PAPER DISPENSER
10.146	TOILET ACCESSORY: TOILET SEAT COVER DISPENSER
22.040	WATER CLOSET
22.041	MANUALLY OPERATED CONCEALED FLUSH VALVE
22.042	URINAL
22.062	BOTTLE FILL STATION

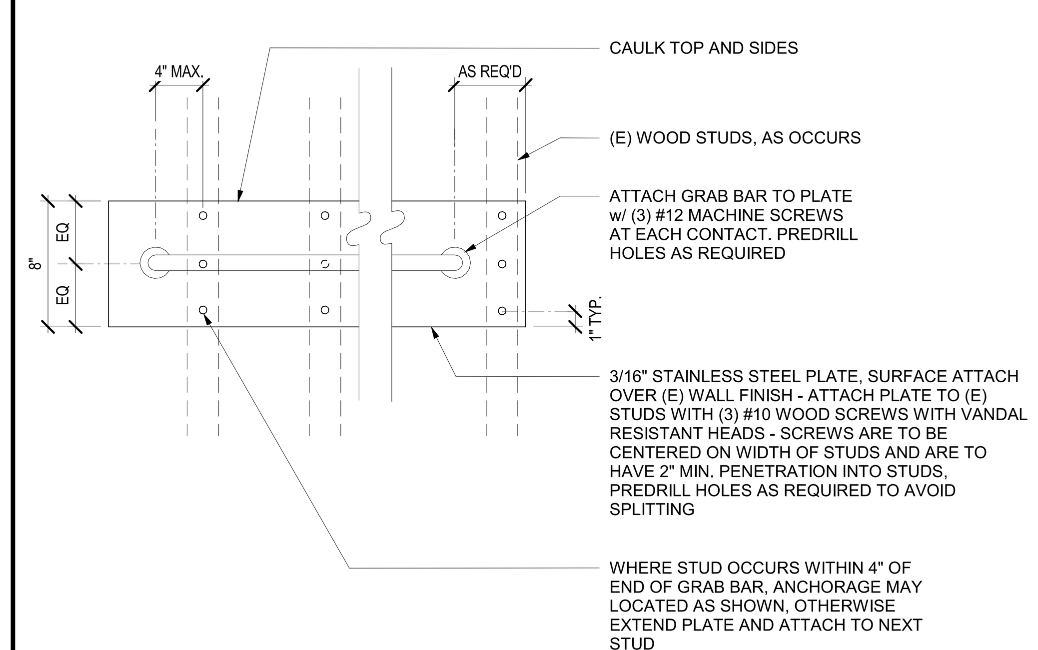

NOTES:
- EASE ALL EXPOSED STAINLESS STEEL EDGES
- (E) FINISH THICKNESS = 1" MAX.

8 GRAB BAR - STAINLESS STEEL PLATE
1 1/2" = 1'-0"

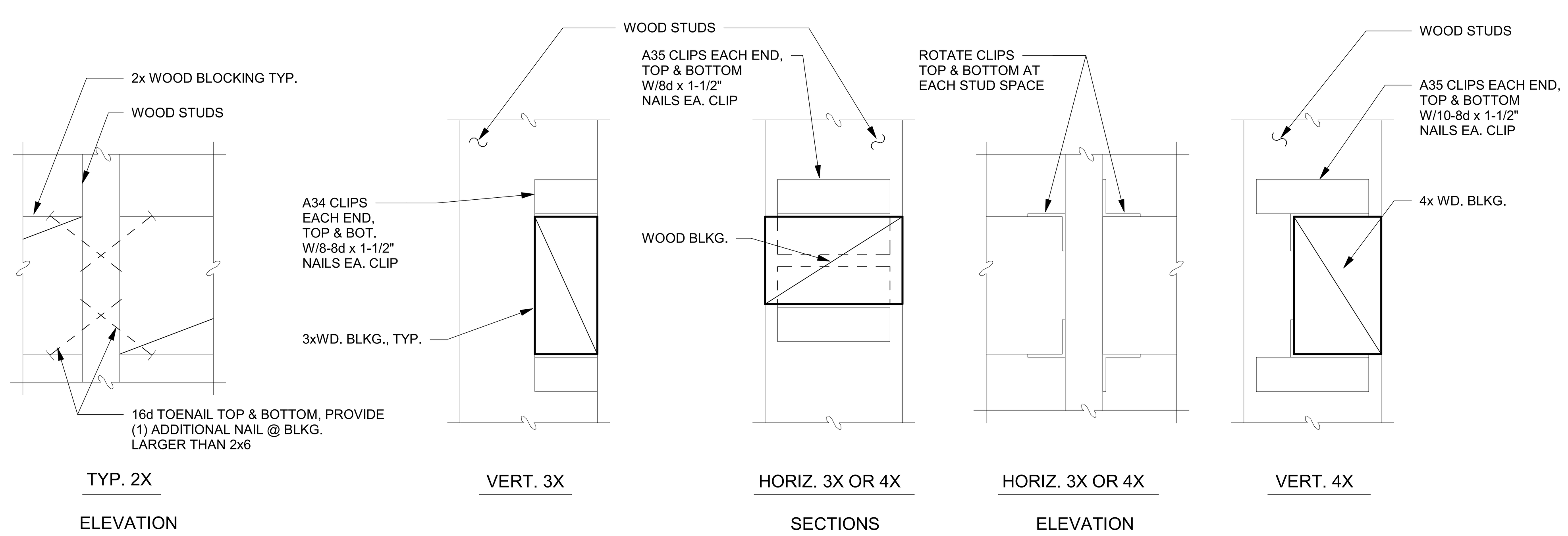

5 TYPICAL WOOD BLOCKING
3" = 1'-0"

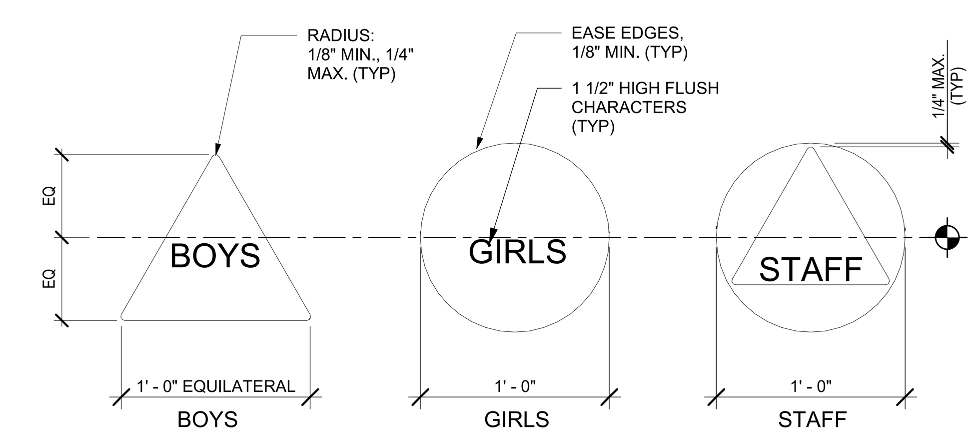

NOTE:

1. TEXT ON DOOR SYMBOL TO BE AS INDICATED ON DRAWINGS

2 TOILET ROOM DOOR SYMBOLS
1 1/2" = 1'-0"

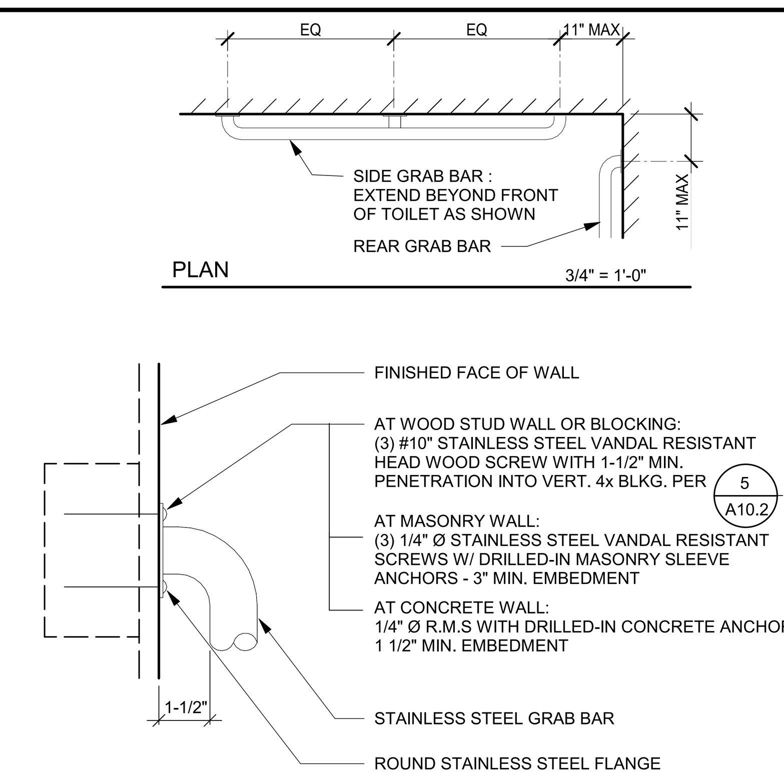

7 TYPICAL GRAB BAR AT WALL
3" = 1'-0"

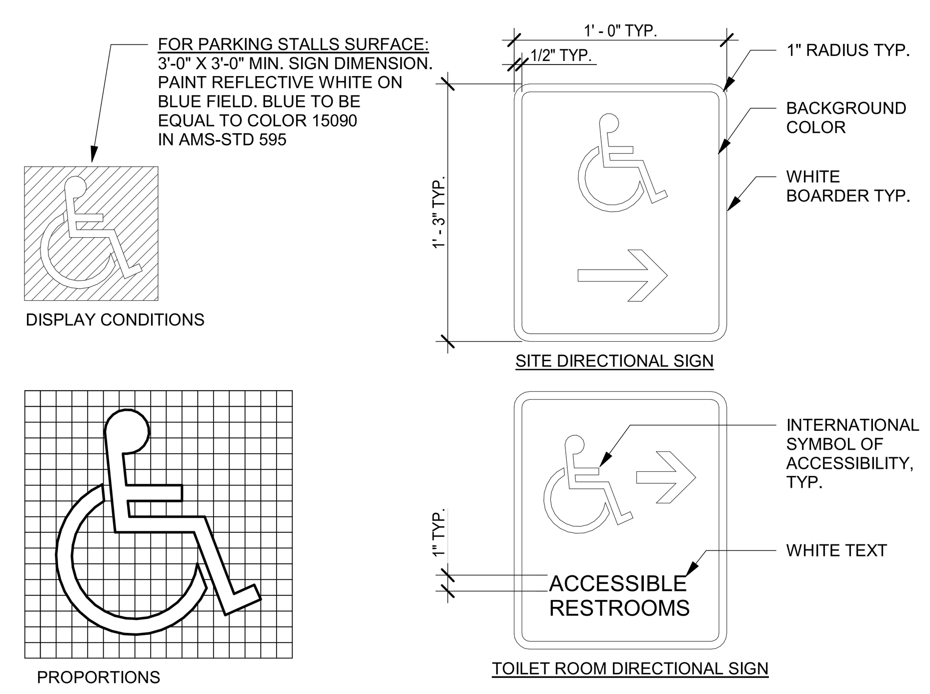

4 SYMBOL OF ACCESSIBILITY
NOT TO SCALE

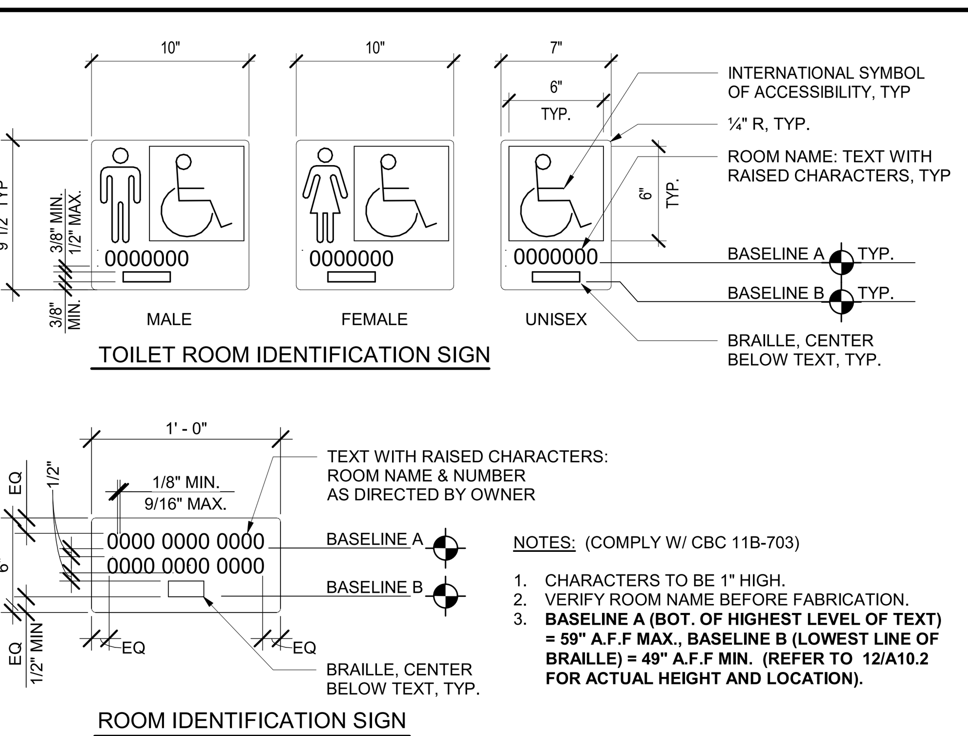

NOTES: (COMPLY W/ CBC 11B-703)

1. CHARACTERS TO BE 1" HIGH.
2. VERIFY ROOM NAME BEFORE FABRICATION.
3. **BASELINE A (BOT. OF HIGHEST LEVEL OF TEXT) = 59" A.F.F MAX., BASELINE B (LOWEST LINE OF BRAILLE) = 49" A.F.F MIN. (REFER TO 12/A10.2 FOR ACTUAL HEIGHT AND LOCATION).**

3 IDENTIFICATION SIGNS
1 1/2" = 1'-0"

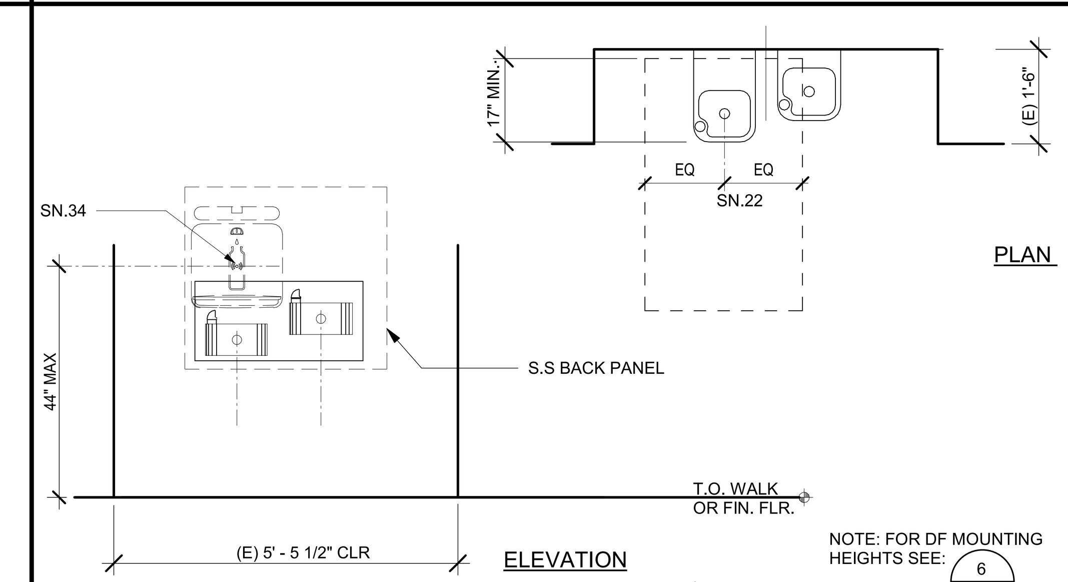

NOTE: FOR DF MOUNTING HEIGHTS SEE: 6/A10.2

PLUMBING FIXTURE SCHEDULE - BASIS OF DESIGN				UTILITY CONNECTIONS						
					WASTE		COLD WATER		HOT WATER	
SYMBOL	FIXTURE	FIXTURE MFR. AND MODEL	NOTES	VENT	BRANCH	OUTLET	BRANCH	OUTLET	BRANCH	OUTLET
DF-1 (ADA)	DRINKING FOUNTAIN DUAL HEIGHT BOTTLE FILLER	"HAWS" MODEL 1119FRP WALL MOUNT DUAL HEIGHT DRINKING FOUNTAIN, BARRIER FREE, PUSH BUTTON OPERATED BUBBLER, SAFE BUBBLER HEAD	PROVIDE MANUFACTURER'S INTERNAL SUPPORT SYSTEM. SET AT HEIGHT INDICATED ON ARCH DWGS. FAUCET OR VALVE: INTEGRAL. TRIM: INTEGRAL STRAINER AND P-TRAP	1 1/2"	2"	1 1/2"	3/4"	1/2"	-	-

1 DRINKING FOUNTAIN ALCOVE
1/2" = 1'-0"

AGENCY APPROVAL:

HMC Architects
R221551X00
3546 CONCOURS STREET
ONTARIO, CA 91764
909 989 9979 / www.hmcarchitects.com
LICENSED ARCHITECT JEFFREY ALAN GRAU C-14648 5/31/25 RENEWAL DATE STATE OF CALIFORNIA

LODI USD

ISSUE

Δ	DESCRIPTION	DATE
0	Revision 1	2/24/24

KEYNOTES

NOTES

FACILITY:
SUTHERLAND ELEMENTARY SCHOOL
550 SPRING RIVER CIRCLE
STOCKTON, CA 95210

PROJECT:
LODI UNIFIED SCHOOL DISTRICT LUNCH SHELTERS - SUTHERLAND ELEMENTARY SCHOOL

SHEET NAME:
TYPICAL MOUNTING HEIGHTS AND DETAILS

CONSTRUCTION DOCUMENTS

DATE: **12/05/23** CLIENT PROJ NO: **R221551X00**

SHEET:
A10.2

Autodesk Docs://R221551X00 Lodi USD Lunch Shelters/R221551X00-A-SUTHERLAND-ES-LUNCH-SHELTER.rvt
2/14/2024 5:19:27 PM
PLEASE RECYCLE

DESIGN VALUES

DESCRIPTION	DESIGN VALUES [1]
DEAD AND LIVE LOADS	
ROOF LIVE LOAD	20 PSF
ROOF DEAD LOAD (SUPERIMPOSED ON FRAME) [2]	LOAD SCENARIO= {1,2} DL = {3.5 PSF, 2.0 PSF}
ALLOWABLE SOIL PRESSURE [3, 5]	
SPREAD PAD	
VERTICAL BEARING: DL + Lr + SEISMIC (CONCRETE FOOTING)	1500 PSF
LATERAL COHESION: DL + Lr + SEISMIC (CONCRETE FOOTING)	130 PSF
DRILLED PIER	
SKIN FRICTION DOWN : DL + Lr + SEISMIC (CONCRETE FOOTING) PER 1810A.3.3.1.4	167 PSF
SKIN FRICTION (UPLIFT): DL + LR SEISMIC (CONCRETE FOOTING) PER 1810A.3.31.5	83 PSF
LATERAL BEARING: DL + Lr + SEISMIC (CONCRETE FOOTING) PER 1810A.3.3.2	100 PSF/FT
ROOF SNOW LOAD [6]	
GROUND SNOW LOAD, Pg	10 PSF
RISK CATEGORY	II
ROOF SNOW LOAD: [ ] FLAT, Pf OR [ ] LOW SLOPE, Pm OR [X] SLOPED, Ps	10 PSF
SNOW ROOF SLOPE FACTOR, Cs	1
SNOW EXPOSURE FACTOR, Ce	1.2
SNOW LOAD IMPORTANCE FACTOR, Is	1.0
THERMAL FACTOR, Ct	1.2
DRIFT SURCHARGE LOAD, Pd	0 PSF
DISTANCE FROM ADJACENT STRUCTURE, Pg = 0 PSF	4 IN
DISTANCE FROM ADJACENT STRUCTURE, Pg > 0 PSF	20 FT
ICE LOAD	0 PSF
FLOOD DESIGN	
FLOOD HAZARD AREA	NO
WIND DESIGN [4]	
BASIC WIND SPEED (3 SECOND GUST), Vult	110 MPH
EXPOSURE CATEGORY	C
TOPOGRAPHIC FACTOR, Kzt (1 MINIMUM)	1
INTERNAL PRESSURE COEFFICIENT, GCpi (IF APPLICABLE)	0.0
CLEAR WIND FLOW	YES
OBSTRUCTED WIND FLOW	YES
SEISMIC DESIGN [4]	
LATERAL FORCE-RESISTING SYSTEM	STEEL ORDINARY CANTILEVER COLUMN SYSTEM
ANALYSIS PROCEDURE	EQUIVALENT LATERAL FORCE PROCEDURE
SEISMIC DESIGN CATEGORY (SDC)	E
SEISMIC IMPORTANCE FACTOR, Ie	1.0
DESIGN BASE SHEAR, V	Cs x W
SEISMIC RESPONSE COEFFICIENT, Cs	LOAD SCENARIO = {1,2} Cs = {0.90,1.32}
RESPONSE MODIFICATION FACTOR, R	1.25
SITE CLASS [7]	E
REDUNDANCY FACTOR, p	1.3
MAPPED SPECTRAL RESPONSE ACCELERATION AT SHORT PERIOD, Ss - USED TO DETERMINE Cs	LOAD SCENARIO = {1,2} Ss = {1.406, 2.063}
SHORT-PERIOD SITE COEFFICIENT, Fa	1.2
DESIGN SPECTRAL RESPONSE ACCELERATION AT SHORT PERIOD, Sds - USED TO DETERMINE Cs	LOAD SCENARIO = {1,2} Sds (MAX) = {1.125, 1.650}
MAPPED SPECTRAL RESPONSE ACCELERATION AT 1 SECOND PERIOD, S1	LOAD SCENARIO = {1,2} S1 = {0.844, 1.07}
LONG-PERIOD SITE COEFFICIENT, Fv	2.0
DESIGN SPECTRAL RESPONSE ACCELERATION AT 1 SECOND PERIOD, Sd1	LOAD SCENARIO = {1,2} Sd1 = {1.125, 1.427}
HORIZONTAL OR VERTICAL IRREGULARITIES TYPE(S)	NONE

1. IF SITE-SPECIFICDESIGN CRITERIA ARE OUTSIDE THE LIMITS OF THESE PC DRAWINGS, CONTACT POLIGON ENGINEERING TO SEE IF AN ENGINEERING LETTER, SUPPLEMENTAL DRAWINGS, AND/OR CALCULATIONS COULD BE SUBMITTED FOR A SITE-SPECIFIC SOLUTION. ANY SITE- SPECIFIC DEVIATION FROM THIS PC MAY NOT BE SUBMITTING TO DSA AS AN OVER-THE-COUNTER.
2. STRUCTURE IS NOT DESIGNED TO SUPPORT SOLAR PANELS. STRUCTURE IS NOT DESIGNED TO SUPPORT SPRINKLER SYSTEMS IN LOAD SCENARIO 2 REGIONS.
3. GEOHAZARD REPORTS ARE REQUIRED IF THE AREA COVERED UNDER THE ROOF EXCEEDS 4000 SQ FT OR IS LOCATED WITHIN STATE OR LOCAL GEOLOGIC HAZARD ZONE. VERIFY SUBMITTAL AND APPROVAL OF A GEOHAZARD REPORT BY CGS PRIOR TO DSA SITE APPLICATION.
4. STRUCTURAL SEPARATION BETWEEN ADJACENT STRUCTURES: RAM 20= 5.0", RAM 30= 3.0"
   STRUCTURAL SEPARATION BETWEEN EXISTING STRUCTURES: RAM 20= 5.5", RAM 30= 4.0"
5. WHEN PLACING MULTIPLE CANOPIES WITH PIER FOOTINGS ADJACENT TO ONE ANOTHER, THE DESIGN MAY REQUIRE AN ANALYSIS OF GROUP EFFECTS ON THE FOUNDATIONS. THE MINIMUM CLEARANCE BETWEEN CENTER OF PIERS IS EIGHT TIMES PIER DIAMETER WITHOUT AN ACCOMPANYING ENGINEERING LETTER
6. SITE APPLICATION DESIGN PROFESSIONAL AND DSA REVIEWER SHALL VERIFY THE STRUCTURE TO BE LOCATED AT LEAST 20 FEET FROM ANY HIGHER ADJACENT STRUCTURE IF GROUND SNOW IS GREATER THAN ZERO.
7. DESIGN COMPLIES WITH THE CONDITIONS OF EXCEPTION 1 OF ASCE 7-16 SECTION 11.4.8, ITEM 2.
8. APPROVED FIRE APPARATUS ACCESS ROADS SHALL EXTEND TO WITHIN 150 FEET OF ALL PORTIONS OF THE PERIMETER OF THE STRUCTURE PER CFC 503.1.1.

ARCHITECTURAL REQUIREMENTS:

DESCRIPTION	DESIGN VALUES
TYPE OF CONSTRUCTION	II B
NUMBER OF STORIES	1
FIRE SPRINKLER SYSTEM	NOT BY POLIGON

RELATED BUILDING CODES AND STANDARDS:

TITLE 24 CODES:

2022 California Administrative Code (CAC)..........................(Part 1, Title 24, CCR)
2022 California Building Code (CBC), Volumes 1 and 2 (Part 2, Title 24, CCR)
(2021 International Building Code with 2022 California amendments)
2022 California Electrical Code ....(Part 3, Title 24, CCR)
(2020 National Electrical Code with 2022 California amendments)
2022 California Mechanical Code (CMC) ....(Part 4, Title 24, CCR)
(2021 Uniform Mechanical Code with 2022 California amendments)
2022 California Plumbing Code (CPC) ....(Part 5, Title 24, CCR)
(2021 Uniform Plumbing Code with 2022 California amendments)
2022 California Energy Code ....(Part 6, Title 24, CCR)
2022 California Fire Code (CFC) ....(Part 9, Title 24, CCR)
(2021 International Fire Code with 2022 California Amendments)
2022 California Existing Building Code (CEBC)......................(Part 10, Title 24, CCR)
2022 California Green Building Standards Code...................(Part 11, Title 24, CCR)
2022 California Referenced Standards Code .... (Part 12, Title 24, CCR)
Title 19 CCR, Public Safety, State Marshal Regulations

NFPA 13 - 2016
NFPA 72 - 2016

REFERENCE CODE SECTIONS FOR APPLICABLE STANDARDS:

2022 CBC, CHAPTER **35**
2022 CFC, CHAPTER **80**

SCOPE OF WORK NARRATIVE:

THESE DRAWINGS ILLUSTRATE THE FABRICATION AND INSTALLATION REQUIREMENTS FOR A FREE-STANDING PREFABRICATED STEEL SHADE STRUCTURE. THE ENTIRE STRUCTURAL SYSTEM IS COMPRISED OF TUBULAR STEEL MEMBERS SUPPORTED ON CONCRETE FOUNDATIONS. THE FLEXIBILITY INCLUDED HEREIN ALLOWS THIS STRUCTURE TO COMPLY WITH A WIDE VARIETY OF PROJECT SITES AND LOADING REQUIREMENTS.

INSTRUCTIONS FOR ARCHITECTS PLANNING TO SUBMIT THESE PRE-CHECKED DRAWINGS TO DSA:

STEP 1 PROJECT INFORMATION

PROJECT NAME	LODI UNIFIED SCHOOL DISTRICT LUNCH SHELTERS - ANSEL ADAMS ELEMENTARY SCHOOL	
SCHOOL DISTRICT	LODI UNIFIED SCHOOL DISTRICT	
USE AND OCCUPANCY CLASSIFICATION	A-2	**(PROPOSED OCCUPANCY: A1, A2, A3, A4, A5, B, E)**
OCCUPANT LOAD FACTOR	15	**(15 SQFT/PERSON MAX; 5 SQFT/PERSON MIN FOR ANY A OCCUPANCY 20 SQFT/PERSON MAX FOR B OR E OCCUPANCY)**
TOTAL ROOF AREA	1,920	**(MAXIMUM 4500 SQFT FOR ANY A OCCUPANCY, 10,000 SQFT FOR B OCCUPANCY, AND 5000 SQFT FOR E OCCUPANCY)**
NUMBER OF OCCUPANTS	128	**(MAXIMUM 300 FOR ANY A OCCUPANCY, 500 FOR B OCCUPANCY, AND 250 FOR E OCCUPANCY)**

STEP 2 DESIGN OPTIONS

ROOF DECK	[ ] MULTI-RIB (MR)	**DEFAULT**, WEIGHT 1.2 PSF
	[X] STANDING SEAM (SS)	WEIGHT 1.8 PSF
GUTTERS	[ ] NO	**DEFAULT**
	[X] YES	SEE RAM7.0 FOR DETAILS
ELECTRICAL ACCESS	[ ] NO	**DEFAULT**
	[X] YES	SEE RAM7.1 FOR DETAILS
CLEAR HEIGHT	[ ] 8'	**DEFAULT**
	[X] 10' OTHER	10' MAX

STEP 3 SEISMIC ACCELERATION

Ss 0 . 7 8 0 **(g)**
S1 0 . 2 6 0 **(g)**

STEP 4 SEISMIC REGIONS

0.000 < Ss <= 1.406 S1 <= 0.844	[X] WHITE	3.5 PSF MAX DEA LOAD
1.406 < Ss <= 2.063 S1 <= 1.070	[ ] GREEN	2.0 PSF MAX DEAD LOAD

STEP 5 TOTAL ROOF DEAD LOAD

ROOF DECK	1 . 8 PSF	SEE STEP 2' 'ROOF DECK FOR WEIGHTS
COLLATERAL	0 . 0 PSF	LIGHTING , FIRE SUPPRESSION, ETC.
TOTAL	1 . 8 PSF	ADD 'ROOF DECK' AND 'COLLATERAL'

STEP 6 LOAD SCENARIO

WHITE	TOTAL ROOF DEAD LAOD <= 3.5 PSF	[X] **LOAD SCENARIO 1**
GREEN	TOTAL ROOF DEAD LOAD < 2.0 PSF	[ ] **LOAD SCENARIO 2**

STEP 7 PC STRUCTURE

ROOF WIDTH <= 20	[ ] **RAM 20**
20 < ROOF WIDTH <= 30	[X] **RAM 30**

STEP 8 STRUCTURE SIZE

	RAM 20		**RAM 30**	
ROOF WIDTH	[ ] 20'	**DEFAULT**	[X] 30'	**DEFAULT**
	[ ] ________ OTHER	9' MIN; 20' MAX	[ ] ________ OTHER	20'-6" MIN; 30' MAX
ROOF LENGTH	[ ] 44'	2 BAYS	[ ] 44'	2 BAYS
	[ ] 64'	3 BAYS	[X] 64'	3 BAYS
	[ ] 84'	4 BAYS	[ ] 84'	4 BAYS
	[ ] ________ OTHER		[ ] ________ OTHER	

STEP 9 FOUNDATION TYPE

	RAM 20		**RAM 30**	
FOUNATION TYPE	[ ] SPREAD PAD	[ ] DRILLED PIER	[ ] SPREAD PAD	[X] DRILLED PIER

STEP 10 FOUNDATION SUMMARY

RAM 20		RAM 30	
[ ] LOAD SCENARIO 1 SPREAD PAD	[ ] LOAD SCENARIO 1 DRILLED PIER	[ ] LOAD SCENARIO 1 SPREAD PAD	[X] LOAD SCENARIO 1 DRILLED PIER
[ ] LOAD SCENARIO 2 SPREAD PAD	[ ] LOAD SCENARIO 2 DRILLED PIER	[ ] LOAD SCENARIO 2 SPREAD PAD	[ ] LOAD SCENARIO 2 DRILLED PIER

STEP 11 SHEET INDEX

BASE FRAME	RAM 20 SHEET INDEX				RAM 30 SHEET INDEX			
ROOF DECK	MR		SS		MR		SS	
FOUNDATION TYPE	SPREAD PAD	DRILLED PIER	SPREAD PAD	DRILLED PIER	SPREAD PAD	DRILLED PIER	SPREAD PAD	DRILLED PIER
SELECT ONE	[ ]	[ ]	[ ]	[ ]	[ ]	[ ]	[ ]	[X]
ORDER FORM	RAM1.0	RAM1.0	RAM1.0	RAM1.0	RAM1.0	RAM1.0	RAM1.0	RAM1.0
NOTES AND SPECIAL INSPECTIONS	RAM1.1	RAM1.1	RAM1.1	RAM1.1	RAM1.1	RAM1.1	RAM1.1	RAM1.1
FOUNDATION PLAN	RAM2.0	RAM2.1	RAM2.0	RAM2.1	RAM2.2	RAM2.3	RAM2.2	RAM2.3
FRAMING PLAN	RAM3.0	RAM3.0	RAM3.0	RAM3.0	RAM3.1	RAM3.1	RAM3.1	RAM3.1
FRAME CONNECTION DETAILS	RAM4.0	RAM4.0	RAM4.0	RAM4.0	RAM4.2	RAM4.2	RAM4.2	RAM4.2
SECTION DETAILS	RAM4.1	RAM4.1	RAM4.1	RAM4.1	RAM4.3	RAM4.3	RAM4.3	RAM4.3
ARCHITECTURAL VIEWS	RAM5.0	RAM5.0	RAM5.0	RAM5.0	RAM5.1	RAM5.1	RAM5.1	RAM5.1
ROOF CONNECTION DETAILS	RAM6.0	RAM6.0	RAM6.1	RAM6.1	RAM6.0	RAM6.0	RAM6.1	RAM6.1
MISC DESIGN OPTIONS	RAM7.0	RAM7.0	RAM7.0	RAM7.0	RAM7.0	RAM7.0	RAM7.0	RAM7.0
ELETRICAL CUTOUTS	RAM7.1	RAM7.1	RAM7.1	RAM7.1	RAM7.1	RAM7.1	RAM7.1	RAM7.1

STEP 12 MULTIPLE STRUCTURES

	ROOF WIDTH X LENGTH	QTY
MULTIPLE STRUCTURES		

STEP 1: GENERAL PROJECT INFORMATION

- IDENTIFY PROJECT NAME AND SCHOOL DISTRICT
- IDENTIFY USE AND OCCUPANCY CLASSIFICATION
  - THE USE AND OCCUPANCY DETERMINE THE MAXIMUM SQUARE FOOTAGE OF THE STRUCTURE
  - THE MAXIMUM SQUARE FOOTAGE IS ALSO LIMITED BY THE NUMBER OF OCCUPANTS
- IDENTIFY THE OCCUPANT LOAD PER TABLE 1004.5 IN THE CBC
- IDENTIFY TOTAL ROOF AREA WHICH SHALL NOT EXCEED ALLOWABLE AREA PER TABLE 506.2 IN THE CBC.
- IDENTIFY EXPECTED NUMBER OF OCCUPANTS BASED ON THE ESTIMATED OCCUPANT LOAD
  - TOTAL ROOF AREA DIVIDED BY OCCUPANT LOAD CAN DETERMINE NUMBER OF OCCUPANTS

STEP 2: DESIGN OPTIONS

- SELECT ROOF DECK FOR YOUR PROJECT
  - "MR" REPRESENTS MCELROY METAL "MULTI-RIB" ROOF DECK
  - "SS" REPRESENTS MCELROY METAL "MEDALLION-LOK" 16" STANDING SEAM ROOF DECK
- SELECT WHETHER GUTTERS AND DOWNSPOUTS FROM POLIGON IS NEEDED FOR YOUR PROJECT
  - IF "YES", THEN INCLUDE SHEET RAM7.0 IN THE DRAWING SET
- SELECT WHETHER ELECTRICAL CUTOUTS ARE NEEDED FOR YOUR PROJECT
  - SHEET RAM7.0 SHOWS ELECTRICAL CUTOUT SIZE AND LOCATION CUTOUTS IN COLUMNS
  - SHEET RAM7.1 HAS INSTRUCTIONS AND SHEET TO IDENTIFY WHICH COLUMNS
  - SHEET RAM7.1 MUST BE FILLED OUT IN THE SUBMITTAL SET APPROVED BY DSA
  - IF NOTHING IS FILLED IN ON RAM7.1, POLIGON WILL ASSUME CUTOTUS ARE ONLY IN COLUMN A1 (SEE 'FRAMING PLAN' FOR REFERENCE)
- SELECT CLEAR HEIGHT (SEE 'ARCHITECTURAL VIEWS' SHEET FOR REFERENCE)
  - MIN 7'-1"; MAX 10'-0"
- **IF NOTHING IS SELECTED, POLIGON WILL ASSUME THE DEFAULT FOR EACH DESIGN OPTION**

STEP 3: IDENTIFY THE Ss & S1 ACCELERATION (g) FOR YOUR PROJECT AND GEOTECHNICAL INFORMATION

- Ss & S1 VALUE DETERMINES THE REQUIRED SEISMIC DESIGN FORCES
- Ss & S1 VALUE DEPENDS ON PROJECT'S GEOGRAPHICAL LOCATION
  - FIND Ss & S1 VALUES FOR YOUR PROJECT IN THE SITE SPECIFIC GEOTECHNICAL REPORT
  - FIND Ss & S1 VALUES FOR YOUR PROJECT USING (https://asce7hazardtool.online/)
- THIS PC IS NOT APPROVED FOR Ss VALUES GREATER THAN 2.063 (CONTACT POLIGON FOR ADDITIONAL OPTIONS)

STEP 4: IDENTIFY THE SEISMIC REGION FOR YOUR PROJECT

- THE REGIONS ARE DEPENDANT ON THE Ss & S1 VALUE DETERMINED IN STEP 3
- THE SEISMIC REGION DICTATES THE MAXIMUM DEAD LOAD PERMITTED (SEE TABLE TO THE LEFT)

STEP 5: IDENTIFY THE ROOF DEAD LOAD FOR YOUR PROJECT

- THE ROOF DECK DEAD LOAD WILL ALWAYS BE INCLUDED
- THE COLLATERAL LOAD REPRESENTS ADDITIONAL LOAD THAT CAN BE SUPPORTED BY THE FRAME
- TOTAL ROOF DEAD LOAD MUST BE LESS THAN OR EQUAL TO THE MAX DEAD LOAD SHOWN IN STEP 4
- CUT SHEETS OF ANY BOARDS, BOXES AND EQUIPMENT TO BE MOUNTED ON THE STRUCTURE, INCLUDING WEIGHTS AND DIMENSIONS ARE REQUIRED

STEP 6: IDENTIFY THE LOAD SCENARIO

- REFERENCE THE STEP 4 COLOR AND SELECT THE APPLICABLE LOAD SCENARIO
- LOAD SCENARIOS HAVE NO IMPACT ON FRAME DESIGN OR COST, BUT DO AFFECT FOUNDATION SIZE

STEP 7: IDENTIFY PC STRUCTURE

- ROOF WIDTHS UP TO 20' WIDE USE THE "RAM 20"
- ROOF WIDTHS UP TO 30' WIDE USE THE "RAM 30"
- THE 20' AND 30' WIDTHS ARE SUGGESTED BECAUSE THEY ARE THE MOST ECONOMICAL
- MAXIMUM WIDTH IS 30'; (SEE 'ARCHITECTURAL VIEWS' SHEET FOR REFERENCE)

STEP 8: IDENTIFY SITE SPECIFIC ROOF WIDTH AND LENGTH

- DO NOT EXCEED THE TOTAL ROOF AREA FROM STEP 1 (ROOF WIDTH MULTIPLIED BY ROOF LENGTH)

STEP 9: FOUNDATION TYPE

- SELECT A FOUNDATION BASED THE DESIRED FOUNDATION TYPE
- SELECT EITHER SPREAD PAD OR DRILLED PIER FOUNDATION PRIOR TO APPROVAL
- FOUNDATION TYPE IMPACTS CONSTRUCTION (TIMING, SEQUENCE, COST, ETC.)
- FOUNDATION TYPE IMPACTS ANCHOR BOLT LENGTH (NOT PROVIDED BY POLIGON)
- REVIEW OF SITE-SPECIFIC SOILS REPORT TO EVALUATE APPLICABILITY OF FOUNDATION OPTIONS AVAILABLE

STEP 10: FOUNDATION SUMMARY

- USE THE SELECTIONS FROM STEP 6 AND STEP 9 TO SELECT THE APPROPRIATE FOUNDATION

STEP 11: SELECT APPLICABLE SHEET INDEX FOR YOUR PROJECT

- IDENTIFY THE APPLICABLE SHEET INDEX
- INCLUDE APPLICABLE SHEETS WITH YOUR DSA SUBMITTAL
- EXCLUDE 'MISC DESIGN OPTIONS' SHEET FOR PROJECTS WITHOUT ELECTRICAL CUTOUTS OR GUTTERS
- EXCLUDE 'ELECTRICAL CUTOUTS' SHEET FOR PROJECTS WITHOUT ELECTRICAL CUTOUTS

STEP 12: MULTIPLE STRUCTURES WITH THE SAME PC#

- FILL IN ROOF LENGTH AND WIDTH OF STRUCTURES AS WELL AS QUANTITY
- UNO ON THE POLIGON DRAWINGS, POLIGON WILL ASSUME ALL DESIGN CRITERIA FOR EACH STRUCTURE IS THE SAME
- CONTACT POLIGON FOR FURTHER INFORMATION

SHEET INDEX					
1	RAM1.0	ORDER FORM	11	RAM4.2	FRAME CONNECTION DETAILS - RAM 30
2	RAM1.1	NOTES AND SPECIAL INSPECTIONS	12	RAM4.3	SECTION DETAILS - RAM 30
~~3~~	~~RAM2.0~~	~~FOUNDATION PLAN SPREAD PAD - RAM 20~~	~~13~~	~~RAM5.0~~	~~ARCHITECTURAL VIEWS - RAM 20~~
~~4~~	~~RAM2.1~~	~~FOUNDATION PLAN DRILLED PIER - RAM 20~~	14	RAM5.1	ARCHITECTURAL VIEWS - RAM 30
~~5~~	~~RAM2.2~~	~~FOUNDATION PLAN SPREAD PAD - RAM 30~~	~~15~~	~~RAM6.0~~	~~ROOF CONNECTION DETAILS~~
6	RAM2.3	FOUNDATION PLAN DRILLED PIER - RAM 30	16	RAM6.1	ROOF CONNECTION DETAILS
~~7~~	~~RAM3.0~~	~~FRAMING PLAN - RAM 20~~	17	RAM7.0	MISC DESIGN OPTIONS
8	RAM3.1	FRAMING PLAN - RAM 30	18	RAM7.1	ELECTRICAL CUTOUTS
~~9~~	~~RAM4.0~~	~~FRAME CONNECTION DETAILS - RAM 20~~			
~~10~~	~~RAM4.1~~	~~SECTION DETAILS - RAM 20~~			
TOTAL SHEETS = 10					

ABBREVIATIONS:

ACI	AMERICAN CONCRETE INSTITUTE	MR	MULTI-RIB ROOF PANEL (MCELROY)
AISC	AMERICAN INSTITUTE OF STEEL CONSTRUCTION	NTS	NOT TO SCALE
ASM	ASSEMBLY (INTERNAL REFERENCE)	NO	NUMBER
ASTM	AMERICAN SOCIETY FOR TESTING AND MAT'LS	OC	ON CENTER
AWS	AMERICAN WELDING SOCIETY	OSHA	OCCUPATIONAL HEALTH AND SAFETY ADM.
CBC	CALIFORNIA BUILDING CODE	PCF	POUNDS PER CUBIC FOOT
CJP	COMPLETE JOINT PENETRATION	PD	POLIGON DRAWING
CLR	CLEAR	PJ	PRETENSIONED JOINT
DEG	DEGREE	PLCS	PLACES
DIA	DIAMETER	PLT	PLATE
DIM	DIMENSION	PSF	POUNDS PER SQUARE FOOT
DSA	DIVISION OF THE STATE ARCHITECT	PSI	POUNDS PER SQUARE INCH
EQ	EQUAL	QTY	QUANTITY
FT	FEET	REF	REFERENCE
GA	GAGE	SQ	SQUARE
IN	INCHES	SS	STANDING SEAM ROOF PANEL (MCELROY)
KSI	KIPS PER SQUARE INCH	TYP	TYPICAL
MAX	MAXIMUM	UNO	UNLESS NOTED OTHERWISE
MIN	MINIMUM	USGS	U.S. GEOLOGICAL SURVEY
MISC	MISCELLANEOUS	W/	WITH
MPH	MILES PER HOUR		

SPECIFICATIONS

PART 1 - GENERAL

1.1 STRUCTURE DESCRIPTION
A. STRUCTURE(S) BASED ON THE FOLLOWING PC DESIGN(S):
1. HIP ROOF (RAM)

1.2 DESIGN REQUIREMENTS
A. MEET THE DESIGN INTENT SHOWN ON THE PC DRAWINGS APPROVED FOR THIS PROJECT.
1. DESIGN CRITERIA
2. MEMBERS SIZES
3. HIDDEN BOLTED CONNECTIONS BETWEEN STRUCTURAL MEMBERS
4. COLUMN ANCHORAGE SHALL INCLUDE FOUR (4) BOLTS IN COMPLIANCE WITH OSHA 1926.755(A)(1).
5. NO FIELD WELDING PERMITTED
6. NO FIELD PAINTING PERMITTED
7. ROOF DIMENSIONS AND SLOPES
8. EXPOSED STEEL ROOF FASTENERS (IF APPLICABLE) POWDER COATED BY MANUFACTURER
9. ROOF DECK SPANS FROM PEAK TO EAVE AND PERMITS PROPER DRAINAGE WITHOUT DEBRIS BUILD-UP.

1.3 SUBMITTALS
A. DRAWINGS AND CALCULATIONS SEALED BY A PROFESSIONAL ENGINEER LICENSED IN THE APPROPRIATE STATE.
B. ONLY MANUFACTURERS THAT SUBMIT DRAWINGS AND CALCULATIONS PRIOR TO BID SHALL BE CONSIDERED.
C. MANUFACTURER MUST BE ABLE TO SUBMIT APPROPRIATE LABORATORY TESTS FOR THE FOLLOWING:
1. FRAME FINISH REQUIREMENTS LISTED IN PART 2 OF THIS SPECIFICATION.
2. CERTIFIED MILL TEST REPORTS FOR STRUCTURAL STEEL (DESCRIBING THE CHEMICAL AND PHYSICAL PROPERTIES).
3. CERTIFIED MILL TEST REPORTS FOR STRUCTURAL BOLTS.

1.4 TECHNICAL SUPPORT
A. MANUFACTURER MUST HAVE IN-HOUSE ENGINEERING DEPARTMENT AND A PROFESSIONAL ENGINEER LICENSED IN THE APPROPRIATE STATE TO ANSWER TECHNICAL QUESTIONS.

1.5 QUALITY ASSURANCE
A. GENERAL
1. FABRICATION PROCEDURES SHALL COMPLY WITH APPLICABLE CODES AND LOCAL REGULATIONS.
2. REQUIRED STRUCTURAL TESTS AND SPECIAL INSPECTIONS INCLUDED ON THE PROJECT DSA-103 FORM.
B. MANUFACTURER QUALIFICATIONS
1. MINIMUM (10) YEARS ENGINEERING AND FABRICATING PRE-ENGINEERED STRUCTURES
2. MANUFACTURER OWNED AND OPERATED POWDER COAT PAINT FINISH SYSTEM
3. ALL AWS CERTIFIED WELDERS
4. FULL-TIME PROFESSIONAL ENGINEER ON STAFF LICENSED IN THE APPROPRIATE STATE
5. FULL-TIME AWS CERTIFIED ASSOCIATE WELDING INSPECTOR ON STAFF
6. FULL-TIME QUALITY ASSURANCE MANAGER ON STAFF
7. FULL-TIME LEED AP ON STAFF
C. MANUFACTURER CERTIFICATIONS
1. PCI 4000 CERTIFICATION THROUGH POWDER COATING INSTITUTE (PCI)
2. AISC CERTIFIED FABRICATOR

1.6 MANUFACTURER WARRANTY
A. STRUCTURE MUST HAVE (10) YEAR LIMITED WARRANTY ON STEEL FRAME MEMBERS.
B. STRUCTURE MUST HAVE (10) YEAR LIMITED WARRANTY ON PAINT SYSTEM.
C. PASS THROUGH WARRANTY OF ROOFING MANUFACTURER SHALL BE PROVIDED UPON REQUEST.

PART 2 - PRODUCTS

2.1 MANUFACTURER
A. ACCEPTABLE MANUFACTURERS
1. POLIGON, A DIVISION OF PORTERCORP.
A. 4240 N 136TH AVE., HOLLAND, MI 49424; (616) 399-1963; WWW.POLIGON.COM .
I. FOR POLIGON STRUCTURES IN *NORTHERN CALIFORNIA*, THE LOCAL REPRESENTATIVE IS ALL ABOUT PLAY (WWW.PLAYGROUNDPROS.COM). EMAIL AAP@PLAYGROUNDPROS .COM OR CALL (916) 923-2180
II. FOR POLIGON STRUCTURES IN *SOUTHERN CALIFORNIA*, THE LOCAL REPRESENTATIVE IS MIRACLE PLAYGROUND SALES (MIRACLEPLAYGROUNDSALES.COM EMAIL SALES@MIRACLEPLAYGROUND.COM OR CALL (951) 695-4515
B. SUBSTITUTION LIMITATIONS
1. THE ENGINEERING FOR THIS STRUCTURE IS ONLY APPLICABLE IF POLIGON SUPPLIES THE MATERIAL.
2. IF THE CONTRACTOR ELECTS TO SUBSTITUTE A DIFFERENT STRUCTURE, THEY ARE RESPONSIBLE TO OBTAIN THE NECESSARY DSA APPROVAL WITH:
A. NO COST TO THE DISTRICT OR ARCHITECT
B. NO CHANGE TO THE CONSTRUCTION SCHEDULE
3. SUBSTITUTIONS MUST BE APPROVED A MINIMUM OF (10) DAYS BEFORE BID.
4. ALL APPROVED MANUFACTURERS SHALL BE NOTIFIED IN WRITING BEFORE THE BID DATE.
5. SUBSTITUTE MANUFACTURERS SHALL NOT BE ALLOWED TO BID WITHOUT WRITTEN NOTIFICATION.
6. SUBSTITUTE MANUFACTURERS MUST MEET "MANUFACTURER QUALIFICATIONS" LISTED IN PART 1 OF THIS SPECIFICATION.
7. SUBSTITUTE MANUFACTURERS MUST PROVIDE PROOF OF "MANUFACTURER CERTIFICATIONS" ABOVE.
8. SUBSTITUTE MANUFACTURERS MUST PROVIDE PAINT FINISH DESCRIBED IN "FRAME FINISH" BELOW.

2.2 FRAME
A. MATERIALS
1. ANCHOR BOLTS: SEE DRAWINGS FOR REQUIREMENTS. ANCHOR BOLTS NOT PROVIDED BY MANUFACTURER
2. STRUCTURAL STEEL: SEE DRAWINGS FOR REQUIREMENTS.
3. STRUCTURAL BOLTS: SEE DRAWINGS FOR REQUIREMENTS.
B. FINISH
1. FRAME FINISH: POLI-5000 POWDER COAT. NO FIELD PAINTING PERMITTED.
A. COMPONENTS SHALL BE CLEANED, PRE-TREATED, AND FINISHED AT A FACILITY OWNED AND DIRECTLY SUPERVISED BY THE MANUFACTURER.
B. COMPONENTS SHALL BE SHOT BLASTED TO SSPC-SP10 NEAR-WHITE BLAST CLEANING. SSPC-SP2 HAND TOOL CLEANING WILL NOT BE AN ACCEPTABLE ALTERNATIVE.
C. COMPONENTS SHALL BE PRETREATED IN A (3) STAGE IRON PHOSPHATE OR EQUAL WASHER.
D. COMPONENTS SHALL RECEIVE EPOXY PRIMER COAT FOR SUPERIOR CORROSION PROTECTION.
E. COMPONENTS SHALL RECEIVE TOP COAT OF SUPER DURABLE TGIC POWDER COAT.
F. FINISH SHALL NOT HAVE ANY VOC EMISSIONS.
G. MANUFACTURER SHALL BE ABLE TO PRODUCE DOCUMENTATION STATING SAMPLE PRODUCTION COMPONENTS HAVE BEEN TESTED TO MEET THE FOLLOWING:
I. SALT SPRAY RESISTANCE PER ASTM B 117/ ASTM D 1654 TO 10,000 HOURS WITH NO CREEP FROM SCRIBE LINE AND RATING OF 10.
II. HUMIDITY RESISTANCE PER ASTM D2247-02 TO 5,000 HOURS WITH NO LOSS OF ADHESION OR BLISTERING.
III. COLOR/UV RESISTANCE PER ASTM G154-04 TO 2,000 HOURS EXPOSURE, ALTERNATE CYCLES WITH RESULTS OF NO CHALKING, 75% COLOR RETENTION, COLOR VARIATION MAXIMUM 3.0 E VARIATION CIE FORMULA (BEFORE AND AFTER 2,000 HOURS EXPOSURE).
2. FRAME COLOR: DETERMINED BY DISTRICT.
C. FABRICATION
1. FABRICATE COMPONENTS TO PERMIT BOLTED CONNECTIONS ON SITE. NO FIELD WELDING PERMITTED.
2. LABEL EACH MEMBER WITH UNIQUE PART NUMBER TO STREAMLINE ERECTION.
3. WELDING REQUIREMENTS: SEE DRAWINGS FOR REQUIREMENTS.

2.3 ROOF
A. MATERIALS
1. ROOF MATERIAL: SEE DRAWINGS FOR REQUIREMENTS.
2. ROOF HARDWARE: SEE DRAWINGS FOR REQUIREMENTS.
B. FINISH
1. ROOF FINISH: KYNAR 500 HIGH-PERFORMANCE RESIN-BASED PAINT.
2. ROOF COLOR: DETERMINED BY OWNER.

2.4 MISCELLANEOUS
A. MATERIALS
1. CONCRETE MATERIAL: SEE DRAWINGS FOR REQUIREMENTS. CONCRETE NOT PROVIDED BY MANUFACTURER.

PART 3 - EXECUTION

3.1 STORAGE AND HANDLING
A. PROTECT MATERIAL AFTER DELIVERY FROM WEATHER, SUNLIGHT, AND DAMAGE.
B. ELEVATE MATERIAL TO ALLOW CIRCULATION AND REDUCE MOLD, FUNGI DECAY, AND INSECT INFESTATION.
C. HANDLE MATERIAL WITH PROTECTIVE STRAPS OR PADDED FORKLIFT. HANDLING MATERIAL WITH CHAIN OR CABLE WILL NOT BE ACCEPTED AND MAY VOID MANUFACTURER'S WARRANTY.
D. TO PREVENT MOISTURE DAMAGE TO ANY WOOD MATERIAL (IF APPLICABLE), KEEP WOOD PACKAGED BEFORE INSTALLATION AND COVER IMMEDIATELY WITH ANY SECONDARY ROOF MATERIAL.

3.2 ERECTION
A. INSTALL COMPONENTS ACCORDING TO MANUFACTURER'S INSTALLATION DRAWINGS AND THESE SPECIFICATIONS.
B. ANCHOR BOLT AND COLUMN LAYOUT IS CRITICAL.
C. COMPLY WITH SPECIFIC BOLTING INSTALLATION REQUIREMENTS PROVIDED ON DRAWINGS REQUIRING THE CONTRACTOR TO COORDINATE THIS PHASE OF CONSTRUCTION WITH THE SPECIAL BOLTING INSPECTOR AND THE INSPECTOR OF RECORD *PRIOR TO THE ERECTION OF THE FRAME.*
D. NO FIELD SLOTTING OR OPENING OF HOLES WILL BE ALLOWED. TOLERANCES ON STEEL STRUCTURAL MEMBERS ARE SET ACCORDING TO AISC CONSTRUCTION PRACTICES, FOLLOWED DURING FABRICATION, AND CANNOT BE INCREASED.
E. AFTER INSTALLATION, RESTORE DAMAGED SURFACES TO THE ORIGINAL CONDITION USING TOUCH-UP PAINT PROVIDED BY MANUFACTURER. IF THE ARCHITECT DOES NOT ACCEPT THAT, REPLACE DAMAGED MATERIAL AT NO COST TO THE DISTRICT.
F. COORDINATE AS REQUIRED WITH OTHER DISCIPLINES (ELECTRICAL, PLUMBING, ETC.)
G. COMPLY WITH ALL APPLICABLE OHSA REQUIREMENTS

3.3 REPAIR
A. DO NOT ATTEMPT ANY FIELD CHANGES TO THE STRUCTURE WITHOUT FIRST CONTACTING THE MANUFACTURER.

3.4 QUALITY CONTROL
A. TESTS AND INSPECTIONS DURING ERECTION ARE NOT REQUIRED BY THE MANUFACTURER, BUT MAY BE REQUIRED BY OTHERS.
B. THE PROJECT INSPECTOR, AND ENTIRE CONSTRUCTION OVERSIGHT PROCESS, SHALL COMPLY WITH DSA PR 13-01. DO NOT PROCEED UNTIL UNSATISFACTORY CONDITIONS HAVE BEEN CORRECTED.

STATE APPROVALS-SITE

IDENTIFICATION STAMP
DIV. OF THE STATE ARCHITECT
APP: 02-122003 INC:
REVIEWED FOR
SS ☑ FLS ☑ ACS ☑
DATE: 12/05/2023

4080 PLAZA GOLDORADO CIRCLE
SUITE B,
CAMERON PARK, CA 95682
530.677.5615

GHD

poligon
PORTER

REGISTERED PROFESSIONAL ENGINEER
JESSICA E. NAPIER
No. S5476
STRUCTURAL
STATE OF CALIFORNIA

STATE APPROVALS-PC

IDENTIFICATION STAMP
DIV. OF THE STATE ARCHITECT
APP: 02-121213 PC
REVIEWED FOR
SS ☑ FLS ☑ ACS ☑ CG ☐
DATE: 7/18/2023

PRE-CHECK (PC) DOCUMENT
CODE: 2022 CBC
A SEPARATE PROJECT APPLICATION FOR CONSTRUCTION IS REQUIRED.

ORDER FORM

HIP ROOF - RAM

RAM1.0

GENERAL:

1. GENERAL NOTES AND TYPICAL DETAILS SHALL APPLY TO ALL PARTS OF THE JOB EXCEPT WHERE THEY MAY CONFLICT WITH DETAILS AND NOTES ON OTHER SHEETS. WHERE CONDITIONS ARE NOT SPECIFICALLY INDICATED BUT ARE OF SIMILAR CHARACTER TO DETAILS SHOWN, SIMILAR DETAILS OF CONSTRUCTION SHALL BE USED SUBJECT TO REVIEW BY THE STRUCTURAL ENGINEER FOR THIS PROJECT.
2. WORK SHALL CONFORM TO THE REQUIREMENTS, AS AMENDED TO DATE, OF THE LATEST ADOPTED EDITION OF THE CBC, C.A.C. TITLE 24, AND ALL OTHER LOCAL, STATE AND FEDERAL REGULATIONS.
3. OMISSIONS OR CONFLICTS BETWEEN THE VARIOUS ELEMENTS OF THE WORKING DRAWINGS AND/OR SPECIFICATIONS SHALL BE BROUGHT TO THE ATTENTION OF THE STRUCTURAL ENGINEER FOR THIS PROJECT PRIOR TO PROCEEDING WITH ANY WORK INVOLVED.
4. THE CONTRACTOR SHALL BE RESPONSIBLE FOR COORDINATING THE WORK OF ALL TRADES AND SHALL CHECK ALL DIMENSIONS. ALL DISCREPANCIES SHALL BE CALLED TO THE ATTENTION OF THE STRUCTURAL ENGINEER FOR THIS PROJECT AND BE RESOLVED BEFORE PROCEEDING WITH THE WORK.
5. THESE CONSTRUCTION DRAWINGS AND SPECIFICATIONS REPRESENT THE FINISHED STRUCTURE AND DO NOT INDICATE THE METHOD OF CONSTRUCTION. THE CONTRACTOR SHALL SUPERVISE AND DIRECT THE WORK AND SHALL BE SOLELY RESPONSIBLE FOR CONSTRUCTION MEANS, METHODS, TECHNIQUES, SEQUENCES AND PROCEDURES, INCLUDING, BUT NOT LIMITED TO, BRACING, TEMPORARY SUPPORTS, AND SHORING. OBSERVATION VISITS TO THE SITE BY FIELD REPRESENTATIVES OF THE ARCHITECT/ENGINEER SHALL NOT INCLUDE INSPECTIONS OF THE PROTECTIVE MEASURES OR THE CONSTRUCTION PROCEDURES. ANY SUPPORT SERVICES PERFORMED BY THE ARCHITECT/ENGINEER DURING THE CONSTRUCTION SHALL BE DISTINGUISHED FROM CONSTRUCTION AND DETAILED INSPECTION SERVICES WHICH ARE FURNISHED BY OTHERS. THESE SUPPORT SERVICES PERFORMED BY THE ARCHITECT/ENGINEER, WHETHER OF MATERIAL OR WORK, ARE FOR THE PURPOSE OF ASSISTING IN QUALITY CONTROL AND IN ACHIEVING CONFORMANCE WITH CONTRACT DOCUMENTS, BUT DO NOT GUARANTEE CONSTRUCTION.
6. ASTM DESIGNATIONS AND ALL STANDARDS REFER TO THE LATEST AMENDMENTS.
7. CONFORM TO APPLICABLE CAL/OSHA CONSTRUCTION SAFETY REGULATIONS FOR ALL WORK PERFORMED DURING CONSTRUCTION. JOB SITE SAFETY IS STRICTLY THE RESPONSIBILITY OF THE CONTRACTOR AND NOT THE ARCHITECT/ENGINEER OR OWNER.
8. THE ENGINEER AND THEIR CONSULTANTS SHALL HAVE NO RESPONSIBILITY FOR THE DISCOVERY, HANDLING, REMOVAL OR DISPOSAL OF HAZARDOUS MATERIALS AT THE PROJECT SITE, INCLUDING BUT NOT LIMITED, TO ASBESTOS, ASBESTOS PRODUCTS, POLYCHLORINATED BIPHENYL (PCB) OR OTHER TOXIC SUBSTANCES.
9. SHOULD ANY CONDITIONS DEVELOP NOT COVERED BY THE CONTRACT DOCUMENTS, OR IF A CHANGE IN THE SCOPE OF WORK IS PROPOSED, A CONSTRUCTION CHANGE DOCUMENT DETAILING AND SPECIFYING THE REQUIRED CHANGE(S) SHALL BE SUBMITTED TO AND APPROVED BY DSA BEFORE PROCEEDING WITH THE WORK.
10. THE SCHOOL DISTRICT'S INSPECTOR OF RECORD SHALL INSPECT AND APPROVE THE ERECTED FRAME PRIOR TO ROOF INSTALLATION.
11. SEE REQUIREMENTS FOR LOCATION IN ANY FIRE HAZARD SEVERITY ZONE FOR WILDLAND URBAN INTERFACE AREAS (WUI) AS SPECIFIED IN THE APPLICABLE VERSION OF THE CALIFORNIA BUILDING CODE. PROVIDE PROTECTION AND DETAILS OF ALL AREAS COMPLYING WITH THE WUI REQUIRMENTS.
12. LOCATING THIS STRUCTURE CLOSER THAN 20 FEET TO OTHER STRUCTURES MAY AFFECT THE ALLOWABLE AREA FOR THE EXISTING CONSTRUCTION PER THE APPLICABLE VERSION OF THE CALIFORNIA BUILDING CODE.
13. VIEWS AND DETAILS ARE NOT DRAWN TO SCALE (UNLESS NOTED OTHERWISE). DO NOT SCALE THESE DRAWINGS.
14. OTHER SITE SPECIFIC ITEMS MAY BE REQUIRED.
15. WHEN A SITE-SPECIFIC PROJECT IS LOCATED IN A FLOOD ZONE OTHER THAN ZONE X, A LETTER STAMPED AND SIGNED FROM A SOILS ENGINEEER IS NEEDED TO VALIDATE THE ALLOWABLE SOIL VALUES SPECIFIED IN THE PC ARE STILL APPLICABLE.

STRUCTURAL AND MISCELLANEOUS STEEL:

1. ALL STRUCTURAL STEEL SHALL BE DETAILED, FABRICATED AND ERECTED IN ACCORDANCE WITH THE AMERICAN INSTITUTE OF STEEL CONSTRUCTION (AISC) 360 - 16 AND 303-16 MANUAL REFERENCED BY THE 2022 EDITION OF THE CALIFORNIA BUILDING CODE.
2. PIPE SECTIONS SHALL CONFORM TO ASTM A53, Fy = 35 ksi, GRADE B UNLESS NOTED OTHERWISE.
3. STRUCTURAL TUBING (HSS SHAPES) SHALL CONFORM TO ASTM A500, GRADE B (OR HIGHER), Fy = 46 KSI.
4. IF MATERIAL AVAILABILITY IS LIMITED, MEMBER THICKNESSES CAN BE INCREASED BEYOND WHAT IS SHOWN IN THESE DRAWINGS (MAXIMUM INCREASE OF 1/8").
5. ALL CHANNELS, ANGLES, PLATES AND MISC. STEEL SHALL CONFORM TO ASTM A36, Fy = 36 KSI.
6. ALL COLD FORM STEEL SHALL CONFORM TO ASTM A653, CS = TYPE B, Fy = 50 KSI.
7. STRUCTURAL STEEL AND DECK SHALL BE IDENTIFIED FOR CONFORMITY PER CBC 2202A.1.
8. ROOF DECK SHALL HAVE KYNAR 5000 METAL COATING.
9. ROOF DECK SHALL CONFORM TO ATSM A792, Fy = 50 KSI.
10. MR ROOF SCREWS MEET ASTM A510 WITH A HEAD DIMENSION OF 0.31" (FLAT-TO-FLAT) AND INTEGRAL WASHER DIMENSION OF 0.58" (OUTSIDE DIAMETER).
11. SS ROOF SCREWS MEET ASTM A510 WITH A HEAD DIMENSION OF 0.437" (OUTSIDE DIAMETER).

WELDING:

1. ALL WELDING SHALL COMPLY WITH AWS D1.1 SPECIFICATIONS AND SHALL BE DONE BY AWS QUALIFIED WELDERS CERTIFIED FOR THE TYPE OF WELDING TO BE PERFORMED.
2. ALL WELDING SHALL BE DONE BY GAS METAL ARC PROCESS WITH E70XX ELECTRODES. FLUX CORE ARC WELD SHALL CONFORM TO CHARPY NOTCH TOUGHNESS RATING OF 20 ft-lb @ (0° F).
3. ALL WELDING SHALL BE DONE IN THE SHOP WITH REQUIRED INSPECTION, PRE-APPROVED BY DSA, TO ENSURE PROPER MATERIAL ID AND WELDING.
4. WELD FILLER METAL MANUFACTURER SHALL PROVIDE WRITTEN CERTIFICATION OF COMPLIANCE WITH CODE AND SPECIFICATIONS.

BOLTING:

1. ALL BOLTS SHOWN ON THESE DRAWINGS ARE ASTM F3125 (A325 TYPE 1) HIGH STRENGTH BOLTS (UNO) AND SHALL BE HOT DIPPED GALVANIZED PER ASTM F2329.
2. HIGH STRENGTH BOLTS SHALL BE SAMPLED AND TESTED IN COMPLANCE WITH CBC 2213A.1.
3. BEFORE ERECTING THE FRAME, VERIFY ALL BOLTS AND NUTS ARE CLEAN OF DEBRIS AND BURRS - INCLUDING THE HARDWARE ALREADY FASTENED INSIDE THE MEMBERS. CHASING SOME OF THE BOLTS AND NUTS MAY BE REQUIRED.
4. ANCHOR BOLTS (HEAVY HEX HEAD, ASTM F1554, GRADE 55) SHALL BE HOT DIPPED GALVANIZED PER ASTM F2329. ANCHOR BOLTS MAY BE HEADED OR THREADED WITH A NUT THAT IS PREVENTED FROM ROTATING.
5. HIGH STRENGTH NUTS SHALL CONFORM TO ASTM A563 AND SHALL BE GALVANIZED PER ASTM F2329.
6. HIGH STRENGTH WASHERS SHALL CONFORM TO ASTM F436 AND SHALL BE GALVANIZED PER ASTM F2329.
7. THE BOLTING INSTALLATION REQUIREMENTS OUTLINED BELOW ARE CRITICAL TO THE STRUCTURE'S DESIGN AND PERFORMANCE. **THE INSTALLER IS REQUIRED TO COORDINATE THIS PHASE OF CONSTRUCTION WITH THE SPECIAL BOLTING INSPECTOR AND THE INSPECTOR OF RECORD PRIOR TO THE ERECTION OF THE FRAME.** ALL BOLTS SHALL BE INSTALLED AND INSPECTED PER THE APPLICABLE VERSION OF AISC'S "SPECIFICATION FOR STRUCTURAL JOINTS USING HIGH-STRENGTH BOLTS", CBC 1705A.2.1; AISC 341-16 J7; AISC 360-16 N5.6.
   A. PRETENSIONED JOINTS (IDENTIFIED ON THE FRAME CONNECTION DETAILS WITH A "PJ REQUIRED") MUST BE INSTALLED AND INSPECTED TO MEET ONE OF FOLLOWING REQUIREMENTS:
      1. TURN-OF-NUT PRETENSIONING
      2. CALIBRATED WRENCH PRENTENSIONING
      3. DIRECT-TENSION-INDICATOR PRETENSIONING (CONTRACTOR RESPONSIBLE FOR PURCHASE OF REQUIRED WASHERS)
   B. ALL OTHER JOINTS MUST BE INSTALLED AND INSPECTED TO MEET THE REQUIREMENTS OF SNUG-TIGHTENED JOINTS. **NOTE TO INSTALLER AND INSPECTOR(S): THE SNUG-TIGHT CONDITION EXISTS, IN PART, WHEN ALL THE BOLTS IN THE JOINT HAVE BEEN TIGHTENED SUFFICIENTLY TO PREVENT THE REMOVAL OF THE NUTS WITHOUT THE USE OF A WRENCH.**

THE CONTRACTOR, SPECIAL BOLTING INSPECTOR AND THE INSPECTOR OF RECORD MUST ALL AGREE ON WHICH APPROACH WILL BE USED TO PRETENSION THE BOLTS. THE CONTRACTOR IS RESPONSIBLE FOR DOCUMENTING THE APPROACH AGREED TO BY ALL PARTIES LISTED ABOVE.

FOUNDATIONS:

1. ALLOWABLE SOIL PRESSURES ASSUME CLASS 5 SOIL CLASSIFICATION PER 2022 CBC TABLE 1806A. 2.
2. FILL AND BACKFILL SHALL BE COMPACTED TO 95% OF MAX. DENSITY IN ACCORDANCE WITH ASTM TEST METHOD D1557. FLOODING NOT PERMITTED.
3. THE CONTRACTOR SHALL BE RESPONSIBLE FOR ALL SHORING, ETC. NECCESSARY TO SUPPORT CUT AND/OR FILL BANKS DURING EXCAVATION, AND FORMING AND PLACEMENT OF CONCRETE.
4. STRUCTURES SHALL BE SETBACK FROM ADAJCENT SLOPES TO PROVIDE FIRM MATERIAL FOR EMBEDMENT AND FOR PROTECTION FROM SLOPE DRAINAGE, EROSION, AND SHALLOW FAILURES.
   A. BOTTOM OF ASCENDING SLOPE: THE SMALLER OF HALF THE HEIGHT OF THE SLOPE AND 15FT MEASURED FROM THE FACE OF THE STRUCTURE TO THE TOE OF THE SLOPE
   B. TOP OF DECENDING SLOPE: THE SMALLER OF A THIRD OF THE HEIGHT OF THE SLOPE AND 40 FT MEASURED FROM THE FACE OF THE FOOTING TO THE TOP OF THE SLOPE

   ALTERNATE SETBACKS ARE PERMITTED, SUBJECT FOR APPROVAL. A GEOTECHNICAL INVESTIGATION MAY BE REQUIRED.
5. STRUCTURES PLACED ON LIQUIFIABLE SOILS OR SITE CLASS F MAY NOT BE SUBMITTED FOR AN OVER THE COUNTER REVIEW.

CONCRETE:

1. MIX DESIGN REQUIREMENTS: (NORMAL WEIGHT CONCRETE)

MINIMUM STRENGTH f'c (28 DAYS)	EXPOSURE CATEGORY	W/C RATIO MAXIMUM)	SLUMP (± 1")	UNIT WEIGHT (NORMAL WEIGHT)
5000 PSI	F3, S3, W2, C2	0.4	4"	150 PCF

2. CHANGES TO THE MIX DESIGN MUST BE APPROVED BY THE ENGINEER OR ARCHITECT OF RECORD AND DSA
3. AGGREGATES SHALL CONFORM TO ASTM C33. MAX AGGREGATE SIZE = 1".
4. CEMENT SHALL CONFORM TO ASTM C150 (TYPE V) WITH A MAXIMUM EXPANSION OF 0.040%, FOR SULFATE RESISTANCE.
5. ADMIXTURES CONTAINING CALCIUM CHLORIDE ARE PROHIBITED.
6. CONCRETE EXPOSED TO FREEZING-AND-THAWING CYCLES SHALL BE AIR ENTRAINED PER ACI 318-19 SECTION 19.3.3.
7. CONCRETE SHALL BE MAINTAINED IN A MOIST CONDITION FOR A MINIMUM OF FIVE DAYS AFTER PLACEMENT. ALTERNATE METHODS WILL BE APPROVED IF SATISFACTORY PERFORMANCE CAN BE ASSURED.
8. CONCRETE SHALL NOT FREE FALL MORE THAN FIVE FEET.
9. CONCRETE SHALL BE PROPORTIONED PER ACI 318-19 26.4.
10. CONCRETE SHALL BE TESTED PER CBC 1910A.1, 1705A.3, AND ACI 318-19 26.13. BATCH PLANT INSPECTION NOT REQUIRED. CONTRACTOR SHALL IMPLEMENT WEIGHTMASTER AND BATCH TICKET REQUIREMENTS OF CBC 1705A.3.3.1.

REINFORCING STEEL:

1. REINFORCING STEEL SHALL BE DEFORMED STEEL CONFORMING TO THE REQUIREMENTS OF ASTM A615, (DEFORMATIONS SHALL BE IN ACCORDANCE WITH ASTM A305) AS FOLLOWS:
   GR 60: (#4 BARS AND LARGER)
   GR 40: (#3 BARS)
2. DETAILING, FABRICATION, AND ERECTION OF REINFORCING BARS SHALL CONFORM TO THE ACI "MANUAL OF STANDARD PRACTICE FOR DETAILING REINFORCING CONCRETE STRUCTURES."
3. MIN. COVER FOR CAST-IN-PLACE CONCRETE SHALL BE AS FOLLOWS:
   A. CAST AGAINST EARTH..... 3"
   B. CAST AGAINST FORM BELOW GRADE..... 2"
   C. FORMED SLABS (#11 BAR & SMALLER)..... 3/4"
   D. SLABS ON GRADE (FROM TOP OF SLAB)..... 1"
   E. COLUMNS AND BEAMS (MAIN BARS)..... 2"
   F. WALLS EXPOSED TO WEATHER (#6-#18 BARS)..... 2"
      (#5 & SMALLER)..... 11/2"
   G. NOT EXPOSED TO WEATHER (#11 & SMALLER)..... 3/4"
4. BARS SHALL BE CLEAN OF RUST, GREASE OR OTHER MATERIAL LIKELY TO IMPAIR BOND. BENDS SHALL BE MADE COLD.
5. FOR #6 BARS AND SMALLER, REINFORCING SHALL BE LAP SPLICED 45 BAR DIA MINIMUM IN CONCRETE. FOR #7 BARS AND LARGER, REINFORCING SHALL BE LAP SPLICED 55 BAR DIAMETERS MINIMUM IN CONCRETE. ALL LAP SPLICES MUST COMPLY WITH ACI 318-19.
6. PRIOR TO PLACING OF CONCRETE, REINFORCING STEEL AND EMBEDDED ITEMS SHALL BE WELL SECURED IN POSITION.
7. WELDING OF REINFORCING IS NOT ALLOWED
8. REINFORCING STEEL SHALL BE SAMPLED AND TESTED PER CBC 1910A.2.

POWDER COATED AND EPOXY PRIMED FINISH:

1. ENTIRE POWDER COATING PROCESS COMPLETED IN SAME FACILITY AS STEEL FABRICATION.
2. ALL CARBON STEEL MEMBERS (COLUMNS, BEAMS, PLATES, ETC.) PAINTED WITH PRIME COAT PER THE "AISC CODE OF STANDARD PRACTICE" AND THE "AISC SPECIFICATION SECTION M3" (UNLESS NOTED OTHERWISE).
3. PARTS PRETREATED IN A 3 STAGE IRON PHOSPHATE WASHER (OR EQUAL).
4. EPOXY PRIMER POWDER COAT APPLIED TO PARTS FOR SUPERIOR CORROSION PROTECTION.
5. TOP POWDER COAT OF SUPER DURABLE TGIC (COLOR SELECTED FROM MANUFACTURER'S STANDARD OPTIONS OR CUSTOM COLOR).
6. SAMPLE PRODUCTION PARTS TESTED TO MEET THE FOLLOWING CRITERIA:
   A. SALT SPRAY RESISTANCE PER ASTM B 117/ ASTM D 1654
      1. 10000 HOURS WITH NO CREEP FROM SCRIBE LINE AND RATING OF 10
   B. HUMIDITY RESISTANCE PER ASTM D2247-02
      1. 5000 HOURS WITH NO LOSS OF ADHESION OR BLISTERING
   C. COLOR/UV RESISTANCE PER ASTM G154-04
      1. 2000 HOURS EXPOSURE ALTERNATE CYCLES WITH NO CHALKING, 75% COLOR RETENTION, AND COLOR VARIATION MAXIMUM 3.0 E VARIATION CIE FORMULA (BEFORE AND AFTER 2000 HOURS EXPOSURE

CONSTRUCTION NOTES

1. A DSA-CERTIFIED CLASS 2 INSPECTOR IS REQUIRED FOR THIS PROJECT.
2. CHANGES TO THE APPROVED DRAWINGS AND SPECIFICATIONS SHALL BE MADE BY ADDENDA OR CONSTRUCTION CHANGE DOCUMENT (CCD) APPROVED BY DSA, AS REQUIRED BY SECTION 4-338, PART 1, TITLE 24 CCR AND DSA IR A-6.
3. A "DSA-CERTIFIED" PROJECT INSPECTOR EMPLOYED BY THE OWNER (E.G. DISTRICT, ETC.) AND APPROVED BY DSA SHALL PROVIDE CONTINUOUS INSPECTION OF WORK. THE DUTIES OF THE INSPECTOR ARE DEFINED IN SECTION 4-342, PART 1, TITLE 24, CCR.
4. A DSA ACCEPTED TESTING LABORATORY DIRECTLY EMPLOYED BY THE OWNER (E.G. DISTRICT, ETC.) SHALL CONDUCT ALL THE REQUIRED TEST AND INSPECTIONS FOR THE PROJECT.

NOTICE OF DISCLAIMER FOR STRUCTURAL ENGINEER RESPONIBILITY

1. FOR THE SITE-SPECIFIC PROJECT, NEITHER POLIGON OR GHD ARE THE DESIGN PROFESSIONAL IN GENERAL RESPONSIBLE CHARGE.
2. FOR THE SITE-SPECIFIC PROJECT, GHD AND POLIGON'S RESPONSIBILITY IS LIMITED TO THE PREPARATION OF THE PLANS AND SPECIFICATIONS FOR THE STRUCTURES OF THIS PC ONLY.
3. STRUCTURAL OBSERVATION OF CONSTRUCTION IS SPECIFICALLY EXCLUDED FROM GHD AND POLIGON'S RESPONSIBILITY FOR THE SITE-SPECIFIC PROJECT.
4. ALL CONSTRUCTION ACTIVITIES RELATED TO STRUCTURAL ENGINEERING MAY BE DELEGATED TO A QUALIFIED ENGINEER BY THE DESIGN PROFESSIONAL IN GENERAL RESPONSIBLE CHARGE. THESE ACTIVITIES INCLUDE, BUT ARE NOT LIMITED TO, APPROVAL OF INSPECTOR QUALIFICATIONS, STRUCTURAL OBSERVATIONS OF CONSTRUCTION, REVIEW OF INSPECTIONS REPORTS, AND SIGNING OFF ON THE VERIFIED REPORT FOR COMPLETED WORK.
5. POLIGON WILL BE RESPONSIBLE FOR RESPONDING TO QUESTIONS PERTAINING TO THE PLANS AND SPECIFICATIONS FOR THE STRUCTURES OF THIS PC WHICH ARISE DURING PLAN REVIEW AND CONSTRUCTION.

SPECIAL INSPECTION NOTES:

1. THE PROJECT INSPECTOR AND TESTING AGENCY SHALL BE SELECTED BY THE SCHOOL DISTRICT AND APPROVED BY DSA AND THE ARCHITECT OF RECORD.
2. COSTS OF THE PROJECT INSPECTOR AND THE TESTING AGENCY SHALL BE BORN BY THE SCHOOL DISTRICT.
3. THE PROJECT INSPECTOR, AND ENTIRE CONSTRUCTION OVERSIGHT PROCESS, SHALL COMPLY WITH DSA PR 13-01.
4. ON APPROVED PC DRAWINGS, THE STATEMENT OF STRUCTURAL TESTS AND SPECIAL INSPECTIONS (FORM DSA-103) BELOW IS ONLY AN EXAMPLE. ON APPROVED PC DRAWINGS, THE EXAMPLE FORM DSA-103 MUST BE CROSSED OUT BEFORE THE PC DRAWINGS CAN BE APPROVED AS PART OF A SITE-SPECIFIC (OR STOCKPILE) PROJECT SO THEY WILL NOT CONFLICT WITH THE OFFICIAL FORM DSA-103 FOR THE PROJECT.

DSA 103-22: LISTING OF STRUCTURAL TESTS & SPECIAL INSPECTIONS, 2022 CBC

Application Number:	**School Name:**	**School District:**
DSA File Number:	**Increment Number:**	**Date Submitted:**

2022 CBC

IMPORTANT: This form is only a summary list of structural tests and some of the special inspections required for the project. Generally, the structural tests and special inspections noted on this form are those that will be performed by the Geotechnical Engineer of Record, Laboratory of Record, or Special Inspector. The actual complete test and inspection program must be performed as detailed on the DSA approved documents. The appendix at the bottom of this form identifies work NOT subject to DSA requirements for special inspection or structural testing. The project inspector is responsible for providing inspection of all facets of construction, including but not limited to, special inspections not listed on this form such as structural wood framing, high-load wood diaphragms, cold-formed steel framing, anchorage of non-structural components, etc., per Title 24, Part 2, Chapter 17A (2022 CBC).

NOTE: Undefined section and table references found in this document are from the CBC, or California Building Code.

KEY TO COLUMNS

1. TYPE	2. PERFORMED BY
Continuous – Indicates that a continuous special inspection is required **Periodic** – Indicates that a periodic special inspection is required **Test** – Indicates that a test is required	**GE** – Indicates that the special inspection shall be performed by a registered geotechnical engineer or his or her authorized representative. **LOR** – Indicates that the test or special inspection shall be performed by a testing laboratory accepted in the DSA Laboratory Evaluation and Acceptance (LEA) Program. See CAC Section 4-335. **PI** – Indicates that the special inspection may be performed by a project inspector when specifically approved by DSA. **SI** – Indicates that the special inspection shall be performed by an appropriately qualified/approved special inspector.

	S1. GENERAL:			
	Test or Special Inspection	**Type**	**Performed By**	**Code References and Notes**
☑	**a.** Verify that: • Site has been prepared properly prior to placement of controlled fill and/or excavations for foundations. • Foundation excavations are extended to proper depth and have reached proper material. • Materials below footings are adequate to achieve the design bearing capacity.	**See Notes**	**PI**	Refer to specific items identified in the Appendix listing exemptions for limitations. Placement of controlled fill exceeding 12" depth under foundations is not permitted without a geotechnical report.

	S2. SOIL COMPACTION AND FILL:			
	Test or Special Inspection	**Type**	**Performed By**	**Code References and Notes**
☑	**a.** Verify use of proper materials, densities and inspect lift thicknesses, placement and compaction during placement of fill.	**Continuous**	**LOR***	* Under the supervision of a geotechnical engineer or LOR's engineering manager. Refer to specific items identified in the Appendix listing exemptions for limitations.
☑	**b.** Compaction testing.	**Test**	**LOR***	* Under the supervision of a geotechnical engineer or LOR's engineering manager. Refer to specific items identified in the Appendix listing exemptions for limitations.

	S4. CAST-IN-PLACE DEEP FOUNDATIONS (PIERS):			
	Test or Special Inspection	**Type**	**Performed By**	**Code References and Notes**
☑	**a.** Inspect drilling operations and maintain complete and accurate records for each pier.	**Continuous**	**PI**	Continuous inspection to be provided by project inspector. Refer to specific items identified in the Appendix listing exemptions for limitations.
☑	**b.** Verify pier locations, diameters, plumbness, and lengths. Record concrete or grout volumes.	**Continuous**	**PI**	Continuous inspection to be provided by project inspector. Refer to specific items identified in the Appendix listing exemptions for limitations.
☑	**c.** Concrete piers.	Provide tests and inspections per CONCRETE section below.		

	C1. CAST-IN-PLACE CONCRETE			
	Test or Special Inspection	**Type**	**Performed By**	**Code References and Notes**
☑	**a.** Verify use of required design mix.	**Periodic**	**SI**	**Table 1705A.3 Item 5, 1910A.1.**
☑	**b.** Identify, sample, and test reinforcing steel.	**Test**	**LOR**	**1910A.2;** ACI 318-19 Ch. 20 and Section 26.6.1.2; DSA IR 17-10. (See Appendix (end of this form) for exemptions.)
☑	**c.** During concrete placement, fabricate specimens for strength tests, perform slump and air content tests, and determine the temperature of the concrete.	**Test**	**LOR**	**Table 1705A.3 Item 6**; ACI 318-19 Sections 26.5 & 26.12.
☑	**d.** Test concrete (f'_c).	**Test**	**LOR**	**1905A.1.17;** ACI 318-19 Section 26.12.
☑	**e.** Batch plan inspection:	**See Notes**	**SI**	Default of **'Continuous'** per **1705A.3.3.** If approved by DSA, batch plant inspection may be reduced to **'Periodic'** subject to requirements in Section **1705.A.3.3.1**, or eliminated per **1705A.3.3.2**. See IR 17-13. (See Appendix (end of this form) for exemptions.)

	S/A1. STRUCTURAL STEEL, COLD-FORMED STEEL AND ALUMINUM USED FOR STRUCTURAL PURPOSES			
	Test or Special Inspection	**Type**	**Performed By**	**Code References and Notes**
☑	**a.** Verify identification of all materials and: • Mill certificates indicate material properties that comply with requirements. • Material sizes, types and grades comply with requirements.	**Periodic**		**Table 1705A.2.1 Item 3a–3c.** 2202A.1; AISI S100-20 Section A3.1 & A3.2, AISI S240-20 Section A3 & A5, AISI S220-20 Sections A4 & A6. * By special inspector or qualified technician when performed off-site.
☑	**b.** Test unidentified materials	**Test**	**LOR**	**2202A.1**
☑	**c.** Examine seam welds of HSS shapes	**Periodic**	**SI**	DSA IR 17-5
☑	**d.** Verify and document steel fabrication per DSA-approved construction documents.	**Periodic**	**SI**	Not applicable to cold-formed steel light-frame construction, except for trusses (**1705A.2.4**).

	S/A2. HIGH-STRENGTH BOLTS:			
	Test or Special Inspection	**Type**	**Performed By**	**Code References and Notes**
☑	**a.** Verify identification markings and manufacturer's certificates of compliance conform to ASTM standards specified in the DSA-approved documents.	**Periodic**	**SI**	**Table 1705A.2.1 Items 3a & 1b, 2202A.1;** AISC 360-16 Section A3.3, J3.1, and N3.2; RCSC 2014 Section 1.5 & 2.1; DSA IR 17-8 & DSA IR 17-9.
☑	**b.** Test high-strength bolts, nuts and washers.	**Test**	**LOR**	**Table 1705A.2.1 Item 1c, 2213A.1**; RCSC 2014 Section 7.2; DSA IR 17-8.
☑	**c.** Bearing-type ("snug tight") connections.	**Periodic**	**SI**	**Table 1705A.2.1 Item 2a, 1705A.2.6, 2204A.2;** AISC 360-16 J3.1, J3.2, M2.5 & N5.6; RCSC 2014 Section 9.1; DSA IR 17-9.
☑	**d.** Pretensioned and slip-critical connections	*	**SI**	**Table 1705A.2.1 Items 2b & 2c, 1705A.2.6, 2204A.2;** AISC 360-16 J3.1, J3.2, M2.5 & N5.6; RCSC 2014 Sections 9.2 & 9.3; DSA IR 17-9. * "Continuous" or "Periodic" depends on the tightening method used.

	S/A3. WELDING:			
	Test or Special Inspection	**Type**	**Performed By**	**Code References and Notes**
☑	**a.** Verify weld filler material identification markings per AWS designation listed on the DSA- approved documents and the WPS.	**Periodic**	**SI**	**1705A.2.5, Table 1705A.2.1 Items 4 & 5**; AWS D1.1 and AWS D1.8 for structural steel; AWS D1.2 for Aluminum; AWS D1.3 for cold-formed steel; AWS D1.4 for reinforcing steel; DSA IR 17- 3.
☑	**b.** Verify weld filler material manufacturer's certificate of compliance.	**Periodic**	**SI**	DSA IR 17-3.
☑	**c.** Verify WPS, welder qualifications and equipment.	**Periodic**	**SI**	DSA IR 17-3.

	S/A4. SHOP WELDING (IN ADDITION TO SECTION S/A3):			
	Test or Special Inspection	**Type**	**Performed By**	**Code References and Notes**
☑	**a.** Inspect groove welds, multi-pass fillet welds, single pass fillet welds > 5/16", plug and slot welds.	**Continuous**	**SI**	**Table 1705A.2.1 Items 5a.1–4;** AISC 360-16 (and AISC 341-16 as applicable); DSA IR 17-3.
☑	**b.** Inspect single-pass fillet welds ≤ 5/16", floor and roof deck welds.	**Periodic**	**SI**	**1705A.2.2, Table 1705A.2.1 Items 5a.5 & 5a.6;** AISC 360-16 (and AISC 341-16 as applicable); DSA IR 17-3.

	S/A5. ANCHOR BOLTS AND ANCHOR RODS:			
	Test or Special Inspection	**Type**	**Performed By**	**Code References and Notes**
☑	**a.** Anchor Bolts and Anchor Rods	**Test**	**LOR**	Sample and test anchor bolts and anchor rods not readily identifiable per procedures noted in DSA IR 17-11.

Name of Architect or Engineer in general responsible charge:

Name of Structural Engineer (When structural design has been delegated):

Signature of Architect or Structural Engineer: Date:

Note: To facilitate DSA electronic mark-ups and identification stamp application, DSA recommends against using secured electronic or digital signatures.

DSA STAMP

DSA 103-22: LIST OF REQUIRED VERIFIED REPORTS, CBC 2022

1. Soils Testing and Inspection: Geotechnical Verified Report Form DSA 293
2. Structural Testing and Inspection: Laboratory Verified Report Form DSA 291
3. Shop Welding Inspection: Laboratory Verified Report Form DSA 291, or, for independently contracting SI, Special Inspection Verified Report Form DSA 292
4. High-Strength Bolt Installation Inspection: Laboratory Verified Report Form DSA 291, or, for independently contracting SI, Special Inspection Verified Report Form DSA 292

STATE APPROVALS-SITE

IDENTIFICATION STAMP
DIV. OF THE STATE ARCHITECT
APP: 02-122003 INC:
REVIEWED FOR
SS ☑ FLS ☑ ACS ☑
DATE: 12/05/2023

4020 PLAZA GOLDORADO CIRCLE
SUITE B
CAMERON PARK, CA 95682
530.677.1016

STATE APPROVALS-PC

IDENTIFICATION STAMP
DIV. OF THE STATE ARCHITECT
APP: 02-122213 PC
REVIEWED FOR
SS ☑ FLS ☑ ACS ☑ CG ☐
DATE: 7/18/2023

REGISTERED PROFESSIONAL ENGINEER
JESSICA E. NAPIER
No. S5476
STRUCTURAL
STATE OF CALIFORNIA

PRE-CHECK (PC) DOCUMENT
CODE: 2022 CBC
A SEPARATE PROJECT APPLICATION FOR CONSTRUCTION IS REQUIRED.

NOTES AND SPECIAL INSPECTIONS

HIP ROOF - RAM

RAM1.1

FOUNDATION PLAN NOTES:

1. TOP OF ALL FOUNDATIONS MUST BE CONSTRUCTED AT ONE COMMON ELEVATION (COORDINATE WITH SITE PLANS - NOT BY POLIGON)
2. ALL FOUNDATIONS MUST BE CENTERED UNDER COLUMNS (UNO).
3. SEE SHEET RAM1.1 FOR CONCRETE REQUIREMENTS.
4. PRIOR TO FORMING AND CASTING FOUNDATIONS, REVIEW FOUNDATION PLAN FOR REQUIRED ORIENTATION.
5. FOUNDATION MATERIAL AND INSTALLATION NOT BY POLIGON.
6. VIBRATE CONCRETE FULL DEPTH OF FOUNDATION.
7. FOR DRILLED PIER FOUNDATIONS, PREVENT SOIL FROM ENTERING EXCAVATED HOLE (FORM, ETC).

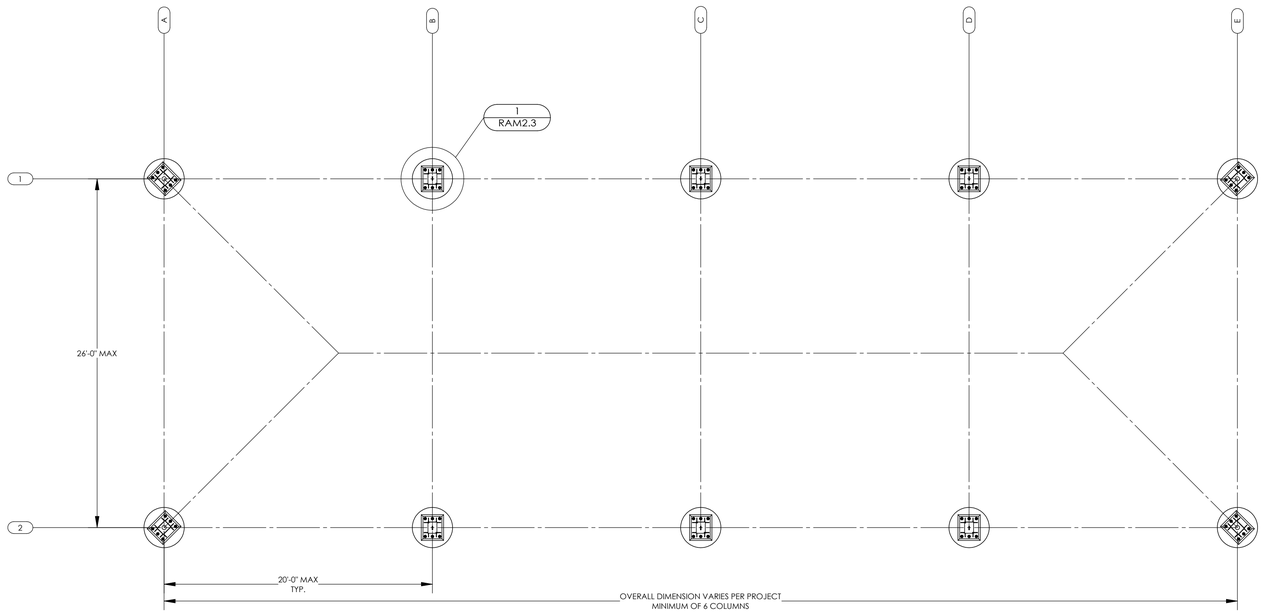

FOUNDATION PLAN (DRILLED PIER)

SCALE: 3/16" = 1'-0"

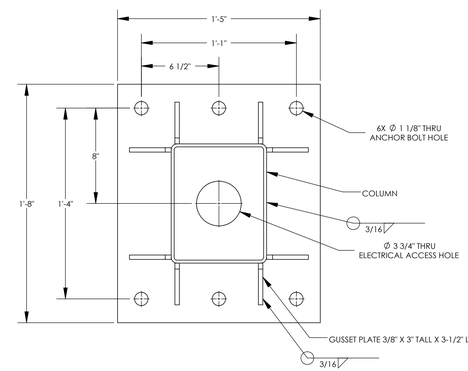

DETAIL 3

SCALE: 1-1/2" = 1'-0"

COLUMN BASEPLATE

3

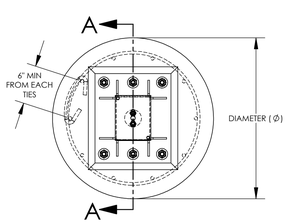

DETAIL 1

SCALE: 3/4" = 1'-0"

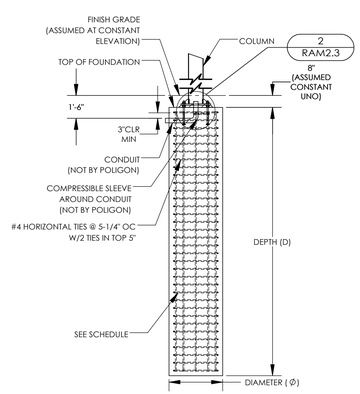

SECTION A-A

SCALE: 1/4" = 1'-0"

FOUNDATION REQUIREMENTS VARY PER PROJECT

SEE SHEET RAM1.0 FOR REQUIRED LOAD SCENARIO AND FOUNDATION TYPE (STEP 9 OF 'INSTRUCTIONS')

ONLY REFERENCE COPY OF PC DRAWINGS SUBMITTED FOR THIS PROJECT

DRILLED PIER

SIZE AND REINFORCING REQUIREMENTS

LOAD SCENARIO	DIAMETER (Ø)	DEPTH (D)	VERTICAL REINFORCING[1]	
			QTY	SIZE
1	3'-0"	13'-0"	10	#7
~~2~~	~~3'-0"~~	~~15'-0"~~	~~10~~	~~#7~~

[1] EQUALLY SPACED AROUND DRILLED PIER

DRILLED PIER FOUNDATION

1

NOTES:

1. GROUT SHALL BE NON-METALLIC, NON-SHRINK GROUT WITH MINIMUM F'c=6500 PSI.
2. COLUMNS FABICATED ASSUMING 1-1/2" GROUT PAD.
3. COLUMN BASES BELOW FINISH GRADE SHOULD BE PROTECTED FROM CORROSION, SELECT ONE OF THE FOLLOWING OPTIONS BELOW.

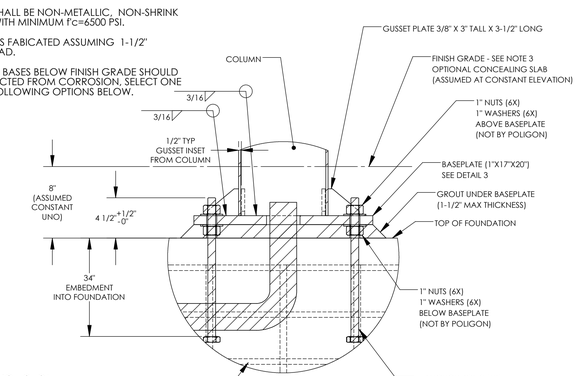

COLUMN BASE PROTECTION

BELOW SURFACE COLUMN INSTALLATION

[ ] CONCRETE SLAB - 3" MIN ANCHOR BOLT COVER

[ ] MASTIC COATING - 1/4" THICK MIN COATING ON ALL STEEL SURFACES BELOW GRADE

DETAIL 2

SCALE: 1-1/2" = 1'-0"

COLUMN BASEPLATE AND ANCHOR BOLTS

2

STATE APPROVALS-SITE

IDENTIFICATION STAMP
DIV. OF THE STATE ARCHITECT
APP: 02-122003 INC:
REVIEWED FOR
SS ☑ FLS ☑ ACS ☑
DATE: 12/05/2023

4600 PLAZA GOLDORADO CIRCLE
SUITE B
CAMERON PARK, CA 95682
530.677.5516

STATE APPROVALS-PC

IDENTIFICATION STAMP
DIV. OF THE STATE ARCHITECT
APP: 02-121213 PC
REVIEWED FOR
SS ☑ FLS ☑ ACS ☑ CG ☐
DATE: 7/18/2023

PRE-CHECK (PC) DOCUMENT
CODE: 2022 CBC
A SEPARATE PROJECT APPLICATION FOR CONSTRUCTION IS REQUIRED.

FOUNDATION PLAN DRILLED PIER

HIP ROOF - RAM 30

RAM2.3

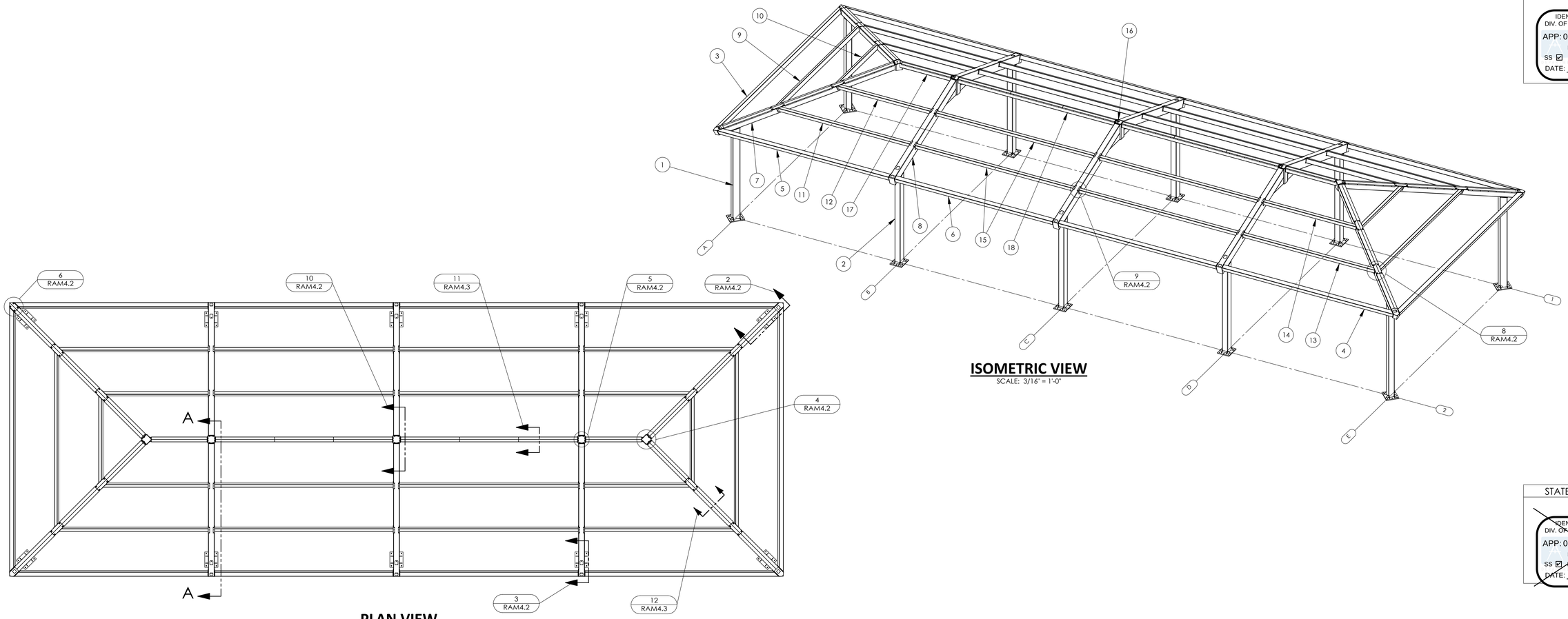

ISOMETRIC VIEW
SCALE: 3/16" = 1'-0"

PLAN VIEW
SCALE: 3/16" = 1'-0"

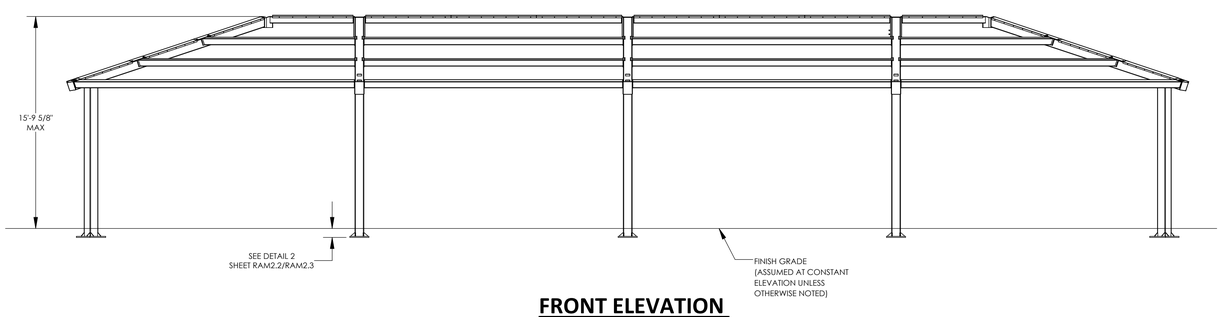

FRONT ELEVATION
SCALE: 3/16" = 1'-0"

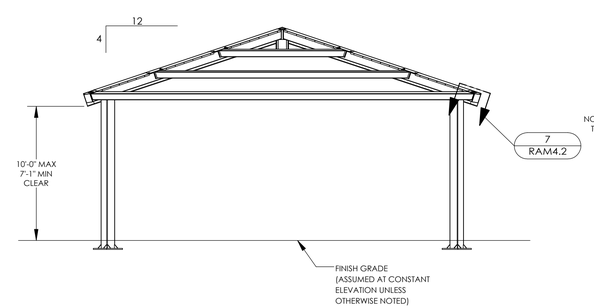

SIDE ELEVATION
SCALE: 3/16" = 1'-0"

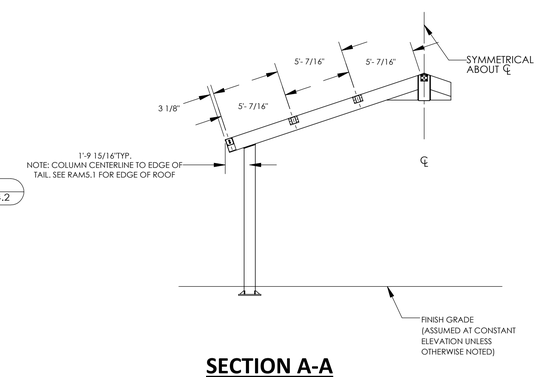

SECTION A-A
SCALE: 3/16" = 1'-0"

ITEM	QTY.	PART NO.	DESCRIPTION	MATERIAL	WEIGHT
18	2	-	R-BEAM ASM	HSS6X6X3/16	287.26
17	2	-	END R-BEAM ASM	HSS6X6X3/16	154.14
16	6	-	C-TUBE ASM	HSS10X10X5/8	143.92
15	8	-	SIDE PURLIN ASM	HSS6X4x3/16	234.29
14	2	-	CORNER PURLIN ASM	HSS6X4x3/16	136.79
13	2	-	CORNER PURLIN ASM	HSS6X4x3/16	193.62
12	2	-	CORNER PURLIN ASM	HSS6X4x3/16	136.94
11	2	-	CORNER PURLIN ASM	HSS6X4x3/16	193.78
10	2	-	END PURLIN ASM	HSS6X4x3/16	110.56
9	2	-	END PURLIN ASM	HSS6X4x3/16	224.23
8	6	-	GABLE BEAM ASM	HSS12X8X1/4	559.76
7	4	-	HIP BEAM ASM	HSS8X8X3/16	431.12
6	4	-	SIDE EAVE BEAM ASM	HSS6X6X3/16	284.96
5	2	-	CORNER EAVE BEAM ASM	HSS6X6X3/16	306.07
4	2	-	CORNER EAVE BEAM ASM	HSS6X6X3/16	306.00
3	2	-	END EAVE BEAM ASM	HSS6X6X3/16	413.48
2	6	-	SIDE COLUMN ASM	HSS10X8X1/4	425.36
1	4	-	CORNER COLUMN ASM	HSS10X8X1/4	433.63

STATE APPROVALS-SITE

IDENTIFICATION STAMP
DIV. OF THE STATE ARCHITECT
APP: 02-122003 INC:
REVIEWED FOR
SS ☑ FLS ☑ ACS ☑
DATE: 12/05/2023

4080 PLAZA GOLDORADO CIRCLE
SUITE B
CAMERON PARK, CA 95682
530.677.5016

poligon PORTER

REGISTERED PROFESSIONAL ENGINEER
JESSICA E. NAPIER
No. S5476
STRUCTURAL
STATE OF CALIFORNIA

STATE APPROVALS-PC

IDENTIFICATION STAMP
DIV. OF THE STATE ARCHITECT
APP: 02-121213 PC
REVIEWED FOR
SS ☑ FLS ☑ ACS ☑ CG ☐
DATE: 7/18/2023

PRE-CHECK (PC) DOCUMENT
CODE: 2022 CBC
A SEPARATE PROJECT APPLICATION FOR CONSTRUCTION IS REQUIRED.

FRAMING PLAN

HIP ROOF - RAM 30

RAM3.1

ALL HIDDEN NUTS AND BOLTS (INSTALLED IN SHOP DURING FABRICATION) ARE SECURED WITH THIS NUT AND BOLT RESTAINING SYSTEM.

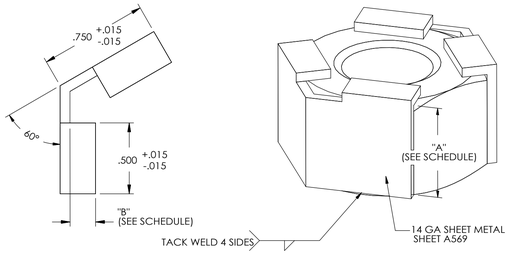

DIMENSION SCHEDULE				
FASTENER	DIM A		DIM B	
5/8" NUT	.631	+.000 -.015	.180	+.015 -.015
5/8" BOLT	.403	+.000 -.015	.250	+.015 -.015
3/4" NUT	.758	+.000 -.015	.180	+.015 -.015
3/4" BOLT	.483	+.000 -.015	.375	+.015 -.015
1" NUT	1.012	+.000 -.015	.180	+.015 -.015
1" BOLT	.643	+.000 -.015	.375	+.015 -.015

NUT & BOLT RESTRAINING SYSTEM 1

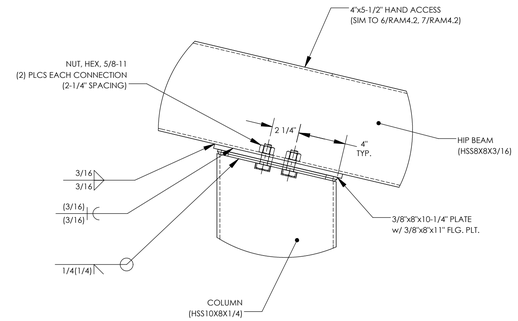

HIP BEAM CONNECTION @ COLUMN 2

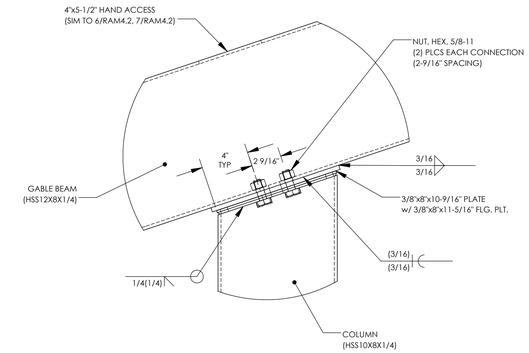

GABLE BEAM CONNECTION @ COLUMN 3

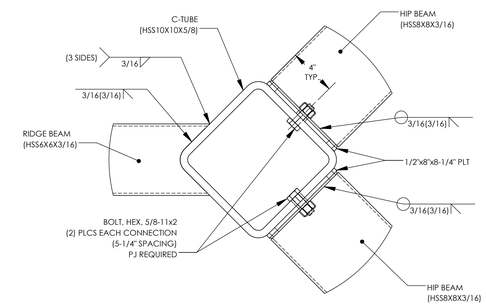

HIP BEAM CONNECTION @ COMPRESSION TUBE 4

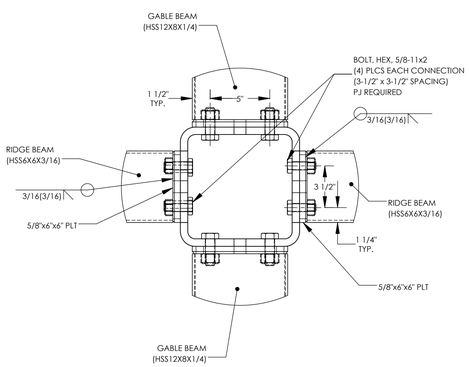

RIDGE BEAM CONNECTION @ COMPRESSION TUBE 5

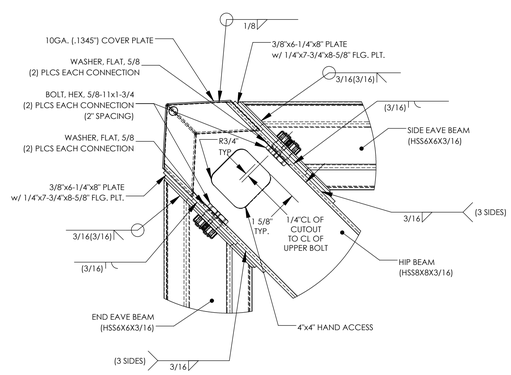

EAVE BEAM CONNECTION @ HIP BEAM 6

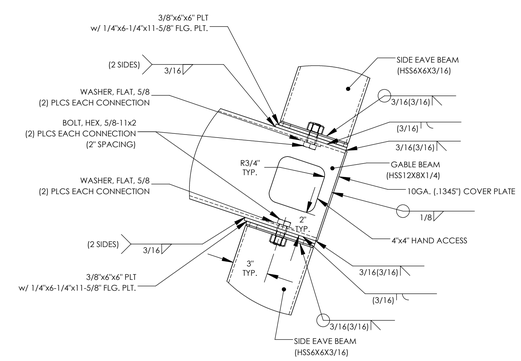

EAVE BEAM CONNECTION @ GABLE BEAM 7

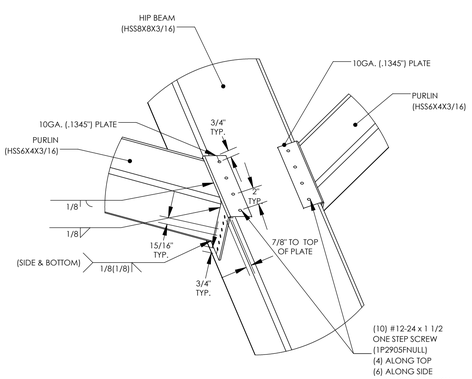

PURLIN CONNECTION @ HIP BEAM 8

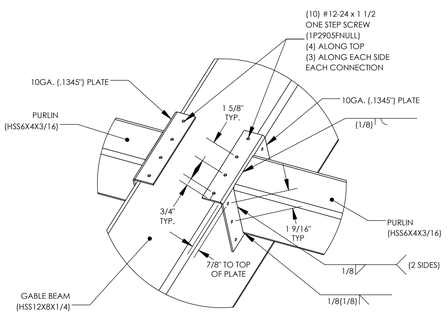

PURLIN CONNECTION @ GABLE BEAM 9

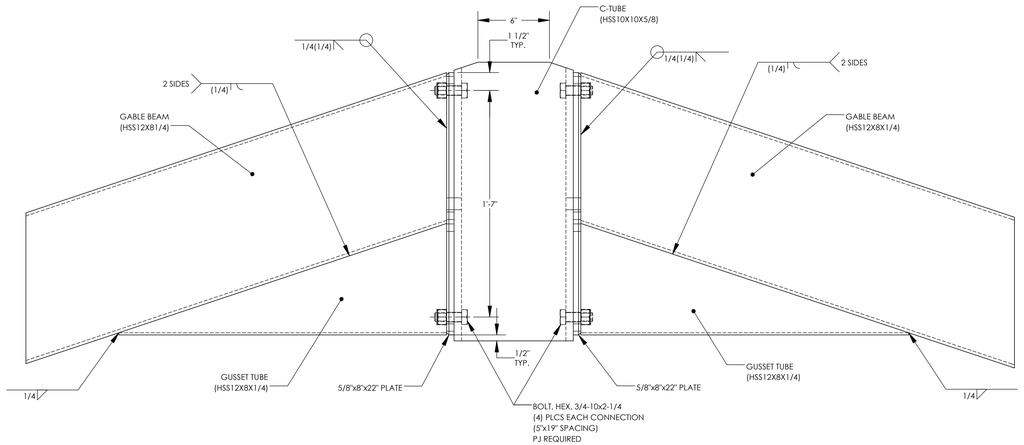

GABLE BEAM CONNECTION @ COMPRESSION TUBE 10

STATE APPROVALS-SITE

IDENTIFICATION STAMP
DIV. OF THE STATE ARCHITECT
APP: 02-122003 INC:
REVIEWED FOR
SS ☑ FLS ☑ ACS ☑
DATE: 12/05/2023

4005 PLAZA GOLDORADO CIRCLE
SUITE B
CAMERON PARK, CA 95682
530.677.1016
GHD
poligon
PORTER

REGISTERED PROFESSIONAL ENGINEER JESSICA E. NAPPER No. S5476 STRUCTURAL STATE OF CALIFORNIA

STATE APPROVALS-PC

IDENTIFICATION STAMP
DIV. OF THE STATE ARCHITECT
APP: 02-121213 PC
REVIEWED FOR
SS ☑ FLS ☑ ACS ☑ CG ☐
DATE: 7/18/2023

PRE-CHECK (PC) DOCUMENT
CODE: 2022 CBC
A SEPARATE PROJECT APPLICATION FOR CONSTRUCTION IS REQUIRED.

FRAME CONNECTION DETAILS

HIP ROOF - RAM 30

RAM4.2

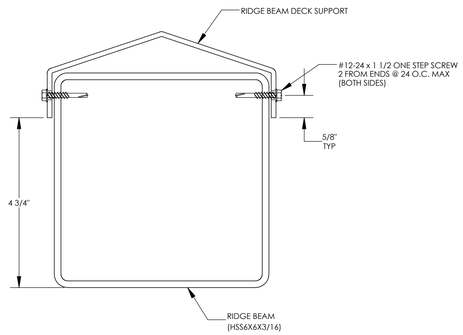

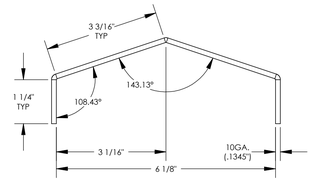

RAM 30 - RIDGE
Fy = 36 KSI
A = 1.231 IN^2
Ix = 1.149 IN^4
Iy = 6.272 IN^4
Sx = 0.771 IN^3
Sy = 1.962 IN^3

RIDGE BEAM DECK SUPPORT DETAIL

11

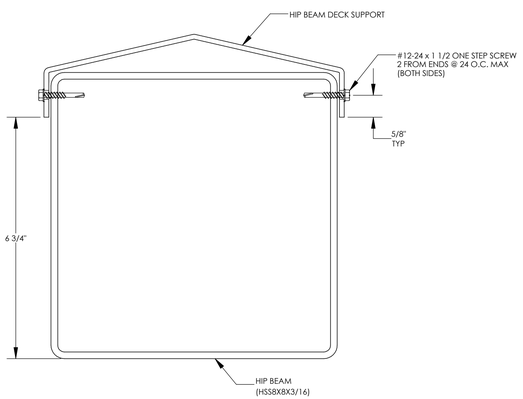

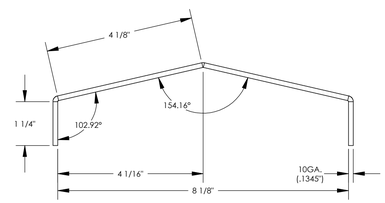

RAM 30 - HIP
Fy = 36 KSI
A = 1.484 IN^2
Ix = 1.341 IN^4
Iy = 12.353 IN^4
Sx = 0.886 IN^3
Sy = 2.943 IN^3

HIP BEAM DECK SUPPORT DETAIL

12

STATE APPROVALS-SITE

IDENTIFICATION STAMP
DIV. OF THE STATE ARCHITECT
APP: 02-122003 INC:
REVIEWED FOR
SS ☑ FLS ☑ ACS ☑
DATE: 12/05/2023

4000 PLAZA GOLDORADO CIRCLE
SUITE B
CAMERON PARK, CA 95682
530.677.0016

poligon PORTER

REGISTERED PROFESSIONAL ENGINEER
JESSICA E. NAPIER
No. S5476
STRUCTURAL
STATE OF CALIFORNIA

STATE APPROVALS-PC

IDENTIFICATION STAMP
DIV. OF THE STATE ARCHITECT
APP: 02-121213 PC
REVIEWED FOR
SS ☑ FLS ☑ ACS ☑ CG ☐
DATE: 7/18/2023

PRE-CHECK (PC) DOCUMENT
CODE: 2022 CBC
A SEPARATE PROJECT APPLICATION FOR CONSTRUCTION IS REQUIRED.

SECTION DETAILS

HIP ROOF - RAM 30

RAM4.3

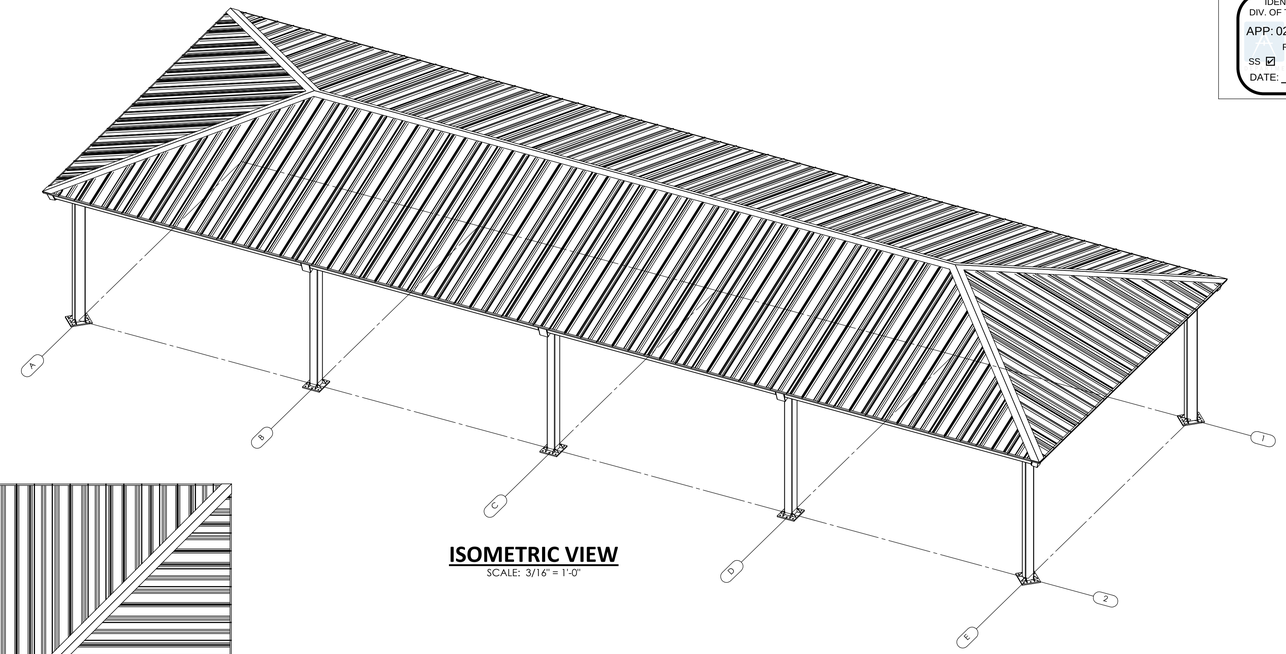

ISOMETRIC VIEW

SCALE: 3/16" = 1'-0"

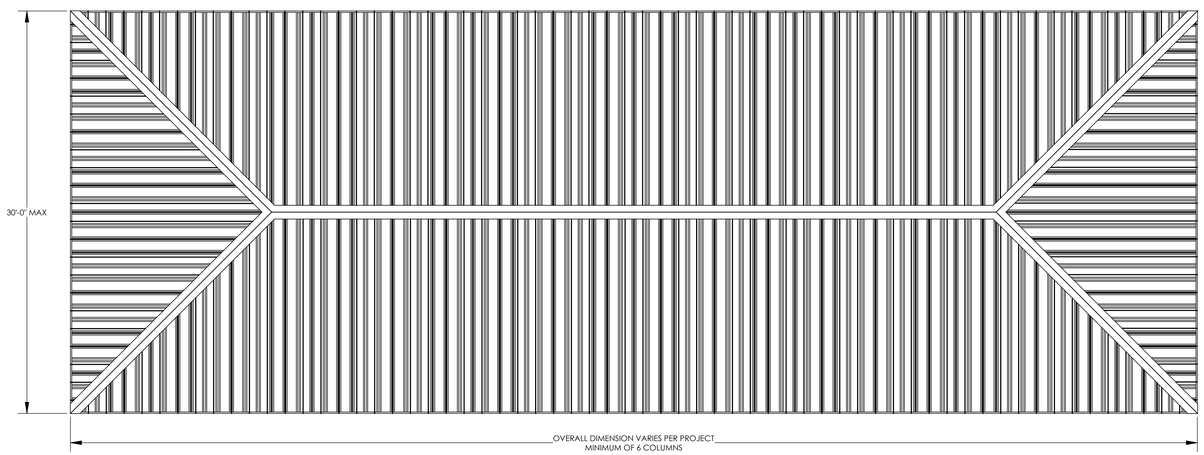

PLAN VIEW

SCALE: 3/16" = 1'-0"

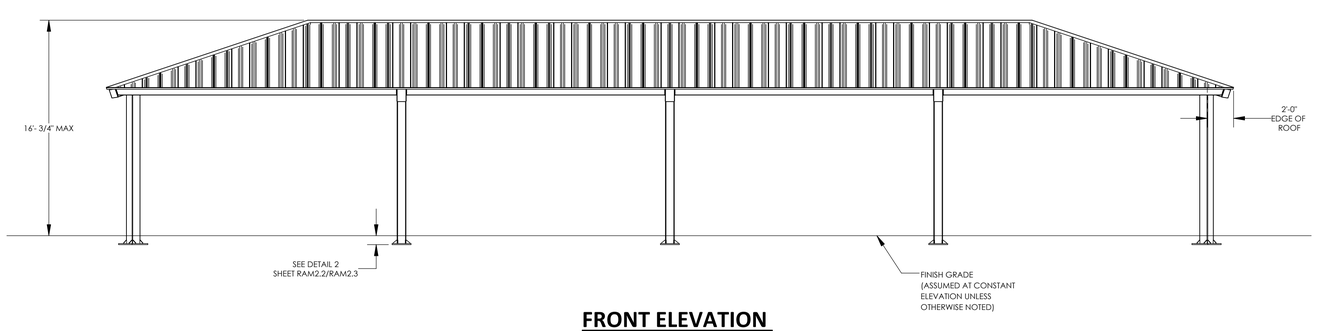

FRONT ELEVATION

SCALE: 3/16" = 1'-0"

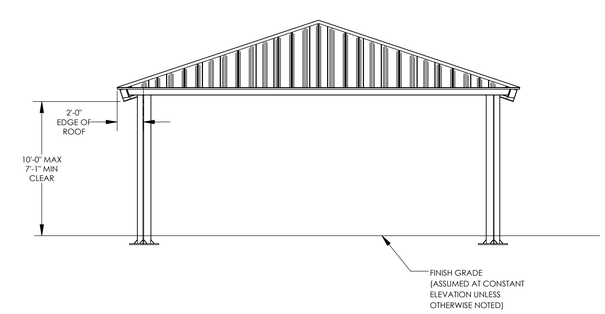

SIDE ELEVATION

SCALE: 3/16" = 1'-0"

STATE APPROVALS-SITE

IDENTIFICATION STAMP
DIV. OF THE STATE ARCHITECT
APP: 02-122003 INC:
REVIEWED FOR
SS ☑ FLS ☑ ACS ☑
DATE: 12/05/2023

4000 PLAZA GOLDCREK DR. CIRCLE
SUITE B
CHANHASSEN, MN, 55317
952.277.1016

REGISTERED PROFESSIONAL ENGINEER
JESSICA E. NAPIER
No. S5476
STRUCTURAL
STATE OF CALIFORNIA

STATE APPROVALS-PC

IDENTIFICATION STAMP
DIV. OF THE STATE ARCHITECT
APP: 02-121213 PC
REVIEWED FOR
SS ☑ FLS ☑ ACS ☑ CG ☐
DATE: 7/18/2023

PRE-CHECK (PC) DOCUMENT
CODE: 2022 CBC
A SEPARATE PROJECT APPLICATION FOR CONSTRUCTION IS REQUIRED.

ARCHITECTURAL VIEWS

HIP ROOF - RAM 30

RAM5.1

STANDING SEAM INSTALLATION NOTES:

THE DETAILS SHOWN ARE SUGGESTIONS OR GUIDELINES ON HOW TO ERECT THE SYSTEMS. THE INFORMATION SHOWN IS ACCURATE, BUT IT IS NOT INTENDED TO COVER ALL INSTANCES, BUILDING REQUIREMENTS, DESIGNS OR CODES. THE DETAILS MAY REQUIRE CHANGES OR REVISIONS DUE TO FIELD CONDITIONS.

IT SHALL BE THE RESPONSIBILITY OF THE ERECTOR TO ENSURE THAT THE DETAILS MEET PARTICULAR BUILDING REQUIREMENTS AND TO ASSURE ADEQUATE WATER TIGHTNESS.

THE ERECTOR SHOULD THOROUGHLY FAMILIARIZE HIMSELF/HERSELF WITH ALL ERECTION INSTRUCTIONS BEFORE STARTING WORK.

THE PANELS SHOULD BE INSTALLED PLUMB, STRAIGHT, AND ACCURATELY TO THE ADJACENT WORK.

FLASHING AND TRIM SHALL BE INSTALLED TRUE, AND IN PROPER ALIGNMENT, WITH ANY EXPOSED FASTENERS EQUALLY SPACED FOR THE BEST APPEARANCE.

SEALANT SHALL BE FIELD APPLIED ON DRY, CLEAN SURFACES. SOME FIELD CUTTING AND FITTING OF PANELS AND FLASHING IS TO BE EXPECTED BY THE ERECTOR AND MINOR FIELD CORRECTIONS ARE A PART OF NORMAL ERECTION WORK.

WORKMANSHIP SHALL BE OF THE BEST INDUSTRY STANDARDS AND INSTALLATION SHALL BE PERFORMED BY EXPERIENCED METAL CRAFTSMEN.

METAL SHAVINGS FROM DRILLING OR INSTALLATION OF ROOF FASTENERS MUST BE CAREFULLY REMOVED FROM THE ROOF BY BRUSHING OR SWEEPING AT THE END OF EACH DAY DURING INSTALLATION. SHAVINGS LEFT ON THE ROOF WILL QUICKLY RUST AND STAIN THE ROOF FINISH.

COVER ACCESS HOLES WITH GRACE ICE AND WATER SHIELD BEFORE ATTACHING ROOF DECKING

METAL ROOFING PRODUCT AND INSTALLATION SHALL MEET ALL REQUIREMENTS OF ICC-ES REPORT ESL-1082.

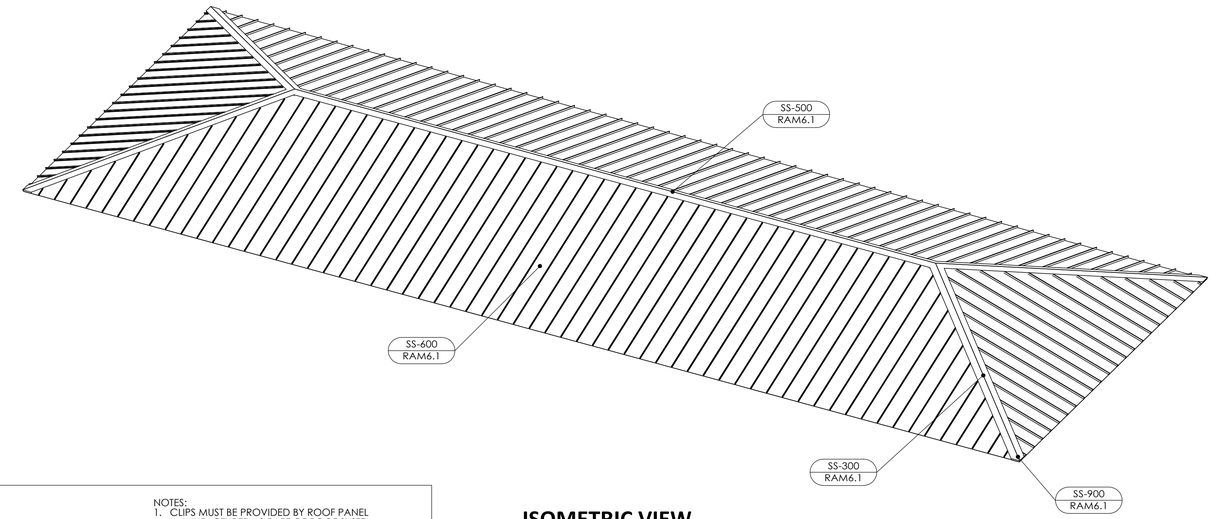

ISOMETRIC VIEW

SCALE: 3/16" = 1'-0"

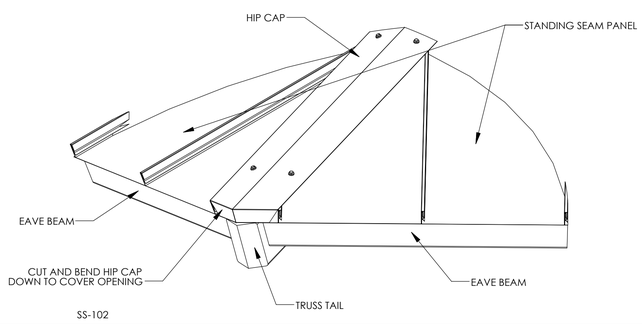

CORNER DETAIL — SS-900

NOTES:
1. CLIPS MUST BE PROVIDED BY ROOF PANEL MANUFACTURER AS PART OF ROOF SYSTEM,
2. MATERIAL THICKNESS MUST BE 18 GAGE (0.048"-0.053")

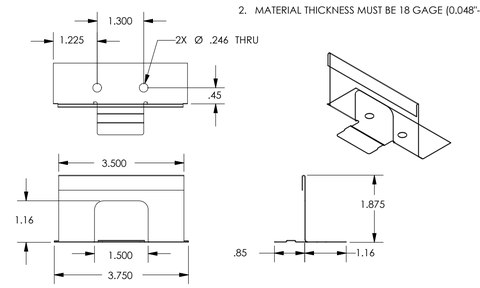

CLIP DETAIL — SS-CLP

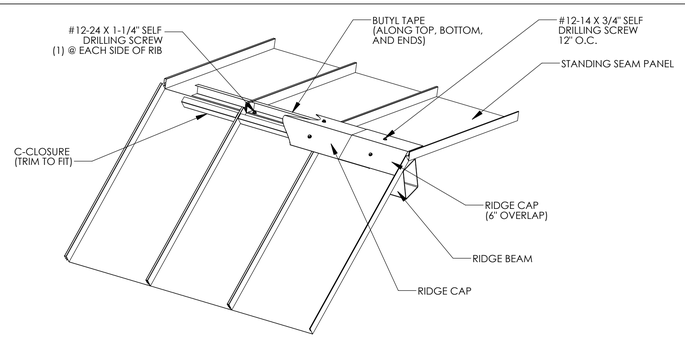

RIDGE DETAIL — SS-500

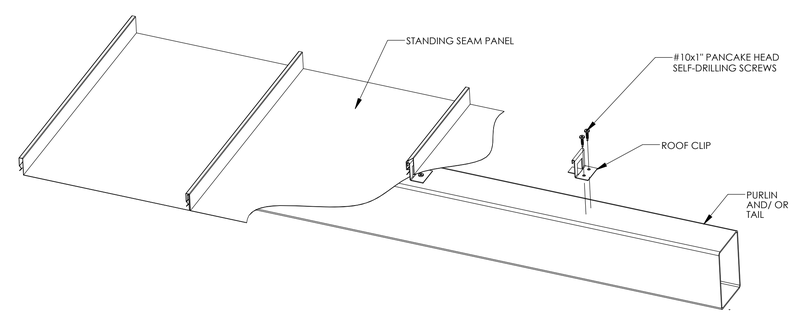

PURLIN DETAIL — SS-600

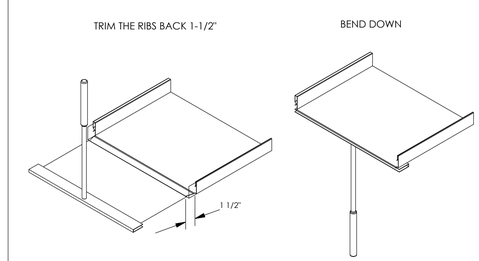

HEMMING DETAIL — SS-HEM

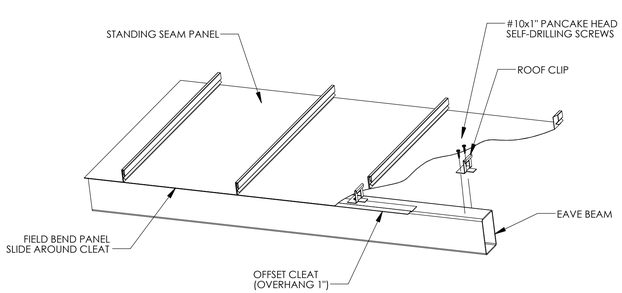

EAVE DETAIL — SS-200

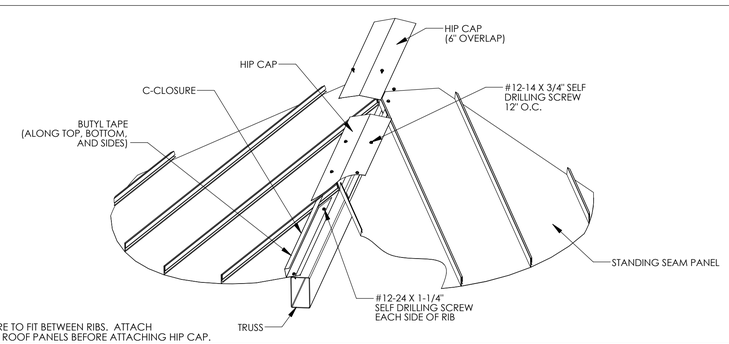

NOTE:
TRIM C-CLOSURE TO FIT BETWEEN RIBS. ATTACH C-CLOSURE TO ROOF PANELS BEFORE ATTACHING HIP CAP.

TRUSS DETAIL — SS-300

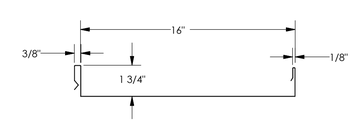

GENERAL
GAGE = 22
FY = 50 KSI

TOP IN COMPRESSION
Ix = 0.1200 IN^4
Se = 0.0803 IN^3
Ma = 2.4056 IN-KIPS

BOTTOM IN COMPRESSION
Ix = 0.0570 IN^4
Se = 0.0729 IN^3
Ma = 1.7220 IN-KIPS

ROOF DECK SECTION PROPERTIES — SS-950

STATE APPROVALS-SITE

IDENTIFICATION STAMP
DIV. OF THE STATE ARCHITECT
APP: 02-122003 INC:
REVIEWED FOR
SS ☑ FLS ☑ ACS ☑
DATE: 12/05/2023

GHD
4600 PLAZA GOLDORADO CIRCLE
SUITE B
CAMERON PARK, CA 95682
530.677.0316

poligon
PORTER

REGISTERED PROFESSIONAL ENGINEER
JESSICA E. NAPIER
No. S5476
STRUCTURAL
STATE OF CALIFORNIA

STATE APPROVALS-PC

IDENTIFICATION STAMP
DIV. OF THE STATE ARCHITECT
APP: 02-121213 PC
REVIEWED FOR
SS ☑ FLS ☑ ACS ☑ CG ☐
DATE: 7/18/2023

PRE-CHECK (PC) DOCUMENT
CODE: 2022 CBC
A SEPARATE PROJECT APPLICATION FOR CONSTRUCTION IS REQUIRED.

ROOF CONNECTION DETAILS

HIP ROOF - RAM

RAM6.1

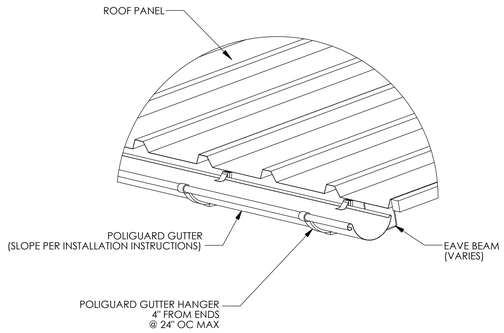

GUTTER DETAIL

GS-100

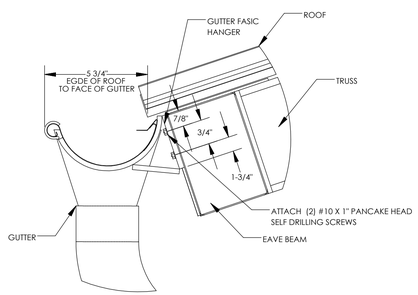

GUTTER DETAIL

GS-200

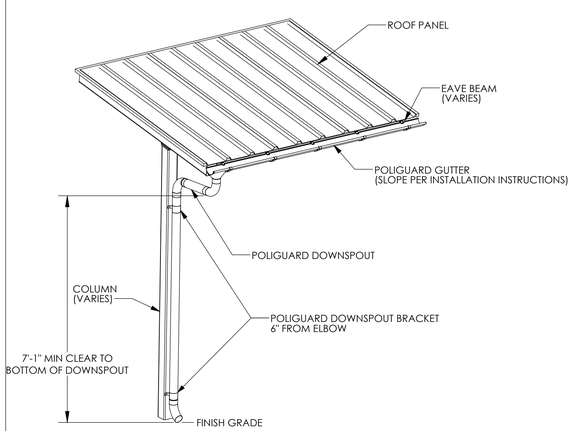

DOWNSPOUT DETAIL

GS-300

POLIGUARD GUTTER SYSTEM NOTES:

1. PREFABRICATED GUTTER SYSTEM IS ATTACHED TO THE STRUCTURE AFTER ROOF IS INSTALLED.
2. DETAILED INSTALLATION INSTRUCTIONS ARE SHIPPED WITH THE STRUCTURE.
3. ~~DOWNSPOUTS REQUIRED AT EACH COLUMN.~~

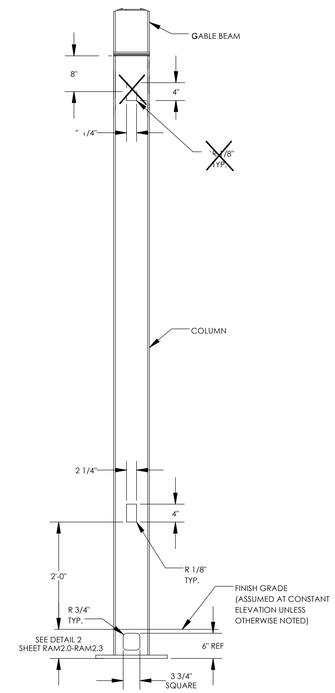

ELECTRICAL CUTOUT IN COLUMNS

EC-100

ELECTRICAL CUTOUT NOTES:

1. MAXIMUM ONE CUTOUT PERMITTED IN EACH MEMBER.
2. CUTOUTS CAN BE PLACED ON ANY SIDE OF A MEMBER.
3. CUTOUTS CAN BE PLACED ALONG MEMBERS AS INDICATED IN THE DETAILS.
4. ARCHITECTS REQUESTING CUTOUTS MUST MARKUP APPROVED PC DRAWINGS TO LOCATE CUTOUTS FOR APPROVAL AND FABRICATION.

STATE APPROVALS-SITE

IDENTIFICATION STAMP
DIV. OF THE STATE ARCHITECT
APP: 02-122003 INC:
REVIEWED FOR
SS ☑ FLS ☑ ACS ☑
DATE: 12/05/2023

4000 P-3 GOLDORADO CIRCLE
SUITE B
CAMERON PARK, CA 95682
530.677.3515

poligon

PORTER

REGISTERED PROFESSIONAL ENGINEER
JESSICA E. NAPIER
No. S5476
STRUCTURAL
STATE OF CALIFORNIA

STATE APPROVALS-PC

IDENTIFICATION STAMP
DIV. OF THE STATE ARCHITECT
APP: 02-121213 PC
REVIEWED FOR
SS ☑ FLS ☑ ACS ☑ CG ☐
DATE: 7/18/2023

PRE-CHECK (PC) DOCUMENT
CODE: 2022 CBC
A SEPARATE PROJECT APPLICATION FOR CONSTRUCTION IS REQUIRED.

MISC DESIGN OPTIONS

HIP ROOF - RAM

RAM7.0

ELECTRICAL CUTOUT AND ACCESS INSTRUCTIONS

- IF 'YES' IS NOT SELECTED IN STEP 2 ON ORDER FORM, THEN THIS SHEET NEED NOT BE INCLUDED IN SITE-SPECIFIC DRAWINGS
- ONLY COLUMNS ARE PERMITTED TO HAVE ELECTRICAL ACCESS
- THE COLUMN CUTOUTS ARE STATIC AND SHOWN IN THE 'MISC DESIGN OPTIONS SHEET'
- IDENTIFY THE COLUMNS WITH ELECTRICAL CUTOUTS BELOW (REFERENCE GRID LINES IN ISOMETRIC FRAME VIEW TO THE RIGHT)
- STRUCTURES MAY BE LONGER OR SHORTER THAN THE ISOMETRIC FRAME VIEW SHOWN
- IF SITE-SPECIFIC STRUCTURE HAS A DIFFERENT NUMBER OF COLUMNS THAN ISOMETRIC SHOWN, REFERENCE COLUMN A1 IN THE ISOMETRIC VIEW AND CONTINUE PATTERN TO FIT SITE-SPECIFIC LAYOUT
- IF NO COLUMNS ARE IDENTIFIED, POLIGON WILL ASSUME CUTOUTS ONLY IN COLUMN A1
- CONTACT POLIGON ENGINEERING FOR SPECIAL PROJECT SPECIFIC REQUIREMENTS

ELECTRICAL CUTOUT IDENTIFICATION IN COLUMNS
SPECIFIC MEMBERS A1, E2

~~EXAMPLE:~~

~~ELECTRICAL CUTOUT IDENTIFICATION IN COLUMNS~~
~~SPECIFIC MEMBERS: A1 , B1, F1~~

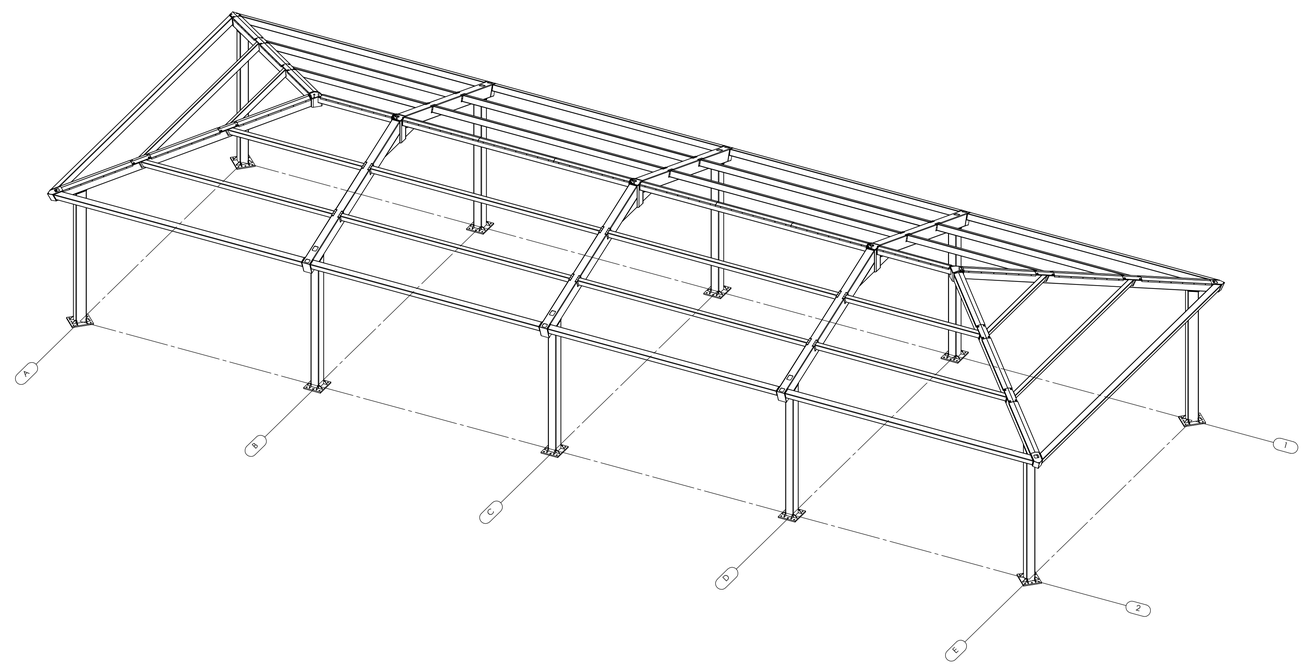

STATE APPROVALS-SITE

IDENTIFICATION STAMP
DIV. OF THE STATE ARCHITECT
APP: 02-122003 INC:
REVIEWED FOR
SS ☑ FLS ☑ ACS ☑
DATE: 12/05/2023

4600 PLAZA GOLDCREEK DR. CIRCLE
SUITE B
CHANHASSEN, MN, 55317
952.277.1016
GHD
poligon
PORTER

REGISTERED PROFESSIONAL ENGINEER
JESSICA E. NAPIER
No. S5476
STRUCTURAL
STATE OF CALIFORNIA

STATE APPROVALS-PC

~~IDENTIFICATION STAMP~~
~~DIV. OF THE STATE ARCHITECT~~
~~APP: 02-121213 PC~~
~~REVIEWED FOR~~
~~SS ☑ FLS ☑ ACS ☑ CG ☐~~
~~DATE: 7/18/2023~~

PRE-CHECK (PC) DOCUMENT
CODE: 2022 CBC
A SEPARATE PROJECT APPLICATION FOR CONSTRUCTION IS REQUIRED.

ELECTRICAL CUTOUTS

HIP ROOF - RAM

RAM7.1