Newkirk Novak Construction Partners
11200 West 79th Street
Lenexa, KS 66214
913.312.9535

Liberty School District – Storm Shelter Additions
Addendum No: 003
Description Narrative
September 27, 2023

This Addendum is issued to all registered plan holders pursuant to the Instructions to Bidders and Conditions of the Contract. This Addendum serves to clarify, revise, and supersede information in the Project Manual, Drawings, and previously issued Addenda. Portions of the Addendum affecting the Contract Documents will be incorporated into the Contract by enumeration of the Addendum in the Owner/Contractor Agreement.

The Bidder shall acknowledge receipt of this Addendum in the appropriate space on the Bid Form.

A. CONSTRUCTION MANAGER'S FRONT END MANUAL

NA

B. OTHER

NA

C. SPECIFICATIONS

NA

D. DRAWINGS

1. **Please reference the attached Addendum No. 003 issued by Hollis + Miller dated September 26, 2023, for updates to Drawings, and bidder questions.**

Please direct any questions regarding the information in this addenda and the project to Newkirk Novak Construction Partners.

we design the future®

ADDENDUM NO. 03

Issued: 09/26/2023

Project: 23018 - Discovery Middle School, 800 Midjay Drive, Liberty, Missouri 64068
23019 - South Valley Middle School, 1000 Midjay Drive, Liberty, Missouri 64068
23020 - EPiC Elementary School, 650 Conister Street, Liberty, Missouri 64068

Owner: Liberty Public Schools
8 Victory Lane
Liberty, MO 64068

Bidding Documents Issued: 08.31.2023

This Addendum includes these two pages and the following attachments:

Supplemental Information:

Refer to Newkirk Novak Construction Partners Description Narrative.

Drawings:

23018 - Discovery Middle School
Refer to Smith & Boucher, MEP Addendum No. 3

23019 – South Valley Middle School
Refer to Smith & Boucher, MEP Addendum No. 3

23020 – EPiC Elementary School
Refer to Smith & Boucher, MEP Addendum No. 3

we design the future®

GENERAL – BIDDER'S QUESTIONS

G1 QUESTION: IS THERE ANYWAY WE COULD CHANGE THE DIMENSIONS OF THE DOUBLE T'S AND LOAD BEARING WALLS (NORTH AND SOUTH SIDES) WALLS?

G1.1 Precast double T size and locations need to remain as is to the original design due to multiple penetrations and strategic coordination during design to support the athletic and fine arts functions in the space. Precast wall panels can be reduced in size per manufacture recommendation as long as, double T size remains as is per the original design and accommodate design intent, provide cost assessment for additional joint and steel connection to precast vs. keeping panels as is, all open sizes and locations need to remain as is per the construction drawings. It is highly advised for precast wall panels to remain 10' to the original design.

DRAWINGS REVISIONS

E2 REFERENCE ATTACHED MEP ADDENDUM NO. 3

SUBSTITUTION REQUEST APPROVALS

This portion of the addendum designates those materials, products and equipment approved prior to submission of bids, as set forth in the contract documents. Items added to the proposed contract documents by this addendum are the only proposed substitutions received and approved by the architect in accordance with those provisions. No other items shall be substituted or bid as "equals".

It is understood that all items allowed by this addendum are subject to the full provisions of the original proposed contract documents and all modifications thereto and, as such, shall match standards of the original specified items with respect to materials, workmanship, design, size, capacity, type, function, finish, performance, quality, warranty, etc. Nothing in this addendum shall be construed as altering those original standards or modifications thereto.

Approvals are based upon the opinion, knowledge, information and belief of the architect at time of issuance of this addendum and reliance upon data submitted. Approvals are therefore interim in nature and subject to reconsideration as additional data, materials, workmanship and coordination with other work are observed and reviewed. In proposing items allowed by this addendum, bidder assumes all risk, costs and responsibility for item's final acceptance, integration into the work and performance.

SECTION 095666 – RESILIENT ATHLETIC FLOORING

Omnisports Active+; vinyl, TarkoLay, is acceptable for the Sheet resilient athletic flooring (096566.A01 – AF21,AF22).

SECTION 096723 – RESINOUS FLOORING

Tnemec is acceptable for the seamless resinous flooring (096723.A01) with integral base (096723.A02).

SECTION 102238 – OPERABLE PANEL PARTITIONS

Moderco; Signature 841, Carpet and Vinyl, Individual Panel, is acceptable for the Operable Partition.

END OF ADDENDUM NO. 03

ADDENUM No. 3

Liberty Discovery Middle School Storm Shelter Addition
Smith & Boucher Project No. 2314702

Liberty South Valley Middle School Storm Shelter Addition
Smith & Boucher Project No. 2314703

Liberty Epic Elementary School Lighting Storm Shelter Addition
Smith & Boucher Project No. 2314704

09/26/2023

To Documents Titled:
See titles above.
08/31/2023

Architect-of-Record:
Hollis and Miller
1828 Walnut Street Suite 922
Kansas City, MO 64108

The Contract Documents for the above referenced project and the Work covered thereby are modified as described herein.

DISCOVERY MIDDLE SCHOOL DRAWINGS

1. Sheet E301- Electrical Schedules and Details
   a. Revised transformer grounding to be grounded to building steel in lieu of underground water pipe.

SOUTH VALLEY MIDDLE SCHOOL DRAWINGS

1. Sheet E301- Electrical Schedules and Details
   a. Revised transformer grounding to be grounded to building steel in lieu of underground water pipe.

EPIC ELEMENTARY SCHOOL DRAWINGS

1. Sheet E301- Electrical Schedules and Details
   a. Revised transformer L4 to be 75kva, revised the secondary feeder to be 200A, and primary to be 125A so that panel load can be up to 200A.
2. Sheet E301- Electrical Schedules and Details
   a. Revised transformer grounding to be grounded to building steel in lieu of underground water pipe.

Attachments

- See drawing list above.

25618 W 103rd St, Olathe, KS 66061
913.345.2127 smithboucher.com

END OF MEP ITEMS FOR ADDENDUM NO. 1

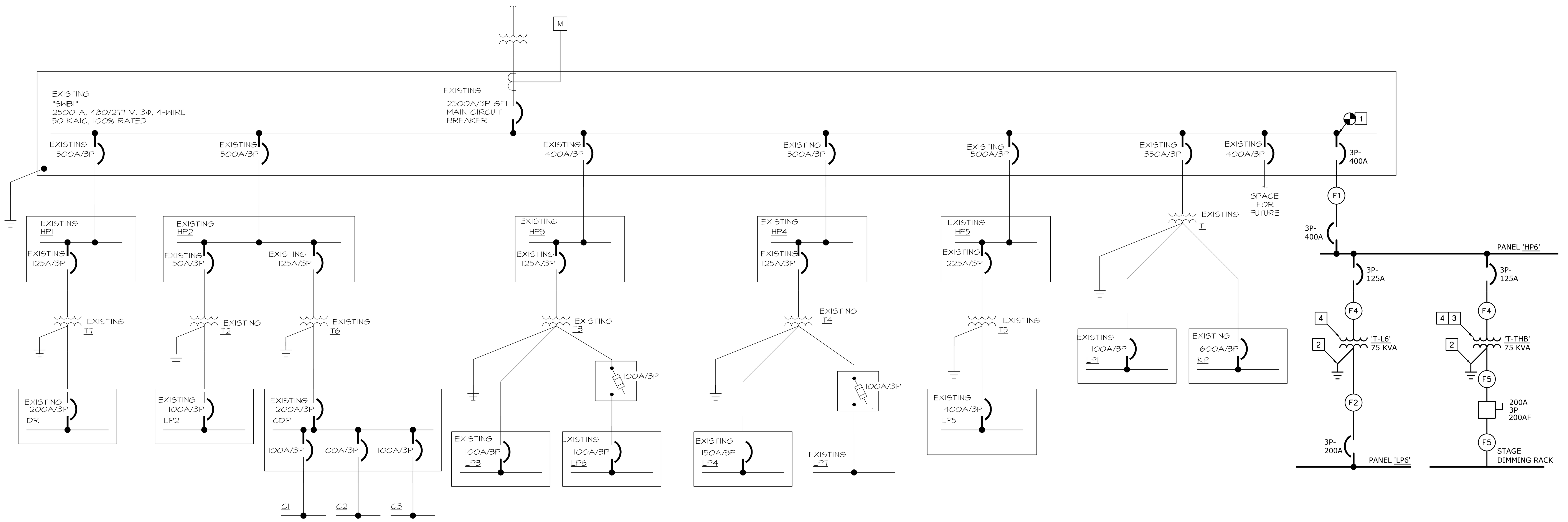

MIDDLE SCHOOL ADDITION ELECTRIC ONE LINE DIAGRAM

NOT TO SCALE

FEEDER SCHEDULE

NO.	CONDUCTORS AND CONDUIT	MATERIAL
F1	2 SETS OF (4)#300, #1/0G., 2-1/2"C.	AA
F2	(4)#250, #2G., 2-1/2"C.	CU
F3	(3)#4, #8G., 1"C.	CU
F4	(3)#1 #6G, 1-1/4"C.	CU
F5	(5)#250, #2G, 3"C.	CU
F6	(5)#350, #4G, 4"C.	CU

CU = COPPER CONDUCTORS
AA = ALUMINUM ALLOY 8000 SERIES CONDUCTORS

PLAN NOTES:

1. FURNISH AND INSTALL NEW 3P-600A CIRCUIT BREAKER WITHIN THE EXISTING A SWITCHBOARD LOCATED IN THE MAIN ELECTRICAL ROOM FOR THE BUILDING.
2. REFER TO 'TYPICAL TRANSFORMER GROUNDING' DIAGRAM ON THIS SHEET FOR TRANSFORMER GROUNDING REQUIREMENTS/SIZE.
3. PROVIDE TYPE K13 RATED TRANSFORMER.
4. PROVIDE TYPE C, D, OR E NEOPRENE VIBRATION ISOLATORS DEPENDING ON MOUNTING CONDITIONS AND WITH MINIMUM STAT DEFLECTION OF 0.15IN. PROVIDE SPRING VIBRATION ISOLATORS WHERE SUSPENDED FROM STRUCTURE WITH MINIMUM STAT DEFLECTION OF .5IN. ALL ELECTRICAL CONNECTIONS TO THE EQUIPMENT SHALL BE MADE WITH LONG LENGTHS OF FLEXIBLE CONDUIT, CONNECTIONS MUST BE LOCATED SO AS TO PREVENT RIGID CONDUIT CONNECTIONS BETWEEN RESILIENTLY MOUNTED EQUIPMENT AND THE BUILDING STRUCTURE. COORDINATE WITH ACOUSTICAL SPECIFICATIONS.

PANEL LP6

MAIN BUS AMPS: 200 A — AIC: 10,000 A
MAIN BREAKER: 200 A — SECTIONS: 1 - 72 SPACE — EQUIPMENT GROUND BUS
VOLTAGE: 208Y/120 V — MOUNTING: SURFACE
PHASES/WIRES: 3 PH / 4 W — ENCLOSURE TYPE: NEMA 1 — SERVICE ENTRANCE

CIRCUIT DESCRIPTION	POLES	AMPS	CKT NO	CKT NO	AMPS	POLES	CIRCUIT DESCRIPTION
REC - STAGE GENERAL #1	1	20	1	2	20	1	STAGE PROJECTOR SCREEN
REC - STAGE GENERAL #2	1	20	3	4	20	1	SCORE BOARD #1
REC - STAGE GENERAL #3	1	20	5	6	20	1	SCORE BOARD #2
REC - STAGE GENERAL #4	1	20	7	8	20	1	REC - MULTIPURPOSE PROJECTOR #1
REC - STAGE GENERAL #5	1	20	9	10	20	1	REC - MULTIPURPOSE PROJECTOR #2
REC - MULTIPURPOSE GENERAL #1	1	20	11	12	20	1	REC - MULTIPRPSE GOAL WINCH #1
REC - MULTIPURPOSE GENERAL #2	1	20	13	14	20	1	REC - MULTIPRPSE GOAL WINCH #2
REC - MULTIPURPOSE GENERAL #2	1	20	15	16	20	1	REC - MULTIPRPSE GOAL WINCH #3
REC - MULTIPURPOSE GENERAL #3	1	20	17	18	20	1	REC - MULTIPRPSE GOAL WINCH #4
REC - MULTIPURPOSE GENERAL #3	1	20	19	20	20	1	REC - MULTIPRPSE GOAL WINCH #5
REC - MULTIPURPOSE GENERAL #4	1	20	21	22	20	1	REC - MULTIPRPSE GOAL WINCH #6
REC - MECH , RR, CIRC	1	20	23	24	20	1	REC - MULTIPRPSE GOAL WINCH #7
REC - VEST, STORAGE	1	20	25	26	20	1	REC - MULTIPRPSE GOAL WINCH #8
REC - EWC	1	20 GFI	27	28	20	1	REC - MULTIPRPSE GOAL WINCH #9
REC - AV ELEC RACK #1	1	20	29	30	20	1	REC - MULTIPRPSE GOAL WINCH #10
REC - AV ELEC RACK #2	1	20	31	32	20	1	REC - MULTIPRPSE GOAL WINCH #11
REC - AV ELEC RACK #3	1	20	33	34	20	1	REC - MULTIPRPSE GOAL WINCH #12
REC - AV ELEC RACK #4	1	20	35	36	20	1	REC - MULTIPURPOSE DIVIDER WINCH
REC - STORAGE 2ND FLR	1	20	37	38	20	3	MULTIPURPOSE BLEACHERS
REC - MULTIPUPOSE ROOF	1	20	39	40			
EF-20	1	15	41	42			
HWCP-5	1	15	43	44	30	2	AC-1
REC - VENDING #1	1	20 GFI	45	46			
REC - VENDING #2	1	20 GFI	47	48	30	2	AC-2
SPARE	1	20	49	50			
SPARE	1	20	51	52	20	1	SPARE
SPARE	1	20	53	54	20	1	SPARE
SPARE	1	20	55	56	20	1	SPARE
SPARE	1	20	57	58	20	1	SPARE
SPARE	1	20	59	60	20	1	SPARE
SPARE	1	20	61	62	20	1	SPARE
SPARE	1	20	63	64	20	1	SPARE
SPARE	1	20	65	66	20	1	SPARE
SPARE	1	20	67	68	20	1	SPARE
SPARE	1	20	69	70	20	1	SPARE
SPARE	1	20	71	72	20	1	SPARE

GFI - GROUND FAULT BREAKER

PANEL HP6

MAIN BUS AMPS: 400 A — AIC: 42,000 A
MAIN BREAKER: 400 A — SECTIONS: 1 - 42 SPACE — EQUIPMENT GROUND BUS
VOLTAGE: 480Y/277 V — MOUNTING: SURFACE
PHASES/WIRES: 3 PH / 4 W — ENCLOSURE TYPE: NEMA 1 — SERVICE ENTRANCE

CIRCUIT DESCRIPTION	POLES	AMPS	CKT NO	CKT NO	AMPS	POLES	CIRCUIT DESCRIPTION
SPARE	1	20	1	2	20	1	LTG- STORAGE, VESTIBULE, ELEC
SPARE	1	20	3	4	25	1	EWH-5
SPARE	1	20	5	6	25	2	ECUH-1
INV-1	3	20	7	8	20	1	SPARE
			9	10	20	1	SPARE
			11	12	20	1	SPARE
RTU-17	3	40	13	14	20	1	SPARE
			15	16	20	1	SPARE
			17	18	20	1	SPARE
RTU-16	3	80	19	20			PREPARED SPACE
			21	22			PREPARED SPACE
			23	24			PREPARED SPACE
RTU-15	3	80	25	26			PREPARED SPACE
			27	28			PREPARED SPACE
			29	30			PREPARED SPACE
LP6	3	125	31	32			PREPARED SPACE
			33	34			PREPARED SPACE
			35	36			PREPARED SPACE
THEATER PANEL RP1	3	125	37	38			PREPARED SPACE
			39	40			PREPARED SPACE
			41	42			PREPARED SPACE

INVERTER INV-1

AIC: 42,000 A
RATED KVA: 12.5
VOLTAGE: 480Y/277 V — MOUNTING: 2" HOUSE KEEPING PAD
PHASES/WIRES: 3 PH / 4 W — ENCLOSURE TYPE: INDOOR

CIRCUIT DESCRIPTION	POLES	AMPS	LOAD	CKT NO	CKT NO	LOAD	AMPS	POLES	CIRCUIT DESCRIPTION
EF-19	3	20	1,332	1	2	1,231	20	1	SHELTER EM LTG #1
			1,332	3	4	984	20	1	SHELTER EM LTG #2
			1,332	5	6	984	20	1	SHELTER EM LTG #3
SPARE	1	20		7	8	100	20	1	SHELTER DAMPERS
SPARE	1	20		9	10		20	1	SPARE
	1			11	12			1	
SUBTOTAL	-	-	3,995	-	-	3,299	-	-	SUBTOTAL

NOTE: SIZE FOR 120MIN RUN TIME PER IECC SHELTER REQUIREMENTS.
UL 924 RATED. EQUIVALENT TO EVENLITE OR APPROVED EQUAL.

MOTORS	(CONNECTED)= 4,095	(DEMAND)=	5,094 VA	(FACTORS)=	1.25 MAX	1.00 ALL OTHERS
RECEPTACLES	(CONNECTED)=	(DEMAND)=	VA	(FACTORS)=	1.00 0-10KVA	0.50 >10 KVA
LIGHTING	(CONNECTED)= 3,199	(DEMAND)=	3,999 VA	(FACTORS)=	1.25	
HEATING	(CONNECTED)=	(DEMAND)=	VA	(FACTORS)=	1.25	
COOLING	(CONNECTED)=	(DEMAND)=	VA	(FACTORS)=	1.00	
KITCHEN	(CONNECTED)=	(DEMAND)=	VA	(FACTORS)=	0.65	
OTHER	(CONNECTED)=	(DEMAND)=	VA	(FACTORS)=	1.00	
TOTAL	(CONNECTED)= 7,294	(DEMAND)=	9,093 VA	**11.9** AMPS	TOTAL MAXIMUM DEMAND	

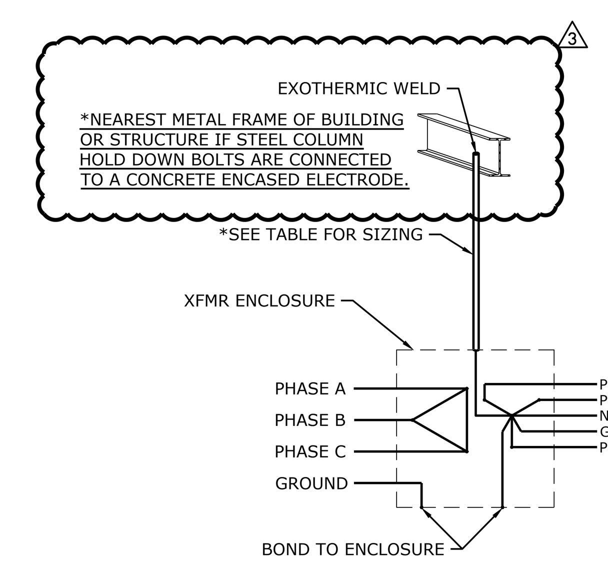

TRANSFORMER SIZE	(*)
15 KVA OR SMALLER	#8 CU IN 1/2" C.
30, 45 KVA	#6 CU IN 1/2" C.
75 KVA	#2 CU IN 1/2" C.
112.5, 150 KVA	#1/0 CU IN 3/4" C.
225 KVA	#2/0 CU IN 3/4" C.
300, 500 KVA	#3/0 CU IN 1" C.

TYPICAL TRANSFORMER GROUNDING

NOT TO SCALE

hollis + miller architects®
we design the future®
1828 Walnut Street Suite 922
Kansas City, MO 64108
T 816.442.7700
115 Wilcox Street Suite 210
Castle Rock, CO 80104
T 720.949.1689
HOLLISANDMILLER.COM
Hollis + Miller Architects
Missouri State Certificate of Authority
Architecture # 0000161
Structure # 2006031333

Bob D Campbell
Structural Engineer
State Certificate of Authority #000442
4338 Bellview Ave.
Kansas City, MO 64111
816.531.4144 phone

Smith & Boucher Inc.
Mechanical, Electrical & Plumbing
State Certificate of Authority #EGC000178
25618 W 103rd Street
Olathe, KS 66061
913.345.2127 phone

MKEC Engineering, Inc.
Civil Engineer
State Certificate of Authority #
Engineering: 2001009364
Landscaping: 2006027139
Surveying: 2006027138
11827 W 112th Street, Suite 200
Overland Park, KS 66210
913.317.9390 phone

Peerbolte Creative
Theatrical Consultant
109 E Pine St.
Warrensburg, MO 64093-0752
660.429.1383 phone

Avant Acoustics
AV/Acoustics Consultant
14827 West 95th St.
Lenexa, KS 66215
913.888.9111 phone

Discovery Middle School Storm Shelter Addition
Liberty School District
800 Midjay Dr, Liberty, MO 64068

CONSTRUCTION DOCUMENTS

REVISIONS:

#	Description	Date
3	ADDENDUM #3	09-26-23

STATE OF MISSOURI — RYAN JEROD DIEDIKER — NUMBER PE-2015006511 — REGISTERED PROFESSIONAL ENGINEER — 8/31/23

The Professional Architects seal affixed to this sheet applies only to the material and items shown on this sheet. All drawings, instruments or other documents not exhibiting this seal shall not be considered prepared by this architect, and this architect expressly disclaims any and all responsibility for such plan, drawings, or documents not exhibiting this seal.

JOB NO: 23018
DRAWN BY: SBI
CHECKED BY: RJD
DATE: 08.31.2023

smith & boucher engineers
25618 west 103rd St olathe, ks 66061
phone 913.345.2127 fax 913.345.0617
project number 2314702

E301

ELECTRICAL - ONE LINE DIAGRAMS

PROJECT NAME: 2314702 Liberty SD 2023 Discovery MS Gym Addition & LED Lighting
AUTOCAD FILE LOCATION \ NAME: X:\23\23147\2314702\Drawings\06-2314702_E301.dwg
LAST CORRECTION BY • DATE • TIME: Jensz Tuesday, September 26, 2023 11:25:53 AM
PLOTTED BY • DATE • TIME: Jeremy Ensz Tuesday, September 26, 2023 11:26:18 AM

Please consider the environment before printing this.

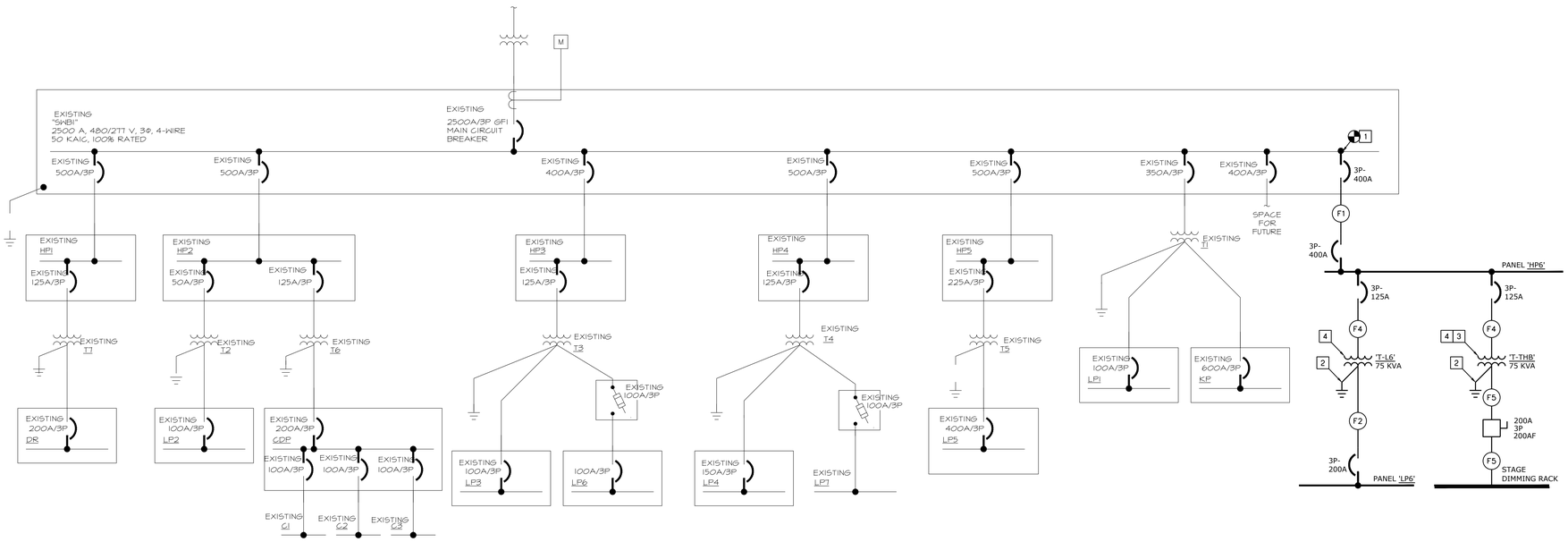

MIDDLE SCHOOL ADDITION ELECTRIC ONE LINE DIAGRAM

NOT TO SCALE

FEEDER SCHEDULE

NO.	CONDUCTORS AND CONDUIT	MATERIAL
F1	2 SETS OF (4)#300, #1/0G., 2-1/2"C.	AA
F2	(4)#250, #2G., 2-1/2"C.	CU
F3	(3)#4, #8G., 1"C.	CU
F4	(3)#1 #6G, 1-1/4"C.	CU
F5	(5)#250, #2G, 3"C.	CU
F6	(5)#350, #4G, 4"C.	CU

CU = COPPER CONDUCTORS
AA = ALUMINUM ALLOY 8000 SERIES CONDUCTORS

PLAN NOTES:

1. FURNISH AND INSTALL NEW 3P-600A CIRCUIT BREAKER WITHIN THE EXISTING A SWITCHBOARD LOCATED IN THE MAIN ELECTRICAL ROOM FOR THE BUILDING.
2. REFER TO 'TYPICAL TRANSFORMER GROUNDING' DIAGRAM ON THIS SHEET FOR TRANSFORMER GROUNDING REQUIREMENTS/SIZE.
3. PROVIDE TYPE K13 RATED TRANSFORMER.
4. PROVIDE TYPE C, D, OR E NEOPRENE VIBRATION ISOLATORS DEPENDING ON MOUNTING CONDITIONS AND WITH MINIMUM STAT DEFLECTION OF 0.15IN. PROVIDE SPRING VIBRATION ISOLATORS WHERE SUSPENDED FROM STRUCTURE WITH MINIMUM STAT DEFLECTION OF .5IN. ALL ELECTRICAL CONNECTIONS TO THE EQUIPMENT SHALL BE MADE WITH LONG LENGTHS OF FLEXIBLE CONDUIT, CONNECTIONS MUST BE LOCATED SO AS TO PREVENT RIGID CONDUIT CONNECTIONS BETWEEN RESILIENTLY MOUNTED EQUIPMENT AND THE BUILDING STRUCTURE. COORDINATE WITH ACOUSTICAL SPECIFICATIONS.

PANEL LP6

MAIN BUS AMPS: 200 A | AIC: 10,000 A
MAIN BREAKER: 200 A | SECTIONS: 1 - 72 SPACE | EQUIPMENT GROUND BUS
VOLTAGE: 208Y/120 V | MOUNTING: SURFACE
PHASES/WIRES: 3 PH / 4 W | ENCLOSURE TYPE: NEMA 1 | SERVICE ENTRANCE

CIRCUIT DESCRIPTION	POLES	AMPS	CKT NO	CKT NO	AMPS	POLES	CIRCUIT DESCRIPTION
REC - STAGE GENERAL #1	1	20	1	2	20	1	STAGE PROJECTOR SCREEN
REC - STAGE GENERAL #2	1	20	3	4	20	1	SCORE BOARD #1
REC - STAGE GENERAL #3	1	20	5	6	20	1	SCORE BOARD #2
REC - STAGE GENERAL #4	1	20	7	8	20	1	REC - MULTIPURPOSE PROJECTOR #1
REC - STAGE GENERAL #5	1	20	9	10	20	1	REC - MULTIPURPOSE PROJECTOR #2
REC - MULTIPURPOSE GENERAL #1	1	20	11	12	20	1	REC - MULTIPRPSE GOAL WINCH #1
REC - MULTIPURPOSE GENERAL #2	1	20	13	14	20	1	REC - MULTIPRPSE GOAL WINCH #2
REC - MULTIPURPOSE GENERAL #2	1	20	15	16	20	1	REC - MULTIPRPSE GOAL WINCH #3
REC - MULTIPURPOSE GENERAL #3	1	20	17	18	20	1	REC - MULTIPRPSE GOAL WINCH #4
REC - MULTIPURPOSE GENERAL #3	1	20	19	20	20	1	REC - MULTIPRPSE GOAL WINCH #5
REC - MULTIPURPOSE GENERAL #4	1	20	21	22	20	1	REC - MULTIPRPSE GOAL WINCH #6
REC - MECH , RR, CIRC	1	20	23	24	20	1	REC - MULTIPRPSE GOAL WINCH #7
REC - VEST, STORAGE	1	20	25	26	20	1	REC - MULTIPRPSE GOAL WINCH #8
REC - EWC	1	20 GFI	27	28	20	1	REC - MULTIPRPSE GOAL WINCH #9
REC - AV ELEC RACK #1	1	20	29	30	20	1	REC - MULTIPRPSE GOAL WINCH #10
REC - AV ELEC RACK #2	1	20	31	32	20	1	REC - MULTIPRPSE GOAL WINCH #11
REC - AV ELEC RACK #3	1	20	33	34	20	1	REC - MULTIPRPSE GOAL WINCH #12
REC - AV ELEC RACK #4	1	20	35	36	20	1	REC - MULTIPURPOSE DIVIDER WINCH
REC - STORAGE 2ND FLR	1	20	37	38	20	3	MULTIPURPOSE BLEACHERS
REC - MULTIPUPOSE ROOF	1	20	39	40			
EF-17	1	15	41	42			
HWCP-5	1	15	43	44	30	2	AC-1
SPARE	1	20	45	46			
SPARE	1	20	47	48	30	2	AC-2
SPARE	1	20	49	50			
SPARE	1	20	51	52	20	1	SPARE
SPARE	1	20	53	54	20	1	SPARE
SPARE	1	20	55	56	20	1	SPARE
SPARE	1	20	57	58	20	1	SPARE
SPARE	1	20	59	60	20	1	SPARE
SPARE	1	20	61	62	20	1	SPARE
SPARE	1	20	63	64	20	1	SPARE
SPARE	1	20	65	66	20	1	SPARE
SPARE	1	20	67	68	20	1	SPARE
SPARE	1	20	69	70	20	1	SPARE
SPARE	1	20	71	72	20	1	SPARE

GFI - GROUND FAULT BREAKER

PANEL HP6

MAIN BUS AMPS: 400 A | AIC: 42,000 A
MAIN BREAKER: 400 A | SECTIONS: 1 - 42 SPACE | EQUIPMENT GROUND BUS
VOLTAGE: 480Y/277 V | MOUNTING: SURFACE
PHASES/WIRES: 3 PH / 4 W | ENCLOSURE TYPE: NEMA 1 | SERVICE ENTRANCE

CIRCUIT DESCRIPTION	POLES	AMPS	CKT NO	CKT NO	AMPS	POLES	CIRCUIT DESCRIPTION
SPARE	1	20	1	2	20	1	LTG- STORAGE, VESTIBULE, ELEC
SPARE	1	20	3	4	25	1	EWH-5
SPARE	1	20	5	6	25	2	ECUH-1
INV-1	3	20	7	8	20	1	SPARE
			9	10	20	1	SPARE
			11	12	20	1	SPARE
RTU-15	3	40	13	14	20	1	SPARE
			15	16	20	1	SPARE
			17	18	20	1	SPARE
RTU-14	3	80	19	20			PREPARED SPACE
			21	22			PREPARED SPACE
			23	24			PREPARED SPACE
RTU-13	3	80	25	26			PREPARED SPACE
			27	28			PREPARED SPACE
			29	30			PREPARED SPACE
LP6	3	125	31	32			PREPARED SPACE
			33	34			PREPARED SPACE
			35	36			PREPARED SPACE
THEATER PANEL RP1	3	125	37	38			PREPARED SPACE
			39	40			PREPARED SPACE
			41	42			PREPARED SPACE

INVERTER INV-1

RATED KVA: 12.5 | AIC: 42,000 A
VOLTAGE: 480Y/277 V | MOUNTING: 2" HOUSE KEEPING PAD
PHASES/WIRES: 3 PH / 4 W | ENCLOSURE TYPE: INDOOR

CIRCUIT DESCRIPTION	POLES	AMPS	LOAD	CKT NO	CKT NO	LOAD	AMPS	POLES	CIRCUIT DESCRIPTION
EF-16	3	20	1,332	1	2	1,231	20	1	SHELTER EM LTG #1
			1,332	3	4	984	20	1	SHELTER EM LTG #2
			1,332	5	6	984	20	1	SHELTER EM LTG #3
SPARE	1	20		7	8	100	20	1	SHELTER DAMPERS
SPARE	1	20		9	10		20	1	SPARE
	1			11	12			1	
SUBTOTAL	-	-	3,995	-	-	3,299	-	-	SUBTOTAL

NOTE: SIZE FOR 120MIN RUN TIME PER IECC SHELTER REQUIREMENTS.
UL 924 RATED. EQUIVALENT TO EVENLITE OR APPROVED EQUAL.

MOTORS	(CONNECTED)= 4,095	(DEMAND)= 5,094 VA	(FACTORS)= 1.25 MAX	1.00 ALL OTHERS	
RECEPTACLES	(CONNECTED)=	(DEMAND)= VA	(FACTORS)= 1.00 0-10KVA	0.50 >10 KVA	
LIGHTING	(CONNECTED)= 3,199	(DEMAND)= 3,999 VA	(FACTORS)= 1.25		
HEATING	(CONNECTED)=	(DEMAND)= VA	(FACTORS)= 1.25		
COOLING	(CONNECTED)=	(DEMAND)= VA	(FACTORS)= 1.00		
KITCHEN	(CONNECTED)=	(DEMAND)= VA	(FACTORS)= 0.65		
OTHER	(CONNECTED)=	(DEMAND)= VA	(FACTORS)= 1.00		
TOTAL	(CONNECTED)= 7,294	(DEMAND)= 9,093 VA	11.9 AMPS	TOTAL MAXIMUM DEMAND	

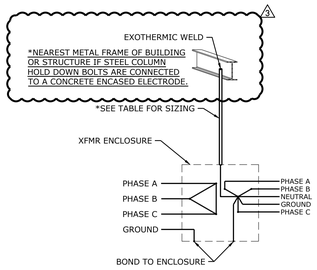

TRANSFORMER SIZE	(*)
15 KVA OR SMALLER	#8 CU IN 1/2" C.
30, 45 KVA	#6 CU IN 1/2" C.
75 KVA	#2 CU IN 1/2" C.
112.5, 150 KVA	#1/0 CU IN 3/4" C.
225 KVA	#2/0 CU IN 3/4" C.
300, 500 KVA	#3/0 CU IN 1" C.

TYPICAL TRANSFORMER GROUNDING

NOT TO SCALE

hollis + miller architects
we design the future
1828 Walnut Street Suite 922
Kansas City, MO 64108
t 816.442.7700
115 Wilcox Street Suite 210
Castle Rock, CO 80104
t 720.949.1685
HOLLISANDMILLER.COM
Hollis + Miller Architects
Missouri State Certificate of Authority
Architecture # 0000161
Structure # 2006031333

Bob D Campbell
Structural Engineer
State Certificate of Authority #000442
4338 Bellview Ave.
Kansas City, MO 64111
816.531.4144 phone

Smith & Boucher Inc.
Mechanical, Electrical & Plumbing
State Certificate of Authority #EGC000178
25618 W 103rd Street
Olathe, KS 66061
913.345.2127 phone

MKEC Engineering, Inc.
Civil Engineer
State Certificate of Authority #
Engineering: 2001009364
Landscaping: 2006027139
Surveying: 2006027138
11827 W 112th Street, Suite 200
Overland Park, KS 66210
913.317.9390 phone

Peerbolte Creative
Theatrical Consultant
109 E Pine St.
Warrensburg, MO 64093-0752
660.429.1383 phone

Avant Acoustics
AV/Acoustics Consultant
14827 West 95th St.
Lenexa, KS 66215
913.888.9111 phone

South Valley Middle School Storm Shelter Addition

Liberty School District

1000 Midjay Dr, Liberty, MO 64068

CONSTRUCTION DOCUMENTS

REVISIONS:

#	Description	Date
3	ADDENDUM #3	09-26-23

STATE OF MISSOURI
RYAN JEROD DIEDIKER
NUMBER PE-2015006[illegible]
PROFESSIONAL ENGINEER
8/31/23

The Professional Architects seal affixed to this sheet applies only to the material and items shown on this sheet. All drawings, instruments or other documents not exhibiting this seal shall not be considered prepared by this architect, and this architect expressly disclaims any and all responsibility for such plan, drawings, or documents not exhibiting this seal.

JOB NO: 23019
DRAWN BY: SBI
CHECKED BY: RJD
DATE: 08.31.2023

E301

smith & boucher engineers
25618 west 103rd St olathe, ks 66061
phone 913.345.2127 fax 913.345.0617
project number 2314703

ELECTRICAL - ONE LINE DIAGRAMS

Please consider the environment before printing this.

2314703 Liberty SD 2023 South Valley MS Gym Addition & LED Lighting
X:\23\2314703\Drawings\06-2314703_E301.dwg
Thursday, August 24, 2023 12:00:12 PM
Jenisz
Tuesday, September 26, 2023 11:27:02 AM
Jeremy Ensz
PROJECT NAME
AUTOCAD FILE LOCATION \ NAME:
LAST CORRECTION BY ◆ DATE ◆ TIME:
PLOTTED BY ◆ DATE ◆ TIME:

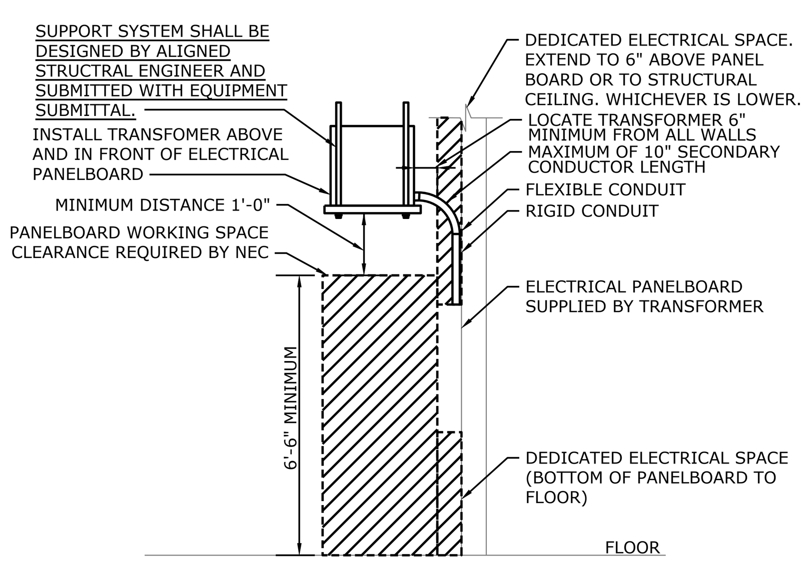

SUSPENDED TRANSFORMER MOUNTING LOCATION DETAIL
NOT TO SCALE

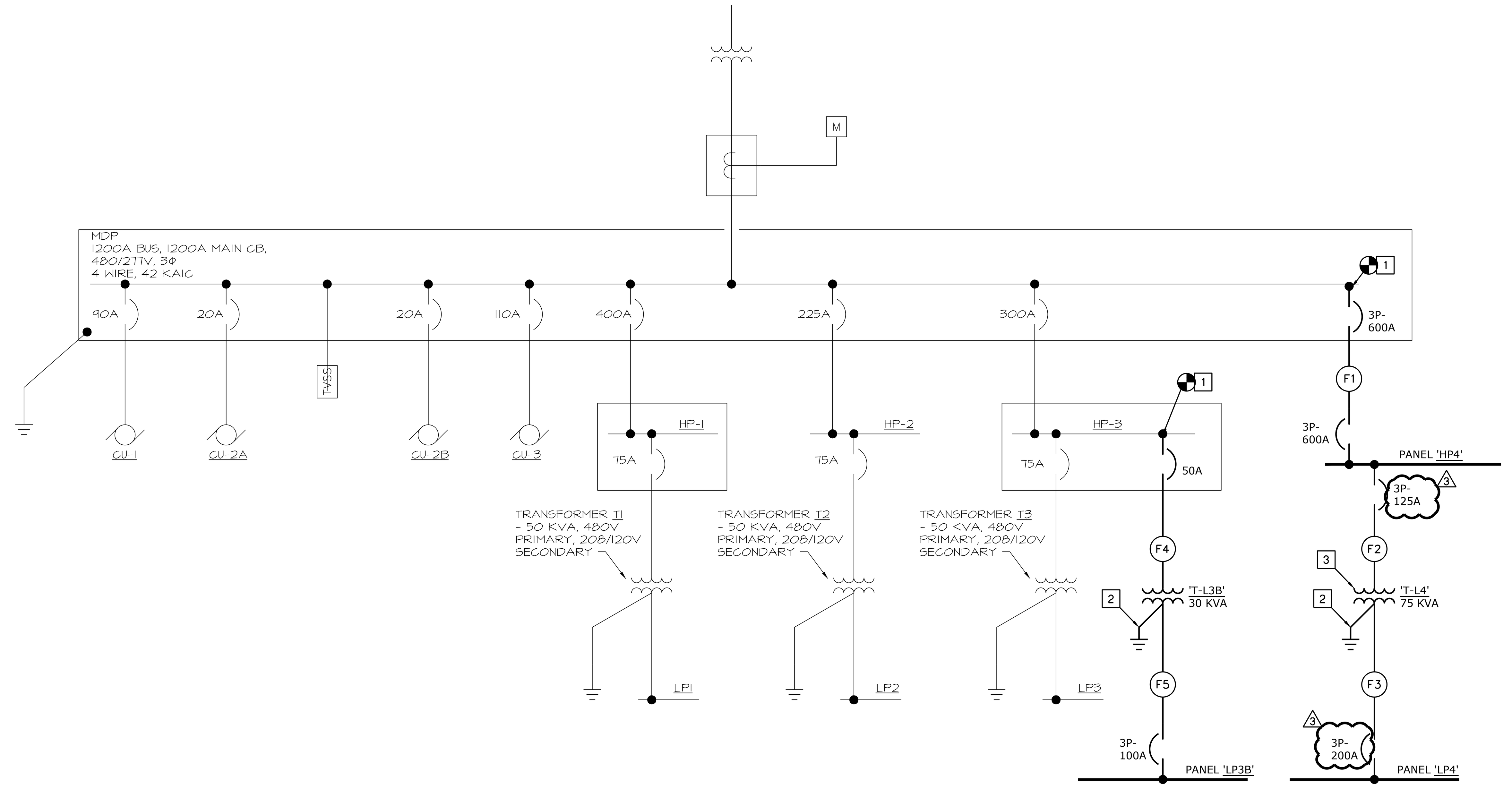

ELECTRIC ONE LINE DIAGRAM
NOT TO SCALE

FEEDER SCHEDULE

NO.	CONDUCTORS AND CONDUIT	MATERIAL
F1	(2)SETS OF (4)#500,#2/0G, 3-1/2"C	AA
F2	(3)#1, #6G., 1-1/4"C.	CU
F3	(4)#250, #2G, 2-1/2"C.	CU
F4	(3)#6, #10G, 3/4"C.	CU
F5	(4)#1, #6G, 1-1/2"C.	CU

CU = COPPER CONDUCTORS
AA = ALUMINUM ALLOY 8000 SERIES CONDUCTORS

PLAN NOTES:

1. FURNISH AND INSTALL NEW CIRCUIT BREAKER WITHIN THE EXISTING SWITCHBOARD LOCATED IN THE MAIN ELECTRICAL ROOM FOR THE BUILDING.
2. REFER TO 'TYPICAL TRANSFORMER GROUNDING' DIAGRAM ON THIS SHEET FOR TRANSFORMER GROUNDING REQUIREMENTS/SIZE.
3. SUSPENDED TRANFORMER, COORDINATE WITH STRUCTURAL ENGINEER/DRAWINGS. PROVIDE SPRING VIBRATION ISOLATORS WHERE SUSPENDED FROM STRUCTURE WITH MINIMUM STAT DEFLECTION OF .5IN. ALL ELECTRICAL CONNECTIONS TO THE EQUIPMENT SHALL BE MADE WITH LONG LENGTHS OF FLEXIBLE CONDUIT, CONNECTIONS MUST BE LOCATED SO AS TO PREVENT RIGID CONDUIT CONNECTIONS BETWEEN RESILIENTLY MOUNTED EQUIPMENT AND THE BUILDING STRUCTURE.
4. FURNISH AND INSTALL NEW CIRCUIT BREAKER WITHIN THE EXISTING 480/277 V PANEL HP3.

PANEL LP4

MAIN BUS AMPS: ~~200 A~~ (3) — AIC: 10,000 A
MAIN BREAKER: 200 A — SECTIONS: 1 - 66 SPACE — EQUIPMENT GROUND BUS
VOLTAGE: 208Y/120 V — MOUNTING: SURFACE
PHASES/WIRES: 3 PH / 4 W — ENCLOSURE TYPE: NEMA 1 — SERVICE ENTRANCE

CIRCUIT DESCRIPTION	POLES	AMPS	CKT NO	CKT NO	AMPS	POLES	CIRCUIT DESCRIPTION
REC - GYM GENERAL #1	1	20	1	2	20	1	GYM GOAL WINCH #1
REC - GYM GENERAL #2	1	20	3	4	20	1	GYM GOAL WINCH #2
REC - GYM GEN, OFFICE	1	20	5	6	20	1	GYM GOAL WINCH #3
REC - CONF #1	1	20	7	8	20	1	GYM GOAL WINCH #4
SPARE	1	20	9	10	20	1	GYM GOAL WINCH #5
REC - CONF #2	1	20	11	12	20	1	GYM GOAL WINCH #6
REC - RR , JAN	1	20	13	14	20	1	GYM GOAL WINCH #7
REC - MUSIC #1	1	20	15	16	20	1	GYM GOAL WINCH #8
REC - MUSIC #2	1	20	17	18	20	1	REC - GYM PROJECTOR #1
REC - MUSIC #3	1	20	19	20	20	1	REC - GYM PROJECTOR #2
REC - MUSIC #4	1	20	21	22	20	1	FUTURE SCORE BOARD
REC - COORIDOR, ELEC, EXT	1	20	23	24	20	1	PROJECTOR SCREEN #1
REC - ART #1	1	20	25	26	20	1	PROJECTOR SCREEN #2
REC - ART #2	1	20	27	28	20	1	PROJECTOR SCREEN MUSIC
EF-5	1	20	29	30	20	1	REC - MUSIC PROJECTOR
HWCP-4	1	20	31	32	20	1	REC - IT #1
SPARE	1	20	33	34	20	1	REC - IT #2
SPARE	1	20	35	36	20	1	REC - AV RACK #1
REC - ROOF TOP	1	20	37	38	30	1	REC - AV RACK #2
SPARE	1	20	39	40	20	1	REC - ART PROJECTOR
SPARE	1	20	41	42	20	1	PROJECTOR SCREEN ART
SPARE	1	20	43	44	20	1	DOOR ACCESS CONTROLS (1)
SPARE	1	20	45	46	50	2	KLIN
SPARE	1	20	47	48			
SPARE	1	20	49	50	20	1	KLIN EXHAUST FAN
SPARE	1	20	51	52	20 GFI	1	REC - EWC
SPARE	1	20	53	54	20	2	AC-1
SPARE	1	20	55	56			
SPARE	1	20	57	58	20	2	AC-2
SPARE	1	20	59	60			
SPARE	1		61	62	20	2	AC-3
SPARE	1		63	64			
SPARE	1		65	66	20	1	SPARE

GFI - GROUND FAULT BREAKER

PANEL LP3B

MAIN BUS AMPS: 100 A — AIC: 10,000 A
MAIN BREAKER: 100 A — SECTIONS: 1 - 42 SPACE — EQUIPMENT GROUND BUS
VOLTAGE: 208Y/120 V — MOUNTING: SURFACE
PHASES/WIRES: 3 PH / 4 W — ENCLOSURE TYPE: NEMA 1 — SERVICE ENTRANCE

CIRCUIT DESCRIPTION	POLES	AMPS	CKT NO	CKT NO	AMPS	POLES	CIRCUIT DESCRIPTION
WALK IN FREEZER	1	20	1	2	20	2	EC-3
WALK IN COOLER	1	20	3	4			
REC - MOTHERS RM FRIDGE	1	20 GFI	5	6	20	2	EC-4
REC - MOTHERS, RESTROOMS	1	20	7	8			
HEAT TAPE	1	20	9	10	20	1	SPARE
COOLER EVAPORATOR	1	20	11	12	20	1	SPARE
SPARE	1	20	13	14	20	1	SPARE
SPARE	1	20	15	16	20	1	SPARE
SPARE	1	20	17	18	20	1	SPARE
SPARE	1	20	19	20	20	1	SPARE
SPARE	1	20	21	22	20	1	SPARE
SPARE	1	20	23	24	20	1	SPARE
SPARE	1	20	25	26	20	1	SPARE
SPARE	1	20	27	28	20	1	SPARE
SPARE	1	20	29	30	20	1	SPARE
SPARE	1	20	31	32	20	1	SPARE
SPARE	1	20	33	34	20	1	SPARE
SPARE	1	20	35	36	20	1	SPARE
SPARE	1	20	37	38	20	1	SPARE
SPARE	1	20	39	40	20	1	SPARE
SPARE	1	20	41	42	20	1	SPARE

GFI - GROUND FAULT BREAKER

PANEL HP4

MAIN BUS AMPS: 600 A — AIC: 42,000 A
MAIN BREAKER: 600 A — SECTIONS: 1 - 42 SPACE — EQUIPMENT GROUND BUS
VOLTAGE: 480Y/277 V — MOUNTING: SURFACE
PHASES/WIRES: 3 PH / 4 W — ENCLOSURE TYPE: NEMA 1 — SERVICE ENTRANCE

CIRCUIT DESCRIPTION	POLES	AMPS	CKT NO	CKT NO	AMPS	POLES	CIRCUIT DESCRIPTION
EWH-4	3	20	1	2	20	1	LTG - MUSIC TRACK
			3	4	20	1	LTG - ART , JAN, DATA, LINK
			5	6	25	1	ECUH-1
INV-1	3	20	7	8	20	1	SPARE
			9	10	20	1	SPARE
			11	12	20	1	SPARE
RTU-4	3	110	13	14	20	1	SPARE
			15	16	20	1	SPARE
			17	18	20	1	SPARE
RTU-5	3	110	19	20	20	1	SPARE
			21	22	20	1	SPARE
			23	24	20	1	SPARE
RTU-6	3	50	25	26		1	SPACE
			27	28		1	SPACE
			29	30		1	SPACE
RTU-7	3	70	31	32		1	SPACE
			33	34		1	SPACE
			35	36		1	SPACE
LP4 (3)	3	125	37	38		1	SPACE
			39	40		1	SPACE
			41	42		1	SPACE

INVERTER INV-1

RATED KVA: 10 — AIC: 42,000 A
VOLTAGE: 480Y/277 V — MOUNTING: 2" HOUSE KEEPING PAD
PHASES/WIRES: 3 PH / 4 W — ENCLOSURE TYPE: INDOOR

CIRCUIT DESCRIPTION	POLES	AMPS	LOAD	CKT NO	CKT NO	LOAD	AMPS	POLES	CIRCUIT DESCRIPTION
EF-4	3	20	941	1	2	1,104	20	1	LTG - MUISC, RAMP, REST
			941	3	4	1,218	20	1	LTG - GYM #1
			941	5	6	1,218	20	1	LTG - GYM #2
SPARE	1	20		7	8	100	20	1	SHELTER DAMPERS
SPARE	1	20		9	10		20	1	SPARE
	1			11	12			1	
SUBTOTAL	-	-	2,823	-	-	3,640	-	-	SUBTOTAL

NOTE: SIZE FOR 120MIN RUN TIME PER IECC SHELTER REQUIREMENTS.
UL 924 RATED. EQUIVALENT TO EVENLITE OR APPROVED EQUAL.

MOTORS	(CONNECTED)= 2,923	(DEMAND)= 3,629 VA	(FACTORS)= 1.25 MAX	1.00 ALL OTHERS
RECEPTACLES	(CONNECTED)=	(DEMAND)= VA	(FACTORS)= 1.00 0-10KVA	0.50 >10 KVA
LIGHTING	(CONNECTED)= 3,540	(DEMAND)= 4,425 VA	(FACTORS)= 1.25	
HEATING	(CONNECTED)=	(DEMAND)= VA	(FACTORS)= 1.25	
COOLING	(CONNECTED)=	(DEMAND)= VA	(FACTORS)= 1.00	
KITCHEN	(CONNECTED)=	(DEMAND)= VA	(FACTORS)= 0.65	
OTHER	(CONNECTED)=	(DEMAND)= VA	(FACTORS)= 1.00	
TOTAL	(CONNECTED)= 6,463	(DEMAND)= 8,054 VA	9.7 AMPS	TOTAL MAXIMUM DEMAND

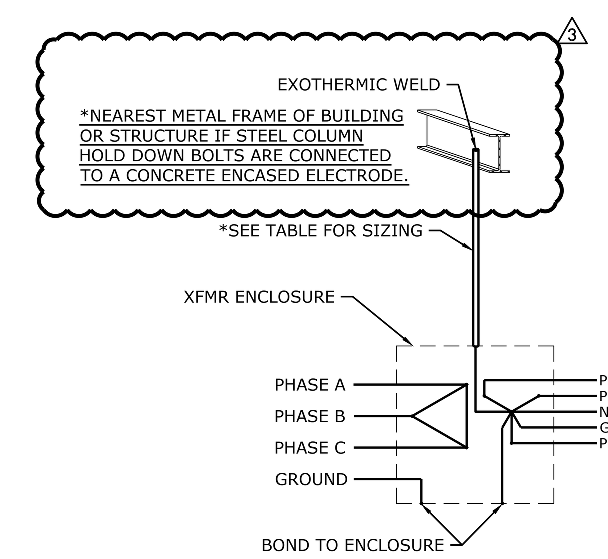

TRANSFORMER SIZE	(*)
15 KVA OR SMALLER	#8 CU IN 1/2" C.
30, 45 KVA	#6 CU IN 1/2" C.
75 KVA	#2 CU IN 1/2" C.
112.5, 150 KVA	#1/0 CU IN 3/4" C.
225 KVA	#2/0 CU IN 3/4" C.
300, 500 KVA	#3/0 CU IN 1" C.

TYPICAL TRANSFORMER GROUNDING
NOT TO SCALE

FLOOR BOX SCHEDULE

TYPE	DESCRIPTION	POWER	DATA	AUDIO/VISUAL	ACCESSORIES	APPLICATION	BASIS OF DESIGN MANUFACTURER SERIES
FB1	3-GANG RECESSED FLOOR BOX, ROUND COVER, RECESSED CONNECTIVITY DESIGN ARCHITECT TO SELECT COVER FINISH AND EXACT LOCATION.	2 DUPLEX 3/4" C	NO	YES (FUTURE) 1-1/4" C	-	SLAB ON GRADE	HUBBELL - SYSTEM ONE CFB SERIES LEGRAND RFB SERIES
FB2	4-GANG RECESSED FLOOR BOX, ROUND COVER, RECESSED CONNECTIVITY DESIGN. ARCHITECT TO SELECT COVER FINISH AND EXACT LOCATION.	2 DUPLEX 3/4" C	YES (2) JACKS 1"C	YES HDMI JACK 1.5"C TO TV BOX	-	SLAB ON GRADE	HUBBELL - SYSTEM ONE CFB SERIES LEGRAND RFB SERIES

GENERAL NOTES:
1. VERIFY FINISHES WITH ARCHITECT.

hollis + miller architects®
we design the future®
1828 Walnut Street Suite 922
Kansas City, MO 64108
T 816.442.7700
115 Wilcox Street Suite 210
Castle Rock, CO 80104
T 720.949.1689
HOLLISANDMILLER.COM
Hollis + Miller Architects
Missouri State Certificate of Authority
Architecture # 0000161
Structure # 2006031333

MKEC Engineering, Inc.
Civil Engineer
State Certificate of Authority #
Engineering: #2001009364
Landscaping: #2006027139
Surveying: #2006027138
11827 W 112th Street, Suite 200
Overland Park, KS 66210
913.317.9390 phone

Smith & Boucher Inc.
Mechanical, Electrical & Plumbing
State Certificate of Authority #EGC000178
25618 W 103rd Street
Olathe, Johnson County, KS 66061
913.345.2127 phone

Bob D Campbell
Structural Engineer
State Certificate of Authority #000442
4338 Bellview Ave.
Kansas City, MO 64111
816.531.4144 phone
816.531.8572 fax

CONSTRUCTION DOCUMENTS

EPIC Elementary Storm Shelter Addition
Liberty Public Schools

650 Conistor St.
Liberty, MO 64068

REVISIONS:

#	Description	Date
1	ADDENDUM #1	09-14-23
3	ADDENDUM #3	09-26-23

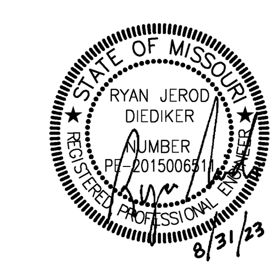

The Professional Architects seal affixed to this sheet applies only to the material and items shown on this sheet. All drawings, instruments or other documents not exhibiting this seal shall not be considered prepared by this architect, and this architect expressly disclaims any and all responsibility for such plan, drawings, or documents not exhibiting this seal.

JOB NO: 23020.00
DRAWN BY: SBI
CHECKED BY: RJD
DATE: 08.31.2023

smith & boucher engineers
25618 west 103rd St olathe, ks 66061
phone 913.345.2127 fax 913.345.0617
project number 2314704

E301

ELECTRICAL - ONE LINE DIAGRAMS

PROJECT NAME: 2314704 Liberty SD 2023 EPIC Gym Addition & LED Lighting
AUTOCAD FILE LOCATION \ NAME: X:\23\23147\2314704\Drawings\06-2314704_E301.dwg
LAST CORRECTION BY ♦ DATE ♦ TIME: Jensz Tuesday, September 26, 2023 11:27:25 AM
PLOTTED BY ♦ DATE ♦ TIME: Jeremy Ensz Tuesday, September 26, 2023 11:28:20 AM

Please consider the environment before printing this.